International® LT / RH and LoneStar Series Built 1/14/2019 To 12/31/2020

Interactive Schematics

Navistar, Inc.
2701 Navistar Drive, Lisle, 60532 USA

© 2020 Navistar, Inc. All rights reserved. All marks are trademarks of their respective owners.

0000018828
Revision 8
March, 2020

Public

TABLE OF CONTENTS

LT/RH/LoneStar - X15/A26 - BCM (Body Control Module)

LT/RH/LoneStar - X15/A26 - BCM (Body Control Module) Design 1

ABS Private J1939

ABS Private J1939 Design 9

Cab J1939 (250Kbps)

Cab J1939 (250Kbps) Design 10

Engine Private J1939 A26

Engine Private J1939 A26 Design 11

Engine Private J1939 X15

Engine Private J1939 X15 Design 12

Fusion Private J1939

Fusion Private J1939 Design 13

Low Speed J1939 (125Kbps)

Low Speed J1939 (125Kbps) Design 14

Telematics J1708

Telematics J1708 Design 15

Body J1939 (250Kbps) Splice Pack 1024

Body J1939 (250Kbps) Splice Pack 1024 Design 16

Body J1939 (250Kbps) Splice Pack 1025

Body J1939 (250Kbps) Splice Pack 1025 Design 17

Body J1939 (250Kbps) Splice Pack 1029

Body J1939 (250Kbps) Splice Pack 1029 Design 18

Body J1939 (250Kbps) W/ 3 Splice Packs

Body J1939 (250Kbps) W/ 3 Splice Packs Design 19

Powertrain J1939 (500Kbps) Allison 3K Transmission A26

Powertrain J1939 (500Kbps) Allison 3K Transmission A26 Design 20

Powertrain J1939 (500Kbps) Eaton Ultrashift+ Transmission A26

Powertrain J1939 (500Kbps) Eaton Ultrashift+ Transmission A26 Design 21

Powertrain J1939 (500Kbps) Edurant Transmission A26

Powertrain J1939 (500Kbps) Edurant Transmission A26 Design 22

Powertrain J1939 (500Kbps) Manual Transmission A26

Powertrain J1939 (500Kbps) Manual Transmission A26 Design 23

Powertrain J1939 (500Kbps) TC10 Transmission A26

Powertrain J1939 (500Kbps) TC10 Transmission A26 Design 24

Powertrain J1939 (500Kbps) Eaton Ultrashift+ Transmission X15

Powertrain J1939 (500Kbps) Eaton Ultrashift+ Transmission X15 Design 25

TABLE OF CONTENTS

Powertrain J1939 (500Kbps) Edurant Transmission X15

Powertrain J1939 (500Kbps) Edurant Transmission X15 Design 26

Powertrain J1939 (500Kbps) Manual Transmission X15

Powertrain J1939 (500Kbps) Manual Transmission X15 Design 27

Powertrain J1939 (500Kbps) TC10 Transmission X15

Powertrain J1939 (500Kbps) TC10 Transmission X15 Design 28

LT/RH A26 - ECM

LT/RH A26 - ECM Design 29

LT/RH/LoneStar X15 - ECM

LT/RH/LoneStar X15 - ECM Design 31

LT/RH/LoneStar - X15/A26 - Instrument Cluster (Premium)

LT/RH/LoneStar - X15/A26 - Instrument Cluster (Premium) Design 32

LT/RH/LoneStar - X15/A26 - Instrument Cluster (Standard)

LT/RH/LoneStar - X15/A26 - Instrument Cluster (Standard) Design 33

LT/RH/LoneStar - X15/A26 - Instrument Cluster - Bulb Check

LT/RH/LoneStar - X15/A26 - Instrument Cluster - Bulb Check Design 34

LT/RH/LoneStar - X15/A26 - Instrument Cluster - Request and Status

LT/RH/LoneStar - X15/A26 - Instrument Cluster - Request and Status Design . . 35

LT/RH/LoneStar - X15/A26 - Cab Ground Studs

LT/RH/LoneStar - X15/A26 - Cab Ground Studs Design 36

LT/RH/LoneStar - X15/A26 - Ground Splice Packs - 1022 & 1023

LT/RH/LoneStar - X15/A26 - Ground Splice Packs - 1022 & 1023 Design 37

LT/RH/LoneStar - X15/A26 - Ground Splice Packs - 1027

LT/RH/LoneStar - X15/A26 - Ground Splice Packs - 1027 Design 38

LT/RH/LoneStar - X15/A26 - Ground Splice Packs - 1410

LT/RH/LoneStar - X15/A26 - Ground Splice Packs - 1410 Design 39

LT/RH/LoneStar - X15/A26 - Ground Splice Pack 1620

LT/RH/LoneStar - X15/A26 - Ground Splice Pack 1620 Design 40

LT/RH/LoneStar - X15/A26 - Sleeper Ground Splice Packs - 5007

LT/RH/LoneStar - X15/A26 - Sleeper Ground Splice Packs - 5007 Design 41

LT/RH/LoneStar - X15/A26 - Center Chassis Ground Splice Packs - 8803 & 8804

LT/RH/LoneStar - X15/A26 - Center Chassis Ground Splice Packs - 8803 & 8804 Design 42

LT/RH/LoneStar - X15/A26 - Center Chassis ZVR Splice Packs - 8802

LT/RH/LoneStar - X15/A26 - Center Chassis ZVR Splice Packs - 8802 Design . 43

LT/RH/LoneStar - X15/A26 - Forward Chassis Ground Splice Packs - 8800

LT/RH/LoneStar - X15/A26 - Forward Chassis Ground Splice Packs - 8800 Design 44

LT/RH A26 - Powertrain Ground Splice Packs - 6704

LT/RH A26 - Powertrain Ground Splice Packs - 6704 Design 46

LT/RH A26 - ZVR Splice Packs - 6702 & 6704B

LT/RH A26 - ZVR Splice Packs - 6702 & 6704B Design 47

LT/RH/LoneStar X15 - Powertrain Ground Splice Packs - 6704

LT/RH/LoneStar X15 - Powertrain Ground Splice Packs - 6704 Design 48

LT/RH/LoneStar X15 - ZVR Splice Packs - 6702 & 6703

LT/RH/LoneStar X15 - ZVR Splice Packs - 6702 & 6703 Design 49

LT/RH/LoneStar - X15/A26 - Lighting Control Module

LT/RH/LoneStar - X15/A26 - Lighting Control Module Design 50

LT/RH A26 - Powertrain Aftertreatment PDM

LT/RH A26 - Powertrain Aftertreatment PDM Design 51

LT/RH/LoneStar X15 - Powertrain Aftertreatment PDM

LT/RH/LoneStar X15 - Powertrain Aftertreatment PDM Design 52

Battery Feed

Battery Feed Design 53

Interior PDM Chart

Interior PDM Chart Design 54

Key Switch Accessory

Key Switch Accessory Design 55

Key Switch Ignition

Key Switch Ignition Design 56

Relays - Grid Management (N/Load Shed Day Cab)

Relays - Grid Management (N/Load Shed Day Cab) Design 57

Relays - Grid Management (W/Load Shed Day Cab)

Relays - Grid Management (W/Load Shed Day Cab) Design 58

Relays - Grid Management (W/Load Shed Sleeper Cab)

Relays - Grid Management (W/Load Shed Sleeper Cab) Design 59

LT/RH/LoneStar - X15/A26 - Front Turn Signal & Back-Up Light Splice Packs - 1030 & 1040

LT/RH/LoneStar - X15/A26 - Front Turn Signal & Back-Up Light Splice Packs - 1030 & 1040 Design 60

TABLE OF CONTENTS

LT/RH/LoneStar - X15/A26 - Marker/Park Lights Splice Pack - 1028

LT/RH/LoneStar - X15/A26 - Marker/Park Lights Splice Pack - 1028 Design 61

LT/RH/LoneStar - X15/A26 - Panel Dimmer Splice Pack - 1021

LT/RH/LoneStar - X15/A26 - Panel Dimmer Splice Pack - 1021 Design 62

LT/RH/LoneStar - X15/A26 - Sleeper PDM

LT/RH/LoneStar - X15/A26 - Sleeper PDM Design 63

LT/RH/LoneStar - X15/A26 - Special Power Distribution

LT/RH/LoneStar - X15/A26 - Special Power Distribution Design 64

LT/RH A26 - IP Underhood PDM

LT/RH A26 - IP Underhood PDM Design 65

LT/RH/LoneStar X15 - IP Underhood PDM

LT/RH/LoneStar X15 - IP Underhood PDM Design 66

LT/RH/LoneStar - X15/A26 - Auxiliary Air Solenoids 4-pack (1 pack/4 solenoids)

LT/RH/LoneStar - X15/A26 - Auxiliary Air Solenoids 4-pack (1 pack/4 solenoids) Design 67

LT/RH/LoneStar - X15/A26 - Auxiliary Air Solenoids 4-pack (2 packs/8 solenoids)

LT/RH/LoneStar - X15/A26 - Auxiliary Air Solenoids 4-pack (2 packs/8 solenoids) Design 72

LT/RH - X15/A26 - Radio N/ Sterring Wheel Pod N/ Remote

LT/RH - X15/A26 - Radio N/ Sterring Wheel Pod N/ Remote Design 77

LT/RH - X15/A26 - Radio W/Steering Wheel Pod N/ Remote

LT/RH - X15/A26 - Radio W/Steering Wheel Pod N/ Remote Design 78

LT/RH/LoneStar - X15/A26 - Radio N/ Steering Wheel Pod W/Remote

LT/RH/LoneStar - X15/A26 - Radio N/ Steering Wheel Pod W/Remote Design . .79

LT/RH/LoneStar - X15/A26 - Radio W/Steering Wheel Pod W/Remote

LT/RH/LoneStar - X15/A26 - Radio W/Steering Wheel Pod W/Remote Design . .80

LT/RH/LoneStar - X15/A26 - Radio (Bluetooth) W/Steering Wheel Pod N/ Remote W/MIC

LT/RH/LoneStar - X15/A26 - Radio (Bluetooth) W/Steering Wheel Pod N/ Remote W/MIC Design 81

LT/RH/LoneStar - X15/A26 - Radio(Bluetooth) W/Steering Wheel W/Remote W/MIC

LT/RH/LoneStar - X15/A26 - Radio(Bluetooth) W/Steering Wheel W/Remote W/MIC Design 82

LT/RH LoneStar - X15/A26 - Speakers:Four Speakers N/BT N/QC

LT/RH LoneStar - X15/A26 - Speakers:Four Speakers N/BT N/QC Design 83

LT/RH LoneStar - X15/A26 - Speakers:Four Speakers N/BT W/QC

LT/RH LoneStar - X15/A26 - Speakers:Four Speakers N/BT W/QC Design 85

LT/RH LoneStar - X15/A26 - Speakers:Speakers N/BT W/AMP N/QC

LT/RH LoneStar - X15/A26 - Speakers:Speakers N/BT W/AMP N/QC Design . . 87

LT/RH LoneStar - X15/A26 - Speakers:Four Speakers W/BT N/QC

LT/RH LoneStar - X15/A26 - Speakers:Four Speakers W/BT N/QC Design 88

LT/RH LoneStar - X15/A26 - Speakers:Four Speakers W/BT W/QC

LT/RH LoneStar - X15/A26 - Speakers:Four Speakers W/BT W/QC Design 90

LT/RH LoneStar - X15/A26 - Speakers:Speakers W/BT W/AMP N/QC

LT/RH LoneStar - X15/A26 - Speakers:Speakers W/BT W/AMP N/QC Design . . 92

LT/RH/LoneStar - X15/A26 - Dual Aux Switch

LT/RH/LoneStar - X15/A26 - Dual Aux Switch Design 93

LT/RH/LoneStar - X15/A26 - Single Aux Switch

LT/RH/LoneStar - X15/A26 - Single Aux Switch Design 94

LT/RH/LoneStar - X15/A26 - Back-Up Alarm (Automatic) TC10

LT/RH/LoneStar - X15/A26 - Back-Up Alarm (Automatic) TC10 Design 96

LT/RH/LoneStar - X15/A26 - Back-Up Alarm (Automatic) (W/ Tail Light Bar Assy)

LT/RH/LoneStar - X15/A26 - Back-Up Alarm (Automatic) (W/ Tail Light Bar Assy) Design 100

LT/RH A26 - Back-Up Alarm (Manual) and UltraShift+

LT/RH A26 - Back-Up Alarm (Manual) and UltraShift+ Design 102

LT/RH A26 - Back-Up Alarm (Manual) (W/ Tail Light Bar Assy)

LT/RH A26 - Back-Up Alarm (Manual) (W/ Tail Light Bar Assy) Design 110

LT/RH/LoneStar X15 - Back-Up Alarm (Manual) and UltraShift+

LT/RH/LoneStar X15 - Back-Up Alarm (Manual) and UltraShift+ Design 114

LT/RH/LoneStar X15 - Back-Up Alarm (Manual) (W/ Tail Light Bar Assy)

LT/RH/LoneStar X15 - Back-Up Alarm (Manual) (W/ Tail Light Bar Assy) Design 118

LT/RH/LoneStar - X15/A26 - Banana Plugs Receptacle

LT/RH/LoneStar - X15/A26 - Banana Plugs Receptacle Design 120

LT/RH/LoneStar - X15/A26 - CB Radio Power Only

LT/RH/LoneStar - X15/A26 - CB Radio Power Only Design 121

LT/RH/LoneStar - X15/A26 - Cigar Lighter

LT/RH/LoneStar - X15/A26 - Cigar Lighter Design 122

LT/RH/LoneStar - X15/A26 - Cigar Lighter Aux APO

LT/RH/LoneStar - X15/A26 - Cigar Lighter Aux APO Design 123

LT/RH/LoneStar - X15/A26 - Cigar Lighter Aux APO Overhead APO

LT/RH/LoneStar - X15/A26 - Cigar Lighter Aux APO Overhead APO Design . . 125

LT/RH/LoneStar - X15/A26 - Cigar Lighter Aux APO Rear Std APO Rear APO W/Cover 12V Panel

LT/RH/LoneStar - X15/A26 - Cigar Lighter Aux APO Rear Std APO Rear APO W/Cover 12V Panel Design 127

LT/RH/LoneStar - X15/A26 - Cigar Lighter Aux APO Rear Std APO Rear APO w/Cover 12V Panel Overhead APO

LT/RH/LoneStar - X15/A26 - Cigar Lighter Aux APO Rear Std APO Rear APO w/Cover 12V Panel Overhead APO Design 131

LT/RH/LoneStar - X15/A26 - Cigar Lighter Aux APO Rear Std APO Rear APO w/Cover 12V Panel Upr Bnk APO

LT/RH/LoneStar - X15/A26 - Cigar Lighter Aux APO Rear Std APO Rear APO w/Cover 12V Panel Upr Bnk APO Design 135

LT/RH/LoneStar - X15/A26 - Cigar Lighter Aux APO Rear Std APO Rear APO w/Cover 12V Panel Upr Bnk APO Rear Overhead APO

LT/RH/LoneStar - X15/A26 - Cigar Lighter Aux APO Rear Std APO Rear APO w/Cover 12V Panel Upr Bnk APO Rear Overhead APO Design 139

LT/RH/LoneStar - X15/A26 - Cigar Lighter Overhead APO

LT/RH/LoneStar - X15/A26 - Cigar Lighter Overhead APO Design 143

LT/RH/LoneStar - X15/A26 - Cigar Lighter Rear Std APO APO W/Cover 12V Panel

LT/RH/LoneStar - X15/A26 - Cigar Lighter Rear Std APO APO W/Cover 12V Panel Design 144

LT/RH/LoneStar - X15/A26 - Cigar Lighter Rear Std APO Rear APO W/Cover 12V Panel Overhead APO

LT/RH/LoneStar - X15/A26 - Cigar Lighter Rear Std APO Rear APO W/Cover 12V Panel Overhead APO Design 146

LT/RH/LoneStar - X15/A26 - Cigar Lighter Rear Std APO Rear APO W/Cover 12V Panel Upr Bnk APO

LT/RH/LoneStar - X15/A26 - Cigar Lighter Rear Std APO Rear APO W/Cover 12V Panel Upr Bnk APO Design 148

LT/RH/LoneStar - X15/A26 - Cigar Lighter Rear Std APO Rear APO w/Cover 12V Panel Upr Bnk APO Rear Overhead APO

LT/RH/LoneStar - X15/A26 - Cigar Lighter Rear Std APO Rear APO w/Cover 12V Panel Upr Bnk APO Rear Overhead APO Design 150

LT/RH/LoneStar - X15/A26 - Standard APO

LT/RH/LoneStar - X15/A26 - Standard APO Design 152

LT/RH/LoneStar - X15/A26 - Standard APO Aux APO

LT/RH/LoneStar - X15/A26 - Standard APO Aux APO Design 153

LT/RH/LoneStar - X15/A26 - Standard APO Aux APO Overhead APO

LT/RH/LoneStar - X15/A26 - Standard APO Aux APO Overhead APO Design . 155

LT/RH/LoneStar - X15/A26 - Standard APO Overhead APO

LT/RH/LoneStar - X15/A26 - Standard APO Overhead APO Design 157

LT/RH/LoneStar - X15/A26 - Std APO Aux APO Rear Std APO Rear APO W/Cover 12V Panel

LT/RH/LoneStar - X15/A26 - Std APO Aux APO Rear Std APO Rear APO W/Cover 12V Panel Design 158

LT/RH/LoneStar - X15/A26 - Std APO Aux APO Rear Std APO Rear APO W/Cover 12V Panel Overhead APO

LT/RH/LoneStar - X15/A26 - Std APO Aux APO Rear Std APO Rear APO W/Cover 12V Panel Overhead APO Design 162

LT/RH/LoneStar - X15/A26 - Std APO Aux APO Rear Std APO Rear APO W/Cover 12V Panel Upr Bnk APO

LT/RH/LoneStar - X15/A26 - Std APO Aux APO Rear Std APO Rear APO W/Cover 12V Panel Upr Bnk APO Design 166

LT/RH/LoneStar - X15/A26 - Std APO Aux APO Rear Std APO Rear APO w/Cover 12V Panel Upr Bnk APO Rear Overhead APO

LT/RH/LoneStar - X15/A26 - Std APO Aux APO Rear Std APO Rear APO w/Cover 12V Panel Upr Bnk APO Rear Overhead APO Design 170

LT/RH/LoneStar - X15/A26 - Std APO Rear Std APO Rear APO W/Cover 12V Panel

LT/RH/LoneStar - X15/A26 - Std APO Rear Std APO Rear APO W/Cover 12V Panel Design 174

LT/RH/LoneStar - X15/A26 - Std APO Rear Std APO Rear APO W/Cover 12V Panel Rear Overhead APO

LT/RH/LoneStar - X15/A26 - Std APO Rear Std APO Rear APO W/Cover 12V Panel Rear Overhead APO Design 176

LT/RH/LoneStar - X15/A26 - Std APO Rear Std APO Rear APO W/Cover 12V Panel Upr Bnk APO

LT/RH/LoneStar - X15/A26 - Std APO Rear Std APO Rear APO W/Cover 12V Panel Upr Bnk APO Design 178

LT/RH/LoneStar - X15/A26 - Std APO Rear Std APO Rear APO w/Cover 12V Panel Upr Bnk APO Rear Overhead APO

LT/RH/LoneStar - X15/A26 - Std APO Rear Std APO Rear APO w/Cover 12V Panel Upr Bnk APO Rear Overhead APO Design 180

LoneStar - X15 - Adaptive Cruise Control w/o Display (Bendix)

LoneStar - X15 - Adaptive Cruise Control w/o Display (Bendix) Design 182

LoneStar - X15 - Adaptive Cruise Control (Bendix - Fusion W/O DIU & N/ Safety Direct & Tweeters)

LoneStar - X15 - Adaptive Cruise Control (Bendix - Fusion W/O DIU & N/ Safety Direct & Tweeters) Design 183

LoneStar - X15 - Adaptive Cruise Control (Bendix - Fusion W/O DIU & W/ Safety Direct & Reg Speakers) Option 1

LoneStar - X15 - Adaptive Cruise Control (Bendix - Fusion W/O DIU & W/ Safety Direct & Reg Speakers) Option 1 Design 184

LoneStar - X15 - Adaptive Cruise Control (Bendix - Fusion W/O DIU & W/ Safety Direct & Reg Speakers) Option 2

LoneStar - X15 - Adaptive Cruise Control (Bendix - Fusion W/O DIU & W/ Safety Direct & Reg Speakers) Option 2 Design 185

LoneStar - X15 - Adaptive Cruise Control (Bendix - Fusion W/O DIU & W/ Safety Direct & W/ Tweeters)

LoneStar - X15 - Adaptive Cruise Control (Bendix - Fusion W/O DIU & W/ Safety Direct & W/ Tweeters) Design 186

LT/RH - X15/A26 - Adaptive Cruise Control w/o Display (Bendix)

LT/RH - X15/A26 - Adaptive Cruise Control w/o Display (Bendix) Design 187

LT/RH - X15/A26 - Adaptive Cruise Control (Bendix - Fusion W/O DIU & N/ Safety Direct & Reg Speakers)

LT/RH - X15/A26 - Adaptive Cruise Control (Bendix - Fusion W/O DIU & N/ Safety Direct & Reg Speakers) Design 188

LT/RH - X15/A26 - Adaptive Cruise Control (Bendix - Fusion W/O DIU & N/ Safety Direct & Tweeters)

LT/RH - X15/A26 - Adaptive Cruise Control (Bendix - Fusion W/O DIU & N/ Safety Direct & Tweeters) Design 189

LT/RH - X15/A26 - Adaptive Cruise Control (Bendix - Fusion W/O DIU & W/ Safety Direct & Reg Speakers)

LT/RH - X15/A26 - Adaptive Cruise Control (Bendix - Fusion W/O DIU & W/ Safety Direct & Reg Speakers) Design 190

LT/RH - X15/A26 - Adaptive Cruise Control (Bendix - Fusion W/O DIU & W/ Safety Direct & W/ Tweeters)

LT/RH - X15/A26 - Adaptive Cruise Control (Bendix - Fusion W/O DIU & W/ Safety Direct & W/ Tweeters) Design 191

LoneStar - X15 - Adaptive Cruise Control w/o Display (Wabco)

LoneStar - X15 - Adaptive Cruise Control w/o Display (Wabco) Design 192

LT/RH - X15/A26 - Adaptive Cruise Control w/o Display (Wabco)

LT/RH - X15/A26 - Adaptive Cruise Control w/o Display (Wabco) Design 193

LT/RH/LoneStar - X15/A26 - Analytic Cruise Control

LT/RH/LoneStar - X15/A26 - Analytic Cruise Control Design 194

LT/RH - X15/A26 - 10 PIN ClockSpring

LT/RH - X15/A26 - 10 PIN ClockSpring Design 195

LT/RH/LoneStar - X15/A26 - Vehicle Speed Control (Cruise Control) 4 - PIN

LT/RH/LoneStar - X15/A26 - Vehicle Speed Control (Cruise Control) 4 - PIN Design 196

LT/RH/LoneStar - X15/A26 - Door Ajar Reminder (Entry/Exit)

LT/RH/LoneStar - X15/A26 - Door Ajar Reminder (Entry/Exit) Design 197

LT/RH/LoneStar - X15/A26 - Power Door Locks

LT/RH/LoneStar - X15/A26 - Power Door Locks Design 198

LT/RH - X15/A26 - Mirrors (Heat) [Switch Pack Actuated Relay Driven]

LT/RH - X15/A26 - Mirrors (Heat) [Switch Pack Actuated Relay Driven] Design 199

LT/RH/LoneStar - X15/A26 - Heated Mirrors (Door Pod Actuated Cab and Hood Mounted)

LT/RH/LoneStar - X15/A26 - Heated Mirrors (Door Pod Actuated Cab and Hood Mounted) Design 200

LT/RH/LoneStar - X15/A26 - Heated Mirrors (Door Pod Actuated Cab Mounted)

LT/RH/LoneStar - X15/A26 - Heated Mirrors (Door Pod Actuated Cab Mounted) Design 201

LT/RH/LoneStar - X15/A26 - Mirrors (Power) [Door Pod Actuated]

LT/RH/LoneStar - X15/A26 - Mirrors (Power) [Door Pod Actuated] Design 202

LT/RH/LoneStar - X15/A26 - Mirror Lighting (Turns without Door Pods)

LT/RH/LoneStar - X15/A26 - Mirror Lighting (Turns without Door Pods) Design 203

LT/RH/LoneStar - X15/A26 - Mirror Lighting (Turns with Door Pods)

LT/RH/LoneStar - X15/A26 - Mirror Lighting (Turns with Door Pods) Design . . . 204

LT/RH/LoneStar - X15/A26 - Power Windows

LT/RH/LoneStar - X15/A26 - Power Windows Design 205

LoneStar - X15 - City Horn W/ 10PIN CLK W/O RKA

LoneStar - X15 - City Horn W/ 10PIN CLK W/O RKA Design 206

LoneStar - X15 - City Horn W/ 10PIN CLK W/RKA

LoneStar - X15 - City Horn W/ 10PIN CLK W/RKA Design 207

LoneStar - X15 - City Horn W/ 4PIN CLK W/O RKA

LoneStar - X15 - City Horn W/ 4PIN CLK W/O RKA Design 208

LoneStar - X15 - City Horn W/ 4PIN CLK W/RKA

LoneStar - X15 - City Horn W/ 4PIN CLK W/RKA Design 209

LT/RH - X15/A26 - City Horn W/ 10PIN CLK W/O RKA

LT/RH - X15/A26 - City Horn W/ 10PIN CLK W/O RKA Design 210

LT/RH - X15/A26 - City Horn W/ 10PIN CLK W/RKA

LT/RH - X15/A26 - City Horn W/ 10PIN CLK W/RKA Design 211

LT/RH - X15/A26 - City Horn W/ 4PIN CLK W/O RKA

LT/RH - X15/A26 - City Horn W/ 4PIN CLK W/O RKA Design 212

LT/RH - X15/A26 - City Horn W/ 4PIN CLK W/RKA

LT/RH - X15/A26 - City Horn W/ 4PIN CLK W/RKA Design 213

LT/RH LoneStar - X15/A26 - Fan - Sleeper/Bunk

LT/RH LoneStar - X15/A26 - Fan - Sleeper/Bunk Design 214

LT/RH/LoneStar - X15/A26 - (Rand Mcnallly) GPS Display

LT/RH/LoneStar - X15/A26 - (Rand Mcnallly) GPS Display Design 215

LT/RH/LoneStar - X15/A26 - Multiplexed Switch Pack (Primary Switch)

LT/RH/LoneStar - X15/A26 - Multiplexed Switch Pack (Primary Switch) Design 216

LT/RH/LoneStar - X15/A26 - Real Time Clock (RTC) (Standard)

LT/RH/LoneStar - X15/A26 - Real Time Clock (RTC) (Standard) Design 217

LT/RH/LoneStar - X15/A26 - Cabinet Refrigerator N/Relay

LT/RH/LoneStar - X15/A26 - Cabinet Refrigerator N/Relay Design 218

LT/RH/LoneStar - X15/A26 - Cabinet Refrigerator W/Relay

LT/RH/LoneStar - X15/A26 - Cabinet Refrigerator W/Relay Design 219

LT/RH/LoneStar - X15/A26 - Underbunk Refrigerator N/Relay

LT/RH/LoneStar - X15/A26 - Underbunk Refrigerator N/Relay Design 220

LT/RH/LoneStar - X15/A26 - Remote Keyless Access

LT/RH/LoneStar - X15/A26 - Remote Keyless Access Design 221

LT/RH/LoneStar - X15/A26 - Telematics (DRIVERTECH DAYCAB W/ J1939)

LT/RH/LoneStar - X15/A26 - Telematics (DRIVERTECH DAYCAB W/ J1939) Design 222

LT/RH/LoneStar - X15/A26 - Telematics (DRIVERTECH SLEEPER W/ J1939)

LT/RH/LoneStar - X15/A26 - Telematics (DRIVERTECH SLEEPER W/ J1939) Design 223

LT/RH/LoneStar - X15/A26 - Antenna (Film Antenna Sleeper Cab OTAPM and Radio)

LT/RH/LoneStar - X15/A26 - Antenna (Film Antenna Sleeper Cab OTAPM and Radio) Design 224

LT/RH/LoneStar - X15/A26 - Antenna (Shark Fin Day Cab OTAPM and Radio)

LT/RH/LoneStar - X15/A26 - Antenna (Shark Fin Day Cab OTAPM and Radio) Design 225

LT/RH/LoneStar - X15/A26 - Navistar Telematics Module - Programming

LT/RH/LoneStar - X15/A26 - Navistar Telematics Module - Programming Design 226

LT/RH/LoneStar - X15/A26 - Navistar Telematics Module - Wiring

LT/RH/LoneStar - X15/A26 - Navistar Telematics Module - Wiring Design 227

LT/RH/LoneStar - X15/A26 - Telematics (OMNIVISION MD)

LT/RH/LoneStar - X15/A26 - Telematics (OMNIVISION MD) Design 228

LT/RH/LoneStar - X15/A26 - Telematics (OMNIVISION W/ J1939 & PANIC BUTTON)

LT/RH/LoneStar - X15/A26 - Telematics (OMNIVISION W/ J1939 & PANIC BUTTON) Design 230

LT/RH/LoneStar - X15/A26 - Telematics:OnCommand Telematics Module

LT/RH/LoneStar - X15/A26 - Telematics:OnCommand Telematics Module Design 232

LT/RH/LoneStar - X15/A26 - Telematics (PEOPLE NET DAYCAB)

LT/RH/LoneStar - X15/A26 - Telematics (PEOPLE NET DAYCAB) Design 233

LT/RH/LoneStar - X15/A26 - Telematics (PEOPLE NET SLEEPER)

LT/RH/LoneStar - X15/A26 - Telematics (PEOPLE NET SLEEPER) Design . . . 234

LT/RH/LoneStar - X15/A26 - Telematics QUALCOMM IMCT DAYCAB With MVPC

LT/RH/LoneStar - X15/A26 - Telematics QUALCOMM IMCT DAYCAB With MVPC Design 235

LT/RH/LoneStar - X15/A26 - Telematics QUALCOMM IMCT DAYCAB With MVPC & PANIC BUTTON

LT/RH/LoneStar - X15/A26 - Telematics QUALCOMM IMCT DAYCAB With MVPC & PANIC BUTTON Design 236

LT/RH/LoneStar - X15/A26 - Telematics QUALCOMM IMCT DAYCAB With PANIC BUTTON

LT/RH/LoneStar - X15/A26 - Telematics QUALCOMM IMCT DAYCAB With PANIC BUTTON Design 237

LT/RH/LoneStar - X15/A26 - Telematics QUALCOMM IMCT MD

LT/RH/LoneStar - X15/A26 - Telematics QUALCOMM IMCT MD Design 239

LT/RH/LoneStar - X15/A26 - Telematics QUALCOMM TMCT

LT/RH/LoneStar - X15/A26 - Telematics QUALCOMM TMCT Design 241

LT/RH/LoneStar - X15/A26 - Telematics QUALCOMM TMCT With PANIC BUTTON

LT/RH/LoneStar - X15/A26 - Telematics QUALCOMM TMCT With PANIC BUTTON Design 242

LT/RH/LoneStar - X15/A26 - Telematics (QUALCOMM MCP50)

LT/RH/LoneStar - X15/A26 - Telematics (QUALCOMM MCP50) Design 243

LT/RH/LoneStar - X15/A26 - Telematics (QUALCOMM MCT w/o Tracs)

LT/RH/LoneStar - X15/A26 - Telematics (QUALCOMM MCT w/o Tracs) Design 244

LT/RH/LoneStar - X15/A26 - Telematics (QUALCOMM MCT w/ TRACS)

LT/RH/LoneStar - X15/A26 - Telematics (QUALCOMM MCT w/ TRACS) Design 245

LT/RH/LoneStar - X15/A26 - Telematics (TRIPMASTER DAYCAB)

LT/RH/LoneStar - X15/A26 - Telematics (TRIPMASTER DAYCAB) Design . . . 246

LT/RH/LoneStar - X15/A26 - Telematics (TRIPMASTER SLEEPER)

LT/RH/LoneStar - X15/A26 - Telematics (TRIPMASTER SLEEPER) Design . . 247

LT/RH/LoneStar - X15/A26 - Theft Deterrent (Standard J1939 Mux SW)

LT/RH/LoneStar - X15/A26 - Theft Deterrent (Standard J1939 Mux SW) Design 248

LoneStar - X15 - Tire Pressure (TPMS) (US & Canada)

LoneStar - X15 - Tire Pressure (TPMS) (US & Canada) Design 249

LT/RH - X15/A26 - Tire Pressure (TPMS) (US & Canada)

LT/RH - X15/A26 - Tire Pressure (TPMS) (US & Canada) Design 250

LT/RH/LoneStar - X15/A26 - Single USB

LT/RH/LoneStar - X15/A26 - Single USB Design 251

LT/RH/LoneStar - X15/A26 - Two USB

LT/RH/LoneStar - X15/A26 - Two USB Design 252

LT/RH/LoneStar - Vehicle Accessory Connector - 0008XMB

LT/RH/LoneStar - Vehicle Accessory Connector - 0008XMB Design 254

LT/RH/LoneStar - X15/A26 - Vehicle Sleep Mode

LT/RH/LoneStar - X15/A26 - Vehicle Sleep Mode Design 255

LT/RH/LoneStar - X15/A26 - DPF Regen Switch Only

LT/RH/LoneStar - X15/A26 - DPF Regen Switch Only Design 256

LT/RH/LoneStar - X15/A26 - DPF With Monostable Inhibit Switch

LT/RH/LoneStar - X15/A26 - DPF With Monostable Inhibit Switch Design 257

LT/RH/LoneStar - X15/A26 - DPF With/ Bi-Stable Inhibit Switch

LT/RH/LoneStar - X15/A26 - DPF With/ Bi-Stable Inhibit Switch Design 258

LT/RH - A26 - Selective Catalytic Reduction (SCR)

LT/RH - A26 - Selective Catalytic Reduction (SCR) Design 259

LT/RH/LoneStar - X15 - Selective Catalytic Reduction (SCR)

LT/RH/LoneStar - X15 - Selective Catalytic Reduction (SCR) Design 265

LT/RH/LoneStar - X15/A26 - Adjustable Engine Speed Control (PTO) 10-PIN ClockSpring

LT/RH/LoneStar - X15/A26 - Adjustable Engine Speed Control (PTO) 10-PIN ClockSpring Design 271

LT/RH/LoneStar - X15/A26 - Adjustable Engine Speed Control (PTO) 4-pin Clockspring

LT/RH/LoneStar - X15/A26 - Adjustable Engine Speed Control (PTO) 4-pin Clockspring Design 272

LoneStar - X15 - Body Builder Lighting - (BOC EOF In Cab) (8HAB 8HAE 8HAU) (Automatic)

LoneStar - X15 - Body Builder Lighting - (BOC EOF In Cab) (8HAB 8HAE 8HAU) (Automatic) Design 273

LT/RH - X15/A26 - Body Builder Lighting - (BOC EOF In Cab) (8HAB 8HAE 8HAU) (Automatic)

LT/RH - X15/A26 - Body Builder Lighting - (BOC EOF In Cab) (8HAB 8HAE 8HAU) (Automatic) Design 275

LT/RH/LoneStar - X15/A26 - Body Builder Lighting - (Blunt Cut)

LT/RH/LoneStar - X15/A26 - Body Builder Lighting - (Blunt Cut) Design 277

LoneStar - X15 - Body Builder Lighting - (BOC EOF In Cab) (8HAB 8HAE 8HAU) (Manual)

LoneStar - X15 - Body Builder Lighting - (BOC EOF In Cab) (8HAB 8HAE 8HAU) (Manual) Design 279

LT/RH - A26 - Body Builder Lighting - (BOC EOF In Cab) (8HAB 8HAE 8HAU) (Manual)

LT/RH - A26 - Body Builder Lighting - (BOC EOF In Cab) (8HAB 8HAE 8HAU) (Manual) Design 281

LT/RH - X15 - Body Builder Lighting - (BOC EOF In Cab) (8HAB 8HAE 8HAU) (Manual)

LT/RH - X15 - Body Builder Lighting - (BOC EOF In Cab) (8HAB 8HAE 8HAU) (Manual) Design 285

LT/RH A26 - Body Builder - Powertrain_MX1

LT/RH A26 - Body Builder - Powertrain_MX1 Design 287

LT/RH/LoneStar - X15/A26 - DLB - Remote Power Module (2 RPM w/ Switch Packs)

LT/RH/LoneStar - X15/A26 - DLB - Remote Power Module (2 RPM w/ Switch Packs) Design 288

LT/RH A26 - Transmission (TC10 Series A65 w/Body Builder)

LT/RH A26 - Transmission (TC10 Series A65 w/Body Builder) Design 289

LT/RH/LoneStar X15 - Transmission (TC10 Series A65 w/Body Builder)

LT/RH/LoneStar X15 - Transmission (TC10 Series A65 w/Body Builder) Design 290

LT/RH - A26 - Transmission Power Take Off Dual PTO with Clutch Interlock

LT/RH - A26 - Transmission Power Take Off Dual PTO with Clutch Interlock Design 291

LT/RH - A26 - Transmission Power Take Off Dual Solenoid AUTO

LT/RH - A26 - Transmission Power Take Off Dual Solenoid AUTO Design 292

LT/RH - A26 - Transmission Power Take Off Option 1

LT/RH - A26 - Transmission Power Take Off Option 1 Design 293

LT/RH - A26 - Transmission Power Take Off Option 2

LT/RH - A26 - Transmission Power Take Off Option 2 Design 294

LT/RH - A26 - Transmission Power Take Off W/ Clutch Interlock

LT/RH - A26 - Transmission Power Take Off W/ Clutch Interlock Design 295

LT/RH/LoneStar - X15 - Transmission Power Take Off

LT/RH/LoneStar - X15 - Transmission Power Take Off Design 296

LT/RH/LoneStar - X15 - Transmission Power Take Off Dual PTO with Clutch Interlock MANUAL

LT/RH/LoneStar - X15 - Transmission Power Take Off Dual PTO with Clutch Interlock MANUAL Design 297

LT/RH/LoneStar - X15 - Transmission Power Take Off Dual Solenoid AUTO

LT/RH/LoneStar - X15 - Transmission Power Take Off Dual Solenoid AUTO Design 298

LT/RH/LoneStar - X15 - Transmission Power Take Off W/ Clutch Interlock

LT/RH/LoneStar - X15 - Transmission Power Take Off W/ Clutch Interlock Design 299

LT/RH/LoneStar - X15 - Transmission SINGLE Power Take Off MANUAL

LT/RH/LoneStar - X15 - Transmission SINGLE Power Take Off MANUAL Design 300

LT/RH/LoneStar - X15/A26 - Dual Air Dryers

LT/RH/LoneStar - X15/A26 - Dual Air Dryers Design 301

LT/RH/LoneStar - X15/A26 - Left Side Air Dryer-Bendix

LT/RH/LoneStar - X15/A26 - Left Side Air Dryer-Bendix Design 303

LT/RH/LoneStar - X15/A26 - Drain Valve Heater

LT/RH/LoneStar - X15/A26 - Drain Valve Heater Design 305

LoneStar - X15 - Antilock Brake System (ABS) [Bendix 6 Channel Implementation]

LoneStar - X15 - Antilock Brake System (ABS) [Bendix 6 Channel Implementation] Design 306

LoneStar - X15 - Antilock Brake System (ABS)-BENDIX 4 Channel Implemenation

LoneStar - X15 - Antilock Brake System (ABS)-BENDIX 4 Channel Implemenation Design 309

LT/RH - X15/A26 - Antilock Brake System (ABS) BENDIX 4 Channel Implemenation

LT/RH - X15/A26 - Antilock Brake System (ABS) BENDIX 4 Channel Implemenation Design 313

LT/RH - X15/A26 - Antilock Brake System (ABS) Bendix 6 Channel Implementation

LT/RH - X15/A26 - Antilock Brake System (ABS) Bendix 6 Channel Implementation Design 317

LoneStar - X15 - Antilock Brake System (ABS) - Wabco 4 Channel Implementation

LoneStar - X15 - Antilock Brake System (ABS) - Wabco 4 Channel Implementation Design 320

LoneStar - X15 - Antilock Brake System - Wabco ABS 6 Channel Implementation

LoneStar - X15 - Antilock Brake System - Wabco ABS 6 Channel Implementation Design 324

LT/RH - X15/A26 - Antilock Brake System (ABS) - Wabco 4 Channel Implementation

LT/RH - X15/A26 - Antilock Brake System (ABS) - Wabco 4 Channel Implementation Design 327

LT/RH - X15/A26 - Antilock Brake System - Wabco ABS 6 Channel Implementation

LT/RH - X15/A26 - Antilock Brake System - Wabco ABS 6 Channel Implementation Design 331

LT/RH - X15/A26 - Park Brake Control (Monitoring) (W/Vehicle Speed)

LT/RH - X15/A26 - Park Brake Control (Monitoring) (W/Vehicle Speed) Design 334

LT/RH - X15/A26 - Park Brake Control (Monitoring)(GEN IV BCM)

LT/RH - X15/A26 - Park Brake Control (Monitoring)(GEN IV BCM) Design 335

LT/RH/LoneStar - X15/A26 - Park Brake Controls (Non Lever Park Brake)

LT/RH/LoneStar - X15/A26 - Park Brake Controls (Non Lever Park Brake) Design 336

LT/RH/LoneStar - X15/A26 - Park Brake Controls (with Alarm IGN ON/OFF)

LT/RH/LoneStar - X15/A26 - Park Brake Controls (with Alarm IGN ON/OFF) Design 337

LT/RH/LoneStar - X15/A26 - Park Brake Reminder (Non-Stationary) (CA2.0)

LT/RH/LoneStar - X15/A26 - Park Brake Reminder (Non-Stationary) (CA2.0) Design 338

LT/RH/LoneStar - X15/A26 - Park Brake Reminder (Stationary) (CA2.0)

LT/RH/LoneStar - X15/A26 - Park Brake Reminder (Stationary) (CA2.0) Design 339

LT/RH - X15/A26 - Bendix Stability Control For Tractor or Tractors with Trailer Tow

LT/RH - X15/A26 - Bendix Stability Control For Tractor or Tractors with Trailer Tow Design 340

LT/RH - X15/A26 - Bendix; Tractor or Towing Truck; W/ Air SUSP; J1939 Driven Lamp

LT/RH - X15/A26 - Bendix; Tractor or Towing Truck; W/ Air SUSP; J1939 Driven Lamp Design 342

LT/RH - X15/A26 - Wabco Full Stability Control

LT/RH - X15/A26 - Wabco Full Stability Control Design 344

LT/RH/LoneStar - X15/A26 - Traction Control (Bendix Controller)

LT/RH/LoneStar - X15/A26 - Traction Control (Bendix Controller) Design 346

LT/RH/LoneStar - X15/A26 - Traction Control (Bendix Controller) Option 2

LT/RH/LoneStar - X15/A26 - Traction Control (Bendix Controller) Option 2 Design 348

LT/RH/LoneStar - X15/A26 - Traction Control (Wabco Controller)

LT/RH/LoneStar - X15/A26 - Traction Control (Wabco Controller) Design 350

LT/RH/LoneStar - X15/A26 - Collision Avoidance System (Warning)

LT/RH/LoneStar - X15/A26 - Collision Avoidance System (Warning) Design . . . 353

LoneStar - X15 - Lane Departure Warning - (Bendix Fusion W/Safety Direct))(US & Canada)

LoneStar - X15 - Lane Departure Warning - (Bendix Fusion W/Safety Direct))(US & Canada) Design 354

LoneStar - X15 - Lane Departure Warning - (Bendix Fusion W/Safety Direct))(US & Canada)-

LoneStar - X15 - Lane Departure Warning - (Bendix Fusion W/Safety Direct))(US & Canada)- Design 355

LT/RH - X15/A26 - Land Departure Warning - (Bendix - AutoVue W/ Qualcomm Safety Direct)

LT/RH - X15/A26 - Land Departure Warning - (Bendix - AutoVue W/ Qualcomm Safety Direct) Design 356

LT/RH - X15/A26 - Lane Departure Warning - Bendix

LT/RH - X15/A26 - Lane Departure Warning - Bendix Design 357

LT/RH - X15/A26 - Lane Departure Warning - (Bendix Fusion W/Safety Direct))(US & Canada)

LT/RH - X15/A26 - Lane Departure Warning - (Bendix Fusion W/Safety Direct))(US & Canada) Design 358

LT/RH - X15/A26 - Lane Departure Warning - (Bendix - AutoVue N/ Qualcomm Safety Direct)

LT/RH - X15/A26 - Lane Departure Warning - (Bendix - AutoVue N/ Qualcomm Safety Direct) Design 359

LT/RH - X15/A26 - Lane Departure Warning (Mobileye Per-Wire)

LT/RH - X15/A26 - Lane Departure Warning (Mobileye Per-Wire) Design 360

LT/RH - X15/A26 - Lane Departure Warning - (Wabco OnLane 2.0 w/ roof speakers)

LT/RH - X15/A26 - Lane Departure Warning - (Wabco OnLane 2.0 w/ roof speakers) Design 361

LT/RH - X15/A26 - Lane Departure Warning - (Wabco OnLane)

LT/RH - X15/A26 - Lane Departure Warning - (Wabco OnLane) Design 362

LT/RH - X15 - Accelerator Interlock W/ Park Brake Controls

LT/RH - X15 - Accelerator Interlock W/ Park Brake Controls Design 363

LT/RH A26 - Coolant Level Monitoring

LT/RH A26 - Coolant Level Monitoring Design 364

LT/RH X15 - Coolant Level Monitoring

LT/RH X15 - Coolant Level Monitoring Design 365

LT/RH/LoneStar - X15 - Coolant Level Monitoring

LT/RH/LoneStar - X15 - Coolant Level Monitoring Design 366

LT/RH A26 - Cooling Fan Control Without Switch

LT/RH A26 - Cooling Fan Control Without Switch Design 367

LT/RH A26 - Cooling Fan Control With Switch

LT/RH A26 - Cooling Fan Control With Switch Design 368

LoneStar - X15 - Cooling Fan Control Without Switch

LoneStar - X15 - Cooling Fan Control Without Switch Design 369

LoneStar - X15 - Cooling Fan Control With Switch

LoneStar - X15 - Cooling Fan Control With Switch Design 370

LT/RH X15 - Cooling Fan Control Without Switch

LT/RH X15 - Cooling Fan Control Without Switch Design 371

LT/RH X15 - Cooling Fan Control With Switch

LT/RH X15 - Cooling Fan Control With Switch Design 372

LT/RH/LoneStar - X15/A26 - Engine Brake (CA2.0; Mux Switch)

LT/RH/LoneStar - X15/A26 - Engine Brake (CA2.0; Mux Switch) Design 373

LT/RH/LoneStar - X15/A26 - Engine Brake (CA2.0; Stalk Shifter)

LT/RH/LoneStar - X15/A26 - Engine Brake (CA2.0; Stalk Shifter) Design 374

LT/RH/LoneStar - X15/A26 - Engine/Exhaust Brake

LT/RH/LoneStar - X15/A26 - Engine/Exhaust Brake Design 375

LT/RH/LoneStar - X15/A26 - EGNR Diagnostic Connector

LT/RH/LoneStar - X15/A26 - EGNR Diagnostic Connector Design 376

LT/RH/LoneStar - X15/A26 - Engine Diagnostic Connector

LT/RH/LoneStar - X15/A26 - Engine Diagnostic Connector Design 377

LT/RH/LoneStar - X15/A26 - Engine Idle Increment/Decrement (Steering Wheel Switch - 10 Pin)

LT/RH/LoneStar - X15/A26 - Engine Idle Increment/Decrement (Steering Wheel Switch - 10 Pin) Design 378

LT/RH/LoneStar - X15/A26 - Engine Idle Increment/Decrement (Steering Wheel Switch - 4 Pin)

LT/RH/LoneStar - X15/A26 - Engine Idle Increment/Decrement (Steering Wheel Switch - 4 Pin) Design 379

LT/RH - X15/A26 - Engine Block Heater (Purchased Assembly)

LT/RH - X15/A26 - Engine Block Heater (Purchased Assembly) Design 380

LT/RH - X15/A26 - Engine Fuel and Block Heaters (Purchased Assembly)

LT/RH - X15/A26 - Engine Fuel and Block Heaters (Purchased Assembly) Design 381

LT/RH - X15/A26 - Engine Oil and Block Heaters (Purchased Assembly)

LT/RH - X15/A26 - Engine Oil and Block Heaters (Purchased Assembly) Design 382

LT/RH - X15/A26 - Engine Oil, Fuel, and Block Heaters (Purchased Assembly)

LT/RH - X15/A26 - Engine Oil, Fuel, and Block Heaters (Purchased Assembly) Design 383

LT/RH - A26 - Interface Connector

LT/RH - A26 - Interface Connector Design 384

LT/RH A26 - Starting Aid (Flame Start)

LT/RH A26 - Starting Aid (Flame Start) Design 385

LT/RH/LoneStar - X15 - Starting Aid (Ether Start)

LT/RH/LoneStar - X15 - Starting Aid (Ether Start) Design 386

LT/RH/LoneStar - A26 - Vehicle Acceleration (w/ Two PWR Two GND & Two STS)

LT/RH/LoneStar - A26 - Vehicle Acceleration (w/ Two PWR Two GND & Two STS) Design 387

LT/RH/LoneStar - X15 - Vehicle Acceleration (w/ Two PWR Two GND & Two STS)

LT/RH/LoneStar - X15 - Vehicle Acceleration (w/ Two PWR Two GND & Two STS) Design 388

LT/RH/LoneStar - X15/A26 - Vehicle Speed Limit Override

LT/RH/LoneStar - X15/A26 - Vehicle Speed Limit Override Design 389

LT/RH/LoneStar - X15/A26 - Air Shield Lighting w/ One Light

LT/RH/LoneStar - X15/A26 - Air Shield Lighting w/ One Light Design 390

LT/RH/LoneStar - X15/A26 - Automatic Lighting (Dual Sensor Solar/Twilight)

LT/RH/LoneStar - X15/A26 - Automatic Lighting (Dual Sensor Solar/Twilight) Design 392

LT/RH/LoneStar - X15/A26 - Automatic Lighting (Single Sensor Twilight)

LT/RH/LoneStar - X15/A26 - Automatic Lighting (Single Sensor Twilight) Design 393

LT/RH A26 - Backup Light (Dual Reverse Light) Allison-TC10

LT/RH A26 - Backup Light (Dual Reverse Light) Allison-TC10 Design 394

LT/RH A26 - Backup Light (Reverse Light) Allison TC10

LT/RH A26 - Backup Light (Reverse Light) Allison TC10 Design 396

LT/RH A26 - Backup Light (Single Reverse Light) Allison TC10

LT/RH A26 - Backup Light (Single Reverse Light) Allison TC10 Design 398

LT/RH A26 - Backup Light (Single Reverse Light) W/Allison TC10

LT/RH A26 - Backup Light (Single Reverse Light) W/Allison TC10 Design 400

LT/RH A26 - Backup Light (Dual Reverse Light) Allison-3K

LT/RH A26 - Backup Light (Dual Reverse Light) Allison-3K Design 402

LT/RH A26 - Backup Light (Reverse Light) Allison-3K

LT/RH A26 - Backup Light (Reverse Light) Allison-3K Design 404

LT/RH A26 - Backup Light (Single Reverse Light) Allison 3K

LT/RH A26 - Backup Light (Single Reverse Light) Allison 3K Design 406

LT/RH A26 - Backup Light (Single Reverse Light) W/Allison 3K

LT/RH A26 - Backup Light (Single Reverse Light) W/Allison 3K Design 408

LT/RH A26 - Backup Lights (Dual Reverse Light) Eaton/Manual Trans

LT/RH A26 - Backup Lights (Dual Reverse Light) Eaton/Manual Trans Design . 410

LT/RH A26 - Backup Lights (Reverse Lights) Eaton/Manual Trans

LT/RH A26 - Backup Lights (Reverse Lights) Eaton/Manual Trans Design 414

LT/RH A26 - Backup Lights (Reverse Light) Eaton/Manual Trans

LT/RH A26 - Backup Lights (Reverse Light) Eaton/Manual Trans Design 418

LT/RH A26 - Backup Lights (Single Reverse Light) Eaton/Manual Trans

LT/RH A26 - Backup Lights (Single Reverse Light) Eaton/Manual Trans Design 422

LT/RH A26 - Backup Lights (Single Reverse Light) Eaton/Manual Trans/

LT/RH A26 - Backup Lights (Single Reverse Light) Eaton/Manual Trans/ Design 426

LT/RH A26 - Backup Light Endurant Trans

LT/RH A26 - Backup Light Endurant Trans Design 430

LT/RH A26 - Backup Light (Dual Reverse Light)

LT/RH A26 - Backup Light (Dual Reverse Light) Design 432

LT/RH A26 - Backup Light (Single Reverse Light)

LT/RH A26 - Backup Light (Single Reverse Light) Design 434

LT/RH A26 - Backup Light (Single Reverse Light) Endurant

LT/RH A26 - Backup Light (Single Reverse Light) Endurant Design 436

LT/RH X15 - Backup Light (Dual Reverse Light) Allison-TC10

LT/RH X15 - Backup Light (Dual Reverse Light) Allison-TC10 Design 438

LT/RH X15 - Backup Light (Reverse Light) Allison TC10

LT/RH X15 - Backup Light (Reverse Light) Allison TC10 Design 440

LT/RH X15 - Backup Light (Single Reverse Light) Allison TC10

LT/RH X15 - Backup Light (Single Reverse Light) Allison TC10 Design 442

LT/RH/LoneStar X15 - Backup Light (Single Reverse Light) W/Allison TC10

LT/RH/LoneStar X15 - Backup Light (Single Reverse Light) W/Allison TC10 Design 444

LT/RH X15 - Backup Lights (Dual Reverse Light) Eaton/Manual Trans

LT/RH X15 - Backup Lights (Dual Reverse Light) Eaton/Manual Trans Design .446

LT/RH X15 - Backup Lights (Reverse Lights) Eaton/Manual Trans

LT/RH X15 - Backup Lights (Reverse Lights) Eaton/Manual Trans Design 448

LT/RH X15 - Backup Lights (Reverse Light) Eaton/Manual Trans

LT/RH X15 - Backup Lights (Reverse Light) Eaton/Manual Trans Design 450

LT/RH X15 - Backup Lights (Single Reverse Light) Eaton/Manual Trans

LT/RH X15 - Backup Lights (Single Reverse Light) Eaton/Manual Trans Design 452

LT/RH/LoneStar X15 - Backup Lights (Single Reverse Light) Eaton/Manual Trans

LT/RH/LoneStar X15 - Backup Lights (Single Reverse Light) Eaton/Manual Trans Design 454

LT/RH X15 - Backup Light (Dual Reverse LT) Procosion/Endurant

LT/RH X15 - Backup Light (Dual Reverse LT) Procosion/Endurant Design 456

LT/RH X15 - Backup Light (Single Reverse Light) Endurant

LT/RH X15 - Backup Light (Single Reverse Light) Endurant Design 458

LT/RH/LoneStar X15 - Backup Light Endurant

LT/RH/LoneStar X15 - Backup Light Endurant Design 460

LT/RH/LoneStar X15 - Backup Light (Single Reverse Light) Endurant

LT/RH/LoneStar X15 - Backup Light (Single Reverse Light) Endurant Design . . 462

LT/RH/LoneStar - X15/A26 - Beacon/Strobe Light

LT/RH/LoneStar - X15/A26 - Beacon/Strobe Light Design 464

LT/RH/LoneStar - X15/A26 - Brake Switch

LT/RH/LoneStar - X15/A26 - Brake Switch Design 466

LT/RH/LoneStar - X15/A26 - Clearance and Identification Lights (W/ Sunshade)

LT/RH/LoneStar - X15/A26 - Clearance and Identification Lights (W/ Sunshade) Design 467

LT/RH/LoneStar - X15/A26 - Daytime Running Lights

LT/RH/LoneStar - X15/A26 - Daytime Running Lights Design 468

LT/RH - X15/A26 - Directional Signal (Turn) With HEADLIGHTS

LT/RH - X15/A26 - Directional Signal (Turn) With HEADLIGHTS Design 469

LT/RH - X15/A26 - Directional Signal (Turn) With HEADLIGHTS (HAL-125)

LT/RH - X15/A26 - Directional Signal (Turn) With HEADLIGHTS (HAL-125) Design 470

RH - X15/A26 - Directional Signal (Turn) W/HEADLIGHTS

RH - X15/A26 - Directional Signal (Turn) W/HEADLIGHTS Design 471

LT/RH - X15/A26 - Directional Signal (Turn) With HEADLIGHTS Option2

LT/RH - X15/A26 - Directional Signal (Turn) With HEADLIGHTS Option2 Design 472

LT/RH - X15/A26 - Directional Signal (Turn) With HEADLIGHTS (LED-125)

LT/RH - X15/A26 - Directional Signal (Turn) With HEADLIGHTS (LED-125) Design 473

LT/RH/LoneStar - X15/A26 - Exterior Lamp Check

LT/RH/LoneStar - X15/A26 - Exterior Lamp Check Design 474

LT/RH/LoneStar - X15/A26 - Exterior Lamp Reminder

LT/RH/LoneStar - X15/A26 - Exterior Lamp Reminder Design 475

LoneStar - X15/A26 - Front Fog Lamps

LoneStar - X15/A26 - Front Fog Lamps Design 476

LT/RH - X15/A26 - Fog Lights Lamps

LT/RH - X15/A26 - Fog Lights Lamps Design 477

LT/RH/LoneStar - X15/A26 - Hazard Warning (CA 2.0)

LT/RH/LoneStar - X15/A26 - Hazard Warning (CA 2.0) Design 478

LoneStar - X15 - Headlights Halogen N/INT N/LOWW

LoneStar - X15 - Headlights Halogen N/INT N/LOWW Design 479

LoneStar - X15 - Headlights Halogen N/INT W/LOWW

LoneStar - X15 - Headlights Halogen N/INT W/LOWW Design 480

LoneStar - X15 - Headlights Halogen W/INT N/LOWW

LoneStar - X15 - Headlights Halogen W/INT N/LOWW Design 481

LoneStar - X15 - Headlights Halogen W/INT W/LOWW

LoneStar - X15 - Headlights Halogen W/INT W/LOWW Design 482

LT - X15/A26 - Headlights Halogen N/INT N/LOWW

LT - X15/A26 - Headlights Halogen N/INT N/LOWW Design 483

LT - X15/A26 - Headlights Halogen N/INT W/LOWW

LT - X15/A26 - Headlights Halogen N/INT W/LOWW Design 484

LT - X15/A26 - Headlights Halogen W/INT N/LOWW

LT - X15/A26 - Headlights Halogen W/INT N/LOWW Design 485

LT - X15/A26 - Headlights Halogen W/INT W/LOWW

LT - X15/A26 - Headlights Halogen W/INT W/LOWW Design 486

LT - X15/A26 - Headlights LED N/ INT N/LOWW

LT - X15/A26 - Headlights LED N/ INT N/LOWW Design 487

LT - X15/A26 - Headlights LED N/ INT W/LOWW

LT - X15/A26 - Headlights LED N/ INT W/LOWW Design 488

LT - X15/A26 - Headlights LED W/INT N/LOWW

LT - X15/A26 - Headlights LED W/INT N/LOWW Design 489

LT - X15/A26 - Headlights LED W/INT W/LOWW

LT - X15/A26 - Headlights LED W/INT W/LOWW Design 490

RH - X15/A26 - Headlights Halogen N/INT N/LOWW

RH - X15/A26 - Headlights Halogen N/INT N/LOWW Design 491

RH - X15/A26 - Headlights Halogen N/INT W/LOWW

RH - X15/A26 - Headlights Halogen N/INT W/LOWW Design 492

RH - X15/A26 - Headlights Halogen W/INT N/LOWW

RH - X15/A26 - Headlights Halogen W/INT N/LOWW Design 493

RH - X15/A26 - Headlights Halogen W/INT W/LOWW

RH - X15/A26 - Headlights Halogen W/INT W/LOWW Design 494

RH - X15/A26 - Headlights LED N/INT N/LOWW LT

RH - X15/A26 - Headlights LED N/INT N/LOWW LT Design 495

RH - X15/A26 - Headlights LED N/INT W/LOWW LT

RH - X15/A26 - Headlights LED N/INT W/LOWW LT Design 496

RH - X15/A26 - Headlights LED W/INT N/LOWW LT

RH - X15/A26 - Headlights LED W/INT N/LOWW LT Design 497

RH - X15/A26 - Headlights LED W/INT W/LOWW LT

RH - X15/A26 - Headlights LED W/INT W/LOWW LT Design 498

LT/RH - X15/A26 - License Plate Light (Dual LED Lamp Tail Light) Option 1

LT/RH - X15/A26 - License Plate Light (Dual LED Lamp Tail Light) Option 1 Design 499

LT/RH - X15/A26 - License Plate Light (Dual LED Lamp Tail Light) Option 2

LT/RH - X15/A26 - License Plate Light (Dual LED Lamp Tail Light) Option 2 Design 501

LT/RH - X15/A26 - License Plate Light (Tail Light Single Assy.)Option 2

LT/RH - X15/A26 - License Plate Light (Tail Light Single Assy.)Option 2 Design 503

LT/RH - X15/A26 - License Plate Light (Tail Light Single Assy.) Option 1

LT/RH - X15/A26 - License Plate Light (Tail Light Single Assy.) Option 1 Design 505

LT/RH/LoneStar - X15/A26 - License Plate Light (Tail Light Single Assy.) Option 1

LT/RH/LoneStar - X15/A26 - License Plate Light (Tail Light Single Assy.) Option 1 Design 507

LT/RH/LoneStar - X15/A26 - License Plate Light (Tail Light Single Assy.) Option 2

LT/RH/LoneStar - X15/A26 - License Plate Light (Tail Light Single Assy.) Option 2 Design 509

LoneStar - X15/A26 - Marker Lights (Halogen)

LoneStar - X15/A26 - Marker Lights (Halogen) Design 511

LT/RH - X15/A26 - Marker Lights (With 113 Halogen)

LT/RH - X15/A26 - Marker Lights (With 113 Halogen) Design 512

LT/RH - X15/A26 - Marker Lights (With 125 Halogen)

LT/RH - X15/A26 - Marker Lights (With 125 Halogen) Design 513

LT/RH - X15/A26 - Marker Lights (With113 LED)

LT/RH - X15/A26 - Marker Lights (With113 LED) Design 514

LT/RH - X15/A26 - Marker Lights (With 125 LED)

LT/RH - X15/A26 - Marker Lights (With 125 LED) Design 515

LT/RH/LoneStar - X15/A26 - MARKER/PARK LIGHTS - W/Marker Interrupt 10pin CLCKSPRING

LT/RH/LoneStar - X15/A26 - MARKER/PARK LIGHTS - W/Marker Interrupt 10pin CLCKSPRING Design 516

LT/RH/LoneStar - X15/A26 - PARK LIGHTS - W/Marker Interrupt 4 pin clockspring

LT/RH/LoneStar - X15/A26 - PARK LIGHTS - W/Marker Interrupt 4 pin clockspring Design 517

LoneStar - X15 - Modesty Lighting W/ Day Cab W/ 2 Turn /0 Marker

LoneStar - X15 - Modesty Lighting W/ Day Cab W/ 2 Turn /0 Marker Design . . 518

LoneStar - X15 - Modesty Lighting W/ Sleeper W/ 4 Side Turns / 0 Marker

LoneStar - X15 - Modesty Lighting W/ Sleeper W/ 4 Side Turns / 0 Marker Design 519

LT/RH - X15/A26 - Modesty Lighting W/ Day Cab W/ 2 Turn /0 Marker

LT/RH - X15/A26 - Modesty Lighting W/ Day Cab W/ 2 Turn /0 Marker Design . 520

LT/RH - X15/A26 - Modesty Lighting W/ Sleeper W/ 4 Side Turns / 0 Marker

LT/RH - X15/A26 - Modesty Lighting W/ Sleeper W/ 4 Side Turns / 0 Marker Design 521

LT/RH - X15/A26 - Skirt Light Customer Supplied

LT/RH - X15/A26 - Skirt Light Customer Supplied Design 522

LT/RH/LoneStar - X15/A26 - Rear Lights Stop - Dual Assembly

LT/RH/LoneStar - X15/A26 - Rear Lights Stop - Dual Assembly Design 523

LT/RH/LoneStar - X15/A26 - Rear Lights Stop - Single Assembly Option 1

LT/RH/LoneStar - X15/A26 - Rear Lights Stop - Single Assembly Option 1 Design 525

LT/RH/LoneStar - X15/A26 - Rear Lights Stop - Single Assembly Option 2

LT/RH/LoneStar - X15/A26 - Rear Lights Stop - Single Assembly Option 2 Design 527

LT/RH/LoneStar - X15/A26 - Work Lights W/ Sw Pack - Customer Supplied W/O RKE W/AUTO REV

LT/RH/LoneStar - X15/A26 - Work Lights W/ Sw Pack - Customer Supplied W/O RKE W/AUTO REV Design 529

LT/RH/LoneStar - X15/A26 - Work Lights W/ Sw Pack - Customer Supplied W/ RKE W/AUTO REV

LT/RH/LoneStar - X15/A26 - Work Lights W/ Sw Pack - Customer Supplied W/ RKE W/AUTO REV Design 531

LT/RH - A26 - Work Lights W/ Sw Pack - Customer Supplied W/O RKE W/MAN REV

LT/RH - A26 - Work Lights W/ Sw Pack - Customer Supplied W/O RKE W/MAN REV Design 533

LT/RH - A26 - Work Lights W/ Sw Pack - Customer Supplied W/ RKE W/MAN REV

LT/RH - A26 - Work Lights W/ Sw Pack - Customer Supplied W/ RKE W/MAN REV Design 537

LT/RH/LoneStar X15 - Work Lights LED W/ Sw Pack - Day Cab W/O RKE W/MAN REV

LT/RH/LoneStar X15 - Work Lights LED W/ Sw Pack - Day Cab W/O RKE W/MAN REV Design 541

LT/RH - X15/A26 - Work Lights W/ Sw Pack - Customer Supplied

LT/RH - X15/A26 - Work Lights W/ Sw Pack - Customer Supplied Design 542

LT/RH/LoneStar - X15 - Work Lights W/ Sw Pack - Customer Supplied W/O RKE W/MAN REV

LT/RH/LoneStar - X15 - Work Lights W/ Sw Pack - Customer Supplied W/O RKE W/MAN REV Design 544

LT/RH/LoneStar - X15 - Work Lights W/ Sw Pack - Customer Supplied W/ RKE W/MAN REV

LT/RH/LoneStar - X15 - Work Lights W/ Sw Pack - Customer Supplied W/ RKE W/MAN REV Design 546

LT/RH/LoneStar - X15/A26 - Work Lights W/ Sw Pack - Customer Supplied

LT/RH/LoneStar - X15/A26 - Work Lights W/ Sw Pack - Customer Supplied Design 548

LT/RH/LoneStar - X15/A26 - Work Lights - LED W/ Sw Pack - Customer Supplied - Sleeper W/O RKE W/AUTO REV

LT/RH/LoneStar - X15/A26 - Work Lights - LED W/ Sw Pack - Customer Supplied - Sleeper W/O RKE W/AUTO REV Design 550

LT/RH/LoneStar - X15/A26 - Work Lights - LED W/ Sw Pack - Customer Supplied - Sleeper W/ RKE W/AUTO REV

LT/RH/LoneStar - X15/A26 - Work Lights - LED W/ Sw Pack - Customer Supplied - Sleeper W/ RKE W/AUTO REV Design 552

LT/RH - A26 - Work Lights - LED W/ Sw Pack - Customer Supplied - Sleeper W/O RKE W/MAN REV

LT/RH - A26 - Work Lights - LED W/ Sw Pack - Customer Supplied - Sleeper W/O RKE W/MAN REV Design 554

LT/RH - A26 - Work Lights - LED W/ Sw Pack - Customer Supplied - Sleeper W/ RKE W/MAN REV

LT/RH - A26 - Work Lights - LED W/ Sw Pack - Customer Supplied - Sleeper W/ RKE W/MAN REV Design 558

LT/RH/LoneStar - X15 - Work Lights - LED W/ Sw Pack - Customer Supplied - Sleeper W/O RKE W/MAN REV

LT/RH/LoneStar - X15 - Work Lights - LED W/ Sw Pack - Customer Supplied - Sleeper W/O RKE W/MAN REV Design 562

LT/RH/LoneStar - X15 - Work Lights - LED W/ Sw Pack - Customer Supplied - Sleeper W/ RKE W/MAN REV

LT/RH/LoneStar - X15 - Work Lights - LED W/ Sw Pack - Customer Supplied - Sleeper W/ RKE W/MAN REV Design 564

LT/RH/LoneStar - X15/A26 - Work Lights - LED W/ Sw Pack - Customer Supplied - Sleeper

LT/RH/LoneStar - X15/A26 - Work Lights - LED W/ Sw Pack - Customer Supplied - Sleeper Design 566

LT/RH/LoneStar - X15/A26 - Work Lights - LED W/ Sw Pack - Customer Supplied - Sleeper W/O RKE

LT/RH/LoneStar - X15/A26 - Work Lights - LED W/ Sw Pack - Customer Supplied - Sleeper W/O RKE Design 568

LT/RH/LoneStar - X15/A26 - Work Lights LED W/ Sw Pack - Day Cab W/O RKE W/AUTO REV

LT/RH/LoneStar - X15/A26 - Work Lights LED W/ Sw Pack - Day Cab W/O RKE W/AUTO REV Design 570

LT/RH/LoneStar - X15/A26 - Work Lights LED W/ Sw Pack - Day Cab W/ RKE W/AUTO REV

LT/RH/LoneStar - X15/A26 - Work Lights LED W/ Sw Pack - Day Cab W/ RKE W/AUTO REV Design 571

LT/RH/LoneStar - X15/A26 - Work Lights (2 Blunt Cuts Only W/O Relay) W/Backup W/Auto Trans (Allison and Endurant)

LT/RH/LoneStar - X15/A26 - Work Lights (2 Blunt Cuts Only W/O Relay) W/Backup W/Auto Trans (Allison and Endurant) Design 572

LT/RH - A26 - Work Lights LED W/ Sw Pack - Day Cab W/O RKE W/MAN REV

LT/RH - A26 - Work Lights LED W/ Sw Pack - Day Cab W/O RKE W/MAN REV Design 574

LT/RH - A26 - Work Lights LED W/ Sw Pack - Day Cab W/ RKE W/MAN REV

LT/RH - A26 - Work Lights LED W/ Sw Pack - Day Cab W/ RKE W/MAN REV Design 576

LT/RH - A26 - Work Lights (2 Blunt Cuts Only W/O Relay) W/Backup W/Manual Trans Day Cab

LT/RH - A26 - Work Lights (2 Blunt Cuts Only W/O Relay) W/Backup W/Manual Trans Day Cab Design 578

LT/RH/LoneStar - X15 - Work Lights (2 Blunt Cuts Only W/O Relay) W/Backup W/Manual Trans

LT/RH/LoneStar - X15 - Work Lights (2 Blunt Cuts Only W/O Relay) W/Backup W/Manual Trans Design 582

LT/RH/LoneStar X15 - Work Lights LED W/ Sw Pack - Day Cab W/ RKE W/MAN REV

LT/RH/LoneStar X15 - Work Lights LED W/ Sw Pack - Day Cab W/ RKE W/MAN REV Design 584

LT/RH/LoneStar - X15/A26 - Work Lights LED W/ Sw Pack - Day Cab

LT/RH/LoneStar - X15/A26 - Work Lights LED W/ Sw Pack - Day Cab Design . 585

LT/RH/LoneStar - X15/A26 - Work Lights LED W/ Sw Pack - Day Cab W/O RKE

LT/RH/LoneStar - X15/A26 - Work Lights LED W/ Sw Pack - Day Cab W/O RKE Design 586

LT/RH/LoneStar - X15/A26 - Work Lights (2 Blunt Cuts Only W/O Relay)

LT/RH/LoneStar - X15/A26 - Work Lights (2 Blunt Cuts Only W/O Relay) Design 587

LT/RH/LoneStar - X15/A26 - Work Lights -LED W/ Sw Pack - Sleeper W/O RKE W/AUTO REV

LT/RH/LoneStar - X15/A26 - Work Lights -LED W/ Sw Pack - Sleeper W/O RKE W/AUTO REV Design 589

LT/RH/LoneStar - X15/A26 - Work Lights -LED W/ Sw Pack - Sleeper W/ RKE W/AUTO REV

LT/RH/LoneStar - X15/A26 - Work Lights -LED W/ Sw Pack - Sleeper W/ RKE W/AUTO REV Design 590

LT/RH - A26 - Work Lights -LED W/ Sw Pack - Sleeper W/O RKE W/MAN REV

LT/RH - A26 - Work Lights -LED W/ Sw Pack - Sleeper W/O RKE W/MAN REV Design 591

LT/RH - A26 - Work Lights -LED W/ Sw Pack - Sleeper W/ RKE W/MAN REV

LT/RH - A26 - Work Lights -LED W/ Sw Pack - Sleeper W/ RKE W/MAN REV Design 593

LT/RH/LoneStar - X15 - Work Lights -LED W/ Sw Pack - Sleeper W/O RKE W/MAN REV

LT/RH/LoneStar - X15 - Work Lights -LED W/ Sw Pack - Sleeper W/O RKE W/MAN REV Design 595

LT/RH/LoneStar - X15 - Work Lights -LED W/ Sw Pack - Sleeper W/ RKE W/MAN REV

LT/RH/LoneStar - X15 - Work Lights -LED W/ Sw Pack - Sleeper W/ RKE W/MAN REV Design 596

LT/RH/LoneStar - X15/A26 - Work Lights -LED W/ Sw Pack - Sleeper

LT/RH/LoneStar - X15/A26 - Work Lights -LED W/ Sw Pack - Sleeper Design . 597

LT/RH/LoneStar - X15/A26 - Work Lights -LED W/ Sw Pack - Sleeper W/O RKE

LT/RH/LoneStar - X15/A26 - Work Lights -LED W/ Sw Pack - Sleeper W/O RKE Design 598

LT/RH/LoneStar - X15/A26 - Fifth Wheel Slide

LT/RH/LoneStar - X15/A26 - Fifth Wheel Slide Design 599

LT/RH/LoneStar - X15/A26 - Jaw Monitoring

LT/RH/LoneStar - X15/A26 - Jaw Monitoring Design 600

LT/RH/LoneStar - X15/A26 - Jaw Unlock Control W/ SOLENOIDS W/SWITCH PACKS

LT/RH/LoneStar - X15/A26 - Jaw Unlock Control W/ SOLENOIDS W/SWITCH PACKS Design 601

LT/RH/LoneStar - X15/A26 - Jaw Unlock Control (Standard)

LT/RH/LoneStar - X15/A26 - Jaw Unlock Control (Standard) Design 602

LoneStar - X15 - Fuel Heater (Vehicle Powered) (Davco)

LoneStar - X15 - Fuel Heater (Vehicle Powered) (Davco) Design 603

LT/RH - X15/A26 - Fuel Heater (Vehicle Powered) (Davco)

LT/RH - X15/A26 - Fuel Heater (Vehicle Powered) (Davco) Design 604

LT/RH - X15/A26 - Fuel Heater (Vehicle Powered) (RAVCOR)

LT/RH - X15/A26 - Fuel Heater (Vehicle Powered) (RAVCOR) Design 606

LT/RH/LoneStar - X15/A26 - Fuel Heater (120VAC)

LT/RH/LoneStar - X15/A26 - Fuel Heater (120VAC) Design 607

LT/RH/LoneStar - X15/A26 - Fuel Level (Single Tank - Left Side)

LT/RH/LoneStar - X15/A26 - Fuel Level (Single Tank - Left Side) Design 608

LT/RH - A26 - Water In Fuel (WIF) DAVCO N/ Heater

LT/RH - A26 - Water In Fuel (WIF) DAVCO N/ Heater Design 614

LT/RH - A26 - Water In Fuel (WIF) Davco W/Heater

LT/RH - A26 - Water In Fuel (WIF) Davco W/Heater Design 616

LT/RH - A26 - Water In Fuel (WIF) RACOR N/ Heater

LT/RH - A26 - Water In Fuel (WIF) RACOR N/ Heater Design 618

LT/RH/LoneStar - X15 - Water In Fuel (WIF) DAVCO N/ Heater

LT/RH/LoneStar - X15 - Water In Fuel (WIF) DAVCO N/ Heater Design 619

LT/RH/LoneStar - X15 - Water In Fuel (WIF) DAVCO W/ Heater

LT/RH/LoneStar - X15 - Water In Fuel (WIF) DAVCO W/ Heater Design 621

LT/RH/LoneStar - X15 - Water In Fuel (WIF) RACOR N/ Heater

LT/RH/LoneStar - X15 - Water In Fuel (WIF) RACOR N/ Heater Design 623

LT/RH A26 - A26 - Heating Ventilation & Air Conditioning (HVAC) Manual

LT/RH A26 - A26 - Heating Ventilation & Air Conditioning (HVAC) Manual Design 624

LT/RH A26 - Heating Ventilation & Air Conditioning (HVAC) Auto Temp Control

LT/RH A26 - Heating Ventilation & Air Conditioning (HVAC) Auto Temp Control Design 628

LT/RH/LoneStar X15 - Heating Ventilation & Air Conditioning (HVAC) Auto Temp Control

LT/RH/LoneStar X15 - Heating Ventilation & Air Conditioning (HVAC) Auto Temp Control Design 634

LT/RH/LoneStar X15 - Heating Ventilation & Air Conditioning (HVAC) Manual

LT/RH/LoneStar X15 - Heating Ventilation & Air Conditioning (HVAC) Manual Design 637

LT/RH/LoneStar - X15/A26 - Rear AUTO HVAC (No Idle) W/ Pre-Heat (Bergstrom Heat and Cool w/ Condensation) 2 SWITCHES

LT/RH/LoneStar - X15/A26 - Rear AUTO HVAC (No Idle) W/ Pre-Heat (Bergstrom Heat and Cool w/ Condensation) 2 SWITCHES Design 639

LT/RH/LoneStar - X15/A26 - Rear HVAC (No Idle) W/ Pre-Heat (Bergstrom Heat and Cool w/ Condensation) 2 SWITCHES Option 1

LT/RH/LoneStar - X15/A26 - Rear HVAC (No Idle) W/ Pre-Heat (Bergstrom Heat and Cool w/ Condensation) 2 SWITCHES Option 1 Design 642

LT/RH/LoneStar - X15/A26 - Rear HVAC (No Idle) W/ Pre-Heat (Bergstrom Heat and Cool w/ Condensation) 2 SWITCHES Option 2

LT/RH/LoneStar - X15/A26 - Rear HVAC (No Idle) W/ Pre-Heat (Bergstrom Heat and Cool w/ Condensation) 2 SWITCHES Option 2 Design 644

LT/RH/LoneStar - X15/A26 - Rear HVAC (No Idle) W/ Pre-Heat (Bergstrom Heat and Cool w/ Condensation) 4 SWITCHES Option 1

LT/RH/LoneStar - X15/A26 - Rear HVAC (No Idle) W/ Pre-Heat (Bergstrom Heat and Cool w/ Condensation) 4 SWITCHES Option 1 Design 646

LT/RH/LoneStar - X15/A26 - Rear HVAC (No Idle) W/ Pre-Heat (Bergstrom Heat and Cool w/ Condensation) 4 SWITCHES Option 2

LT/RH/LoneStar - X15/A26 - Rear HVAC (No Idle) W/ Pre-Heat (Bergstrom Heat and Cool w/ Condensation) 4 SWITCHES Option 2 Design 648

LT/RH/LoneStar - X15/A26 - Rear Manual HVAC (No Idle) W/ Pre-Heat (Bergstrom Heat and Cool w/ Condensation) 2 SWITCHES

LT/RH/LoneStar - X15/A26 - Rear Manual HVAC (No Idle) W/ Pre-Heat (Bergstrom Heat and Cool w/ Condensation) 2 SWITCHES Design 650

LT/RH/LoneStar - X15/A26 - Rear HVAC (No Idle Heater) (Espar) Option 1

LT/RH/LoneStar - X15/A26 - Rear HVAC (No Idle Heater) (Espar) Option 1 Design 653

LT/RH/LoneStar - X15/A26 - Rear HVAC (No Idle Heater) (Espar) Option 2

LT/RH/LoneStar - X15/A26 - Rear HVAC (No Idle Heater) (Espar) Option 2 Design 654

LT/RH/LoneStar - X15/A26 - Rear HVAC (No Idle Heater) (Webasto Smartemp)

LT/RH/LoneStar - X15/A26 - Rear HVAC (No Idle Heater) (Webasto Smartemp) Design 655

LT/RH/LoneStar - X15/A26 - Rear HVAC (No Idle Heater) (Webasto Std N/Swift) N/ Heat Swtich

LT/RH/LoneStar - X15/A26 - Rear HVAC (No Idle Heater) (Webasto Std N/Swift) N/ Heat Swtich Design 656

LT/RH/LoneStar - X15/A26 - Rear HVAC (No Idle Heater) (Webasto Std W/Swift) N/ Heat Switch

LT/RH/LoneStar - X15/A26 - Rear HVAC (No Idle Heater) (Webasto Std W/Swift) N/ Heat Switch Design 657

LT/RH/LoneStar - X15/A26 - No Idle HVAC - TRI-PAC Prewire

LT/RH/LoneStar - X15/A26 - No Idle HVAC - TRI-PAC Prewire Design 658

LT/RH/LoneStar - X15/A26 - Rear HVAC (Sleeper W/ Deluxe)

LT/RH/LoneStar - X15/A26 - Rear HVAC (Sleeper W/ Deluxe) Design 659

LT/RH/LoneStar - X15/A26 - Rear HVAC (Sleeper W/ Premium)

LT/RH/LoneStar - X15/A26 - Rear HVAC (Sleeper W/ Premium) Design 661

LT/RH - A26 - Air Flow Restriction Monitoring A26

LT/RH - A26 - Air Flow Restriction Monitoring A26 Design 663

LT/RH/LoneStar - X15 - Air Flow Restriction Monitoring

LT/RH/LoneStar - X15 - Air Flow Restriction Monitoring Design 665

LT/RH A26 - Ambient Air Temperature Option 1

LT/RH A26 - Ambient Air Temperature Option 1 Design 666

LT/RH A26 - Ambient Air Temperature Option 2

LT/RH A26 - Ambient Air Temperature Option 2 Design 667

LT/RH/LoneStar X15 - Ambient Air Temperature Option 1

LT/RH/LoneStar X15 - Ambient Air Temperature Option 1 Design 668

LT/RH/LoneStar X15 - Ambient Air Temperature Option 2

LT/RH/LoneStar X15 - Ambient Air Temperature Option 2 Design 669

LT/RH/LoneStar - X15/A26 - Auxilary Gauges (Secondary)

LT/RH/LoneStar - X15/A26 - Auxilary Gauges (Secondary) Design 670

LT/RH/LoneStar - X15/A26 - Auxiliary Gauges (Primary)

LT/RH/LoneStar - X15/A26 - Auxiliary Gauges (Primary) Design 671

LT/RH/LoneStar - X15/A26 - Brake Pressure (Auxiliary Gauge)

LT/RH/LoneStar - X15/A26 - Brake Pressure (Auxiliary Gauge) Design 672

LT/RH/LoneStar - X15/A26 - Brake Pressure (Virtual Gauge)

LT/RH/LoneStar - X15/A26 - Brake Pressure (Virtual Gauge) Design 673

LT/RH/LoneStar - X15/A26 - Compressed Air Supply (Primary and Secondary Gauge)

LT/RH/LoneStar - X15/A26 - Compressed Air Supply (Primary and Secondary Gauge) Design 674

LT/RH - A26 - DEF Economy Monitor (Cluster)

LT/RH - A26 - DEF Economy Monitor (Cluster) Design 675

LT/RH/LoneStar - X15 - DEF Economy Monitor (GEN IV Cluster w/ Cummins ENG)

LT/RH/LoneStar - X15 - DEF Economy Monitor (GEN IV Cluster w/ Cummins ENG) Design 676

LT/RH/LoneStar - X15/A26 - Engine Usage Monitoring (Base)

LT/RH/LoneStar - X15/A26 - Engine Usage Monitoring (Base) Design 677

LT/RH/LoneStar - X15/A26 - Engine Usage Monitoring (VID Option)

LT/RH/LoneStar - X15/A26 - Engine Usage Monitoring (VID Option) Design . . .678

LT/RH - X15/A26 - Engine Oil Level Monitoring (CA2.0)

LT/RH - X15/A26 - Engine Oil Level Monitoring (CA2.0) Design 679

LT/RH/LoneStar - X15/A26 - Engine Oil Pressure

LT/RH/LoneStar - X15/A26 - Engine Oil Pressure Design 680

LT/RH/LoneStar - X15/A26 - Engine Oil Temperature (NA MUX_AUX Gauge)

LT/RH/LoneStar - X15/A26 - Engine Oil Temperature (NA MUX_AUX Gauge) Design 681

LT/RH/LoneStar - X15/A26 - Engine Oil Temperature (NA-Mux)

LT/RH/LoneStar - X15/A26 - Engine Oil Temperature (NA-Mux) Design 682

LT/RH/LoneStar - X15/A26 - Engine Speed (Tachometer_J1939)

LT/RH/LoneStar - X15/A26 - Engine Speed (Tachometer_J1939) Design 683

LT/RH/LoneStar - X15/A26 - Fuel Economy Monitor

LT/RH/LoneStar - X15/A26 - Fuel Economy Monitor Design 684

LT/RH/LoneStar - X15/A26 - Intake Manifold Pressure

LT/RH/LoneStar - X15/A26 - Intake Manifold Pressure Design 685

LT/RH - X15/A26 - Intake Manifold Pressure AUX gauge

LT/RH - X15/A26 - Intake Manifold Pressure AUX gauge Design 686

LT/RH/LoneStar - X15/A26 - Odometer (Cluster)

LT/RH/LoneStar - X15/A26 - Odometer (Cluster) Design 687

LT/RH/LoneStar - X15/A26 - Trip Odometer (Cluster)

LT/RH/LoneStar - X15/A26 - Trip Odometer (Cluster) Design 688

LT/RH/LoneStar - X15/A26 - Transmission Oil Level (Low Level Warning)

LT/RH/LoneStar - X15/A26 - Transmission Oil Level (Low Level Warning) Design 689

LT/RH - A26 - Transmission Oil Temperature-Manual Trans-Horizon Option 1

LT/RH - A26 - Transmission Oil Temperature-Manual Trans-Horizon Option 1 Design 690

LT/RH - A26 - Transmission Oil Temperature-Manual Trans-Horizon Option 2

LT/RH - A26 - Transmission Oil Temperature-Manual Trans-Horizon Option 2 Design 693

LT/RH/LoneStar - X15 - Transmission Oil Temperature-Manual Trans-Horizon Option 1

LT/RH/LoneStar - X15 - Transmission Oil Temperature-Manual Trans-Horizon Option 1 Design 696

LT/RH/LoneStar - X15 - Transmission Oil Temperature-Manual Trans-Horizon Option 2

LT/RH/LoneStar - X15 - Transmission Oil Temperature-Manual Trans-Horizon Option 2 Design 699

LT/RH/LoneStar - X15/A26 - Transmission Oil Temperature (Automatic Trans W/ Aux Gauge)

LT/RH/LoneStar - X15/A26 - Transmission Oil Temperature (Automatic Trans W/ Aux Gauge) Design 702

LT/RH/LoneStar - X15/A26 - Transmission Oil Temperature (Automatic Trans)

LT/RH/LoneStar - X15/A26 - Transmission Oil Temperature (Automatic Trans) Design 703

LT/RH - A26 - VEHICLE SPEEDOMETER SYSTEM (MANUAL XMSN)

LT/RH - A26 - VEHICLE SPEEDOMETER SYSTEM (MANUAL XMSN) Design 704

LT/RH/LoneStar - X15 - Vehicle Speedometer System (Manual XMSN) ISX

LT/RH/LoneStar - X15 - Vehicle Speedometer System (Manual XMSN) ISX Design 706

LT/RH/LoneStar - X15/A26 - Vehicle Speedometer System (W/AMT/AUTO TRANS)

LT/RH/LoneStar - X15/A26 - Vehicle Speedometer System (W/AMT/AUTO TRANS) Design 707

LT/RH/LoneStar - X15/A26 - Voltage Monitoring (Voltmeter) Option 1

LT/RH/LoneStar - X15/A26 - Voltage Monitoring (Voltmeter) Option 1 Design . .708

LT/RH/LoneStar - X15/A26 - Voltage Monitoring (Voltmeter) Option 2

LT/RH/LoneStar - X15/A26 - Voltage Monitoring (Voltmeter) Option 2 Design . .709

LT/RH/LoneStar - X15/A26 - Voltage Monitoring (Voltmeter) (with Aux gauge)

LT/RH/LoneStar - X15/A26 - Voltage Monitoring (Voltmeter) (with Aux gauge) Design 710

LT/RH/LoneStar - X15/A26 - Engine Warning (DM1 LAMPS - MUX)

LT/RH/LoneStar - X15/A26 - Engine Warning (DM1 LAMPS - MUX) Design . . .711

LT/RH/LoneStar - X15/A26 - High Exhaust System Temperature (HEST) Monitoring

LT/RH/LoneStar - X15/A26 - High Exhaust System Temperature (HEST) Monitoring Design 712

LT/RH/LoneStar - X15/A26 - Coolant Temperature Monitoring (J1939 Comm)

LT/RH/LoneStar - X15/A26 - Coolant Temperature Monitoring (J1939 Comm) Design 713

LT/RH A26 - X15/A26 - Up Shift Indicator (CA 2.0)

LT/RH A26 - X15/A26 - Up Shift Indicator (CA 2.0) Design 714

LT/RH/LoneStar - X15/A26 - Transmission Range Inhibit (J1939 Comm)

LT/RH/LoneStar - X15/A26 - Transmission Range Inhibit (J1939 Comm) Design 715

LT/RH/LoneStar - X15/A26 - Vehicle Information Display (VID-W/BT)

LT/RH/LoneStar - X15/A26 - Vehicle Information Display (VID-W/BT) Design . .716

LT/RH/LoneStar - X15/A26 - Vehicle Information Display (VID-W/O BT)

LT/RH/LoneStar - X15/A26 - Vehicle Information Display (VID-W/O BT) Design 717

LT/RH/LoneStar - X15/A26 - Lighting - Cabinet Lights

LT/RH/LoneStar - X15/A26 - Lighting - Cabinet Lights Design 718

LT/RH/LoneStar - X15/A26 - Courtesy Light Cab

LT/RH/LoneStar - X15/A26 - Courtesy Light Cab Design 719

LT/RH/LoneStar - X15/A26 - Cab Dome Light (Day Cab)

LT/RH/LoneStar - X15/A26 - Cab Dome Light (Day Cab) Design 720

LT/RH/LoneStar - X15/A26 - Cab Dome Light - (Sleeper Cab)

LT/RH/LoneStar - X15/A26 - Cab Dome Light - (Sleeper Cab) Design 721

LT/RH/LoneStar - X15/A26 - Lighting Sleeper Dome

LT/RH/LoneStar - X15/A26 - Lighting Sleeper Dome Design 722

LT/RH/LoneStar - X15/A26 - Floor/Search Lights DayCab

LT/RH/LoneStar - X15/A26 - Floor/Search Lights DayCab Design 723

LT/RH/LoneStar - X15/A26 - Floor/Search Lights Sleeper

LT/RH/LoneStar - X15/A26 - Floor/Search Lights Sleeper Design 724

LT/RH/LoneStar - X15/A26 - Floor/Search Lights Sleeper (1 Light)

LT/RH/LoneStar - X15/A26 - Floor/Search Lights Sleeper (1 Light) Design 725

LT/RH/LoneStar - X15/A26 - Interior Task Lights (Map) (Cab Dome / Map Combo) - DayCab

LT/RH/LoneStar - X15/A26 - Interior Task Lights (Map) (Cab Dome / Map Combo) - DayCab Design 726

LT/RH/LoneStar - X15/A26 - Interior Task Lights (Map Light-Separate map light from cab dome) - Sleeper Cab

LT/RH/LoneStar - X15/A26 - Interior Task Lights (Map Light-Separate map light from cab dome) - Sleeper Cab Design 727

LT/RH/LoneStar - X15/A26 - Luggage Compartment Lights - W/O No Idle HVAC

LT/RH/LoneStar - X15/A26 - Luggage Compartment Lights - W/O No Idle HVAC Design 728

LT/RH/LoneStar - X15/A26 - Luggage Compartment Lights - W/ No Idle HVAC

LT/RH/LoneStar - X15/A26 - Luggage Compartment Lights - W/ No Idle HVAC Design 729

LT/RH/LoneStar - X15/A26 - Panel Backlighting (Cabin Dimmer) Option 1

LT/RH/LoneStar - X15/A26 - Panel Backlighting (Cabin Dimmer) Option 1 Design 730

LT/RH/LoneStar - X15/A26 - Panel Backlighting (Cabin Dimmer) Option 2

LT/RH/LoneStar - X15/A26 - Panel Backlighting (Cabin Dimmer) Option 2 Design 731

LT/RH/LoneStar - X15/A26 - Reading Lighting - W/Lower

LT/RH/LoneStar - X15/A26 - Reading Lighting - W/Lower Design 732

LT/RH/LoneStar - X15/A26 - Reading Lighting - W/Upper& Lower

LT/RH/LoneStar - X15/A26 - Reading Lighting - W/Upper& Lower Design 733

LT/RH/LoneStar - X15/A26 - Rear Interior Dimming (Accent Light)

LT/RH/LoneStar - X15/A26 - Rear Interior Dimming (Accent Light) Design 734

LT/RH/LoneStar - X15/A26 - Rear Interior Dimming (Accent/Mood)

LT/RH/LoneStar - X15/A26 - Rear Interior Dimming (Accent/Mood) Design 735

LT/RH/LoneStar - X15/A26 - Axle Loading (Weight) Rear

LT/RH/LoneStar - X15/A26 - Axle Loading (Weight) Rear Design 736

LT/RH/LoneStar - X15/A26 - Single Axle Temperature Monitoring

LT/RH/LoneStar - X15/A26 - Single Axle Temperature Monitoring Design 738

LT/RH/LoneStar - X15/A26 - Single Axle Temperature Monitoring w/Aux Gauge

LT/RH/LoneStar - X15/A26 - Single Axle Temperature Monitoring w/Aux Gauge Design 739

LT/RH/LoneStar - X15/A26 - Tandem Axle Temperature Monitoring

LT/RH/LoneStar - X15/A26 - Tandem Axle Temperature Monitoring Design . . . 740

LT/RH/LoneStar - X15/A26 - Tandem Axle Temperature Monitoring w/Aux Gauge

LT/RH/LoneStar - X15/A26 - Tandem Axle Temperature Monitoring w/Aux Gauge Design 742

LT/RH/LoneStar - X15/A26 - Tandem Axle Temperature Monitoring w/ Single SNSR and AUX Gauge

LT/RH/LoneStar - X15/A26 - Tandem Axle Temperature Monitoring w/ Single SNSR and AUX Gauge Design 744

LT/RH/LoneStar - X15/A26 - Driver Controlled Locking Differential - FR & RR Axle (DANA)

LT/RH/LoneStar - X15/A26 - Driver Controlled Locking Differential - FR & RR Axle (DANA) Design 745

LT/RH/LoneStar - X15/A26 - 2 Driver Controlled Locking Differential - FR & RR Axle (DANA)

LT/RH/LoneStar - X15/A26 - 2 Driver Controlled Locking Differential - FR & RR Axle (DANA) Design 746

LT/RH/LoneStar - X15/A26 - Driver Controlled Locking Differential - RR Axle (DANA)

LT/RH/LoneStar - X15/A26 - Driver Controlled Locking Differential - RR Axle (DANA) Design 747

LT/RH/LoneStar - X15/A26 - Driver Controlled Locking Differential - FR (MERITOR)

LT/RH/LoneStar - X15/A26 - Driver Controlled Locking Differential - FR (MERITOR) Design 749

LT/RH/LoneStar - X15/A26 - Driver Controlled Locking Differential - FR & RR Axle (MERITOR)

LT/RH/LoneStar - X15/A26 - Driver Controlled Locking Differential - FR & RR Axle (MERITOR) Design 750

LT/RH/LoneStar - X15/A26 - 2 Driver Controlled Locking Differential - FR & RR Axle (MERITOR)

LT/RH/LoneStar - X15/A26 - 2 Driver Controlled Locking Differential - FR & RR Axle (MERITOR) Design 751

LT/RH/LoneStar - X15/A26 - Driver Controlled Locking Differential - RR Axle (MERITOR)

LT/RH/LoneStar - X15/A26 - Driver Controlled Locking Differential - RR Axle (MERITOR) Design 752

LT/RH/LoneStar - X15/A26 - Height Control

LT/RH/LoneStar - X15/A26 - Height Control Design 754

LT/RH/LoneStar - X15/A26 - Power Divider Lock Control and Monitoring

LT/RH/LoneStar - X15/A26 - Power Divider Lock Control and Monitoring Design 755

LT/RH/LoneStar - X15/A26 - Seats Climate Controlled (Drivers Heated Seat)

LT/RH/LoneStar - X15/A26 - Seats Climate Controlled (Drivers Heated Seat) Design 756

LT/RH/LoneStar - X15/A26 - Seats (RollTek) Driver and Passenger (Hard Wired)

LT/RH/LoneStar - X15/A26 - Seats (RollTek) Driver and Passenger (Hard Wired) Design 757

LT/RH/LoneStar - X15/A26 - Seats (RolTek) Drivers Seat Only (Hard Wired) - Leather

LT/RH/LoneStar - X15/A26 - Seats (RolTek) Drivers Seat Only (Hard Wired) - Leather Design 758

LT/RH/LoneStar - X15/A26 - Seats (RolTek) Drivers Seat Only (Hard Wired) - Mordura

LT/RH/LoneStar - X15/A26 - Seats (RolTek) Drivers Seat Only (Hard Wired) - Mordura Design 759

LT/RH/LoneStar - X15/A26 - Seats (RolTek) Drivers Seat Only (Hard Wired) - Vinyl

LT/RH/LoneStar - X15/A26 - Seats (RolTek) Drivers Seat Only (Hard Wired) - Vinyl Design 760

LT/RH/LoneStar - X15/A26 - Seatbelt Reminder (Warning)(Driver only)

LT/RH/LoneStar - X15/A26 - Seatbelt Reminder (Warning)(Driver only) Design761

LT/RH/LoneStar - X15/A26 - Seatbelt Reminder (Warning)(Driver & Passenger in parallel)

LT/RH/LoneStar - X15/A26 - Seatbelt Reminder (Warning)(Driver & Passenger in parallel) Design 762

LT/RH/LoneStar - X15/A26 - Auxiliary Trailer Power CAV D

LT/RH/LoneStar - X15/A26 - Auxiliary Trailer Power CAV D Design 763

LT/RH/LoneStar - X15/A26 - Auxiliary Trailer Power W/ ISO Trailer Socket

LT/RH/LoneStar - X15/A26 - Auxiliary Trailer Power W/ ISO Trailer Socket Design 765

LT/RH/LoneStar - X15/A26 - Mobile Communications Sensor Wiring Effects for Trailer TRAC

LT/RH/LoneStar - X15/A26 - Mobile Communications Sensor Wiring Effects for Trailer TRAC Design 766

LoneStar - X15 - Trailer Interface (ABS) - Center Pin Circuit

LoneStar - X15 - Trailer Interface (ABS) - Center Pin Circuit Design 768

LT/RH - X15/A26 - Trailer Interface (ABS) - Center Pin Circuit

LT/RH - X15/A26 - Trailer Interface (ABS) - Center Pin Circuit Design 772

LT/RH/LoneStar - X15/A26 - Trailer Interface (ABS) - BOC & EOF_NA

LT/RH/LoneStar - X15/A26 - Trailer Interface (ABS) - BOC & EOF_NA Design 776

LT/RH/LoneStar - X15/A26 - Trailer Interface (ABS) - BOC_NA

LT/RH/LoneStar - X15/A26 - Trailer Interface (ABS) - BOC_NA Design 780

LT/RH/LoneStar - X15/A26 - Trailer Interface (ABS) - TRAMEC_NA

LT/RH/LoneStar - X15/A26 - Trailer Interface (ABS) - TRAMEC_NA Design . . . 782

LT/RH/LoneStar - X15/A26 - Trailer Interface (Lighting) – BOC NA

LT/RH/LoneStar - X15/A26 - Trailer Interface (Lighting) – BOC NA Design 783

LT/RH/LoneStar - X15/A26 - Trailer Interface (Lighting) – BOC & EOF_NA

LT/RH/LoneStar - X15/A26 - Trailer Interface (Lighting) – BOC & EOF_NA Design 785

LT/RH/LoneStar - X15/A26 - Trailer Interface (Lighting) – TRAMEC_NA

LT/RH/LoneStar - X15/A26 - Trailer Interface (Lighting) – TRAMEC_NA Design 789

LT/RH - A26 - Transmission Shifter (Eaton Endurant and Eaton Procision)

LT/RH - A26 - Transmission Shifter (Eaton Endurant and Eaton Procision) Design 790

LT/RH - A26 - Transmission Shifter (Universal Shifter - Ultrashift+ & FAS)

LT/RH - A26 - Transmission Shifter (Universal Shifter - Ultrashift+ & FAS) Design 791

LT/RH/LoneStar - X15 - Transmission Shifter (Eaton Endurant and Eaton Procision)

LT/RH/LoneStar - X15 - Transmission Shifter (Eaton Endurant and Eaton Procision) Design 792

LT/RH/LoneStar - X15 - Transmission Shifter (Universal Shifter - Ultrashift+ & FAS)

LT/RH/LoneStar - X15 - Transmission Shifter (Universal Shifter - Ultrashift+ & FAS) Design 793

LT/RH A26 - Endurant Transmission

LT/RH A26 - Endurant Transmission Design 794

LT/RH/LoneStar X15 - Endurant Transmission

LT/RH/LoneStar X15 - Endurant Transmission Design 795

LT/RH A26 - Ultrashift Plus

LT/RH A26 - Ultrashift Plus Design 796

LT/RH/LoneStar X15 - Ultrashift Plus

LT/RH/LoneStar X15 - Ultrashift Plus Design 797

LT/RH A26 - Transmission I/O (Allison 3K with Body Builder)

LT/RH A26 - Transmission I/O (Allison 3K with Body Builder) Design 798

LT/RH A26 - Transmission (Allison 3K/4K)

LT/RH A26 - Transmission (Allison 3K/4K) Design 801

LT/RH - A26 - Auto Neutral (Allison with Multiplex Switch and Confirmation Telltale)

LT/RH - A26 - Auto Neutral (Allison with Multiplex Switch and Confirmation Telltale) Design 802

LT/RH/LoneStar - X15/A26 - Auto Neutral (J1939 Comms TC10 and Ultrashift)

LT/RH/LoneStar - X15/A26 - Auto Neutral (J1939 Comms TC10 and Ultrashift) Design 803

LT/RH A26 - TC10 Series

LT/RH A26 - TC10 Series Design 804

LT/RH/LoneStar X15 - TC10 Series

LT/RH/LoneStar X15 - TC10 Series Design 805

LT/RH A26 - Transmission (Ultrashift+ w/Body Builder)

LT/RH A26 - Transmission (Ultrashift+ w/Body Builder) Design 806

LT/RH/LoneStar X15 - Transmission (Ultrashift+ w/Body Builder)

LT/RH/LoneStar X15 - Transmission (Ultrashift+ w/Body Builder) Design 807

LT/RH/LoneStar - X15/A26 - Hill Start Aid (Bendix)

LT/RH/LoneStar - X15/A26 - Hill Start Aid (Bendix) Design 808

LT/RH/LoneStar - X15/A26 - Hill Start Aid (Wabco)

LT/RH/LoneStar - X15/A26 - Hill Start Aid (Wabco) Design 811

LT/RH/LoneStar - X15/A26 - Transmission - MODE Selection

LT/RH/LoneStar - X15/A26 - Transmission - MODE Selection Design 812

LT/RH A26 - Transmission I/O (Endurant Pressure Sensor)

LT/RH A26 - Transmission I/O (Endurant Pressure Sensor) Design 813

LT/RH/LoneStar X15 - Transmission I/O (Endurant Pressure Sensor)

LT/RH/LoneStar X15 - Transmission I/O (Endurant Pressure Sensor) Design . . 814

LoneStar - X15 - Windshield Washer Pump

LoneStar - X15 - Windshield Washer Pump Design 815

LoneStar - X15 - Windshield Washer Pump & Low Fluid Sensor

LoneStar - X15 - Windshield Washer Pump & Low Fluid Sensor Design 816

LT/RH - X15/A26 - Windshield Washer Pump

LT/RH - X15/A26 - Windshield Washer Pump Design 817

LT/RH - X15/A26 - Windshield Washer Pump & Low Fluid Sensor

LT/RH - X15/A26 - Windshield Washer Pump & Low Fluid Sensor Design 818

LT/RH - X15/A26 - Windshield Wipers Cruise Disable W/Wipers ON

LT/RH - X15/A26 - Windshield Wipers Cruise Disable W/Wipers ON Design . . 819

LT/RH - X15/A26 - Windshield Wipers Cruise Disable & Park Brake W/Wipers ON

LT/RH - X15/A26 - Windshield Wipers Cruise Disable & Park Brake W/Wipers ON Design 820

LT/RH/LoneStar - X15/A26 - Windshield Wipers Park Brake W/Wipers ON

LT/RH/LoneStar - X15/A26 - Windshield Wipers Park Brake W/Wipers ON Design 821

LT/RH/LoneStar - X15/A26 - Windshield Wipers Standard

LT/RH/LoneStar - X15/A26 - Windshield Wipers Standard Design 822

LT/RH A26 - Auto Start Stop Battery & Oil Temp Mapping Auto Trans

LT/RH A26 - Auto Start Stop Battery & Oil Temp Mapping Auto Trans Design . 823

LT/RH A26 - Auto Start Stop with Sleeper Auto Climate / Cab Temp / Oil Mapping Auto Trans

LT/RH A26 - Auto Start Stop with Sleeper Auto Climate / Cab Temp / Oil Mapping Auto Trans Design 824

LT/RH A26 - Auto Start Stop and Sleeper Auto Climate / Cab Temp / Oil Mapping Manual Trans

LT/RH A26 - Auto Start Stop and Sleeper Auto Climate / Cab Temp / Oil Mapping Manual Trans Design 825

LT/RH A26 - Auto Start Stop Battery & Oil Temp Mapping Manual Trans

LT/RH A26 - Auto Start Stop Battery & Oil Temp Mapping Manual Trans Design 826

LT/RH/LoneStar X15 - Auto Start Stop Oil Temp Sensor Auto Trans

LT/RH/LoneStar X15 - Auto Start Stop Oil Temp Sensor Auto Trans Design . . 827

LT/RH/LoneStar X15 - Auto Start Stop with Sleeper Auto Climate / Cab Temp with Oil Temp Sensor Auto Trans

LT/RH/LoneStar X15 - Auto Start Stop with Sleeper Auto Climate / Cab Temp with Oil Temp Sensor Auto Trans Design 828

LT/RH/LoneStar X15 - Auto Start Stop Oil Temp Sensor Manual Trans

LT/RH/LoneStar X15 - Auto Start Stop Oil Temp Sensor Manual Trans Design 829

LT/RH/LoneStar X15 - Auto Start Stop with Sleeper Auto Climate / Cab Temp with Oil Temp Sensor Manual Trans

LT/RH/LoneStar X15 - Auto Start Stop with Sleeper Auto Climate / Cab Temp with Oil Temp Sensor Manual Trans Design 830

LT/RH - X15/A26 - Battery Disconnect

LT/RH - X15/A26 - Battery Disconnect Design 831

LT/RH - A26 - Bosch LH160_LH200 Alternator

LT/RH - A26 - Bosch LH160_LH200 Alternator Design 832

LT/RH - A26 - Bosch LIL165_LIL200 Alternator W/ Remote Sense

LT/RH - A26 - Bosch LIL165_LIL200 Alternator W/ Remote Sense Design 833

LT/RH - A26 - Delco Remy 28SI Alternator W/ Remote Sense

LT/RH - A26 - Delco Remy 28SI Alternator W/ Remote Sense Design 834

LT/RH - A26 - Delco Remy 36SI Alternator W/ Remote Sense

LT/RH - A26 - Delco Remy 36SI Alternator W/ Remote Sense Design 835

LT/RH - A26 - Delco Remy 40SI Alternator W/ Remote Sense Combination 1

LT/RH - A26 - Delco Remy 40SI Alternator W/ Remote Sense Combination 1 Design 836

LT/RH - A26 - Delco Remy 40SI Alternator W/ Remote Sense Combination 2

LT/RH - A26 - Delco Remy 40SI Alternator W/ Remote Sense Combination 2 Design 837

LT/RH - A26 - Leece-Neville AVI160 Alternator N/ Remote Sense

LT/RH - A26 - Leece-Neville AVI160 Alternator N/ Remote Sense Design 838

LT/RH - A26 - Leece-Neville AVI160-210A/240A Alternator W/ Remote Sense

LT/RH - A26 - Leece-Neville AVI160-210A/240A Alternator W/ Remote Sense Design 839

LT/RH - A26 - Leece-Neville 320PAH Alternator

LT/RH - A26 - Leece-Neville 320PAH Alternator Design 840

LT/RH - A26 - Leece-Neville - LN 325A Alternator W/ Remote Sense

LT/RH - A26 - Leece-Neville - LN 325A Alternator W/ Remote Sense Design . . 841

LT/RH/LoneStar X15 - Bosch LH160_LH200 Alternator W/ Delco Starter

LT/RH/LoneStar X15 - Bosch LH160_LH200 Alternator W/ Delco Starter Design 842

LT/RH/LoneStar X15 - Bosch LIL165_LIL200 Alternator W/ Remote Sense W/ Delco Starter

LT/RH/LoneStar X15 - Bosch LIL165_LIL200 Alternator W/ Remote Sense W/ Delco Starter Design 843

LT/RH/LoneStar X15 - Delco Remy 28SI Alternator W/ Remote Sense W/ Delco Starter

LT/RH/LoneStar X15 - Delco Remy 28SI Alternator W/ Remote Sense W/ Delco Starter Design 844

LT/RH/LoneStar X15 - Delco Remy 36SI Alternator W/ Remtoe Sense W/ Delco Starter

LT/RH/LoneStar X15 - Delco Remy 36SI Alternator W/ Remtoe Sense W/ Delco Starter Design 846

LT/RH/LoneStar X15 - Delco Remy 40SI Alternator W/ Remote Sense W/ Delco Starter

LT/RH/LoneStar X15 - Delco Remy 40SI Alternator W/ Remote Sense W/ Delco Starter Design 847

LT/RH/LoneStar X15 - Leece-Neville AVI160 Alternator W/ Delco Starter

LT/RH/LoneStar X15 - Leece-Neville AVI160 Alternator W/ Delco Starter Design 849

LT/RH/LoneStar X15 - Leece-Neville AVI160-210A/240A Alternator W/ Remote Sense W/ Delco Starter

LT/RH/LoneStar X15 - Leece-Neville AVI160-210A/240A Alternator W/ Remote Sense W/ Delco Starter Design 850

LT/RH/LoneStar X15 - Leece-Neville 320PAH Alternator W/ Delco Starter

LT/RH/LoneStar X15 - Leece-Neville 320PAH Alternator W/ Delco Starter Design 851

LT/RH/LoneStar X15 - Leece-Neville - LN 325A Alternator W/ Remote Sense W/ Delco Starter

LT/RH/LoneStar X15 - Leece-Neville - LN 325A Alternator W/ Remote Sense W/ Delco Starter Design 852

LT/RH - A26 - Bosch LH160_LH200 Alternator W/ Mitsubishi Starter

LT/RH - A26 - Bosch LH160_LH200 Alternator W/ Mitsubishi Starter Design . . 853

LT/RH - A26 - Bosch LIL165_LIL200 Alternator W/ Remote Sense W/ Mitsubishi Starter

LT/RH - A26 - Bosch LIL165_LIL200 Alternator W/ Remote Sense W/ Mitsubishi Starter Design 854

LT/RH - A26 - Delco Remy 28SI Alternator W/ Remote Sense W/ Mitsubishi Starter

LT/RH - A26 - Delco Remy 28SI Alternator W/ Remote Sense W/ Mitsubishi Starter Design 855

LT/RH - A26 - Delco Remy 36SI Alternator W/ Remote Sense W/ Mitsubishi Starter

LT/RH - A26 - Delco Remy 36SI Alternator W/ Remote Sense W/ Mitsubishi Starter Design . . . 856

LT/RH - A26 - Delco Remy 40SI Alternator W/ Remote Sense Combination 1 W/ Mitsubishi Starter

LT/RH - A26 - Delco Remy 40SI Alternator W/ Remote Sense Combination 1 W/ Mitsubishi Starter Design . . . 857

LT/RH - A26 - Delco Remy 40SI Alternator W/ Remote Sense Combination 2 W/ Mitsubishi Starter

LT/RH - A26 - Delco Remy 40SI Alternator W/ Remote Sense Combination 2 W/ Mitsubishi Starter Design . . . 858

LT/RH - A26 - Leece-Neville AVI160 Alternator N/ Remote Sense W/ Mitsubishi Starter

LT/RH - A26 - Leece-Neville AVI160 Alternator N/ Remote Sense W/ Mitsubishi Starter Design . . . 859

LT/RH - A26 - Leece-Neville AVI160-210A/240A Alternator W/ Remote Sense W/ Mitsubishi Starter

LT/RH - A26 - Leece-Neville AVI160-210A/240A Alternator W/ Remote Sense W/ Mitsubishi Starter Design . . . 860

LT/RH - A26 - Leece-Neville 320PAH Alternator W/ Mitsubishi Starter

LT/RH - A26 - Leece-Neville 320PAH Alternator W/ Mitsubishi Starter Design . 861

LT/RH - A26 - Leece-Neville - LN 325A Alternator W/ Remote Sense W/ Mitsubishi Starter

LT/RH - A26 - Leece-Neville - LN 325A Alternator W/ Remote Sense W/ Mitsubishi Starter Design . . . 862

LT/RH/LoneStar - X15 - Bosch LH160_LH200 Alternator W/ Mitsubishi Starter

LT/RH/LoneStar - X15 - Bosch LH160_LH200 Alternator W/ Mitsubishi Starter Design . . . 863

LT/RH/LoneStar - X15 - Bosch LIL165_LIL200 Alternator W/ Remote Sense W/ Mitsubishi Starter

LT/RH/LoneStar - X15 - Bosch LIL165_LIL200 Alternator W/ Remote Sense W/ Mitsubishi Starter Design . . . 864

LT/RH/LoneStar - X15 - Delco Remy 28SI Alternator W/ Remote Sense W/ Mitsubishi Starter

LT/RH/LoneStar - X15 - Delco Remy 28SI Alternator W/ Remote Sense W/ Mitsubishi Starter Design . . . 865

LT/RH/LoneStar - X15 - Delco Remy 36SI Alternator W/ Remote Sense W/ Mitsubishi Starter

LT/RH/LoneStar - X15 - Delco Remy 36SI Alternator W/ Remote Sense W/ Mitsubishi Starter Design . . . 867

LT/RH/LoneStar - X15 - Delco Remy 40SI Alternator W/ Remote Sense W/ Mitsubishi Starter

LT/RH/LoneStar - X15 - Delco Remy 40SI Alternator W/ Remote Sense W/ Mitsubishi Starter Design . . . 868

LT/RH/LoneStar - X15 - Leece-Neville AVI160 Alternator W/ Mitsubishi Starter

LT/RH/LoneStar - X15 - Leece-Neville AVI160 Alternator W/ Mitsubishi Starter Design 870

LT/RH/LoneStar - X15 - Leece-Neville AVI160-210A/240A Alternator W/ Remote Sense W/ Mitsubishi Starter

LT/RH/LoneStar - X15 - Leece-Neville AVI160-210A/240A Alternator W/ Remote Sense W/ Mitsubishi Starter Design 871

LT/RH/LoneStar - X15 - Leece-Neville 320PAH Alternator W/ Mitsubishi Starter

LT/RH/LoneStar - X15 - Leece-Neville 320PAH Alternator W/ Mitsubishi Starter Design 872

LT/RH/LoneStar - X15 - Leece-Neville - LN 325A Alternator W/ Remote Sense W/ Mitsubishi Starter

LT/RH/LoneStar - X15 - Leece-Neville - LN 325A Alternator W/ Remote Sense W/ Mitsubishi Starter Design 873

LT/RH/LoneStar - X15/A26 - Cranking Request (BCM Controlled)

LT/RH/LoneStar - X15/A26 - Cranking Request (BCM Controlled) Design 874

LT/RH/LoneStar - X15/A26 - Engine Speed Inhibit Only

LT/RH/LoneStar - X15/A26 - Engine Speed Inhibit Only Design 875

LT/RH - A26 - Cranking (Starter) GEN4 BCM W/O Thermal Overcrank Wiring

LT/RH - A26 - Cranking (Starter) GEN4 BCM W/O Thermal Overcrank Wiring Design 876

LT/RH/LoneStar - X15 - Cranking (Starter) GEN4 BCM W/O Thermal Overcrank Wiring

LT/RH/LoneStar - X15 - Cranking (Starter) GEN4 BCM W/O Thermal Overcrank Wiring Design 877

LT/RH - A26 - Cranking (Starter) GEN4 BCM W/ Thermal Overcrank - External Switch

LT/RH - A26 - Cranking (Starter) GEN4 BCM W/ Thermal Overcrank - External Switch Design 878

LT/RH/LoneStar - X15 - Cranking (Starter) GEN4 BCM W/ Thermal Overcrank - External Switch

LT/RH/LoneStar - X15 - Cranking (Starter) GEN4 BCM W/ Thermal Overcrank - External Switch Design 879

LT/RH/LoneStar - X15/A26 - DC/AC Inverter

LT/RH/LoneStar - X15/A26 - DC/AC Inverter Design 880

LT/RH/LoneStar - X15/A26 - DC/AC Inverter (1200W W/switch control)

LT/RH/LoneStar - X15/A26 - DC/AC Inverter (1200W W/switch control) Design 881

LT/RH/LoneStar - X15/A26 - DC/AC Inverter (1800W)

LT/RH/LoneStar - X15/A26 - DC/AC Inverter (1800W) Design 882

LT/RH/LoneStar - X15/A26 - Electrical Load Control(Load Shed)

LT/RH/LoneStar - X15/A26 - Electrical Load Control(Load Shed) Design 883

LT/RH/LoneStar - X15/A26 - JUMP START STUD (DUAL)

LT/RH/LoneStar - X15/A26 - JUMP START STUD (DUAL) Design 884

LT/RH/LoneStar - X15/A26 - JUMP START STUD (SINGLE)

LT/RH/LoneStar - X15/A26 - JUMP START STUD (SINGLE) Design 885

LT/RH/LoneStar - X15/A26 - Key Switch (Operator Input)

LT/RH/LoneStar - X15/A26 - Key Switch (Operator Input) Design 886

LT/RH - A26/X15 - Maxwell 12V Ultracapacitor Engine Start Module (ESM)

LT/RH - A26/X15 - Maxwell 12V Ultracapacitor Engine Start Module (ESM) Design 887

LT/RH/LoneStar - X15/A26 - Clutch Monitoring (High and Low Switch to BCM)

LT/RH/LoneStar - X15/A26 - Clutch Monitoring (High and Low Switch to BCM) Design 888

LoneStar - X15 - Crank Inhibit with Hood Switch - with new BCM Pin

LoneStar - X15 - Crank Inhibit with Hood Switch - with new BCM Pin Design . . 889

LoneStar - X15 - Hood Switch

LoneStar - X15 - Hood Switch Design 891

LT/RH - X15/A26 - Hood Switch

LT/RH - X15/A26 - Hood Switch Design 892

LT/RH - X15/A26 - with Hood Switch - with new BCM Pin

LT/RH - X15/A26 - with Hood Switch - with new BCM Pin Design 893

LT/RH - A26 - Starter Interlocks A26 TC10

LT/RH - A26 - Starter Interlocks A26 TC10 Design 894

LT/RH - A26 - Starter Interlocks A26 3K

LT/RH - A26 - Starter Interlocks A26 3K Design 895

LT/RH - A26 - Starter Interlocks (Service Brake Interlock)

LT/RH - A26 - Starter Interlocks (Service Brake Interlock) Design 896

LT/RH - A26 - Starter Interlock (BCM HSD controlled W/ Clutch Switch W/ Auto Start Stop)

LT/RH - A26 - Starter Interlock (BCM HSD controlled W/ Clutch Switch W/ Auto Start Stop) Design 897

LT/RH - A26 - Starter Interlock (BCM LSD Controlled w/ Relay)_EATON XMSN

LT/RH - A26 - Starter Interlock (BCM LSD Controlled w/ Relay)_EATON XMSN Design 899

LT/RH/LoneStar - X15 - Starter Interlocks ISX TC10

LT/RH/LoneStar - X15 - Starter Interlocks ISX TC10 Design 900

LT/RH/LoneStar - X15 - Starter Interlocks (Service Brake Interlock)

LT/RH/LoneStar - X15 - Starter Interlocks (Service Brake Interlock) Design . . . 901

LT/RH/LoneStar - X15 - Starter Interlock (BCM HSD controlled W/ Clutch Switch W/ Auto Start Stop)

LT/RH/LoneStar - X15 - Starter Interlock (BCM HSD controlled W/ Clutch Switch W/ Auto Start Stop) Design 902

LT/RH/LoneStar - X15 - Starter Interlock (BCM LSD Controlled w/ Relay)_EATON XMSN

LT/RH/LoneStar - X15 - Starter Interlock (BCM LSD Controlled w/ Relay)_EATON XMSN Design 903

LT/RH/LoneStar - X15/A26 - Starter Interlock (BCM HSD controlled W/ Clutch Switch N/ Auto Start Stop)

LT/RH/LoneStar - X15/A26 - Starter Interlock (BCM HSD controlled W/ Clutch Switch N/ Auto Start Stop) Design 904

LT/RH A26 - Battery International (3) 12V

LT/RH A26 - Battery International (3) 12V Design 905

LT/RH/LoneStar X15 - Battery International (3) 12V

LT/RH/LoneStar X15 - Battery International (3) 12V Design 906

LT/RH A26 - Battery International (4) 12V

LT/RH A26 - Battery International (4) 12V Design 907

LT/RH/LoneStar X15 - Battery International (4) 12V

LT/RH/LoneStar X15 - Battery International (4) 12V Design 908

LT/RH - A26 - Battery International (8) 12V

LT/RH - A26 - Battery International (8) 12V Design 909

LT/RH/LoneStar X15 - Battery International (8) 12V

LT/RH/LoneStar X15 - Battery International (8) 12V Design 910

LT/RH/LoneStar - X15/A26 - 9 Pin Diagnostic Connector (Green)

LT/RH/LoneStar - X15/A26 - 9 Pin Diagnostic Connector (Green) Design 911

LT/RH/LoneStar - X15/A26 - 9 Pin Diagnostic Connector (Green)(Export)

LT/RH/LoneStar - X15/A26 - 9 Pin Diagnostic Connector (Green)(Export) Design 912

Connectors 913

Part Assembly List

Connector Assembly List LT 2869

Index 3166

Connector J1-1603

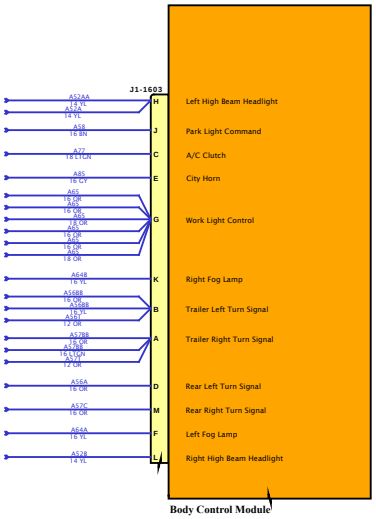

DESIGN DESCRIPTION

FEATURE CODES

SOFTWARE FEATURE CODES

NAVISTAR INC. CONFIDENTIAL PROPRIETARY

Connector J2-1604

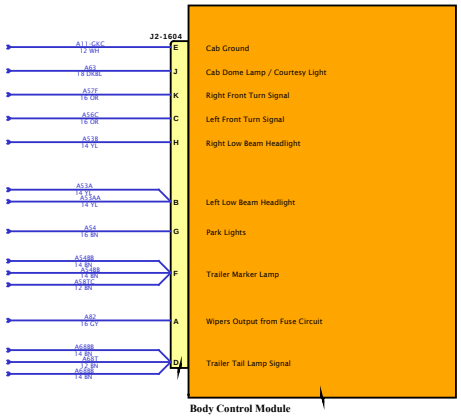

DESIGN DESCRIPTION

FEATURE CODES

SOFTWARE FEATURE CODES

For Data Links see EES-SE-L-0002

NAVISTAR INC. CONFIDENTIAL PROPRIETARY

Connector J3-1600

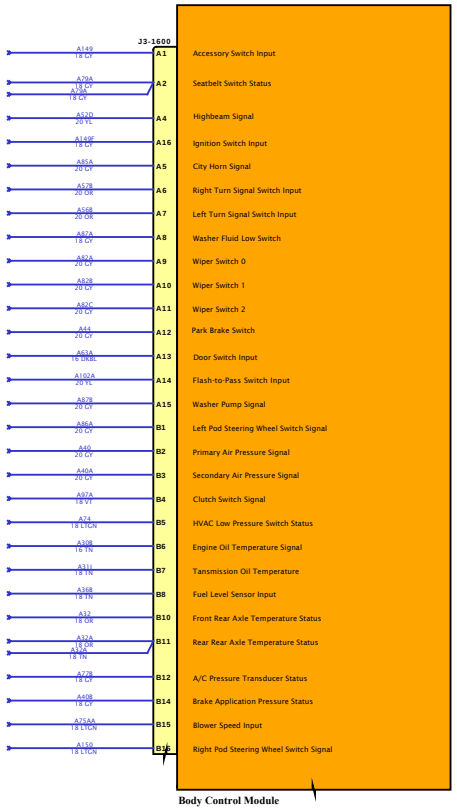

DESIGN DESCRIPTION

FEATURE CODES

SOFTWARE FEATURE CODES

NAVISTAR INC. CONFIDENTIAL PROPRIETARY

Connector J4-1601

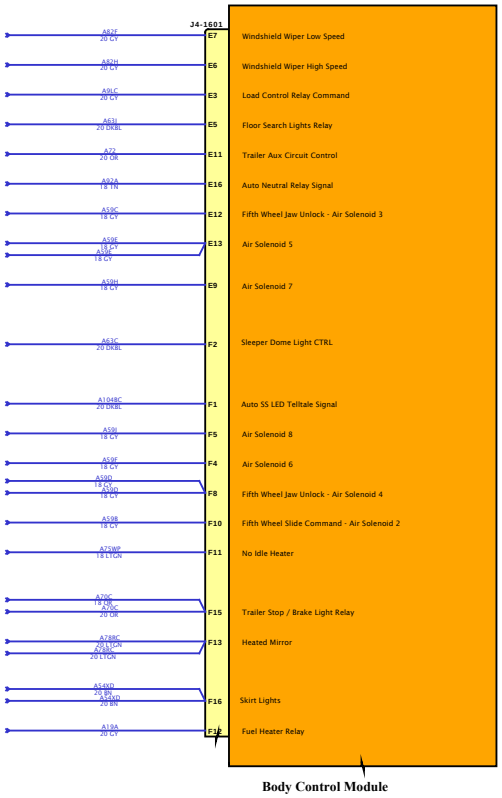

DESIGN DESCRIPTION

FEATURE CODES

SOFTWARE FEATURE CODES

NAVISTAR INC. CONFIDENTIAL PROPRIETARY

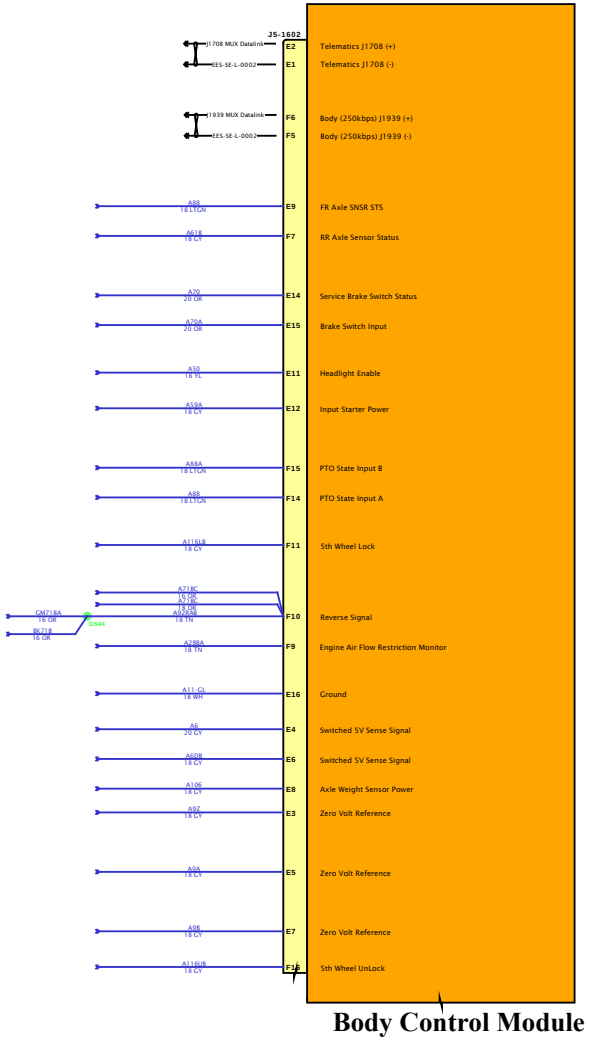

DESIGN DESCRIPTION

FEATURE CODES

SOFTWARE FEATURE CODES

NAVISTAR
NAVISTAR, INC. CONFIDENTIAL PROPRIETARY

Connector J6-1606

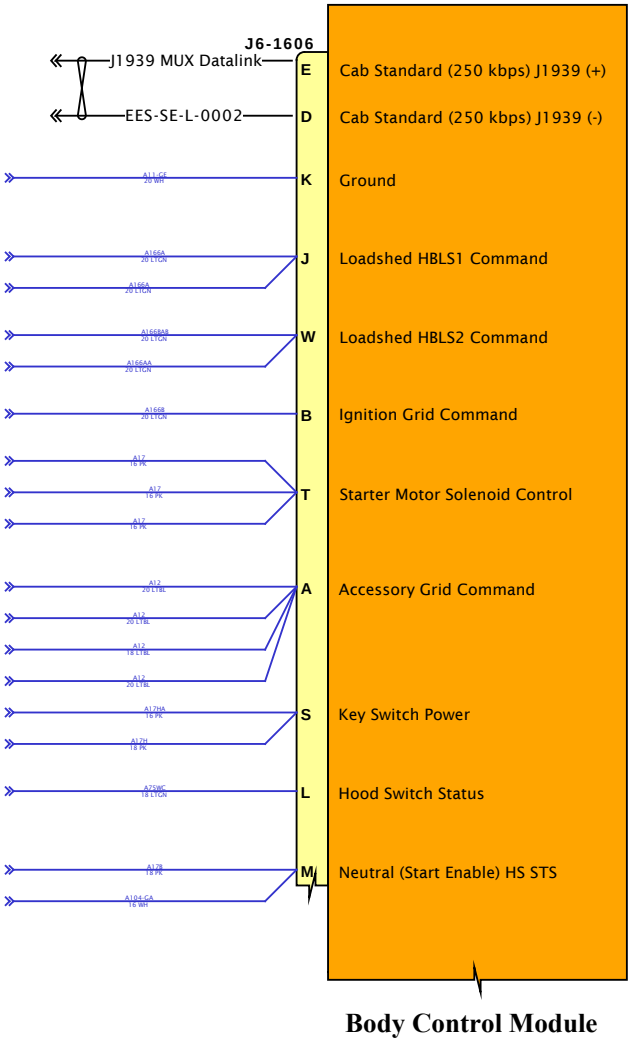

DESIGN DESCRIPTION

FEATURE CODES

SOFTWARE FEATURE CODES

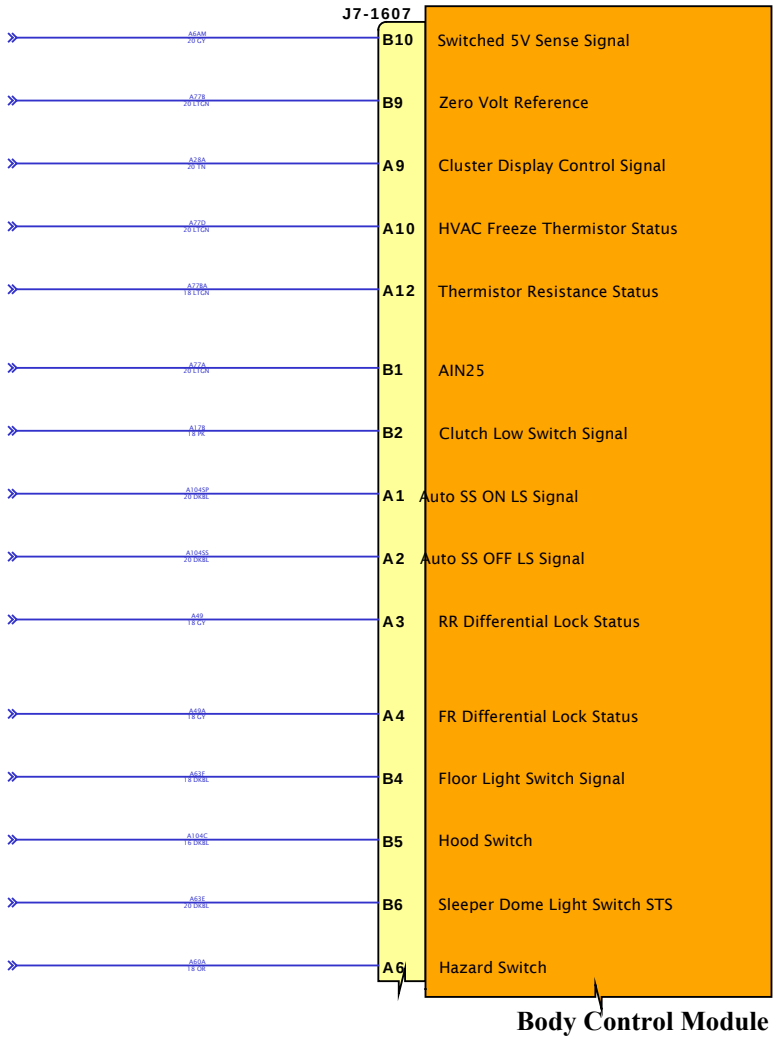

DESIGN DESCRIPTION

FEATURE CODES

SOFTWARE FEATURE CODES

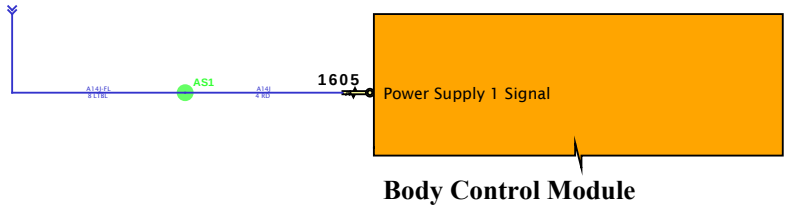

DESIGN DESCRIPTION

FEATURE CODES

SOFTWARE FEATURE CODES

DESIGN DESCRIPTION

FEATURE CODES

SOFTWARE FEATURE CODES

BENDIX ABS IMPLEMENTATION

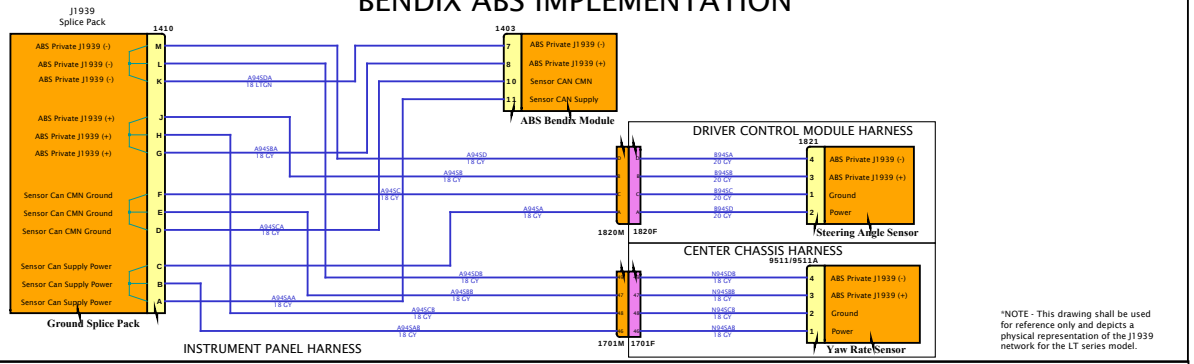

*NOTE - This drawing shall be used for reference only and depicts a physical representation of the J1939 network for the LT series model.

WABCO ABS IMPLEMENTATION

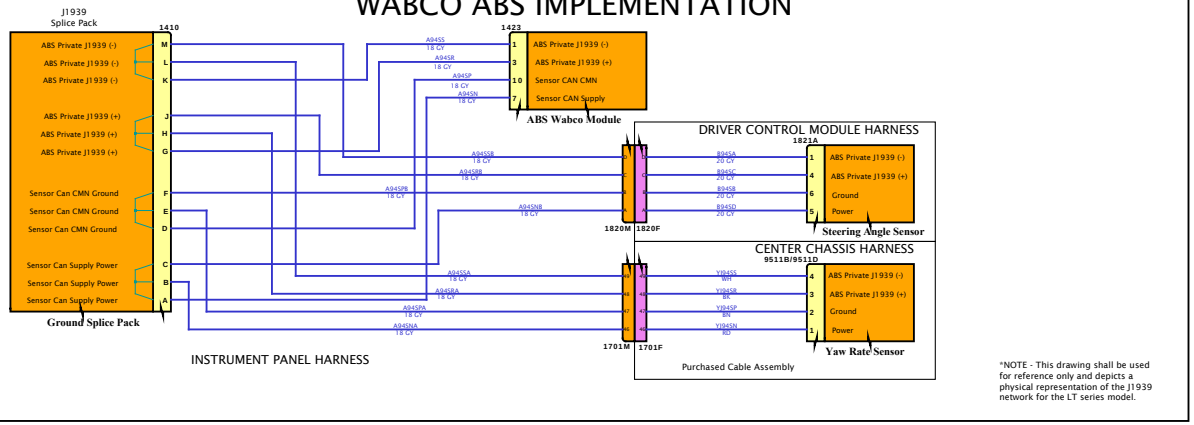

*NOTE - This drawing shall be used for reference only and depicts a physical representation of the J1939 network for the LT series model.

Cab J1939 (250Kbps)

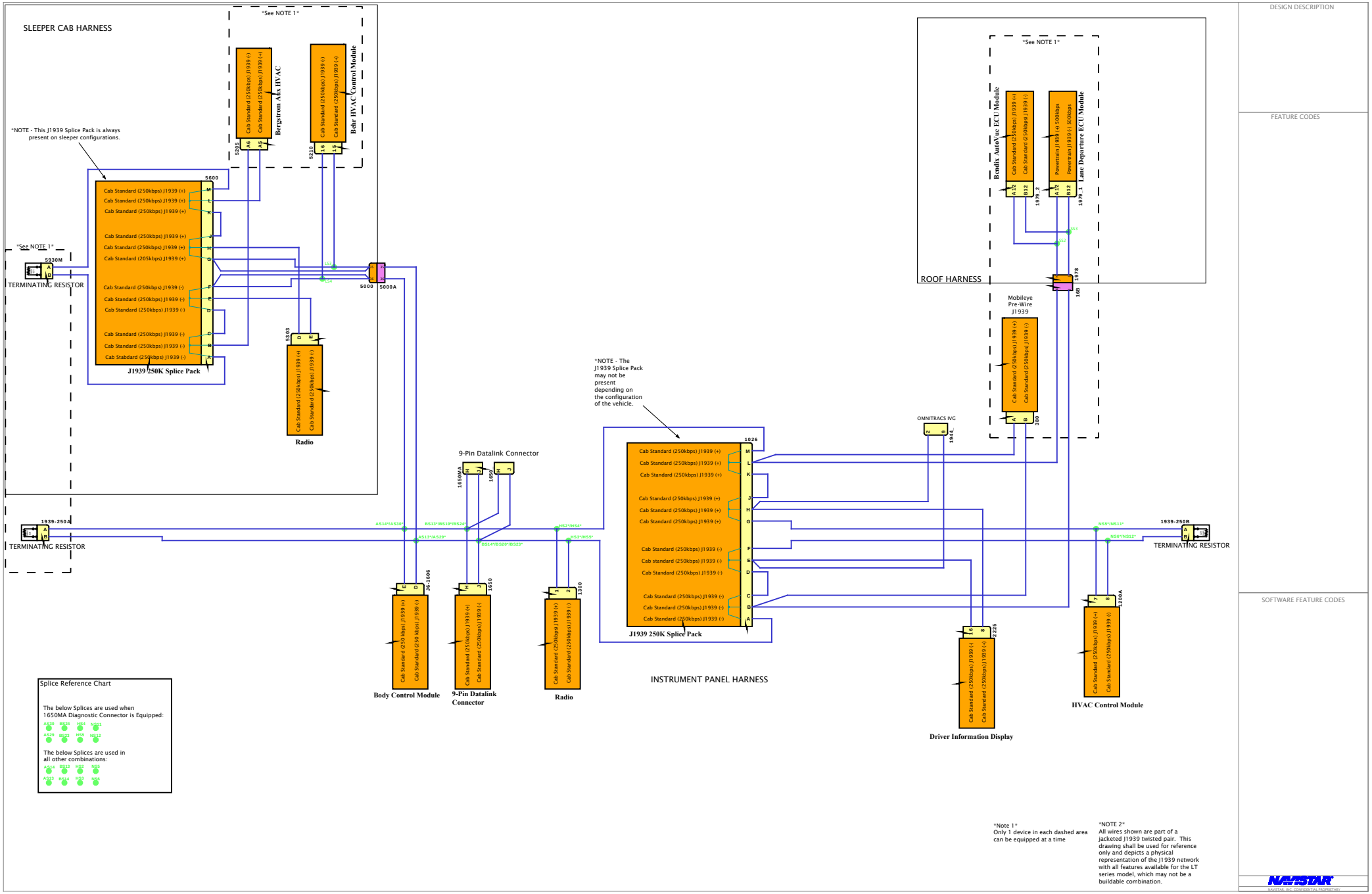

DESIGN DESCRIPTION

FEATURE CODES

SOFTWARE FEATURE CODES

A26 ENGINE IMPLEMENTATION

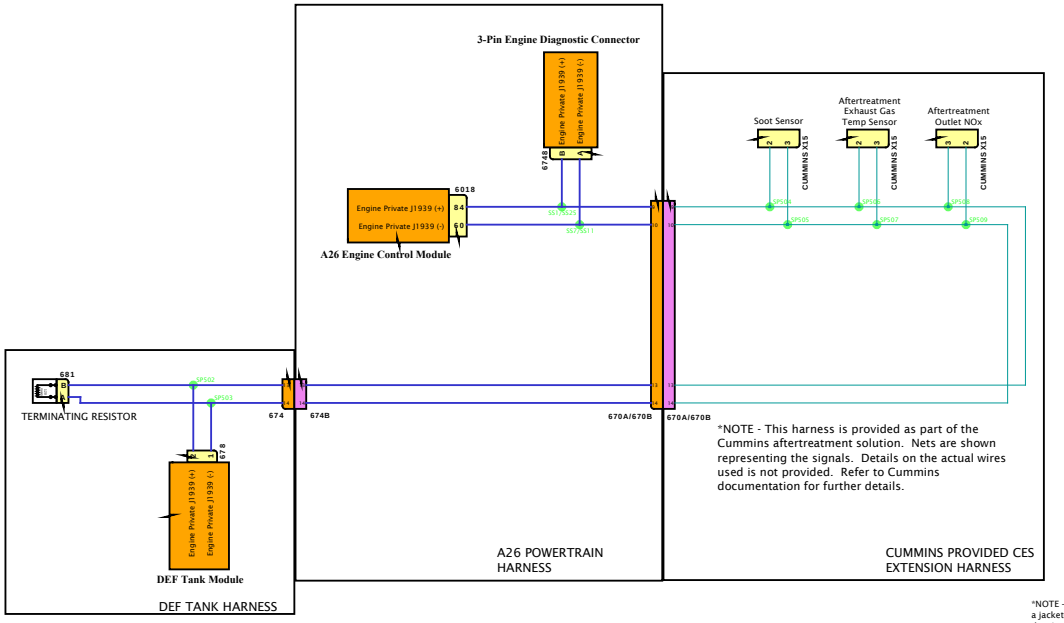

*NOTE - All wires shown are part of a jacketed J1939 twisted pair. This drawing shall be used for reference only and depicts a physical representation of the J1939 network with all features available for the LT series model, which may not be a buildable combination.

NAVISTAR INC. CONFIDENTIAL PROPRIETARY

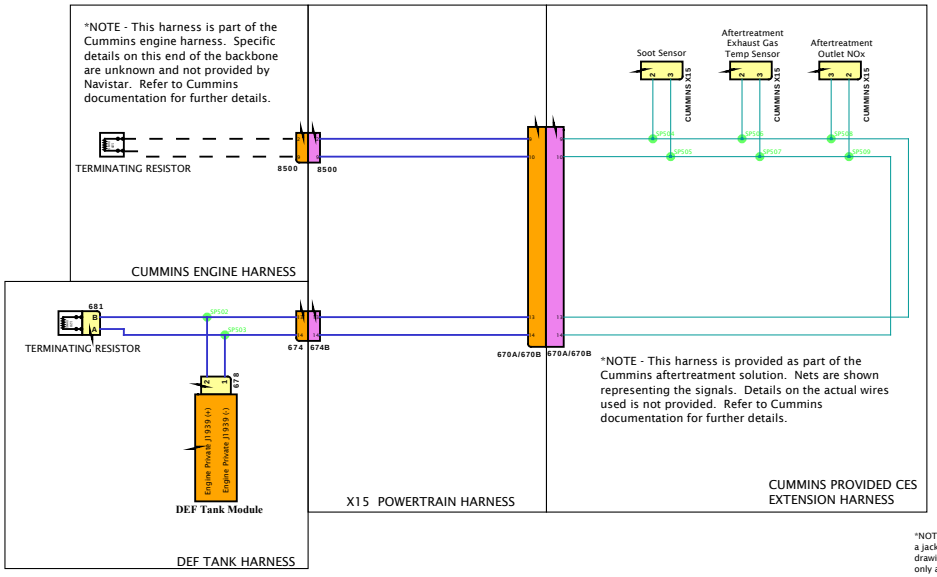

*NOTE - All wires shown are part of a jacketed J1939 twisted pair. This drawing shall be used for reference only and depicts a physical representation of the J1939 network with all features available for the LT series model, which may not be a buildable combination.

DESIGN DESCRIPTION

FEATURE CODES

SOFTWARE FEATURE CODES

NAVISTAR INC. CONFIDENTIAL PROPRIETARY

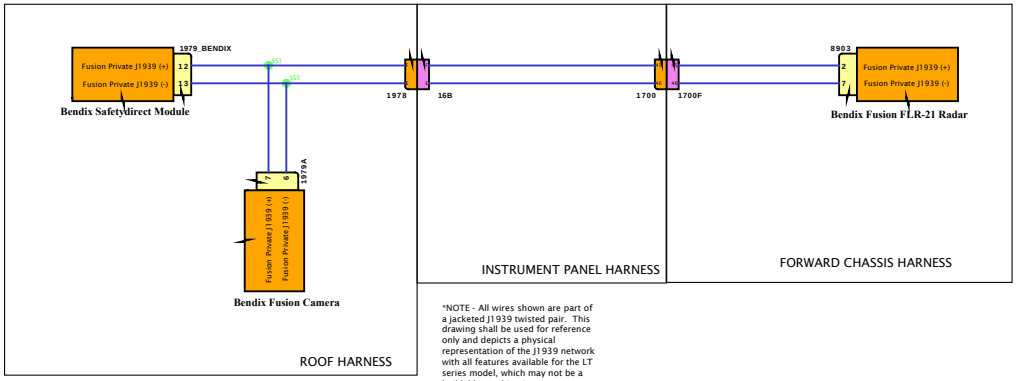

*NOTE - All wires shown are part of a jacketed J1939 twisted pair. This drawing shall be used for reference only and depicts a physical representation of the J1939 network with all features available for the LT series model, which may not be a buildable combination.

DESIGN DESCRIPTION

FEATURE CODES

SOFTWARE FEATURE CODES

NAVISTAR INC. CONFIDENTIAL PROPRIETARY

Low Speed J1939 (125Kbps)

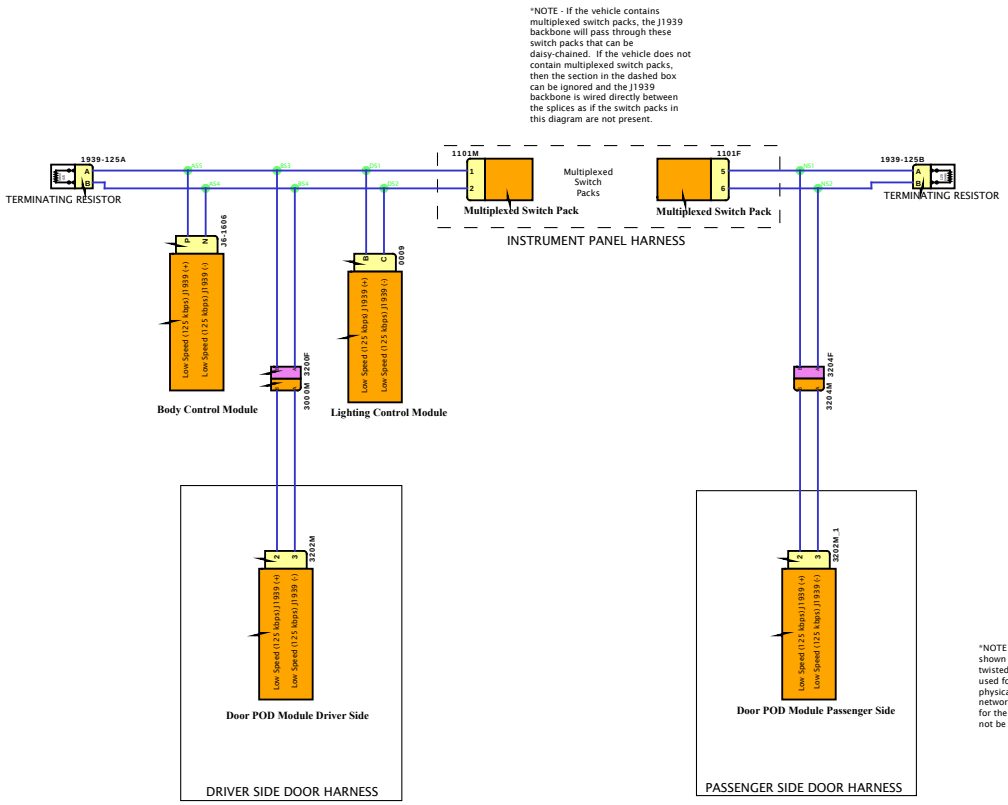

DESIGN DESCRIPTION

FEATURE CODES

SOFTWARE FEATURE CODES

DESIGN DESCRIPTION

FEATURE CODES

SOFTWARE FEATURE CODES

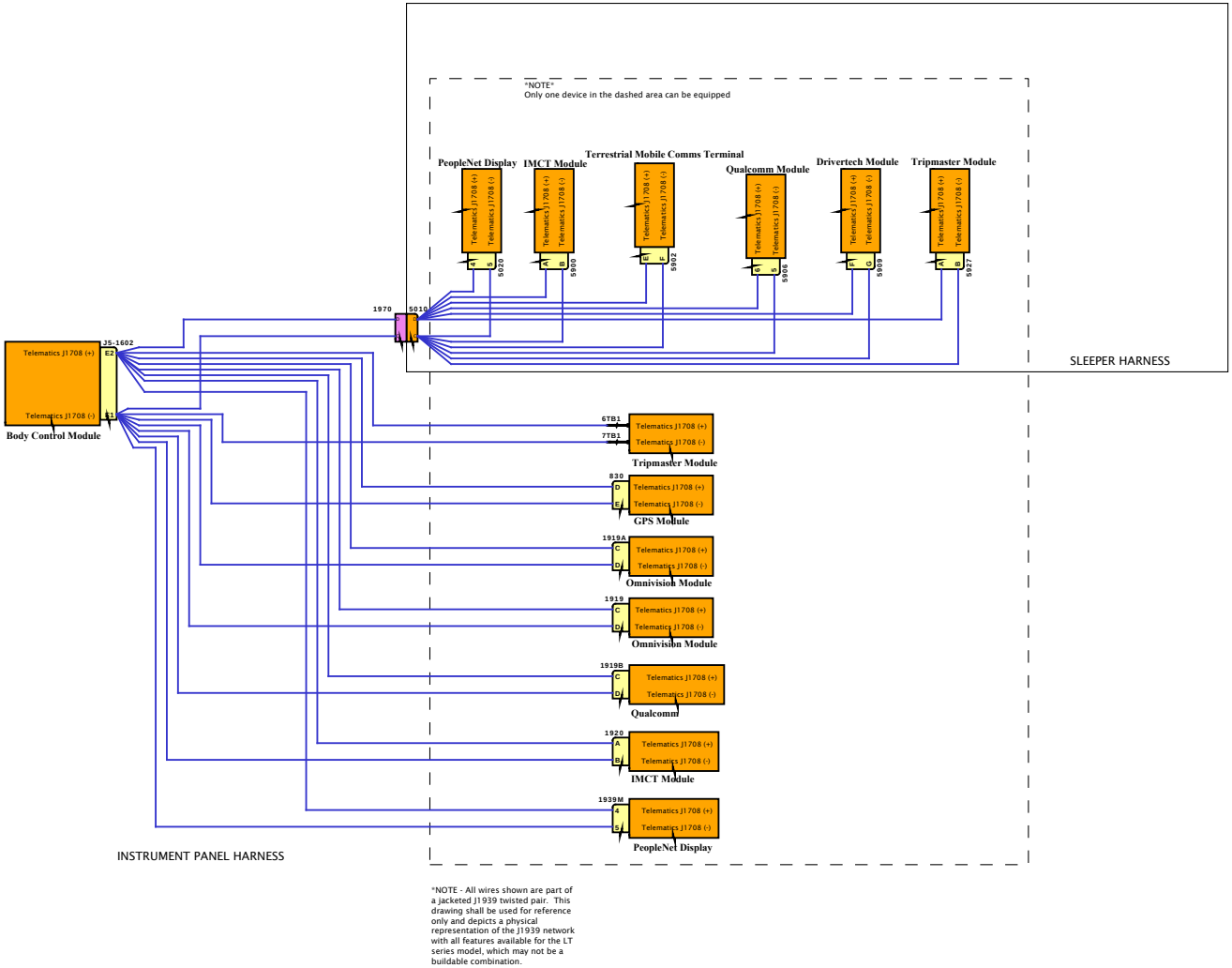

*NOTE - All wires shown are part of a jacketed J1939 twisted pair. This drawing shall be used for reference only and depicts a physical representation of the J1939 network with all features available for the LT series model, which may not be a buildable combination.

Body J1939 (250Kbps)

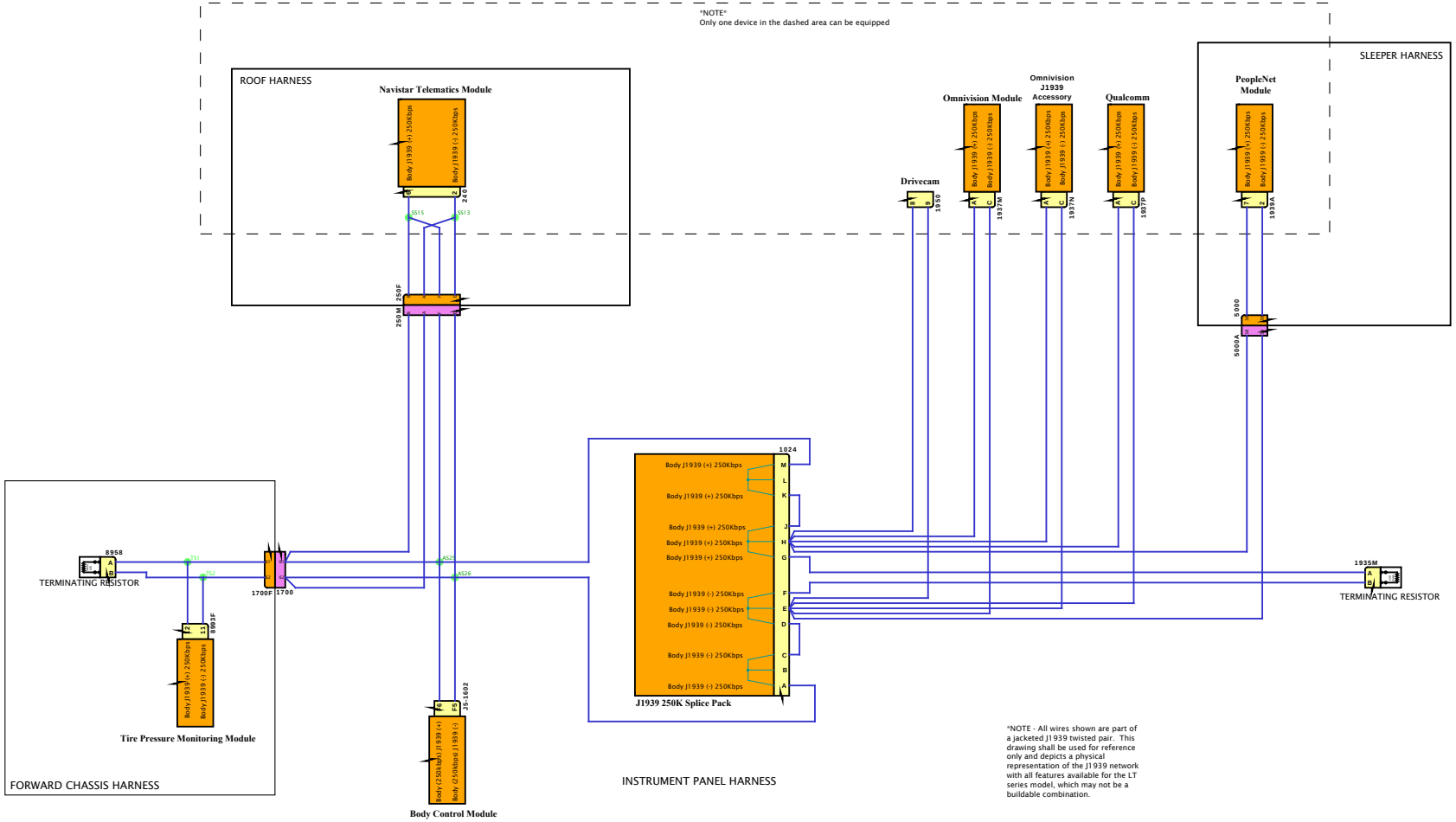

DESIGN DESCRIPTION

FEATURE CODES

SOFTWARE FEATURE CODES

Body J1939 (250Kbps)

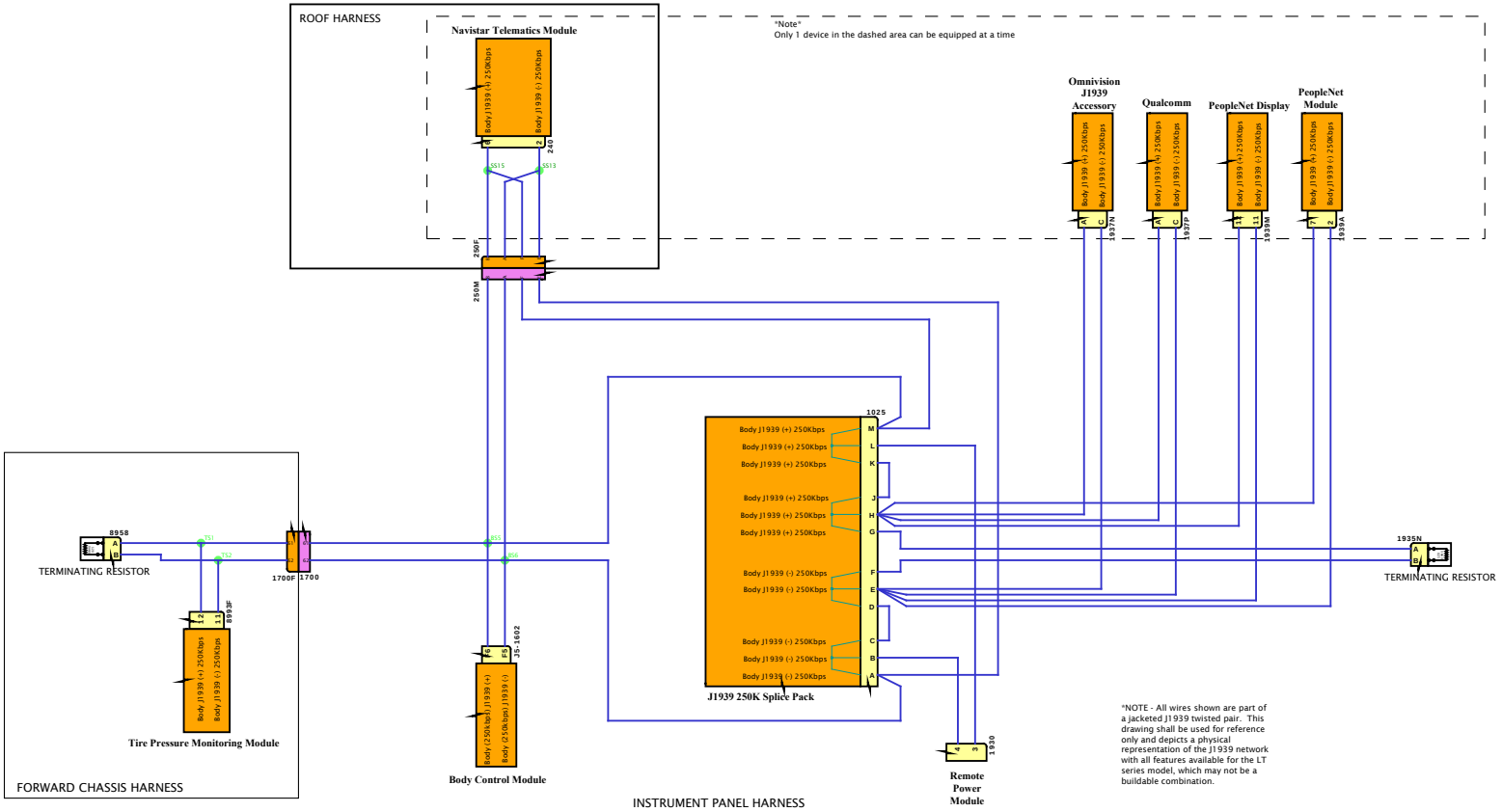

DESIGN DESCRIPTION

FEATURE CODES

SOFTWARE FEATURE CODES

Body J1939 (250Kbps)

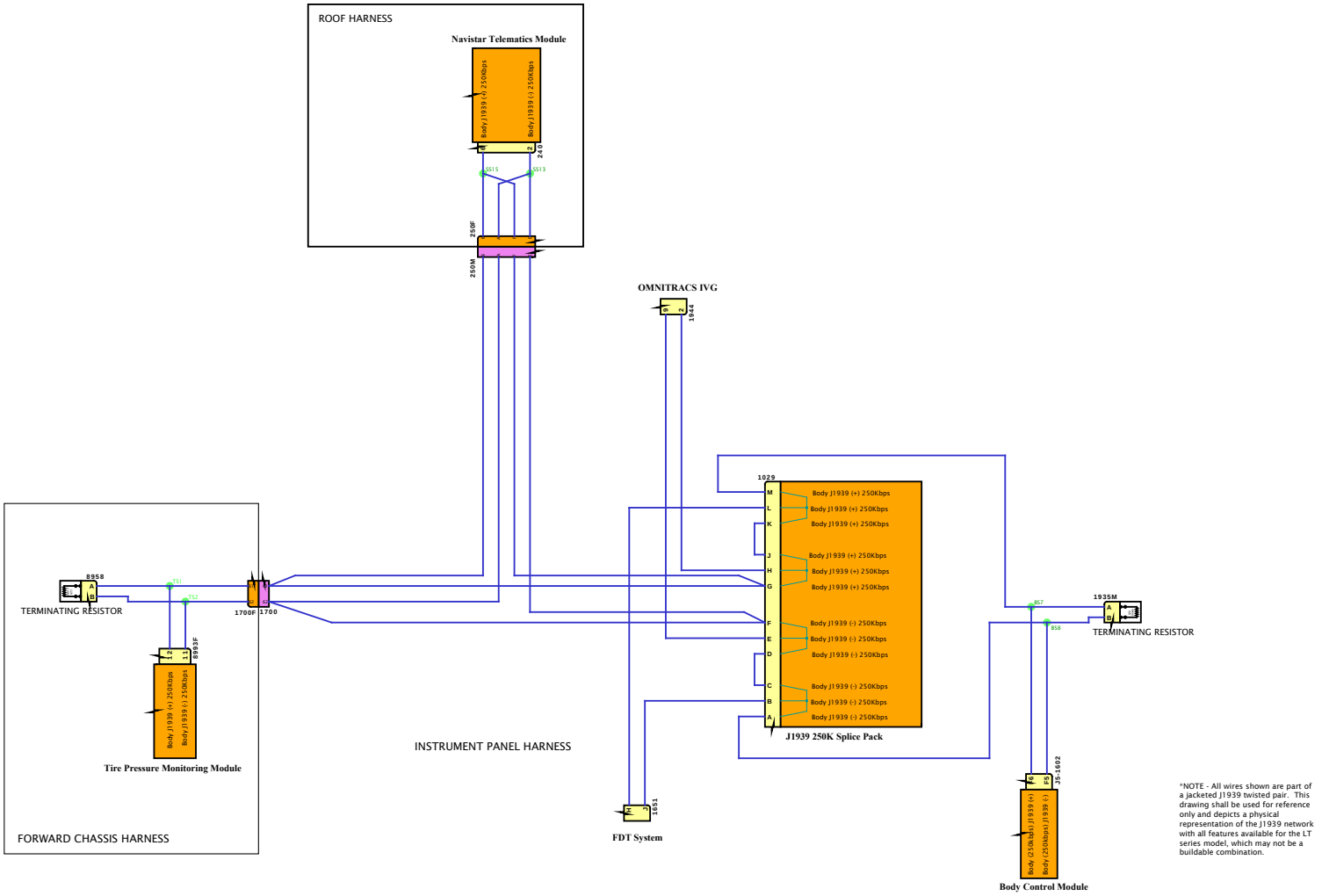

DESIGN DESCRIPTION

FEATURE CODES

SOFTWARE FEATURE CODES

Body J1939 (250Kbps)

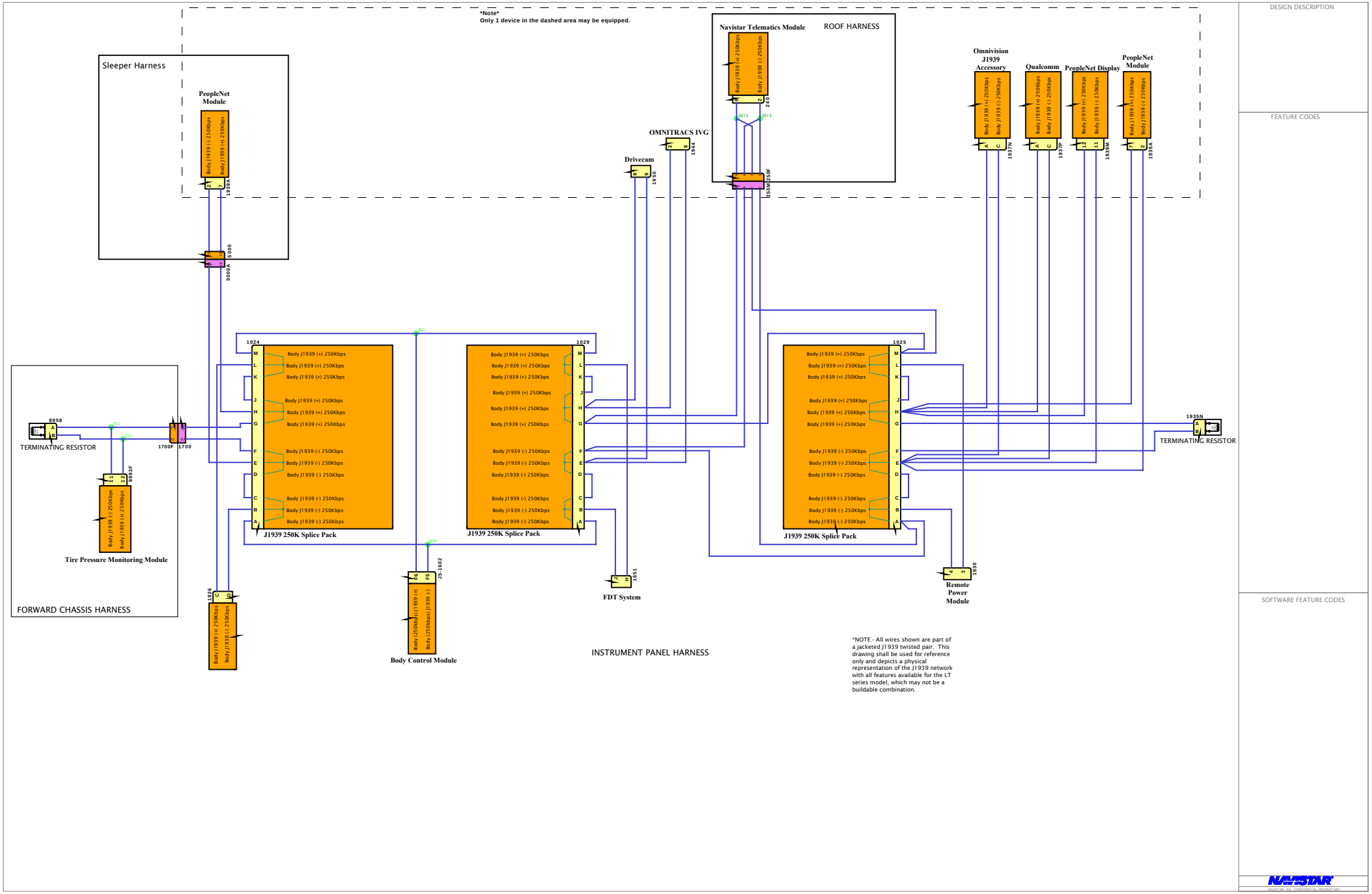

A26 ENGINE IMPLEMENTATION

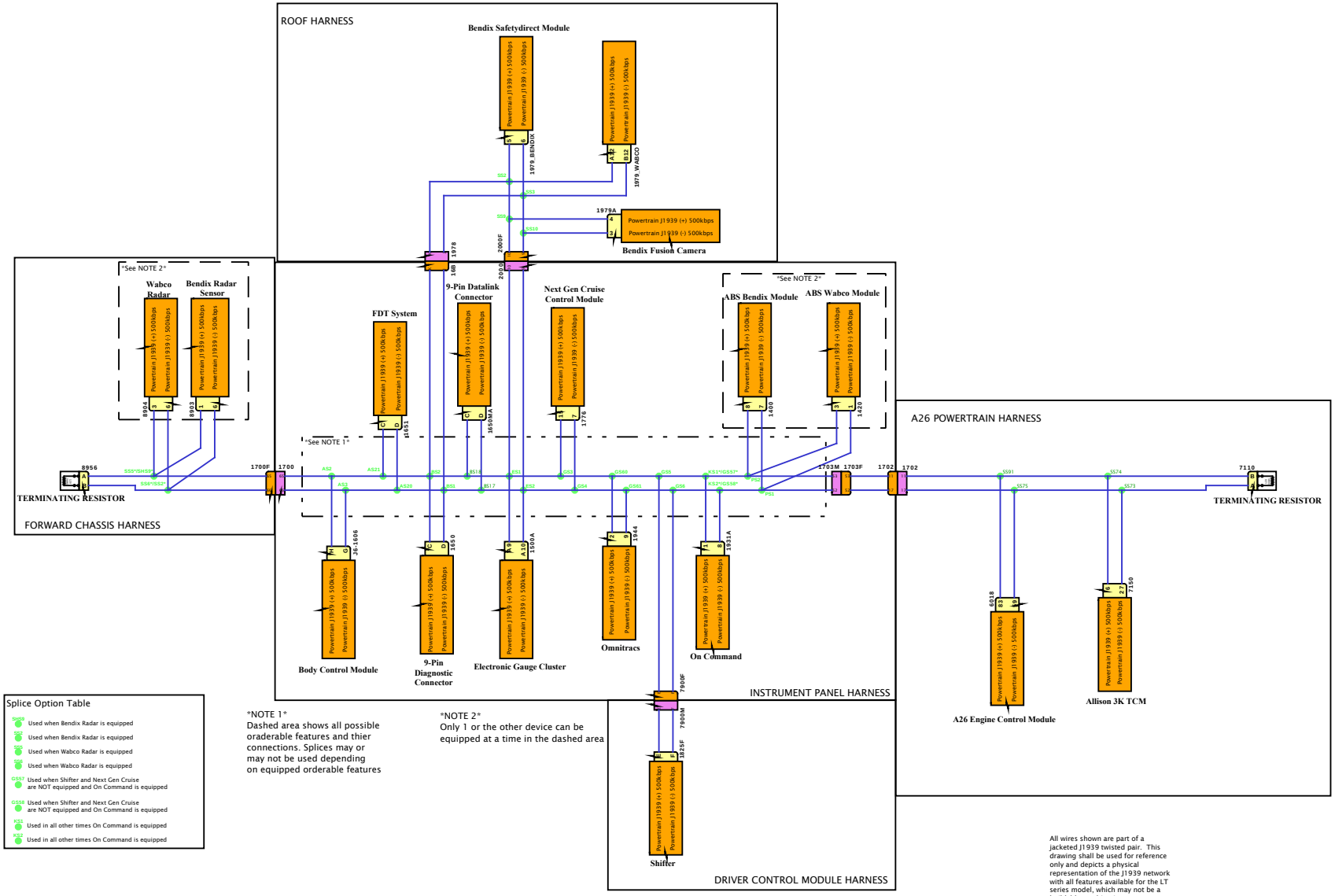

DESIGN DESCRIPTION

FEATURE CODES

SOFTWARE FEATURE CODES

A26 ENGINE IMPLEMENTATION

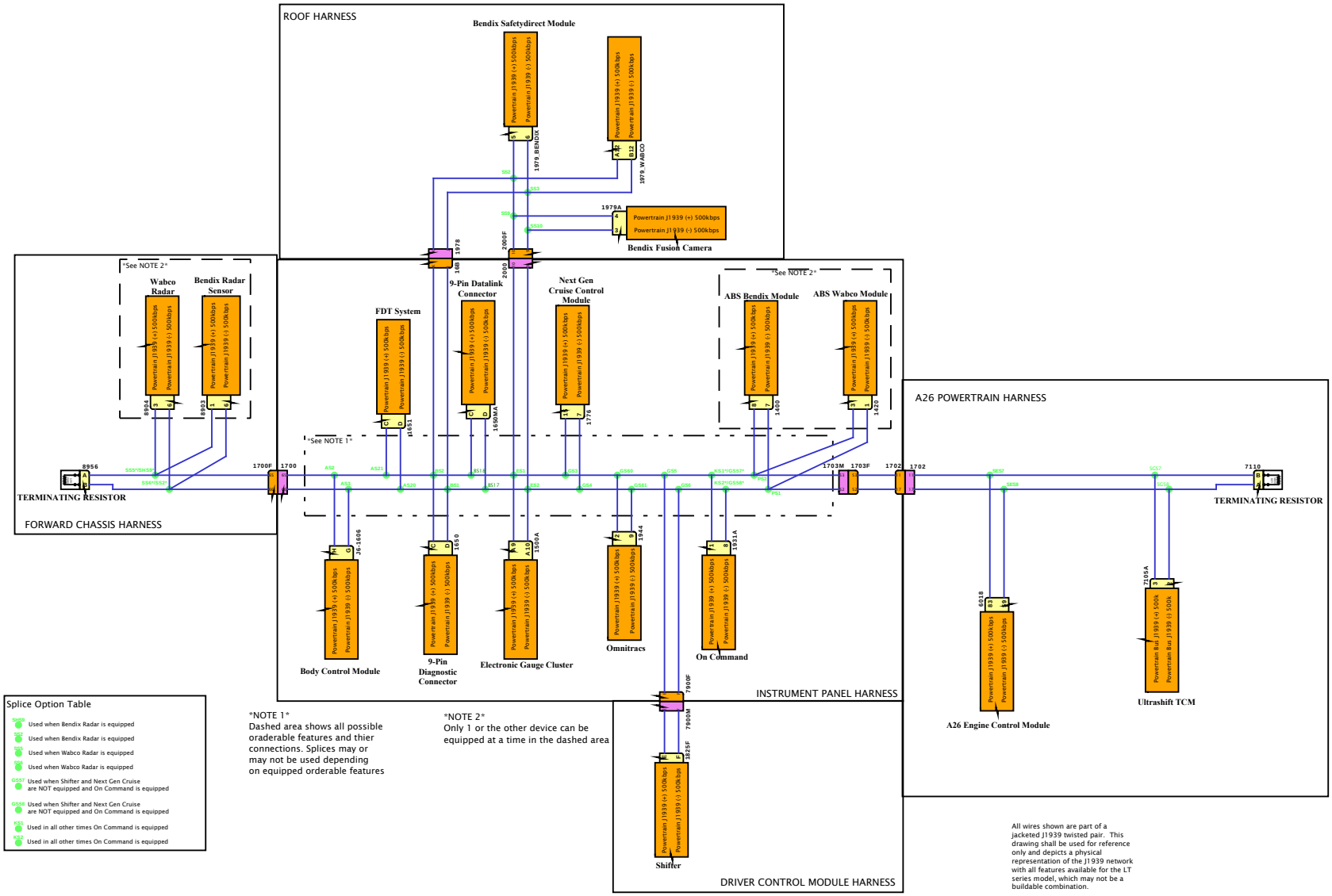

NOTE 1
Dashed area shows all possible oraderable features and thier connections. Splices may or may not be used depending on equipped orderable features

NOTE 2
Only 1 or the other device can be equipped at a time in the dashed area

All wires shown are part of a jacketed J1939 twisted pair. This drawing shall be used for reference only and depicts a physical representation of the J1939 network with all features available for the LT series model, which may not be a buildable combination.

DESIGN DESCRIPTION

FEATURE CODES

SOFTWARE FEATURE CODES

A26 ENGINE IMPLEMENTATION

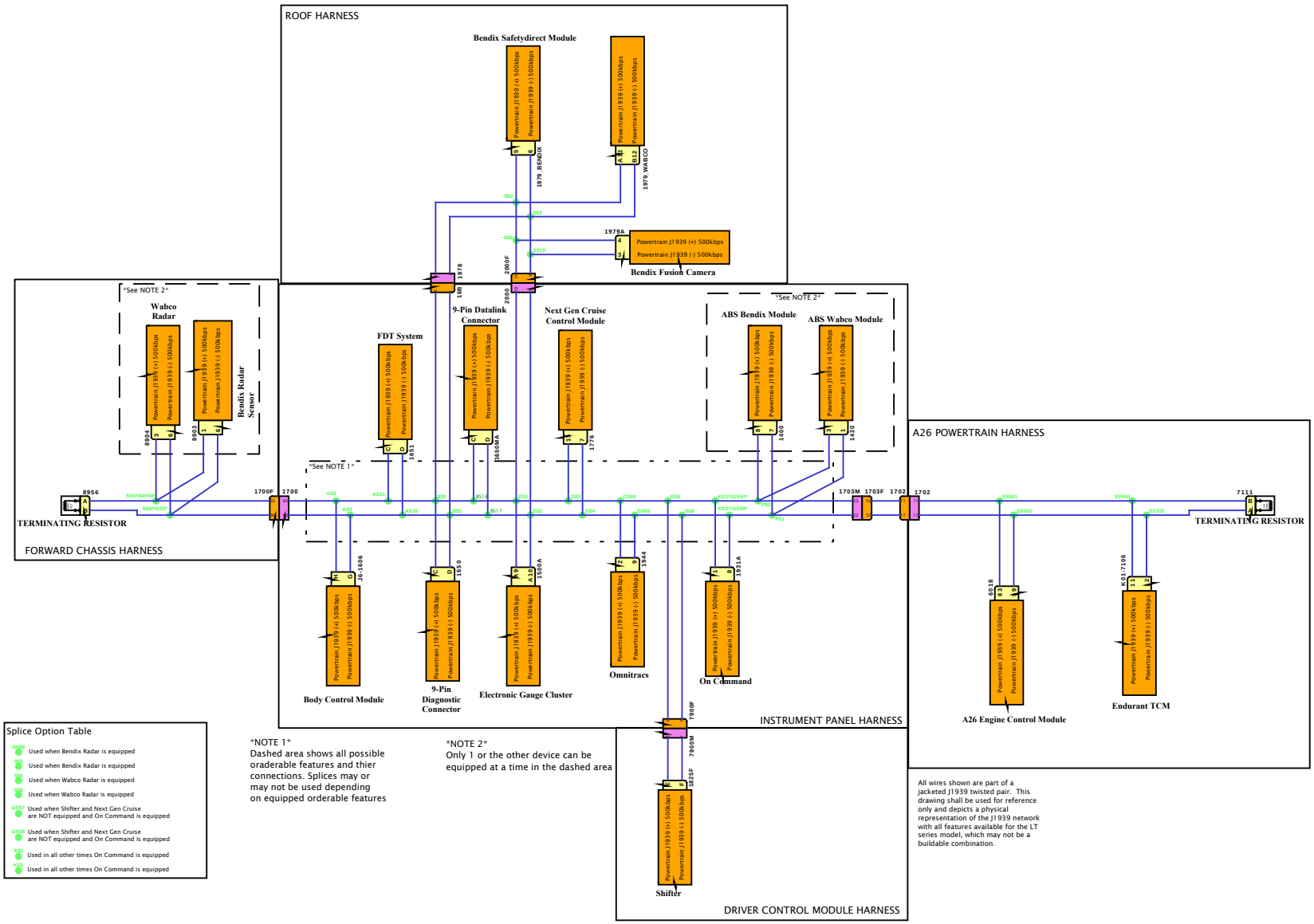

DESIGN DESCRIPTION

FEATURE CODES

SOFTWARE FEATURE CODES

A26 ENGINE IMPLEMENTATION

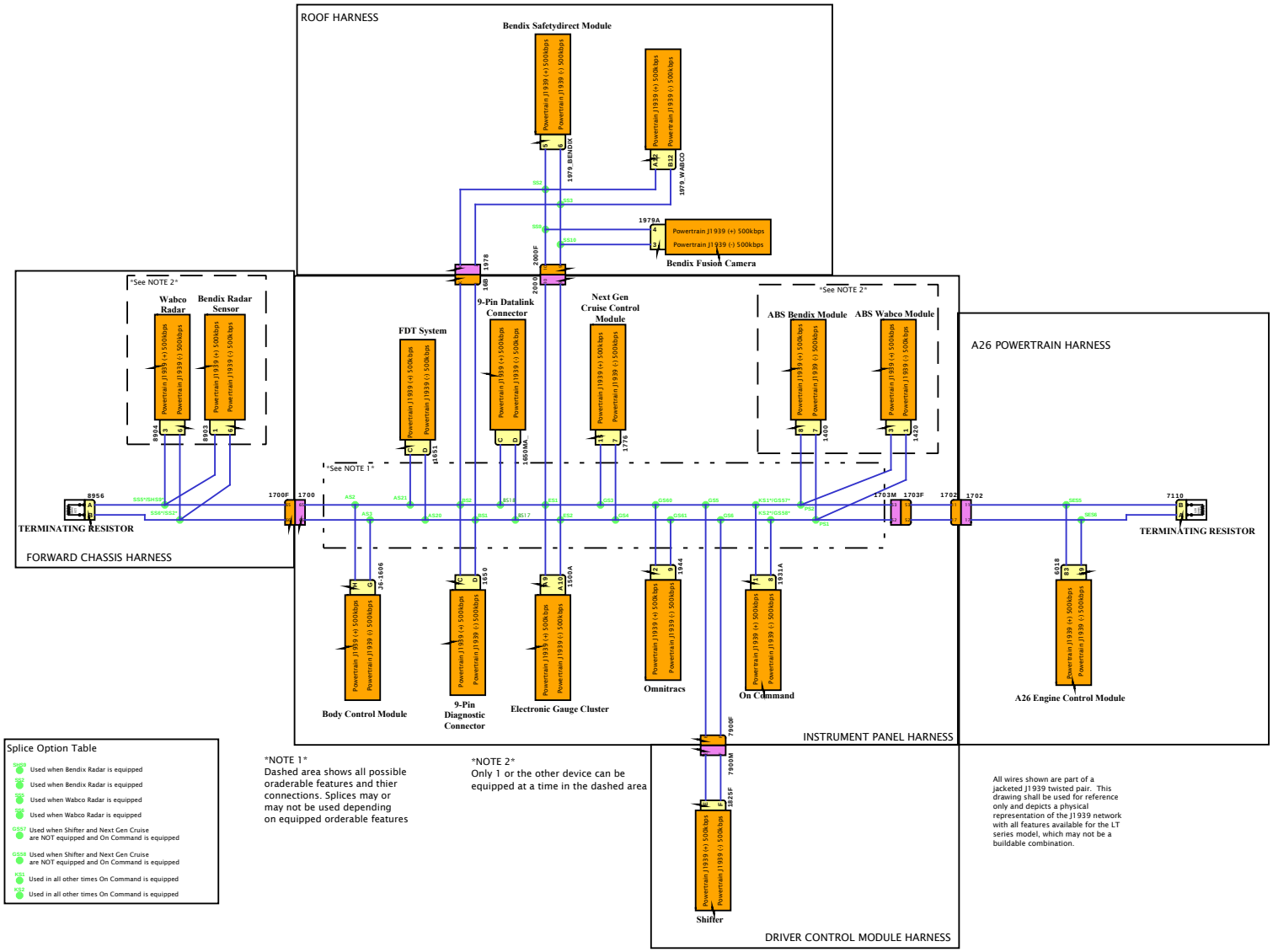

DESIGN DESCRIPTION

FEATURE CODES

SOFTWARE FEATURE CODES

A26 ENGINE IMPLEMENTATION

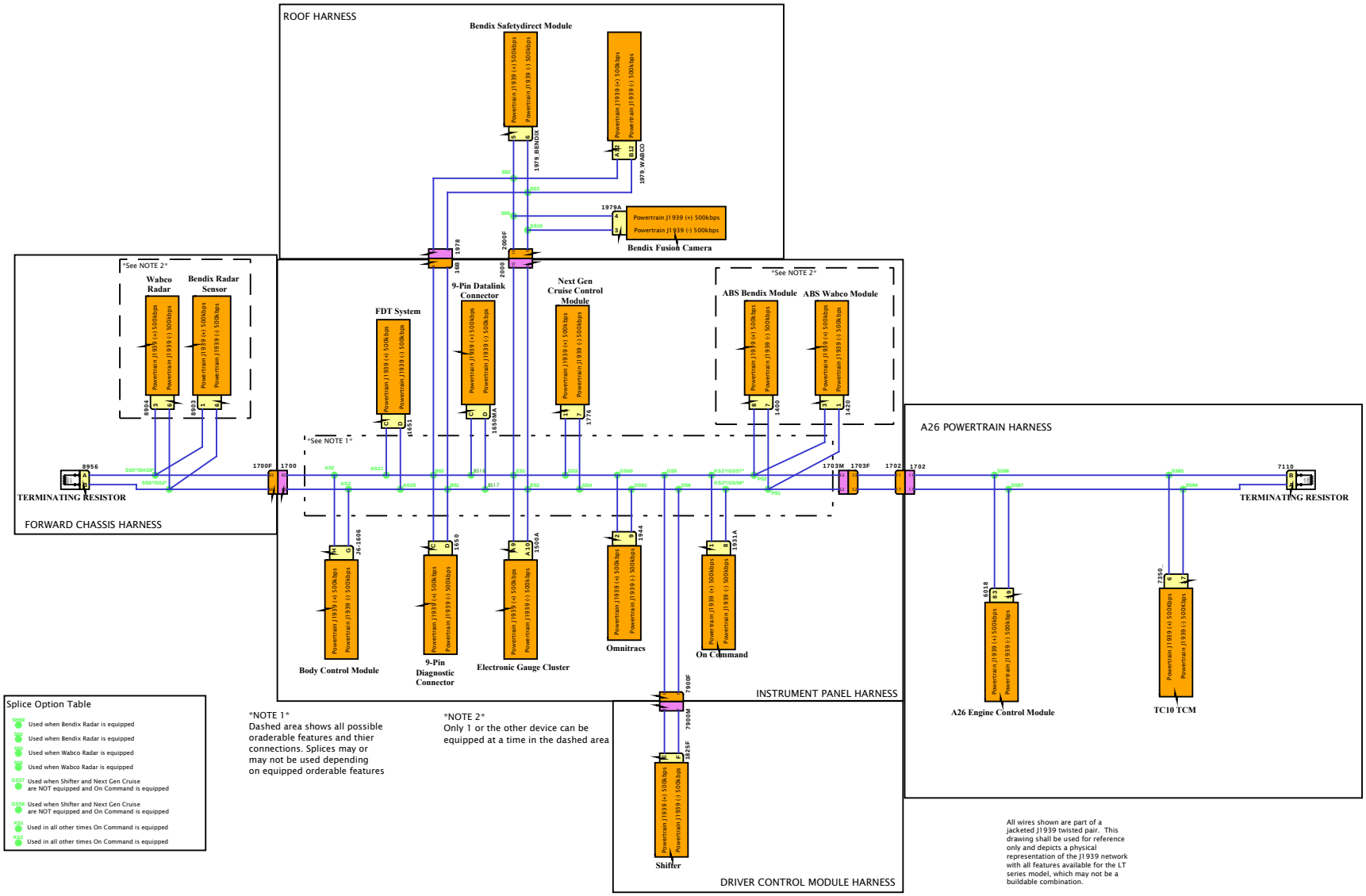

DESIGN DESCRIPTION

FEATURE CODES

SOFTWARE FEATURE CODES

X15 ENGINE IMPLEMENTATION

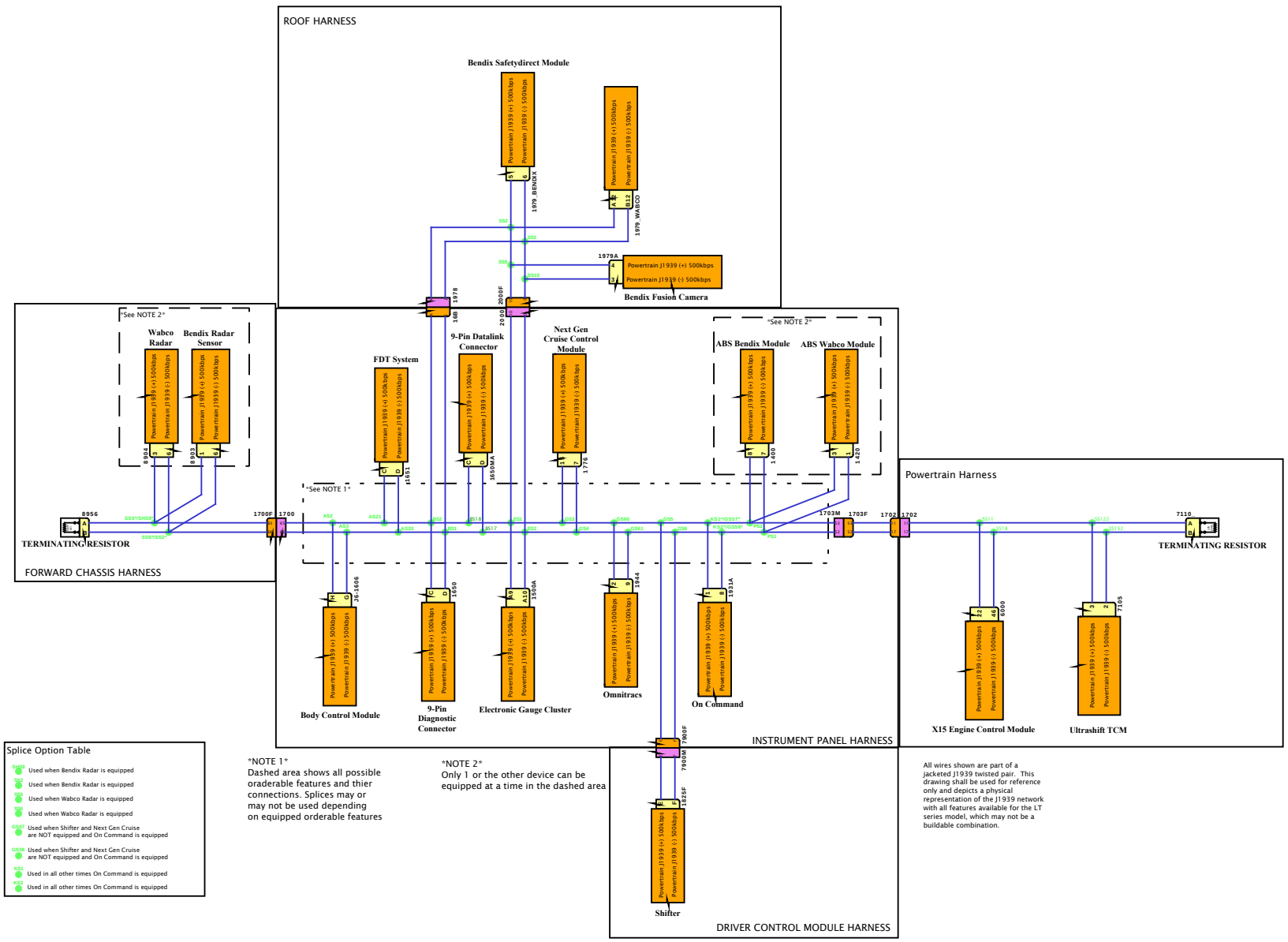

Splice Option Table

- SHS9 Used when Bendix Radar is equipped
- SS2 Used when Bendix Radar is equipped
- SS5 Used when Wabco Radar is equipped
- SS6 Used when Wabco Radar is equipped
- GS57 Used when Shifter and Next Gen Cruise are NOT equipped and On Command is equipped
- GS58 Used when Shifter and Next Gen Cruise are NOT equipped and On Command is equipped
- KS1 Used in all other times On Command is equipped
- KS2 Used in all other times On Command is equipped

NOTE 1
Dashed area shows all possible oraderable features and thier connections. Splices may or may not be used depending on equipped orderable features

NOTE 2
Only 1 or the other device can be equipped at a time in the dashed area

All wires shown are part of a jacketed J1939 twisted pair. This drawing shall be used for reference only and depicts a physical representation of the J1939 network with all features available for the LT series model, which may not be a buildable combination.

DESIGN DESCRIPTION

FEATURE CODES

SOFTWARE FEATURE CODES

NAVISTAR

NAVISTAR, INC. CONFIDENTIAL PROPRIETARY

X15 ENGINE IMPLEMENTATION

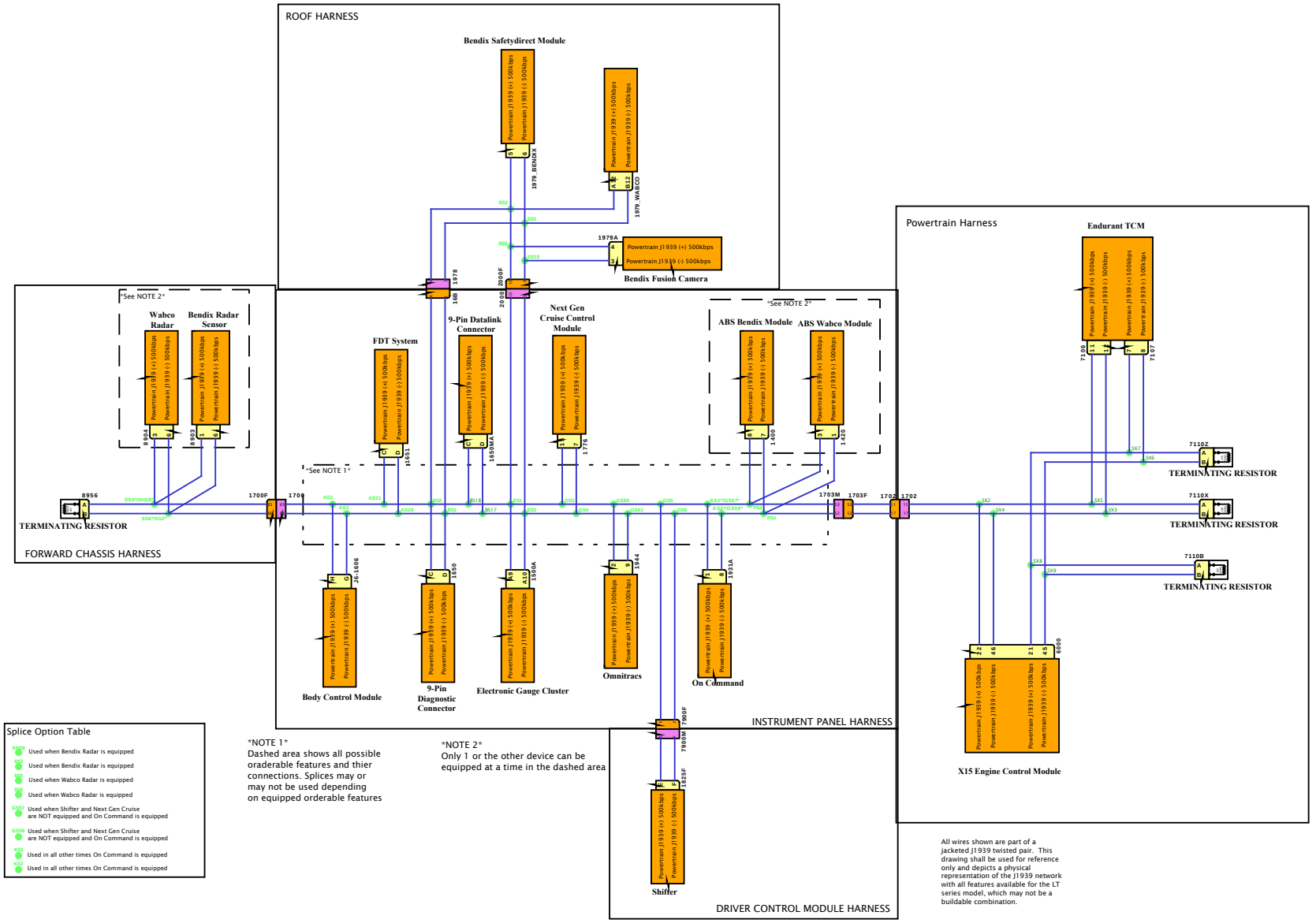

DESIGN DESCRIPTION

FEATURE CODES

SOFTWARE FEATURE CODES

X15 ENGINE IMPLEMENTATION

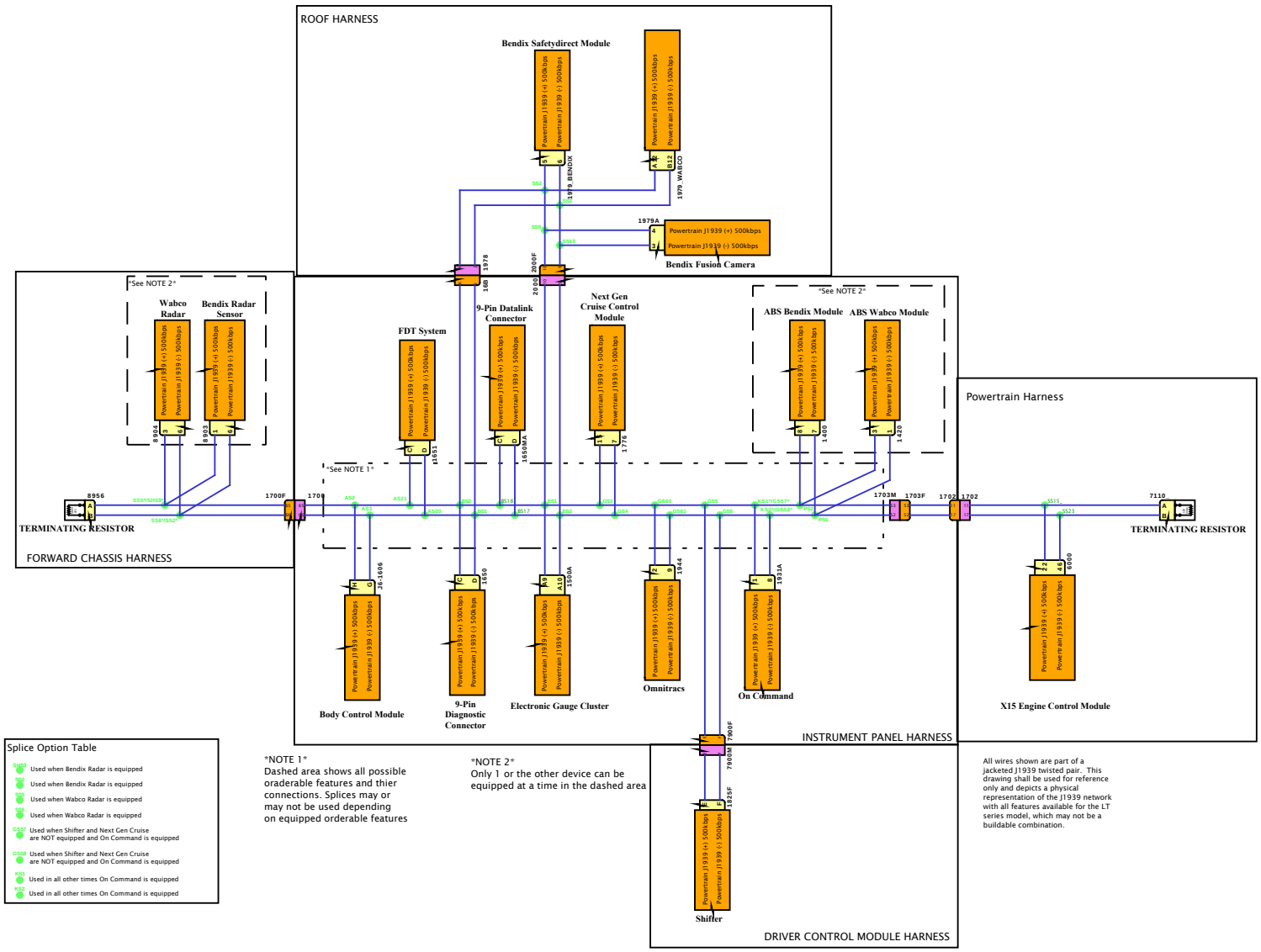

Splice Option Table

- SHS9 Used when Bendix Radar is equipped
- SS2 Used when Bendix Radar is equipped
- SS5 Used when Wabco Radar is equipped
- SS6 Used when Wabco Radar is equipped
- GS57 Used when Shifter and Next Gen Cruise are NOT equipped and On Command is equipped
- GS58 Used when Shifter and Next Gen Cruise are NOT equipped and On Command is equipped
- KS1 Used in all other times On Command is equipped
- KS2 Used in all other times On Command is equipped

NOTE 1
Dashed area shows all possible oraderable features and thier connections. Splices may or may not be used depending on equipped orderable features

NOTE 2
Only 1 or the other device can be equipped at a time in the dashed area

All wires shown are part of a jacketed J1939 twisted pair. This drawing shall be used for reference only and depicts a physical representation of the J1939 network with all features available for the LT series model, which may not be a buildable combination.

DESIGN DESCRIPTION

FEATURE CODES

SOFTWARE FEATURE CODES

NAVISTAR

NAVISTAR, INC. CONFIDENTIAL PROPRIETARY

X15 ENGINE IMPLEMENTATION

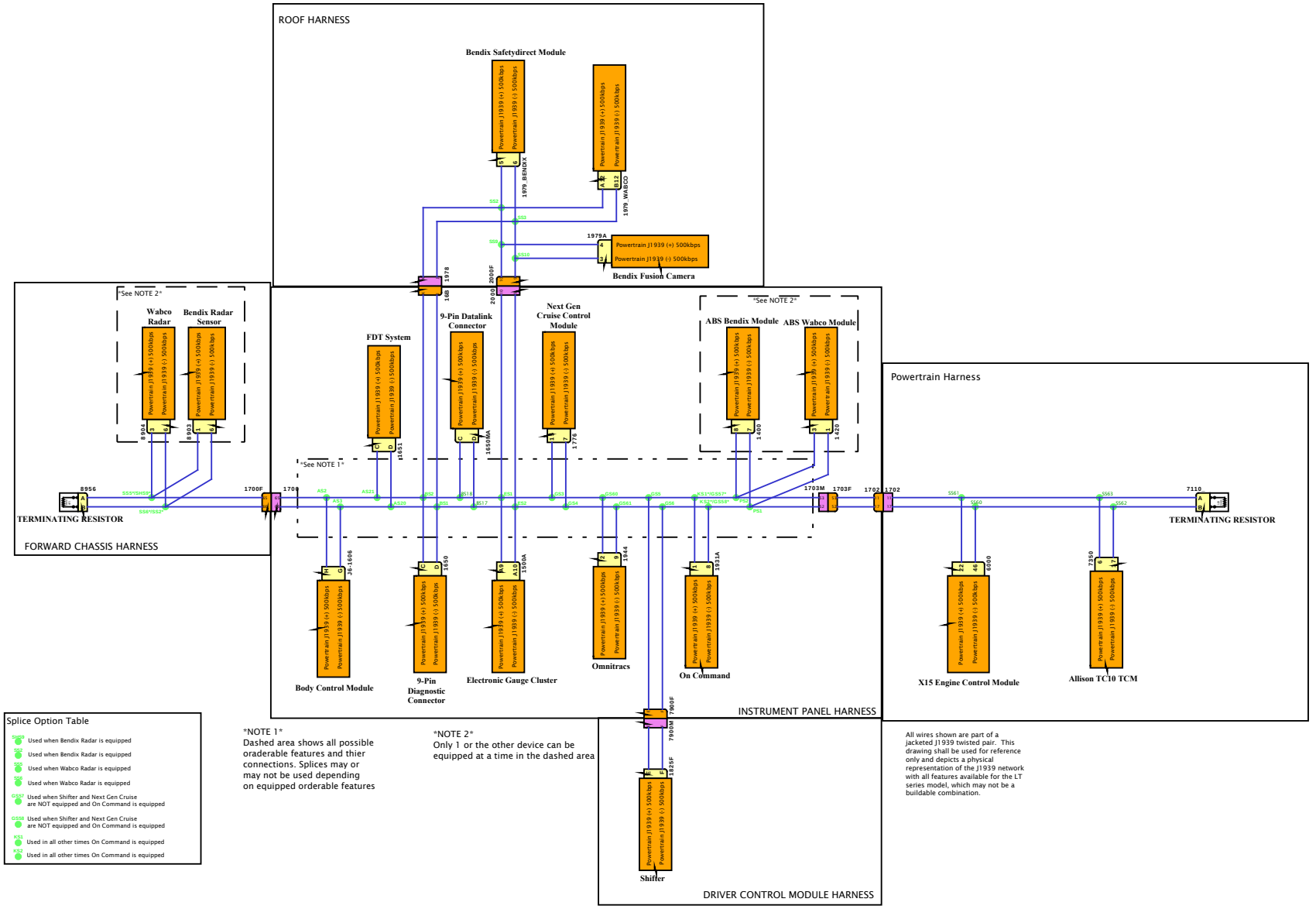

DESIGN DESCRIPTION

FEATURE CODES

SOFTWARE FEATURE CODES

ECM Connector 6018

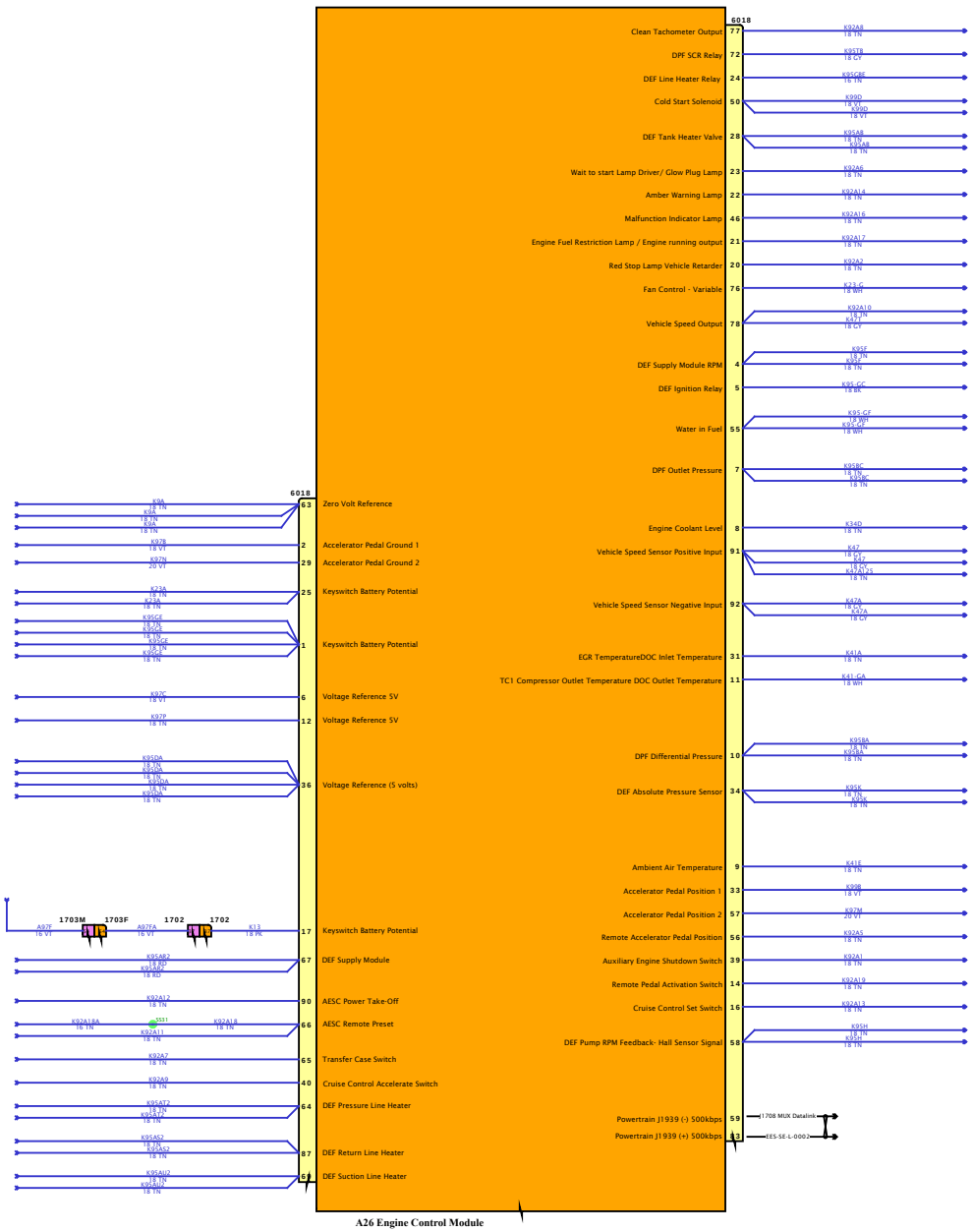

DESIGN DESCRIPTION

FEATURE CODES

SOFTWARE FEATURE CODES

ECM Connector 6019

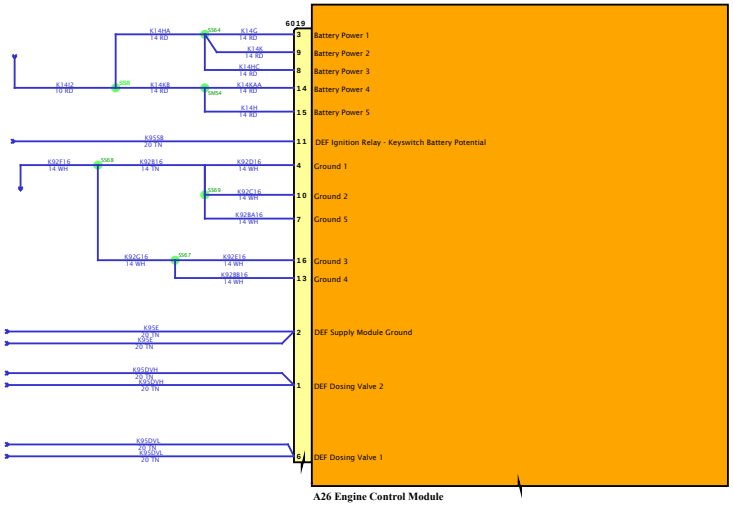

DESIGN DESCRIPTION

FEATURE CODES

SOFTWARE FEATURE CODES

NAVISTAR INC. CONFIDENTIAL PROPRIETARY

Diagram1

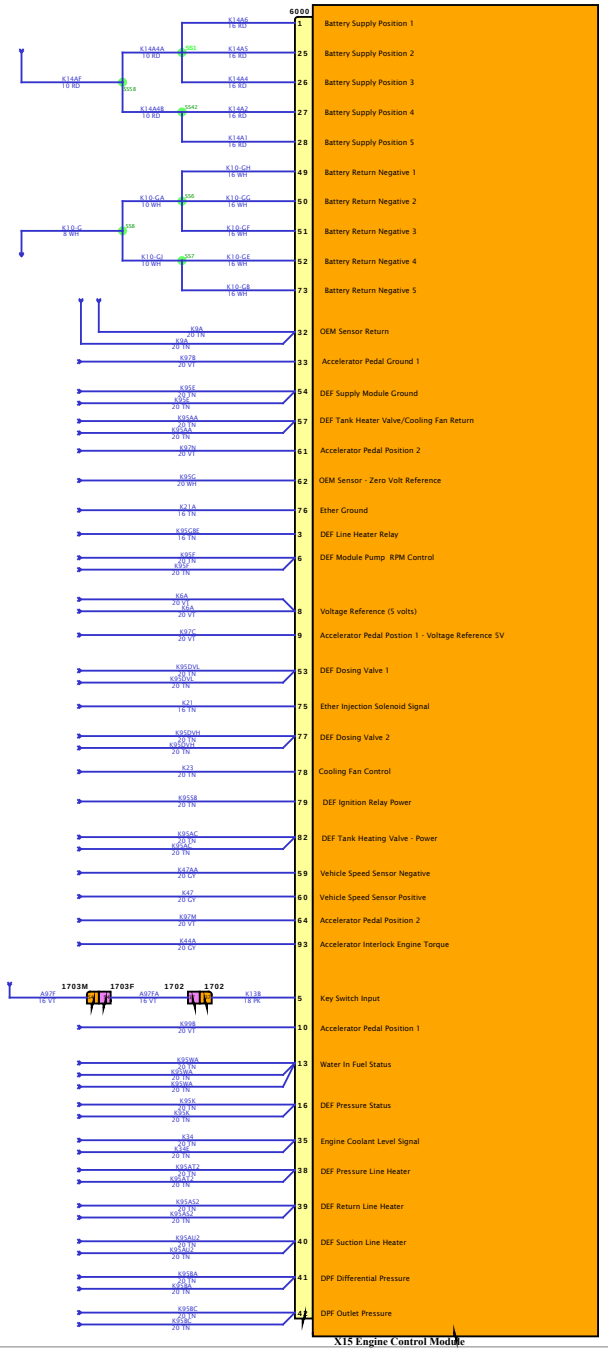

DESIGN DESCRIPTION

FEATURE CODES

SOFTWARE FEATURE CODES

DESIGN DESCRIPTION

FEATURE CODES

SOFTWARE FEATURE CODES

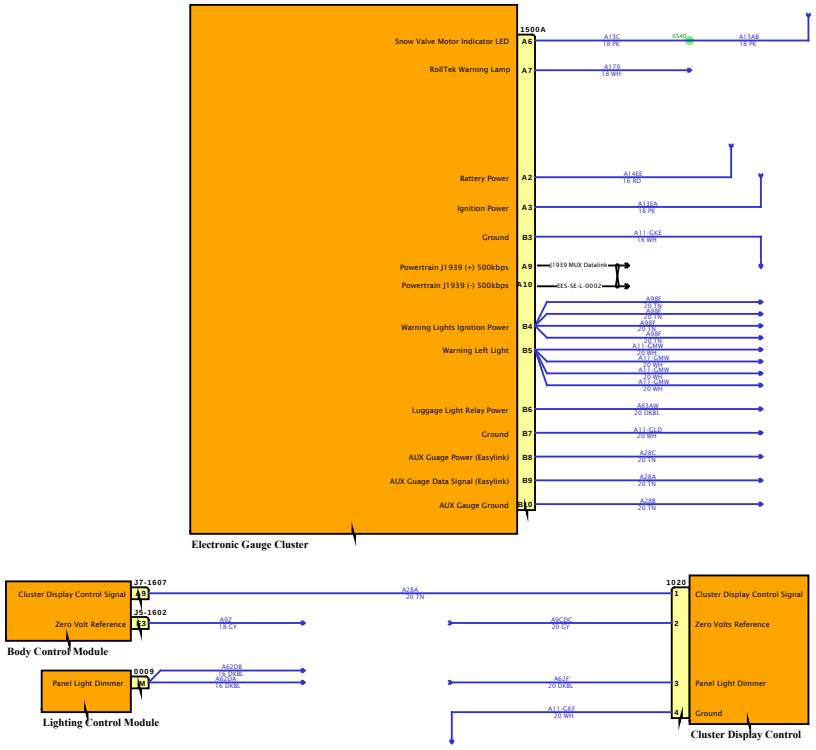

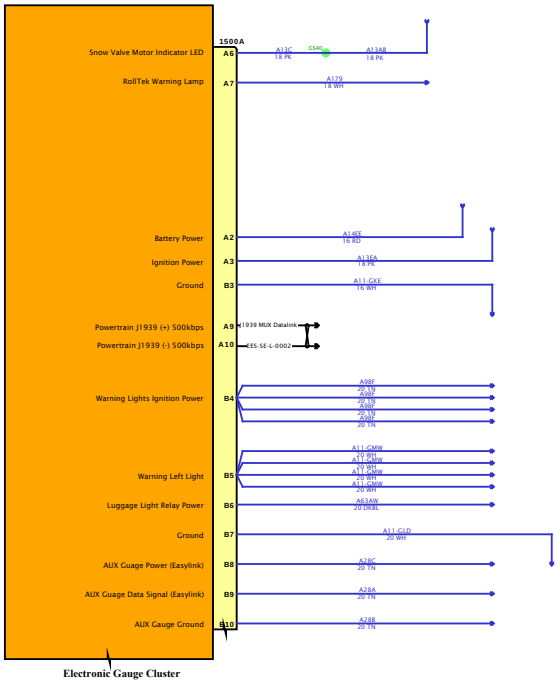

DESIGN DESCRIPTION

FEATURE CODES

SOFTWARE FEATURE CODES

NAVISTAR INC. CONFIDENTIAL PROPRIETARY

Diagram1



DESIGN DESCRIPTION

FEATURE CODES

SOFTWARE FEATURE CODES

NAVISTAR INC. CONFIDENTIAL PROPRIETARY

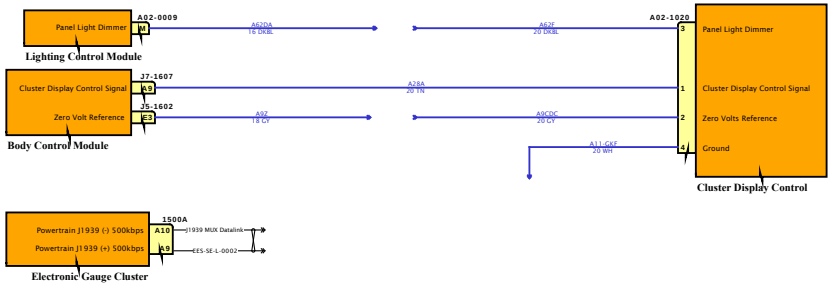

DESIGN DESCRIPTION

FEATURE CODES

SOFTWARE FEATURE CODES

NAVISTAR INC. CONFIDENTIAL PROPRIETARY

Diagram1

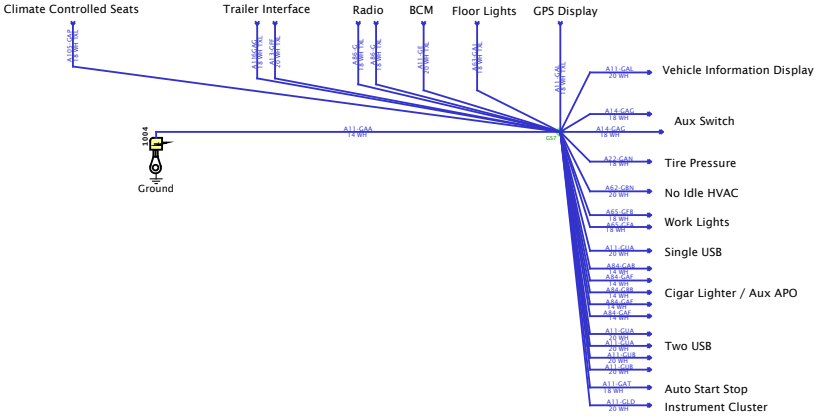



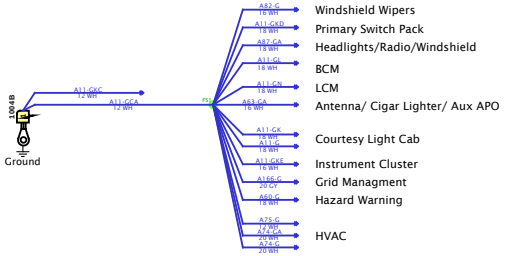

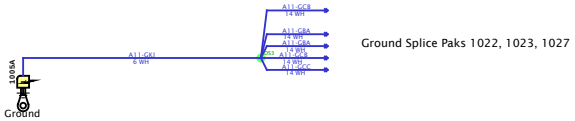



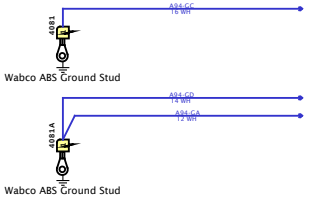

DESIGN DESCRIPTION

FEATURE CODES

SOFTWARE FEATURE CODES

Diagram1

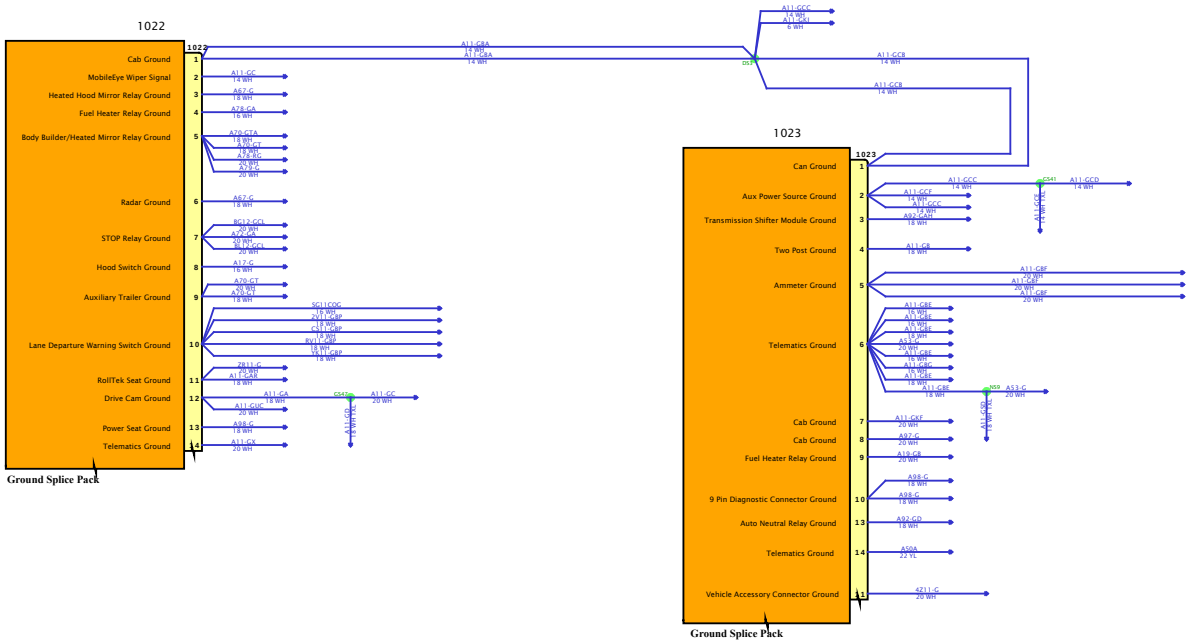

DESIGN DESCRIPTION

FEATURE CODES

SOFTWARE FEATURE CODES

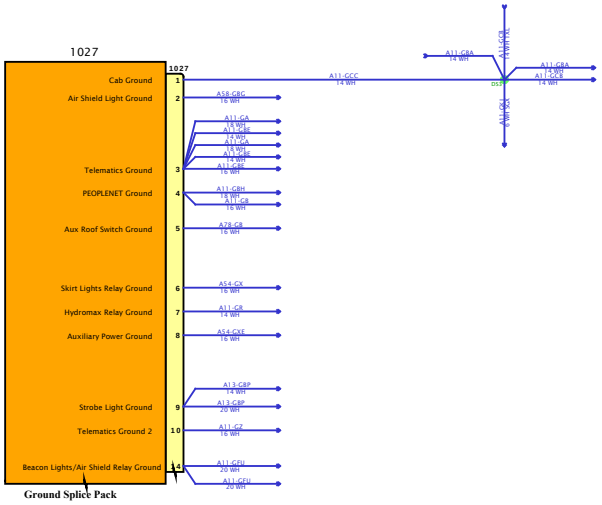

DESIGN DESCRIPTION

FEATURE CODES

SOFTWARE FEATURE CODES

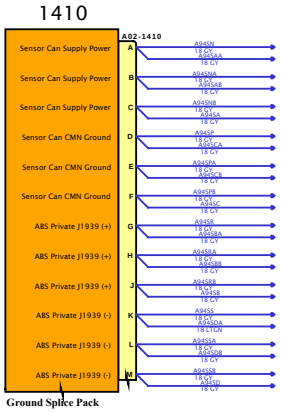

DESIGN DESCRIPTION

FEATURE CODES

SOFTWARE FEATURE CODES

NAVISTAR INC. CONFIDENTIAL PROPRIETARY

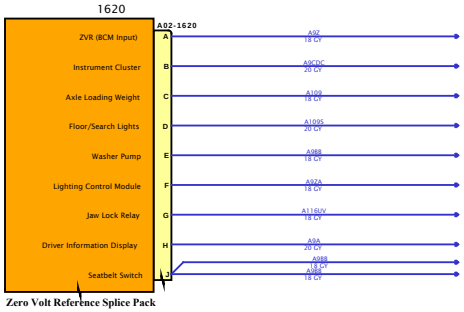

DESIGN DESCRIPTION

FEATURE CODES

SOFTWARE FEATURE CODES

NAVISTAR INC. CONFIDENTIAL PROPRIETARY

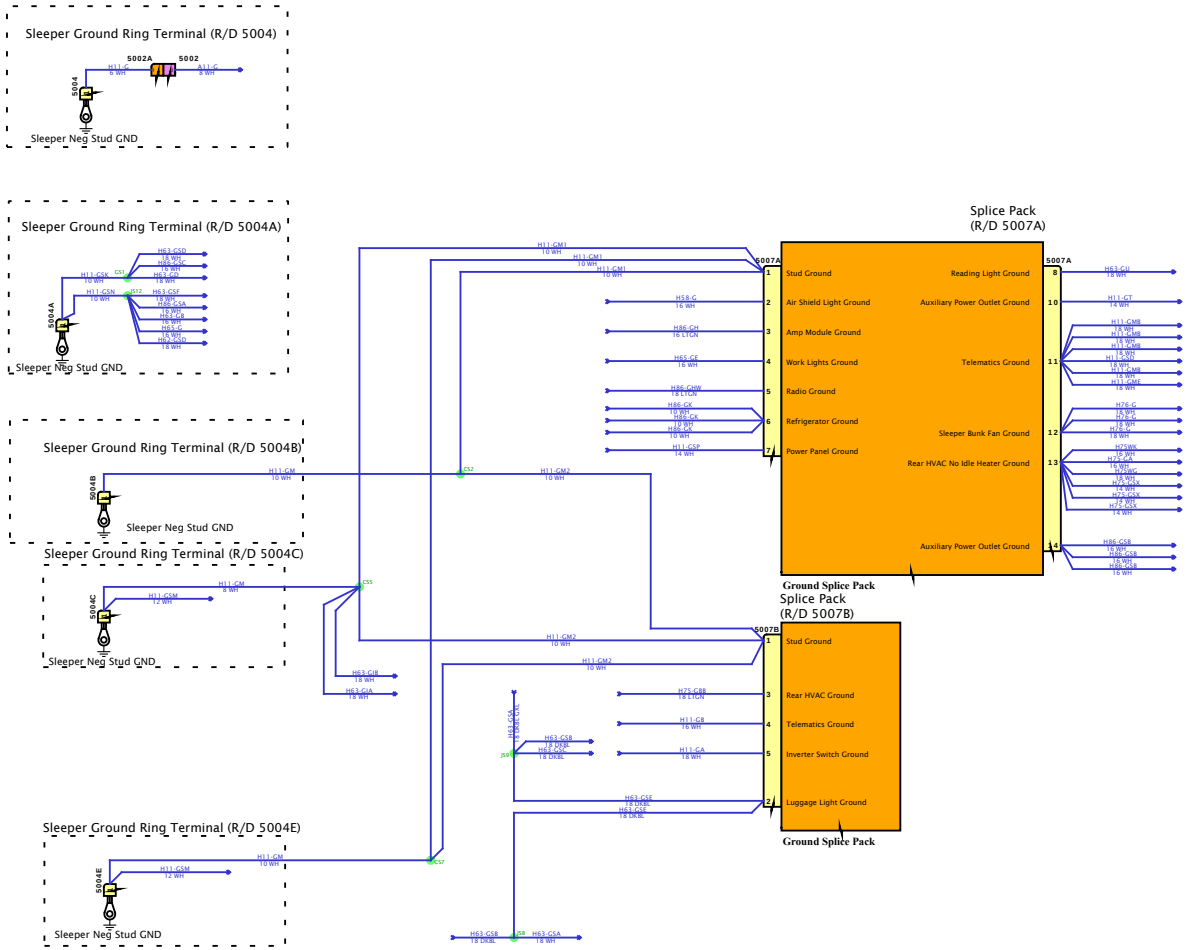

DESIGN DESCRIPTION

FEATURE CODES

SOFTWARE FEATURE CODES

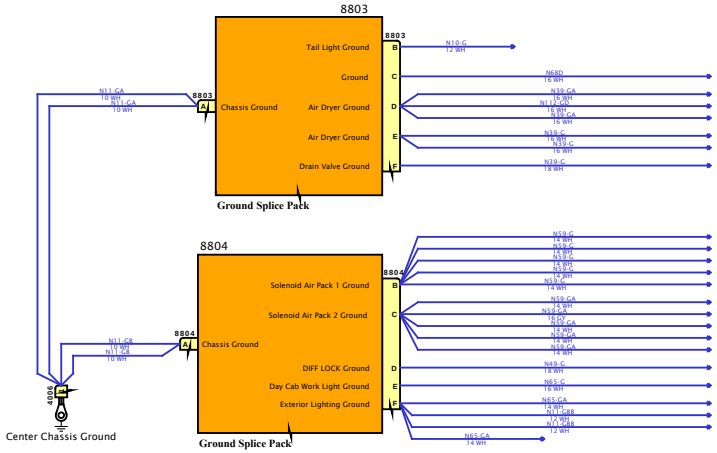

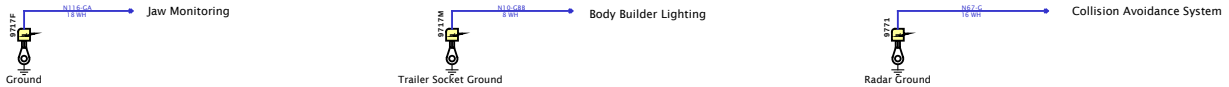

DESIGN DESCRIPTION

FEATURE CODES

SOFTWARE FEATURE CODES

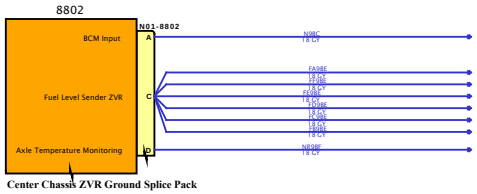

DESIGN DESCRIPTION

FEATURE CODES

SOFTWARE FEATURE CODES

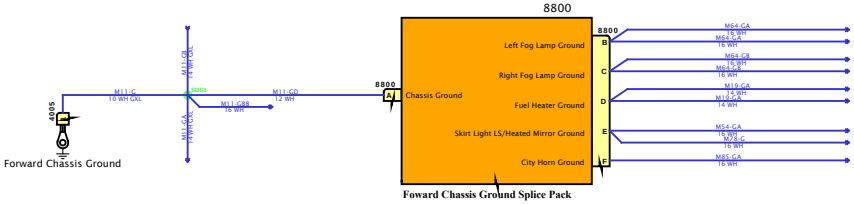

DESIGN DESCRIPTION

FEATURE CODES

SOFTWARE FEATURE CODES

NAVISTAR
NAVISTAR, INC. CONFIDENTIAL PROPRIETARY

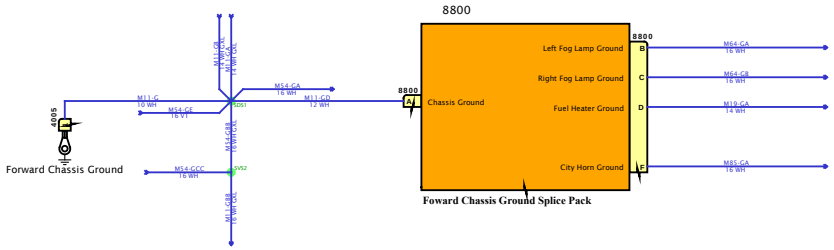

DESIGN DESCRIPTION

FEATURE CODES

SOFTWARE FEATURE CODES

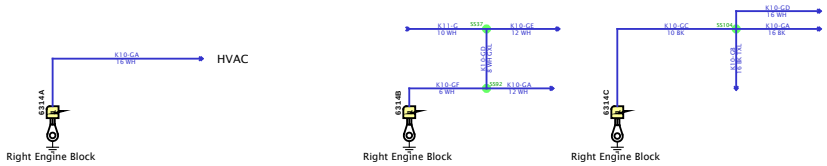

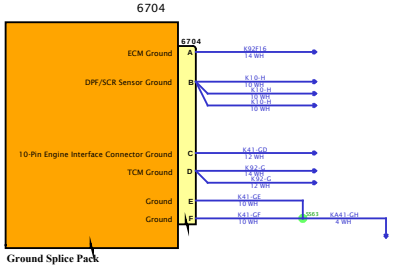

DESIGN DESCRIPTION

FEATURE CODES

SOFTWARE FEATURE CODES

NAVISTAR INC. CONFIDENTIAL PROPRIETARY

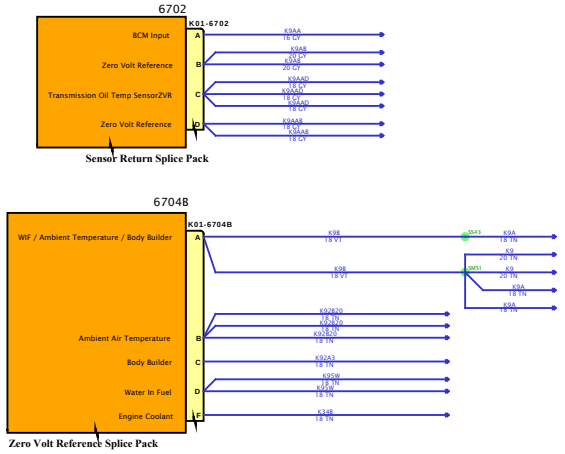

DESIGN DESCRIPTION

FEATURE CODES

SOFTWARE FEATURE CODES

NAVISTAR INC. CONFIDENTIAL PROPRIETARY

Diagram1

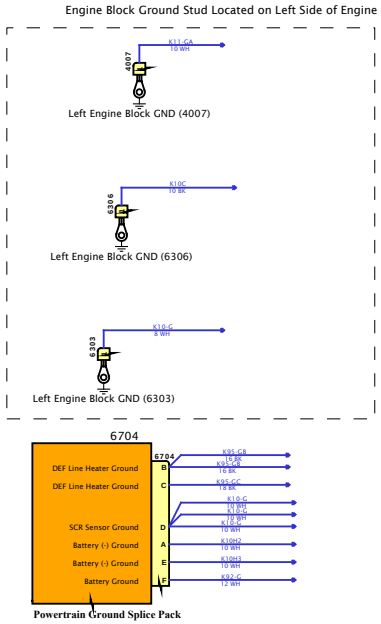

DESIGN DESCRIPTION

FEATURE CODES

SOFTWARE FEATURE CODES

NAVISTAR INC. CONFIDENTIAL PROPRIETARY

Diagram1

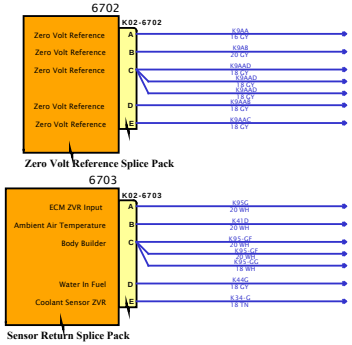

DESIGN DESCRIPTION

FEATURE CODES

SOFTWARE FEATURE CODES

NAVISTAR INC. CONFIDENTIAL PROPRIETARY

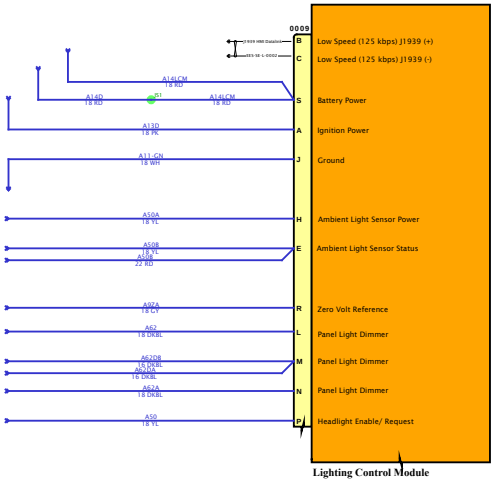

Lighting Control Module

DESIGN DESCRIPTION

FEATURE CODES

SOFTWARE FEATURE CODES

NAVISTAR INC. CONFIDENTIAL PROPRIETARY

Diagram1

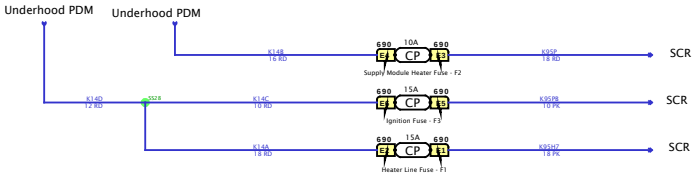

DESIGN DESCRIPTION

FEATURE CODES

SOFTWARE FEATURE CODES

NAVISTAR

NAVISTAR, INC. CONFIDENTIAL PROPRIETARY

Diagram1

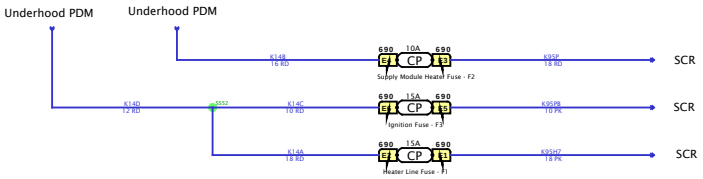

DESIGN DESCRIPTION

FEATURE CODES

SOFTWARE FEATURE CODES

NAVISTAR INC. CONFIDENTIAL PROPRIETARY

Diagram1

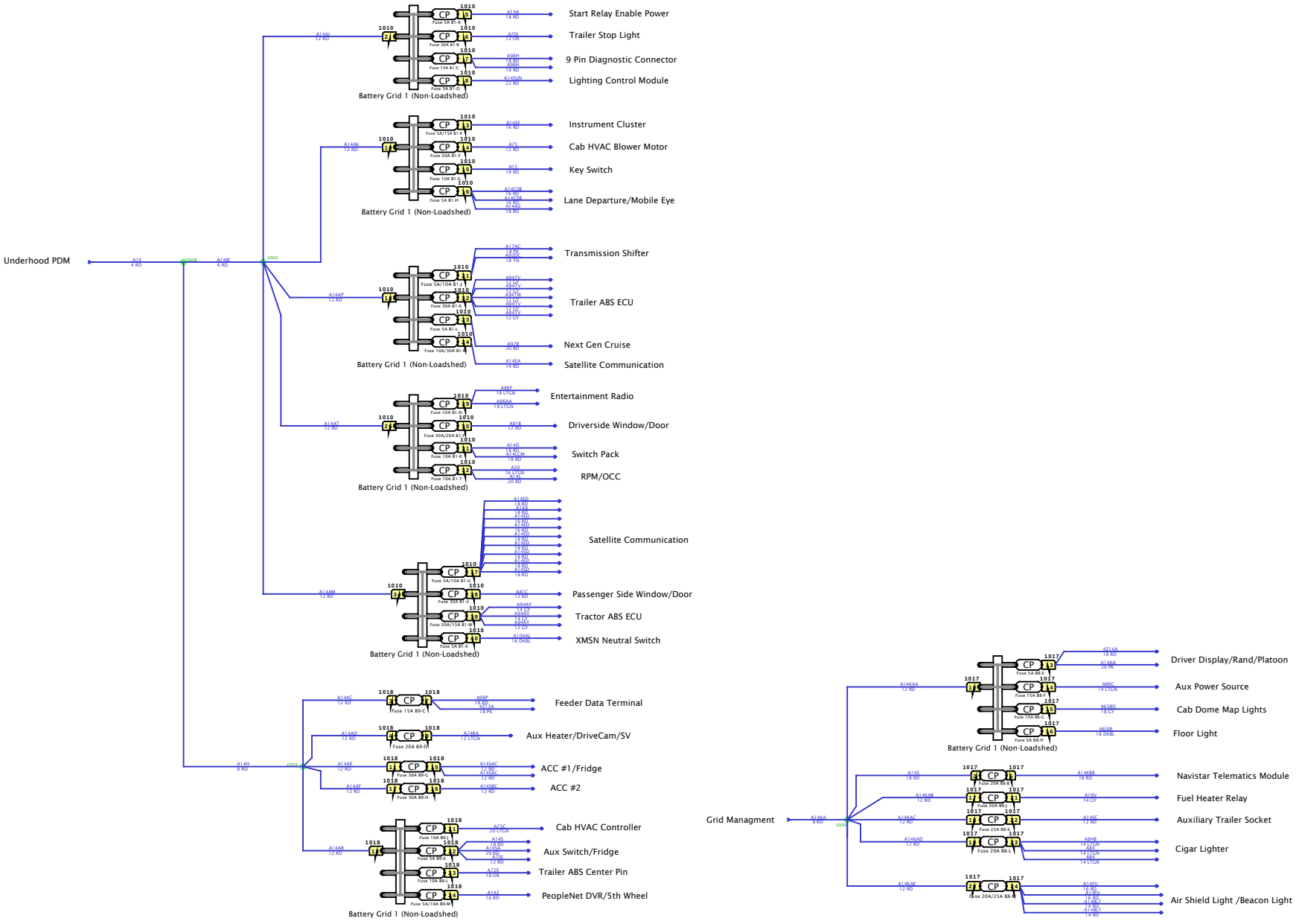
Underhood PDM
Battery Grid 1 (Non-Loadshed)
Start Relay Enable Power
Trailer Stop Light
9 Pin Diagnostic Connector
Lighting Control Module
Instrument Cluster
Cab HVAC Blower Motor
Key Switch
Lane Departure/Mobile Eye
Transmission Shifter
Trailer ABS ECU
Next Gen Cruise
Satellite Communication
Entertainment Radio
Driverside Window/Door
Switch Pack
RPM/OCC
Satellite Communication
Passenger Side Window/Door
Tractor ABS ECU
XMSN Neutral Switch
Feeder Data Terminal
Aux Heater/DriveCam/SV
ACC #1/Fridge
ACC #2
Cab HVAC Controller
Aux Switch/Fridge
Trailer ABS Center Pin
PeopleNet DVR/5th Wheel
Grid Managment
Driver Display/Rand/Platoon
Aux Power Source
Cab Dome Map Lights
Floor Light
Navistar Telematics Module
Fuel Heater Relay
Auxiliary Trailer Socket
Cigar Lighter
Air Shield Light /Beacon Light
DESIGN DESCRIPTION
FEATURE CODES
SOFTWARE FEATURE CODES

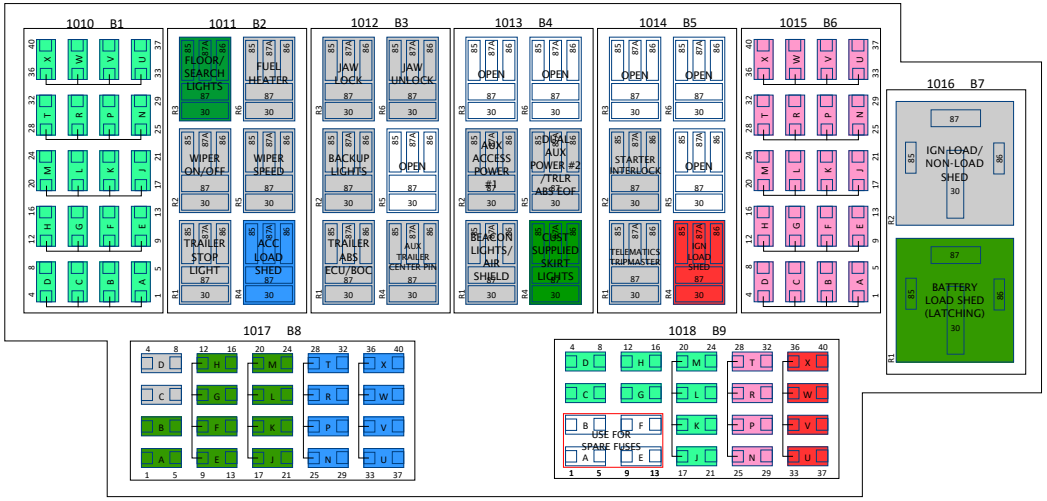

N/ LOADSHED

W/ LOADSHED

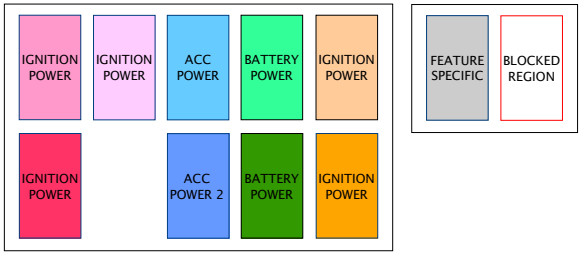

LOCATION	AMP	FEED	STD/OPT	DESCRIPTION	LOCATION	AMP	FEED	STD/OPT	DESCRIPTION	LOCATION	AMP	FEED	STD/OPT	DESCRIPTION	LOCATION	AMP	FEED	STD/OPT	DESCRIPTION	LOCATION	AMP	FEED	STD/OPT	DESCRIPTION
B1-A	5	BTRY	OPT	START RELAY ENABLE PWR	B6-A	NOTE 7	IGN	OPT	SATELLITE COMMUNICATION	B8-A	5	–	OPT	AUX HEATER	B9-A	–	–	–	NOT FOR USE					
B1-B	30	BTRY	STD	TRAILER STOP LIGHT	B6-B	10	IGN	STD	WINDSHIELD WASHER PUMP	B8-B	5	BTRY	STD	N2 MODULE	B9-B	–	–	–	NOT FOR USE					
B1-C	15	BTRY	STD	9-PIN DIAGNOSTIC	B6-C	10	IGN	STD	TRAILER ABS	B8-C	5	BTRY	OPT	TRAILER TRACS/SAT COMM	B9-C	15	BTRY	OPT	FEEDER DATA TERMINAL					
B1-D	5	BTRY	STD	LIGHTING CONTROL MODULE	B6-D	5	IGN	OPT	DIRECT DRIVE WARN LIGHTS	B8-D	5	IGN	OPT	TRI-PAC	B9-D	NOTE 14	BTRY	OPT	AUX HEATER/DRIVECAM/SV					
B1-E	NOTE 1	BTRY	STD	INSTRUMENT CLUSTER	B6-E	5	IGN	OPT	PREDICTIVE CRUISE CONTROL	B8-E	NOTE 13	BTRY	OPT	DRIVER DISPLAY/RAND/PLATOON	B9-E	–	–	–	NOT FOR USE					
B1-F	30	BTRY	STD	CAB HVAC BLOWER MOTOR	B6-F	10	IGN	OPT	HEATED SEATS	B8-F	15	BTRY	OPT	AUX POWER SOURCE	B9-F	–	–	–	NOT FOR USE					
B1-G	10	BTRY	STD	KEYSWITCH	B6-G	10	IGN	STD	BACK-UP LIGHTS	B8-G	10	BTRY	STD	CAB DOME MAP LIGHTS	B9-G	30	BTRY	OPT	ACC #1 FRIDGE					
B1-H	5	BTRY	OPT	LANE DEPART/MOBILE EYE	B6-H	15	IGN	STD	LIGHTING CONTROL MODULE	B8-H	5	BTRY	NOTE 3	FLOOR LIGHT	B9-H	30	BTRY	OPT	ACC #2					
B1-J	NOTE 9	BTRY	OPT	TRANSMISSION SHIFTER	B6-J	5	IGN	OPT	TIRE PRESSURE MONITOR	B8-J	20	BTRY	OPT	FUEL WATER SEPARATOR	B9-J	10	BTRY	OPT	CAB HVAC CONTROLLER					
B1-K	30	BTRY	STD	TRAILER ABS ECU	B6-K	20	IGN	OPT	HEATED MIRRORS	B8-K	25	BTRY	OPT	AUX TRAILER SOCKET	B9-K	5	BTRY	OPT	AUX SWITCH/FRIDGE					
B1-L	5	BTRY	OPT	NEXT GEN CRUISE CONTROL	B6-L	10	IGN	STD	INSTRUMENT CLUSTER	B8-L	20	BTRY	STD	CIGAR LIGHTER	B9-L	10	BTRY	OPT	TRAILER ABS CENTER PIN					
B1-M	NOTE 11	BTRY	OPT	SATELLITE COMMUNICATION	B6-M	10	IGN	OPT	TRANSMISSION CONTROL UNIT	B8-M	NOTE 10	BTRY	OPT	BEACON LIGHT/AIR SHIELD LIGHT	B9-M	NOTE 12	BTRY	OPT	POEPLENET DVR/5TH WHEEL					
B1-N	10	BTRY	STD	ENTERTAINMENT RADIO	B6-N	10	IGN	OPT	COLLISION MITIGATION-FRONT	B8-N	–	ACC	–	OPEN	B9-N	5	IGN	OPT	ROLLTEK SEAT					
B1-P	NOTE 5	BTRY	OPT	DRIVER SIDE WINDOW/DOOR	B6-P	10	IGN	OPT	HEATED DRAIN VALVE	B8-P	–	ACC	–	OPEN	B9-P	5	IGN	OPT	ETRAC LOAD BIAS					
B1-R	10	BTRY	STD	SWITCH PACK	B6-R	10	IGN	OPT	5TH WHEEL MONITOR	B8-R	15	ACC	OPT	SKIRT LIGHT	B9-R	10	IGN	OPT	DEF AND NOX SENSORS					
B1-T	10	BTRY	OPT	RPM/OCC	B6-T	5	IGN	STD	ENGINE ECM	B8-T	10	ACC	OPT	BEACON LIGHT	B9-T	10	IGN	OPT	RAND MCNALLY/PLATOON/SV					
B1-U	NOTE 6	BTRY	OPT	SATELLITE COMMUNICATION	B6-U	10	IGN	STD	TRACTOR ABS ECU	B8-U	–	ACC	–	OPEN	B9-U	5	IGN	OPT	DRIVECAM/PEOPLENET DVR					
B1-V	30	BTRY	OPT	PASSENGER SIDE WINDOW/DOOR	B6-V	10	IGN	STD	AIR DRYER	B8-V	10	ACC	OPT	CB RADIO	B9-V	5	IGN	OPT	AUX POWER USB					
B1-W	NOTE 2	BTRY	STD	TRACTOR ABS ECU	B6-W	10	IGN	OPT	COLLISION MITIGATION SIDE	B8-W	NOTE 4	ACC	OPT	DRIVER DISPLAY/GPS	B9-W	5	IGN	OPT	TRI-PAC					
B1-X	5	BTRY	OPT	XMSN NEUTRAL SWITCH	B6-X	5	IGN	OPT	LANE DEPART/DRIVECAM	B8-X	5	ACC	STD	ENTERTAINMENT RADIO	B9-X	15	IGN	OPT	DOUBLE DIN USB					

DESIGN DESCRIPTION

FEATURE CODES

SOFTWARE FEATURE CODES

Diagram1

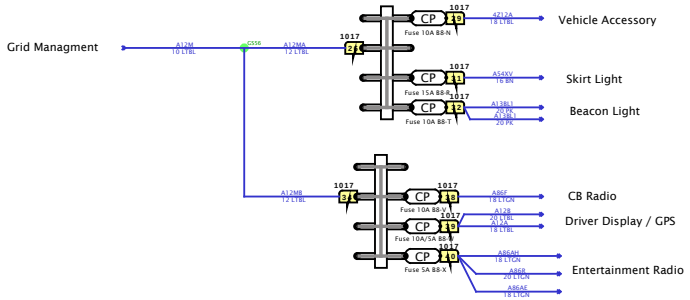

DESIGN DESCRIPTION

FEATURE CODES

SOFTWARE FEATURE CODES

NAVISTAR INC. CONFIDENTIAL PROPRIETARY

Diagram1

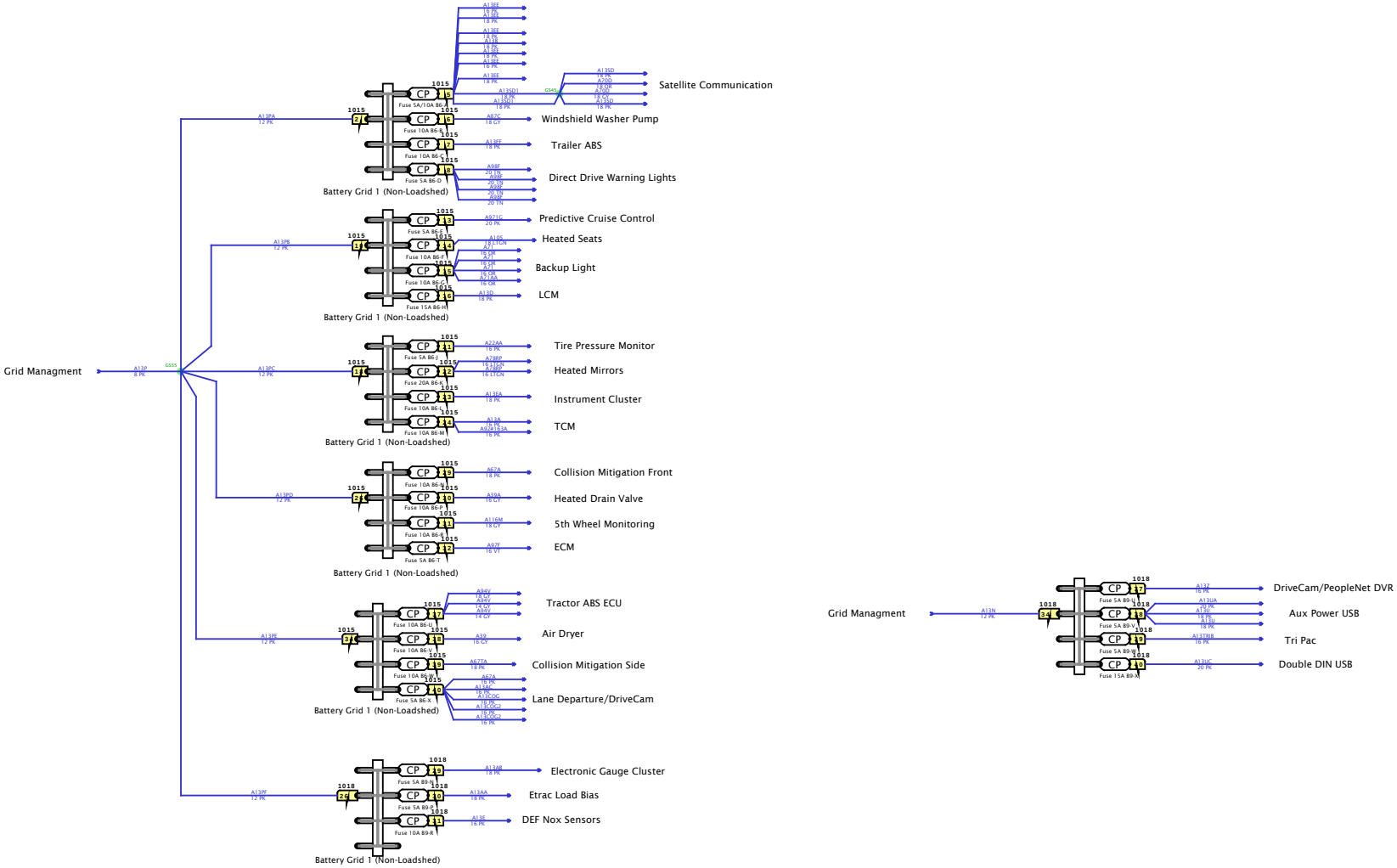

DESIGN DESCRIPTION

FEATURE CODES

SOFTWARE FEATURE CODES

DESIGN DESCRIPTION

FEATURE CODES

SOFTWARE FEATURE CODES

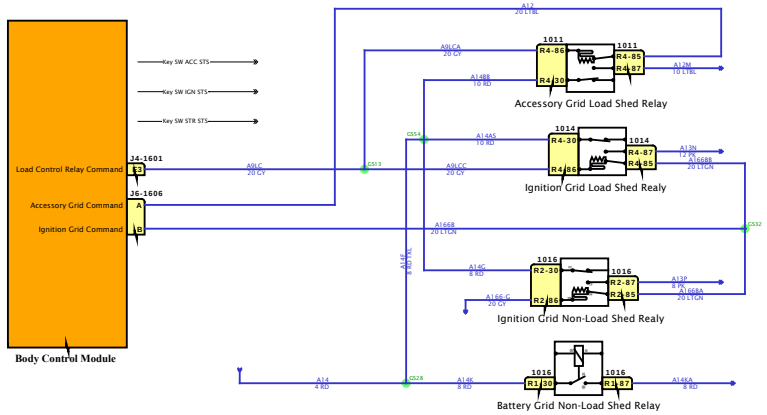

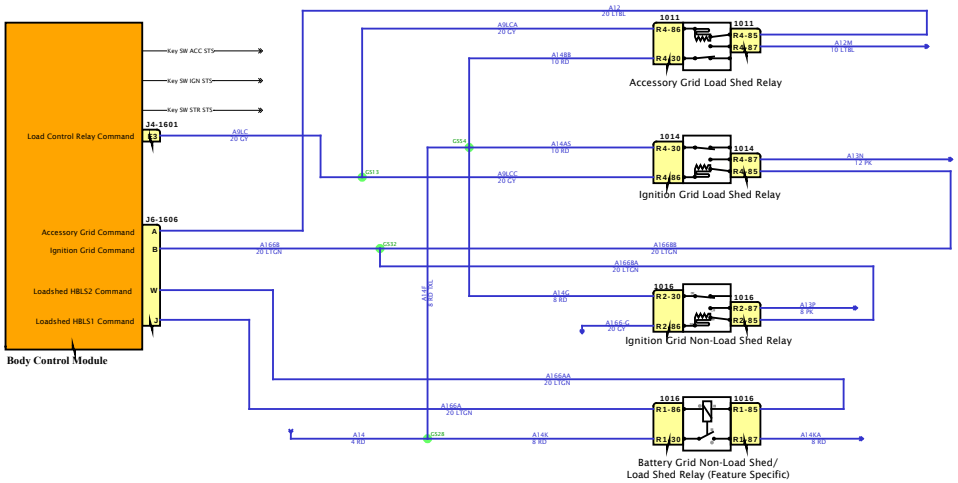

DESIGN DESCRIPTION

FEATURE CODES

SOFTWARE FEATURE CODES

NAVISTAR INC. CONFIDENTIAL PROPRIETARY

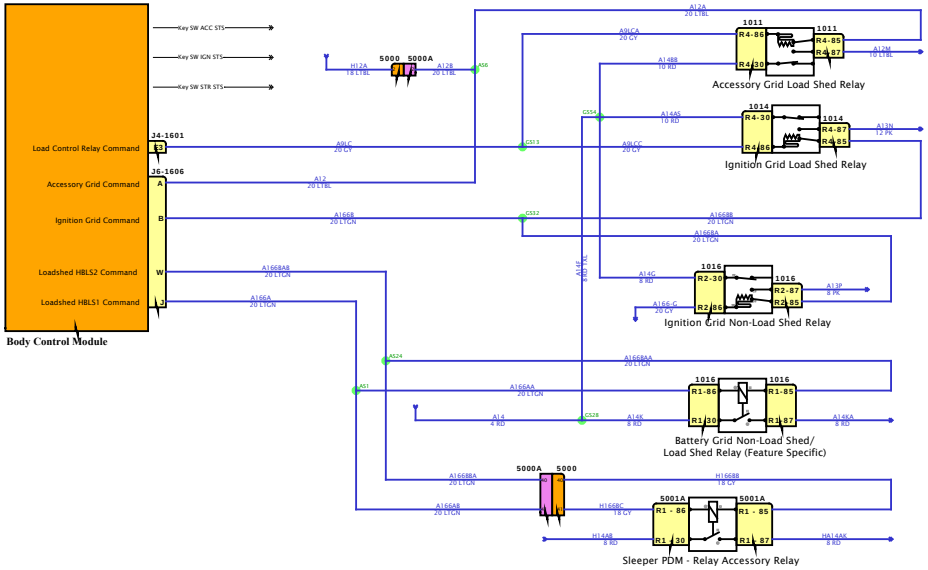

DESIGN DESCRIPTION

FEATURE CODES

SOFTWARE FEATURE CODES

NAVISTAR INC. CONFIDENTIAL PROPRIETARY

Diagram1

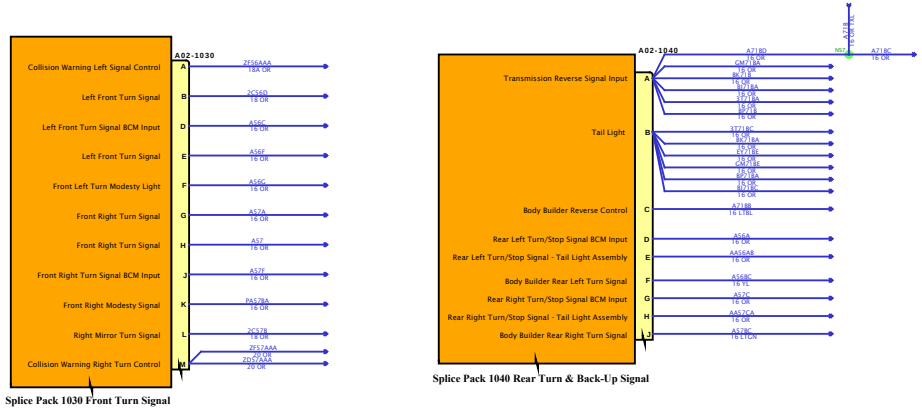

DESIGN DESCRIPTION

FEATURE CODES

SOFTWARE FEATURE CODES

NAVISTAR INC. CONFIDENTIAL PROPRIETARY

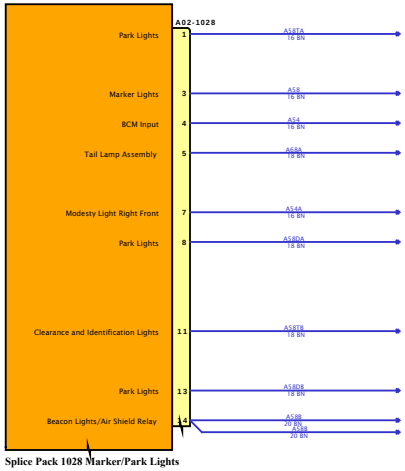

Splice Pack 1028 Marker/Park Lights

DESIGN DESCRIPTION

FEATURE CODES

SOFTWARE FEATURE CODES

NAVISTAR INC. CONFIDENTIAL PROPRIETARY

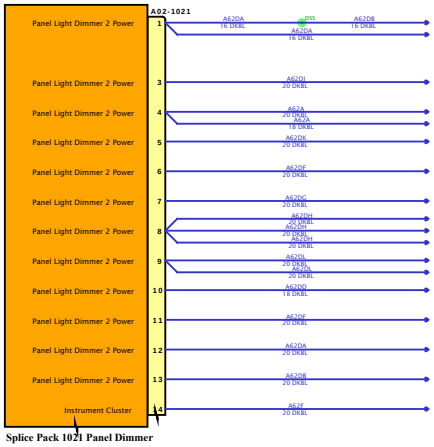

Splice Pack 1021 Panel Dimmer

DESIGN DESCRIPTION

FEATURE CODES

SOFTWARE FEATURE CODES

NAVISTAR INC. CONFIDENTIAL PROPRIETARY

Diagram1

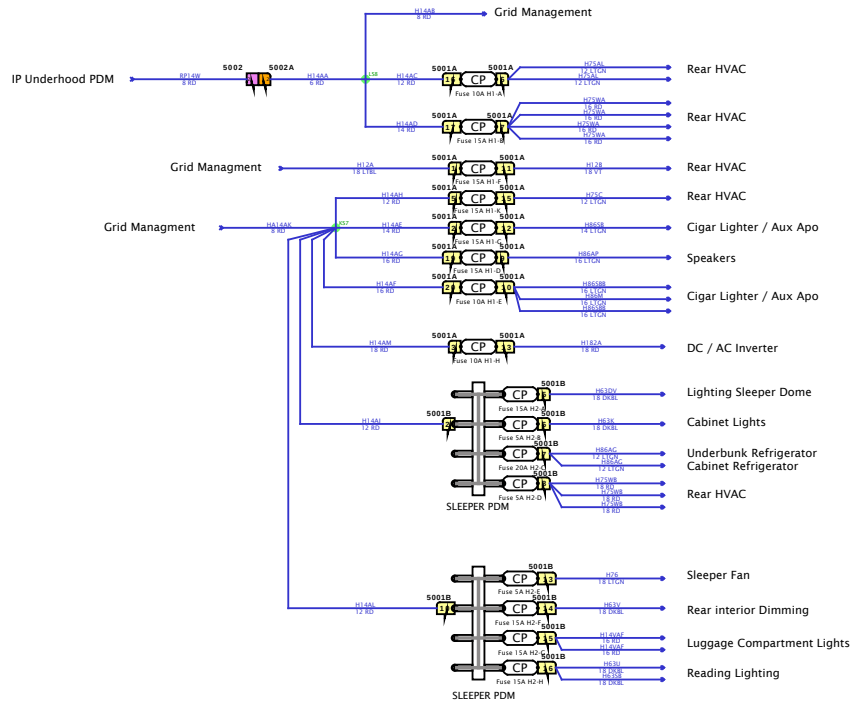

DESIGN DESCRIPTION

FEATURE CODES

SOFTWARE FEATURE CODES

DESIGN DESCRIPTION

FEATURE CODES

SOFTWARE FEATURE CODES

Mobile Communication Sensor



Telematics / Mobile Communication Sensor

No Idle HVAC



No Idle HVAC

NAVISTAR, INC. CONFIDENTIAL PROPRIETARY

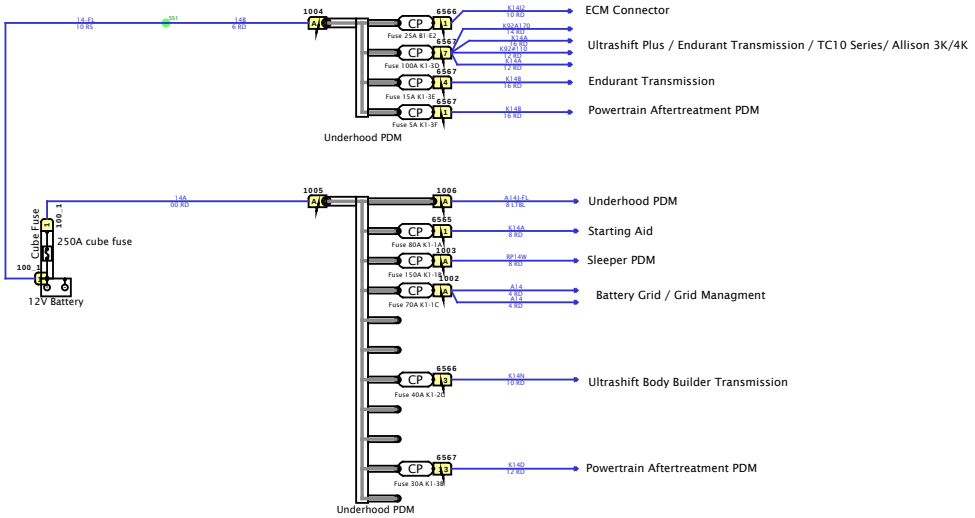

DESIGN DESCRIPTION

FEATURE CODES

SOFTWARE FEATURE CODES

NAVISTAR INC. CONFIDENTIAL PROPRIETARY

Diagram1

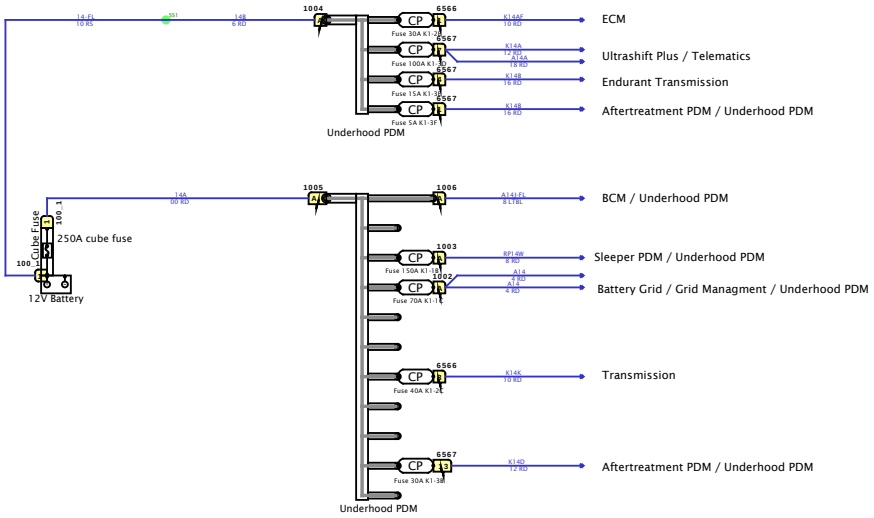

DESIGN DESCRIPTION

FEATURE CODES

SOFTWARE FEATURE CODES

NAVISTAR INC. CONFIDENTIAL PROPRIETARY

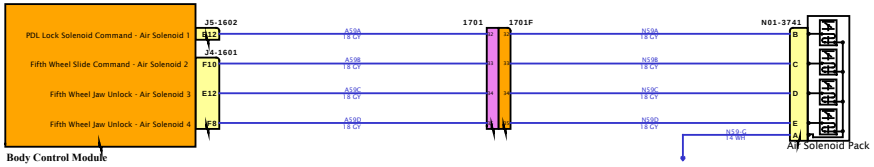

DESIGN DESCRIPTION

FEATURE CODES

SOFTWARE FEATURE CODES

NAVISTAR INC. CONFIDENTIAL PROPRIETARY

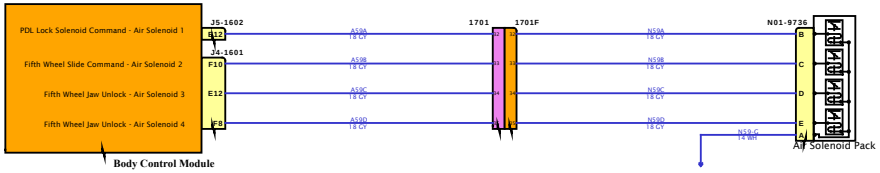

DESIGN DESCRIPTION

FEATURE CODES

SOFTWARE FEATURE CODES

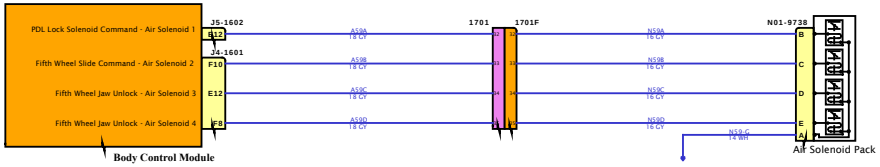

DESIGN DESCRIPTION

FEATURE CODES

SOFTWARE FEATURE CODES

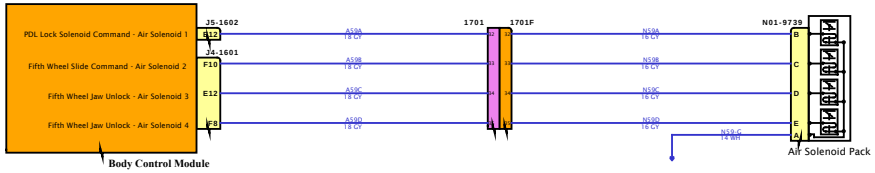

DESIGN DESCRIPTION

FEATURE CODES

SOFTWARE FEATURE CODES

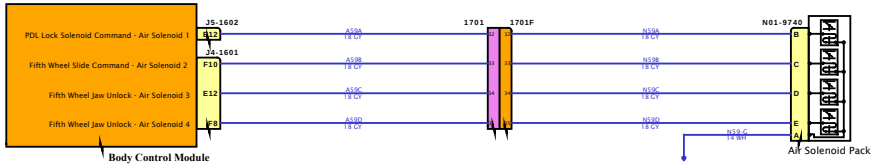

DESIGN DESCRIPTION

FEATURE CODES

SOFTWARE FEATURE CODES

NAVISTAR INC. CONFIDENTIAL PROPRIETARY

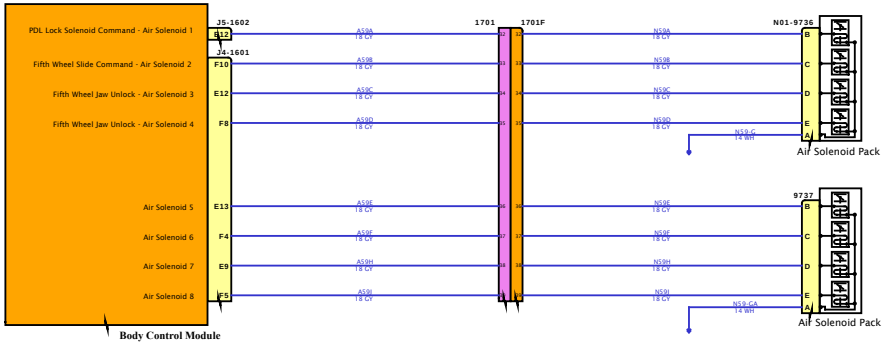

DESIGN DESCRIPTION

FEATURE CODES

SOFTWARE FEATURE CODES

Diagram2

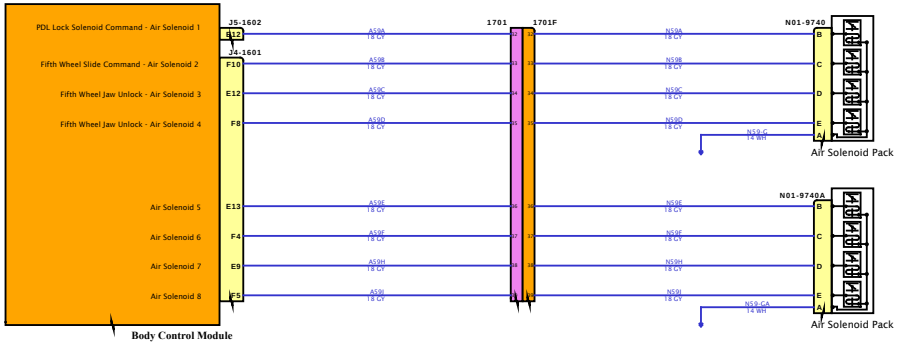

DESIGN DESCRIPTION

FEATURE CODES

SOFTWARE FEATURE CODES

Diagram3

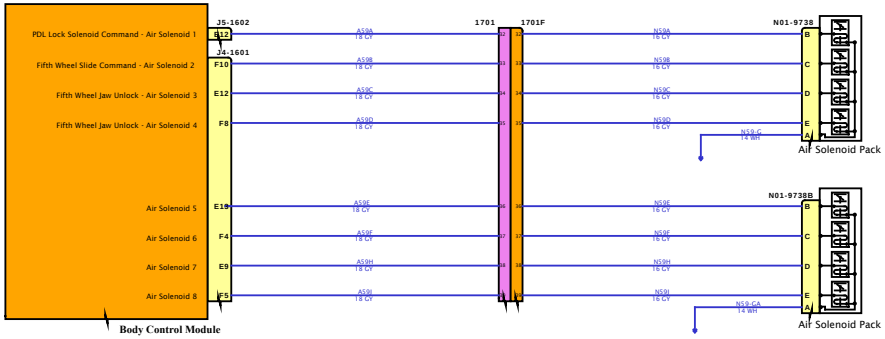

DESIGN DESCRIPTION

FEATURE CODES

SOFTWARE FEATURE CODES

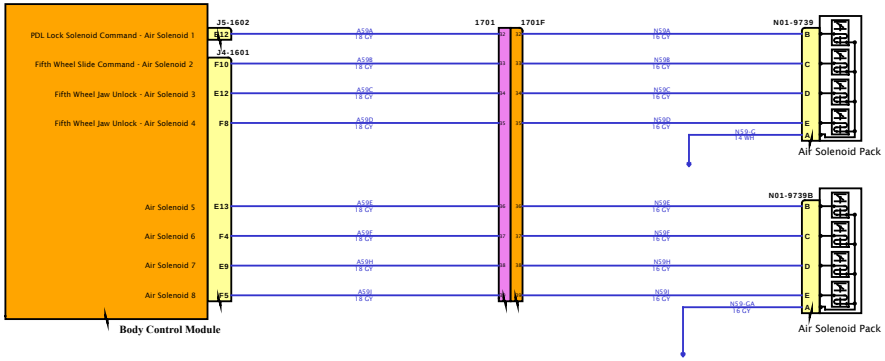

DESIGN DESCRIPTION

FEATURE CODES

SOFTWARE FEATURE CODES

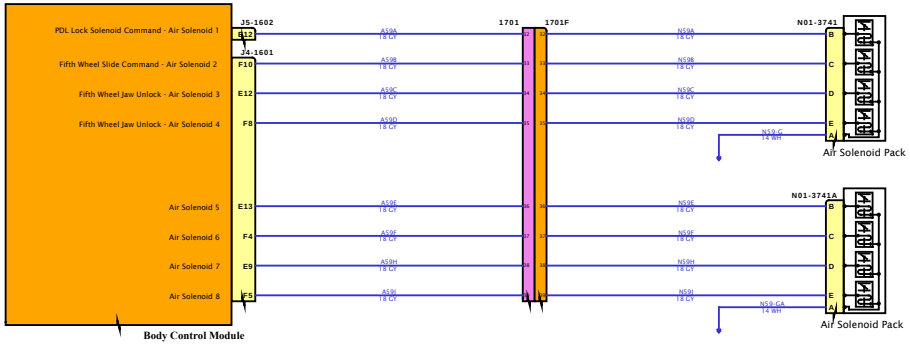

DESIGN DESCRIPTION

FEATURE CODES

SOFTWARE FEATURE CODES

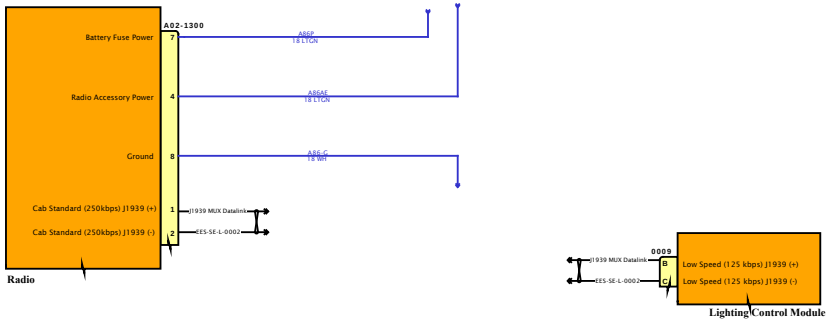

DESIGN DESCRIPTION

FEATURE CODES

SOFTWARE FEATURE CODES

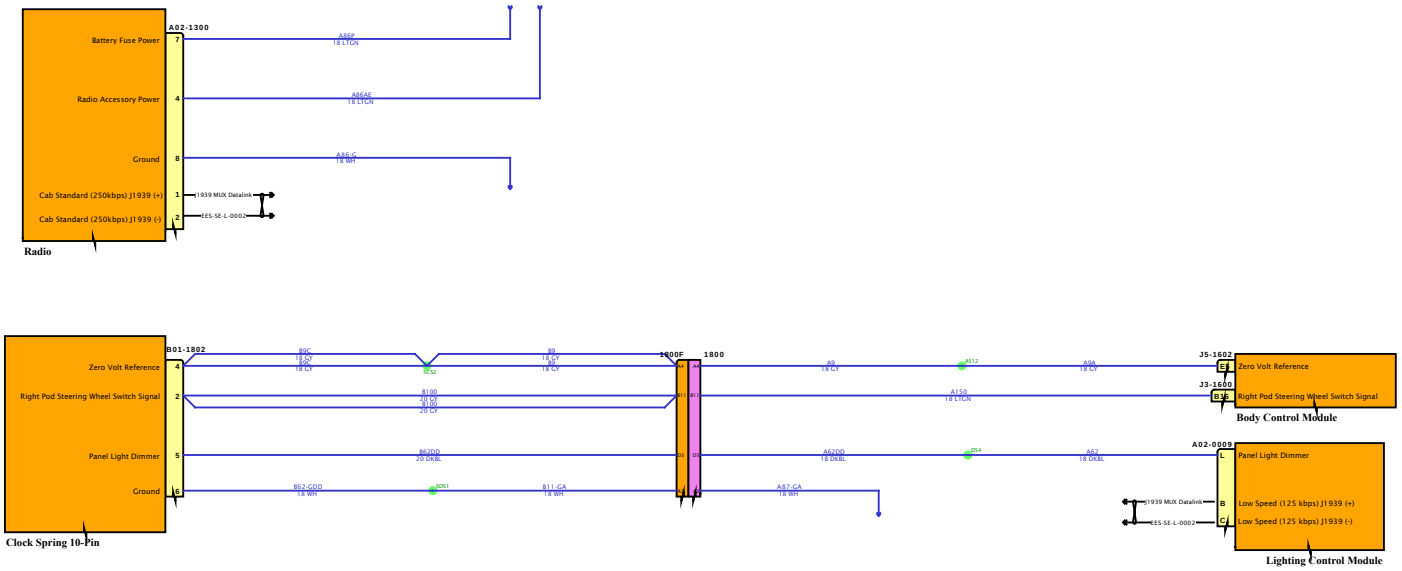

DESIGN DESCRIPTION

FEATURE CODES

SOFTWARE FEATURE CODES

NAVISTAR
NAVISTAR, INC. CONFIDENTIAL PROPRIETARY

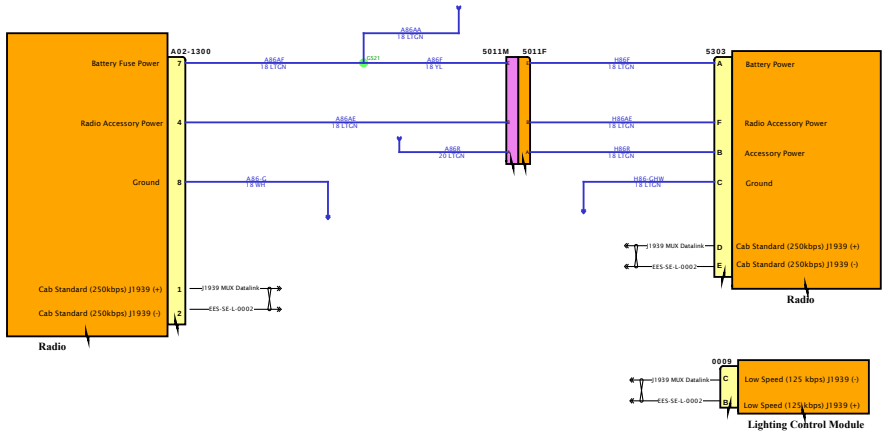

DESIGN DESCRIPTION

FEATURE CODES

SOFTWARE FEATURE CODES

NAVISTAR
NAVISTAR, INC. CONFIDENTIAL PROPRIETARY

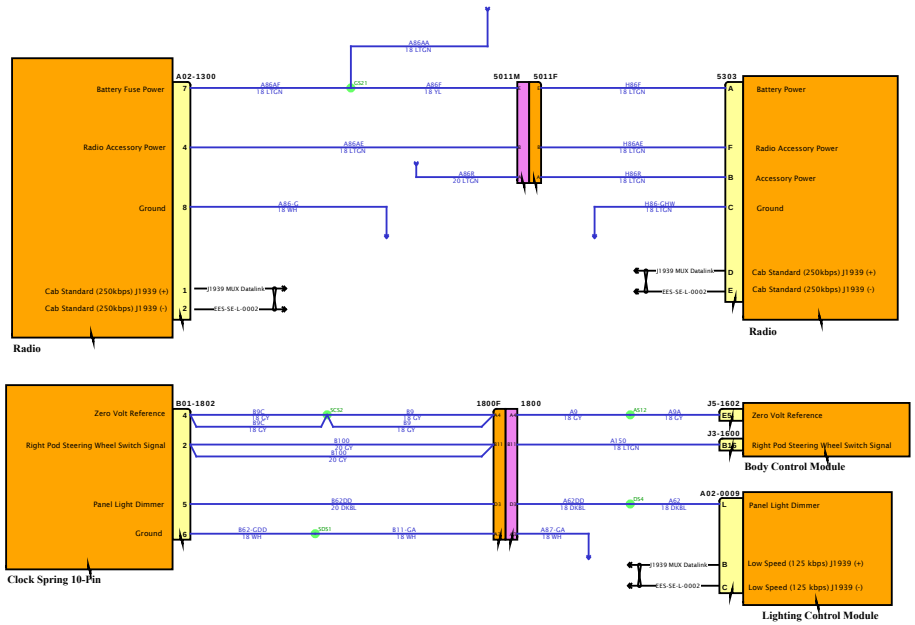

DESIGN DESCRIPTION

FEATURE CODES

SOFTWARE FEATURE CODES

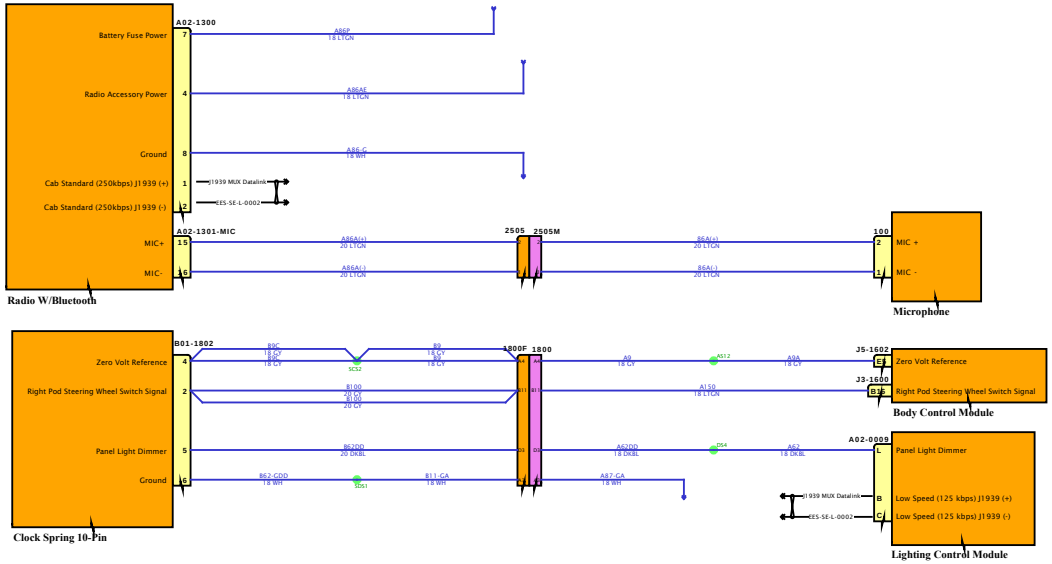

DESIGN DESCRIPTION

FEATURE CODES

SOFTWARE FEATURE CODES

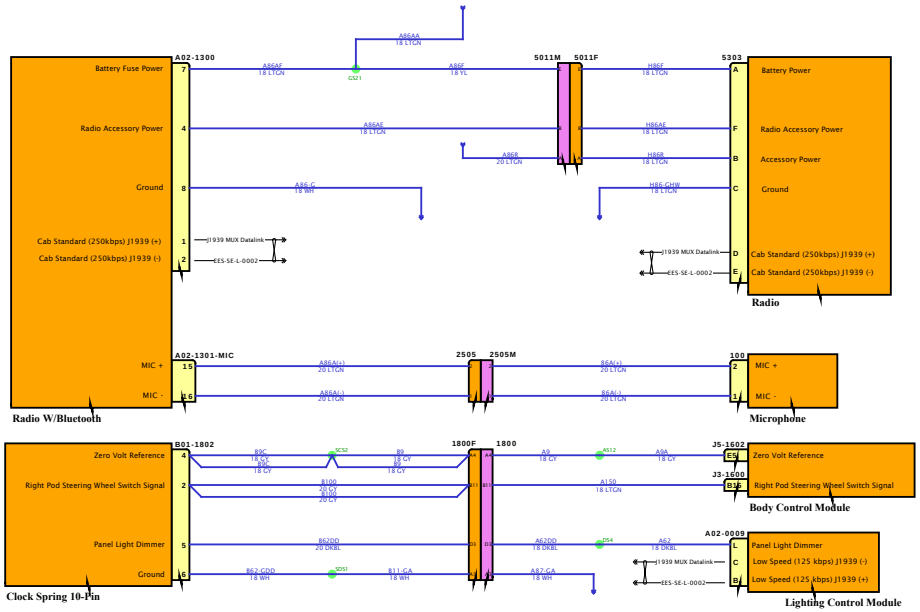

DESIGN DESCRIPTION

FEATURE CODES

SOFTWARE FEATURE CODES

NAVISTAR
NAVISTAR, INC. CONFIDENTIAL PROPRIETARY

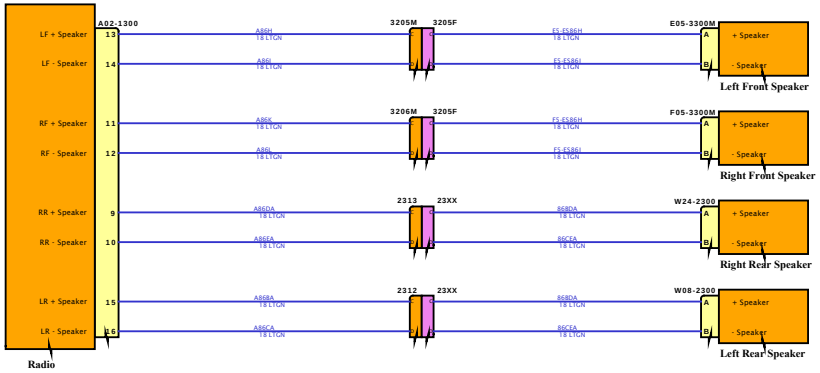

DESIGN DESCRIPTION

FEATURE CODES

SOFTWARE FEATURE CODES

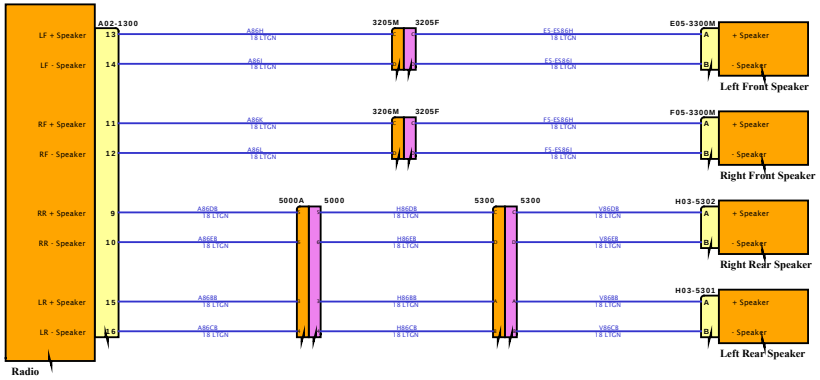

DESIGN DESCRIPTION

FEATURE CODES

SOFTWARE FEATURE CODES

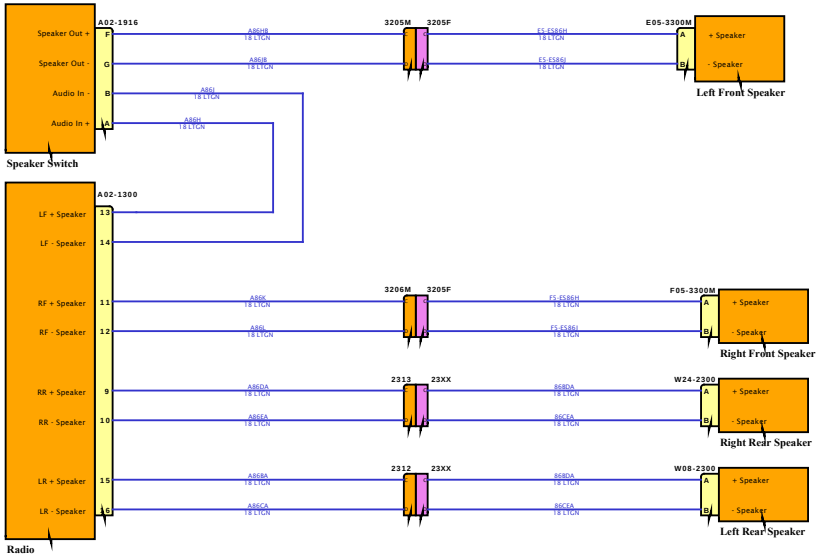

DESIGN DESCRIPTION

FEATURE CODES

SOFTWARE FEATURE CODES

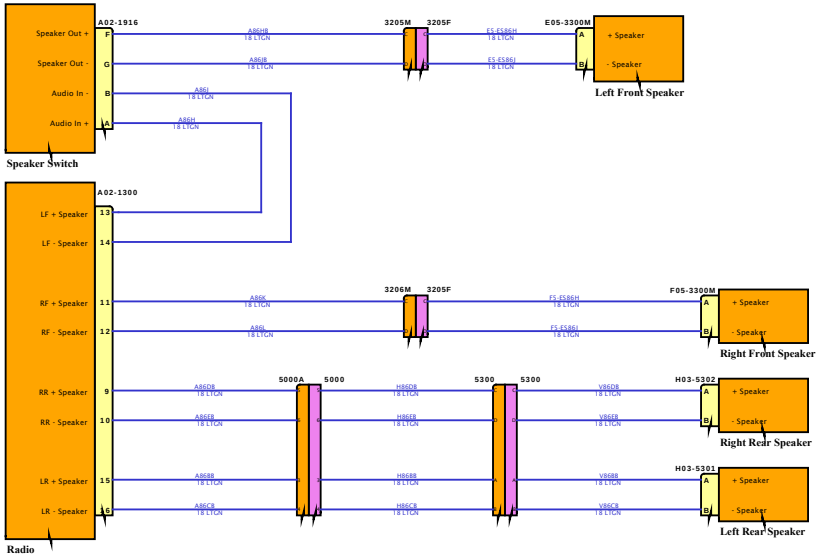

DESIGN DESCRIPTION

FEATURE CODES

SOFTWARE FEATURE CODES

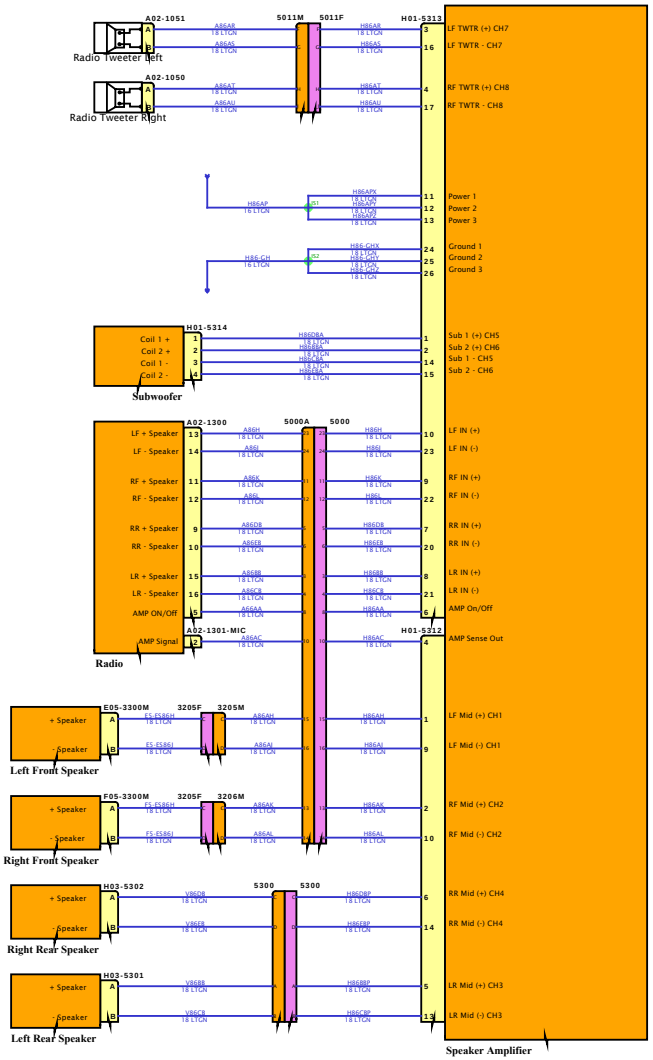

DESIGN DESCRIPTION

FEATURE CODES

SOFTWARE FEATURE CODES

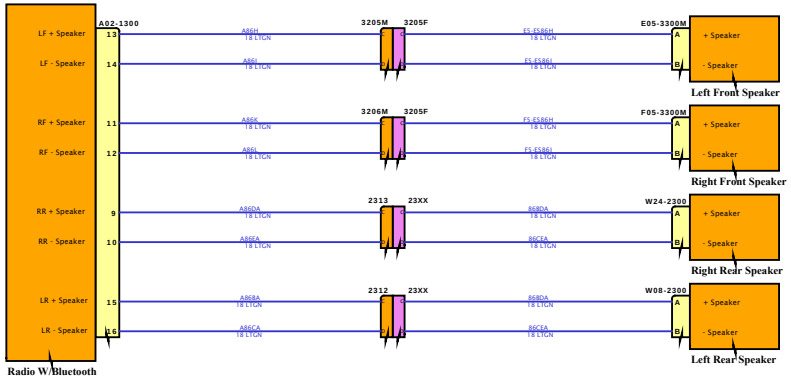

DESIGN DESCRIPTION

FEATURE CODES

SOFTWARE FEATURE CODES

NAVISTAR
NAVISTAR, INC. CONFIDENTIAL PROPRIETARY

Diagram2-Sleeper

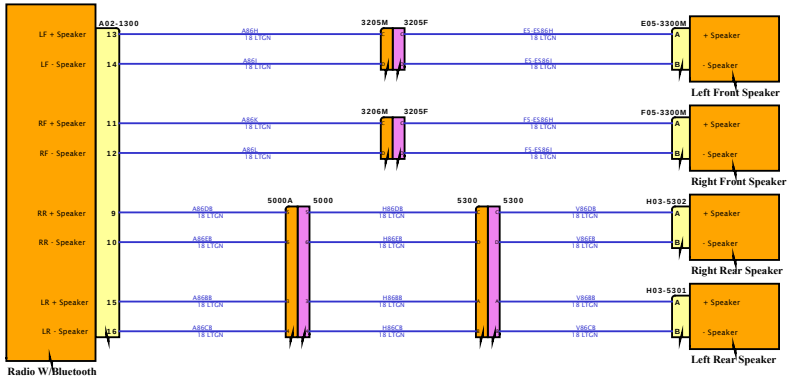

DESIGN DESCRIPTION

FEATURE CODES

SOFTWARE FEATURE CODES

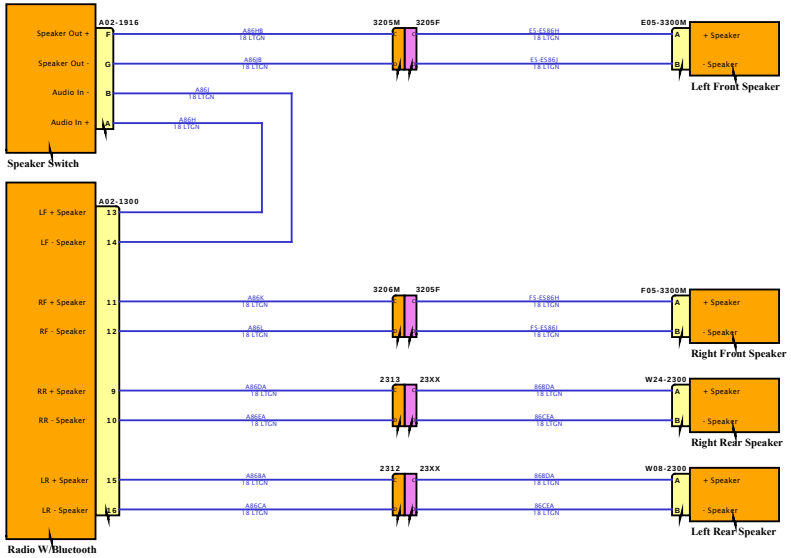

DESIGN DESCRIPTION

FEATURE CODES

SOFTWARE FEATURE CODES

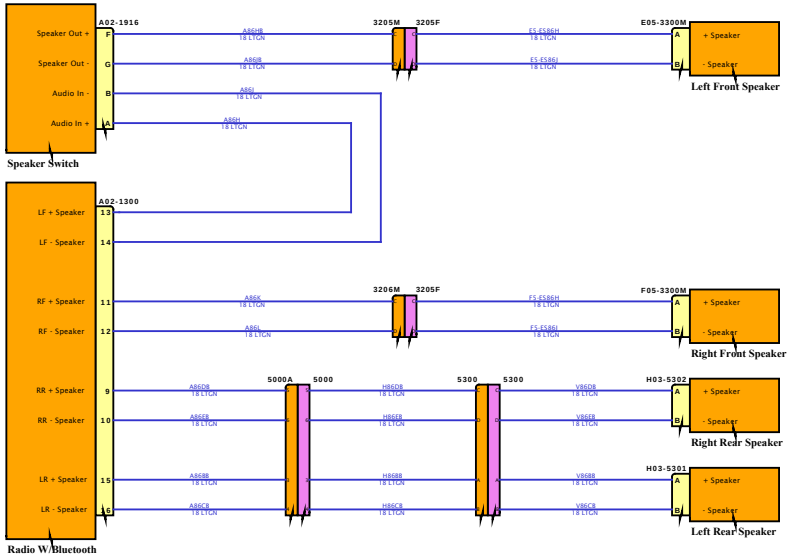

DESIGN DESCRIPTION

FEATURE CODES

SOFTWARE FEATURE CODES

Diagram1

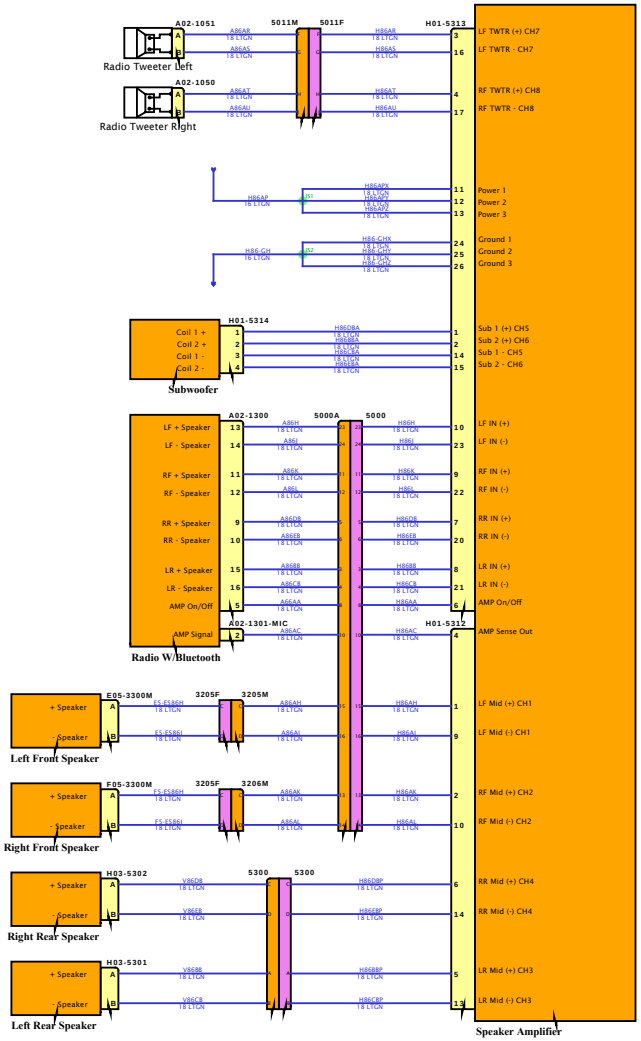

DESIGN DESCRIPTION

FEATURE CODES

SOFTWARE FEATURE CODES

NAVISTAR
NAVISTAR, INC. CONFIDENTIAL PROPRIETARY

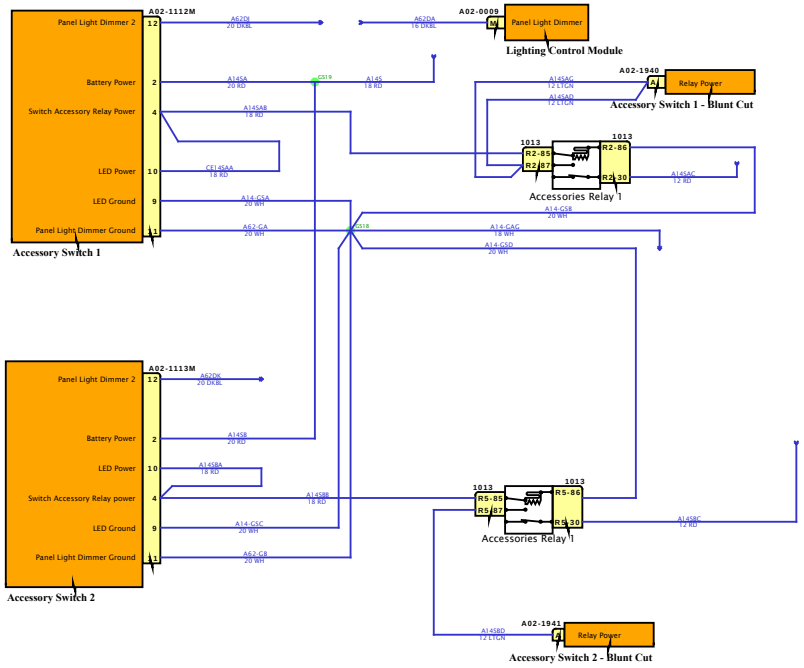

DESIGN DESCRIPTION

FEATURE CODES

SOFTWARE FEATURE CODES

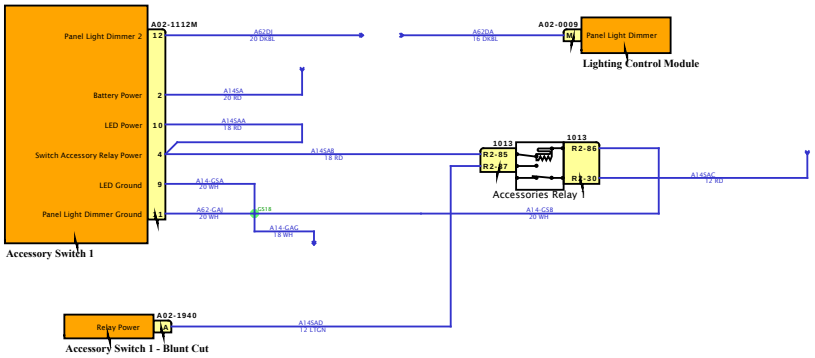

DESIGN DESCRIPTION

FEATURE CODES

SOFTWARE FEATURE CODES

NAVISTAR INC. CONFIDENTIAL PROPRIETARY

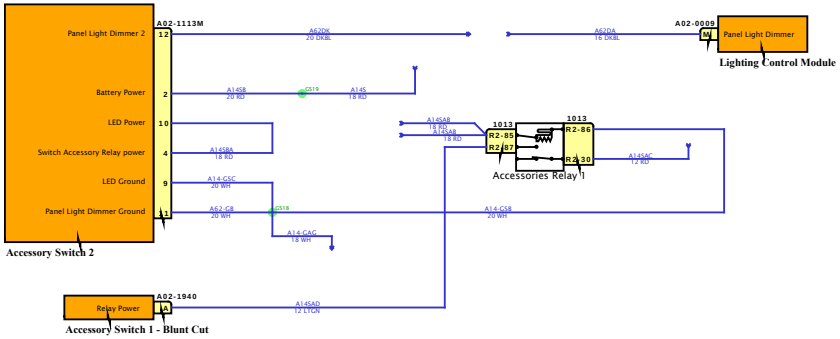

DESIGN DESCRIPTION

FEATURE CODES

SOFTWARE FEATURE CODES

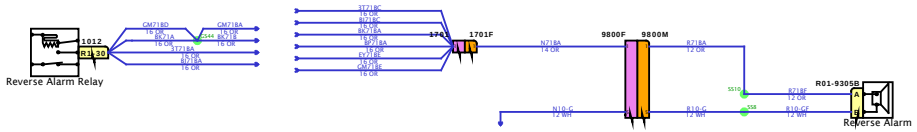

DESIGN DESCRIPTION

FEATURE CODES

SOFTWARE FEATURE CODES

NAVISTAR INC. CONFIDENTIAL PROPRIETARY

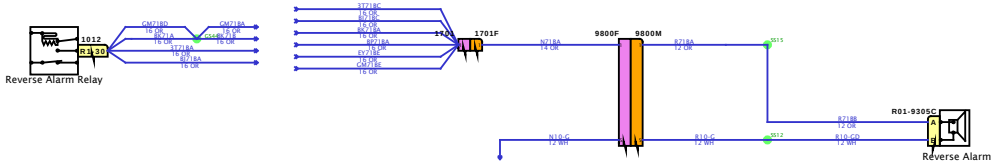

DESIGN DESCRIPTION

FEATURE CODES

SOFTWARE FEATURE CODES

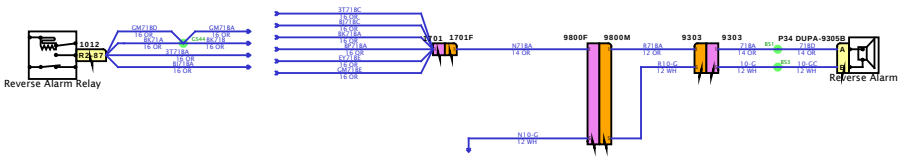

DESIGN DESCRIPTION

FEATURE CODES

SOFTWARE FEATURE CODES

NAVISTAR INC. CONFIDENTIAL PROPRIETARY

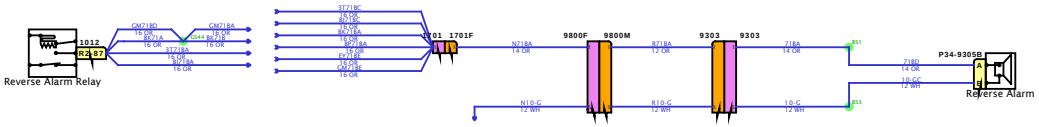

DESIGN DESCRIPTION

FEATURE CODES

SOFTWARE FEATURE CODES

NAVISTAR INC. CONFIDENTIAL PROPRIETARY

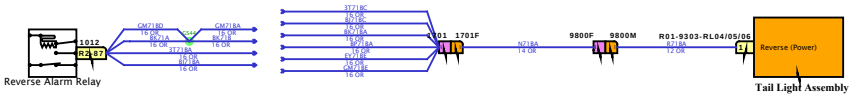

DESIGN DESCRIPTION

FEATURE CODES

SOFTWARE FEATURE CODES

Diagram2

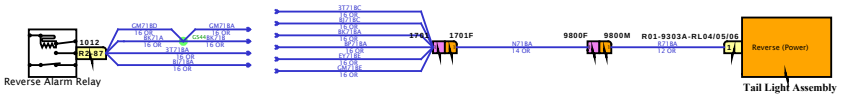

DESIGN DESCRIPTION

FEATURE CODES

SOFTWARE FEATURE CODES

NAVISTAR INC. CONFIDENTIAL PROPRIETARY

Diagram1

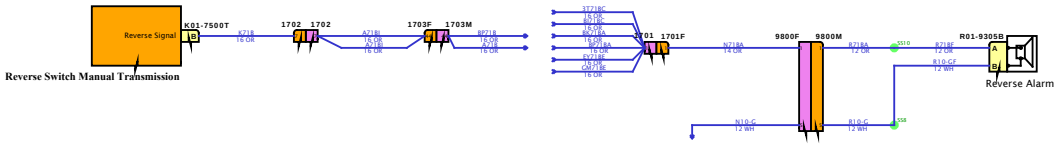

DESIGN DESCRIPTION

FEATURE CODES

SOFTWARE FEATURE CODES

NAVISTAR INC. CONFIDENTIAL PROPRIETARY



DESIGN DESCRIPTION

FEATURE CODES

SOFTWARE FEATURE CODES

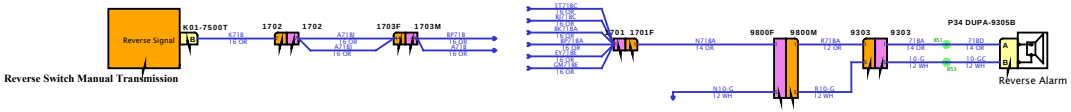

DESIGN DESCRIPTION

FEATURE CODES

SOFTWARE FEATURE CODES

NAVISTAR INC. CONFIDENTIAL PROPRIETARY

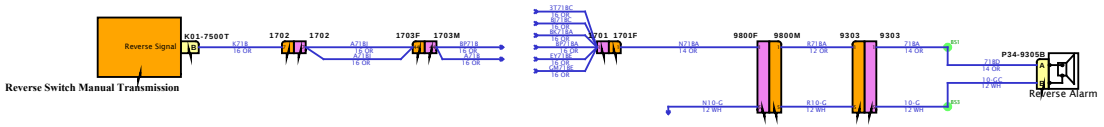

DESIGN DESCRIPTION

FEATURE CODES

SOFTWARE FEATURE CODES

NAVISTAR INC. CONFIDENTIAL PROPRIETARY

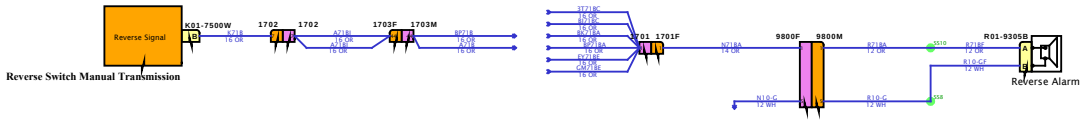

DESIGN DESCRIPTION

FEATURE CODES

SOFTWARE FEATURE CODES



DESIGN DESCRIPTION

FEATURE CODES

SOFTWARE FEATURE CODES

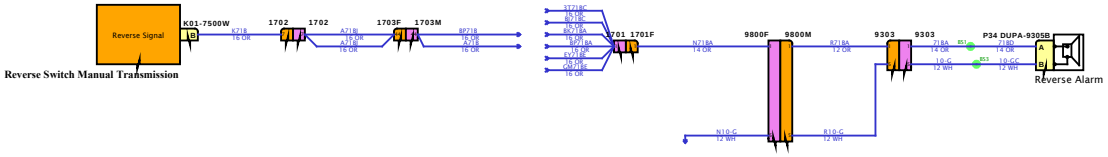

DESIGN DESCRIPTION

FEATURE CODES

SOFTWARE FEATURE CODES

NAVISTAR INC. CONFIDENTIAL PROPRIETARY

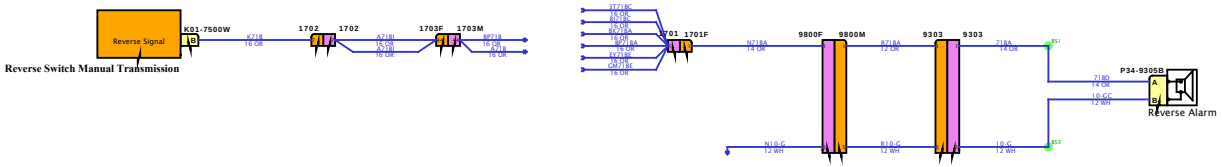

DESIGN DESCRIPTION

FEATURE CODES

SOFTWARE FEATURE CODES

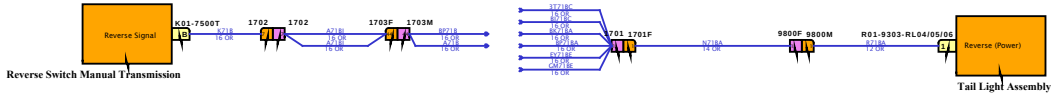

Reverse Switch Manual Transmission

Tail Light Assembly

DESIGN DESCRIPTION

FEATURE CODES

SOFTWARE FEATURE CODES

NAVISTAR INC. CONFIDENTIAL PROPRIETARY



DESIGN DESCRIPTION

FEATURE CODES

SOFTWARE FEATURE CODES

NAVISTAR INC. CONFIDENTIAL PROPRIETARY

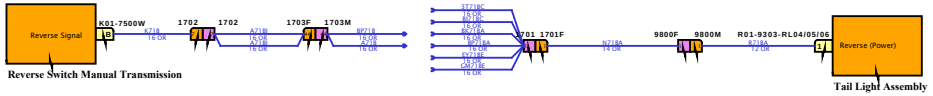

DESIGN DESCRIPTION

FEATURE CODES

SOFTWARE FEATURE CODES

NAVISTAR INC. CONFIDENTIAL PROPRIETARY

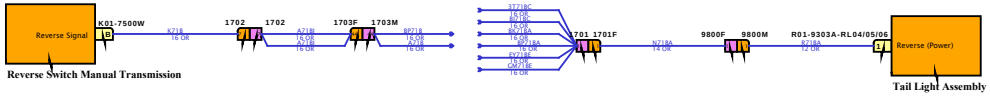

DESIGN DESCRIPTION

FEATURE CODES

SOFTWARE FEATURE CODES

NAVISTAR INC. CONFIDENTIAL PROPRIETARY

Diagram1

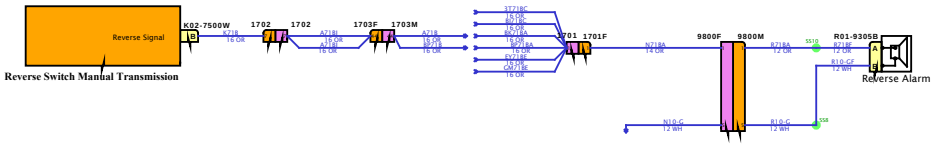

DESIGN DESCRIPTION

FEATURE CODES

SOFTWARE FEATURE CODES

NAVISTAR INC. CONFIDENTIAL PROPRIETARY

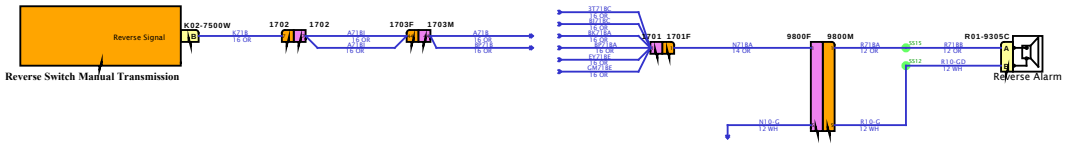

DESIGN DESCRIPTION

FEATURE CODES

SOFTWARE FEATURE CODES

NAVISTAR INC. CONFIDENTIAL PROPRIETARY

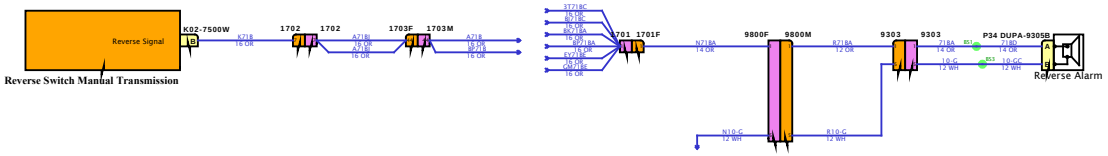

DESIGN DESCRIPTION

FEATURE CODES

SOFTWARE FEATURE CODES

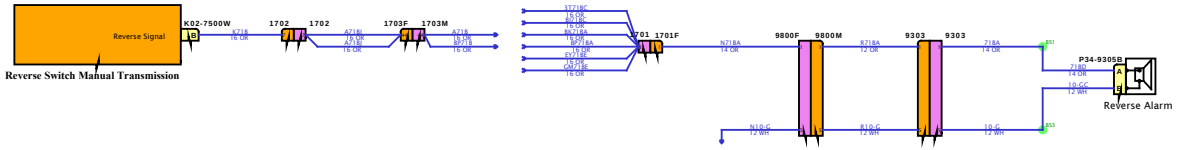

DESIGN DESCRIPTION

FEATURE CODES

SOFTWARE FEATURE CODES

NAVISTAR INC. CONFIDENTIAL PROPRIETARY

Diagram1

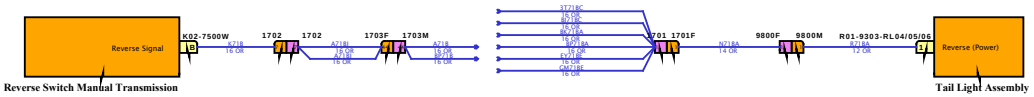

DESIGN DESCRIPTION

FEATURE CODES

SOFTWARE FEATURE CODES

NAVISTAR INC. CONFIDENTIAL PROPRIETARY

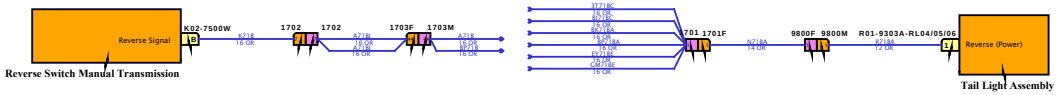

DESIGN DESCRIPTION

FEATURE CODES

SOFTWARE FEATURE CODES

NAVISTAR
NAVISTAR, INC. CONFIDENTIAL PROPRIETARY

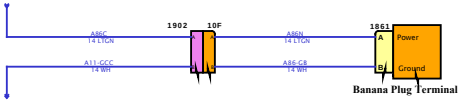

DESIGN DESCRIPTION

FEATURE CODES

SOFTWARE FEATURE CODES

NAVISTAR INC. CONFIDENTIAL PROPRIETARY

Diagram1

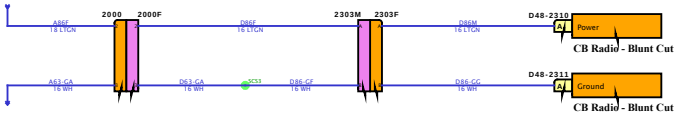

DESIGN DESCRIPTION

FEATURE CODES

SOFTWARE FEATURE CODES

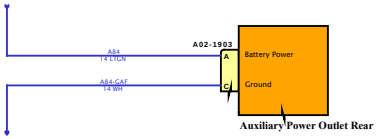

DESIGN DESCRIPTION

FEATURE CODES

SOFTWARE FEATURE CODES

NAVISTAR INC. CONFIDENTIAL PROPRIETARY

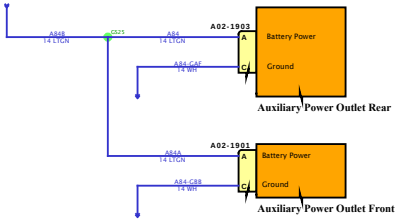

DESIGN DESCRIPTION

FEATURE CODES

SOFTWARE FEATURE CODES

NAVISTAR INC. CONFIDENTIAL PROPRIETARY

Diagram2

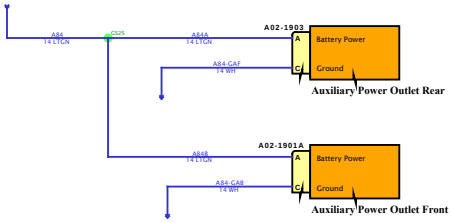

DESIGN DESCRIPTION

FEATURE CODES

SOFTWARE FEATURE CODES

NAVISTAR INC. CONFIDENTIAL PROPRIETARY

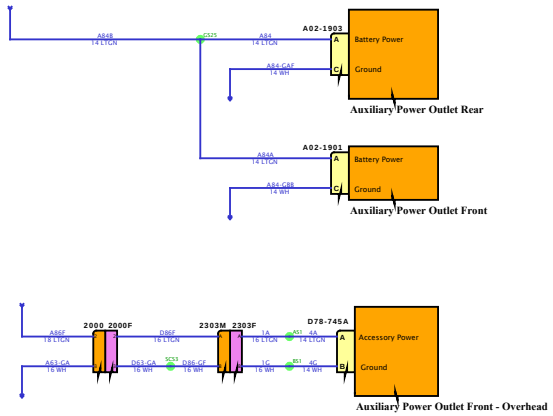

DESIGN DESCRIPTION

FEATURE CODES

SOFTWARE FEATURE CODES

NAVISTAR INC. CONFIDENTIAL PROPRIETARY

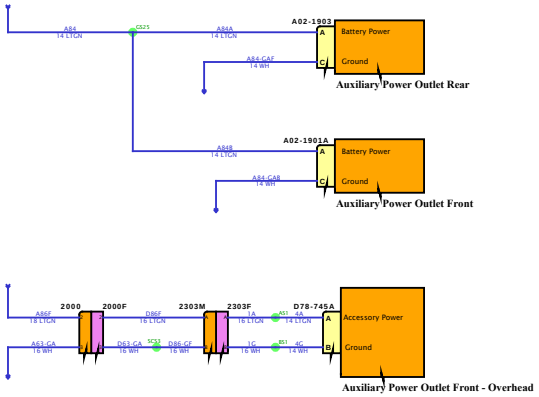

DESIGN DESCRIPTION

FEATURE CODES

SOFTWARE FEATURE CODES

NAVISTAR INC. CONFIDENTIAL PROPRIETARY

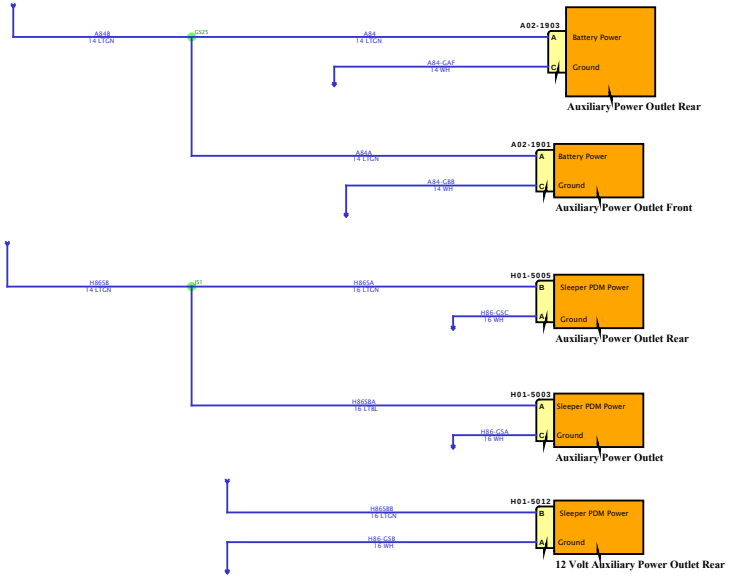

DESIGN DESCRIPTION

FEATURE CODES

SOFTWARE FEATURE CODES

NAVISTAR INC. CONFIDENTIAL PROPRIETARY

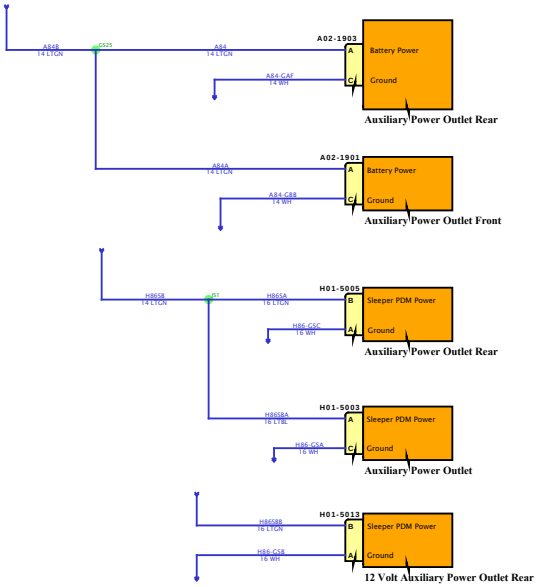

DESIGN DESCRIPTION

FEATURE CODES

SOFTWARE FEATURE CODES

NAVISTAR
NAVISTAR, INC. CONFIDENTIAL PROPRIETARY

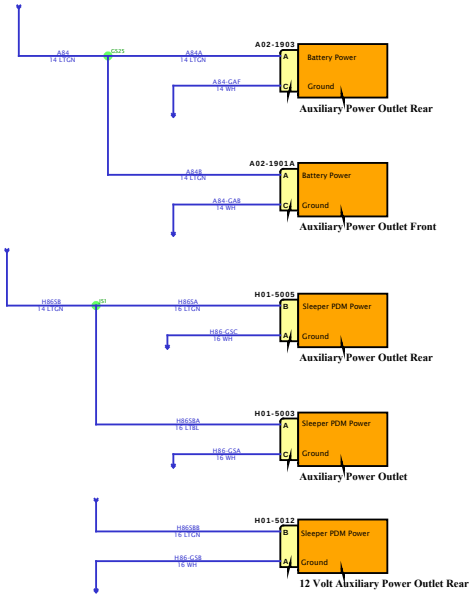

DESIGN DESCRIPTION

FEATURE CODES

SOFTWARE FEATURE CODES

NAVISTAR
NAVISTAR, INC. CONFIDENTIAL PROPRIETARY

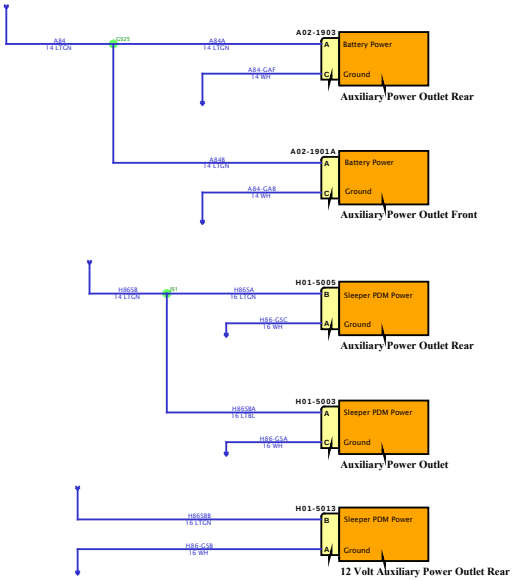

DESIGN DESCRIPTION

FEATURE CODES

SOFTWARE FEATURE CODES

NAVISTAR
NAVISTAR, INC. CONFIDENTIAL PROPRIETARY

Diagram1

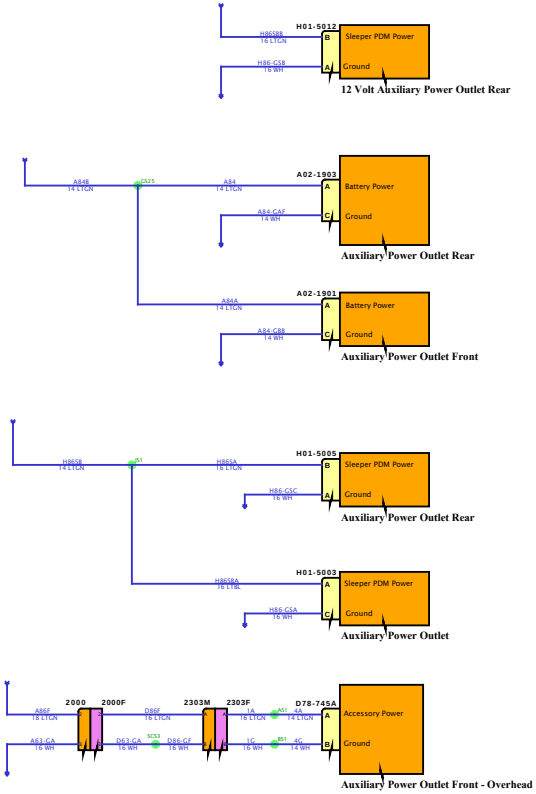

DESIGN DESCRIPTION

FEATURE CODES

SOFTWARE FEATURE CODES

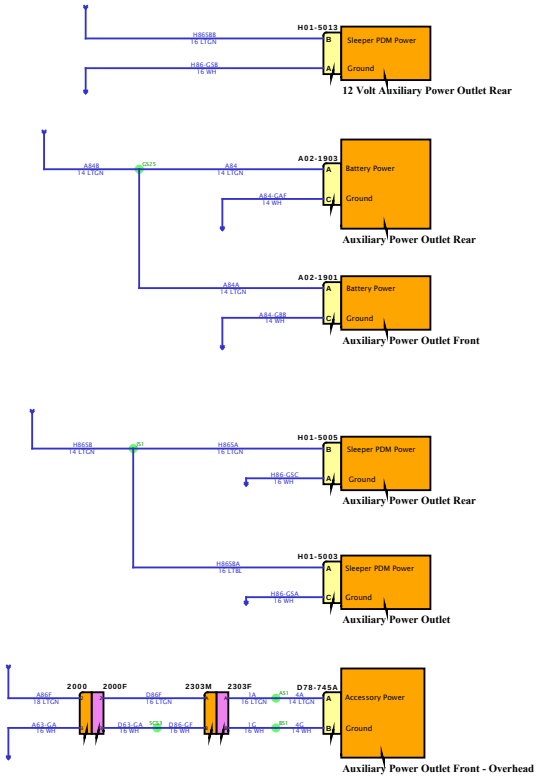

DESIGN DESCRIPTION

FEATURE CODES

SOFTWARE FEATURE CODES

NAVISTAR INC. CONFIDENTIAL PROPRIETARY

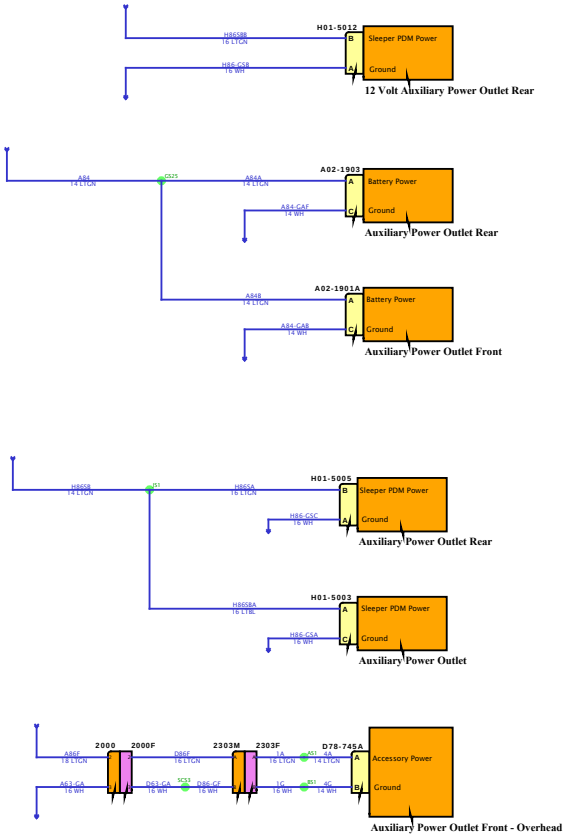

DESIGN DESCRIPTION

FEATURE CODES

SOFTWARE FEATURE CODES

NAVISTAR INC. CONFIDENTIAL PROPRIETARY

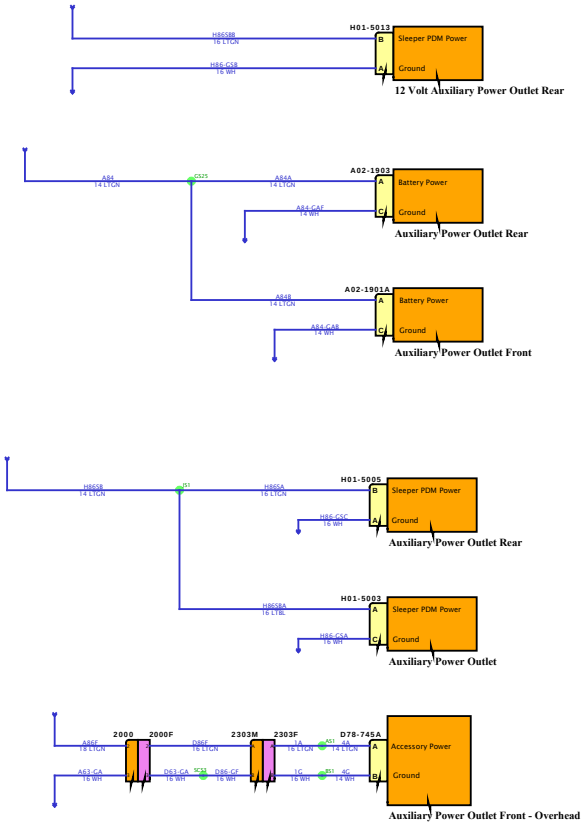

DESIGN DESCRIPTION

FEATURE CODES

SOFTWARE FEATURE CODES

DESIGN DESCRIPTION

FEATURE CODES

SOFTWARE FEATURE CODES

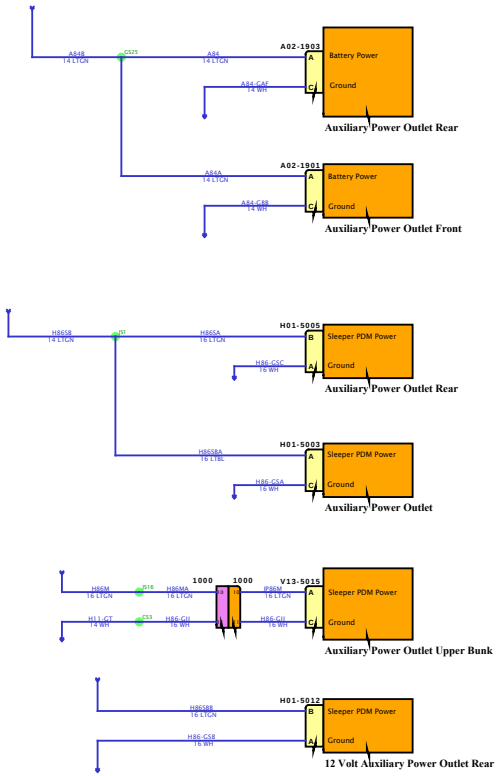

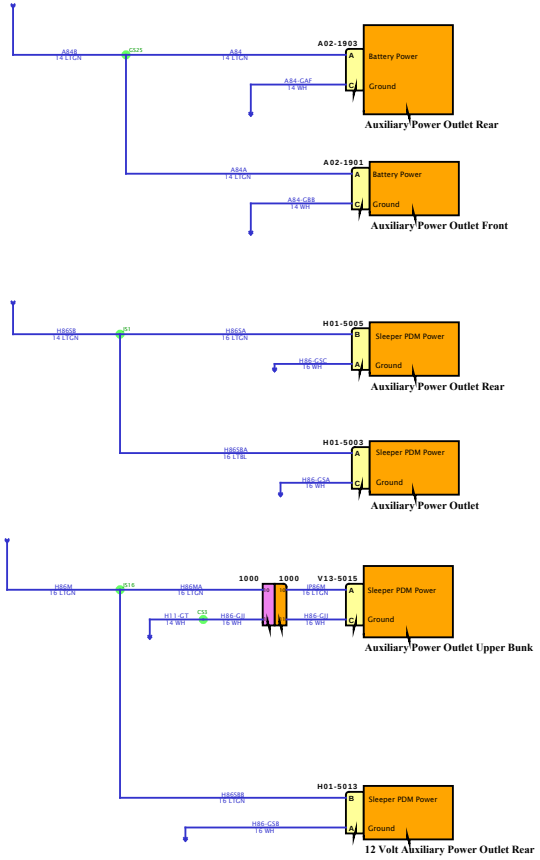

DESIGN DESCRIPTION

FEATURE CODES

SOFTWARE FEATURE CODES

NAVISTAR INC. CONFIDENTIAL PROPRIETARY

Diagram3

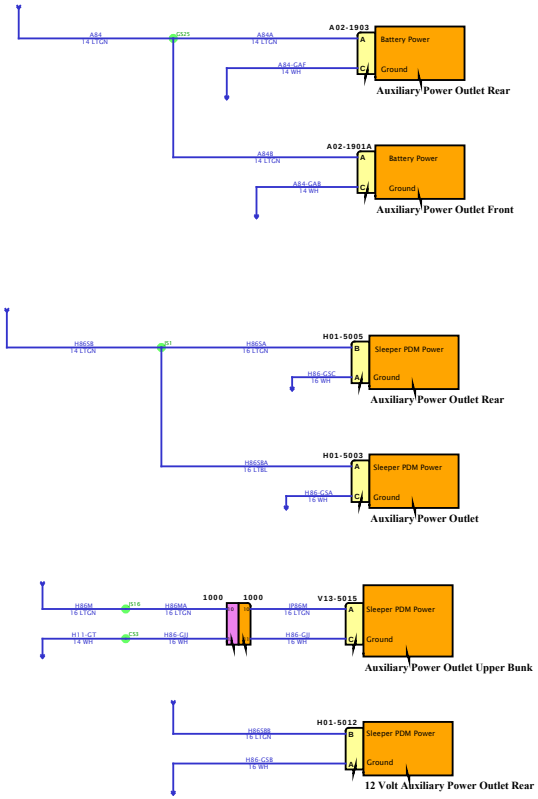

DESIGN DESCRIPTION

FEATURE CODES

SOFTWARE FEATURE CODES

NAVISTAR INC. CONFIDENTIAL PROPRIETARY

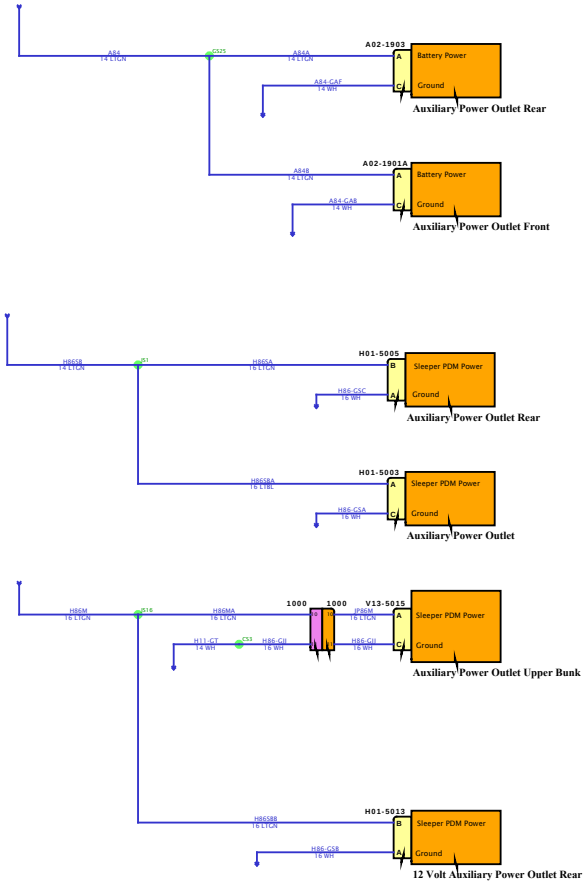

DESIGN DESCRIPTION

FEATURE CODES

SOFTWARE FEATURE CODES

NAVISTAR INC. CONFIDENTIAL PROPRIETARY

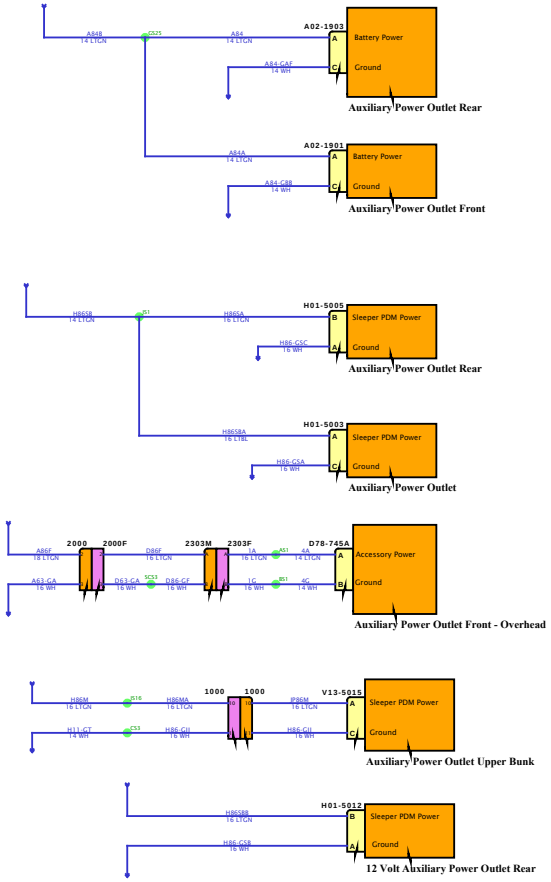

DESIGN DESCRIPTION

FEATURE CODES

SOFTWARE FEATURE CODES

NAVISTAR INC. CONFIDENTIAL PROPRIETARY

DESIGN DESCRIPTION

FEATURE CODES

SOFTWARE FEATURE CODES

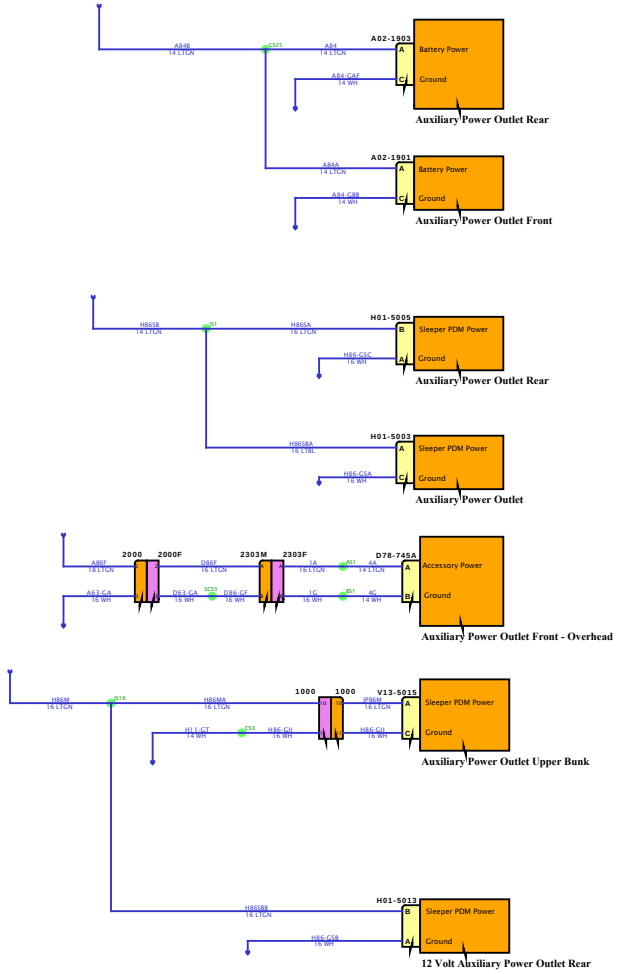

DESIGN DESCRIPTION

FEATURE CODES

SOFTWARE FEATURE CODES

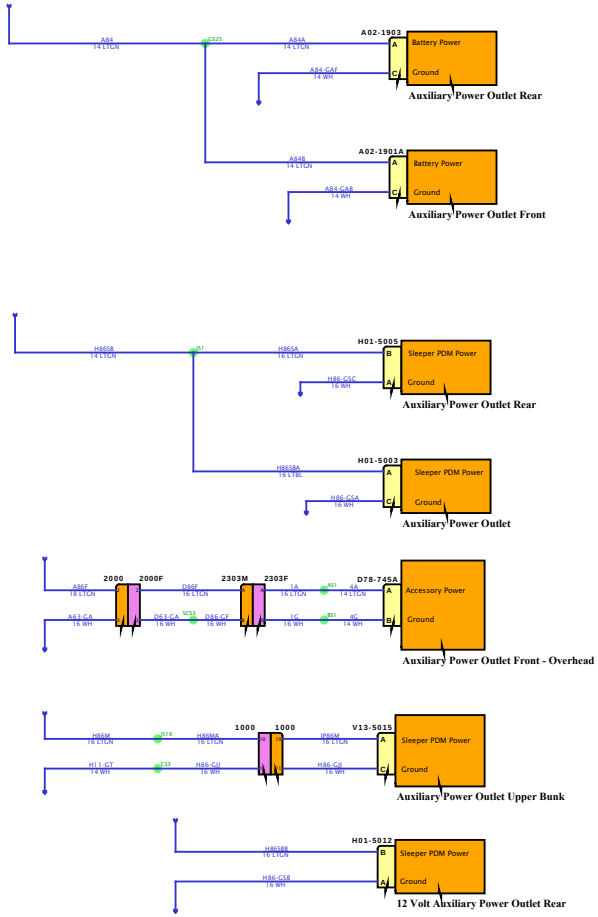

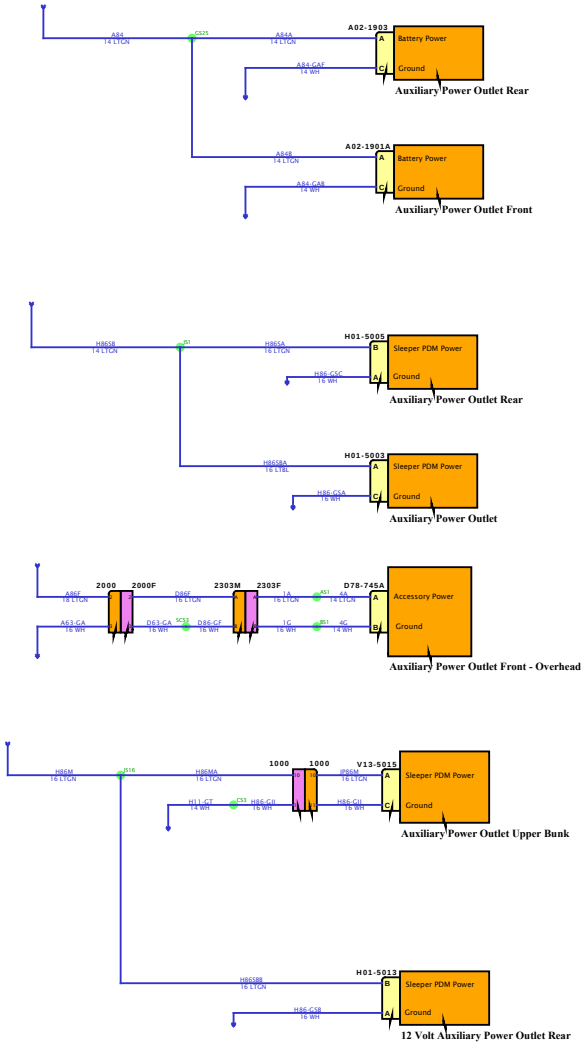

DESIGN DESCRIPTION

FEATURE CODES

SOFTWARE FEATURE CODES

NAVISTAR INC. CONFIDENTIAL PROPRIETARY

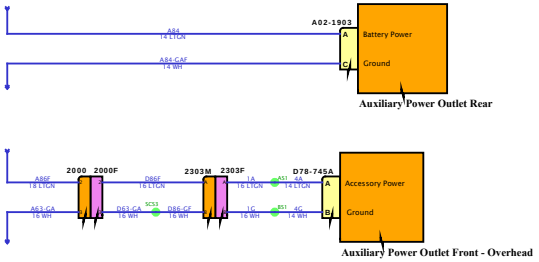

DESIGN DESCRIPTION

FEATURE CODES

SOFTWARE FEATURE CODES

NAVISTAR INC. CONFIDENTIAL PROPRIETARY

Diagram1

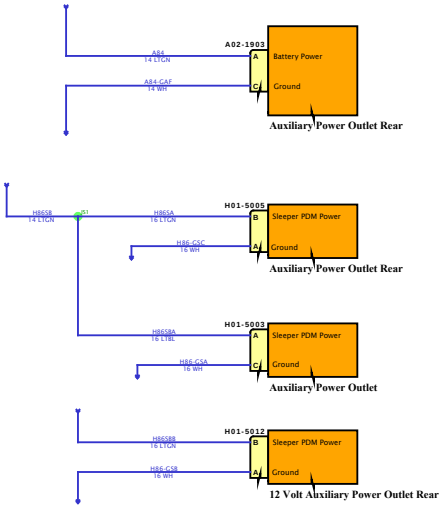

DESIGN DESCRIPTION

FEATURE CODES

SOFTWARE FEATURE CODES

NAVISTAR INC. CONFIDENTIAL PROPRIETARY

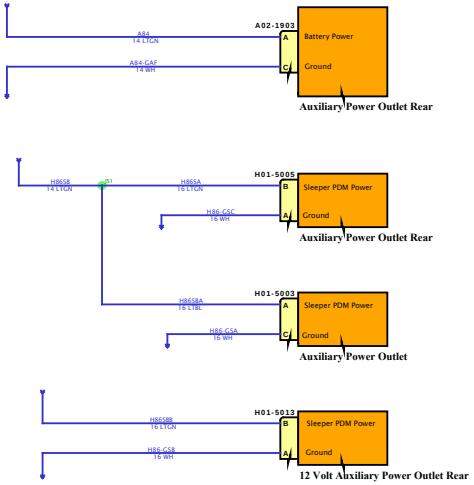

DESIGN DESCRIPTION

FEATURE CODES

SOFTWARE FEATURE CODES

NAVISTAR INC. CONFIDENTIAL PROPRIETARY

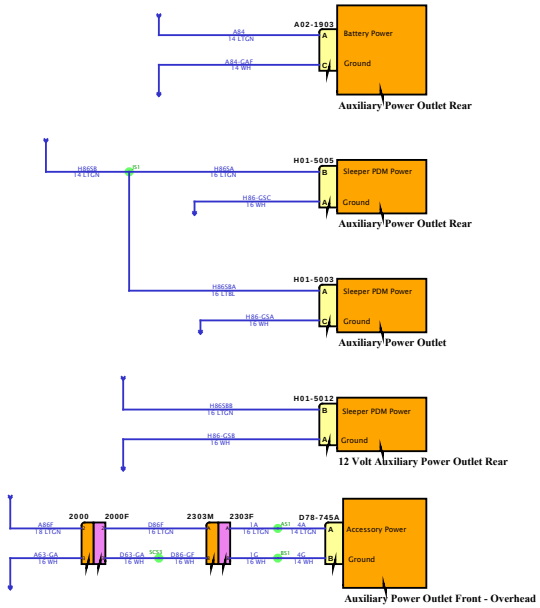

DESIGN DESCRIPTION

FEATURE CODES

SOFTWARE FEATURE CODES

NAVISTAR INC. CONFIDENTIAL PROPRIETARY

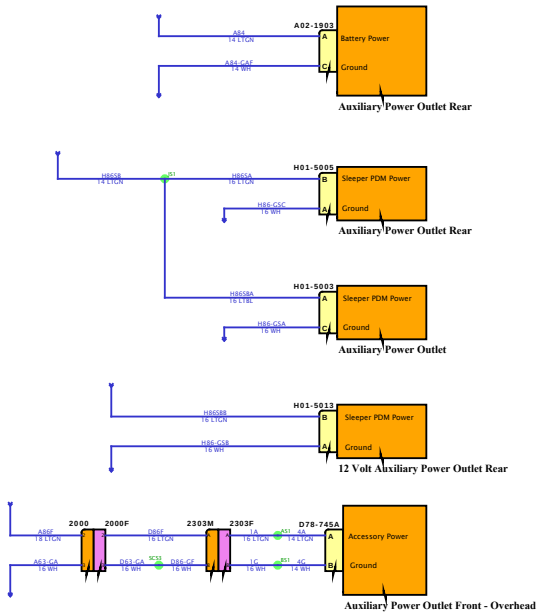

DESIGN DESCRIPTION

FEATURE CODES

SOFTWARE FEATURE CODES

NAVISTAR INC. CONFIDENTIAL PROPRIETARY

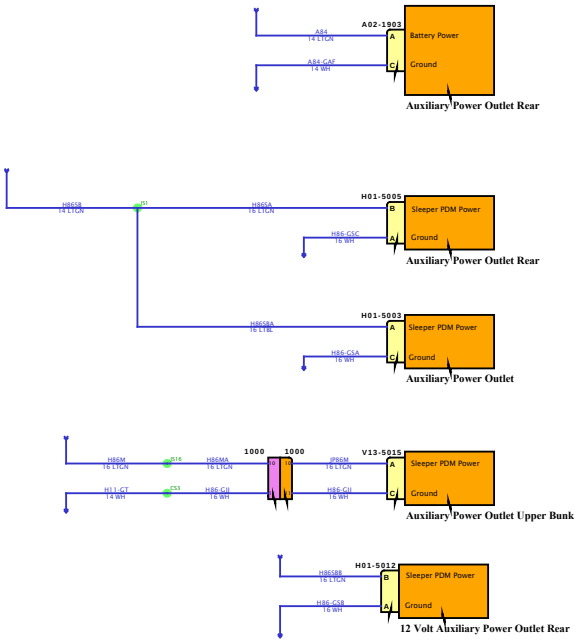

DESIGN DESCRIPTION

FEATURE CODES

SOFTWARE FEATURE CODES

NAVISTAR INC. CONFIDENTIAL PROPRIETARY

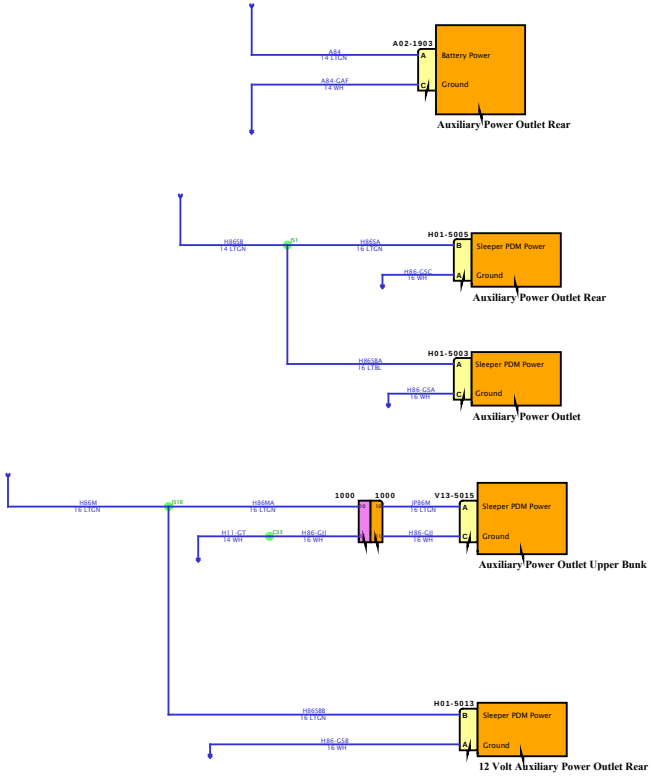

DESIGN DESCRIPTION

FEATURE CODES

SOFTWARE FEATURE CODES

NAVISTAR INC. CONFIDENTIAL PROPRIETARY

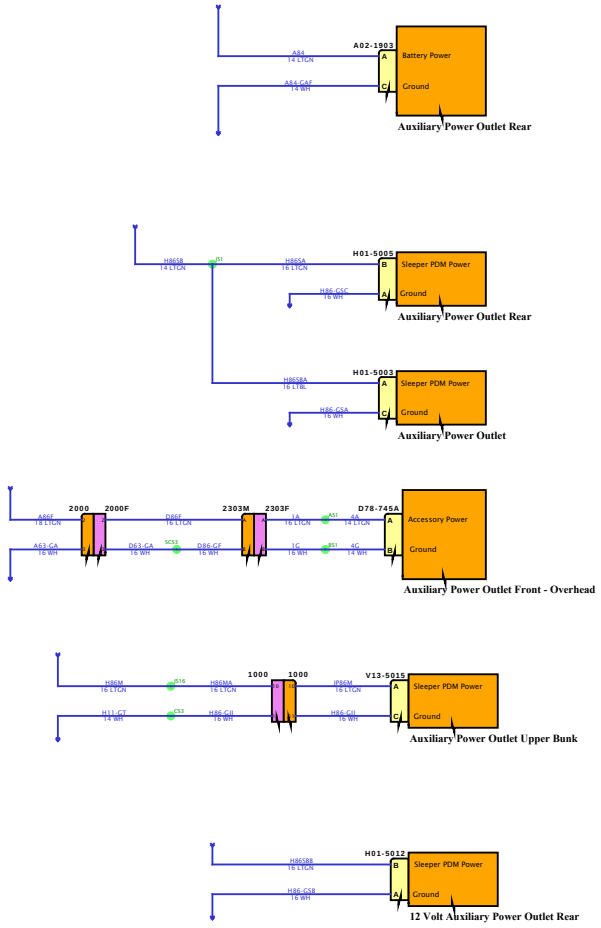

DESIGN DESCRIPTION

FEATURE CODES

SOFTWARE FEATURE CODES

NAVISTAR INC. CONFIDENTIAL PROPRIETARY

Diagram2

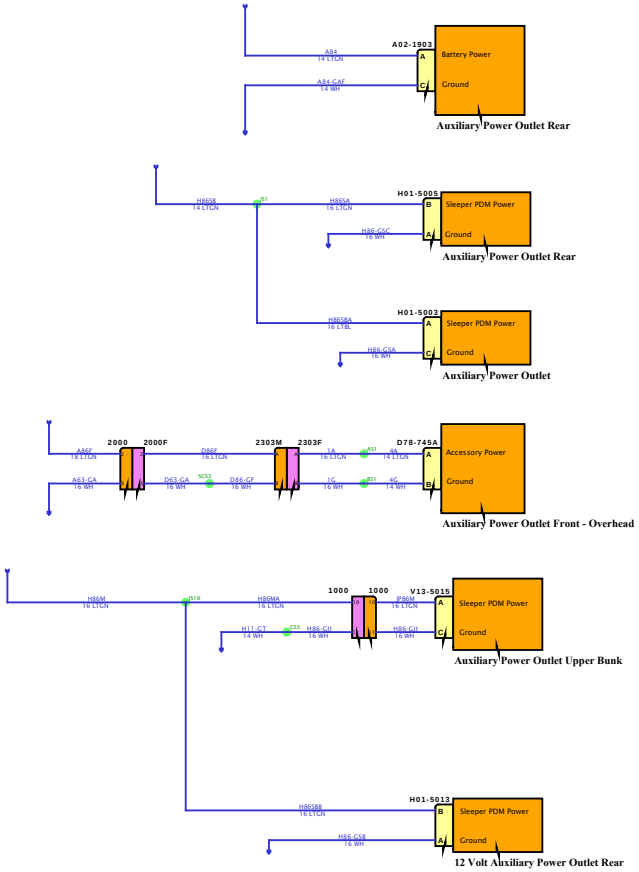

DESIGN DESCRIPTION

FEATURE CODES

SOFTWARE FEATURE CODES

NAVISTAR INC. CONFIDENTIAL PROPRIETARY

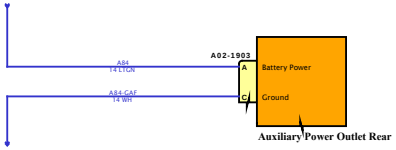

DESIGN DESCRIPTION

FEATURE CODES

SOFTWARE FEATURE CODES

NAVISTAR INC. CONFIDENTIAL PROPRIETARY

Diagram1

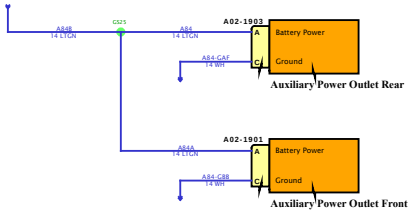

DESIGN DESCRIPTION

FEATURE CODES

SOFTWARE FEATURE CODES

NAVISTAR INC. CONFIDENTIAL PROPRIETARY

Diagram2

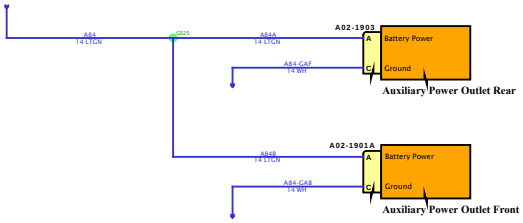

DESIGN DESCRIPTION

FEATURE CODES

SOFTWARE FEATURE CODES

NAVISTAR INC. CONFIDENTIAL PROPRIETARY

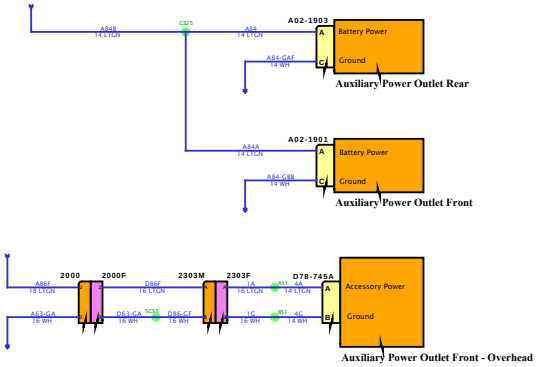

DESIGN DESCRIPTION

FEATURE CODES

SOFTWARE FEATURE CODES

NAVISTAR INC. CONFIDENTIAL PROPRIETARY

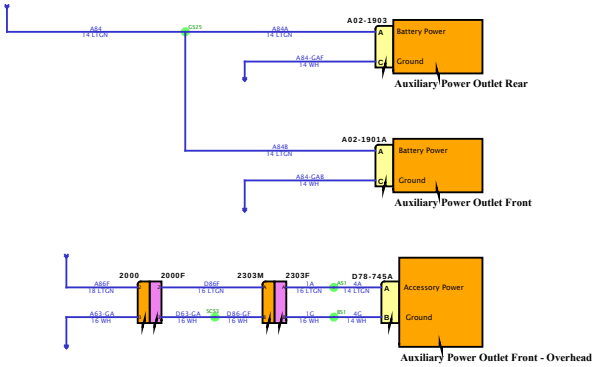

DESIGN DESCRIPTION

FEATURE CODES

SOFTWARE FEATURE CODES

NAVISTAR INC. CONFIDENTIAL PROPRIETARY

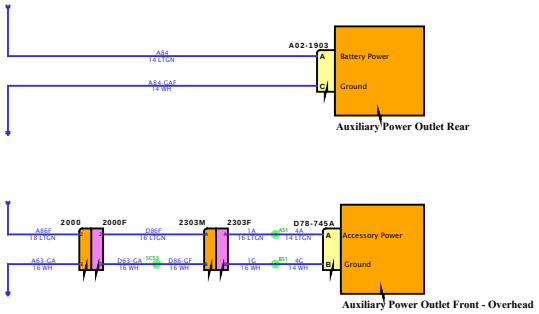

DESIGN DESCRIPTION

FEATURE CODES

SOFTWARE FEATURE CODES

NAVISTAR INC. CONFIDENTIAL PROPRIETARY

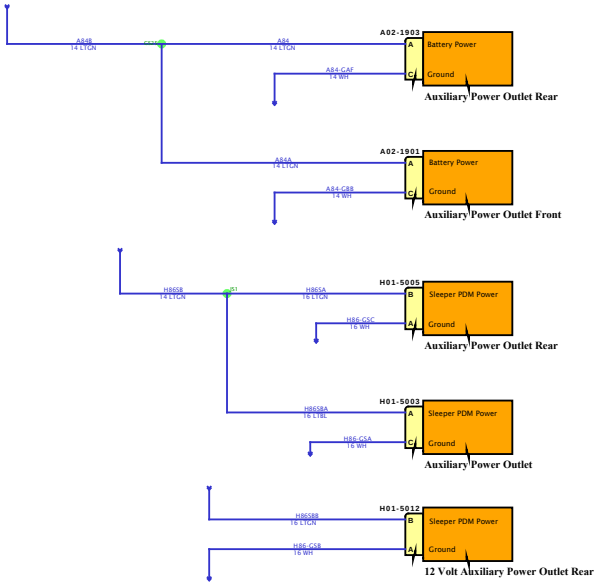

DESIGN DESCRIPTION

FEATURE CODES

SOFTWARE FEATURE CODES

NAVISTAR
NAVISTAR, INC. CONFIDENTIAL PROPRIETARY

Diagram2

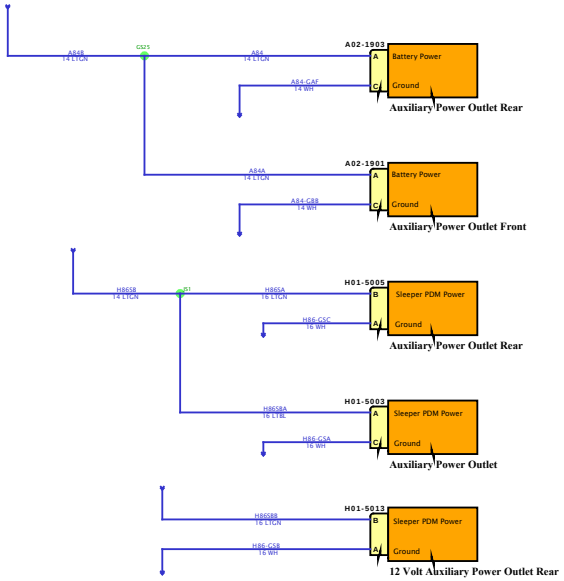

DESIGN DESCRIPTION

FEATURE CODES

SOFTWARE FEATURE CODES

NAVISTAR
NAVISTAR, INC. CONFIDENTIAL PROPRIETARY

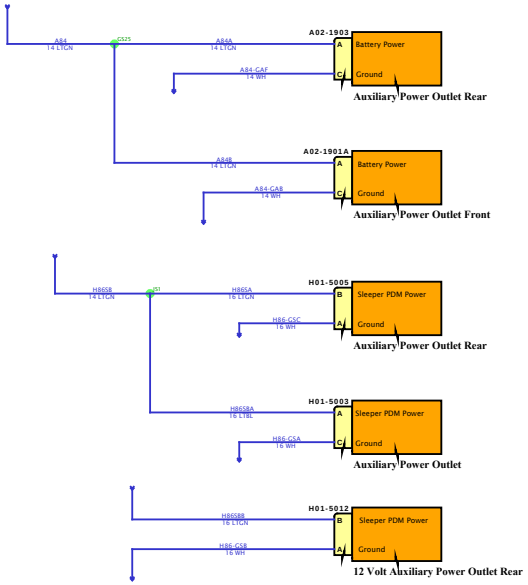

DESIGN DESCRIPTION

FEATURE CODES

SOFTWARE FEATURE CODES

NAVISTAR INC. CONFIDENTIAL PROPRIETARY

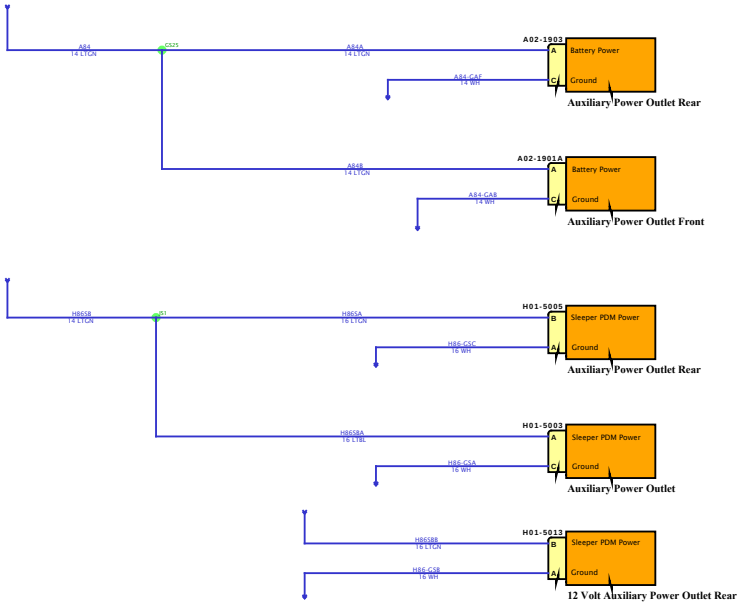

DESIGN DESCRIPTION

FEATURE CODES

SOFTWARE FEATURE CODES

NAVISTAR
NAVISTAR, INC. CONFIDENTIAL PROPRIETARY

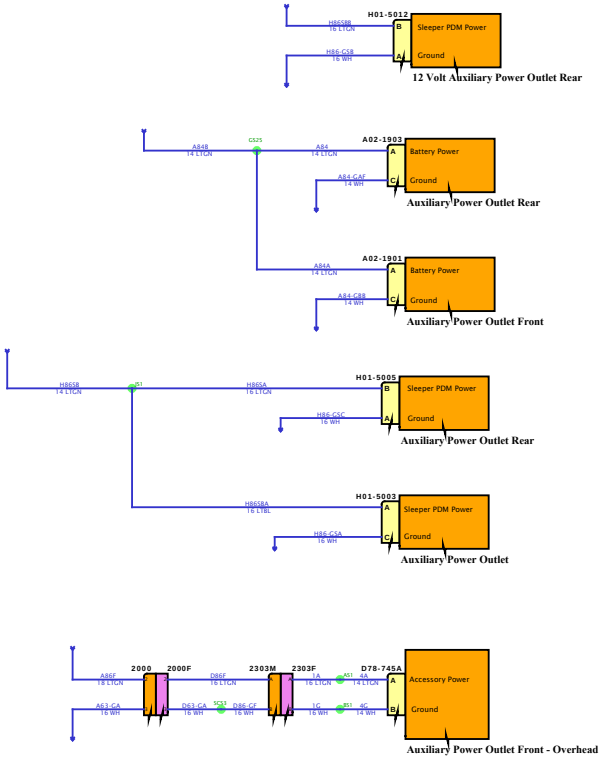

DESIGN DESCRIPTION

FEATURE CODES

SOFTWARE FEATURE CODES

NAVISTAR INC. CONFIDENTIAL PROPRIETARY

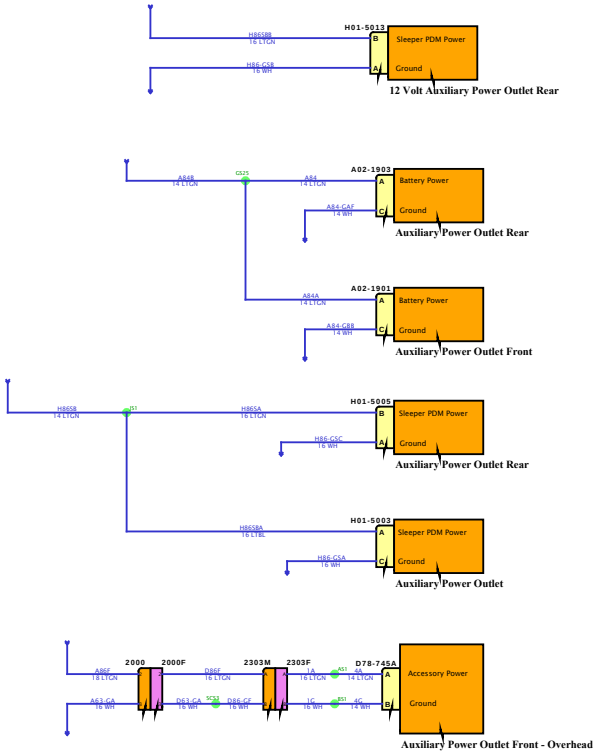

DESIGN DESCRIPTION

FEATURE CODES

SOFTWARE FEATURE CODES

NAVISTAR INC. CONFIDENTIAL PROPRIETARY

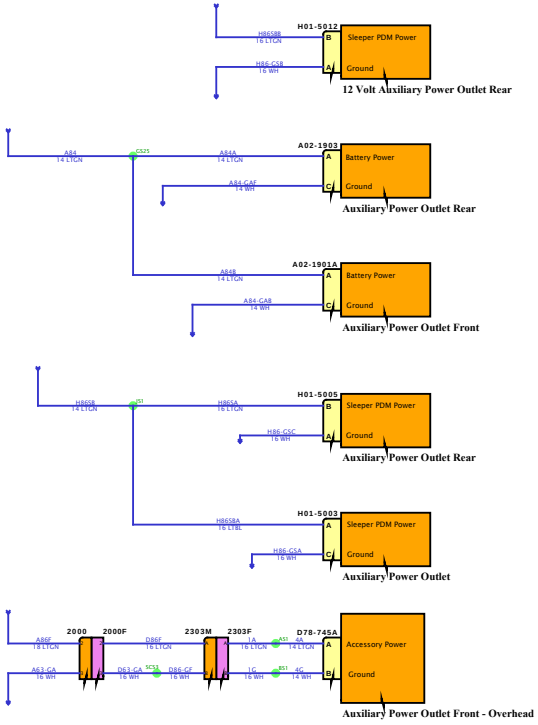

DESIGN DESCRIPTION

FEATURE CODES

SOFTWARE FEATURE CODES

NAVISTAR
NAVISTAR, INC. CONFIDENTIAL PROPRIETARY

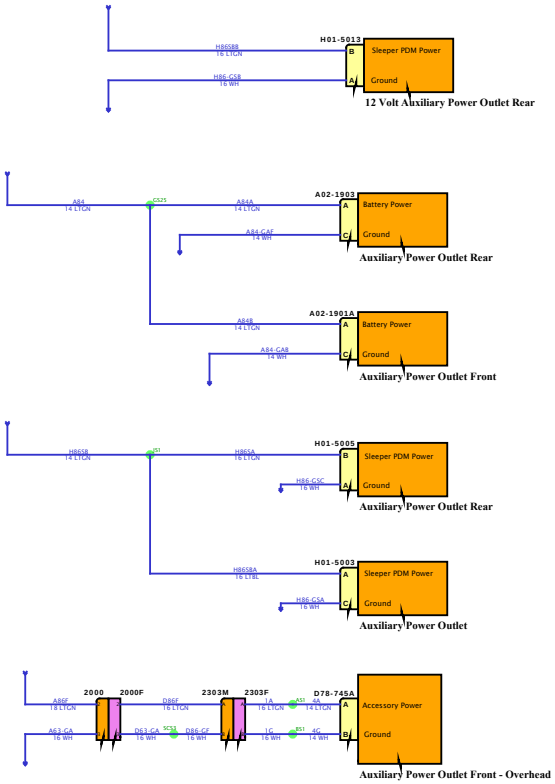

DESIGN DESCRIPTION

FEATURE CODES

SOFTWARE FEATURE CODES

NAVISTAR
NAVISTAR, INC. CONFIDENTIAL PROPRIETARY

Diagram1

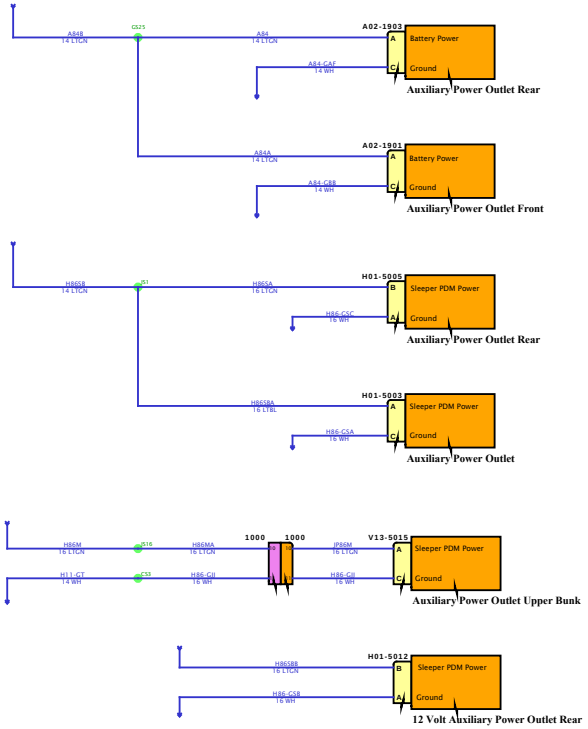

DESIGN DESCRIPTION

FEATURE CODES

SOFTWARE FEATURE CODES

NAVISTAR INC. CONFIDENTIAL PROPRIETARY

Diagram2

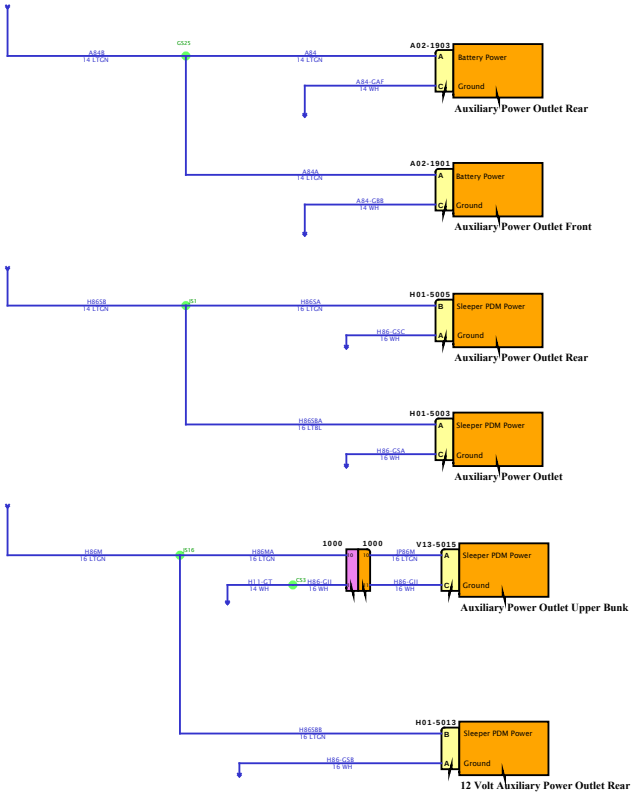

DESIGN DESCRIPTION

FEATURE CODES

SOFTWARE FEATURE CODES

NAVISTAR INC. CONFIDENTIAL PROPRIETARY

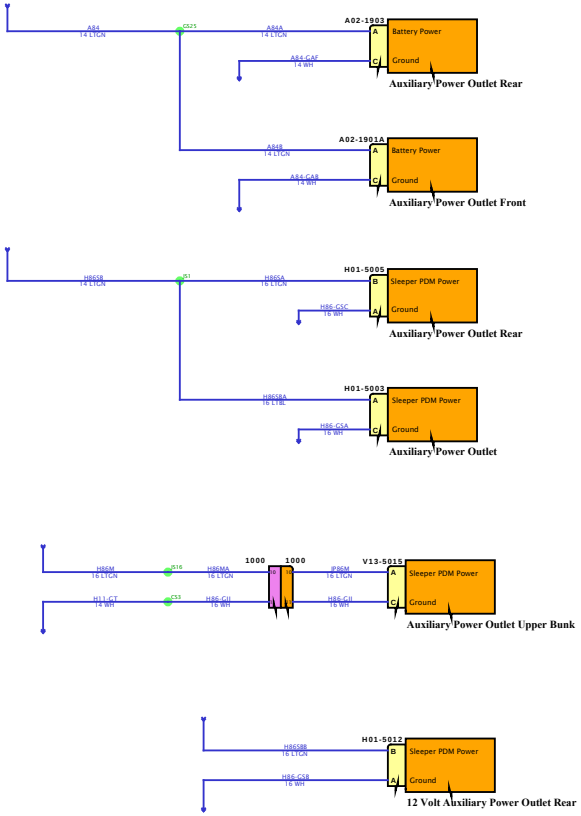

DESIGN DESCRIPTION

FEATURE CODES

SOFTWARE FEATURE CODES

NAVISTAR
NAVISTAR, INC. CONFIDENTIAL PROPRIETARY

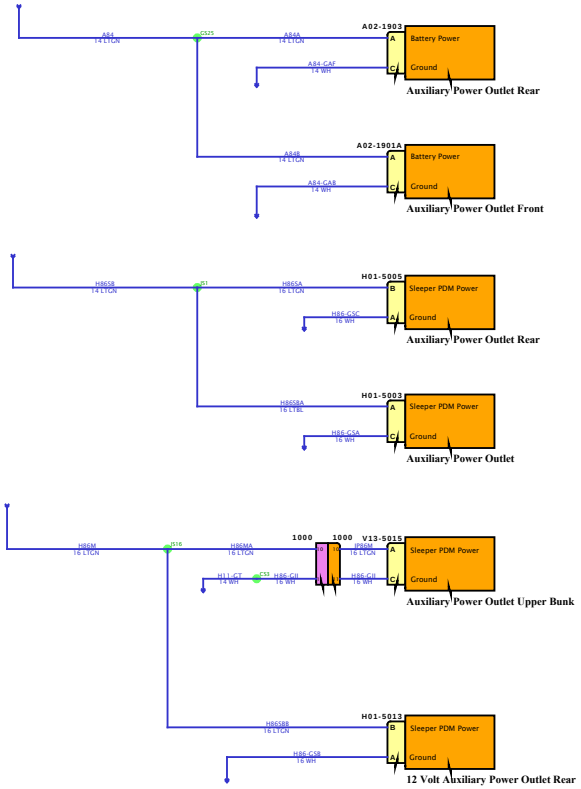

DESIGN DESCRIPTION

FEATURE CODES

SOFTWARE FEATURE CODES

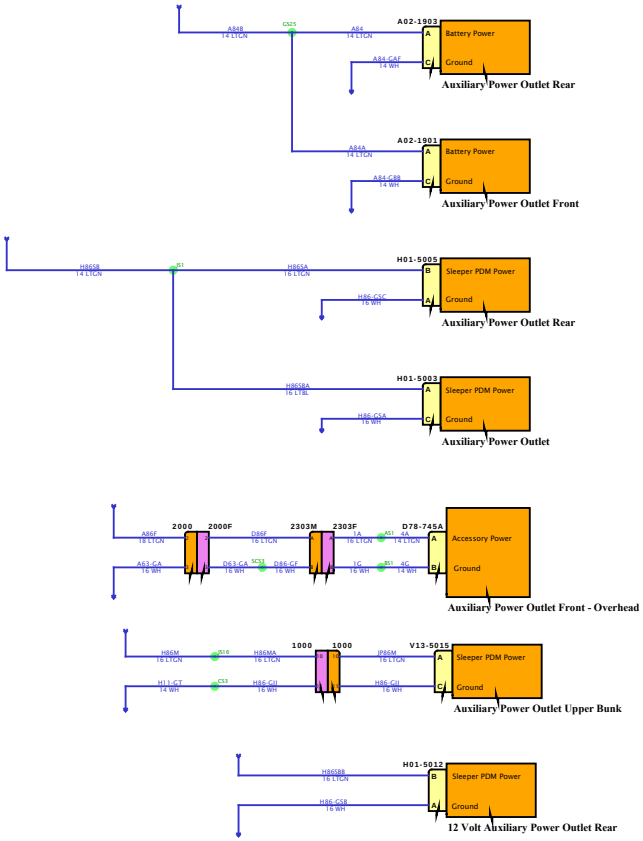

DESIGN DESCRIPTION

FEATURE CODES

SOFTWARE FEATURE CODES

NAVISTAR INC. CONFIDENTIAL PROPRIETARY

Diagram2

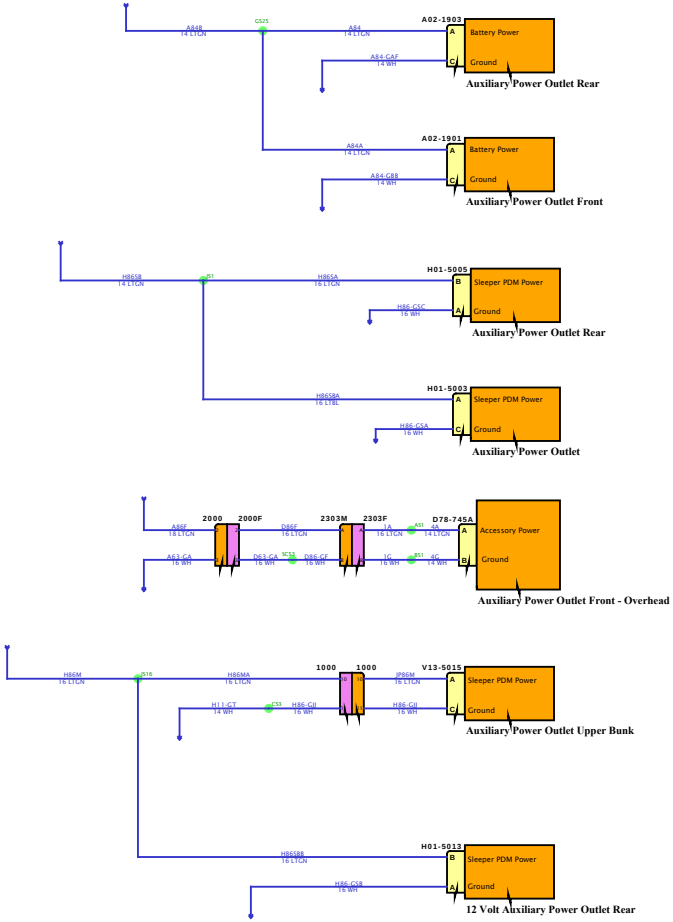

DESIGN DESCRIPTION

FEATURE CODES

SOFTWARE FEATURE CODES

NAVISTAR INC. CONFIDENTIAL PROPRIETARY

Diagram3

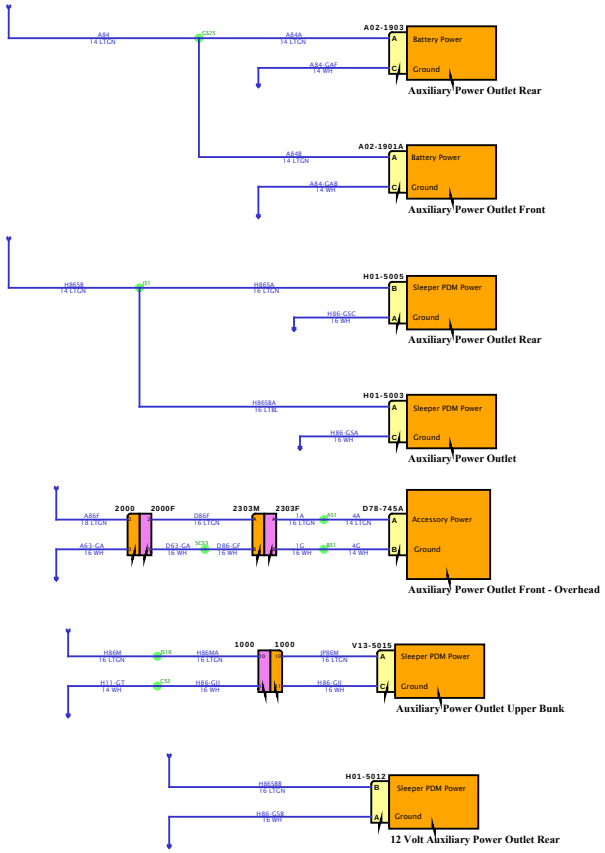

DESIGN DESCRIPTION

FEATURE CODES

SOFTWARE FEATURE CODES

NAVISTAR INC. CONFIDENTIAL PROPRIETARY

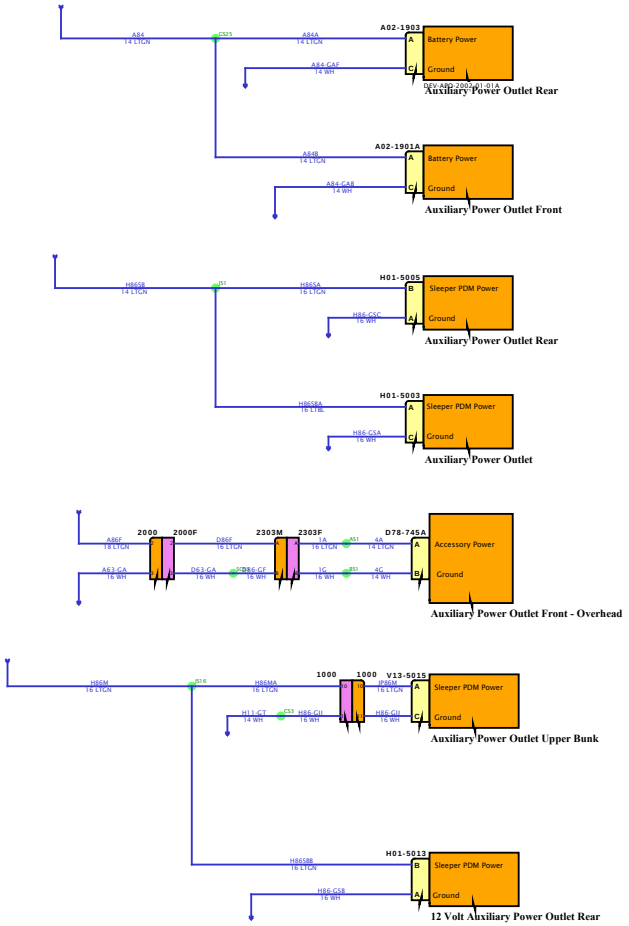

DESIGN DESCRIPTION

FEATURE CODES

SOFTWARE FEATURE CODES

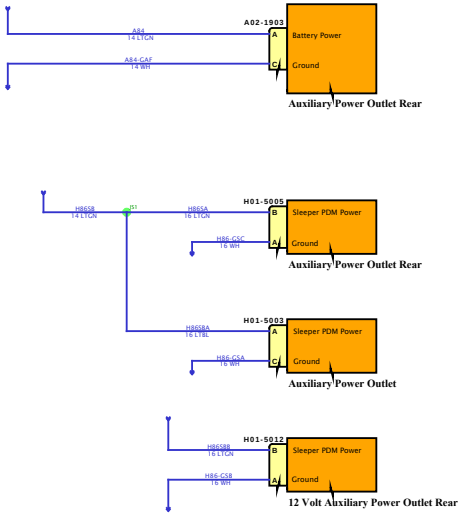

DESIGN DESCRIPTION

FEATURE CODES

SOFTWARE FEATURE CODES

NAVISTAR INC. CONFIDENTIAL PROPRIETARY

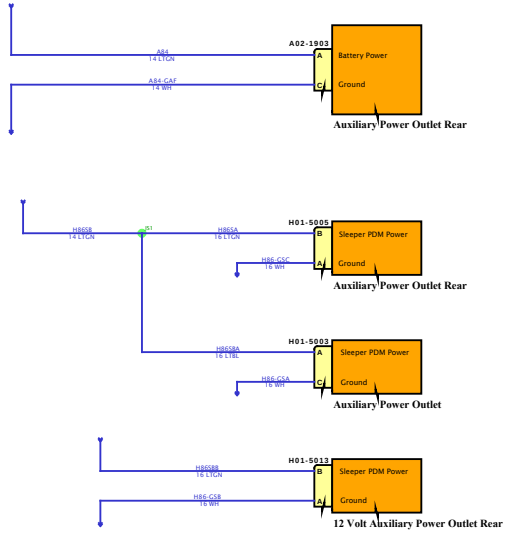

DESIGN DESCRIPTION

FEATURE CODES

SOFTWARE FEATURE CODES

NAVISTAR INC. CONFIDENTIAL PROPRIETARY

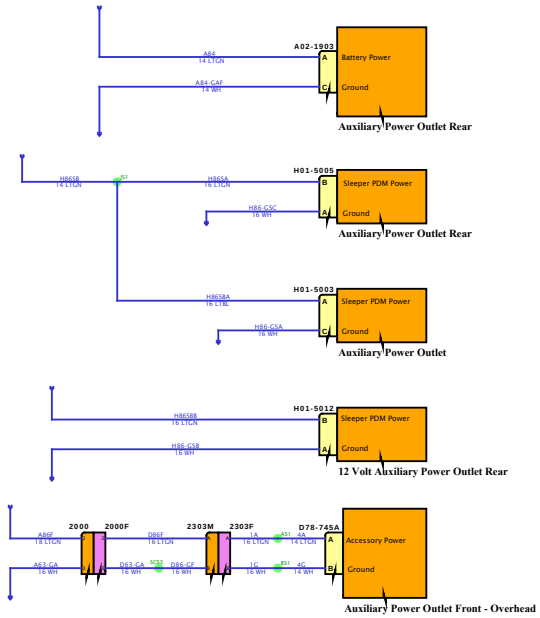

DESIGN DESCRIPTION

FEATURE CODES

SOFTWARE FEATURE CODES

NAVISTAR INC. CONFIDENTIAL PROPRIETARY

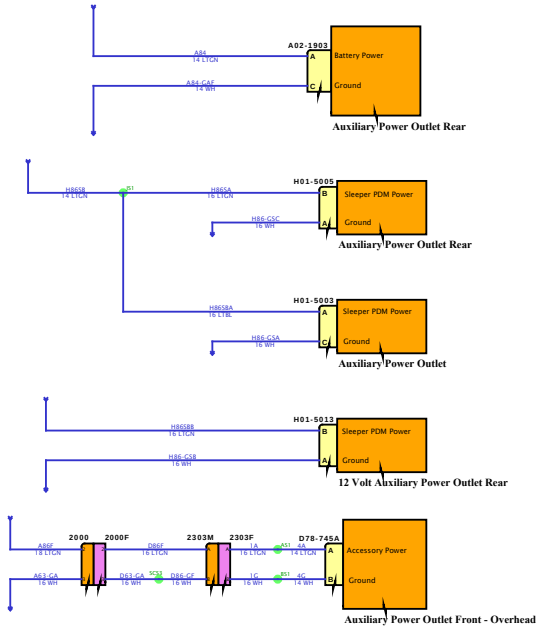

DESIGN DESCRIPTION

FEATURE CODES

SOFTWARE FEATURE CODES

NAVISTAR INC. CONFIDENTIAL PROPRIETARY

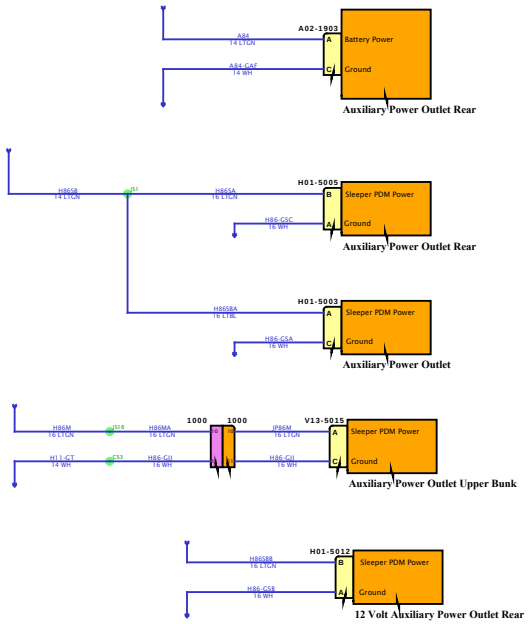

DESIGN DESCRIPTION

FEATURE CODES

SOFTWARE FEATURE CODES

Diagram2

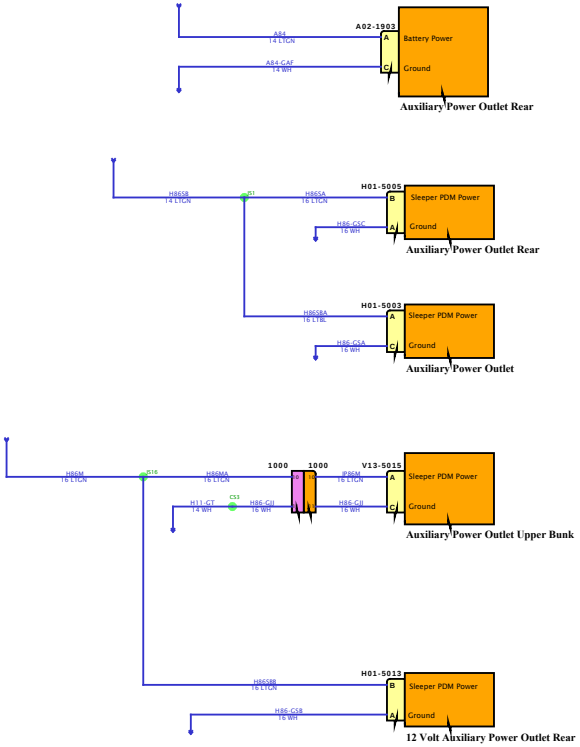

DESIGN DESCRIPTION

FEATURE CODES

SOFTWARE FEATURE CODES

NAVISTAR
NAVISTAR, INC. CONFIDENTIAL PROPRIETARY

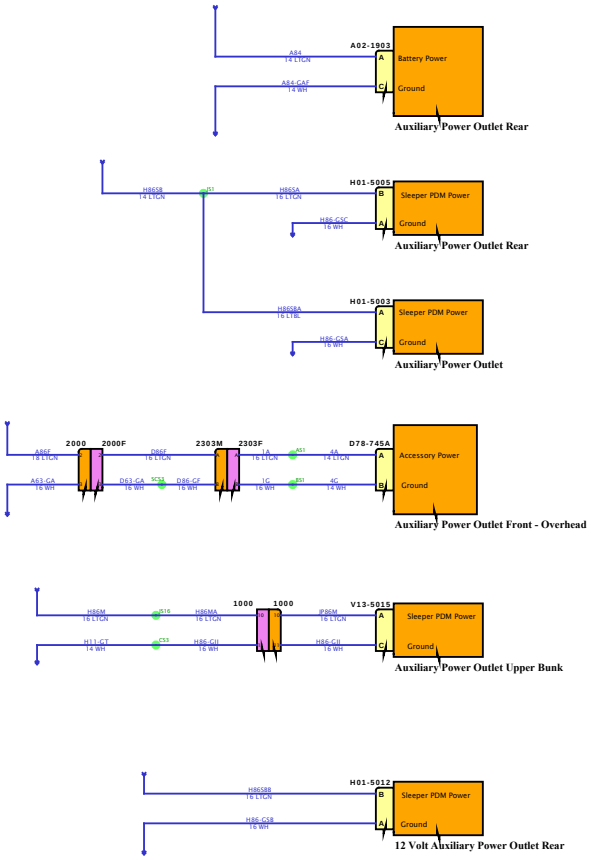

DESIGN DESCRIPTION

FEATURE CODES

SOFTWARE FEATURE CODES

NAVISTAR
NAVISTAR, INC. CONFIDENTIAL PROPRIETARY

Diagram2

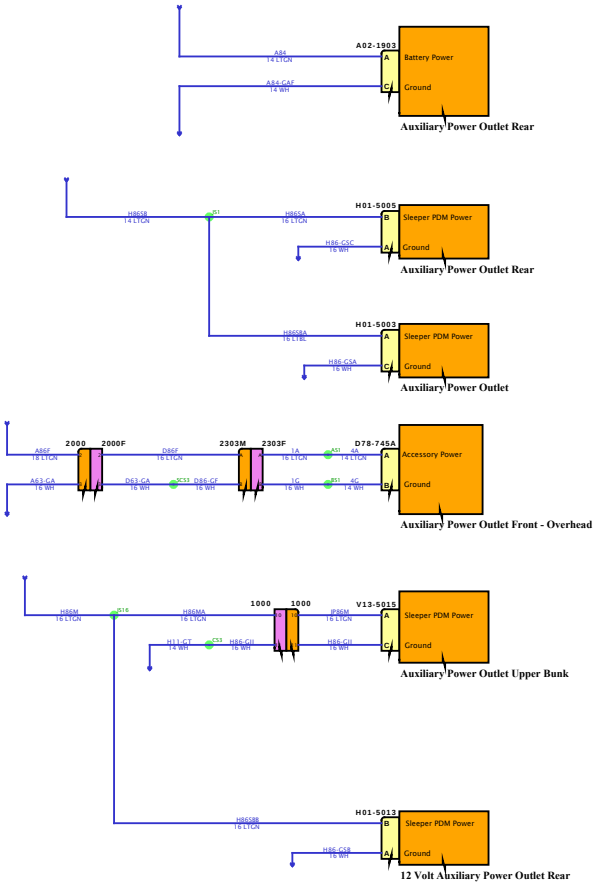

DESIGN DESCRIPTION

FEATURE CODES

SOFTWARE FEATURE CODES

NAVISTAR INC. CONFIDENTIAL PROPRIETARY

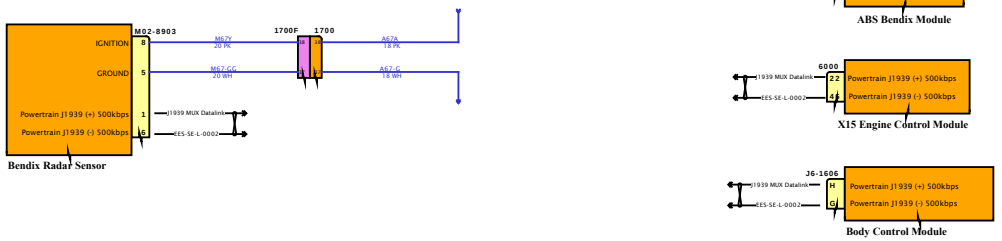

DESIGN DESCRIPTION

FEATURE CODES

SOFTWARE FEATURE CODES

NAVISTAR
NAVISTAR, INC. CONFIDENTIAL PROPRIETARY

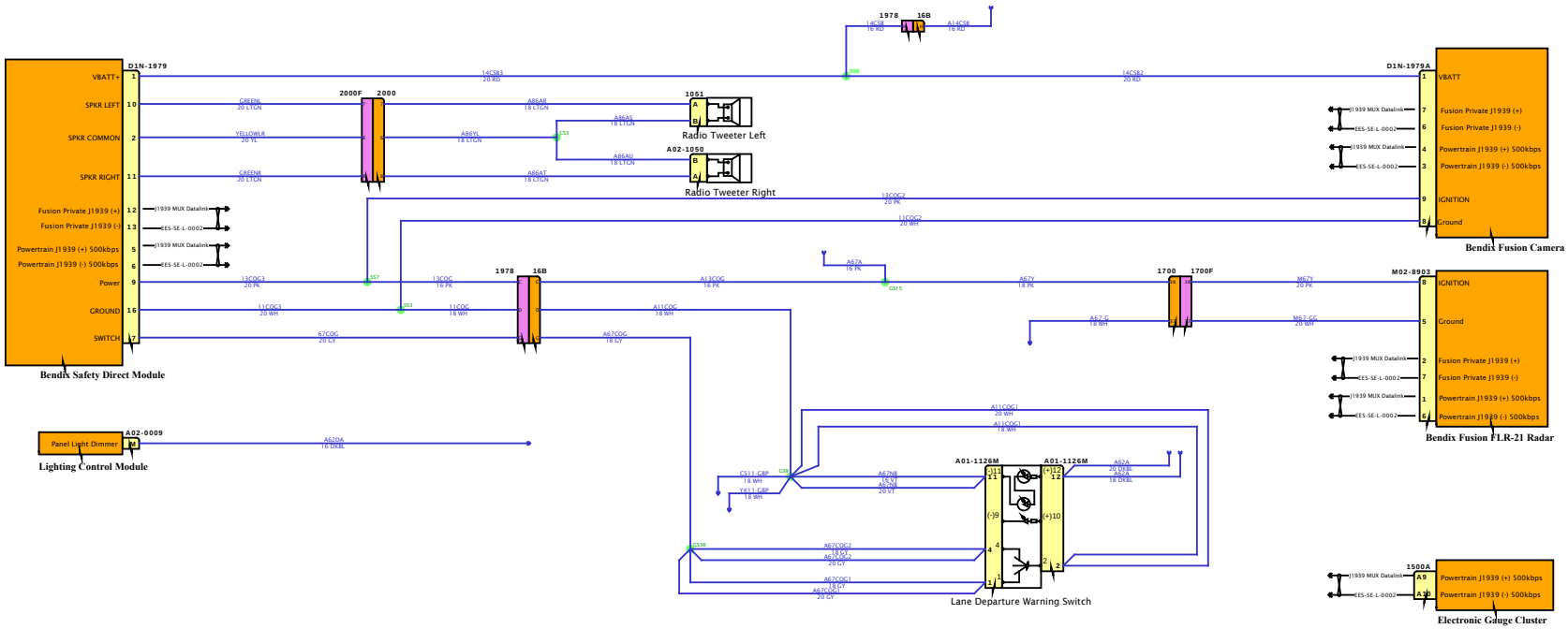

DESIGN DESCRIPTION

FEATURE CODES

SOFTWARE FEATURE CODES

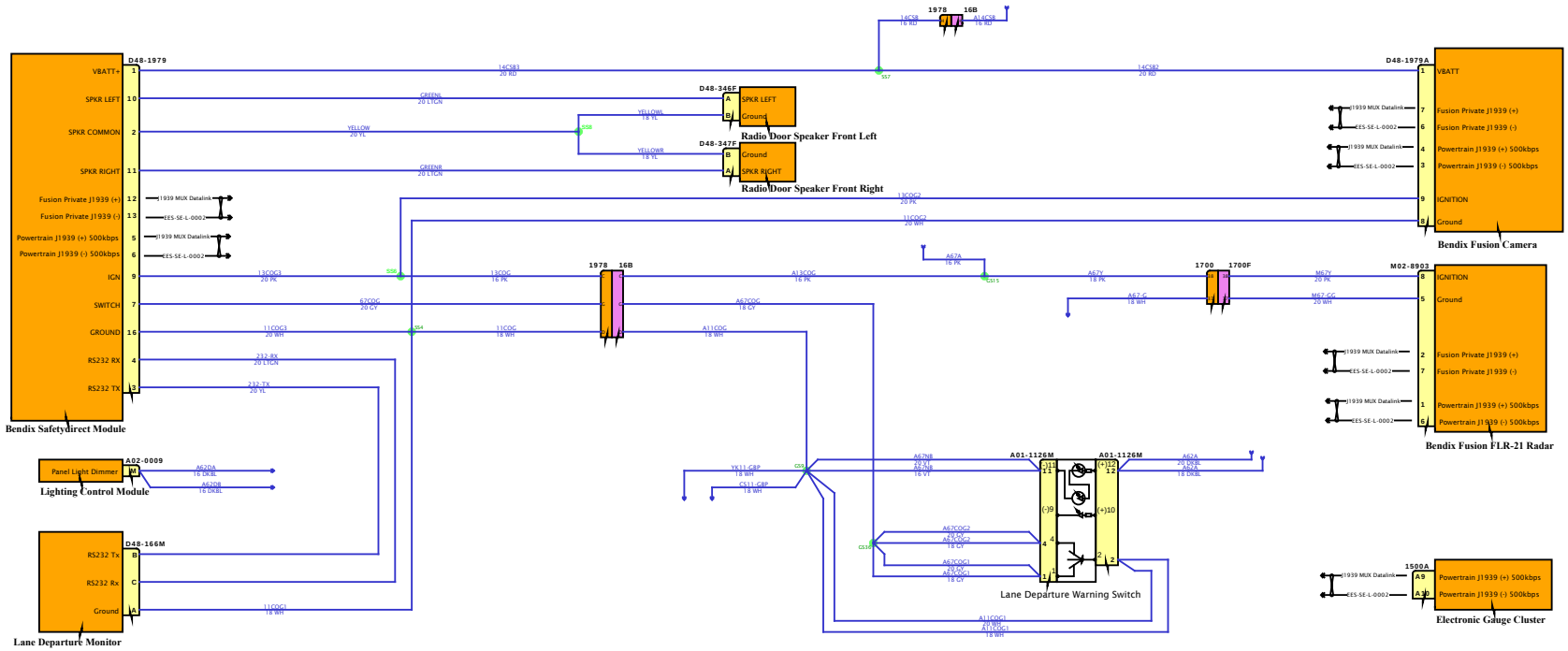

DESIGN DESCRIPTION

FEATURE CODES

SOFTWARE FEATURE CODES

Diagram1

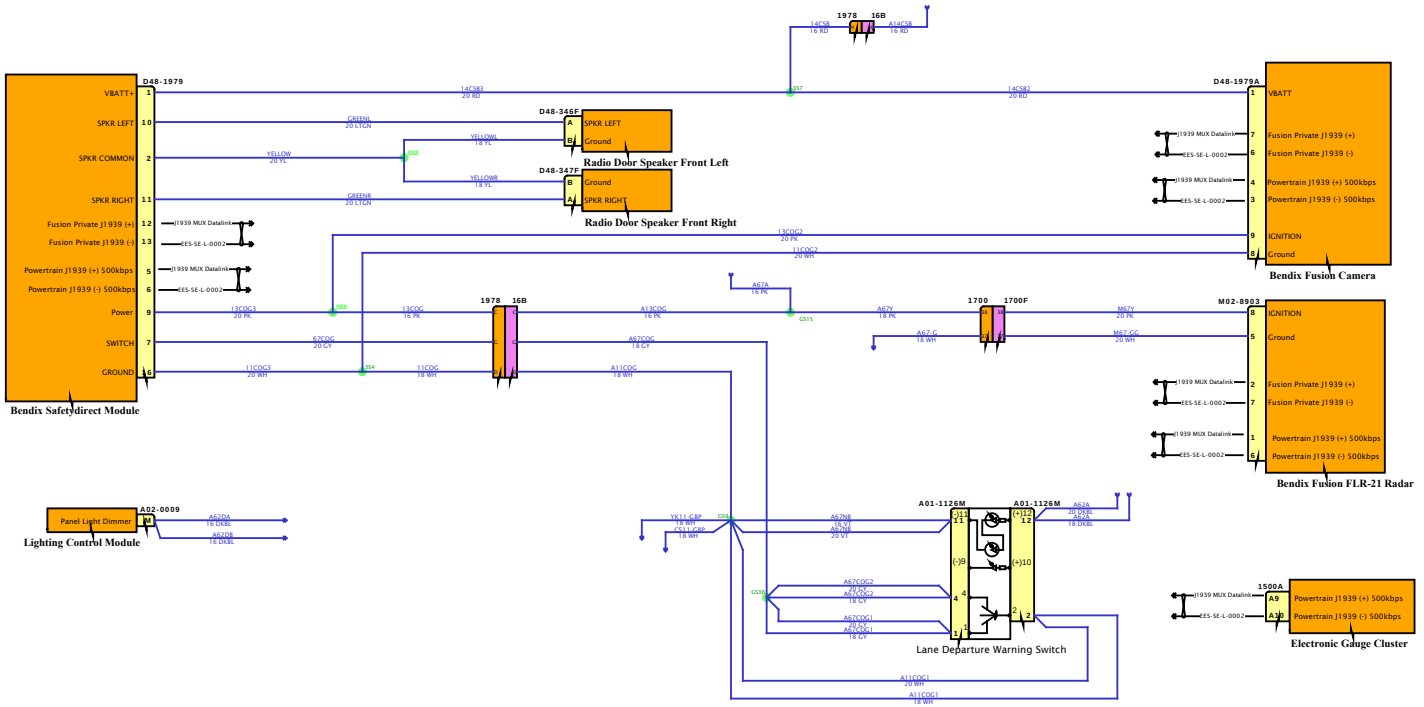

DESIGN DESCRIPTION

FEATURE CODES

SOFTWARE FEATURE CODES

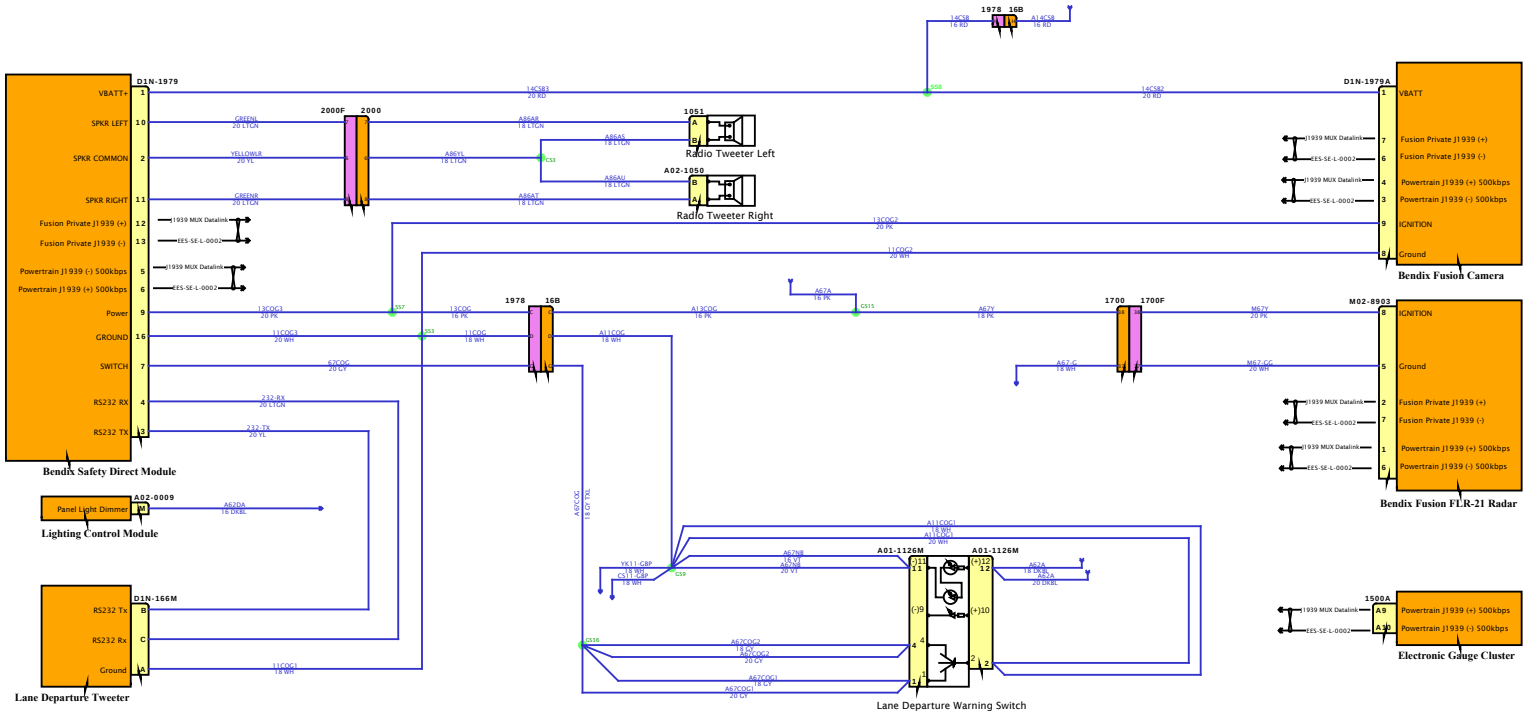
D1N-1979
VBATT+
SPKR LEFT
SPKR COMMON
SPKR RIGHT
Fusion Private J1939 (+)
Fusion Private J1939 (-)
Powertrain J1939 (-) 500kbps
Powertrain J1939 (+) 500kbps
Power
GROUND
SWITCH
RS232 RX
RS232 TX
Bendix Safety Direct Module
A02-0009
Panel Light Dimmer
Lighting Control Module
D1N-166M
RS232 Tx
RS232 Rx
Ground
Lane Departure Tweeter
2000F
2000
1051
Radio Tweeter Left
A02-1050
Radio Tweeter Right
1978
16B
1700
1700F
A01-1126M
Lane Departure Warning Switch
D1N-1979A
VBATT
IGNITION
Ground
Bendix Fusion Camera
M02-8903
Bendix Fusion FLR-21 Radar
1500A
Electronic Gauge Cluster

Diagram1

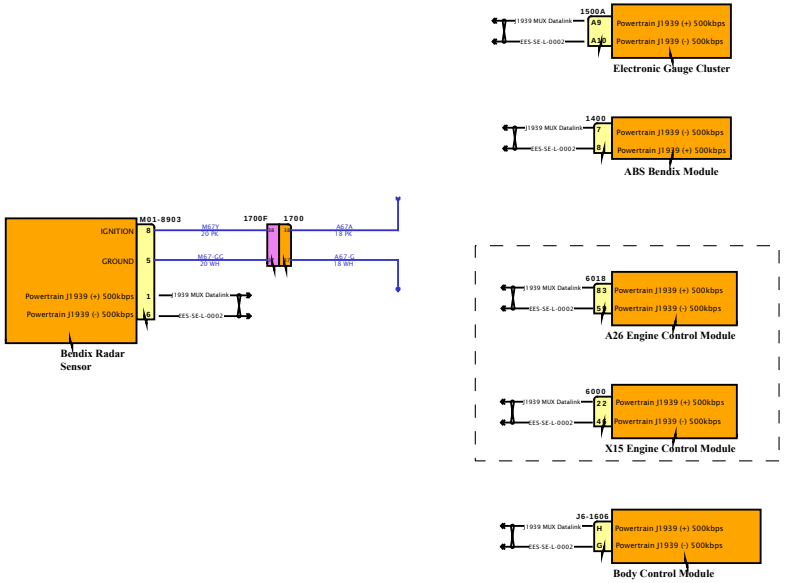

DESIGN DESCRIPTION

FEATURE CODES

SOFTWARE FEATURE CODES

NAVISTAR INC. CONFIDENTIAL PROPRIETARY

Diagram1

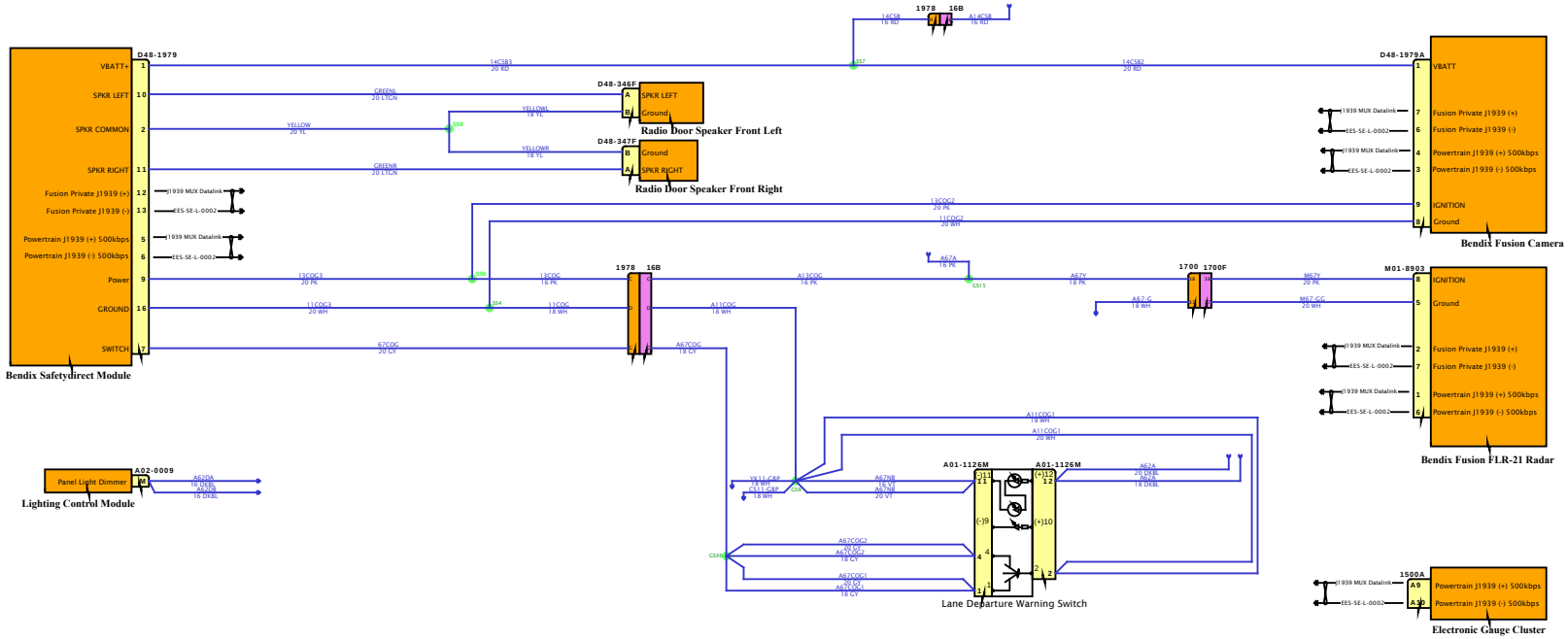

DESIGN DESCRIPTION

FEATURE CODES

SOFTWARE FEATURE CODES

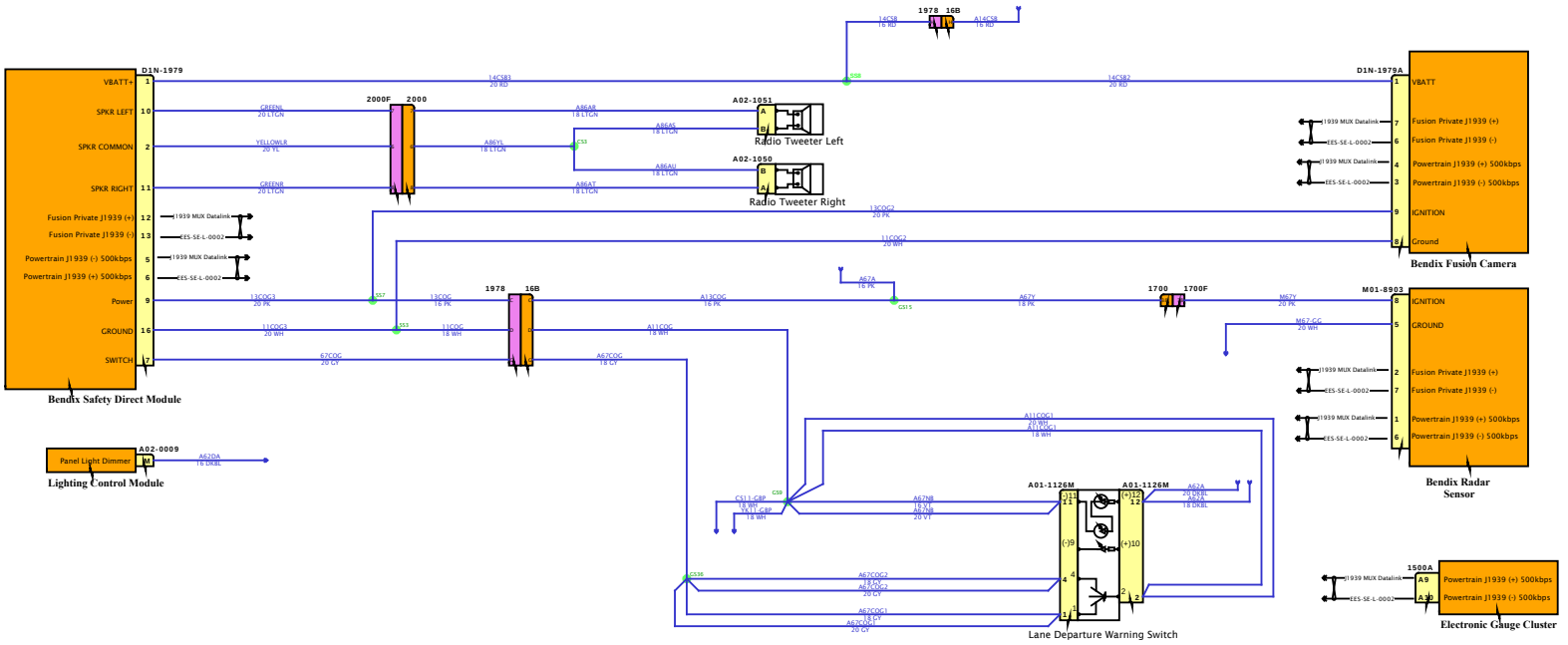

DESIGN DESCRIPTION

FEATURE CODES

SOFTWARE FEATURE CODES

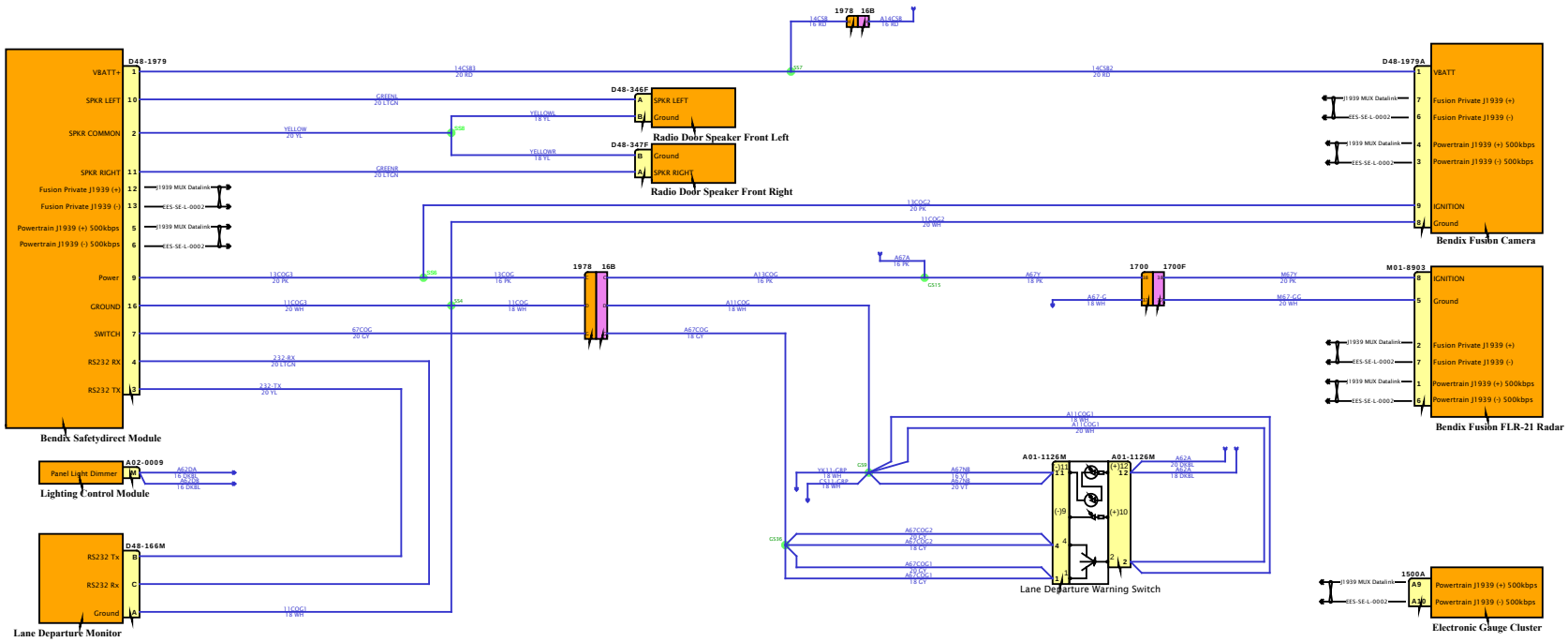

DESIGN DESCRIPTION

FEATURE CODES

SOFTWARE FEATURE CODES

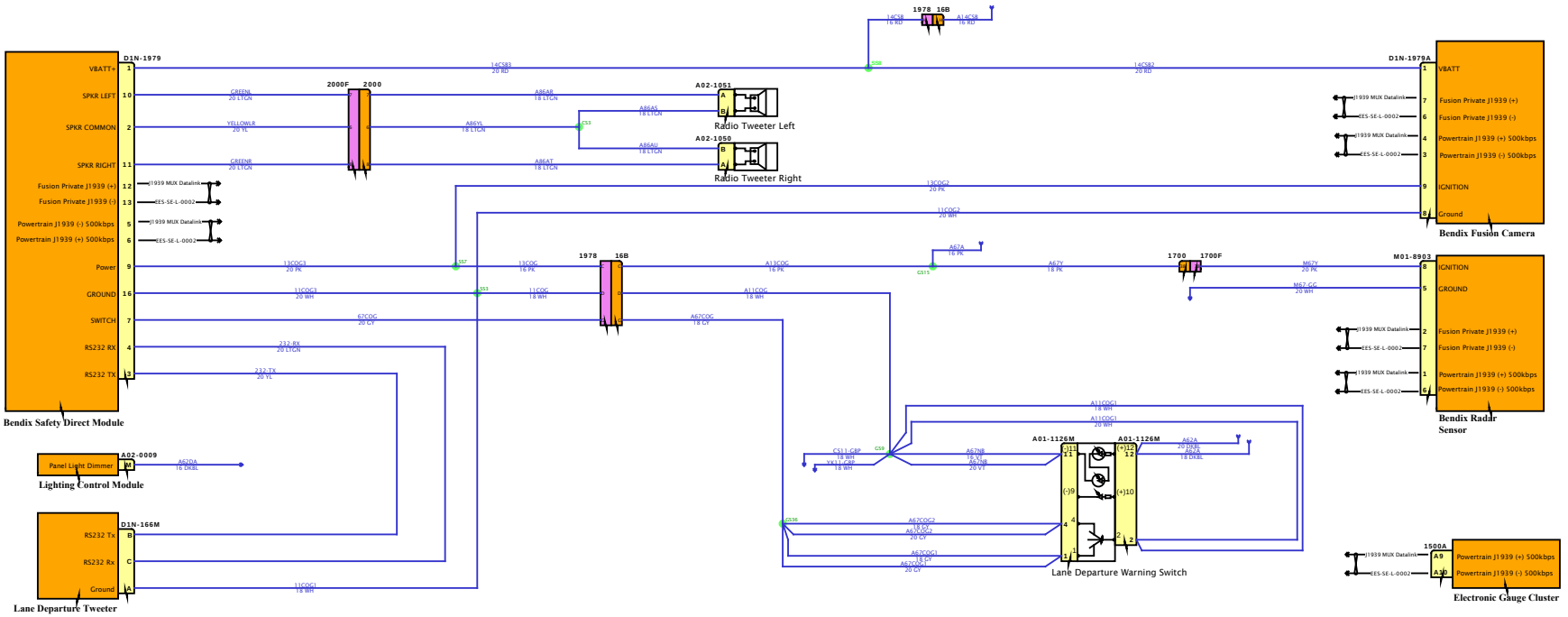

DESIGN DESCRIPTION

FEATURE CODES

SOFTWARE FEATURE CODES

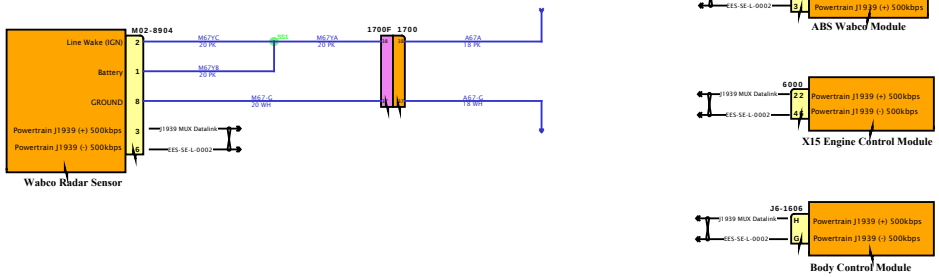

DESIGN DESCRIPTION

FEATURE CODES

SOFTWARE FEATURE CODES

NAVISTAR
NAVISTAR, INC. CONFIDENTIAL PROPRIETARY

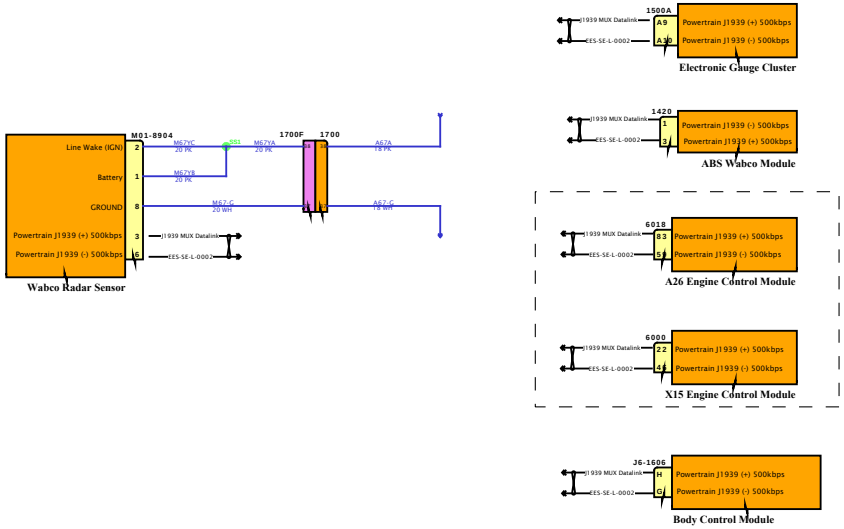

DESIGN DESCRIPTION

FEATURE CODES

SOFTWARE FEATURE CODES

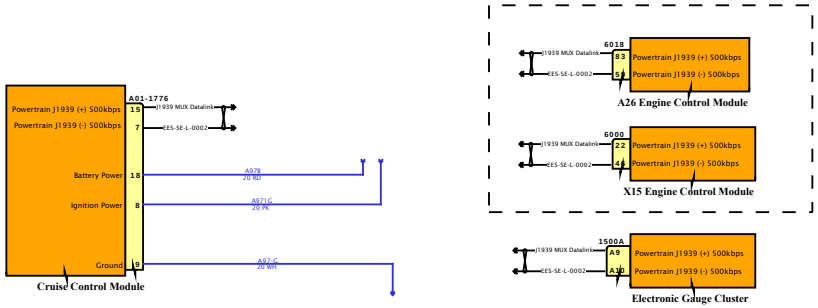

DESIGN DESCRIPTION

FEATURE CODES

SOFTWARE FEATURE CODES

NAVISTAR INC. CONFIDENTIAL PROPRIETARY

Diagram1

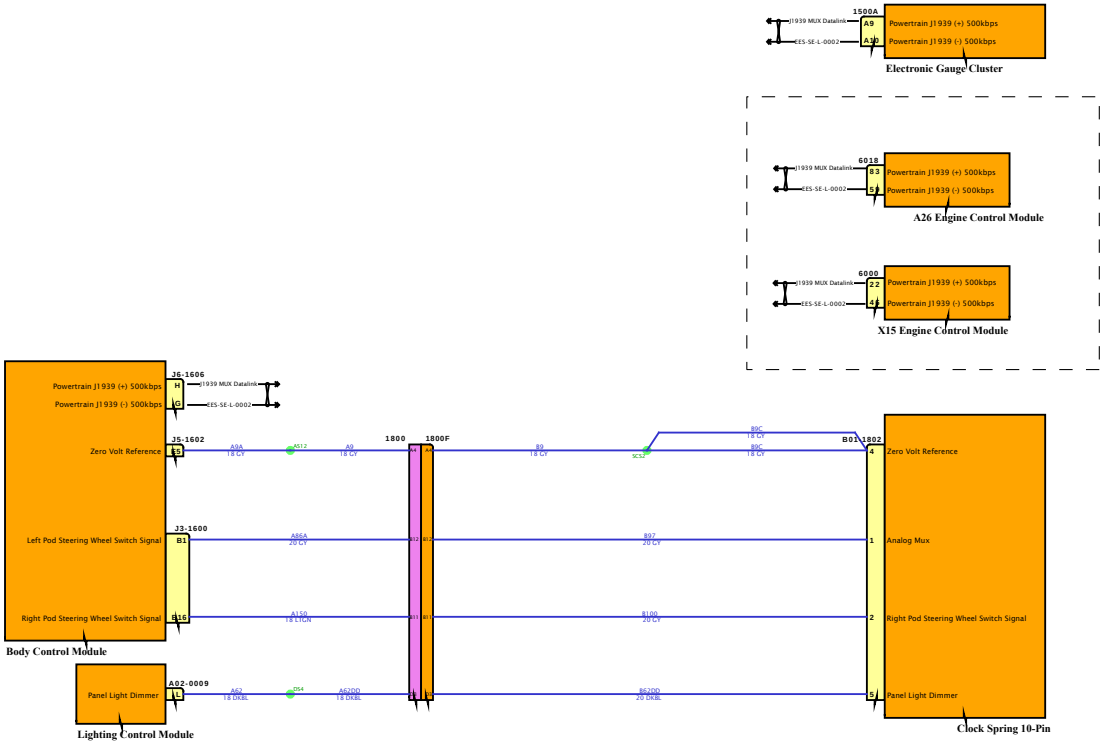

DESIGN DESCRIPTION

FEATURE CODES

SOFTWARE FEATURE CODES

NAVISTAR
NAVISTAR, INC. CONFIDENTIAL PROPRIETARY

Diagram1

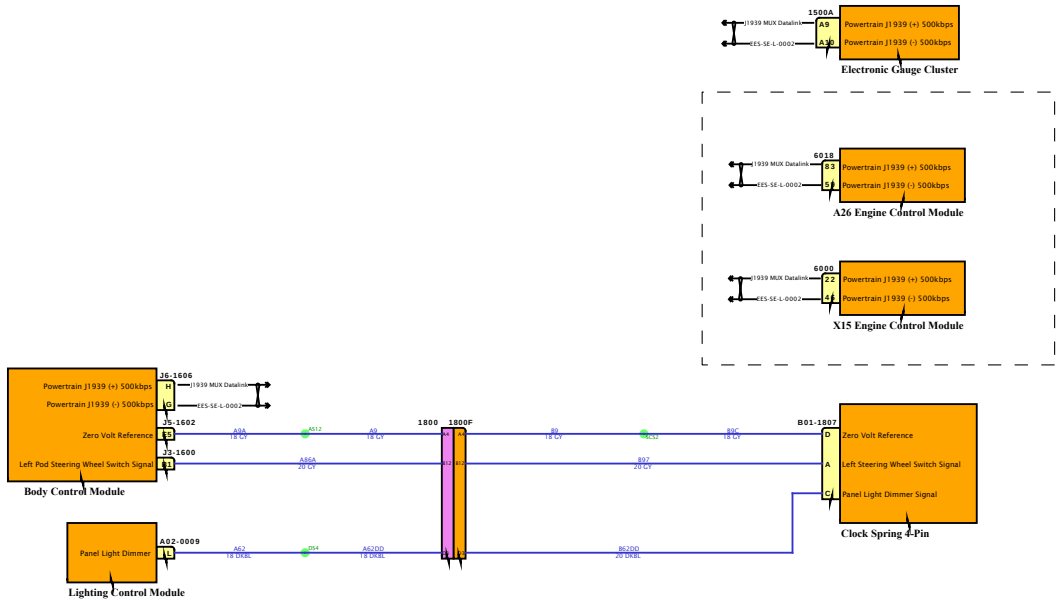

DESIGN DESCRIPTION

FEATURE CODES

SOFTWARE FEATURE CODES

NAVISTAR
NAVISTAR, INC. CONFIDENTIAL PROPRIETARY

Diagram1

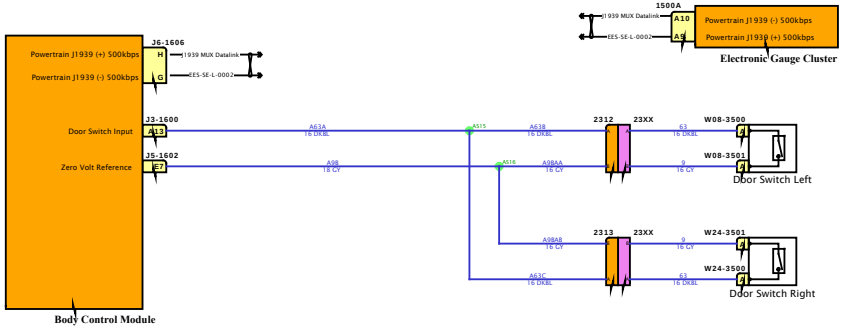

DESIGN DESCRIPTION

FEATURE CODES

SOFTWARE FEATURE CODES

NAVISTAR INC. CONFIDENTIAL PROPRIETARY

Diagram1

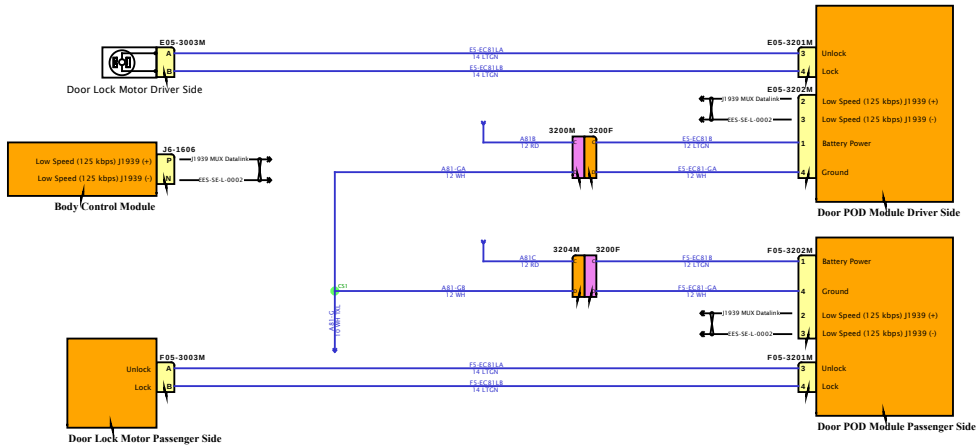

DESIGN DESCRIPTION

FEATURE CODES

SOFTWARE FEATURE CODES

NAVISTAR INC. CONFIDENTIAL PROPRIETARY

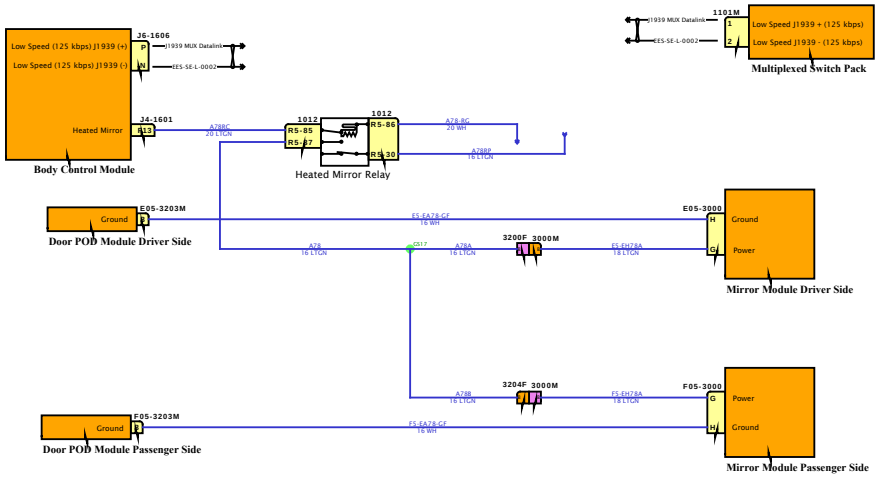

DESIGN DESCRIPTION

FEATURE CODES

SOFTWARE FEATURE CODES

NAVISTAR
NAVISTAR, INC. CONFIDENTIAL PROPRIETARY

Diagram1

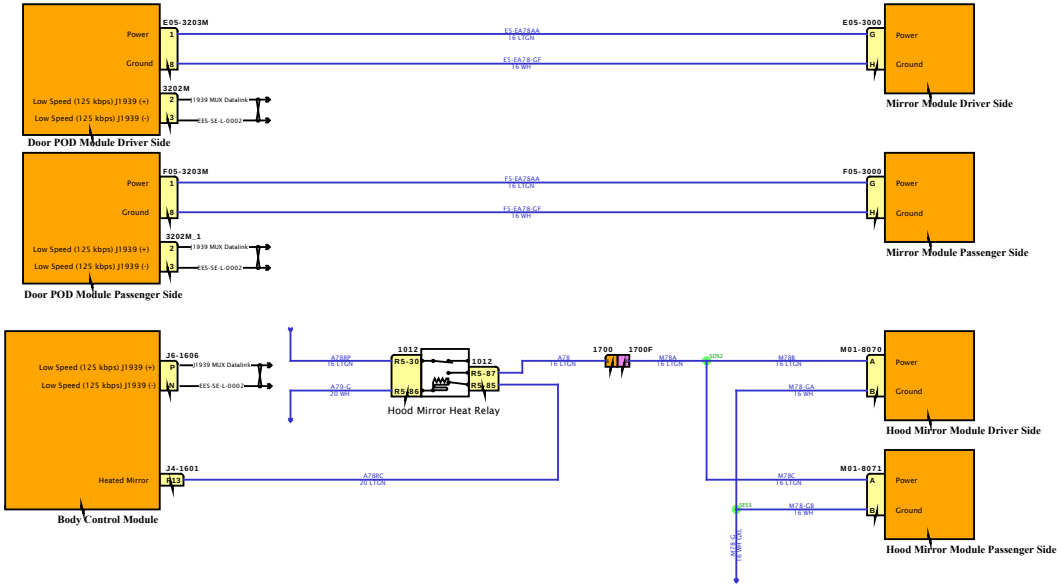

DESIGN DESCRIPTION

FEATURE CODES

SOFTWARE FEATURE CODES

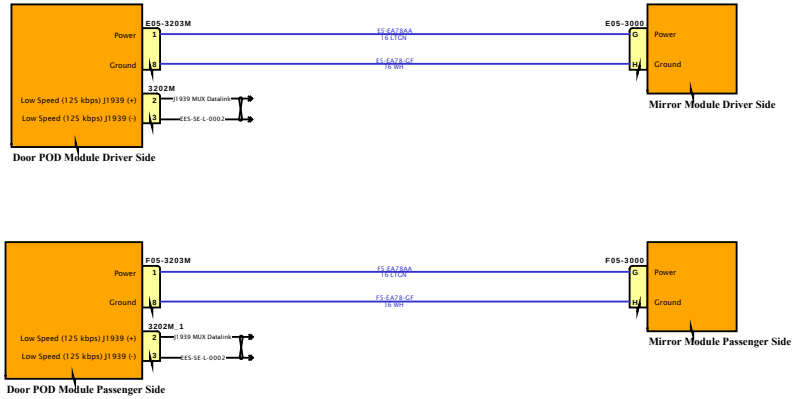

DESIGN DESCRIPTION

FEATURE CODES

SOFTWARE FEATURE CODES

NAVISTAR INC. CONFIDENTIAL PROPRIETARY

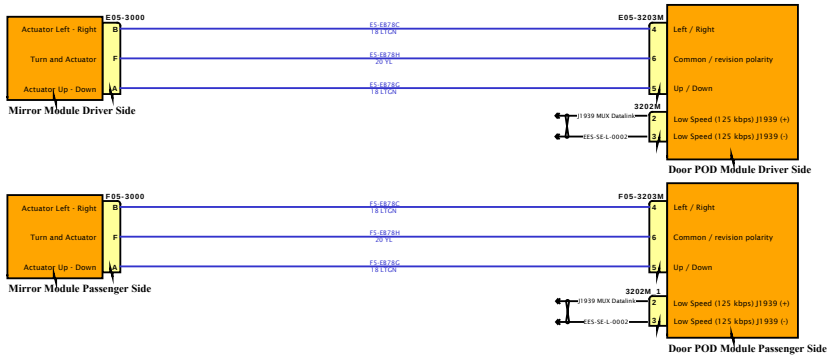

DESIGN DESCRIPTION

FEATURE CODES

SOFTWARE FEATURE CODES

NAVISTAR
NAVISTAR, INC. CONFIDENTIAL PROPRIETARY

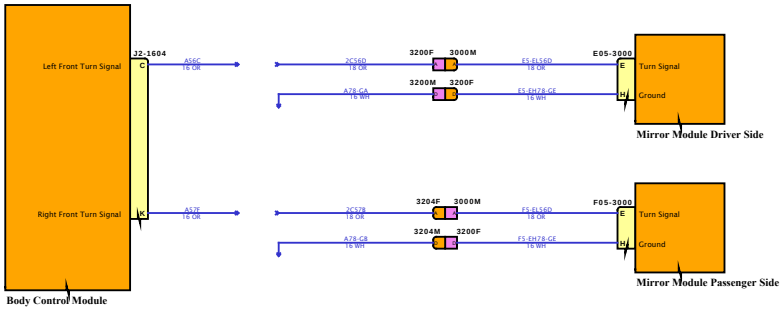

DESIGN DESCRIPTION

FEATURE CODES

SOFTWARE FEATURE CODES

NAVISTAR INC. CONFIDENTIAL PROPRIETARY

Diagram1

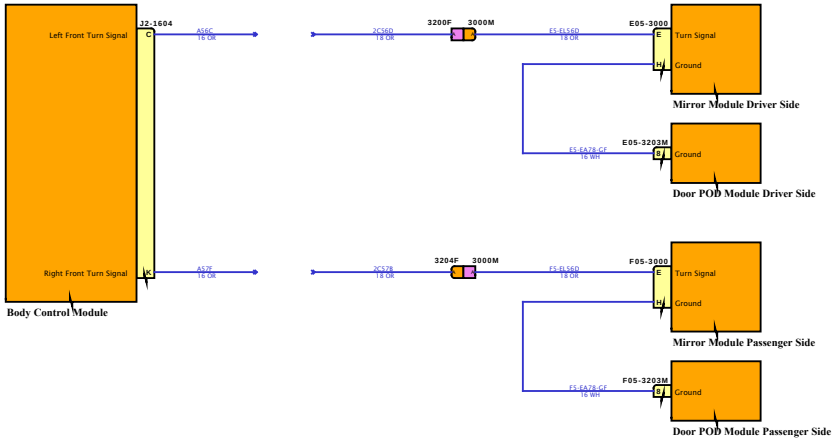

DESIGN DESCRIPTION

FEATURE CODES

SOFTWARE FEATURE CODES

NAVISTAR INC. CONFIDENTIAL PROPRIETARY

Diagram1

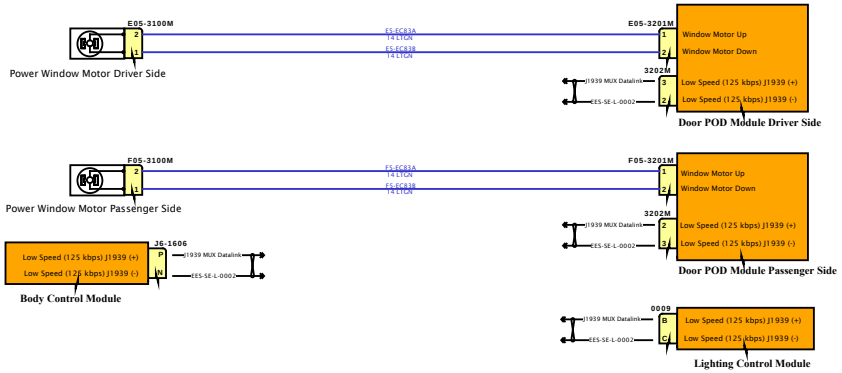

DESIGN DESCRIPTION

FEATURE CODES

SOFTWARE FEATURE CODES

NAVISTAR INC. CONFIDENTIAL PROPRIETARY

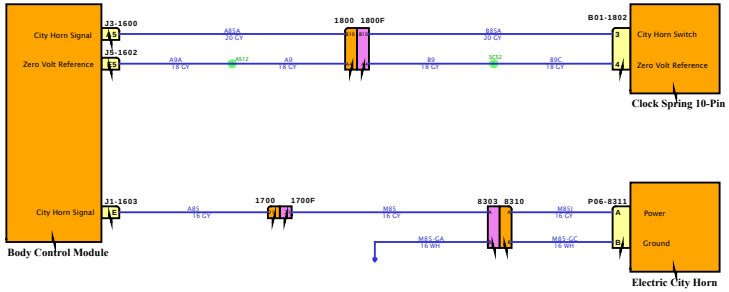

DESIGN DESCRIPTION

FEATURE CODES

SOFTWARE FEATURE CODES

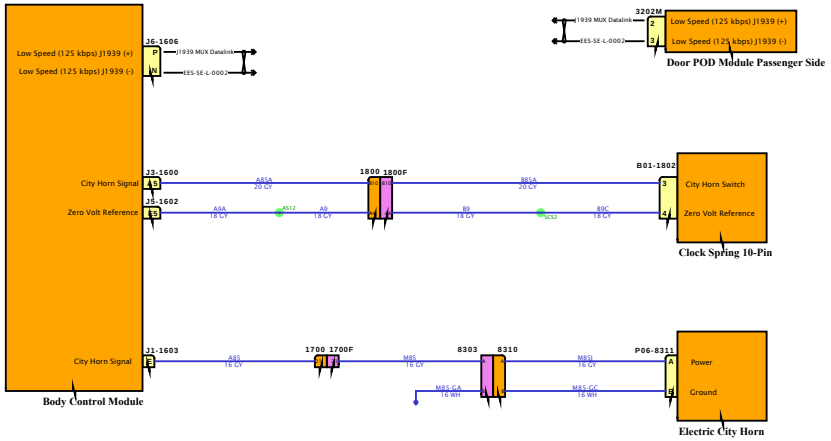

DESIGN DESCRIPTION

FEATURE CODES

SOFTWARE FEATURE CODES

NAVISTAR
NAVISTAR, INC. CONFIDENTIAL PROPRIETARY

DESIGN DESCRIPTION

FEATURE CODES

SOFTWARE FEATURE CODES

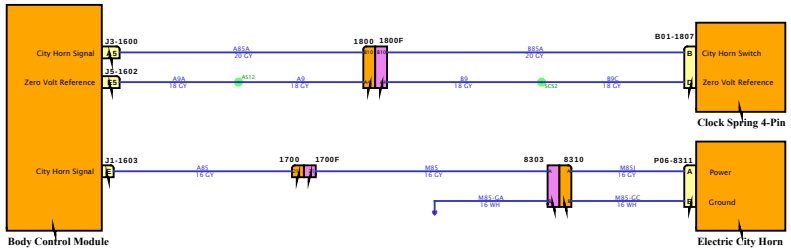

DESIGN DESCRIPTION

FEATURE CODES

SOFTWARE FEATURE CODES

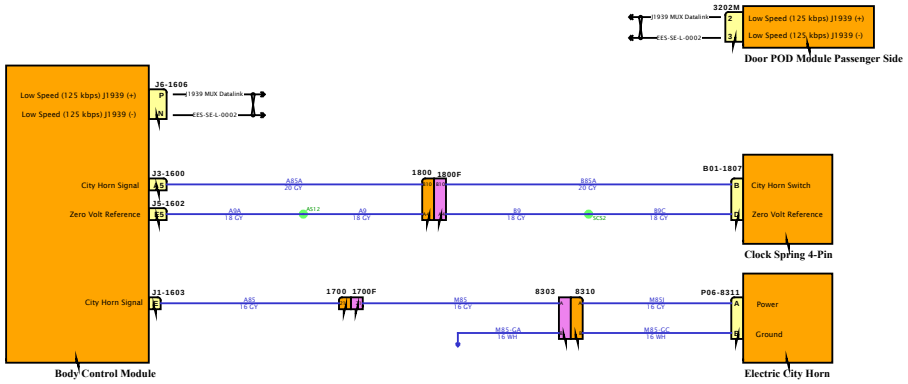

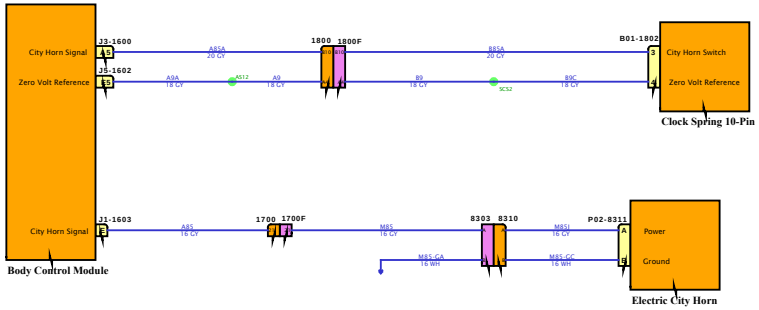

DESIGN DESCRIPTION

FEATURE CODES

SOFTWARE FEATURE CODES

NAVISTAR
NAVISTAR, INC. CONFIDENTIAL PROPRIETARY

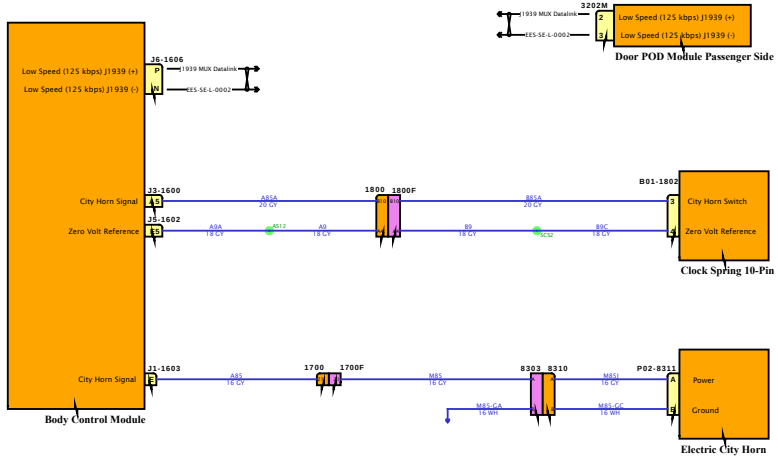

DESIGN DESCRIPTION

FEATURE CODES

SOFTWARE FEATURE CODES

NAVISTAR
NAVISTAR, INC. CONFIDENTIAL PROPRIETARY

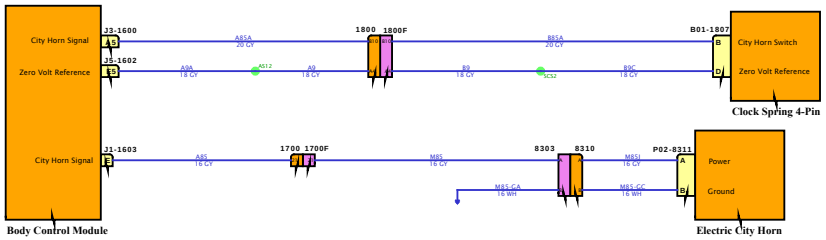

DESIGN DESCRIPTION

FEATURE CODES

SOFTWARE FEATURE CODES

NAVISTAR INC. CONFIDENTIAL PROPRIETARY

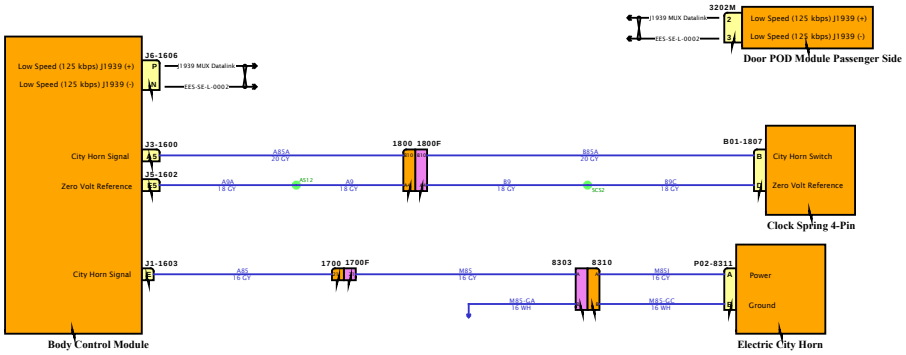

DESIGN DESCRIPTION

FEATURE CODES

SOFTWARE FEATURE CODES

NAVISTAR INC. CONFIDENTIAL PROPRIETARY

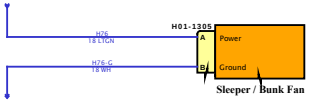

DESIGN DESCRIPTION

FEATURE CODES

SOFTWARE FEATURE CODES

NAVISTAR INC. CONFIDENTIAL PROPRIETARY

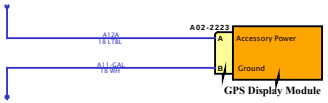

DESIGN DESCRIPTION

FEATURE CODES

SOFTWARE FEATURE CODES

NAVISTAR INC. CONFIDENTIAL PROPRIETARY

DESIGN DESCRIPTION

FEATURE CODES

SOFTWARE FEATURE CODES

* NOTE - The device depicted below is a multiplexed switch pack that includes a pigtail harness that is utilized for "daisy-chaining" with other multiplexed switch packs or to connect back to the Instrument Panel harness for continuation of the Low Speed (125kbps) J1939 backbone. The below diagram only shows the battery and ground feeds since only those are required to correctly drive the wiring needed in the harnesses.

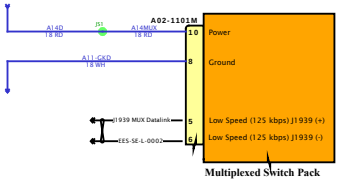

Multiplexed Switch Pack

NAVISTAR INC. CONFIDENTIAL PROPRIETARY

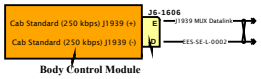

DESIGN DESCRIPTION

FEATURE CODES

SOFTWARE FEATURE CODES

NAVISTAR INC. CONFIDENTIAL PROPRIETARY

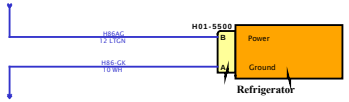

DESIGN DESCRIPTION

FEATURE CODES

SOFTWARE FEATURE CODES

NAVISTAR INC. CONFIDENTIAL PROPRIETARY

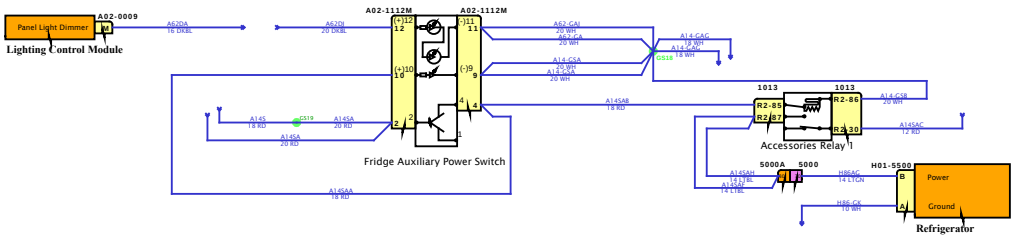

DESIGN DESCRIPTION

FEATURE CODES

SOFTWARE FEATURE CODES

NAVISTAR
NAVISTAR, INC. CONFIDENTIAL PROPRIETARY

Diagram1

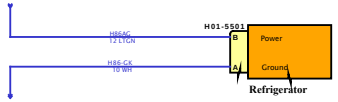

DESIGN DESCRIPTION

FEATURE CODES

SOFTWARE FEATURE CODES

NAVISTAR INC. CONFIDENTIAL PROPRIETARY

Diagram1

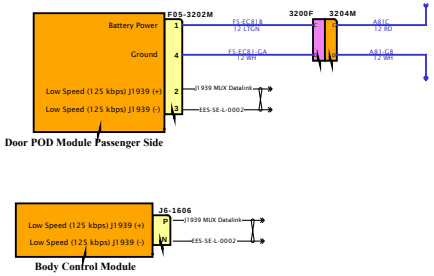

DESIGN DESCRIPTION

FEATURE CODES

SOFTWARE FEATURE CODES

NAVISTAR INC. CONFIDENTIAL PROPRIETARY

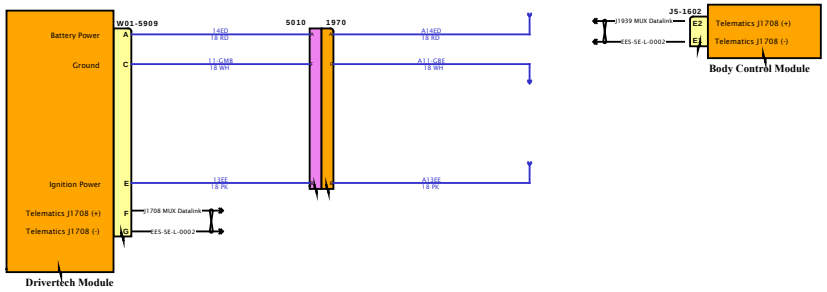

DESIGN DESCRIPTION

FEATURE CODES

SOFTWARE FEATURE CODES

NAVISTAR INC. CONFIDENTIAL PROPRIETARY

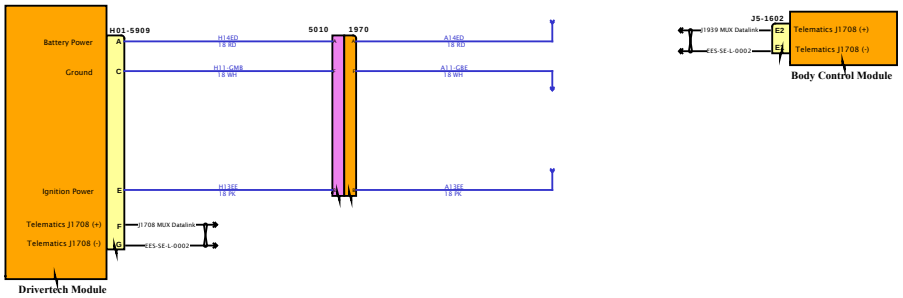

DESIGN DESCRIPTION

FEATURE CODES

SOFTWARE FEATURE CODES

NAVISTAR INC. CONFIDENTIAL PROPRIETARY

Diagram1

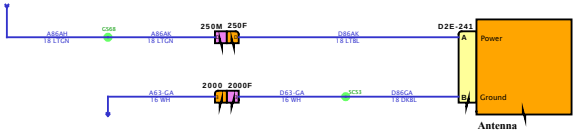

DESIGN DESCRIPTION

FEATURE CODES

SOFTWARE FEATURE CODES

NAVISTAR

NAVISTAR, INC. CONFIDENTIAL PROPRIETARY

Diagram1

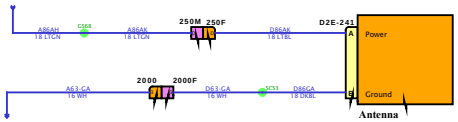

DESIGN DESCRIPTION

FEATURE CODES

SOFTWARE FEATURE CODES

NAVISTAR INC. CONFIDENTIAL PROPRIETARY

Diagram1

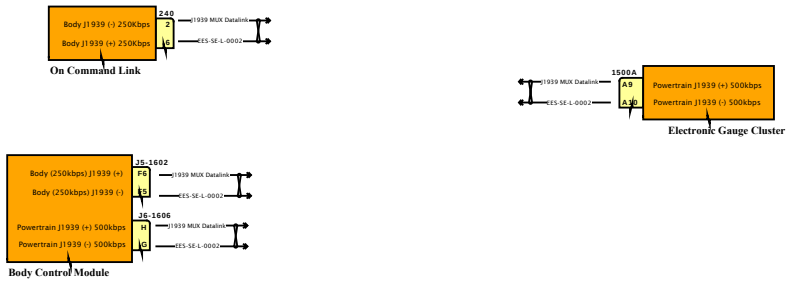

DESIGN DESCRIPTION

FEATURE CODES

SOFTWARE FEATURE CODES

NAVISTAR INC. CONFIDENTIAL PROPRIETARY

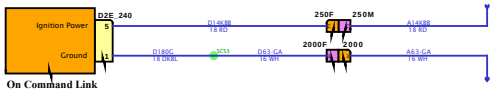

DESIGN DESCRIPTION

FEATURE CODES

SOFTWARE FEATURE CODES

NAVISTAR INC. CONFIDENTIAL PROPRIETARY

DESIGN DESCRIPTION

FEATURE CODES

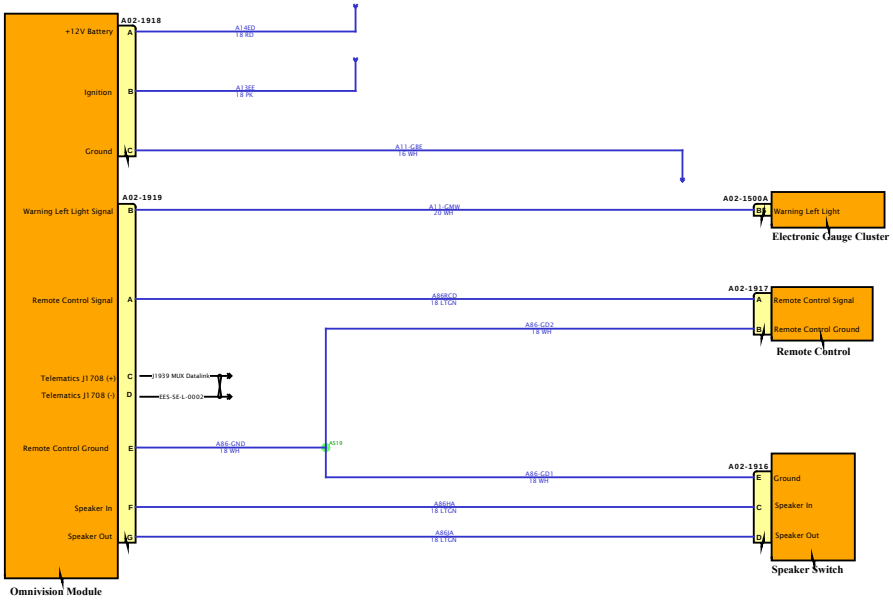

SOFTWARE FEATURE CODES

NAVISTAR

NAVISTAR, INC. CONFIDENTIAL PROPRIETARY

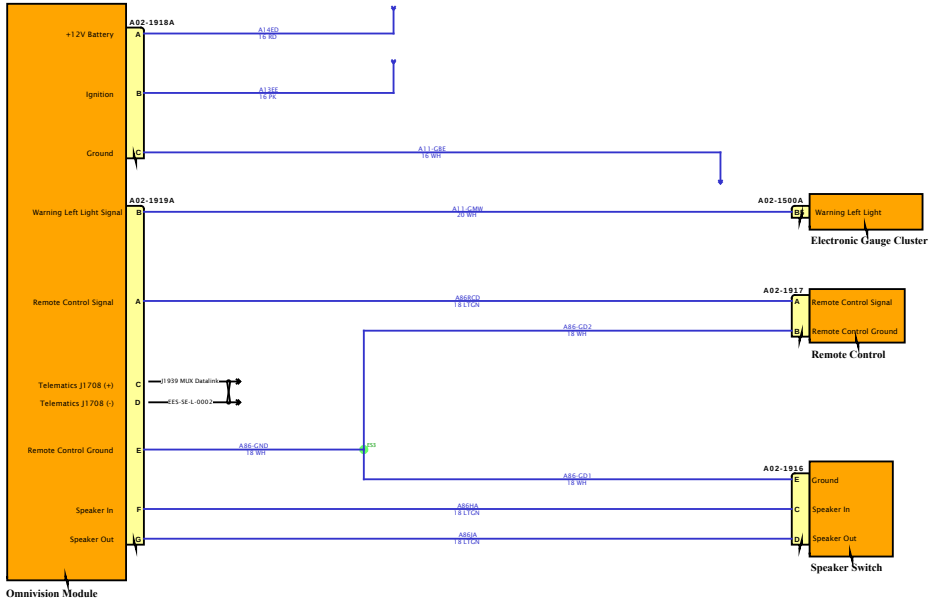

DESIGN DESCRIPTION

FEATURE CODES

SOFTWARE FEATURE CODES

NAVISTAR
NAVISTAR, INC. CONFIDENTIAL PROPRIETARY

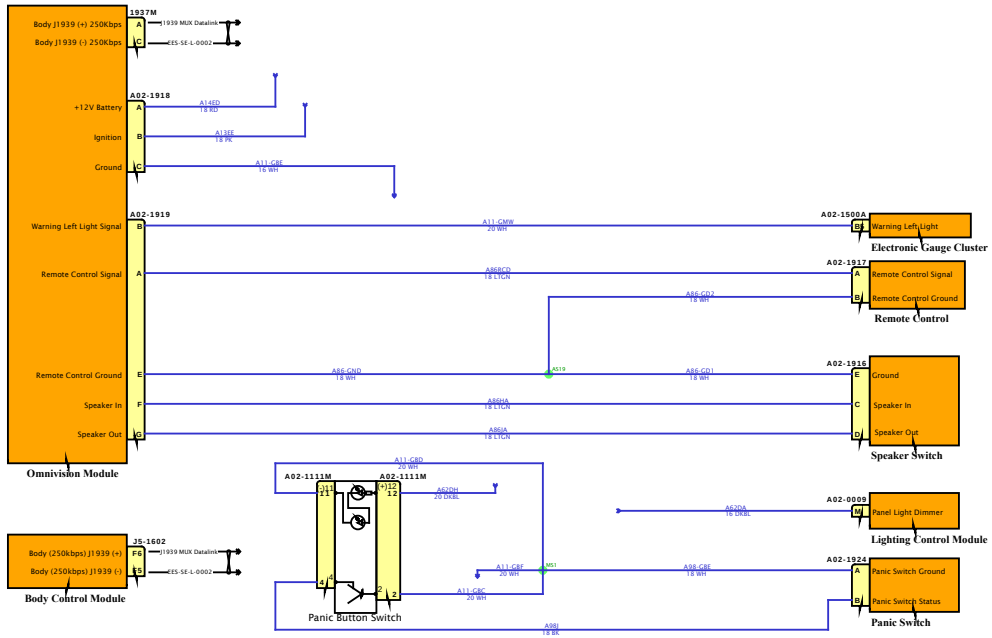

DESIGN DESCRIPTION

FEATURE CODES

SOFTWARE FEATURE CODES

NAVISTAR
NAVISTAR, INC. CONFIDENTIAL PROPRIETARY

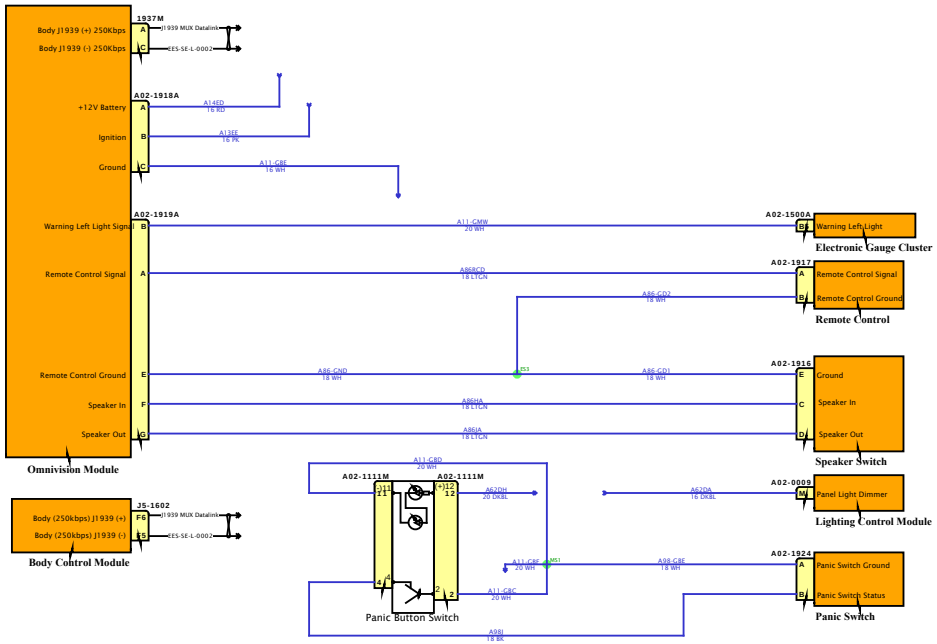

DESIGN DESCRIPTION

FEATURE CODES

SOFTWARE FEATURE CODES

Diagram1

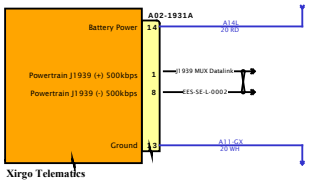

DESIGN DESCRIPTION

FEATURE CODES

SOFTWARE FEATURE CODES

NAVISTAR INC. CONFIDENTIAL PROPRIETARY

Diagram1

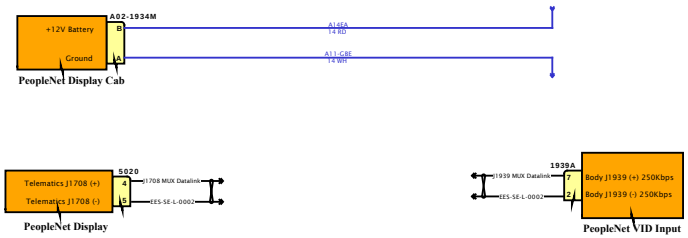

DESIGN DESCRIPTION

FEATURE CODES

SOFTWARE FEATURE CODES

NAVISTAR INC. CONFIDENTIAL PROPRIETARY

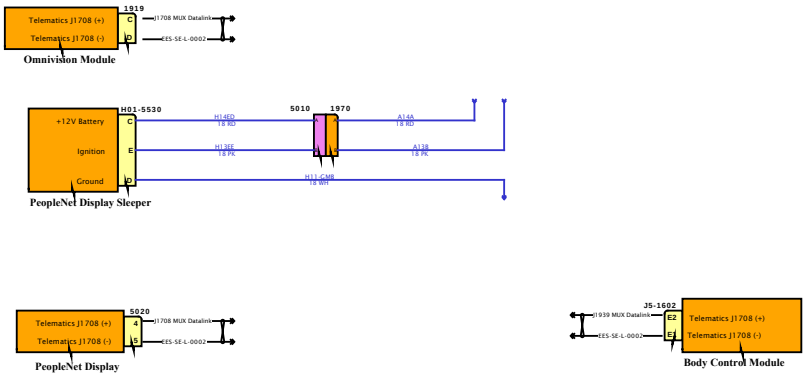

DESIGN DESCRIPTION

FEATURE CODES

SOFTWARE FEATURE CODES

NAVISTAR INC. CONFIDENTIAL PROPRIETARY

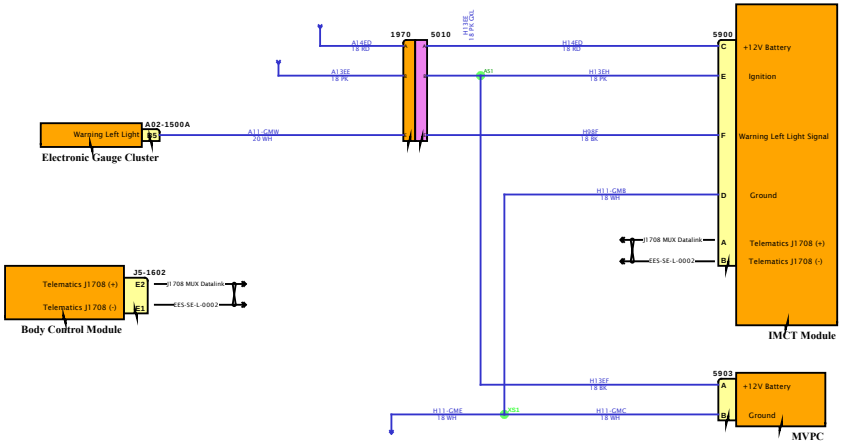

DESIGN DESCRIPTION

FEATURE CODES

SOFTWARE FEATURE CODES

NAVISTAR
NAVISTAR, INC. CONFIDENTIAL PROPRIETARY

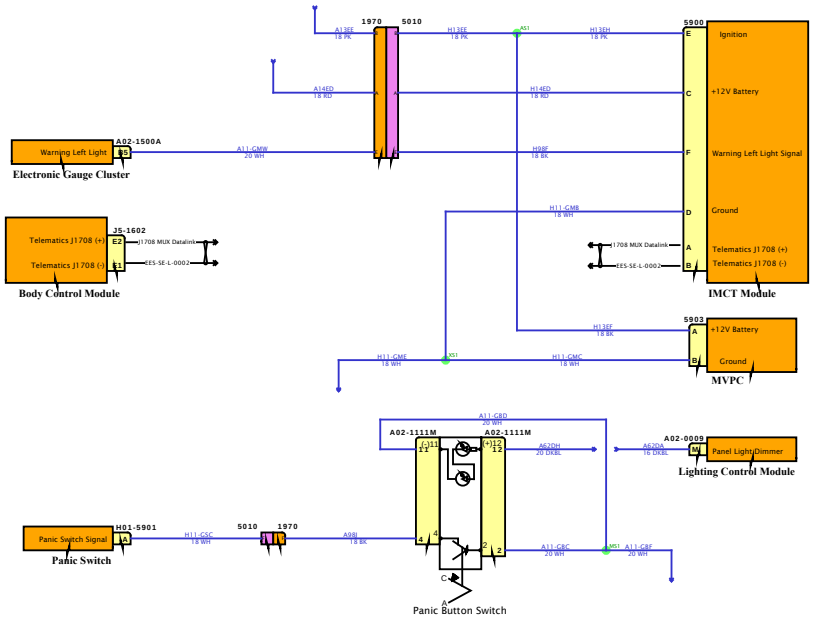

DESIGN DESCRIPTION

FEATURE CODES

SOFTWARE FEATURE CODES

Diagram1

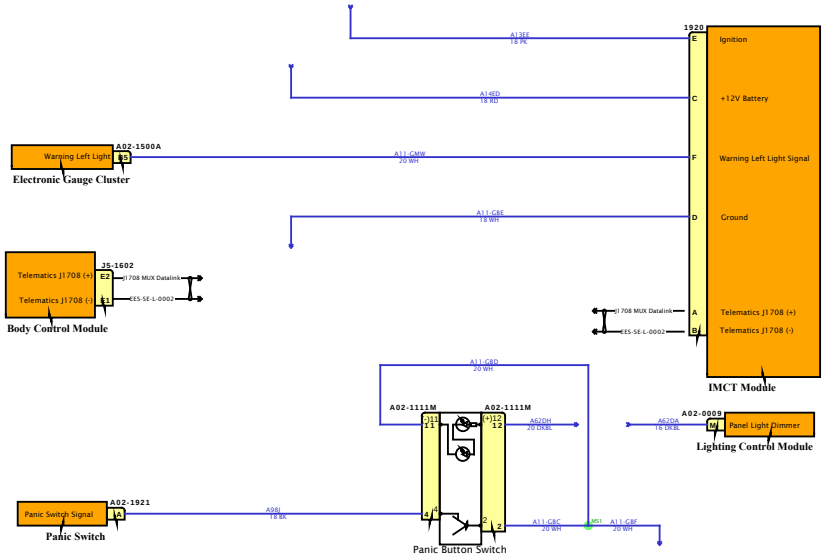

DESIGN DESCRIPTION

FEATURE CODES

SOFTWARE FEATURE CODES

NAVISTAR
NAVISTAR, INC. CONFIDENTIAL PROPRIETARY

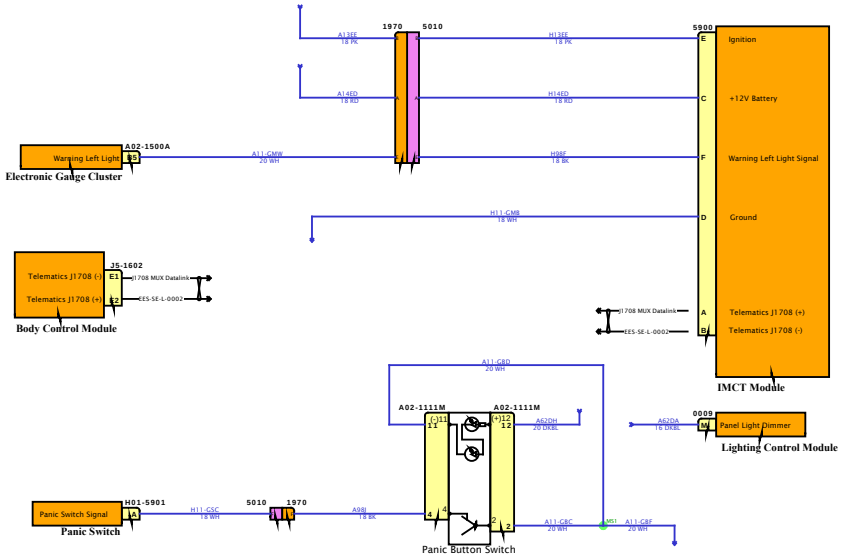

DESIGN DESCRIPTION

FEATURE CODES

SOFTWARE FEATURE CODES

NAVISTAR
NAVISTAR, INC. CONFIDENTIAL PROPRIETARY

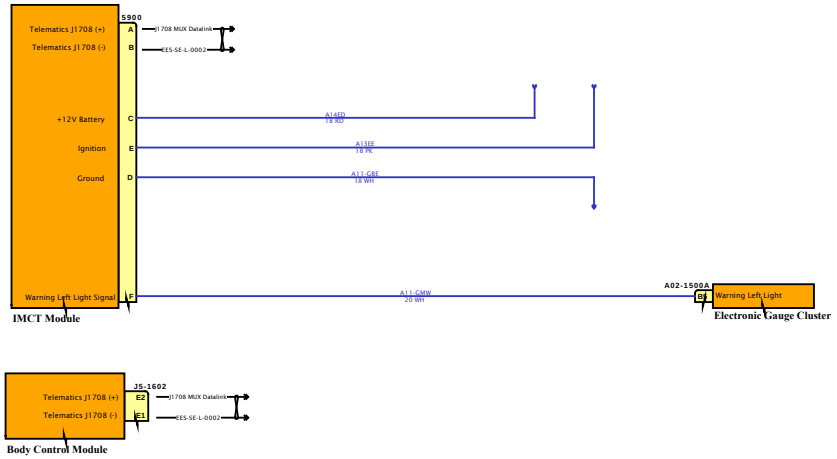

DESIGN DESCRIPTION

FEATURE CODES

SOFTWARE FEATURE CODES

NAVISTAR
NAVISTAR, INC. CONFIDENTIAL PROPRIETARY

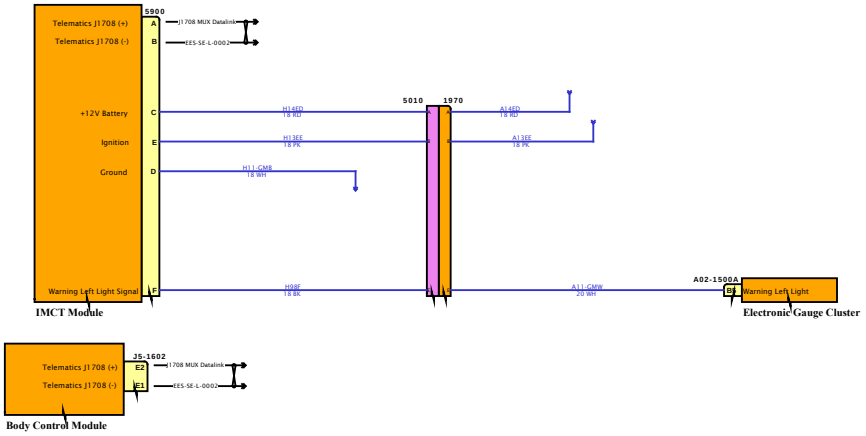

DESIGN DESCRIPTION

FEATURE CODES

SOFTWARE FEATURE CODES

NAVISTAR INC. CONFIDENTIAL PROPRIETARY

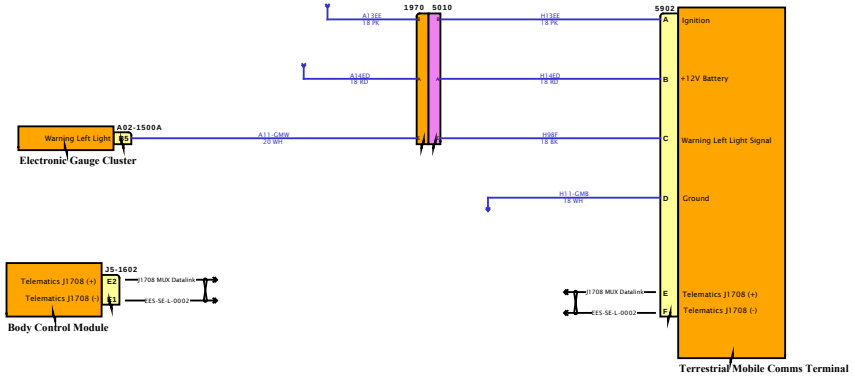

DESIGN DESCRIPTION

FEATURE CODES

SOFTWARE FEATURE CODES

NAVISTAR INC. CONFIDENTIAL PROPRIETARY

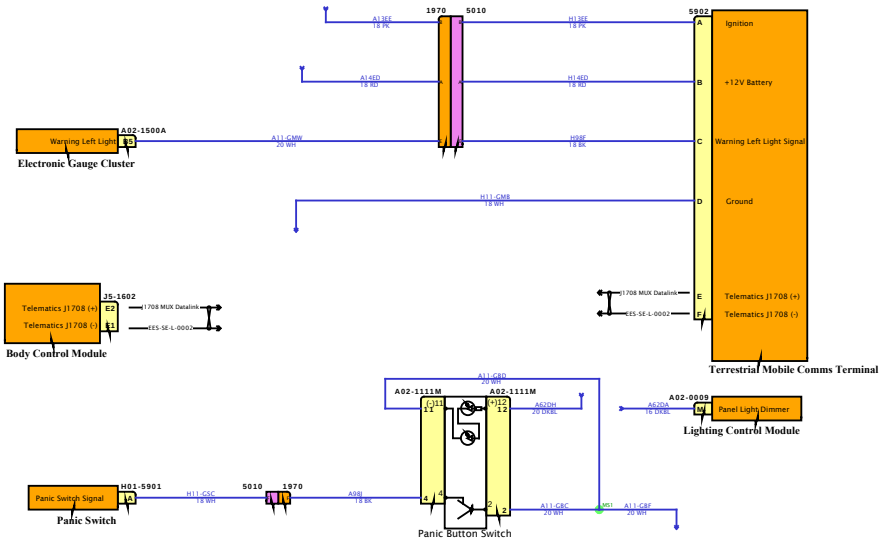

DESIGN DESCRIPTION

FEATURE CODES

SOFTWARE FEATURE CODES

NAVISTAR
NAVISTAR, INC. CONFIDENTIAL PROPRIETARY

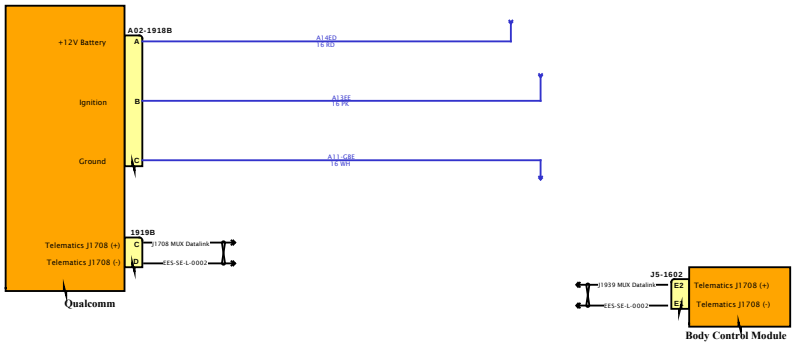

DESIGN DESCRIPTION

FEATURE CODES

SOFTWARE FEATURE CODES

NAVISTAR INC. CONFIDENTIAL PROPRIETARY

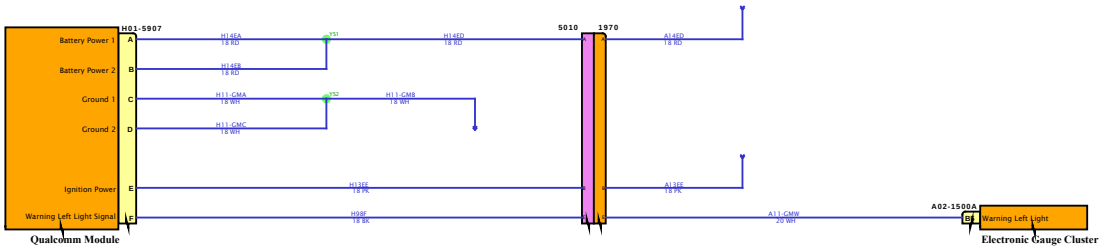

DESIGN DESCRIPTION

FEATURE CODES

SOFTWARE FEATURE CODES

NAVISTAR INC. CONFIDENTIAL PROPRIETARY

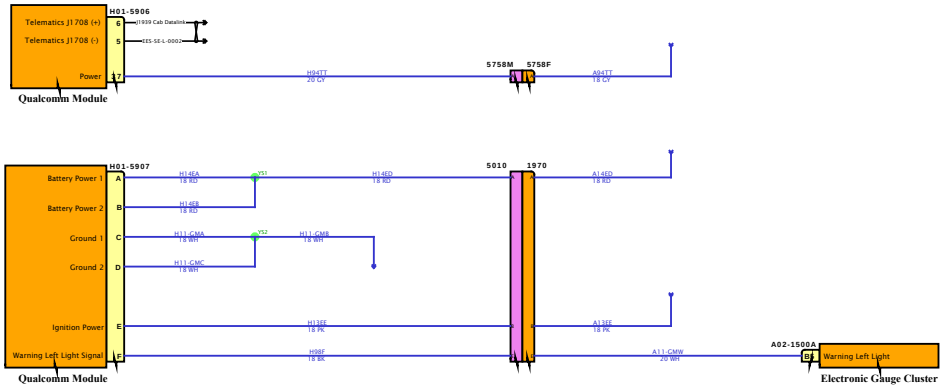

DESIGN DESCRIPTION

FEATURE CODES

SOFTWARE FEATURE CODES

NAVISTAR INC. CONFIDENTIAL PROPRIETARY

Diagram1

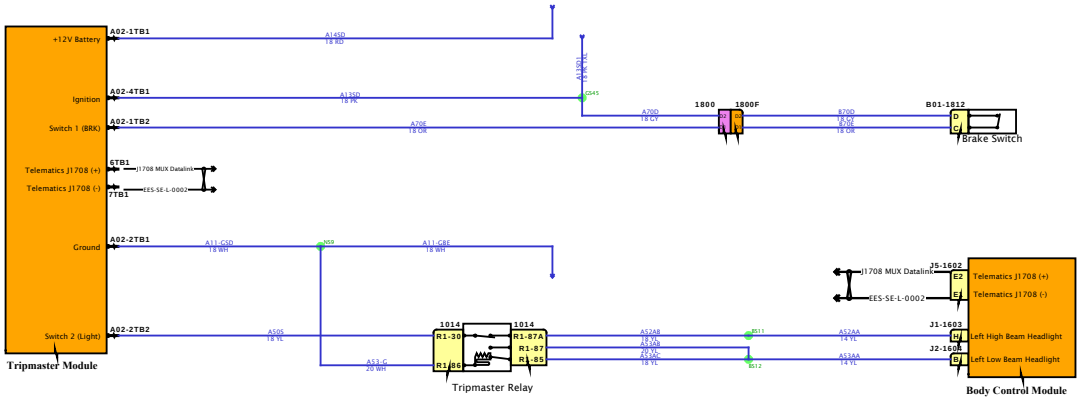

DESIGN DESCRIPTION

FEATURE CODES

SOFTWARE FEATURE CODES

NAVISTAR
NAVISTAR, INC. CONFIDENTIAL PROPRIETARY

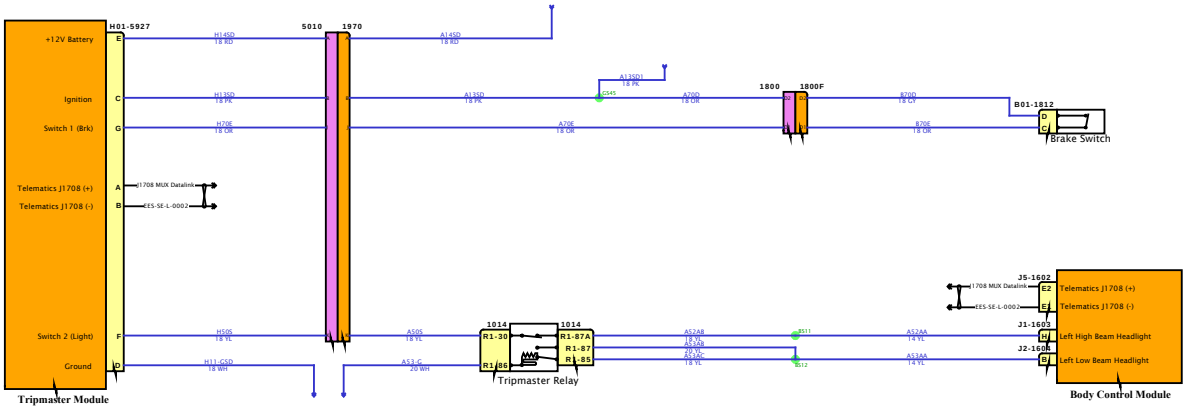

DESIGN DESCRIPTION

FEATURE CODES

SOFTWARE FEATURE CODES

Diagram1

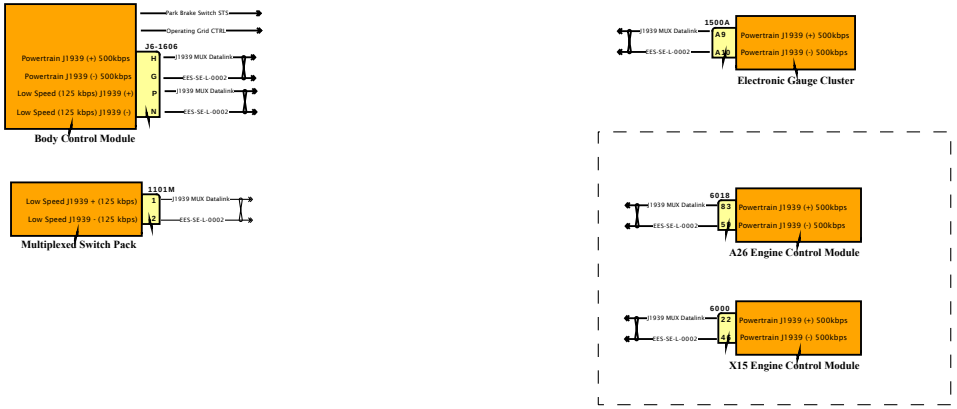

DESIGN DESCRIPTION

FEATURE CODES

SOFTWARE FEATURE CODES

NAVISTAR INC. CONFIDENTIAL PROPRIETARY

Diagram1

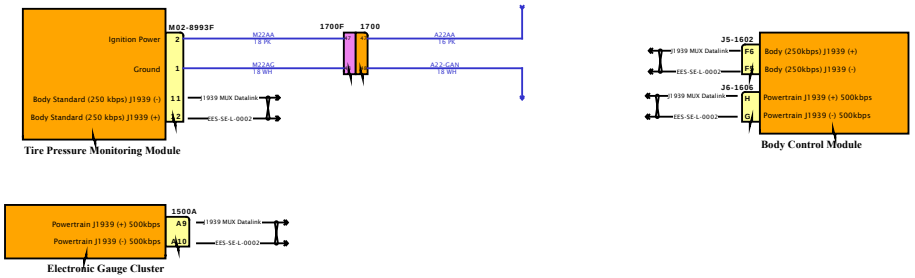

DESIGN DESCRIPTION

FEATURE CODES

SOFTWARE FEATURE CODES

NAVISTAR INC. CONFIDENTIAL PROPRIETARY

Diagram1

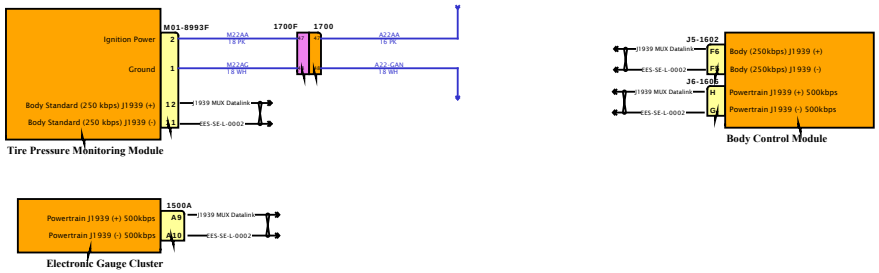

DESIGN DESCRIPTION

FEATURE CODES

SOFTWARE FEATURE CODES

NAVISTAR INC. CONFIDENTIAL PROPRIETARY

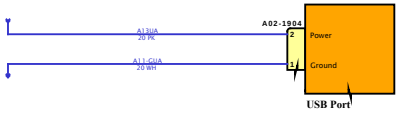

DESIGN DESCRIPTION

FEATURE CODES

SOFTWARE FEATURE CODES

NAVISTAR INC. CONFIDENTIAL PROPRIETARY

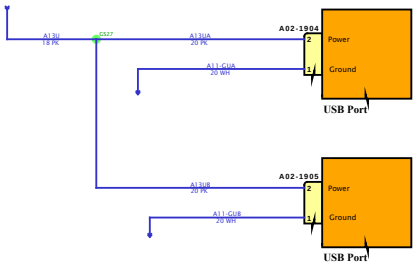

DESIGN DESCRIPTION

FEATURE CODES

SOFTWARE FEATURE CODES

NAVISTAR

NAVISTAR, INC. CONFIDENTIAL PROPRIETARY

Diagram2

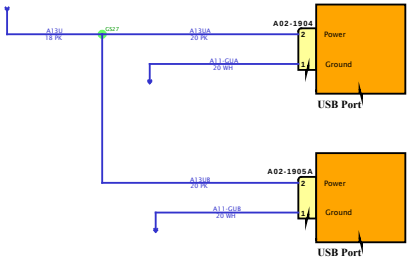

DESIGN DESCRIPTION

FEATURE CODES

SOFTWARE FEATURE CODES

NAVISTAR INC. CONFIDENTIAL PROPRIETARY

Diagram1

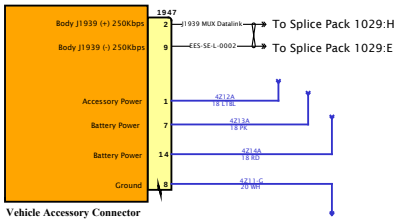

DESIGN DESCRIPTION

FEATURE CODES

SOFTWARE FEATURE CODES

NAVISTAR INC. CONFIDENTIAL PROPRIETARY

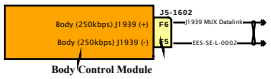

DESIGN DESCRIPTION

FEATURE CODES

SOFTWARE FEATURE CODES

NAVISTAR INC. CONFIDENTIAL PROPRIETARY

Diagram1

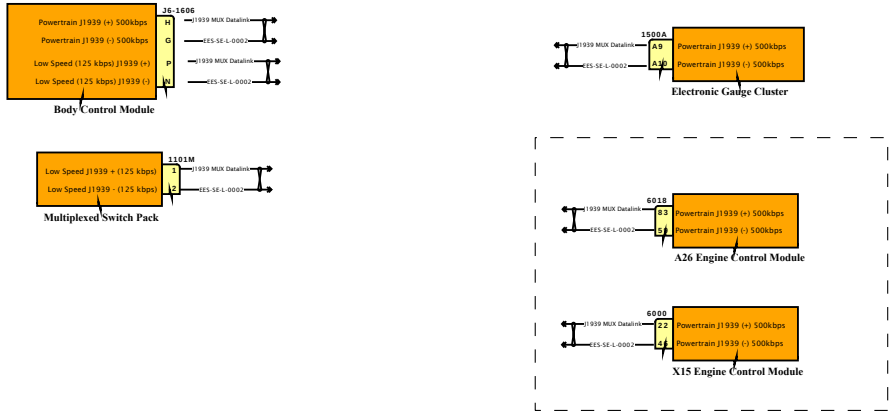

DESIGN DESCRIPTION

FEATURE CODES

SOFTWARE FEATURE CODES

NAVISTAR INC. CONFIDENTIAL PROPRIETARY

Diagram1

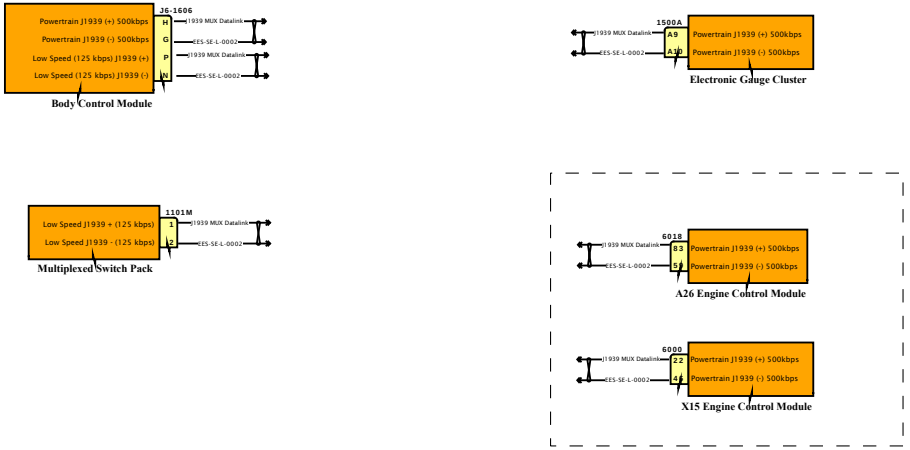

DESIGN DESCRIPTION

FEATURE CODES

SOFTWARE FEATURE CODES

NAVISTAR INC. CONFIDENTIAL PROPRIETARY

Diagram1

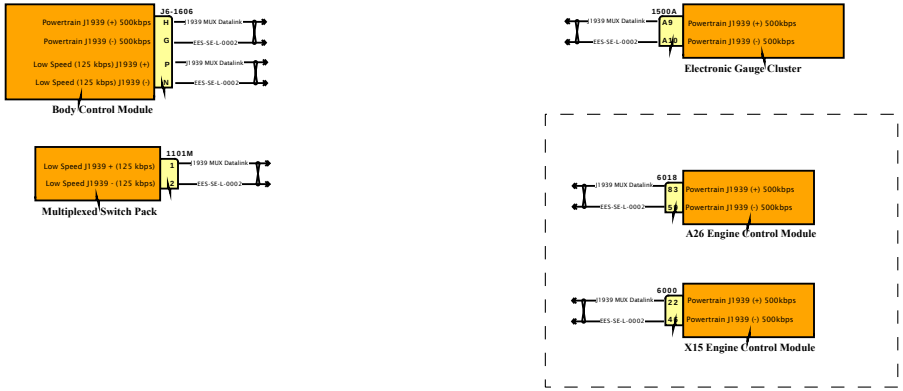

DESIGN DESCRIPTION

FEATURE CODES

SOFTWARE FEATURE CODES

NAVISTAR INC. CONFIDENTIAL PROPRIETARY

Diagram1 - Heater & Supply Module Relays-Combination1

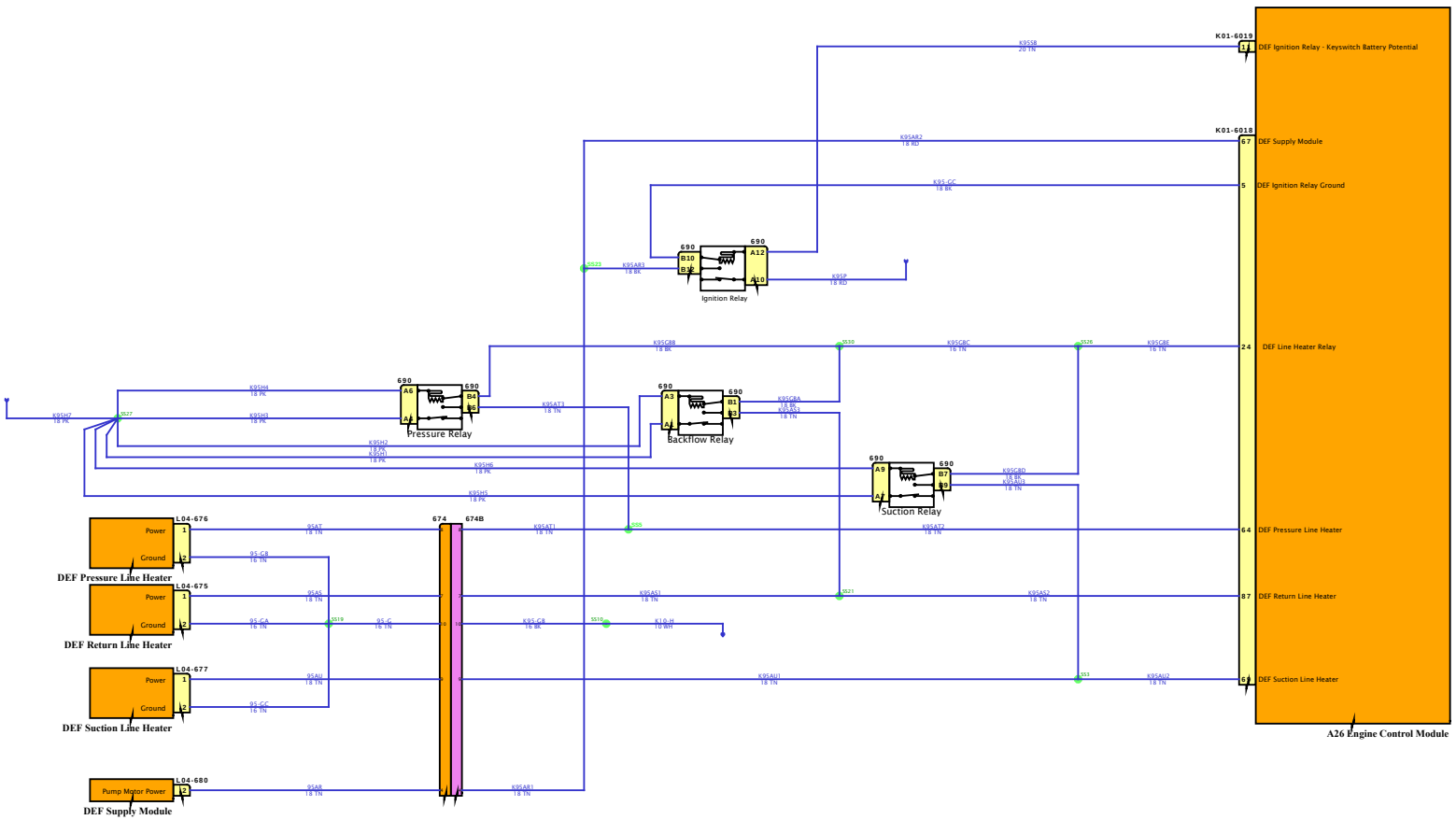

DESIGN DESCRIPTION

FEATURE CODES

SOFTWARE FEATURE CODES

Diagram1 - Heater & Supply Module Relays-Combination2

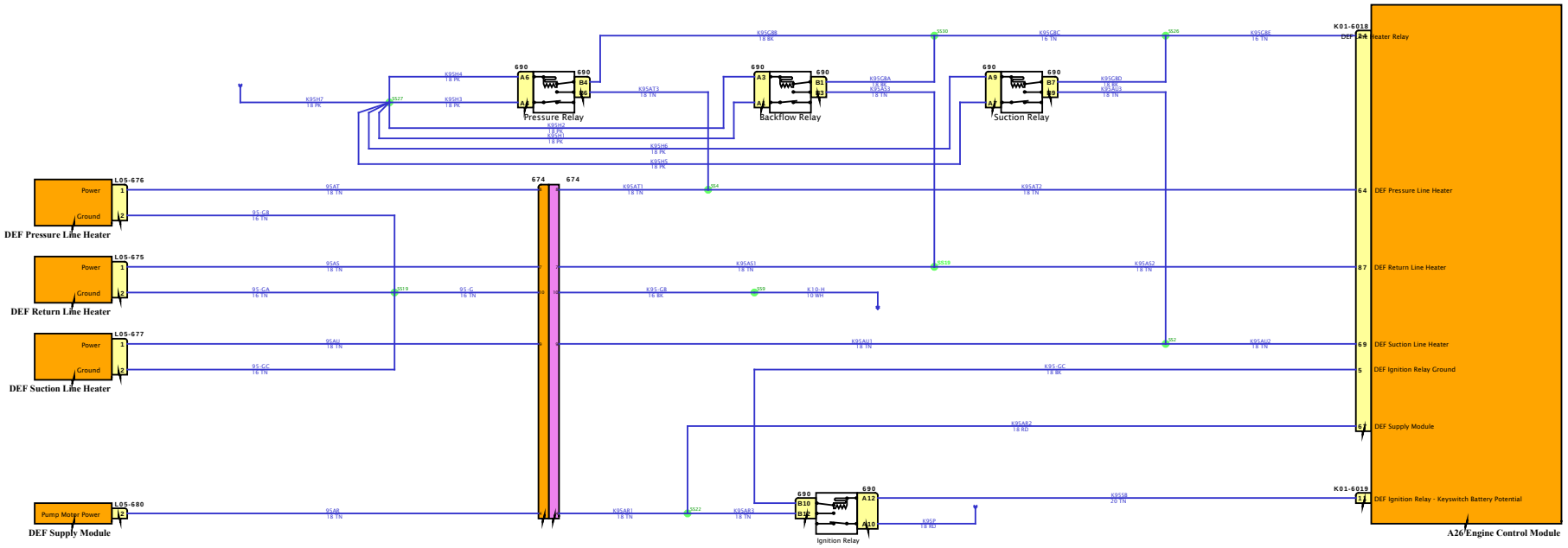

Diagram1 - Heater & Supply Module Relays-Combination3

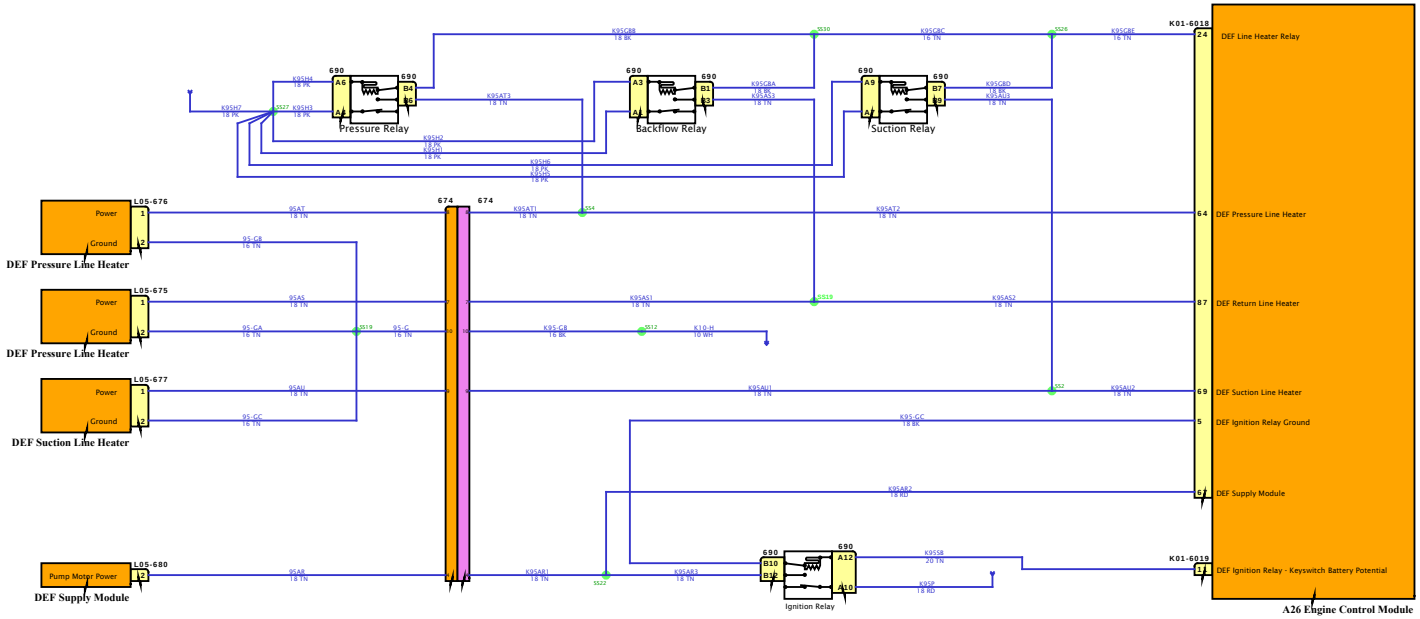

DESIGN DESCRIPTION

FEATURE CODES

SOFTWARE FEATURE CODES

Diagram2 - Supply Module, Sensor Table, Quality Sensor, DEF Tank Valve-Combination1

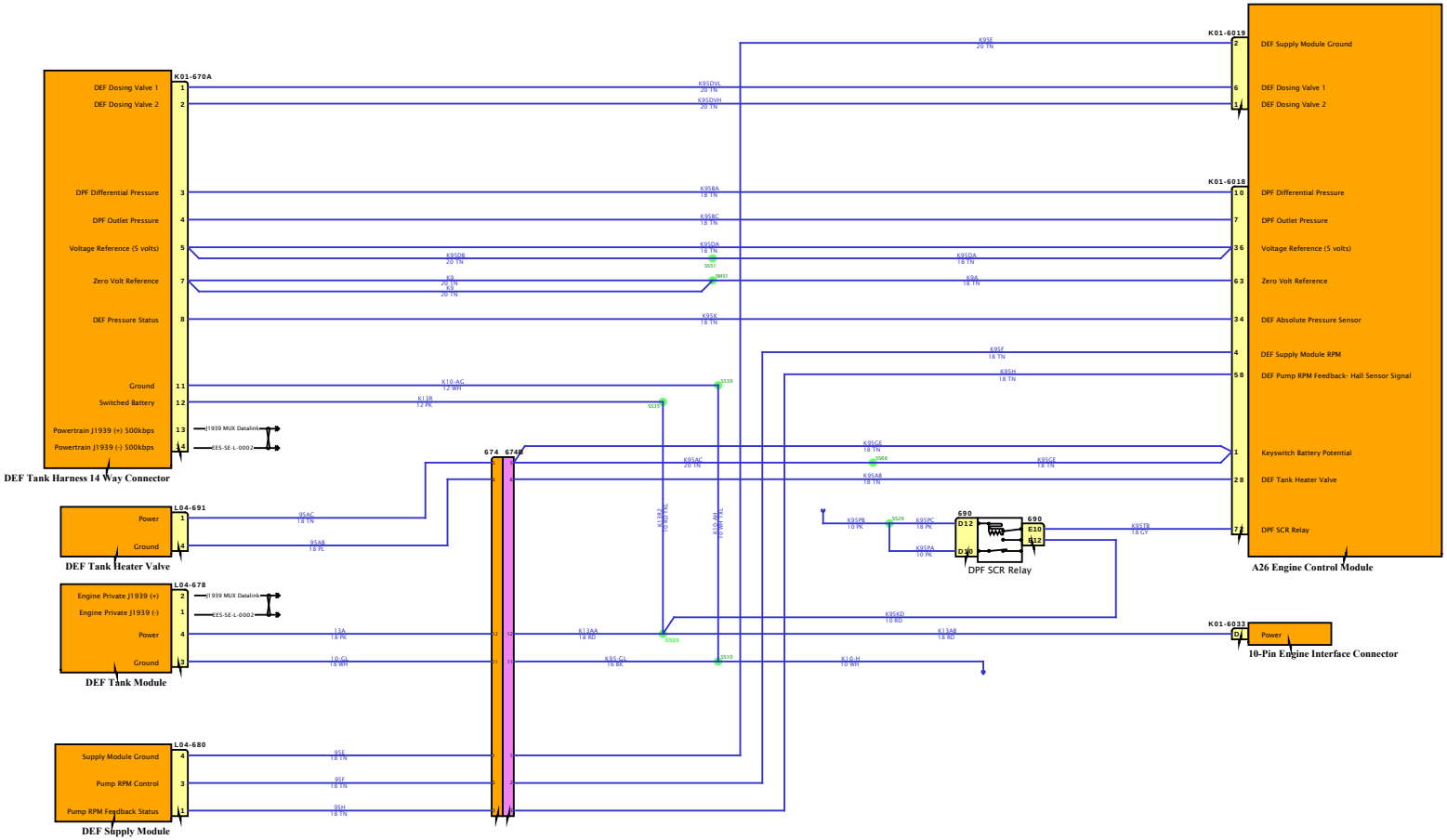

Diagram2 - Supply Module, Sensor Table, Quality Sensor, DEF Tank Valve-Combination2

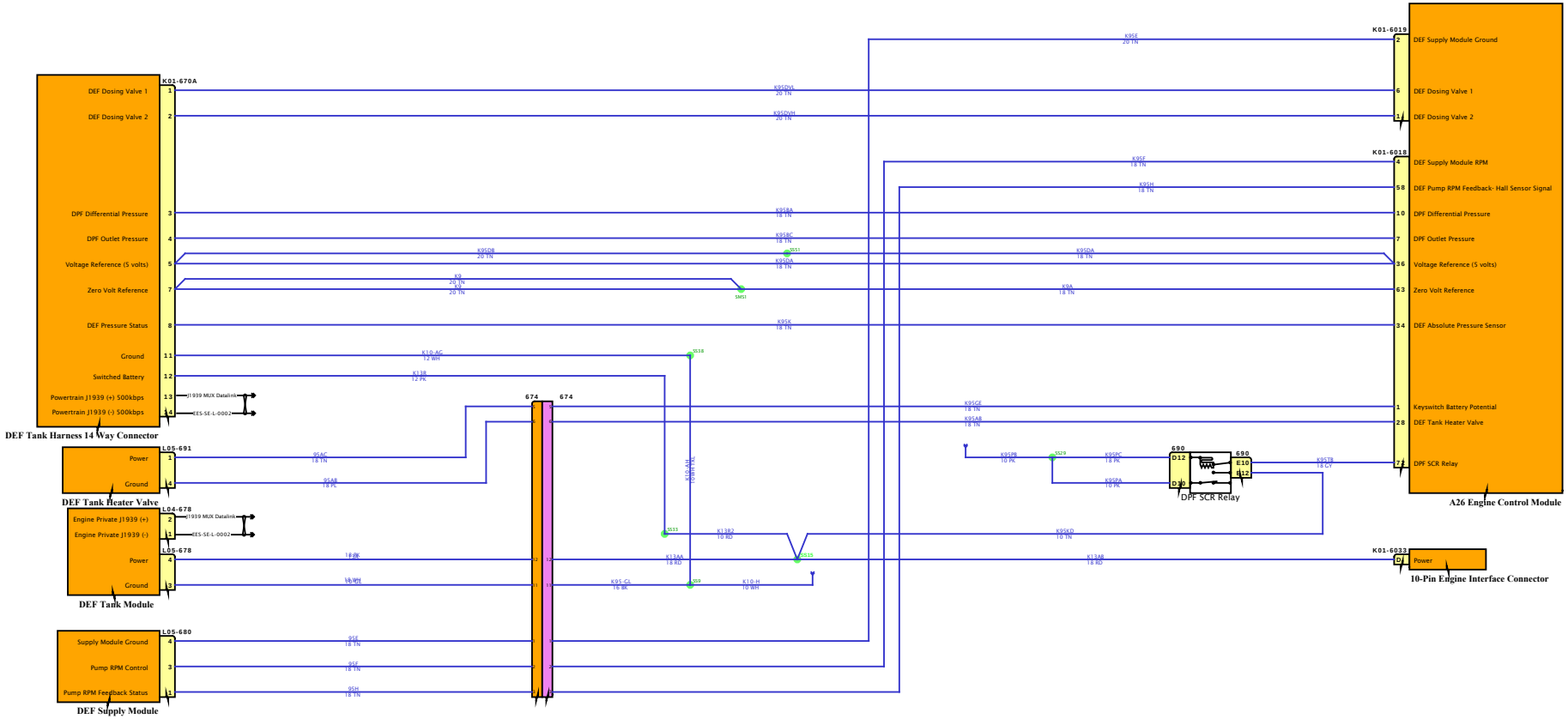

DESIGN DESCRIPTION

FEATURE CODES

SOFTWARE FEATURE CODES

Diagram2 - Supply Module, Sensor Table, Quality Sensor, DEF Tank Valve-Combination3

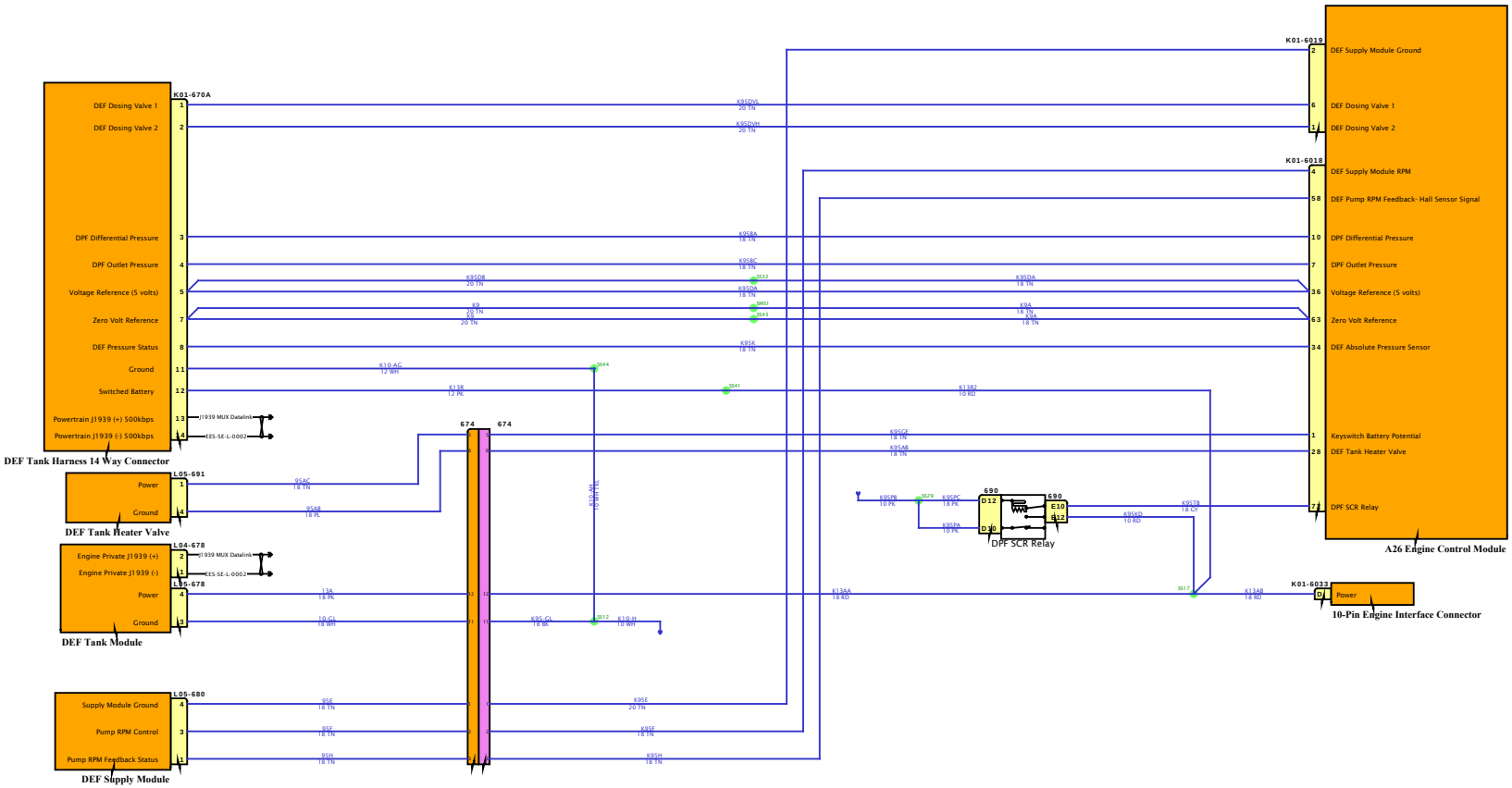

DESIGN DESCRIPTION

FEATURE CODES

SOFTWARE FEATURE CODES

Diagram1 - Heater & Supply Module Relays-Combination1

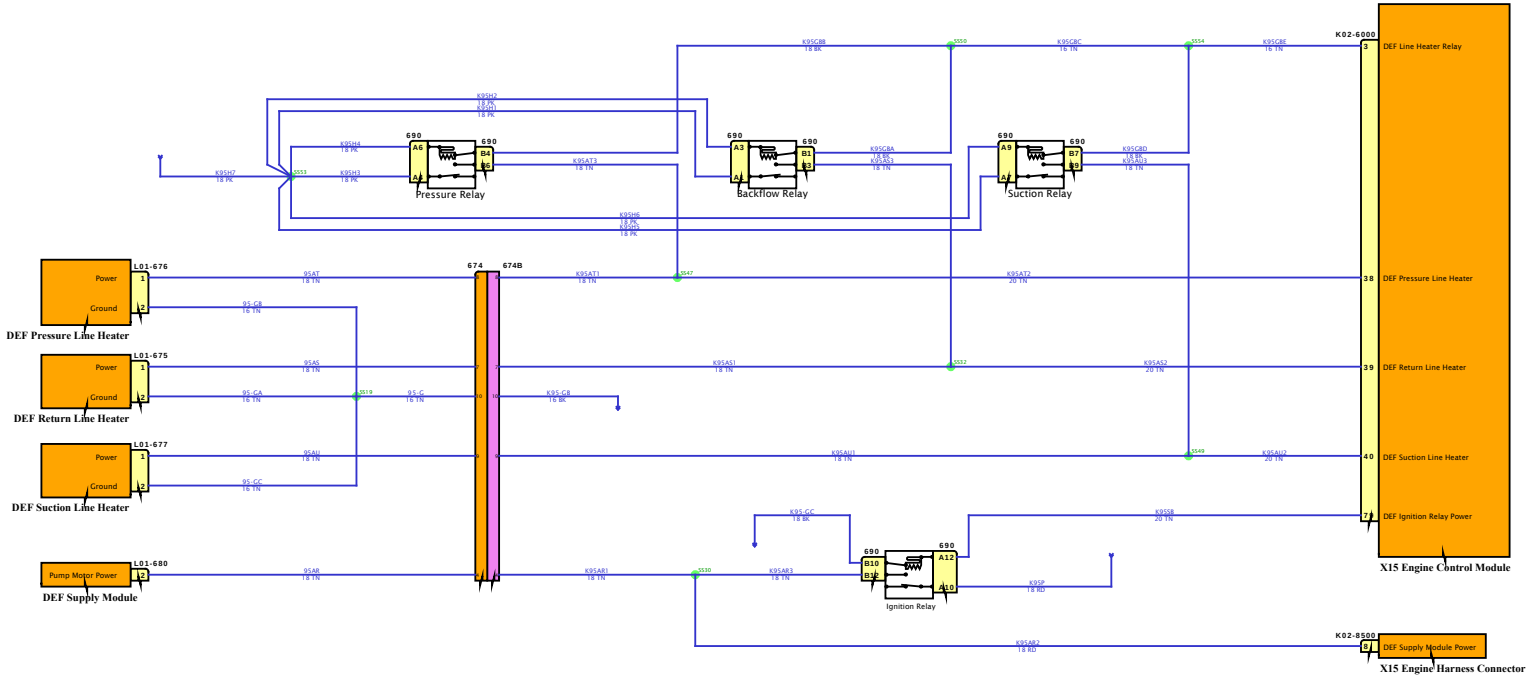

Diagram1 - Heater & Supply Module Relays-Combination2

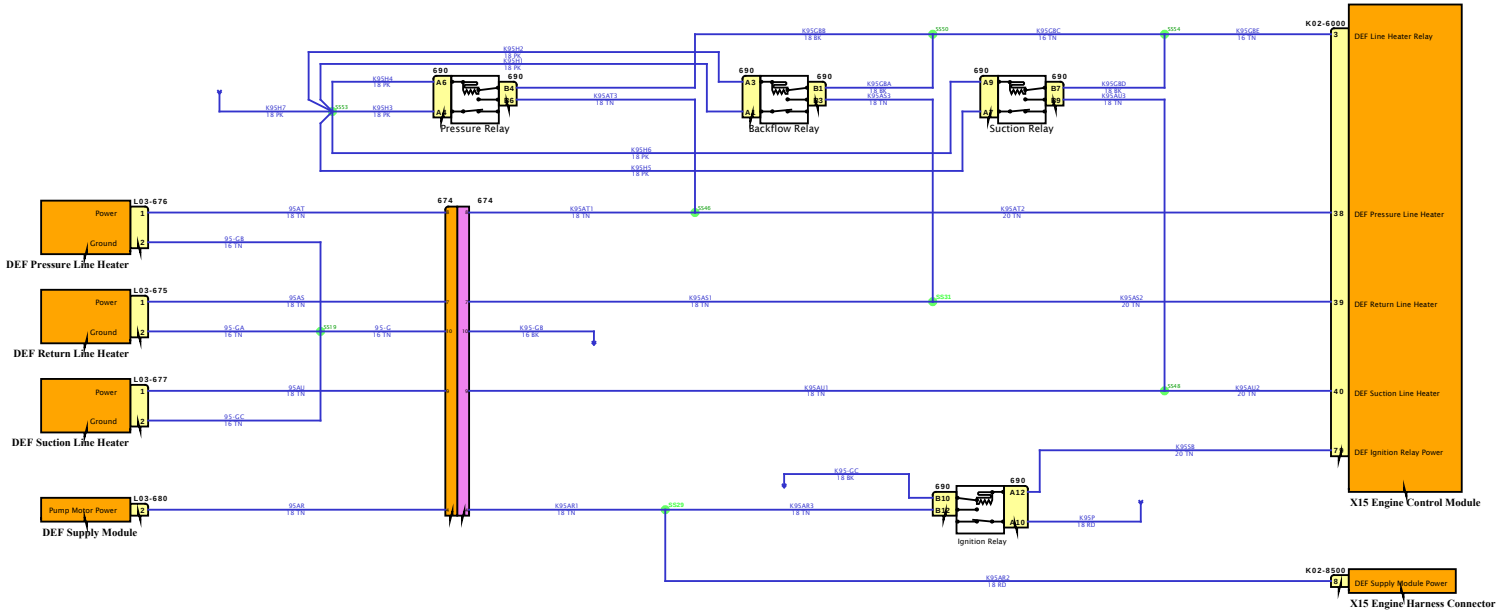

DESIGN DESCRIPTION

FEATURE CODES

SOFTWARE FEATURE CODES

Diagram1 - Heater & Supply Module Relays-Combination3

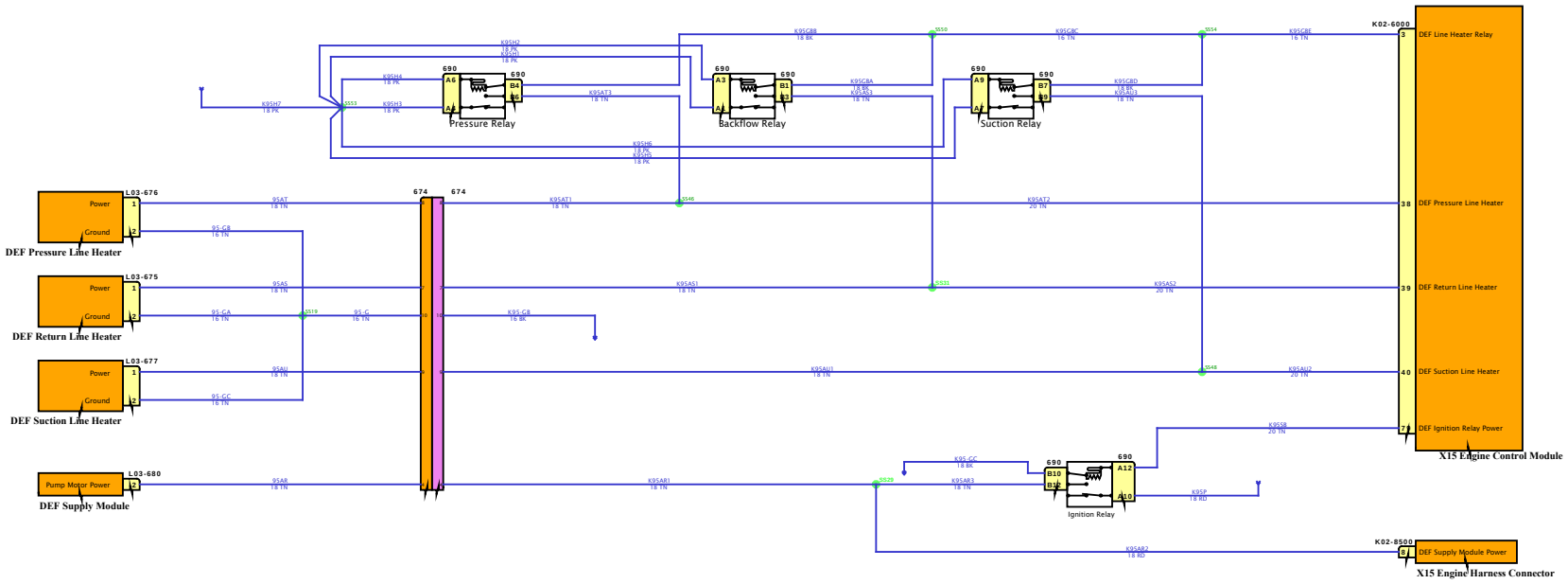

Diagram2 - Supply Module, Sensor Table, Quality Sensor, DEF Tank Valve-Combination1

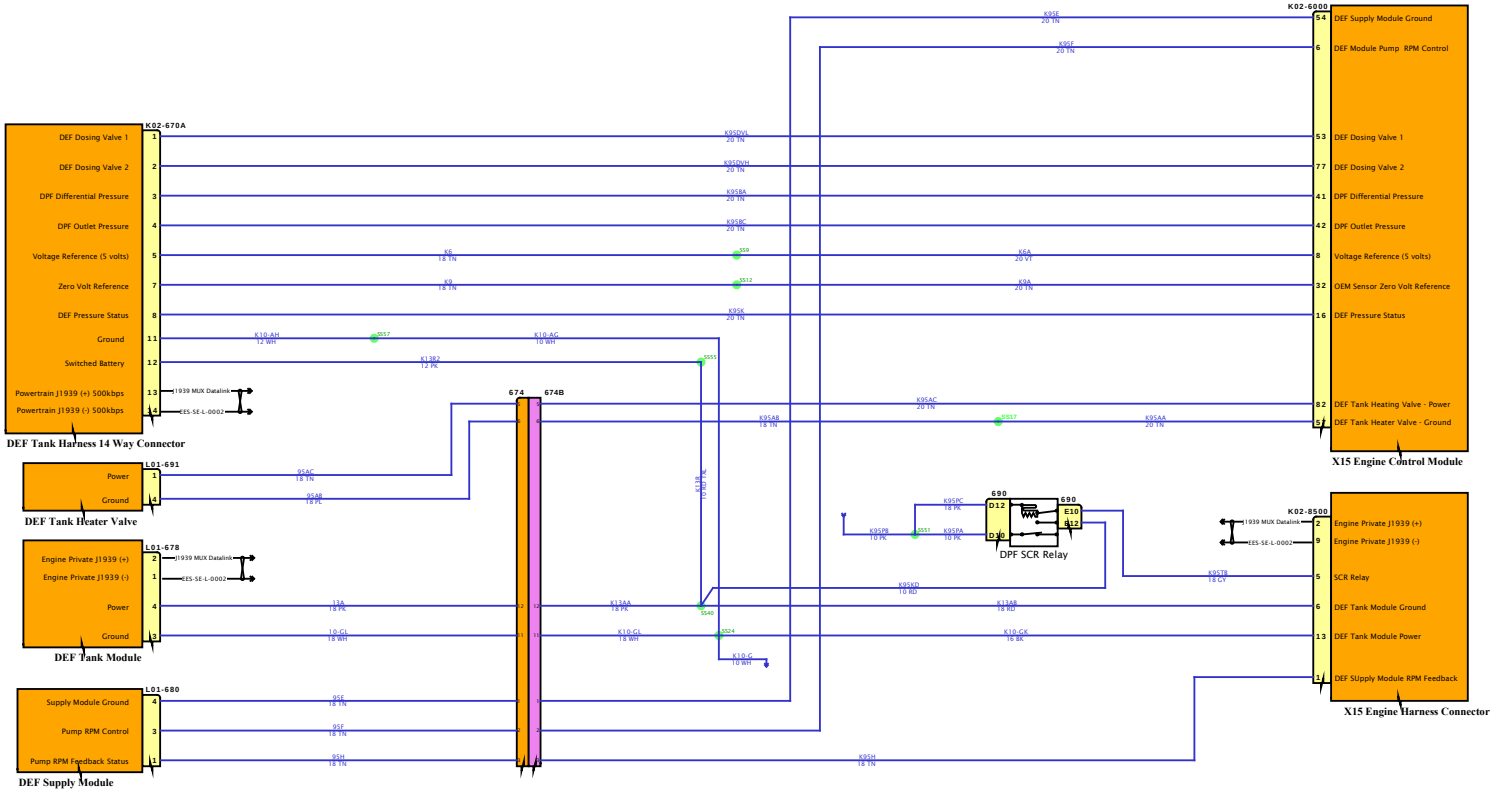

DESIGN DESCRIPTION

FEATURE CODES

SOFTWARE FEATURE CODES

Diagram2 - Supply Module, Sensor Table, Quality Sensor, DEF Tank Valve-Combination2

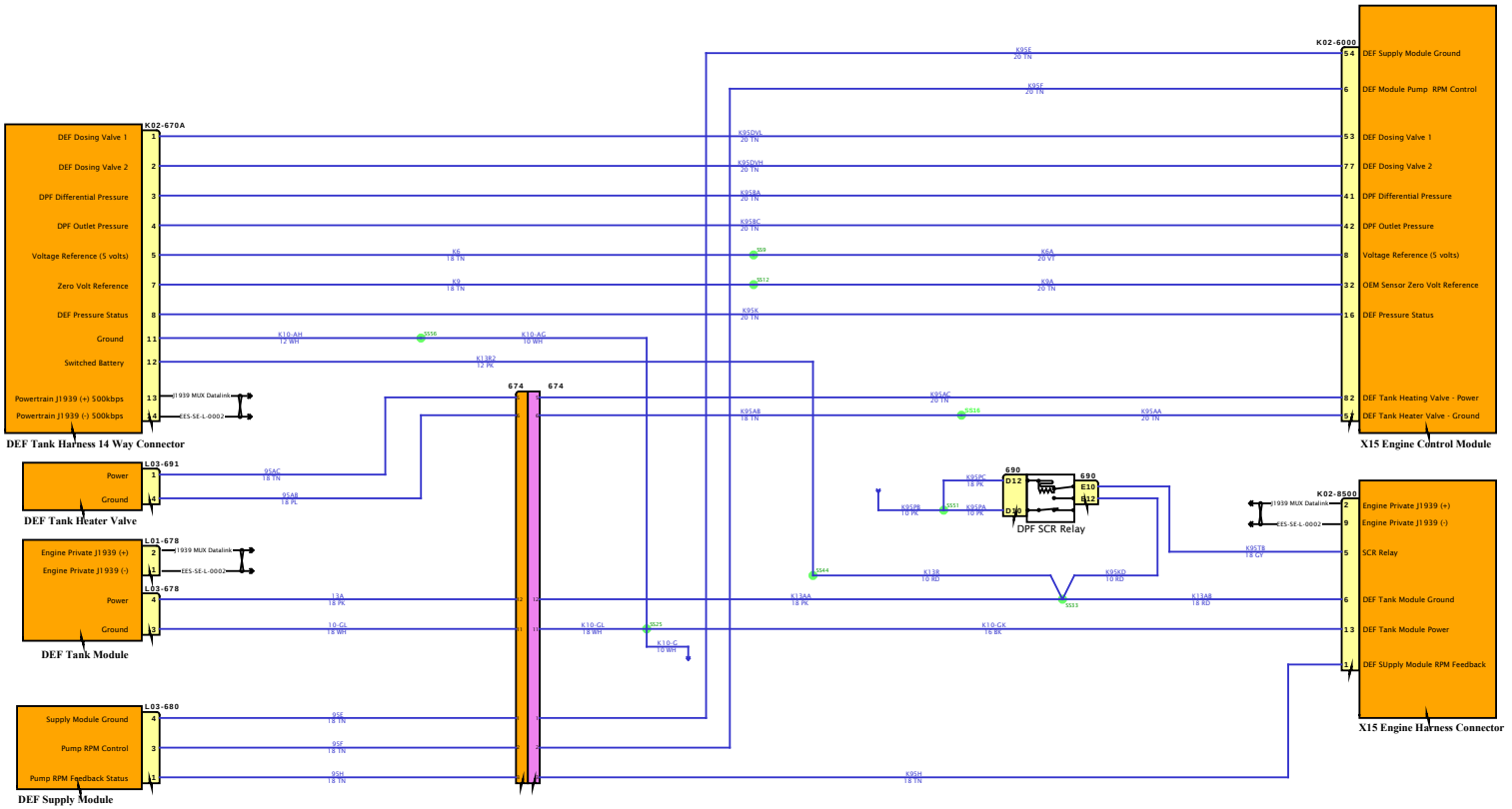

DESIGN DESCRIPTION

FEATURE CODES

SOFTWARE FEATURE CODES

Diagram2 - Supply Module, Sensor Table, Quality Sensor, DEF Tank Valve-Combination3

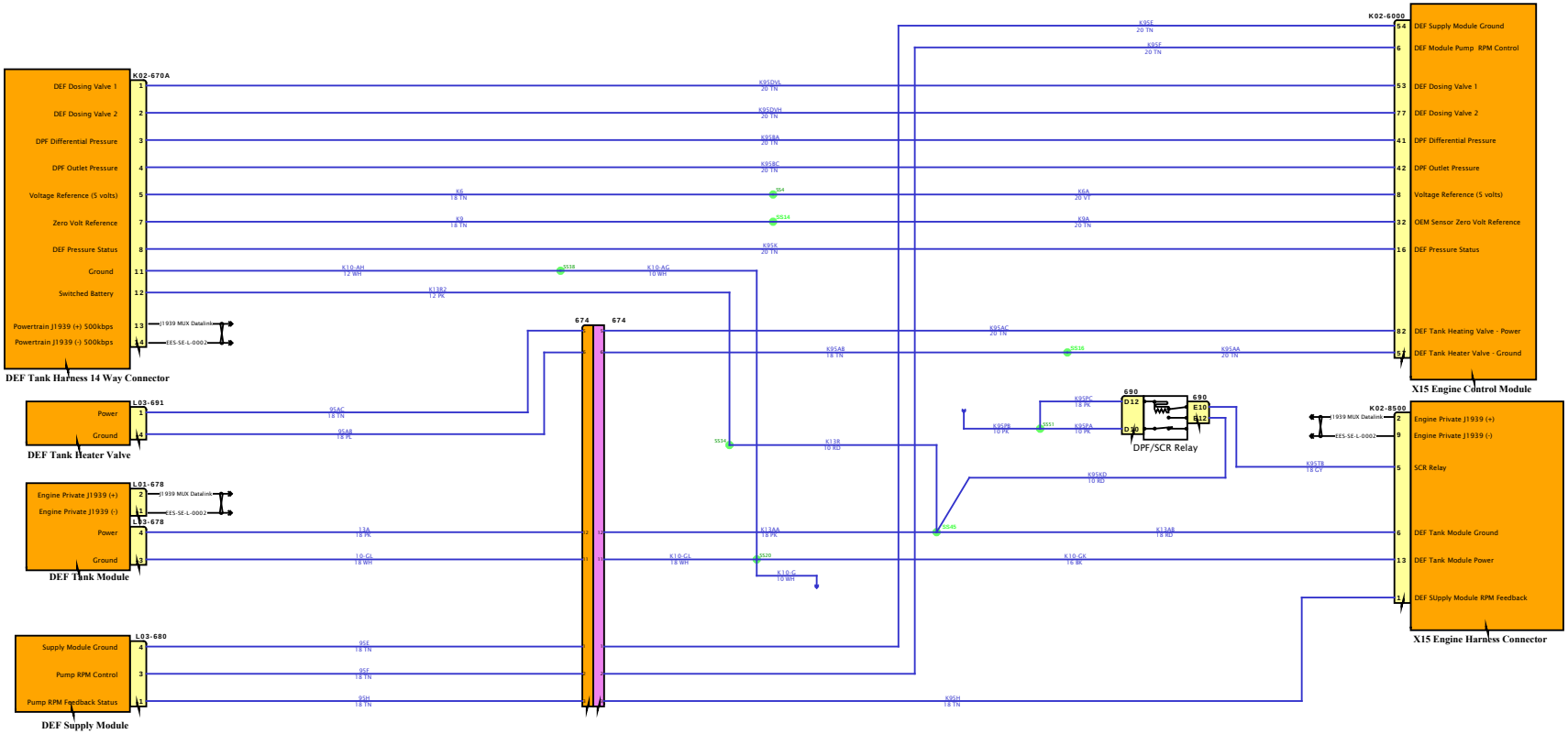

DESIGN DESCRIPTION

FEATURE CODES

SOFTWARE FEATURE CODES

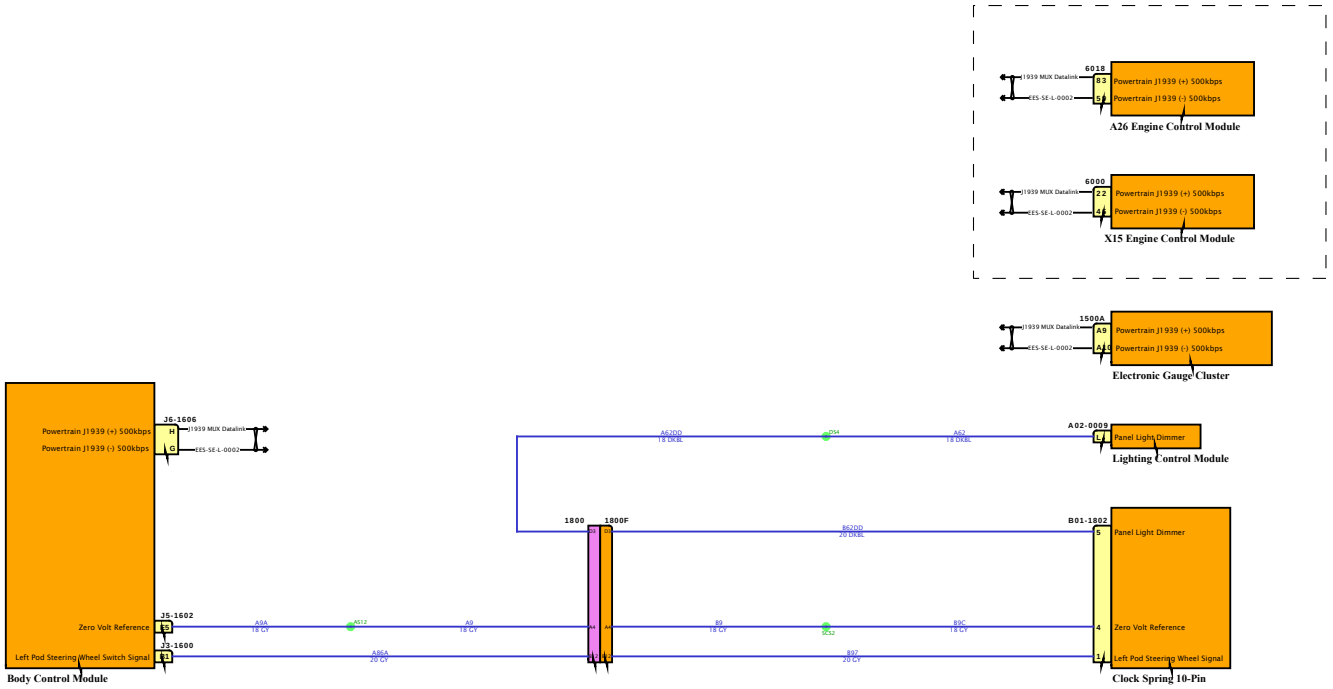

DESIGN DESCRIPTION

FEATURE CODES

SOFTWARE FEATURE CODES

NAVISTAR INC. CONFIDENTIAL PROPRIETARY

Diagram1

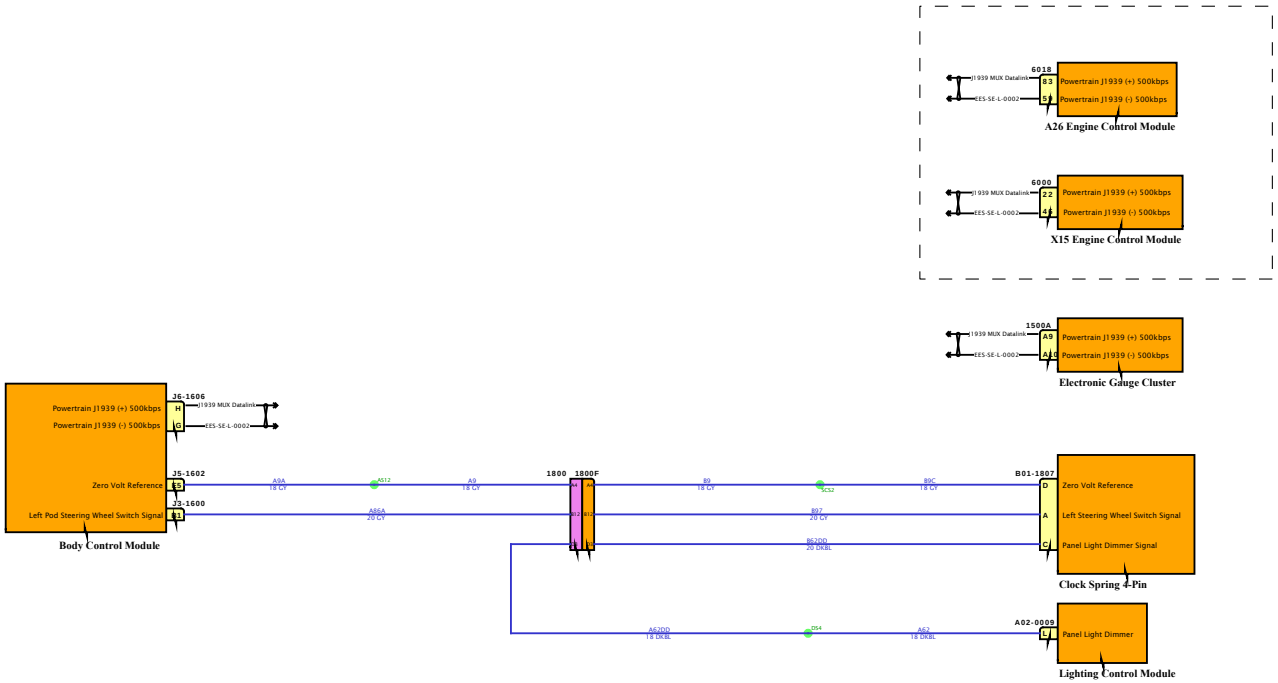

DESIGN DESCRIPTION

FEATURE CODES

SOFTWARE FEATURE CODES

NAVISTAR
NAVISTAR, INC. CONFIDENTIAL PROPRIETARY

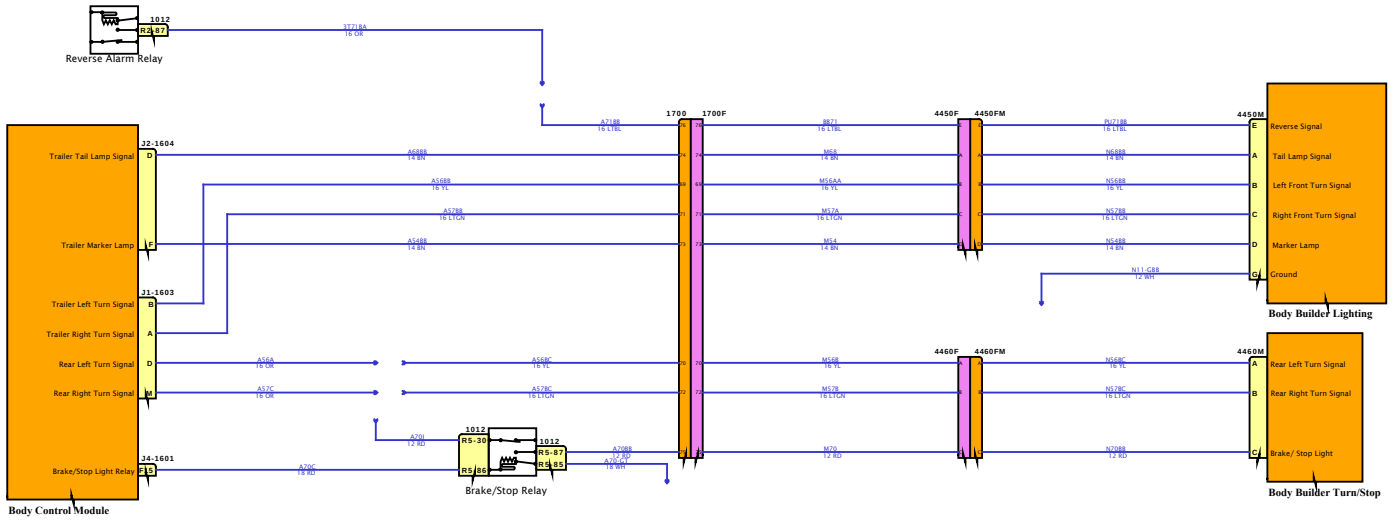

DESIGN DESCRIPTION

FEATURE CODES

SOFTWARE FEATURE CODES

Diagram2

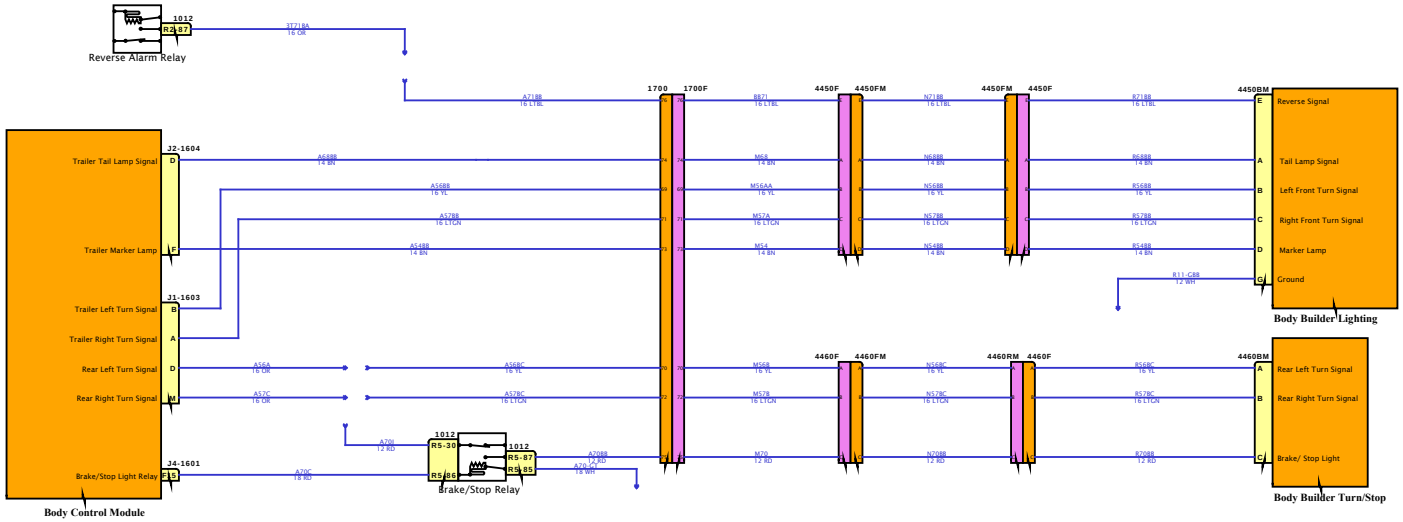

DESIGN DESCRIPTION

FEATURE CODES

SOFTWARE FEATURE CODES

Diagram1

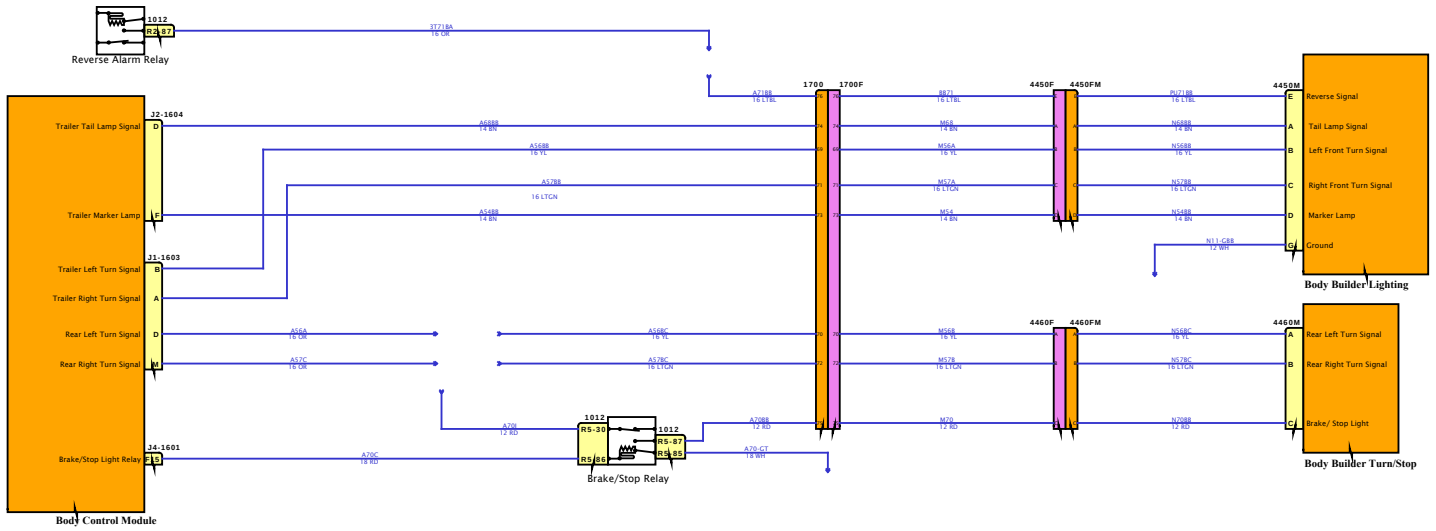

DESIGN DESCRIPTION

FEATURE CODES

SOFTWARE FEATURE CODES

NAVISTAR INC. CONFIDENTIAL PROPRIETARY

Diagram2

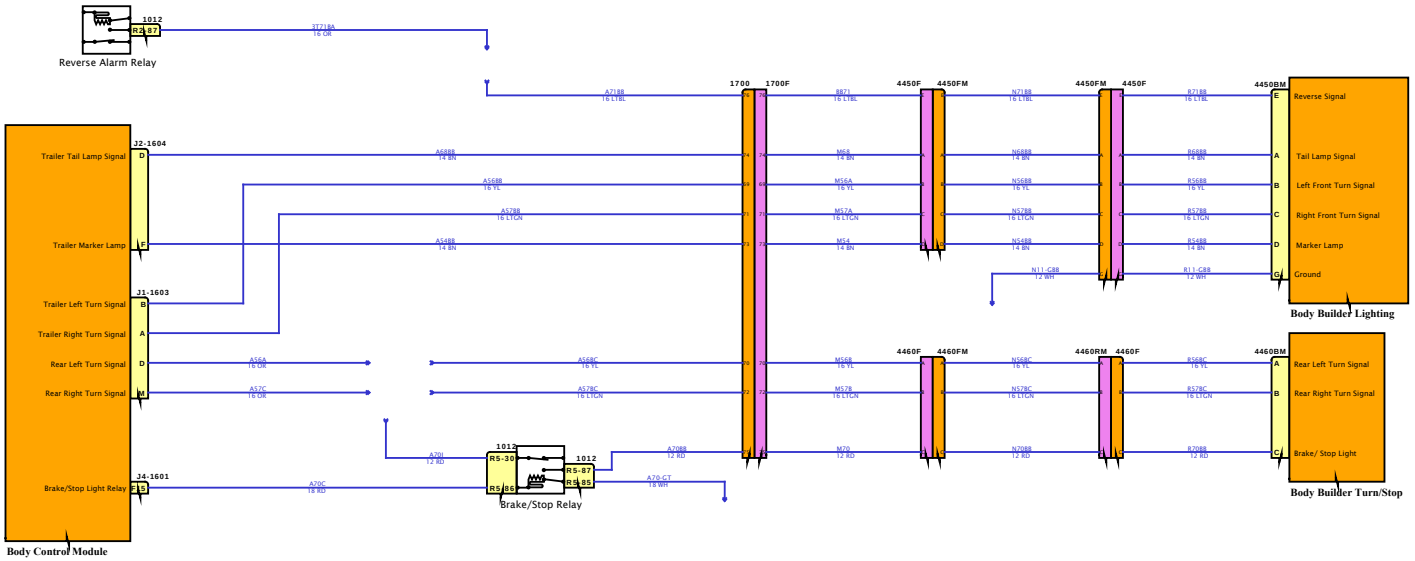

DESIGN DESCRIPTION

FEATURE CODES

SOFTWARE FEATURE CODES

NAVISTAR
NAVISTAR, INC. CONFIDENTIAL PROPRIETARY

Diagram1

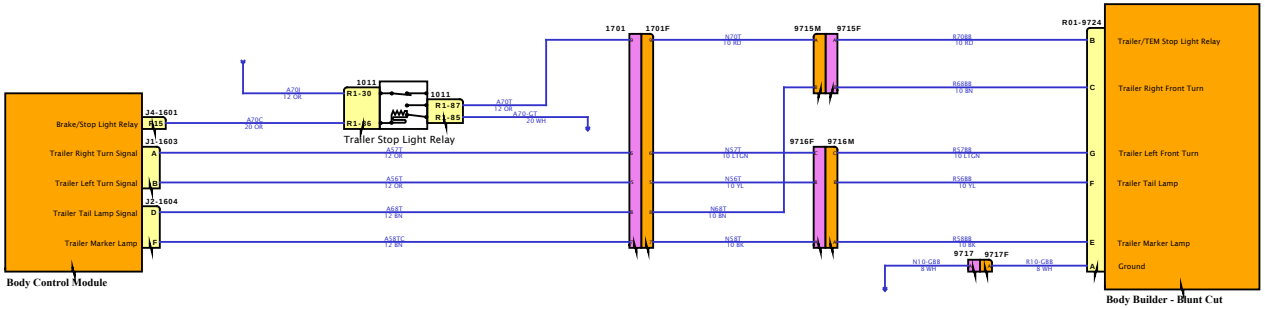

DESIGN DESCRIPTION

FEATURE CODES

SOFTWARE FEATURE CODES

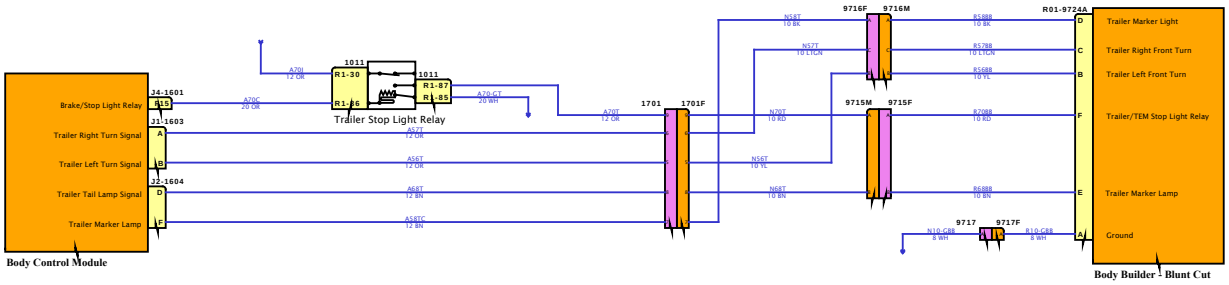

DESIGN DESCRIPTION

FEATURE CODES

SOFTWARE FEATURE CODES

Diagram1

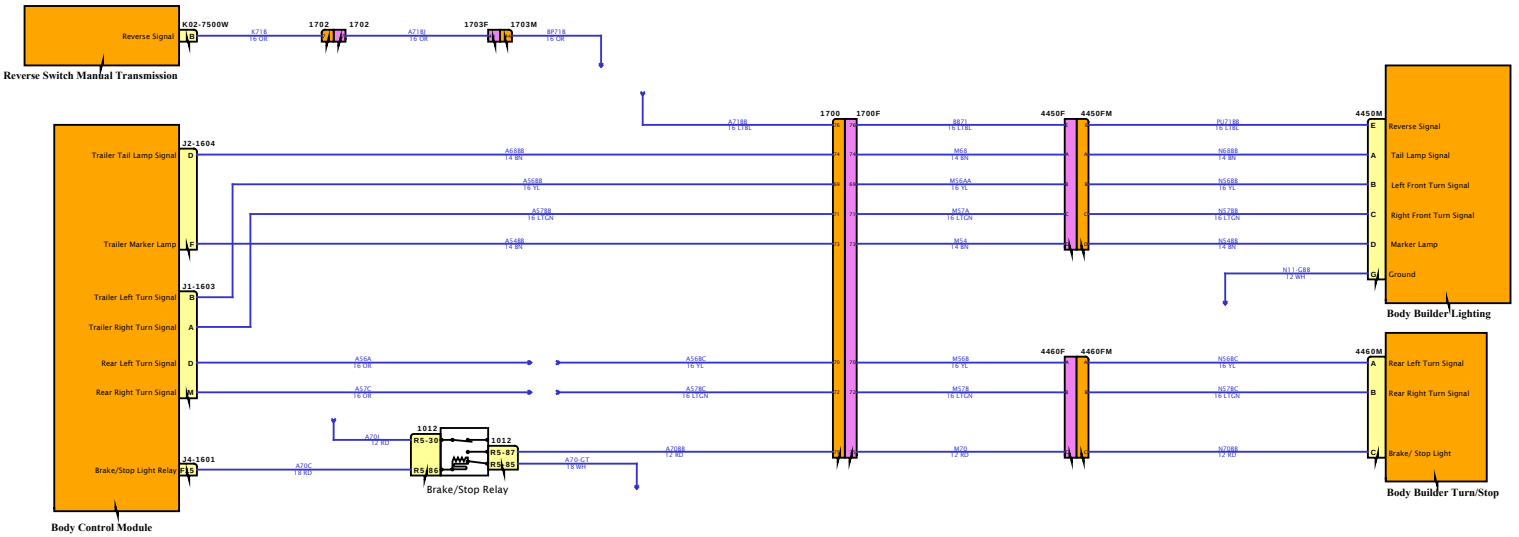

DESIGN DESCRIPTION

FEATURE CODES

SOFTWARE FEATURE CODES

NAVISTAR
NAVISTAR, INC. CONFIDENTIAL PROPRIETARY

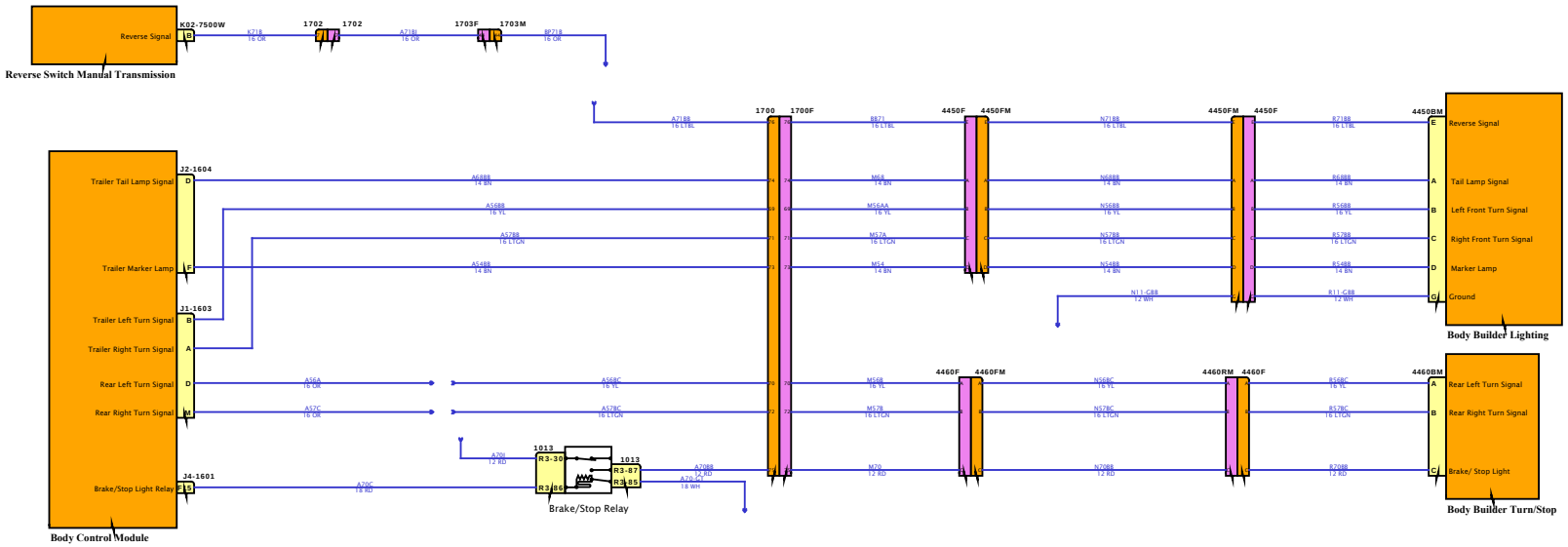

DESIGN DESCRIPTION

FEATURE CODES

SOFTWARE FEATURE CODES

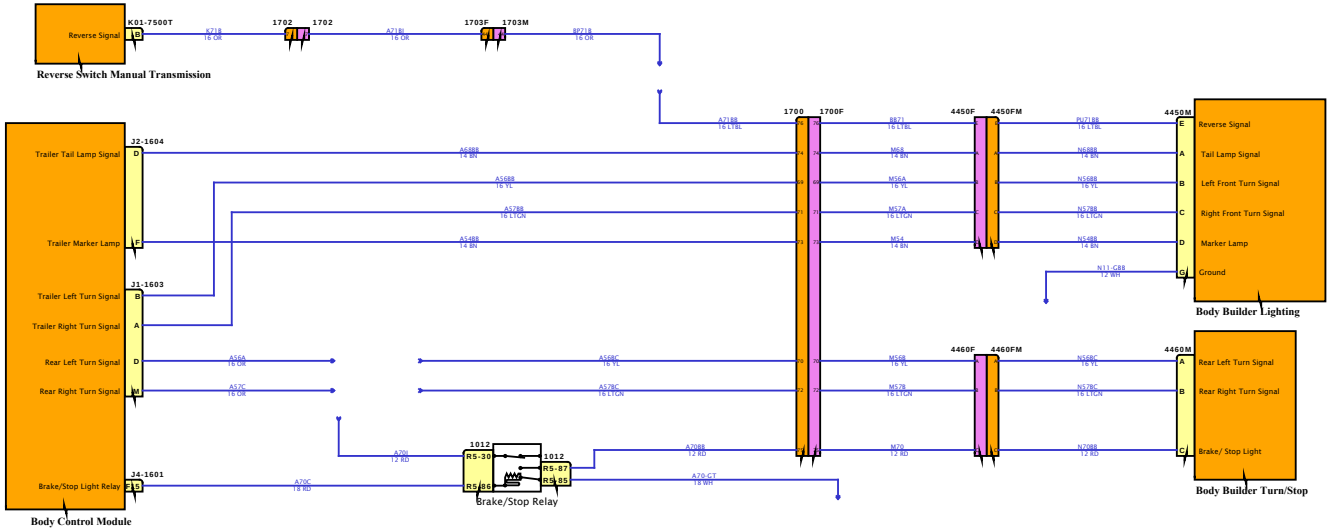
Reverse Signal
K01-7500T
B
K71B
16 OR
1702
1702
A71BI
16 OR
1703F
1703M
BP71B
16 OR
Reverse Switch Manual Transmission
A71BB
16 LTBL
1700
1700F
B871
16 LTBL
4450F
4450FM
PU71BB
16 LTBL
4450M
E
Reverse Signal
Trailer Tail Lamp Signal
J2-1604
D
A56BB
14 BN
M68
14 BN
N68BB
14 BN
A
Tail Lamp Signal
A56BB
16 YL
M56A
16 YL
N56BB
16 YL
B
Left Front Turn Signal
A57BB
16 LTGN
M57A
16 LTGN
N57BB
16 LTGN
C
Right Front Turn Signal
Trailer Marker Lamp
F
A54BB
14 BN
M54
14 BN
N54BB
14 BN
D
Marker Lamp
N11-GBB
12 WH
G
Ground
Body Builder Lighting
Trailer Left Turn Signal
J1-1603
B
Trailer Right Turn Signal
A
Rear Left Turn Signal
D
A56A
16 OR
A56BC
16 YL
M56B
16 YL
4460F
4460FM
N56BC
16 YL
4460M
A
Rear Left Turn Signal
Rear Right Turn Signal
M
A57C
16 OR
A57BC
16 LTGN
M57B
16 LTGN
N57BC
16 LTGN
B
Rear Right Turn Signal
1012
RS-30
1012
RS-87
RS-85
RS-86
A70W
12 RD
A70BB
12 RD
M70
12 RD
N70BB
12 RD
C
Brake/ Stop Light
Brake/Stop Light Relay
Brake/Stop Light Relay
J4-1601
E
A70C
18 RD
A70-GT
18 WH
Body Control Module
Body Builder Turn/Stop
DESIGN DESCRIPTION
FEATURE CODES
SOFTWARE FEATURE CODES
NAVISTAR
NAVISTAR, INC. CONFIDENTIAL PROPRIETARY

Diagram2

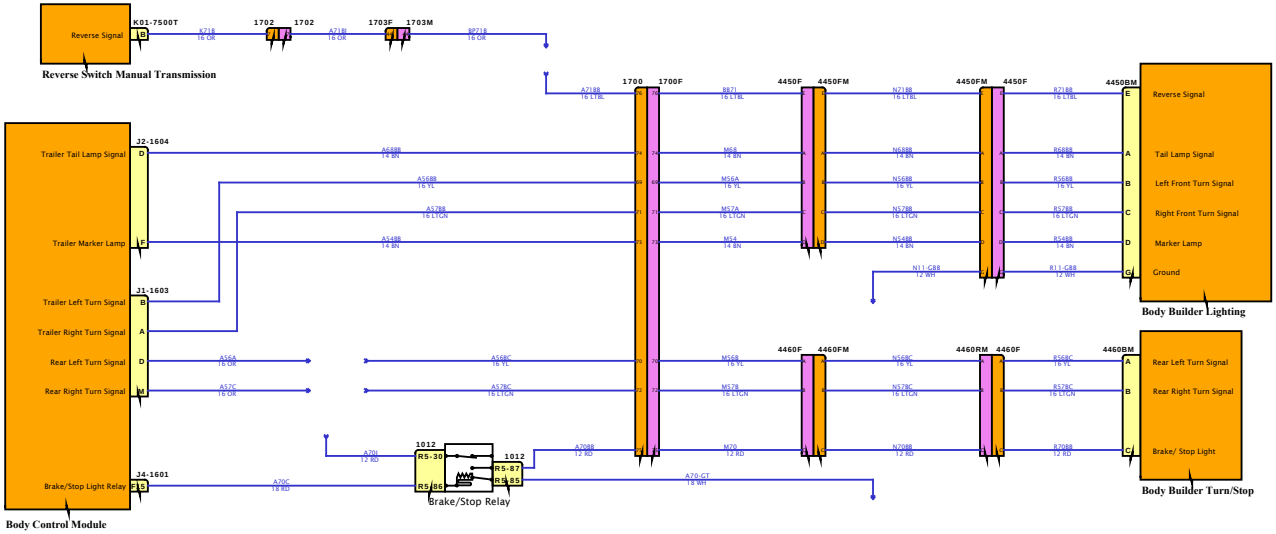

DESIGN DESCRIPTION

FEATURE CODES

SOFTWARE FEATURE CODES

NAVISTAR INC. CONFIDENTIAL PROPRIETARY

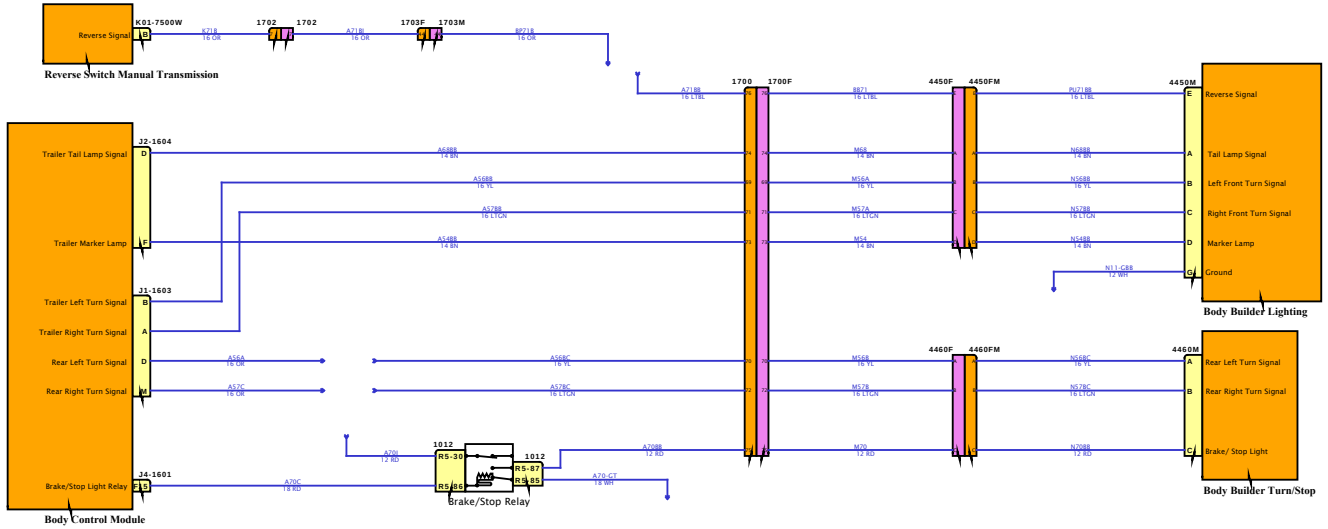
Reverse Signal
K01-7500W
Reverse Switch Manual Transmission
1702
1703F
1703M
1700
1700F
4450F
4450FM
4450M
Reverse Signal
Tail Lamp Signal
Left Front Turn Signal
Right Front Turn Signal
Marker Lamp
Ground
Body Builder Lighting
J2-1604
Trailer Tail Lamp Signal
Trailer Marker Lamp
J1-1603
Trailer Left Turn Signal
Trailer Right Turn Signal
Rear Left Turn Signal
Rear Right Turn Signal
4460F
4460FM
4460M
Rear Left Turn Signal
Rear Right Turn Signal
Brake/ Stop Light
Body Builder Turn/Stop
J4-1601
Brake/Stop Light Relay
1012
R5-30
R5-87
R5-85
R5-86
Brake/Stop Relay
Body Control Module
DESIGN DESCRIPTION
FEATURE CODES
SOFTWARE FEATURE CODES

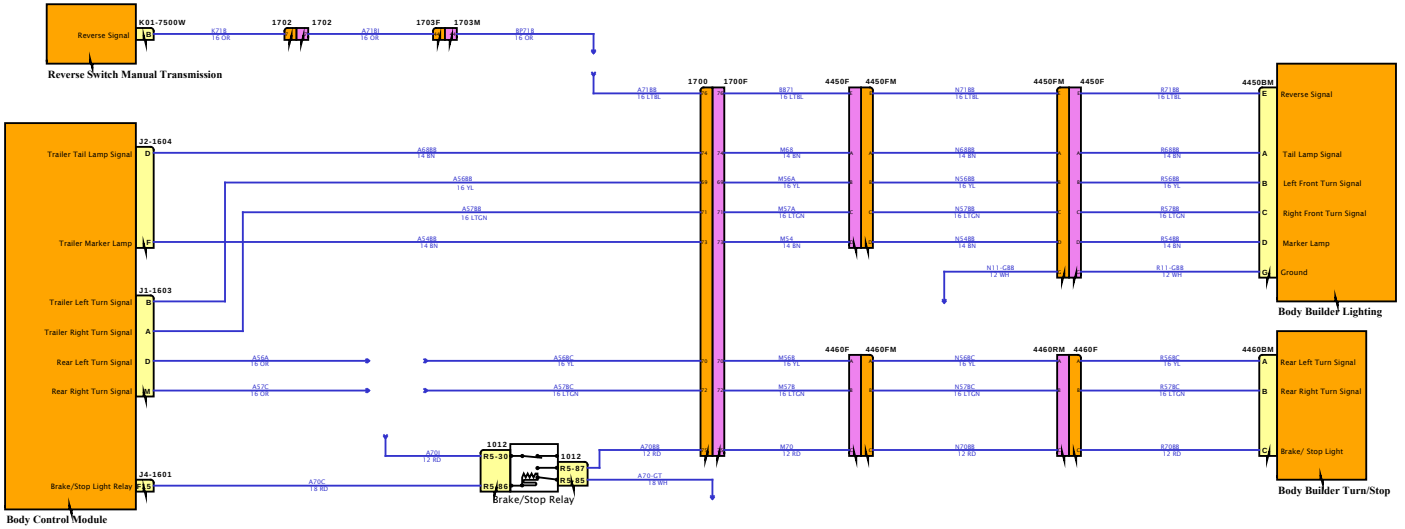

DESIGN DESCRIPTION

FEATURE CODES

SOFTWARE FEATURE CODES

NAVISTAR
NAVISTAR, INC. CONFIDENTIAL PROPRIETARY

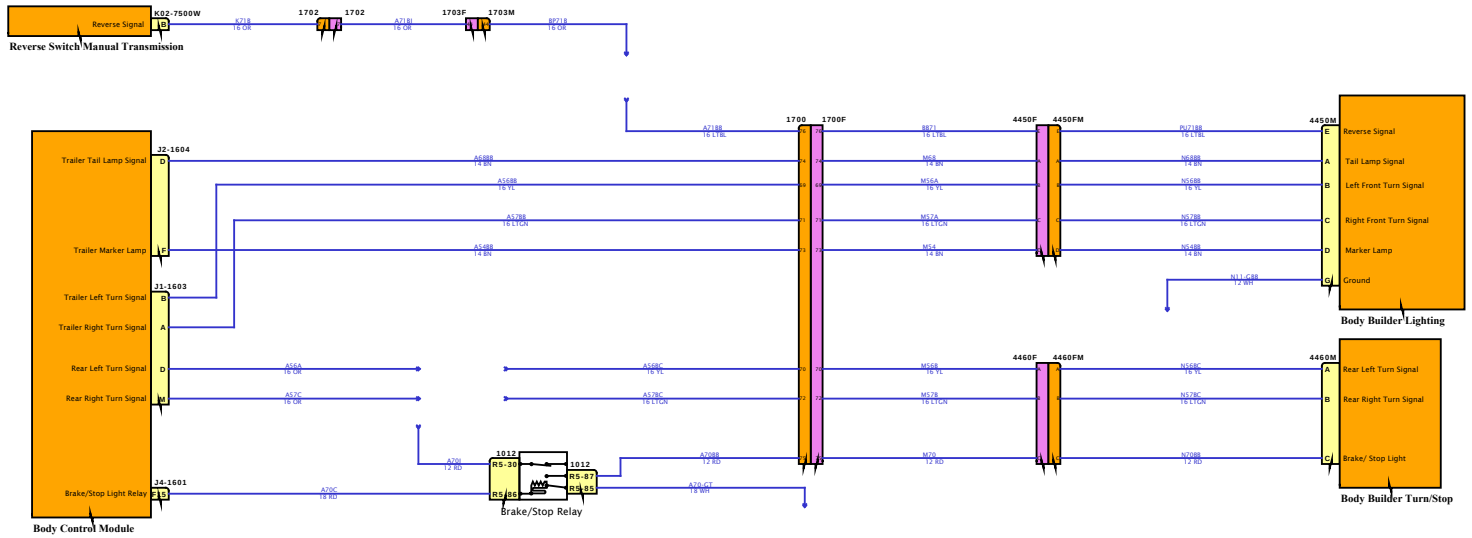

DESIGN DESCRIPTION

FEATURE CODES

SOFTWARE FEATURE CODES

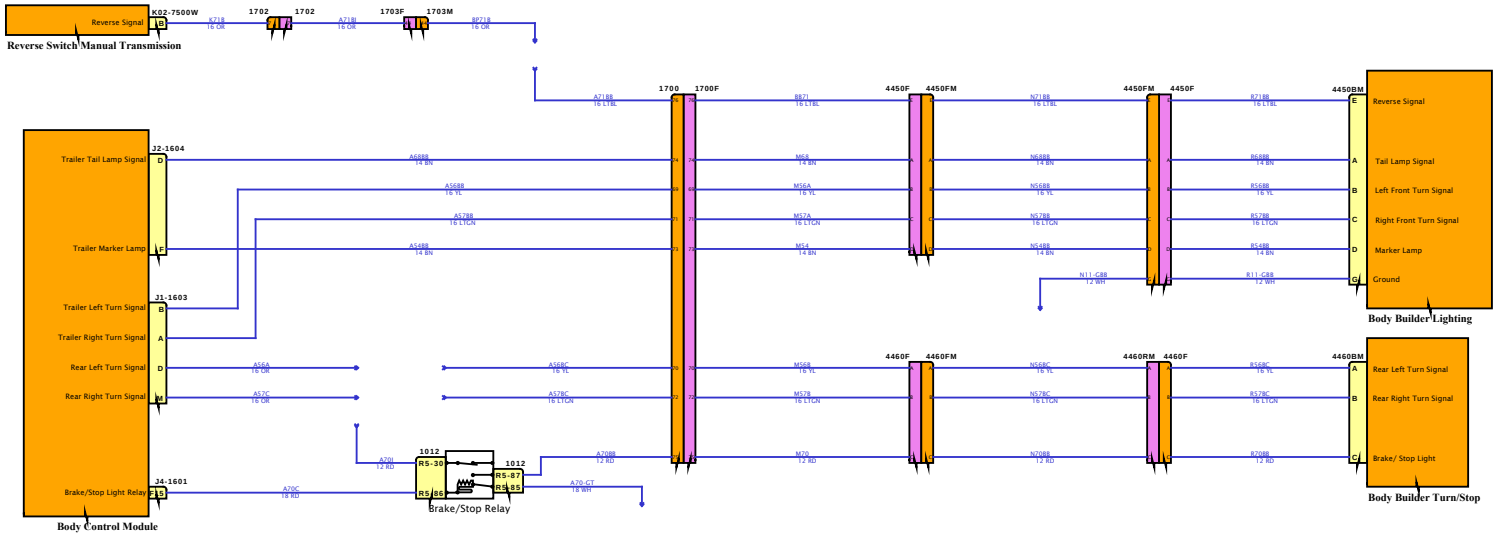

DESIGN DESCRIPTION

FEATURE CODES

SOFTWARE FEATURE CODES

NAVISTAR INC. CONFIDENTIAL PROPRIETARY

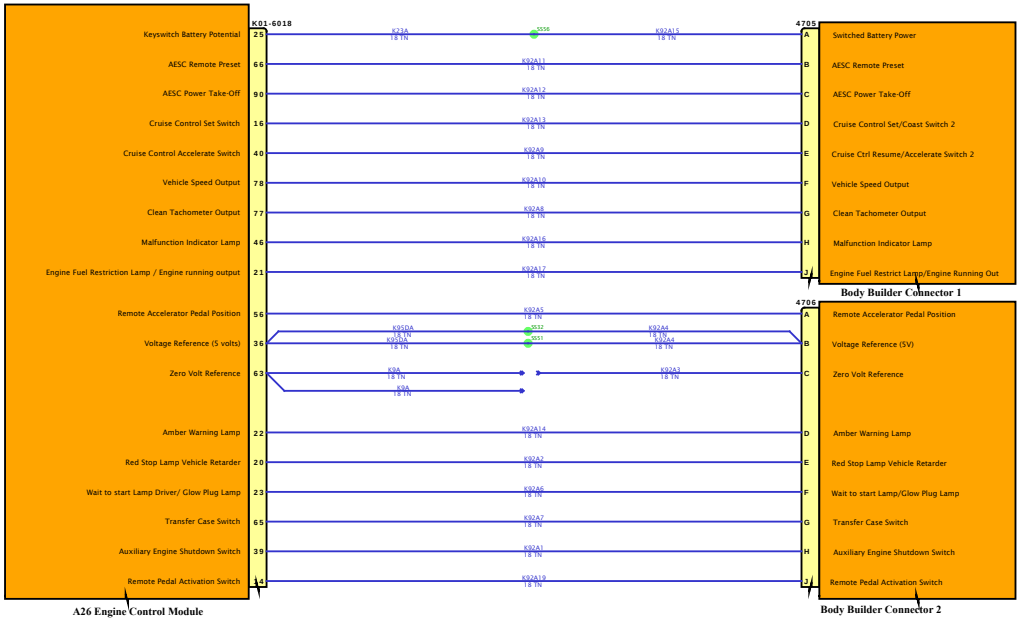

DESIGN DESCRIPTION

FEATURE CODES

SOFTWARE FEATURE CODES

NAVISTAR INC. CONFIDENTIAL PROPRIETARY

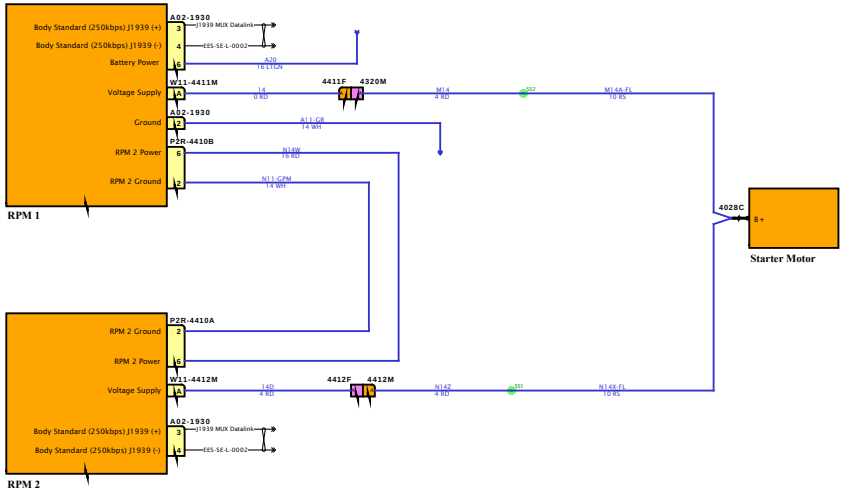

DESIGN DESCRIPTION

FEATURE CODES

SOFTWARE FEATURE CODES

NAVISTAR
NAVISTAR, INC. CONFIDENTIAL PROPRIETARY

Diagram1

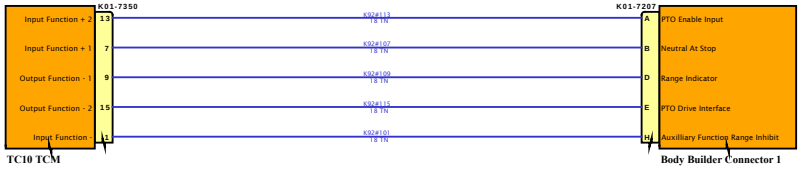

DESIGN DESCRIPTION

FEATURE CODES

SOFTWARE FEATURE CODES

NAVISTAR INC. CONFIDENTIAL PROPRIETARY

Diagram1

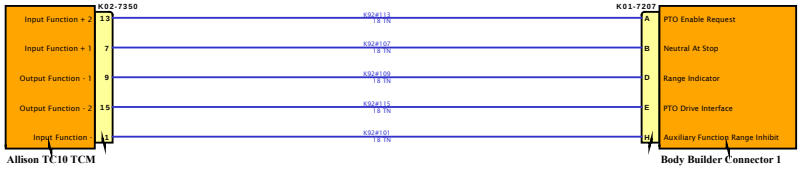

DESIGN DESCRIPTION

FEATURE CODES

SOFTWARE FEATURE CODES

NAVISTAR INC. CONFIDENTIAL PROPRIETARY

Diagram1

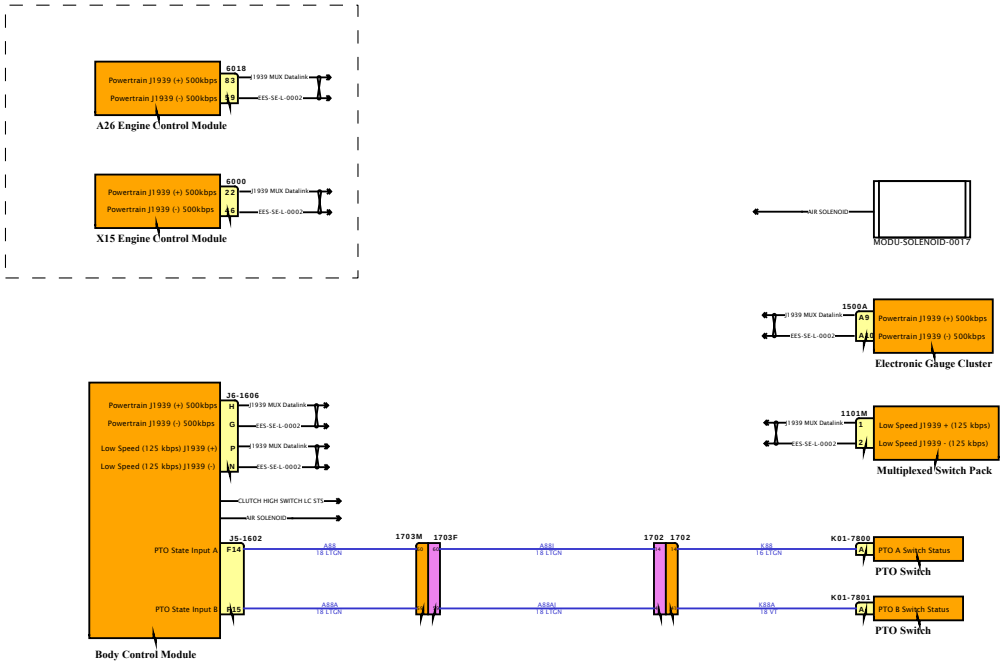

DESIGN DESCRIPTION

FEATURE CODES

SOFTWARE FEATURE CODES

Diagram1

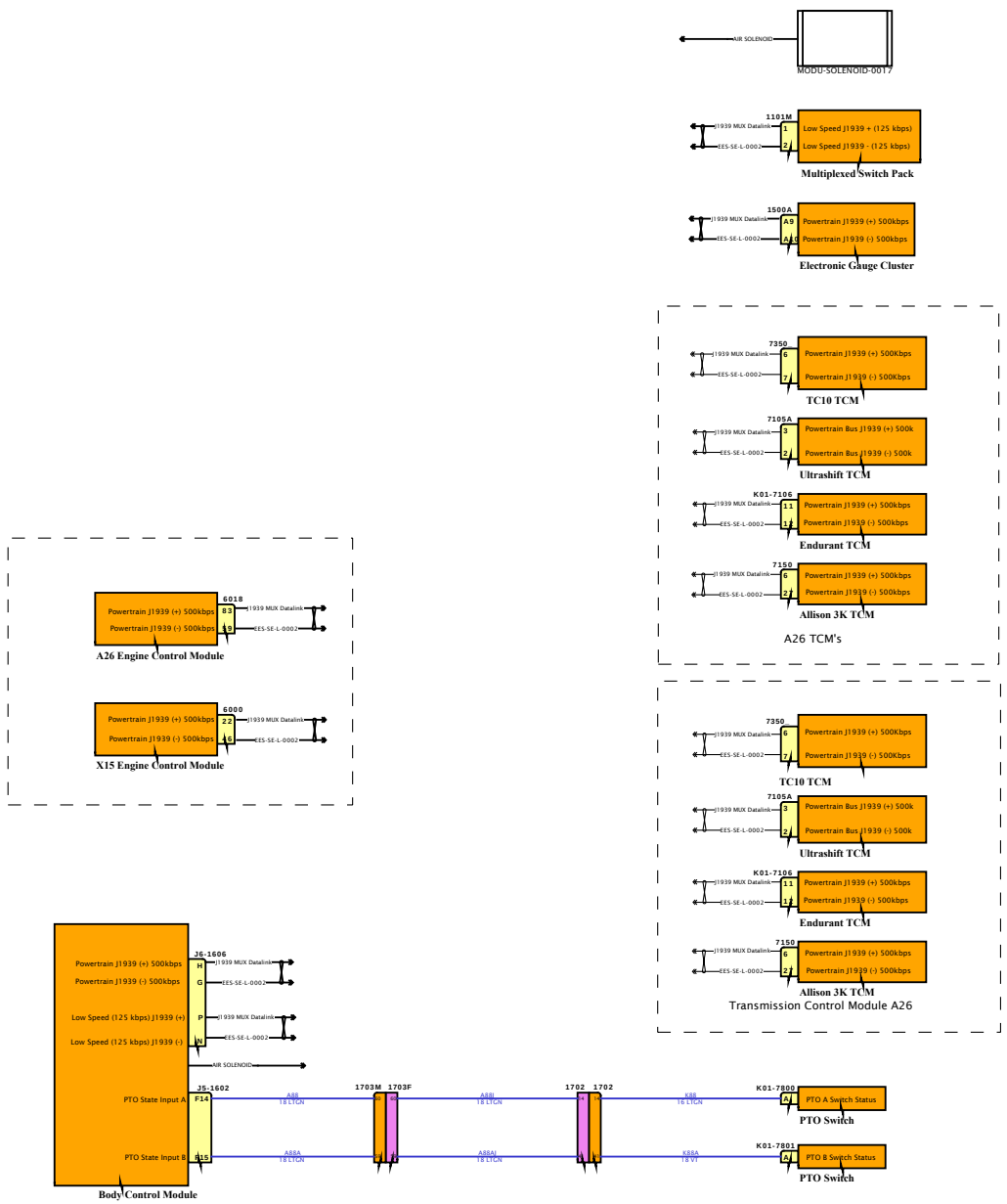
AIR SOLENOID
MODU-SOLENOID-0017
1101M
1939 MUX Datalink
CES-SE-L-0002
1 Low Speed J1939 + (125 kbps)
2 Low Speed J1939 - (125 kbps)
Multiplexed Switch Pack
1500A
A9 Powertrain J1939 (+) 500kbps
A10 Powertrain J1939 (-) 500kbps
Electronic Gauge Cluster
7350
6 Powertrain J1939 (+) 500Kbps
7 Powertrain J1939 (-) 500Kbps
TC10 TCM
7105A
3 Powertrain Bus J1939 (+) 500k
2 Powertrain Bus J1939 (-) 500k
Ultrashift TCM
K01-7106
11 Powertrain J1939 (+) 500kbps
12 Powertrain J1939 (-) 500kbps
Endurant TCM
7150
6 Powertrain J1939 (+) 500kbps
2 Powertrain J1939 (-) 500kbps
Allison 3K TCM
A26 TCM's
6018
83 Powertrain J1939 (+) 500kbps
19 Powertrain J1939 (-) 500kbps
A26 Engine Control Module
6000
22 Powertrain J1939 (+) 500kbps
16 Powertrain J1939 (-) 500kbps
X15 Engine Control Module
Transmission Control Module A26
J6-1606
H Powertrain J1939 (+) 500kbps
G Powertrain J1939 (-) 500kbps
P Low Speed (125 kbps) J1939 (+)
N Low Speed (125 kbps) J1939 (-)
AIR SOLENOID
J5-1602
F14 PTO State Input A
A15 PTO State Input B
Body Control Module
1703M 1703F
1702 1702
K01-7800
A1 PTO A Switch Status
PTO Switch
K01-7801
A2 PTO B Switch Status
PTO Switch
DESIGN DESCRIPTION
FEATURE CODES
SOFTWARE FEATURE CODES
NAVISTAR
NAVISTAR, INC. CONFIDENTIAL PROPRIETARY

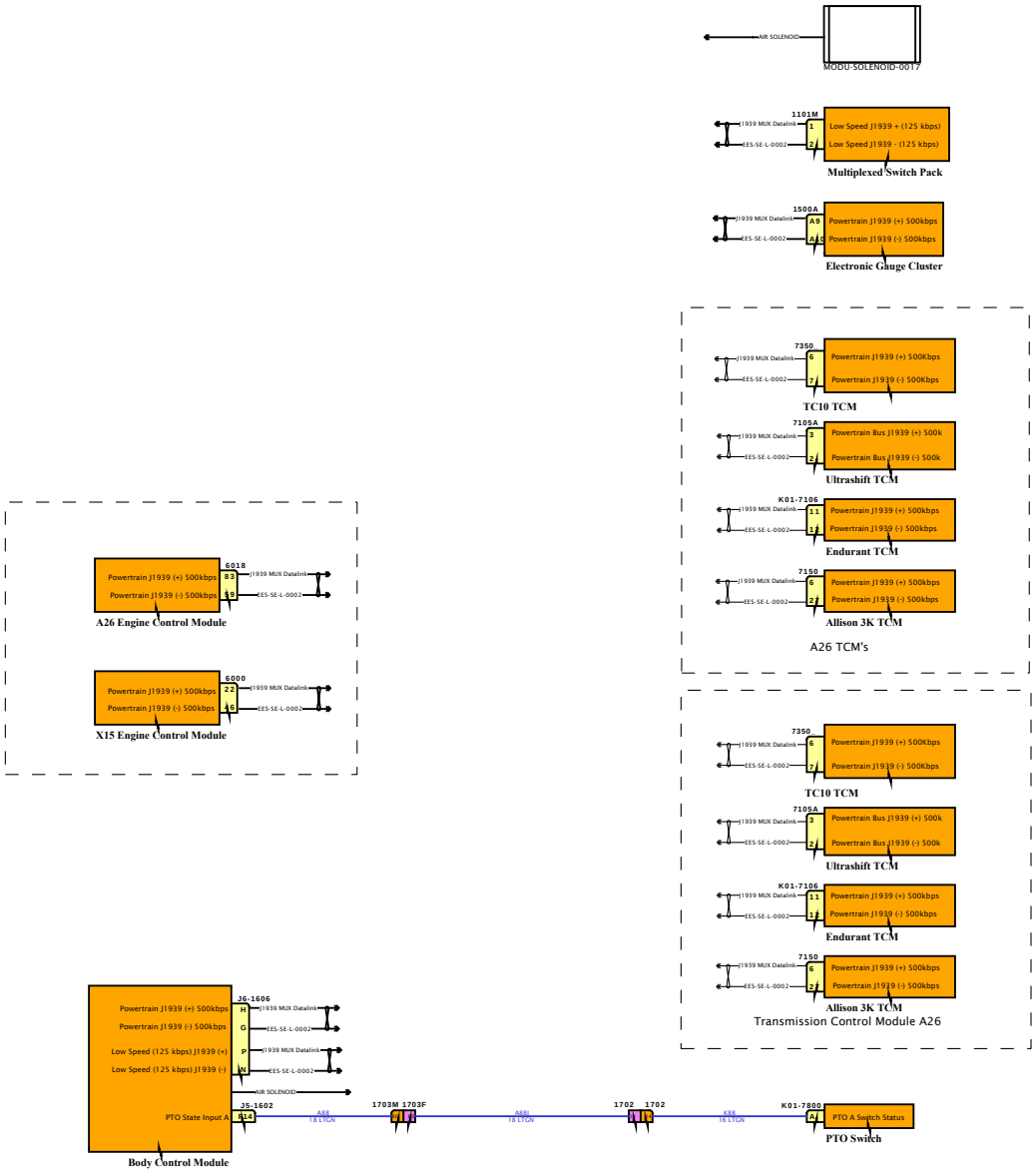

DESIGN DESCRIPTION

FEATURE CODES

SOFTWARE FEATURE CODES

NAVISTAR
NAVISTAR, INC. CONFIDENTIAL PROPRIETARY

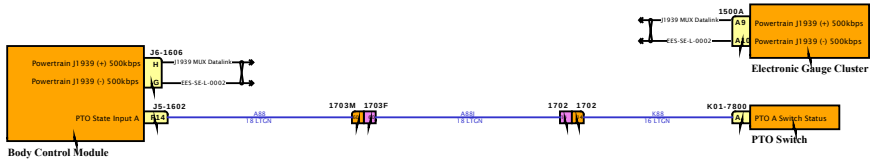

DESIGN DESCRIPTION

FEATURE CODES

SOFTWARE FEATURE CODES

NAVISTAR
NAVISTAR, INC. CONFIDENTIAL PROPRIETARY

DESIGN DESCRIPTION

FEATURE CODES

SOFTWARE FEATURE CODES

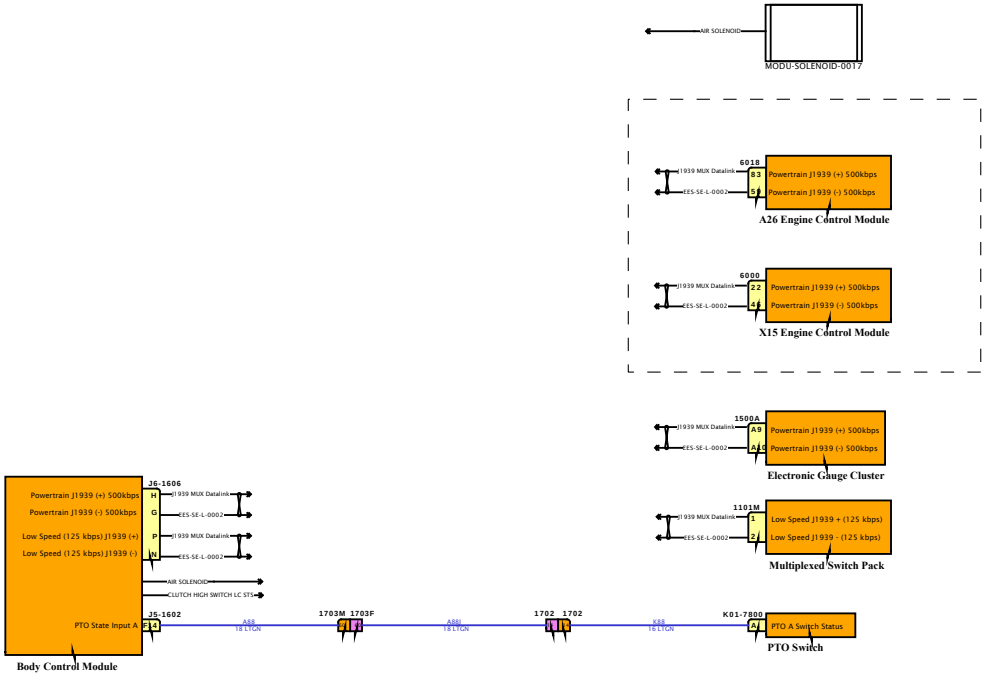

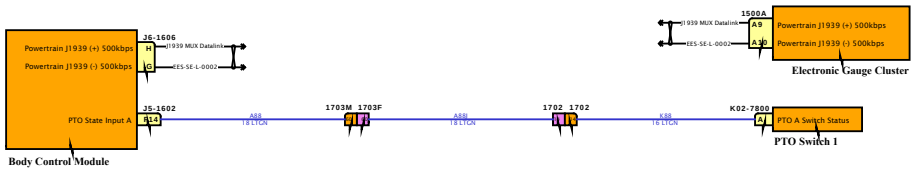

DESIGN DESCRIPTION

FEATURE CODES

SOFTWARE FEATURE CODES

NAVISTAR INC. CONFIDENTIAL PROPRIETARY

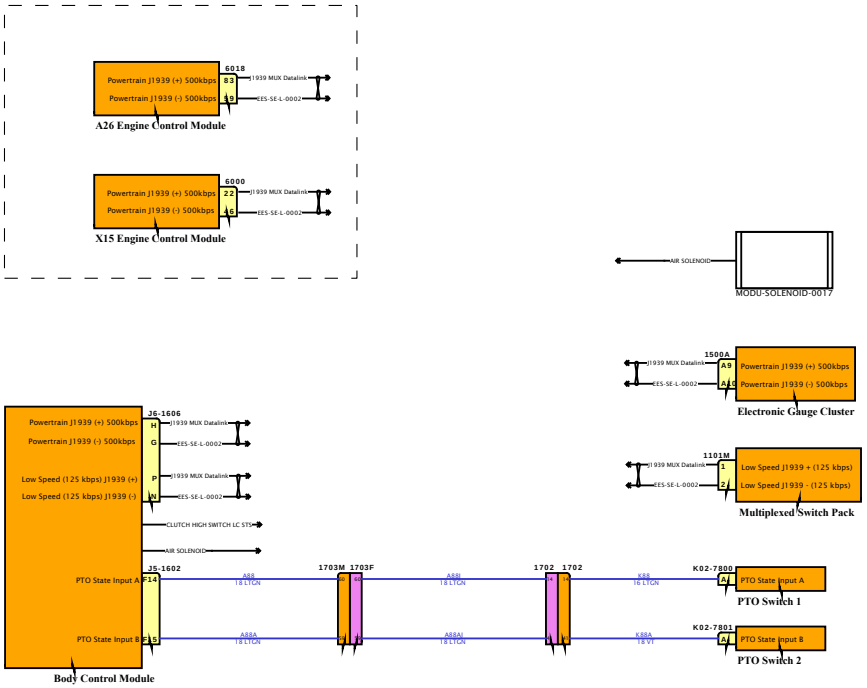

DESIGN DESCRIPTION

FEATURE CODES

SOFTWARE FEATURE CODES

Diagram1

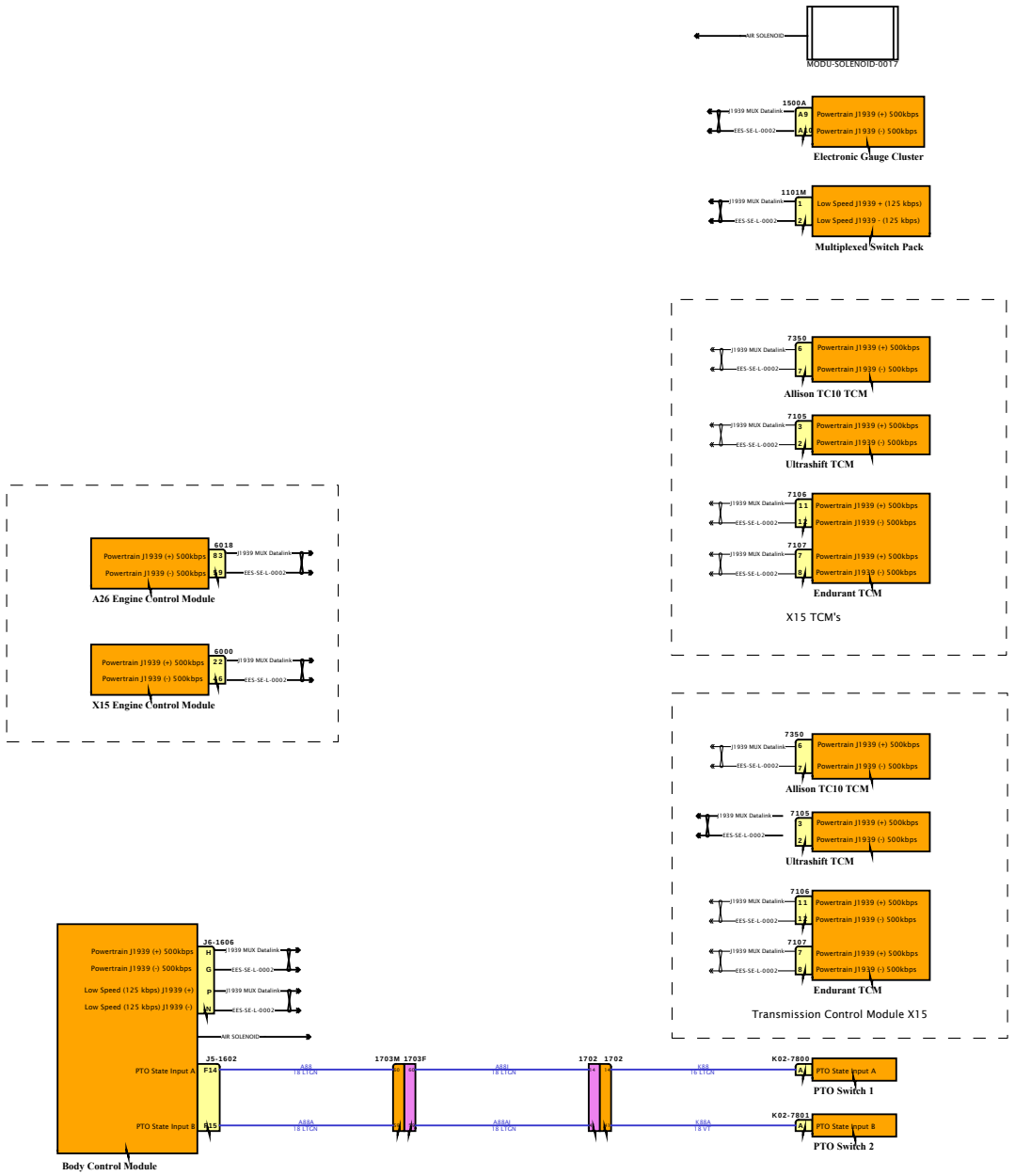

DESIGN DESCRIPTION

FEATURE CODES

SOFTWARE FEATURE CODES

Diagram1

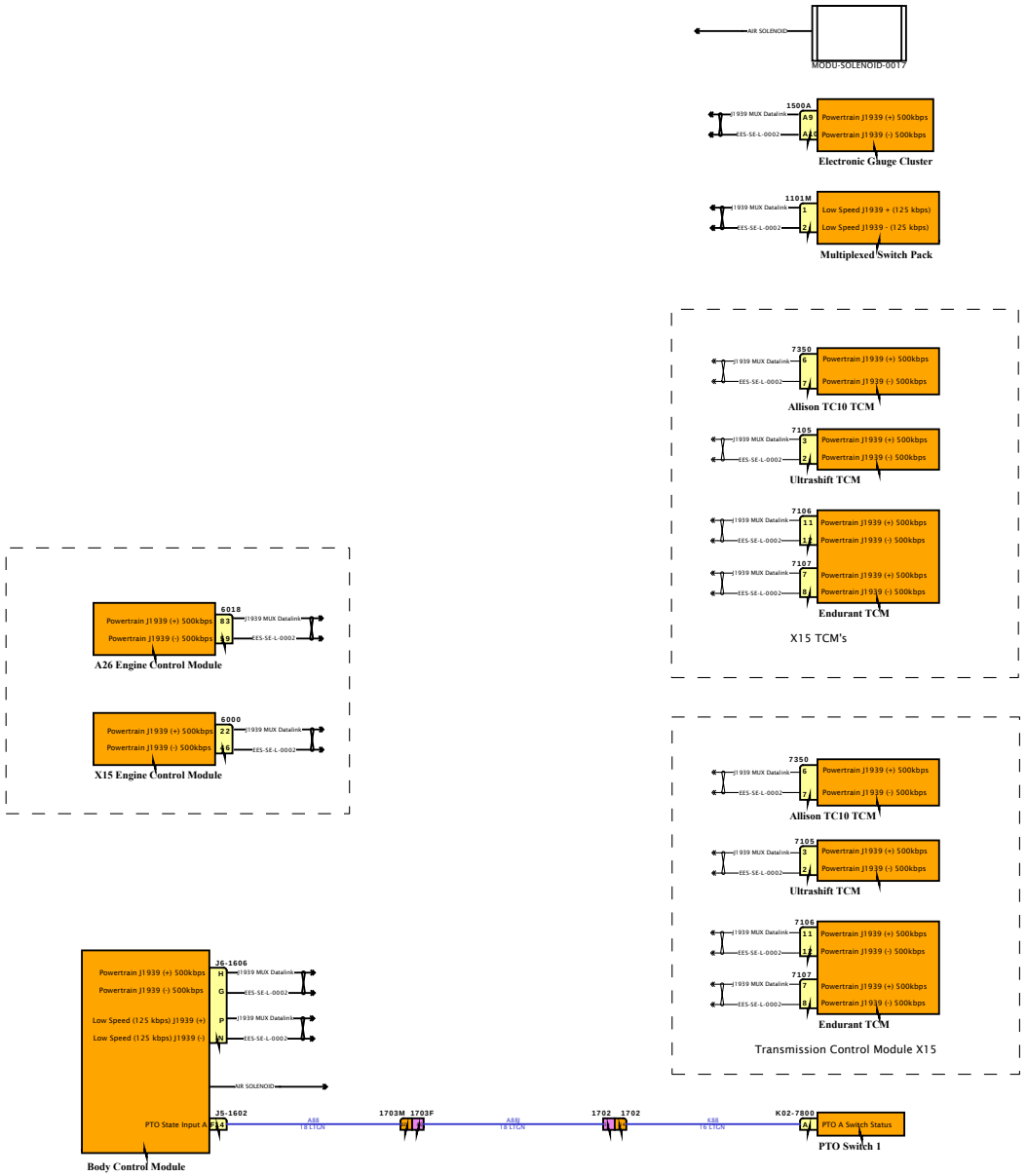

DESIGN DESCRIPTION

FEATURE CODES

SOFTWARE FEATURE CODES

NAVISTAR
NAVISTAR, INC. CONFIDENTIAL PROPRIETARY

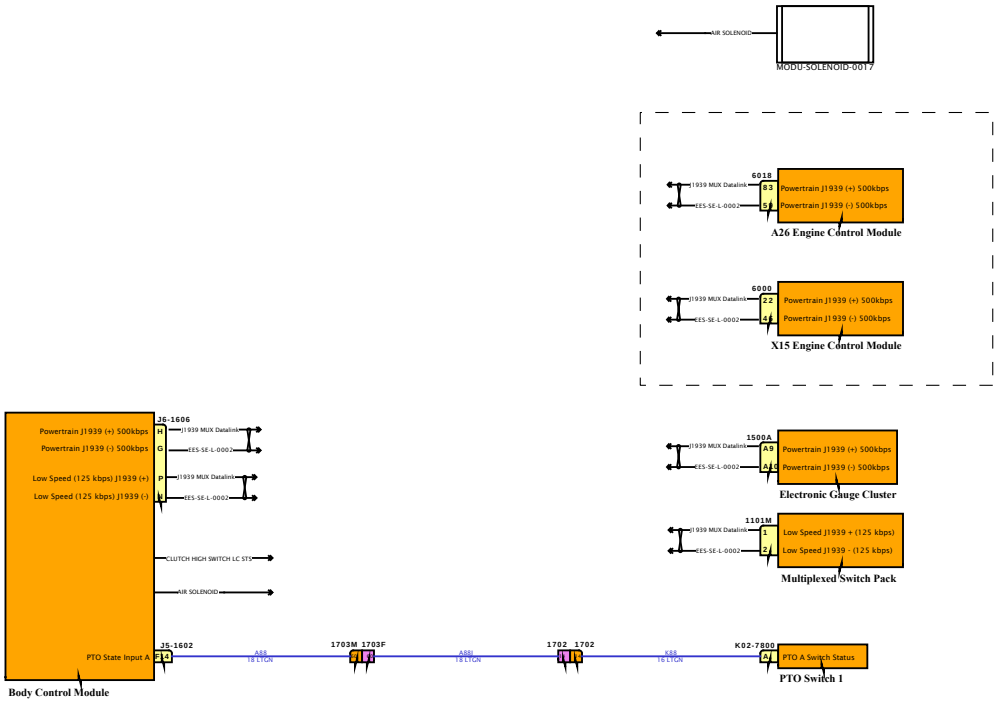

DESIGN DESCRIPTION

FEATURE CODES

SOFTWARE FEATURE CODES

Diagram1

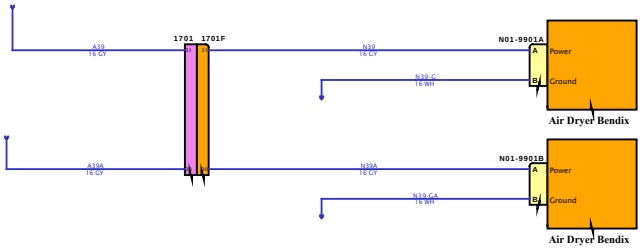

DESIGN DESCRIPTION

FEATURE CODES

SOFTWARE FEATURE CODES

NAVISTAR INC. CONFIDENTIAL PROPRIETARY

Diagram2

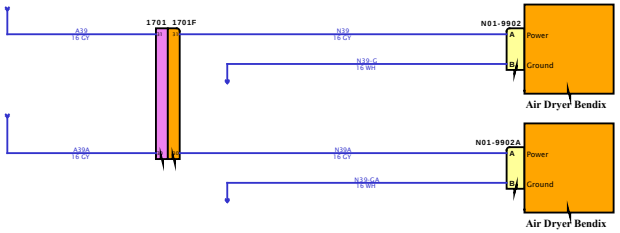

DESIGN DESCRIPTION

FEATURE CODES

SOFTWARE FEATURE CODES

NAVISTAR INC. CONFIDENTIAL PROPRIETARY

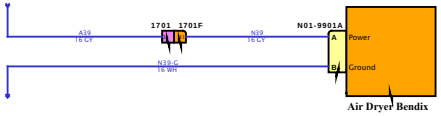

DESIGN DESCRIPTION

FEATURE CODES

SOFTWARE FEATURE CODES

NAVISTAR INC. CONFIDENTIAL PROPRIETARY

Diagram2

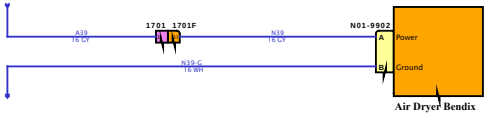

DESIGN DESCRIPTION

FEATURE CODES

SOFTWARE FEATURE CODES

NAVISTAR INC. CONFIDENTIAL PROPRIETARY

Diagram1

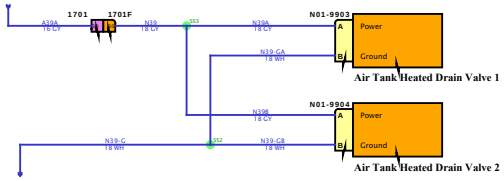

DESIGN DESCRIPTION

FEATURE CODES

SOFTWARE FEATURE CODES

NAVISTAR INC. CONFIDENTIAL PROPRIETARY

Diagram1

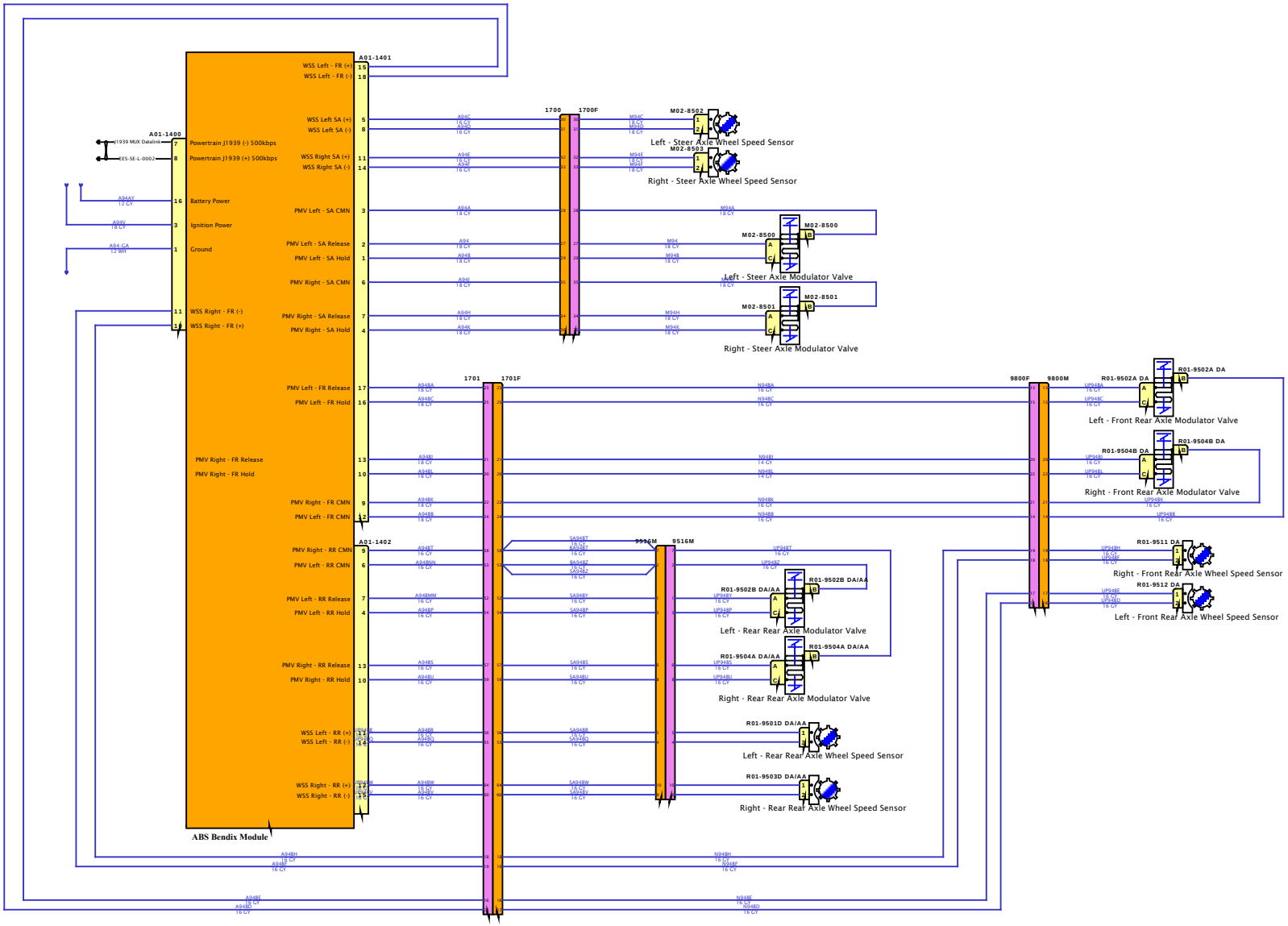

DESIGN DESCRIPTION

FEATURE CODES

SOFTWARE FEATURE CODES

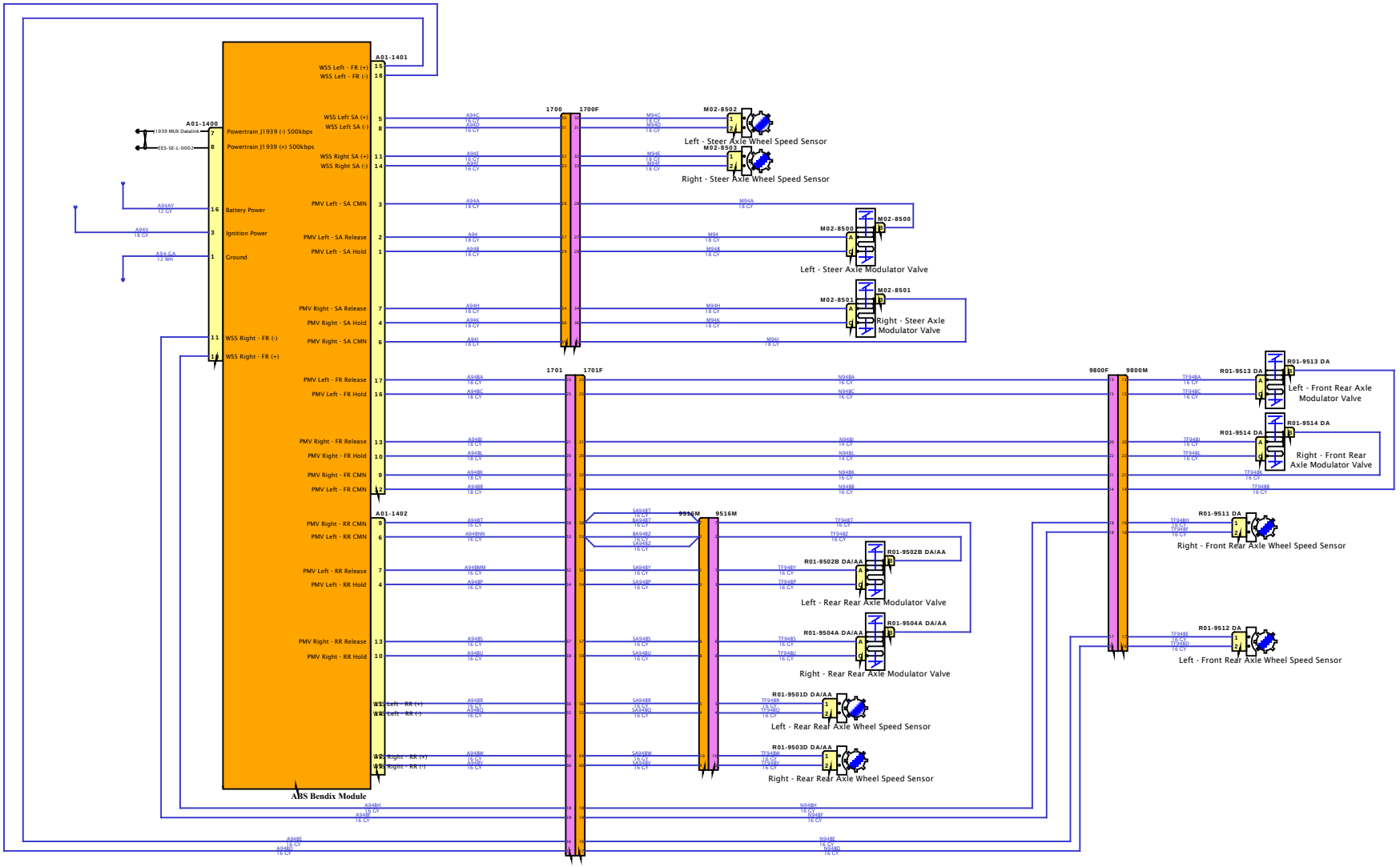
A01-1401
A01-1400
A01-1402
WSS Left - FR (+)
WSS Left - FR (-)
WSS Left SA (+)
WSS Left SA (-)
WSS Right SA (+)
WSS Right SA (-)
Powertrain J1939 (-) 500kbps
Powertrain J1939 (+) 500kbps
Battery Power
Ignition Power
Ground
PMV Left - SA CMN
PMV Left - SA Release
PMV Left - SA Hold
PMV Right - SA Release
PMV Right - SA Hold
PMV Right - SA CMN
WSS Right - FR (-)
WSS Right - FR (+)
PMV Left - FR Release
PMV Left - FR Hold
PMV Right - FR Release
PMV Right - FR Hold
PMV Right - FR CMN
PMV Left - FR CMN
PMV Right - RR CMN
PMV Left - RR CMN
PMV Left - RR Release
PMV Left - RR Hold
PMV Right - RR Release
PMV Right - RR Hold
WSS Left - RR (+)
WSS Left - RR (-)
WSS Right - RR (+)
WSS Right - RR (-)
ABS Bendix Module
1700
1700F
1701
1701F
9516M
9800F
9800M
M02-8502
Left - Steer Axle Wheel Speed Sensor
M02-8503
Right - Steer Axle Wheel Speed Sensor
M02-8500
Left - Steer Axle Modulator Valve
M02-8501
Right - Steer Axle Modulator Valve
R01-9513 DA
Left - Front Rear Axle Modulator Valve
R01-9514 DA
Right - Front Rear Axle Modulator Valve
R01-9511 DA
Right - Front Rear Axle Wheel Speed Sensor
R01-9502B DA/AA
Left - Rear Rear Axle Modulator Valve
R01-9504A DA/AA
Right - Rear Rear Axle Modulator Valve
R01-9512 DA
Left - Front Rear Axle Wheel Speed Sensor
R01-9501D DA/AA
Left - Rear Rear Axle Wheel Speed Sensor
R01-9503D DA/AA
Right - Rear Rear Axle Wheel Speed Sensor
DESIGN DESCRIPTION
FEATURE CODES
SOFTWARE FEATURE CODES
NAVISTAR
NAVISTAR, INC. CONFIDENTIAL PROPRIETARY

Diagram3

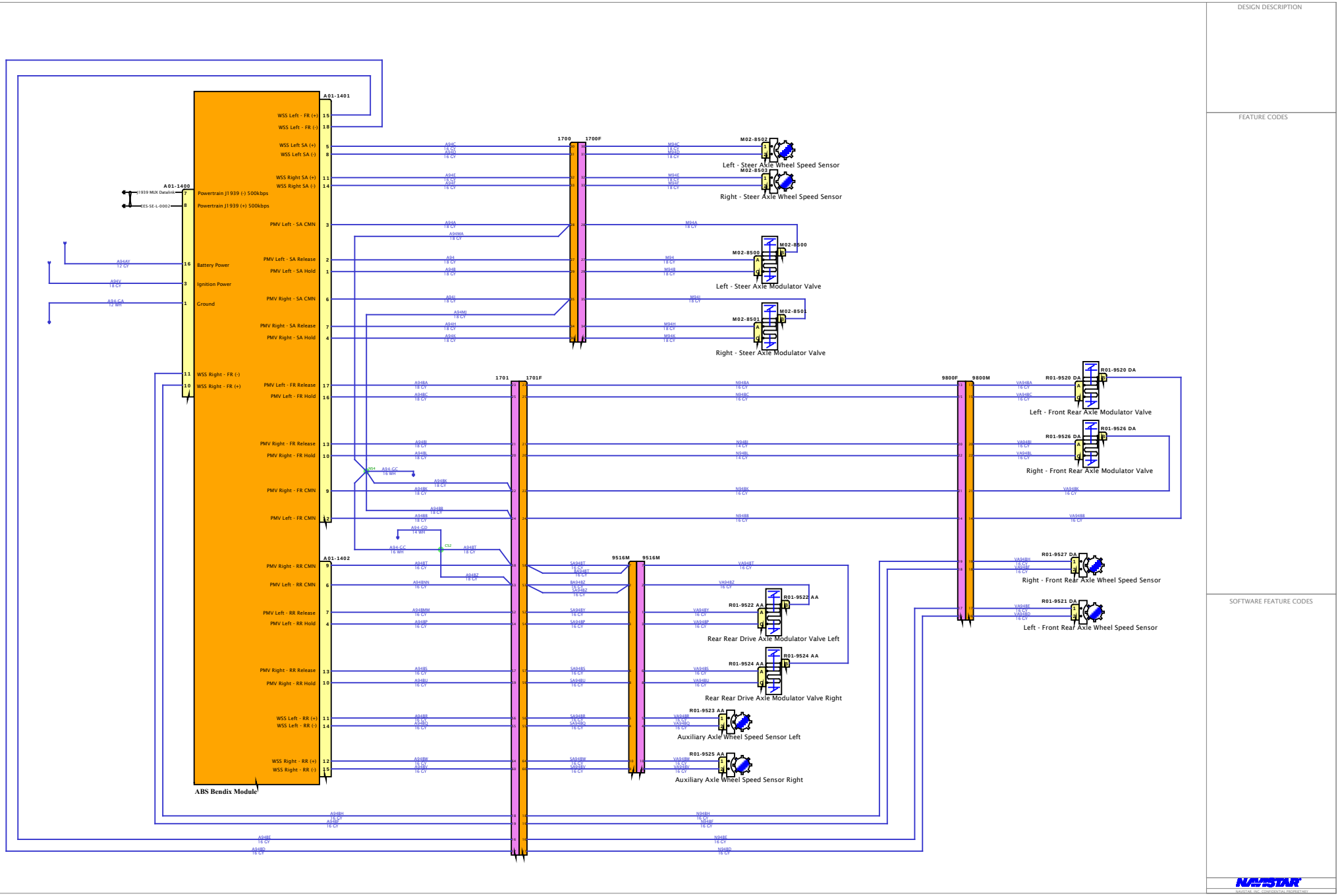
DESIGN DESCRIPTION
FEATURE CODES
SOFTWARE FEATURE CODES
A01-1401
A01-1400
A01-1402
ABS Bendix Module
WSS Left - FR (+)
WSS Left - FR (-)
WSS Left SA (+)
WSS Left SA (-)
WSS Right SA (+)
WSS Right SA (-)
Powertrain J1939 (-) 500kbps
Powertrain J1939 (+) 500kbps
PMV Left - SA CMN
PMV Left - SA Release
PMV Left - SA Hold
Battery Power
Ignition Power
Ground
PMV Right - SA CMN
PMV Right - SA Release
PMV Right - SA Hold
WSS Right - FR (-)
WSS Right - FR (+)
PMV Left - FR Release
PMV Left - FR Hold
PMV Right - FR Release
PMV Right - FR Hold
PMV Right - FR CMN
PMV Left - FR CMN
PMV Right - RR CMN
PMV Left - RR CMN
PMV Left - RR Release
PMV Left - RR Hold
PMV Right - RR Release
PMV Right - RR Hold
WSS Left - RR (+)
WSS Left - RR (-)
WSS Right - RR (+)
WSS Right - RR (-)
J1939 MUX Datalink
CES-SE-L-0002
1700
1700F
1701
1701F
9516M
9516M
9800F
9800M
M02-8502
Left - Steer Axle Wheel Speed Sensor
M02-8503
Right - Steer Axle Wheel Speed Sensor
M02-8500
Left - Steer Axle Modulator Valve
M02-8501
Right - Steer Axle Modulator Valve
R01-9520 DA
Left - Front Rear Axle Modulator Valve
R01-9526 DA
Right - Front Rear Axle Modulator Valve
R01-9527 DA
Right - Front Rear Axle Wheel Speed Sensor
R01-9521 DA
Left - Front Rear Axle Wheel Speed Sensor
R01-9522 AA
Rear Rear Drive Axle Modulator Valve Left
R01-9524 AA
Rear Rear Drive Axle Modulator Valve Right
R01-9523 AA
Auxiliary Axle Wheel Speed Sensor Left
R01-9525 AA
Auxiliary Axle Wheel Speed Sensor Right
NAVISTAR
NAVISTAR, INC. CONFIDENTIAL PROPRIETARY

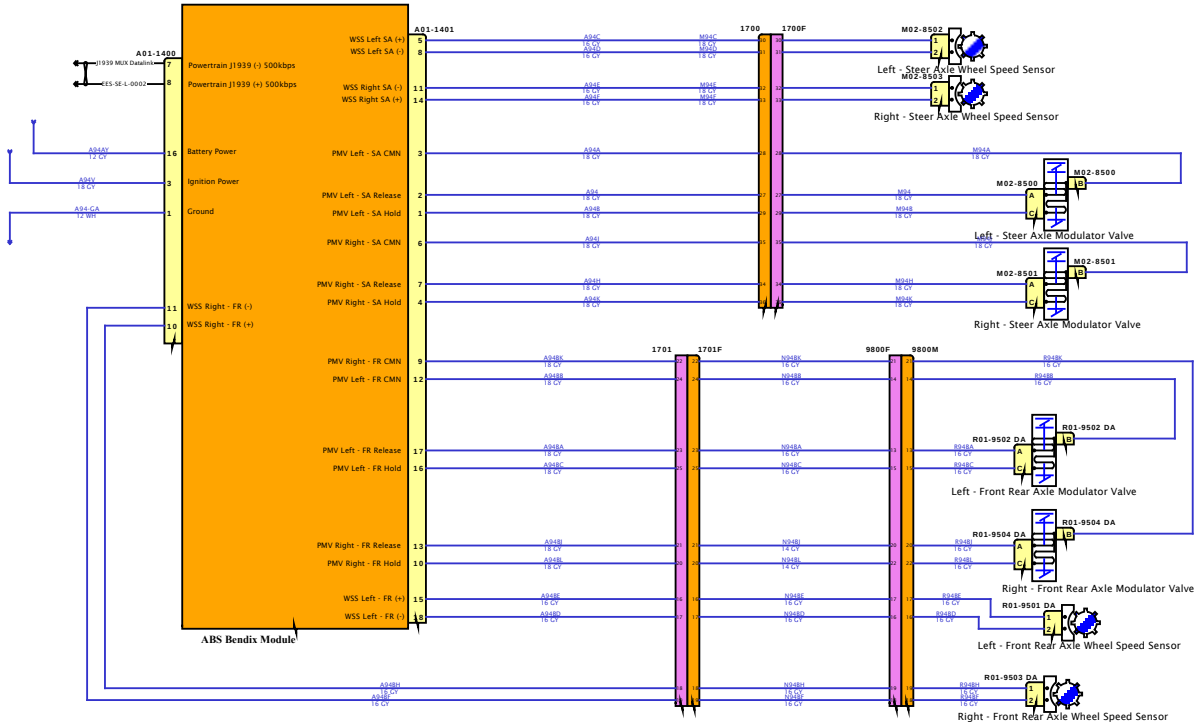

DESIGN DESCRIPTION

FEATURE CODES

SOFTWARE FEATURE CODES

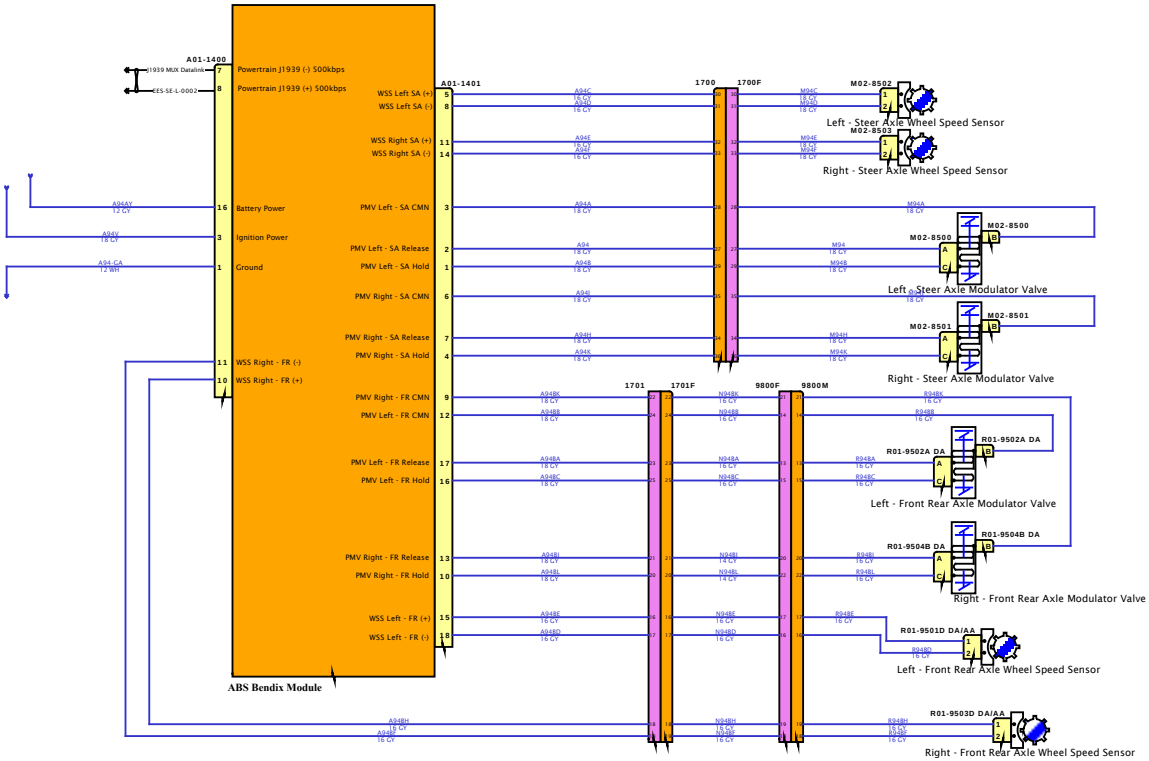

DESIGN DESCRIPTION

FEATURE CODES

SOFTWARE FEATURE CODES

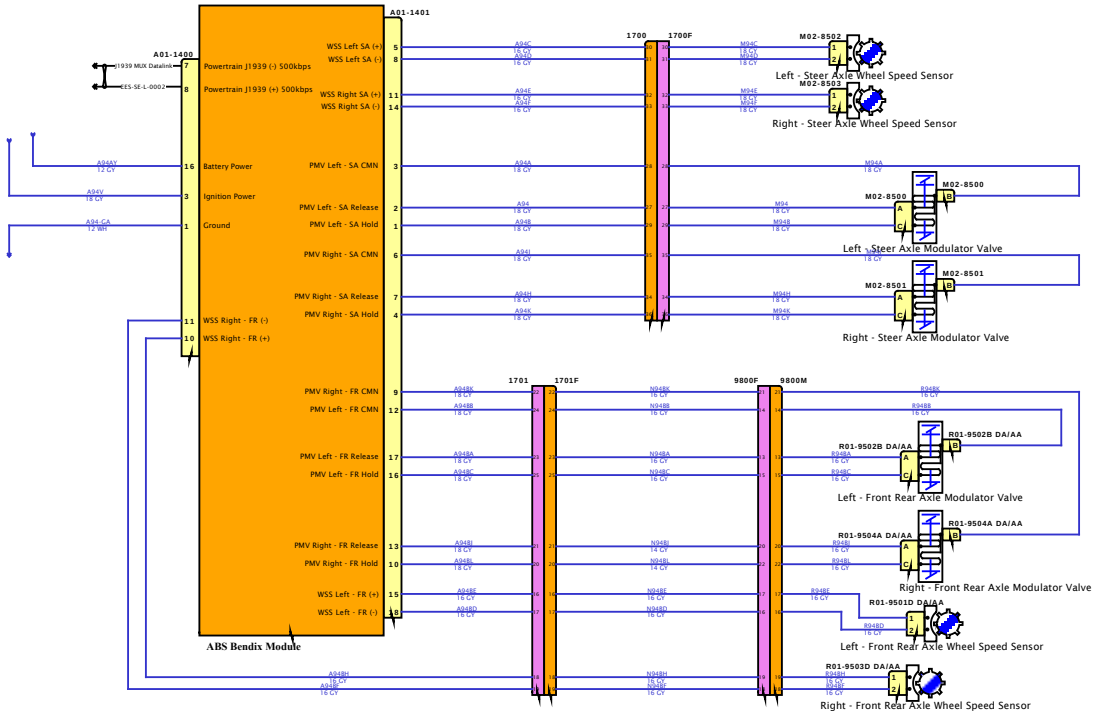

DESIGN DESCRIPTION

FEATURE CODES

SOFTWARE FEATURE CODES

NAVISTAR
NAVISTAR, INC. CONFIDENTIAL PROPRIETARY

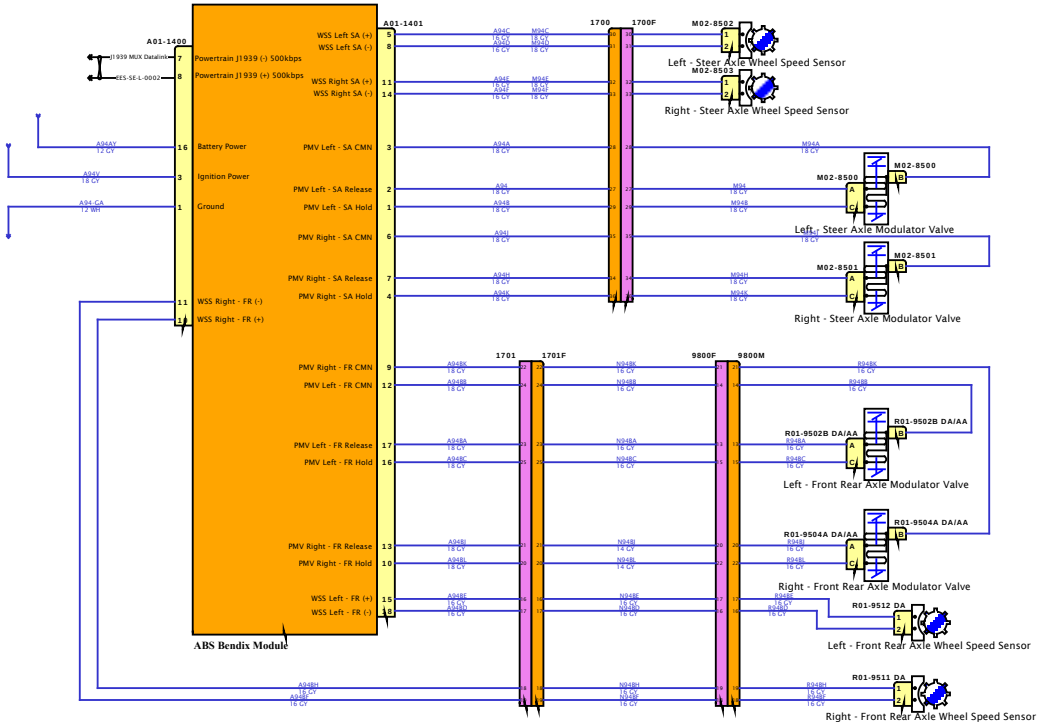

DESIGN DESCRIPTION

FEATURE CODES

SOFTWARE FEATURE CODES

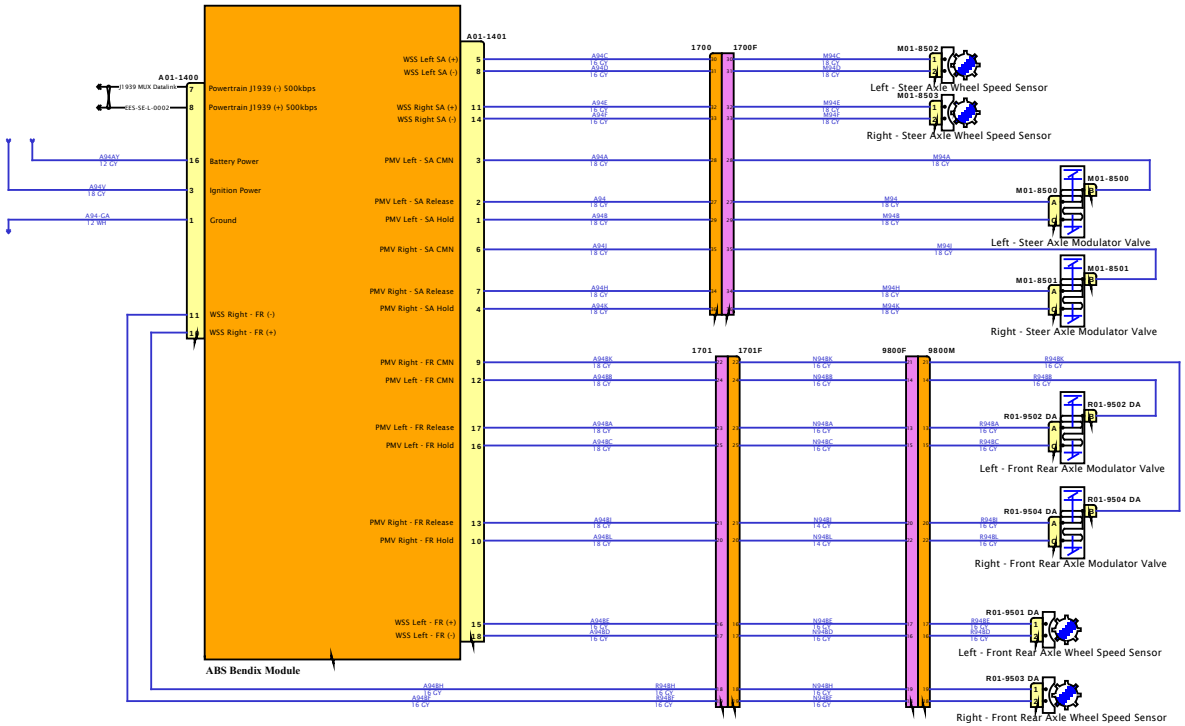

DESIGN DESCRIPTION

FEATURE CODES

SOFTWARE FEATURE CODES

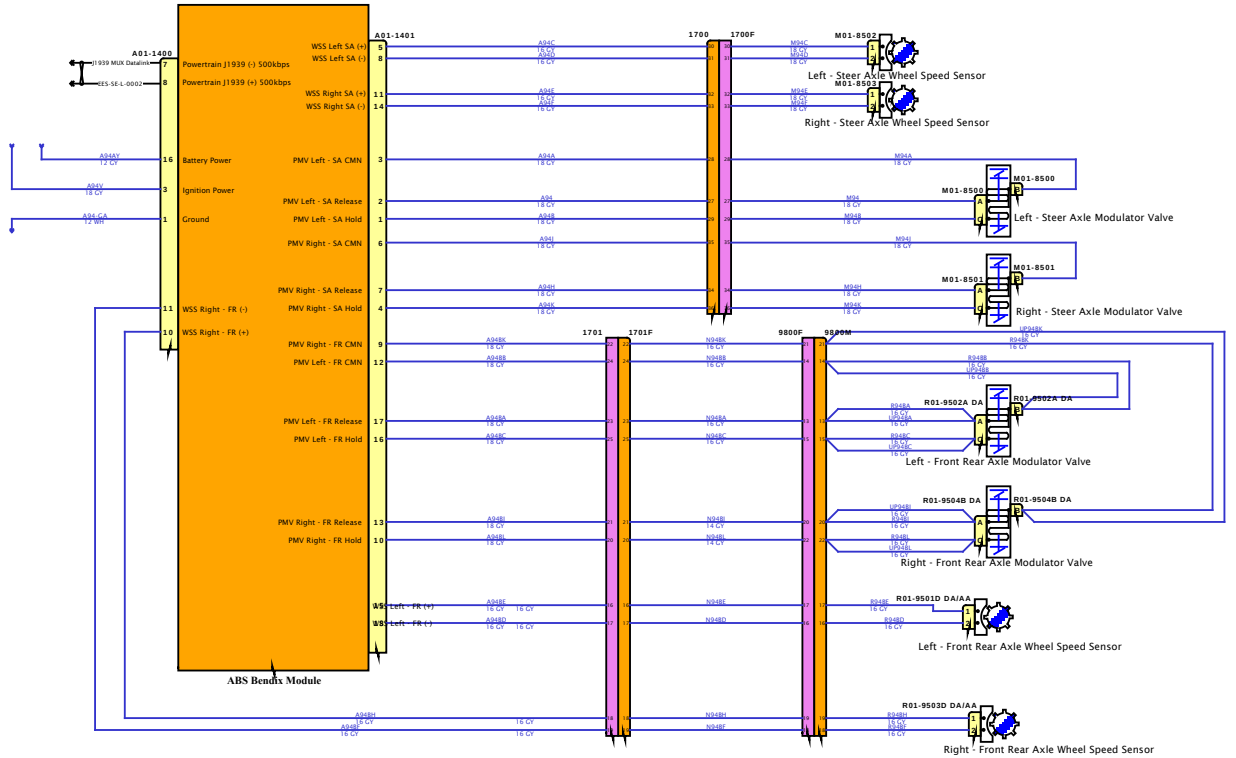

DESIGN DESCRIPTION

FEATURE CODES

SOFTWARE FEATURE CODES

NAVISTAR
NAVISTAR, INC. CONFIDENTIAL PROPRIETARY

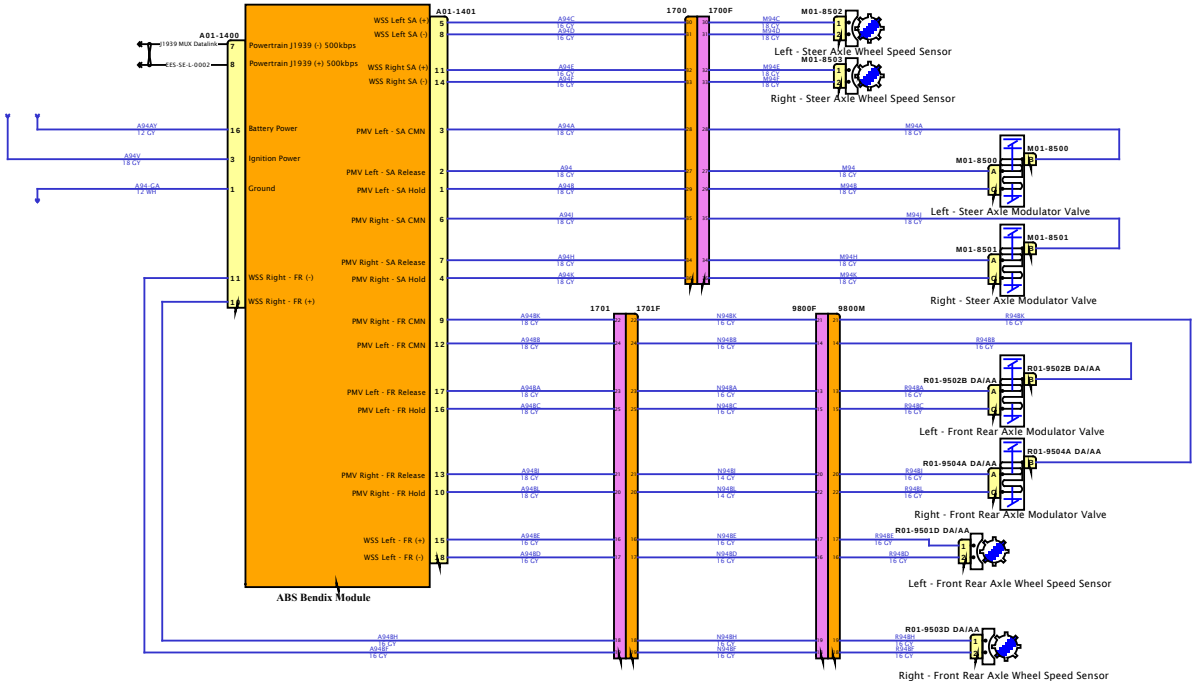

DESIGN DESCRIPTION

FEATURE CODES

SOFTWARE FEATURE CODES

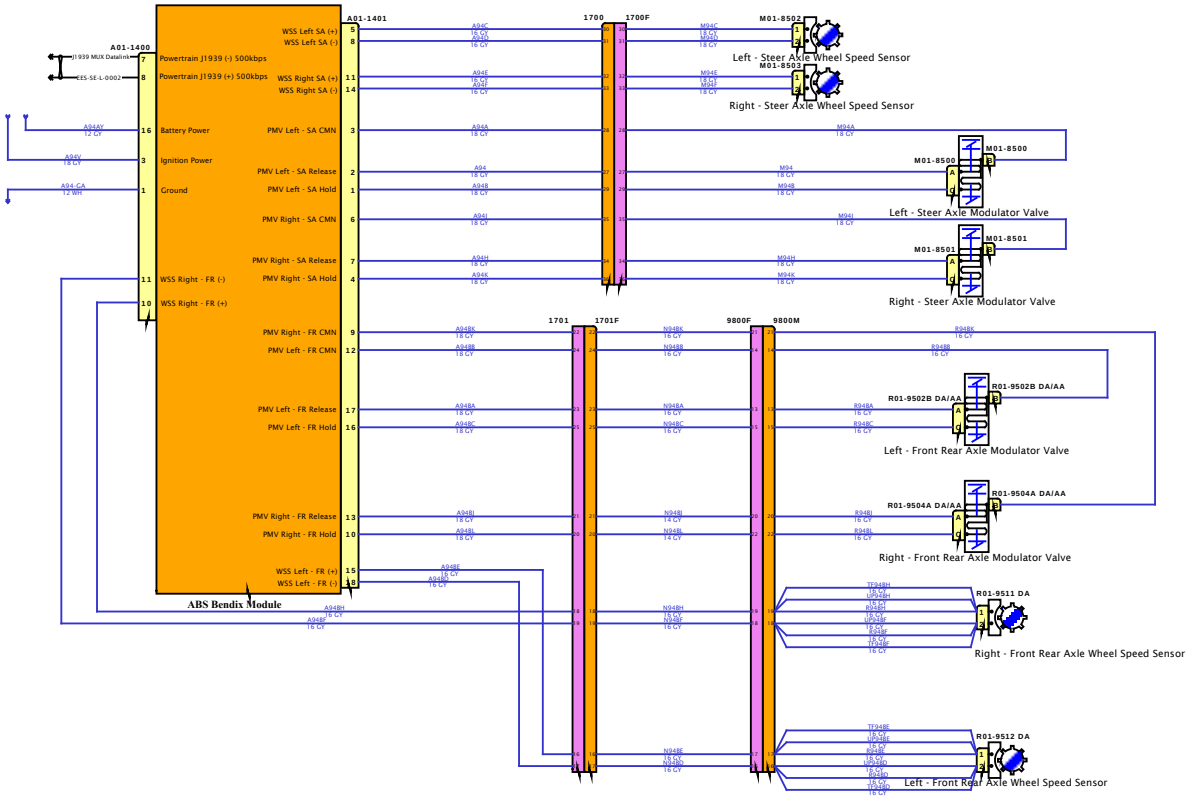

DESIGN DESCRIPTION

FEATURE CODES

SOFTWARE FEATURE CODES

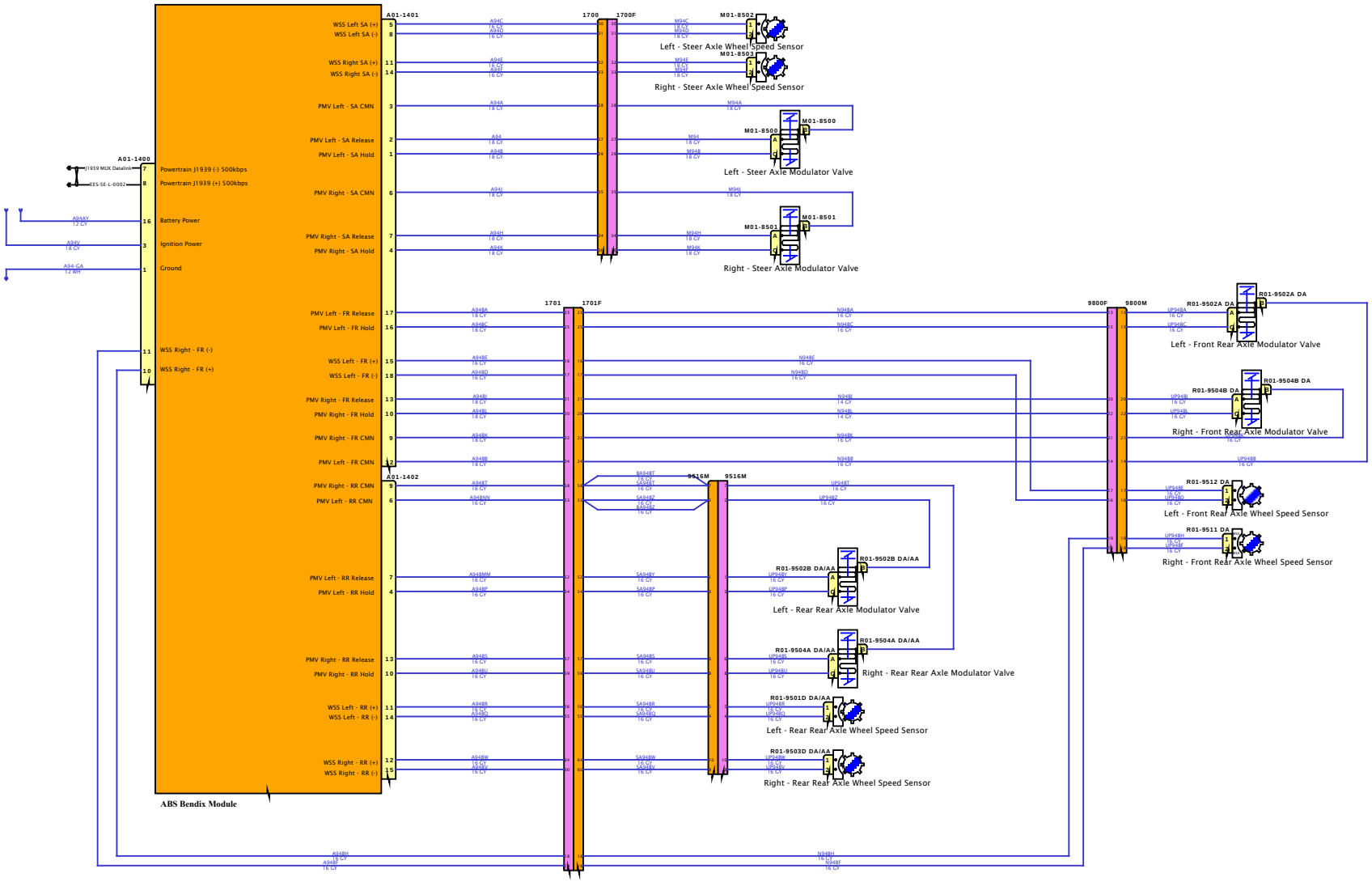

DESIGN DESCRIPTION

FEATURE CODES

SOFTWARE FEATURE CODES

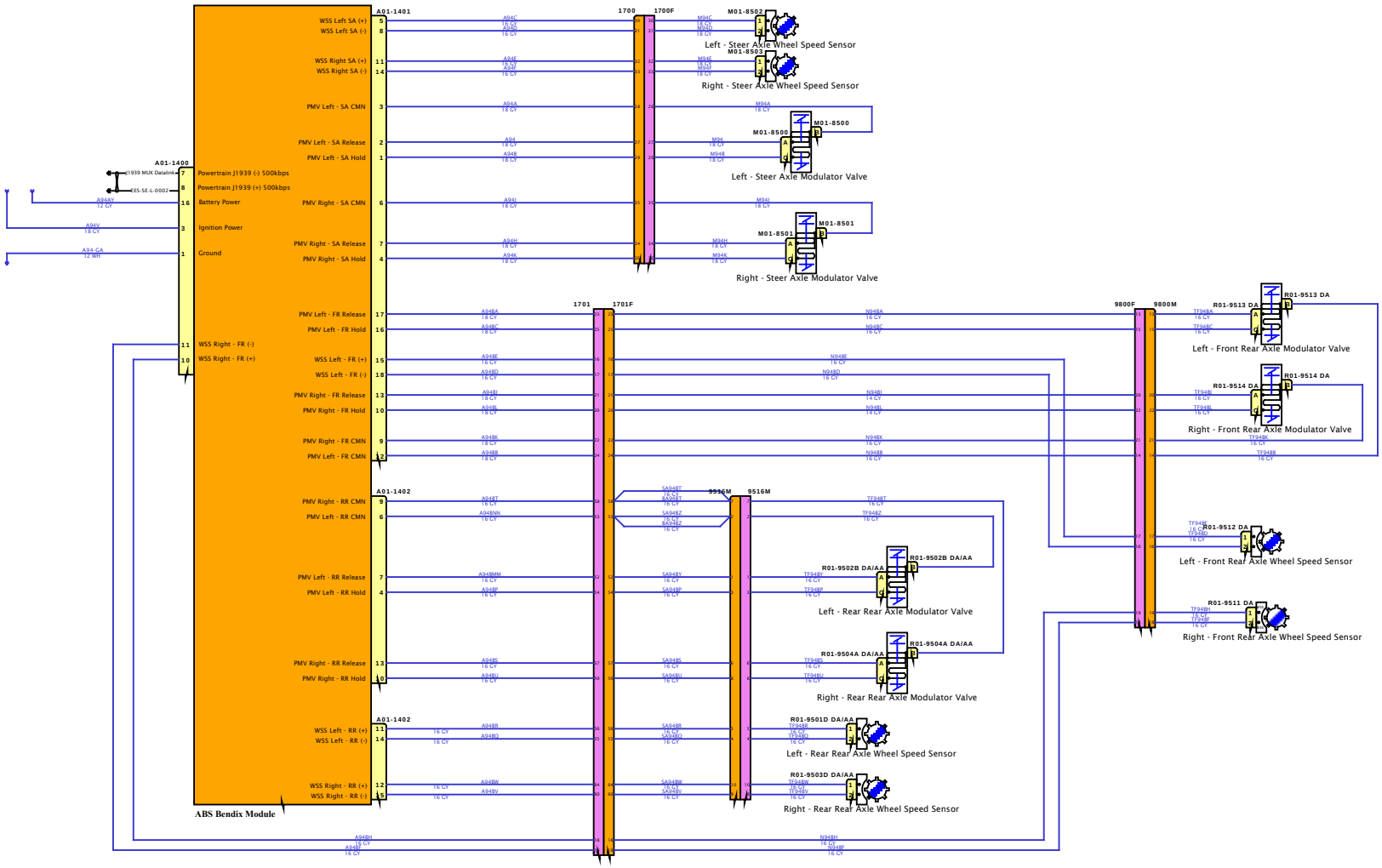

DESIGN DESCRIPTION

FEATURE CODES

SOFTWARE FEATURE CODES

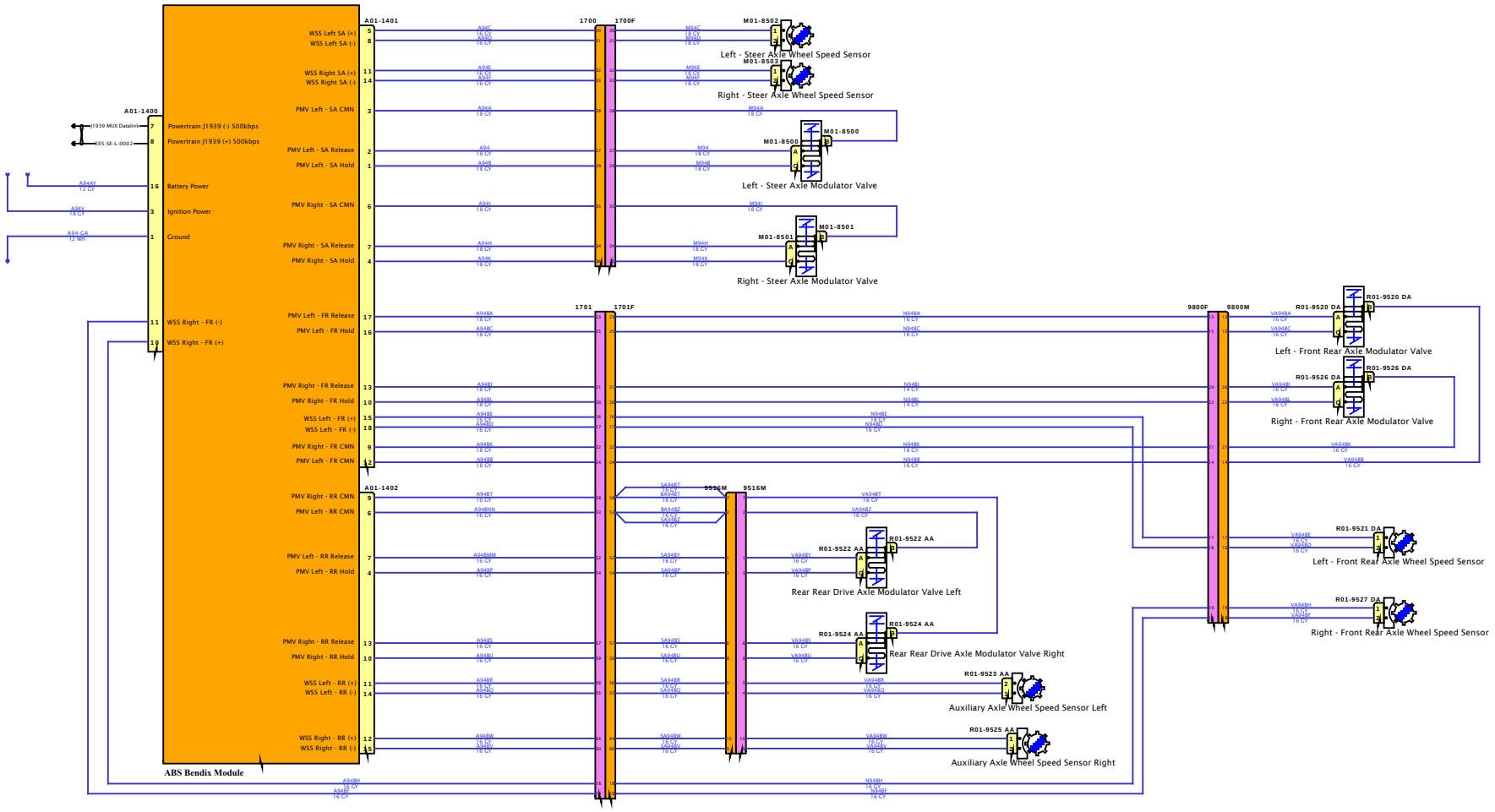
A01-1401
A01-1400
A01-1402
ABS Bendix Module
WSS Left SA (+)
WSS Left SA (-)
WSS Right SA (+)
WSS Right SA (-)
PMV Left - SA CMN
PMV Left - SA Release
PMV Left - SA Hold
PMV Right - SA CMN
PMV Right - SA Release
PMV Right - SA Hold
PMV Left - FR Release
PMV Left - FR Hold
PMV Right - FR Release
PMV Right - FR Hold
WSS Left - FR (+)
WSS Left - FR (-)
PMV Right - FR CMN
PMV Left - FR CMN
PMV Left - RR CMN
PMV Left - RR CMN
PMV Left - RR Release
PMV Left - RR Hold
PMV Right - RR Release
PMV Right - RR Hold
WSS Left - RR (+)
WSS Left - RR (-)
WSS Right - RR (+)
WSS Right - RR (-)
Powertrain J1939 (-) 500kbps
Powertrain J1939 (+) 500kbps
Battery Power
Ignition Power
Ground
WSS Right - FR (-)
WSS Right - FR (+)
1700
1700F
1701
1701F
9516M
9800F
9800M
M01-8502
Left - Steer Axle Wheel Speed Sensor
M01-8503
Right - Steer Axle Wheel Speed Sensor
M01-8500
Left - Steer Axle Modulator Valve
M01-8501
Right - Steer Axle Modulator Valve
R01-9520 DA
Left - Front Rear Axle Modulator Valve
R01-9526 DA
Right - Front Rear Axle Modulator Valve
R01-9522 AA
Rear Rear Drive Axle Modulator Valve Left
R01-9524 AA
Rear Rear Drive Axle Modulator Valve Right
R01-9523 AA
Auxiliary Axle Wheel Speed Sensor Left
R01-9525 AA
Auxiliary Axle Wheel Speed Sensor Right
R01-9521 DA
Left - Front Rear Axle Wheel Speed Sensor
R01-9527 DA
Right - Front Rear Axle Wheel Speed Sensor
DESIGN DESCRIPTION
FEATURE CODES
SOFTWARE FEATURE CODES
NAVISTAR
NAVISTAR, INC. CONFIDENTIAL PROPRIETARY

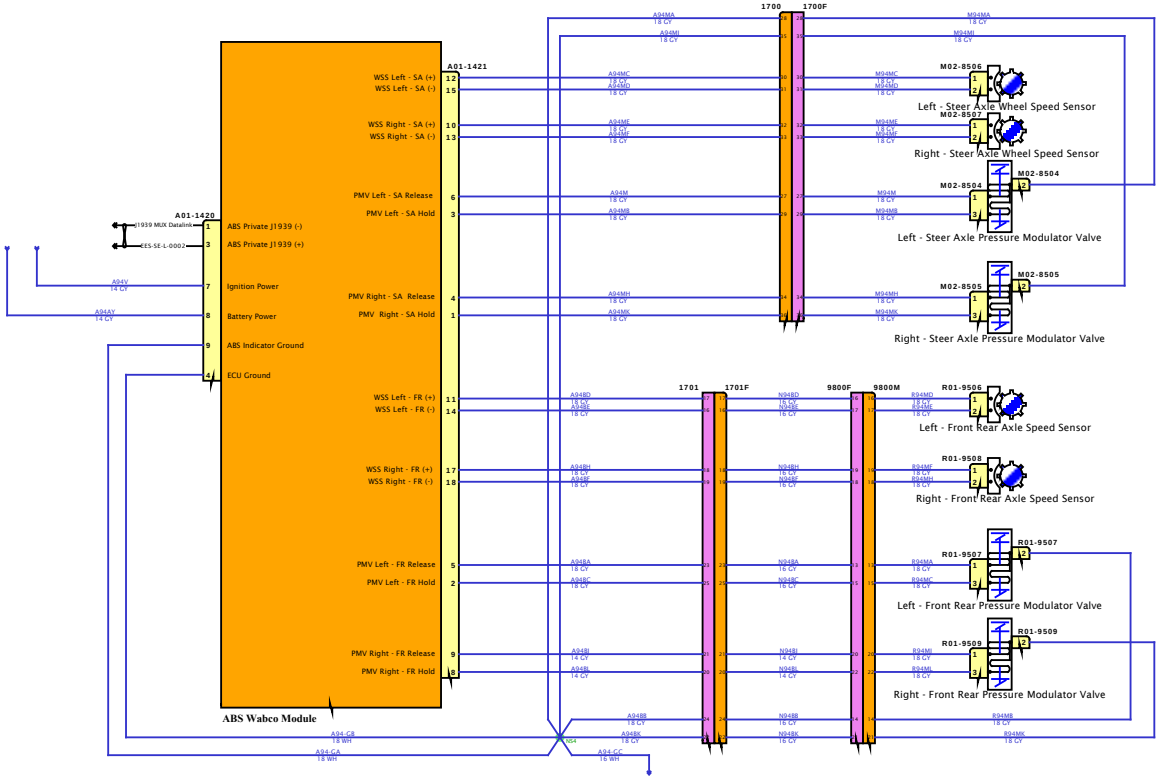

DESIGN DESCRIPTION

FEATURE CODES

SOFTWARE FEATURE CODES

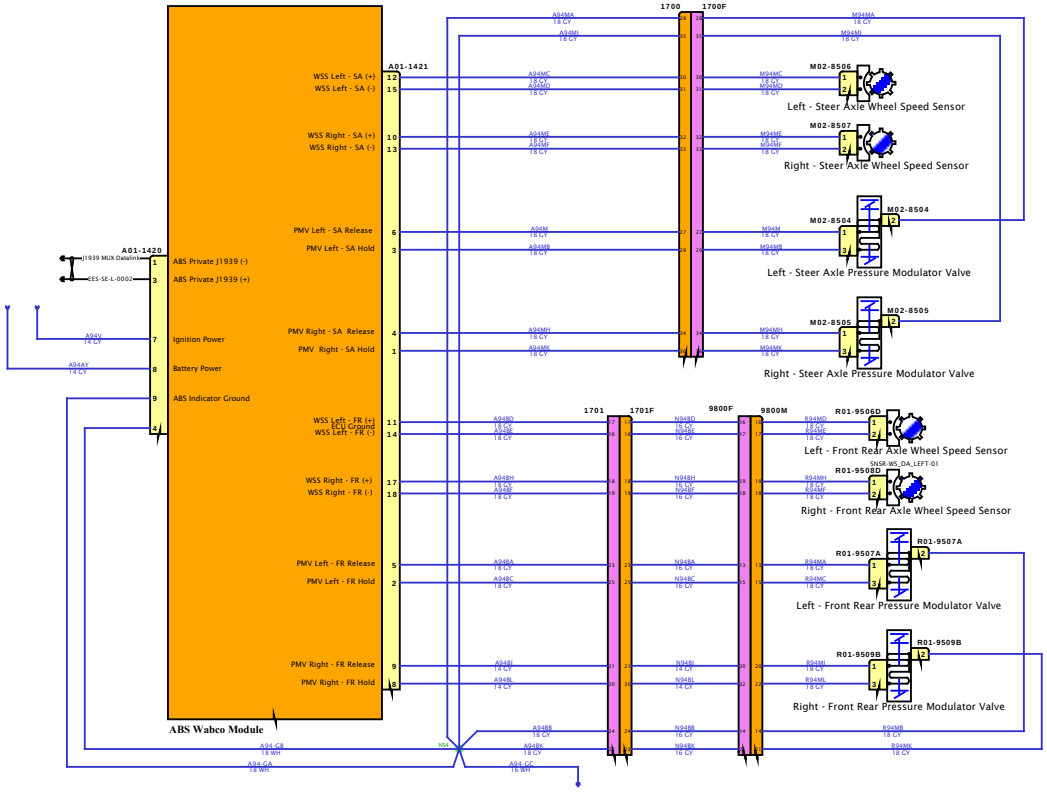

DESIGN DESCRIPTION

FEATURE CODES

SOFTWARE FEATURE CODES

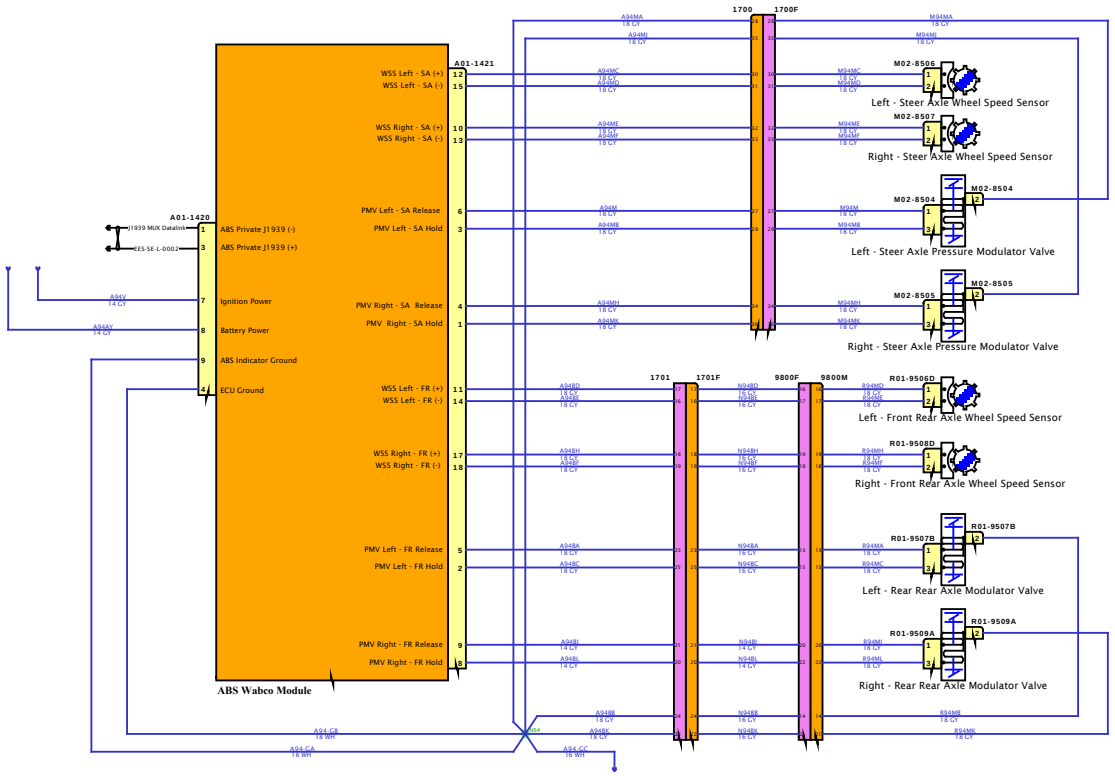

DESIGN DESCRIPTION

FEATURE CODES

SOFTWARE FEATURE CODES

NAVISTAR
NAVISTAR, INC. CONFIDENTIAL PROPRIETARY

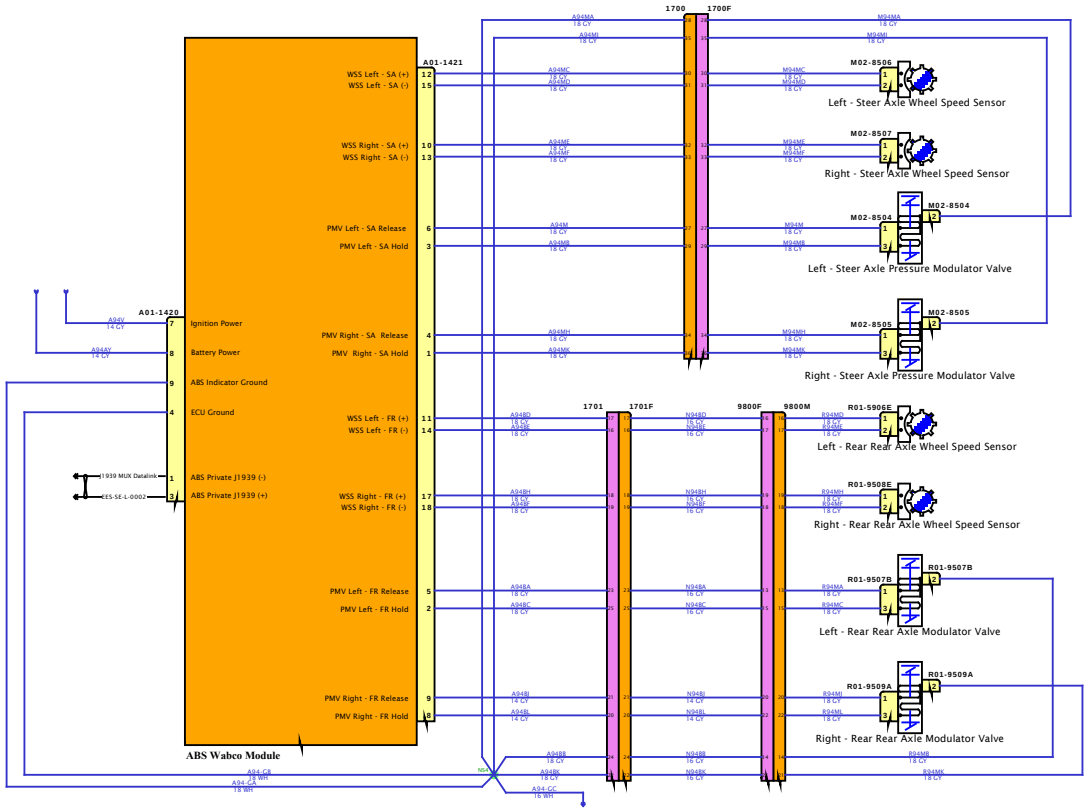

DESIGN DESCRIPTION

FEATURE CODES

SOFTWARE FEATURE CODES

NAVISTAR
NAVISTAR, INC. CONFIDENTIAL PROPRIETARY

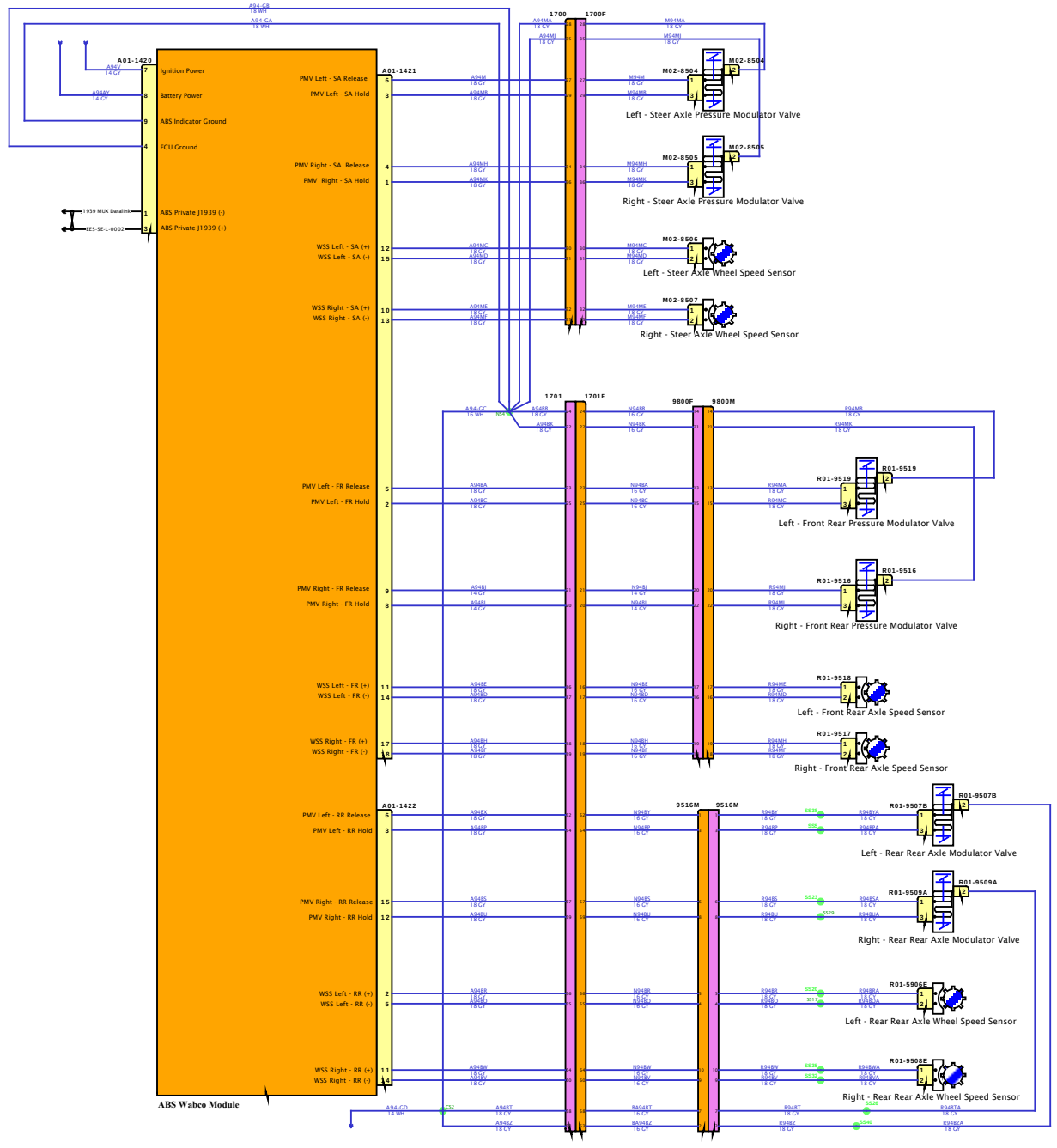
A01-1420
Ignition Power
Battery Power
ABS Indicator Ground
ECU Ground
J1939 MUX Datalink
EES-SE-L-0002
ABS Private J1939 (-)
ABS Private J1939 (+)
A01-1421
PMV Left - SA Release
PMV Left - SA Hold
PMV Right - SA Release
PMV Right - SA Hold
WSS Left - SA (+)
WSS Left - SA (-)
WSS Right - SA (+)
WSS Right - SA (-)
1700
1700F
M02-8504
Left - Steer Axle Pressure Modulator Valve
M02-8505
Right - Steer Axle Pressure Modulator Valve
M02-8506
Left - Steer Axle Wheel Speed Sensor
M02-8507
Right - Steer Axle Wheel Speed Sensor
1701
1701F
9800F
9800M
R01-9519
Left - Front Rear Pressure Modulator Valve
R01-9516
Right - Front Rear Pressure Modulator Valve
R01-9518
Left - Front Rear Axle Speed Sensor
R01-9517
Right - Front Rear Axle Speed Sensor
PMV Left - FR Release
PMV Left - FR Hold
PMV Right - FR Release
PMV Right - FR Hold
WSS Left - FR (+)
WSS Left - FR (-)
WSS Right - FR (+)
WSS Right - FR (-)
A01-1422
PMV Left - RR Release
PMV Left - RR Hold
PMV Right - RR Release
PMV Right - RR Hold
WSS Left - RR (+)
WSS Left - RR (-)
WSS Right - RR (+)
WSS Right - RR (-)
9516M
9516M
R01-9507B
Left - Rear Rear Axle Modulator Valve
R01-9509A
Right - Rear Rear Axle Modulator Valve
R01-9506E
Left - Rear Rear Axle Wheel Speed Sensor
R01-9508E
Right - Rear Rear Axle Wheel Speed Sensor
ABS Wabco Module
DESIGN DESCRIPTION
FEATURE CODES
SOFTWARE FEATURE CODES
NAVISTAR
NAVISTAR, INC. CONFIDENTIAL PROPRIETARY

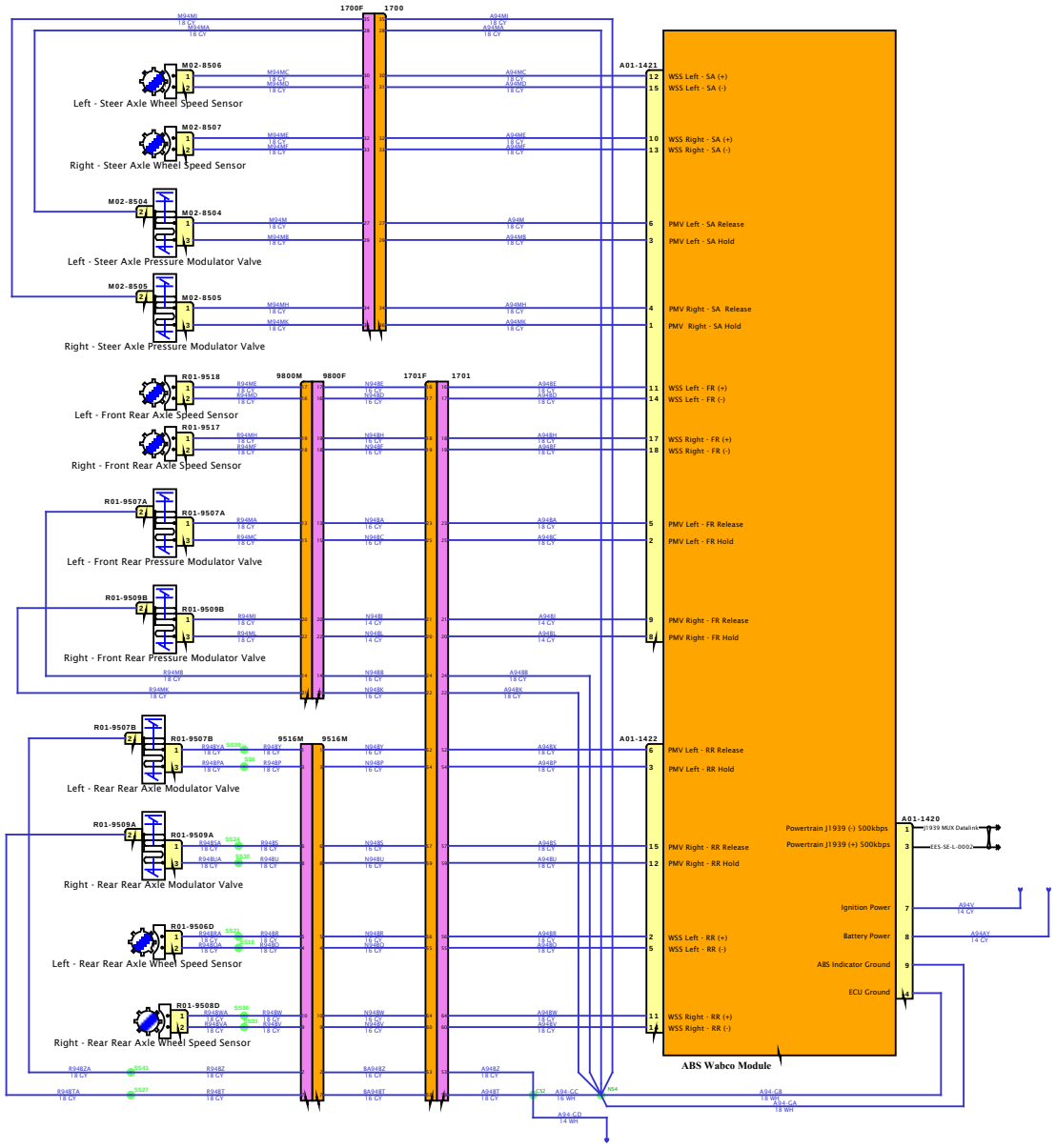

DESIGN DESCRIPTION

FEATURE CODES

SOFTWARE FEATURE CODES

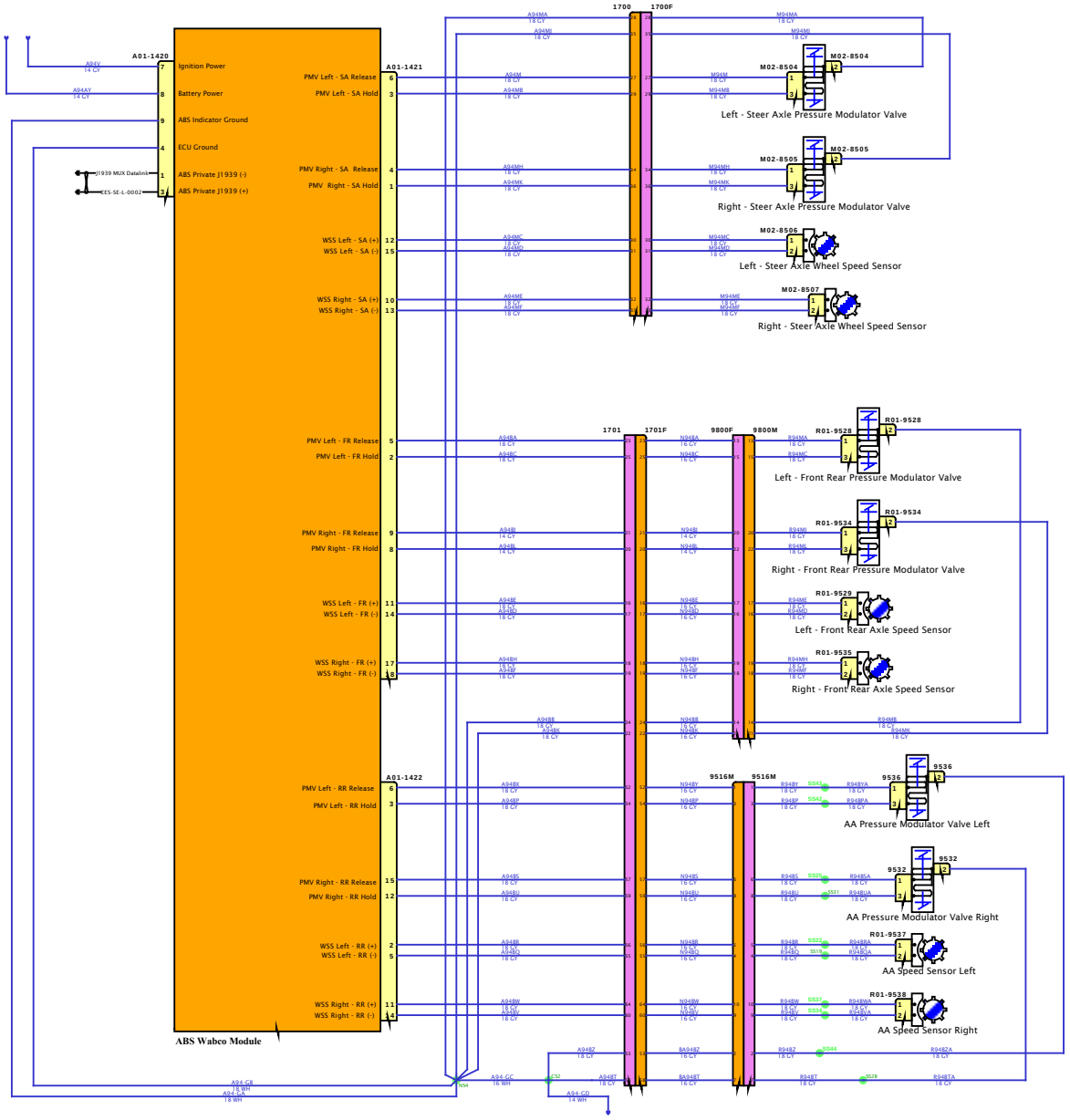

DESIGN DESCRIPTION

FEATURE CODES

SOFTWARE FEATURE CODES

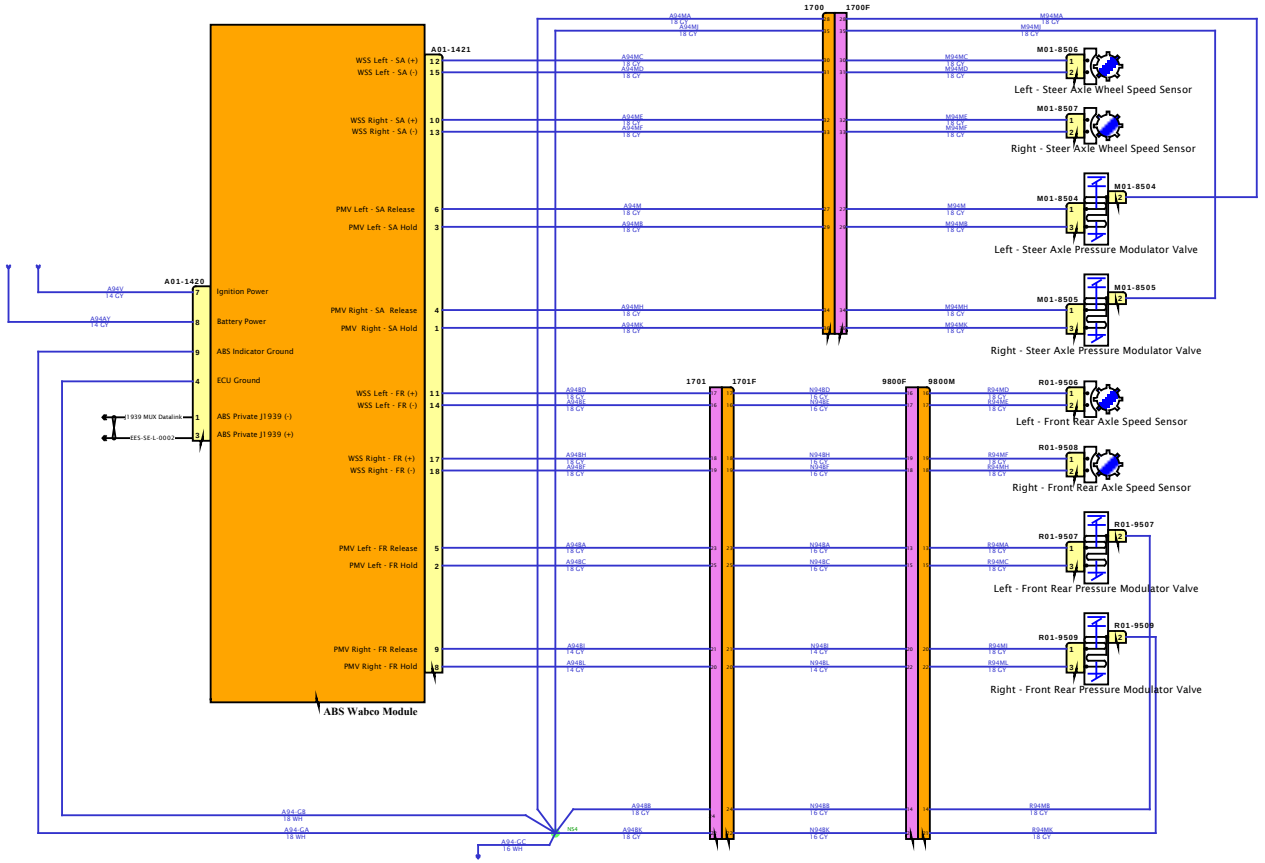

DESIGN DESCRIPTION

FEATURE CODES

SOFTWARE FEATURE CODES

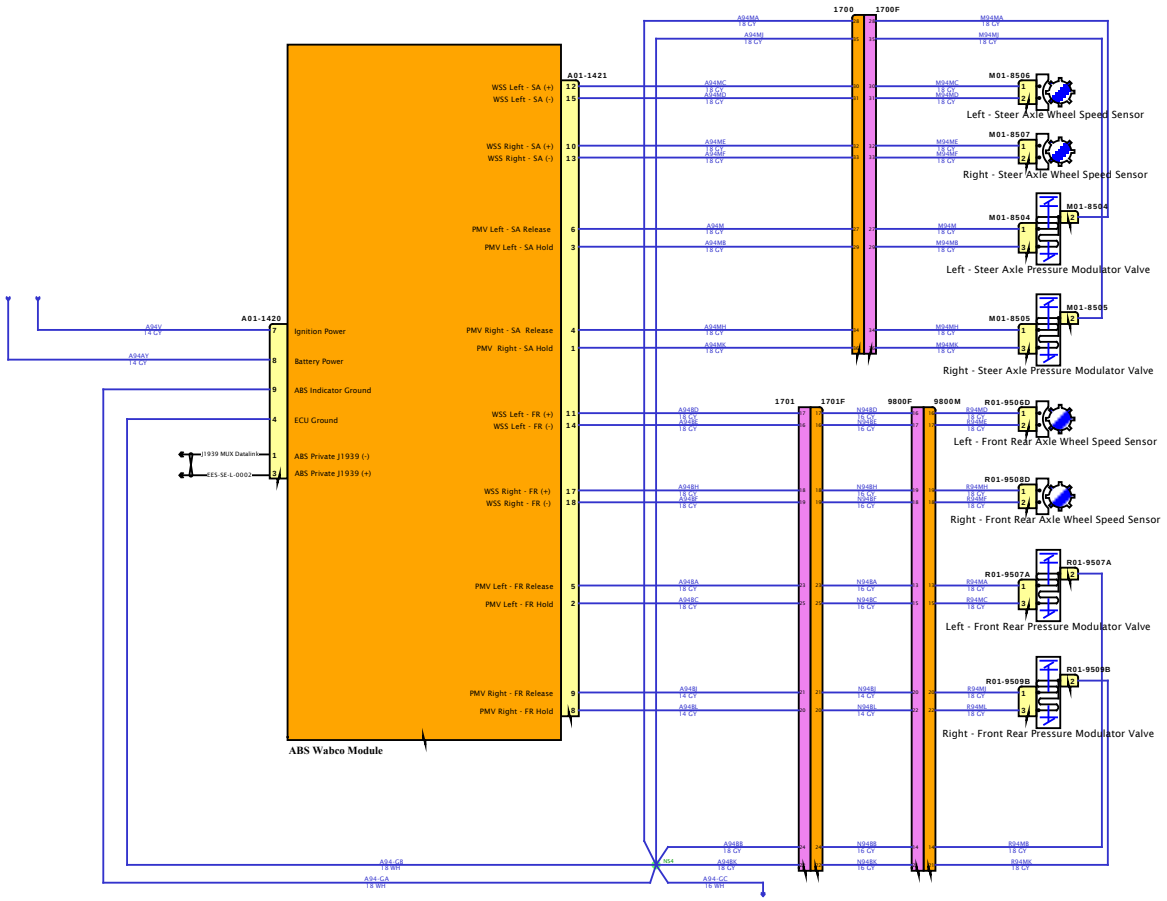

DESIGN DESCRIPTION

FEATURE CODES

SOFTWARE FEATURE CODES

NAVISTAR INC. CONFIDENTIAL PROPRIETARY

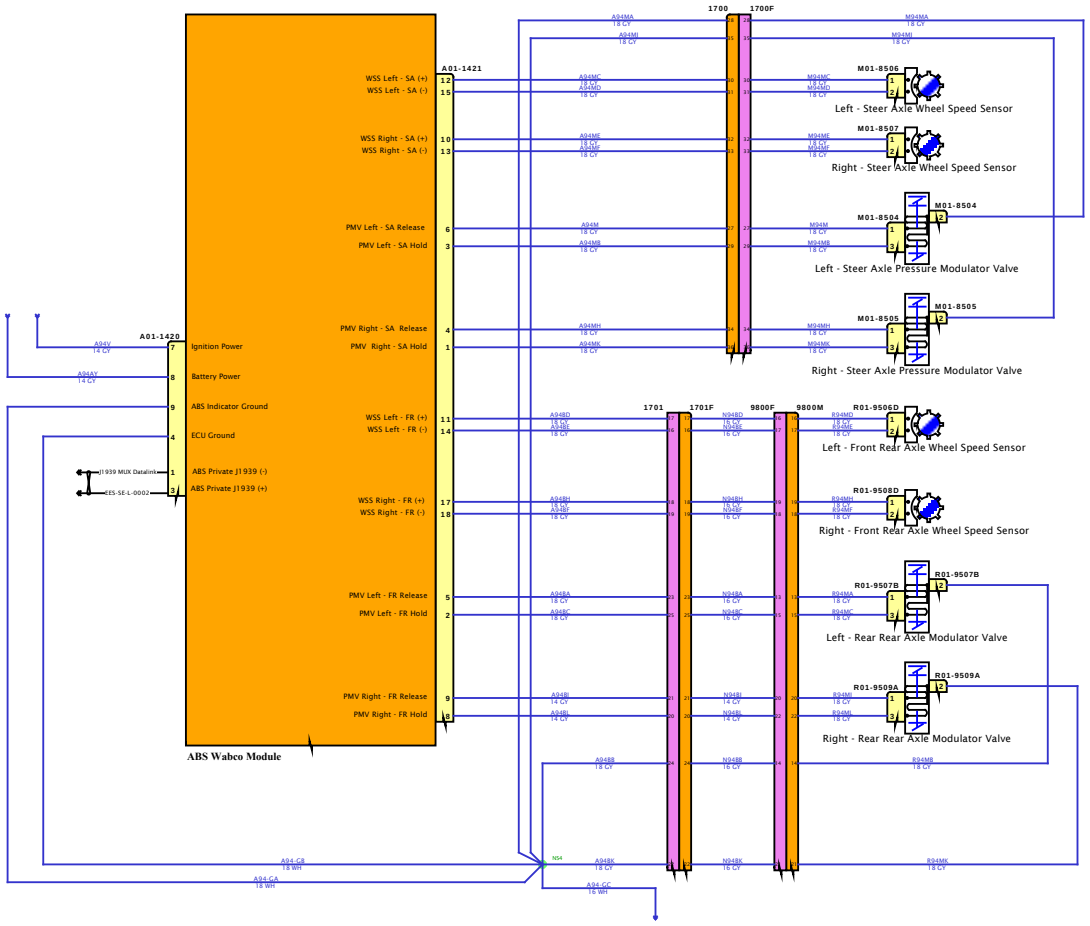

DESIGN DESCRIPTION

FEATURE CODES

SOFTWARE FEATURE CODES

NAVISTAR INC. CONFIDENTIAL PROPRIETARY

Diagram4

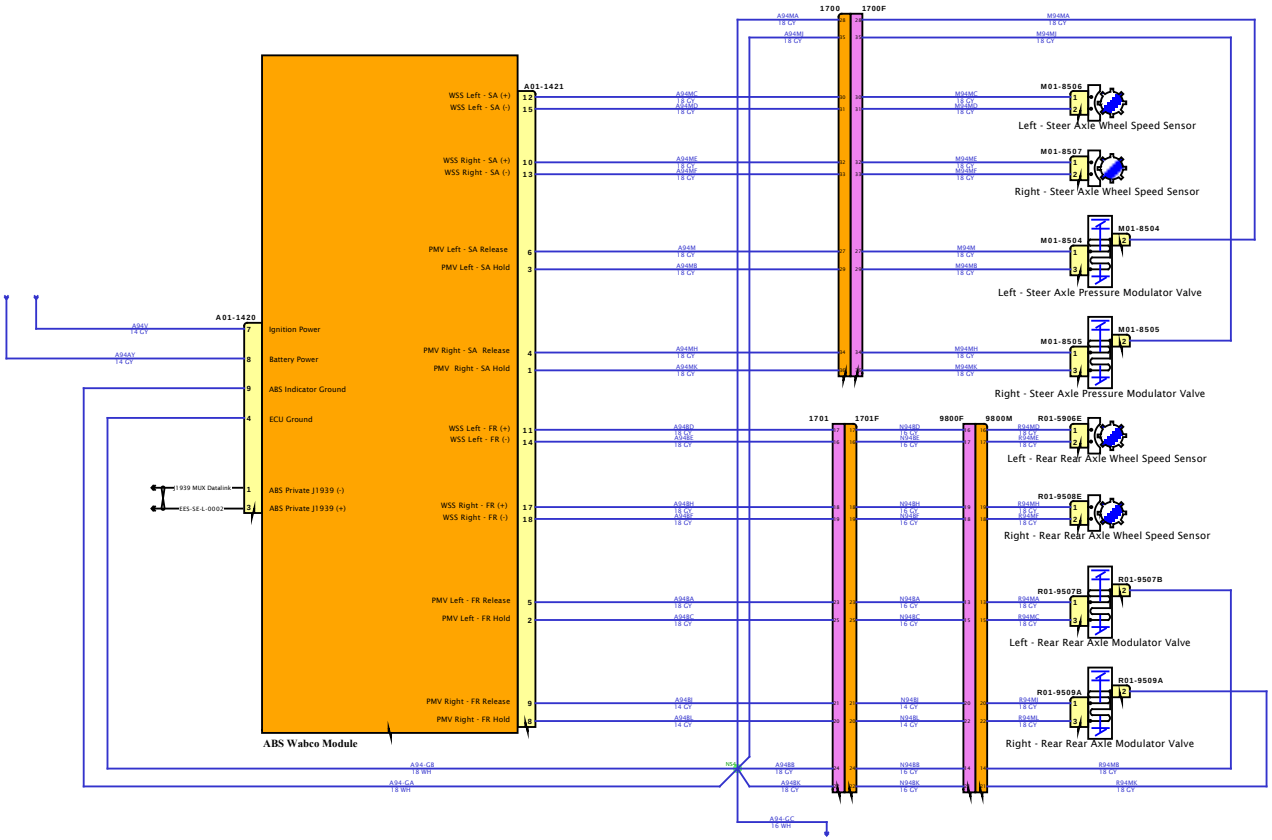

DESIGN DESCRIPTION

FEATURE CODES

SOFTWARE FEATURE CODES

NAVISTAR INC. CONFIDENTIAL PROPRIETARY

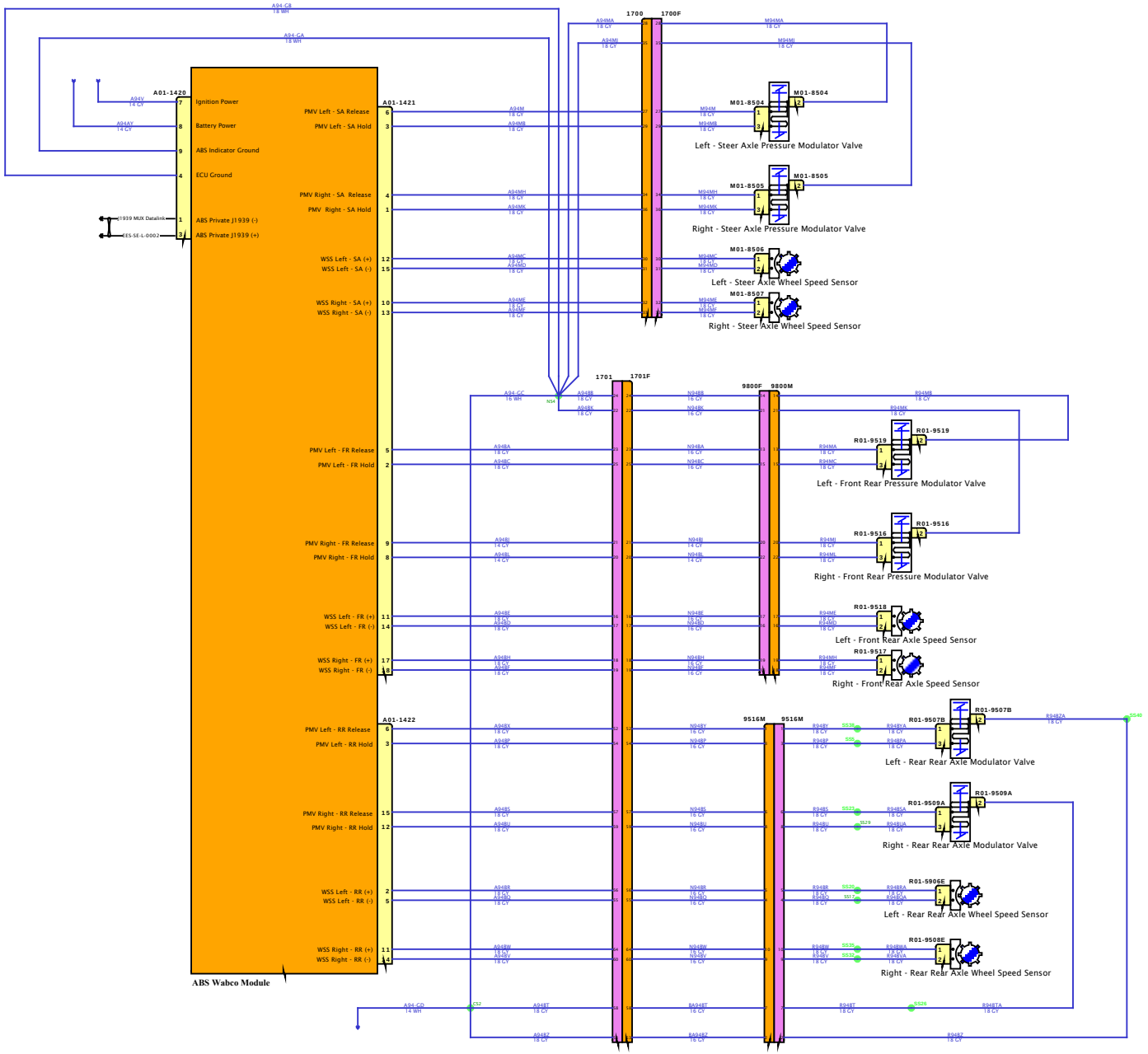
A01-1420
Ignition Power
Battery Power
ABS Indicator Ground
ECU Ground
J1939 MUX Datalink
CES-SE-L-0002
ABS Private J1939 (-)
ABS Private J1939 (+)
A01-1421
PMV Left - SA Release
PMV Left - SA Hold
PMV Right - SA Release
PMV Right - SA Hold
WSS Left - SA (+)
WSS Left - SA (-)
WSS Right - SA (+)
WSS Right - SA (-)
PMV Left - FR Release
PMV Left - FR Hold
PMV Right - FR Release
PMV Right - FR Hold
WSS Left - FR (+)
WSS Left - FR (-)
WSS Right - FR (+)
WSS Right - FR (-)
A01-1422
PMV Left - RR Release
PMV Left - RR Hold
PMV Right - RR Release
PMV Right - RR Hold
WSS Left - RR (+)
WSS Left - RR (-)
WSS Right - RR (+)
WSS Right - RR (-)
ABS Wabco Module
1700
1700F
1701
1701F
9800F
9800M
9516M
9516M
M01-8504
Left - Steer Axle Pressure Modulator Valve
M01-8505
Right - Steer Axle Pressure Modulator Valve
M01-8506
Left - Steer Axle Wheel Speed Sensor
M01-8507
Right - Steer Axle Wheel Speed Sensor
R01-9519
Left - Front Rear Pressure Modulator Valve
R01-9516
Right - Front Rear Pressure Modulator Valve
R01-9518
Left - Front Rear Axle Speed Sensor
R01-9517
Right - Front Rear Axle Speed Sensor
R01-9507B
Left - Rear Rear Axle Modulator Valve
R01-9509A
Right - Rear Rear Axle Modulator Valve
R01-9506E
Left - Rear Rear Axle Wheel Speed Sensor
R01-9508E
Right - Rear Rear Axle Wheel Speed Sensor
DESIGN DESCRIPTION
FEATURE CODES
SOFTWARE FEATURE CODES
NAVISTAR
NAVISTAR, INC. CONFIDENTIAL PROPRIETARY

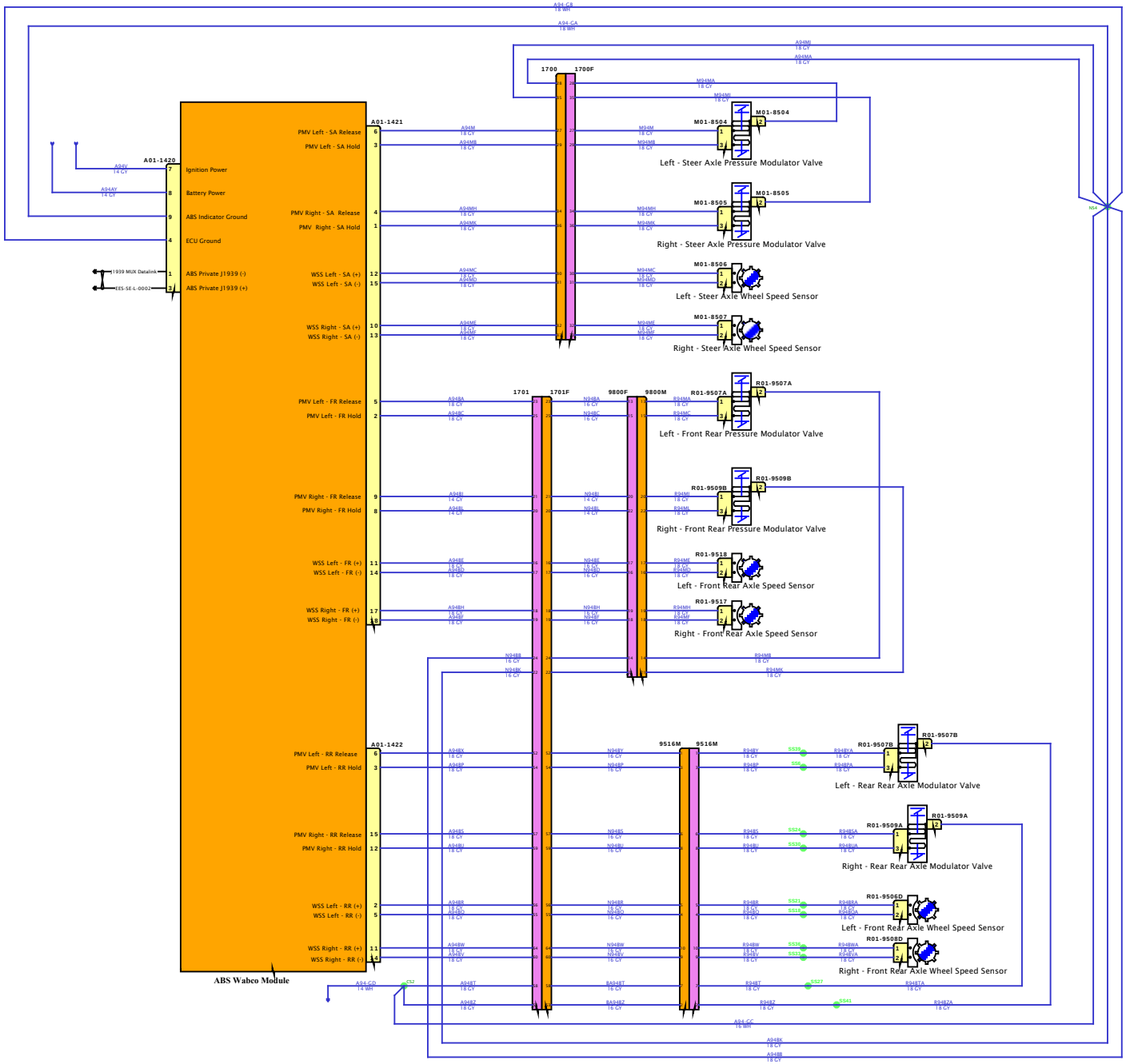

DESIGN DESCRIPTION

FEATURE CODES

SOFTWARE FEATURE CODES

Diagram3

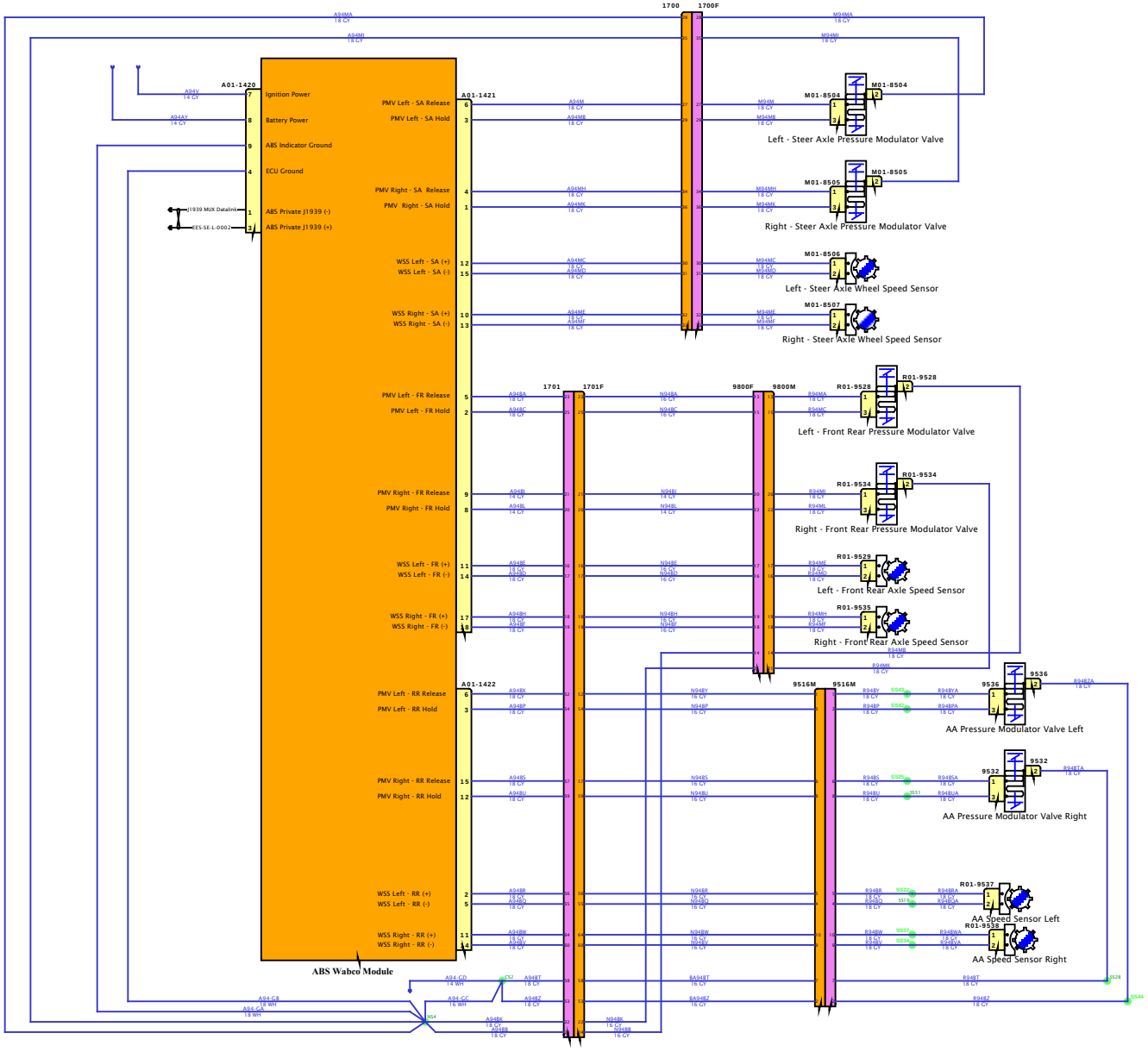

DESIGN DESCRIPTION

FEATURE CODES

SOFTWARE FEATURE CODES

NAVISTAR
NAVISTAR, INC. CONFIDENTIAL PROPRIETARY

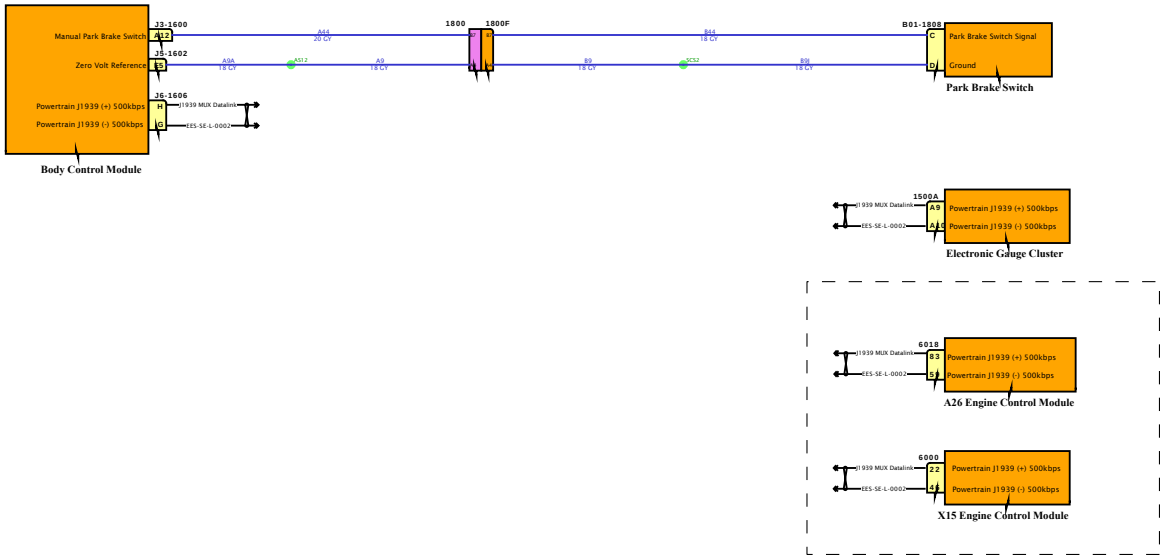

DESIGN DESCRIPTION

FEATURE CODES

SOFTWARE FEATURE CODES

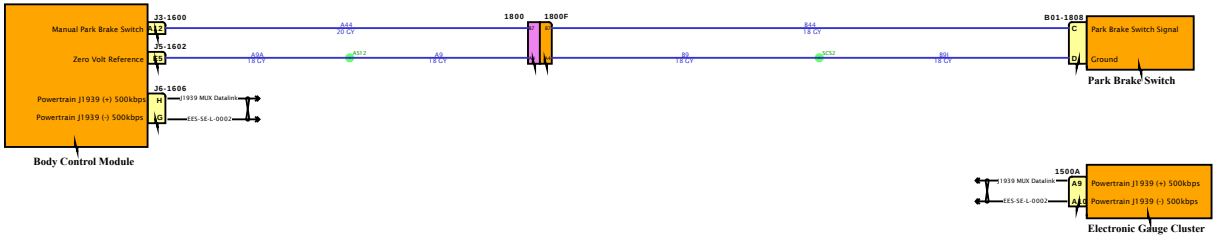

DESIGN DESCRIPTION

FEATURE CODES

SOFTWARE FEATURE CODES

NAVISTAR INC. CONFIDENTIAL PROPRIETARY

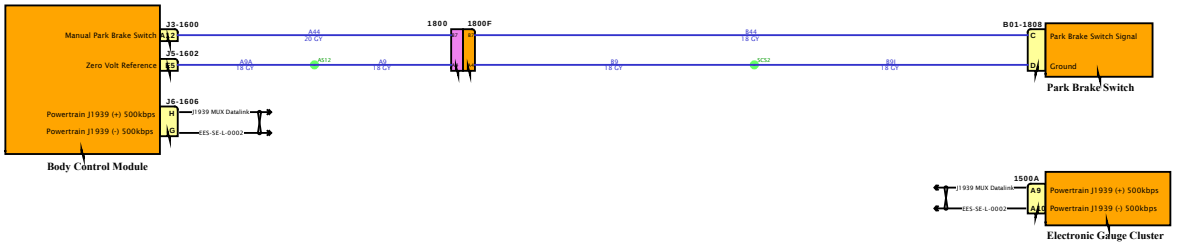

DESIGN DESCRIPTION

FEATURE CODES

SOFTWARE FEATURE CODES

NAVISTAR INC. CONFIDENTIAL PROPRIETARY

Diagram1

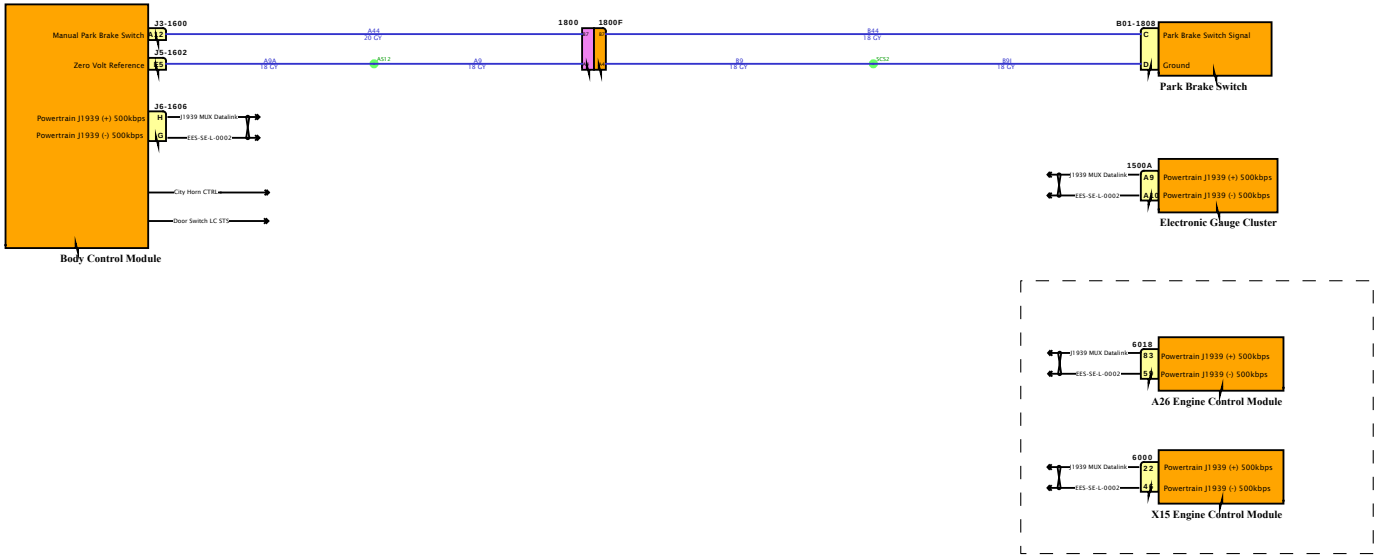

DESIGN DESCRIPTION

FEATURE CODES

SOFTWARE FEATURE CODES

NAVISTAR
NAVISTAR, INC. CONFIDENTIAL PROPRIETARY

Diagram1

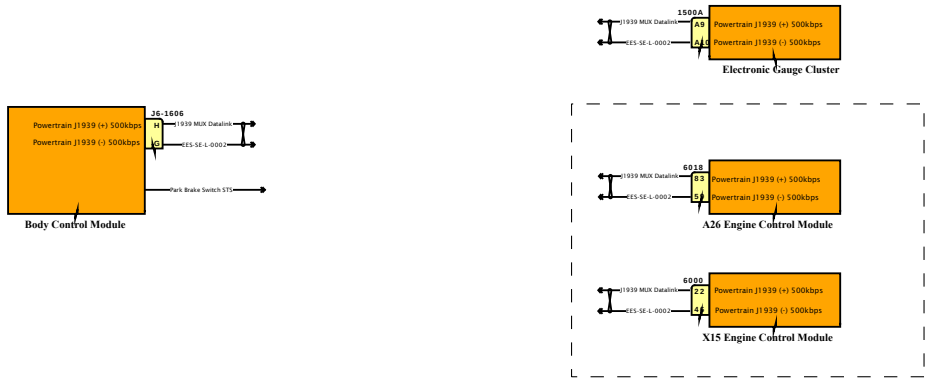

DESIGN DESCRIPTION

FEATURE CODES

SOFTWARE FEATURE CODES

NAVISTAR INC. CONFIDENTIAL PROPRIETARY

Diagram1

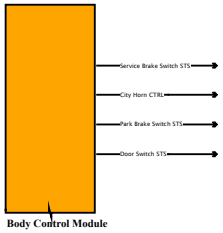

DESIGN DESCRIPTION

FEATURE CODES

SOFTWARE FEATURE CODES

NAVISTAR

NAVISTAR, INC. CONFIDENTIAL PROPRIETARY

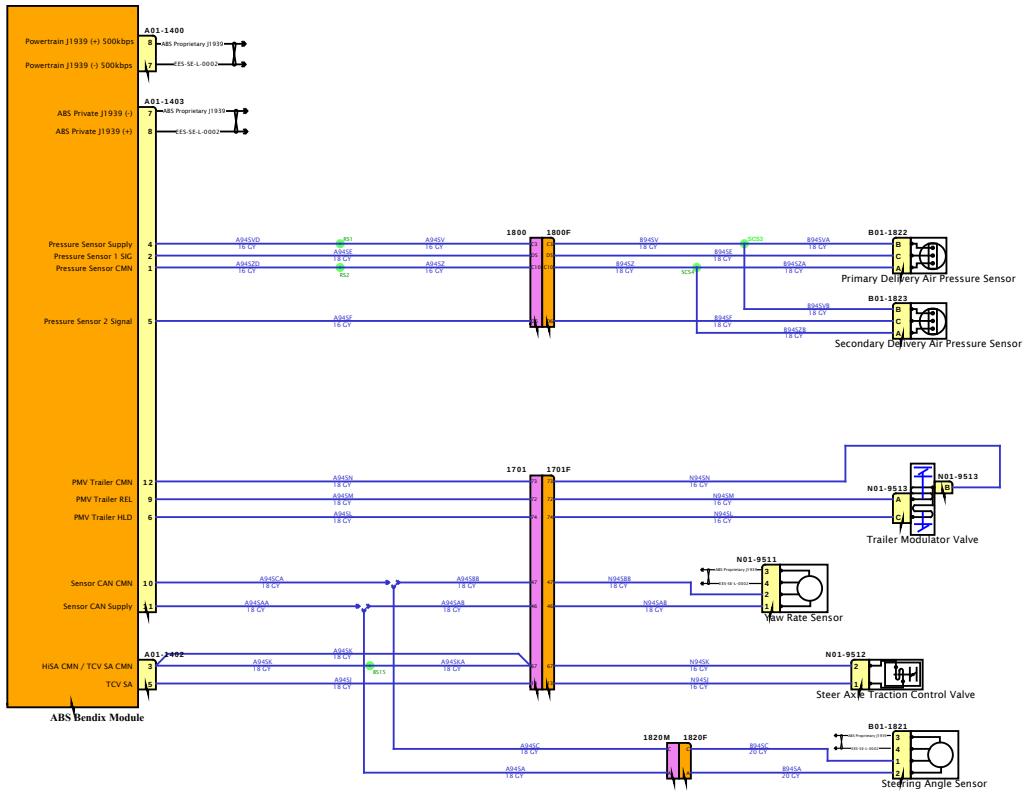

DESIGN DESCRIPTION

FEATURE CODES

SOFTWARE FEATURE CODES

NAVISTAR INC. CONFIDENTIAL PROPRIETARY

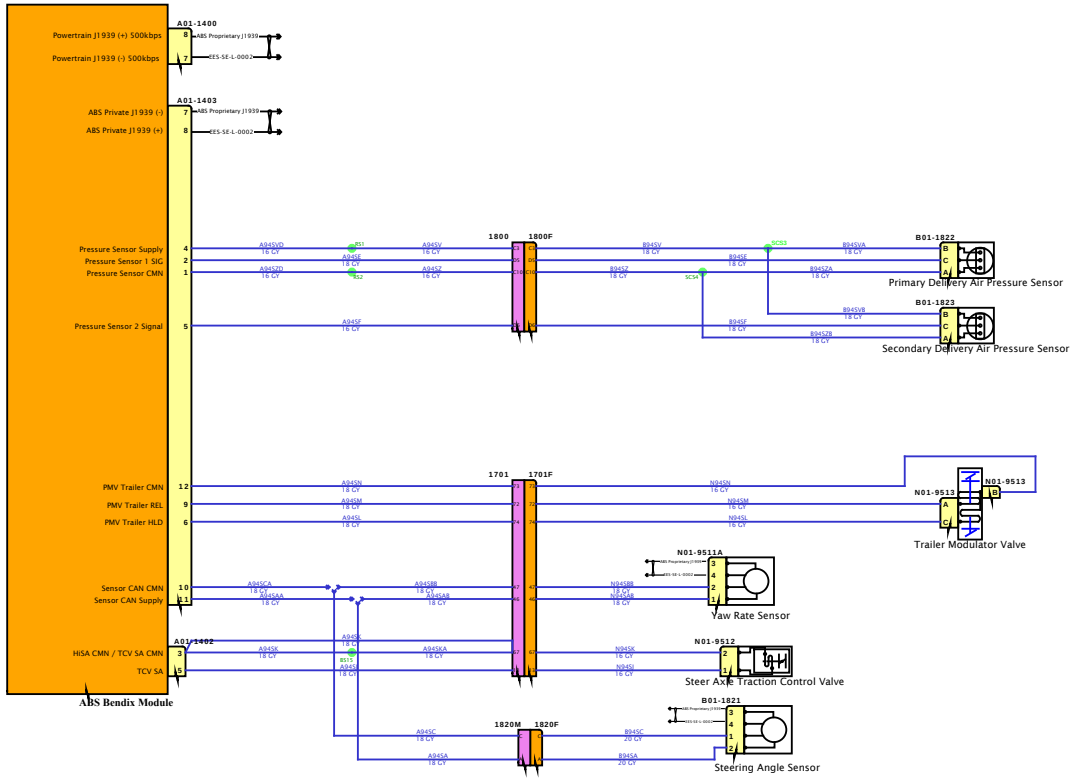

DESIGN DESCRIPTION

FEATURE CODES

SOFTWARE FEATURE CODES

NAVISTAR
NAVISTAR, INC. CONFIDENTIAL PROPRIETARY

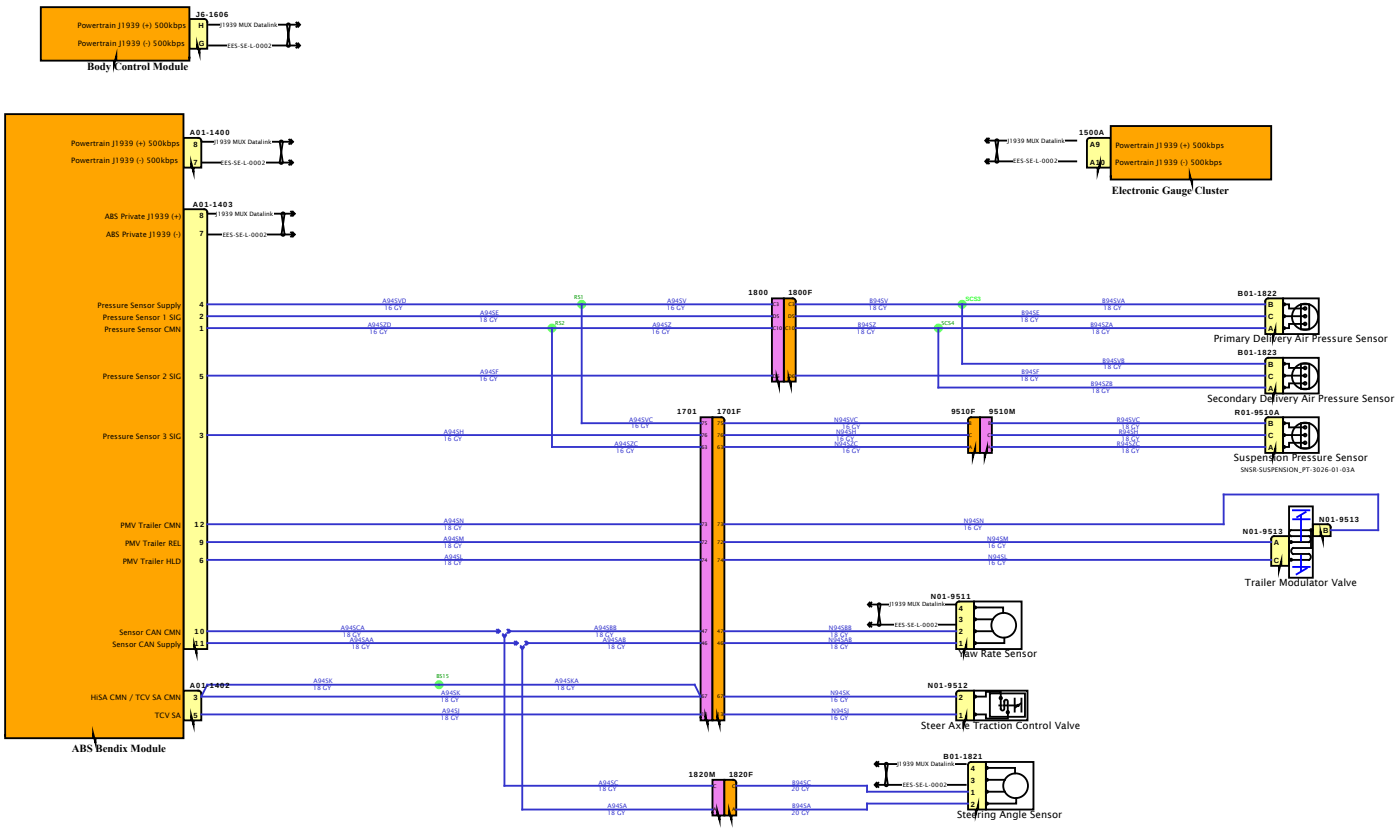

DESIGN DESCRIPTION

FEATURE CODES

SOFTWARE FEATURE CODES

NAVISTAR INC. CONFIDENTIAL PROPRIETARY

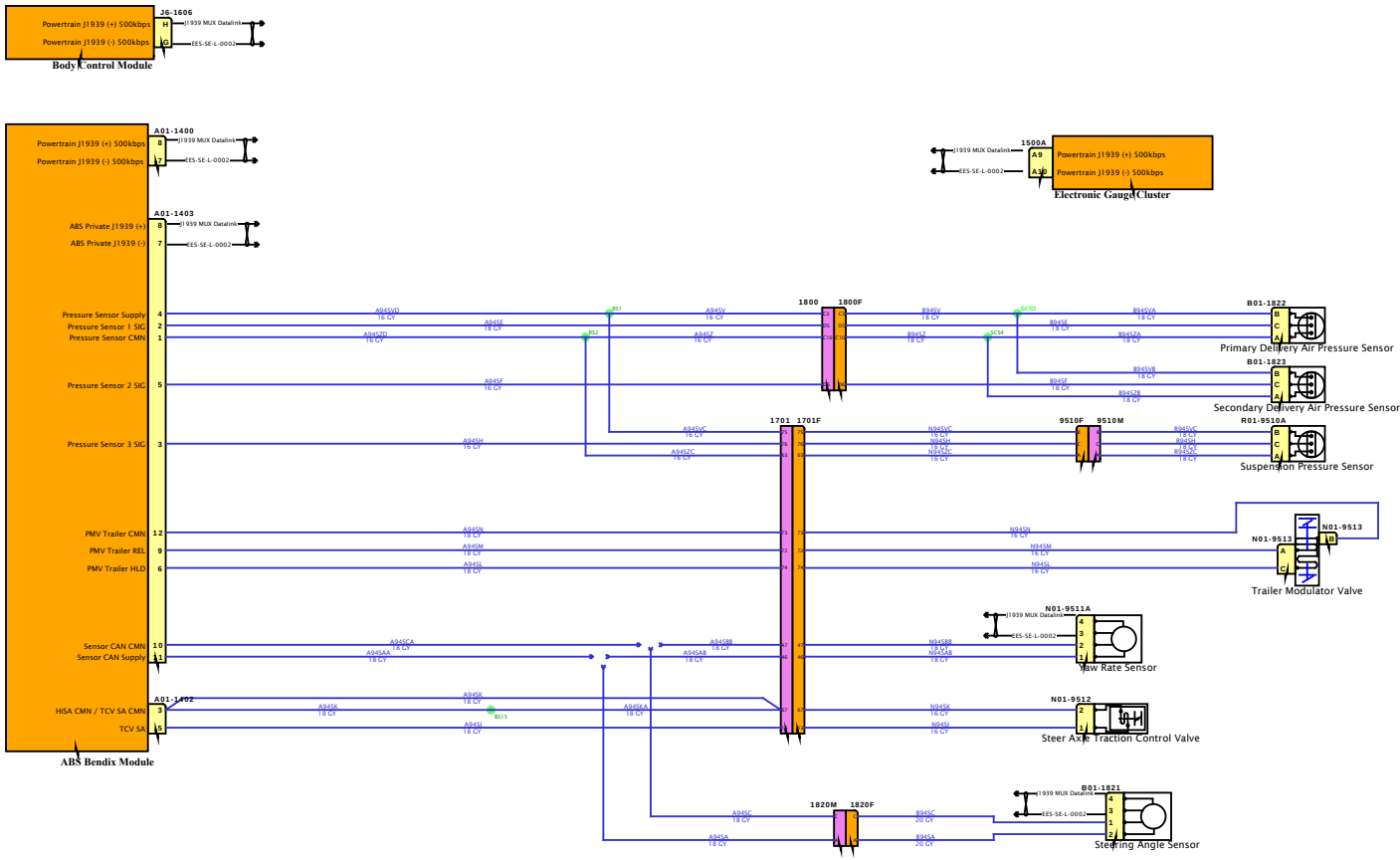

DESIGN DESCRIPTION

FEATURE CODES

SOFTWARE FEATURE CODES

Diagram1

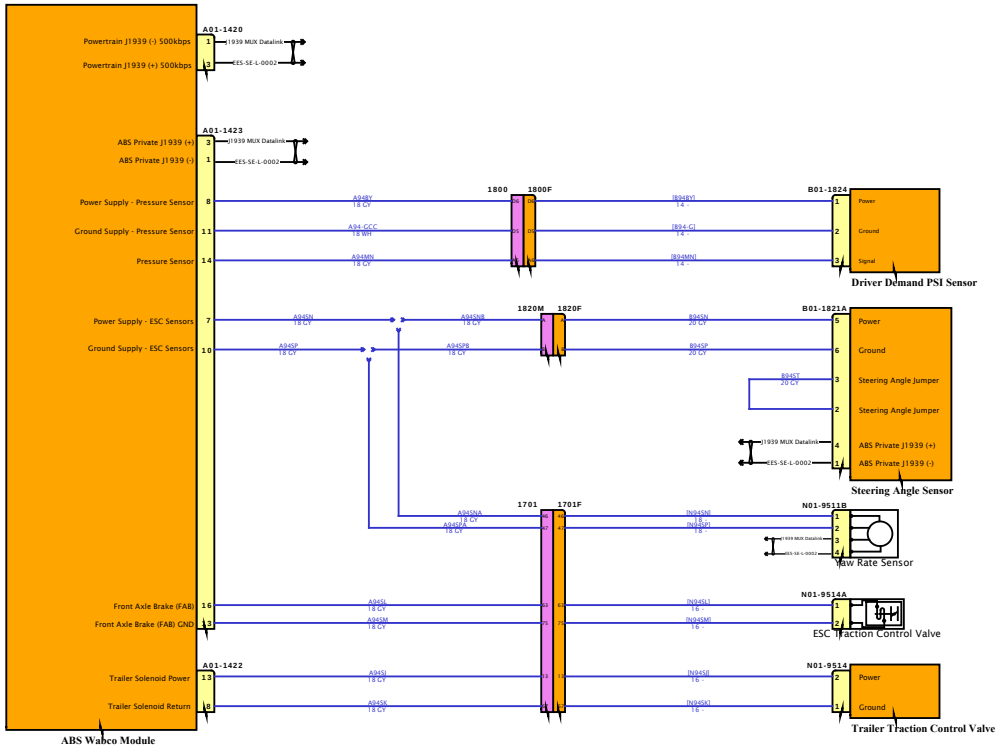

DESIGN DESCRIPTION

FEATURE CODES

SOFTWARE FEATURE CODES

Diagram2

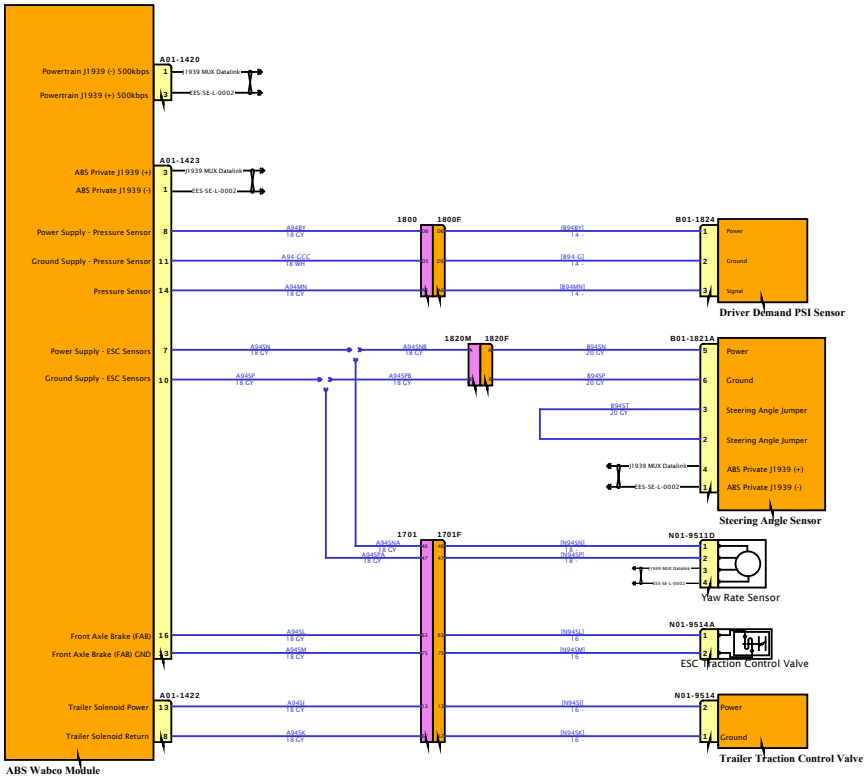

DESIGN DESCRIPTION

FEATURE CODES

SOFTWARE FEATURE CODES

NAVISTAR INC. CONFIDENTIAL PROPRIETARY

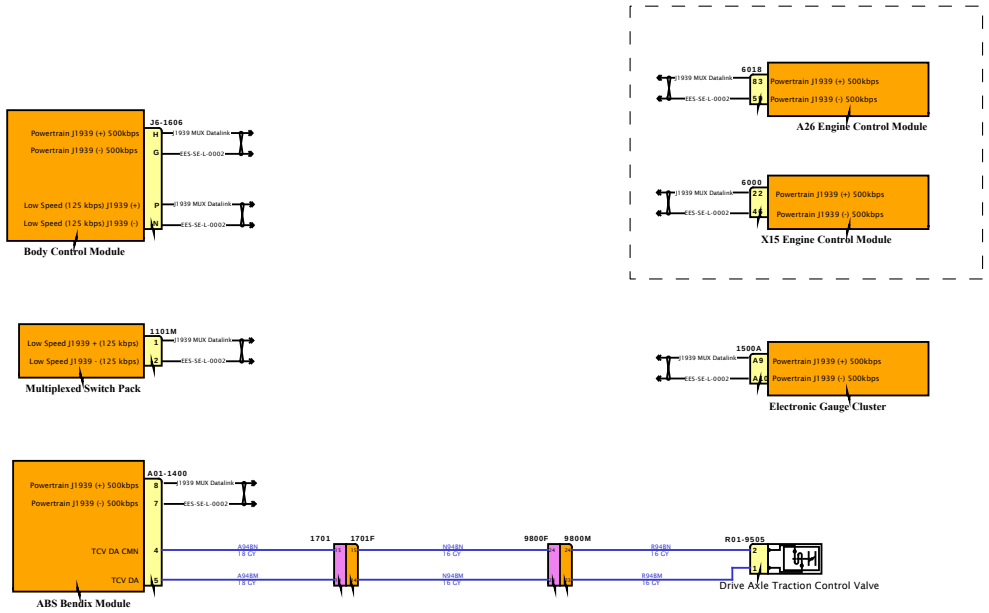

DESIGN DESCRIPTION

FEATURE CODES

SOFTWARE FEATURE CODES

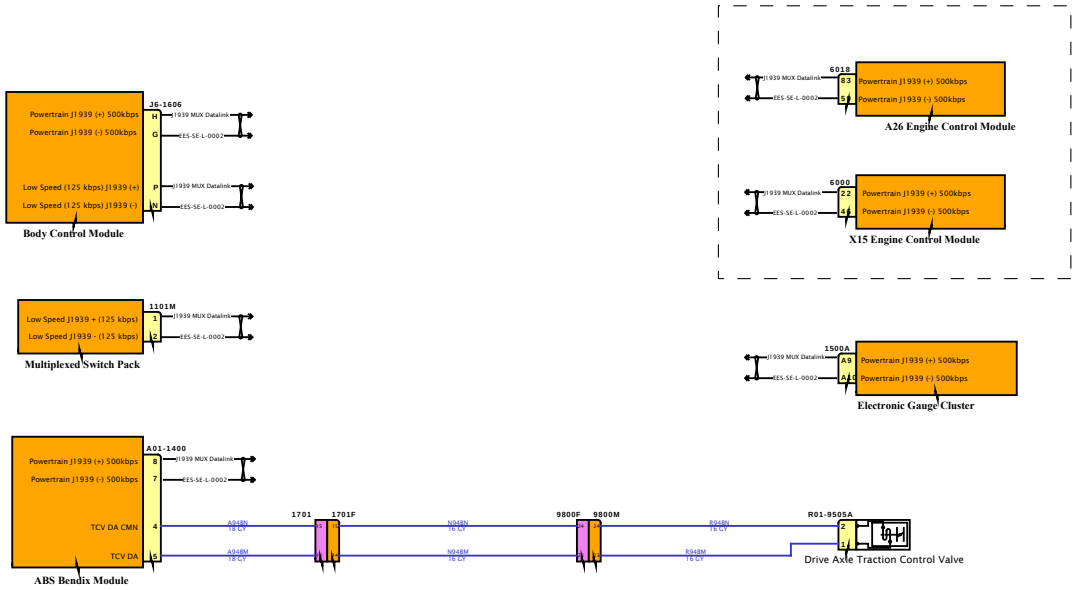

DESIGN DESCRIPTION

FEATURE CODES

SOFTWARE FEATURE CODES

NAVISTAR
NAVISTAR, INC. CONFIDENTIAL PROPRIETARY

DESIGN DESCRIPTION

FEATURE CODES

SOFTWARE FEATURE CODES

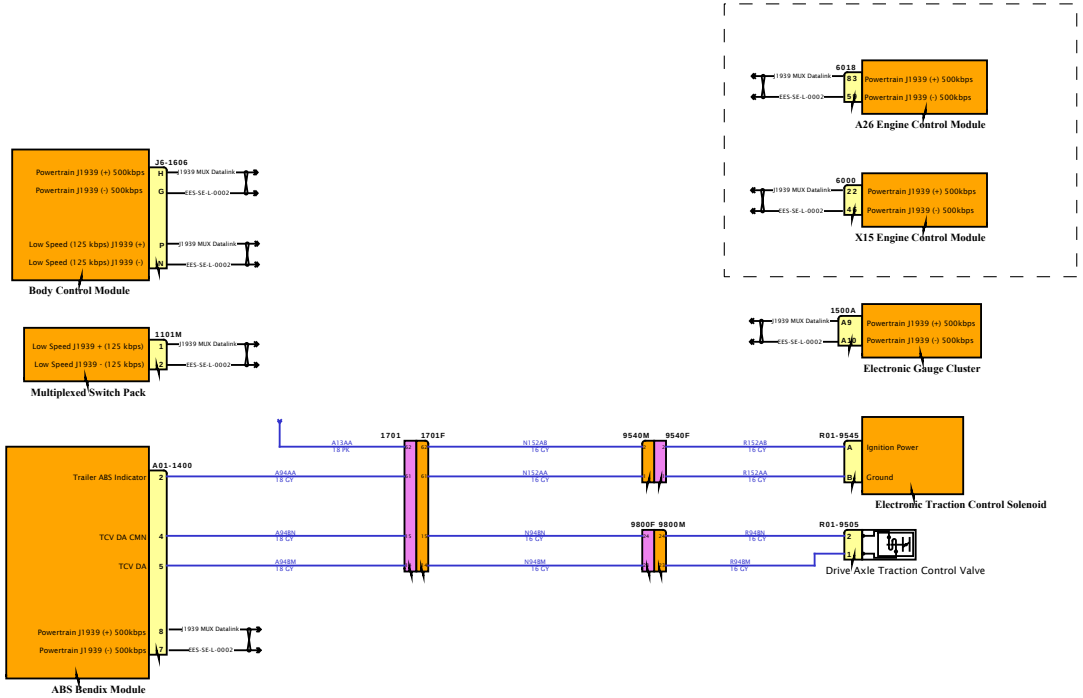

DESIGN DESCRIPTION

FEATURE CODES

SOFTWARE FEATURE CODES

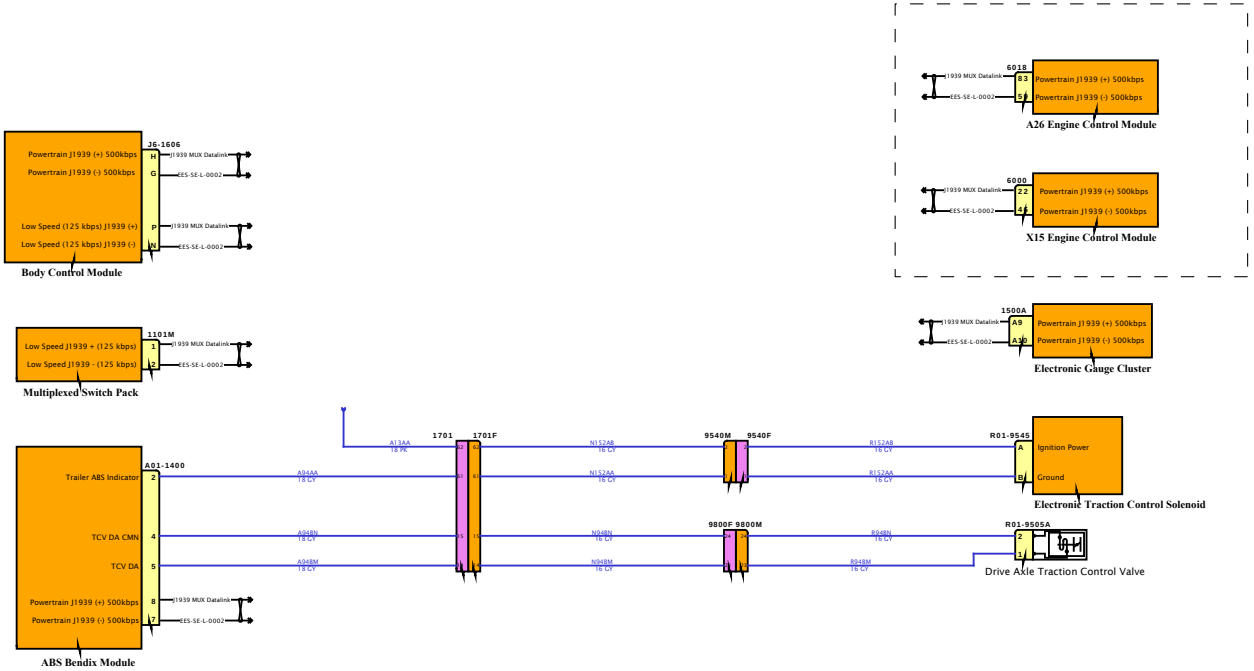

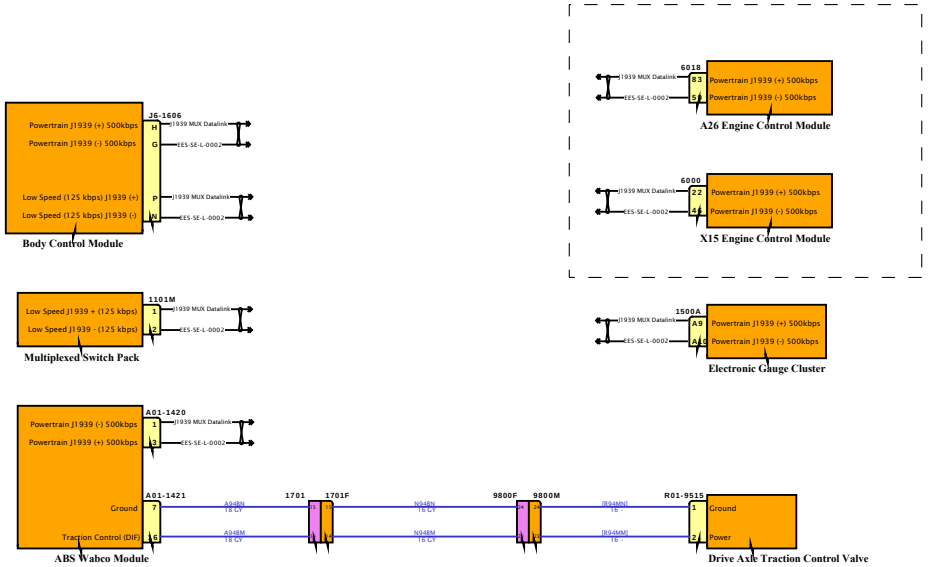

DESIGN DESCRIPTION

FEATURE CODES

SOFTWARE FEATURE CODES

NAVISTAR INC. CONFIDENTIAL PROPRIETARY

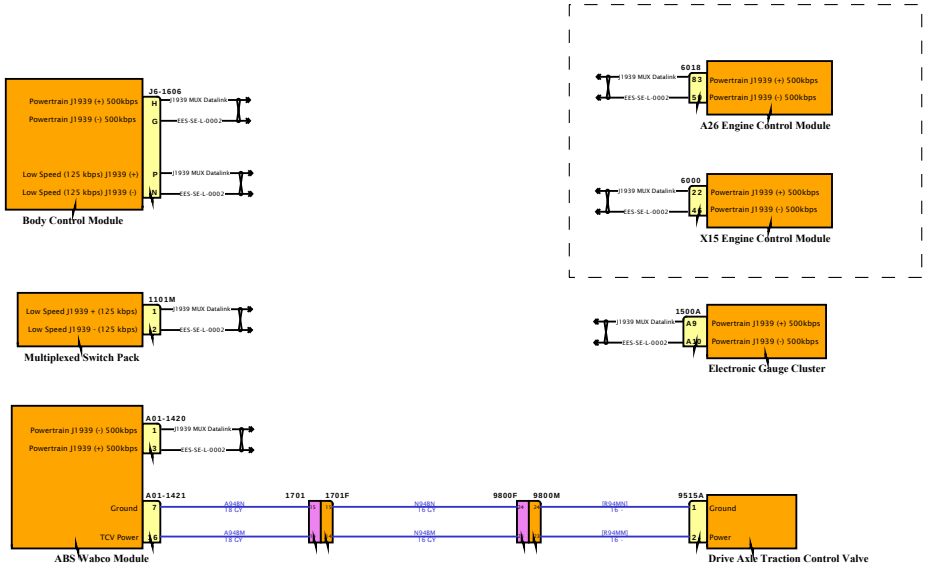

DESIGN DESCRIPTION

FEATURE CODES

SOFTWARE FEATURE CODES

NAVISTAR INC. CONFIDENTIAL PROPRIETARY

DESIGN DESCRIPTION

FEATURE CODES

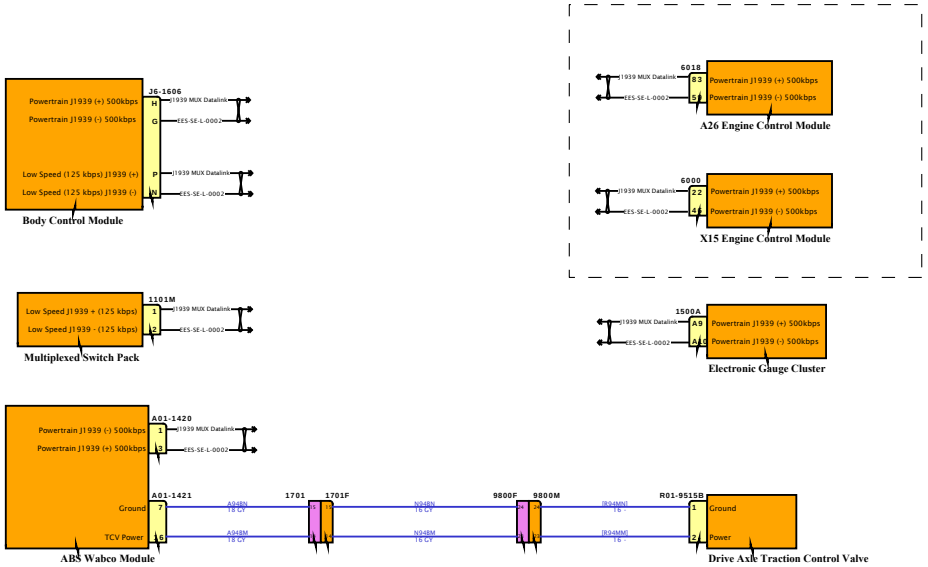

SOFTWARE FEATURE CODES

DESIGN DESCRIPTION

FEATURE CODES

SOFTWARE FEATURE CODES

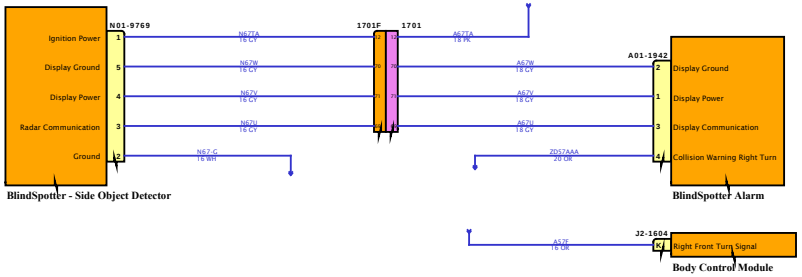

NAVISTAR INC. CONFIDENTIAL PROPRIETARY

Diagram1

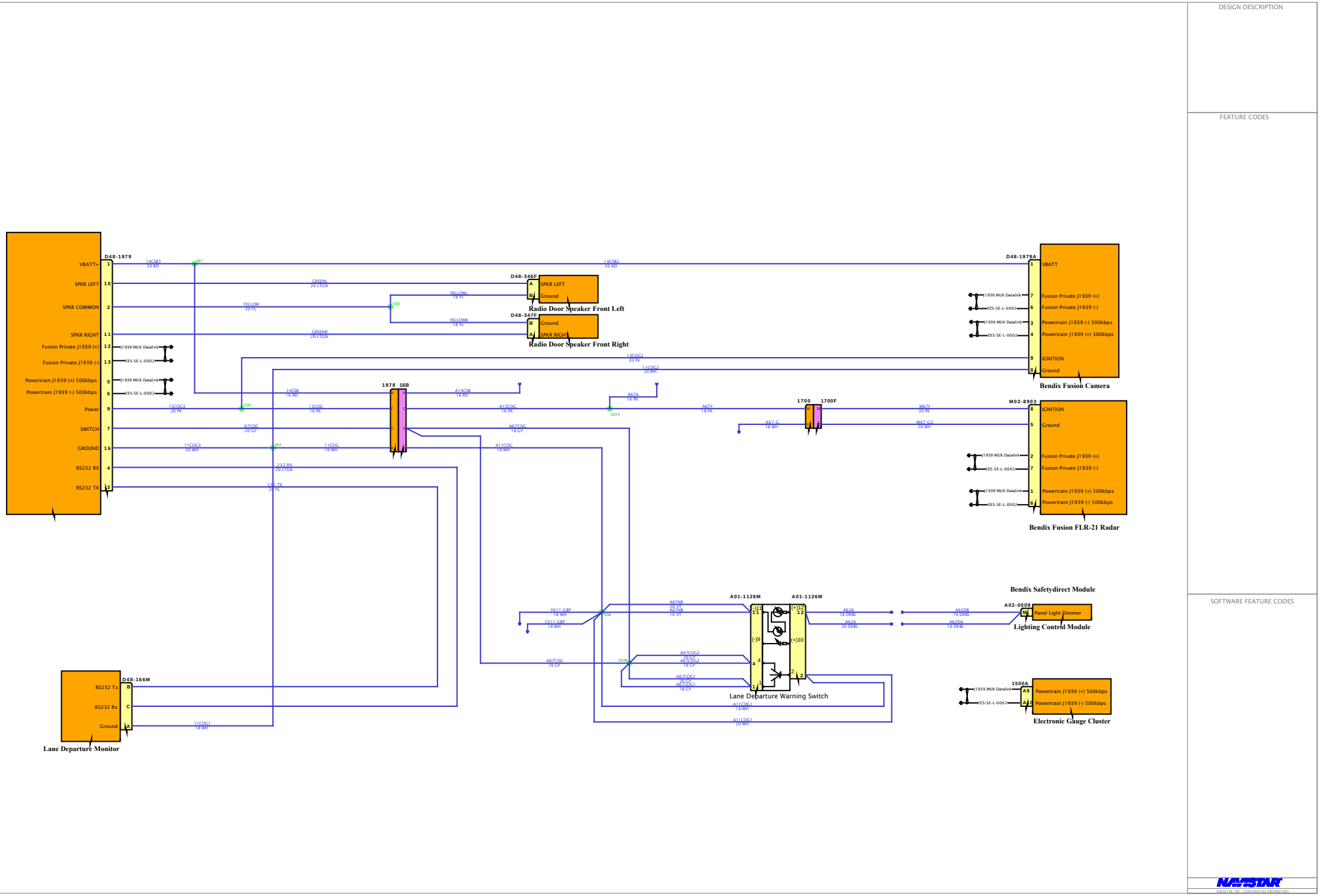
DESIGN DESCRIPTION
FEATURE CODES
SOFTWARE FEATURE CODES
D48-1979
VBATT+
SPKR LEFT
SPKR COMMON
SPKR RIGHT
Fusion Private J1939 (+)
Fusion Private J1939 (-)
Powertrain J1939 (+) 500kbps
Powertrain J1939 (-) 500kbps
Power
SWITCH
GROUND
RS232 RX
RS232 TX
D48-346F
SPKR LEFT
Ground
Radio Door Speaker Front Left
D48-347F
Ground
SPKR RIGHT
Radio Door Speaker Front Right
D48-1979A
VBATT
IGNITION
Ground
Bendix Fusion Camera
M02-8903
Bendix Fusion FLR-21 Radar
1978 16B
1700
1700F
A01-1126M
Lane Departure Warning Switch
Bendix Safetydirect Module
A02-0009
Panel Light Dimmer
Lighting Control Module
1500A
Powertrain J1939 (+) 500kbps
Powertrain J1939 (-) 500kbps
Electronic Gauge Cluster
D48-166M
RS232 Tx
RS232 Rx
Ground
Lane Departure Monitor
NAVISTAR
NAVISTAR, INC. CONFIDENTIAL PROPRIETARY

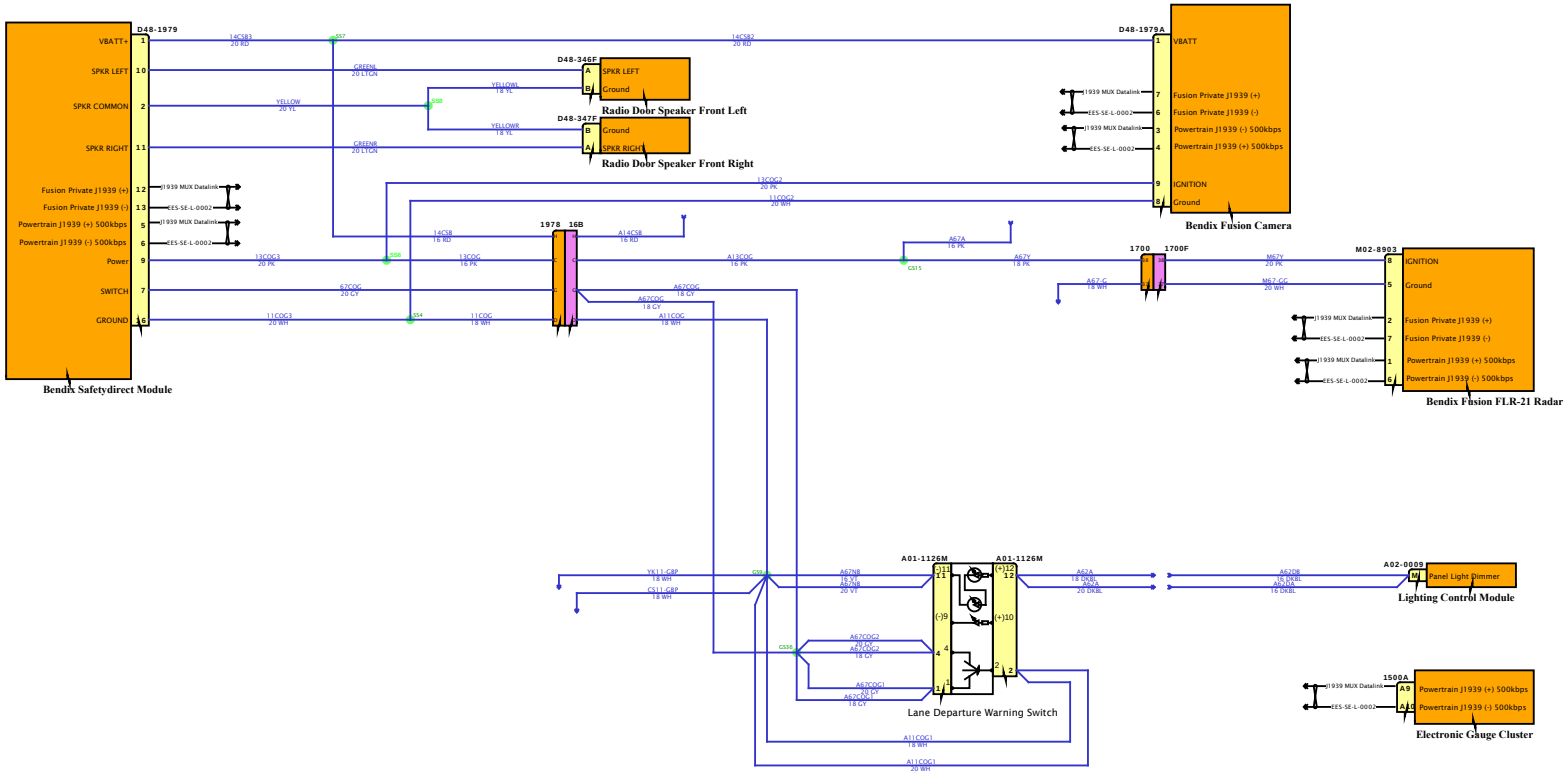

DESIGN DESCRIPTION

FEATURE CODES

SOFTWARE FEATURE CODES

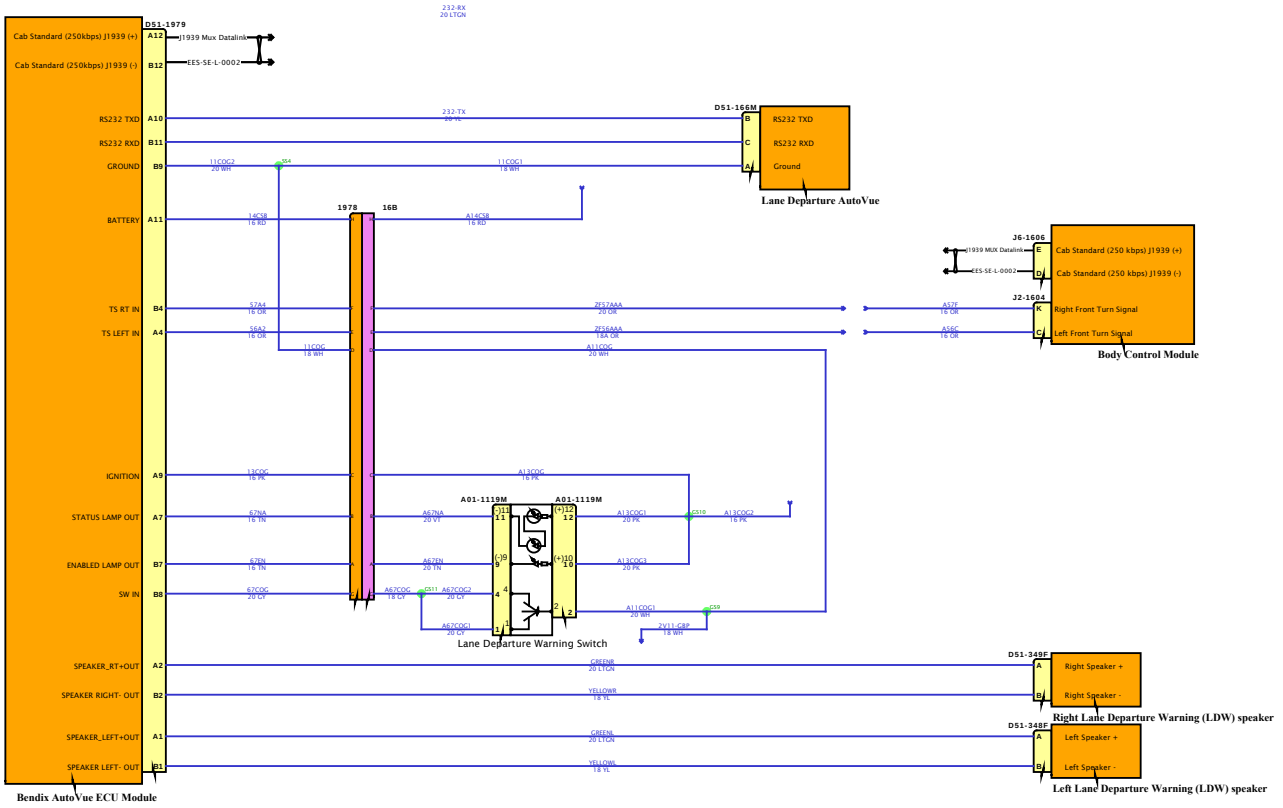

DESIGN DESCRIPTION

FEATURE CODES

SOFTWARE FEATURE CODES

NAVISTAR INC. CONFIDENTIAL PROPRIETARY

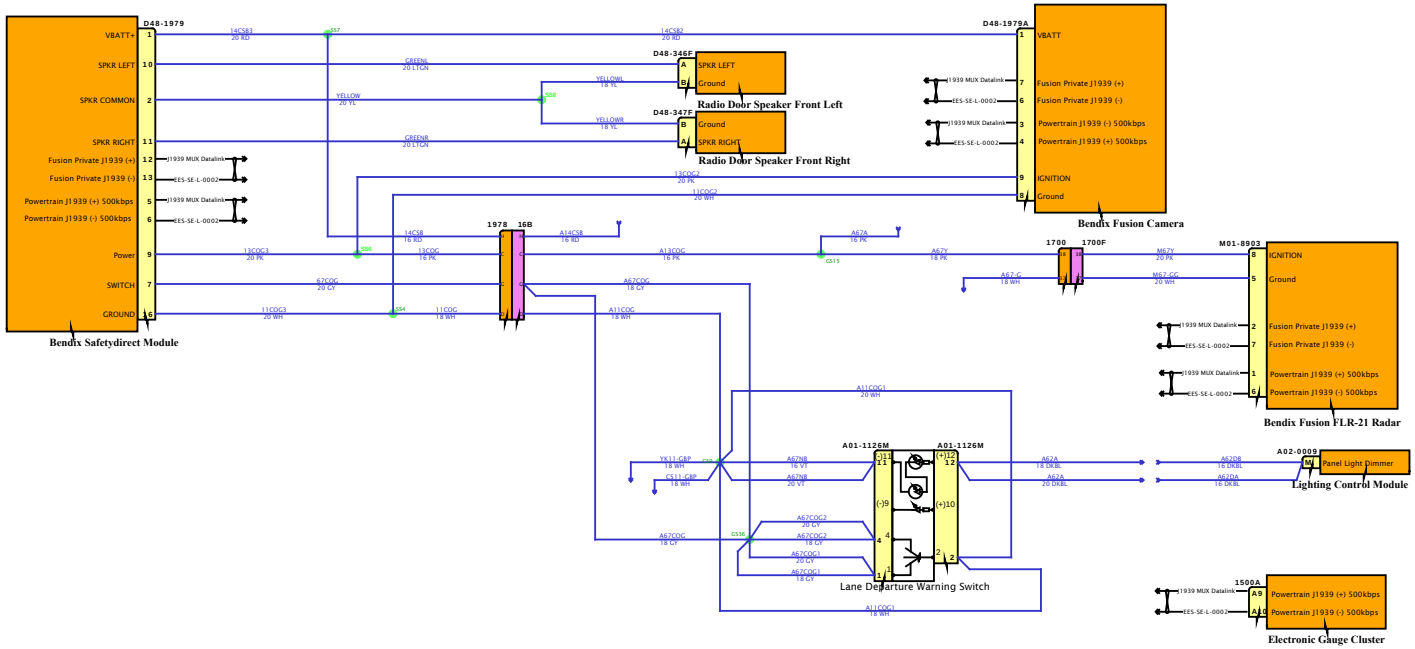

DESIGN DESCRIPTION

FEATURE CODES

SOFTWARE FEATURE CODES

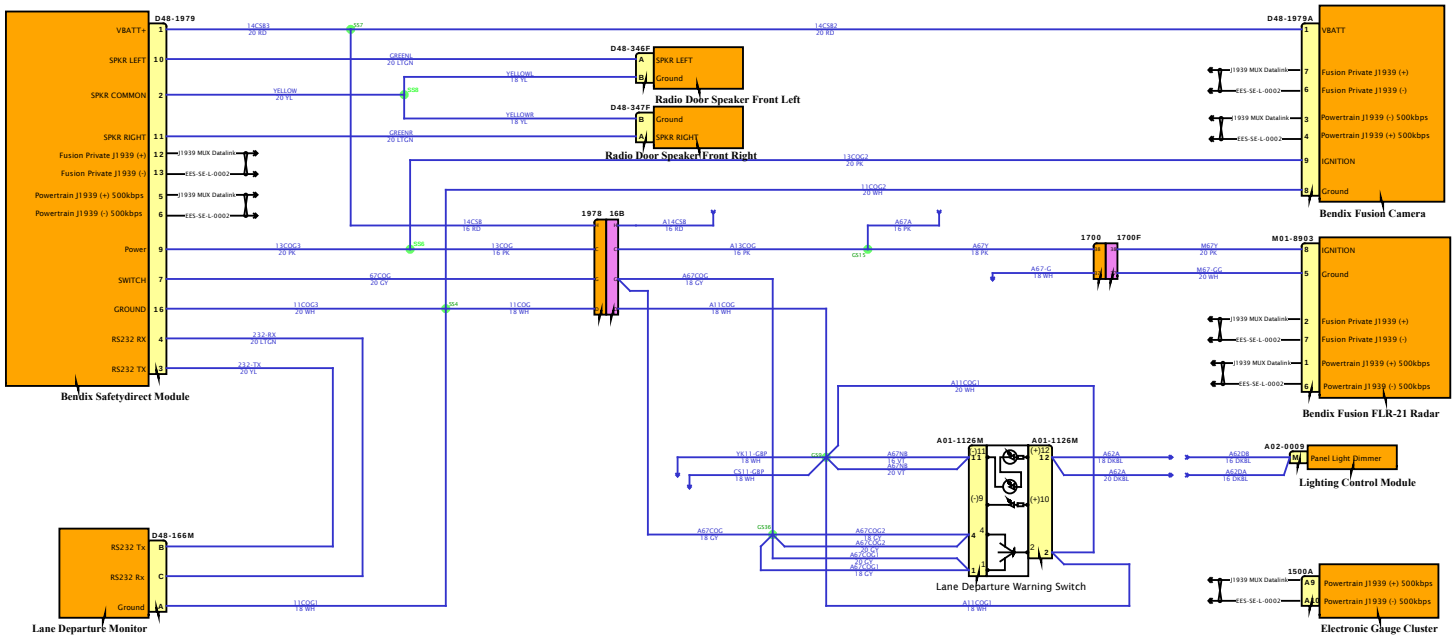

DESIGN DESCRIPTION

FEATURE CODES

SOFTWARE FEATURE CODES

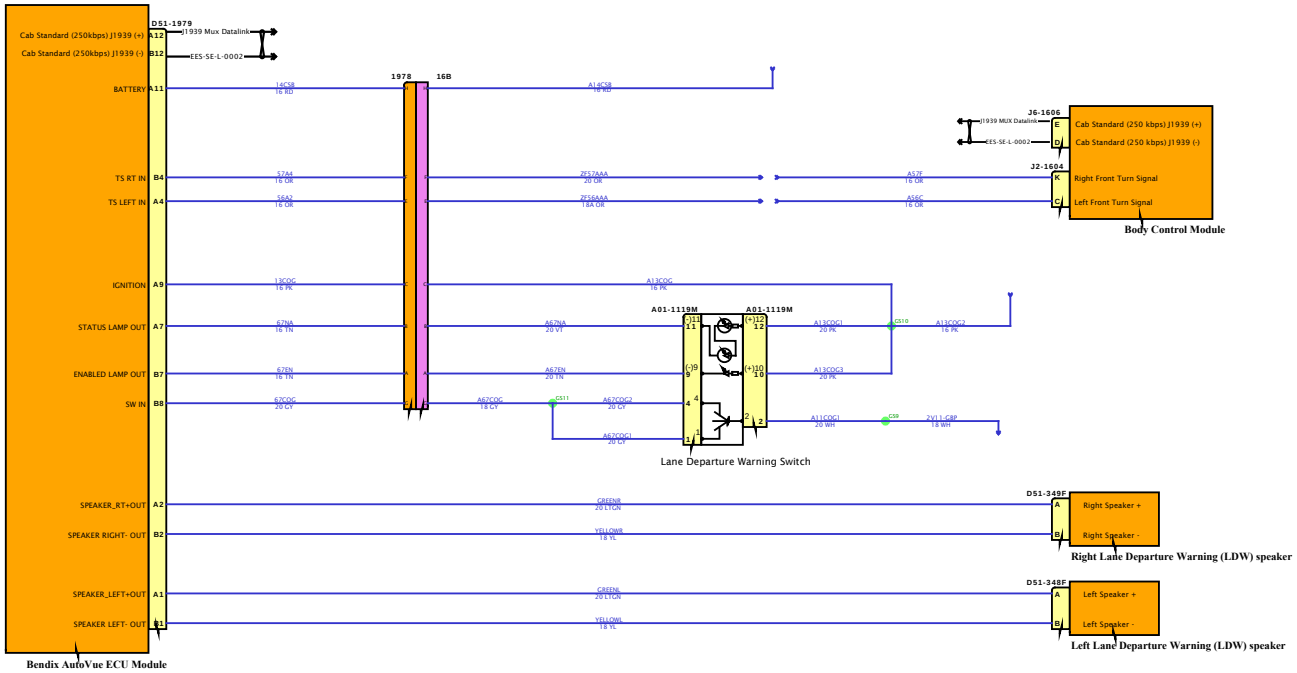

DESIGN DESCRIPTION

FEATURE CODES

SOFTWARE FEATURE CODES

NAVISTAR
NAVISTAR, INC. CONFIDENTIAL PROPRIETARY

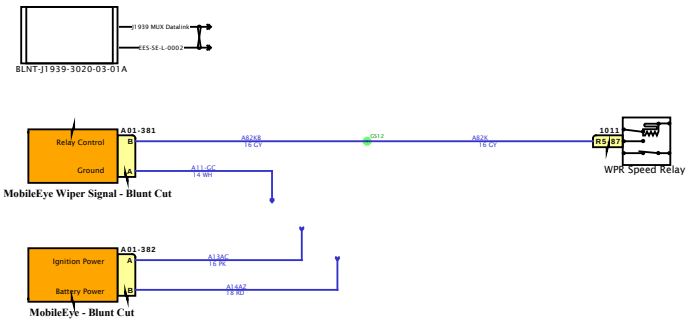

DESIGN DESCRIPTION

FEATURE CODES

SOFTWARE FEATURE CODES

NAVISTAR INC. CONFIDENTIAL PROPRIETARY

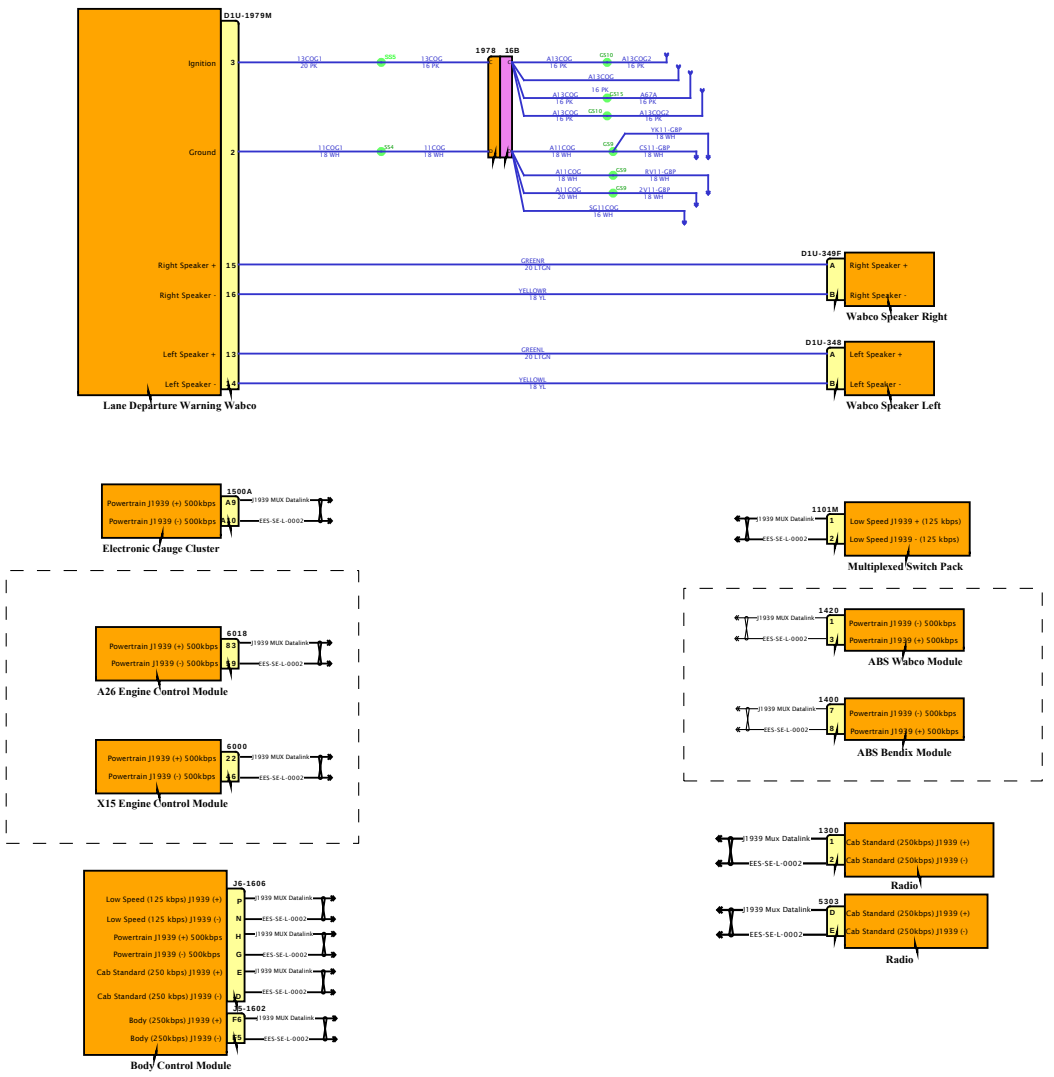

DESIGN DESCRIPTION

FEATURE CODES

SOFTWARE FEATURE CODES

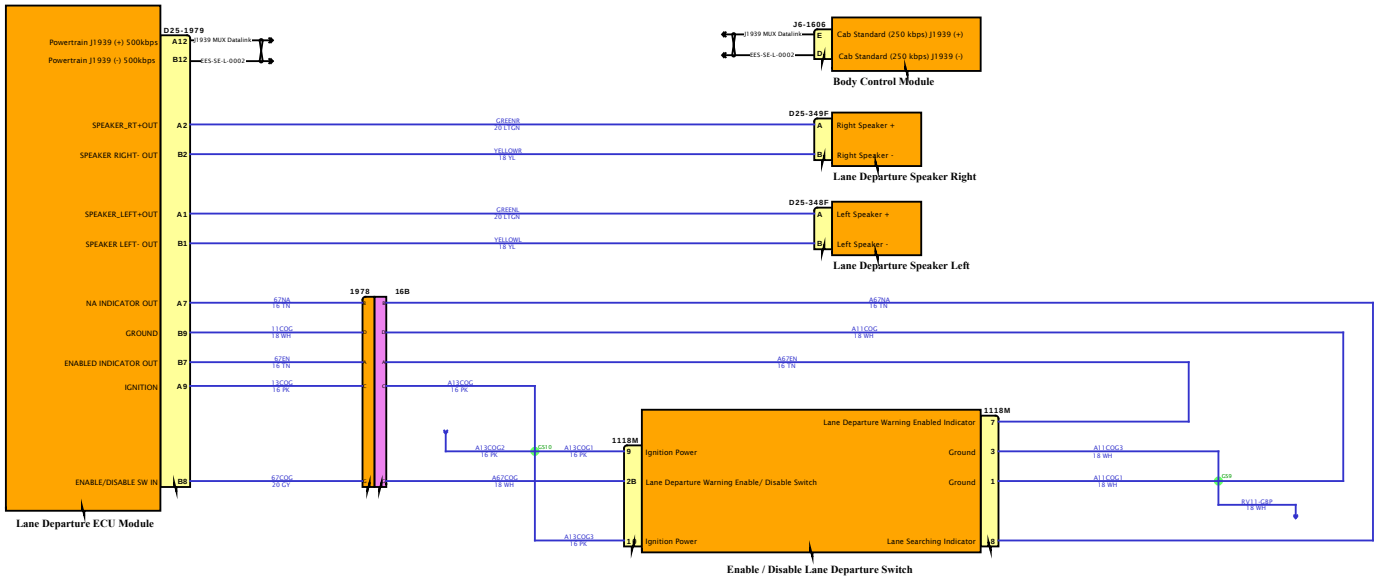

DESIGN DESCRIPTION

FEATURE CODES

SOFTWARE FEATURE CODES

Diagram1

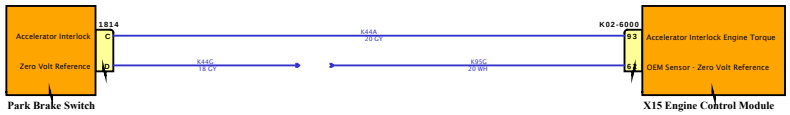

DESIGN DESCRIPTION

FEATURE CODES

SOFTWARE FEATURE CODES

NAVISTAR INC. CONFIDENTIAL PROPRIETARY

Diagram1

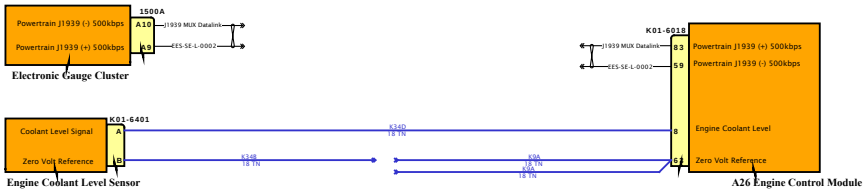

DESIGN DESCRIPTION

FEATURE CODES

SOFTWARE FEATURE CODES

NAVISTAR INC. CONFIDENTIAL PROPRIETARY

Diagram1

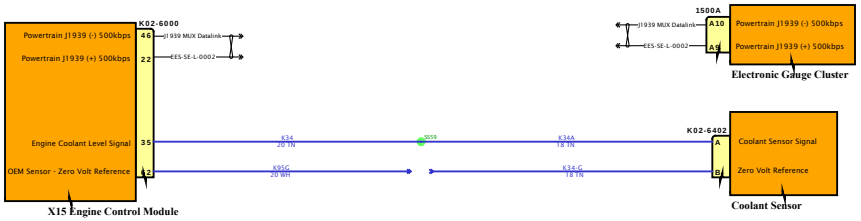

DESIGN DESCRIPTION

FEATURE CODES

SOFTWARE FEATURE CODES

Diagram1

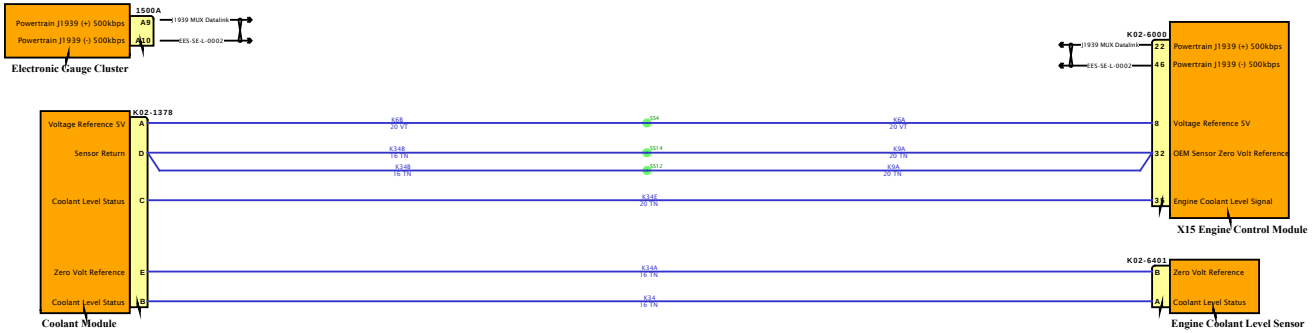

DESIGN DESCRIPTION

FEATURE CODES

SOFTWARE FEATURE CODES

NAVISTAR
NAVISTAR, INC. CONFIDENTIAL PROPRIETARY

Diagram1

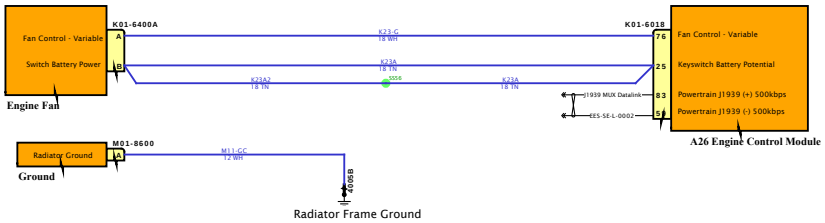

DESIGN DESCRIPTION

FEATURE CODES

SOFTWARE FEATURE CODES

NAVISTAR
NAVISTAR, INC. CONFIDENTIAL PROPRIETARY

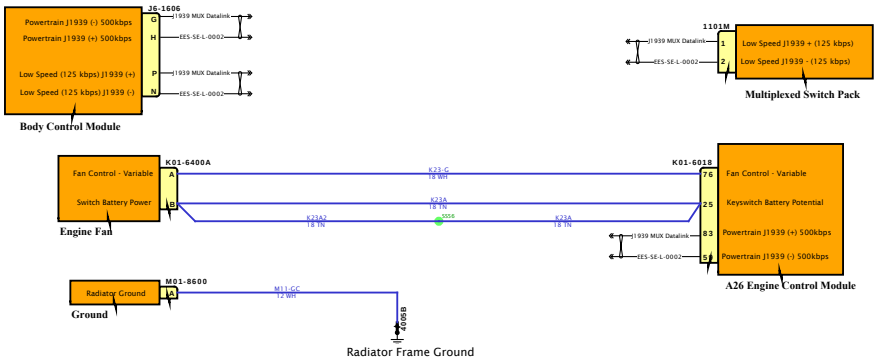

DESIGN DESCRIPTION

FEATURE CODES

SOFTWARE FEATURE CODES

NAVISTAR
NAVISTAR, INC. CONFIDENTIAL PROPRIETARY

Diagram1

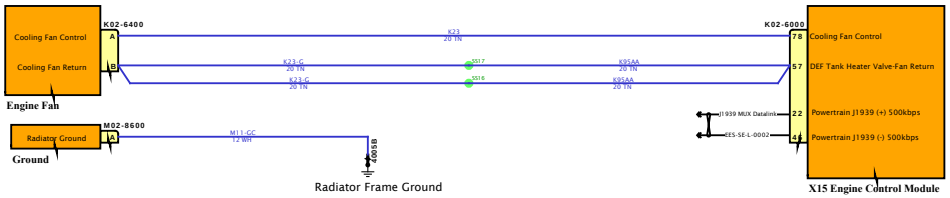

DESIGN DESCRIPTION

FEATURE CODES

SOFTWARE FEATURE CODES

NAVISTAR INC. CONFIDENTIAL PROPRIETARY

Diagram1

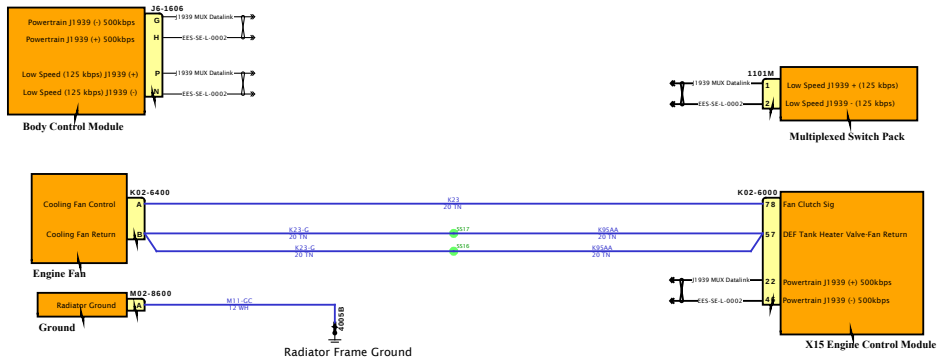

DESIGN DESCRIPTION

FEATURE CODES

SOFTWARE FEATURE CODES

NAVISTAR
NAVISTAR, INC. CONFIDENTIAL PROPRIETARY

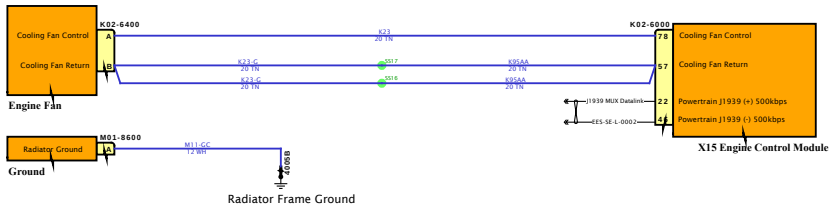

DESIGN DESCRIPTION

FEATURE CODES

SOFTWARE FEATURE CODES

NAVISTAR INC. CONFIDENTIAL PROPRIETARY

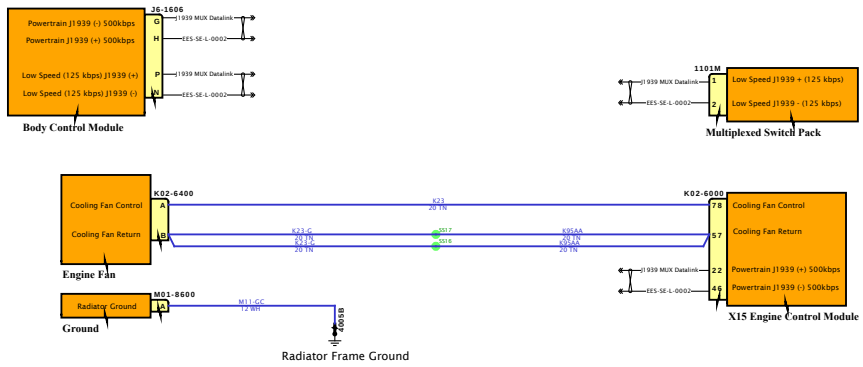

DESIGN DESCRIPTION

FEATURE CODES

SOFTWARE FEATURE CODES

NAVISTAR
NAVISTAR, INC. CONFIDENTIAL PROPRIETARY

Diagram1

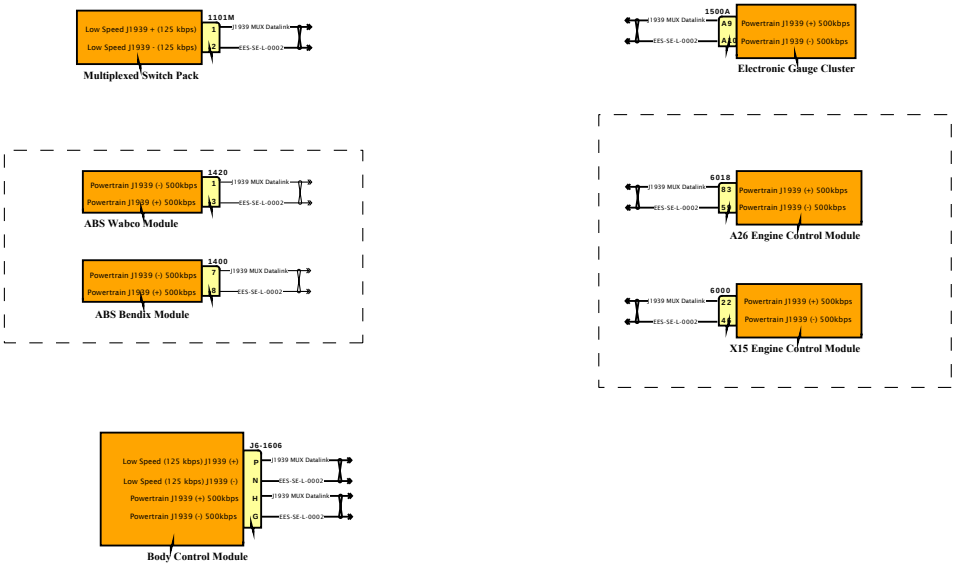

DESIGN DESCRIPTION

FEATURE CODES

SOFTWARE FEATURE CODES

NAVISTAR INC. CONFIDENTIAL PROPRIETARY

Diagram1

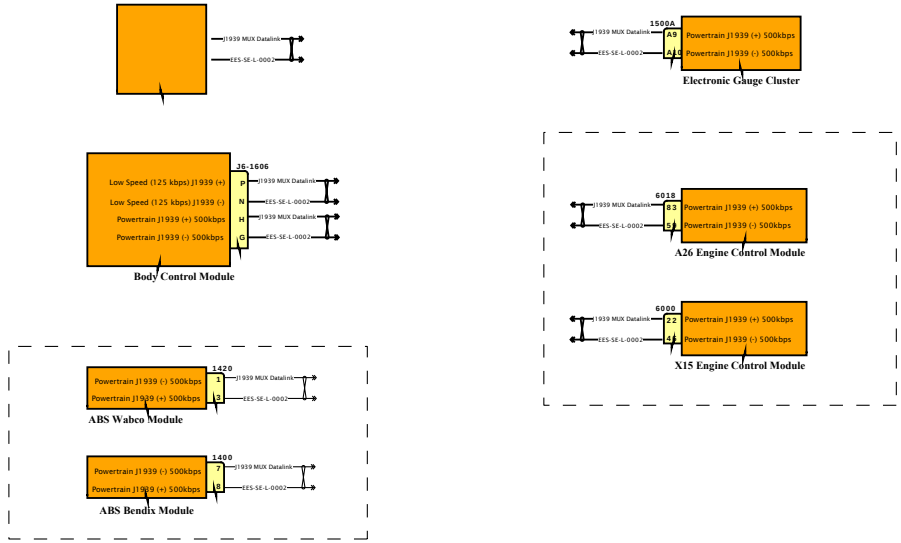

DESIGN DESCRIPTION

FEATURE CODES

SOFTWARE FEATURE CODES

NAVISTAR INC. CONFIDENTIAL PROPRIETARY

Diagram1

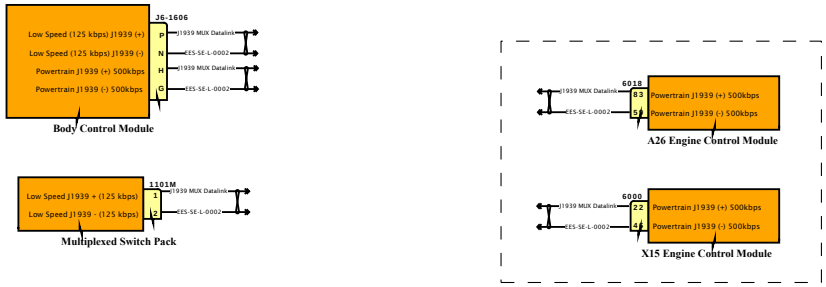

DESIGN DESCRIPTION

FEATURE CODES

SOFTWARE FEATURE CODES

NAVISTAR
NAVISTAR, INC. CONFIDENTIAL PROPRIETARY

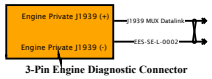

3-Pin Engine Diagnostic Connector

DESIGN DESCRIPTION

FEATURE CODES

SOFTWARE FEATURE CODES

NAVISTAR INC. CONFIDENTIAL PROPRIETARY

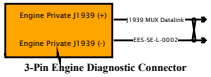

3-Pin Engine Diagnostic Connector

DESIGN DESCRIPTION

FEATURE CODES

SOFTWARE FEATURE CODES

NAVISTAR INC. CONFIDENTIAL PROPRIETARY

Diagram1

DESIGN DESCRIPTION

FEATURE CODES

SOFTWARE FEATURE CODES

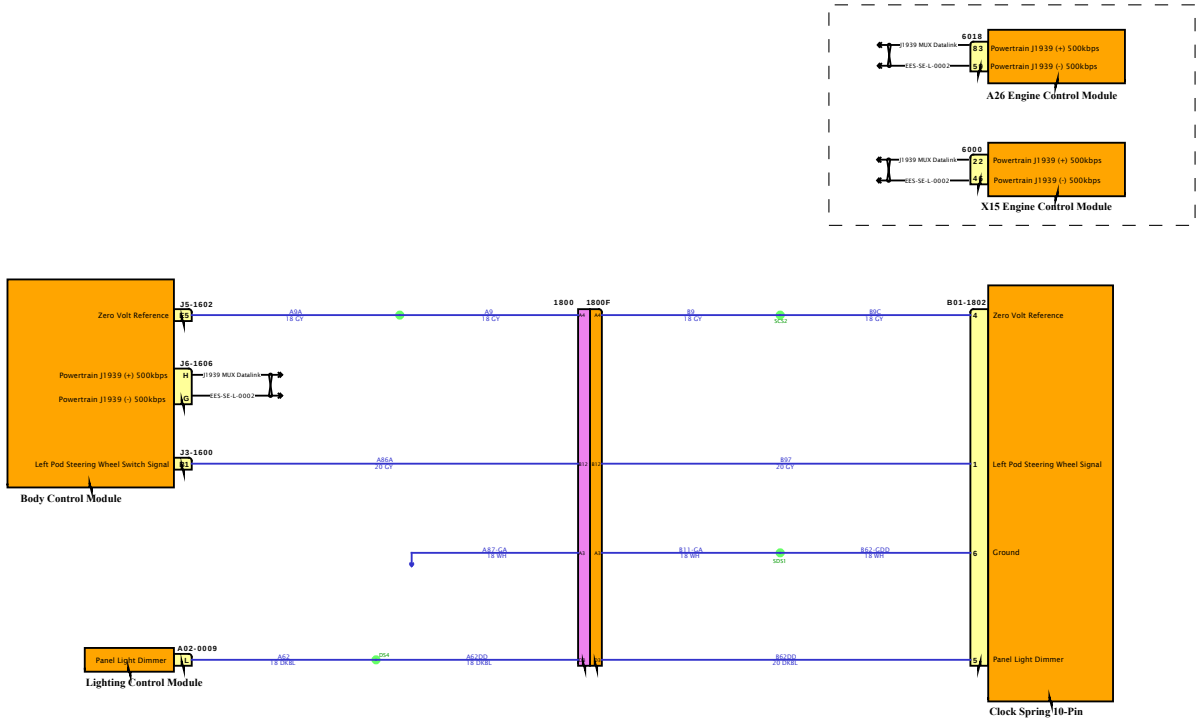

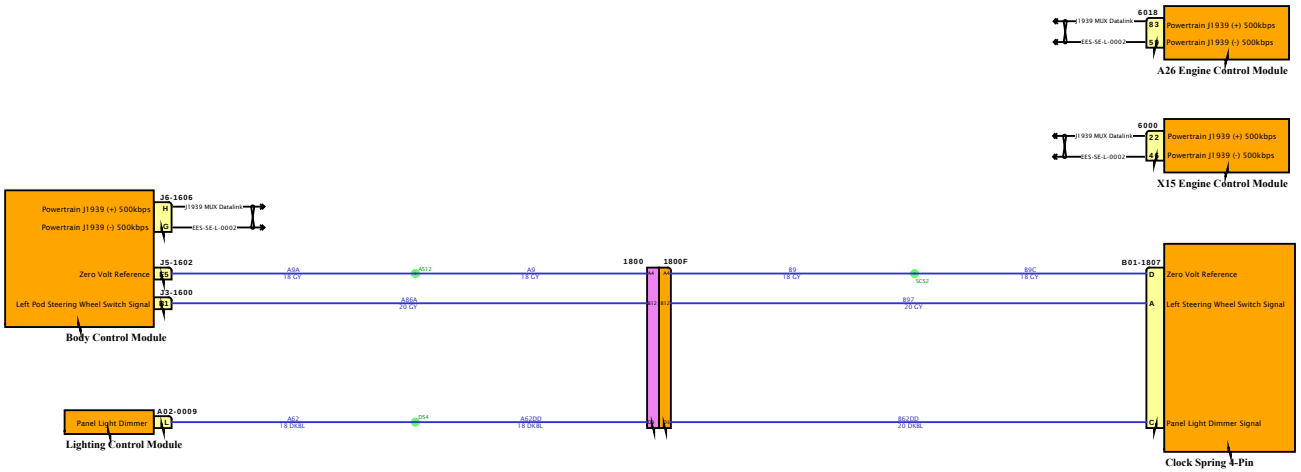

DESIGN DESCRIPTION

FEATURE CODES

SOFTWARE FEATURE CODES

NAVISTAR INC. CONFIDENTIAL PROPRIETARY

Diagram1



DESIGN DESCRIPTION

FEATURE CODES

SOFTWARE FEATURE CODES

NAVISTAR

NAVISTAR, INC. CONFIDENTIAL PROPRIETARY

Diagram1



DESIGN DESCRIPTION

FEATURE CODES

SOFTWARE FEATURE CODES

NAVISTAR

NAVISTAR, INC. CONFIDENTIAL PROPRIETARY

Diagram1



DESIGN DESCRIPTION

FEATURE CODES

SOFTWARE FEATURE CODES

NAVISTAR INC. CONFIDENTIAL PROPRIETARY

Diagram1

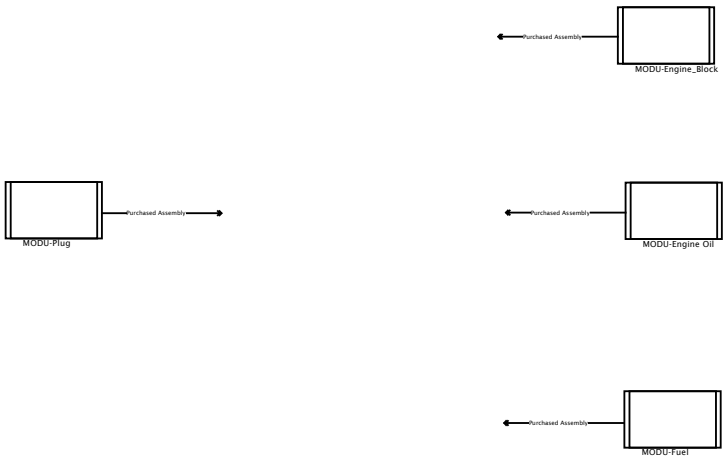

DESIGN DESCRIPTION

FEATURE CODES

SOFTWARE FEATURE CODES

NAVISTAR

NAVISTAR, INC. CONFIDENTIAL PROPRIETARY

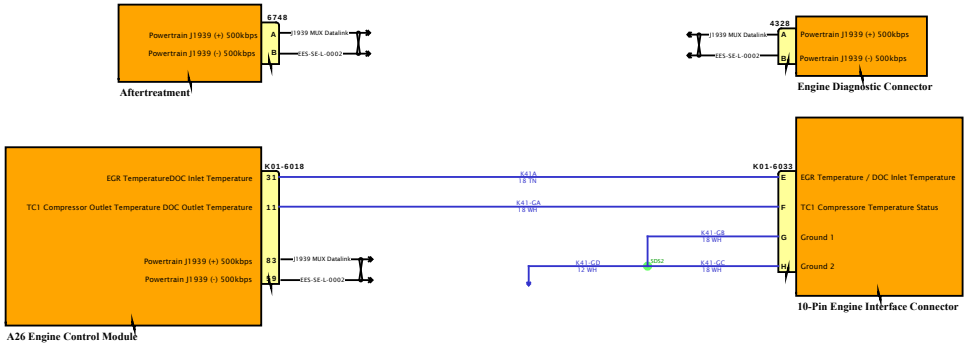

DESIGN DESCRIPTION

FEATURE CODES

SOFTWARE FEATURE CODES

NAVISTAR
NAVISTAR, INC. CONFIDENTIAL PROPRIETARY

DESIGN DESCRIPTION

FEATURE CODES

SOFTWARE FEATURE CODES

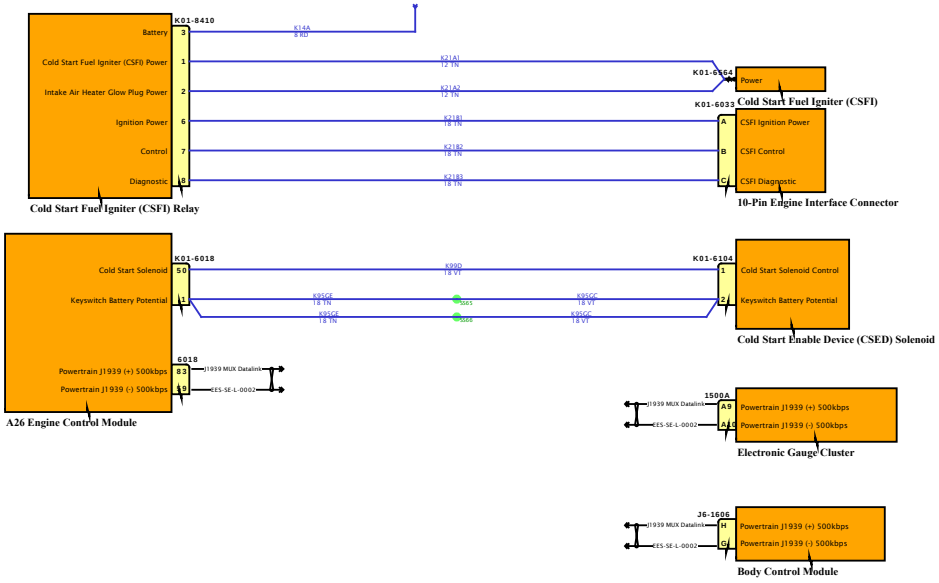

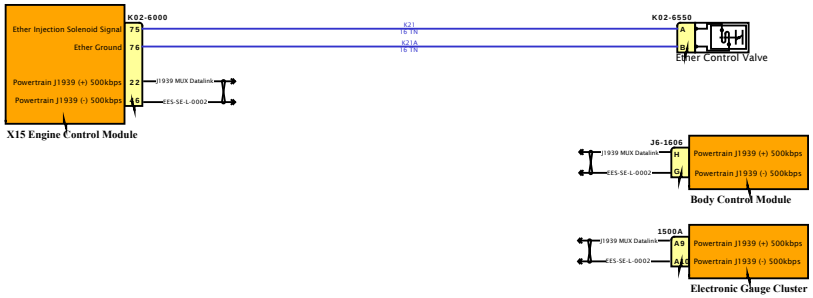

DESIGN DESCRIPTION

FEATURE CODES

SOFTWARE FEATURE CODES

NAVISTAR INC. CONFIDENTIAL PROPRIETARY

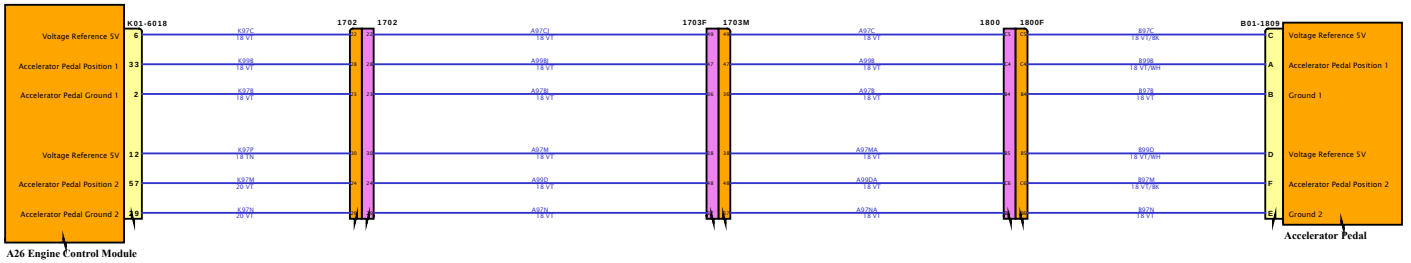

DESIGN DESCRIPTION

FEATURE CODES

SOFTWARE FEATURE CODES

NAVISTAR INC. CONFIDENTIAL PROPRIETARY

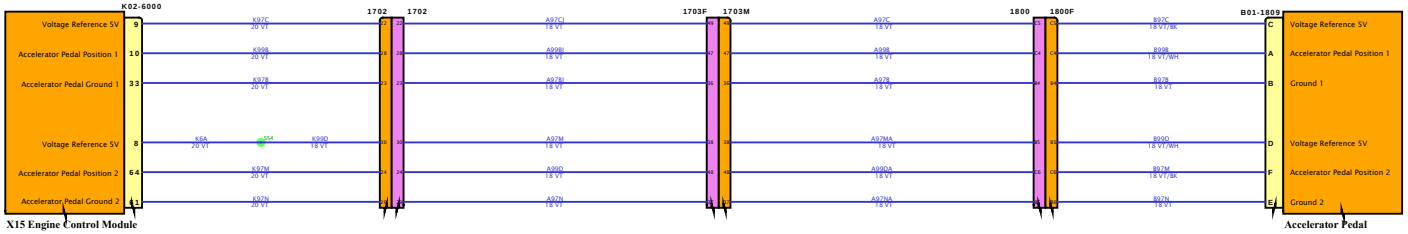

DESIGN DESCRIPTION

FEATURE CODES

SOFTWARE FEATURE CODES

NAVISTAR
NAVISTAR, INC. CONFIDENTIAL PROPRIETARY

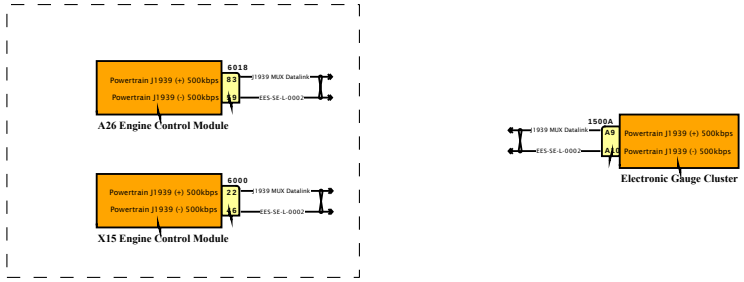

DESIGN DESCRIPTION

FEATURE CODES

SOFTWARE FEATURE CODES

NAVISTAR INC. CONFIDENTIAL PROPRIETARY

Diagram1

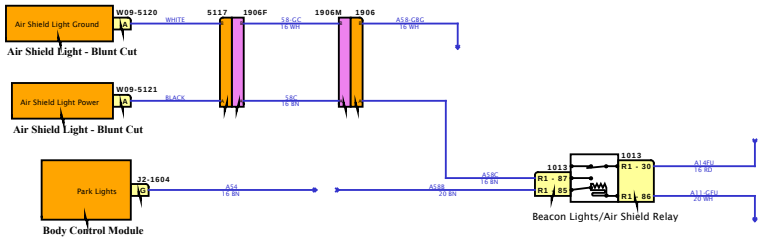

DESIGN DESCRIPTION

FEATURE CODES

SOFTWARE FEATURE CODES

NAVISTAR INC. CONFIDENTIAL PROPRIETARY

Diagram2

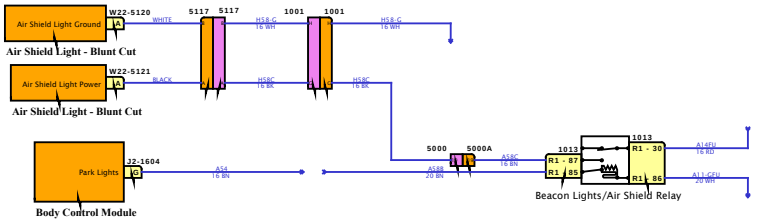

DESIGN DESCRIPTION

FEATURE CODES

SOFTWARE FEATURE CODES

NAVISTAR INC. CONFIDENTIAL PROPRIETARY

Diagram1

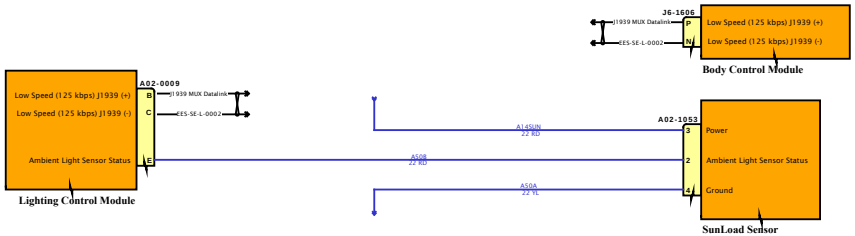

DESIGN DESCRIPTION

FEATURE CODES

SOFTWARE FEATURE CODES

NAVISTAR INC. CONFIDENTIAL PROPRIETARY

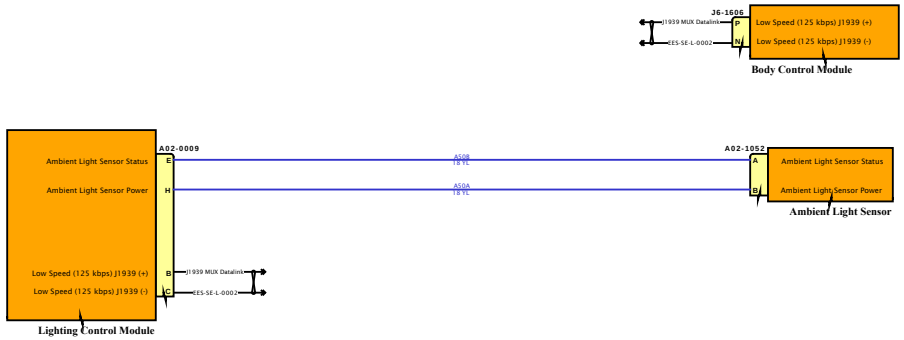

DESIGN DESCRIPTION

FEATURE CODES

SOFTWARE FEATURE CODES

NAVISTAR
NAVISTAR, INC. CONFIDENTIAL PROPRIETARY

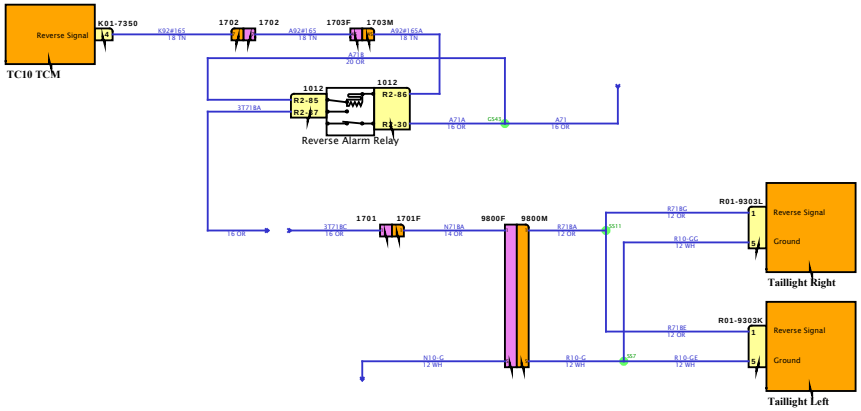

DESIGN DESCRIPTION

FEATURE CODES

SOFTWARE FEATURE CODES

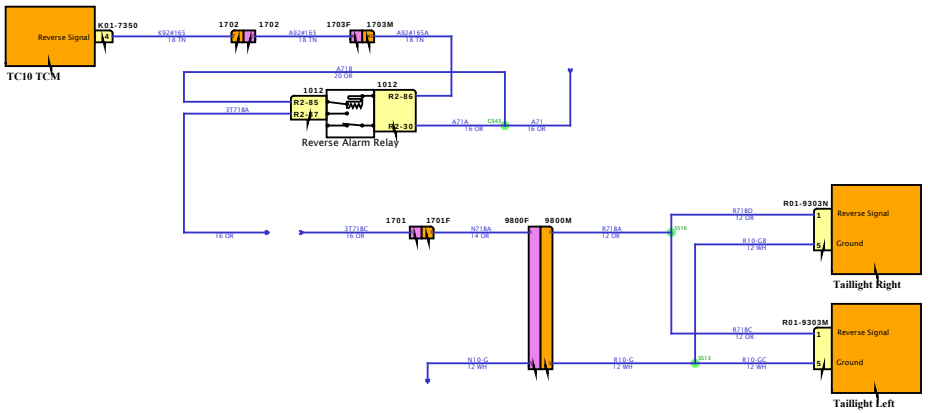

DESIGN DESCRIPTION

FEATURE CODES

SOFTWARE FEATURE CODES

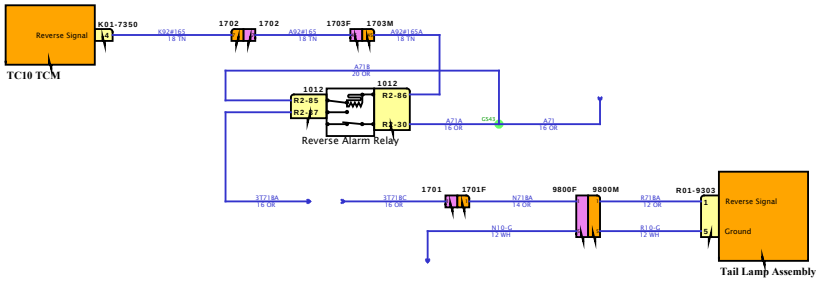

DESIGN DESCRIPTION

FEATURE CODES

SOFTWARE FEATURE CODES

NAVISTAR INC. CONFIDENTIAL PROPRIETARY

Diagram2

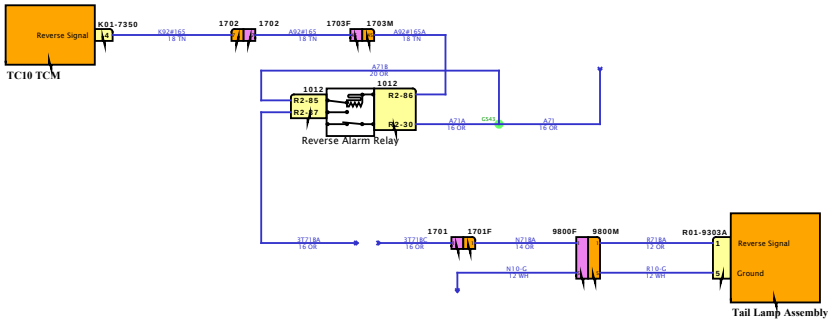

DESIGN DESCRIPTION

FEATURE CODES

SOFTWARE FEATURE CODES

NAVISTAR INC. CONFIDENTIAL PROPRIETARY

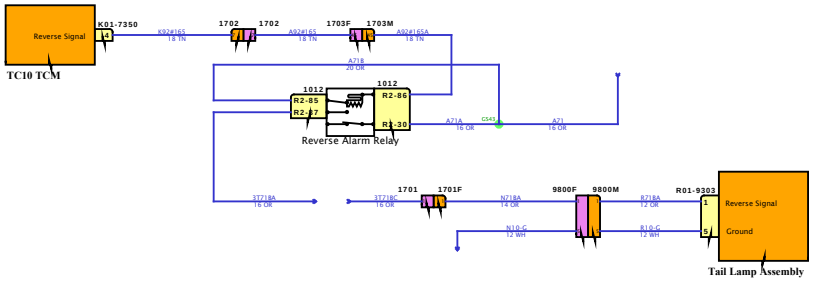

DESIGN DESCRIPTION

FEATURE CODES

SOFTWARE FEATURE CODES

NAVISTAR INC. CONFIDENTIAL PROPRIETARY

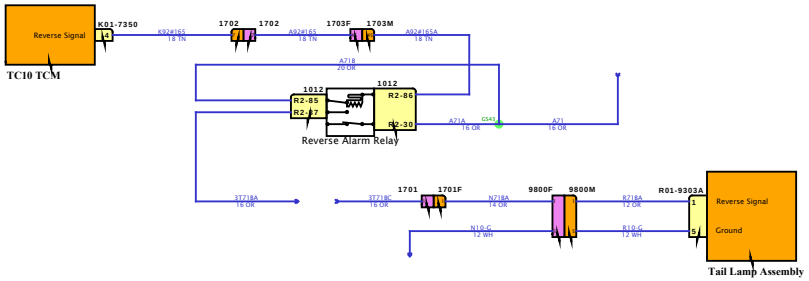

DESIGN DESCRIPTION

FEATURE CODES

SOFTWARE FEATURE CODES

NAVISTAR INC. CONFIDENTIAL PROPRIETARY

Diagram1

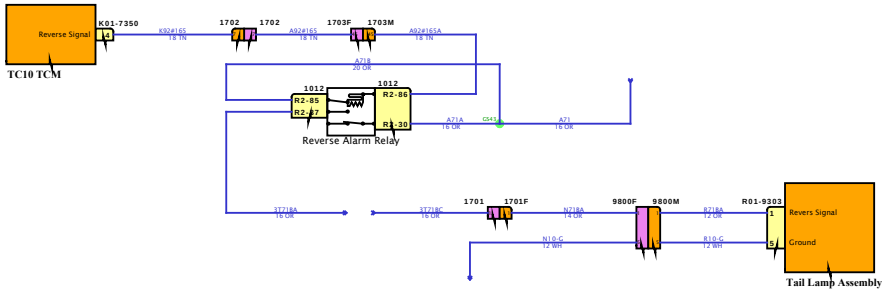

DESIGN DESCRIPTION

FEATURE CODES

SOFTWARE FEATURE CODES

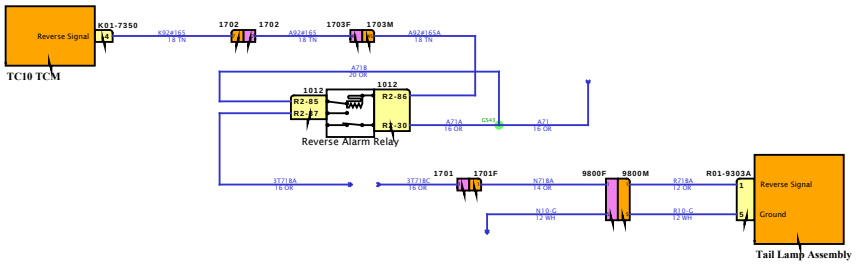

DESIGN DESCRIPTION

FEATURE CODES

SOFTWARE FEATURE CODES

NAVISTAR INC. CONFIDENTIAL PROPRIETARY

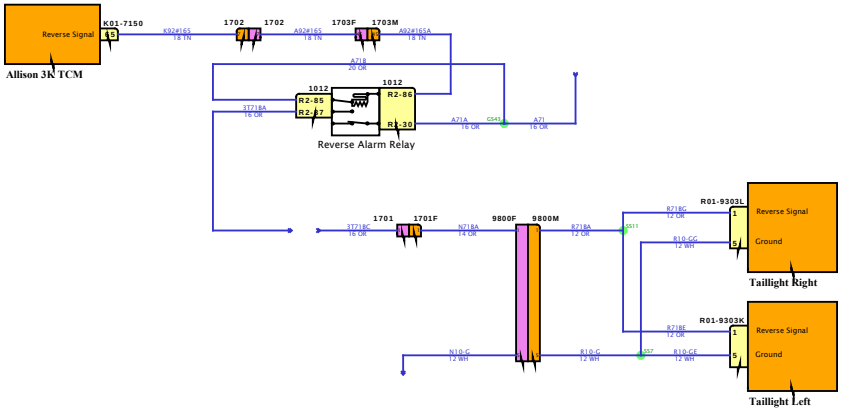

DESIGN DESCRIPTION

FEATURE CODES

SOFTWARE FEATURE CODES

Diagram2

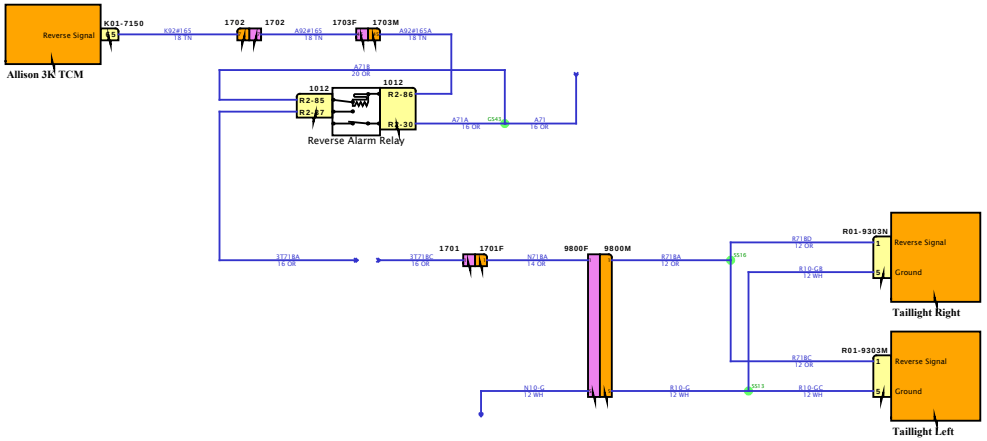

DESIGN DESCRIPTION

FEATURE CODES

SOFTWARE FEATURE CODES

NAVISTAR INC. CONFIDENTIAL PROPRIETARY

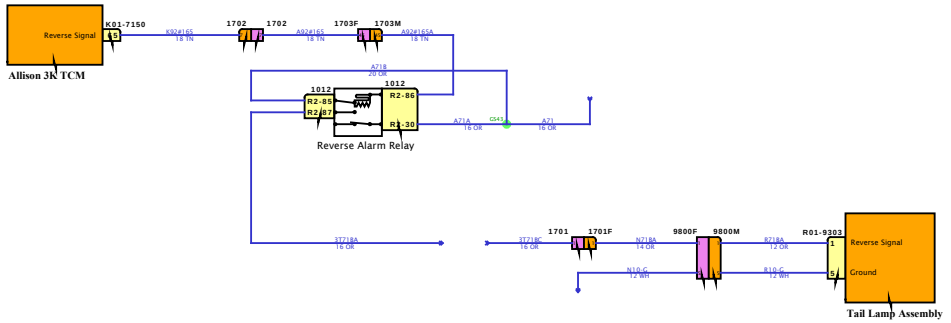

DESIGN DESCRIPTION

FEATURE CODES

SOFTWARE FEATURE CODES

NAVISTAR

NAVISTAR, INC. CONFIDENTIAL PROPRIETARY

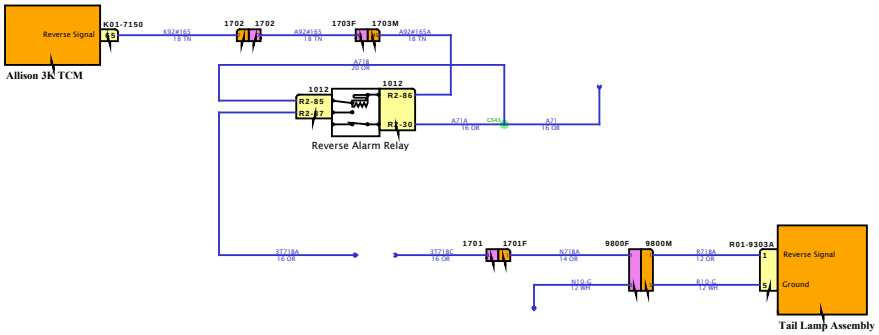

DESIGN DESCRIPTION

FEATURE CODES

SOFTWARE FEATURE CODES

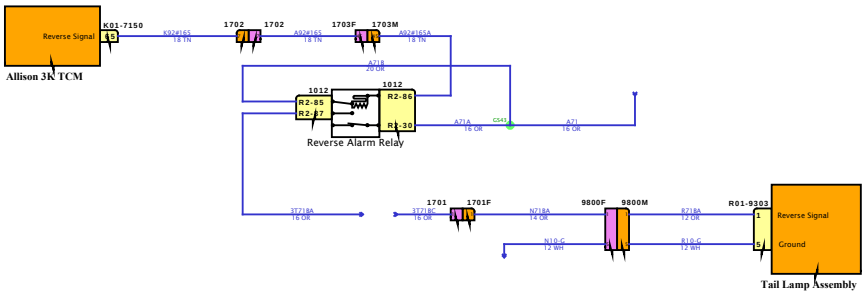

DESIGN DESCRIPTION

FEATURE CODES

SOFTWARE FEATURE CODES

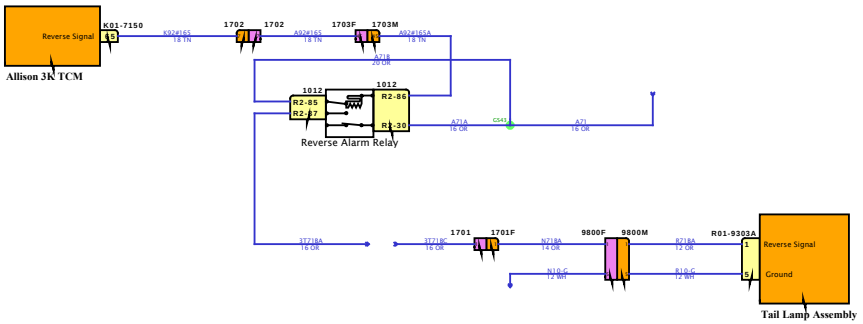

DESIGN DESCRIPTION

FEATURE CODES

SOFTWARE FEATURE CODES

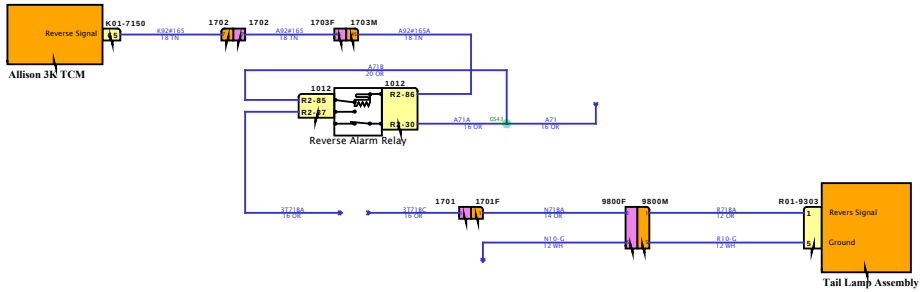

DESIGN DESCRIPTION

FEATURE CODES

SOFTWARE FEATURE CODES

NAVISTAR
NAVISTAR, INC. CONFIDENTIAL PROPRIETARY

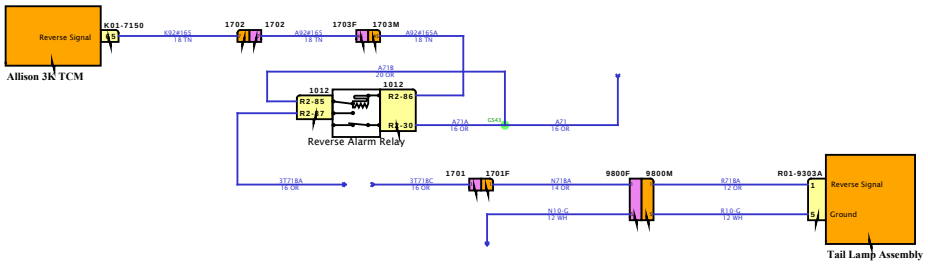

DESIGN DESCRIPTION

FEATURE CODES

SOFTWARE FEATURE CODES

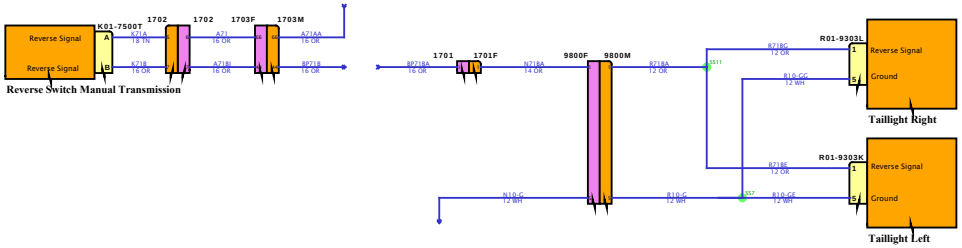

DESIGN DESCRIPTION

FEATURE CODES

SOFTWARE FEATURE CODES

NAVISTAR INC. CONFIDENTIAL PROPRIETARY

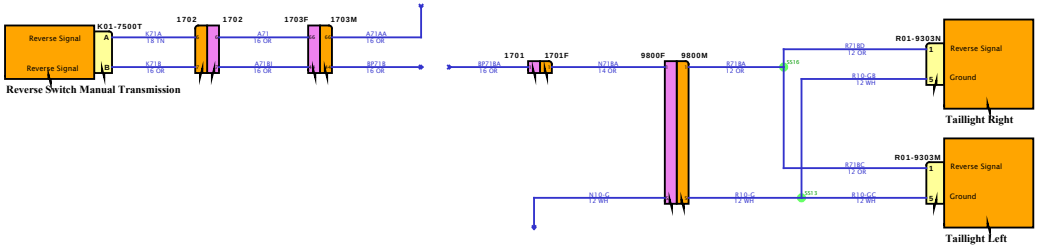

DESIGN DESCRIPTION

FEATURE CODES

SOFTWARE FEATURE CODES

NAVISTAR
NAVISTAR, INC. CONFIDENTIAL PROPRIETARY

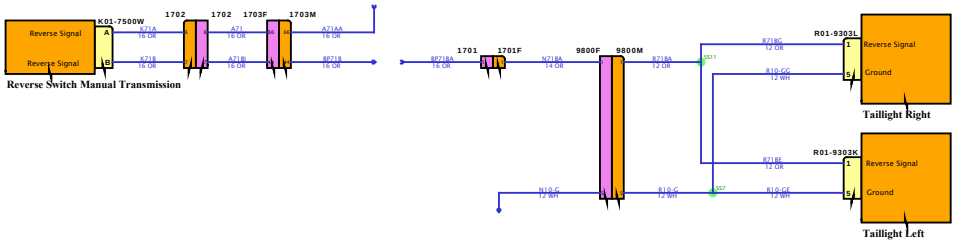

DESIGN DESCRIPTION

FEATURE CODES

SOFTWARE FEATURE CODES

NAVISTAR INC. CONFIDENTIAL PROPRIETARY

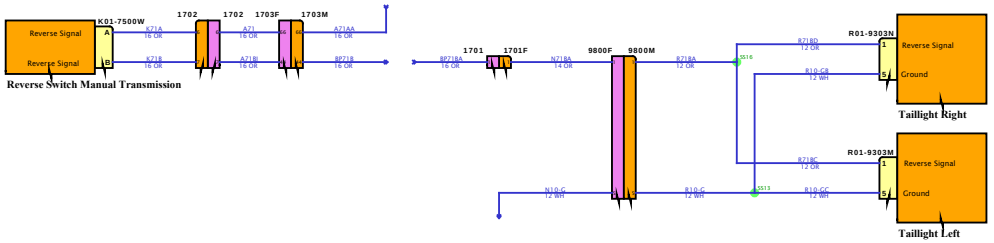

DESIGN DESCRIPTION

FEATURE CODES

SOFTWARE FEATURE CODES

NAVISTAR
NAVISTAR, INC. CONFIDENTIAL PROPRIETARY

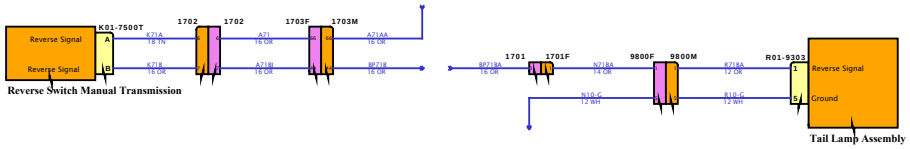

DESIGN DESCRIPTION

FEATURE CODES

SOFTWARE FEATURE CODES

NAVISTAR
NAVISTAR, INC. CONFIDENTIAL PROPRIETARY

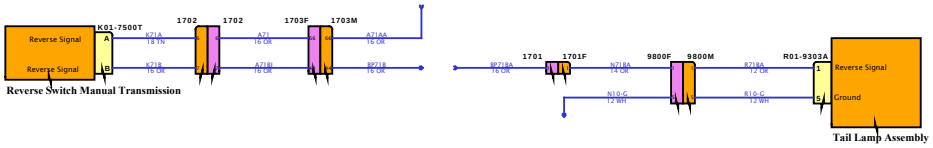

DESIGN DESCRIPTION

FEATURE CODES

SOFTWARE FEATURE CODES

NAVISTAR INC. CONFIDENTIAL PROPRIETARY

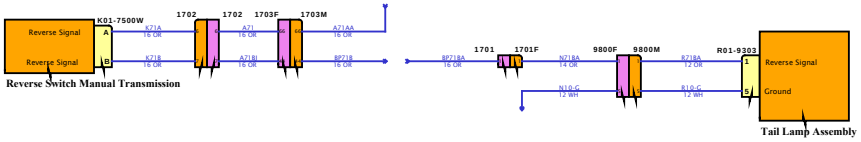

DESIGN DESCRIPTION

FEATURE CODES

SOFTWARE FEATURE CODES

NAVISTAR INC. CONFIDENTIAL PROPRIETARY

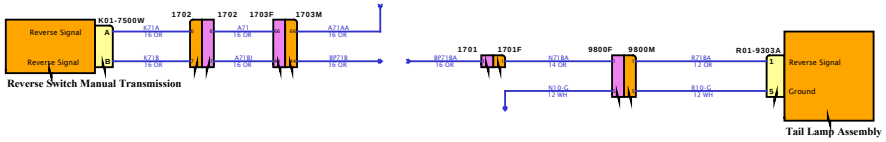

DESIGN DESCRIPTION

FEATURE CODES

SOFTWARE FEATURE CODES

NAVISTAR INC. CONFIDENTIAL PROPRIETARY

Diagram1

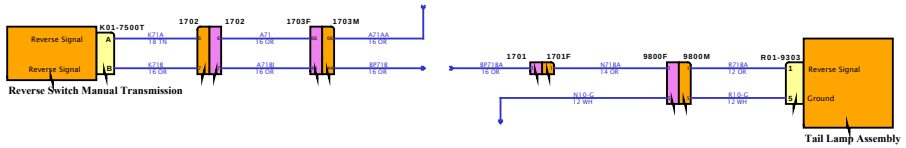

DESIGN DESCRIPTION

FEATURE CODES

SOFTWARE FEATURE CODES

NAVISTAR INC. CONFIDENTIAL PROPRIETARY

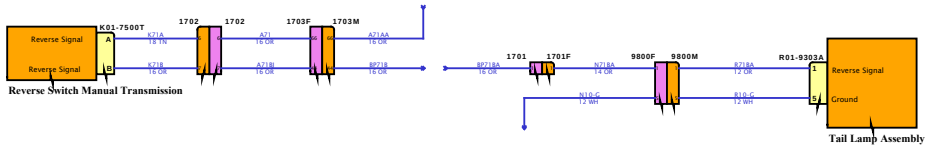

DESIGN DESCRIPTION

FEATURE CODES

SOFTWARE FEATURE CODES

NAVISTAR INC. CONFIDENTIAL PROPRIETARY

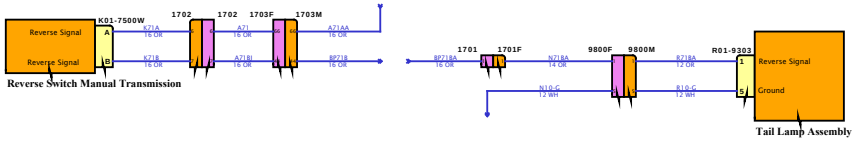

DESIGN DESCRIPTION

FEATURE CODES

SOFTWARE FEATURE CODES

NAVISTAR INC. CONFIDENTIAL PROPRIETARY

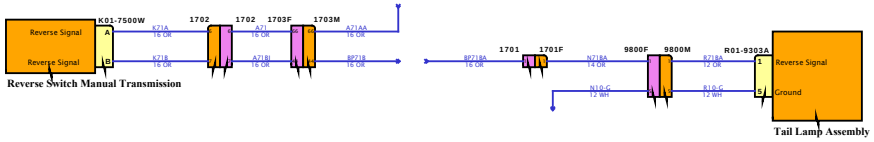

DESIGN DESCRIPTION

FEATURE CODES

SOFTWARE FEATURE CODES

NAVISTAR INC. CONFIDENTIAL PROPRIETARY

Diagram1

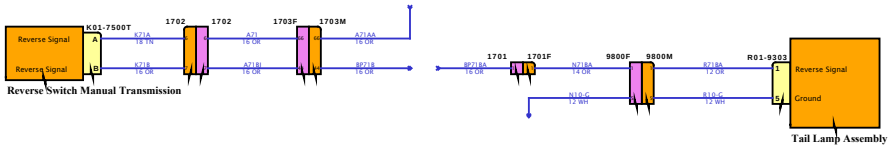

DESIGN DESCRIPTION

FEATURE CODES

SOFTWARE FEATURE CODES

NAVISTAR INC. CONFIDENTIAL PROPRIETARY

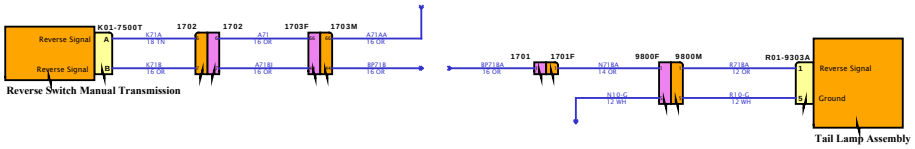

DESIGN DESCRIPTION

FEATURE CODES

SOFTWARE FEATURE CODES

NAVISTAR INC. CONFIDENTIAL PROPRIETARY

Diagram3

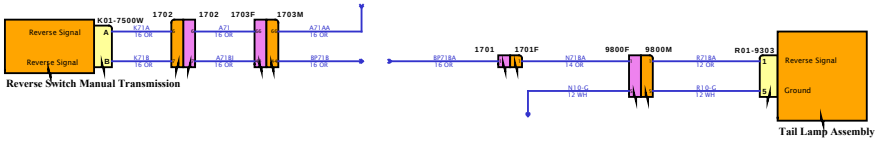

DESIGN DESCRIPTION

FEATURE CODES

SOFTWARE FEATURE CODES

NAVISTAR INC. CONFIDENTIAL PROPRIETARY

Diagram4

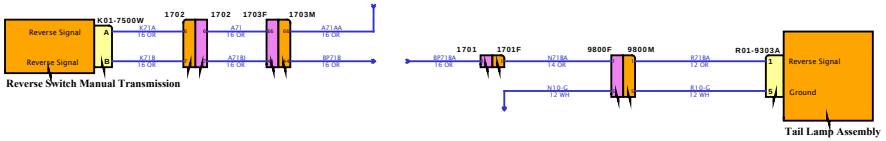

DESIGN DESCRIPTION

FEATURE CODES

SOFTWARE FEATURE CODES

NAVISTAR INC. CONFIDENTIAL PROPRIETARY

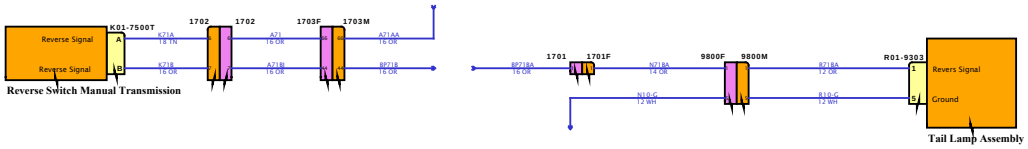

DESIGN DESCRIPTION

FEATURE CODES

SOFTWARE FEATURE CODES

NAVISTAR INC. CONFIDENTIAL PROPRIETARY

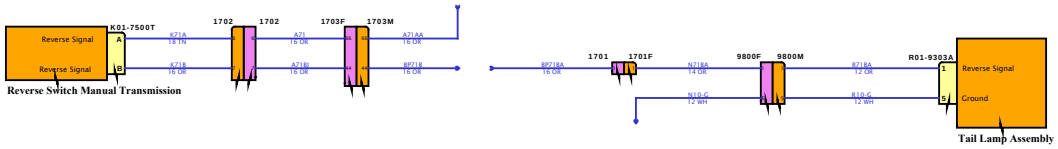

DESIGN DESCRIPTION

FEATURE CODES

SOFTWARE FEATURE CODES

NAVISTAR INC. CONFIDENTIAL PROPRIETARY

Diagram3

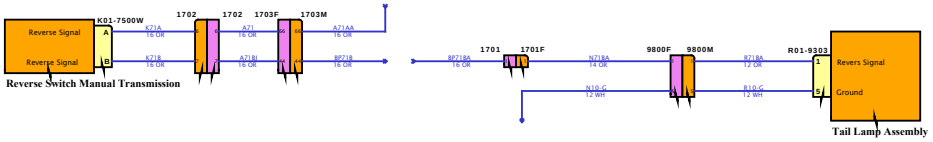

DESIGN DESCRIPTION

FEATURE CODES

SOFTWARE FEATURE CODES

NAVISTAR INC. CONFIDENTIAL PROPRIETARY

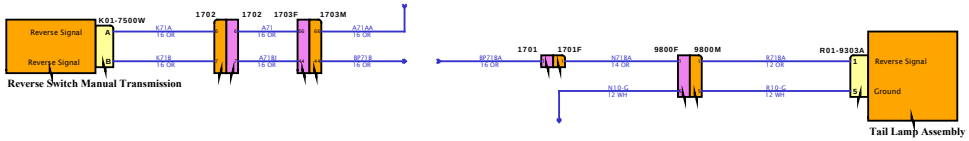

DESIGN DESCRIPTION

FEATURE CODES

SOFTWARE FEATURE CODES

NAVISTAR INC. CONFIDENTIAL PROPRIETARY

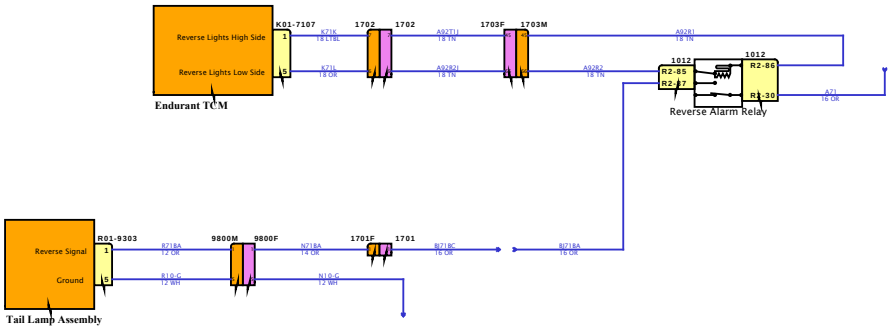

DESIGN DESCRIPTION

FEATURE CODES

SOFTWARE FEATURE CODES

NAVISTAR INC. CONFIDENTIAL PROPRIETARY

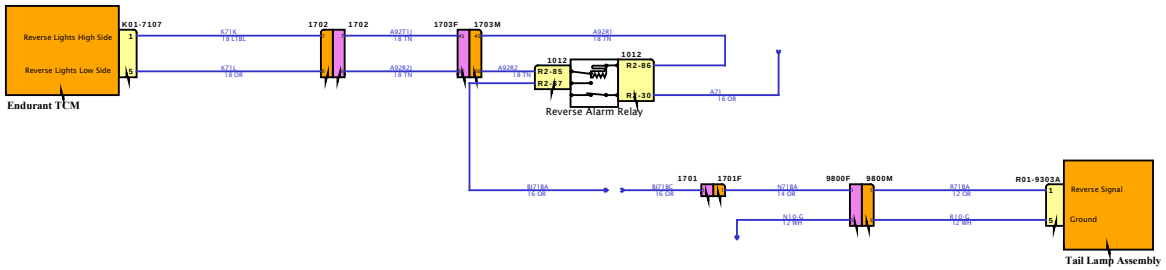

DESIGN DESCRIPTION

FEATURE CODES

SOFTWARE FEATURE CODES

NAVISTAR INC. CONFIDENTIAL PROPRIETARY

Diagram1

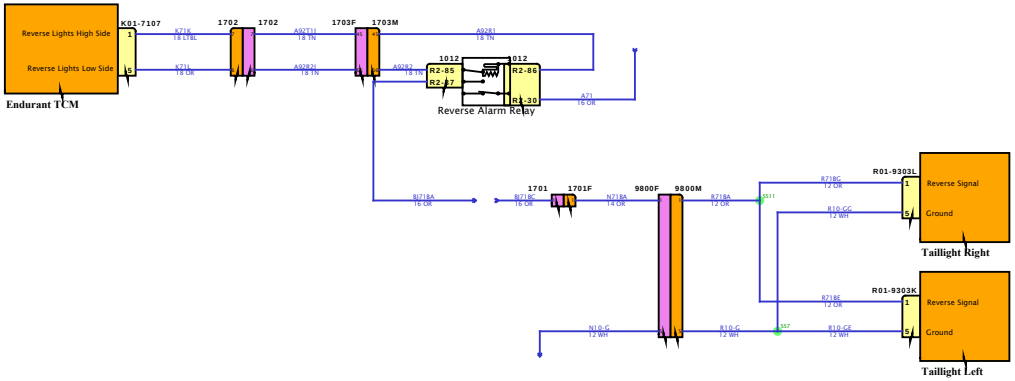

DESIGN DESCRIPTION

FEATURE CODES

SOFTWARE FEATURE CODES

NAVISTAR
NAVISTAR, INC. CONFIDENTIAL PROPRIETARY

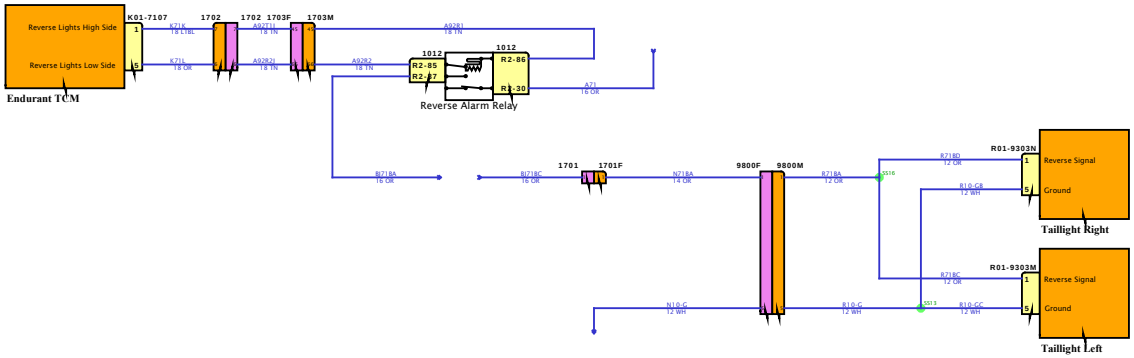

DESIGN DESCRIPTION

FEATURE CODES

SOFTWARE FEATURE CODES

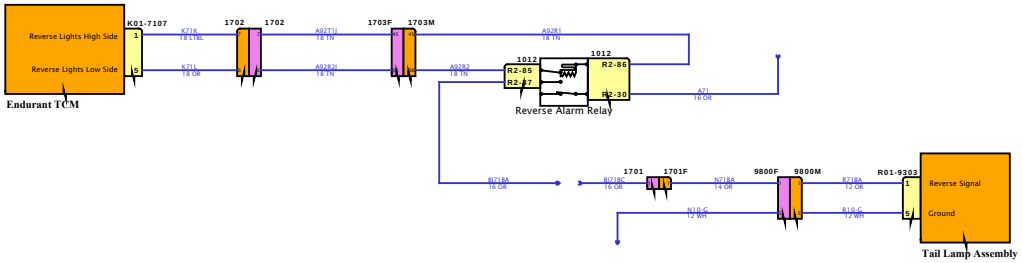

DESIGN DESCRIPTION

FEATURE CODES

SOFTWARE FEATURE CODES

NAVISTAR
NAVISTAR, INC. CONFIDENTIAL PROPRIETARY

Diagram2

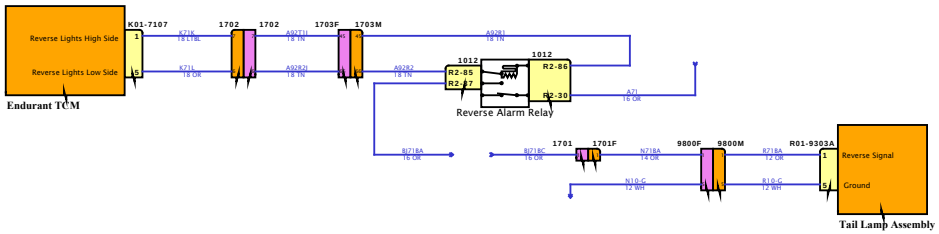

DESIGN DESCRIPTION

FEATURE CODES

SOFTWARE FEATURE CODES

NAVISTAR
NAVISTAR, INC. CONFIDENTIAL PROPRIETARY

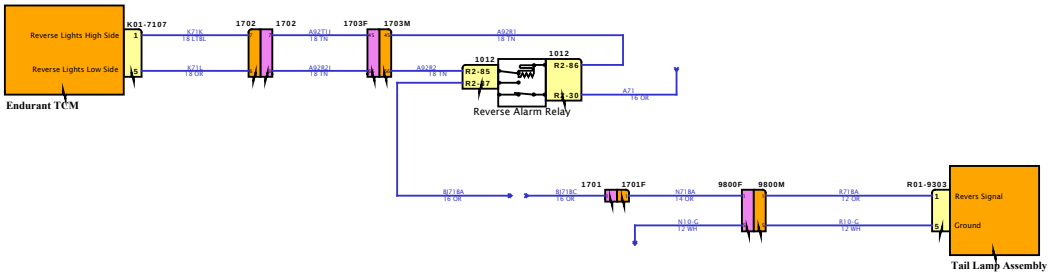

DESIGN DESCRIPTION

FEATURE CODES

SOFTWARE FEATURE CODES

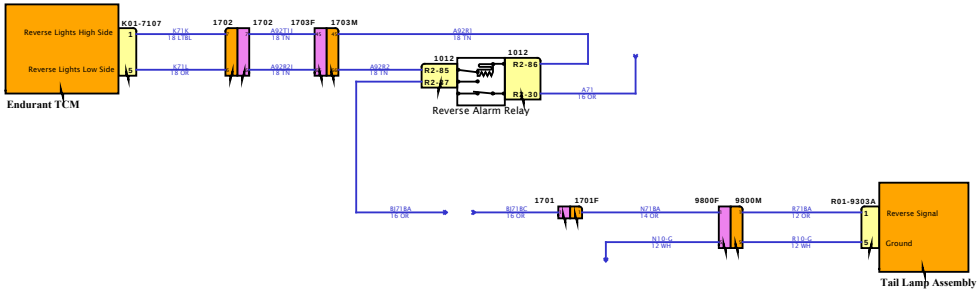

DESIGN DESCRIPTION

FEATURE CODES

SOFTWARE FEATURE CODES

NAVISTAR INC. CONFIDENTIAL PROPRIETARY

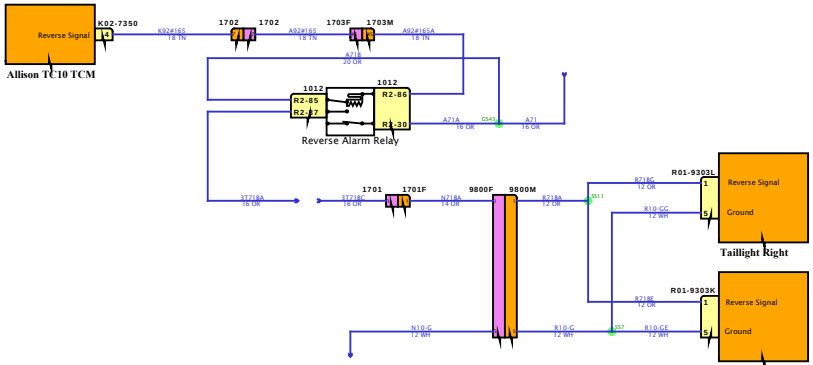

DESIGN DESCRIPTION

FEATURE CODES

SOFTWARE FEATURE CODES

NAVISTAR
NAVISTAR, INC. CONFIDENTIAL PROPRIETARY

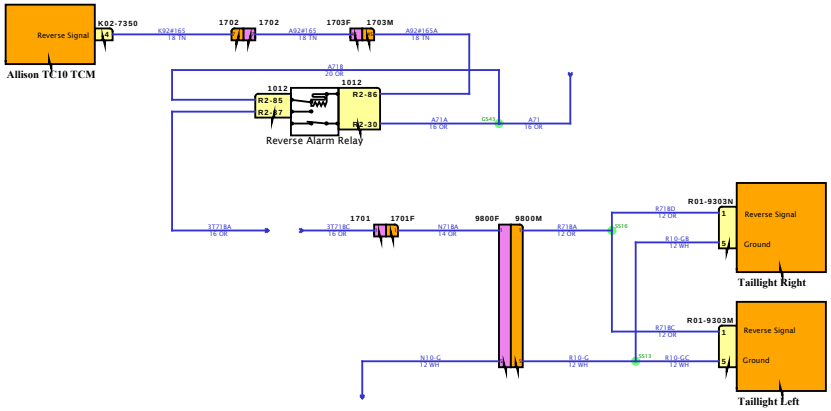

DESIGN DESCRIPTION

FEATURE CODES

SOFTWARE FEATURE CODES

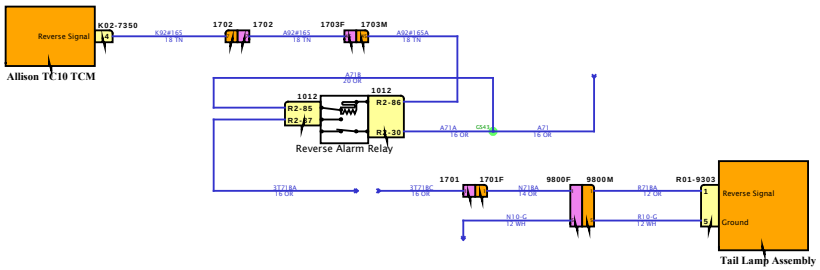

DESIGN DESCRIPTION

FEATURE CODES

SOFTWARE FEATURE CODES

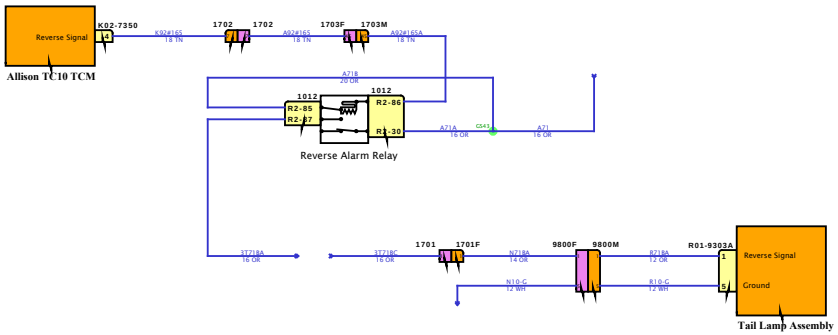

DESIGN DESCRIPTION

FEATURE CODES

SOFTWARE FEATURE CODES

NAVISTAR INC. CONFIDENTIAL PROPRIETARY

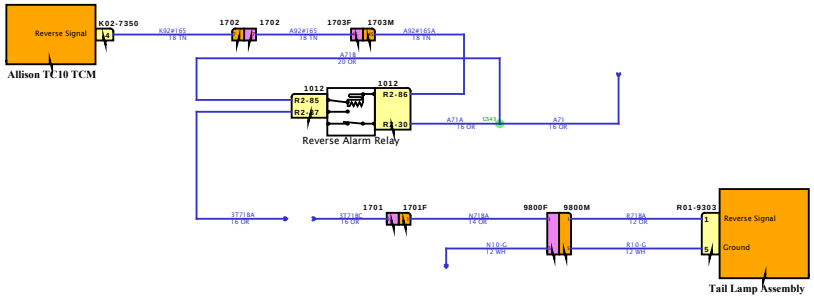

DESIGN DESCRIPTION

FEATURE CODES

SOFTWARE FEATURE CODES

NAVISTAR INC. CONFIDENTIAL PROPRIETARY

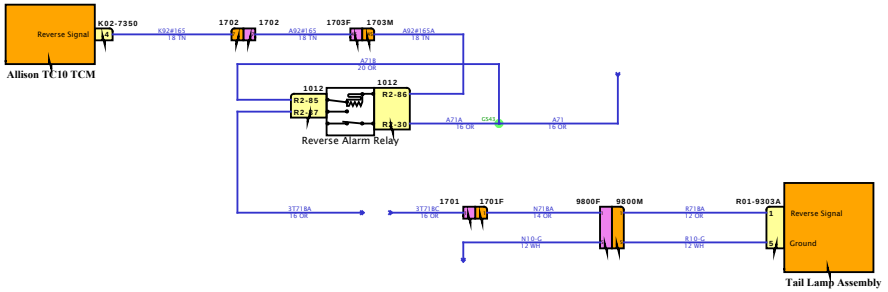

DESIGN DESCRIPTION

FEATURE CODES

SOFTWARE FEATURE CODES

NAVISTAR
NAVISTAR, INC. CONFIDENTIAL PROPRIETARY

Diagram1

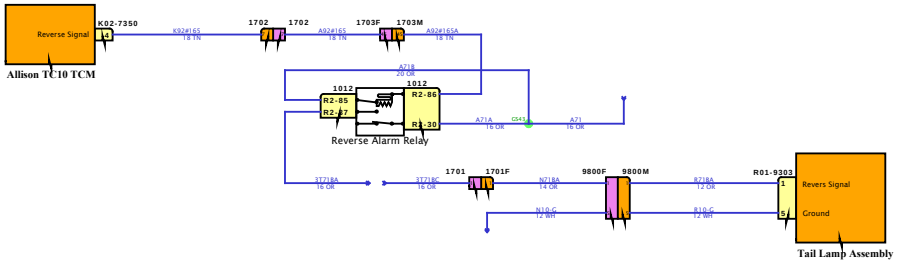

DESIGN DESCRIPTION

FEATURE CODES

SOFTWARE FEATURE CODES

NAVISTAR INC. CONFIDENTIAL PROPRIETARY

Diagram2

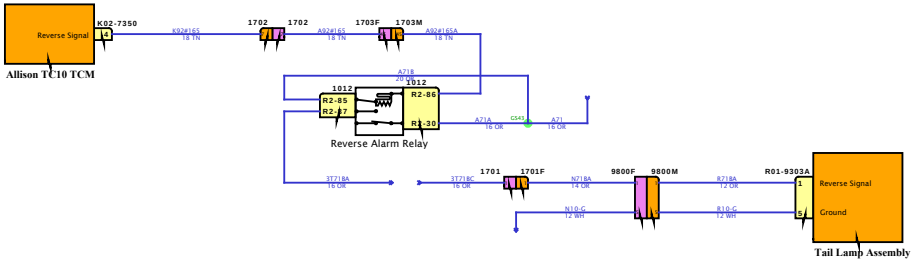

DESIGN DESCRIPTION

FEATURE CODES

SOFTWARE FEATURE CODES

NAVISTAR INC. CONFIDENTIAL PROPRIETARY

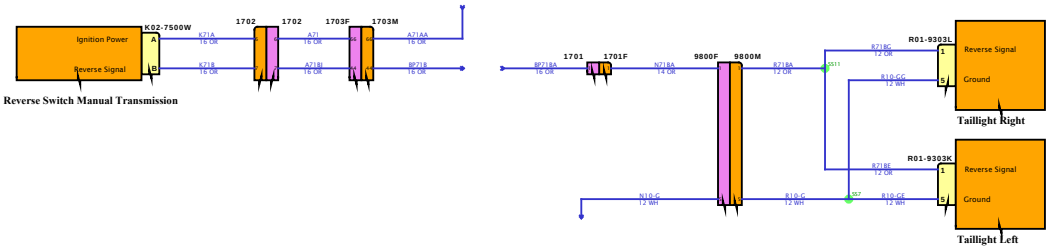

DESIGN DESCRIPTION

FEATURE CODES

SOFTWARE FEATURE CODES

Diagram2

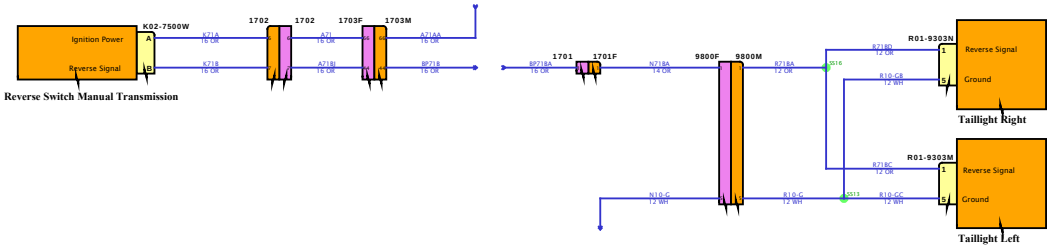

DESIGN DESCRIPTION

FEATURE CODES

SOFTWARE FEATURE CODES

NAVISTAR INC. CONFIDENTIAL PROPRIETARY

Diagram1

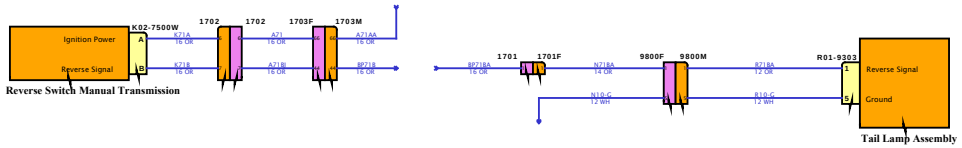

DESIGN DESCRIPTION

FEATURE CODES

SOFTWARE FEATURE CODES

NAVISTAR INC. CONFIDENTIAL PROPRIETARY

Diagram2

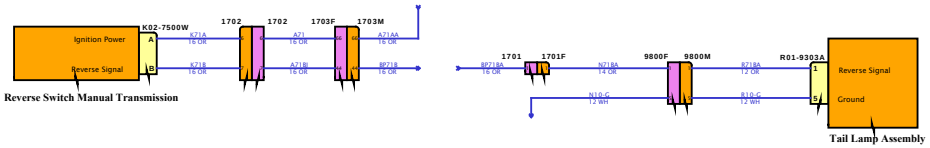

DESIGN DESCRIPTION

FEATURE CODES

SOFTWARE FEATURE CODES

NAVISTAR INC. CONFIDENTIAL PROPRIETARY

Diagram1

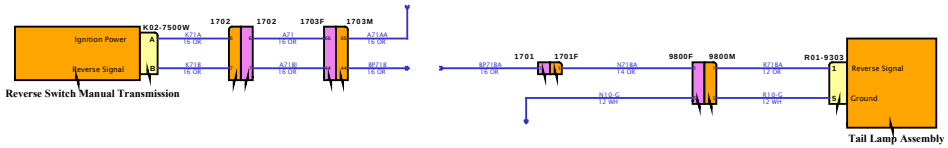

DESIGN DESCRIPTION

FEATURE CODES

SOFTWARE FEATURE CODES

NAVISTAR INC. CONFIDENTIAL PROPRIETARY

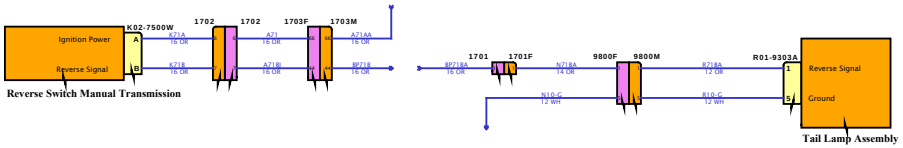

DESIGN DESCRIPTION

FEATURE CODES

SOFTWARE FEATURE CODES

NAVISTAR INC. CONFIDENTIAL PROPRIETARY

Diagram1

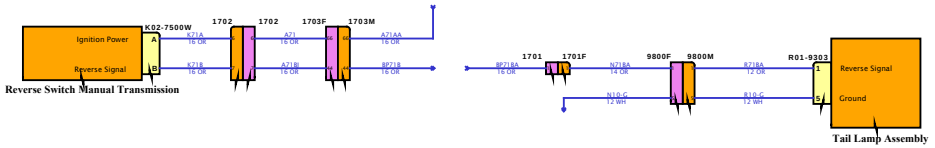

DESIGN DESCRIPTION

FEATURE CODES

SOFTWARE FEATURE CODES

NAVISTAR INC. CONFIDENTIAL PROPRIETARY

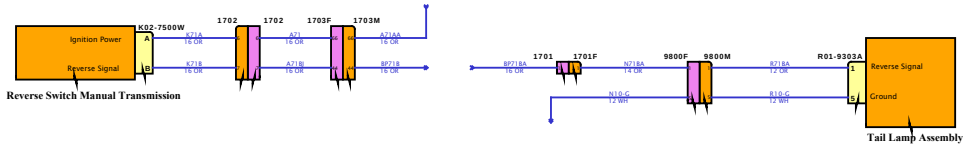

DESIGN DESCRIPTION

FEATURE CODES

SOFTWARE FEATURE CODES

NAVISTAR INC. CONFIDENTIAL PROPRIETARY

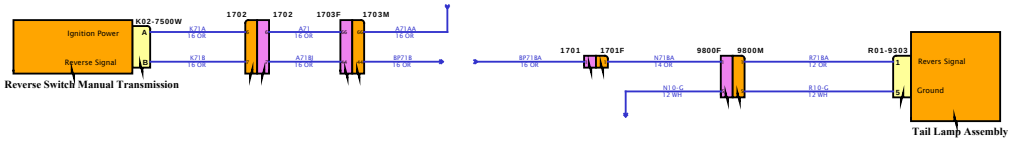

DESIGN DESCRIPTION

FEATURE CODES

SOFTWARE FEATURE CODES

NAVISTAR INC. CONFIDENTIAL PROPRIETARY

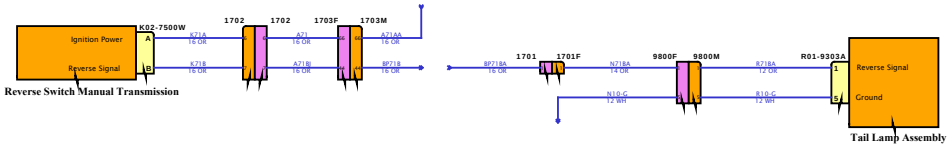

DESIGN DESCRIPTION

FEATURE CODES

SOFTWARE FEATURE CODES

NAVISTAR INC. CONFIDENTIAL PROPRIETARY

Diagram1

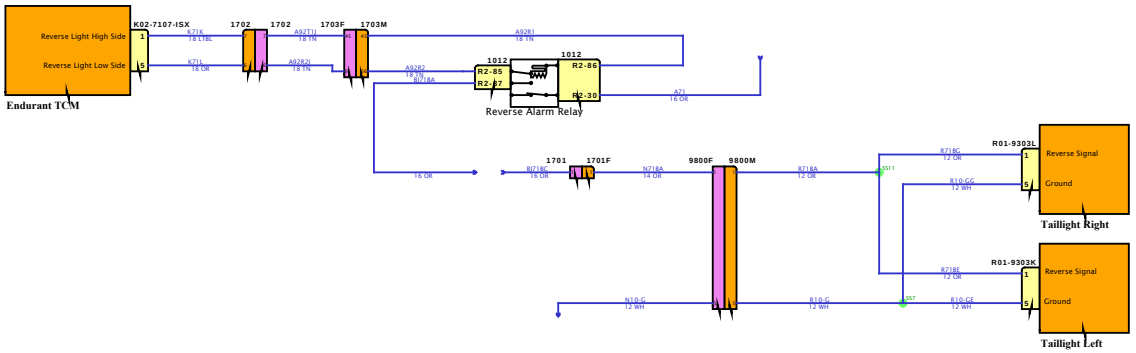

DESIGN DESCRIPTION

FEATURE CODES

SOFTWARE FEATURE CODES

Diagram2

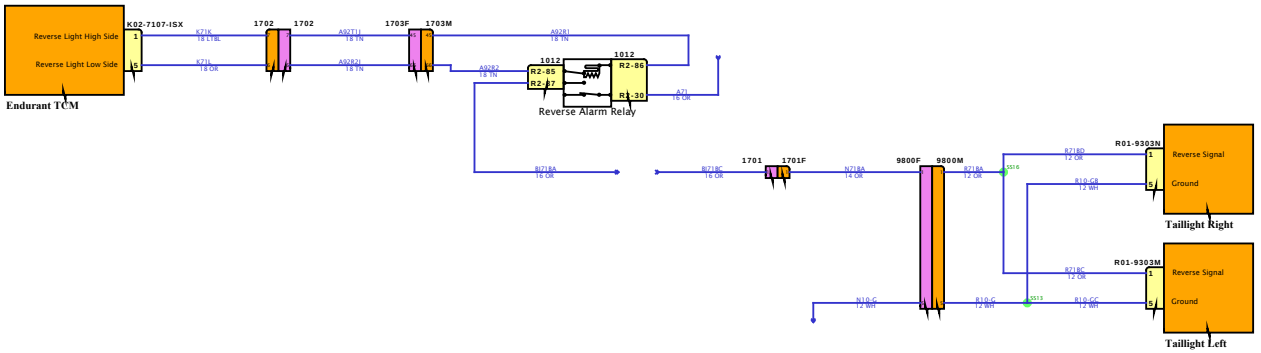

DESIGN DESCRIPTION

FEATURE CODES

SOFTWARE FEATURE CODES

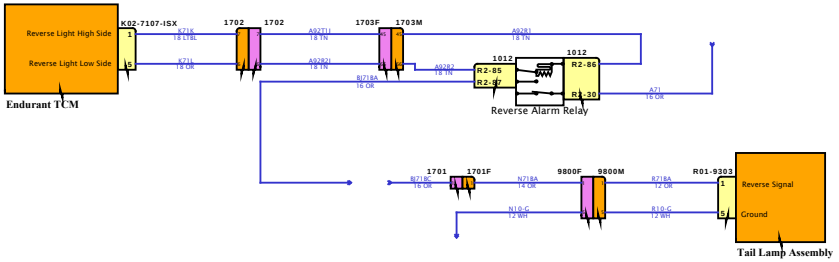

DESIGN DESCRIPTION

FEATURE CODES

SOFTWARE FEATURE CODES

NAVISTAR INC. CONFIDENTIAL PROPRIETARY

Diagram2

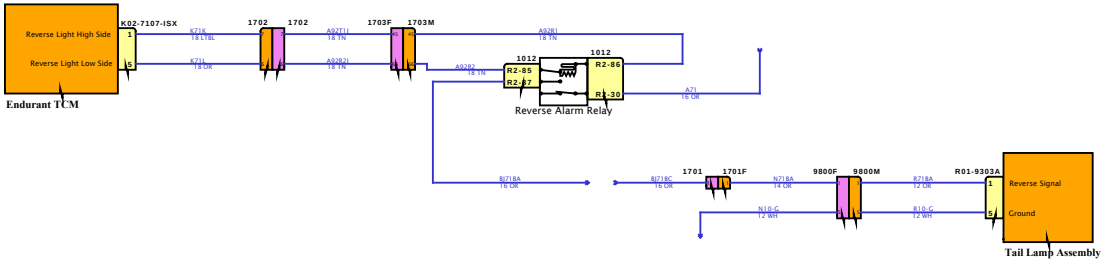

DESIGN DESCRIPTION

FEATURE CODES

SOFTWARE FEATURE CODES

NAVISTAR INC. CONFIDENTIAL PROPRIETARY

Diagram1

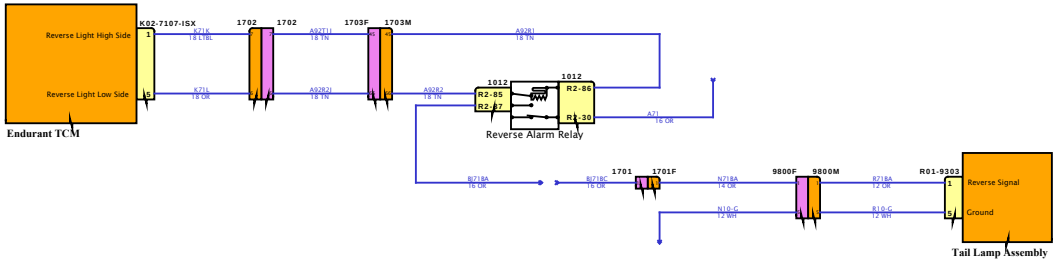

DESIGN DESCRIPTION

FEATURE CODES

SOFTWARE FEATURE CODES

NAVISTAR INC. CONFIDENTIAL PROPRIETARY

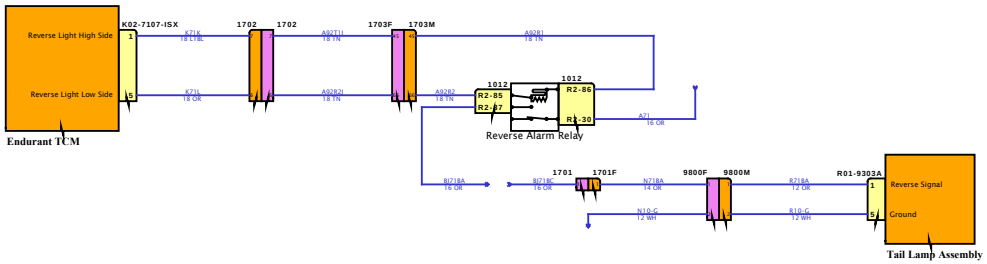

DESIGN DESCRIPTION

FEATURE CODES

SOFTWARE FEATURE CODES

NAVISTAR INC. CONFIDENTIAL PROPRIETARY

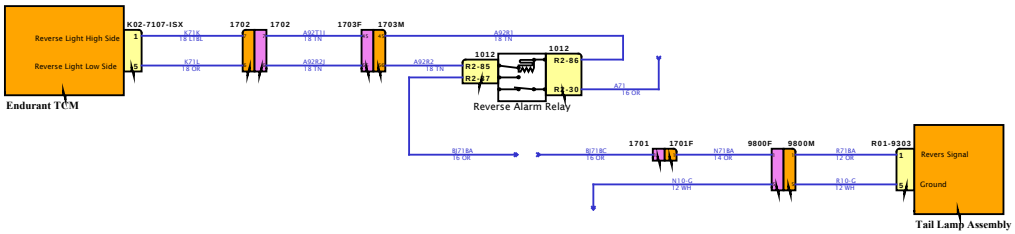

DESIGN DESCRIPTION

FEATURE CODES

SOFTWARE FEATURE CODES

NAVISTAR INC. CONFIDENTIAL PROPRIETARY

Diagram2

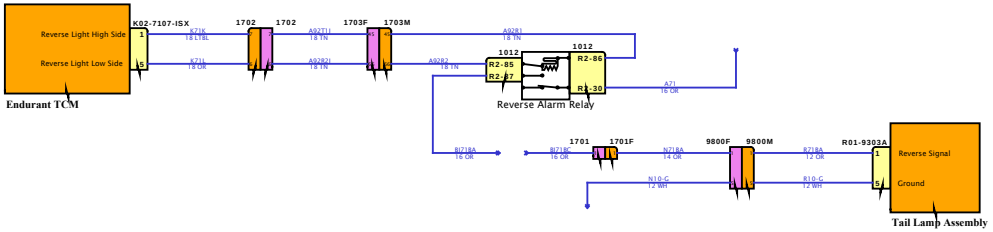

DESIGN DESCRIPTION

FEATURE CODES

SOFTWARE FEATURE CODES

Diagram1

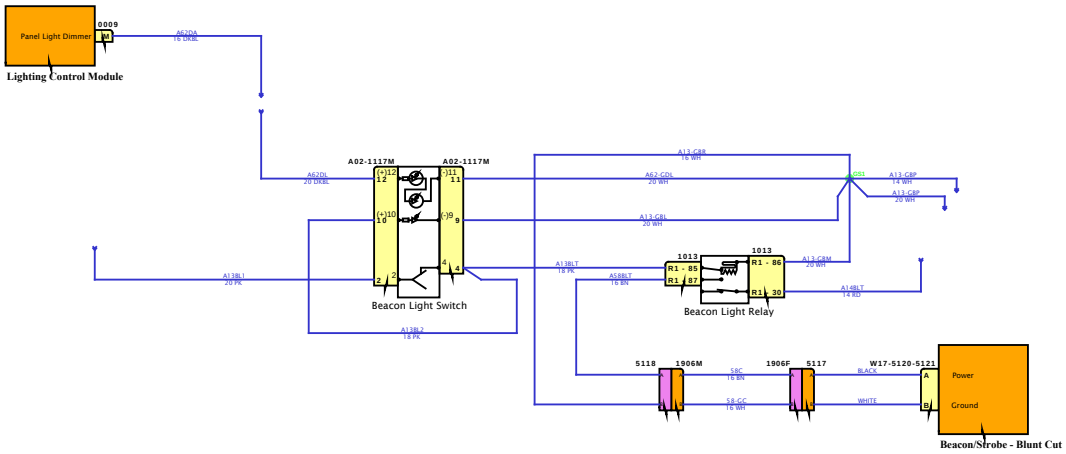

DESIGN DESCRIPTION

FEATURE CODES

SOFTWARE FEATURE CODES

NAVISTAR INC. CONFIDENTIAL PROPRIETARY

Diagram2

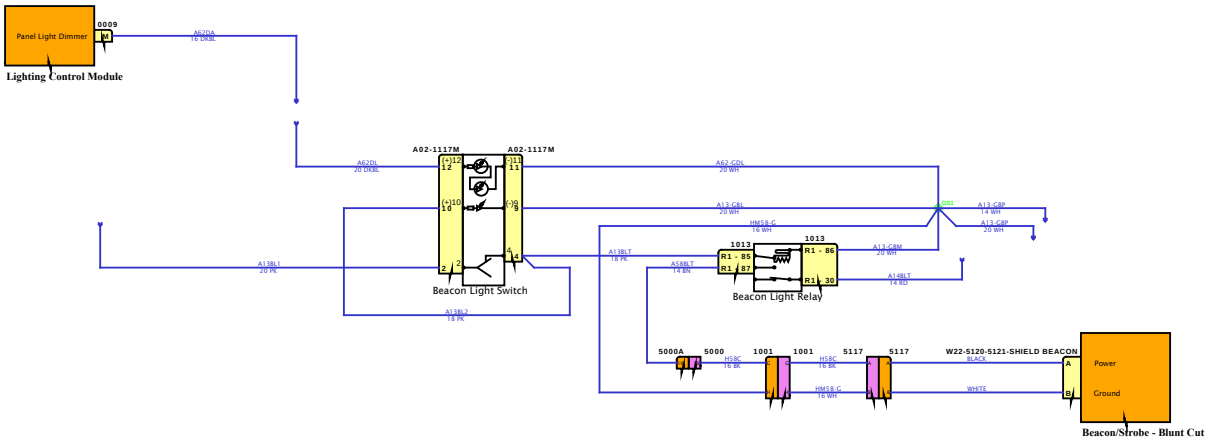

DESIGN DESCRIPTION

FEATURE CODES

SOFTWARE FEATURE CODES

NAVISTAR
NAVISTAR, INC. CONFIDENTIAL PROPRIETARY

Diagram1

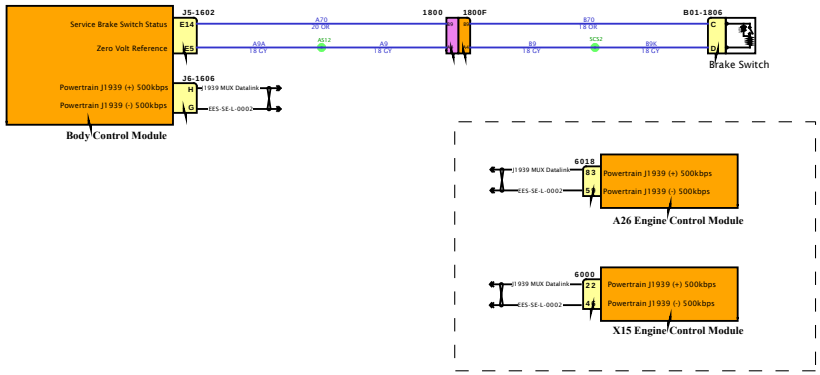

DESIGN DESCRIPTION

FEATURE CODES

SOFTWARE FEATURE CODES

NAVISTAR INC. CONFIDENTIAL PROPRIETARY

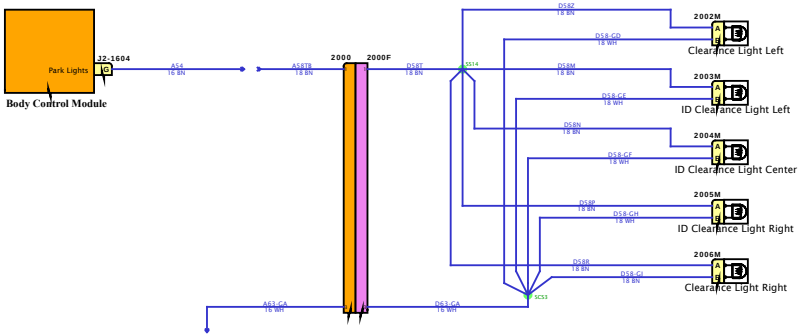

DESIGN DESCRIPTION

FEATURE CODES

SOFTWARE FEATURE CODES

NAVISTAR INC. CONFIDENTIAL PROPRIETARY

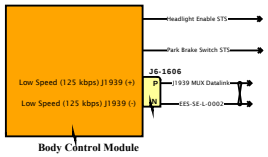

DESIGN DESCRIPTION

FEATURE CODES

SOFTWARE FEATURE CODES

NAVISTAR INC. CONFIDENTIAL PROPRIETARY

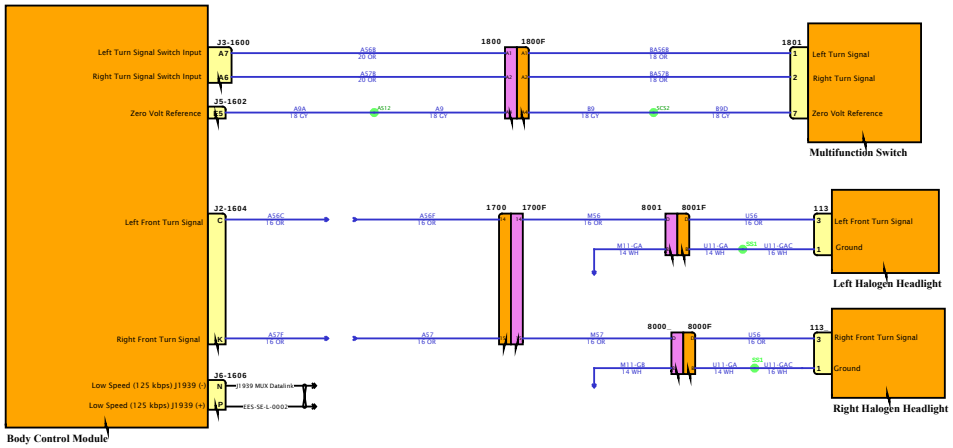

DESIGN DESCRIPTION

FEATURE CODES

SOFTWARE FEATURE CODES

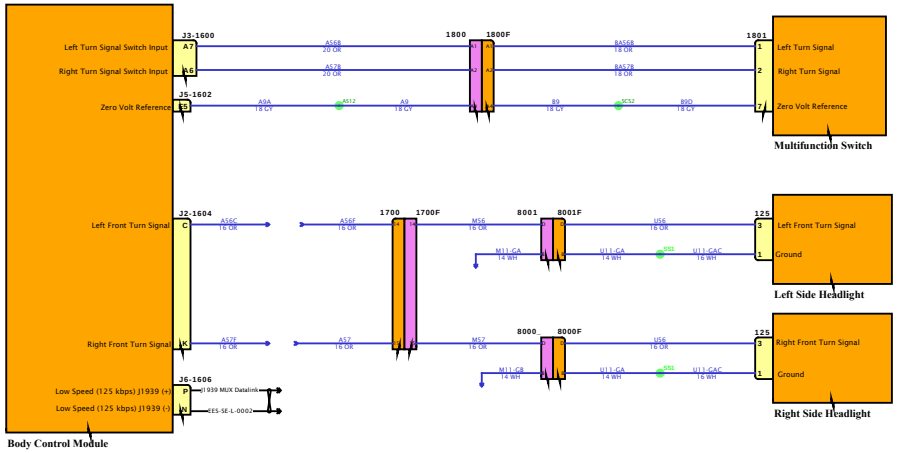

DESIGN DESCRIPTION

FEATURE CODES

SOFTWARE FEATURE CODES

NAVISTAR
NAVISTAR, INC. CONFIDENTIAL PROPRIETARY

DESIGN DESCRIPTION

FEATURE CODES

SOFTWARE FEATURE CODES

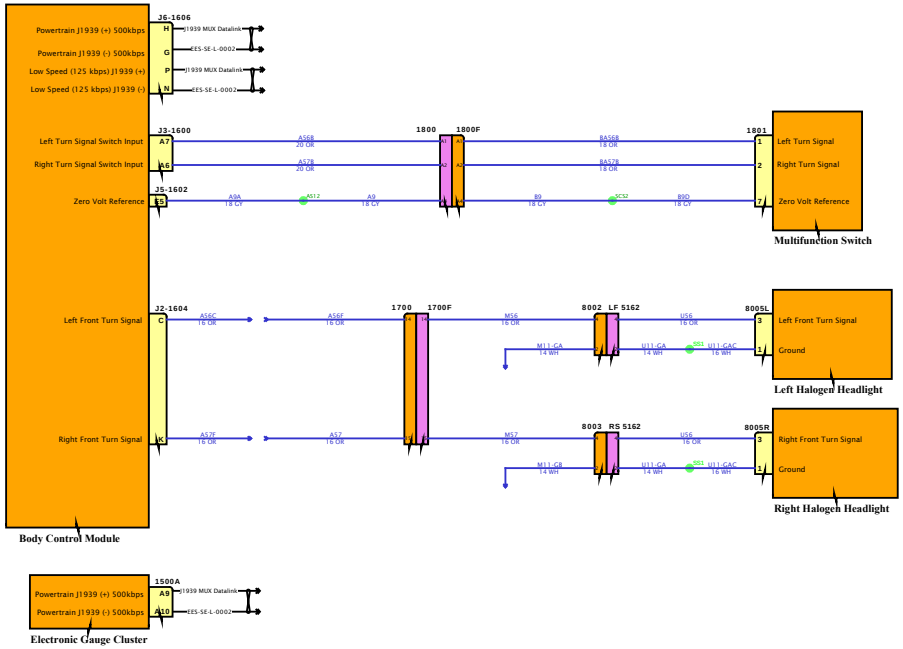

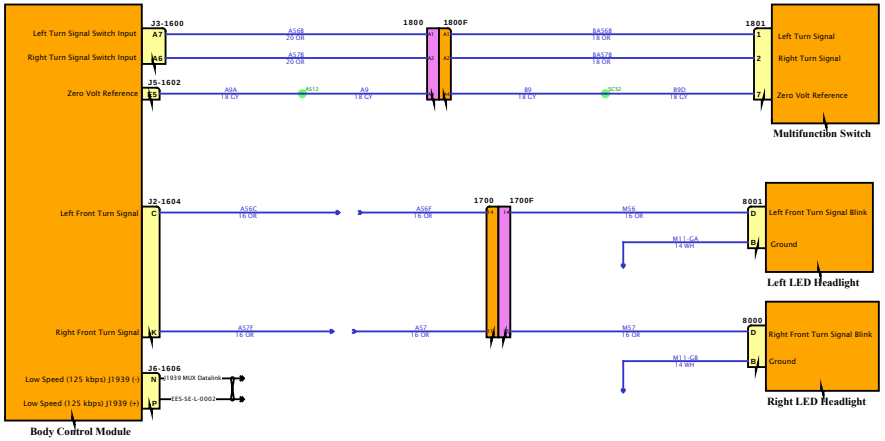

DESIGN DESCRIPTION

FEATURE CODES

SOFTWARE FEATURE CODES

NAVISTAR
NAVISTAR, INC. CONFIDENTIAL PROPRIETARY

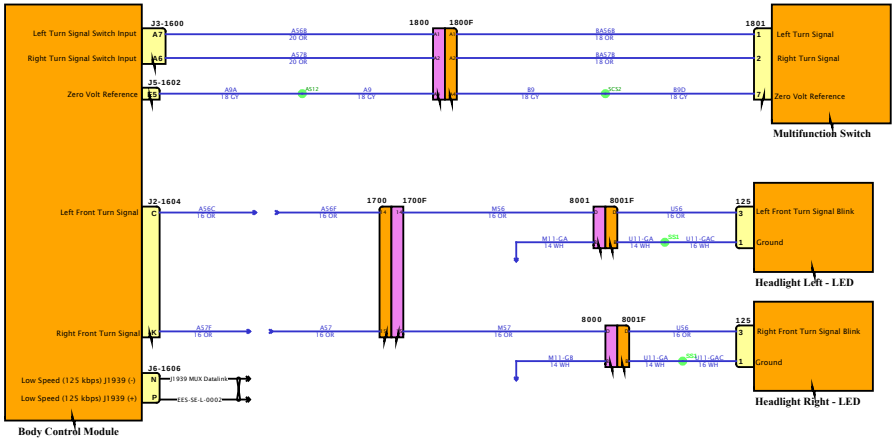

DESIGN DESCRIPTION

FEATURE CODES

SOFTWARE FEATURE CODES

NAVISTAR
NAVISTAR, INC. CONFIDENTIAL PROPRIETARY

Diagram1

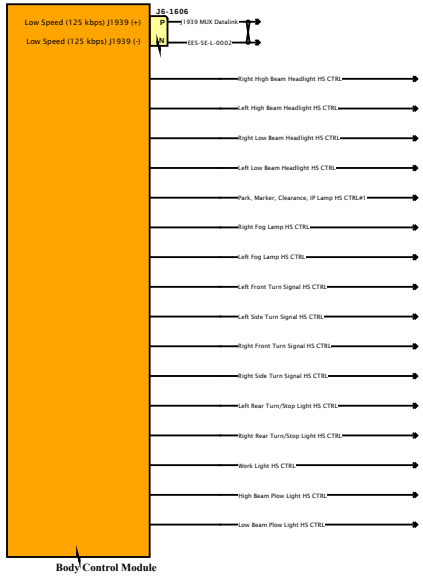

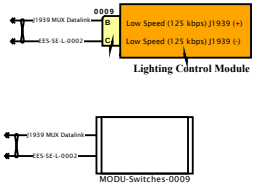

DESIGN DESCRIPTION

FEATURE CODES

SOFTWARE FEATURE CODES

NAVISTAR INC. CONFIDENTIAL PROPRIETARY

Diagram1

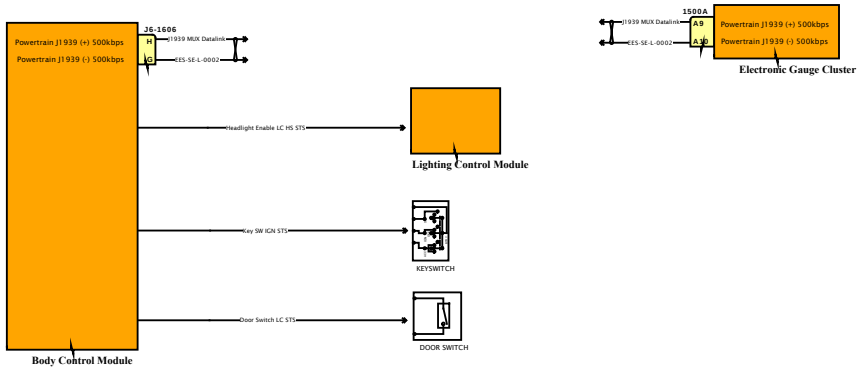

DESIGN DESCRIPTION

FEATURE CODES

SOFTWARE FEATURE CODES

NAVISTAR
NAVISTAR, INC. CONFIDENTIAL PROPRIETARY

Diagram1

DESIGN DESCRIPTION

FEATURE CODES

SOFTWARE FEATURE CODES

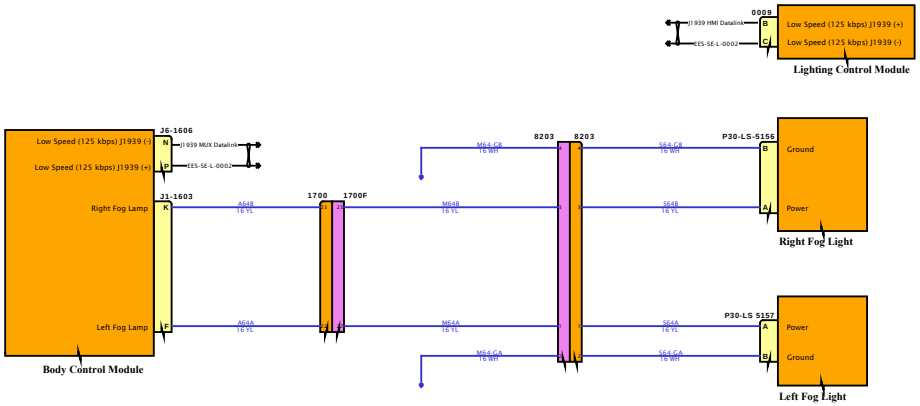

NAVISTAR INC. CONFIDENTIAL PROPRIETARY

Diagram1

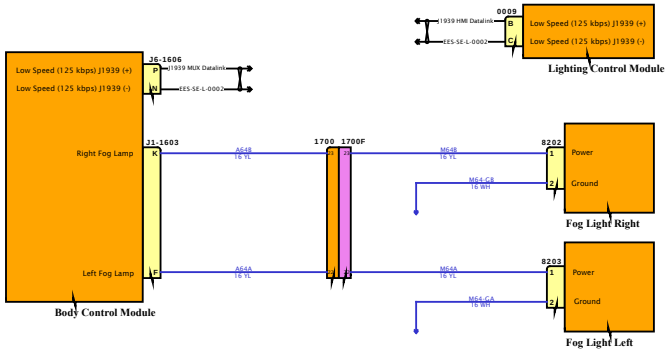

DESIGN DESCRIPTION

FEATURE CODES

SOFTWARE FEATURE CODES

NAVISTAR INC. CONFIDENTIAL PROPRIETARY

Diagram1

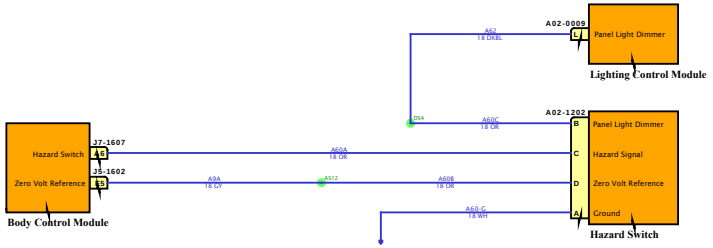

DESIGN DESCRIPTION

FEATURE CODES

SOFTWARE FEATURE CODES

NAVISTAR INC. CONFIDENTIAL PROPRIETARY

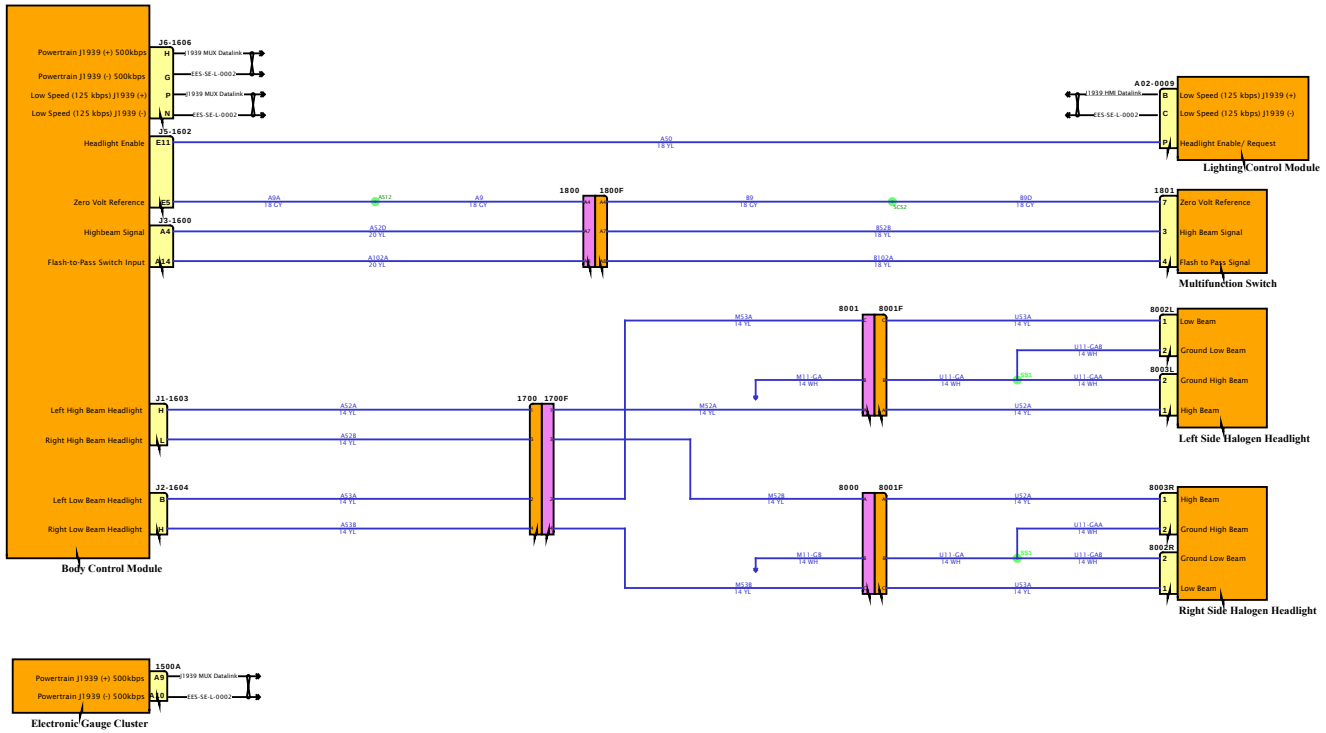

DESIGN DESCRIPTION

FEATURE CODES

SOFTWARE FEATURE CODES

NAVISTAR
NAVISTAR, INC. CONFIDENTIAL PROPRIETARY

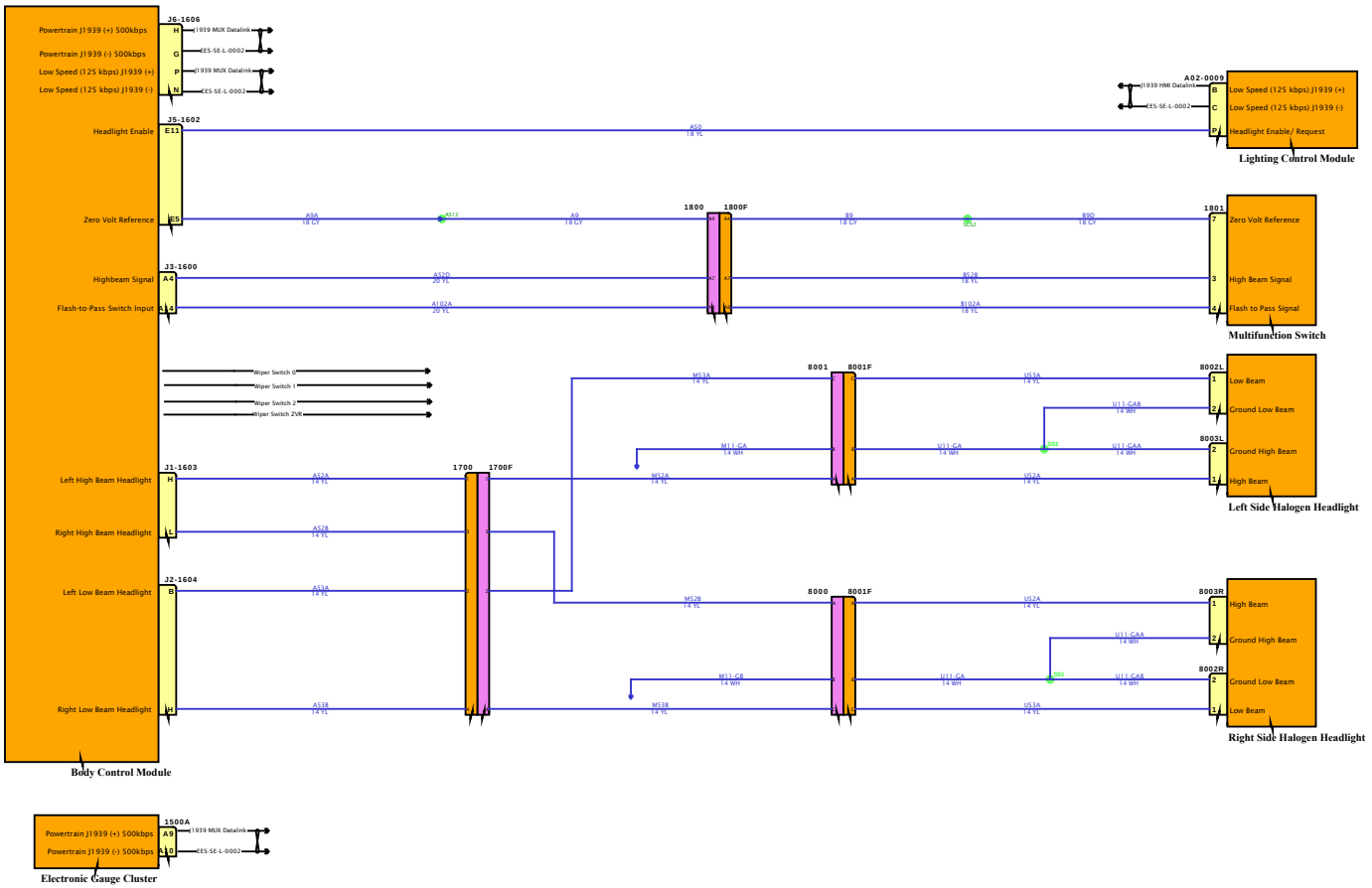

DESIGN DESCRIPTION

FEATURE CODES

SOFTWARE FEATURE CODES

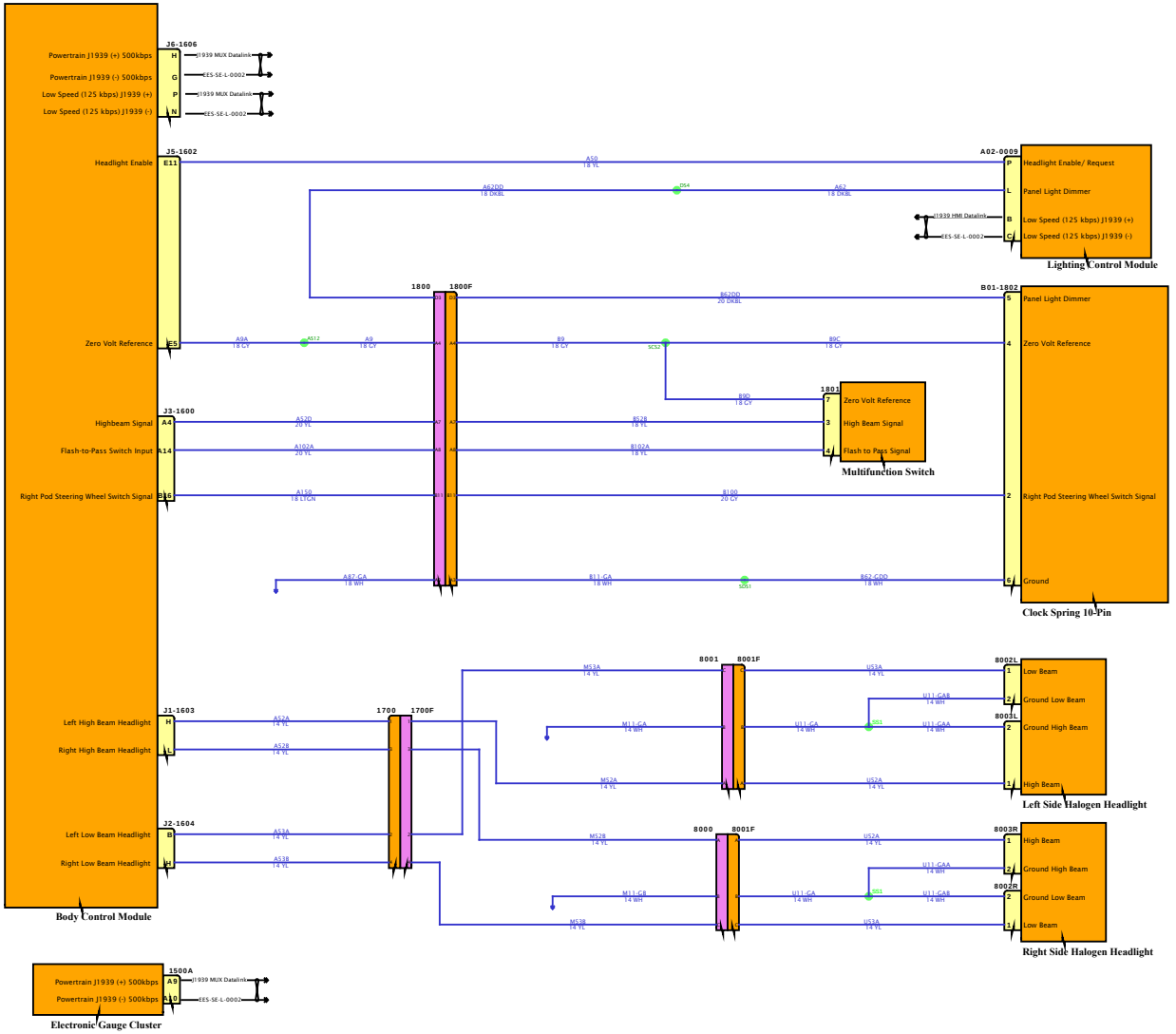

DESIGN DESCRIPTION

FEATURE CODES

SOFTWARE FEATURE CODES

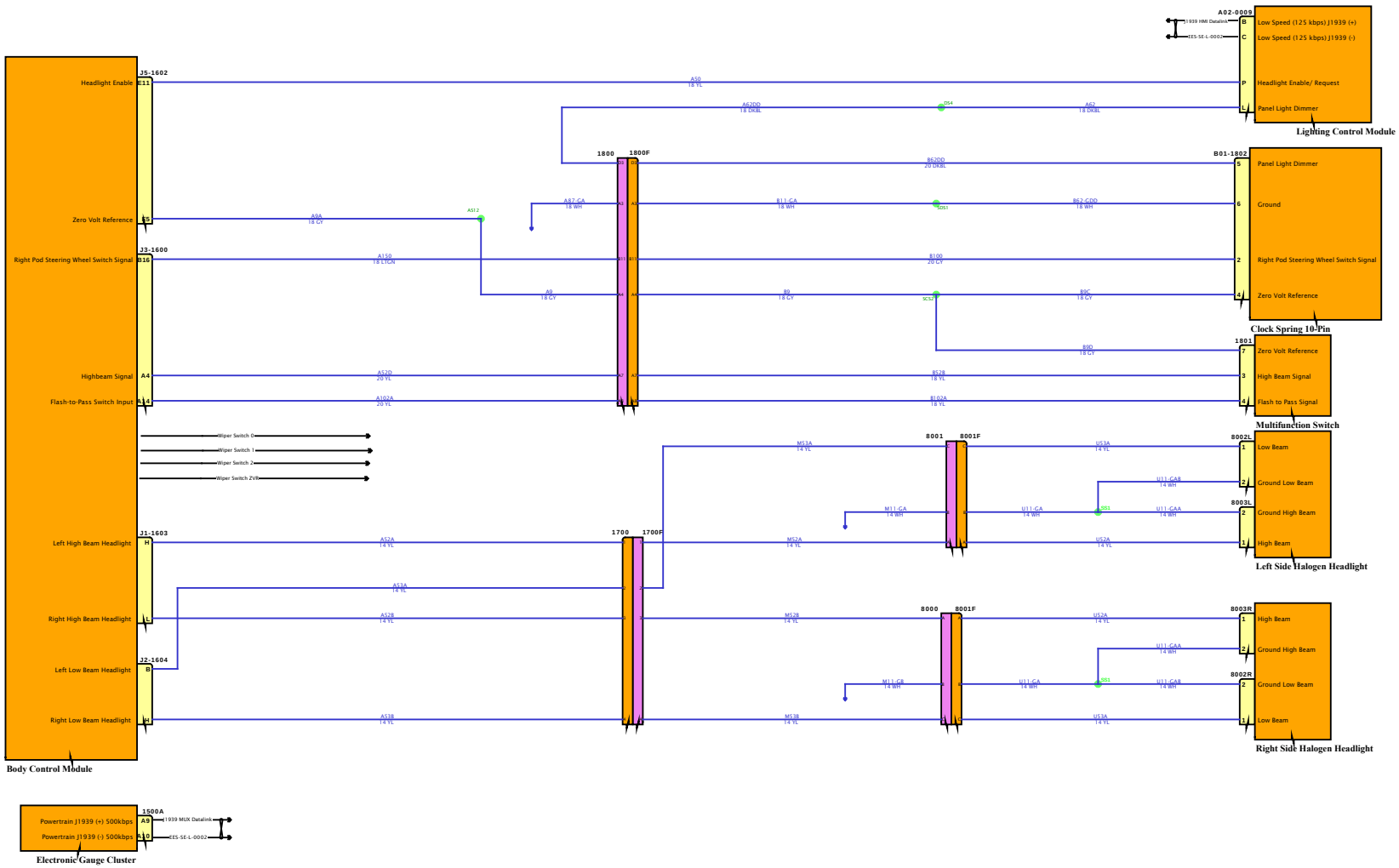
DESIGN DESCRIPTION
FEATURE CODES
SOFTWARE FEATURE CODES
Body Control Module
Headlight Enable
Zero Volt Reference
Right Pod Steering Wheel Switch Signal
Highbeam Signal
Flash-to-Pass Switch Input
Wiper Switch 0
Wiper Switch 1
Wiper Switch 2
Wiper Switch ZVR
Left High Beam Headlight
Right High Beam Headlight
Left Low Beam Headlight
Right Low Beam Headlight
Lighting Control Module
Low Speed (125 kbps) J1939 (+)
Low Speed (125 kbps) J1939 (-)
Headlight Enable/ Request
Panel Light Dimmer
Clock Spring 10-Pin
Panel Light Dimmer
Ground
Right Pod Steering Wheel Switch Signal
Zero Volt Reference
Multifunction Switch
Zero Volt Reference
High Beam Signal
Flash to Pass Signal
Left Side Halogen Headlight
Low Beam
Ground Low Beam
Ground High Beam
High Beam
Right Side Halogen Headlight
High Beam
Ground High Beam
Ground Low Beam
Low Beam
Electronic Gauge Cluster
Powertrain J1939 (+) 500kbps
Powertrain J1939 (-) 500kbps
NAVISTAR INC. CONFIDENTIAL PROPRIETARY

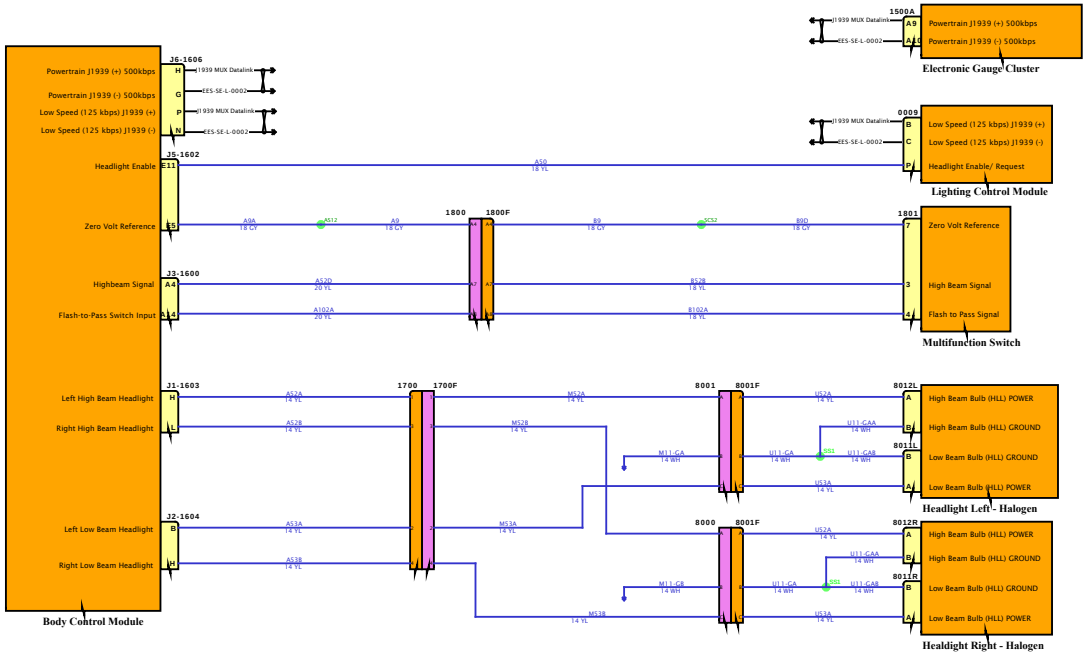

DESIGN DESCRIPTION

FEATURE CODES

SOFTWARE FEATURE CODES

Diagram1

DESIGN DESCRIPTION

FEATURE CODES

SOFTWARE FEATURE CODES

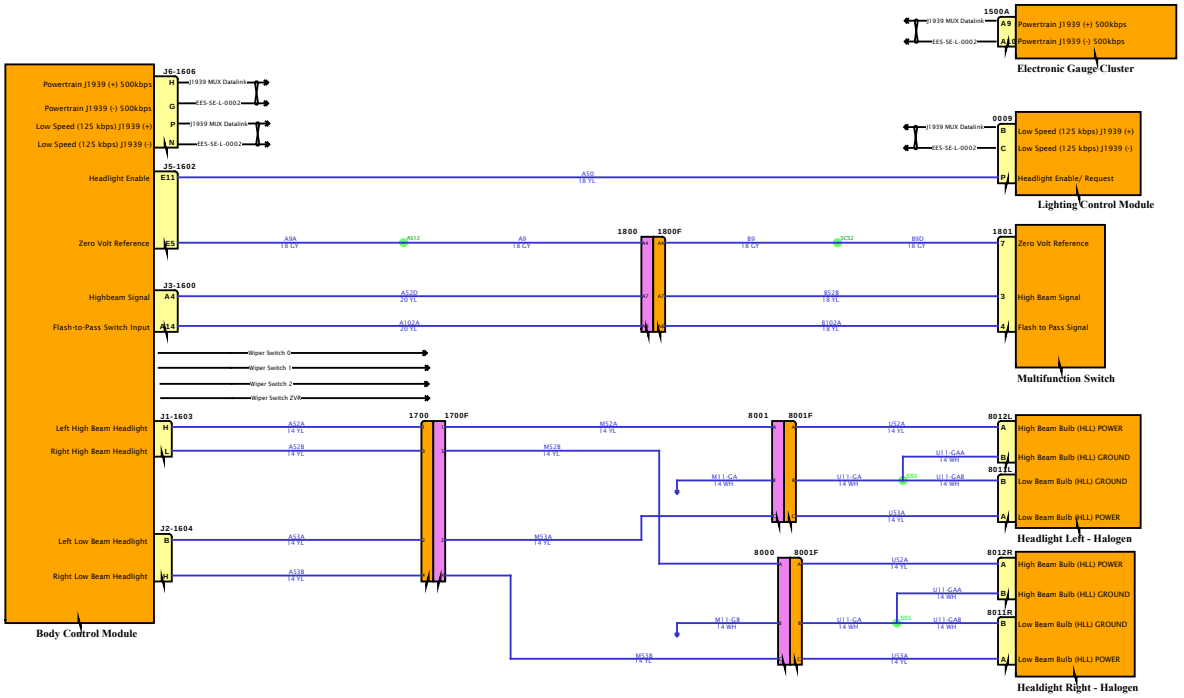

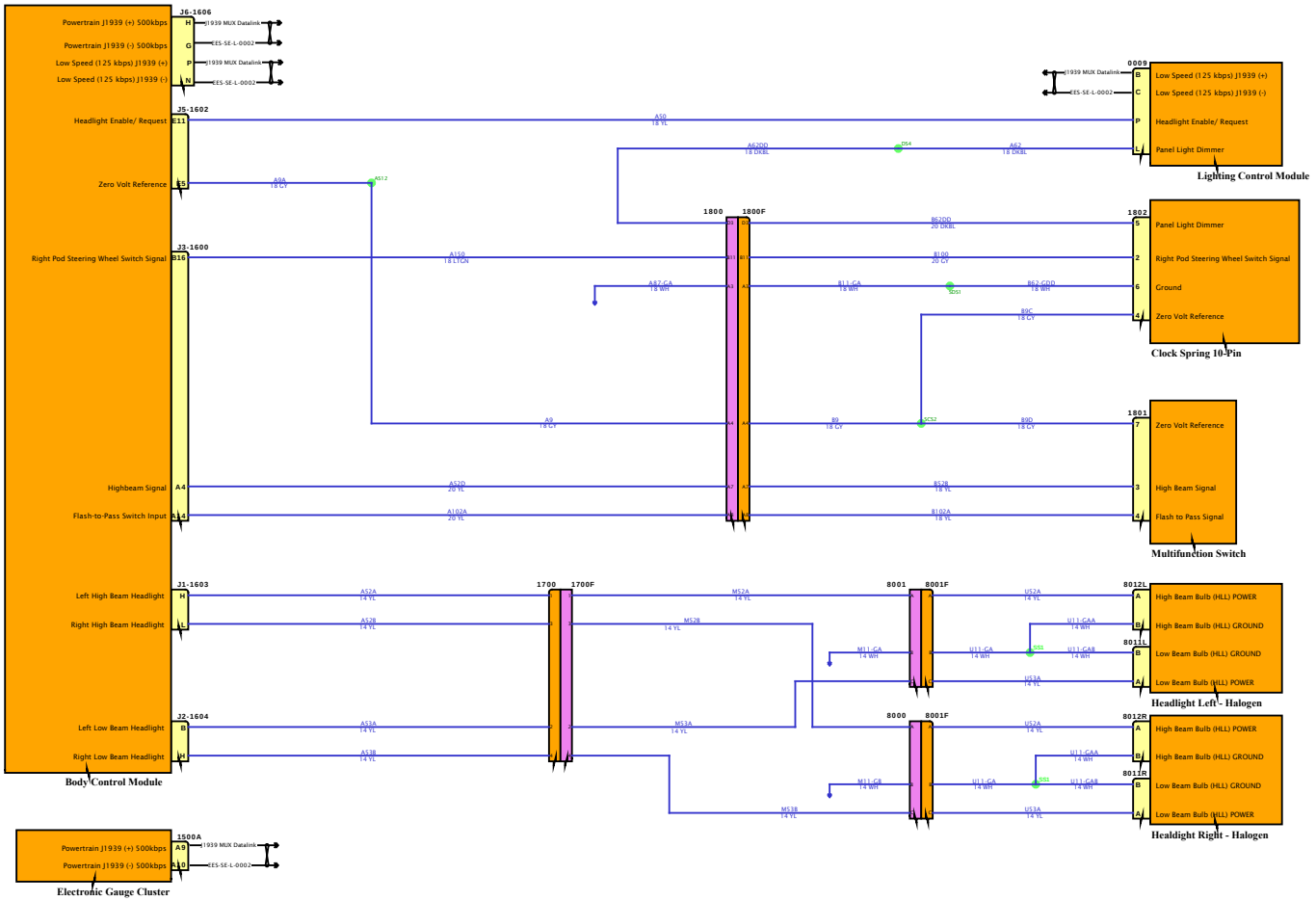

DESIGN DESCRIPTION

FEATURE CODES

SOFTWARE FEATURE CODES

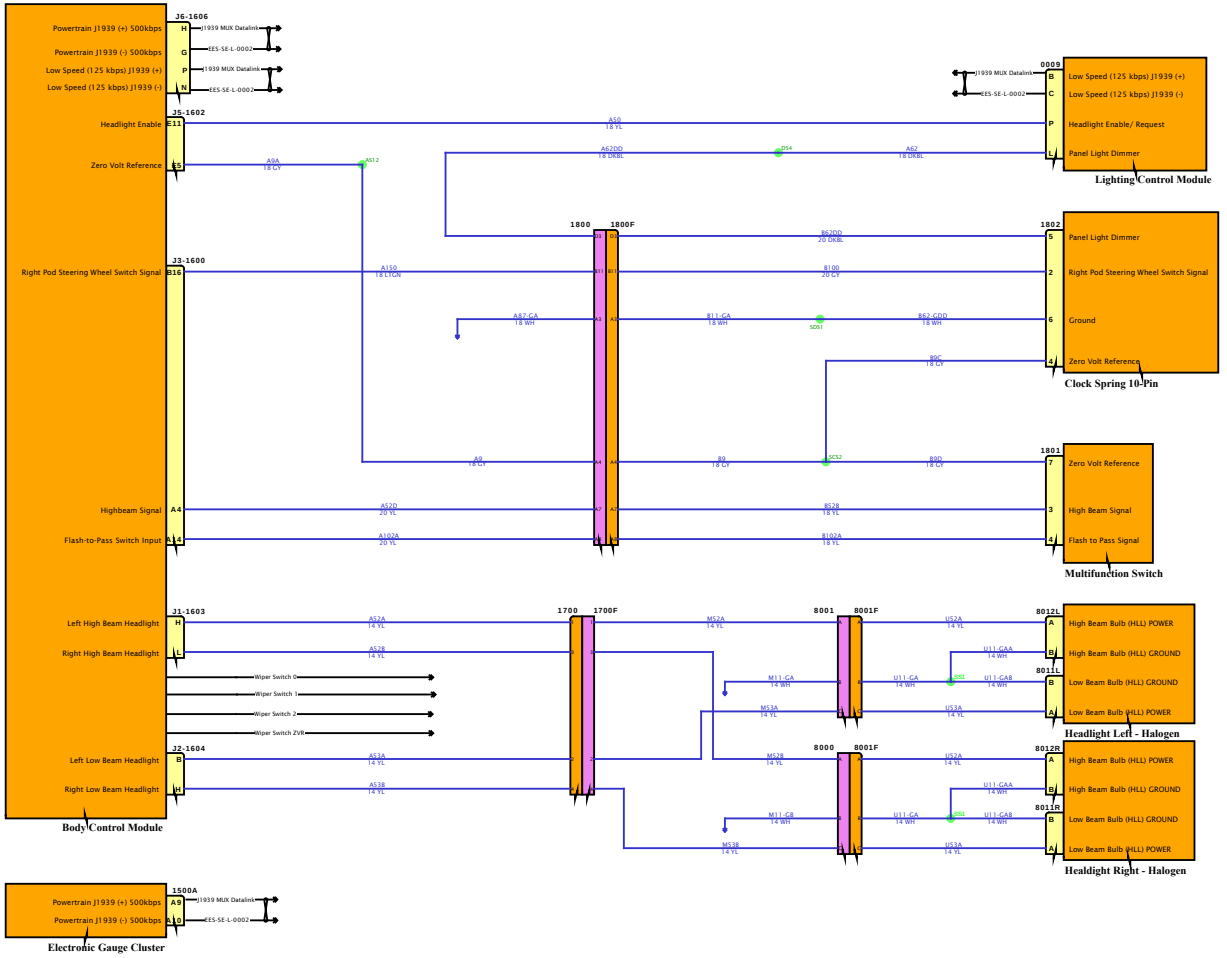

DESIGN DESCRIPTION

FEATURE CODES

SOFTWARE FEATURE CODES

Diagram1

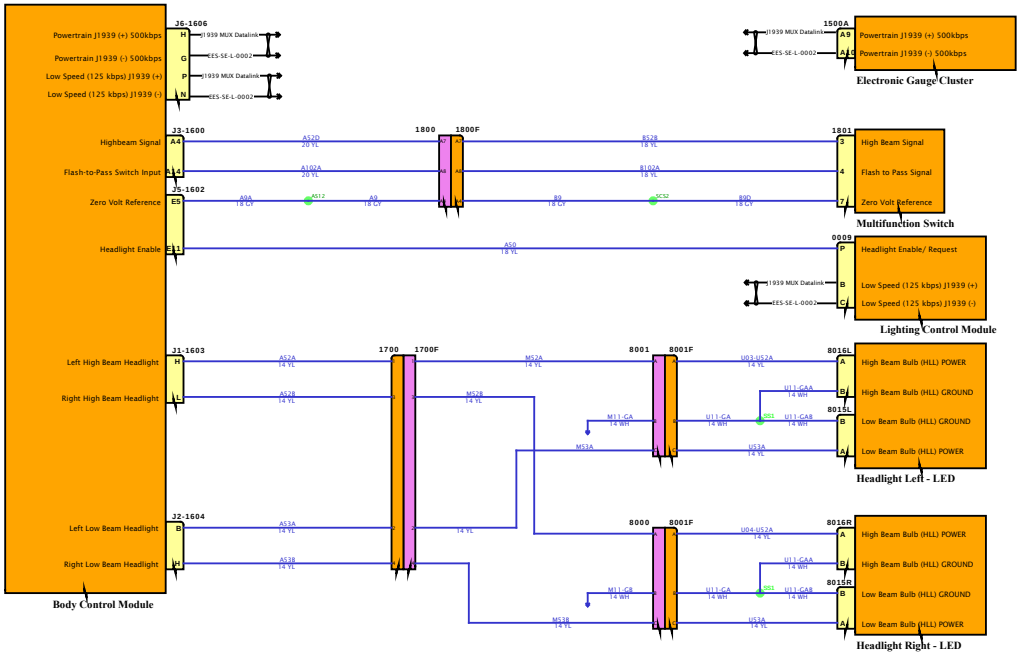

DESIGN DESCRIPTION

FEATURE CODES

SOFTWARE FEATURE CODES

NAVISTAR
NAVISTAR, INC. CONFIDENTIAL PROPRIETARY

Diagram1

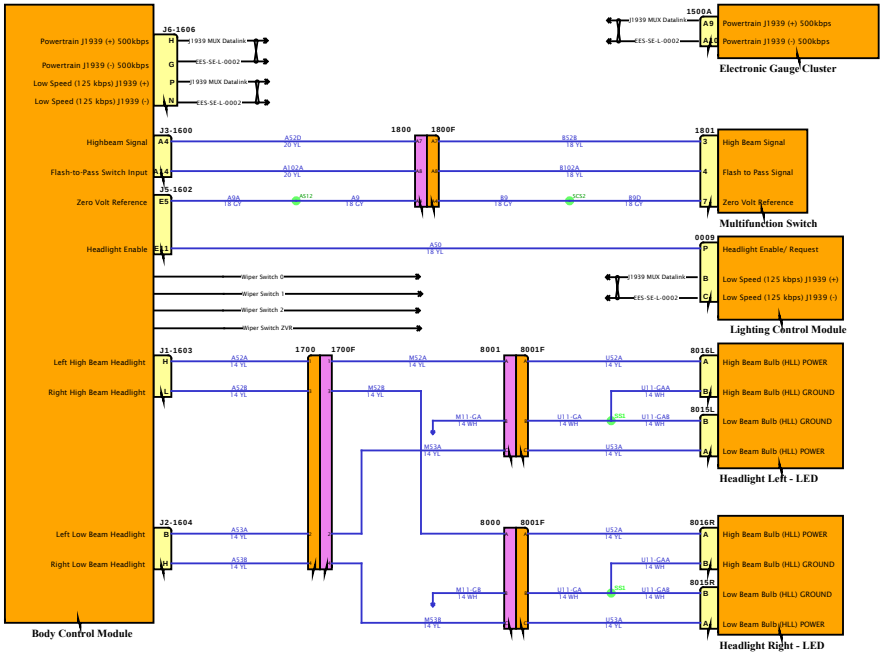

DESIGN DESCRIPTION

FEATURE CODES

SOFTWARE FEATURE CODES

NAVISTAR
NAVISTAR, INC. CONFIDENTIAL PROPRIETARY

Diagram1

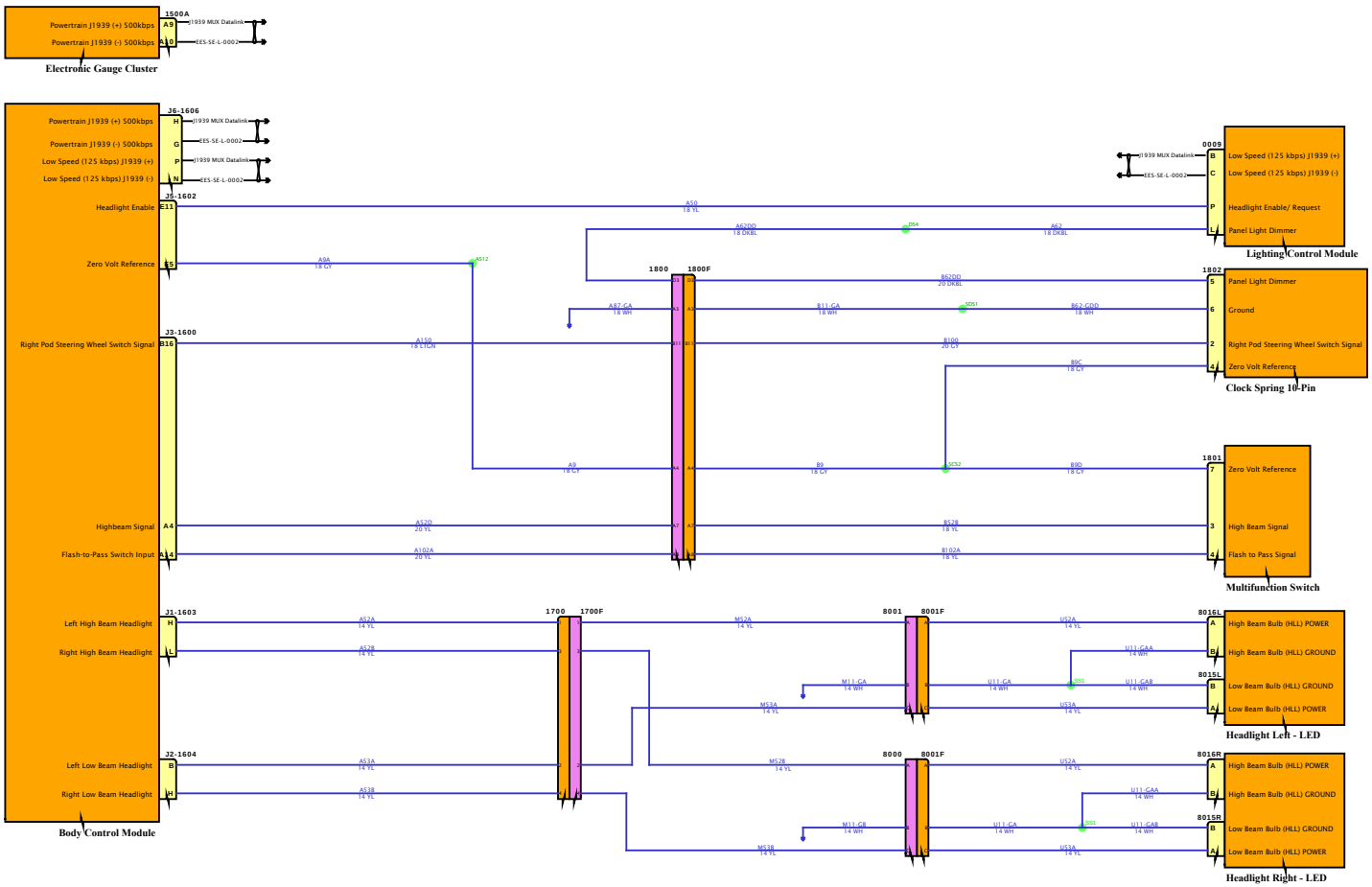

DESIGN DESCRIPTION

FEATURE CODES

SOFTWARE FEATURE CODES

NAVISTAR INC. CONFIDENTIAL PROPRIETARY

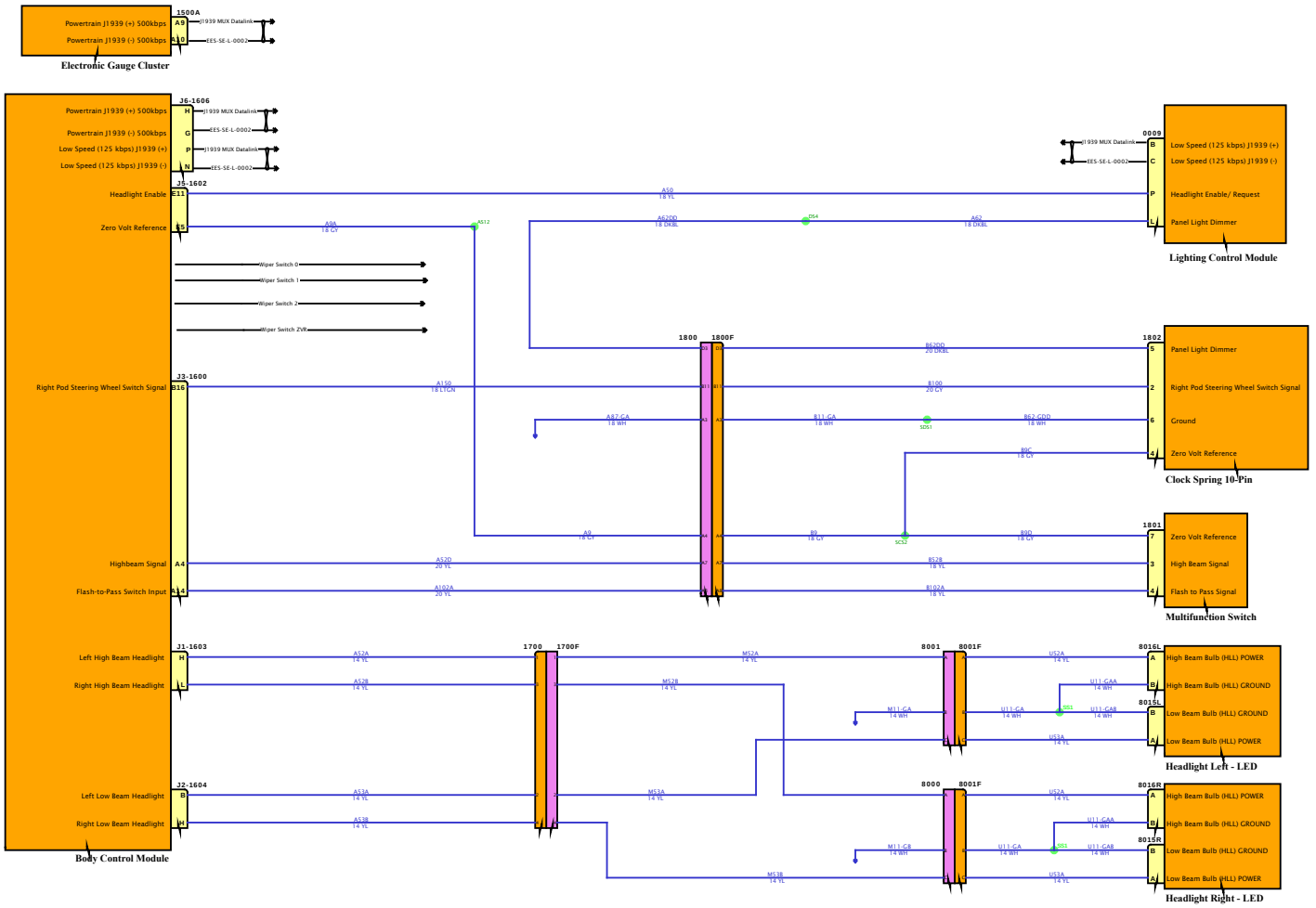

DESIGN DESCRIPTION

FEATURE CODES

SOFTWARE FEATURE CODES

NAVISTAR
NAVISTAR, INC. CONFIDENTIAL PROPRIETARY

Diagram1

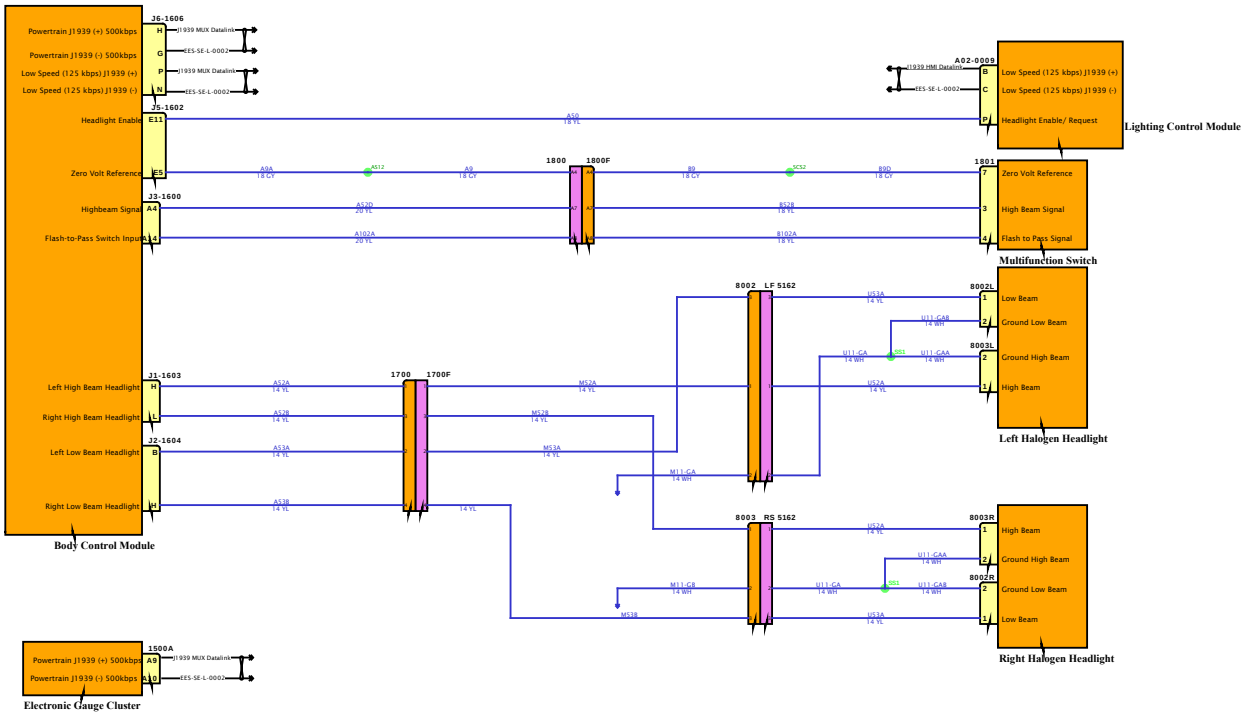

DESIGN DESCRIPTION

FEATURE CODES

SOFTWARE FEATURE CODES

NAVISTAR INC. CONFIDENTIAL PROPRIETARY

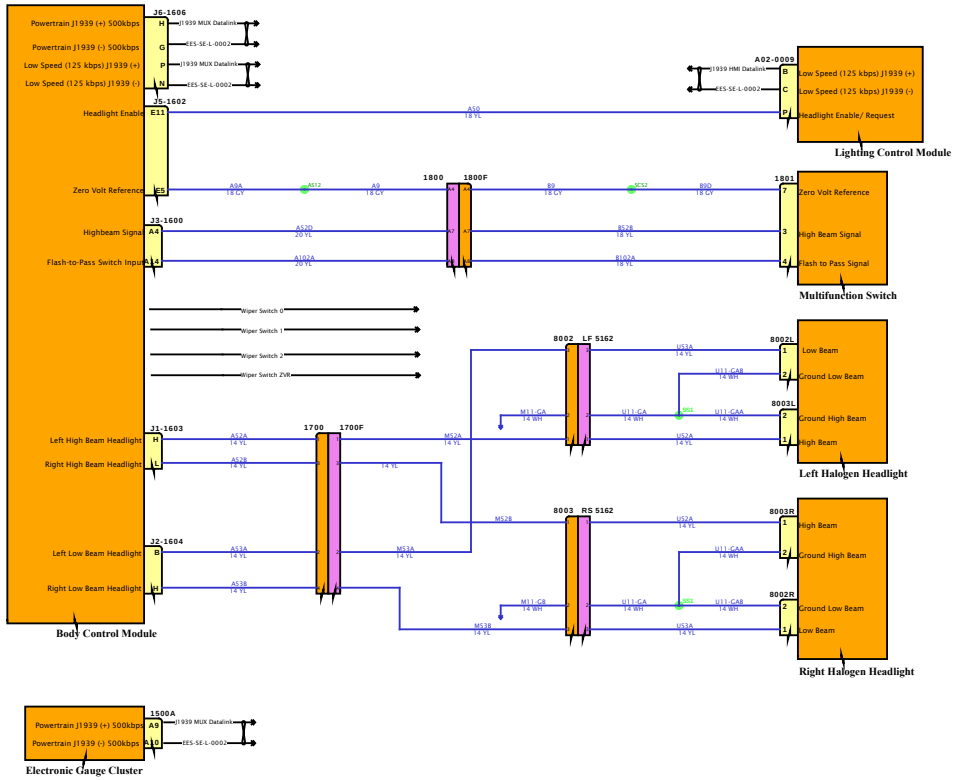

DESIGN DESCRIPTION

FEATURE CODES

SOFTWARE FEATURE CODES

NAVISTAR
NAVISTAR, INC. CONFIDENTIAL PROPRIETARY

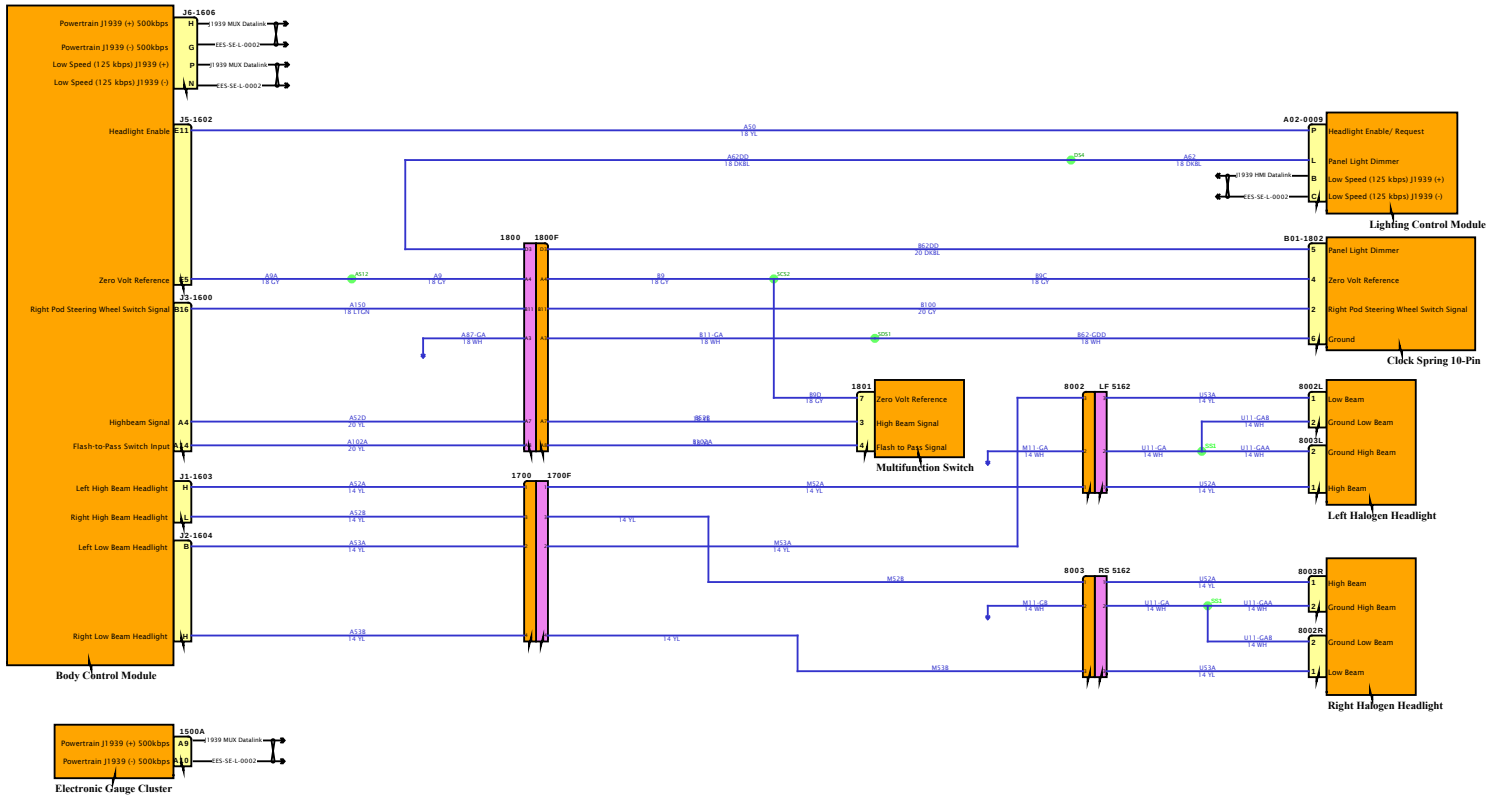
J6-1606
Powertrain J1939 (+) 500kbps
Powertrain J1939 (-) 500kbps
Low Speed (125 kbps) J1939 (+)
Low Speed (125 kbps) J1939 (-)
J1939 MUX Datalink
EES-SE-L-0002
J5-1602
Headlight Enable
E11
Zero Volt Reference
E5
J3-1600
Right Pod Steering Wheel Switch Signal
B16
Highbeam Signal
A4
Flash-to-Pass Switch Input
A14
J1-1603
Left High Beam Headlight
H
Right High Beam Headlight
L
J2-1604
Left Low Beam Headlight
B
Right Low Beam Headlight
H
Body Control Module
1500A
Powertrain J1939 (+) 500kbps
Powertrain J1939 (-) 500kbps
A8
A10
Electronic Gauge Cluster
A02-0009
Headlight Enable/ Request
Panel Light Dimmer
Low Speed (125 kbps) J1939 (+)
Low Speed (125 kbps) J1939 (-)
J1939 HMI Datalink
Lighting Control Module
1800
1800F
1700
1700F
B01-1802
Panel Light Dimmer
Zero Volt Reference
Right Pod Steering Wheel Switch Signal
Ground
Clock Spring 10-Pin
1801
Zero Volt Reference
High Beam Signal
Flash to Pass Signal
Multifunction Switch
8002
LF 5162
8002L
Low Beam
Ground Low Beam
8003L
Ground High Beam
High Beam
Left Halogen Headlight
8003
RS 5162
8003R
High Beam
Ground High Beam
8002R
Ground Low Beam
Low Beam
Right Halogen Headlight
DESIGN DESCRIPTION
FEATURE CODES
SOFTWARE FEATURE CODES
NAVISTAR
NAVISTAR, INC. CONFIDENTIAL PROPRIETARY

Diagram1

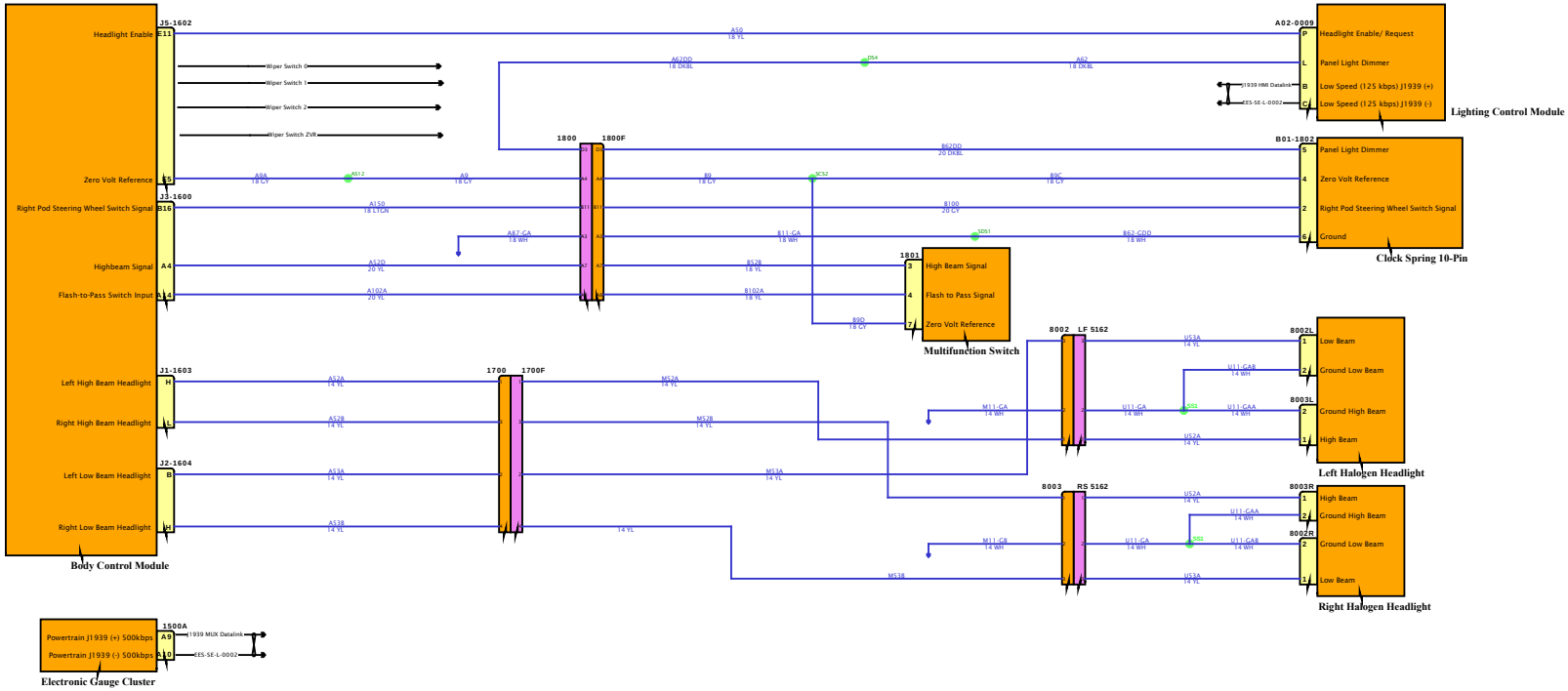

DESIGN DESCRIPTION

FEATURE CODES

SOFTWARE FEATURE CODES

NAVISTAR
NAVISTAR, INC. CONFIDENTIAL PROPRIETARY

Diagram1

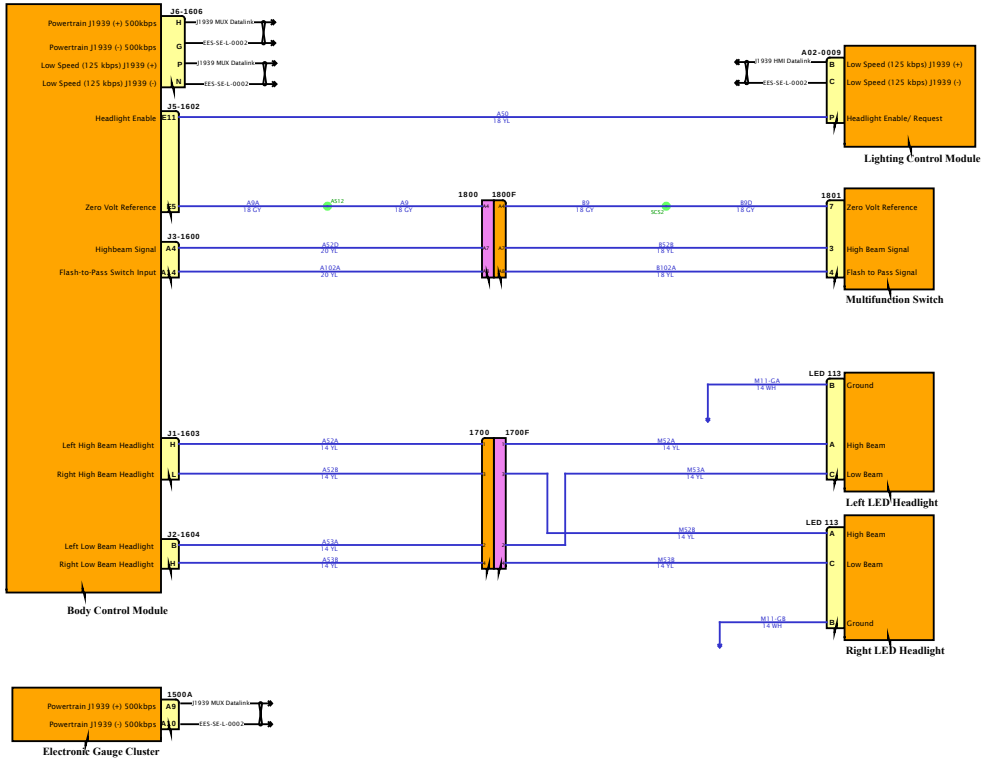

DESIGN DESCRIPTION

FEATURE CODES

SOFTWARE FEATURE CODES

NAVISTAR
NAVISTAR, INC. CONFIDENTIAL PROPRIETARY

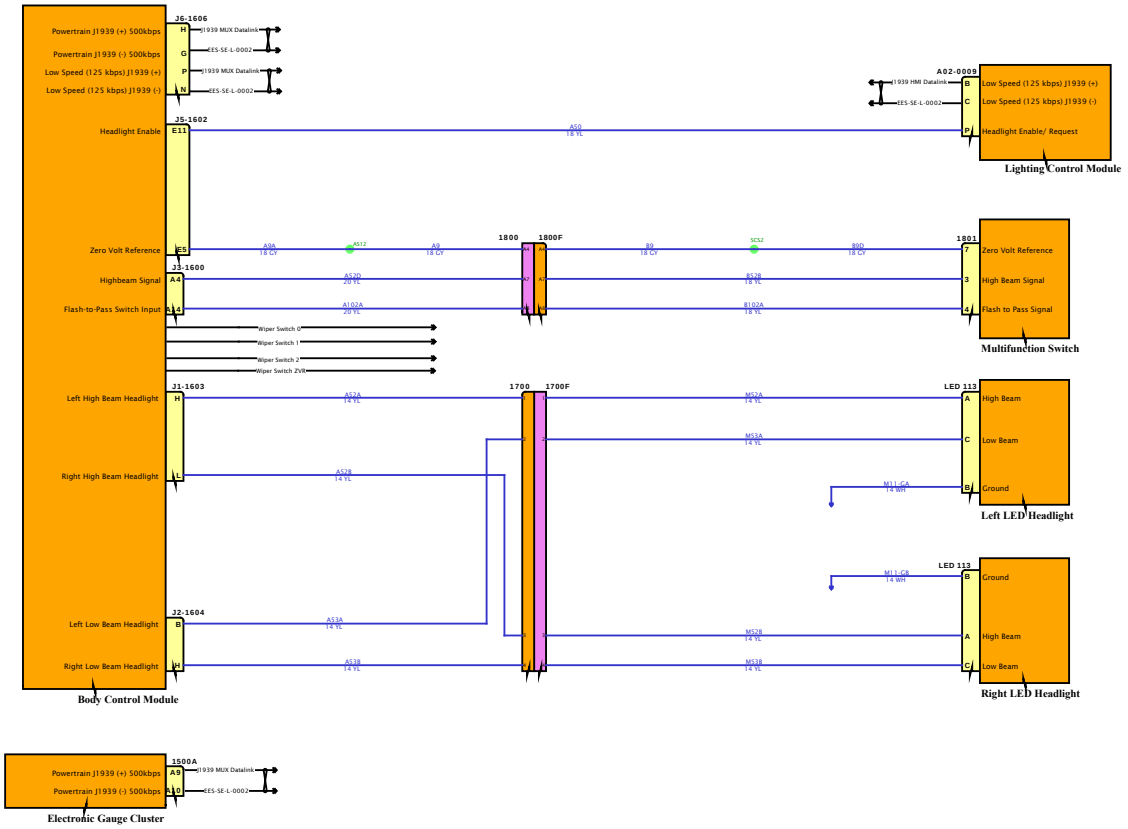

DESIGN DESCRIPTION

FEATURE CODES

SOFTWARE FEATURE CODES

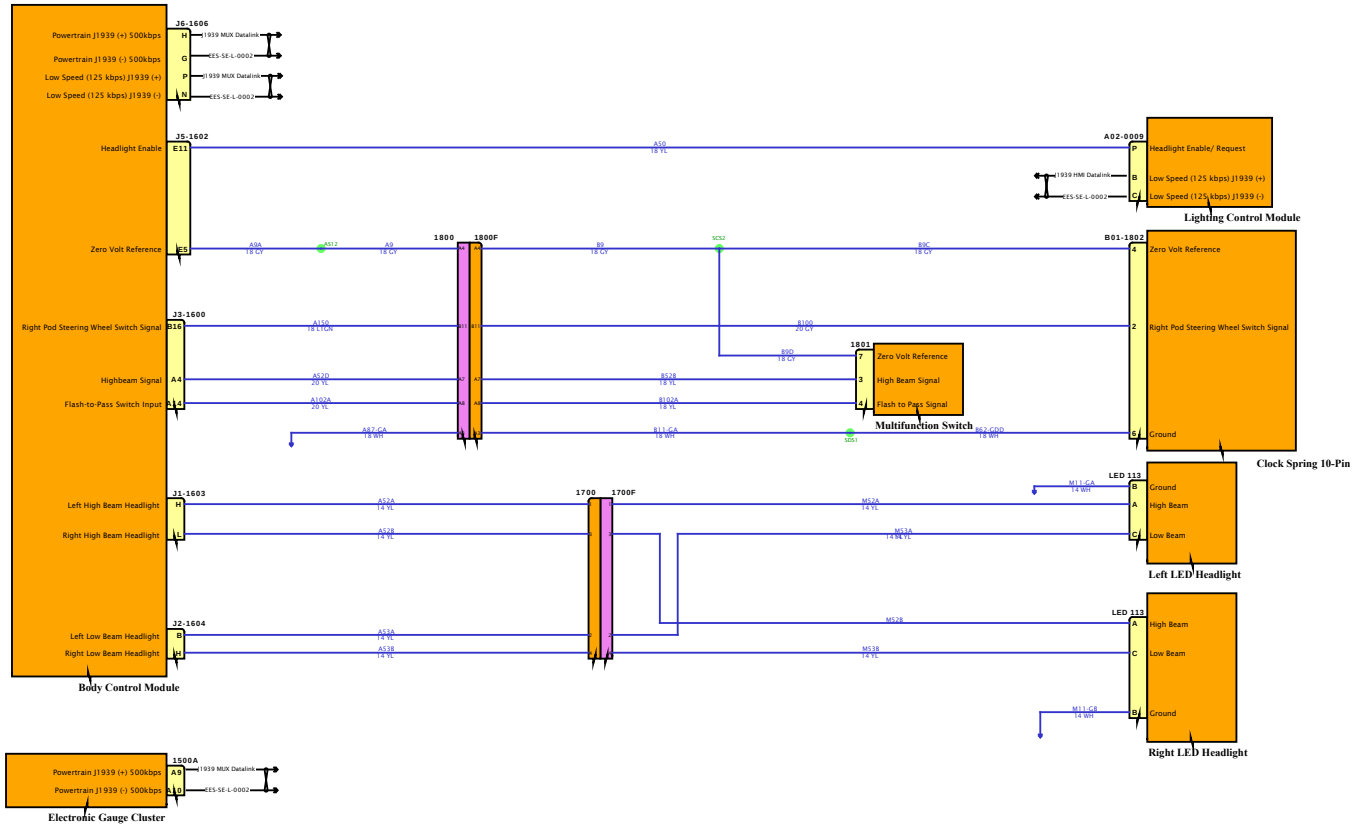

DESIGN DESCRIPTION

FEATURE CODES

SOFTWARE FEATURE CODES

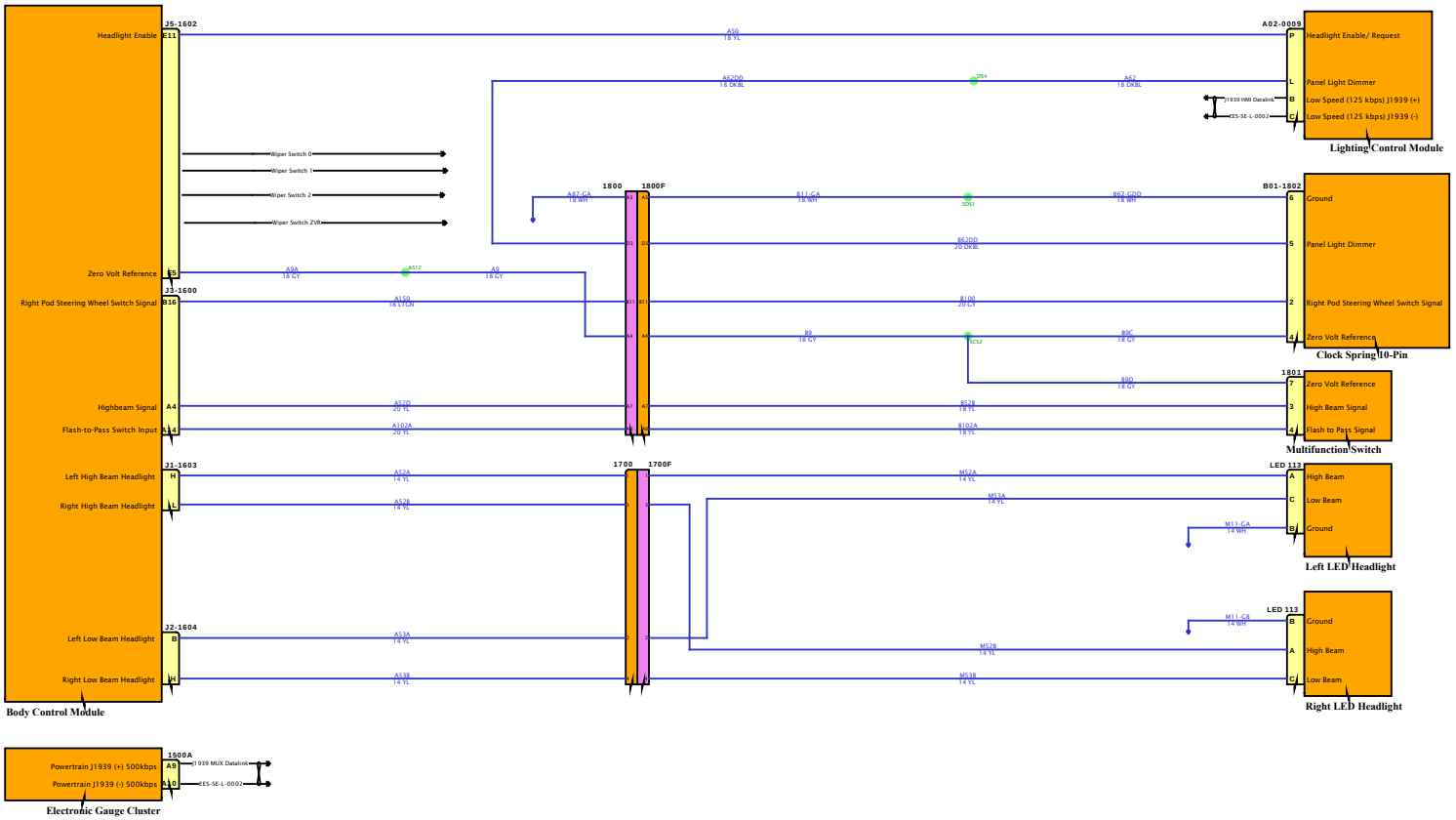

DESIGN DESCRIPTION

FEATURE CODES

SOFTWARE FEATURE CODES

NAVISTAR INC. CONFIDENTIAL PROPRIETARY

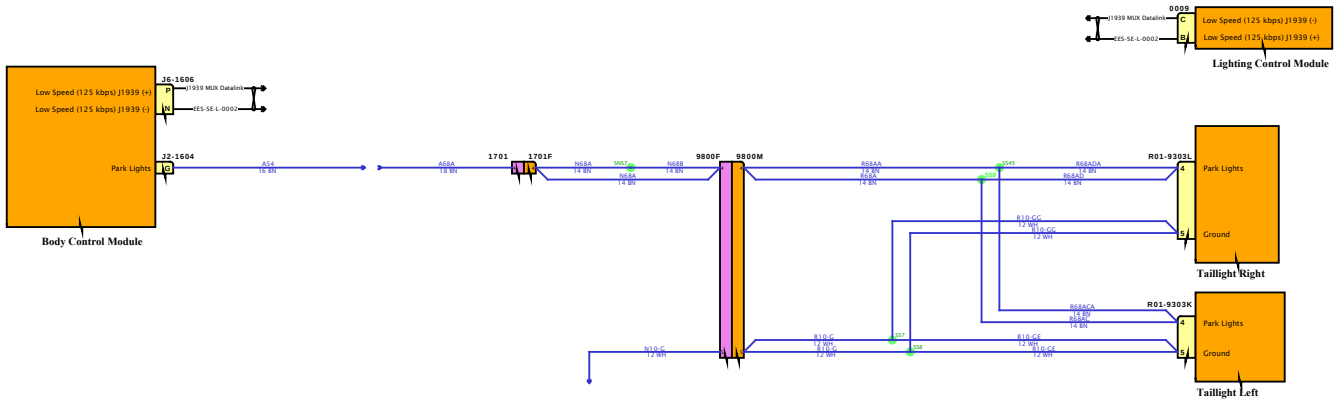

DESIGN DESCRIPTION

FEATURE CODES

SOFTWARE FEATURE CODES

NAVISTAR
NAVISTAR, INC. CONFIDENTIAL PROPRIETARY

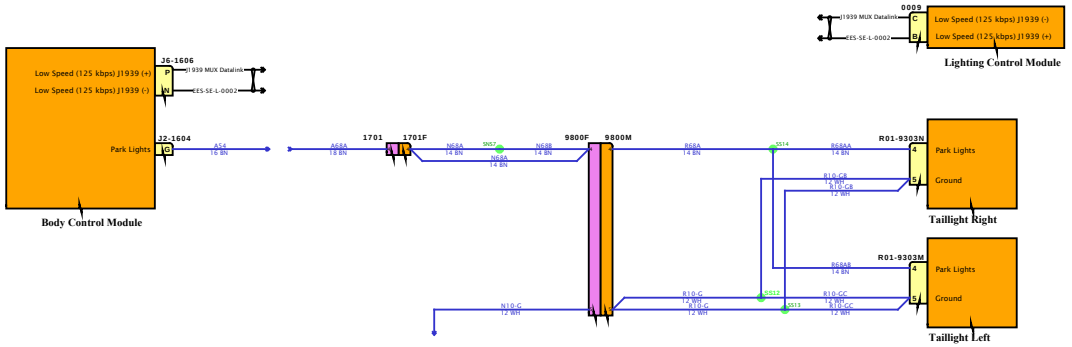

DESIGN DESCRIPTION

FEATURE CODES

SOFTWARE FEATURE CODES

NAVISTAR INC. CONFIDENTIAL PROPRIETARY

Diagram1

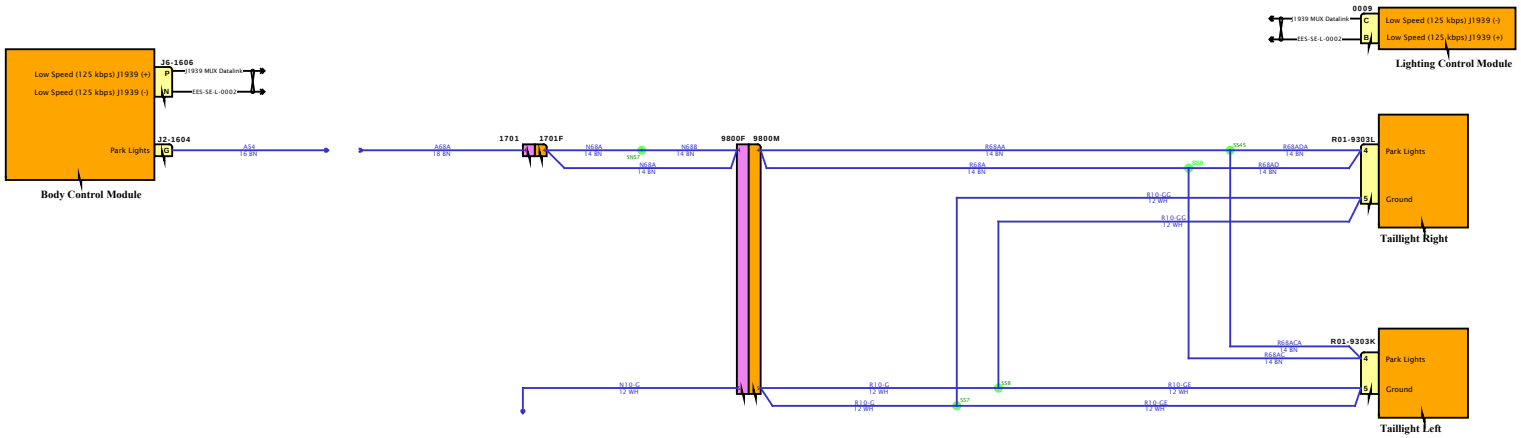

DESIGN DESCRIPTION

FEATURE CODES

SOFTWARE FEATURE CODES

NAVISTAR INC. CONFIDENTIAL PROPRIETARY

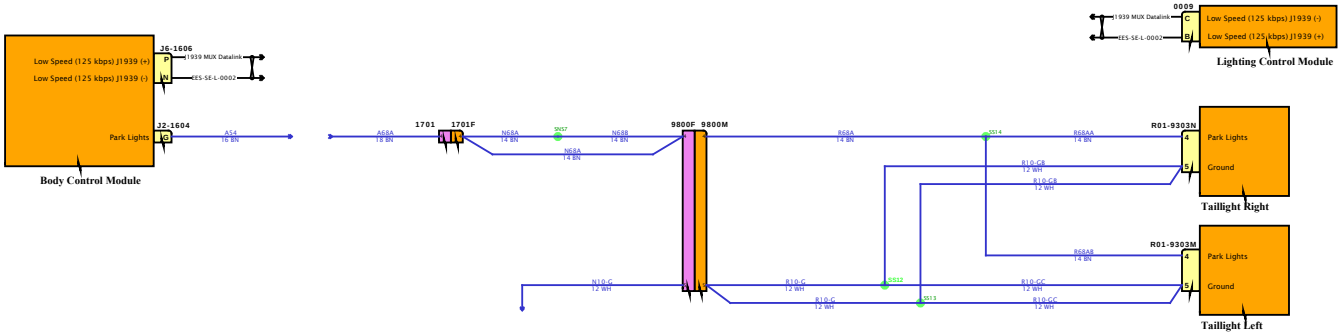

DESIGN DESCRIPTION

FEATURE CODES

SOFTWARE FEATURE CODES

NAVISTAR
NAVISTAR, INC. CONFIDENTIAL PROPRIETARY

Diagram1

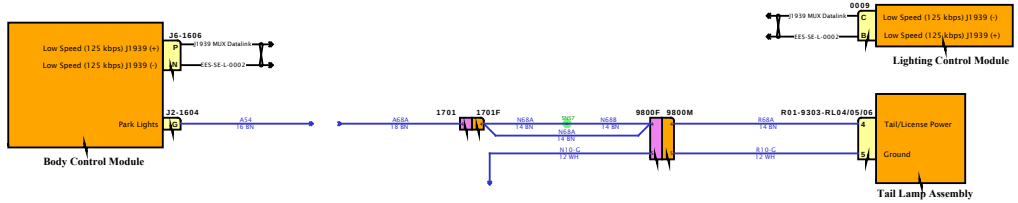

DESIGN DESCRIPTION

FEATURE CODES

SOFTWARE FEATURE CODES

NAVISTAR INC. CONFIDENTIAL PROPRIETARY

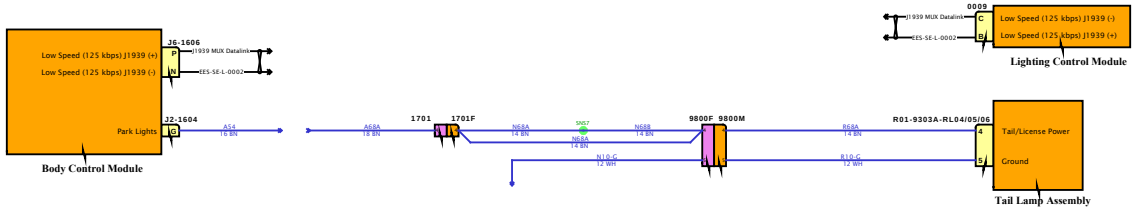

DESIGN DESCRIPTION

FEATURE CODES

SOFTWARE FEATURE CODES

NAVISTAR INC. CONFIDENTIAL PROPRIETARY

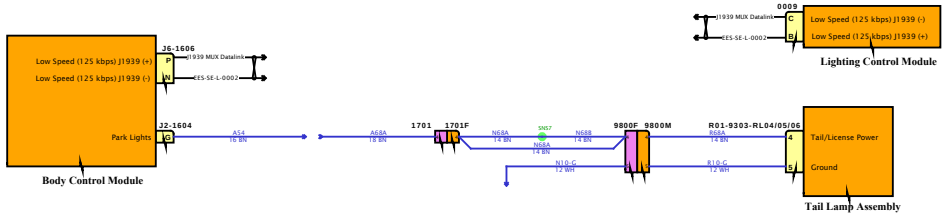

DESIGN DESCRIPTION

FEATURE CODES

SOFTWARE FEATURE CODES

NAVISTAR
NAVISTAR, INC. CONFIDENTIAL PROPRIETARY

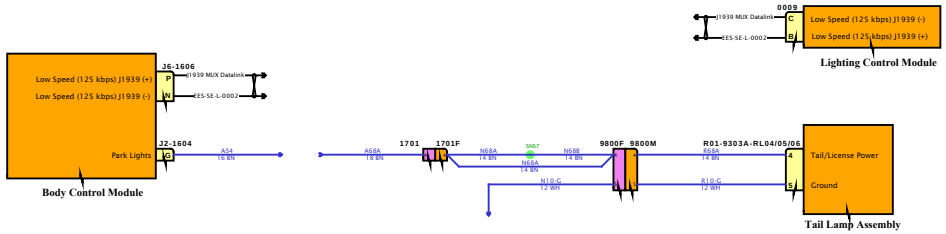

DESIGN DESCRIPTION

FEATURE CODES

SOFTWARE FEATURE CODES

NAVISTAR
NAVISTAR, INC. CONFIDENTIAL PROPRIETARY

Diagram1

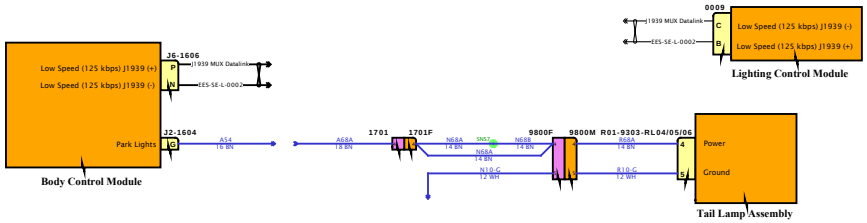

DESIGN DESCRIPTION

FEATURE CODES

SOFTWARE FEATURE CODES

NAVISTAR
NAVISTAR, INC. CONFIDENTIAL PROPRIETARY

Diagram2

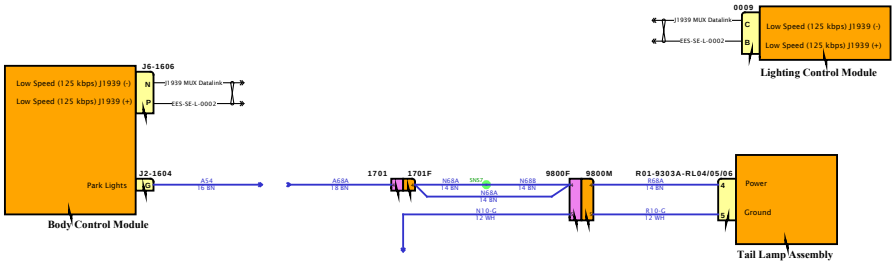

DESIGN DESCRIPTION

FEATURE CODES

SOFTWARE FEATURE CODES

NAVISTAR INC. CONFIDENTIAL PROPRIETARY

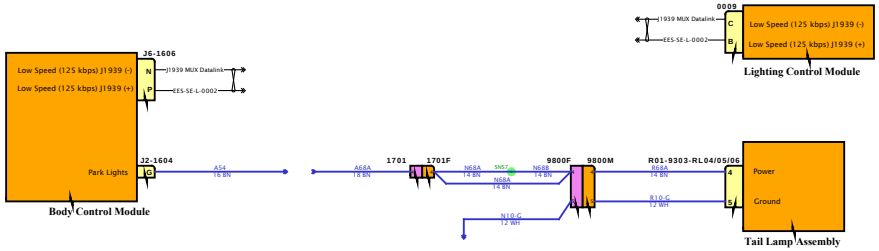

DESIGN DESCRIPTION

FEATURE CODES

SOFTWARE FEATURE CODES

NAVISTAR
NAVISTAR, INC. CONFIDENTIAL PROPRIETARY

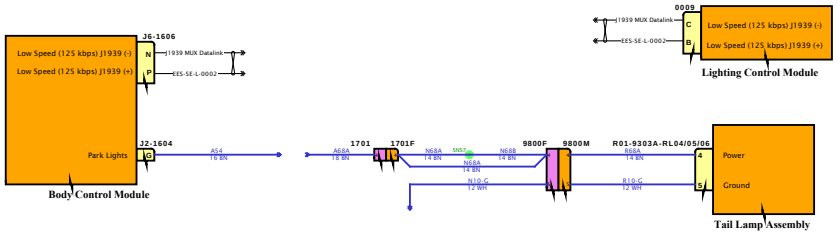

DESIGN DESCRIPTION

FEATURE CODES

SOFTWARE FEATURE CODES

NAVISTAR
NAVISTAR, INC. CONFIDENTIAL PROPRIETARY

Diagram1

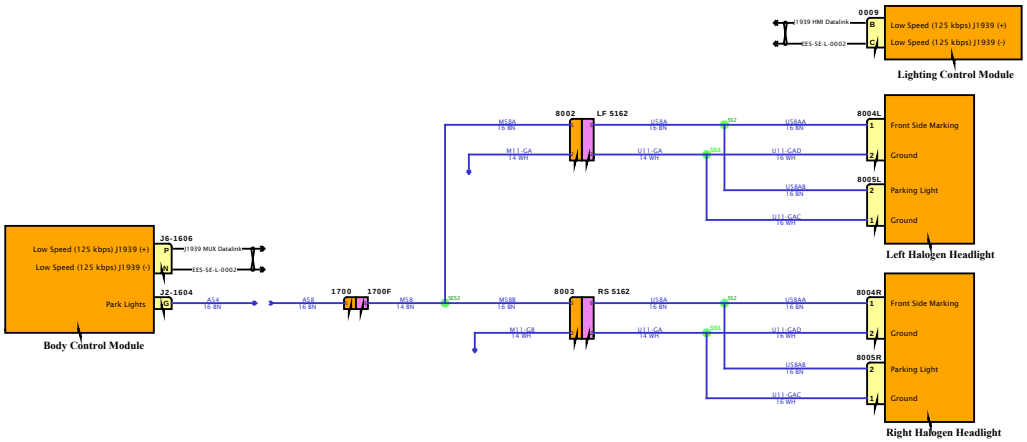

DESIGN DESCRIPTION

FEATURE CODES

SOFTWARE FEATURE CODES

NAVISTAR INC. CONFIDENTIAL PROPRIETARY

Diagram1

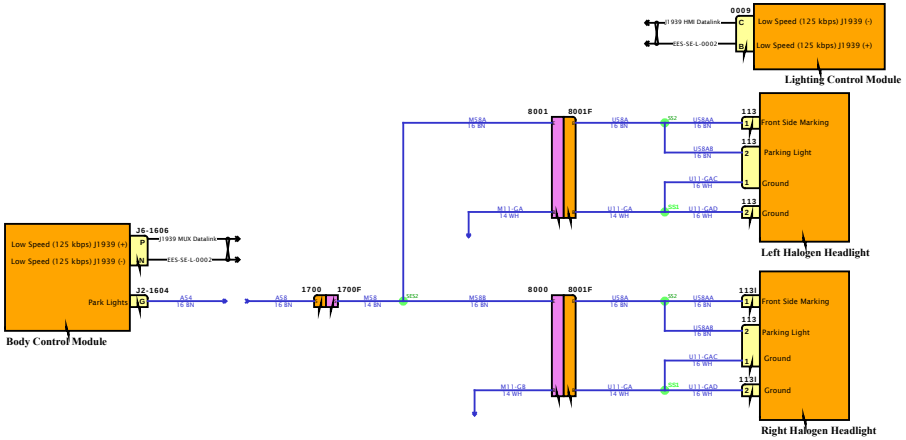

DESIGN DESCRIPTION

FEATURE CODES

SOFTWARE FEATURE CODES

NAVISTAR INC. CONFIDENTIAL PROPRIETARY

Diagram1

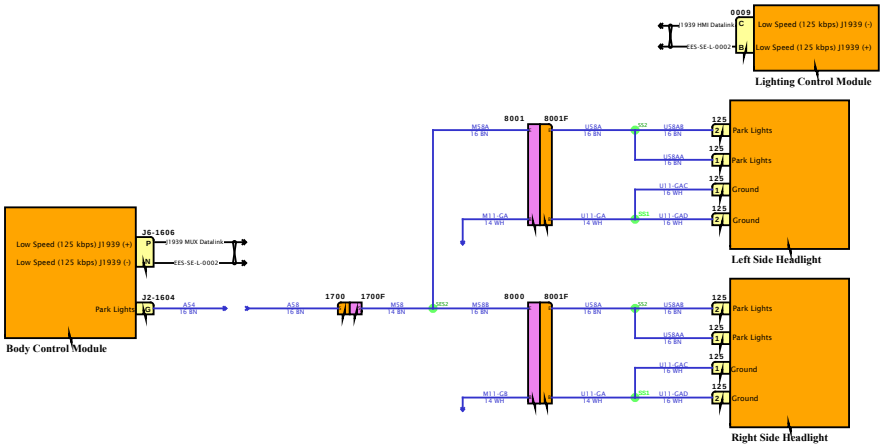

DESIGN DESCRIPTION

FEATURE CODES

SOFTWARE FEATURE CODES

NAVISTAR INC. CONFIDENTIAL PROPRIETARY

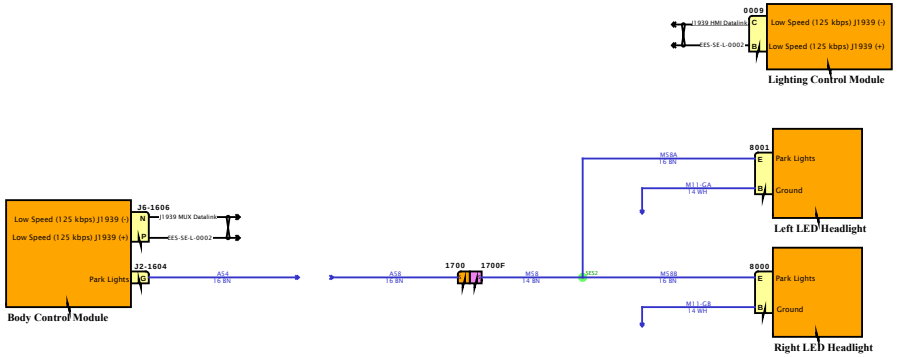

DESIGN DESCRIPTION

FEATURE CODES

SOFTWARE FEATURE CODES

NAVISTAR
NAVISTAR, INC. CONFIDENTIAL PROPRIETARY

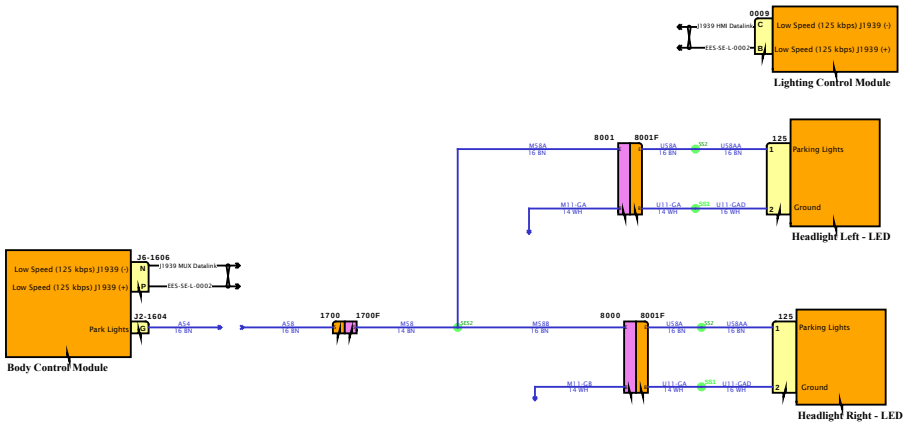

DESIGN DESCRIPTION

FEATURE CODES

SOFTWARE FEATURE CODES

NAVISTAR
NAVISTAR, INC. CONFIDENTIAL PROPRIETARY

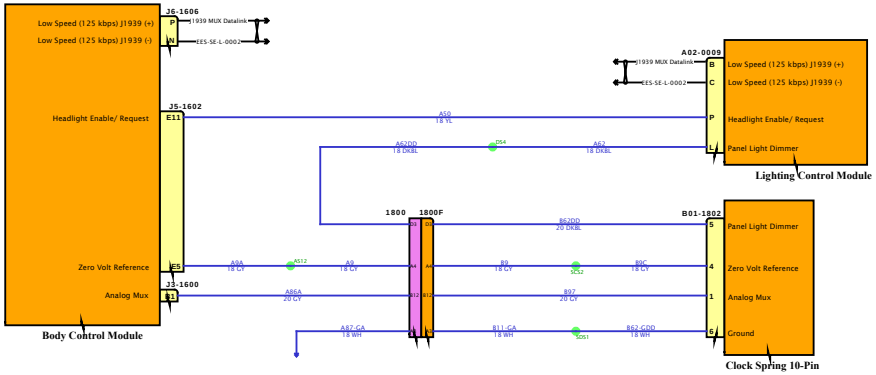

DESIGN DESCRIPTION

FEATURE CODES

SOFTWARE FEATURE CODES

NAVISTAR
NAVISTAR, INC. CONFIDENTIAL PROPRIETARY

Diagram1

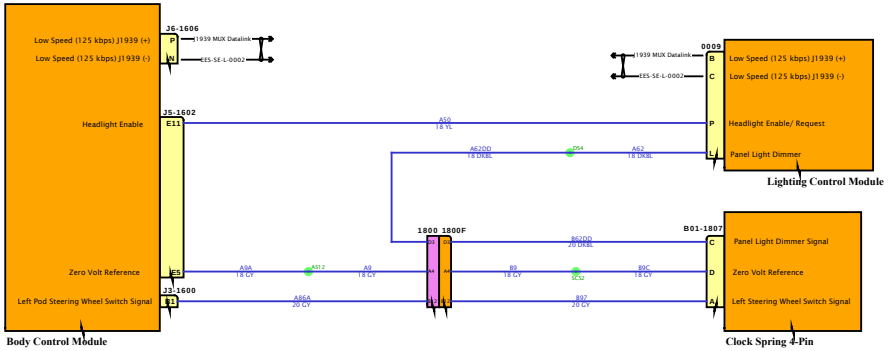

DESIGN DESCRIPTION

FEATURE CODES

SOFTWARE FEATURE CODES

NAVISTAR
NAVISTAR, INC. CONFIDENTIAL PROPRIETARY

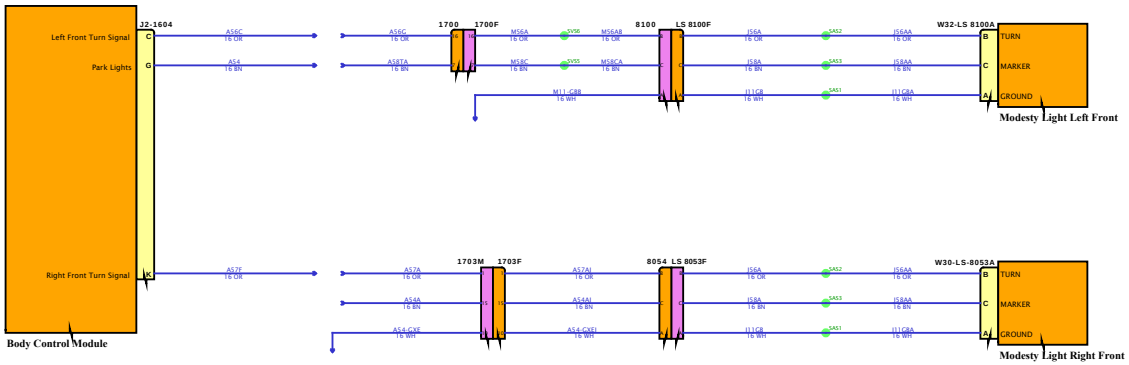

DESIGN DESCRIPTION

FEATURE CODES

SOFTWARE FEATURE CODES

NAVISTAR INC. CONFIDENTIAL PROPRIETARY

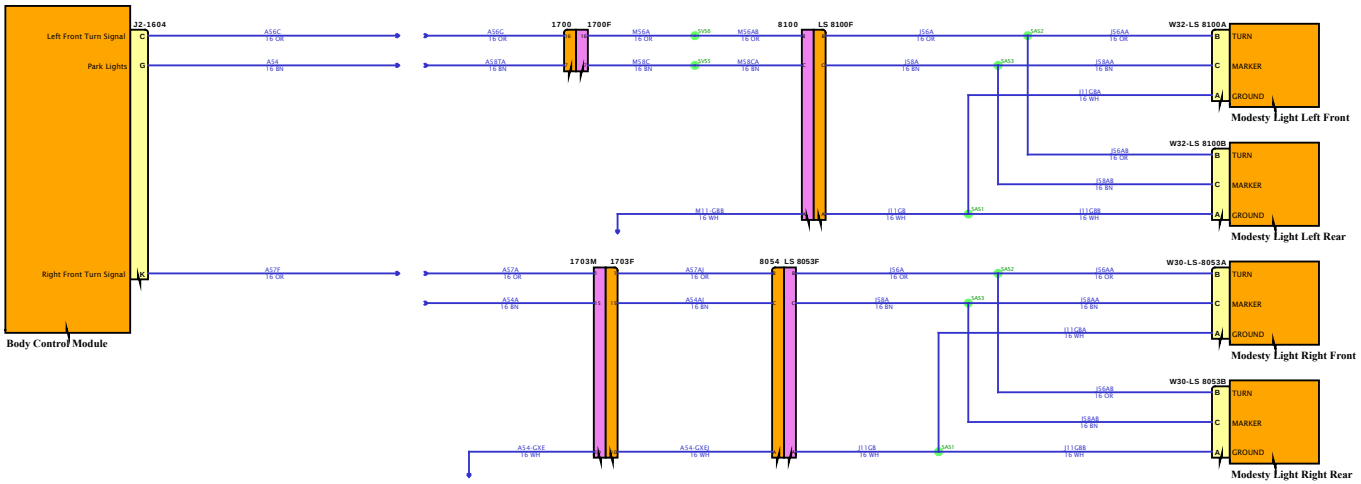

DESIGN DESCRIPTION

FEATURE CODES

SOFTWARE FEATURE CODES

NAVISTAR
NAVISTAR, INC. CONFIDENTIAL PROPRIETARY

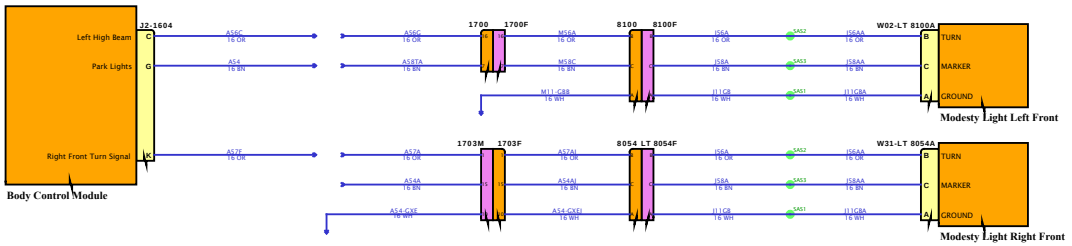

DESIGN DESCRIPTION

FEATURE CODES

SOFTWARE FEATURE CODES

NAVISTAR INC. CONFIDENTIAL PROPRIETARY

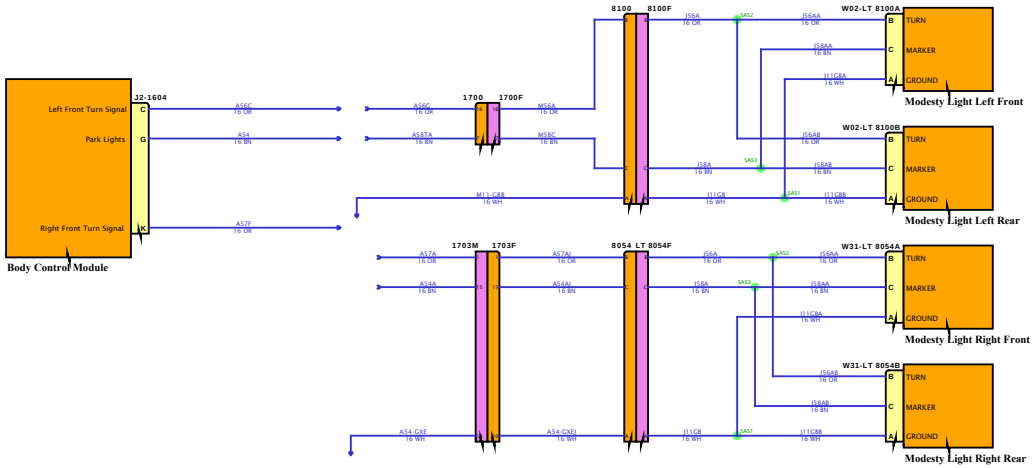

DESIGN DESCRIPTION

FEATURE CODES

SOFTWARE FEATURE CODES

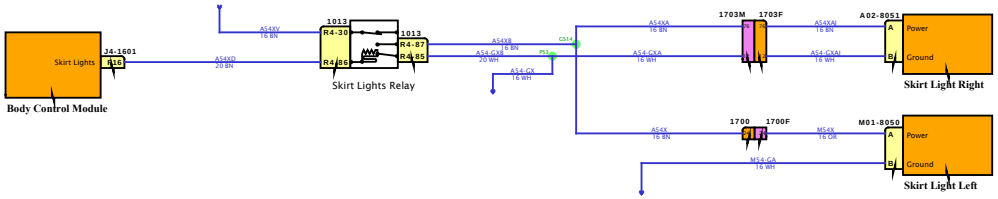

DESIGN DESCRIPTION

FEATURE CODES

SOFTWARE FEATURE CODES

NAVISTAR
NAVISTAR, INC. CONFIDENTIAL PROPRIETARY

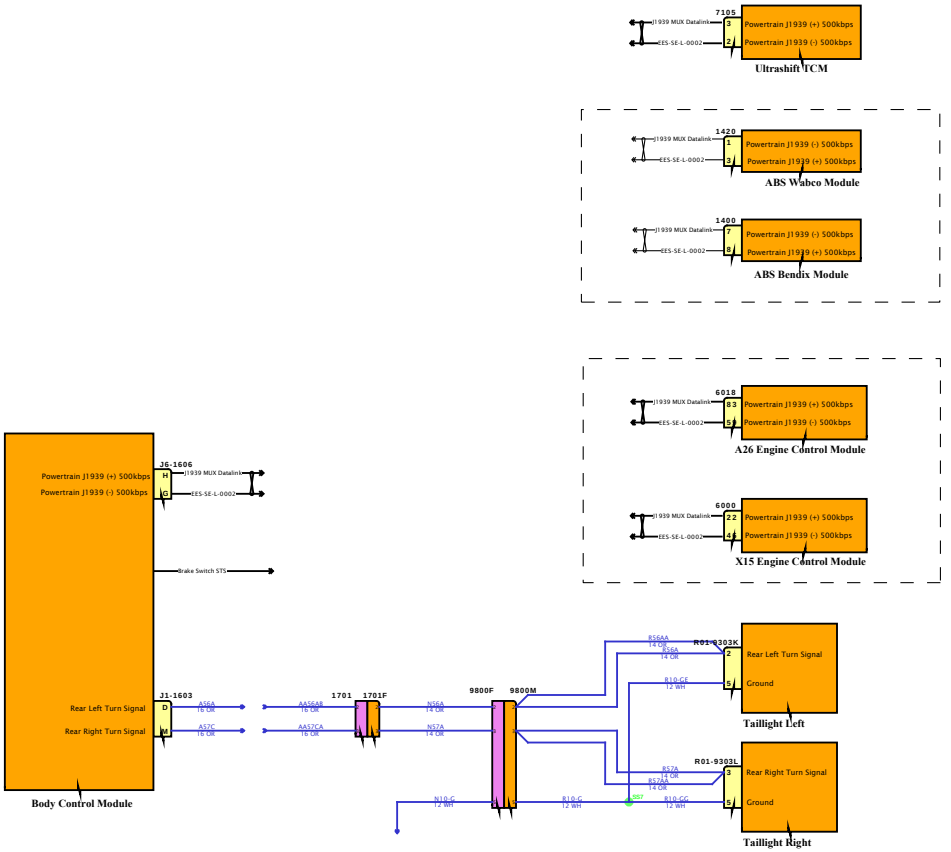

DESIGN DESCRIPTION

FEATURE CODES

SOFTWARE FEATURE CODES

Diagram2

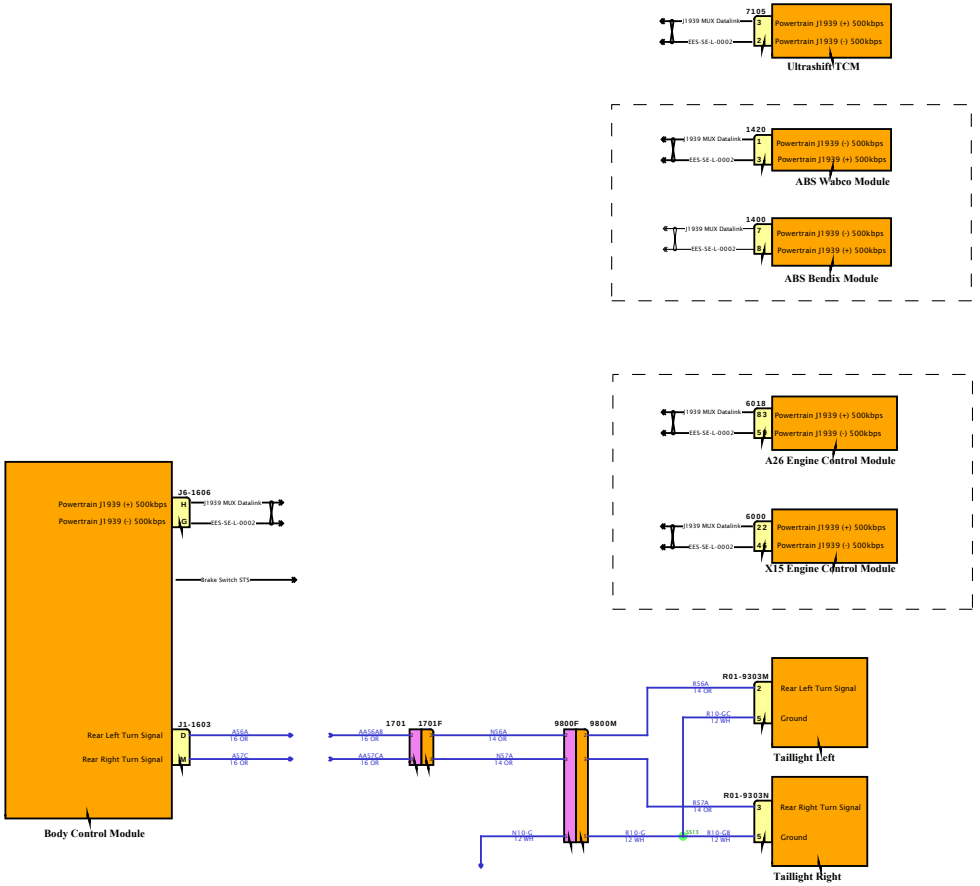

DESIGN DESCRIPTION

FEATURE CODES

SOFTWARE FEATURE CODES

NAVISTAR INC. CONFIDENTIAL PROPRIETARY

DESIGN DESCRIPTION

FEATURE CODES

SOFTWARE FEATURE CODES

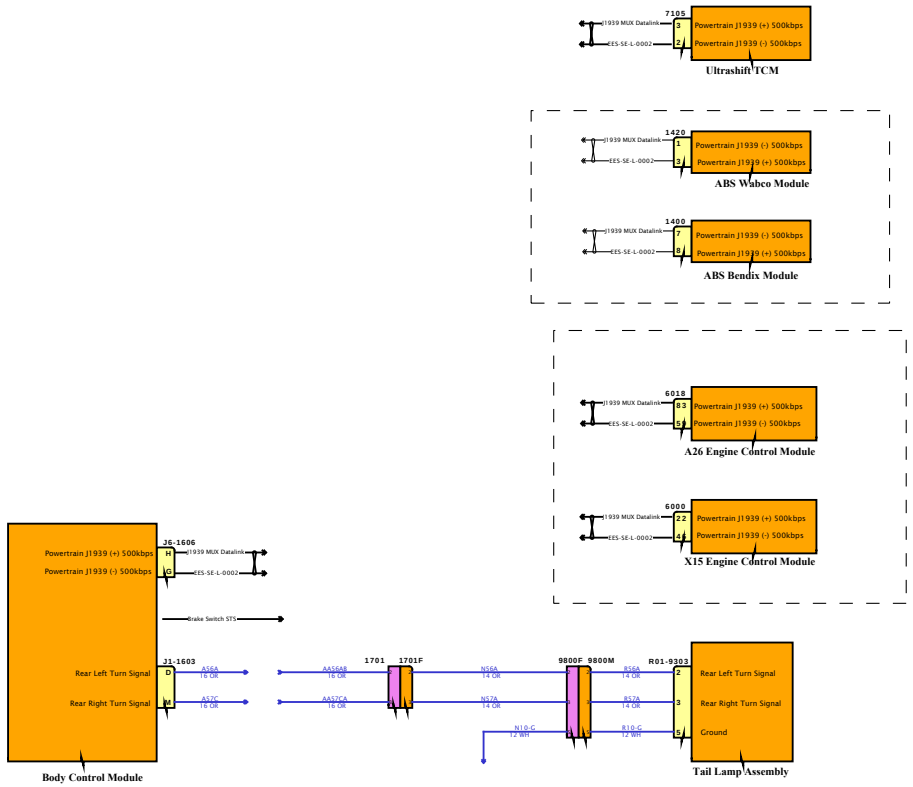

DESIGN DESCRIPTION

FEATURE CODES

SOFTWARE FEATURE CODES

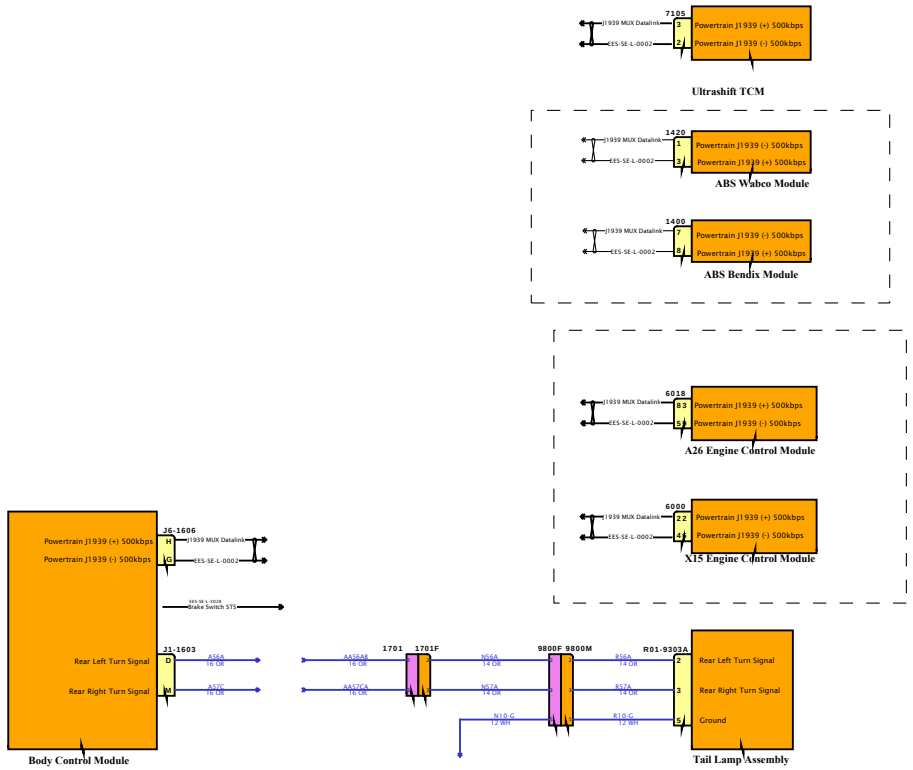

DESIGN DESCRIPTION

FEATURE CODES

SOFTWARE FEATURE CODES

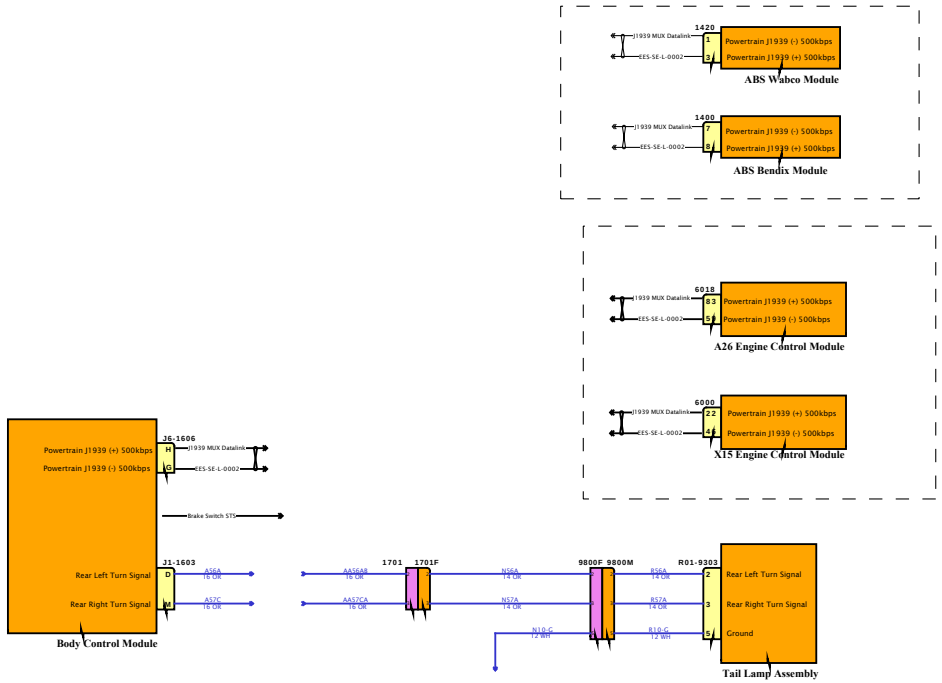

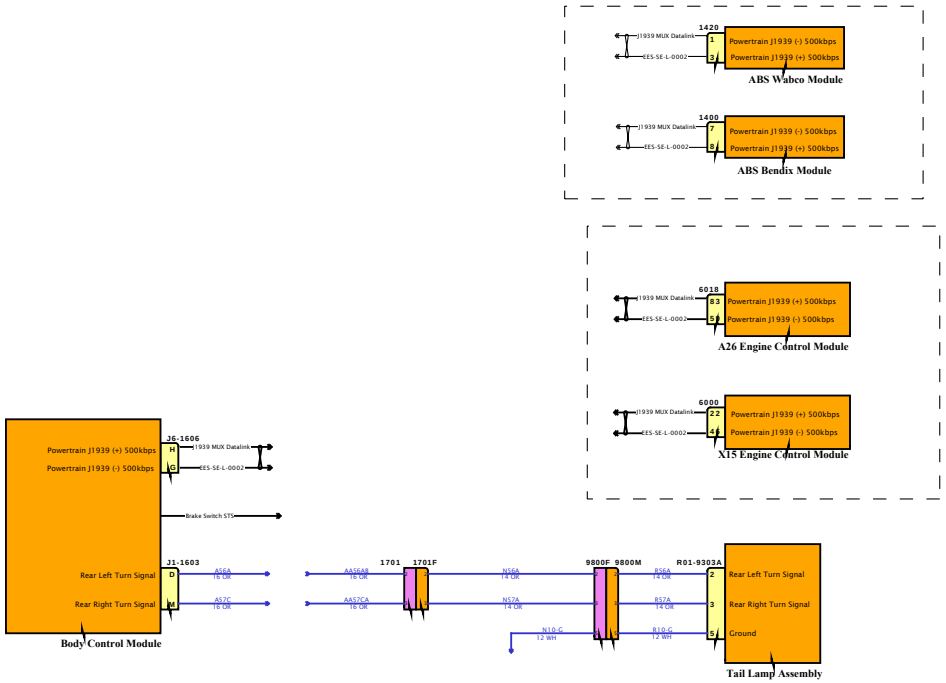

DESIGN DESCRIPTION

FEATURE CODES

SOFTWARE FEATURE CODES

NAVISTAR INC. CONFIDENTIAL PROPRIETARY

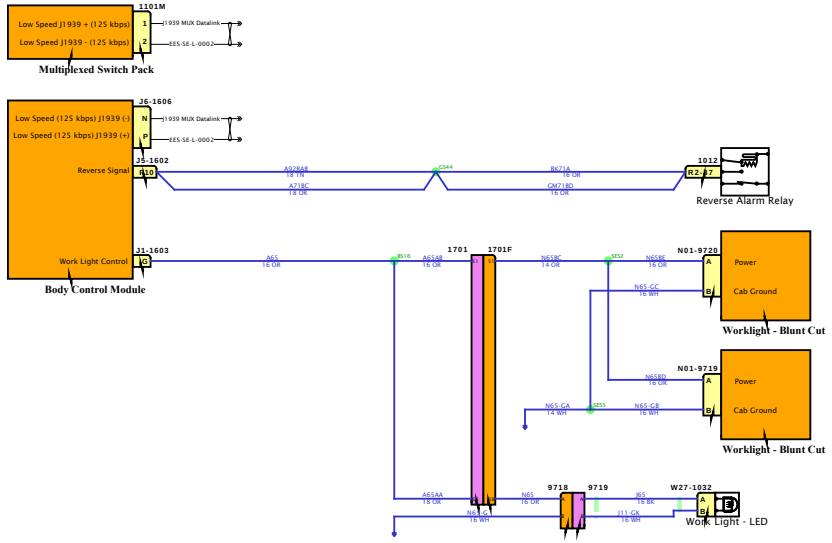

DESIGN DESCRIPTION

FEATURE CODES

SOFTWARE FEATURE CODES

NAVISTAR
NAVISTAR, INC. CONFIDENTIAL PROPRIETARY

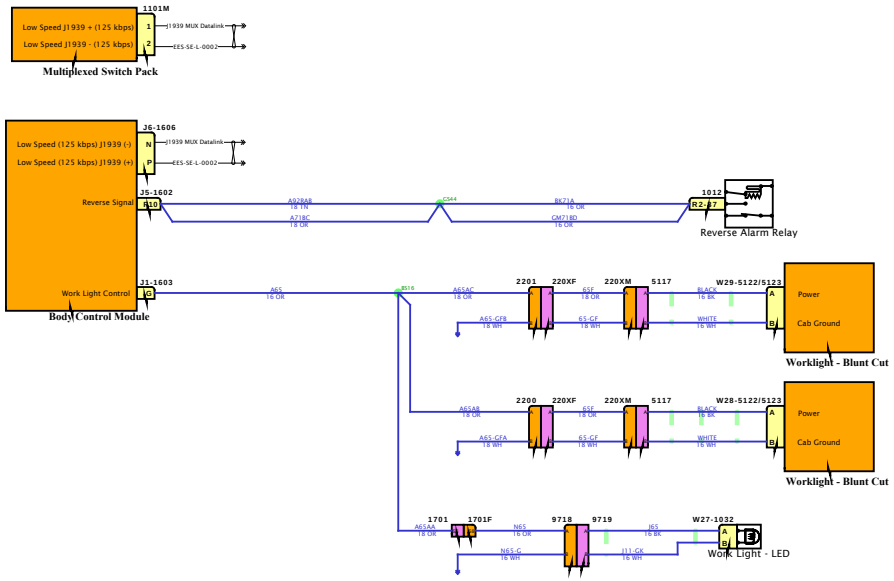

DESIGN DESCRIPTION

FEATURE CODES

SOFTWARE FEATURE CODES

NAVISTAR
NAVISTAR, INC. CONFIDENTIAL PROPRIETARY

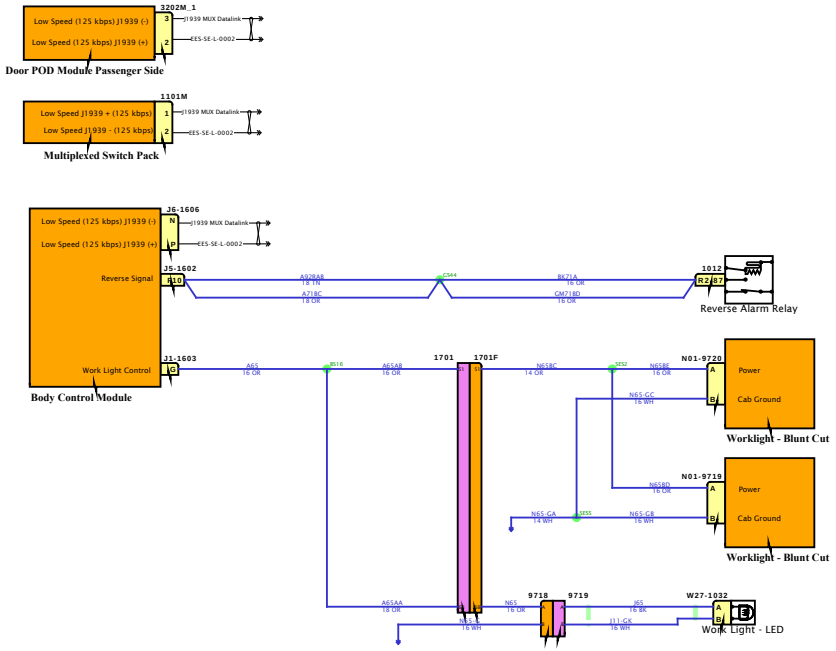

DESIGN DESCRIPTION

FEATURE CODES

SOFTWARE FEATURE CODES

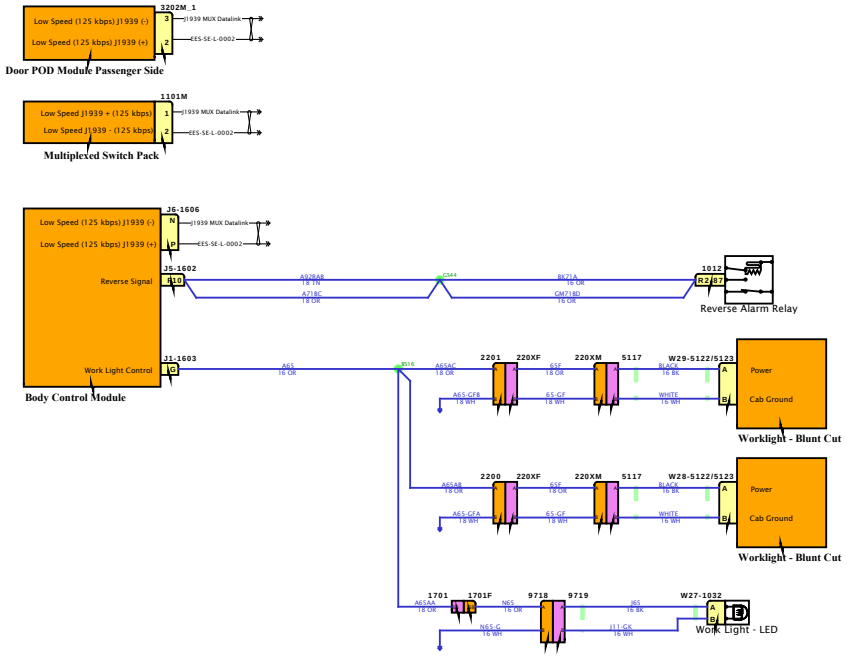

DESIGN DESCRIPTION

FEATURE CODES

SOFTWARE FEATURE CODES

NAVISTAR INC. CONFIDENTIAL PROPRIETARY

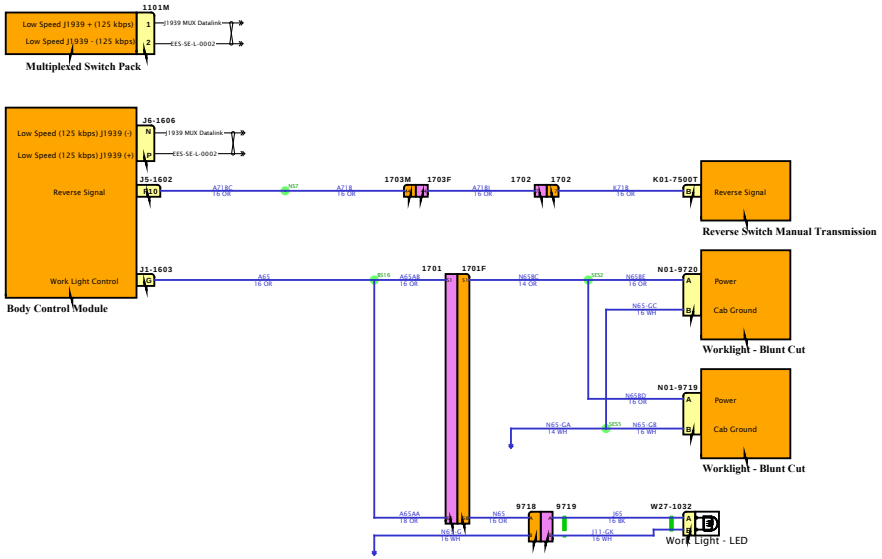

DESIGN DESCRIPTION

FEATURE CODES

SOFTWARE FEATURE CODES

NAVISTAR
NAVISTAR, INC. CONFIDENTIAL PROPRIETARY

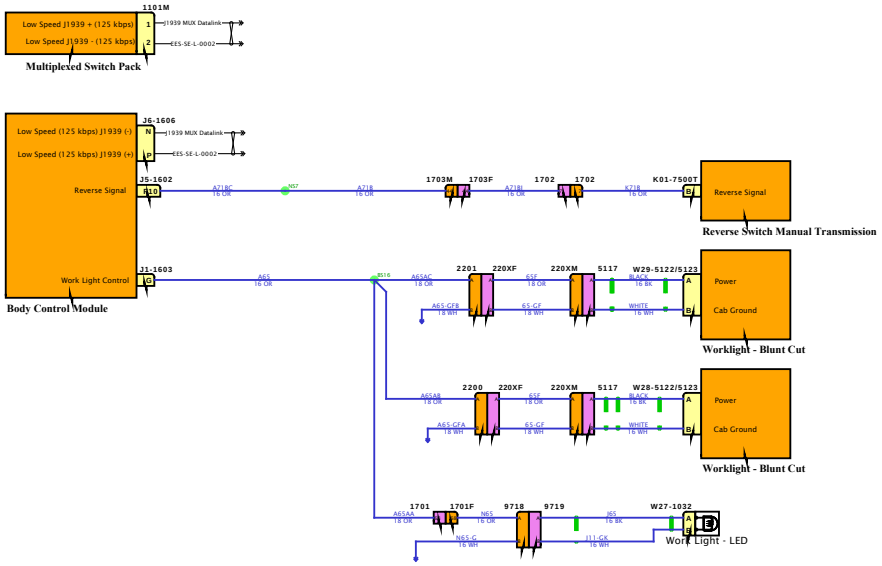

DESIGN DESCRIPTION

FEATURE CODES

SOFTWARE FEATURE CODES

NAVISTAR INC. CONFIDENTIAL PROPRIETARY

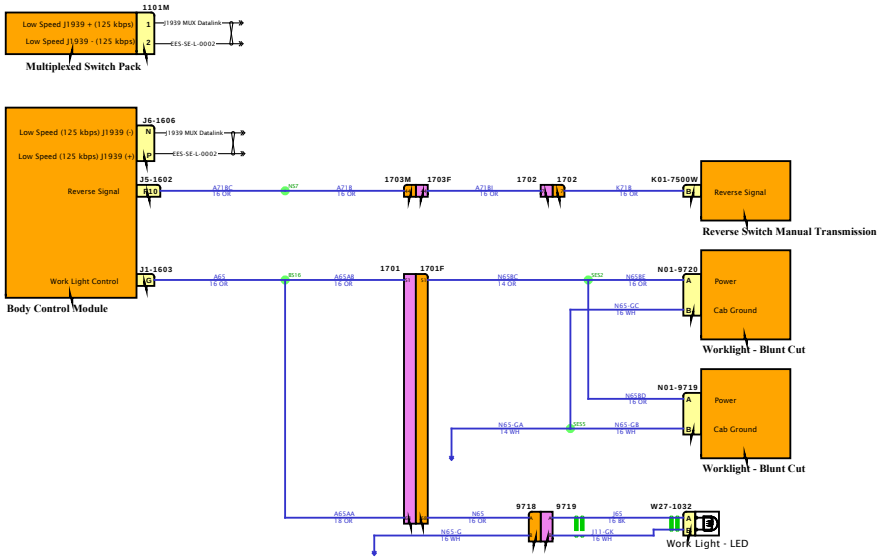

DESIGN DESCRIPTION

FEATURE CODES

SOFTWARE FEATURE CODES

NAVISTAR
NAVISTAR, INC. CONFIDENTIAL PROPRIETARY

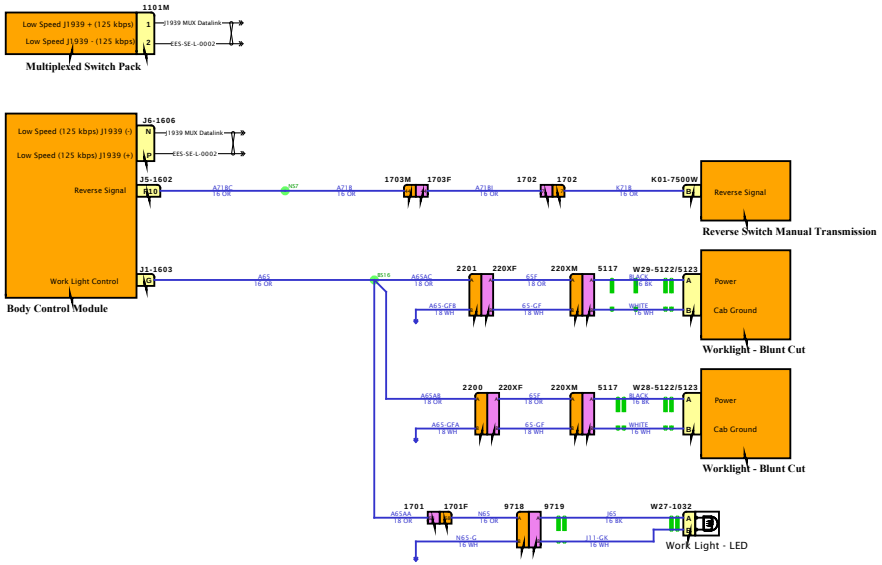

DESIGN DESCRIPTION

FEATURE CODES

SOFTWARE FEATURE CODES

NAVISTAR
NAVISTAR, INC. CONFIDENTIAL PROPRIETARY

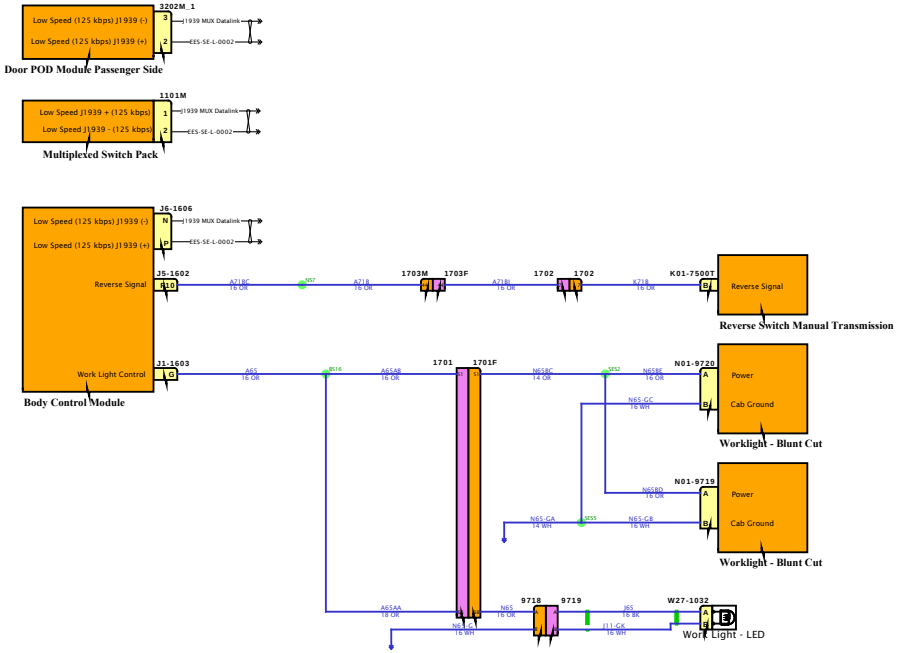

DESIGN DESCRIPTION

FEATURE CODES

SOFTWARE FEATURE CODES

NAVISTAR
NAVISTAR, INC. CONFIDENTIAL PROPRIETARY

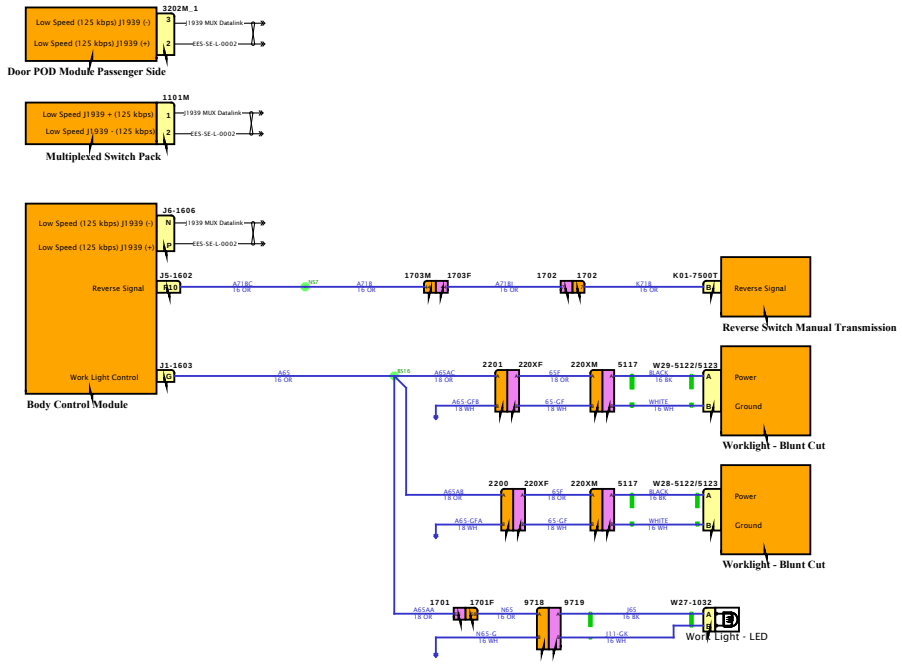

DESIGN DESCRIPTION

FEATURE CODES

SOFTWARE FEATURE CODES

NAVISTAR INC. CONFIDENTIAL PROPRIETARY

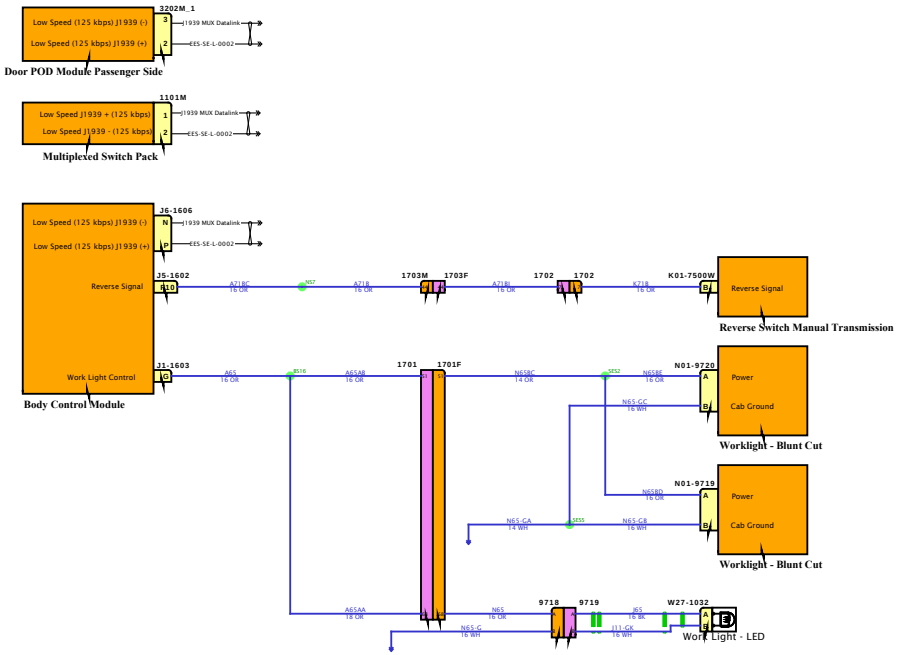

DESIGN DESCRIPTION

FEATURE CODES

SOFTWARE FEATURE CODES

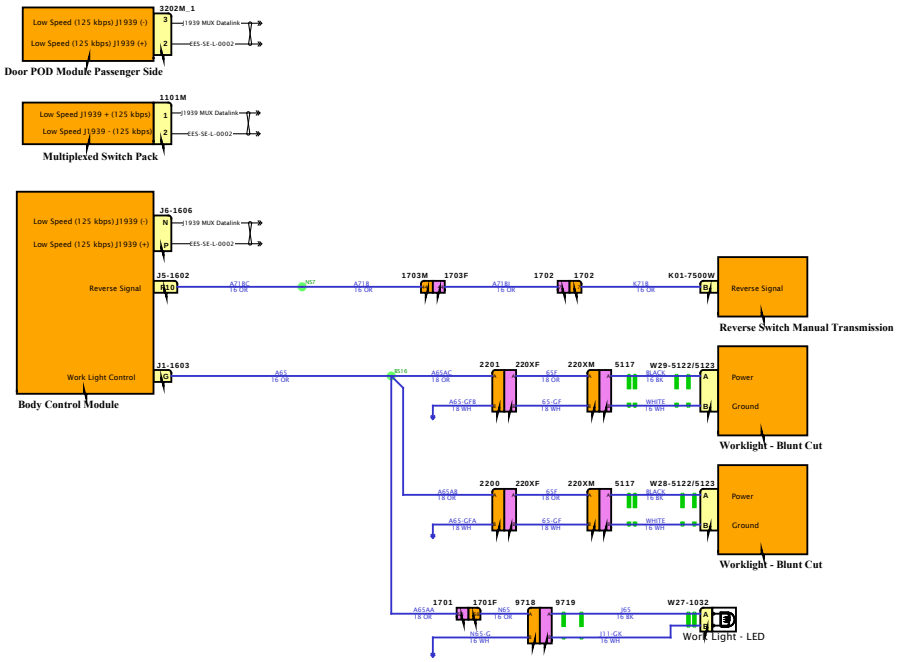

DESIGN DESCRIPTION

FEATURE CODES

SOFTWARE FEATURE CODES

NAVISTAR INC. CONFIDENTIAL PROPRIETARY

Diagram1

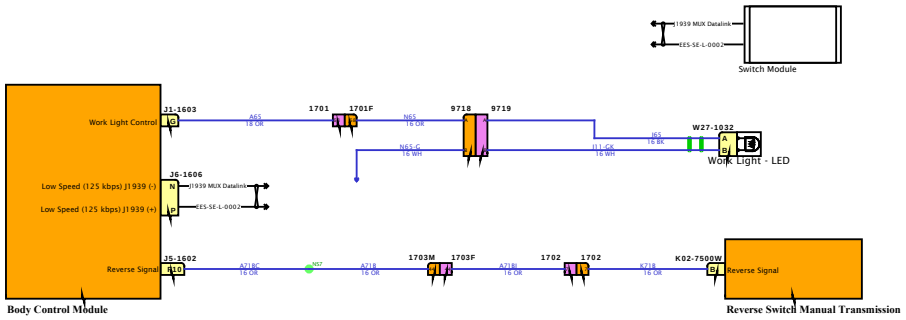

DESIGN DESCRIPTION

FEATURE CODES

SOFTWARE FEATURE CODES

NAVISTAR INC. CONFIDENTIAL PROPRIETARY

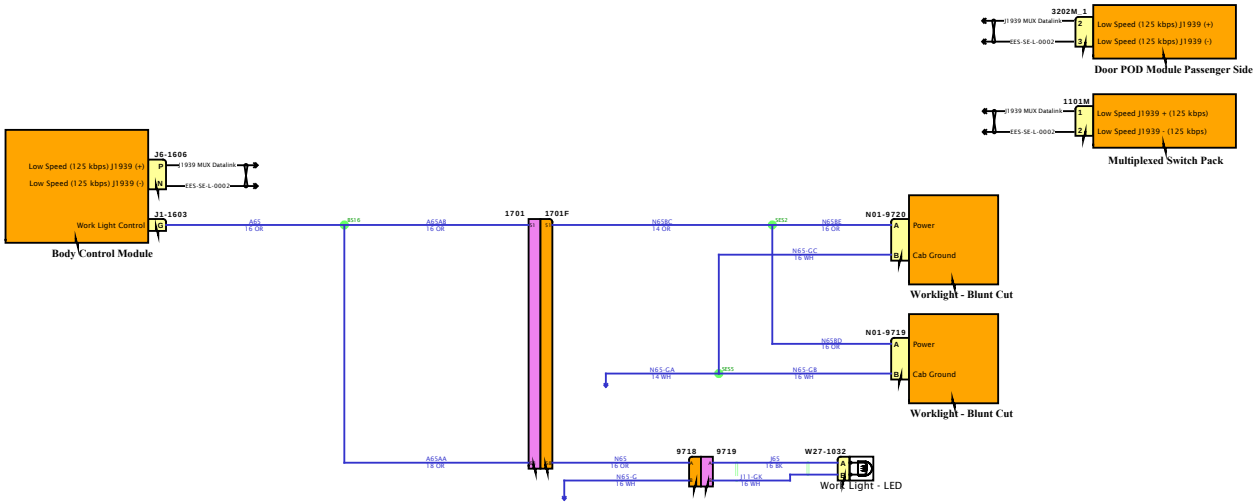

DESIGN DESCRIPTION

FEATURE CODES

SOFTWARE FEATURE CODES

NAVISTAR
NAVISTAR, INC. CONFIDENTIAL PROPRIETARY

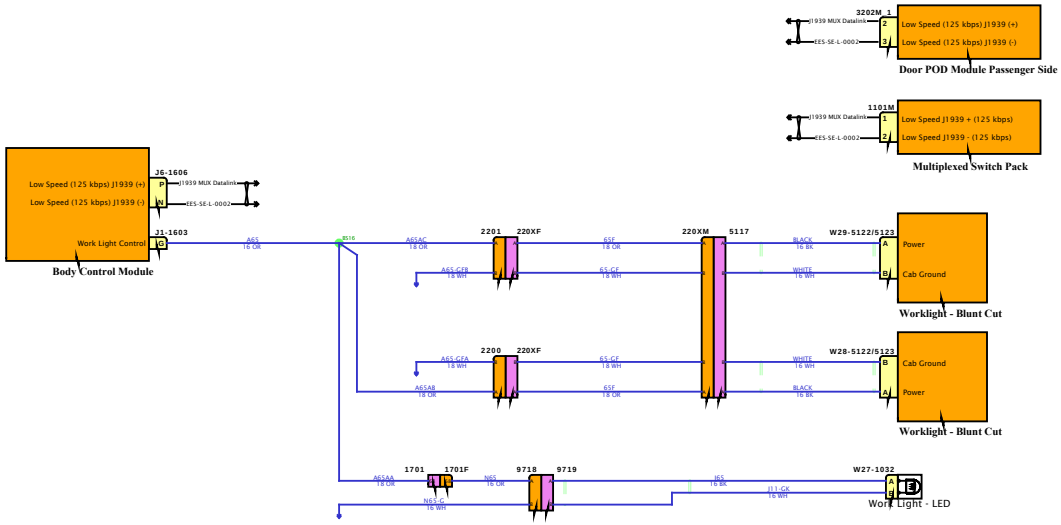

DESIGN DESCRIPTION

FEATURE CODES

SOFTWARE FEATURE CODES

DESIGN DESCRIPTION

FEATURE CODES

SOFTWARE FEATURE CODES

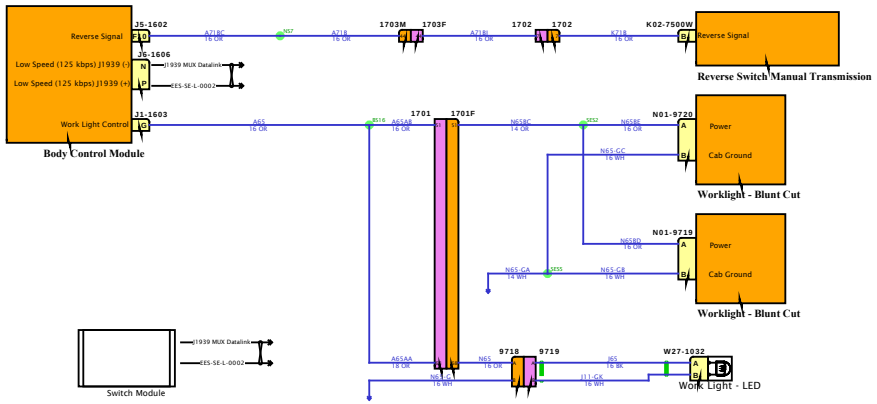

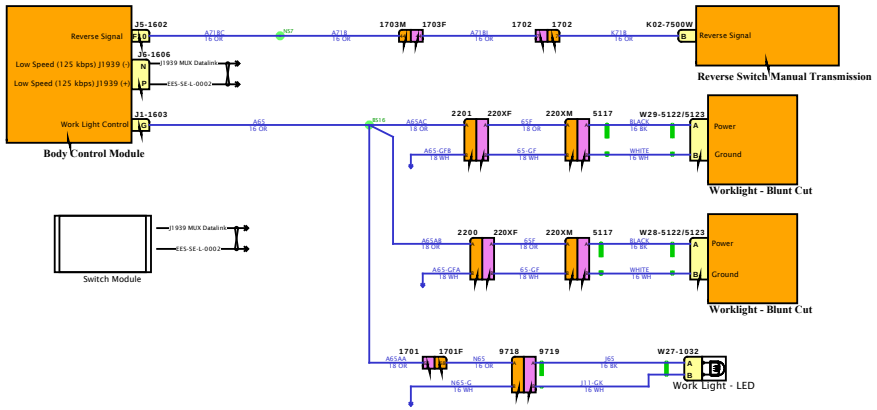

DESIGN DESCRIPTION

FEATURE CODES

SOFTWARE FEATURE CODES

NAVISTAR INC. CONFIDENTIAL PROPRIETARY

Diagram1

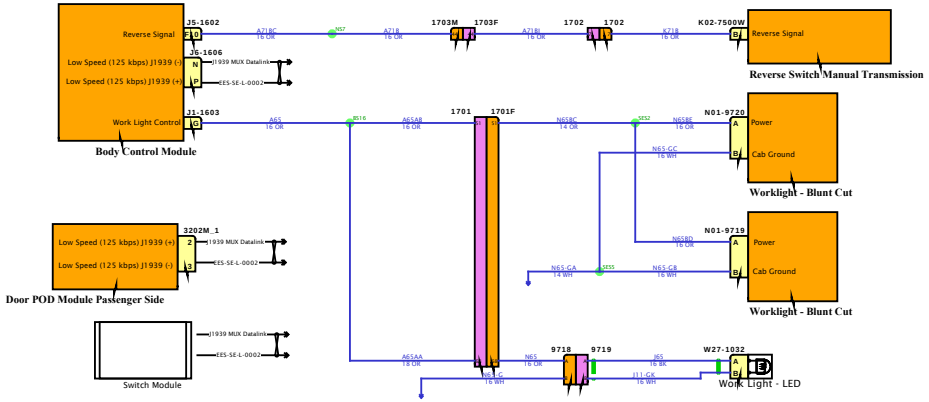

DESIGN DESCRIPTION

FEATURE CODES

SOFTWARE FEATURE CODES

NAVISTAR
NAVISTAR, INC. CONFIDENTIAL PROPRIETARY

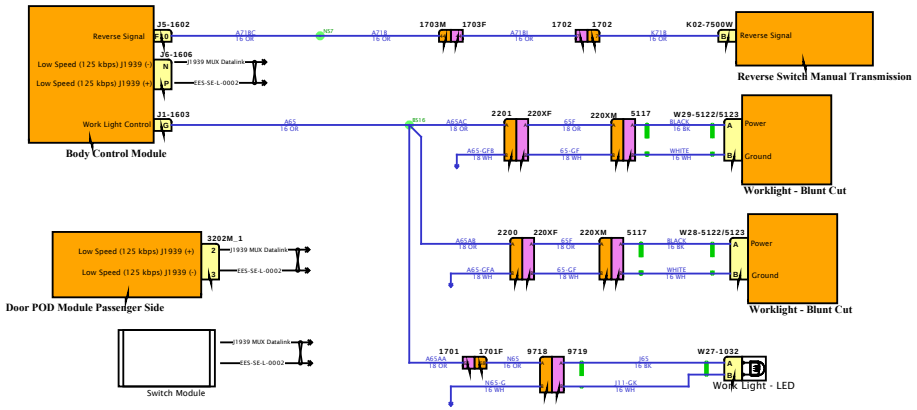

DESIGN DESCRIPTION

FEATURE CODES

SOFTWARE FEATURE CODES

NAVISTAR
NAVISTAR, INC. CONFIDENTIAL PROPRIETARY

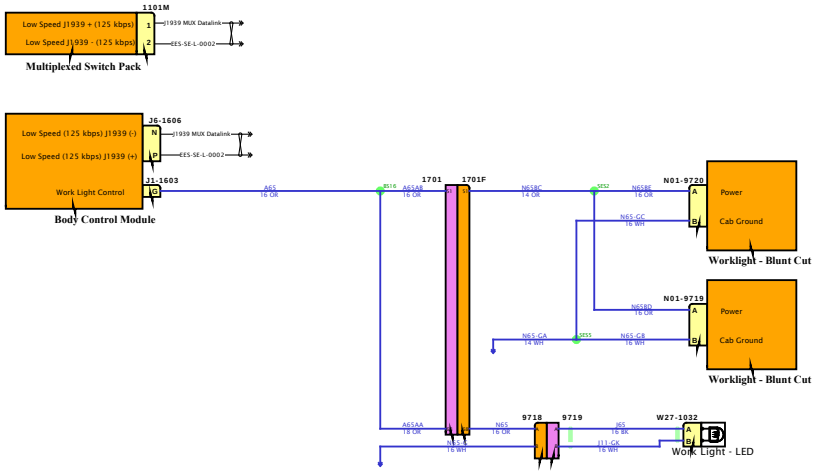

DESIGN DESCRIPTION

FEATURE CODES

SOFTWARE FEATURE CODES

NAVISTAR INC. CONFIDENTIAL PROPRIETARY

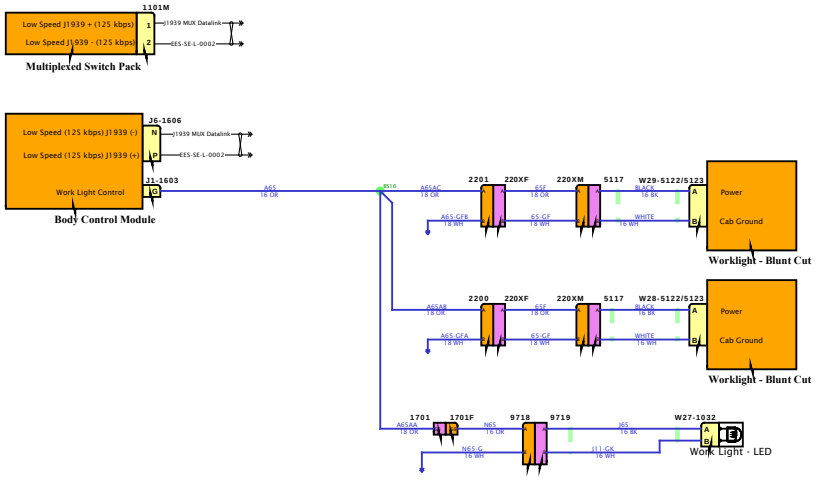

DESIGN DESCRIPTION

FEATURE CODES

SOFTWARE FEATURE CODES

NAVISTAR
NAVISTAR, INC. CONFIDENTIAL PROPRIETARY

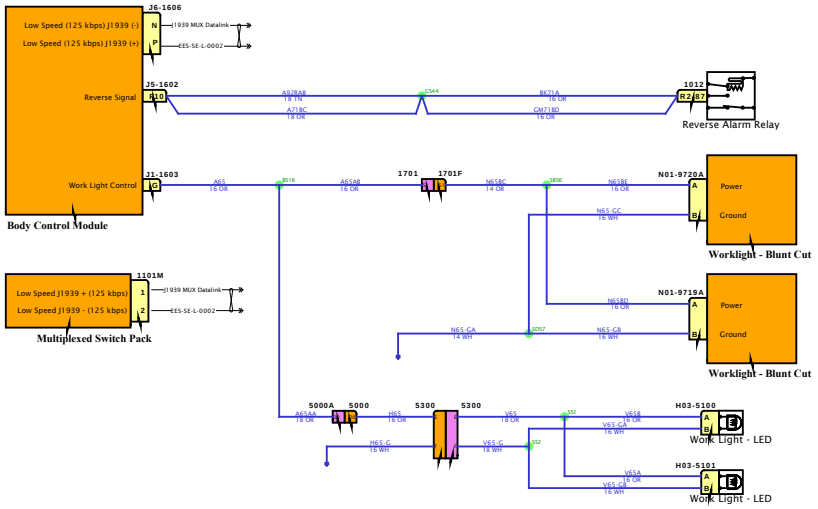

DESIGN DESCRIPTION

FEATURE CODES

SOFTWARE FEATURE CODES

NAVISTAR
NAVISTAR, INC. CONFIDENTIAL PROPRIETARY

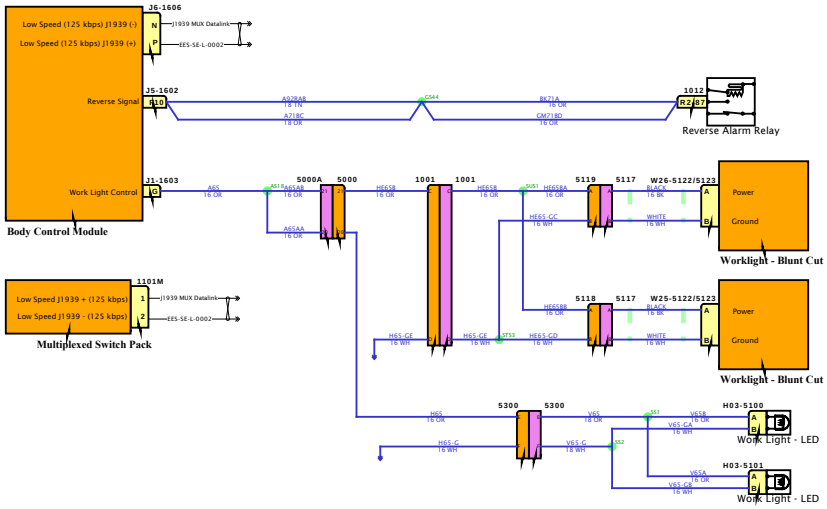

DESIGN DESCRIPTION

FEATURE CODES

SOFTWARE FEATURE CODES

NAVISTAR
NAVISTAR, INC. CONFIDENTIAL PROPRIETARY

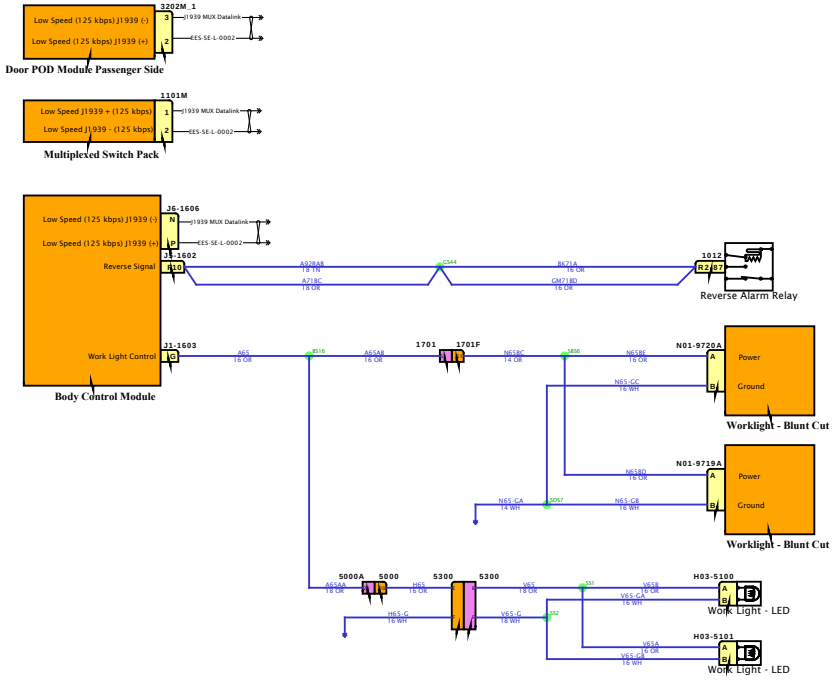

DESIGN DESCRIPTION

FEATURE CODES

SOFTWARE FEATURE CODES

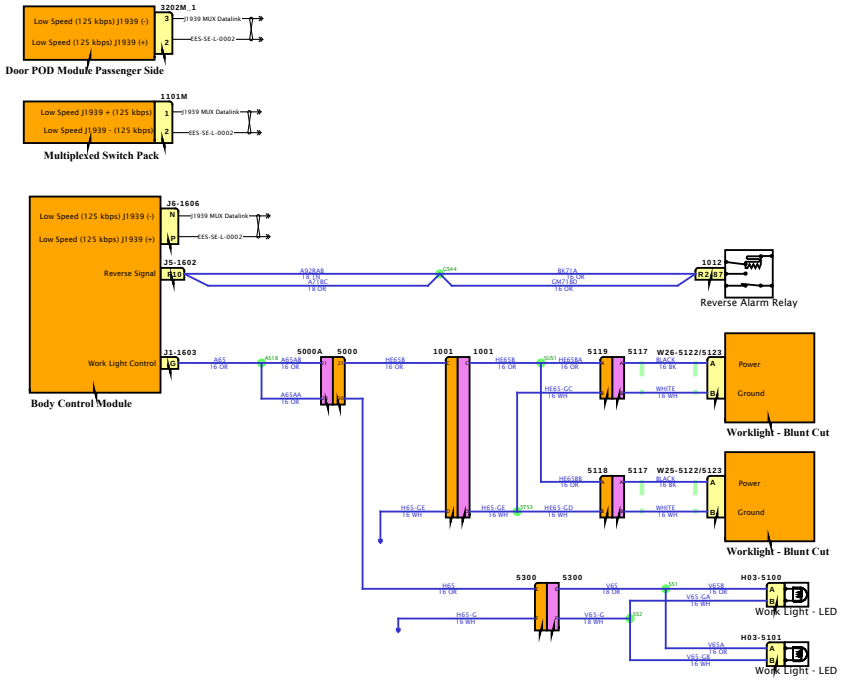

DESIGN DESCRIPTION

FEATURE CODES

SOFTWARE FEATURE CODES

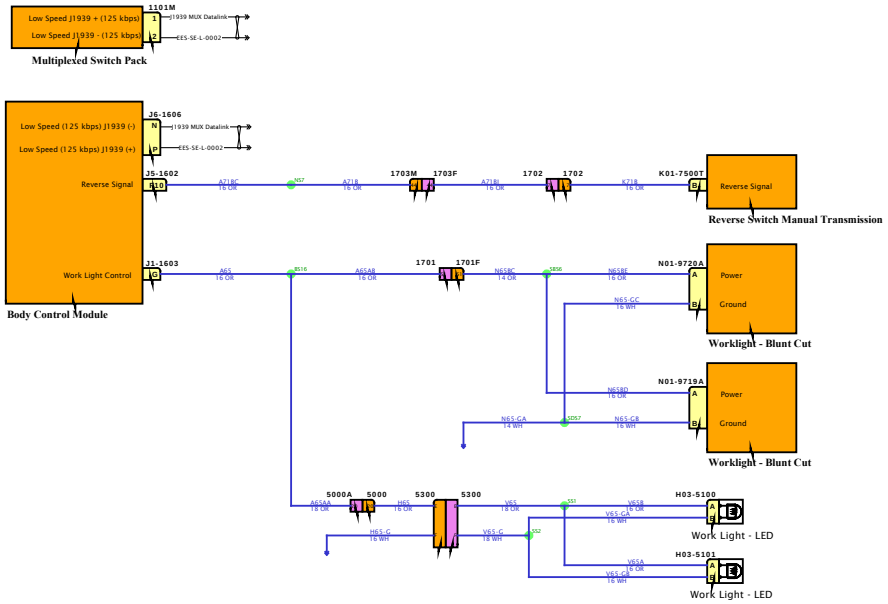

DESIGN DESCRIPTION

FEATURE CODES

SOFTWARE FEATURE CODES

NAVISTAR
NAVISTAR, INC. CONFIDENTIAL PROPRIETARY

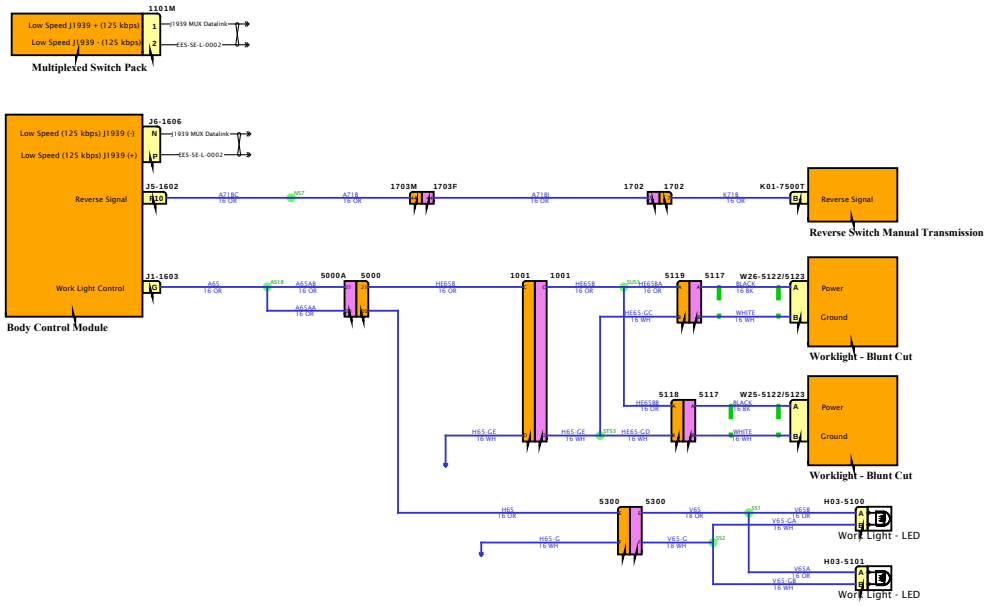

DESIGN DESCRIPTION

FEATURE CODES

SOFTWARE FEATURE CODES

NAVISTAR
NAVISTAR, INC. CONFIDENTIAL PROPRIETARY

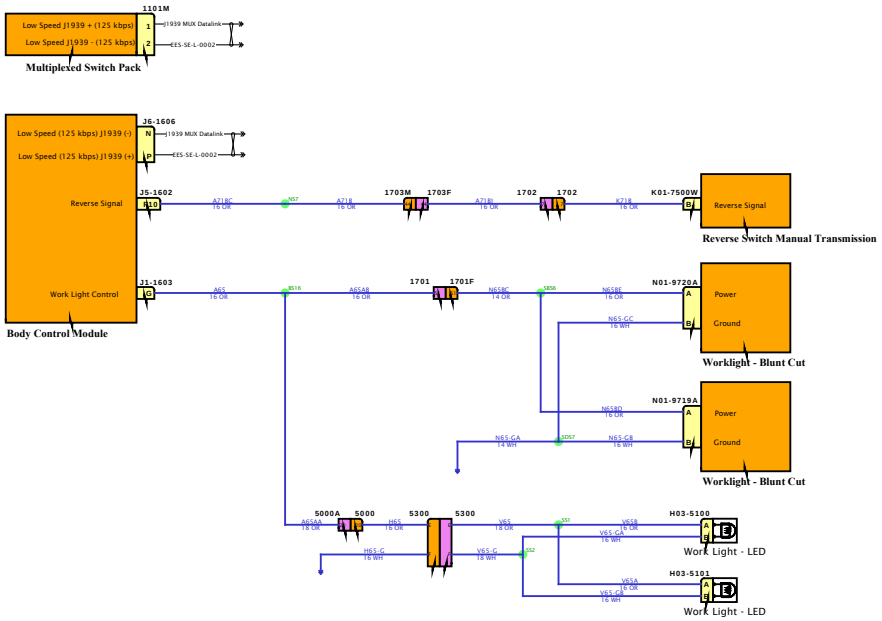

DESIGN DESCRIPTION

FEATURE CODES

SOFTWARE FEATURE CODES

NAVISTAR
NAVISTAR, INC. CONFIDENTIAL PROPRIETARY

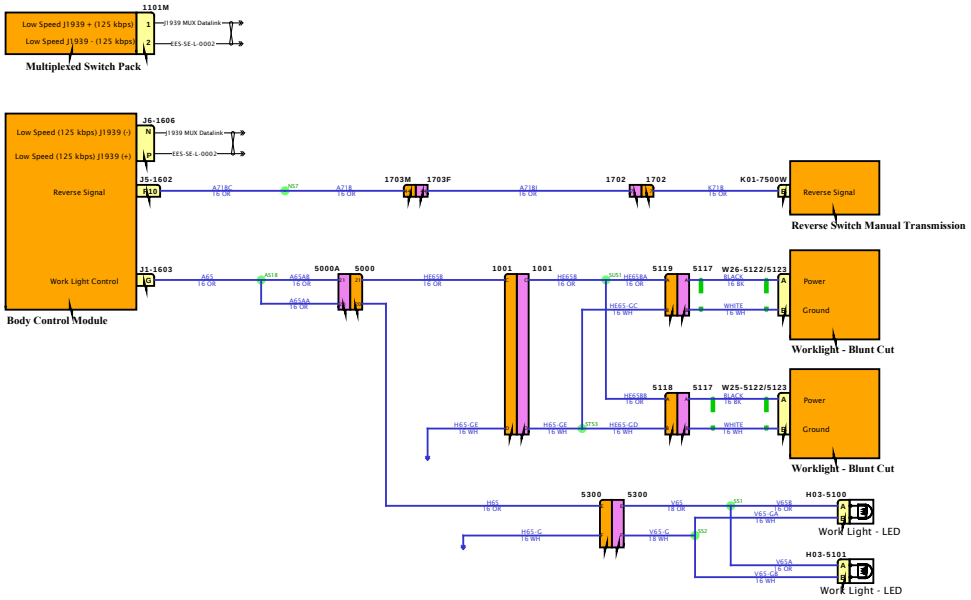

DESIGN DESCRIPTION

FEATURE CODES

SOFTWARE FEATURE CODES

NAVISTAR INC. CONFIDENTIAL PROPRIETARY

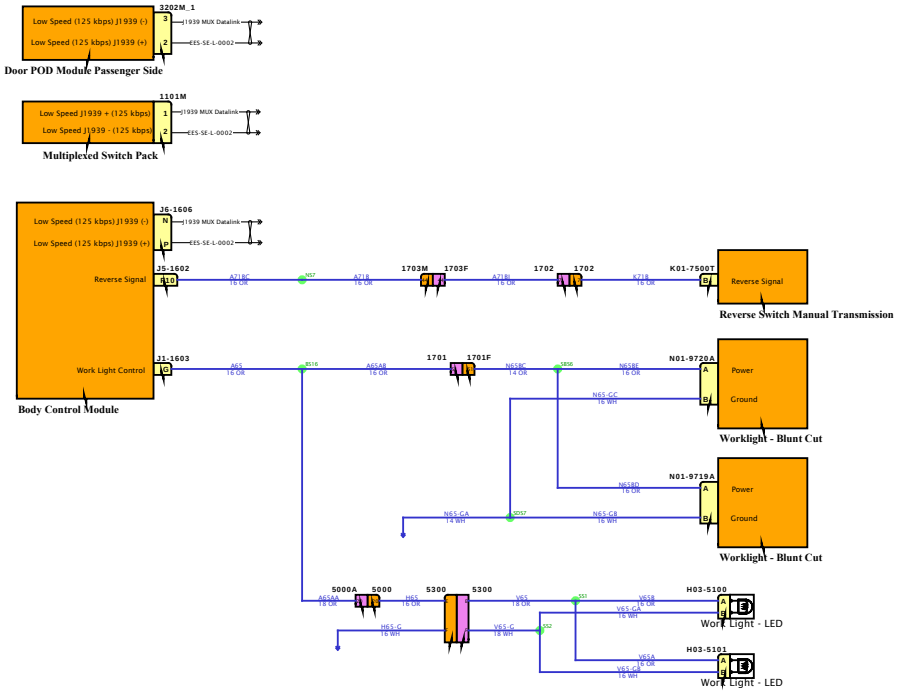

DESIGN DESCRIPTION

FEATURE CODES

SOFTWARE FEATURE CODES

NAVISTAR
NAVISTAR, INC. CONFIDENTIAL PROPRIETARY

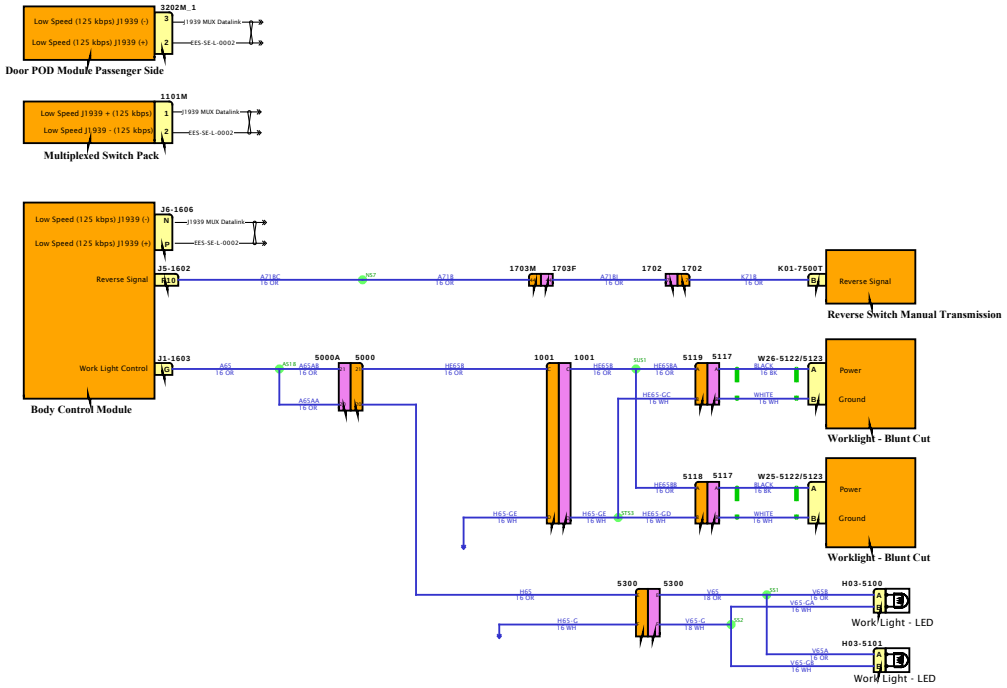

DESIGN DESCRIPTION

FEATURE CODES

SOFTWARE FEATURE CODES

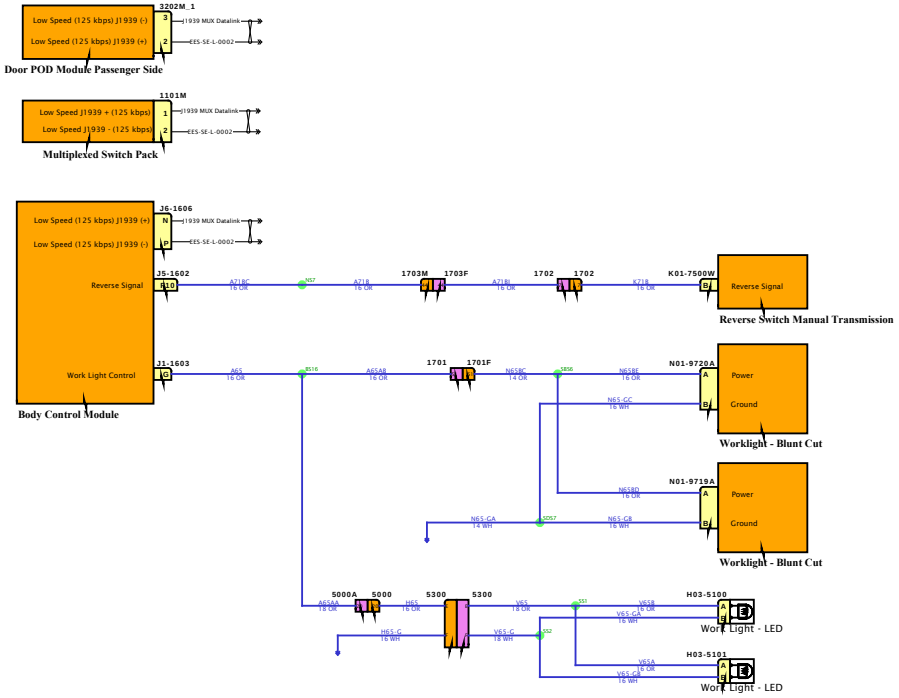

DESIGN DESCRIPTION

FEATURE CODES

SOFTWARE FEATURE CODES

NAVISTAR
NAVISTAR, INC. CONFIDENTIAL PROPRIETARY

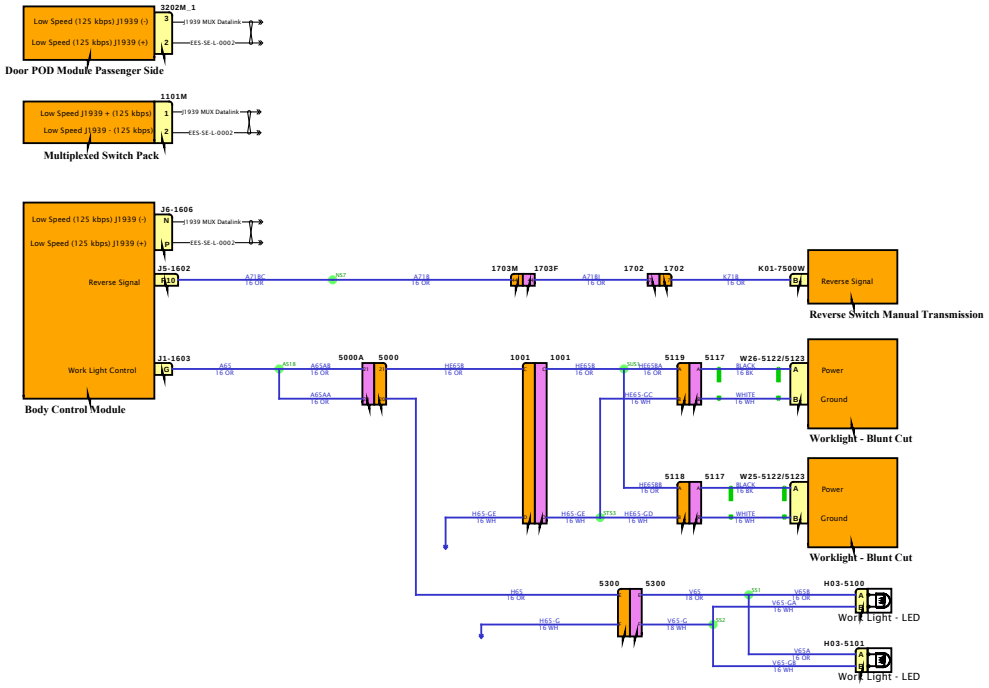

DESIGN DESCRIPTION

FEATURE CODES

SOFTWARE FEATURE CODES

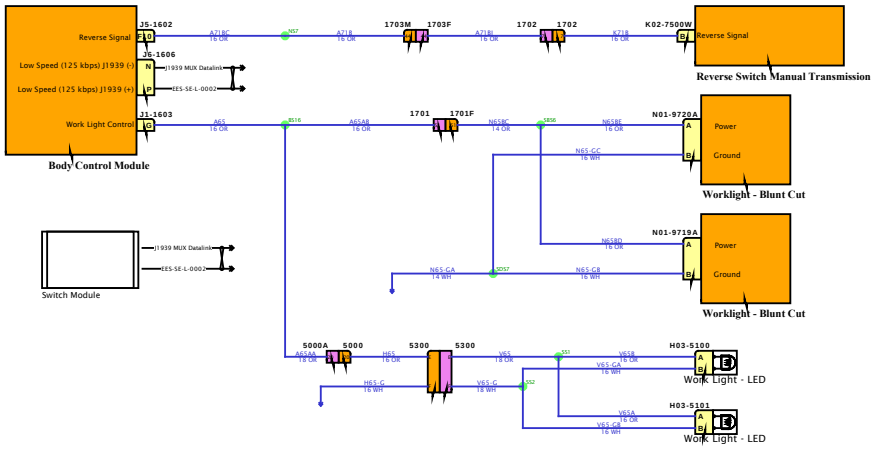

DESIGN DESCRIPTION

FEATURE CODES

SOFTWARE FEATURE CODES

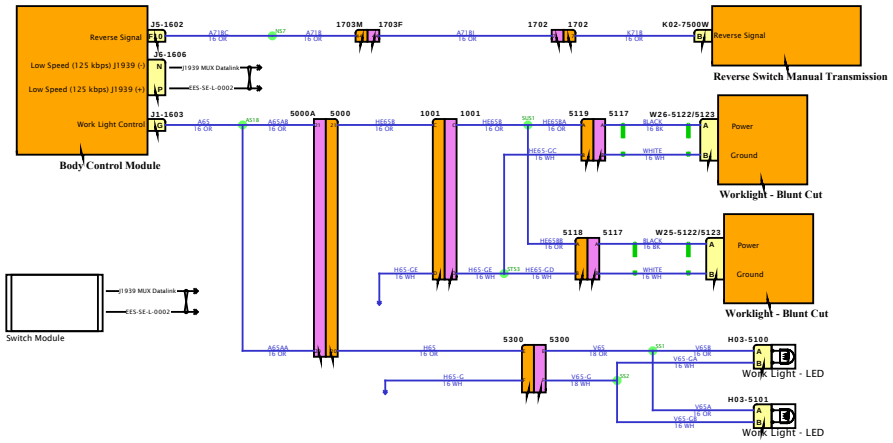

DESIGN DESCRIPTION

FEATURE CODES

SOFTWARE FEATURE CODES

NAVISTAR
NAVISTAR, INC. CONFIDENTIAL PROPRIETARY

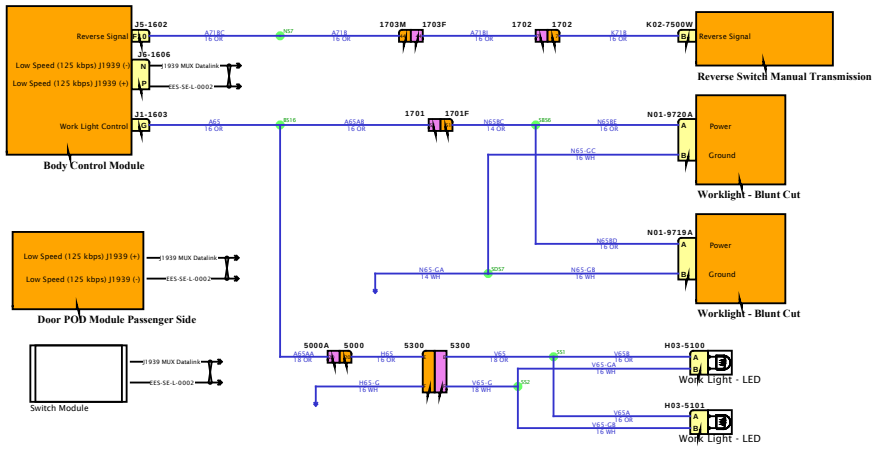

DESIGN DESCRIPTION

FEATURE CODES

SOFTWARE FEATURE CODES

NAVISTAR INC. CONFIDENTIAL PROPRIETARY

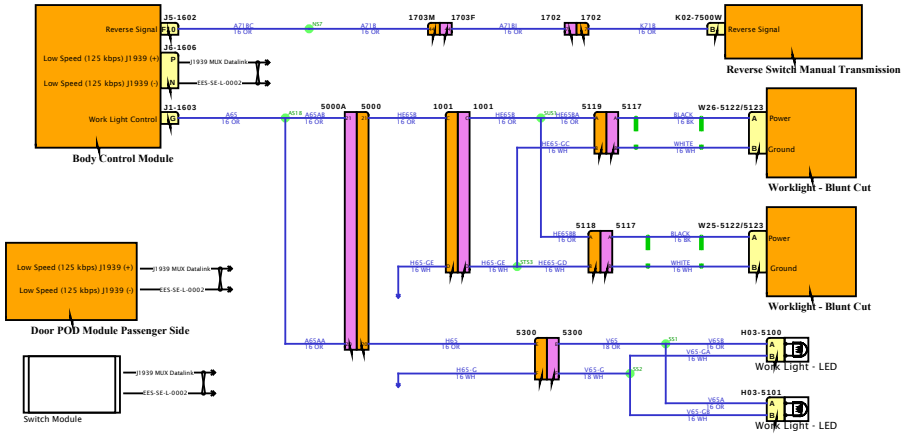

DESIGN DESCRIPTION

FEATURE CODES

SOFTWARE FEATURE CODES

NAVISTAR
NAVISTAR, INC. CONFIDENTIAL PROPRIETARY

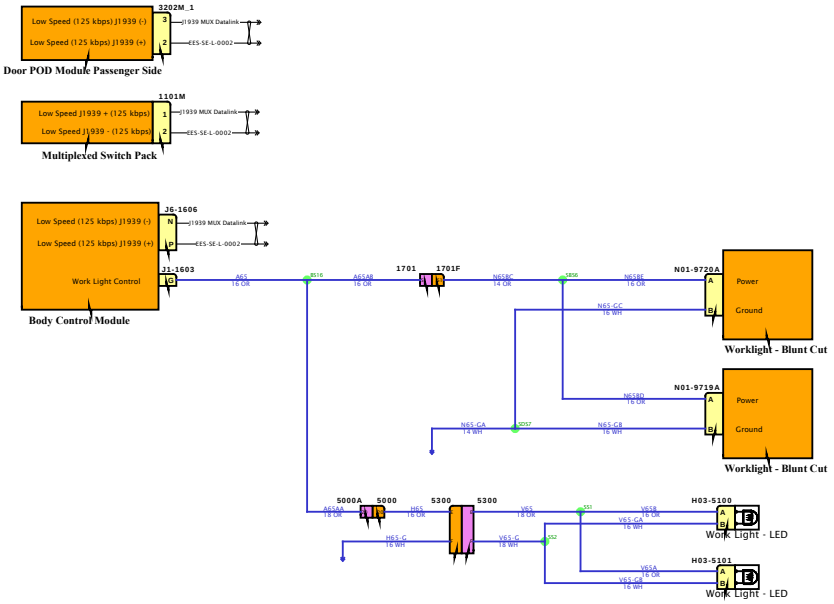

DESIGN DESCRIPTION

FEATURE CODES

SOFTWARE FEATURE CODES

NAVISTAR
NAVISTAR, INC. CONFIDENTIAL PROPRIETARY

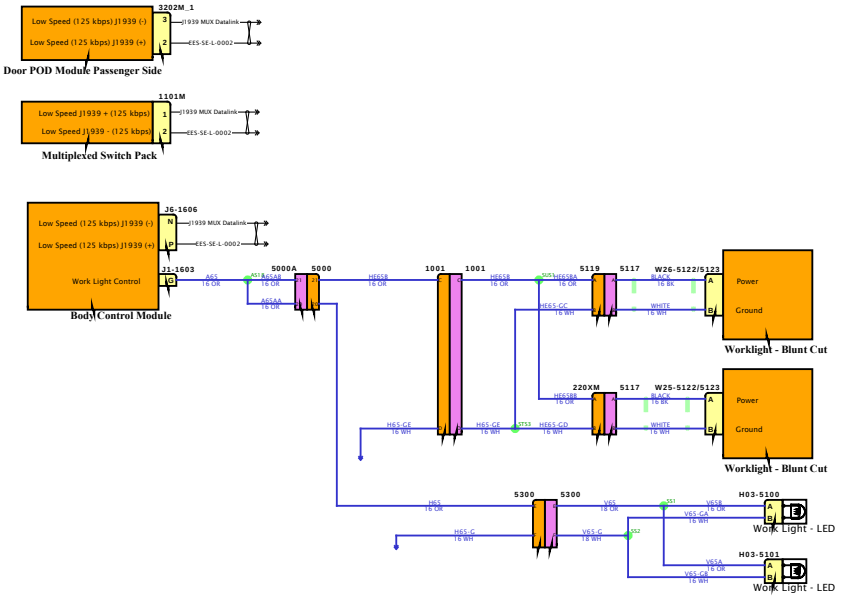

DESIGN DESCRIPTION

FEATURE CODES

SOFTWARE FEATURE CODES

NAVISTAR
NAVISTAR, INC. CONFIDENTIAL PROPRIETARY

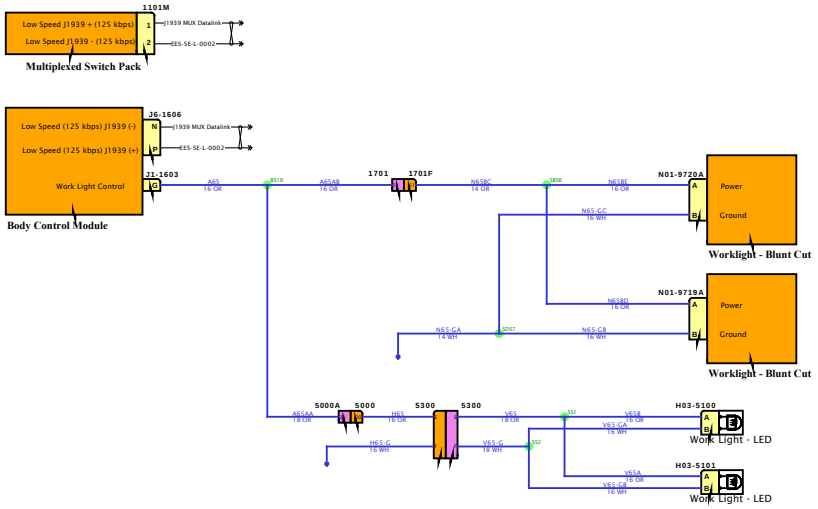

DESIGN DESCRIPTION

FEATURE CODES

SOFTWARE FEATURE CODES

NAVISTAR INC. CONFIDENTIAL PROPRIETARY

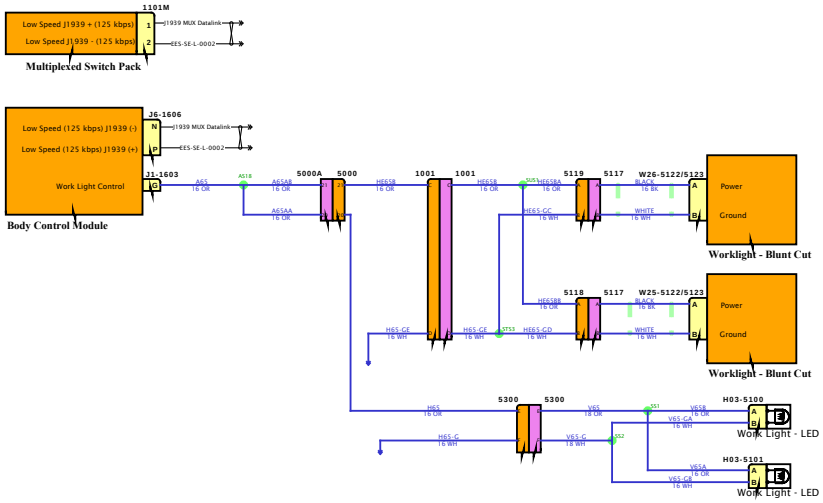

DESIGN DESCRIPTION

FEATURE CODES

SOFTWARE FEATURE CODES

NAVISTAR
NAVISTAR, INC. CONFIDENTIAL PROPRIETARY

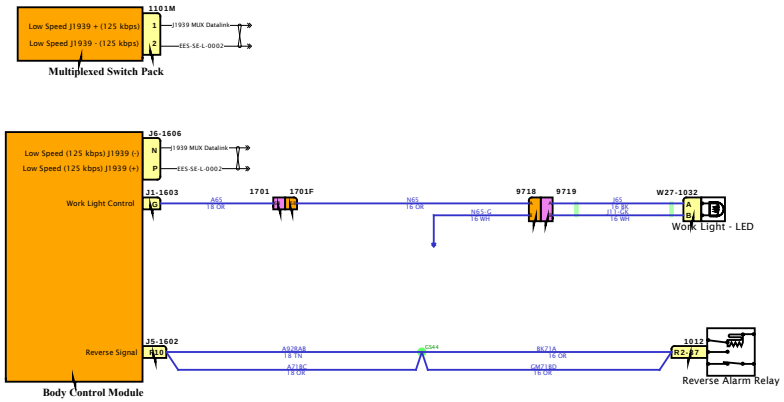

DESIGN DESCRIPTION

FEATURE CODES

SOFTWARE FEATURE CODES

NAVISTAR
NAVISTAR, INC. CONFIDENTIAL PROPRIETARY

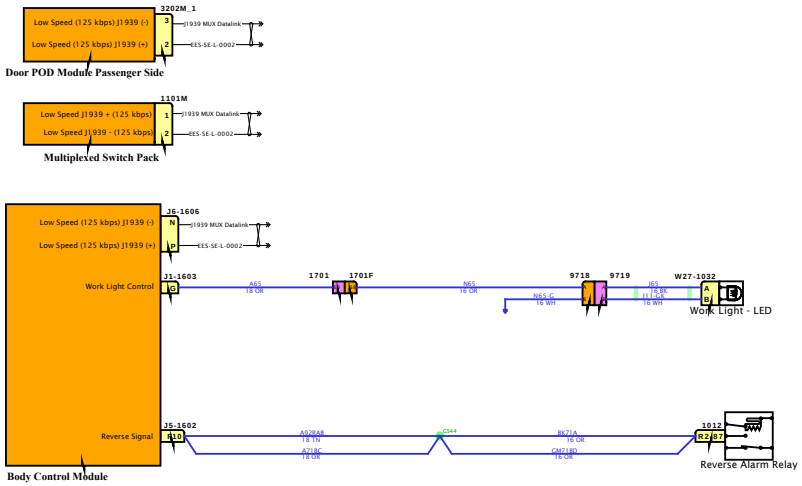

DESIGN DESCRIPTION

FEATURE CODES

SOFTWARE FEATURE CODES

NAVISTAR
NAVISTAR, INC. CONFIDENTIAL PROPRIETARY

DESIGN DESCRIPTION

FEATURE CODES

SOFTWARE FEATURE CODES

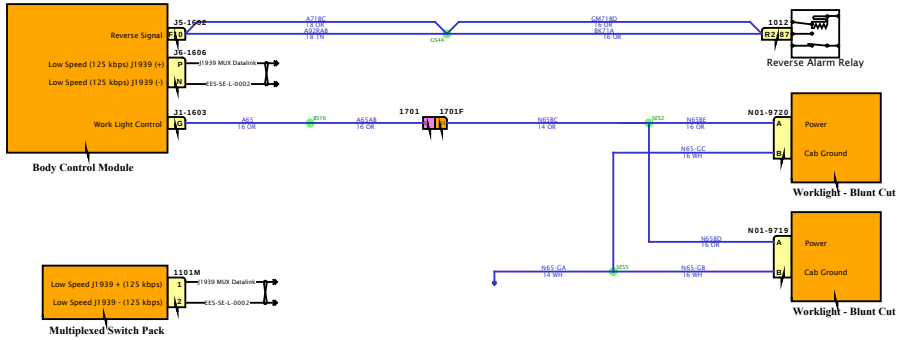

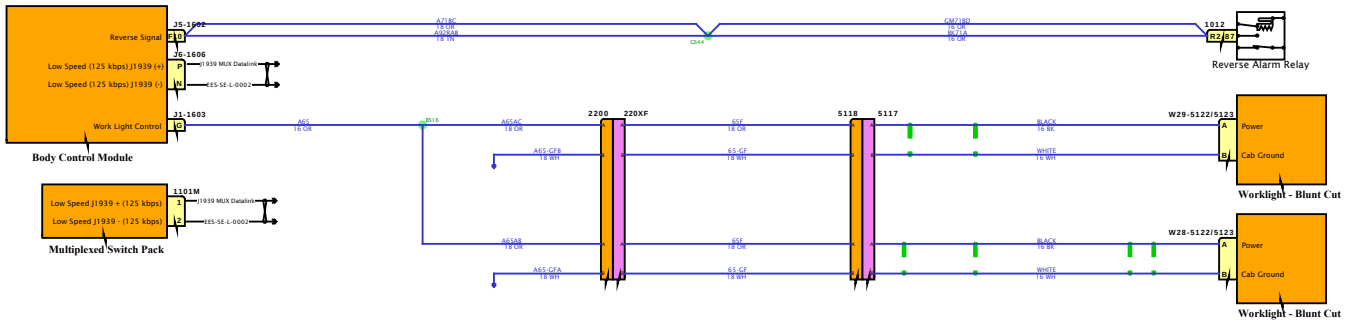

DESIGN DESCRIPTION

FEATURE CODES

SOFTWARE FEATURE CODES

NAVISTAR
NAVISTAR, INC. CONFIDENTIAL PROPRIETARY

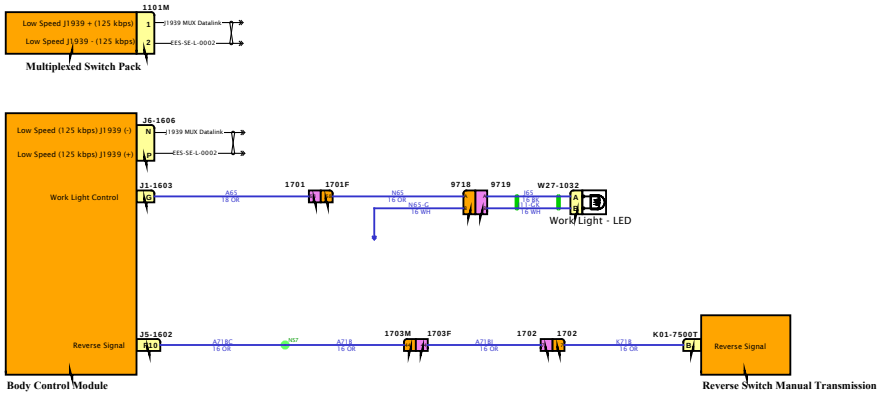

DESIGN DESCRIPTION

FEATURE CODES

SOFTWARE FEATURE CODES

NAVISTAR
NAVISTAR, INC. CONFIDENTIAL PROPRIETARY

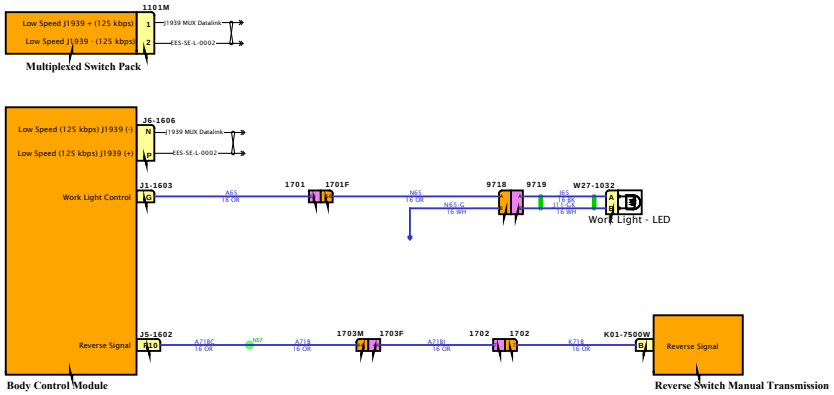

DESIGN DESCRIPTION

FEATURE CODES

SOFTWARE FEATURE CODES

NAVISTAR INC. CONFIDENTIAL PROPRIETARY

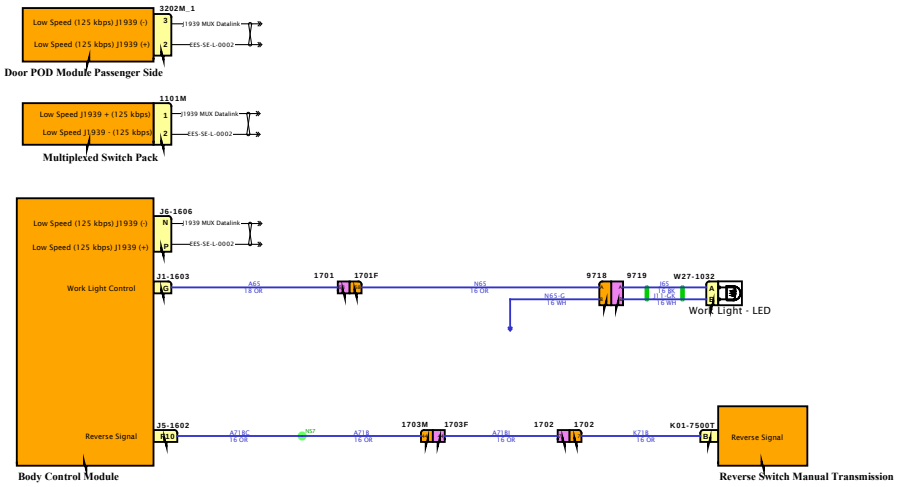

DESIGN DESCRIPTION

FEATURE CODES

SOFTWARE FEATURE CODES

NAVISTAR INC. CONFIDENTIAL PROPRIETARY

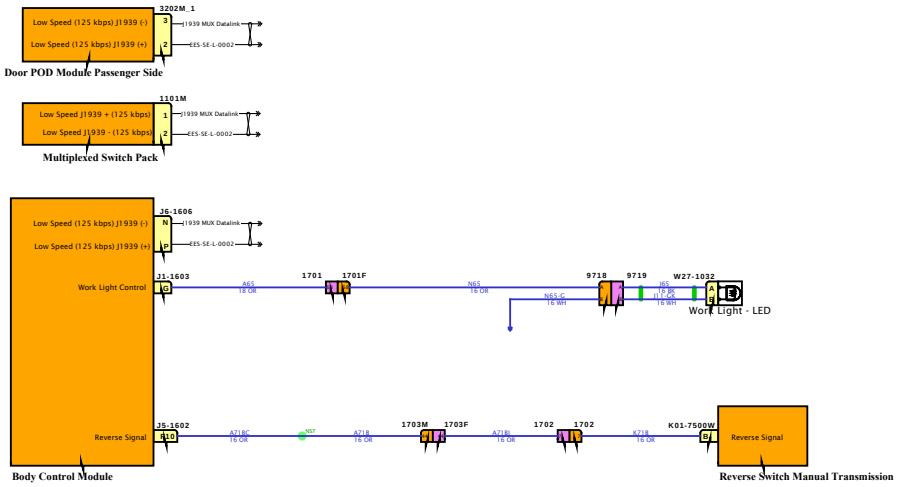

DESIGN DESCRIPTION

FEATURE CODES

SOFTWARE FEATURE CODES

NAVISTAR INC. CONFIDENTIAL PROPRIETARY

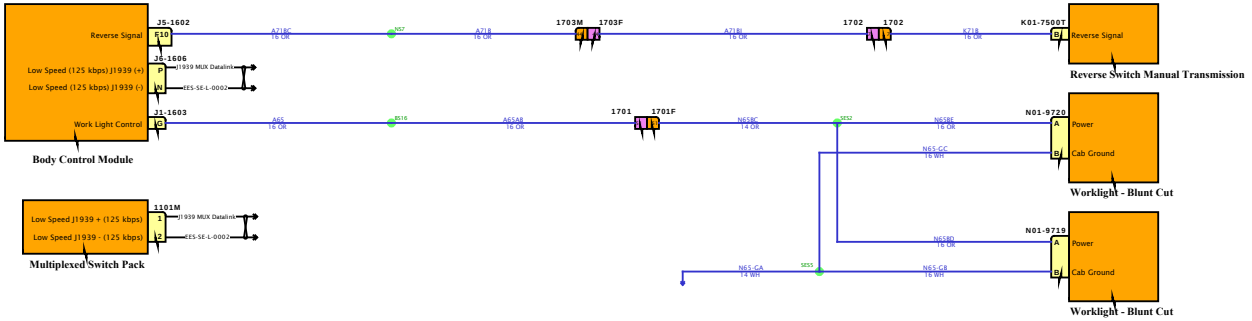

DESIGN DESCRIPTION

FEATURE CODES

SOFTWARE FEATURE CODES

NAVISTAR INC. CONFIDENTIAL PROPRIETARY

Diagram2

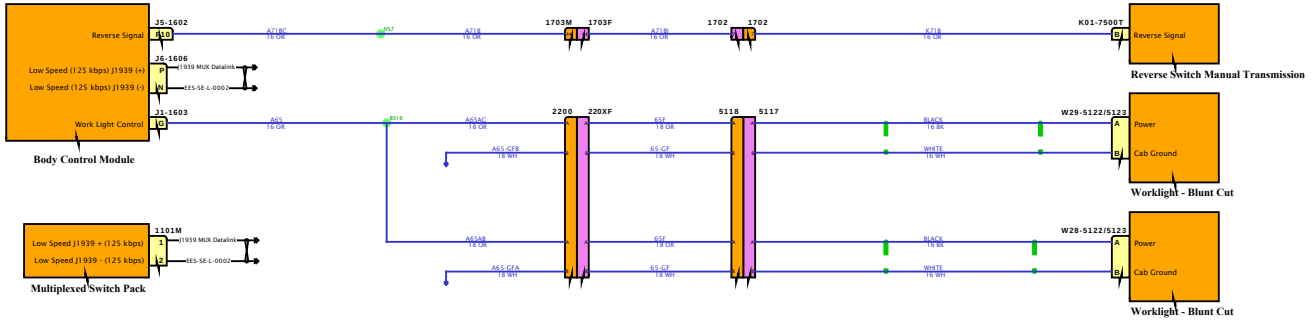

DESIGN DESCRIPTION

FEATURE CODES

SOFTWARE FEATURE CODES

NAVISTAR
NAVISTAR, INC. CONFIDENTIAL PROPRIETARY

DESIGN DESCRIPTION

FEATURE CODES

SOFTWARE FEATURE CODES

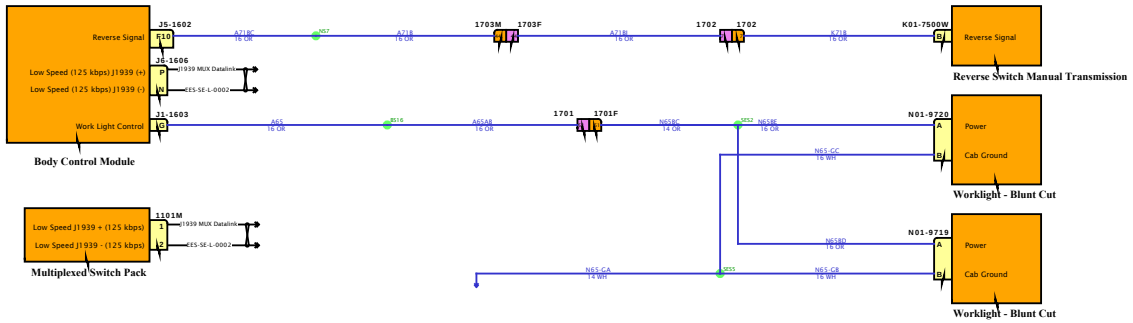

DESIGN DESCRIPTION

FEATURE CODES

SOFTWARE FEATURE CODES

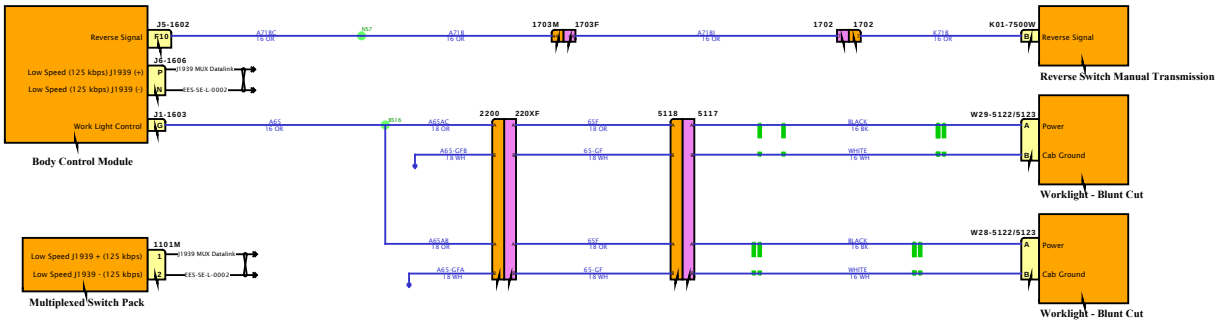

DESIGN DESCRIPTION

FEATURE CODES

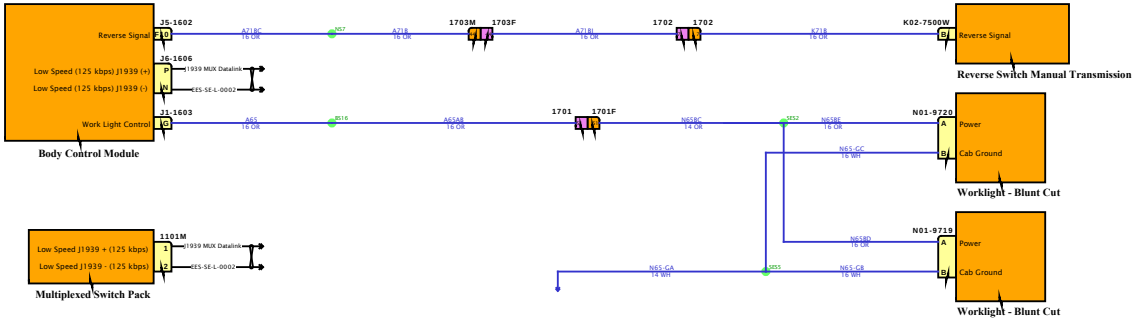

SOFTWARE FEATURE CODES

NAVISTAR
NAVISTAR, INC. CONFIDENTIAL PROPRIETARY

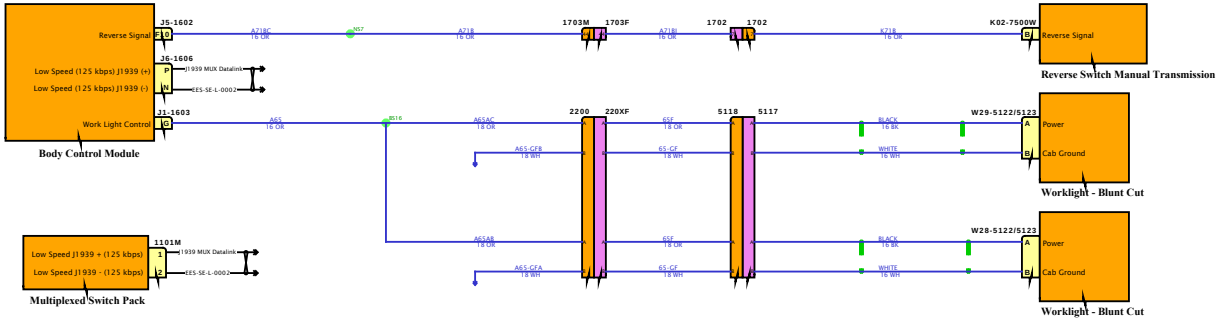

DESIGN DESCRIPTION

FEATURE CODES

SOFTWARE FEATURE CODES

NAVISTAR
NAVISTAR, INC. CONFIDENTIAL PROPRIETARY

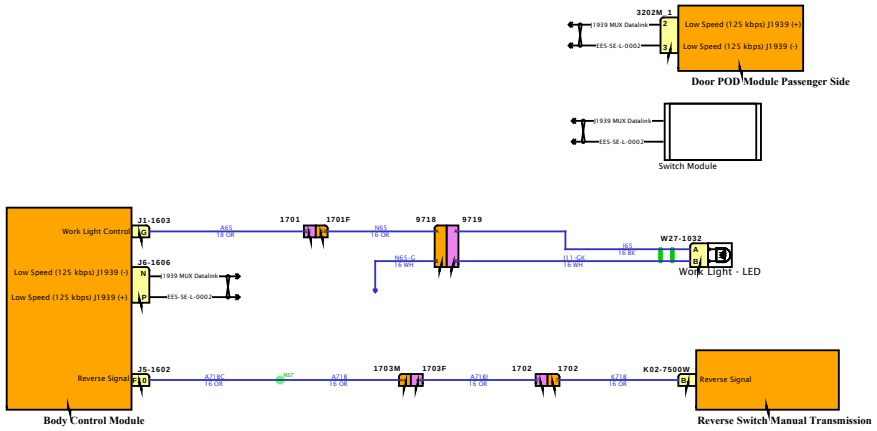

DESIGN DESCRIPTION

FEATURE CODES

SOFTWARE FEATURE CODES

NAVISTAR
NAVISTAR, INC. CONFIDENTIAL PROPRIETARY

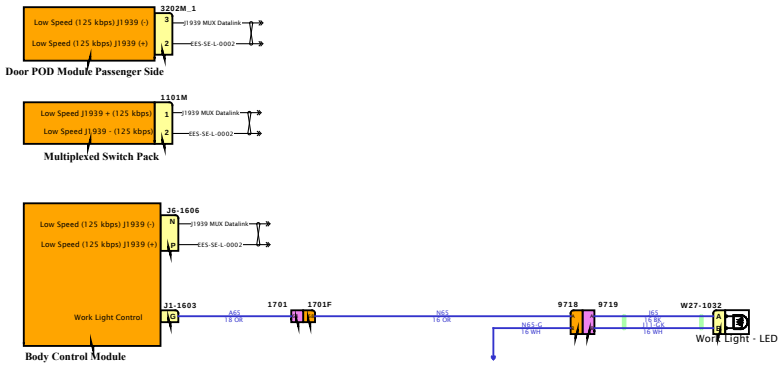

DESIGN DESCRIPTION

FEATURE CODES

SOFTWARE FEATURE CODES

NAVISTAR INC. CONFIDENTIAL PROPRIETARY

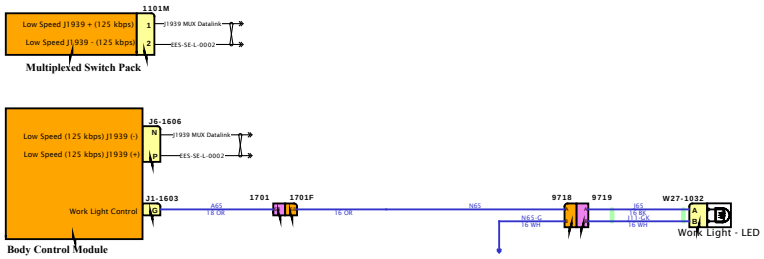

DESIGN DESCRIPTION

FEATURE CODES

SOFTWARE FEATURE CODES

NAVISTAR
NAVISTAR, INC. CONFIDENTIAL PROPRIETARY

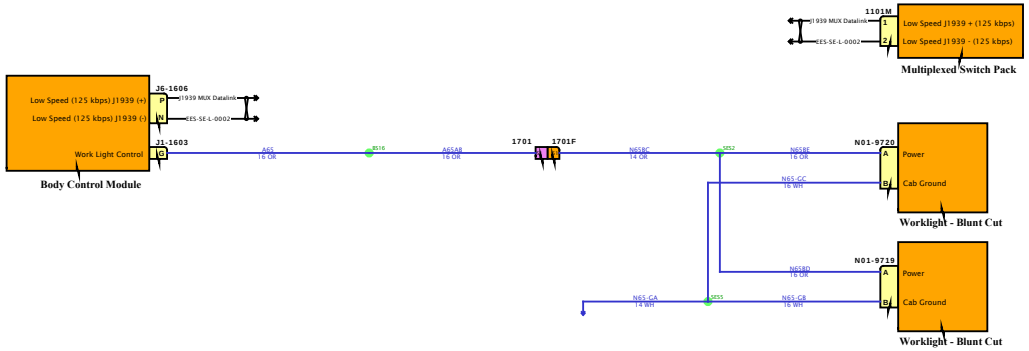

DESIGN DESCRIPTION

FEATURE CODES

SOFTWARE FEATURE CODES

NAVISTAR INC. CONFIDENTIAL PROPRIETARY

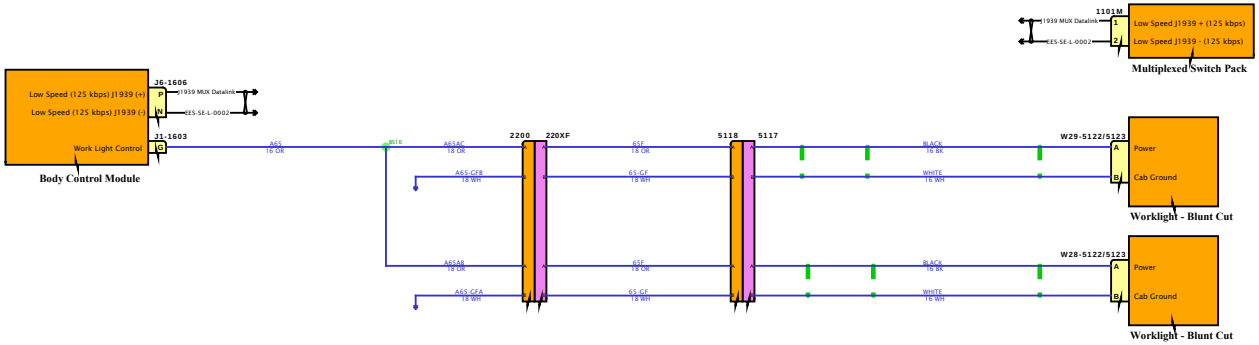

DESIGN DESCRIPTION

FEATURE CODES

SOFTWARE FEATURE CODES

NAVISTAR
NAVISTAR, INC. CONFIDENTIAL PROPRIETARY

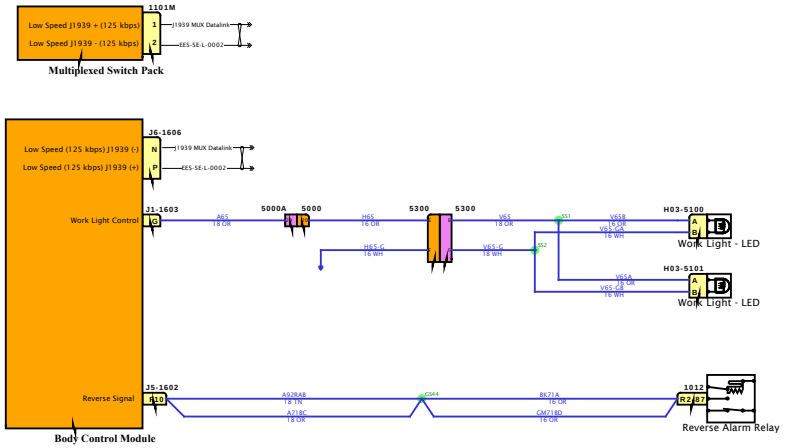

DESIGN DESCRIPTION

FEATURE CODES

SOFTWARE FEATURE CODES

NAVISTAR INC. CONFIDENTIAL PROPRIETARY

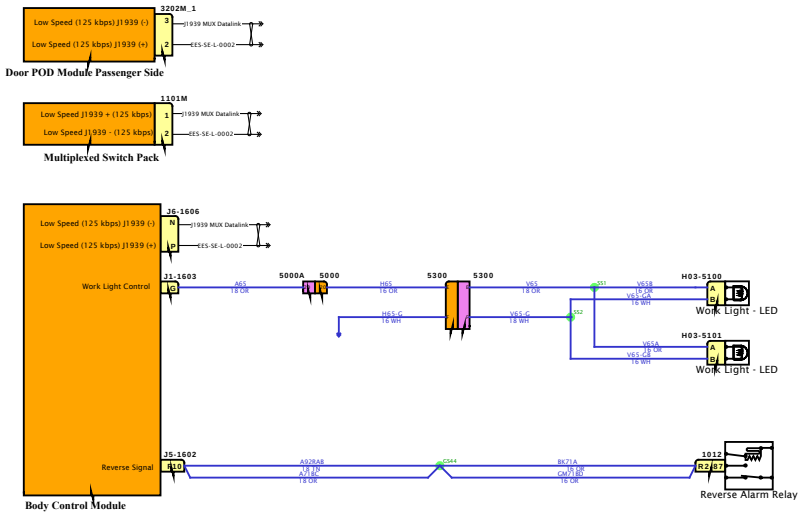

DESIGN DESCRIPTION

FEATURE CODES

SOFTWARE FEATURE CODES

NAVISTAR
NAVISTAR, INC. CONFIDENTIAL PROPRIETARY

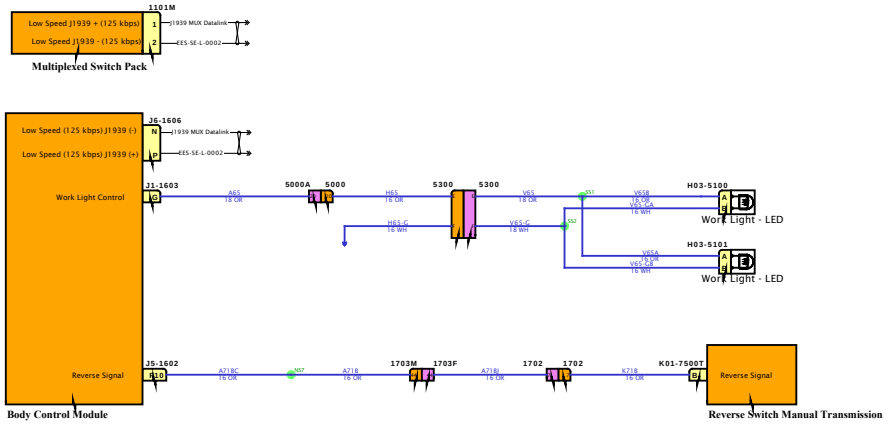

DESIGN DESCRIPTION

FEATURE CODES

SOFTWARE FEATURE CODES

NAVISTAR
NAVISTAR, INC. CONFIDENTIAL PROPRIETARY

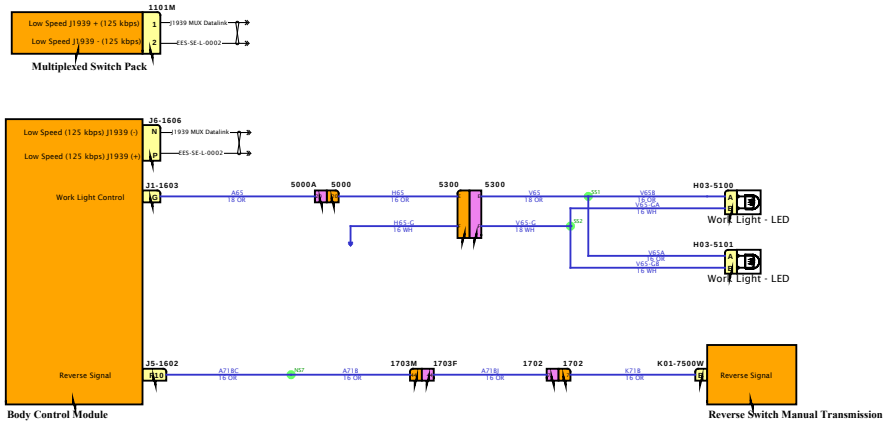

DESIGN DESCRIPTION

FEATURE CODES

SOFTWARE FEATURE CODES

NAVISTAR
NAVISTAR, INC. CONFIDENTIAL PROPRIETARY

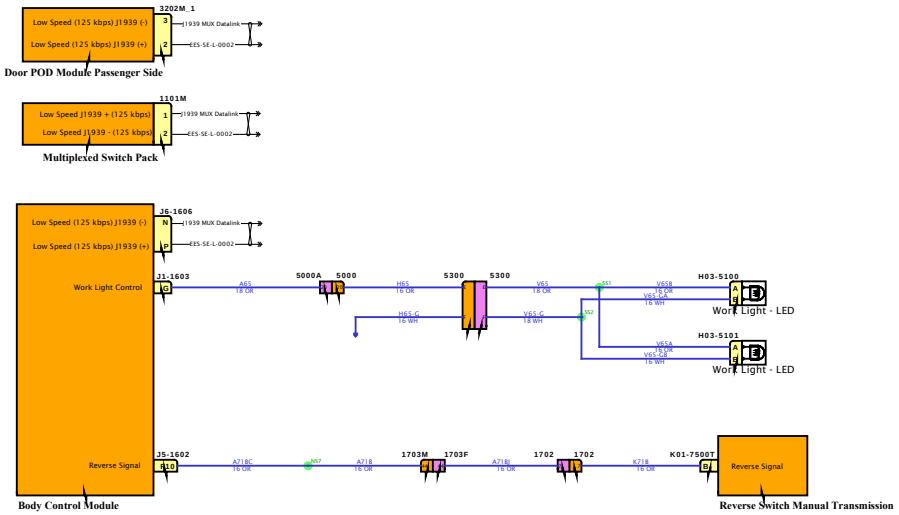

DESIGN DESCRIPTION

FEATURE CODES

SOFTWARE FEATURE CODES

NAVISTAR INC. CONFIDENTIAL PROPRIETARY

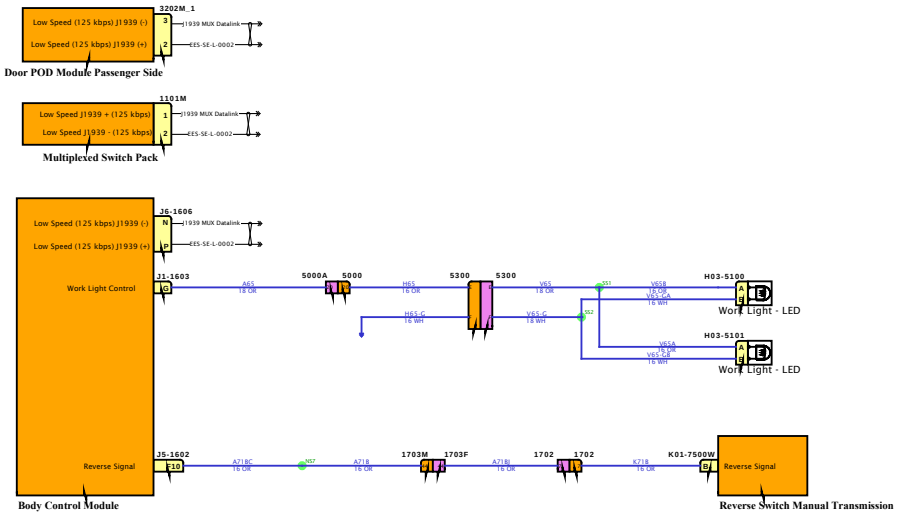

DESIGN DESCRIPTION

FEATURE CODES

SOFTWARE FEATURE CODES

NAVISTAR INC. CONFIDENTIAL PROPRIETARY

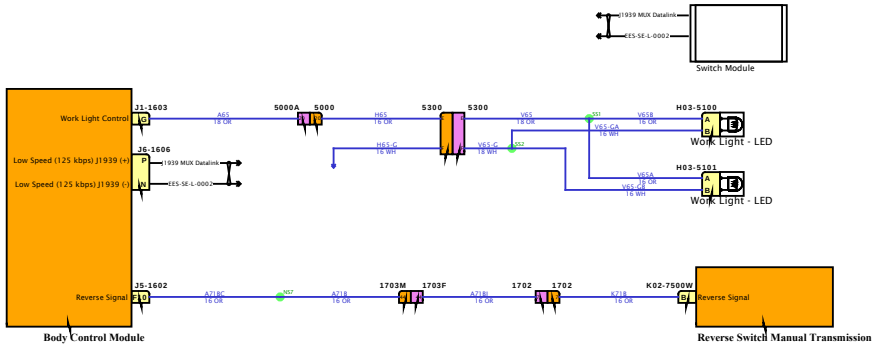

DESIGN DESCRIPTION

FEATURE CODES

SOFTWARE FEATURE CODES

NAVISTAR
NAVISTAR, INC. CONFIDENTIAL PROPRIETARY

Diagram1

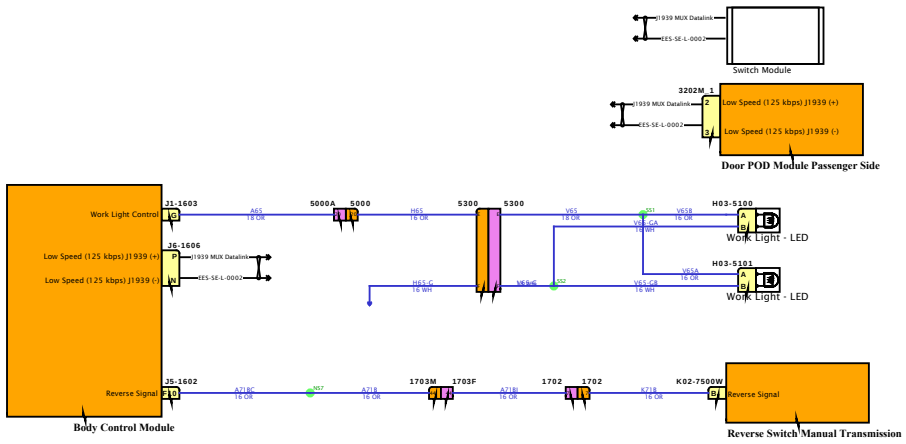

DESIGN DESCRIPTION

FEATURE CODES

SOFTWARE FEATURE CODES

NAVISTAR INC. CONFIDENTIAL PROPRIETARY

Diagram1

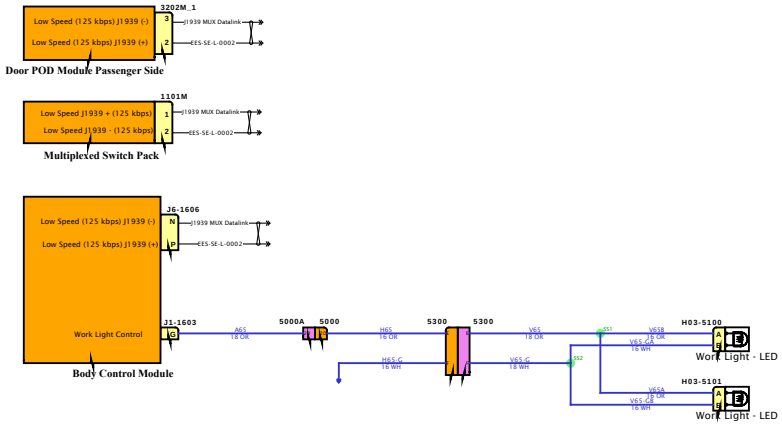

DESIGN DESCRIPTION

FEATURE CODES

SOFTWARE FEATURE CODES

NAVISTAR INC. CONFIDENTIAL PROPRIETARY

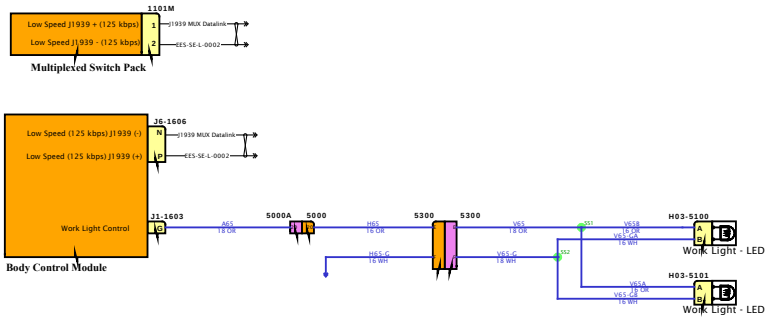

DESIGN DESCRIPTION

FEATURE CODES

SOFTWARE FEATURE CODES

NAVISTAR INC. CONFIDENTIAL PROPRIETARY

Diagram1

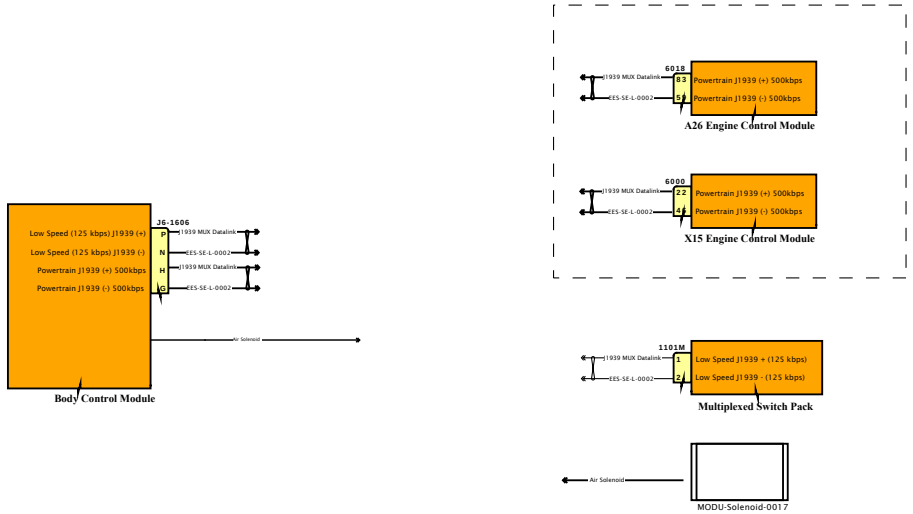

DESIGN DESCRIPTION

FEATURE CODES

SOFTWARE FEATURE CODES

NAVISTAR INC. CONFIDENTIAL PROPRIETARY

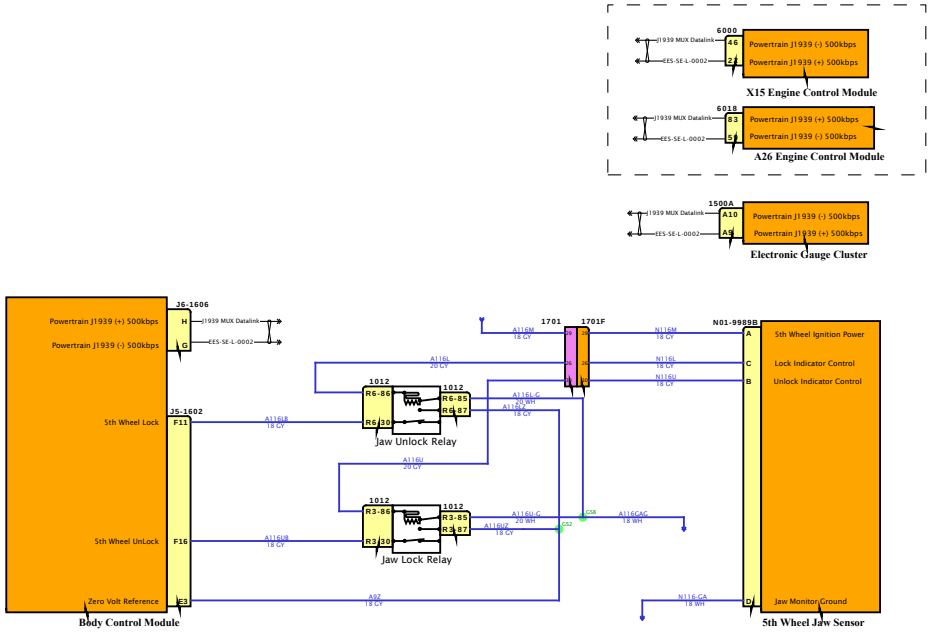

DESIGN DESCRIPTION

FEATURE CODES

SOFTWARE FEATURE CODES

NAVISTAR
NAVISTAR, INC. CONFIDENTIAL PROPRIETARY

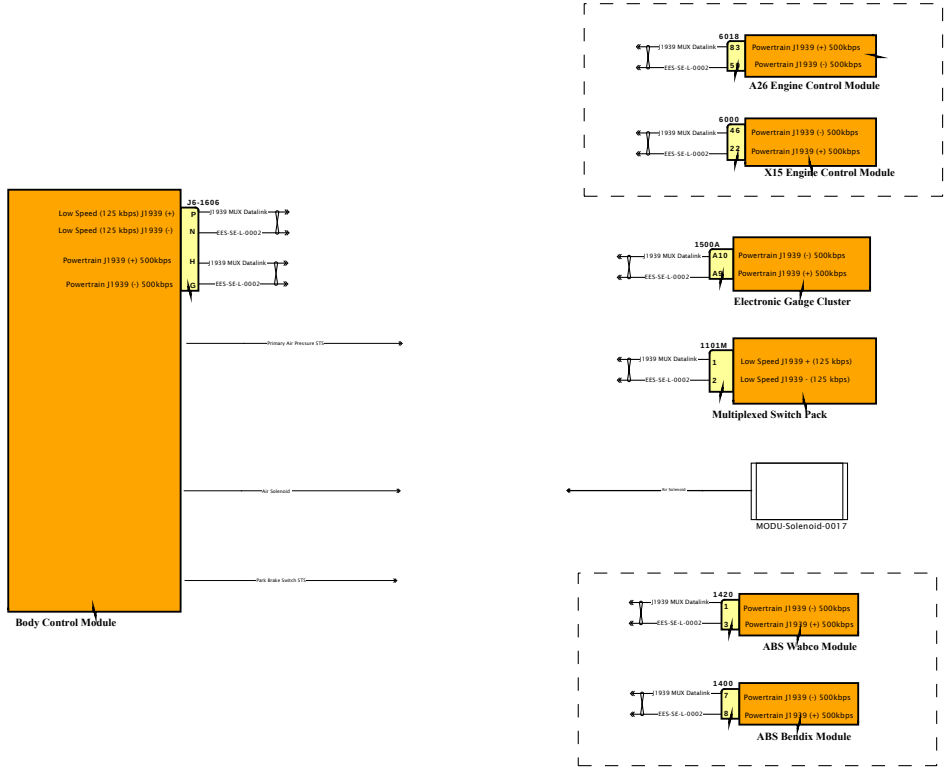

DESIGN DESCRIPTION

FEATURE CODES

SOFTWARE FEATURE CODES

NAVISTAR INC. CONFIDENTIAL PROPRIETARY

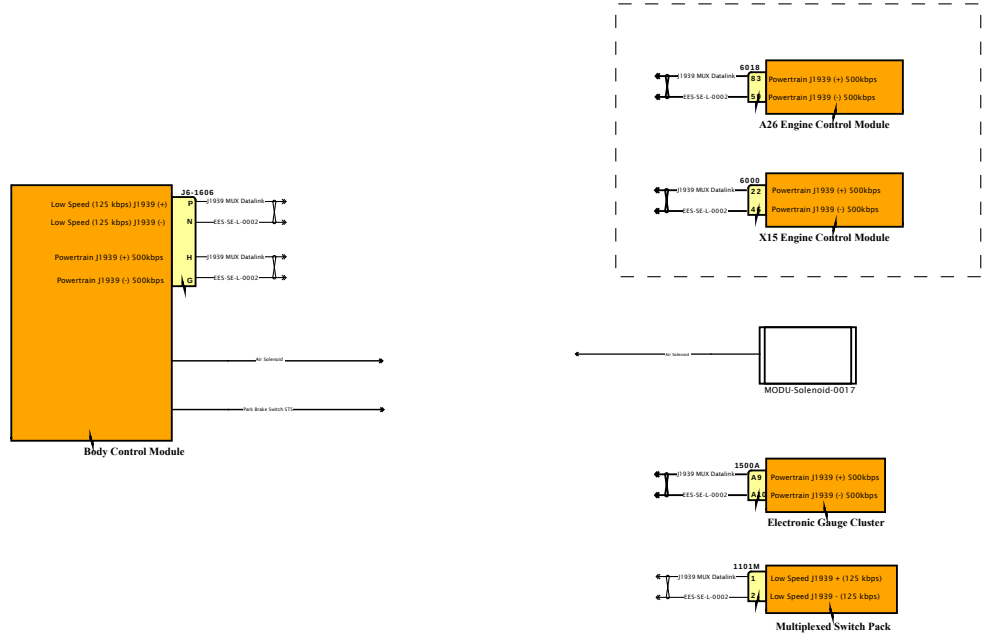

DESIGN DESCRIPTION

FEATURE CODES

SOFTWARE FEATURE CODES

NAVISTAR INC. CONFIDENTIAL PROPRIETARY

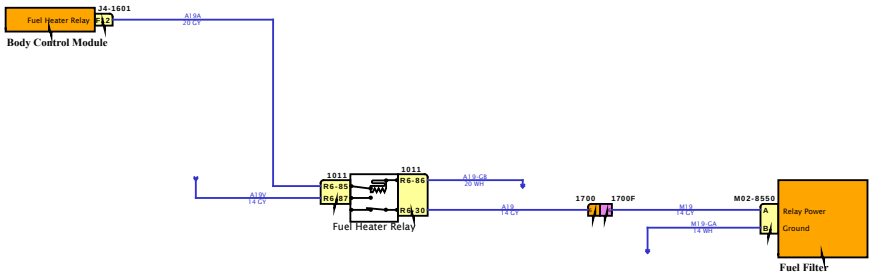

DESIGN DESCRIPTION

FEATURE CODES

SOFTWARE FEATURE CODES

NAVISTAR INC. CONFIDENTIAL PROPRIETARY

Diagram1

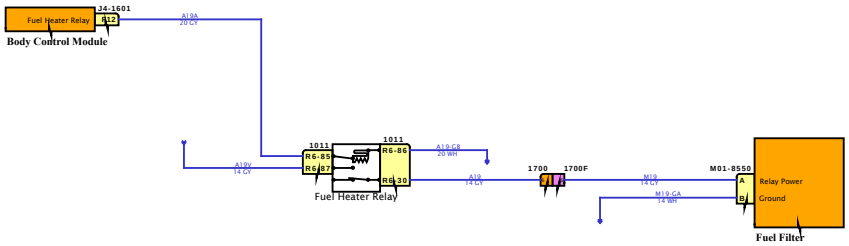

DESIGN DESCRIPTION

FEATURE CODES

SOFTWARE FEATURE CODES

NAVISTAR INC. CONFIDENTIAL PROPRIETARY

Diagram2

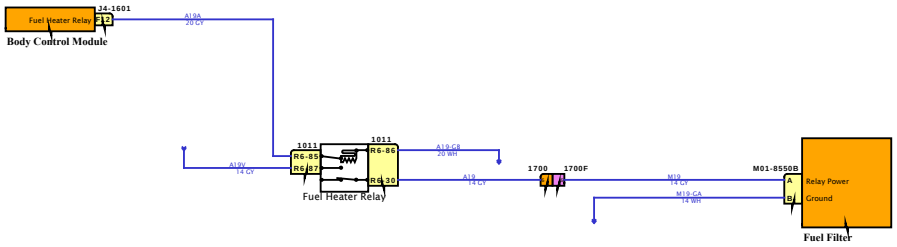

DESIGN DESCRIPTION

FEATURE CODES

SOFTWARE FEATURE CODES

NAVISTAR INC. CONFIDENTIAL PROPRIETARY

Diagram1

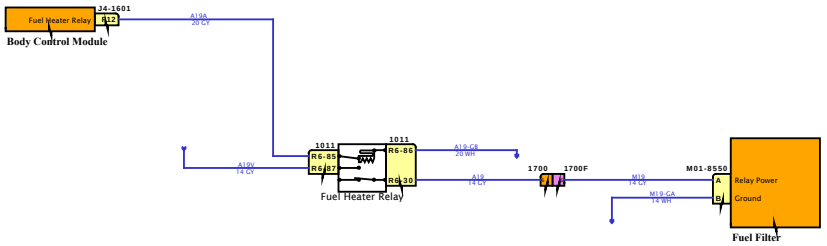

DESIGN DESCRIPTION

FEATURE CODES

SOFTWARE FEATURE CODES

NAVISTAR INC. CONFIDENTIAL PROPRIETARY

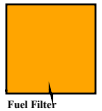

DESIGN DESCRIPTION

FEATURE CODES

SOFTWARE FEATURE CODES

NAVISTAR INC. CONFIDENTIAL PROPRIETARY

DESIGN DESCRIPTION

FEATURE CODES

SOFTWARE FEATURE CODES

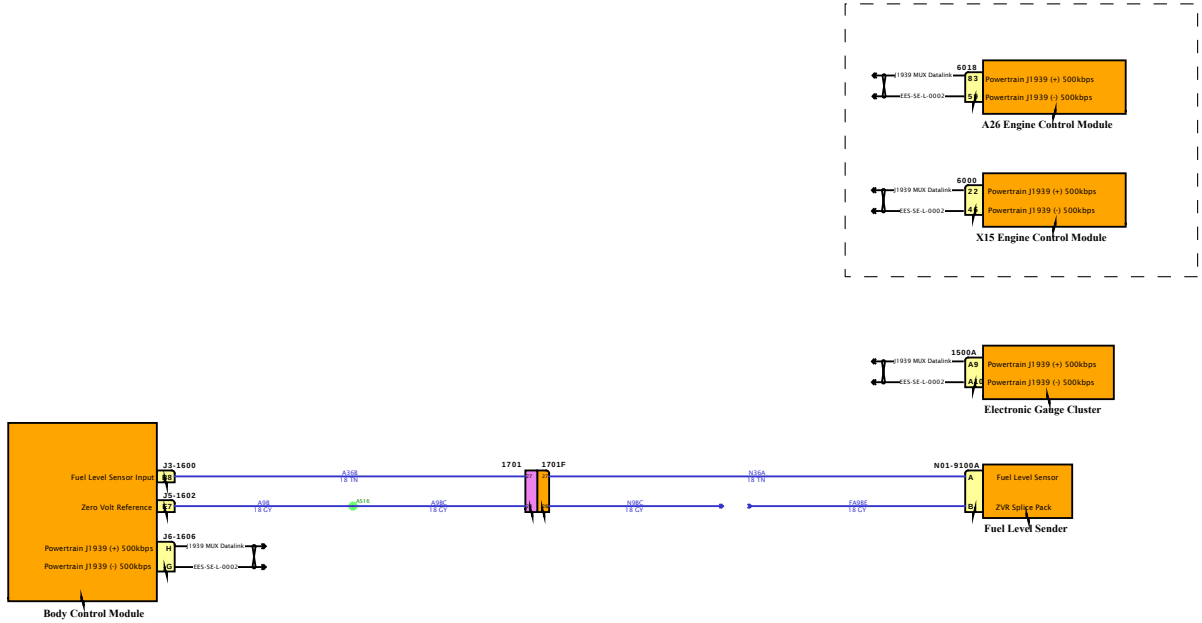

DESIGN DESCRIPTION

FEATURE CODES

SOFTWARE FEATURE CODES

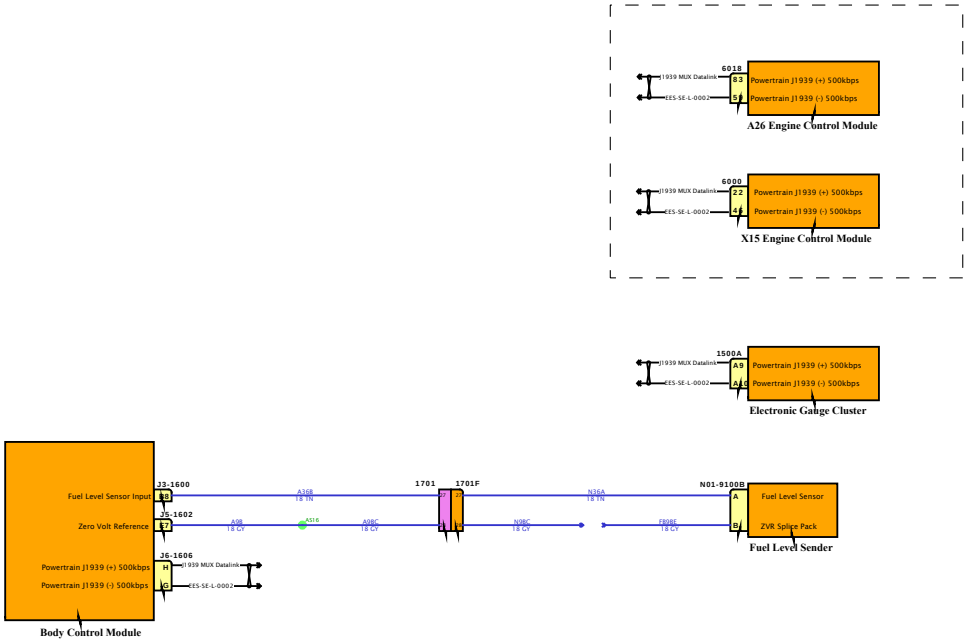

DESIGN DESCRIPTION

FEATURE CODES

SOFTWARE FEATURE CODES

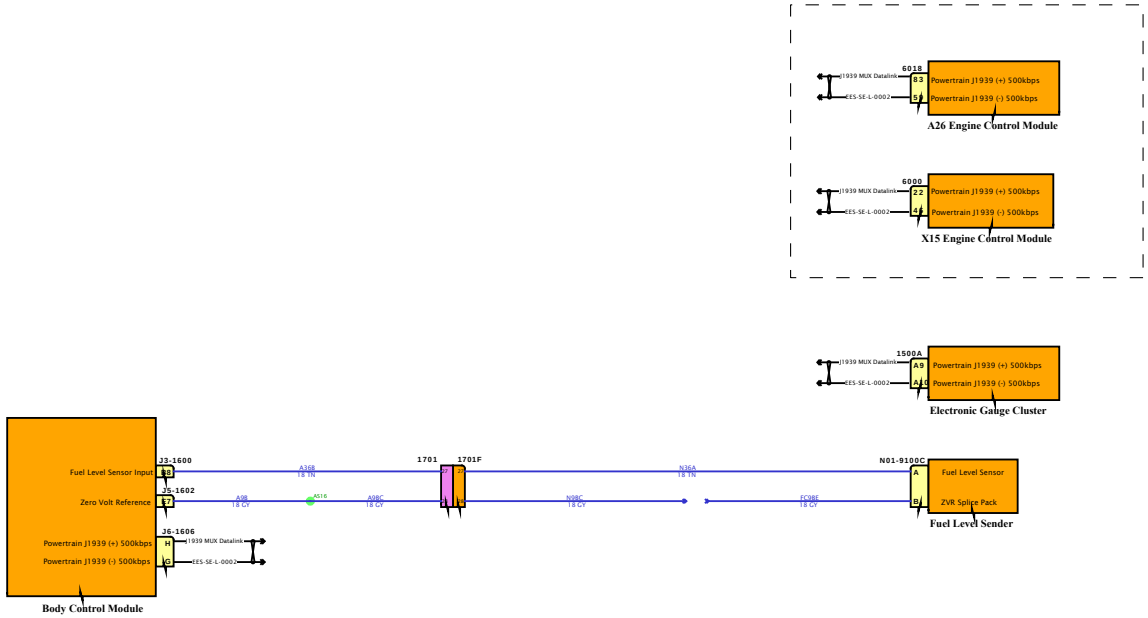

DESIGN DESCRIPTION

FEATURE CODES

SOFTWARE FEATURE CODES

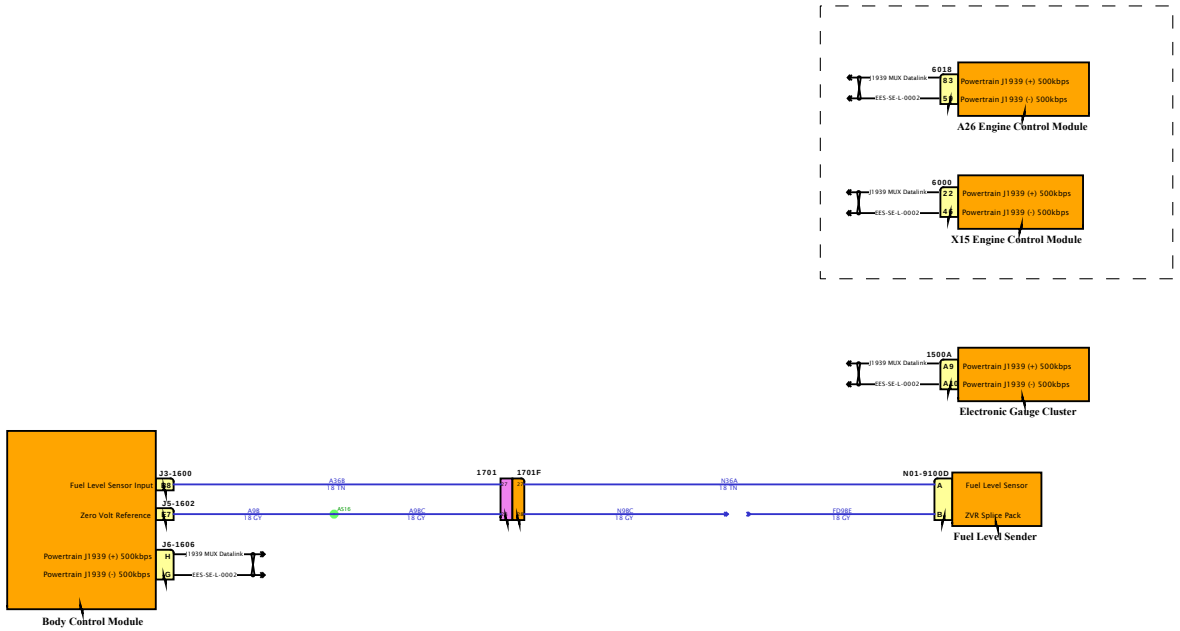

NAVISTAR
NAVISTAR, INC. CONFIDENTIAL PROPRIETARY

DESIGN DESCRIPTION

FEATURE CODES

SOFTWARE FEATURE CODES

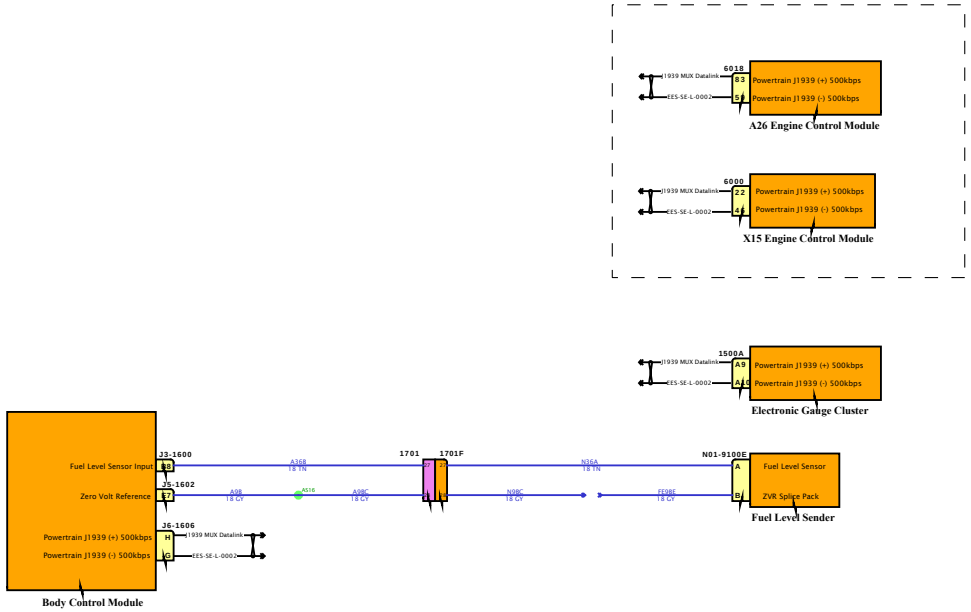

NAVISTAR
NAVISTAR, INC. CONFIDENTIAL PROPRIETARY

DESIGN DESCRIPTION

FEATURE CODES

SOFTWARE FEATURE CODES

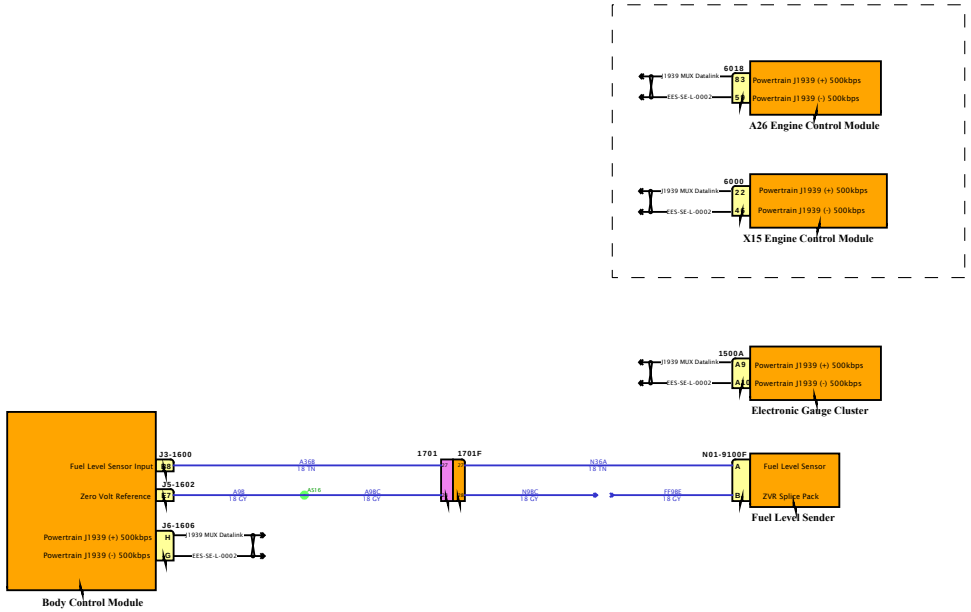

NAVISTAR
NAVISTAR, INC. CONFIDENTIAL PROPRIETARY

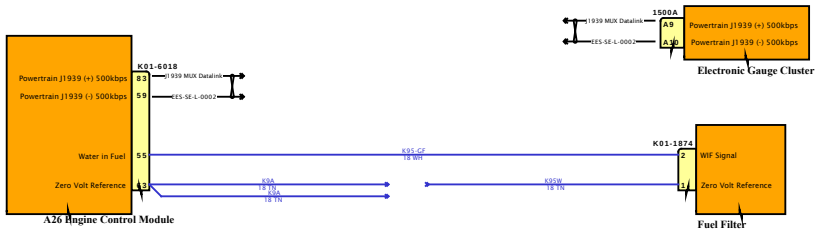

DESIGN DESCRIPTION

FEATURE CODES

SOFTWARE FEATURE CODES

NAVISTAR
NAVISTAR, INC. CONFIDENTIAL PROPRIETARY

Diagram2

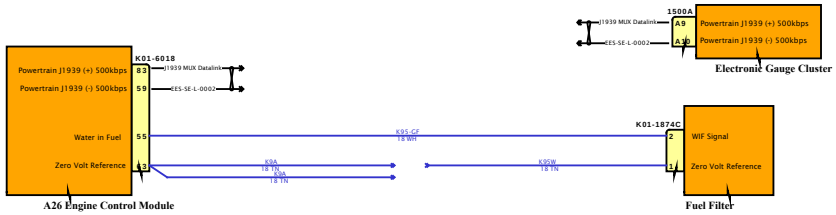

DESIGN DESCRIPTION

FEATURE CODES

SOFTWARE FEATURE CODES

NAVISTAR INC. CONFIDENTIAL PROPRIETARY

DESIGN DESCRIPTION

FEATURE CODES

SOFTWARE FEATURE CODES

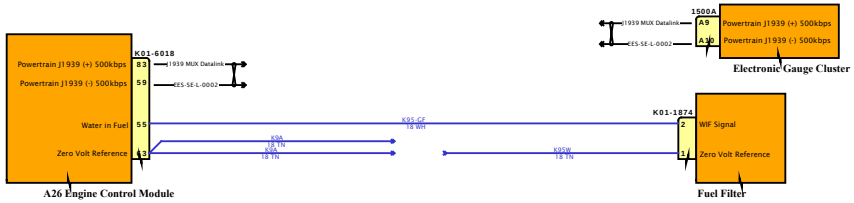

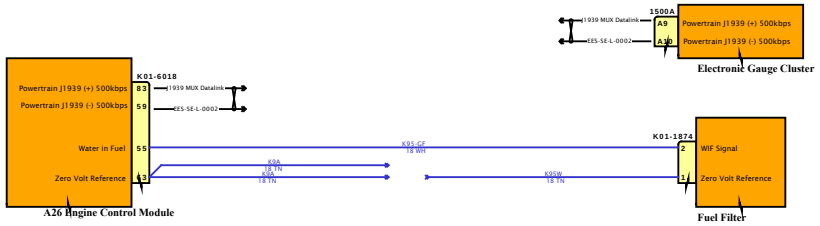

DESIGN DESCRIPTION

FEATURE CODES

SOFTWARE FEATURE CODES

NAVISTAR
NAVISTAR, INC. CONFIDENTIAL PROPRIETARY

Diagram1

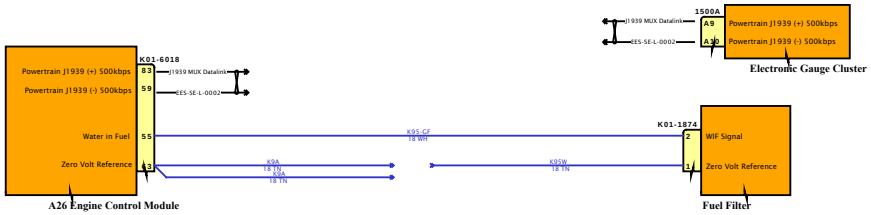

DESIGN DESCRIPTION

FEATURE CODES

SOFTWARE FEATURE CODES

NAVISTAR INC. CONFIDENTIAL PROPRIETARY

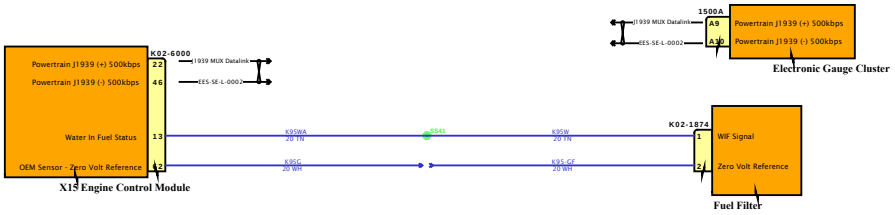

DESIGN DESCRIPTION

FEATURE CODES

SOFTWARE FEATURE CODES

NAVISTAR
NAVISTAR, INC. CONFIDENTIAL PROPRIETARY

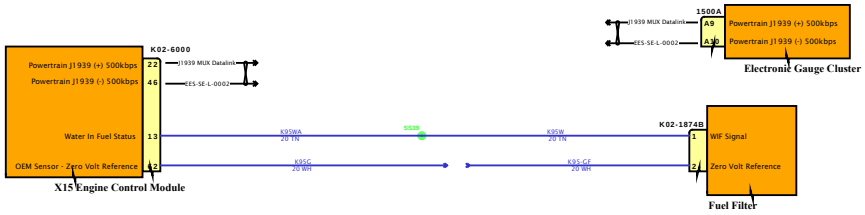

DESIGN DESCRIPTION

FEATURE CODES

SOFTWARE FEATURE CODES

NAVISTAR
NAVISTAR, INC. CONFIDENTIAL PROPRIETARY

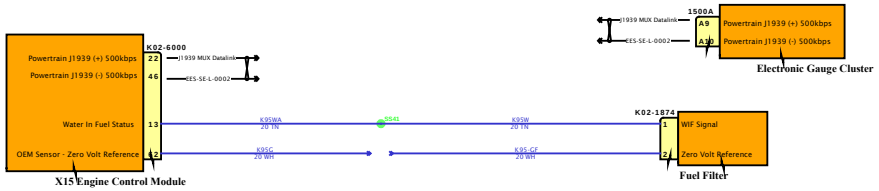

DESIGN DESCRIPTION

FEATURE CODES

SOFTWARE FEATURE CODES

NAVISTAR
NAVISTAR, INC. CONFIDENTIAL PROPRIETARY

DESIGN DESCRIPTION

FEATURE CODES

SOFTWARE FEATURE CODES

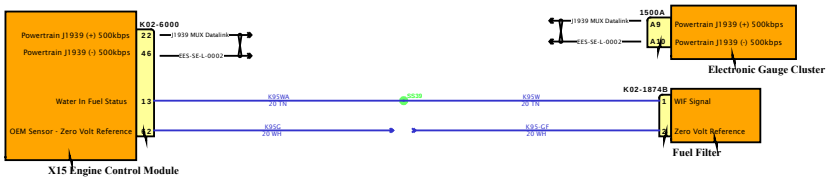

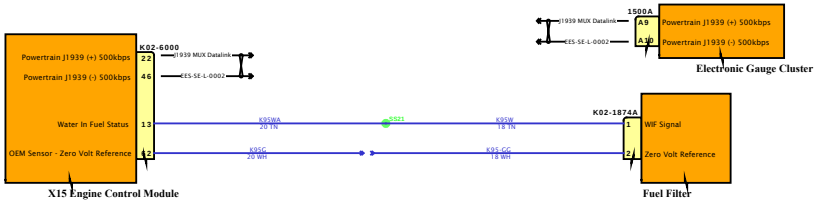

DESIGN DESCRIPTION

FEATURE CODES

SOFTWARE FEATURE CODES

NAVISTAR
NAVISTAR, INC. CONFIDENTIAL PROPRIETARY

Diagram1 - HVAC - Option1

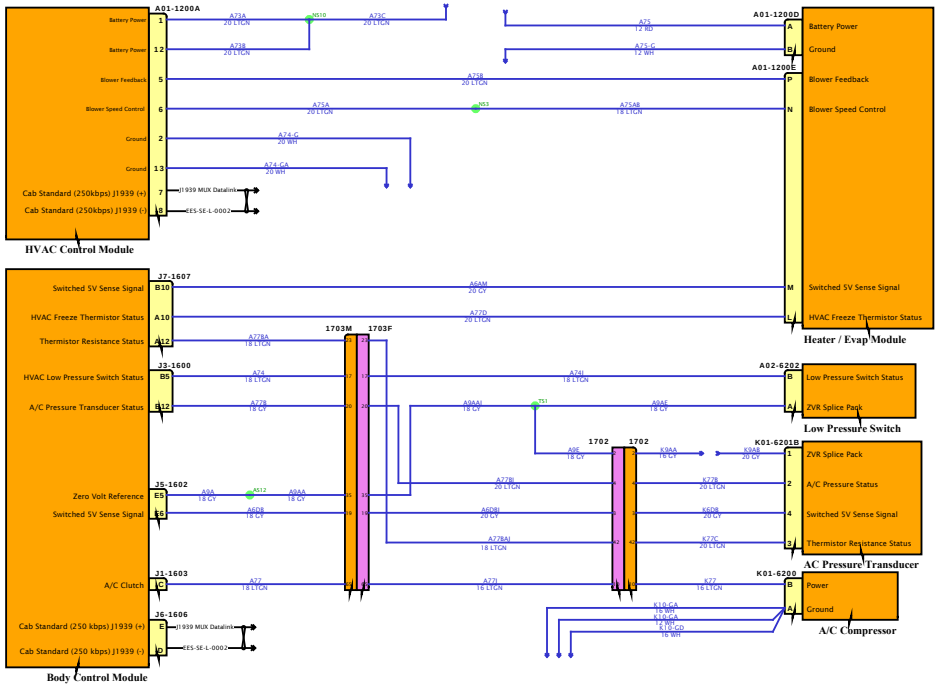

DESIGN DESCRIPTION

FEATURE CODES

SOFTWARE FEATURE CODES

NAVISTAR
NAVISTAR, INC. CONFIDENTIAL PROPRIETARY

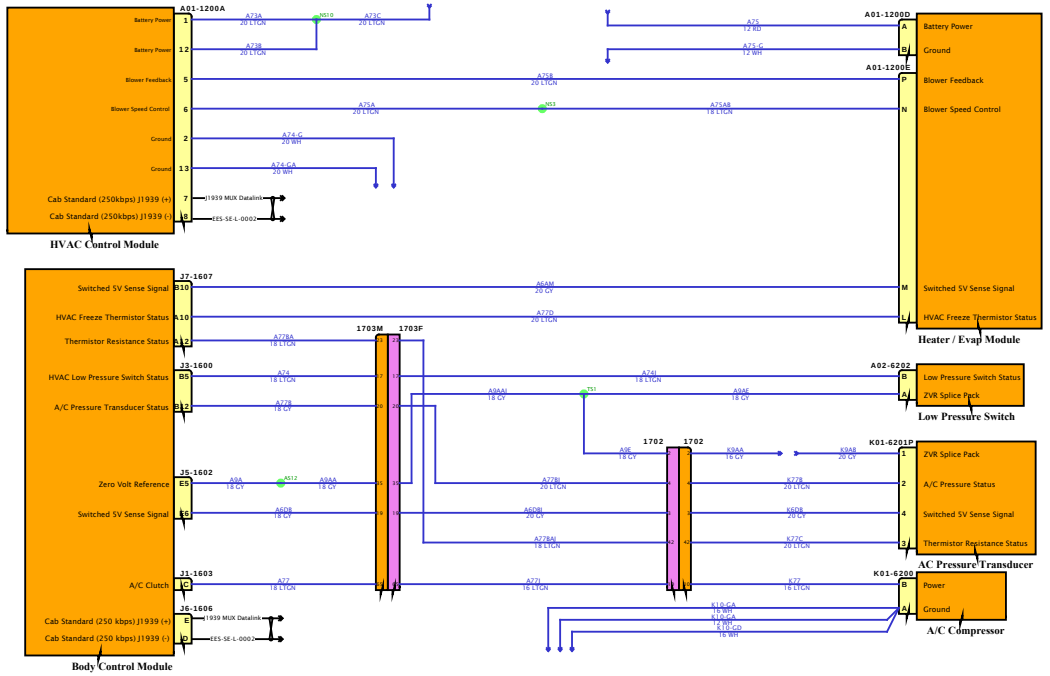

DESIGN DESCRIPTION

FEATURE CODES

SOFTWARE FEATURE CODES

Diagram3 - Actuators - Option1

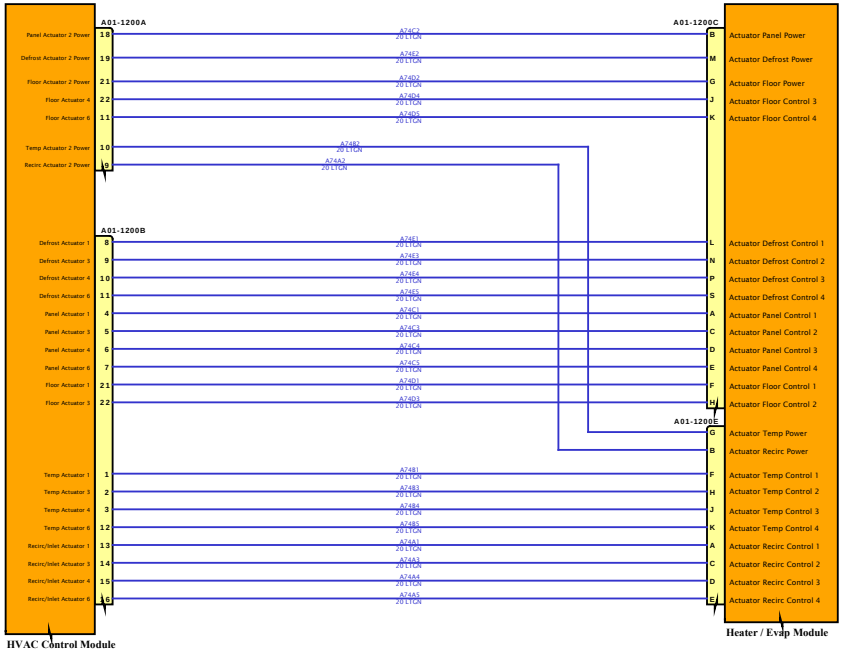

DESIGN DESCRIPTION

FEATURE CODES

SOFTWARE FEATURE CODES

NAVISTAR
NAVISTAR, INC. CONFIDENTIAL PROPRIETARY

Diagram4 - Actuators - Option2

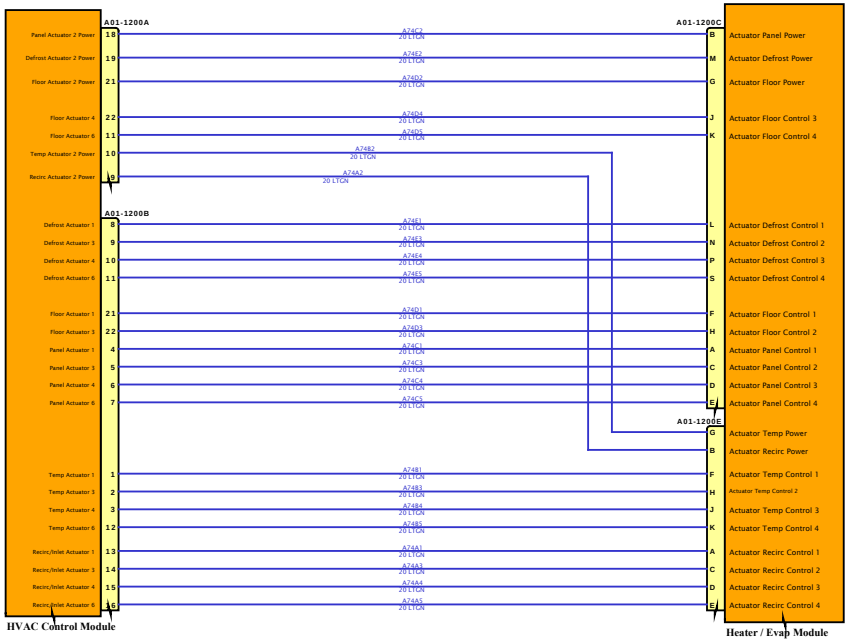

DESIGN DESCRIPTION

FEATURE CODES

SOFTWARE FEATURE CODES

NAVISTAR
NAVISTAR, INC. CONFIDENTIAL PROPRIETARY

Diagram1 - HVAC - Option1

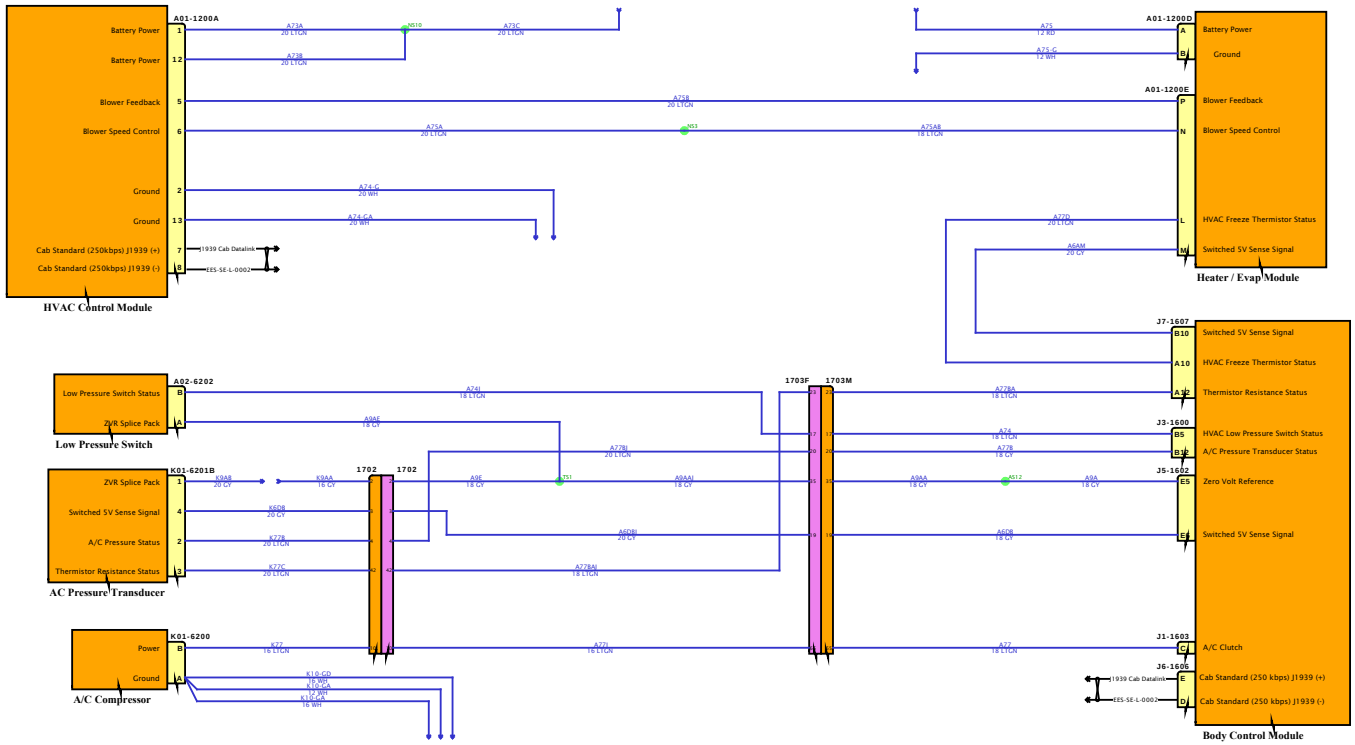

DESIGN DESCRIPTION

FEATURE CODES

SOFTWARE FEATURE CODES

Diagram2 - HVAC - Option2

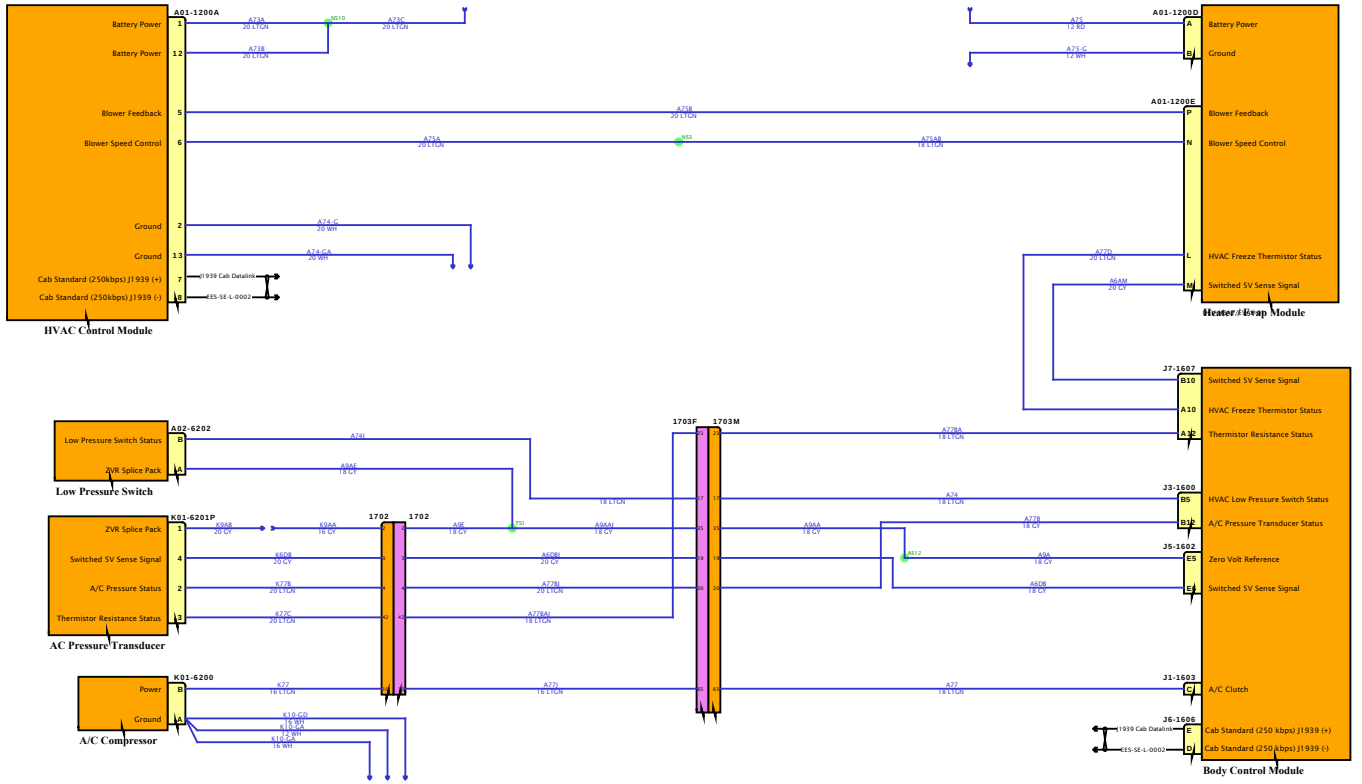

DESIGN DESCRIPTION

FEATURE CODES

SOFTWARE FEATURE CODES

NAVISTAR
NAVISTAR, INC. CONFIDENTIAL PROPRIETARY

Diagram3 - Actuators - Option1

DESIGN DESCRIPTION

FEATURE CODES

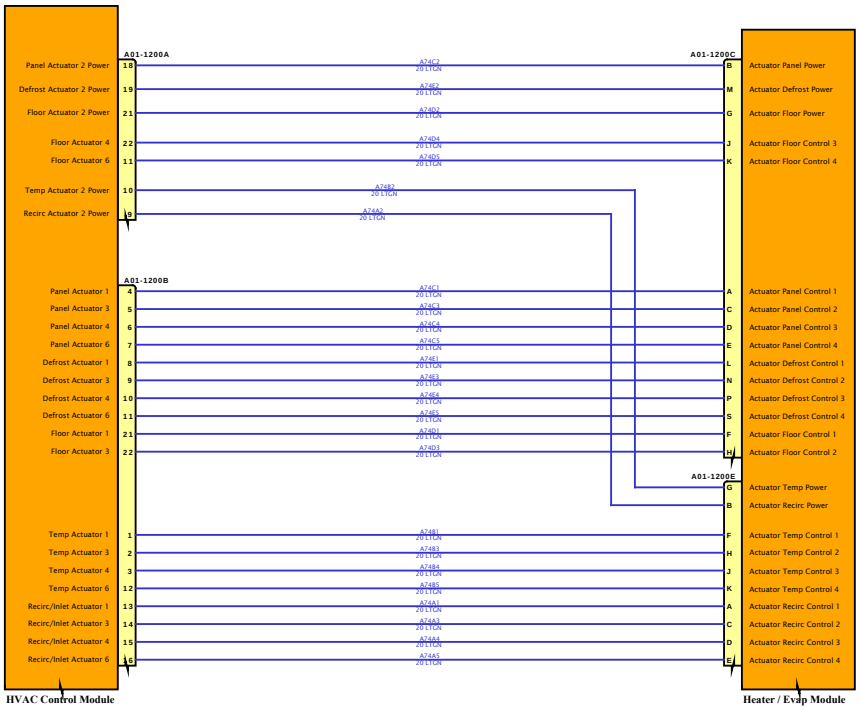

SOFTWARE FEATURE CODES

NAVISTAR
NAVISTAR, INC. CONFIDENTIAL PROPRIETARY

Diagram4 - Actuators - Option2

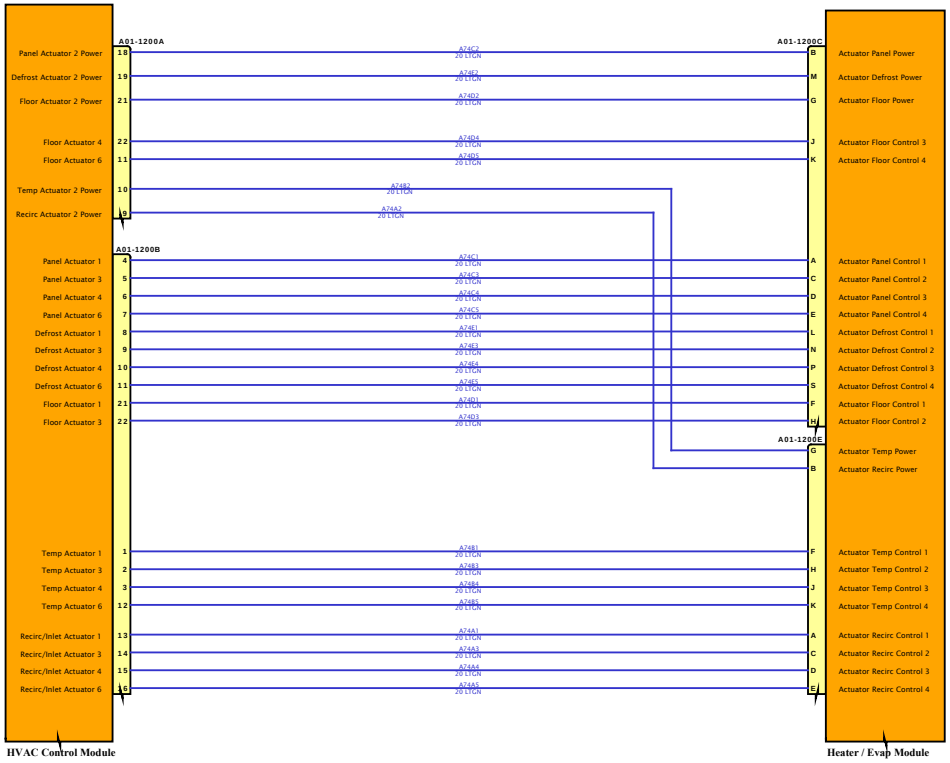

DESIGN DESCRIPTION

FEATURE CODES

SOFTWARE FEATURE CODES

NAVISTAR INC. CONFIDENTIAL PROPRIETARY

Diagram5 - Sensors - Option1

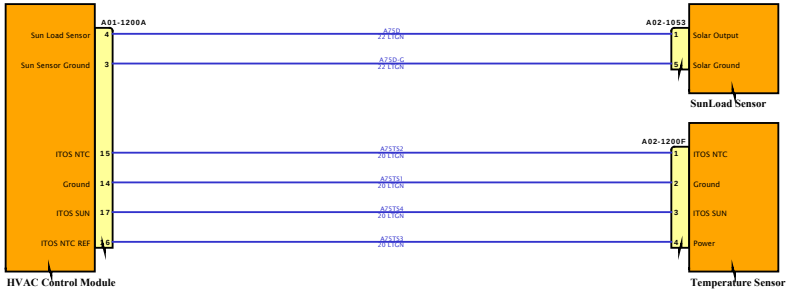

DESIGN DESCRIPTION

FEATURE CODES

SOFTWARE FEATURE CODES

NAVISTAR INC. CONFIDENTIAL PROPRIETARY

Diagram6 - Sensors - Option2

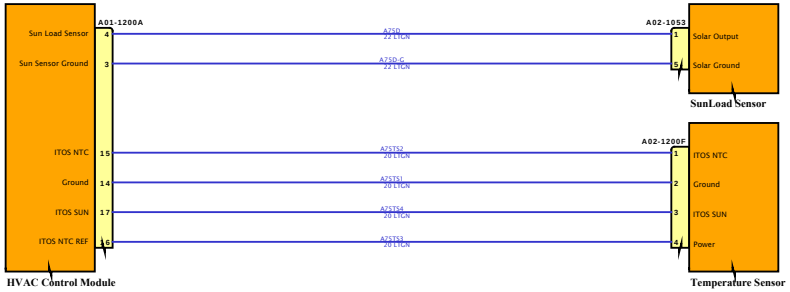

DESIGN DESCRIPTION

FEATURE CODES

SOFTWARE FEATURE CODES

NAVISTAR INC. CONFIDENTIAL PROPRIETARY

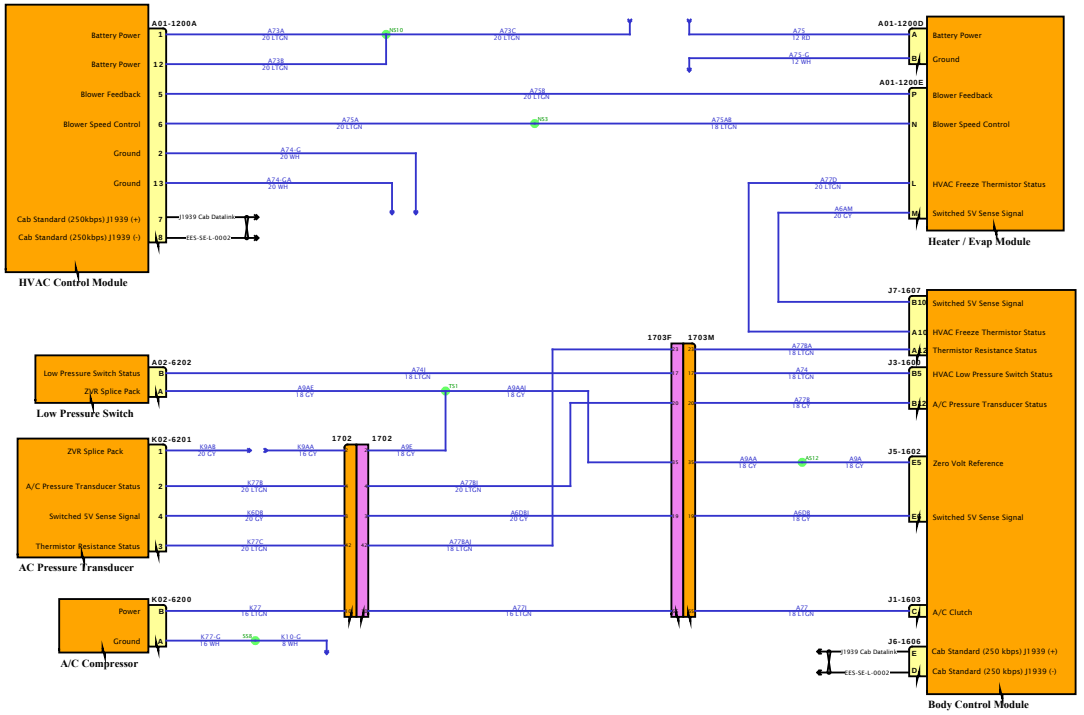

DESIGN DESCRIPTION

FEATURE CODES

SOFTWARE FEATURE CODES

Diagram2 - Actuators

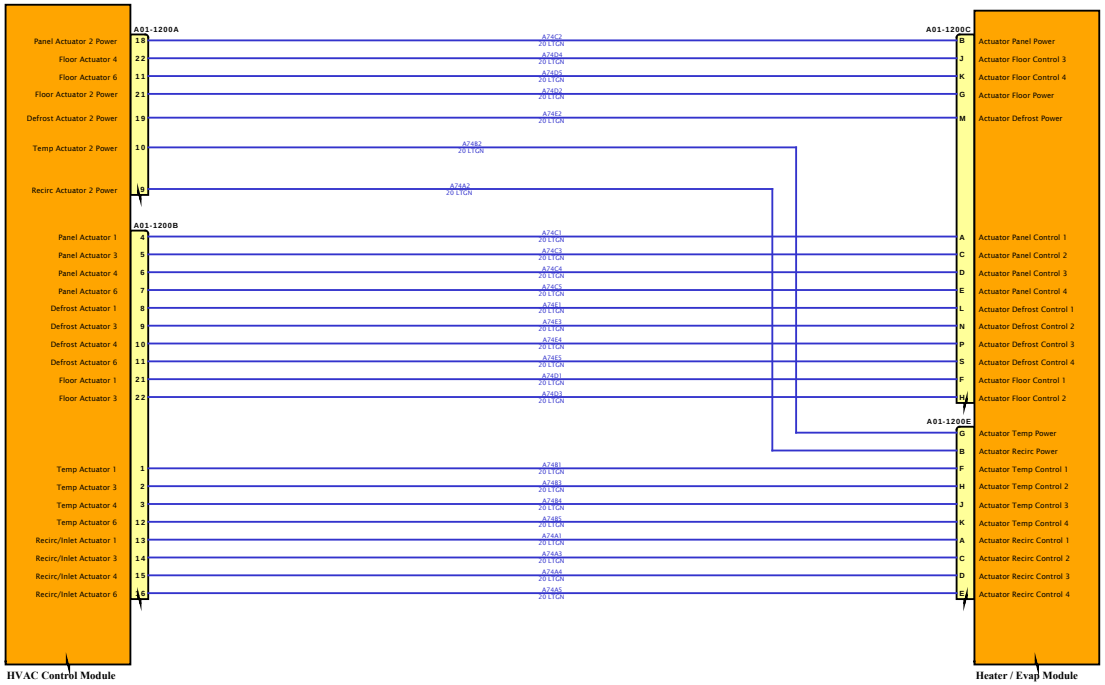

DESIGN DESCRIPTION

FEATURE CODES

SOFTWARE FEATURE CODES

NAVISTAR INC. CONFIDENTIAL PROPRIETARY

Diagram3 - Sensors

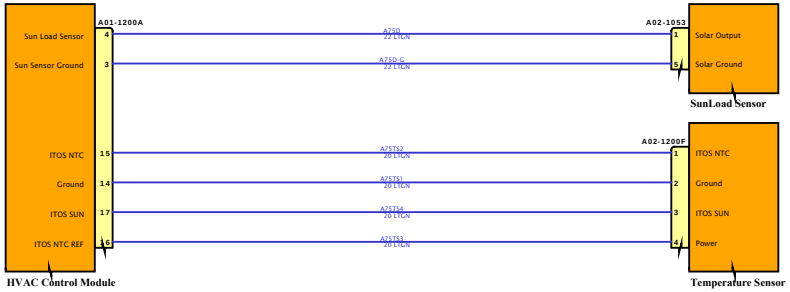

DESIGN DESCRIPTION

FEATURE CODES

SOFTWARE FEATURE CODES

NAVISTAR INC. CONFIDENTIAL PROPRIETARY

Diagram1 - HVAC

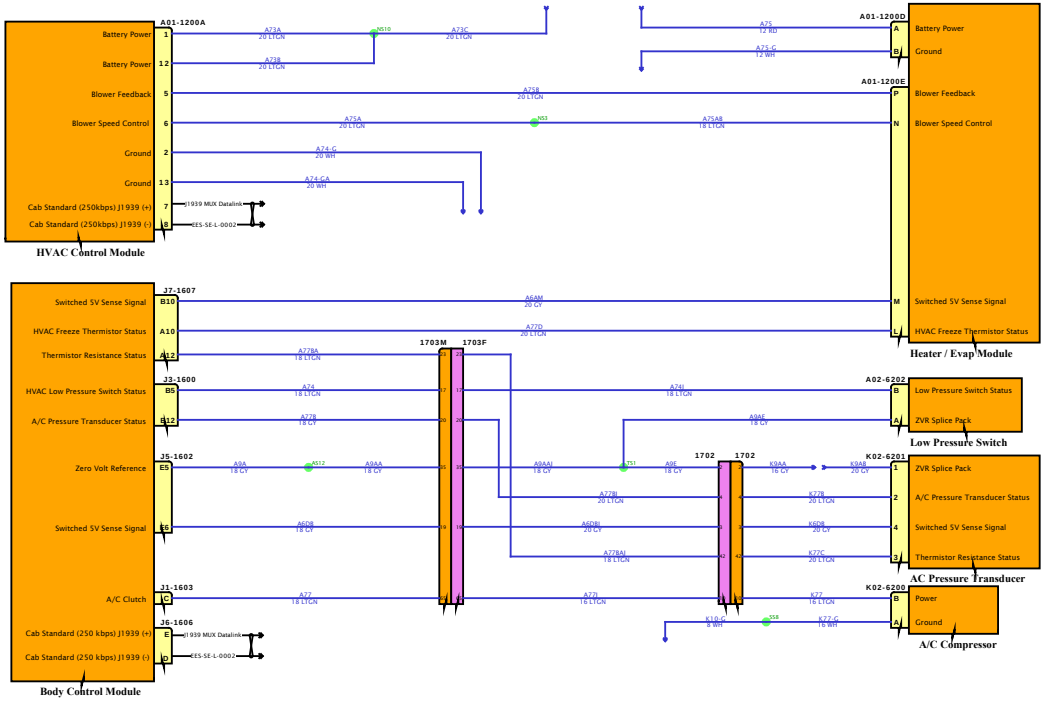

DESIGN DESCRIPTION

FEATURE CODES

SOFTWARE FEATURE CODES

Diagram2 - Actuators

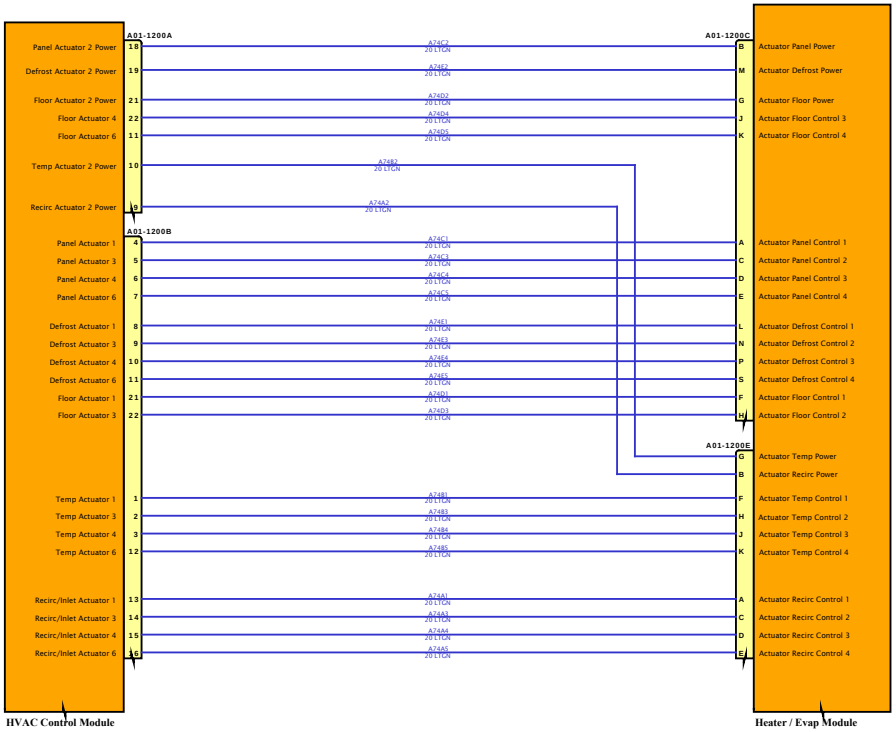

DESIGN DESCRIPTION

FEATURE CODES

SOFTWARE FEATURE CODES

NAVISTAR
NAVISTAR, INC. CONFIDENTIAL PROPRIETARY

Diagram1 - Powers, Grounds & Controls

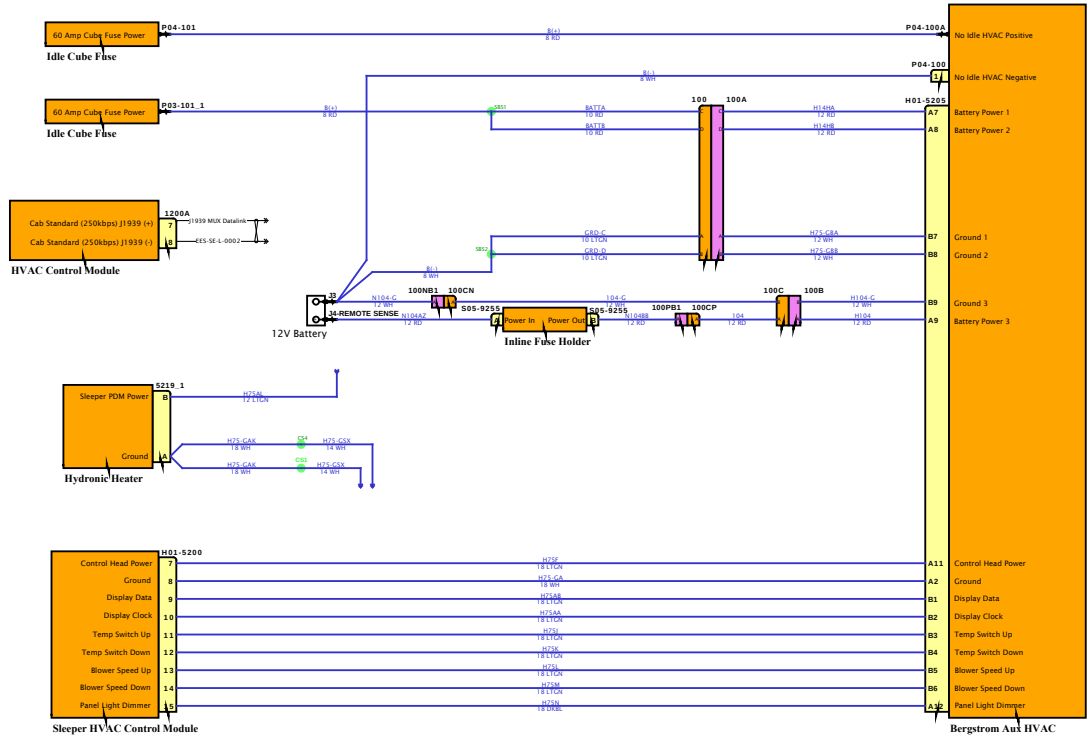

DESIGN DESCRIPTION

FEATURE CODES

SOFTWARE FEATURE CODES

Diagram2 - No Idle Switching

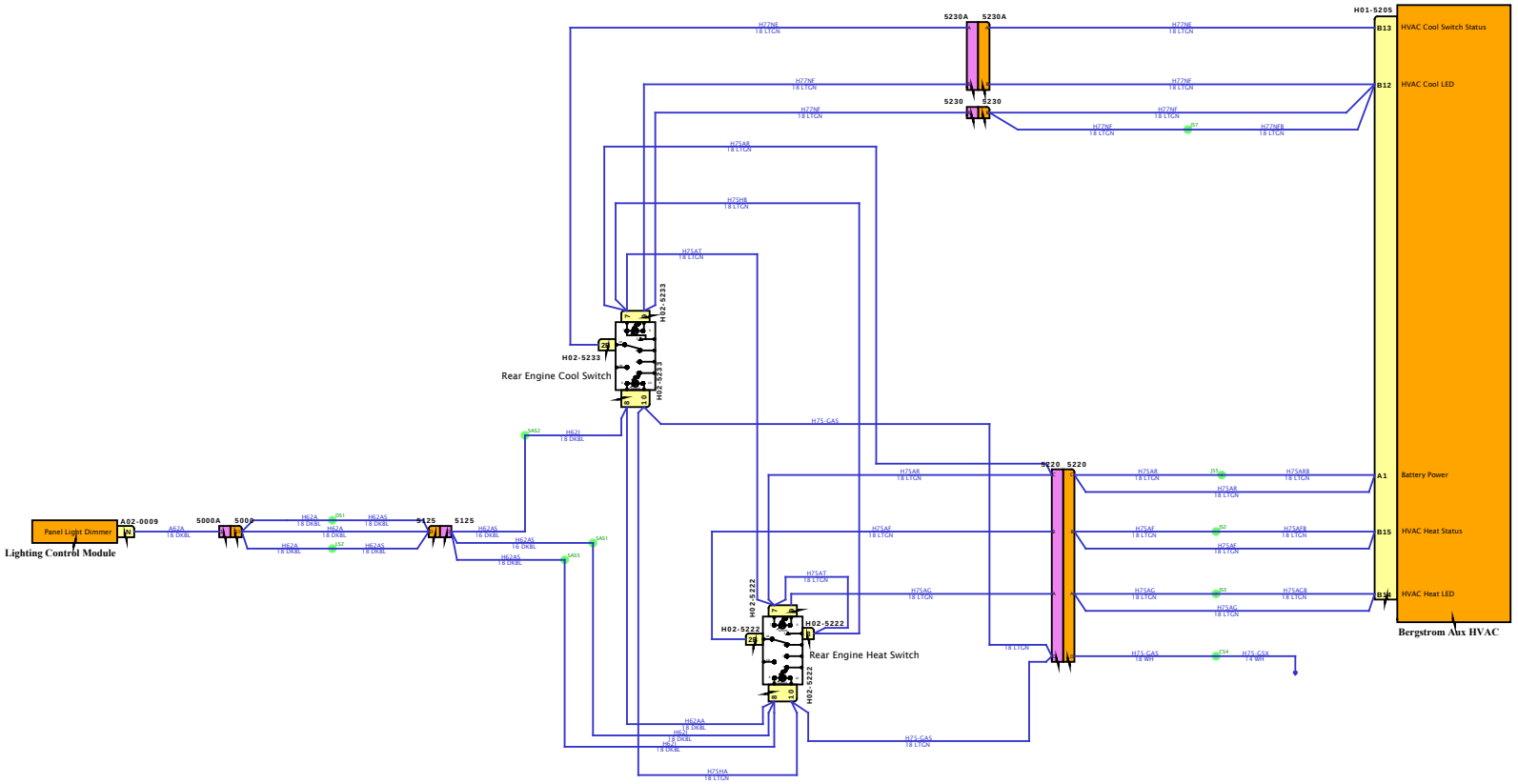

DESIGN DESCRIPTION

FEATURE CODES

SOFTWARE FEATURE CODES

Diagram3 - Espar Circuit

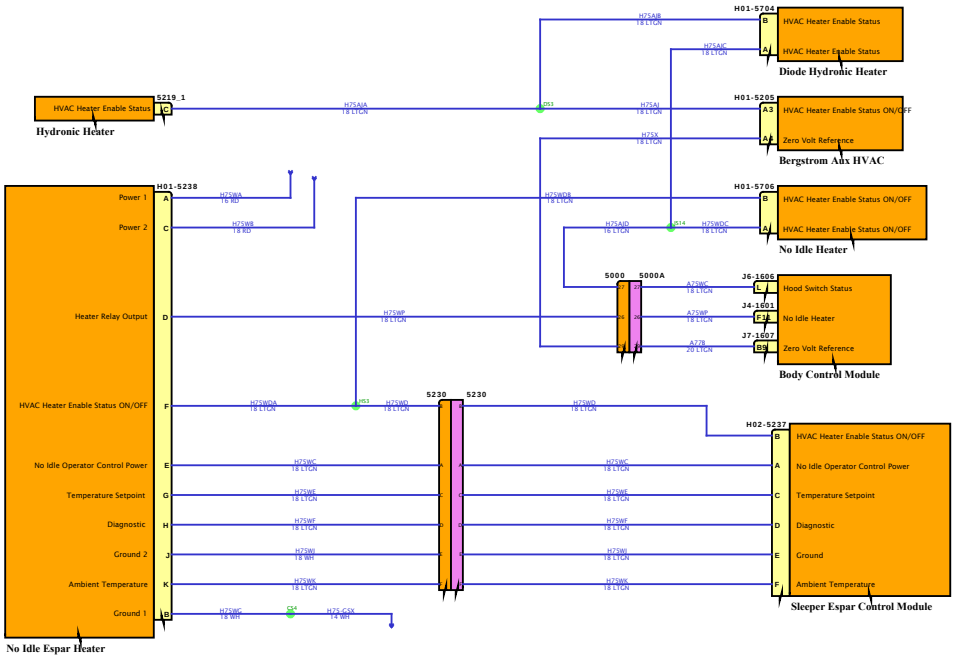

DESIGN DESCRIPTION

FEATURE CODES

SOFTWARE FEATURE CODES

NAVISTAR INC. CONFIDENTIAL PROPRIETARY

Diagram1 - Powers, Grounds & Controls

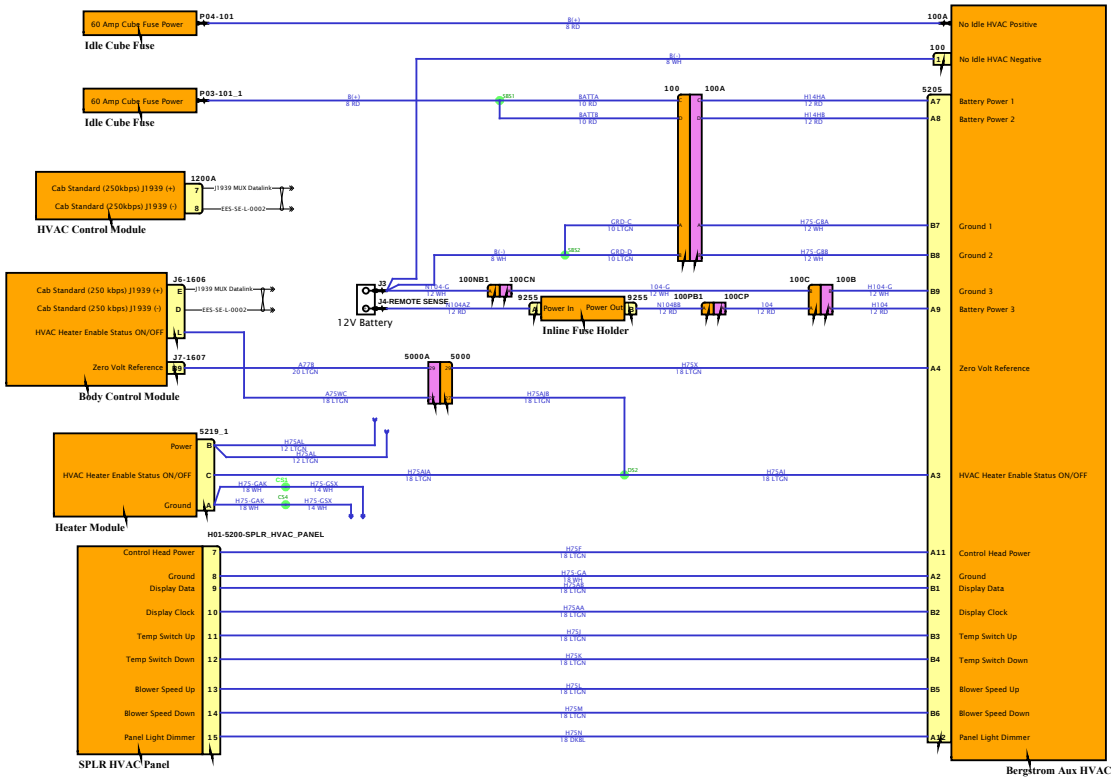

DESIGN DESCRIPTION

FEATURE CODES

SOFTWARE FEATURE CODES

NAVISTAR
NAVISTAR, INC. CONFIDENTIAL PROPRIETARY

Diagram2 - No Idle Switching

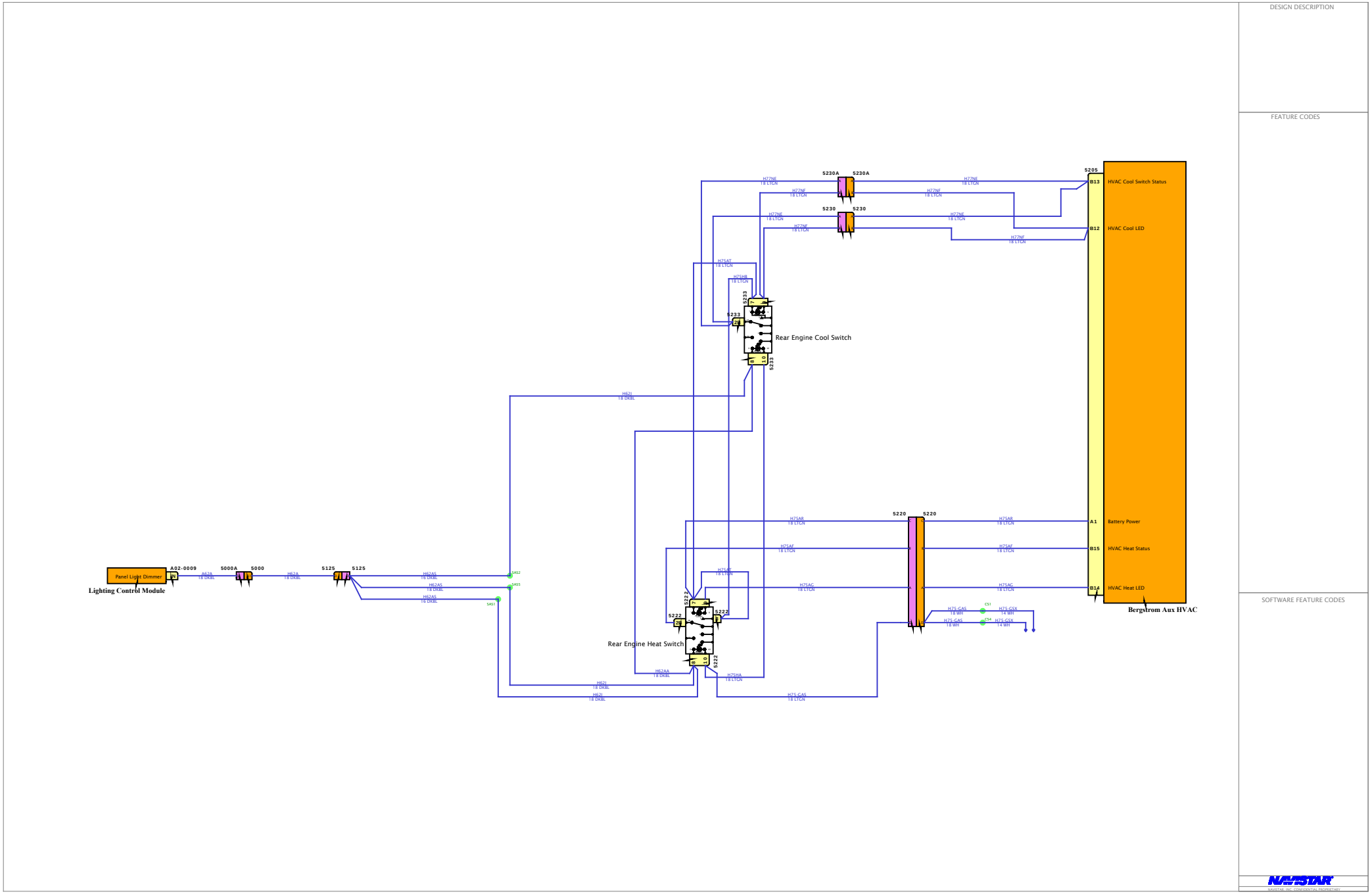

Diagram1 - Powers, Grounds & Controls

DESIGN DESCRIPTION

FEATURE CODES

SOFTWARE FEATURE CODES

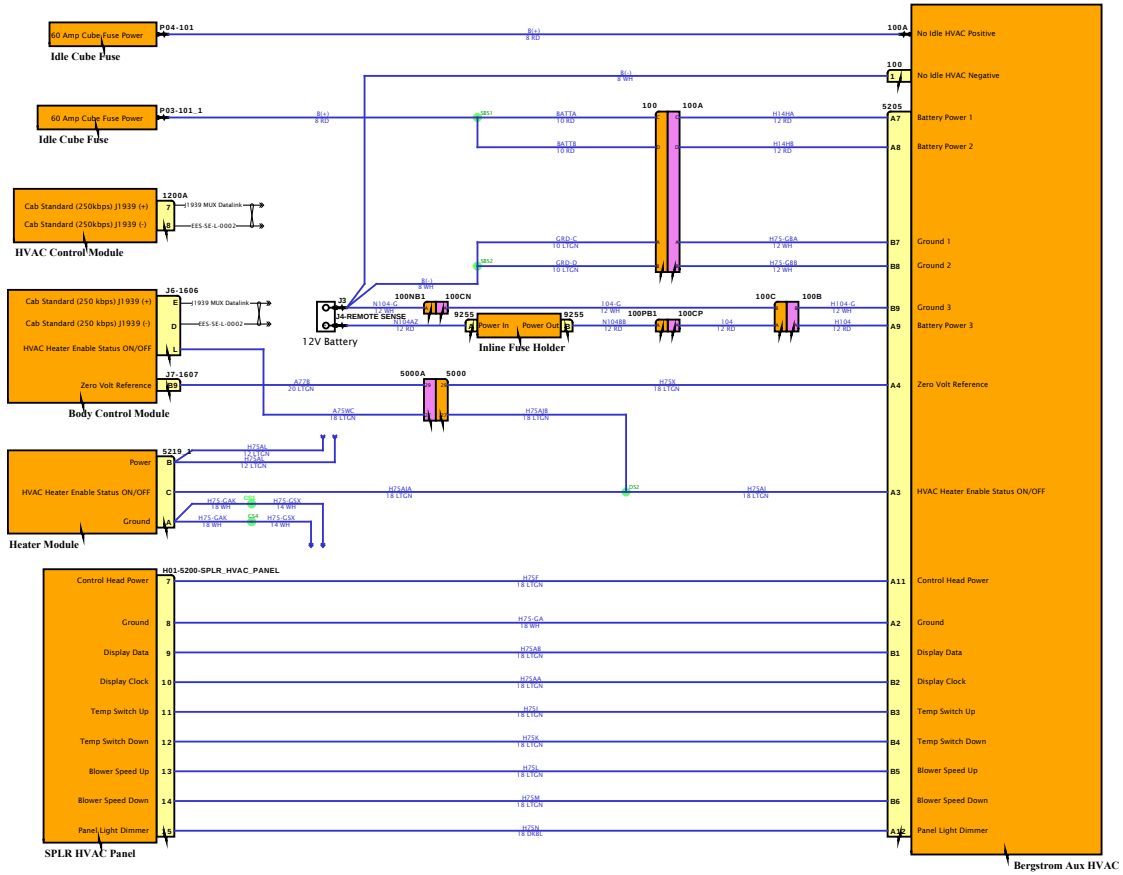

NAVISTAR
NAVISTAR, INC. CONFIDENTIAL PROPRIETARY

Diagram2 - No Idle Switching

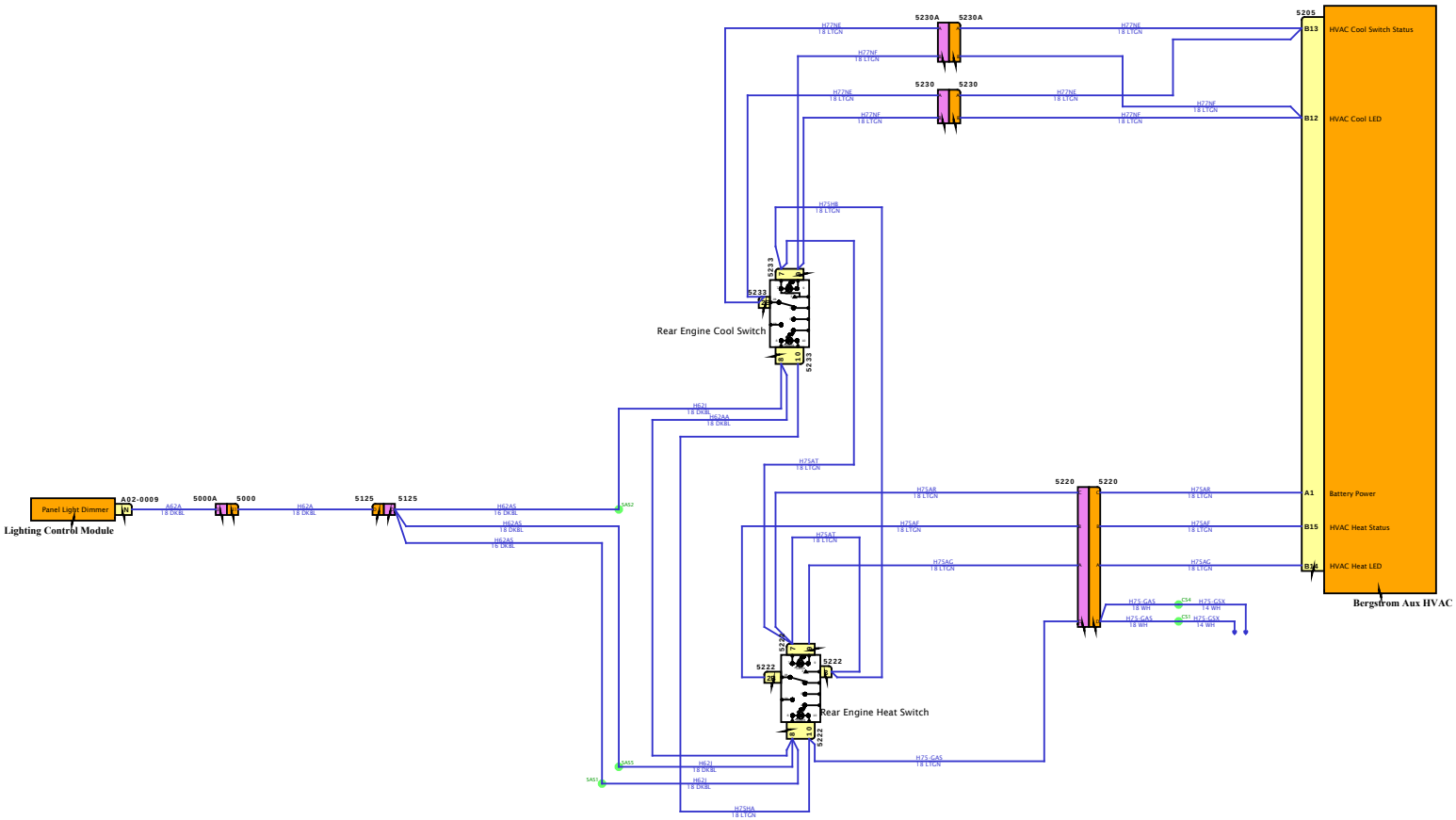

DESIGN DESCRIPTION

FEATURE CODES

SOFTWARE FEATURE CODES

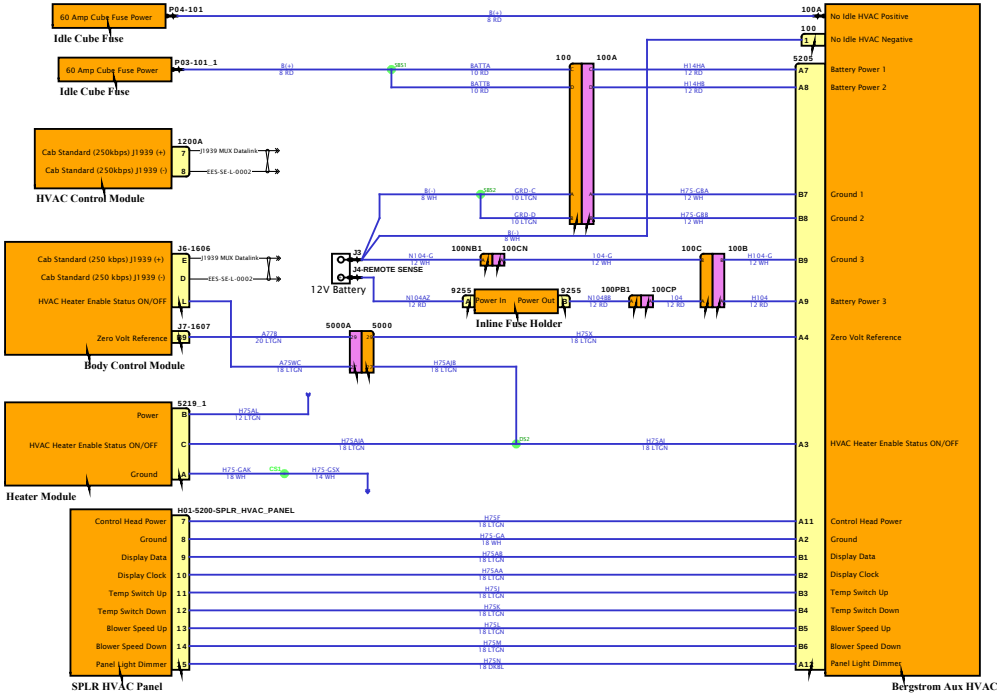

DESIGN DESCRIPTION

FEATURE CODES

SOFTWARE FEATURE CODES

Diagram2 - No Idle Switching

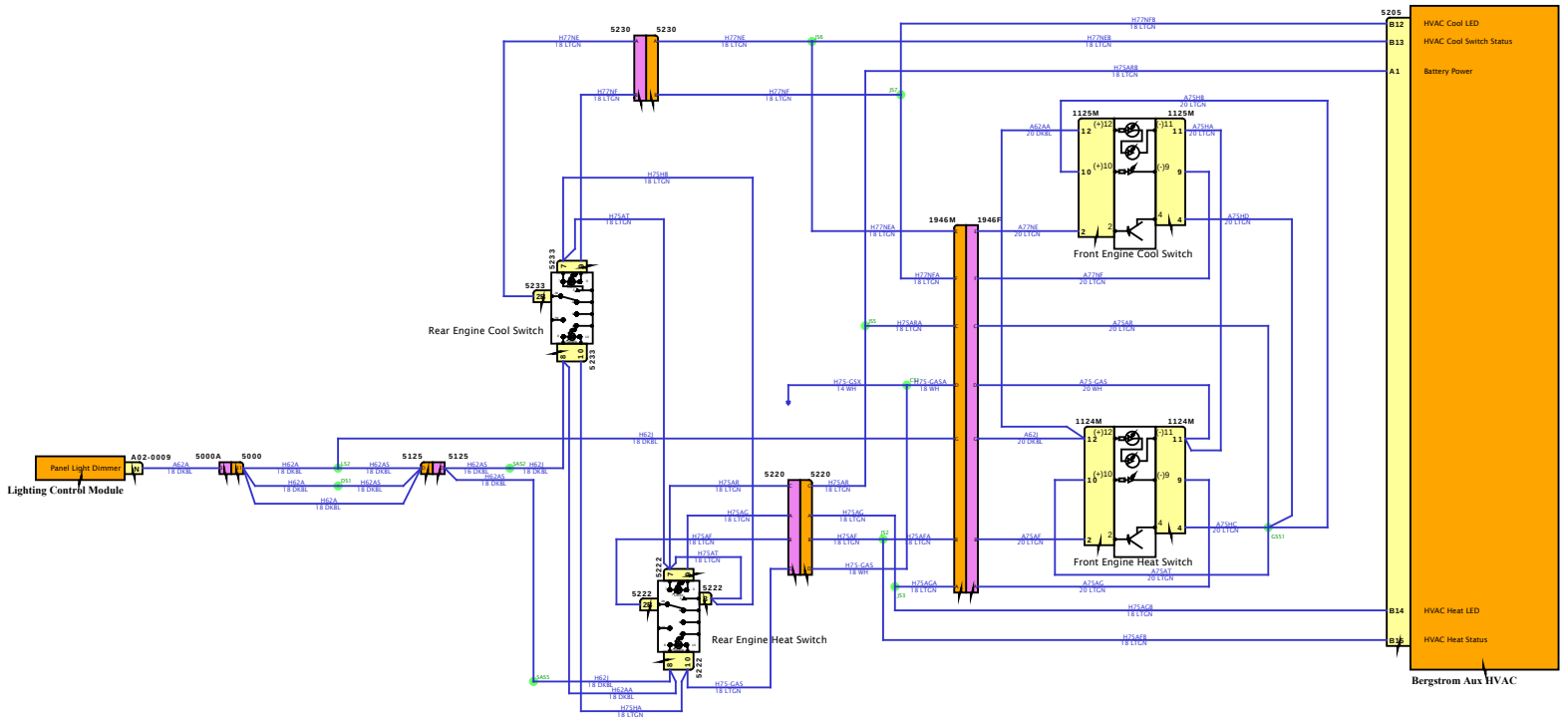

DESIGN DESCRIPTION

FEATURE CODES

SOFTWARE FEATURE CODES

Diagram1 - Powers, Grounds & Controls

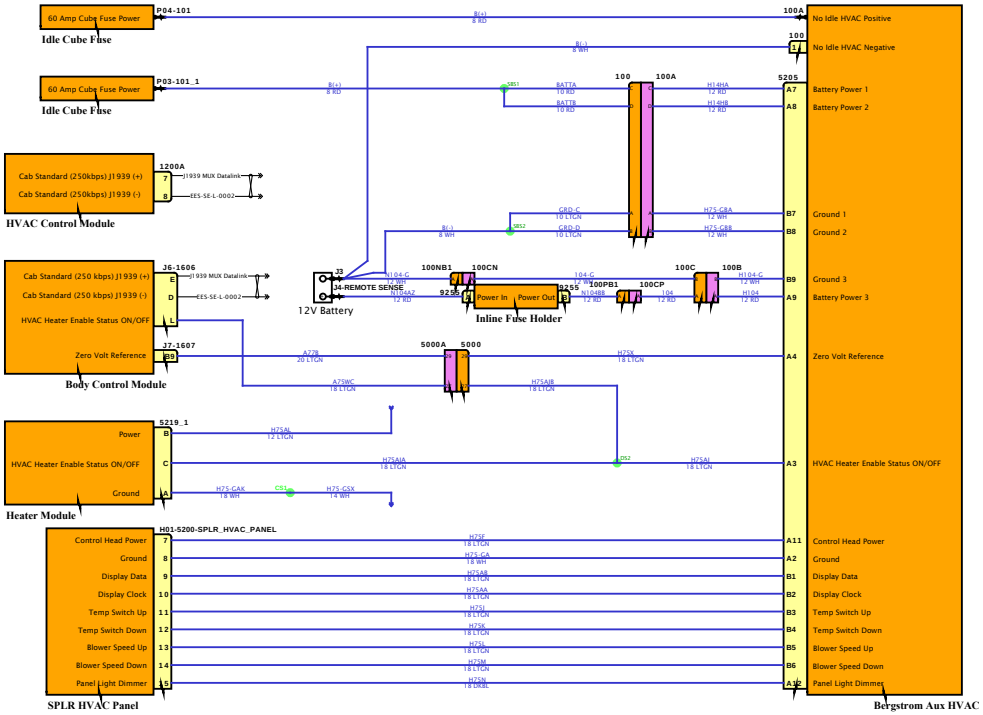

DESIGN DESCRIPTION

FEATURE CODES

SOFTWARE FEATURE CODES

NAVISTAR INC. CONFIDENTIAL PROPRIETARY

Diagram2 - No Idle Switching

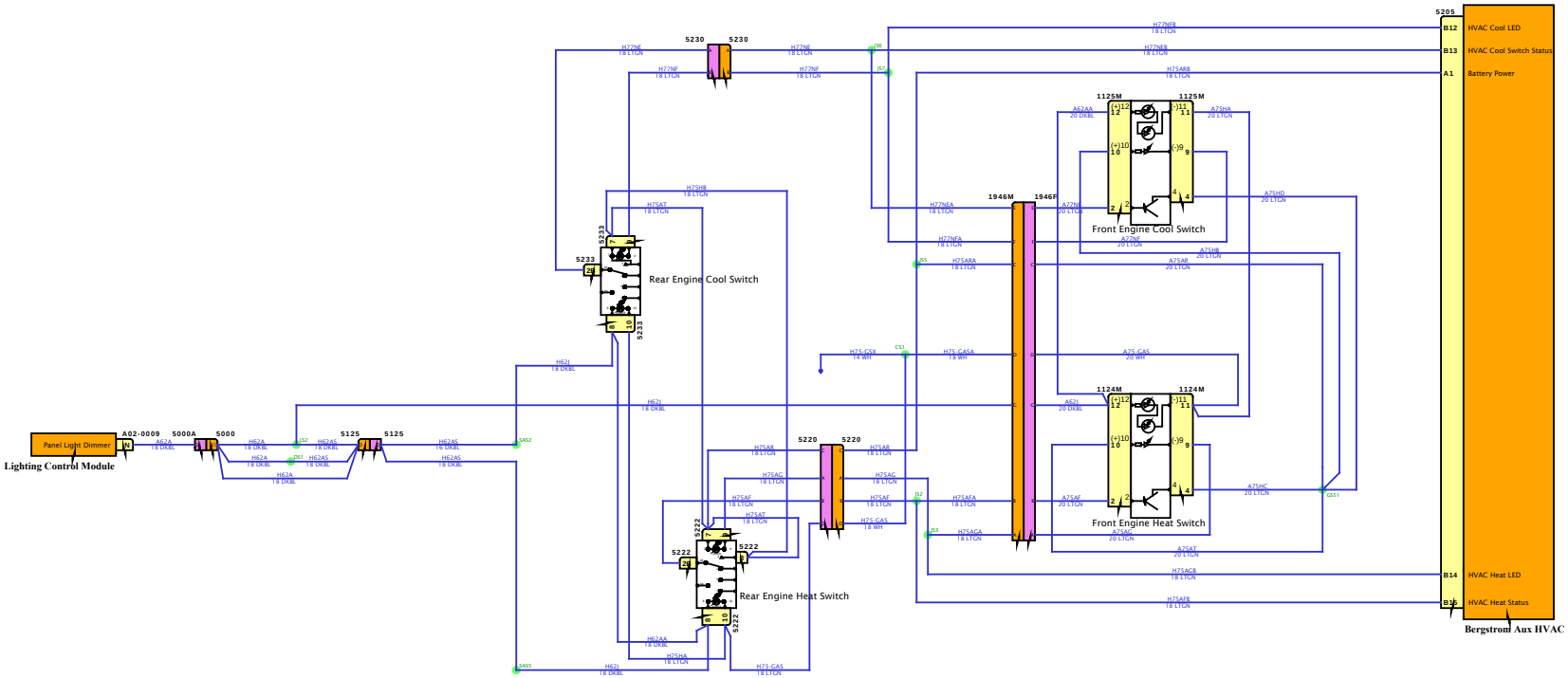

DESIGN DESCRIPTION

FEATURE CODES

SOFTWARE FEATURE CODES

Diagram1 - Powers, Grounds & Controls

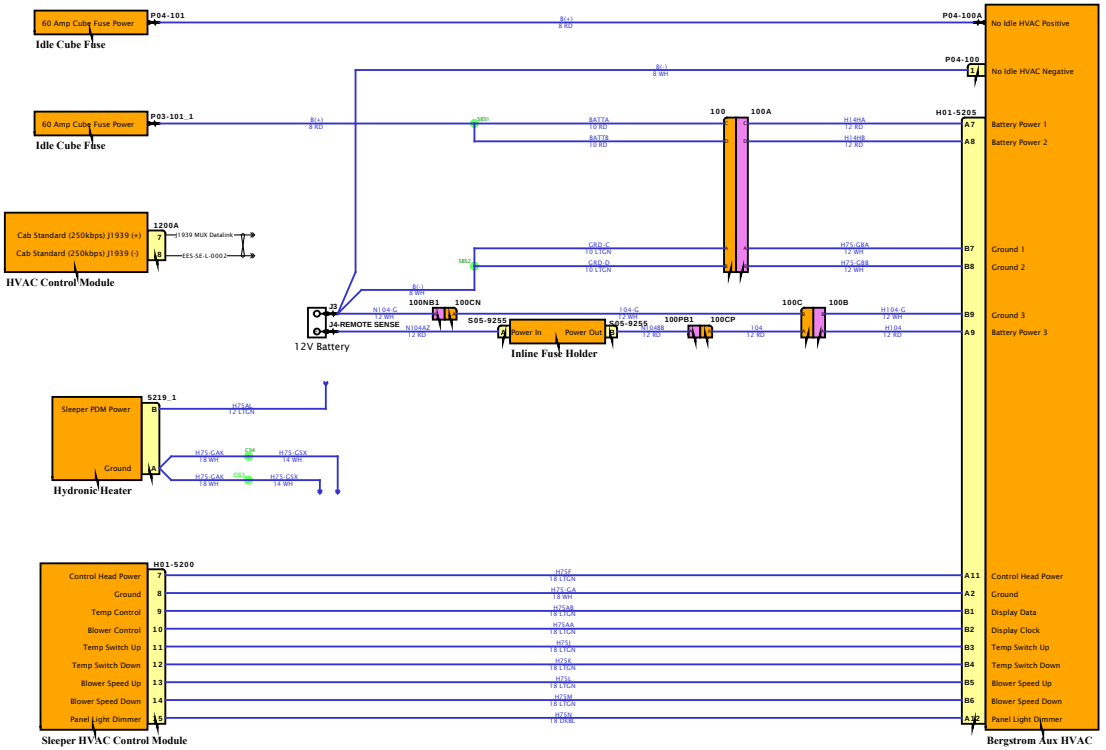

DESIGN DESCRIPTION

FEATURE CODES

SOFTWARE FEATURE CODES

Diagram2 - No Idle Switching

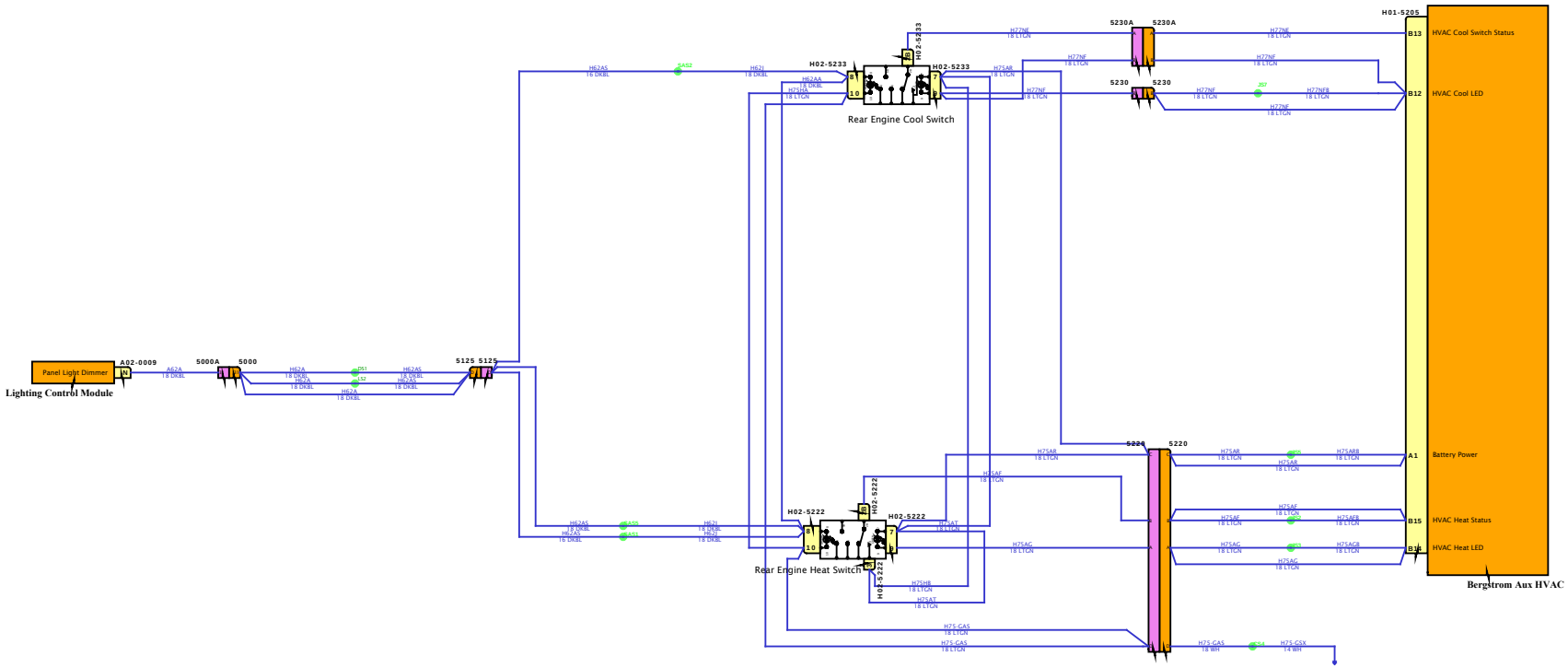

DESIGN DESCRIPTION

FEATURE CODES

SOFTWARE FEATURE CODES

Diagram3 - Espar Circuit

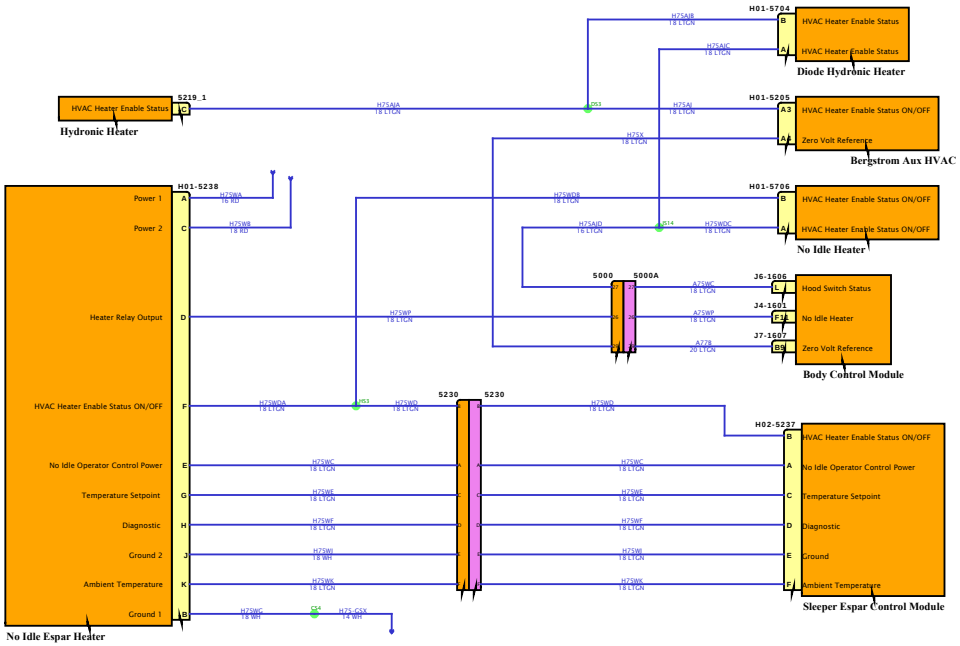

DESIGN DESCRIPTION

FEATURE CODES

SOFTWARE FEATURE CODES

NAVISTAR
NAVISTAR, INC. CONFIDENTIAL PROPRIETARY

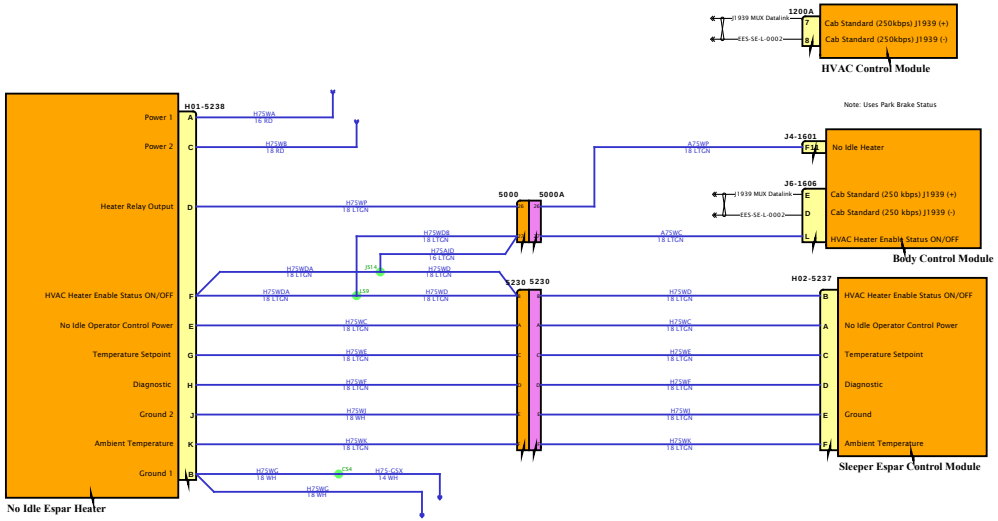

DESIGN DESCRIPTION

FEATURE CODES

SOFTWARE FEATURE CODES

NAVISTAR
NAVISTAR, INC. CONFIDENTIAL PROPRIETARY

DESIGN DESCRIPTION

FEATURE CODES

SOFTWARE FEATURE CODES

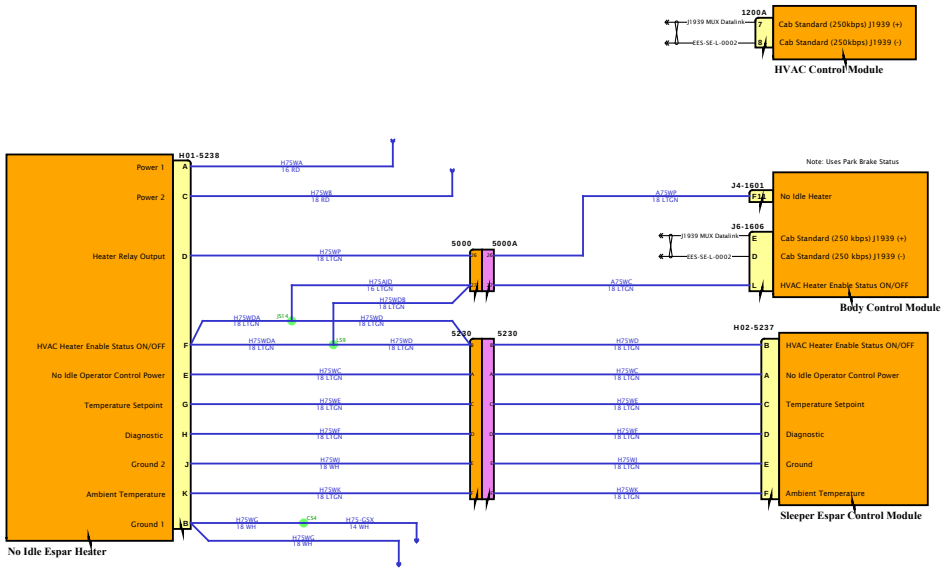

Diagram1

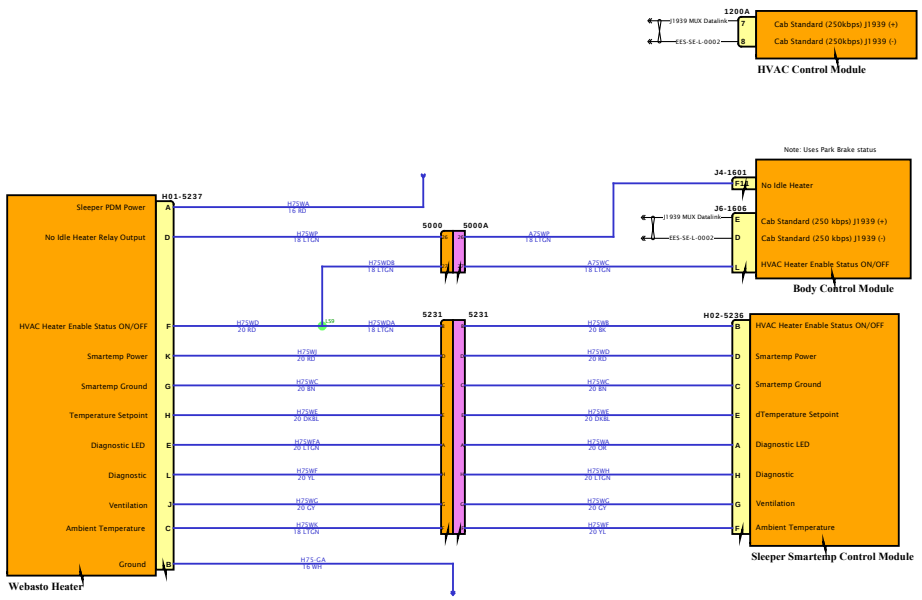

DESIGN DESCRIPTION

FEATURE CODES

SOFTWARE FEATURE CODES

NAVISTAR
NAVISTAR, INC. CONFIDENTIAL PROPRIETARY

Diagram1

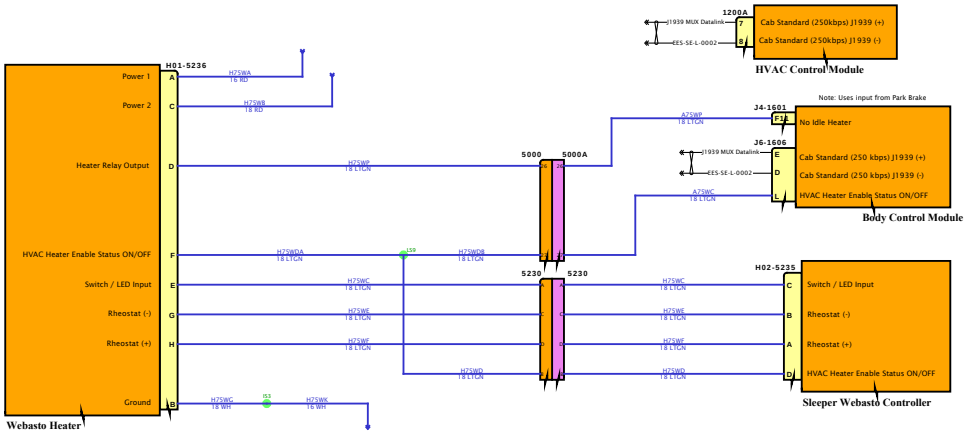

DESIGN DESCRIPTION

FEATURE CODES

SOFTWARE FEATURE CODES

NAVISTAR INC. CONFIDENTIAL PROPRIETARY

Diagram1

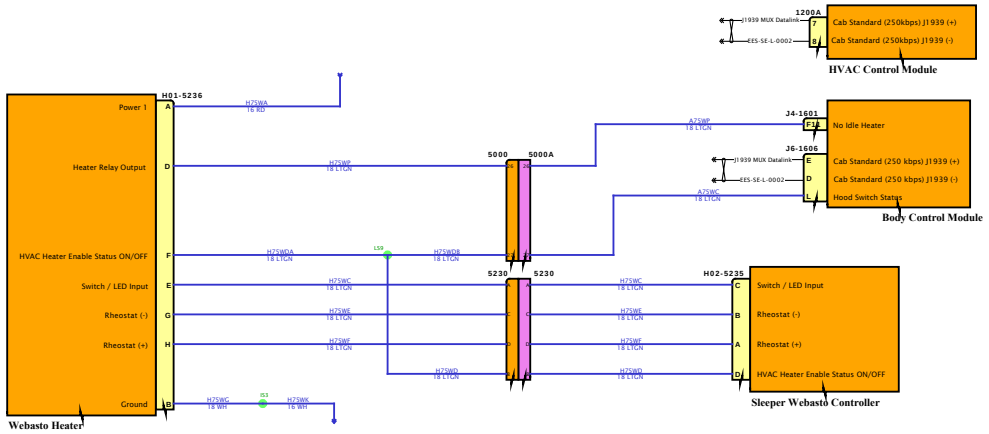

DESIGN DESCRIPTION

FEATURE CODES

SOFTWARE FEATURE CODES

NAVISTAR
NAVISTAR, INC. CONFIDENTIAL PROPRIETARY

Diagram1

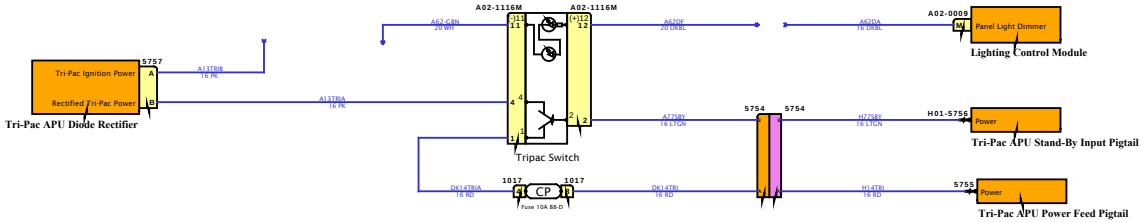

DESIGN DESCRIPTION

FEATURE CODES

SOFTWARE FEATURE CODES

Diagram1

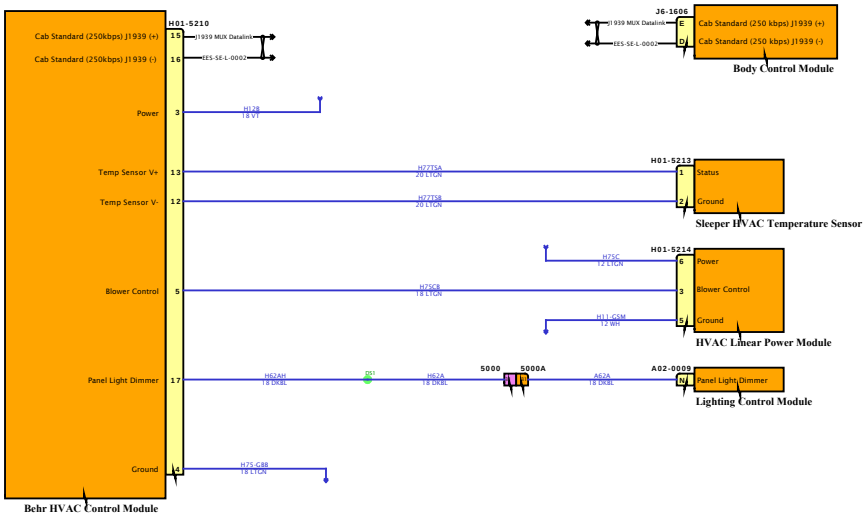

DESIGN DESCRIPTION

FEATURE CODES

SOFTWARE FEATURE CODES

NAVISTAR
NAVISTAR, INC. CONFIDENTIAL PROPRIETARY

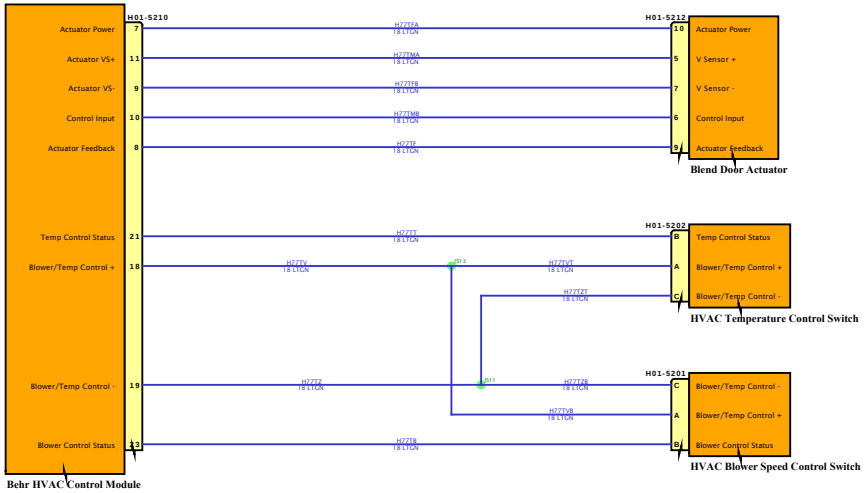

DESIGN DESCRIPTION

FEATURE CODES

SOFTWARE FEATURE CODES

NAVISTAR INC. CONFIDENTIAL PROPRIETARY

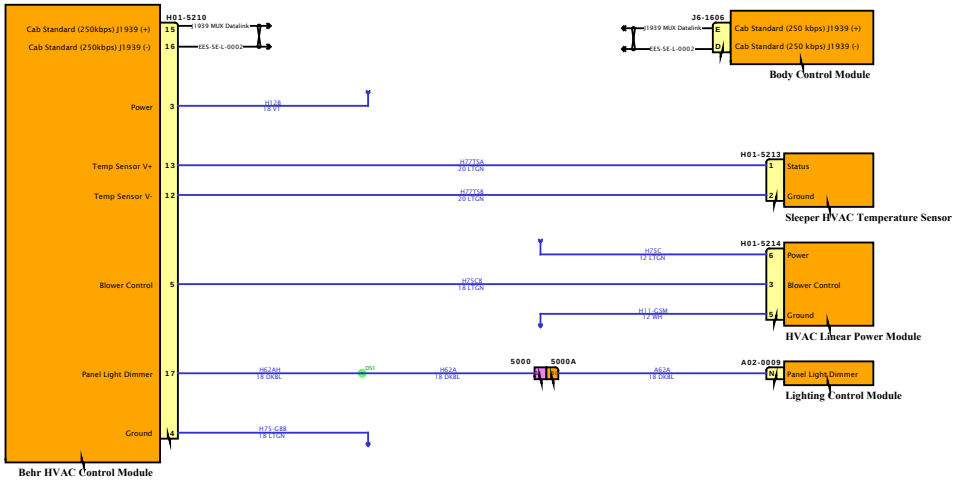

DESIGN DESCRIPTION

FEATURE CODES

SOFTWARE FEATURE CODES

NAVISTAR
NAVISTAR, INC. CONFIDENTIAL PROPRIETARY

DESIGN DESCRIPTION

FEATURE CODES

SOFTWARE FEATURE CODES



NAVISTAR INC. CONFIDENTIAL PROPRIETARY

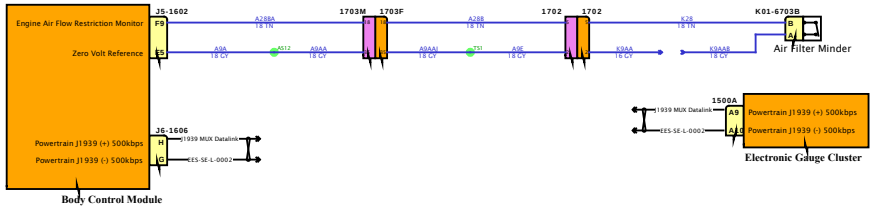

DESIGN DESCRIPTION

FEATURE CODES

SOFTWARE FEATURE CODES

NAVISTAR INC. CONFIDENTIAL PROPRIETARY

Diagram2

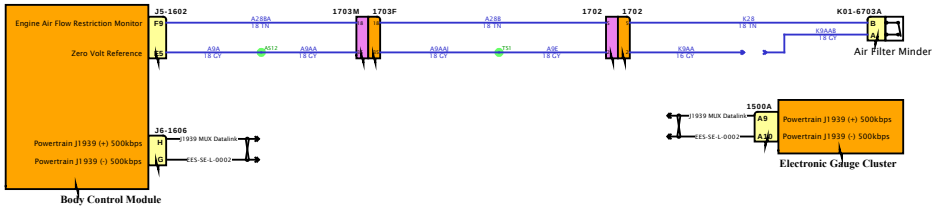

DESIGN DESCRIPTION

FEATURE CODES

SOFTWARE FEATURE CODES

NAVISTAR INC. CONFIDENTIAL PROPRIETARY

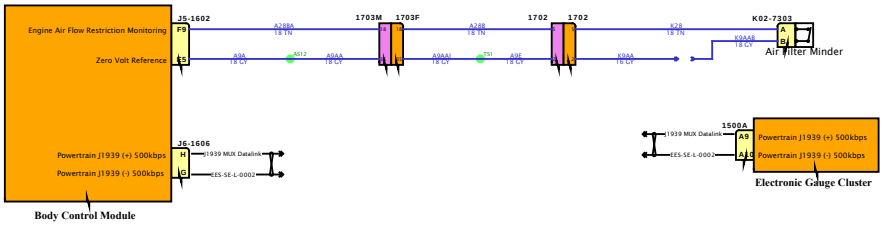

DESIGN DESCRIPTION

FEATURE CODES

SOFTWARE FEATURE CODES

NAVISTAR
NAVISTAR, INC. CONFIDENTIAL PROPRIETARY

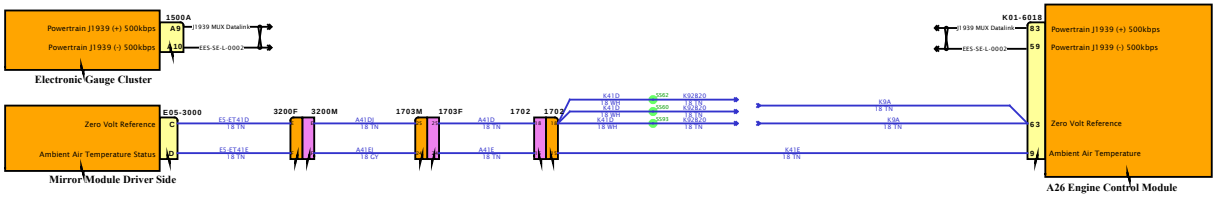

DESIGN DESCRIPTION

FEATURE CODES

SOFTWARE FEATURE CODES

NAVISTAR
NAVISTAR, INC. CONFIDENTIAL PROPRIETARY

Diagram1

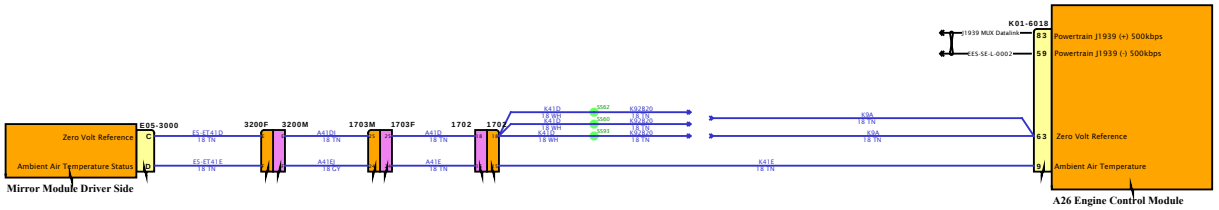

DESIGN DESCRIPTION

FEATURE CODES

SOFTWARE FEATURE CODES

NAVISTAR
NAVISTAR, INC. CONFIDENTIAL PROPRIETARY

Diagram1

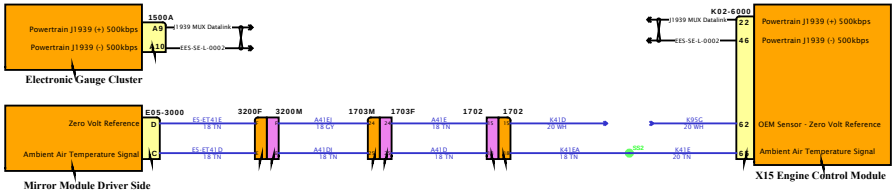

DESIGN DESCRIPTION

FEATURE CODES

SOFTWARE FEATURE CODES

NAVISTAR
NAVISTAR, INC. CONFIDENTIAL PROPRIETARY

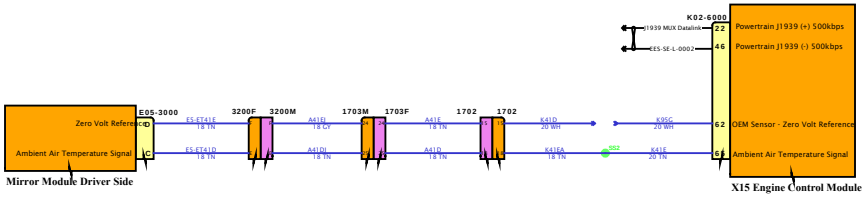

DESIGN DESCRIPTION

FEATURE CODES

SOFTWARE FEATURE CODES

NAVISTAR INC. CONFIDENTIAL PROPRIETARY

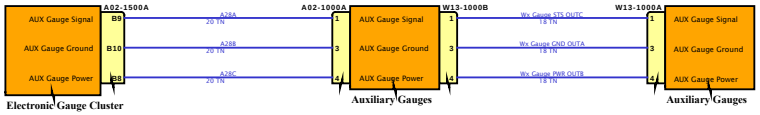

DESIGN DESCRIPTION

FEATURE CODES

SOFTWARE FEATURE CODES

NAVISTAR INC. CONFIDENTIAL PROPRIETARY

Diagram1

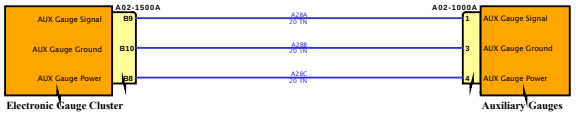

DESIGN DESCRIPTION

FEATURE CODES

SOFTWARE FEATURE CODES

NAVISTAR INC. CONFIDENTIAL PROPRIETARY

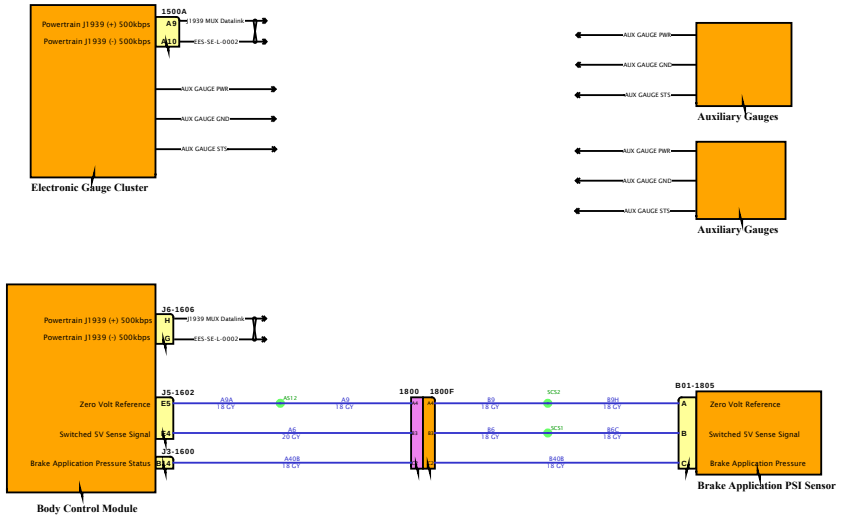

DESIGN DESCRIPTION

FEATURE CODES

SOFTWARE FEATURE CODES

NAVISTAR INC. CONFIDENTIAL PROPRIETARY

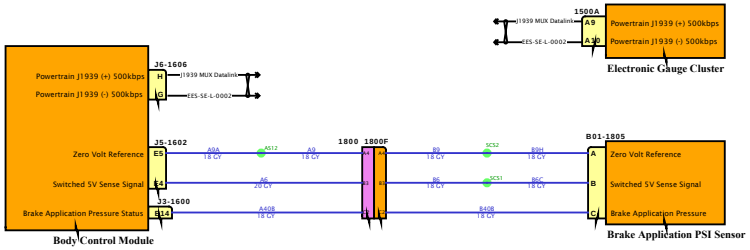

DESIGN DESCRIPTION

FEATURE CODES

SOFTWARE FEATURE CODES

NAVISTAR INC. CONFIDENTIAL PROPRIETARY

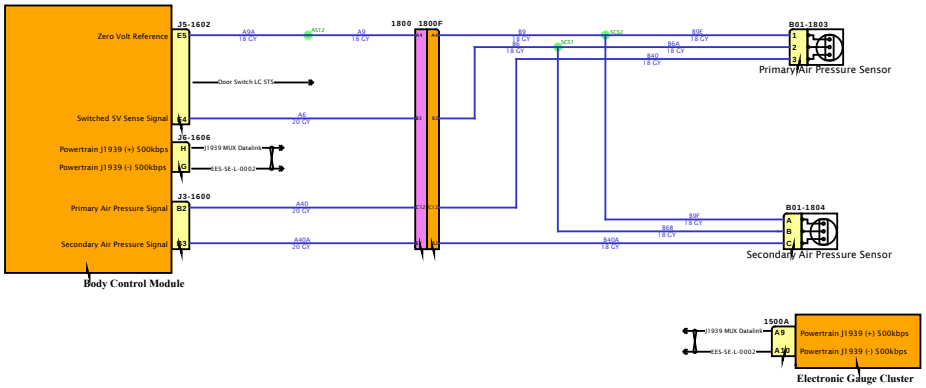

DESIGN DESCRIPTION

FEATURE CODES

SOFTWARE FEATURE CODES

NAVISTAR INC. CONFIDENTIAL PROPRIETARY

Diagram1

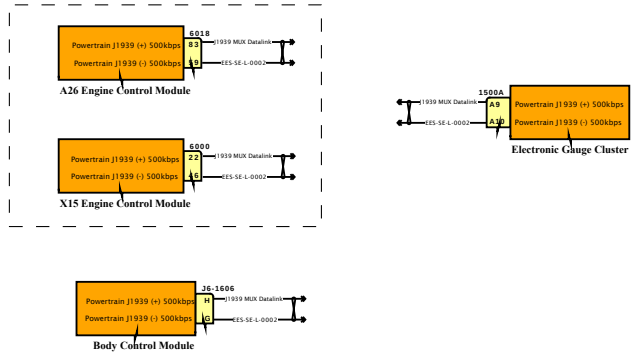

DESIGN DESCRIPTION

FEATURE CODES

SOFTWARE FEATURE CODES

NAVISTAR INC. CONFIDENTIAL PROPRIETARY

Diagram1

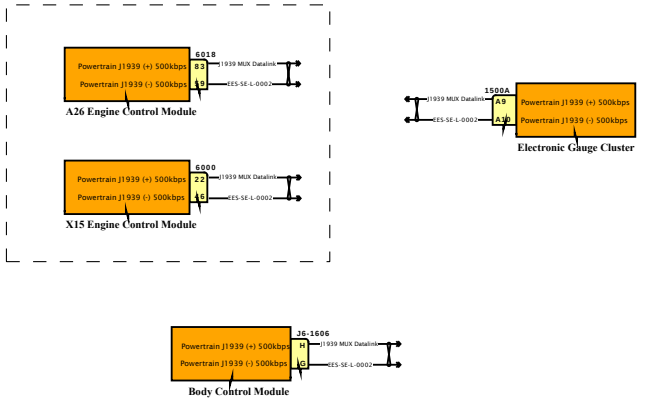

DESIGN DESCRIPTION

FEATURE CODES

SOFTWARE FEATURE CODES

NAVISTAR
NAVISTAR, INC. CONFIDENTIAL PROPRIETARY

Diagram1

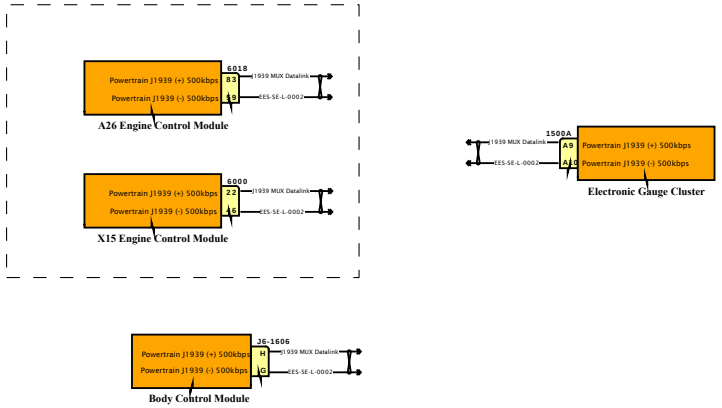

DESIGN DESCRIPTION

FEATURE CODES

SOFTWARE FEATURE CODES

NAVISTAR INC. CONFIDENTIAL PROPRIETARY

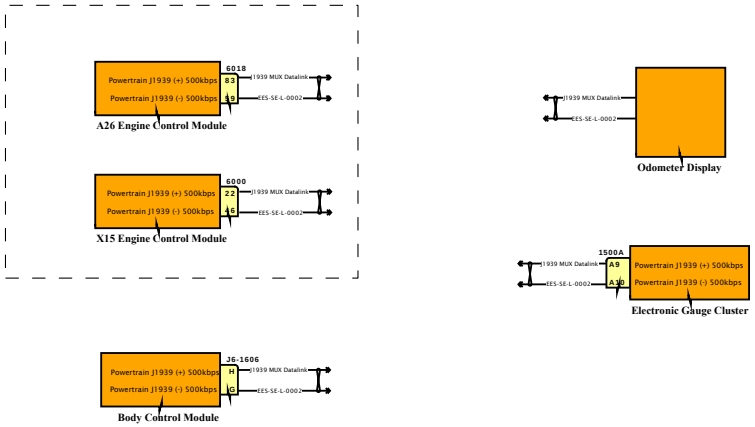

DESIGN DESCRIPTION

FEATURE CODES

SOFTWARE FEATURE CODES

NAVISTAR INC. CONFIDENTIAL PROPRIETARY

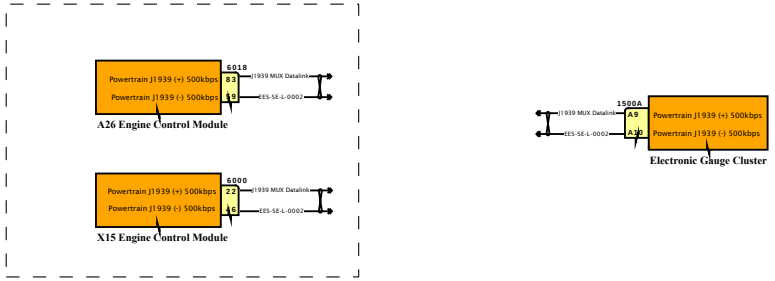

DESIGN DESCRIPTION

FEATURE CODES

SOFTWARE FEATURE CODES

NAVISTAR INC. CONFIDENTIAL PROPRIETARY

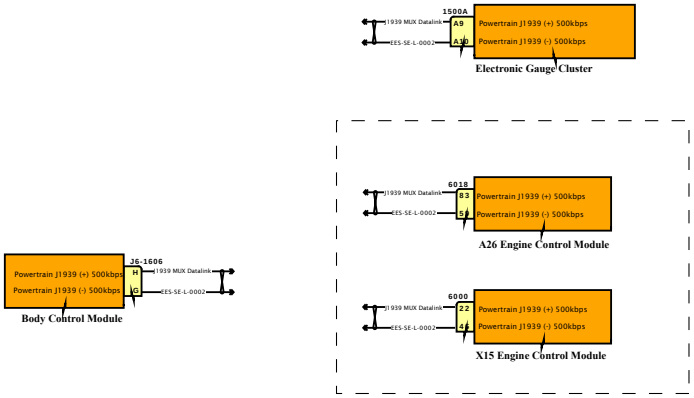

DESIGN DESCRIPTION

FEATURE CODES

SOFTWARE FEATURE CODES

NAVISTAR
NAVISTAR, INC. CONFIDENTIAL PROPRIETARY

Diagram1

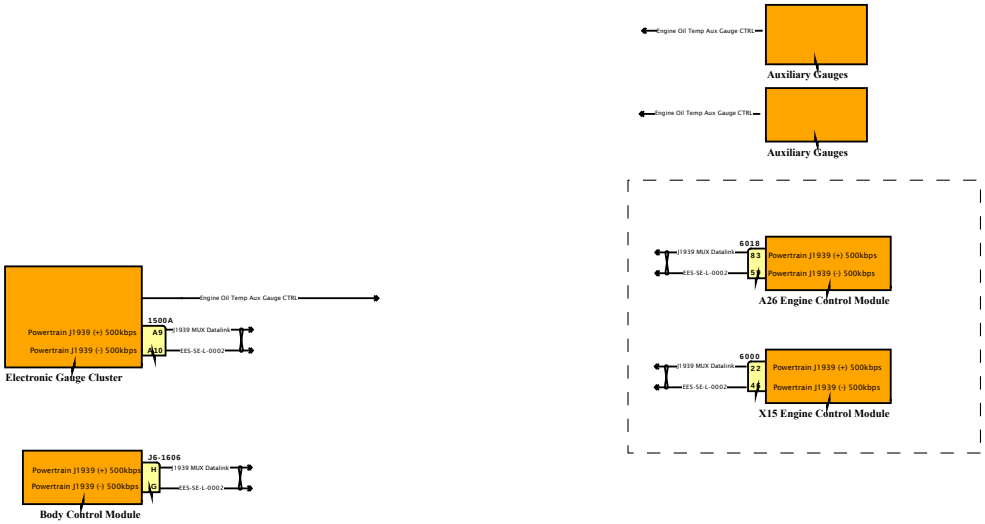

DESIGN DESCRIPTION

FEATURE CODES

SOFTWARE FEATURE CODES

NAVISTAR
NAVISTAR, INC. CONFIDENTIAL PROPRIETARY

Diagram1

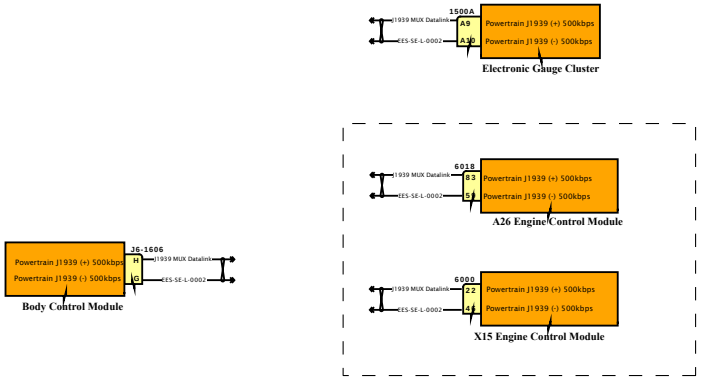

DESIGN DESCRIPTION

FEATURE CODES

SOFTWARE FEATURE CODES

NAVISTAR INC. CONFIDENTIAL PROPRIETARY

Diagram1

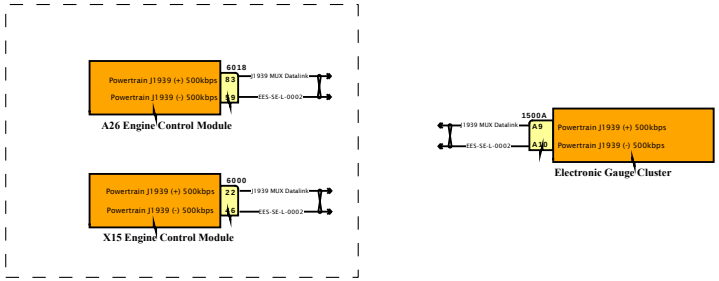

DESIGN DESCRIPTION

FEATURE CODES

SOFTWARE FEATURE CODES

NAVISTAR
NAVISTAR, INC. CONFIDENTIAL PROPRIETARY

Diagram1

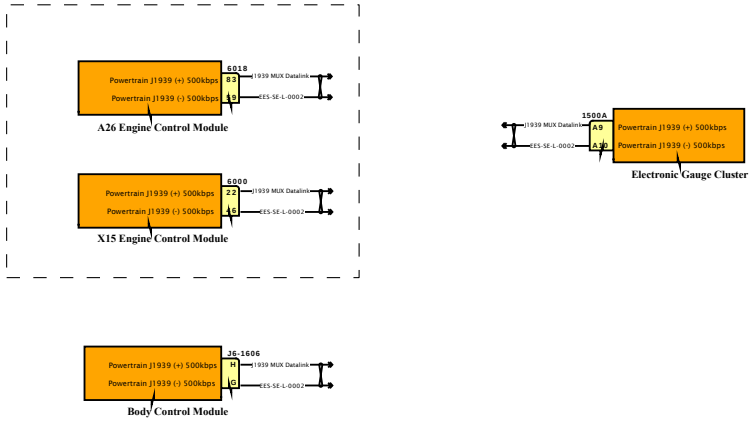

DESIGN DESCRIPTION

FEATURE CODES

SOFTWARE FEATURE CODES

NAVISTAR INC. CONFIDENTIAL PROPRIETARY

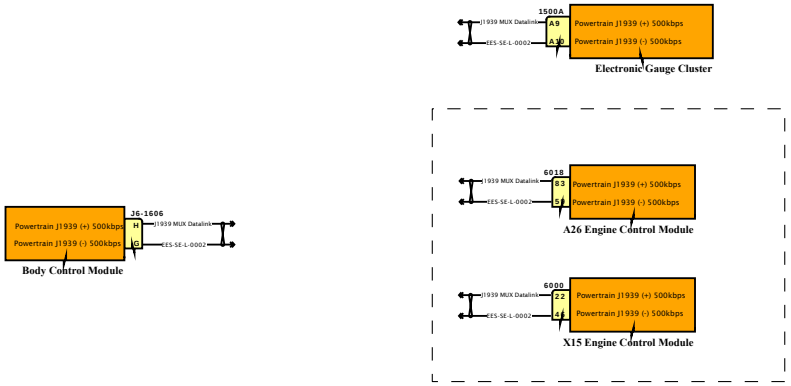

DESIGN DESCRIPTION

FEATURE CODES

SOFTWARE FEATURE CODES

NAVISTAR INC. CONFIDENTIAL PROPRIETARY

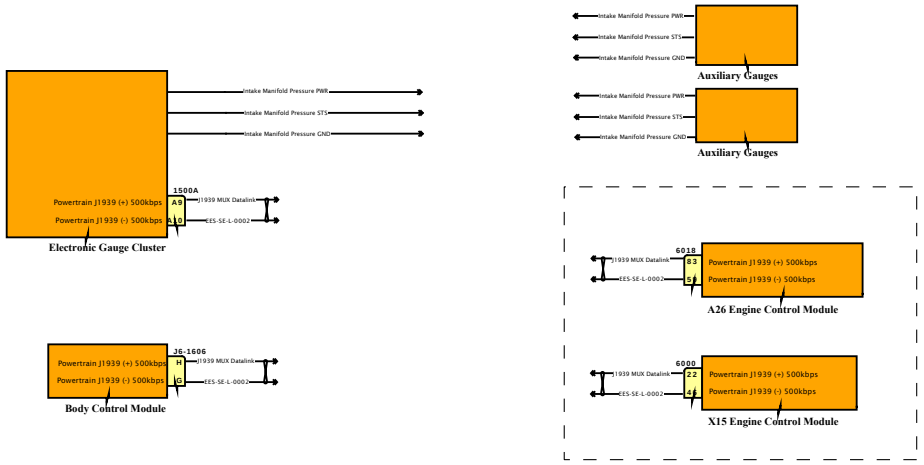

DESIGN DESCRIPTION

FEATURE CODES

SOFTWARE FEATURE CODES

NAVISTAR INC. CONFIDENTIAL PROPRIETARY

Diagram1

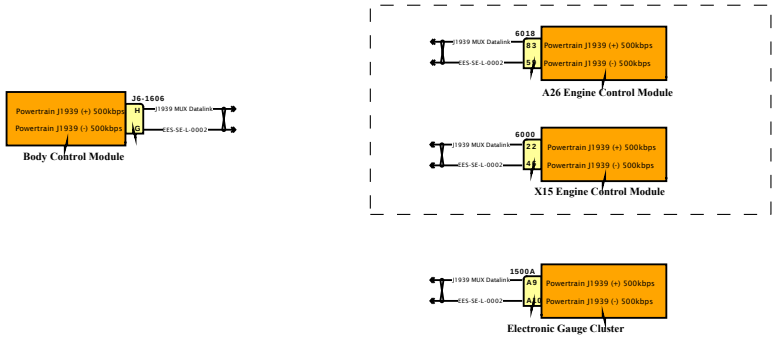

DESIGN DESCRIPTION

FEATURE CODES

SOFTWARE FEATURE CODES

NAVISTAR INC. CONFIDENTIAL PROPRIETARY

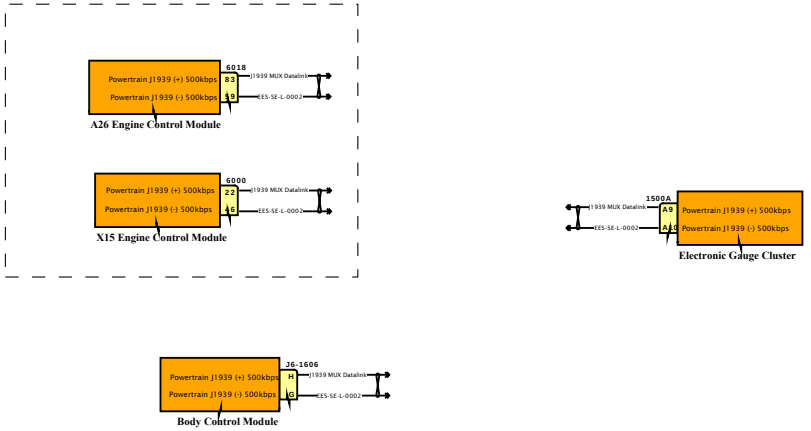

DESIGN DESCRIPTION

FEATURE CODES

SOFTWARE FEATURE CODES

NAVISTAR INC. CONFIDENTIAL PROPRIETARY

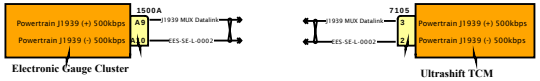

DESIGN DESCRIPTION

FEATURE CODES

SOFTWARE FEATURE CODES

NAVISTAR INC. CONFIDENTIAL PROPRIETARY

DESIGN DESCRIPTION

FEATURE CODES

SOFTWARE FEATURE CODES

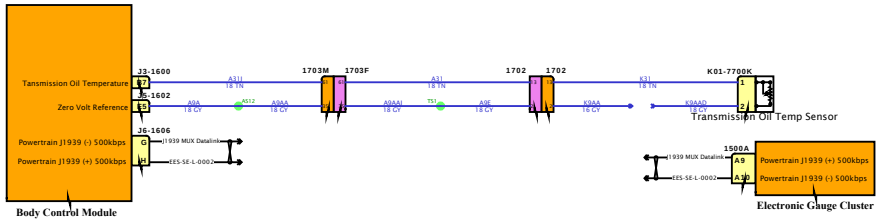

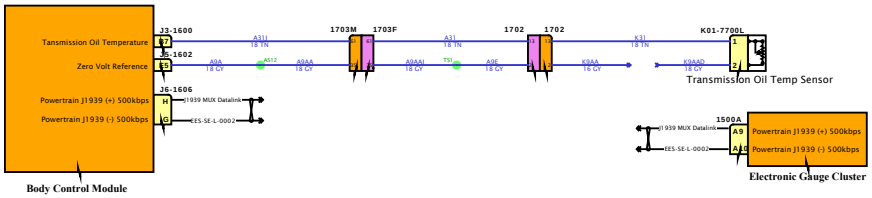

DESIGN DESCRIPTION

FEATURE CODES

SOFTWARE FEATURE CODES

NAVISTAR INC. CONFIDENTIAL PROPRIETARY

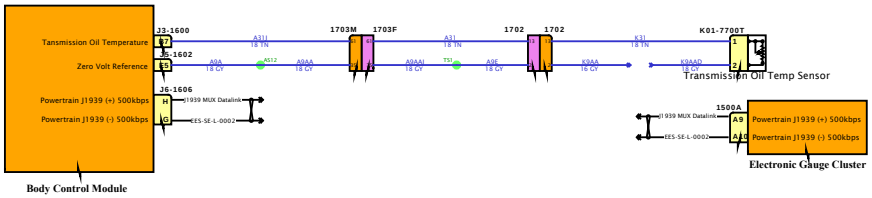

DESIGN DESCRIPTION

FEATURE CODES

SOFTWARE FEATURE CODES

NAVISTAR INC. CONFIDENTIAL PROPRIETARY

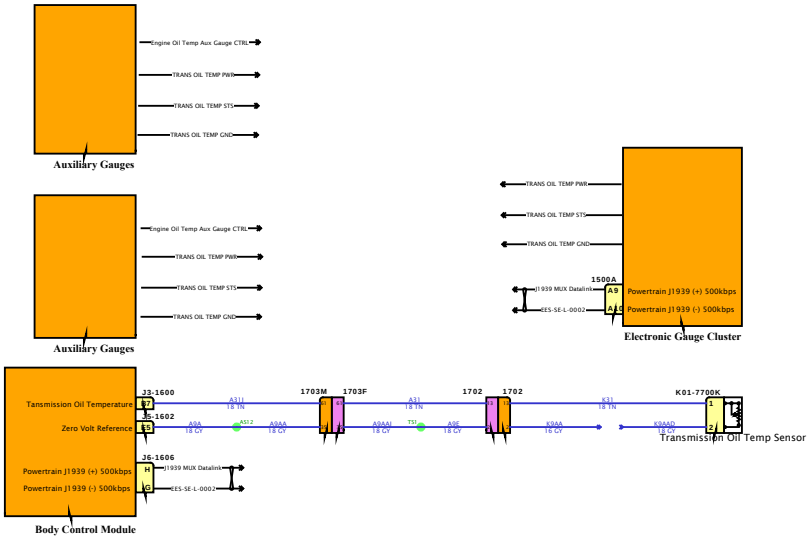

DESIGN DESCRIPTION

FEATURE CODES

SOFTWARE FEATURE CODES

NAVISTAR INC. CONFIDENTIAL PROPRIETARY

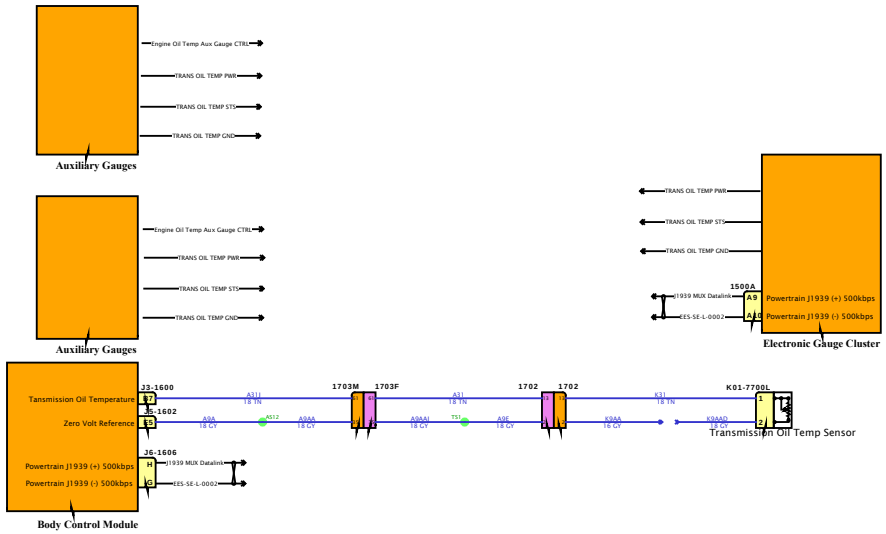

DESIGN DESCRIPTION

FEATURE CODES

SOFTWARE FEATURE CODES

NAVISTAR
NAVISTAR, INC. CONFIDENTIAL PROPRIETARY

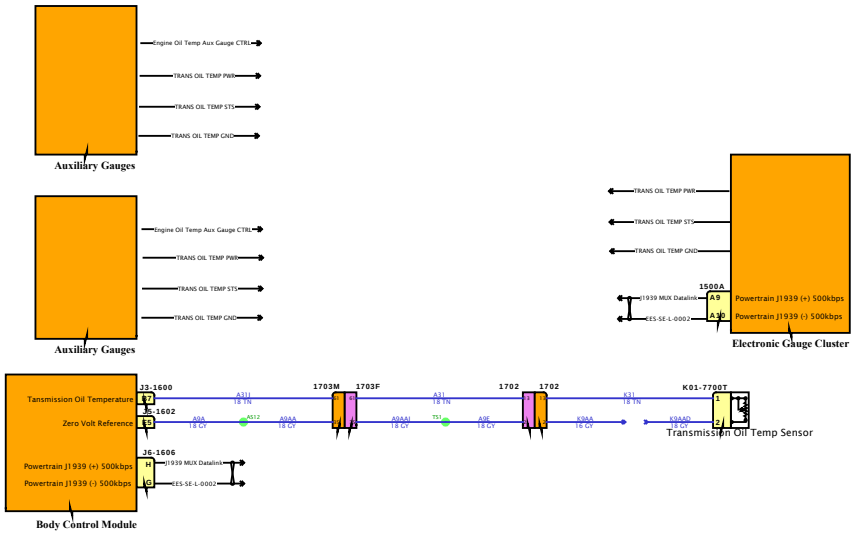
Engine Oil Temp Aux Gauge CTRL
TRANS OIL TEMP PWR
TRANS OIL TEMP STS
TRANS OIL TEMP GND
Auxiliary Gauges
Engine Oil Temp Aux Gauge CTRL
TRANS OIL TEMP PWR
TRANS OIL TEMP STS
TRANS OIL TEMP GND
Auxiliary Gauges
TRANS OIL TEMP PWR
TRANS OIL TEMP STS
TRANS OIL TEMP GND
1500A
A9
A10
J1939 MUX Datalink
CES-SE-L-0002
Powertrain J1939 (+) 500kbps
Powertrain J1939 (-) 500kbps
Electronic Gauge Cluster
J3-1600
J5-1602
J6-1606
Tansmission Oil Temperature
Zero Volt Reference
Powertrain J1939 (+) 500kbps
Powertrain J1939 (-) 500kbps
J1939 MUX Datalink
CES-SE-L-0002
Body Control Module
1703M
1703F
1702
1702
K01-7700T
Transmission Oil Temp Sensor

DESIGN DESCRIPTION

FEATURE CODES

SOFTWARE FEATURE CODES

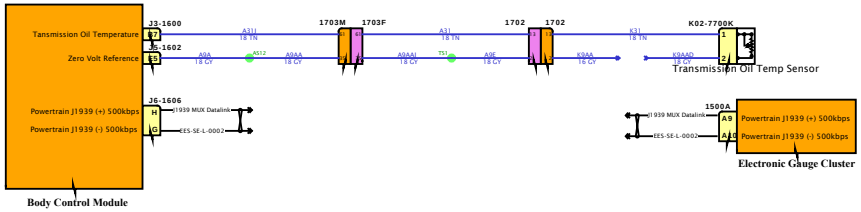

NAVISTAR INC. CONFIDENTIAL PROPRIETARY

DESIGN DESCRIPTION

FEATURE CODES

SOFTWARE FEATURE CODES

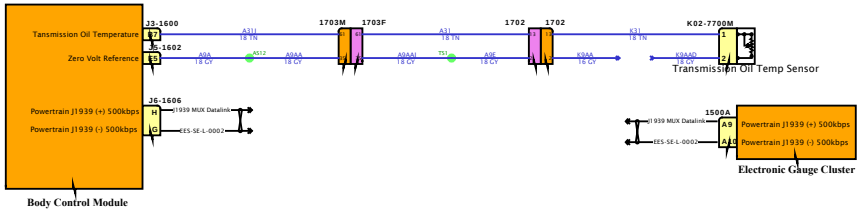

NAVISTAR INC. CONFIDENTIAL PROPRIETARY

DESIGN DESCRIPTION

FEATURE CODES

SOFTWARE FEATURE CODES

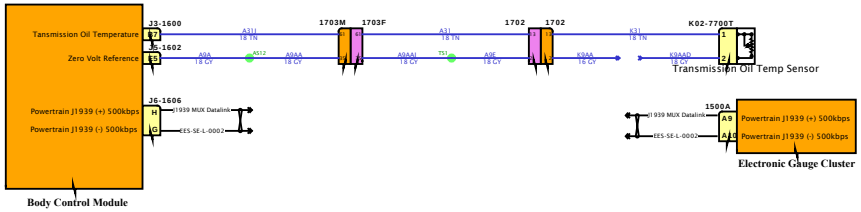

Diagram1

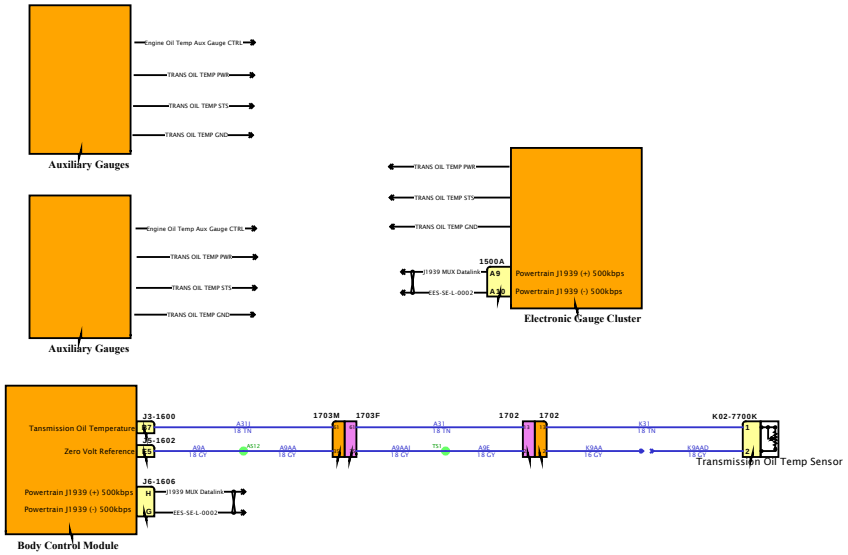

DESIGN DESCRIPTION

FEATURE CODES

SOFTWARE FEATURE CODES

NAVISTAR INC. CONFIDENTIAL PROPRIETARY

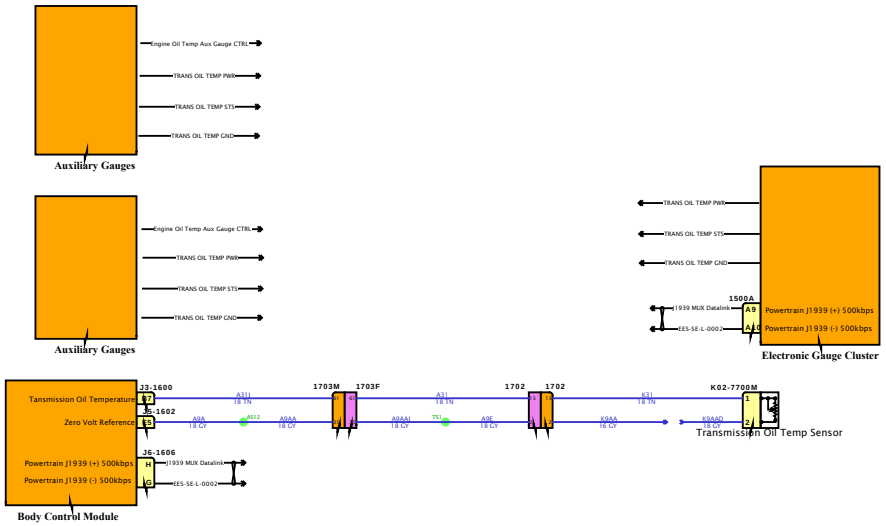

DESIGN DESCRIPTION

FEATURE CODES

SOFTWARE FEATURE CODES

NAVISTAR INC. CONFIDENTIAL PROPRIETARY

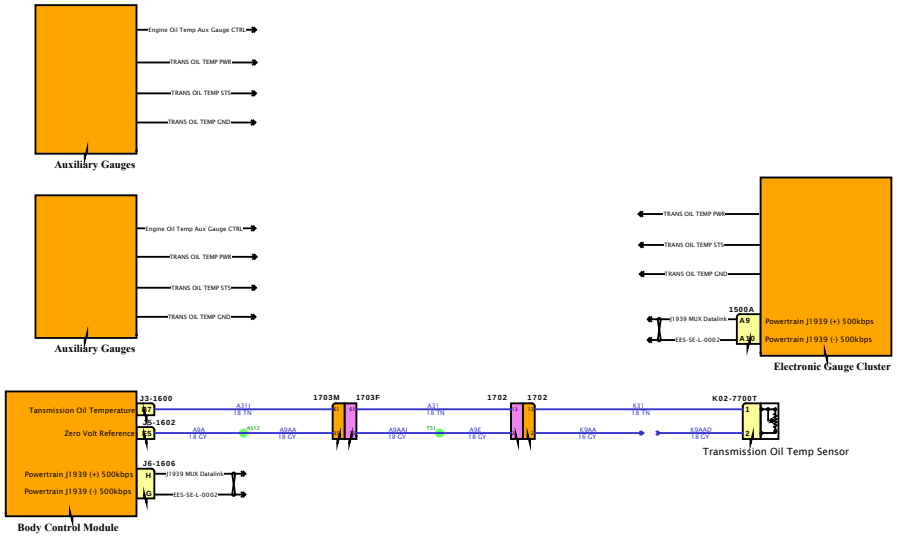

DESIGN DESCRIPTION

FEATURE CODES

SOFTWARE FEATURE CODES

NAVISTAR INC. CONFIDENTIAL PROPRIETARY

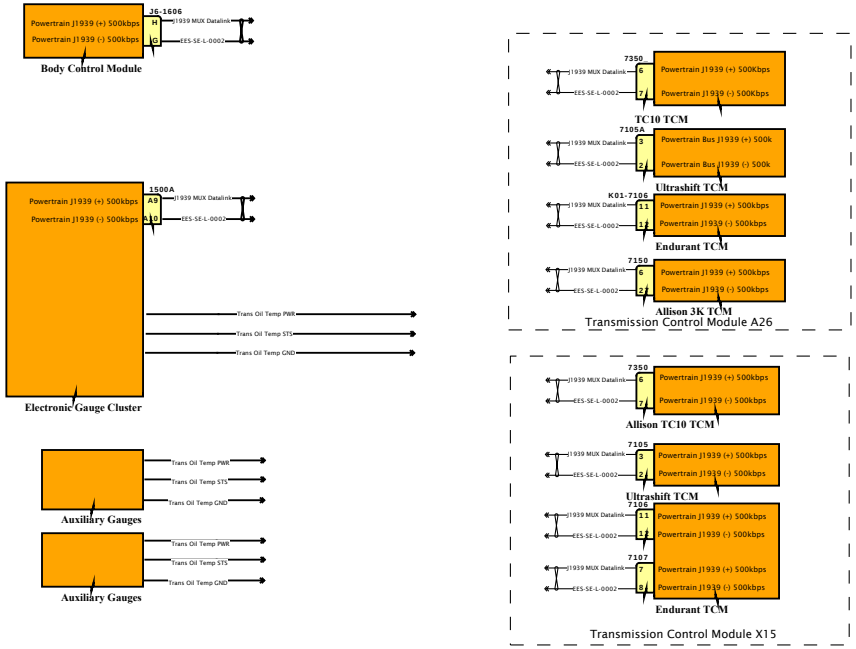

DESIGN DESCRIPTION

FEATURE CODES

SOFTWARE FEATURE CODES

NAVISTAR INC. CONFIDENTIAL PROPRIETARY

Diagram1

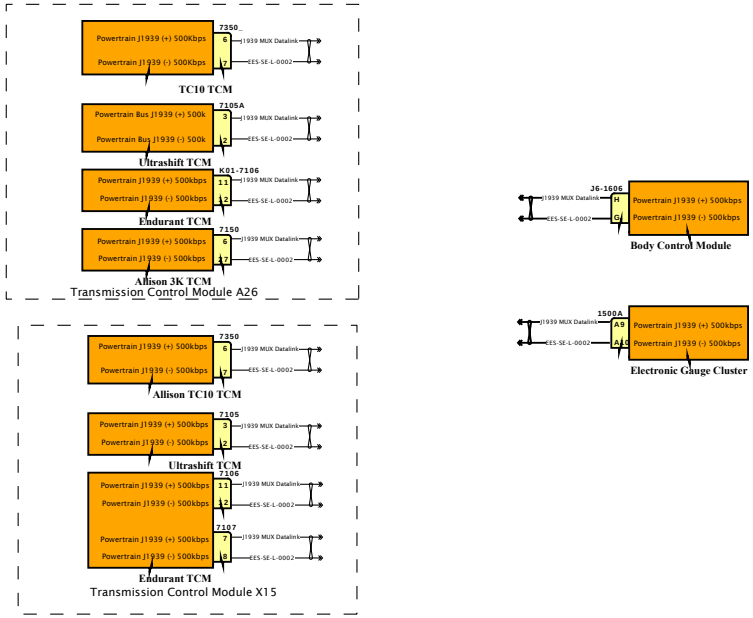

DESIGN DESCRIPTION

FEATURE CODES

SOFTWARE FEATURE CODES

NAVISTAR
NAVISTAR, INC. CONFIDENTIAL PROPRIETARY

Diagram1

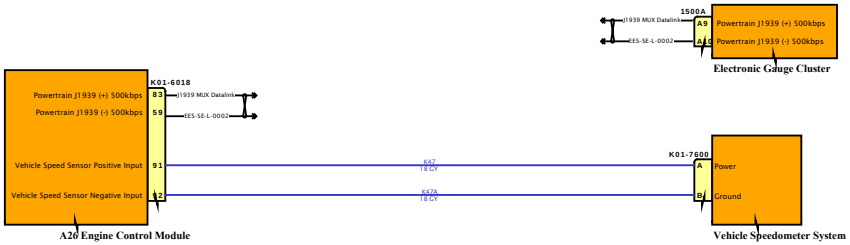

DESIGN DESCRIPTION

FEATURE CODES

SOFTWARE FEATURE CODES

NAVISTAR
NAVISTAR, INC. CONFIDENTIAL PROPRIETARY

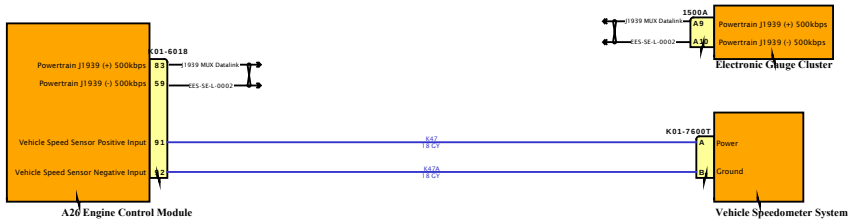

DESIGN DESCRIPTION

FEATURE CODES

SOFTWARE FEATURE CODES

NAVISTAR
NAVISTAR, INC. CONFIDENTIAL PROPRIETARY

Diagram1

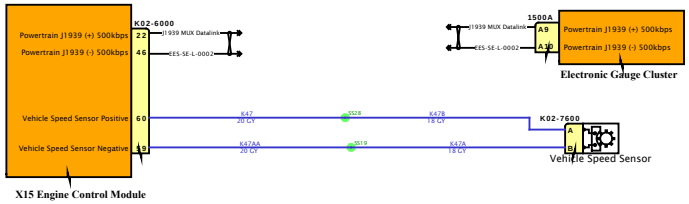

DESIGN DESCRIPTION

FEATURE CODES

SOFTWARE FEATURE CODES

NAVISTAR INC. CONFIDENTIAL PROPRIETARY

Diagram1

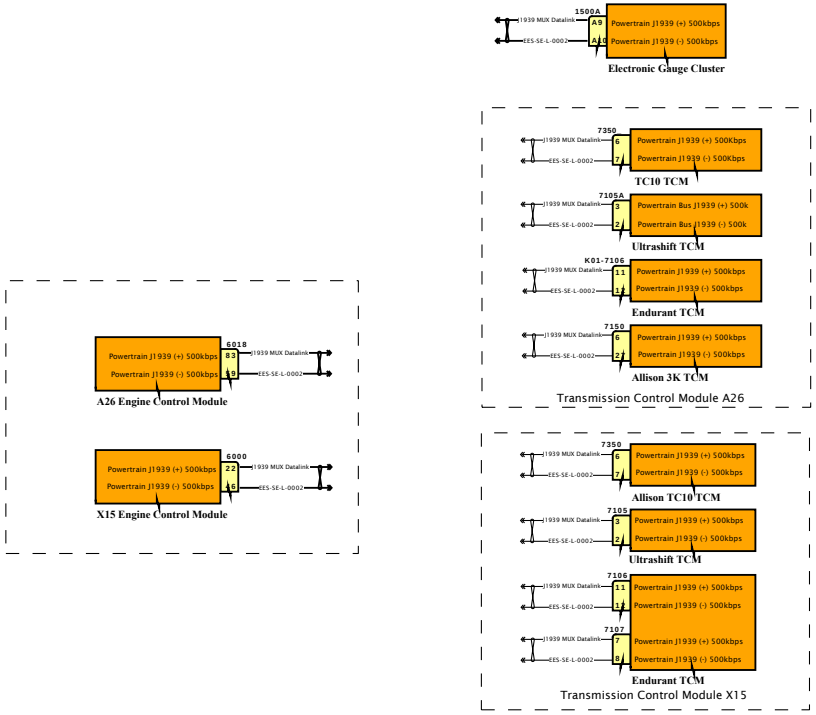

DESIGN DESCRIPTION

FEATURE CODES

SOFTWARE FEATURE CODES

NAVISTAR INC. CONFIDENTIAL PROPRIETARY

Diagram1

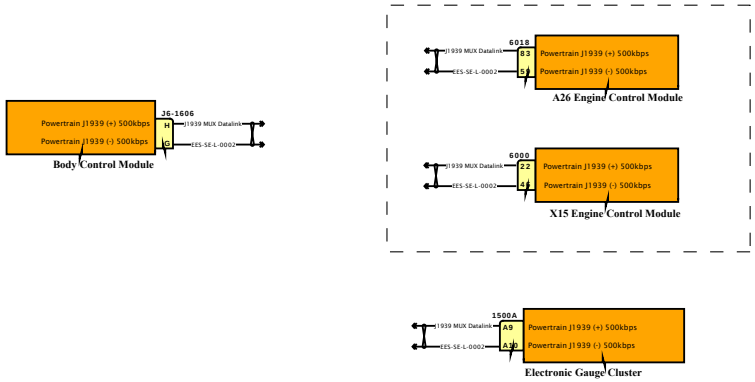

DESIGN DESCRIPTION

FEATURE CODES

SOFTWARE FEATURE CODES

NAVISTAR INC. CONFIDENTIAL PROPRIETARY

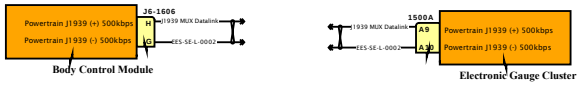

DESIGN DESCRIPTION

FEATURE CODES

SOFTWARE FEATURE CODES

NAVISTAR INC. CONFIDENTIAL PROPRIETARY

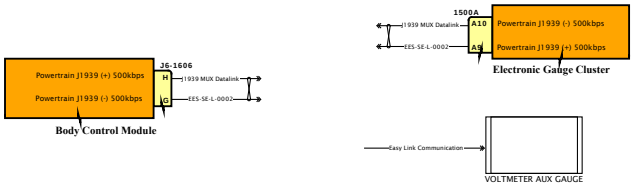

DESIGN DESCRIPTION

FEATURE CODES

SOFTWARE FEATURE CODES

NAVISTAR INC. CONFIDENTIAL PROPRIETARY

Diagram1

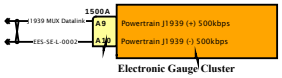

DESIGN DESCRIPTION

FEATURE CODES

SOFTWARE FEATURE CODES

NAVISTAR INC. CONFIDENTIAL PROPRIETARY



DESIGN DESCRIPTION

FEATURE CODES

SOFTWARE FEATURE CODES

NAVISTAR INC. CONFIDENTIAL PROPRIETARY

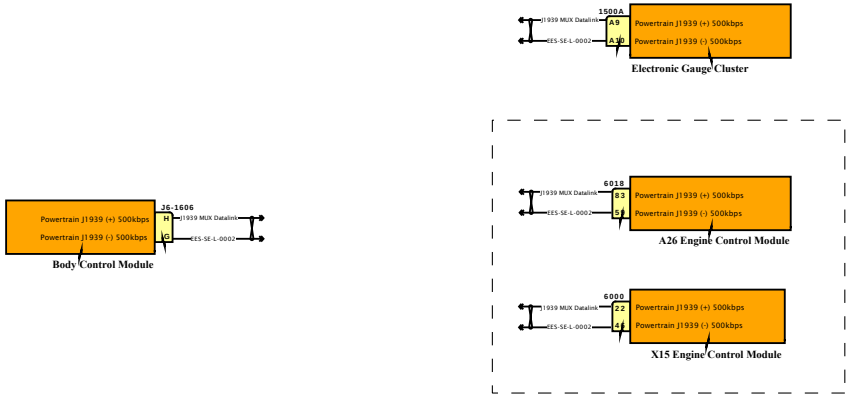

DESIGN DESCRIPTION

FEATURE CODES

SOFTWARE FEATURE CODES

NAVISTAR INC. CONFIDENTIAL PROPRIETARY

Diagram1

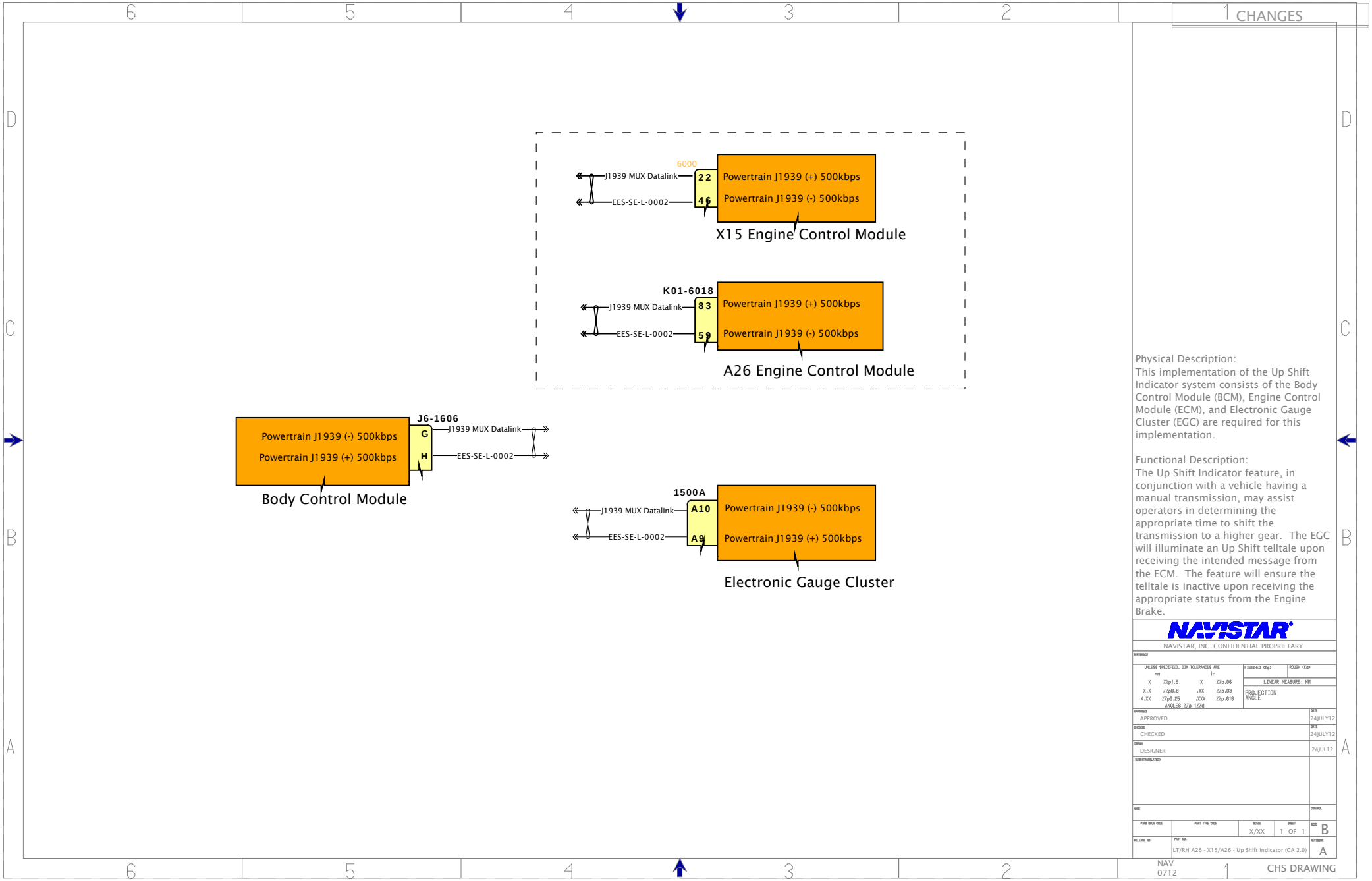
CHANGES
6000
J1939 MUX Datalink
EES-SE-L-0002
22
46
Powertrain J1939 (+) 500kbps
Powertrain J1939 (-) 500kbps
X15 Engine Control Module
K01-6018
J1939 MUX Datalink
EES-SE-L-0002
83
59
Powertrain J1939 (+) 500kbps
Powertrain J1939 (-) 500kbps
A26 Engine Control Module
J6-1606
Powertrain J1939 (-) 500kbps
Powertrain J1939 (+) 500kbps
G
H
J1939 MUX Datalink
EES-SE-L-0002
Body Control Module
1500A
J1939 MUX Datalink
EES-SE-L-0002
A10
A9
Powertrain J1939 (-) 500kbps
Powertrain J1939 (+) 500kbps
Electronic Gauge Cluster
Physical Description:
This implementation of the Up Shift Indicator system consists of the Body Control Module (BCM), Engine Control Module (ECM), and Electronic Gauge Cluster (EGC) are required for this implementation.
Functional Description:
The Up Shift Indicator feature, in conjunction with a vehicle having a manual transmission, may assist operators in determining the appropriate time to shift the transmission to a higher gear. The EGC will illuminate an Up Shift telltale upon receiving the intended message from the ECM. The feature will ensure the telltale is inactive upon receiving the appropriate status from the Engine Brake.
NAVISTAR
NAVISTAR, INC. CONFIDENTIAL PROPRIETARY
APPROVED
24JULY12
CHECKED
24JULY12
DESIGNER
24JUL12
X/XX
1 OF 1
B
LT/RH A26 - X15/A26 - Up Shift Indicator (CA 2.0)
A
NAV
0712
CHS DRAWING

Diagram1

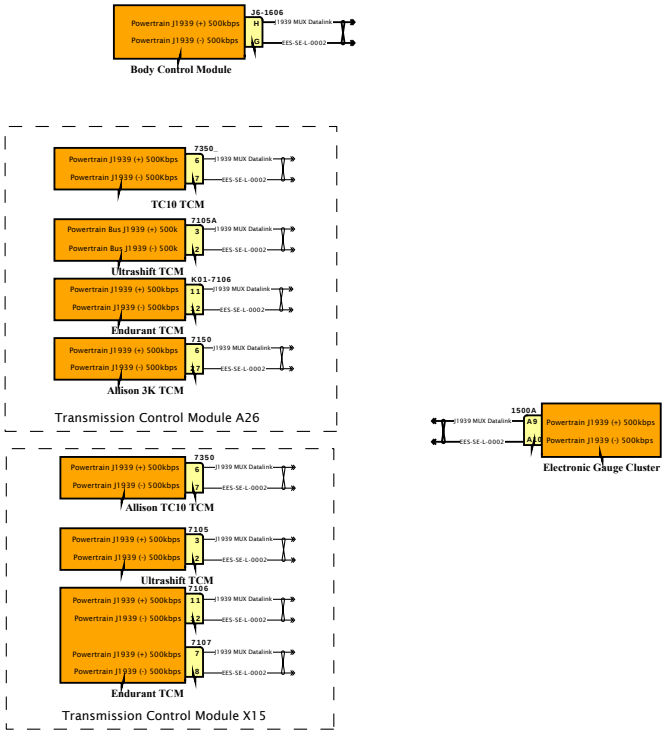

DESIGN DESCRIPTION

FEATURE CODES

SOFTWARE FEATURE CODES

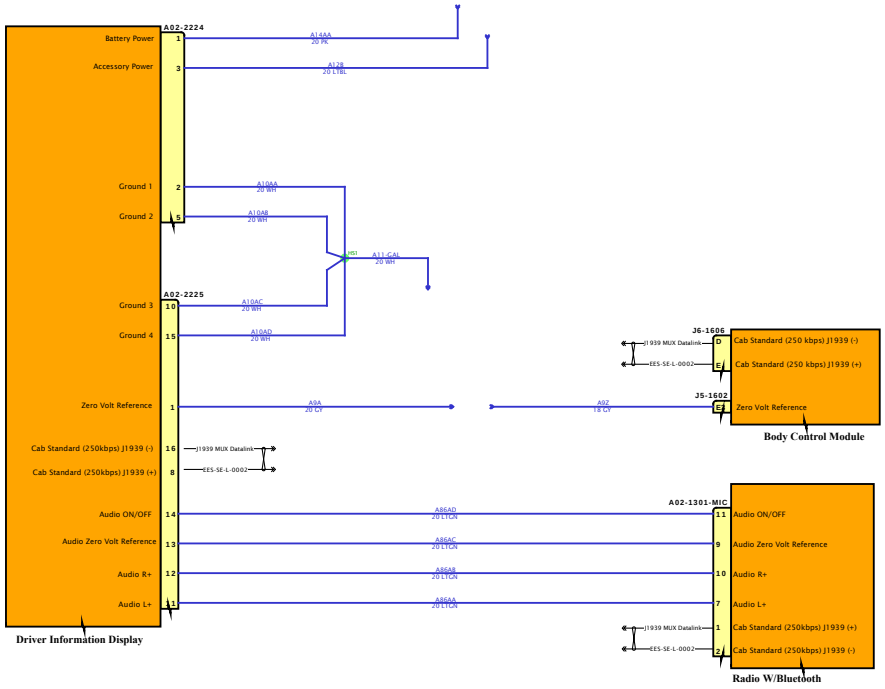

DESIGN DESCRIPTION

FEATURE CODES

SOFTWARE FEATURE CODES

NAVISTAR INC. CONFIDENTIAL PROPRIETARY

DESIGN DESCRIPTION

FEATURE CODES

SOFTWARE FEATURE CODES

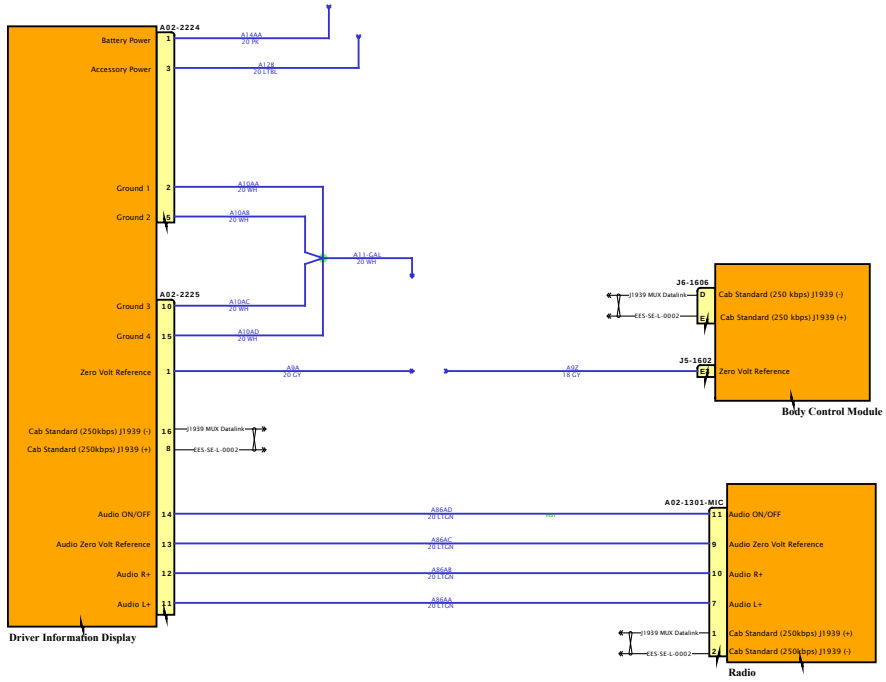

NAVISTAR
NAVISTAR, INC. CONFIDENTIAL PROPRIETARY

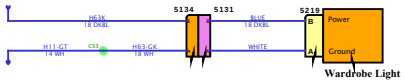

DESIGN DESCRIPTION

FEATURE CODES

SOFTWARE FEATURE CODES

NAVISTAR INC. CONFIDENTIAL PROPRIETARY

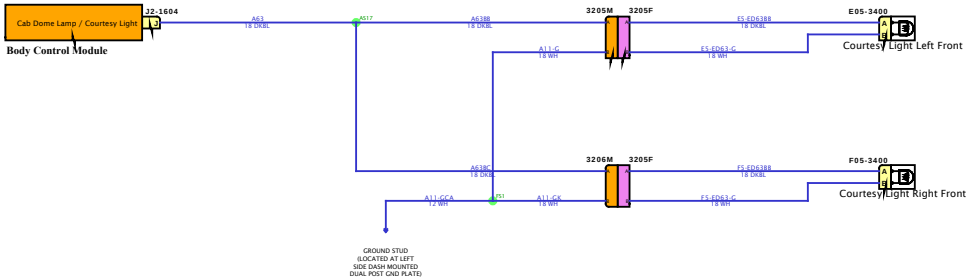

DESIGN DESCRIPTION

FEATURE CODES

SOFTWARE FEATURE CODES

NAVISTAR INC. CONFIDENTIAL PROPRIETARY

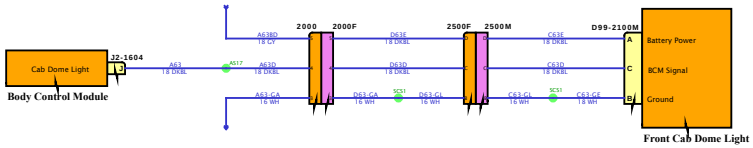

DESIGN DESCRIPTION

FEATURE CODES

SOFTWARE FEATURE CODES

NAVISTAR INC. CONFIDENTIAL PROPRIETARY

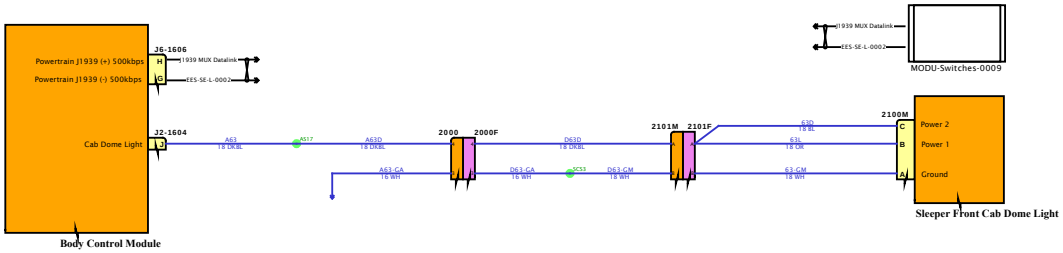

DESIGN DESCRIPTION

FEATURE CODES

SOFTWARE FEATURE CODES

NAVISTAR
NAVISTAR, INC. CONFIDENTIAL PROPRIETARY

Diagram1

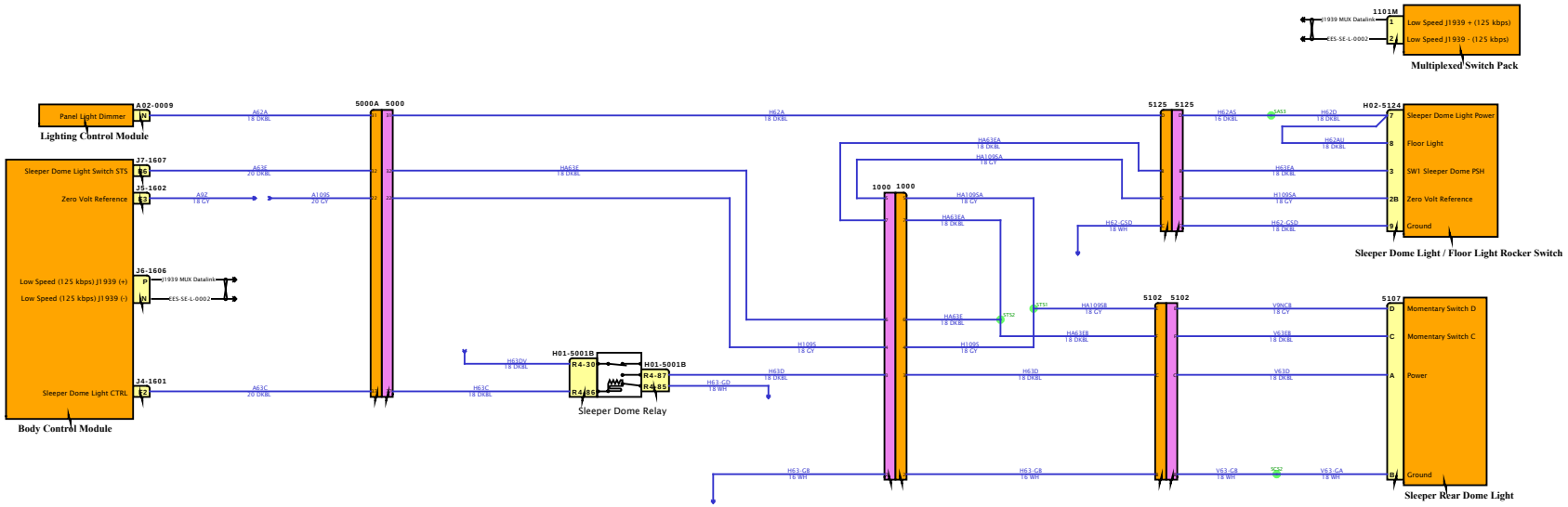

DESIGN DESCRIPTION

FEATURE CODES

SOFTWARE FEATURE CODES

NAVISTAR INC. CONFIDENTIAL PROPRIETARY

Diagram1

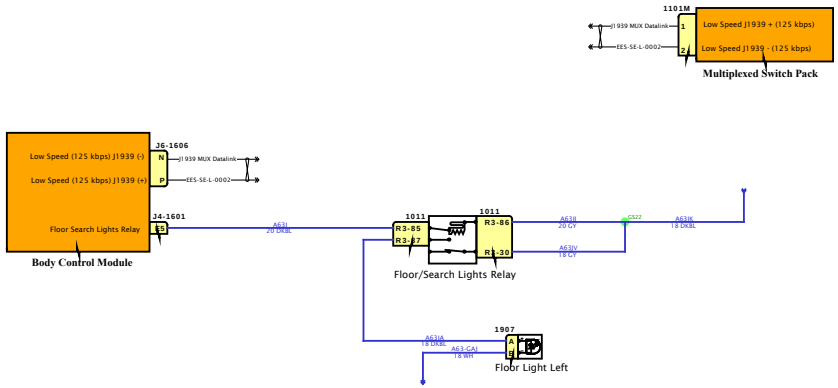

DESIGN DESCRIPTION

FEATURE CODES

SOFTWARE FEATURE CODES

NAVISTAR
NAVISTAR, INC. CONFIDENTIAL PROPRIETARY

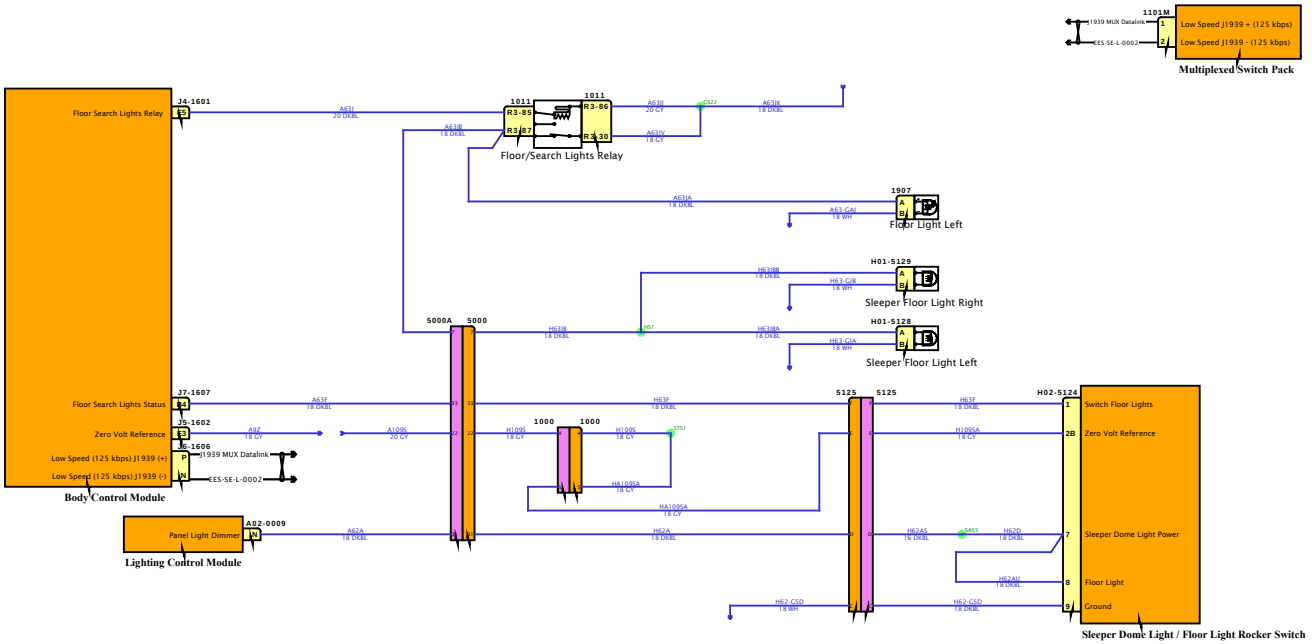

DESIGN DESCRIPTION

FEATURE CODES

SOFTWARE FEATURE CODES

NAVISTAR INC. CONFIDENTIAL PROPRIETARY

Diagram1

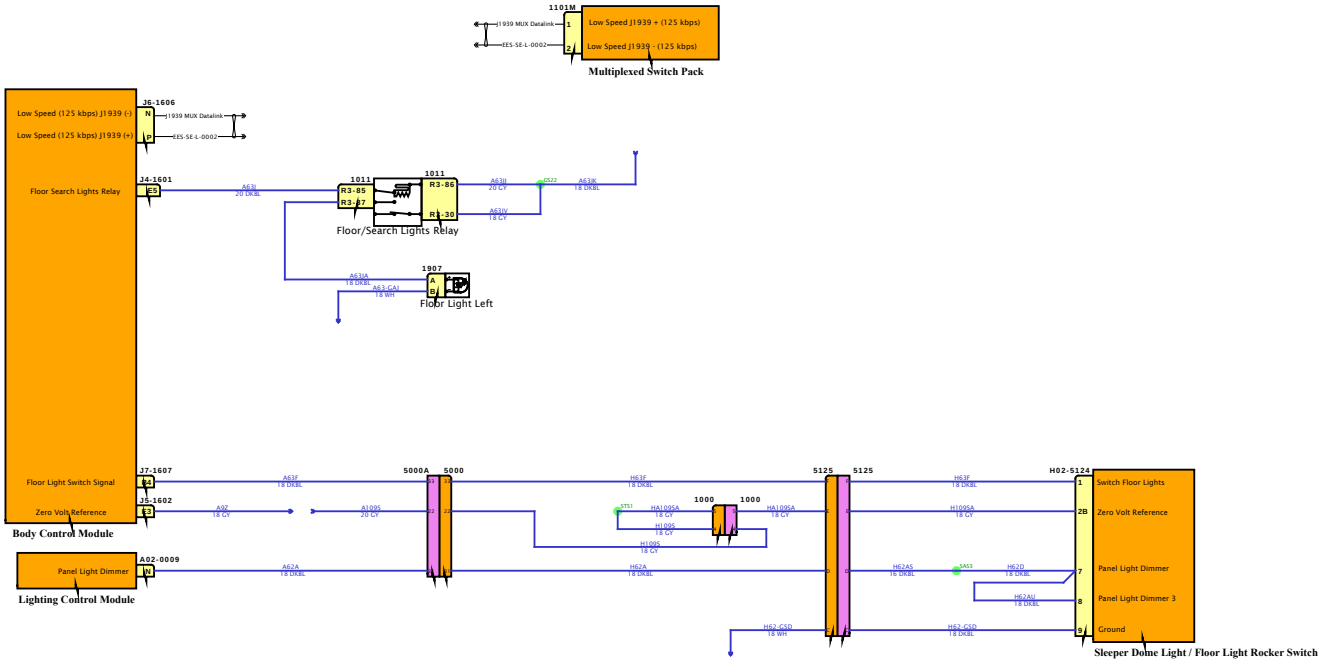

DESIGN DESCRIPTION

FEATURE CODES

SOFTWARE FEATURE CODES

NAVISTAR
NAVISTAR, INC. CONFIDENTIAL PROPRIETARY

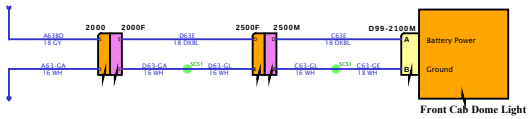

DESIGN DESCRIPTION

FEATURE CODES

SOFTWARE FEATURE CODES

NAVISTAR INC. CONFIDENTIAL PROPRIETARY

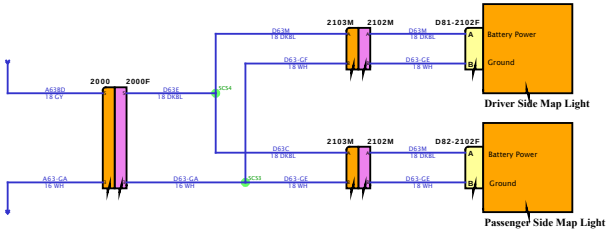

DESIGN DESCRIPTION

FEATURE CODES

SOFTWARE FEATURE CODES

NAVISTAR INC. CONFIDENTIAL PROPRIETARY

Diagram1

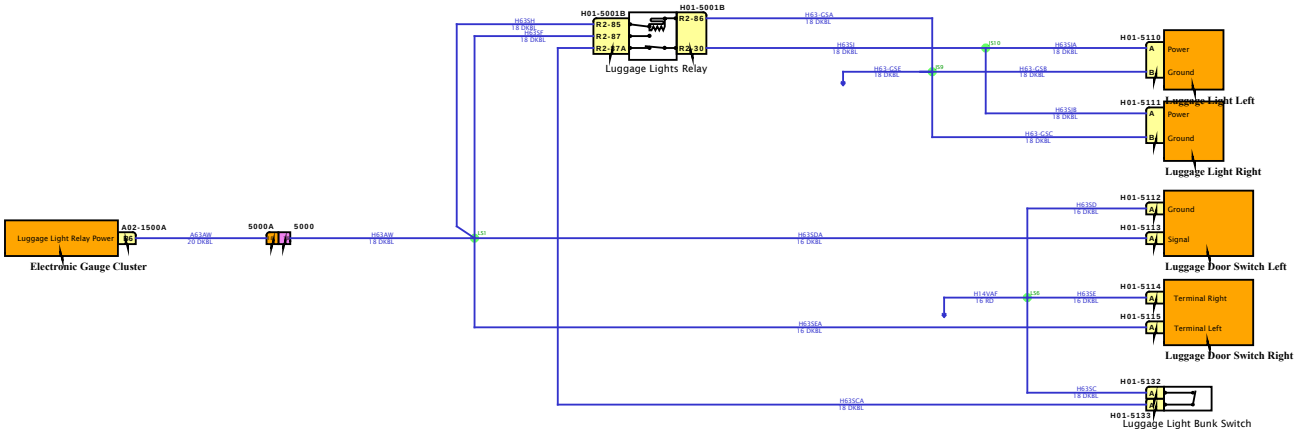

DESIGN DESCRIPTION

FEATURE CODES

SOFTWARE FEATURE CODES

Diagram1

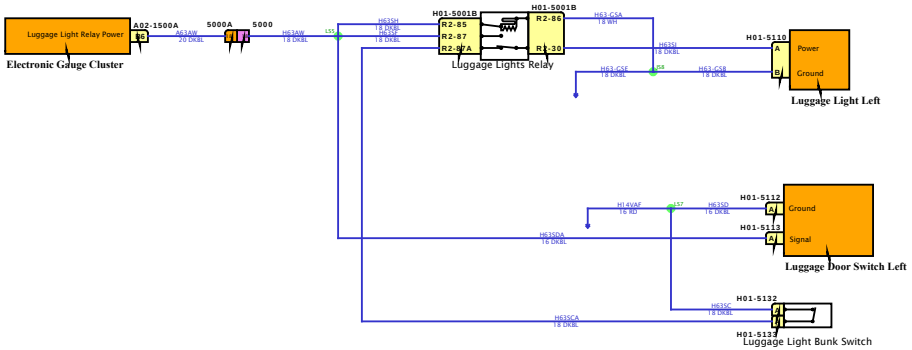

DESIGN DESCRIPTION

FEATURE CODES

SOFTWARE FEATURE CODES

NAVISTAR INC. CONFIDENTIAL PROPRIETARY

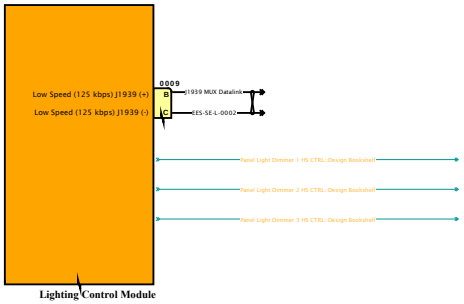

DESIGN DESCRIPTION

FEATURE CODES

SOFTWARE FEATURE CODES

NAVISTAR INC. CONFIDENTIAL PROPRIETARY

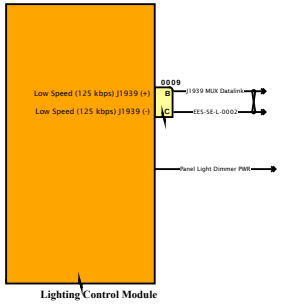

DESIGN DESCRIPTION

FEATURE CODES

SOFTWARE FEATURE CODES

NAVISTAR INC. CONFIDENTIAL PROPRIETARY

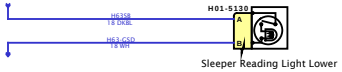

DESIGN DESCRIPTION

FEATURE CODES

SOFTWARE FEATURE CODES

NAVISTAR

NAVISTAR, INC. CONFIDENTIAL PROPRIETARY

Diagram1

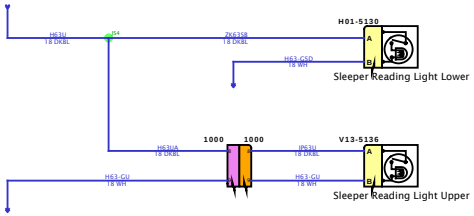

DESIGN DESCRIPTION

FEATURE CODES

SOFTWARE FEATURE CODES

NAVISTAR INC. CONFIDENTIAL PROPRIETARY

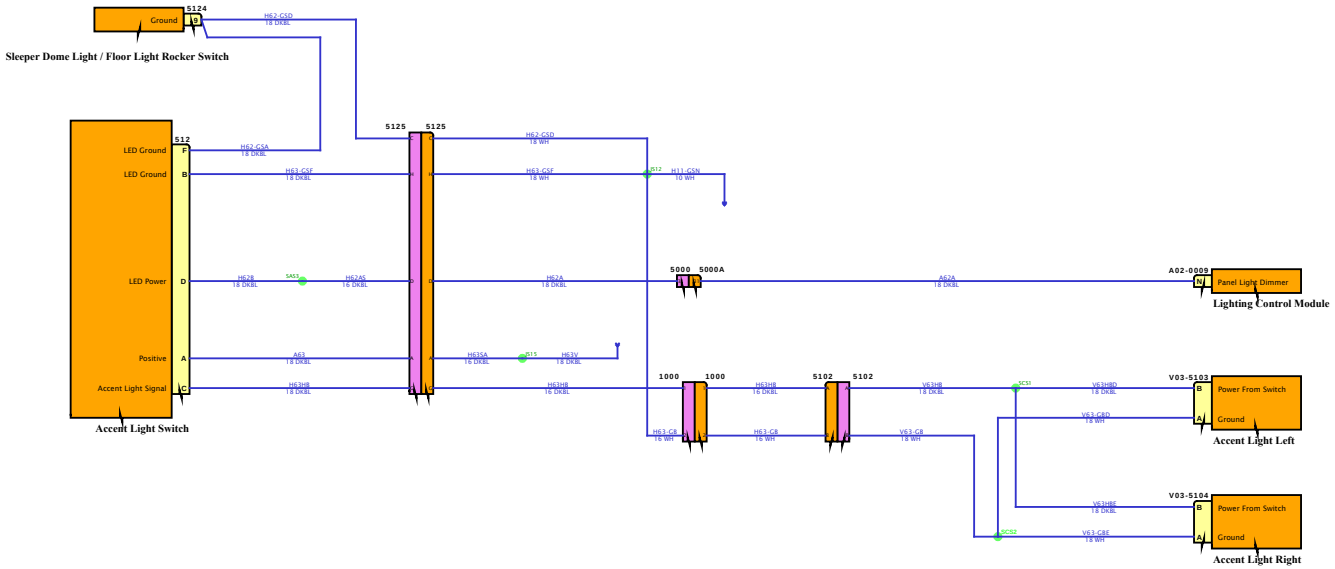

DESIGN DESCRIPTION

FEATURE CODES

SOFTWARE FEATURE CODES

Diagram1

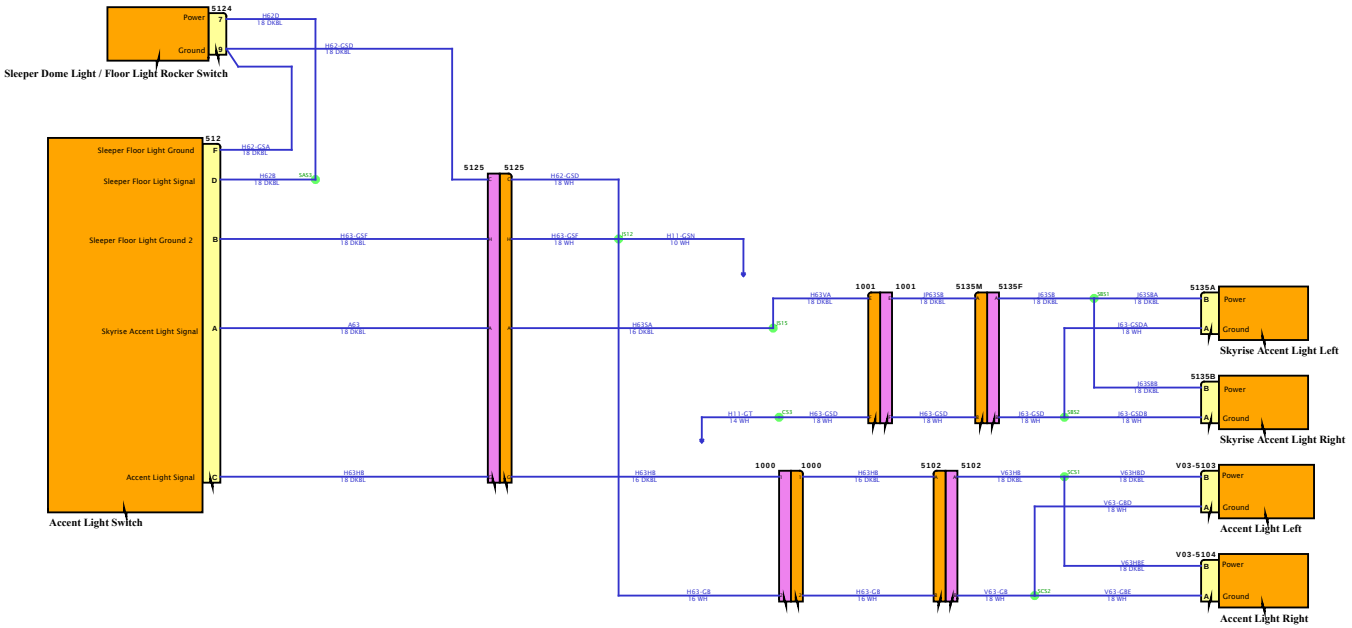

DESIGN DESCRIPTION

FEATURE CODES

SOFTWARE FEATURE CODES

NAVISTAR
NAVISTAR, INC. CONFIDENTIAL PROPRIETARY

Diagram1

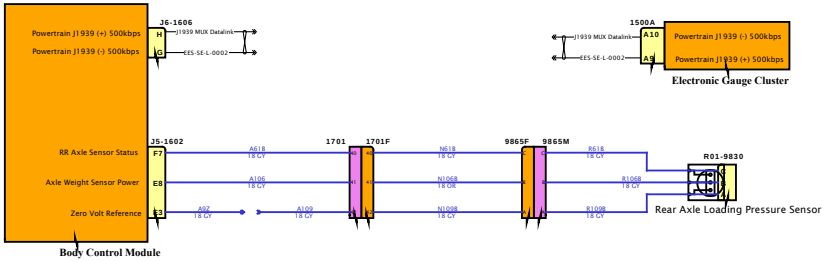

DESIGN DESCRIPTION

FEATURE CODES

SOFTWARE FEATURE CODES

NAVISTAR
NAVISTAR, INC. CONFIDENTIAL PROPRIETARY

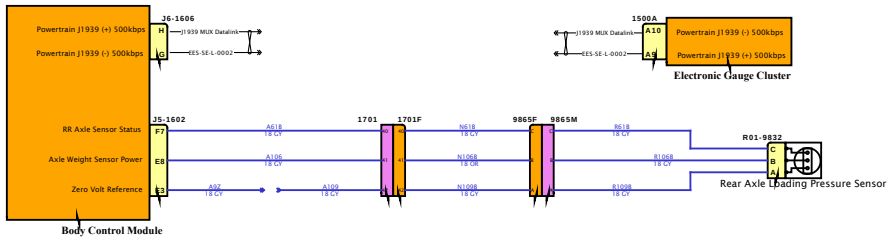

DESIGN DESCRIPTION

FEATURE CODES

SOFTWARE FEATURE CODES

NAVISTAR
NAVISTAR, INC. CONFIDENTIAL PROPRIETARY

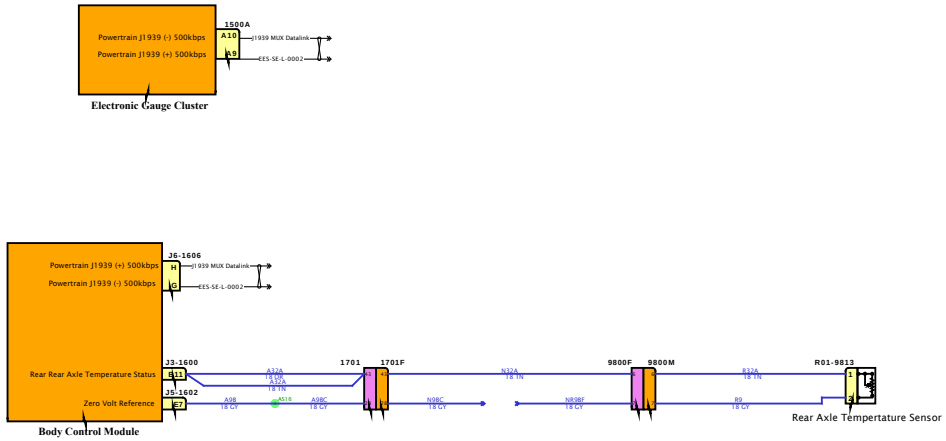

DESIGN DESCRIPTION

FEATURE CODES

SOFTWARE FEATURE CODES

NAVISTAR INC. CONFIDENTIAL PROPRIETARY

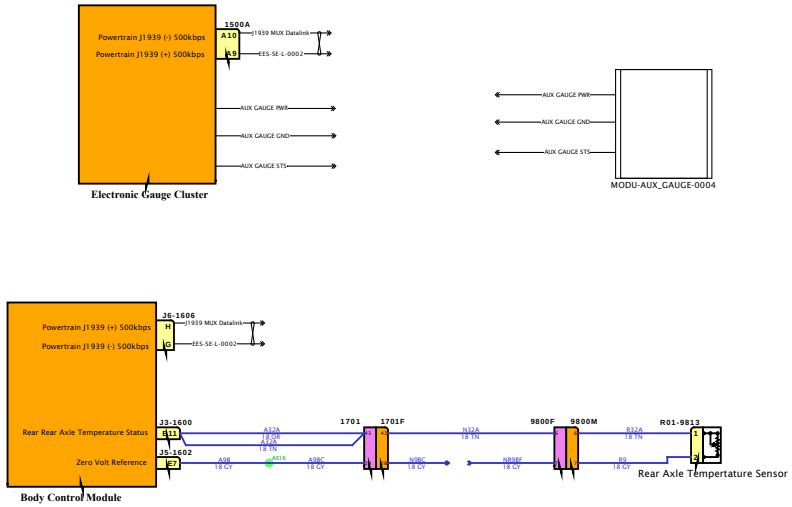

DESIGN DESCRIPTION

FEATURE CODES

SOFTWARE FEATURE CODES

NAVISTAR INC. CONFIDENTIAL PROPRIETARY

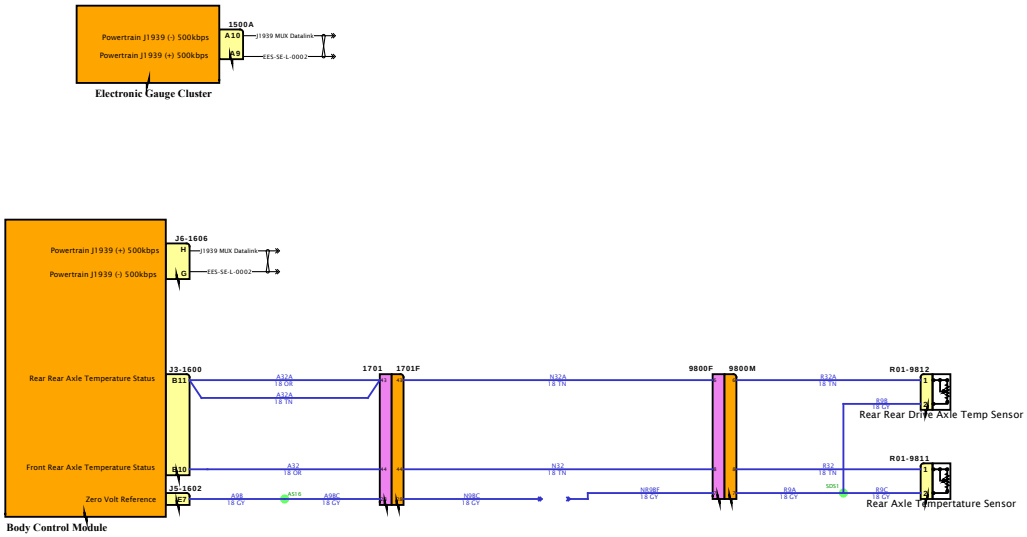

DESIGN DESCRIPTION

FEATURE CODES

SOFTWARE FEATURE CODES

NAVISTAR INC. CONFIDENTIAL PROPRIETARY

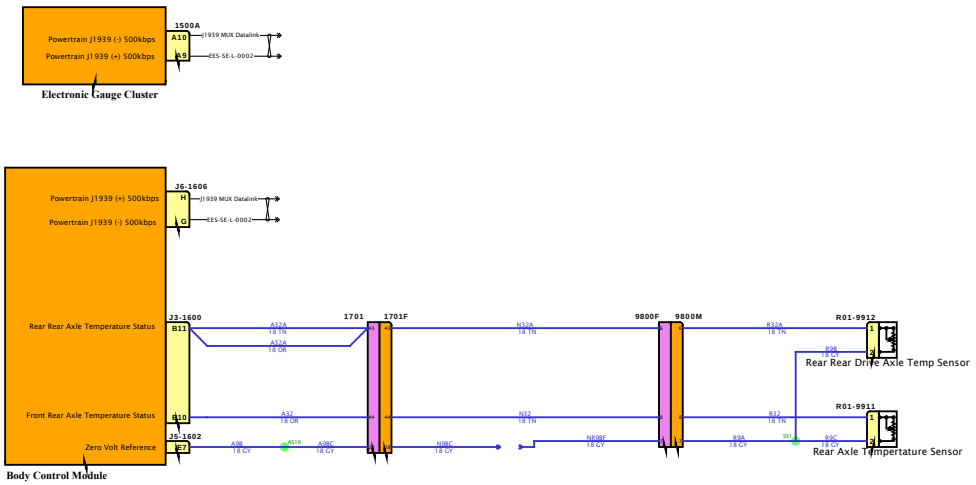

DESIGN DESCRIPTION

FEATURE CODES

SOFTWARE FEATURE CODES

NAVISTAR
NAVISTAR, INC. CONFIDENTIAL PROPRIETARY

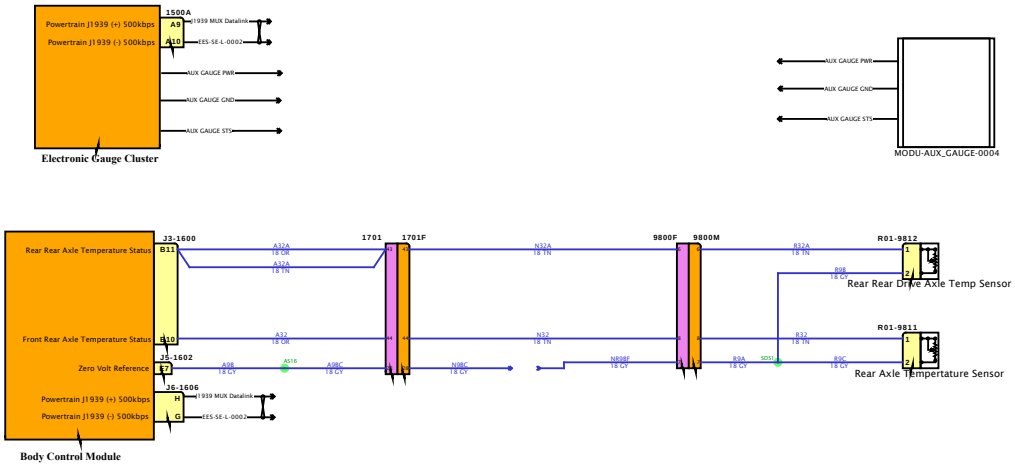

DESIGN DESCRIPTION

FEATURE CODES

SOFTWARE FEATURE CODES

NAVISTAR INC. CONFIDENTIAL PROPRIETARY

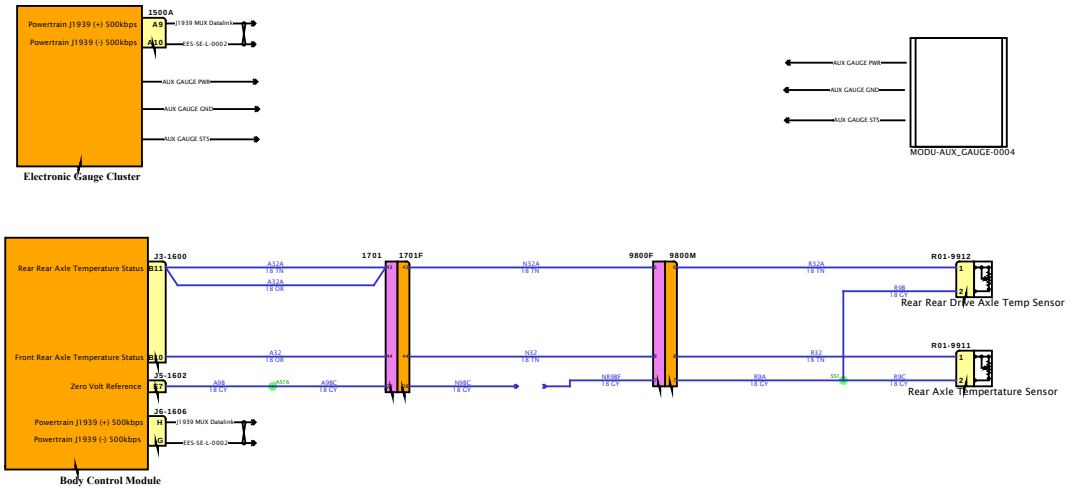

DESIGN DESCRIPTION

FEATURE CODES

SOFTWARE FEATURE CODES

NAVISTAR
NAVISTAR, INC. CONFIDENTIAL PROPRIETARY

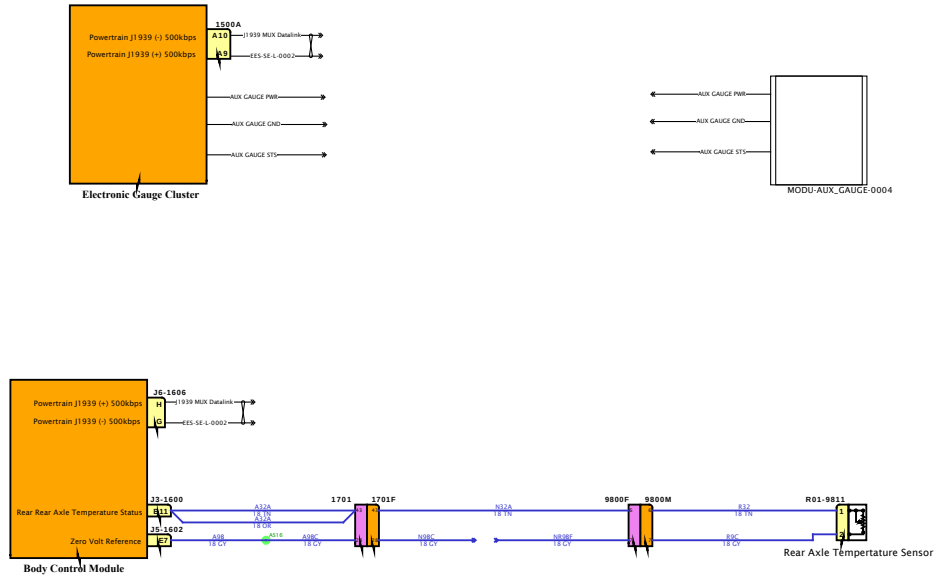

DESIGN DESCRIPTION

FEATURE CODES

SOFTWARE FEATURE CODES

NAVISTAR INC. CONFIDENTIAL PROPRIETARY

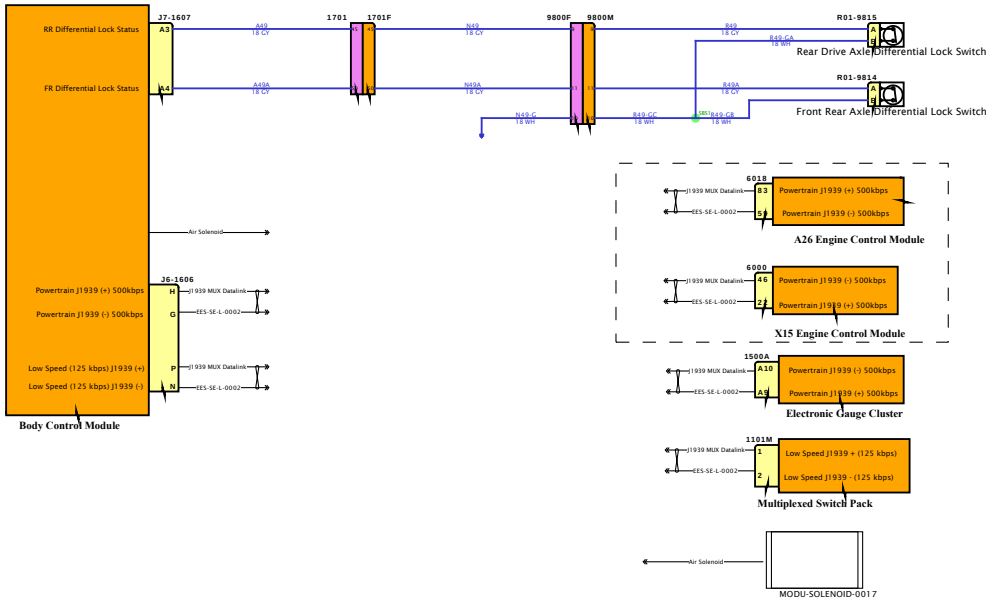

DESIGN DESCRIPTION

FEATURE CODES

SOFTWARE FEATURE CODES

NAVISTAR
NAVISTAR, INC. CONFIDENTIAL PROPRIETARY

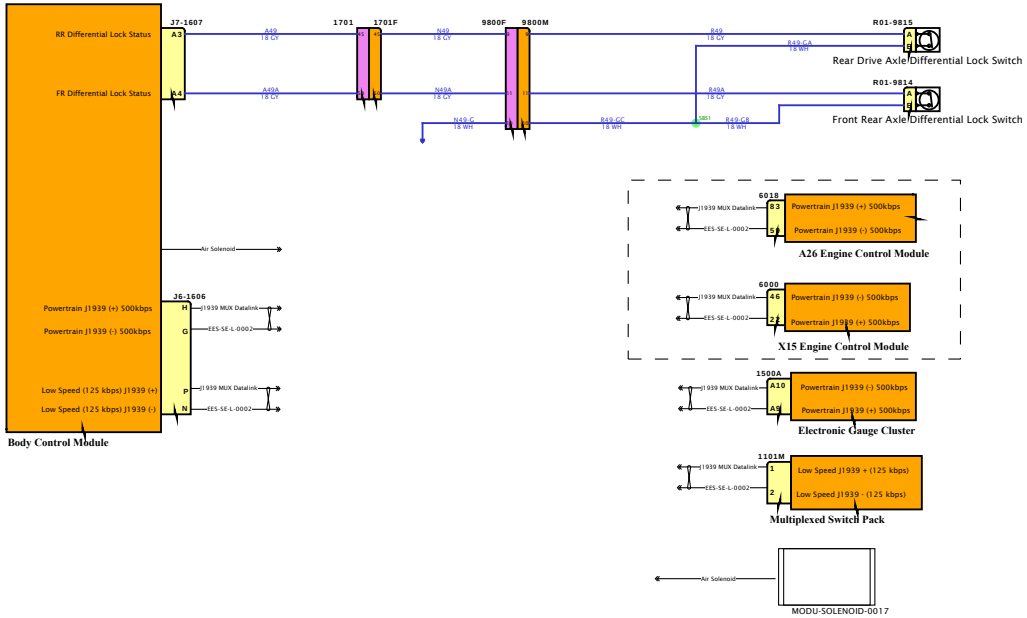

DESIGN DESCRIPTION

FEATURE CODES

SOFTWARE FEATURE CODES

Diagram1

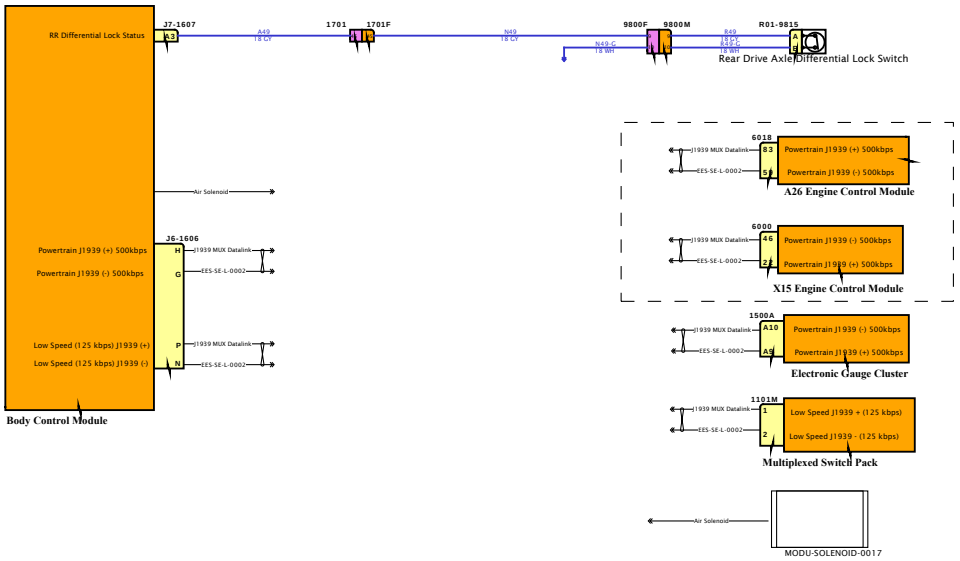

DESIGN DESCRIPTION

FEATURE CODES

SOFTWARE FEATURE CODES

NAVISTAR
NAVISTAR, INC. CONFIDENTIAL PROPRIETARY

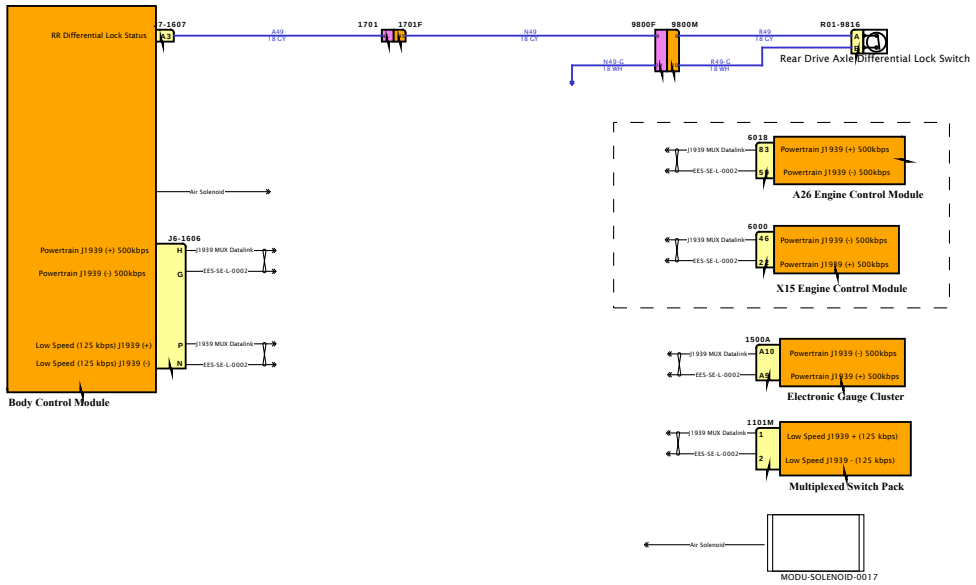

DESIGN DESCRIPTION

FEATURE CODES

SOFTWARE FEATURE CODES

NAVISTAR
NAVISTAR, INC. CONFIDENTIAL PROPRIETARY

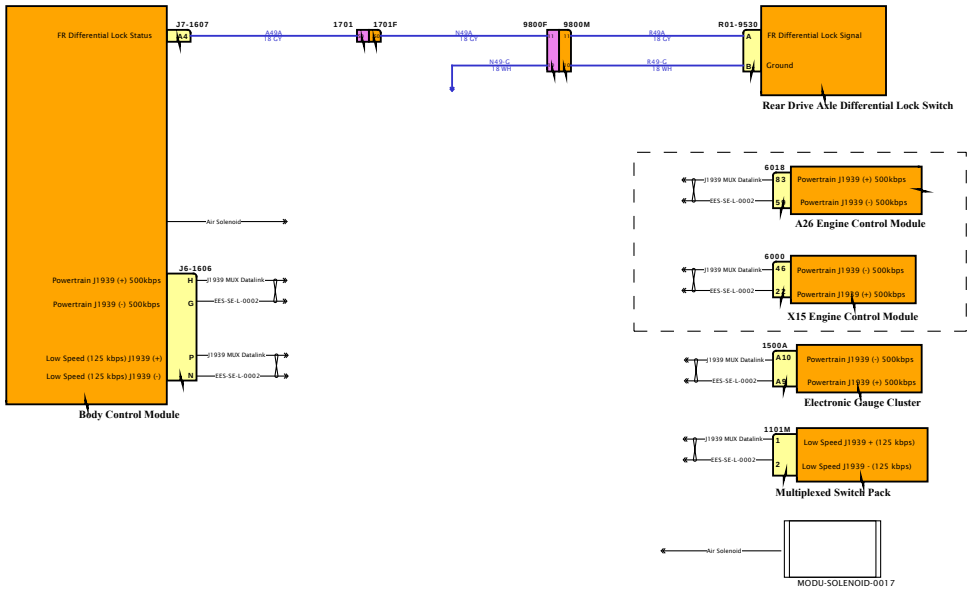

DESIGN DESCRIPTION

FEATURE CODES

SOFTWARE FEATURE CODES

NAVISTAR INC. CONFIDENTIAL PROPRIETARY

Diagram1

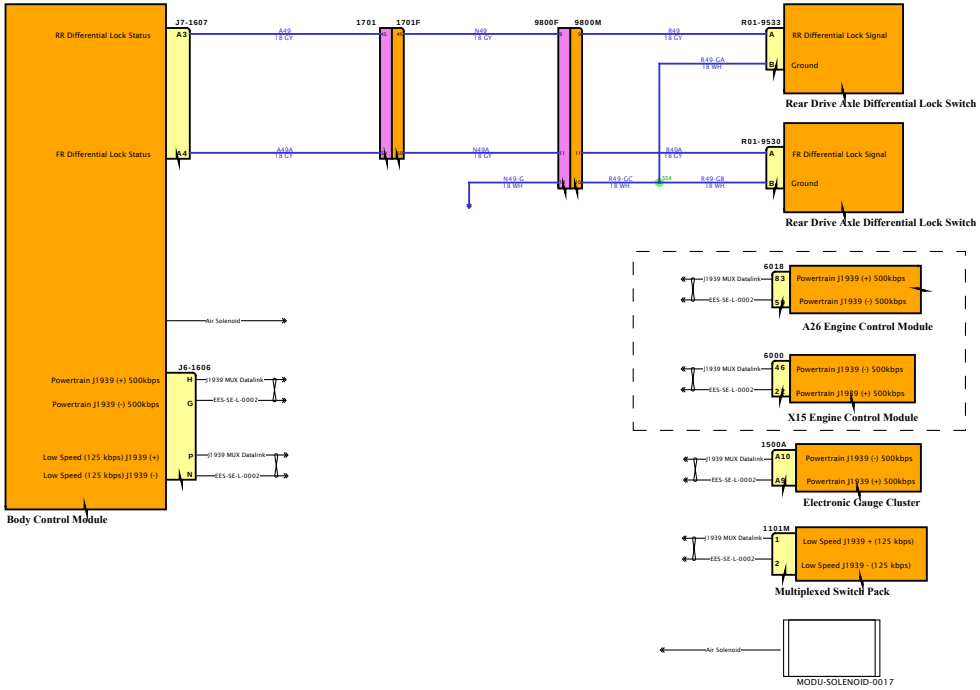

DESIGN DESCRIPTION

FEATURE CODES

SOFTWARE FEATURE CODES

NAVISTAR
NAVISTAR, INC. CONFIDENTIAL PROPRIETARY

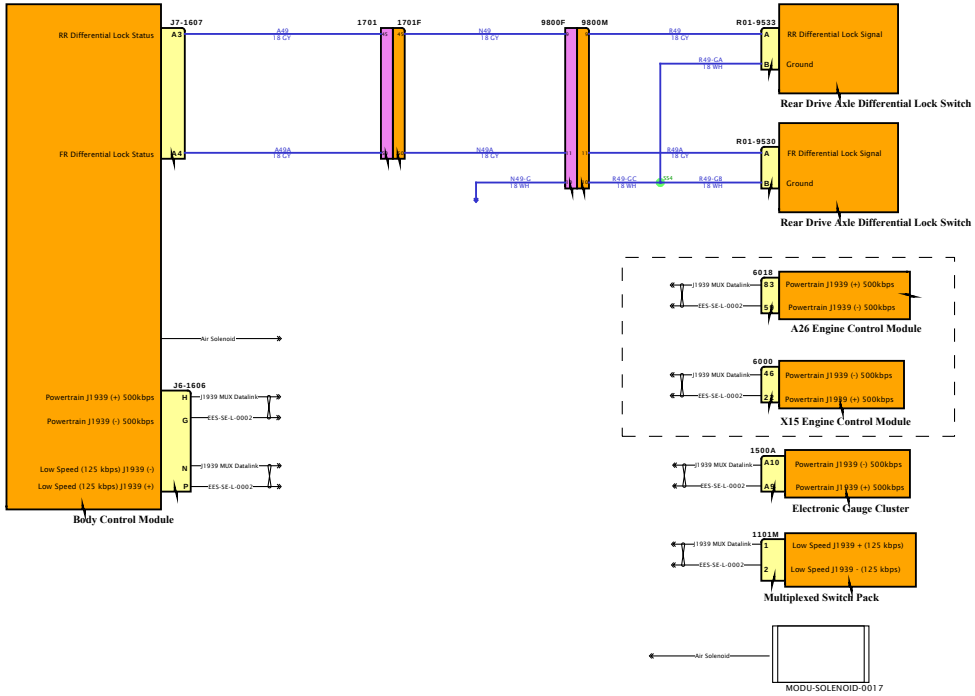

DESIGN DESCRIPTION

FEATURE CODES

SOFTWARE FEATURE CODES

Diagram1

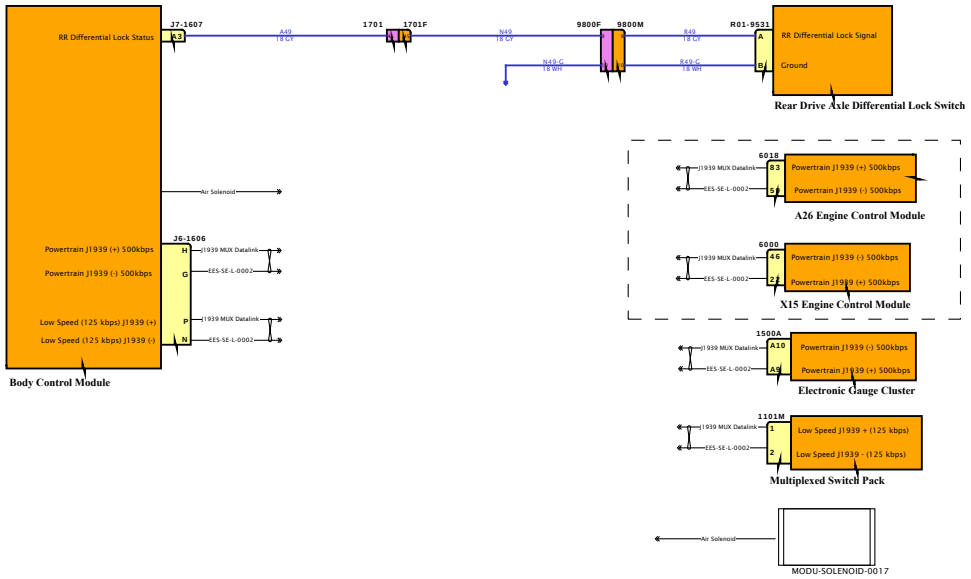

DESIGN DESCRIPTION

FEATURE CODES

SOFTWARE FEATURE CODES

NAVISTAR INC. CONFIDENTIAL PROPRIETARY

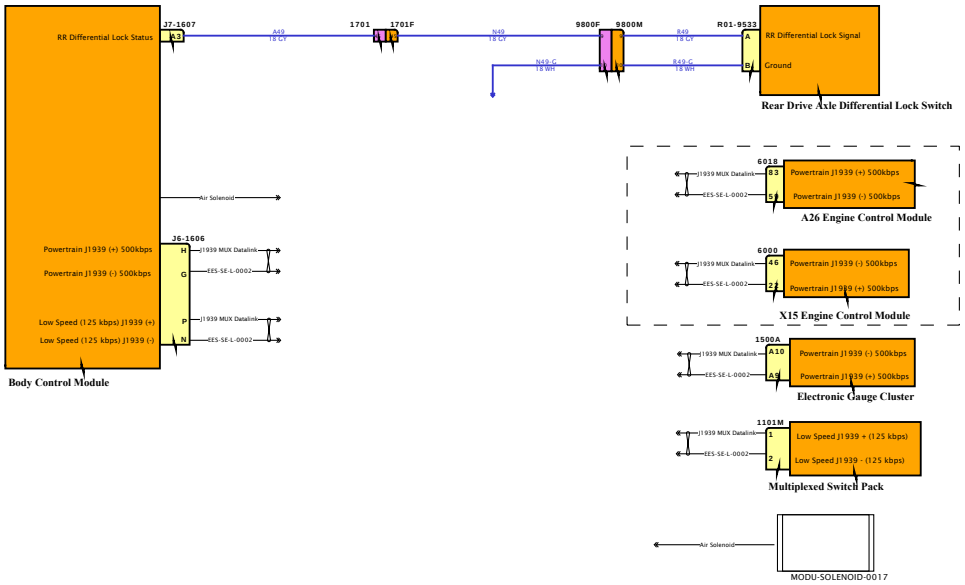

DESIGN DESCRIPTION

FEATURE CODES

SOFTWARE FEATURE CODES

Diagram1

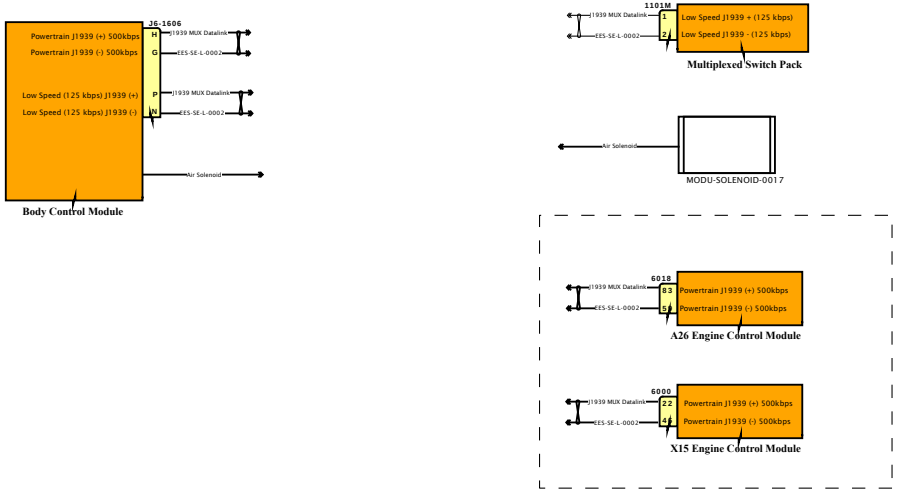

DESIGN DESCRIPTION

FEATURE CODES

SOFTWARE FEATURE CODES

NAVISTAR
NAVISTAR, INC. CONFIDENTIAL PROPRIETARY

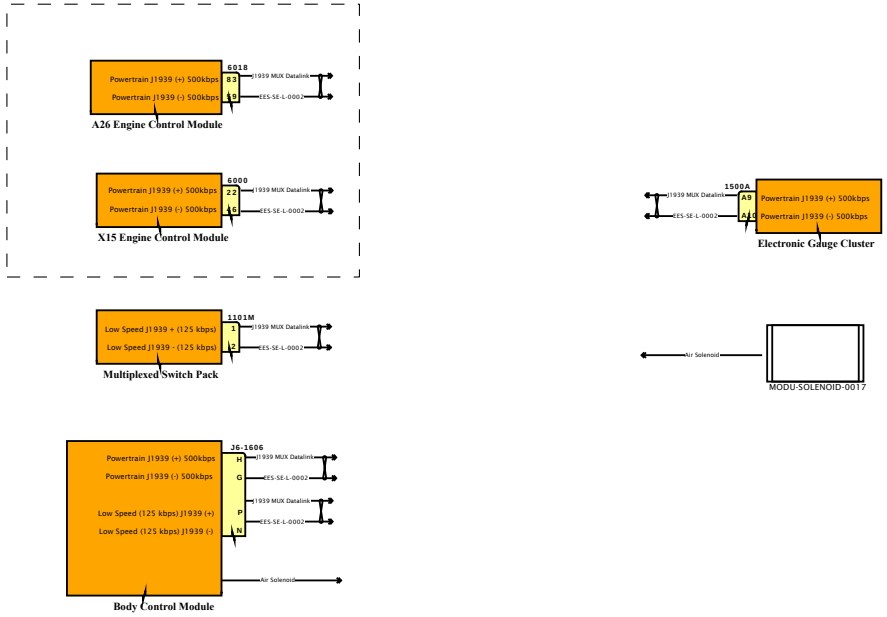

DESIGN DESCRIPTION

FEATURE CODES

SOFTWARE FEATURE CODES

NAVISTAR
NAVISTAR, INC. CONFIDENTIAL PROPRIETARY

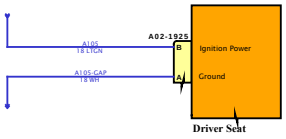

DESIGN DESCRIPTION

FEATURE CODES

SOFTWARE FEATURE CODES

NAVISTAR INC. CONFIDENTIAL PROPRIETARY

Diagram1

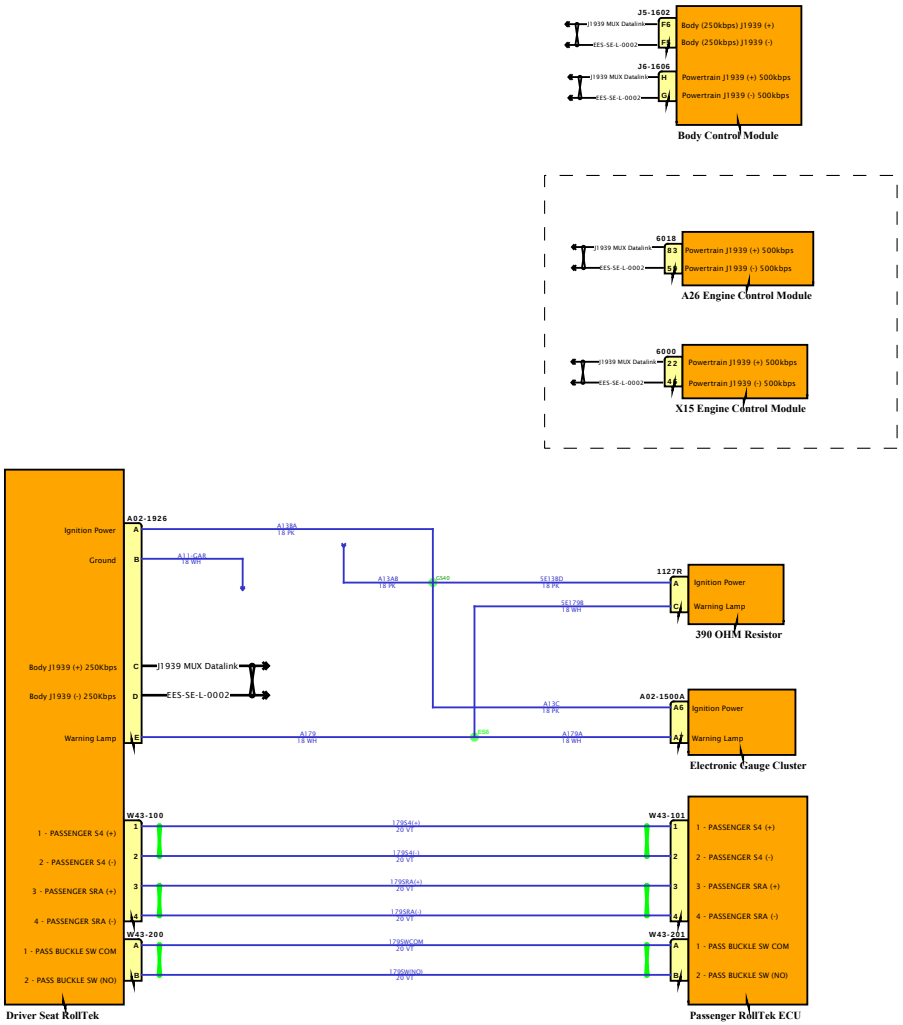

DESIGN DESCRIPTION

FEATURE CODES

SOFTWARE FEATURE CODES

NAVISTAR
NAVISTAR, INC. CONFIDENTIAL PROPRIETARY

Diagram1

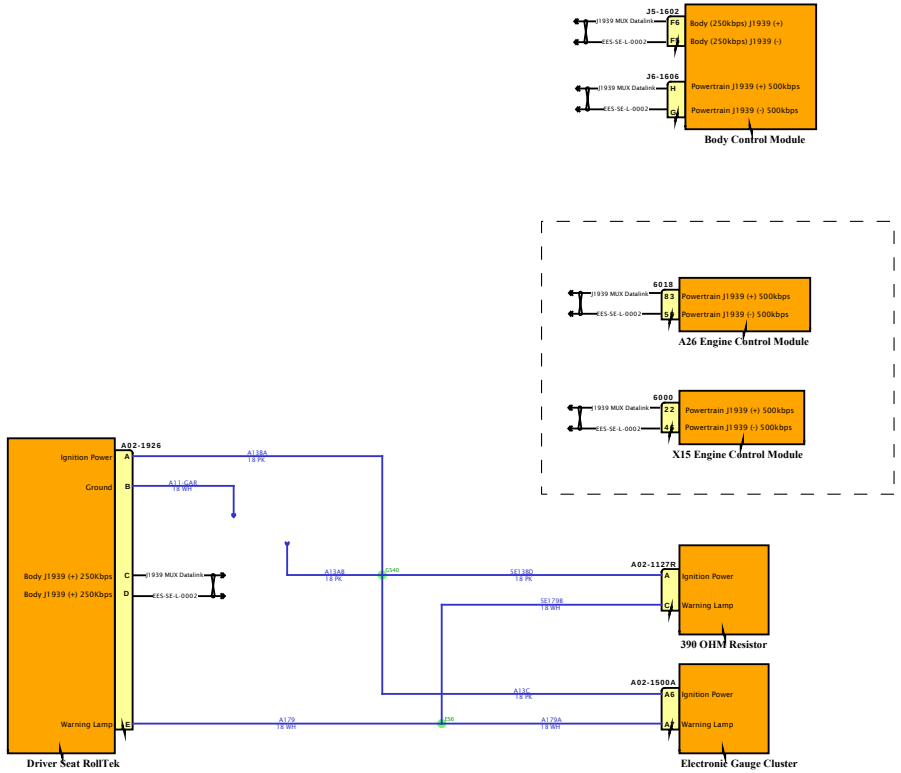

DESIGN DESCRIPTION

FEATURE CODES

SOFTWARE FEATURE CODES

NAVISTAR
NAVISTAR, INC. CONFIDENTIAL PROPRIETARY

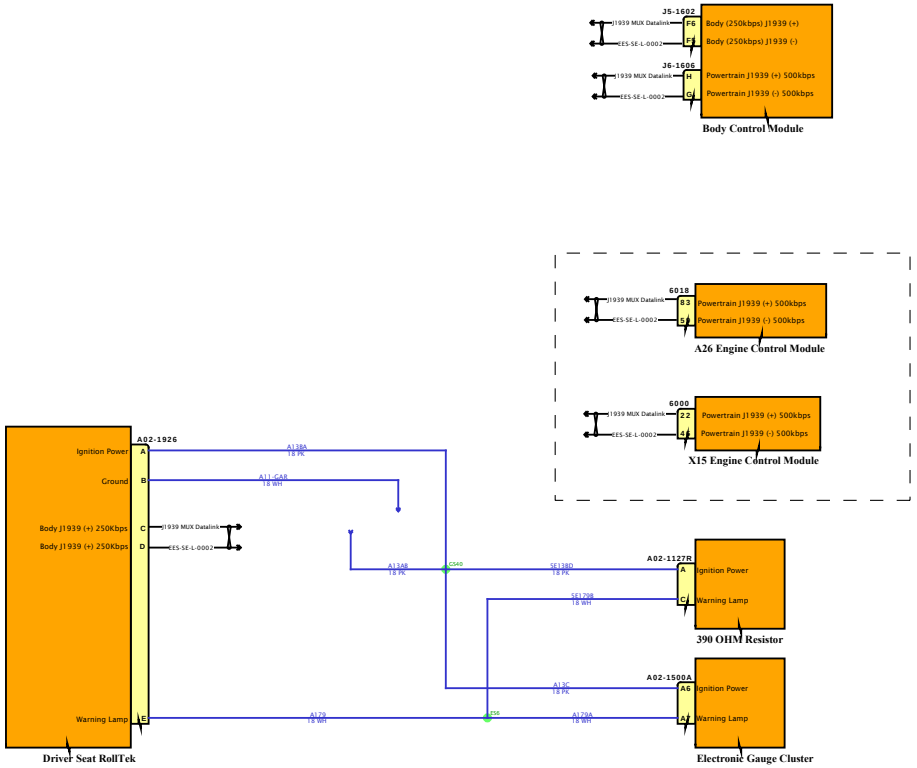

DESIGN DESCRIPTION

FEATURE CODES

SOFTWARE FEATURE CODES

NAVISTAR
NAVISTAR, INC. CONFIDENTIAL PROPRIETARY

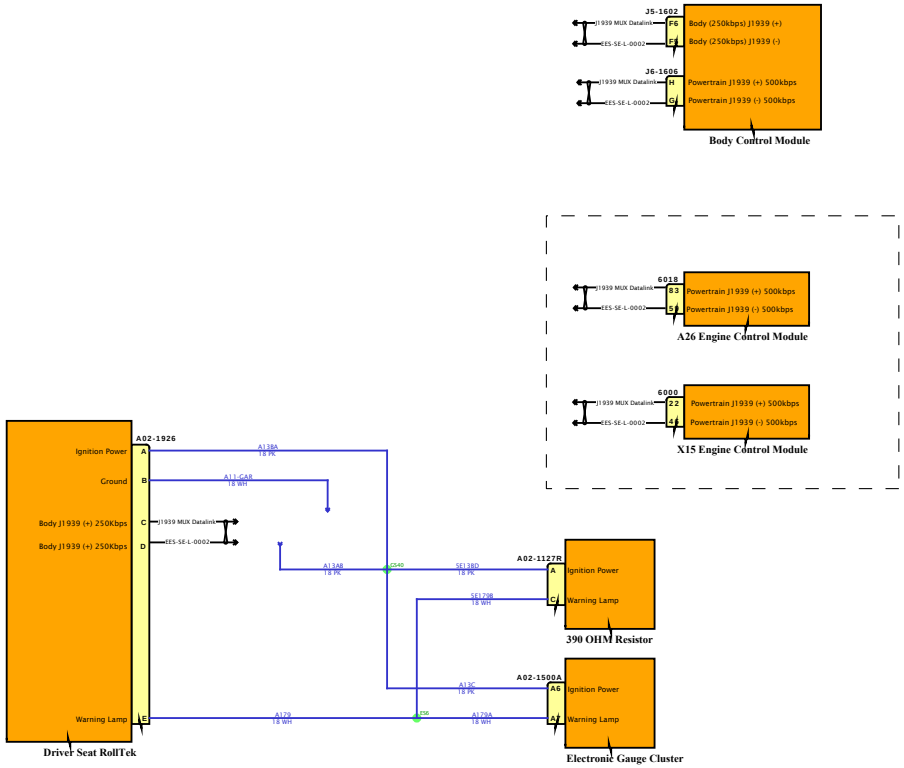

DESIGN DESCRIPTION

FEATURE CODES

SOFTWARE FEATURE CODES

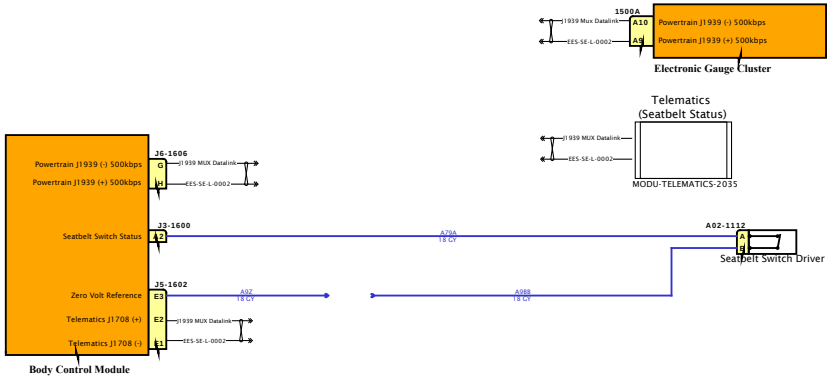

DESIGN DESCRIPTION

FEATURE CODES

SOFTWARE FEATURE CODES

NAVISTAR
NAVISTAR, INC. CONFIDENTIAL PROPRIETARY

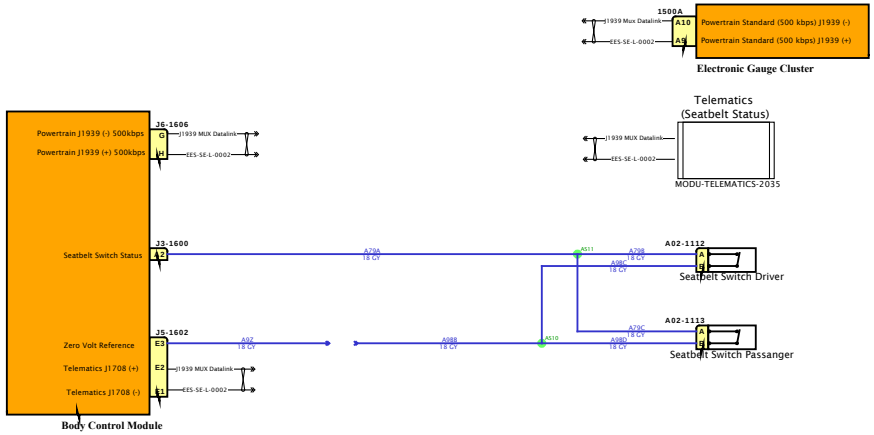

DESIGN DESCRIPTION

FEATURE CODES

SOFTWARE FEATURE CODES

NAVISTAR
NAVISTAR, INC. CONFIDENTIAL PROPRIETARY

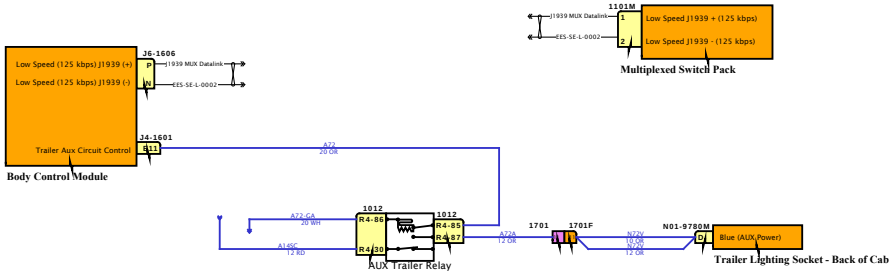

DESIGN DESCRIPTION

FEATURE CODES

SOFTWARE FEATURE CODES

NAVISTAR INC. CONFIDENTIAL PROPRIETARY

Diagram2

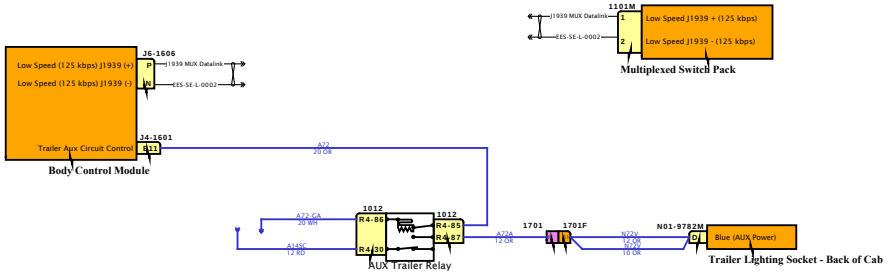

DESIGN DESCRIPTION

FEATURE CODES

SOFTWARE FEATURE CODES

NAVISTAR INC. CONFIDENTIAL PROPRIETARY

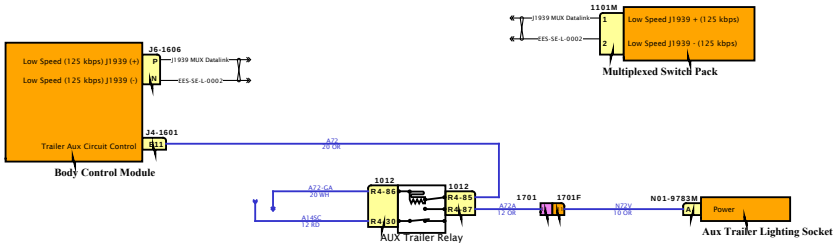

DESIGN DESCRIPTION

FEATURE CODES

SOFTWARE FEATURE CODES

NAVISTAR INC. CONFIDENTIAL PROPRIETARY

Diagram1

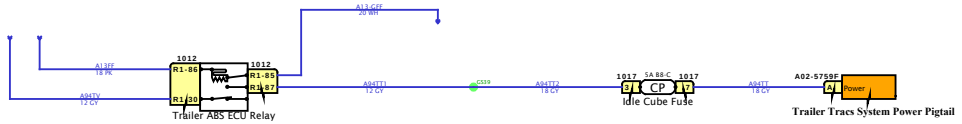

DESIGN DESCRIPTION

FEATURE CODES

SOFTWARE FEATURE CODES

NAVISTAR INC. CONFIDENTIAL PROPRIETARY

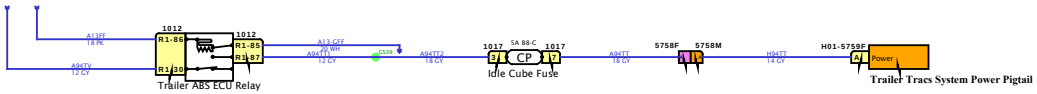

DESIGN DESCRIPTION

FEATURE CODES

SOFTWARE FEATURE CODES

NAVISTAR INC. CONFIDENTIAL PROPRIETARY

Diagram1

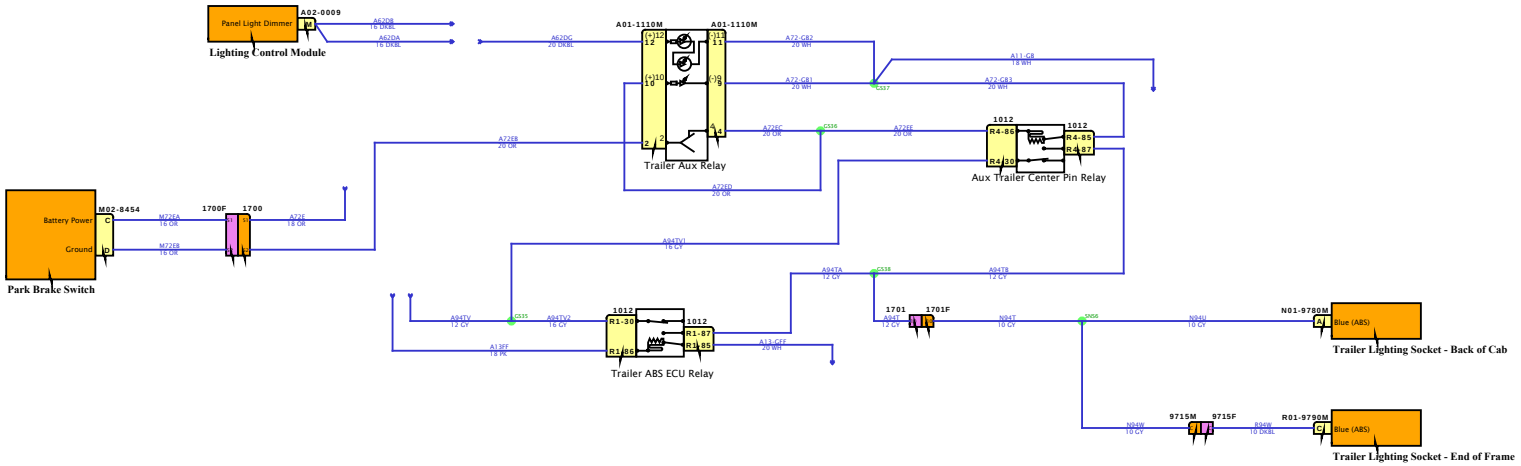

DESIGN DESCRIPTION

FEATURE CODES

SOFTWARE FEATURE CODES

NAVISTAR INC. CONFIDENTIAL PROPRIETARY

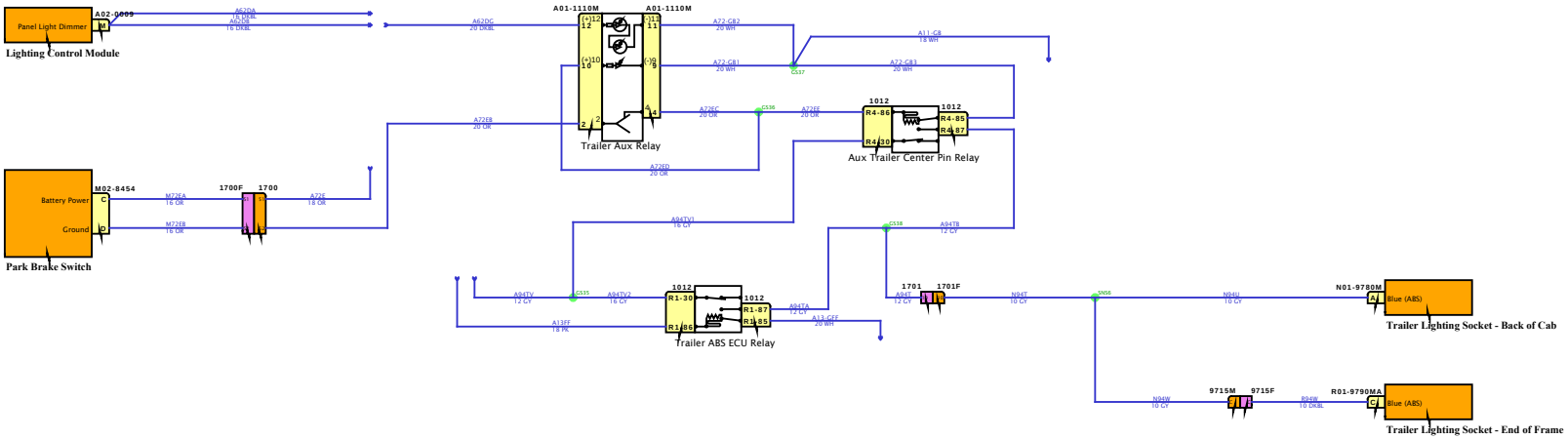

DESIGN DESCRIPTION

FEATURE CODES

SOFTWARE FEATURE CODES

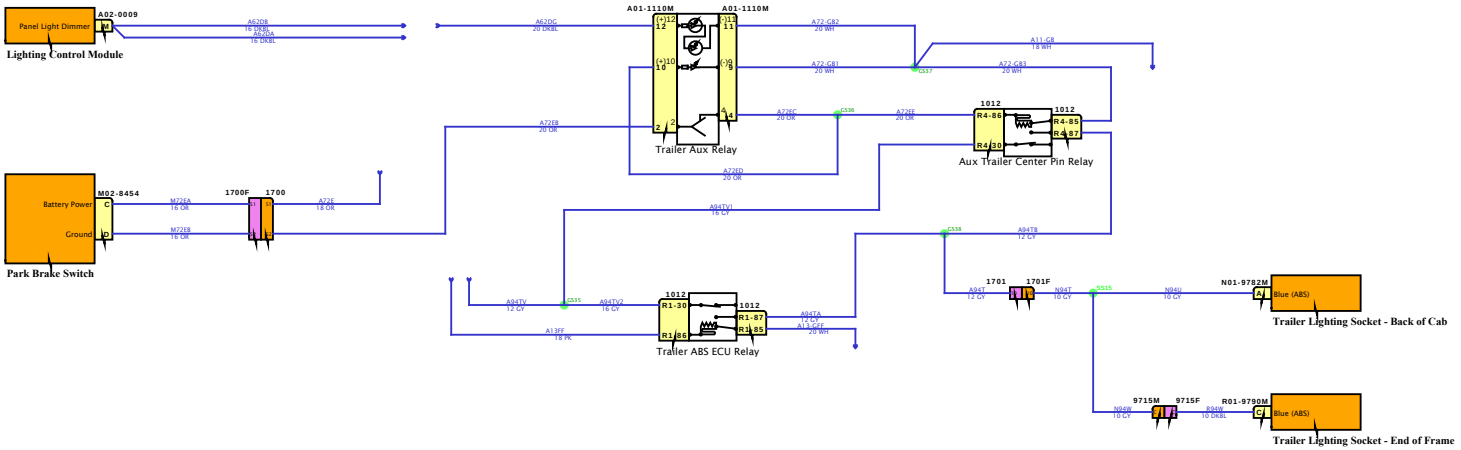

DESIGN DESCRIPTION

FEATURE CODES

SOFTWARE FEATURE CODES

NAVISTAR
NAVISTAR, INC. CONFIDENTIAL PROPRIETARY

Diagram4

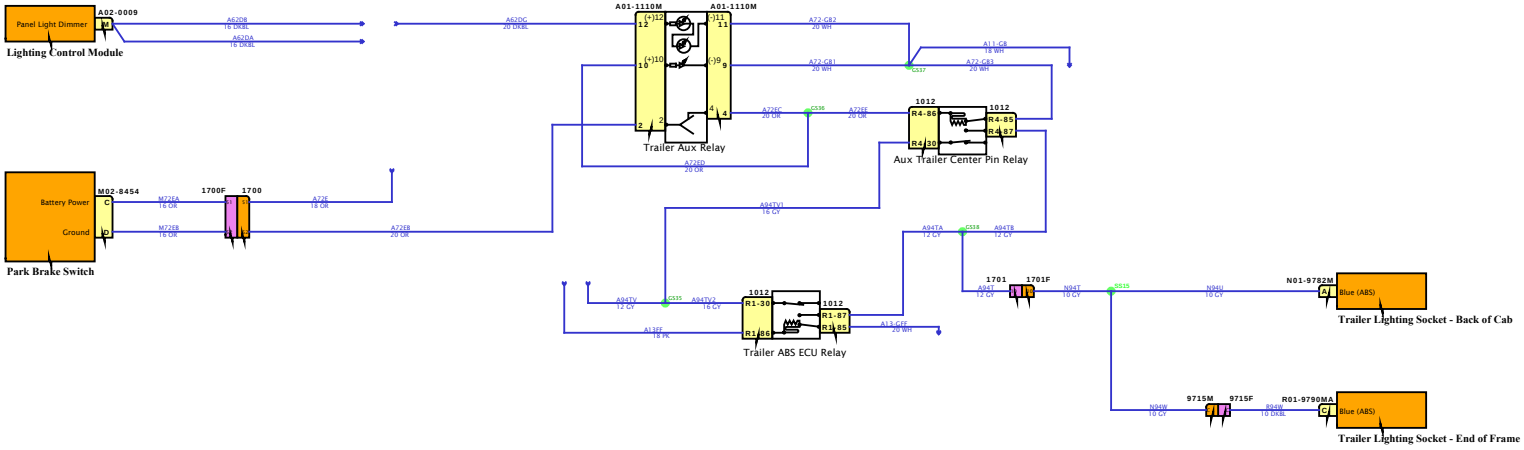

DESIGN DESCRIPTION

FEATURE CODES

SOFTWARE FEATURE CODES

NAVISTAR
NAVISTAR, INC. CONFIDENTIAL PROPRIETARY

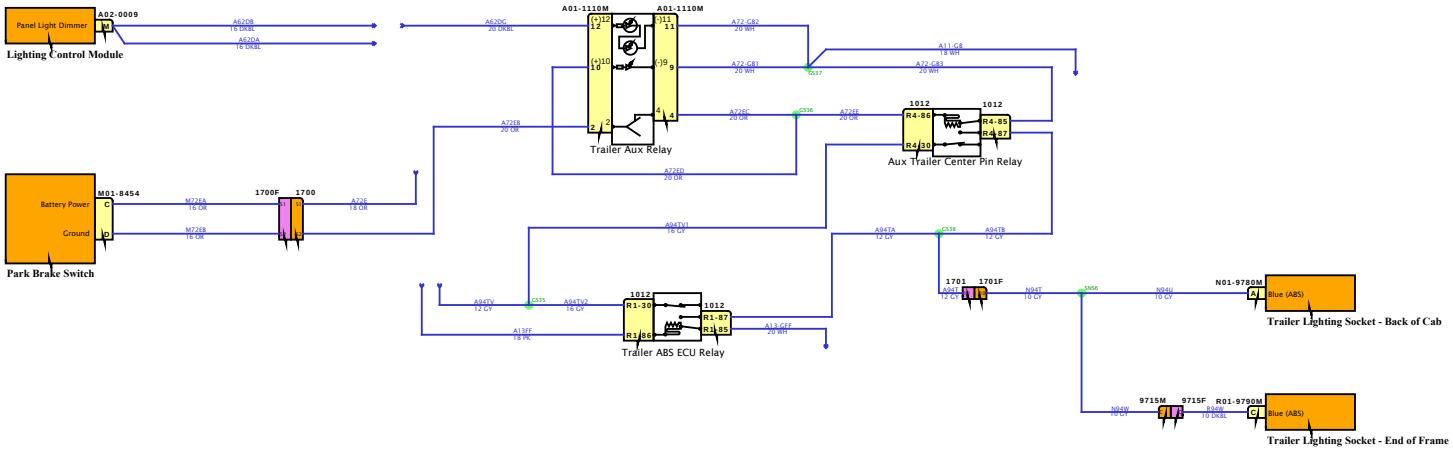

DESIGN DESCRIPTION

FEATURE CODES

SOFTWARE FEATURE CODES

Diagram2

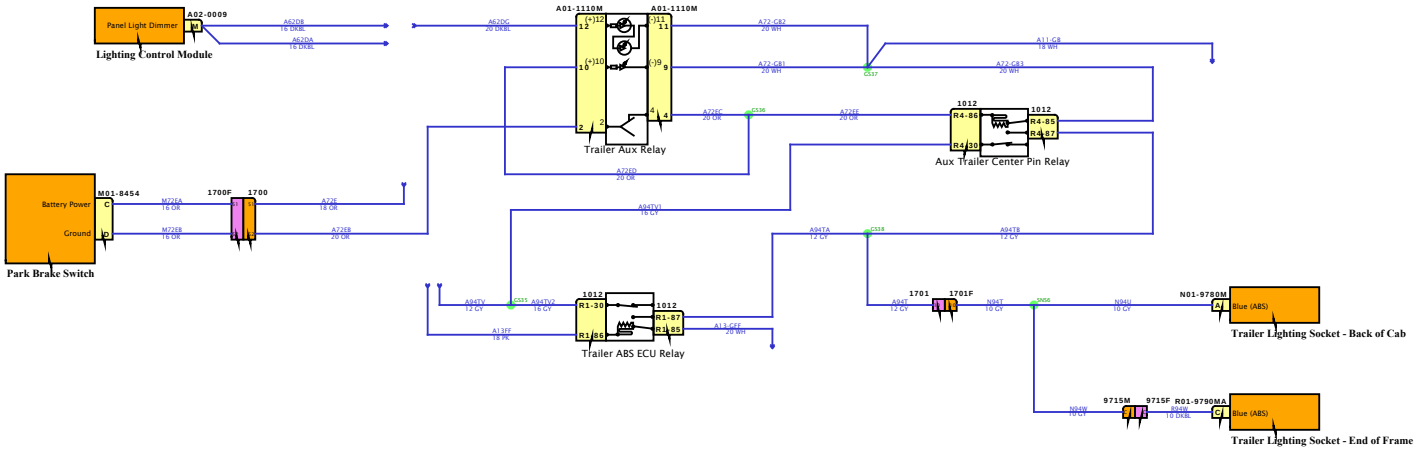

DESIGN DESCRIPTION

FEATURE CODES

SOFTWARE FEATURE CODES

NAVISTAR
NAVISTAR, INC. CONFIDENTIAL PROPRIETARY

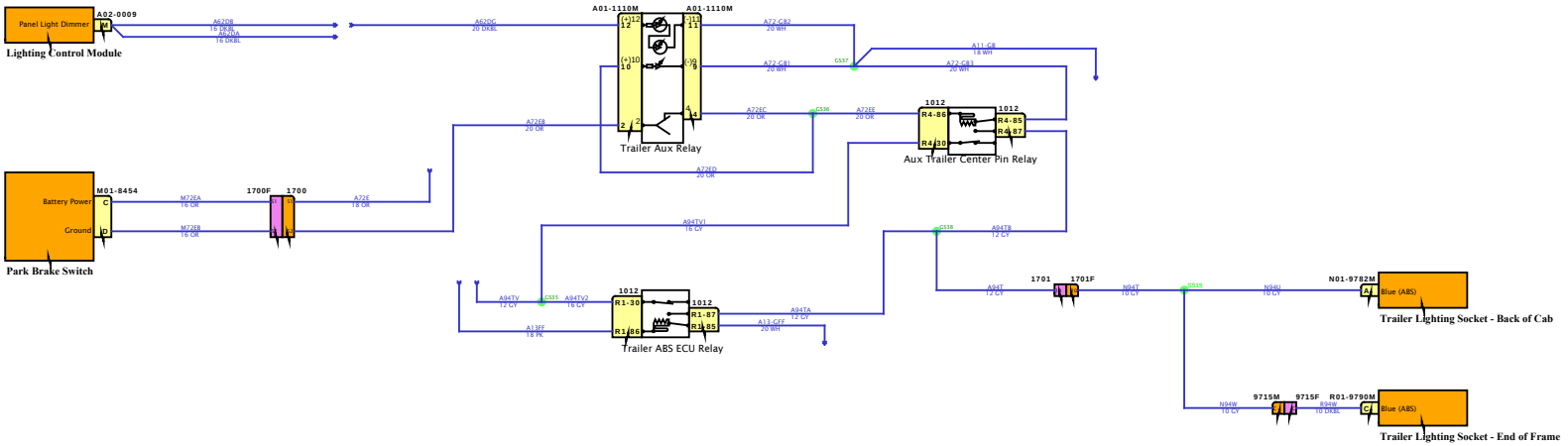

DESIGN DESCRIPTION

FEATURE CODES

SOFTWARE FEATURE CODES

Diagram4

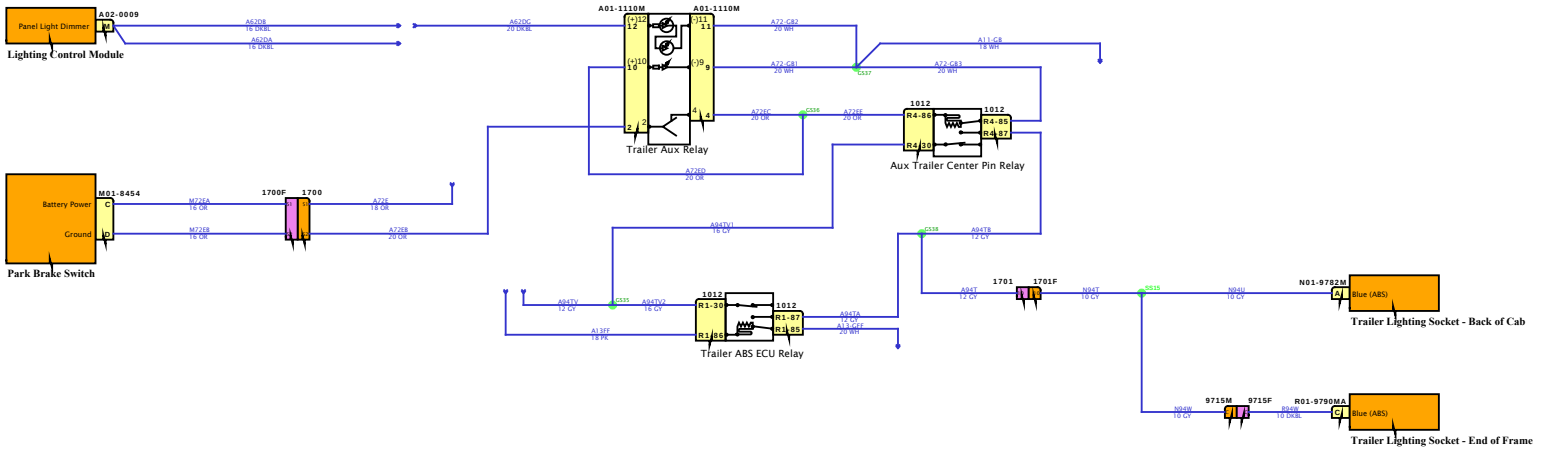

DESIGN DESCRIPTION

FEATURE CODES

SOFTWARE FEATURE CODES

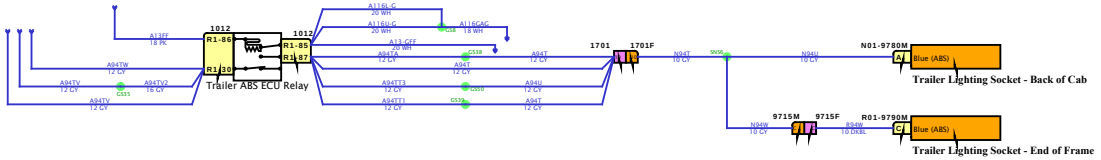

DESIGN DESCRIPTION

FEATURE CODES

SOFTWARE FEATURE CODES

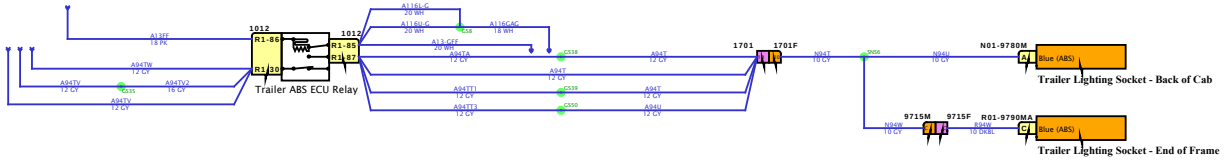

DESIGN DESCRIPTION

FEATURE CODES

SOFTWARE FEATURE CODES

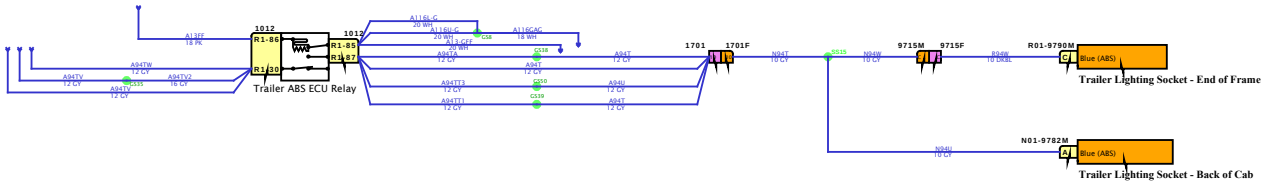

DESIGN DESCRIPTION

FEATURE CODES

SOFTWARE FEATURE CODES

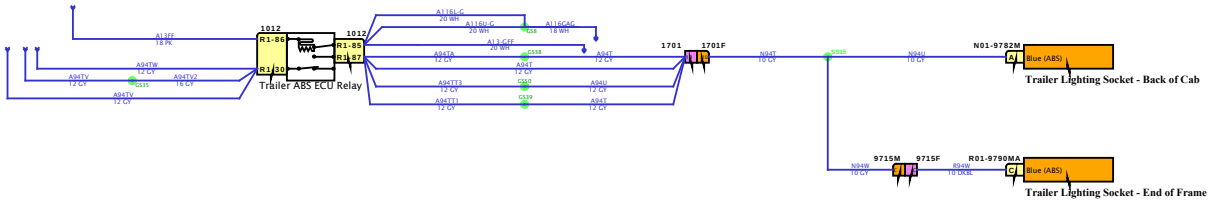

DESIGN DESCRIPTION

FEATURE CODES

SOFTWARE FEATURE CODES

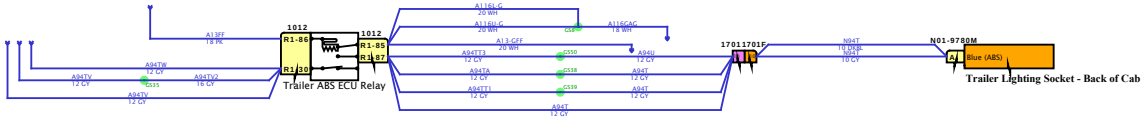

DESIGN DESCRIPTION

FEATURE CODES

SOFTWARE FEATURE CODES



DESIGN DESCRIPTION

FEATURE CODES

SOFTWARE FEATURE CODES

NAVISTAR INC. CONFIDENTIAL PROPRIETARY

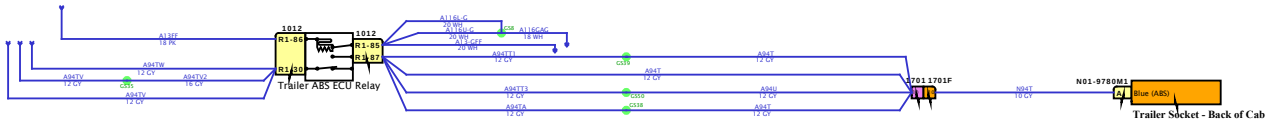

DESIGN DESCRIPTION

FEATURE CODES

SOFTWARE FEATURE CODES

NAVISTAR
NAVISTAR, INC. CONFIDENTIAL PROPRIETARY

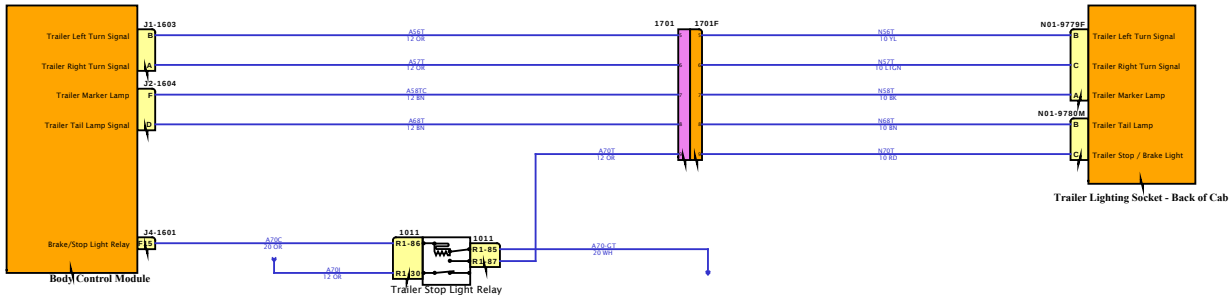

DESIGN DESCRIPTION

FEATURE CODES

SOFTWARE FEATURE CODES

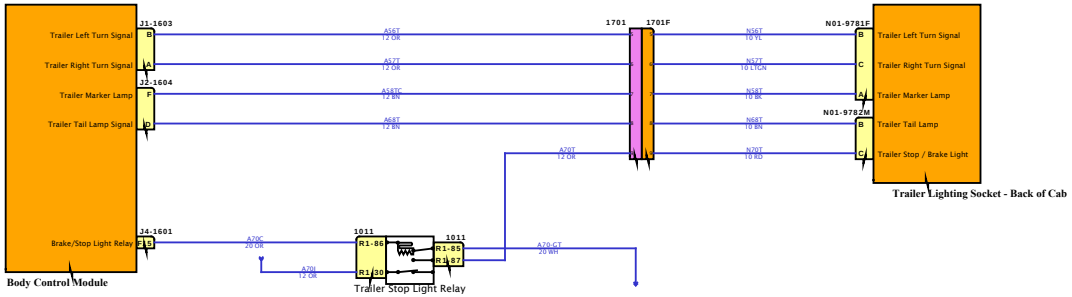

DESIGN DESCRIPTION

FEATURE CODES

SOFTWARE FEATURE CODES

NAVISTAR INC. CONFIDENTIAL PROPRIETARY

DESIGN DESCRIPTION

FEATURE CODES

SOFTWARE FEATURE CODES

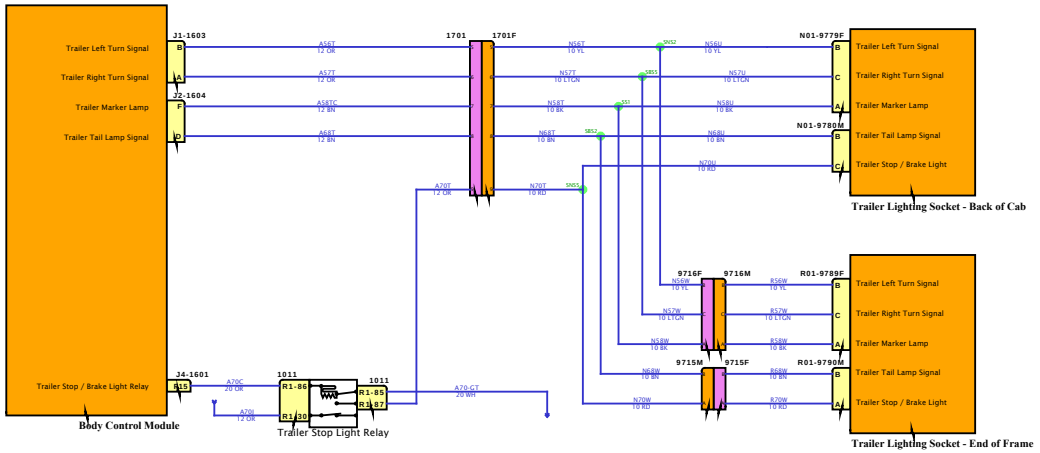

Diagram1-Combination2

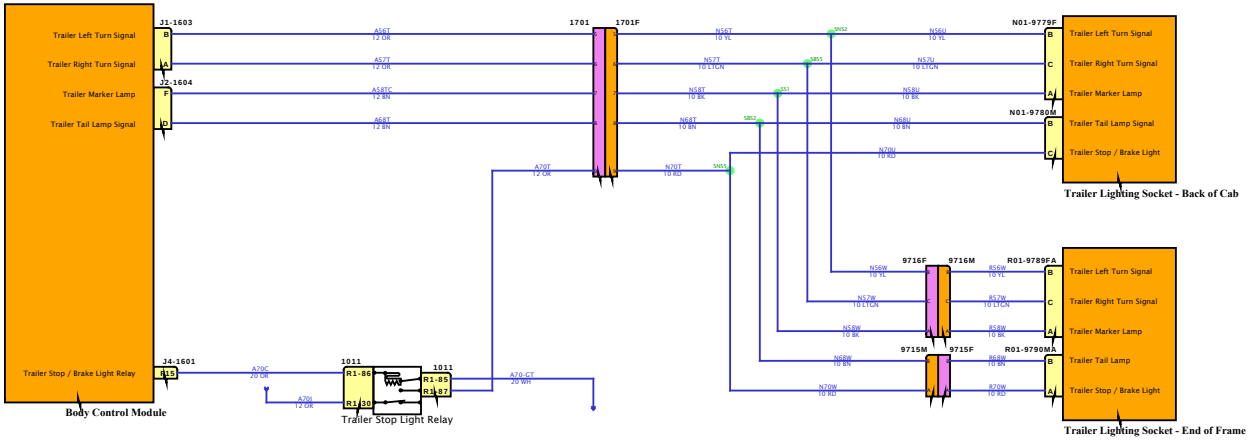

DESIGN DESCRIPTION

FEATURE CODES

SOFTWARE FEATURE CODES

DESIGN DESCRIPTION

FEATURE CODES

SOFTWARE FEATURE CODES

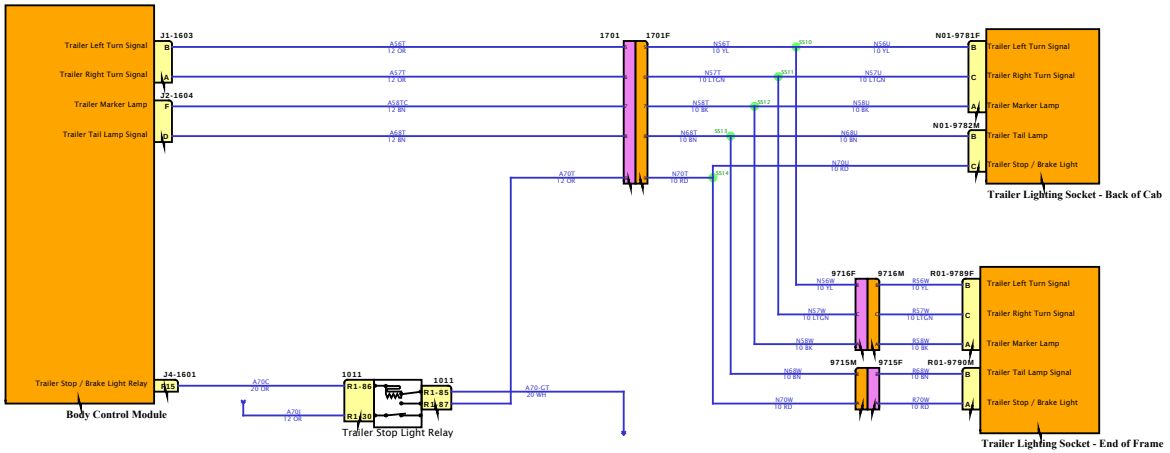

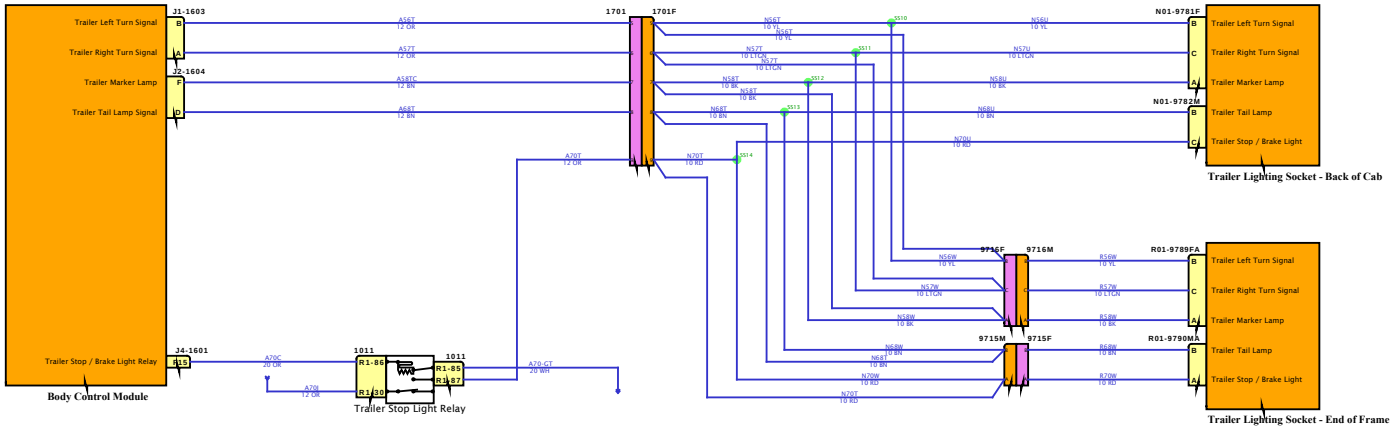

DESIGN DESCRIPTION

FEATURE CODES

SOFTWARE FEATURE CODES

Diagram1

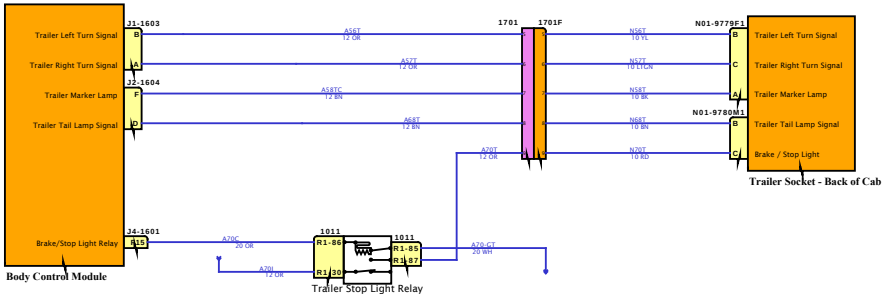

DESIGN DESCRIPTION

FEATURE CODES

SOFTWARE FEATURE CODES

NAVISTAR INC. CONFIDENTIAL PROPRIETARY

DESIGN DESCRIPTION

FEATURE CODES

SOFTWARE FEATURE CODES

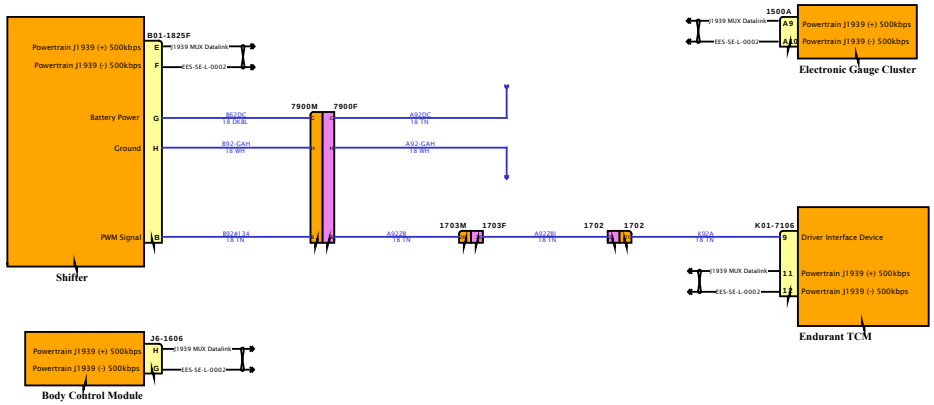

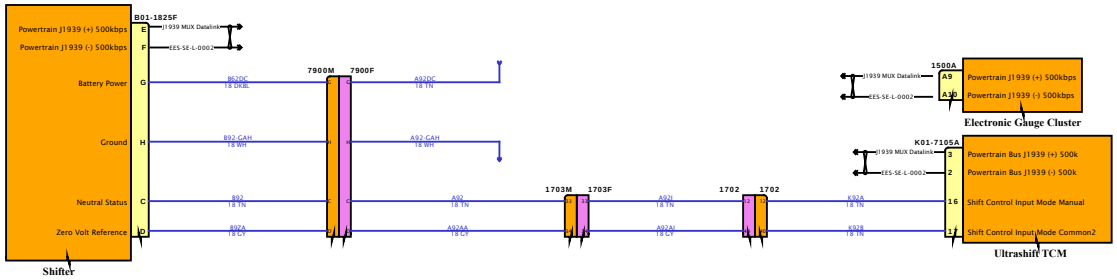

DESIGN DESCRIPTION

FEATURE CODES

SOFTWARE FEATURE CODES

NAVISTAR
NAVISTAR, INC. CONFIDENTIAL PROPRIETARY

Diagram1

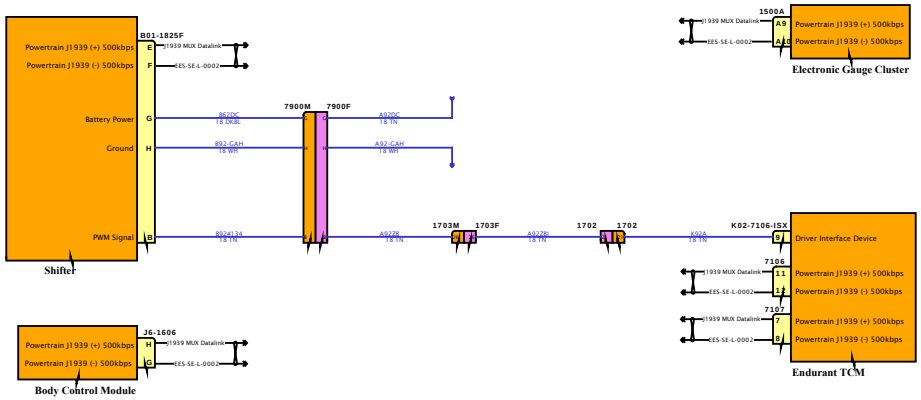

DESIGN DESCRIPTION

FEATURE CODES

SOFTWARE FEATURE CODES

NAVISTAR
NAVISTAR, INC. CONFIDENTIAL PROPRIETARY

Diagram1

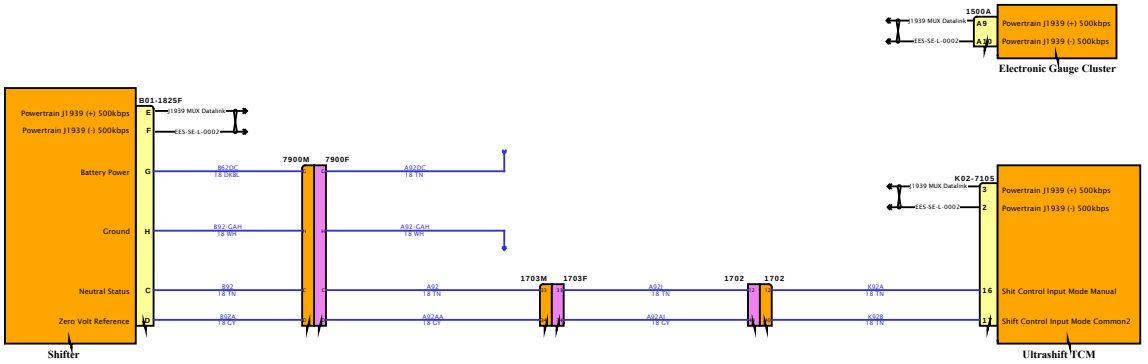

DESIGN DESCRIPTION

FEATURE CODES

SOFTWARE FEATURE CODES

NAVISTAR
NAVISTAR, INC. CONFIDENTIAL PROPRIETARY

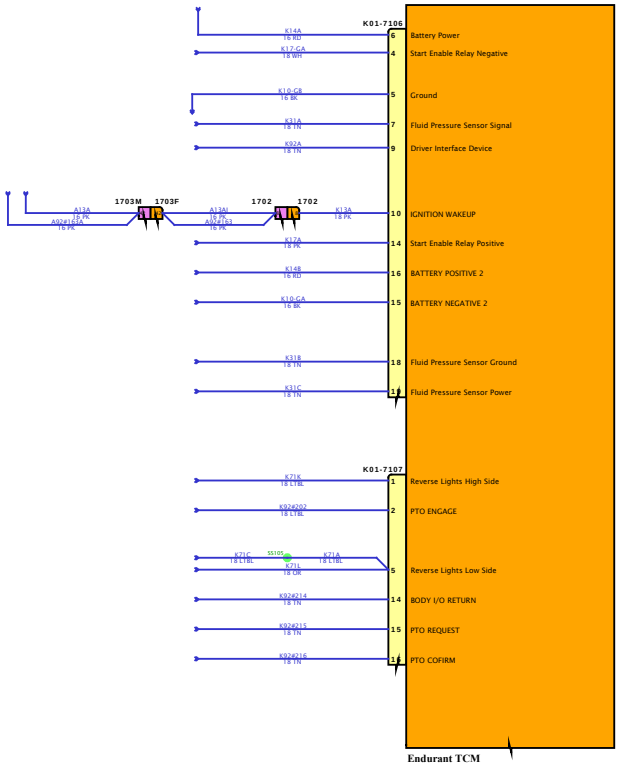

DESIGN DESCRIPTION

FEATURE CODES

SOFTWARE FEATURE CODES

Diagram1

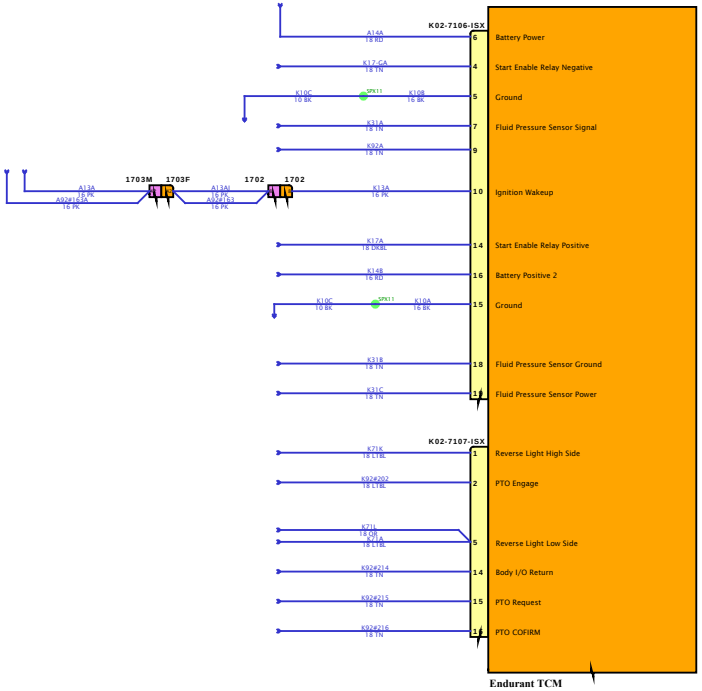

DESIGN DESCRIPTION

FEATURE CODES

SOFTWARE FEATURE CODES

NAVISTAR
NAVISTAR, INC. CONFIDENTIAL PROPRIETARY

Diagram1

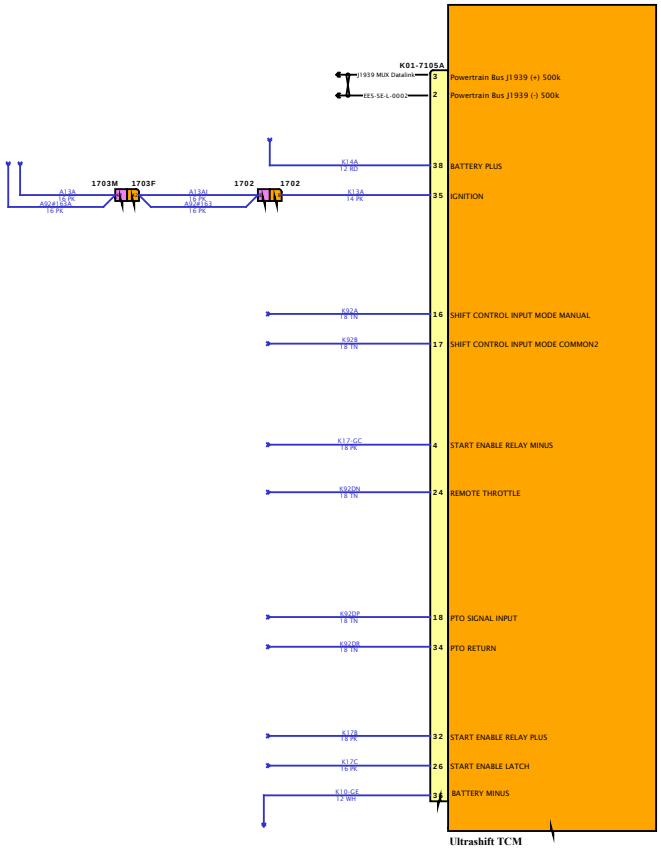

DESIGN DESCRIPTION

FEATURE CODES

SOFTWARE FEATURE CODES

NAVISTAR INC. CONFIDENTIAL PROPRIETARY

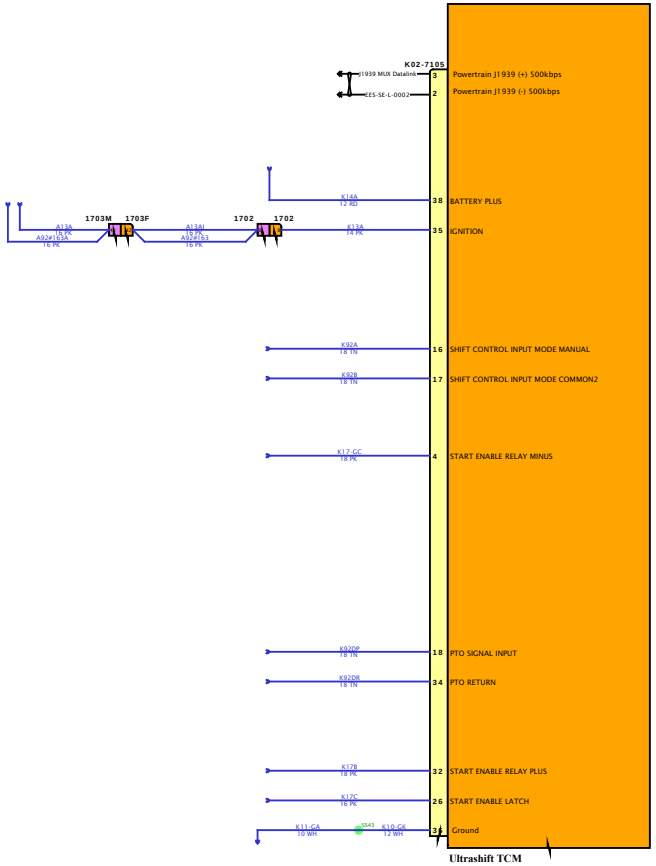

DESIGN DESCRIPTION

FEATURE CODES

SOFTWARE FEATURE CODES

NAVISTAR INC. CONFIDENTIAL PROPRIETARY

Diagram1

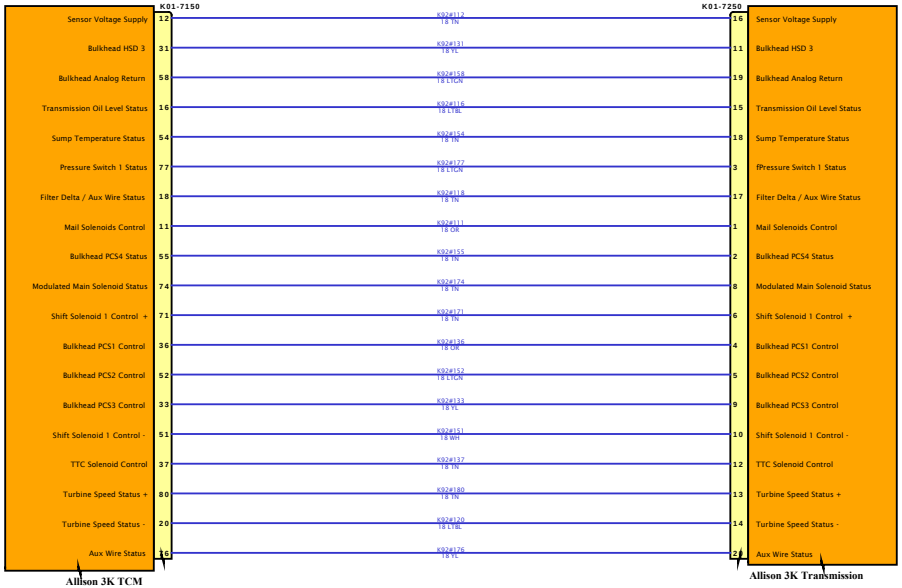

DESIGN DESCRIPTION

FEATURE CODES

SOFTWARE FEATURE CODES

NAVISTAR INC. CONFIDENTIAL PROPRIETARY

Diagram2

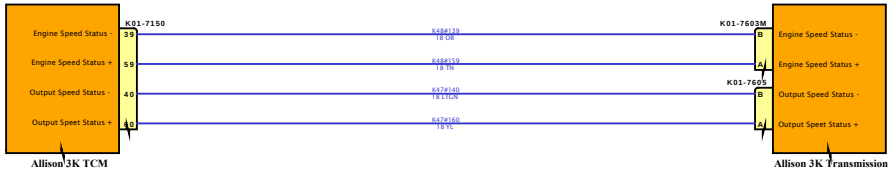

DESIGN DESCRIPTION

FEATURE CODES

SOFTWARE FEATURE CODES

NAVISTAR INC. CONFIDENTIAL PROPRIETARY

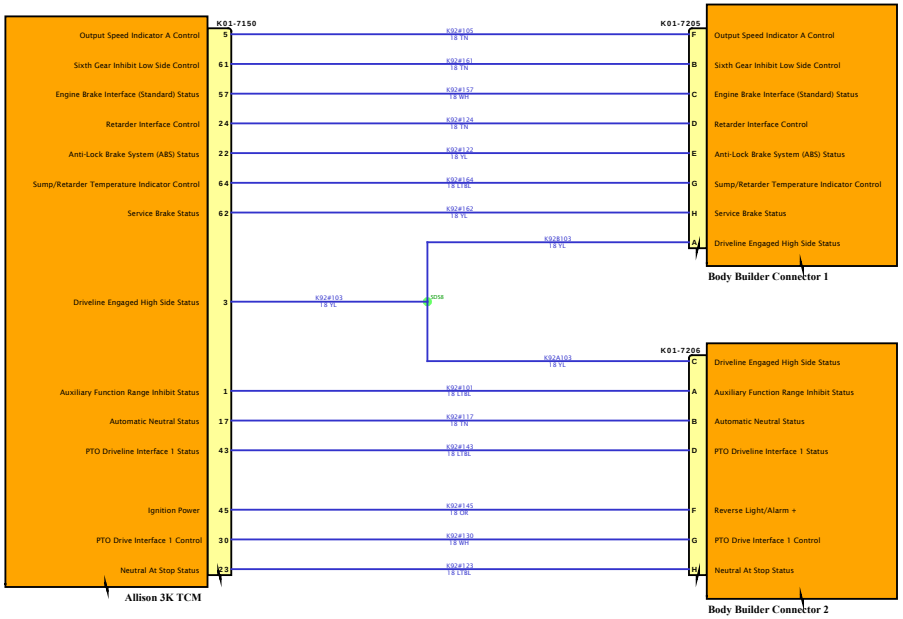

DESIGN DESCRIPTION

FEATURE CODES

SOFTWARE FEATURE CODES

NAVISTAR
NAVISTAR, INC. CONFIDENTIAL PROPRIETARY

Diagram1

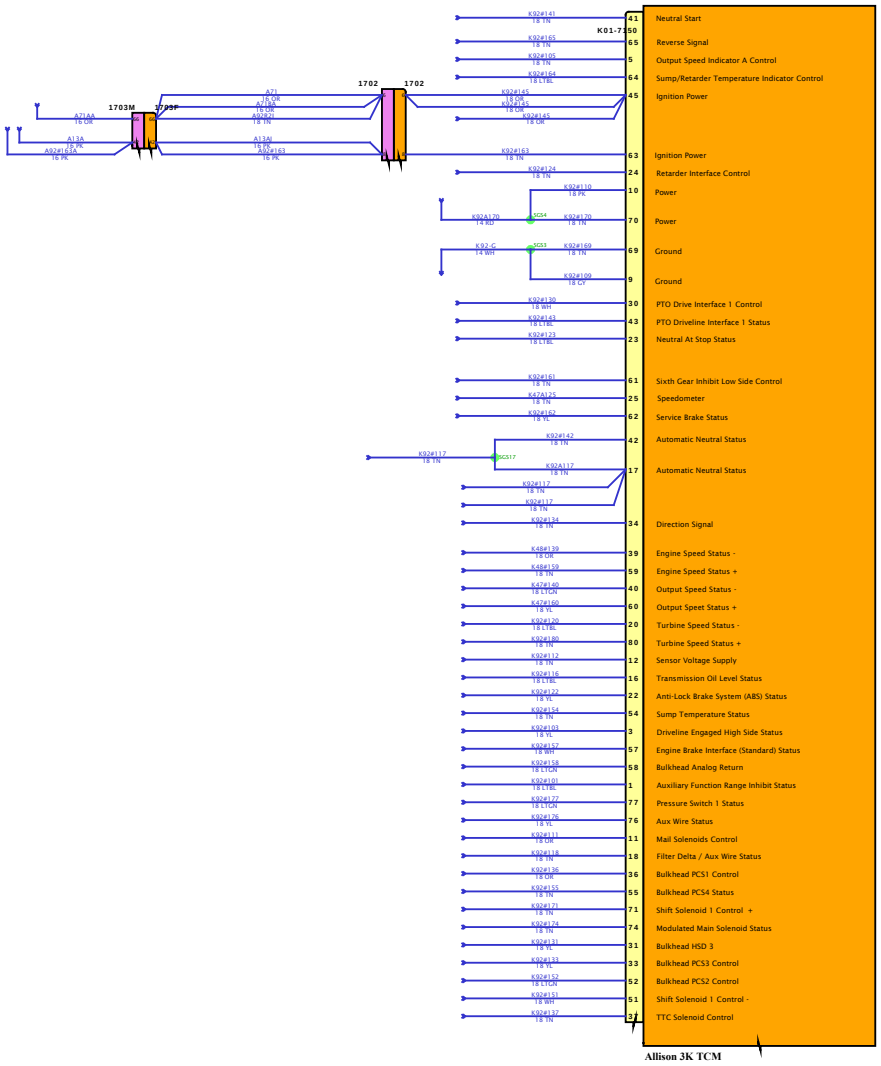

DESIGN DESCRIPTION

FEATURE CODES

SOFTWARE FEATURE CODES

NAVISTAR
NAVISTAR, INC. CONFIDENTIAL PROPRIETARY

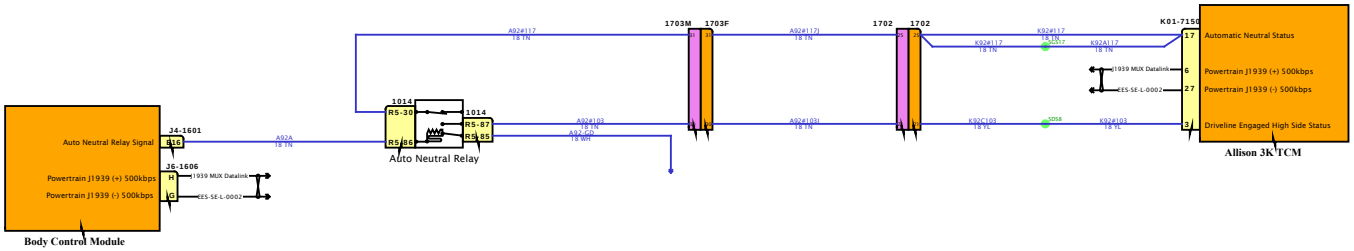

DESIGN DESCRIPTION

FEATURE CODES

SOFTWARE FEATURE CODES

NAVISTAR INC. CONFIDENTIAL PROPRIETARY

Diagram1

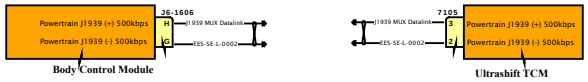

DESIGN DESCRIPTION

FEATURE CODES

SOFTWARE FEATURE CODES

NAVISTAR INC. CONFIDENTIAL PROPRIETARY

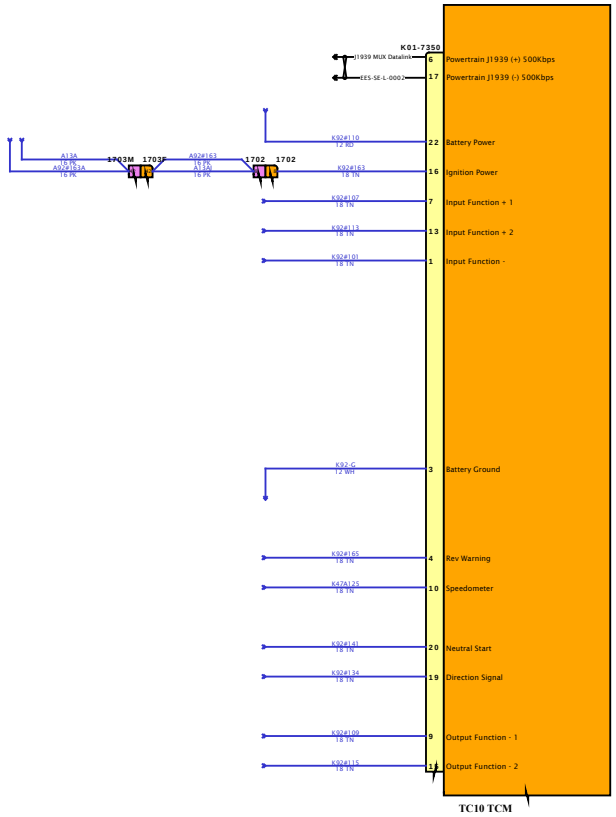

DESIGN DESCRIPTION

FEATURE CODES

SOFTWARE FEATURE CODES

NAVISTAR
NAVISTAR, INC. CONFIDENTIAL PROPRIETARY

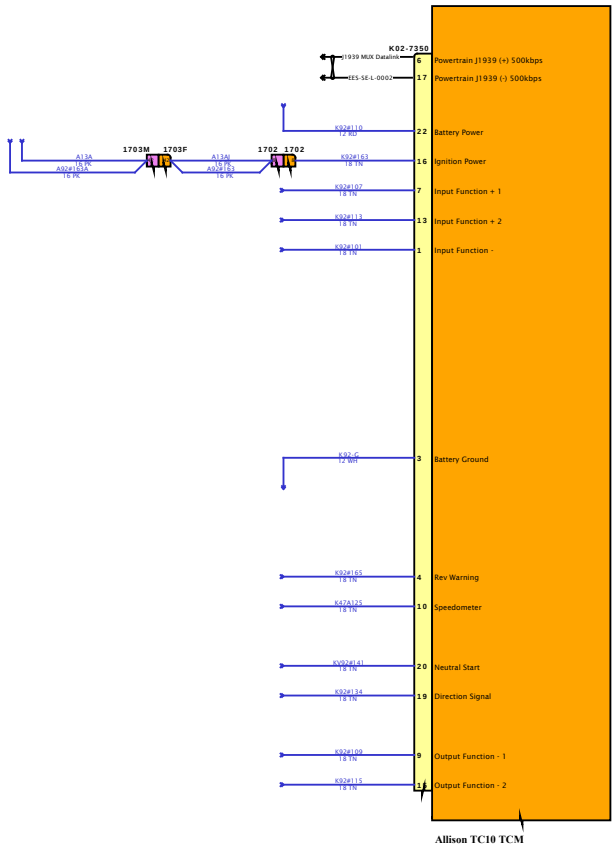

DESIGN DESCRIPTION

FEATURE CODES

SOFTWARE FEATURE CODES

NAVISTAR INC. CONFIDENTIAL PROPRIETARY

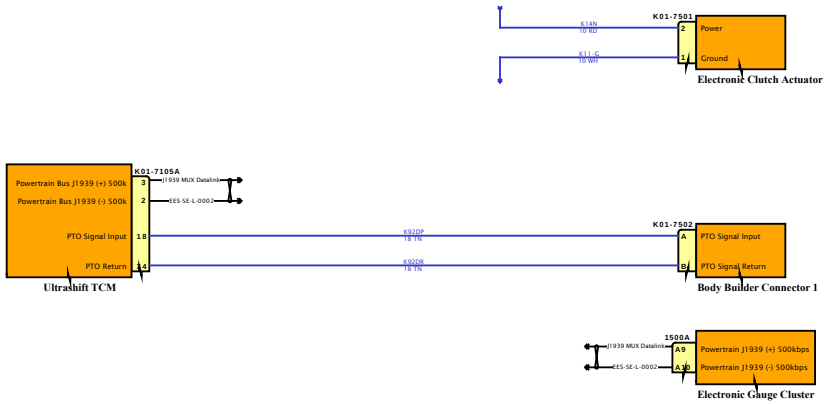

DESIGN DESCRIPTION

FEATURE CODES

SOFTWARE FEATURE CODES

NAVISTAR
NAVISTAR, INC. CONFIDENTIAL PROPRIETARY

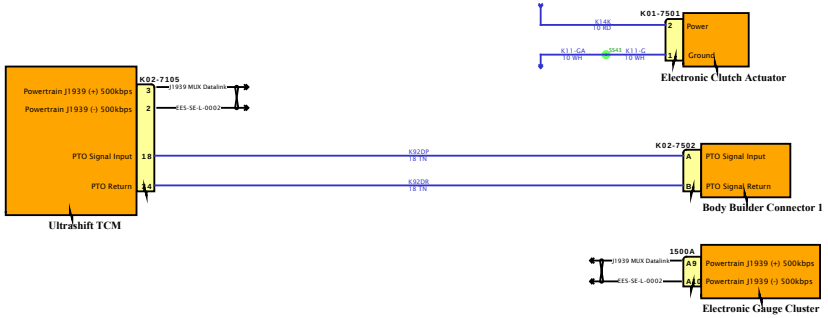

DESIGN DESCRIPTION

FEATURE CODES

SOFTWARE FEATURE CODES

NAVISTAR
NAVISTAR, INC. CONFIDENTIAL PROPRIETARY

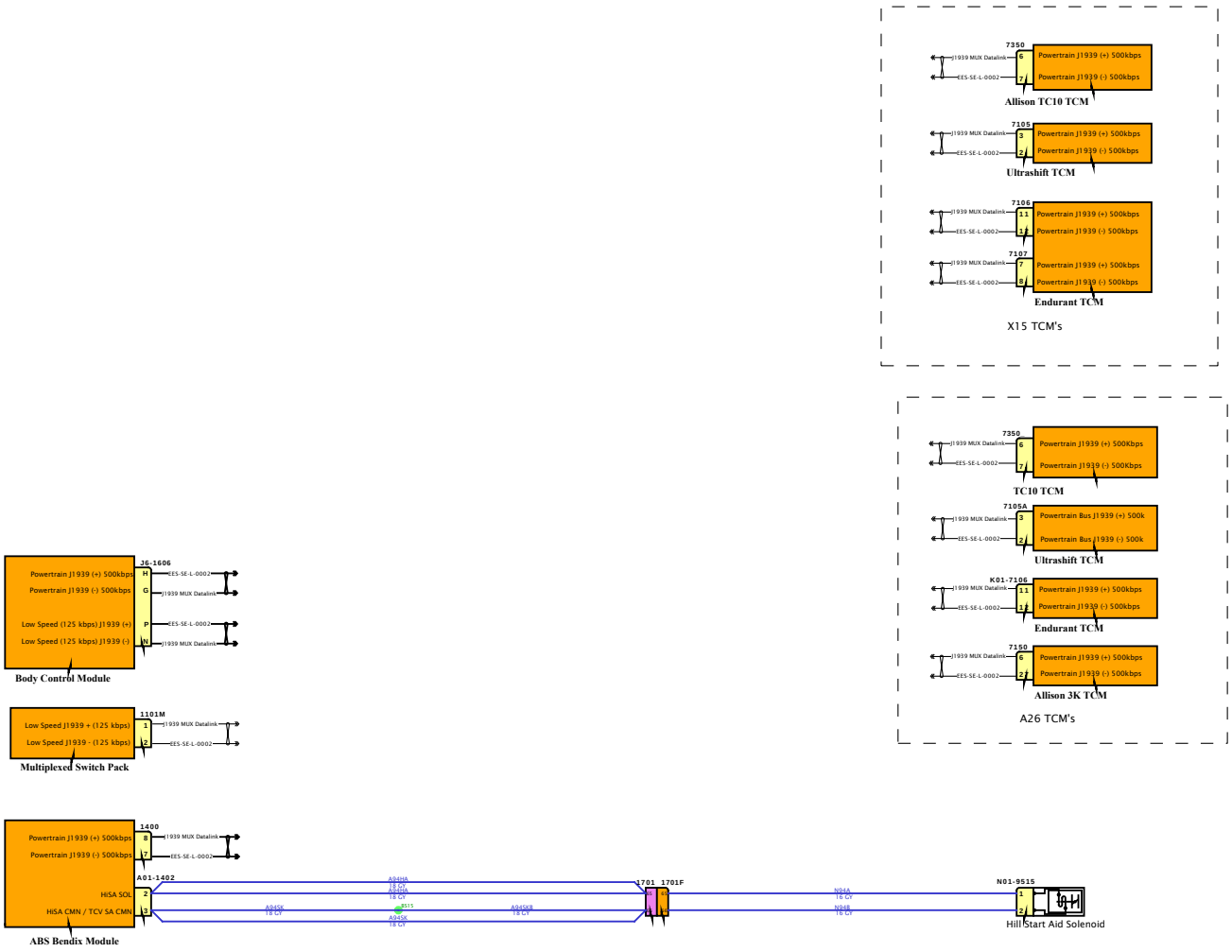

DESIGN DESCRIPTION

FEATURE CODES

SOFTWARE FEATURE CODES

NAVISTAR
NAVISTAR, INC. CONFIDENTIAL PROPRIETARY

Diagram2

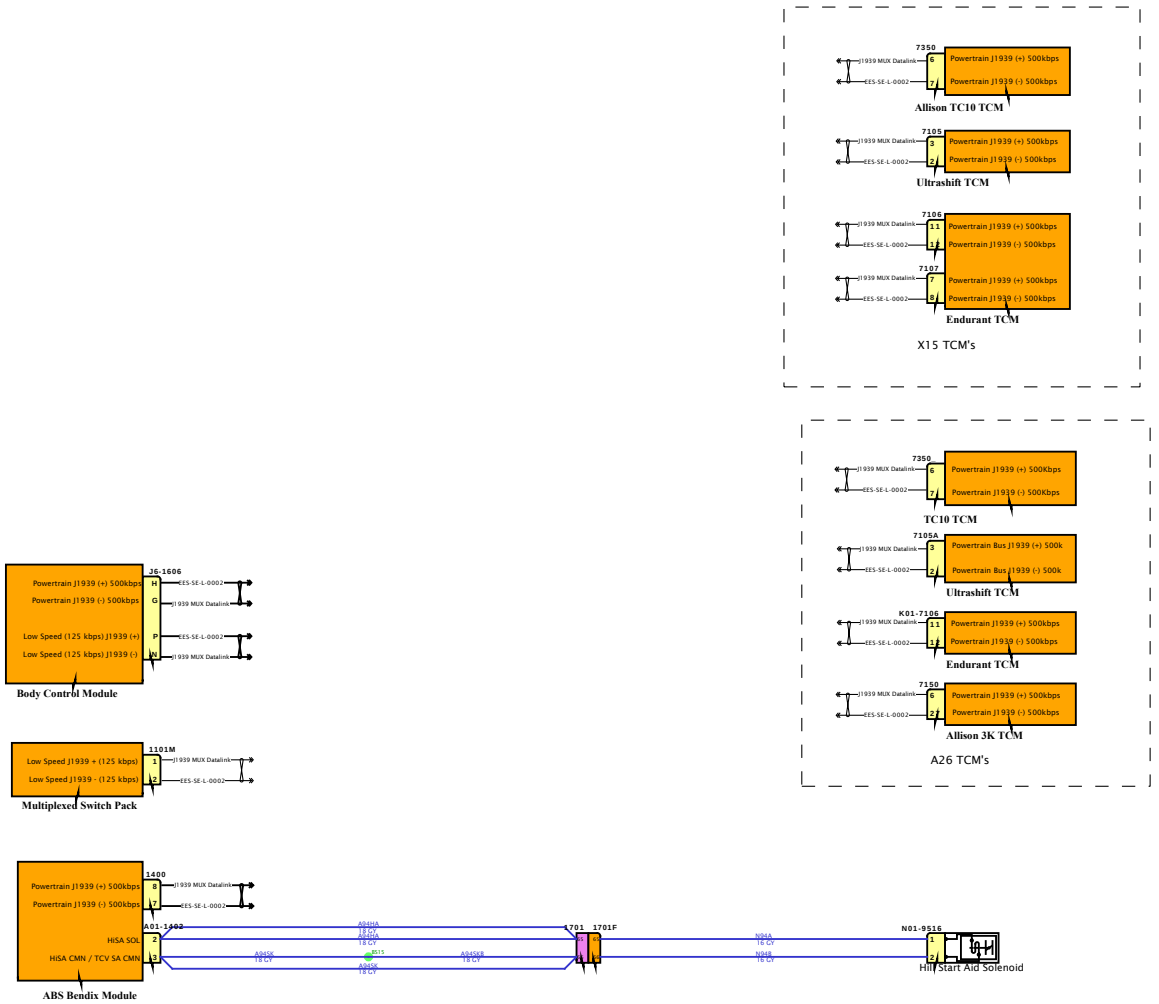

DESIGN DESCRIPTION

FEATURE CODES

SOFTWARE FEATURE CODES

NAVISTAR INC. CONFIDENTIAL PROPRIETARY

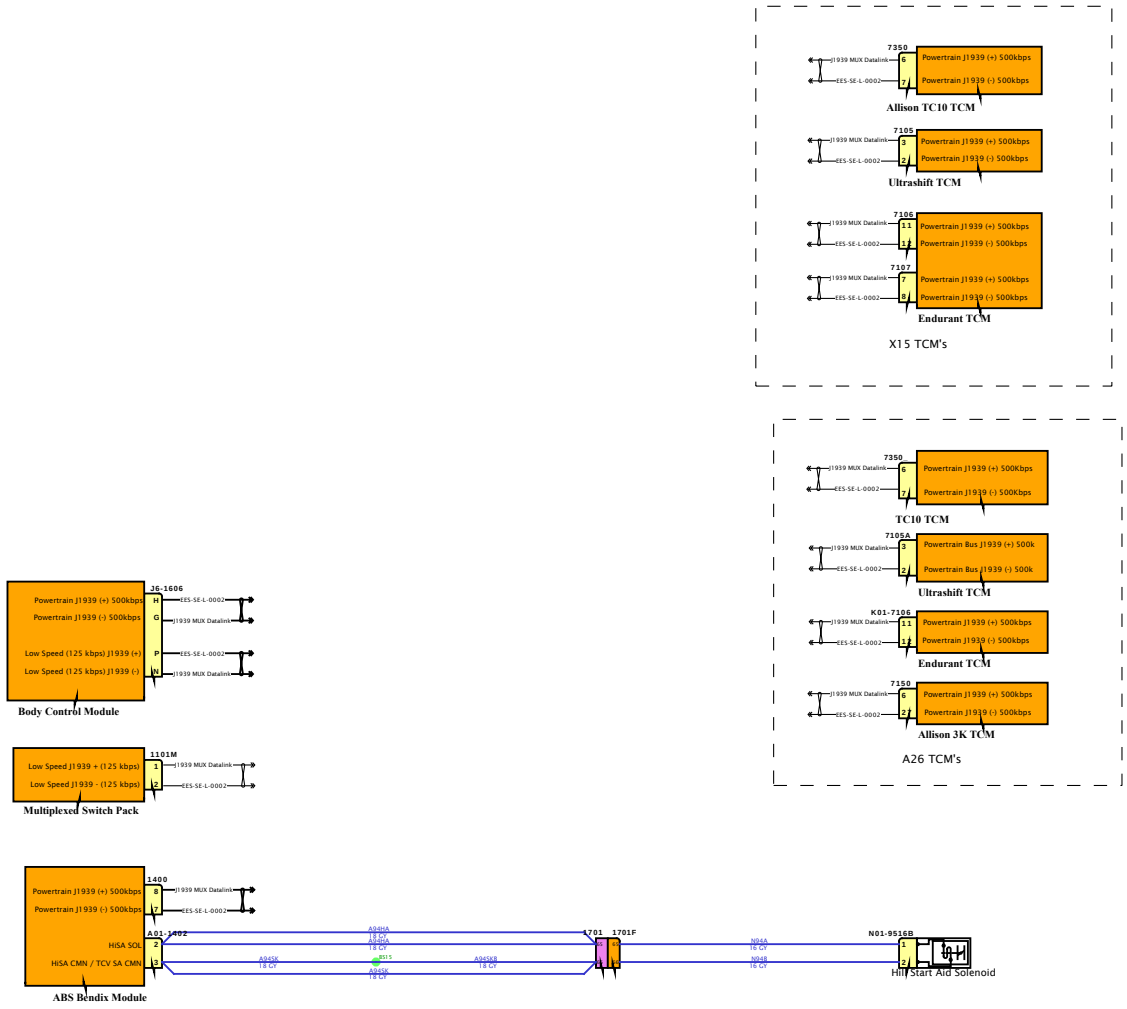

DESIGN DESCRIPTION

FEATURE CODES

SOFTWARE FEATURE CODES

NAVISTAR INC. CONFIDENTIAL PROPRIETARY

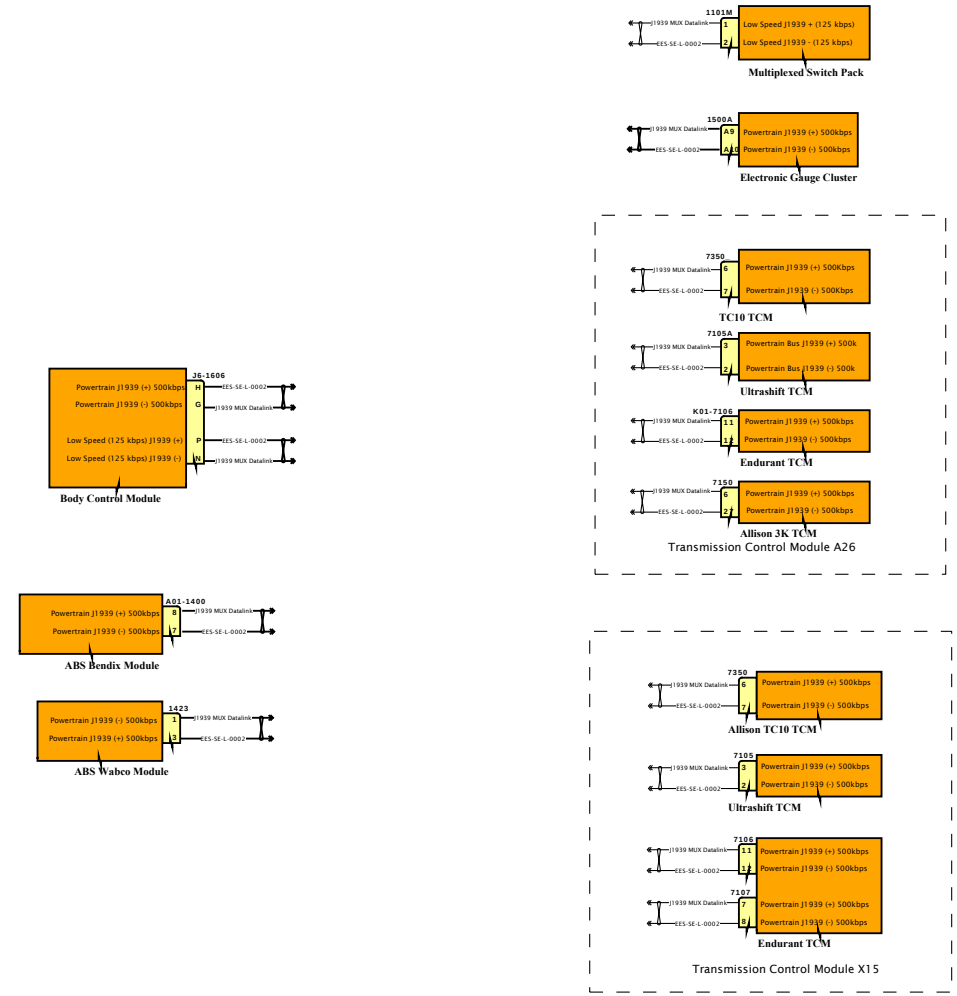

DESIGN DESCRIPTION

FEATURE CODES

SOFTWARE FEATURE CODES

NAVISTAR INC. CONFIDENTIAL PROPRIETARY

Diagram1

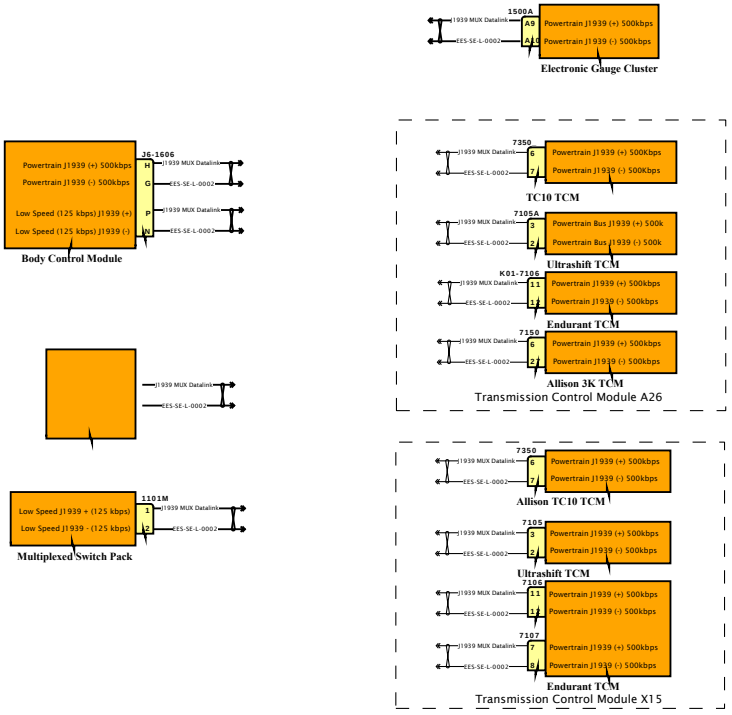

DESIGN DESCRIPTION

FEATURE CODES

SOFTWARE FEATURE CODES

NAVISTAR INC. CONFIDENTIAL PROPRIETARY

Diagram1

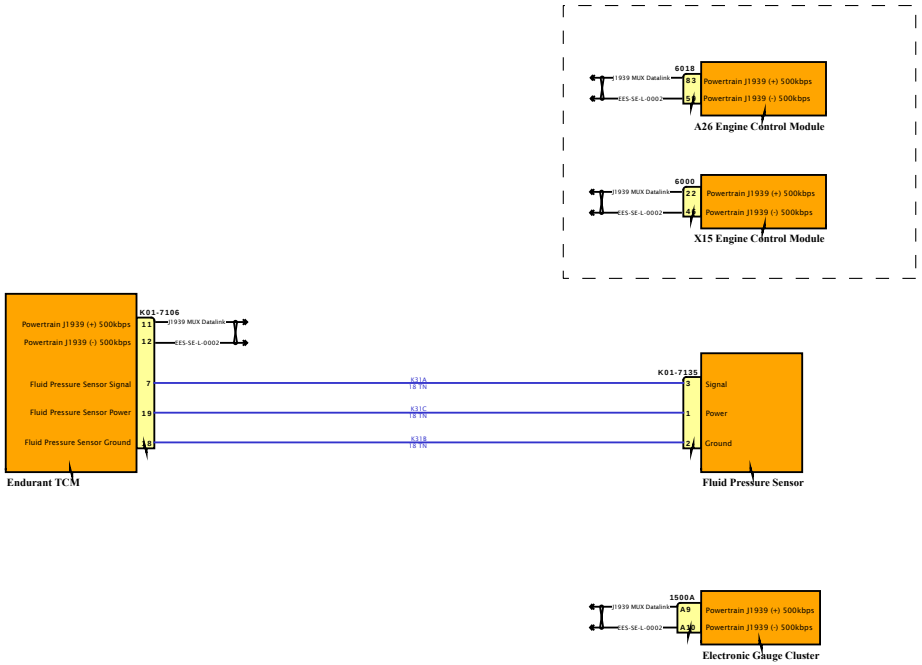

DESIGN DESCRIPTION

FEATURE CODES

SOFTWARE FEATURE CODES

NAVISTAR
NAVISTAR, INC. CONFIDENTIAL PROPRIETARY

Diagram1

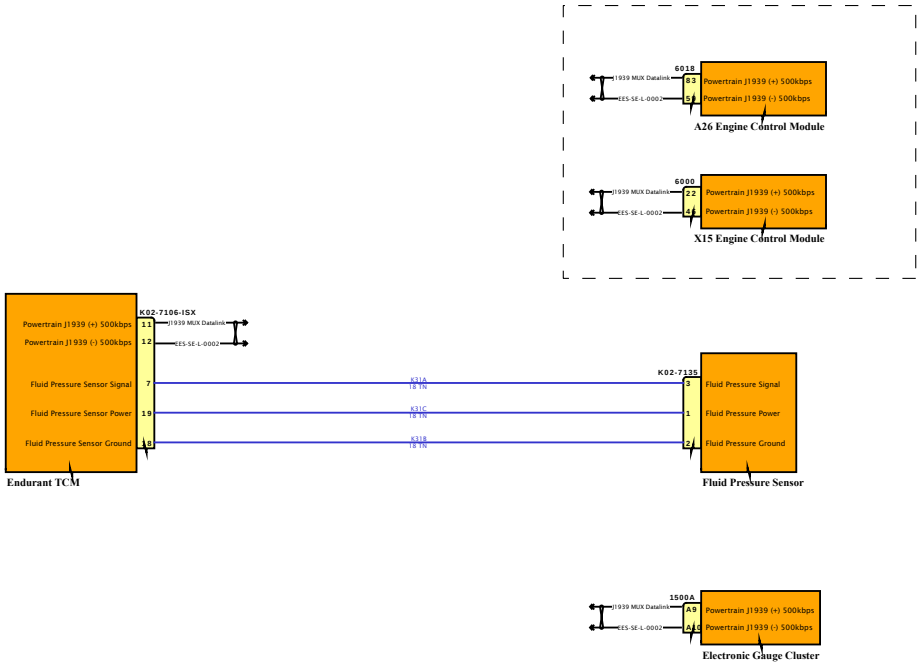

DESIGN DESCRIPTION

FEATURE CODES

SOFTWARE FEATURE CODES

NAVISTAR
NAVISTAR, INC. CONFIDENTIAL PROPRIETARY

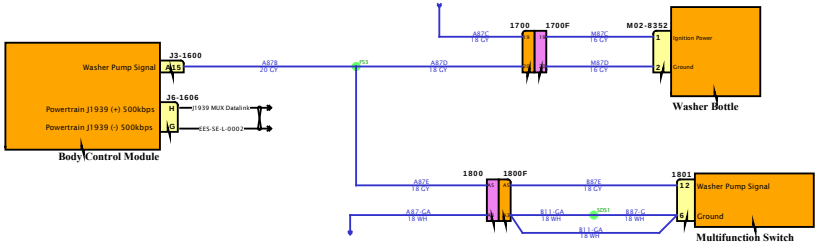

DESIGN DESCRIPTION

FEATURE CODES

SOFTWARE FEATURE CODES

NAVISTAR
NAVISTAR, INC. CONFIDENTIAL PROPRIETARY

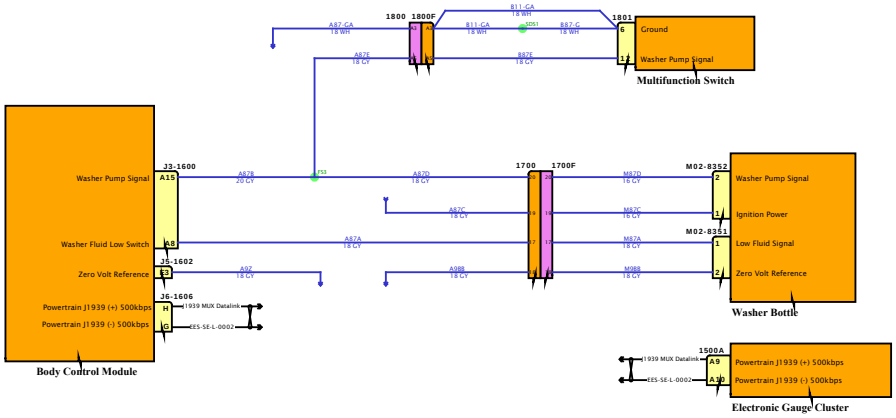

DESIGN DESCRIPTION

FEATURE CODES

SOFTWARE FEATURE CODES

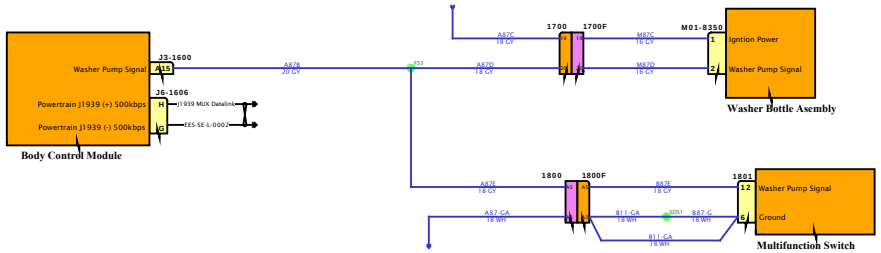

DESIGN DESCRIPTION

FEATURE CODES

SOFTWARE FEATURE CODES

NAVISTAR
NAVISTAR, INC. CONFIDENTIAL PROPRIETARY

Diagram1

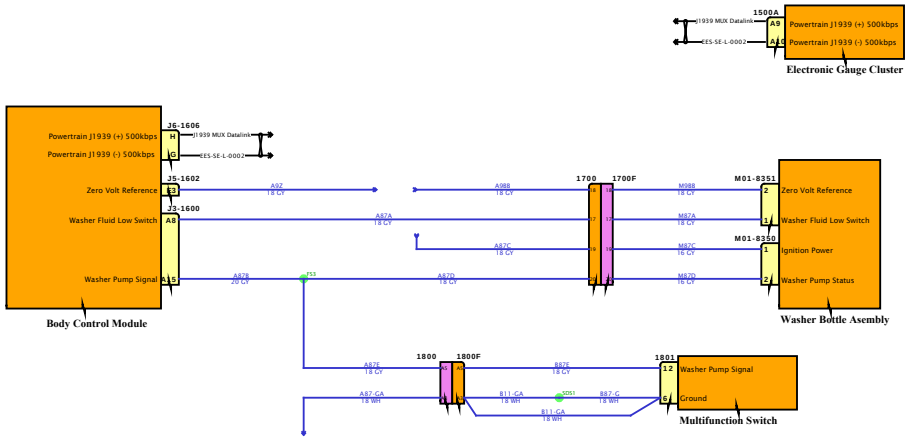

DESIGN DESCRIPTION

FEATURE CODES

SOFTWARE FEATURE CODES

NAVISTAR INC. CONFIDENTIAL PROPRIETARY

Diagram1

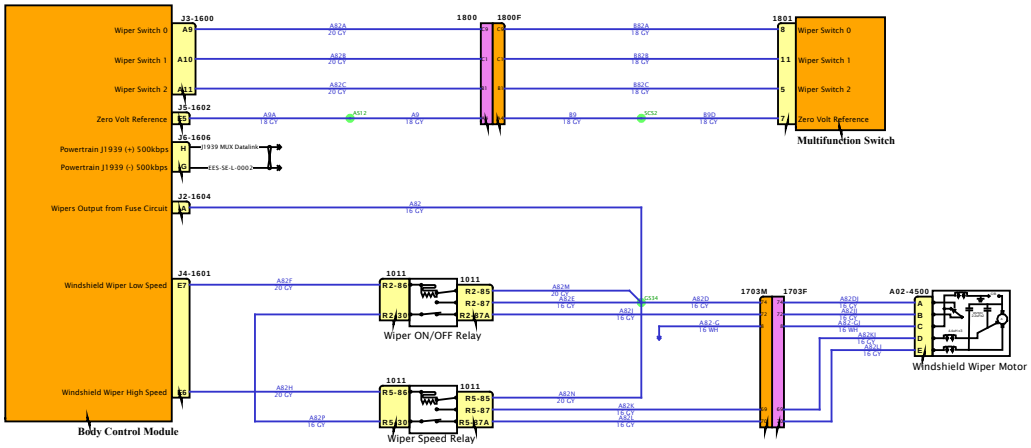

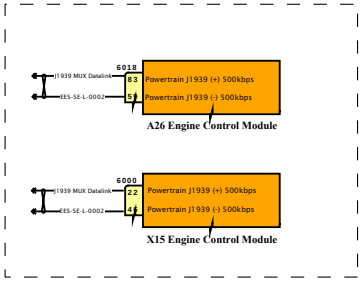

DESIGN DESCRIPTION

FEATURE CODES

SOFTWARE FEATURE CODES

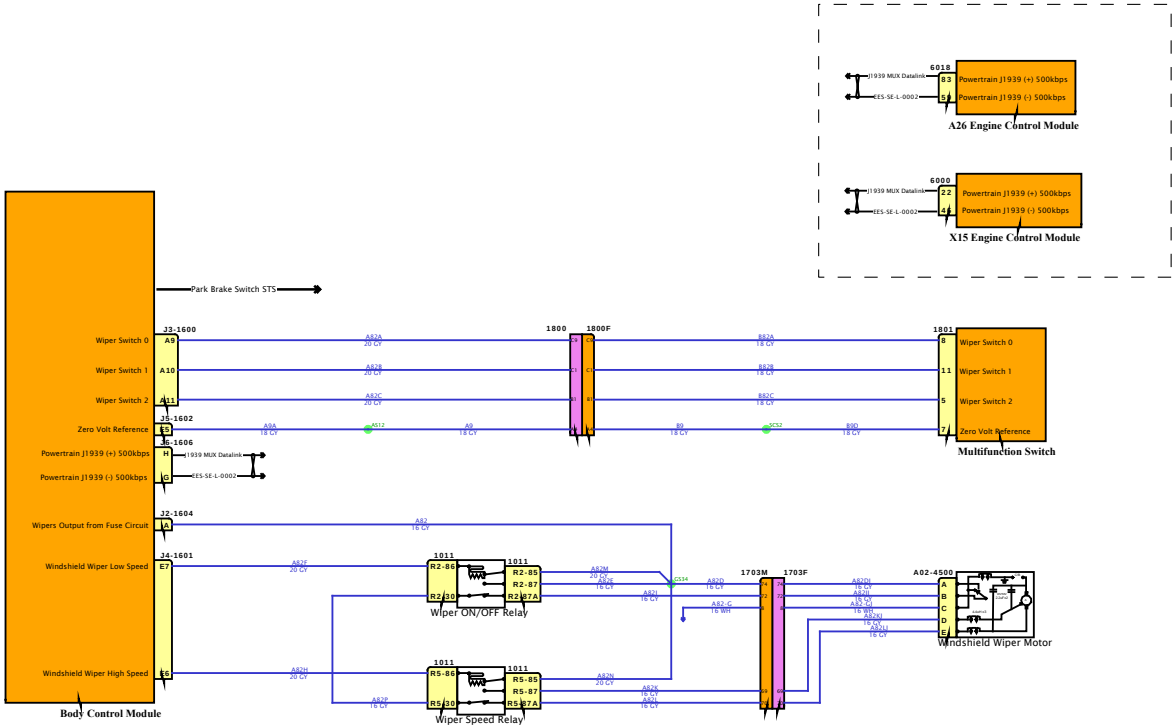

DESIGN DESCRIPTION

FEATURE CODES

SOFTWARE FEATURE CODES

Diagram1

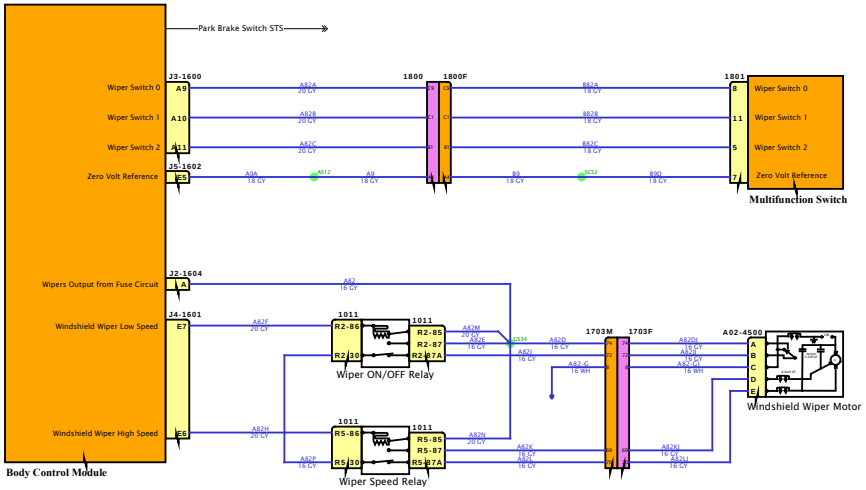

DESIGN DESCRIPTION

FEATURE CODES

SOFTWARE FEATURE CODES

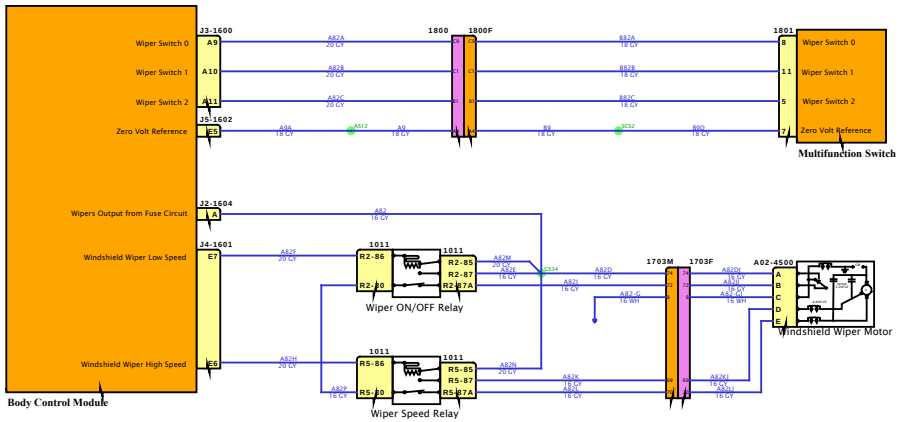

DESIGN DESCRIPTION

FEATURE CODES

SOFTWARE FEATURE CODES

Diagram1

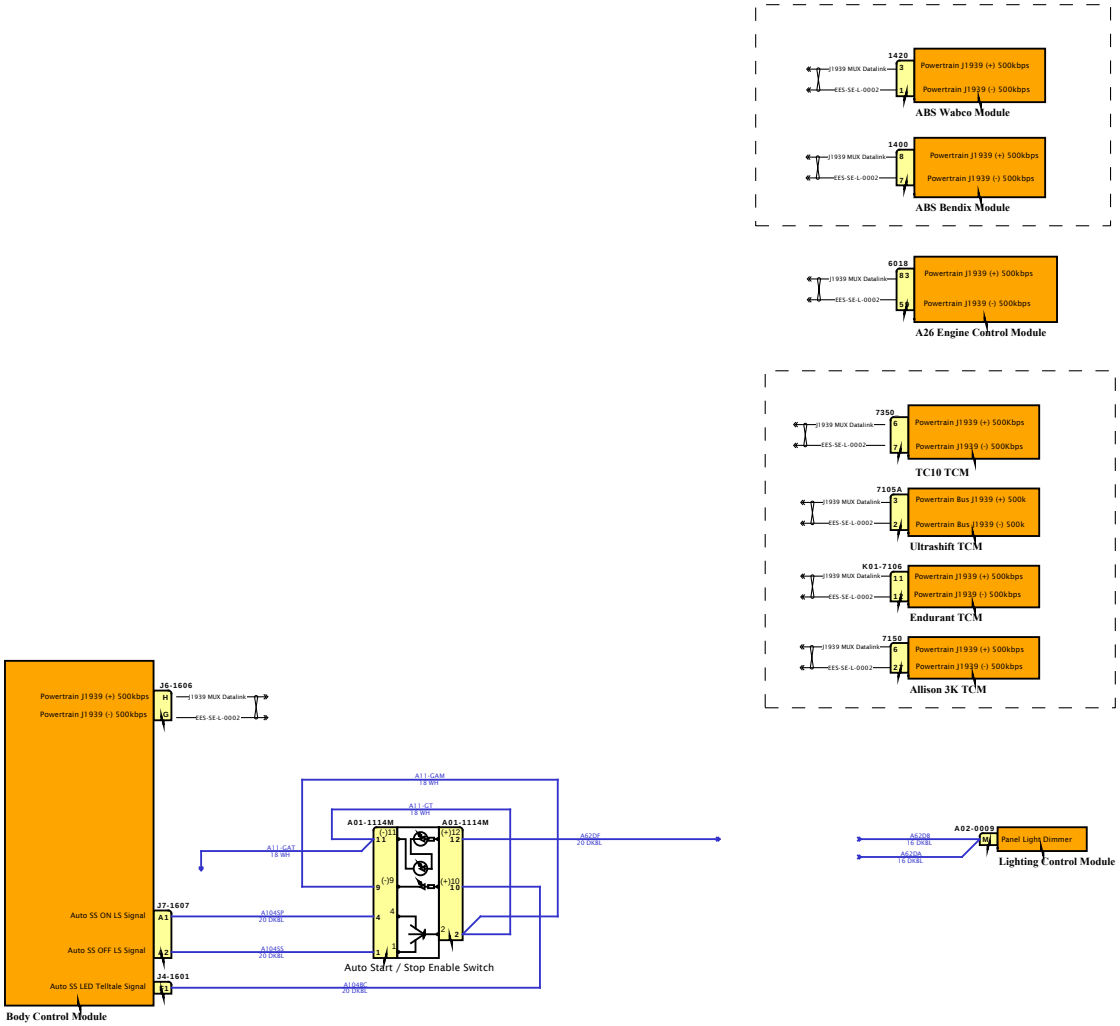

DESIGN DESCRIPTION

FEATURE CODES

SOFTWARE FEATURE CODES

NAVISTAR INC. CONFIDENTIAL PROPRIETARY

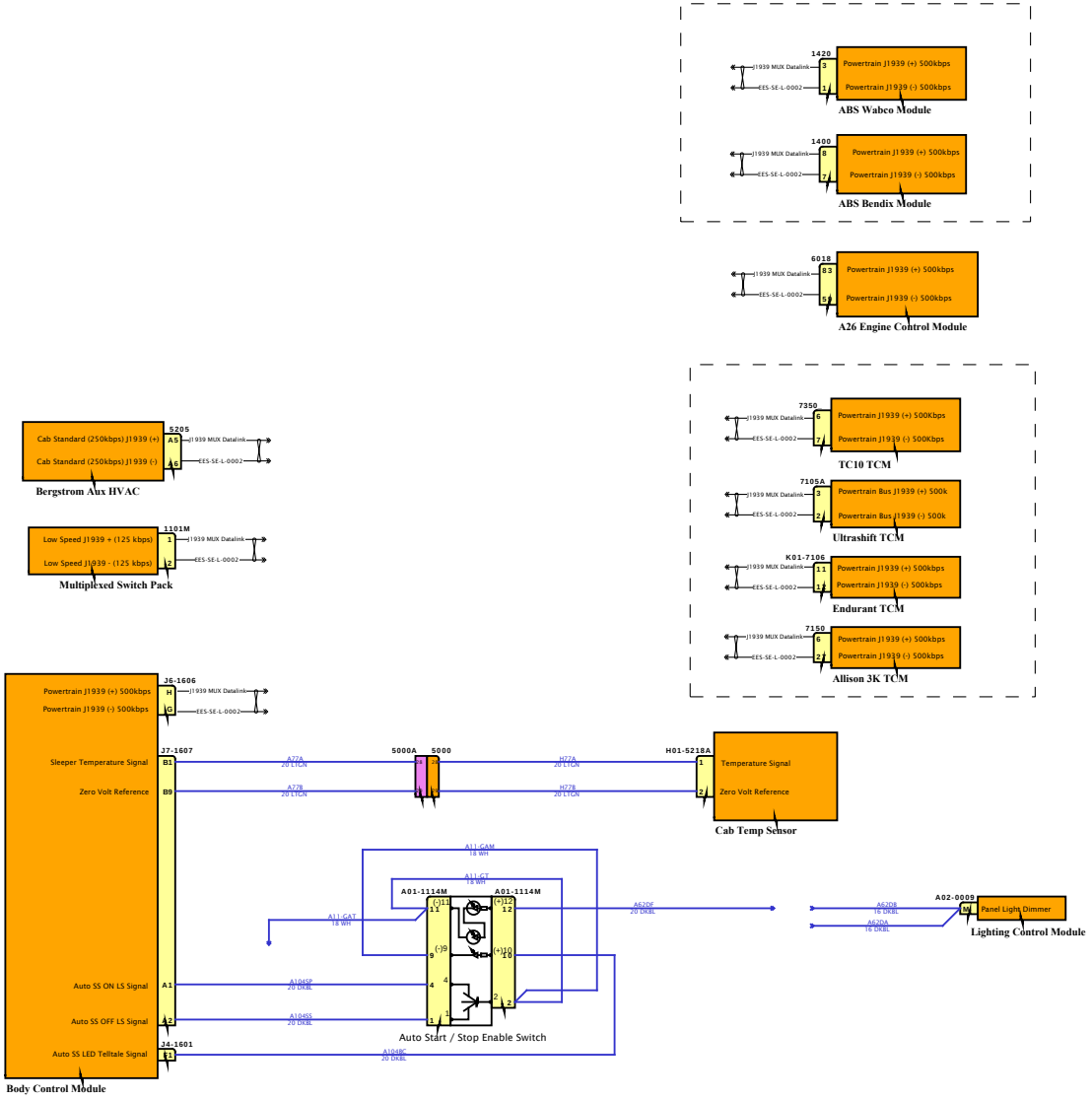

DESIGN DESCRIPTION

FEATURE CODES

SOFTWARE FEATURE CODES

Diagram1

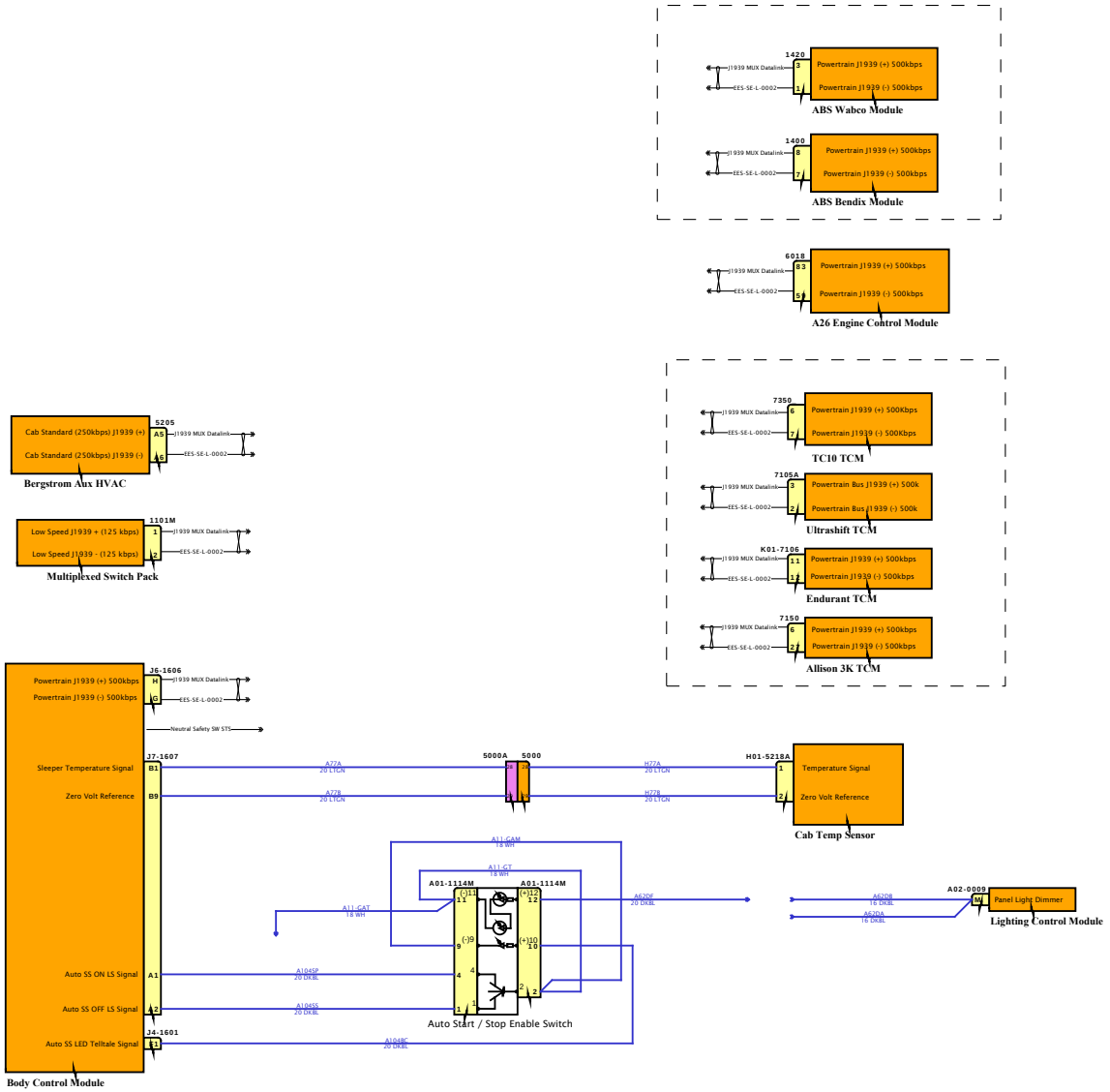

DESIGN DESCRIPTION

FEATURE CODES

SOFTWARE FEATURE CODES

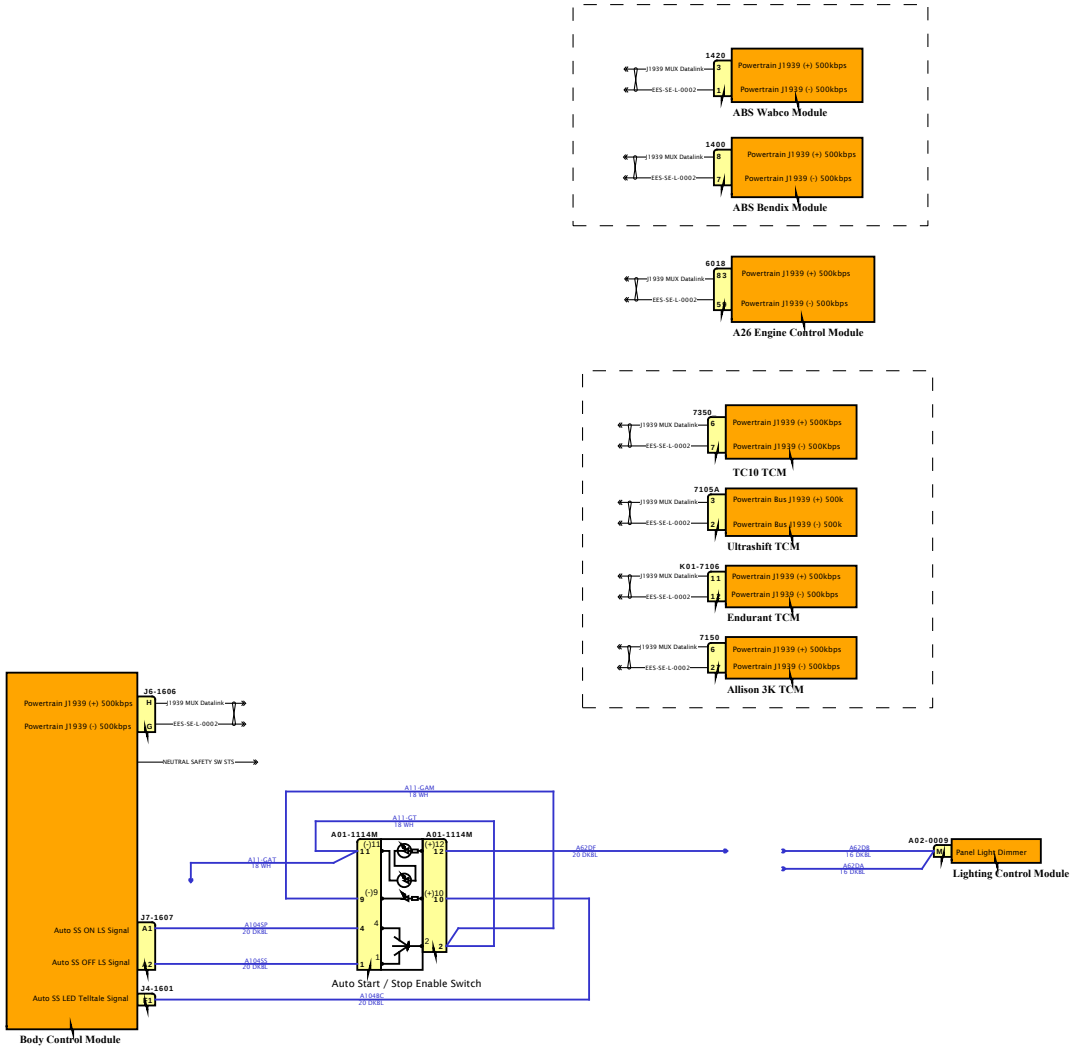

DESIGN DESCRIPTION

FEATURE CODES

SOFTWARE FEATURE CODES

NAVISTAR
NAVISTAR, INC. CONFIDENTIAL PROPRIETARY

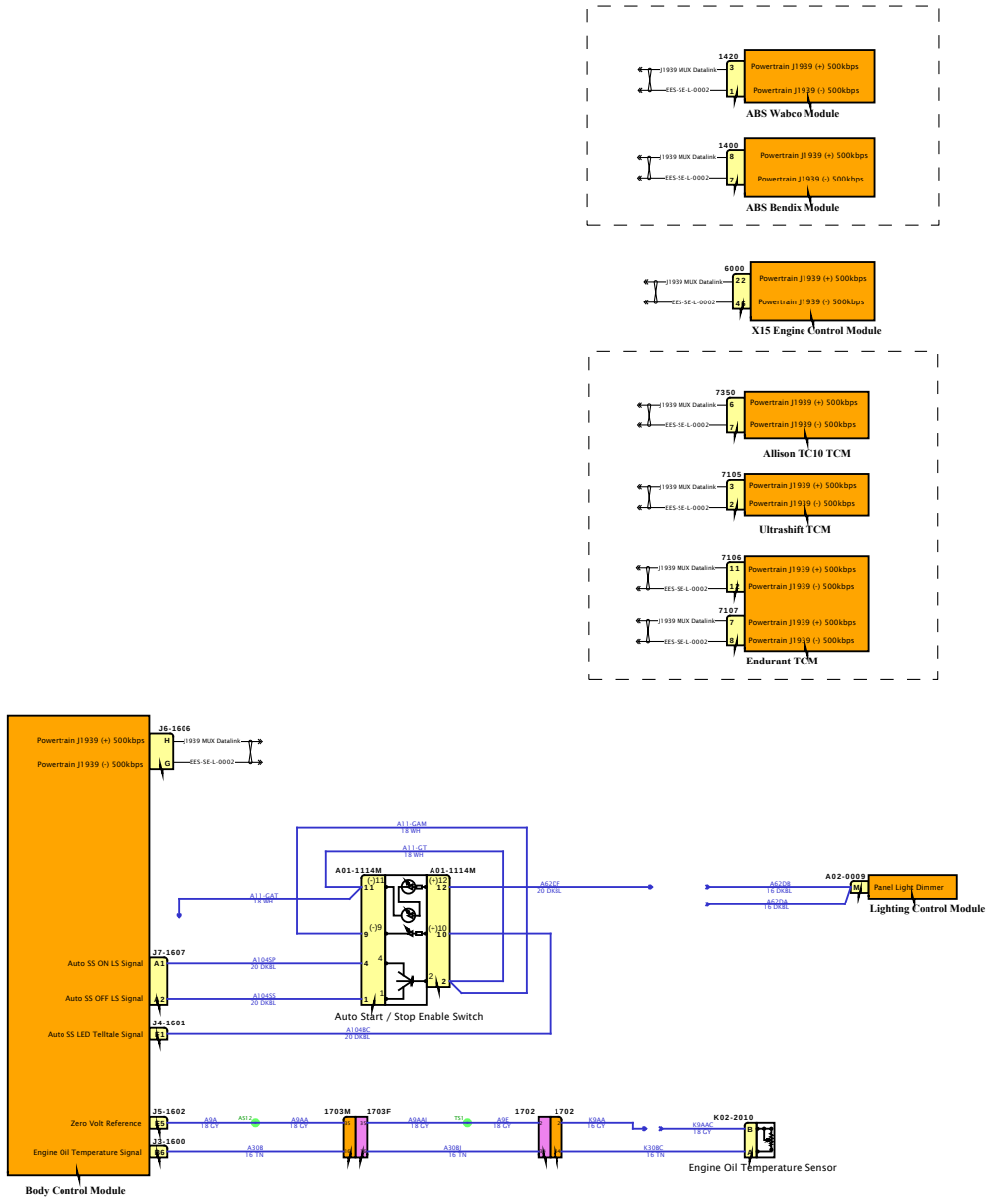

DESIGN DESCRIPTION

FEATURE CODES

SOFTWARE FEATURE CODES

NAVISTAR INC. CONFIDENTIAL PROPRIETARY

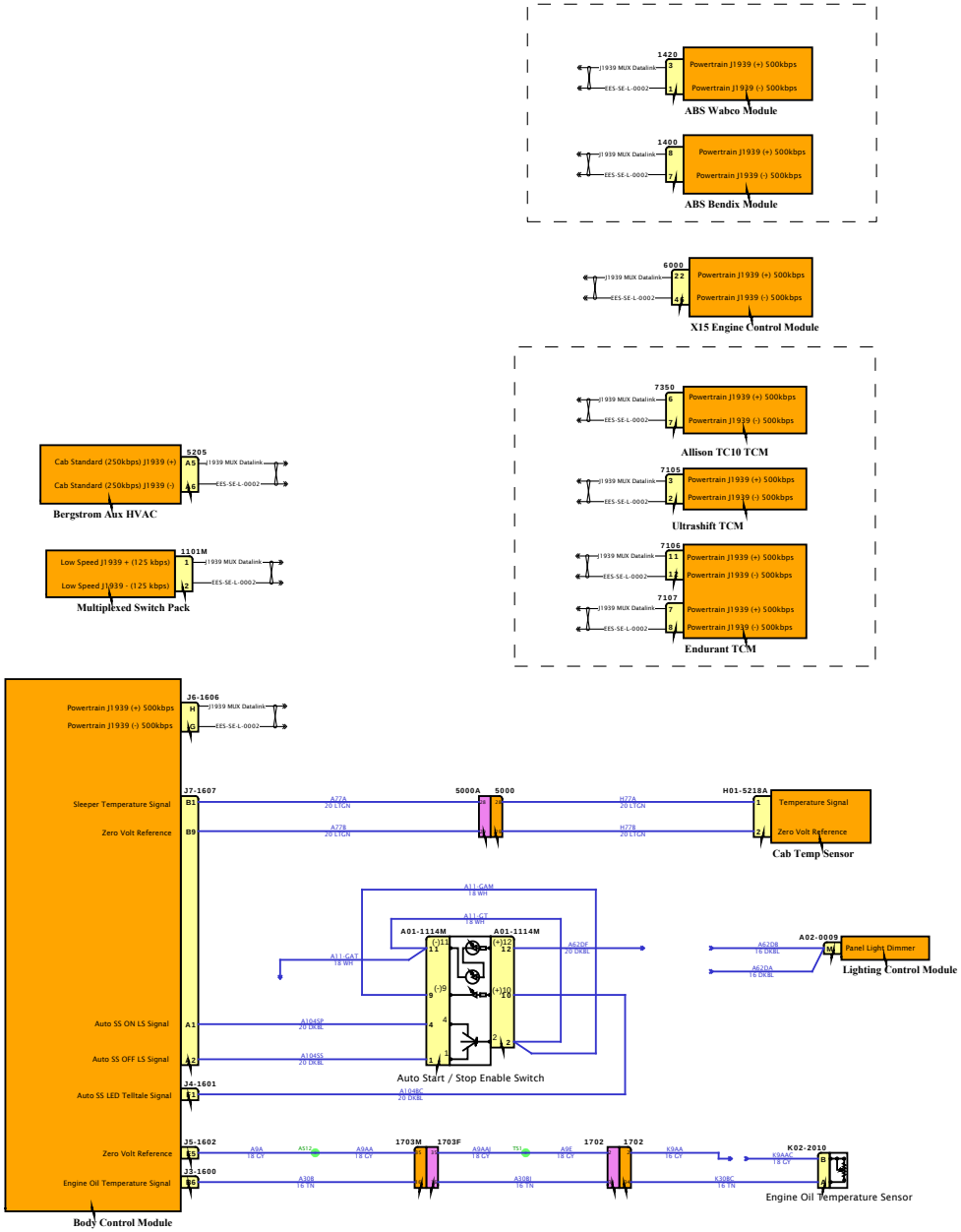

DESIGN DESCRIPTION

FEATURE CODES

SOFTWARE FEATURE CODES

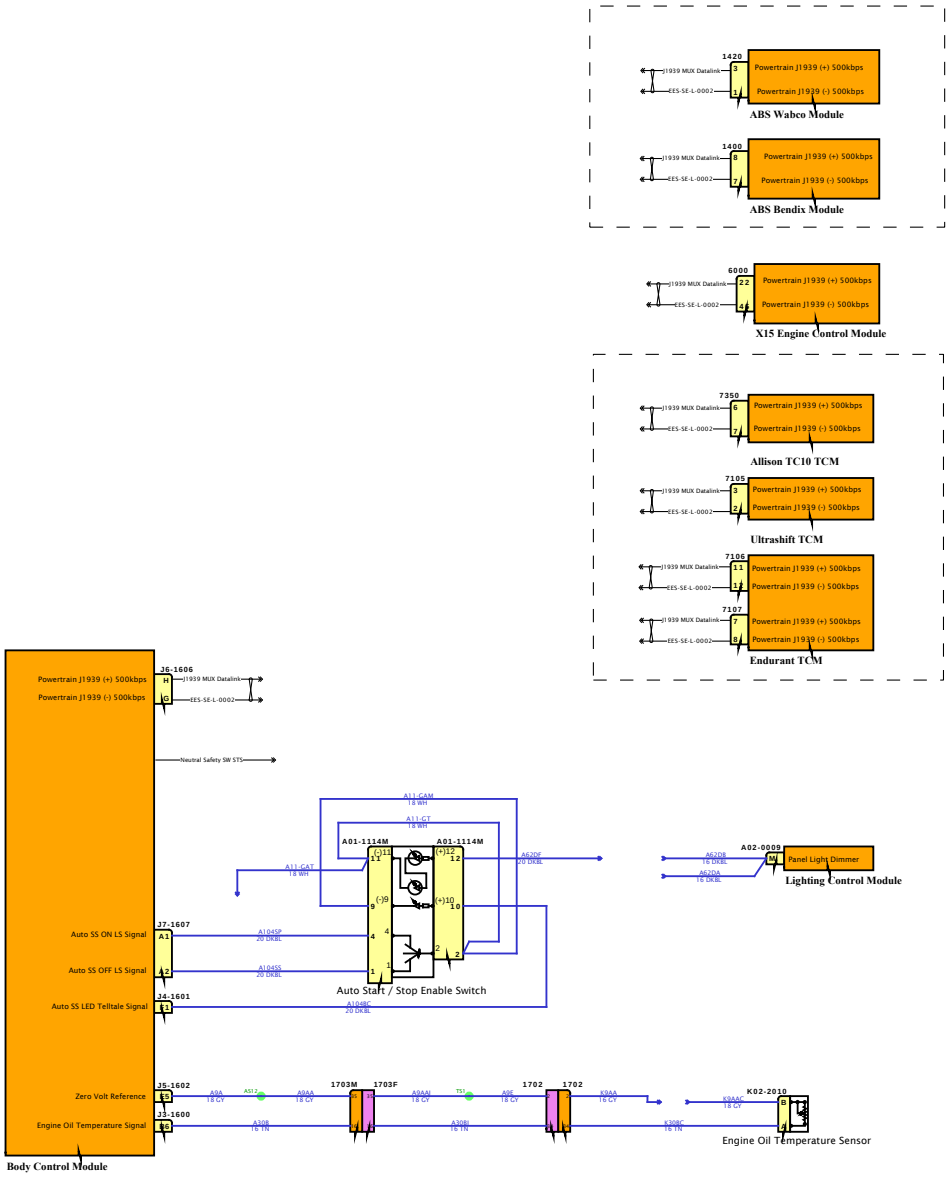

DESIGN DESCRIPTION

FEATURE CODES

SOFTWARE FEATURE CODES

NAVISTAR INC. CONFIDENTIAL PROPRIETARY

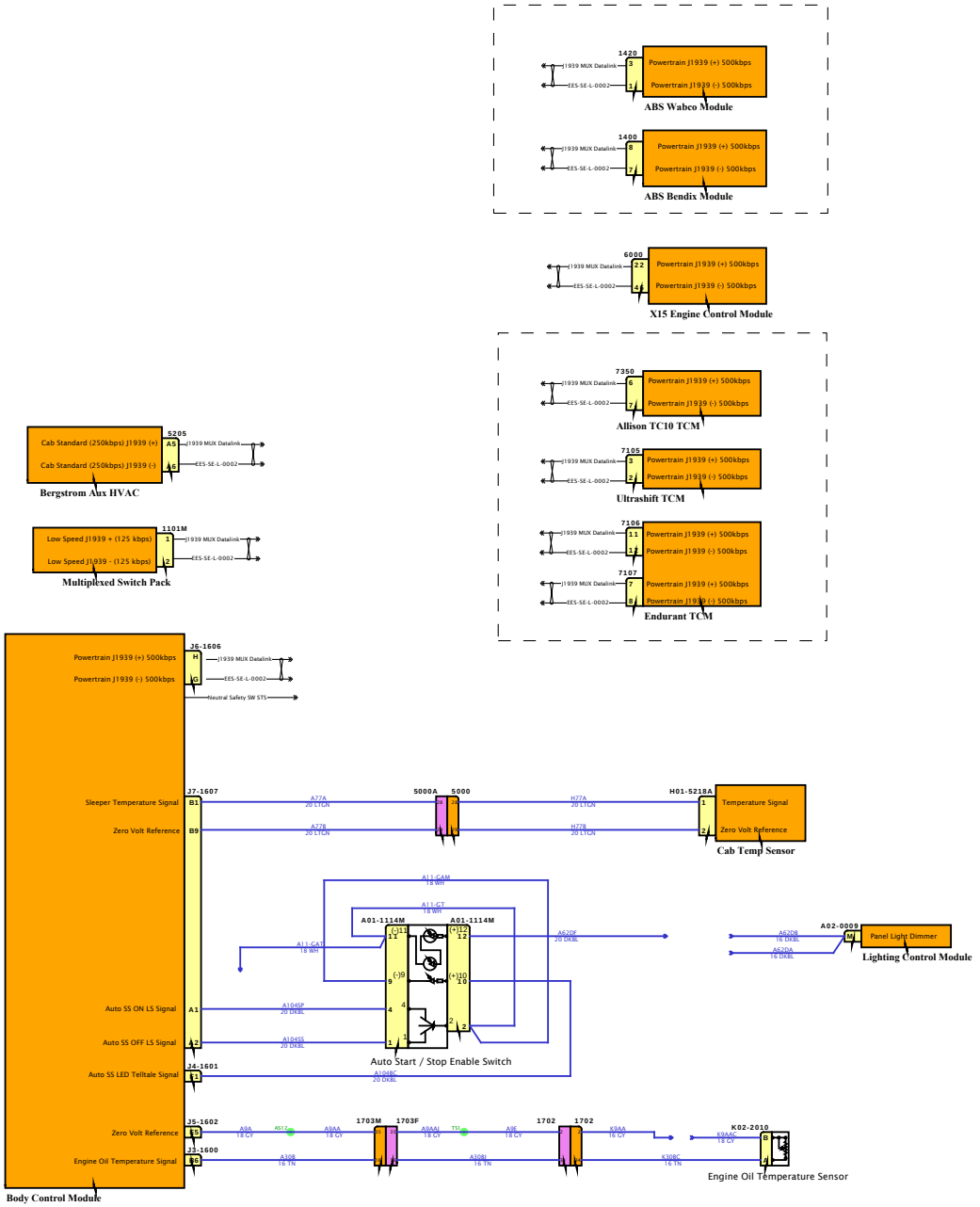

DESIGN DESCRIPTION

FEATURE CODES

SOFTWARE FEATURE CODES

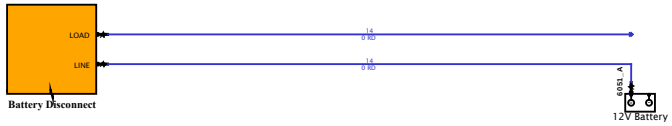

DESIGN DESCRIPTION

FEATURE CODES

SOFTWARE FEATURE CODES

NAVISTAR INC. CONFIDENTIAL PROPRIETARY

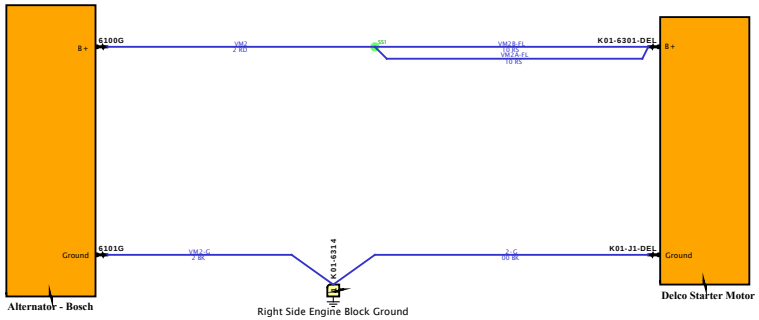

DESIGN DESCRIPTION

FEATURE CODES

SOFTWARE FEATURE CODES

NAVISTAR INC. CONFIDENTIAL PROPRIETARY

Diagram1

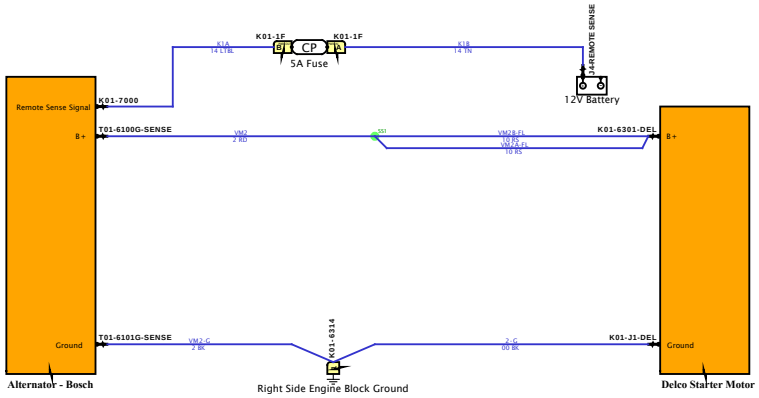

DESIGN DESCRIPTION

FEATURE CODES

SOFTWARE FEATURE CODES

NAVISTAR
NAVISTAR, INC. CONFIDENTIAL PROPRIETARY

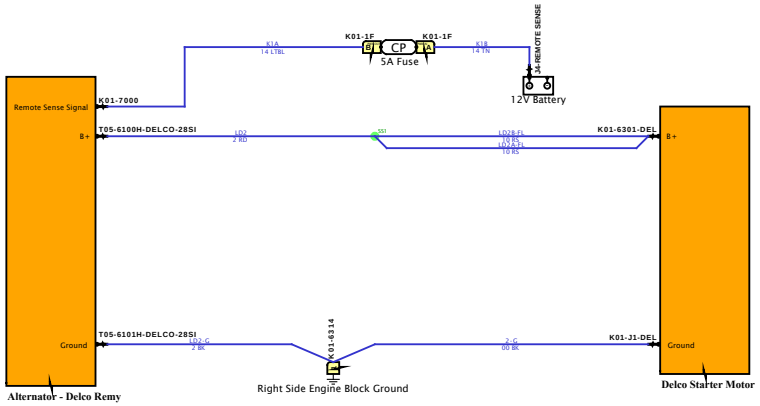

DESIGN DESCRIPTION

FEATURE CODES

SOFTWARE FEATURE CODES

Diagram1

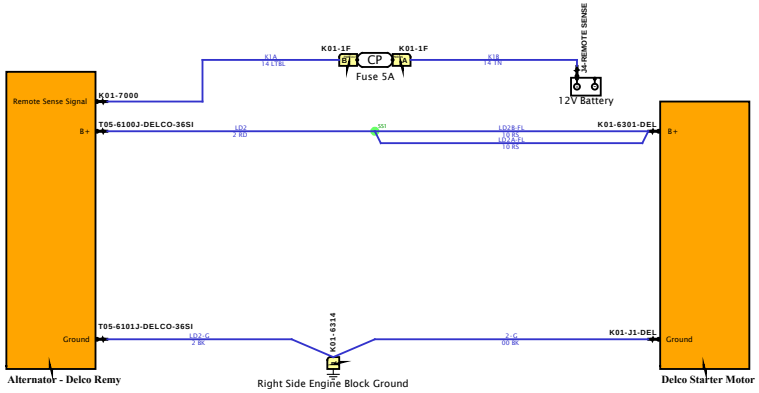

DESIGN DESCRIPTION

FEATURE CODES

SOFTWARE FEATURE CODES

NAVISTAR INC. CONFIDENTIAL PROPRIETARY

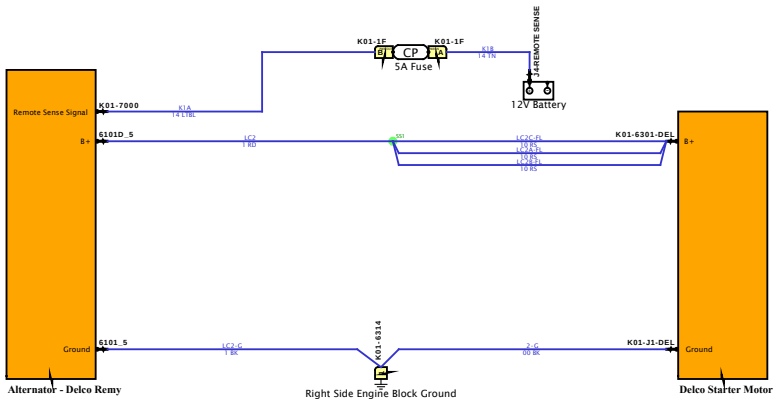

DESIGN DESCRIPTION

FEATURE CODES

SOFTWARE FEATURE CODES

NAVISTAR
NAVISTAR, INC. CONFIDENTIAL PROPRIETARY

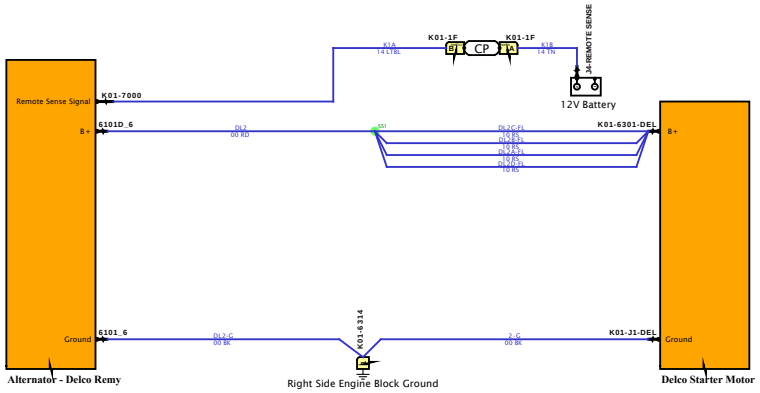

DESIGN DESCRIPTION

FEATURE CODES

SOFTWARE FEATURE CODES

NAVISTAR INC. CONFIDENTIAL PROPRIETARY

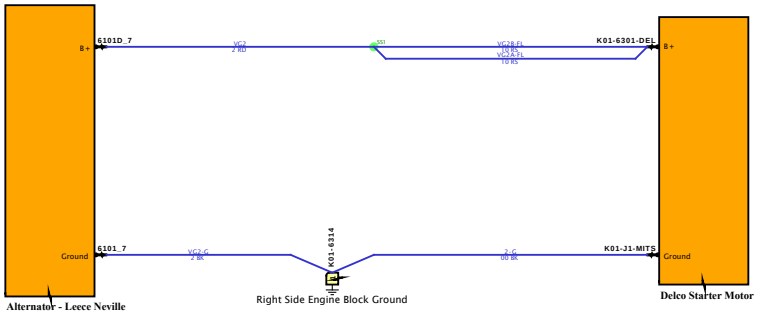

DESIGN DESCRIPTION

FEATURE CODES

SOFTWARE FEATURE CODES

NAVISTAR INC. CONFIDENTIAL PROPRIETARY

Diagram1

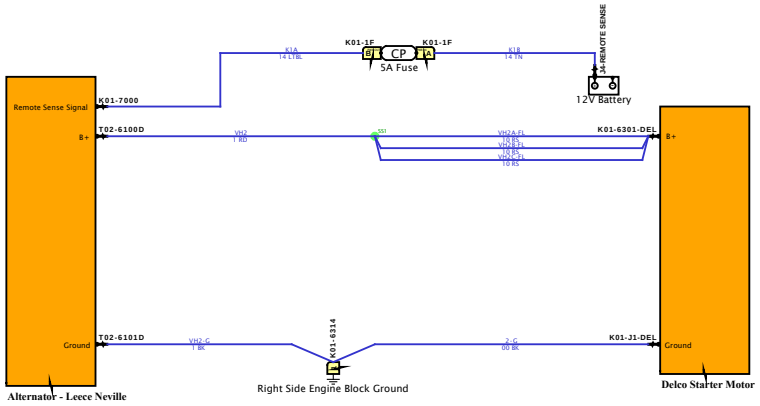

DESIGN DESCRIPTION

FEATURE CODES

SOFTWARE FEATURE CODES

NAVISTAR INC. CONFIDENTIAL PROPRIETARY

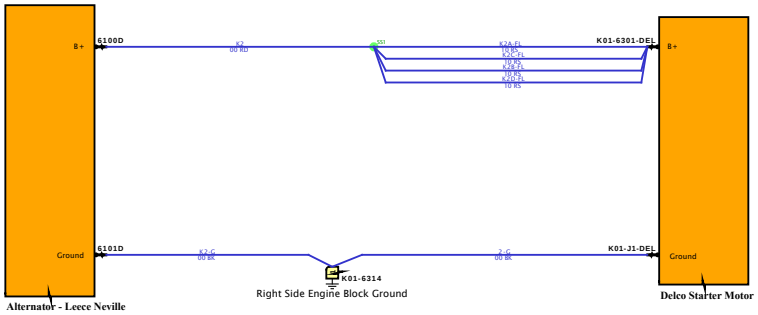

DESIGN DESCRIPTION

FEATURE CODES

SOFTWARE FEATURE CODES

NAVISTAR INC. CONFIDENTIAL PROPRIETARY

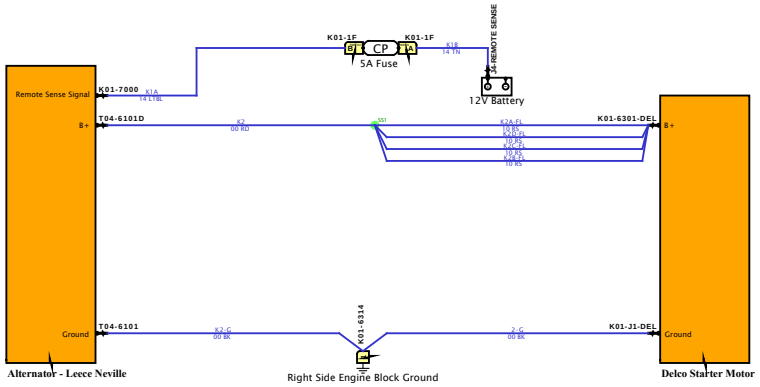

DESIGN DESCRIPTION

FEATURE CODES

SOFTWARE FEATURE CODES

NAVISTAR
NAVISTAR, INC. CONFIDENTIAL PROPRIETARY

DESIGN DESCRIPTION

FEATURE CODES

SOFTWARE FEATURE CODES

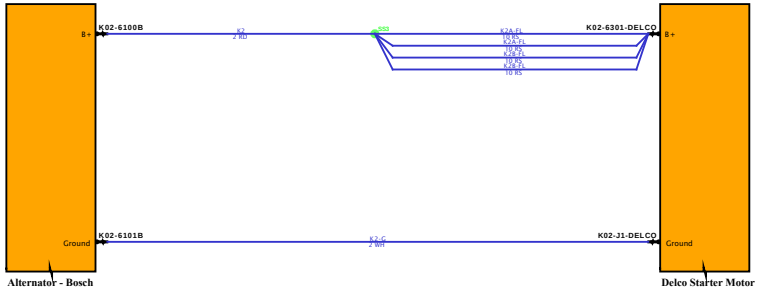

NAVISTAR INC. CONFIDENTIAL PROPRIETARY

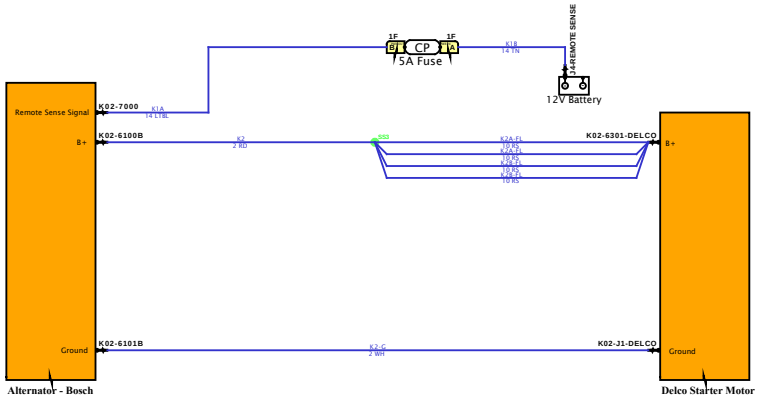

DESIGN DESCRIPTION

FEATURE CODES

SOFTWARE FEATURE CODES

NAVISTAR
NAVISTAR, INC. CONFIDENTIAL PROPRIETARY

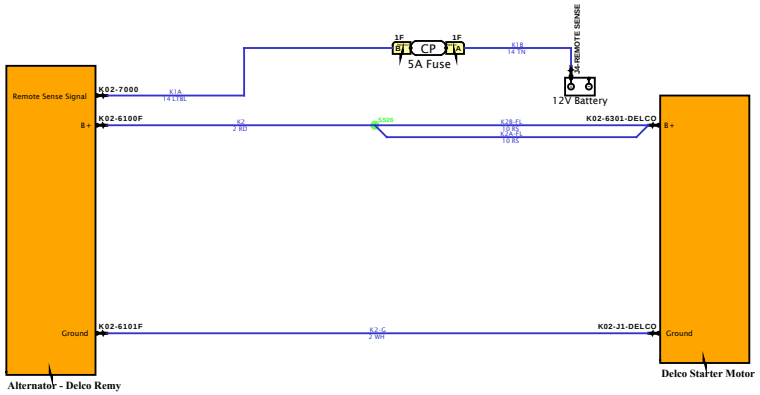

DESIGN DESCRIPTION

FEATURE CODES

SOFTWARE FEATURE CODES

NAVISTAR
NAVISTAR, INC. CONFIDENTIAL PROPRIETARY

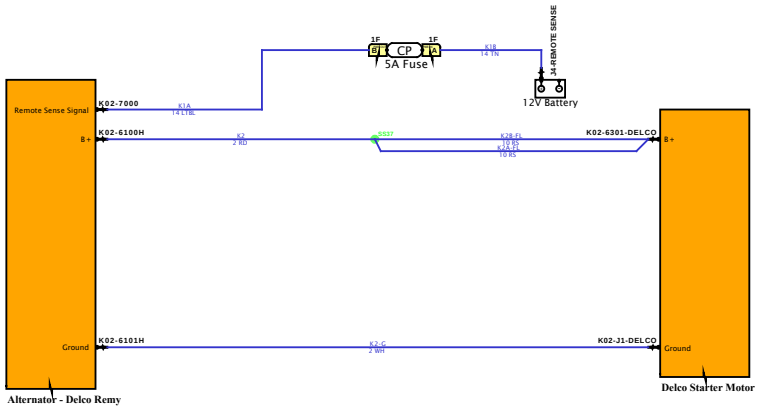

DESIGN DESCRIPTION

FEATURE CODES

SOFTWARE FEATURE CODES

NAVISTAR
NAVISTAR, INC. CONFIDENTIAL PROPRIETARY

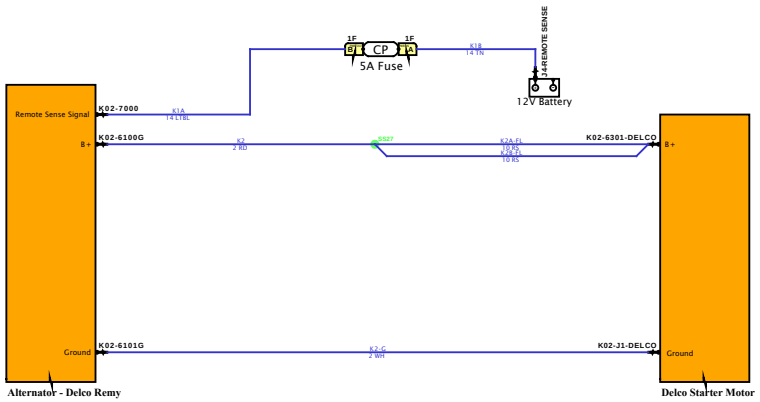

DESIGN DESCRIPTION

FEATURE CODES

SOFTWARE FEATURE CODES

NAVISTAR
NAVISTAR, INC. CONFIDENTIAL PROPRIETARY

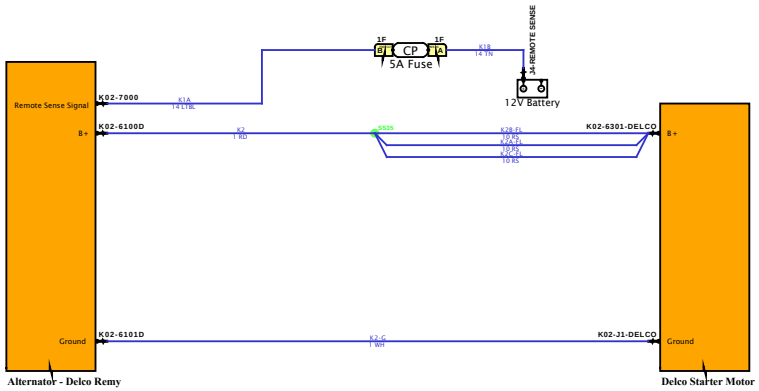

DESIGN DESCRIPTION

FEATURE CODES

SOFTWARE FEATURE CODES

NAVISTAR
NAVISTAR, INC. CONFIDENTIAL PROPRIETARY

Diagram1-Combination2

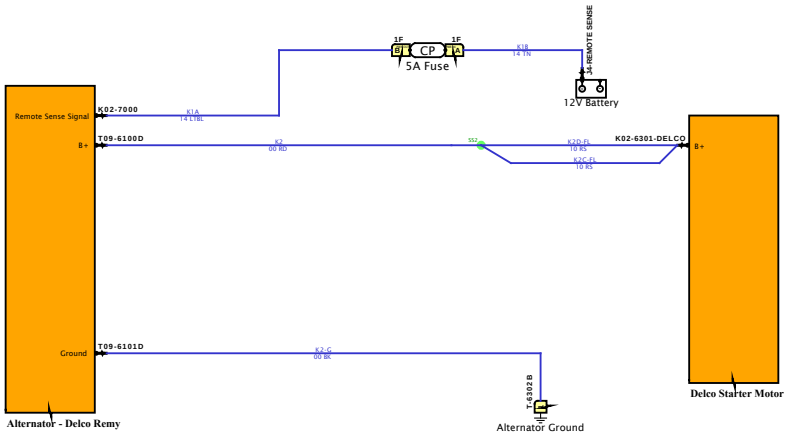

DESIGN DESCRIPTION

FEATURE CODES

SOFTWARE FEATURE CODES

NAVISTAR
NAVISTAR, INC. CONFIDENTIAL PROPRIETARY

Diagram1-Combination1

DESIGN DESCRIPTION

FEATURE CODES

SOFTWARE FEATURE CODES

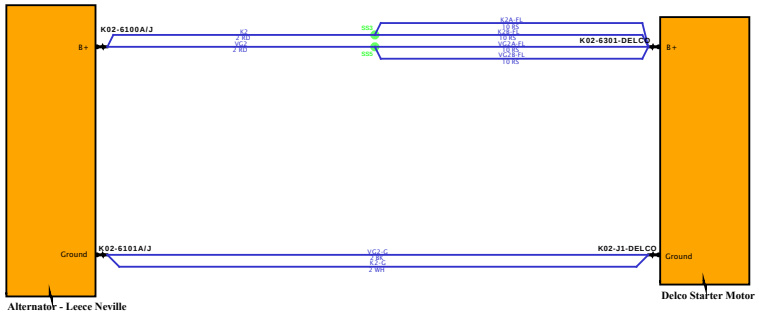

NAVISTAR
NAVISTAR, INC. CONFIDENTIAL PROPRIETARY

Diagram1-Combination1

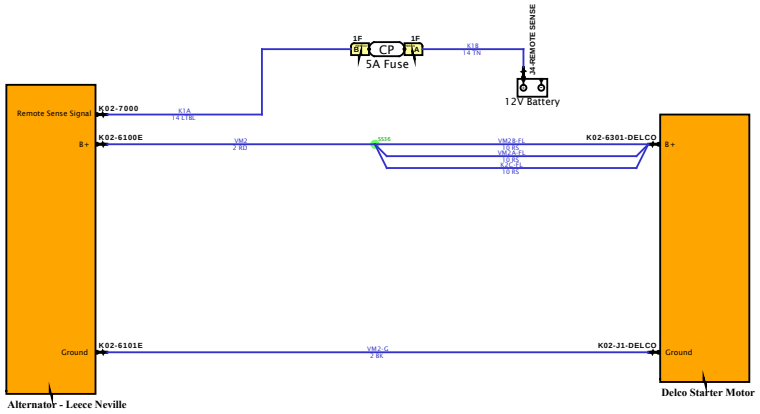

DESIGN DESCRIPTION

FEATURE CODES

SOFTWARE FEATURE CODES

NAVISTAR INC. CONFIDENTIAL PROPRIETARY

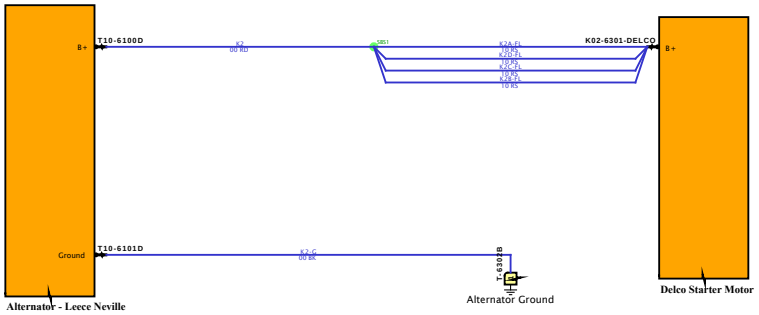

DESIGN DESCRIPTION

FEATURE CODES

SOFTWARE FEATURE CODES

NAVISTAR INC. CONFIDENTIAL PROPRIETARY

Diagram1

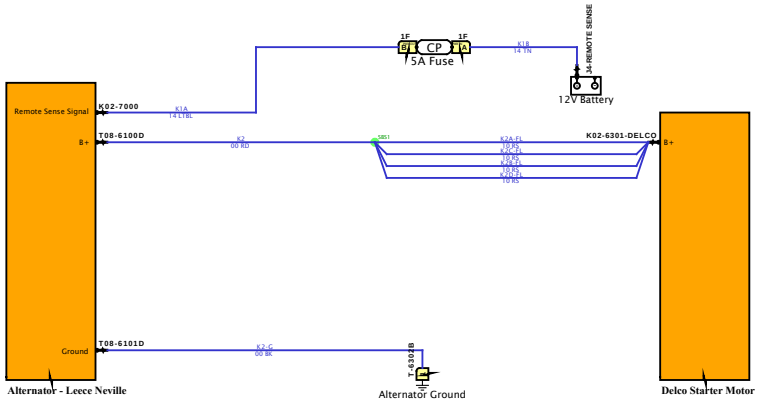

DESIGN DESCRIPTION

FEATURE CODES

SOFTWARE FEATURE CODES

NAVISTAR

NAVISTAR INC. CONFIDENTIAL PROPRIETARY

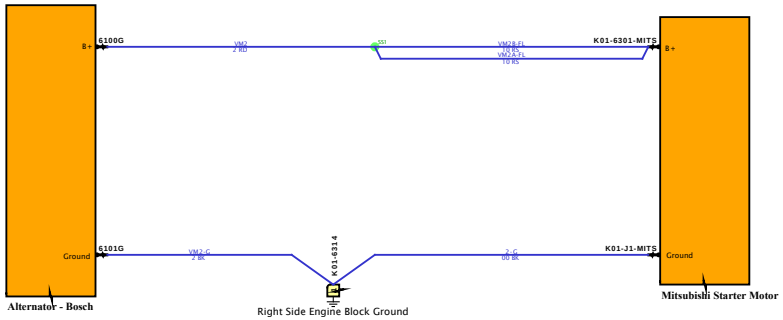

DESIGN DESCRIPTION

FEATURE CODES

SOFTWARE FEATURE CODES

NAVISTAR INC. CONFIDENTIAL PROPRIETARY

Diagram1

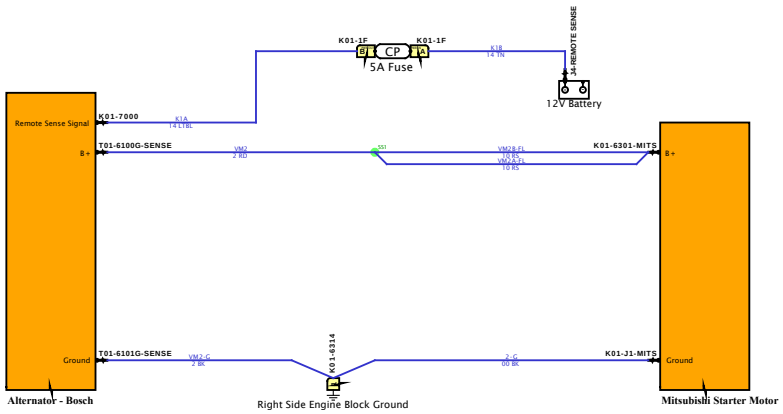

DESIGN DESCRIPTION

FEATURE CODES

SOFTWARE FEATURE CODES

NAVISTAR
NAVISTAR, INC. CONFIDENTIAL PROPRIETARY

Diagram1

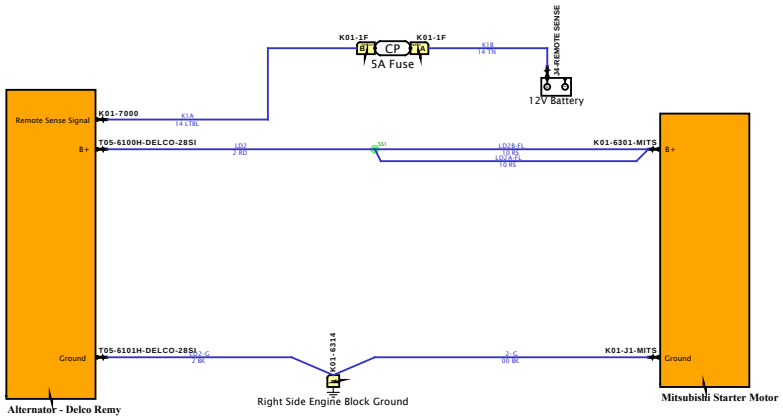

DESIGN DESCRIPTION

FEATURE CODES

SOFTWARE FEATURE CODES

NAVISTAR INC. CONFIDENTIAL PROPRIETARY

Diagram1

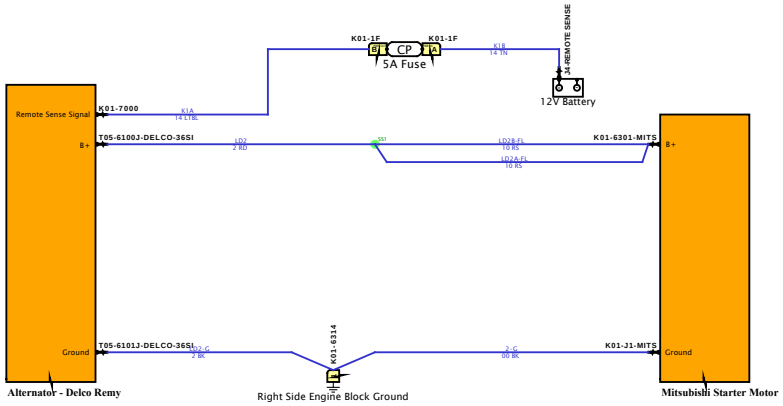

DESIGN DESCRIPTION

FEATURE CODES

SOFTWARE FEATURE CODES

NAVISTAR
NAVISTAR, INC. CONFIDENTIAL PROPRIETARY

Diagram1

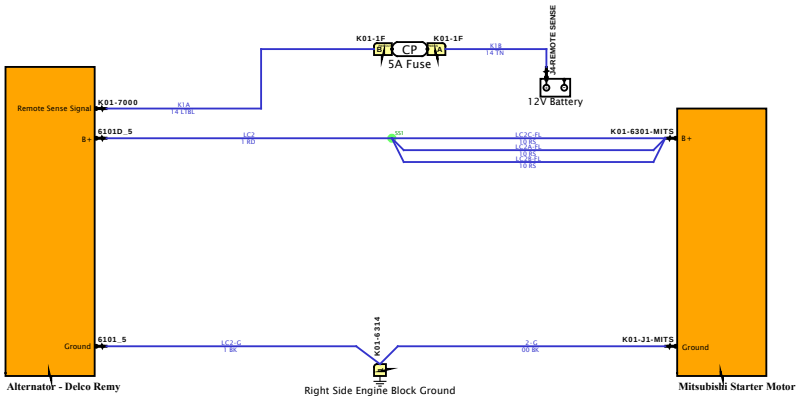

DESIGN DESCRIPTION

FEATURE CODES

SOFTWARE FEATURE CODES

NAVISTAR
NAVISTAR, INC. CONFIDENTIAL PROPRIETARY

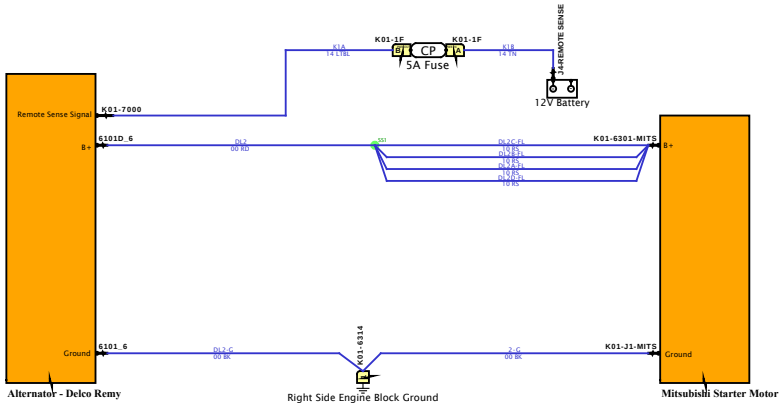

DESIGN DESCRIPTION

FEATURE CODES

SOFTWARE FEATURE CODES

NAVISTAR
NAVISTAR, INC. CONFIDENTIAL PROPRIETARY

DESIGN DESCRIPTION

FEATURE CODES

SOFTWARE FEATURE CODES

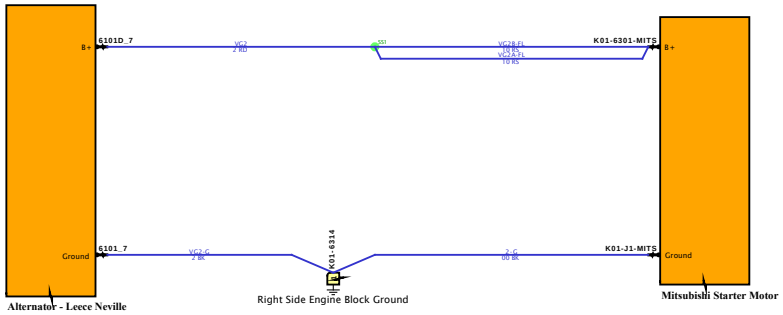

Diagram1

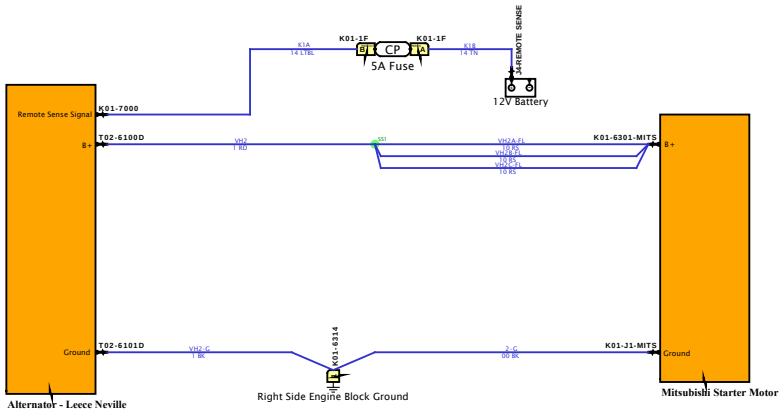

DESIGN DESCRIPTION

FEATURE CODES

SOFTWARE FEATURE CODES

NAVISTAR
NAVISTAR, INC. CONFIDENTIAL PROPRIETARY

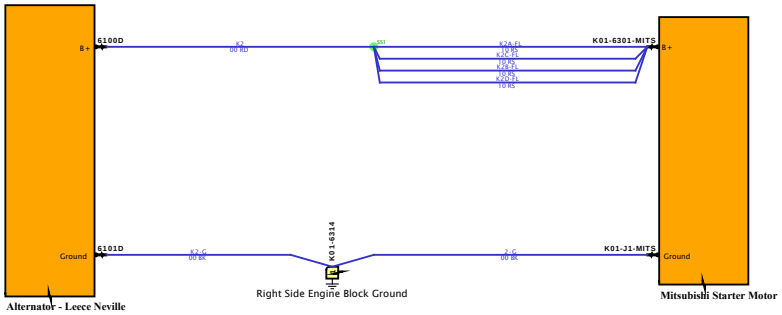

DESIGN DESCRIPTION

FEATURE CODES

SOFTWARE FEATURE CODES

NAVISTAR

NAVISTAR INC. CONFIDENTIAL PROPRIETARY

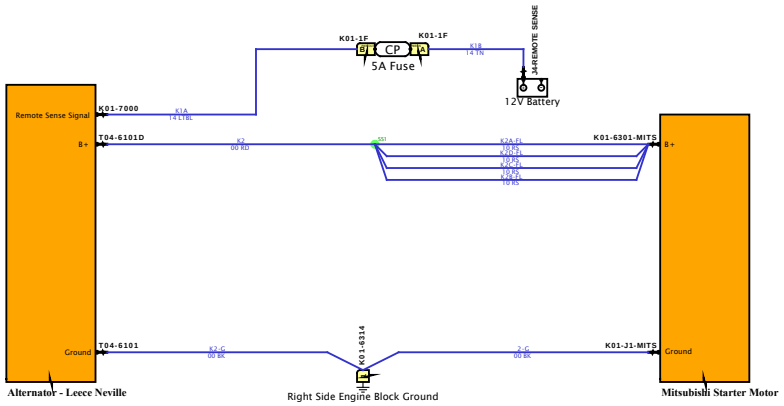

DESIGN DESCRIPTION

FEATURE CODES

SOFTWARE FEATURE CODES

NAVISTAR INC. CONFIDENTIAL PROPRIETARY

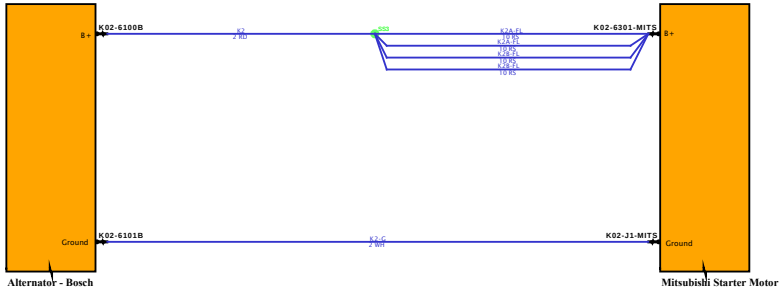

DESIGN DESCRIPTION

FEATURE CODES

SOFTWARE FEATURE CODES

NAVISTAR INC. CONFIDENTIAL PROPRIETARY

Diagram1

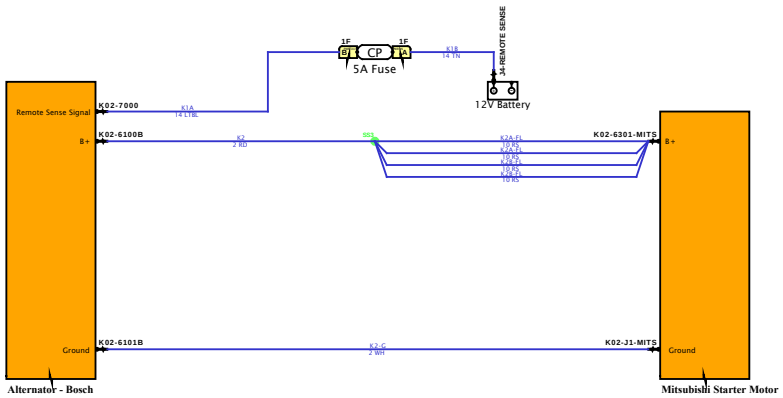

DESIGN DESCRIPTION

FEATURE CODES

SOFTWARE FEATURE CODES

NAVISTAR
NAVISTAR, INC. CONFIDENTIAL PROPRIETARY

Diagram1

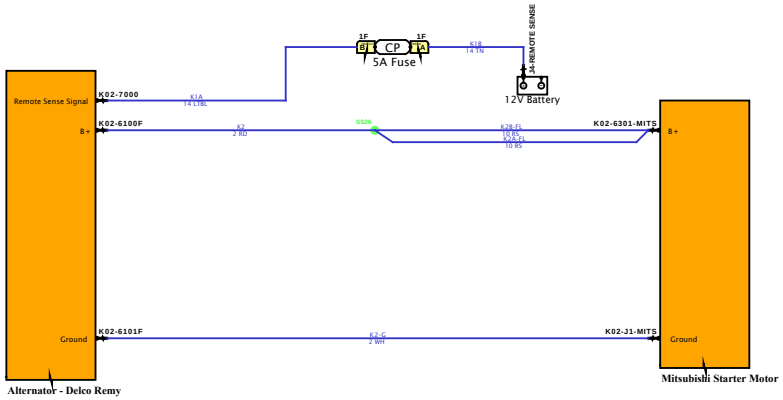

DESIGN DESCRIPTION

FEATURE CODES

SOFTWARE FEATURE CODES

NAVISTAR

NAVISTAR, INC. CONFIDENTIAL PROPRIETARY

Diagram2

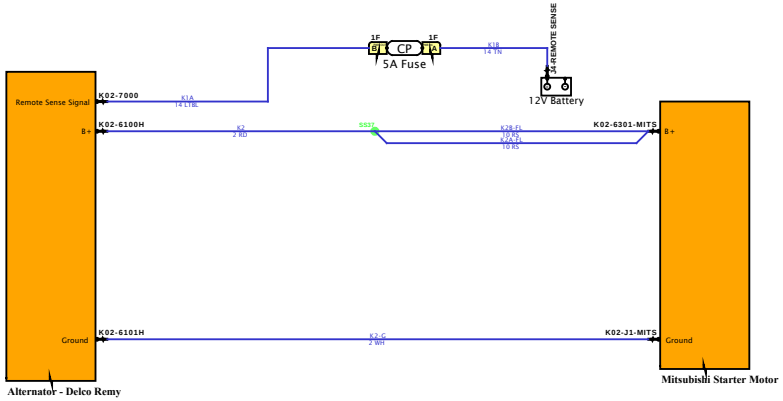

DESIGN DESCRIPTION

FEATURE CODES

SOFTWARE FEATURE CODES

NAVISTAR INC. CONFIDENTIAL PROPRIETARY

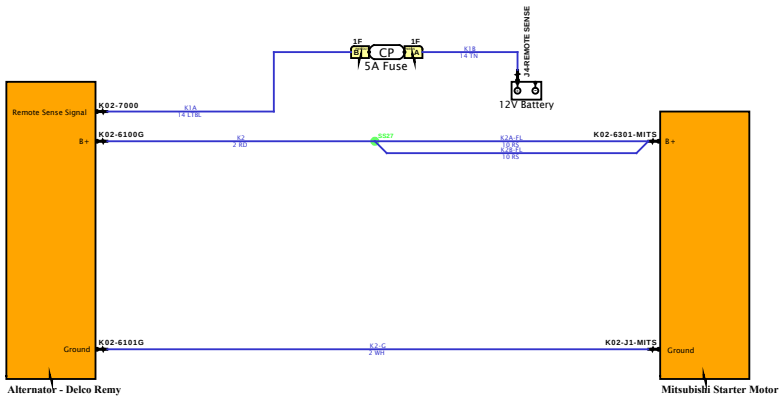

DESIGN DESCRIPTION

FEATURE CODES

SOFTWARE FEATURE CODES

NAVISTAR INC. CONFIDENTIAL PROPRIETARY

Diagram1

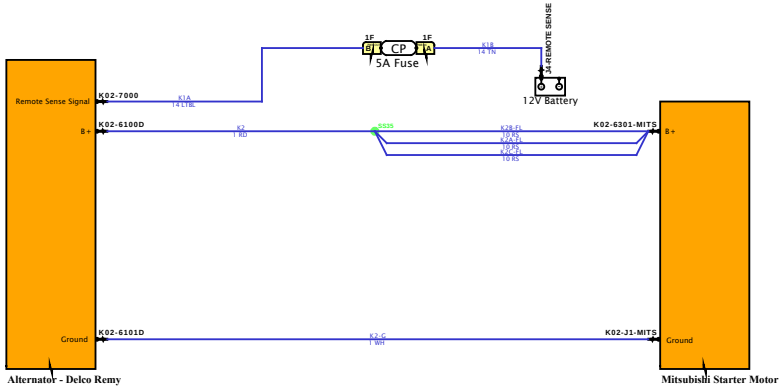

DESIGN DESCRIPTION

FEATURE CODES

SOFTWARE FEATURE CODES

NAVISTAR
NAVISTAR, INC. CONFIDENTIAL PROPRIETARY

Diagram2

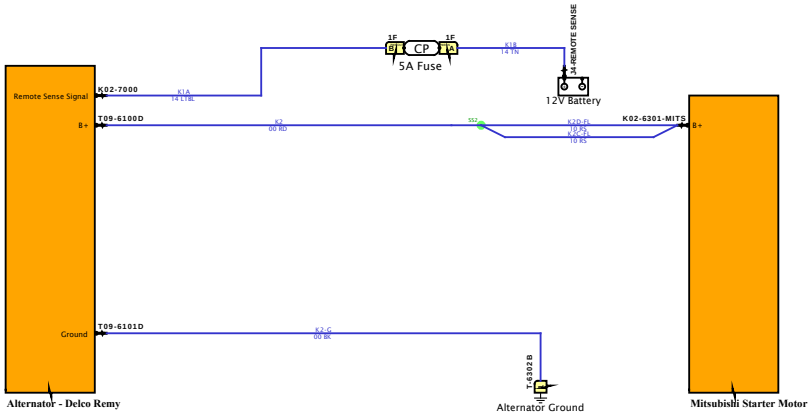

DESIGN DESCRIPTION

FEATURE CODES

SOFTWARE FEATURE CODES

NAVISTAR INC. CONFIDENTIAL PROPRIETARY

Diagram1

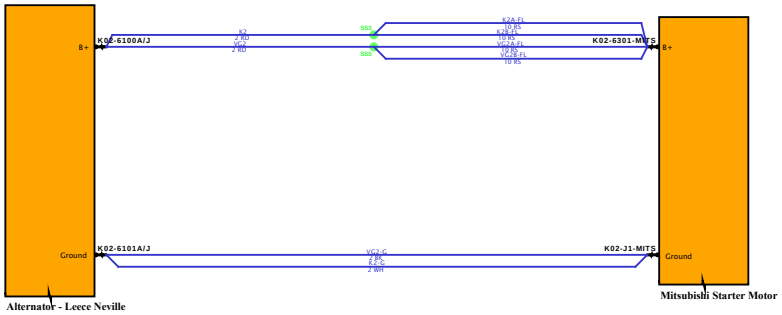

DESIGN DESCRIPTION

FEATURE CODES

SOFTWARE FEATURE CODES

NAVISTAR INC. CONFIDENTIAL PROPRIETARY

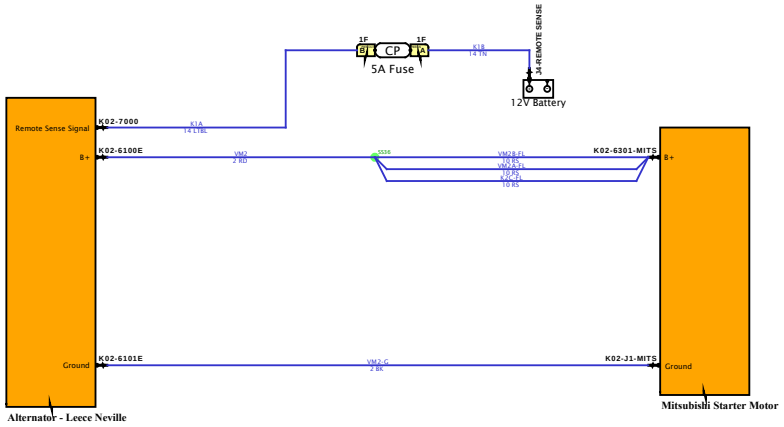

DESIGN DESCRIPTION

FEATURE CODES

SOFTWARE FEATURE CODES

NAVISTAR
NAVISTAR, INC. CONFIDENTIAL PROPRIETARY

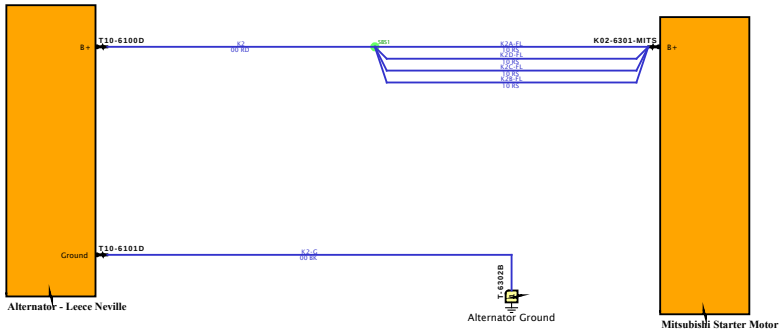

DESIGN DESCRIPTION

FEATURE CODES

SOFTWARE FEATURE CODES

NAVISTAR INC. CONFIDENTIAL PROPRIETARY

Diagram1

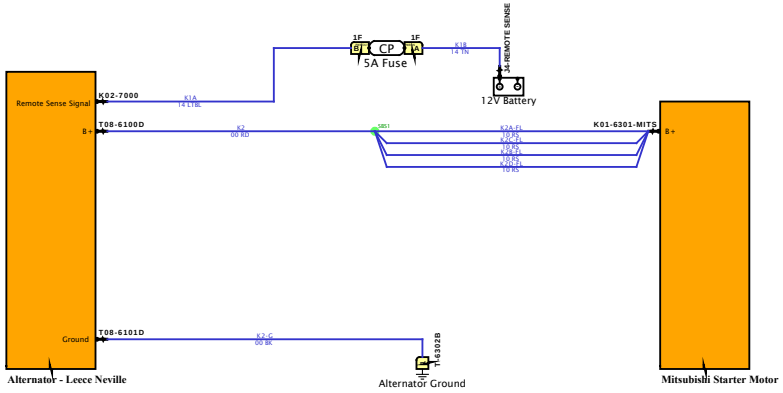

DESIGN DESCRIPTION

FEATURE CODES

SOFTWARE FEATURE CODES

NAVISTAR
NAVISTAR, INC. CONFIDENTIAL PROPRIETARY

Diagram1

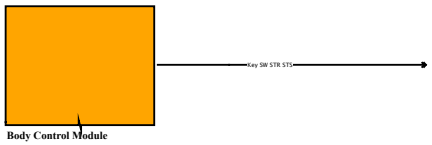

DESIGN DESCRIPTION

FEATURE CODES

SOFTWARE FEATURE CODES

NAVISTAR INC. CONFIDENTIAL PROPRIETARY

Diagram1

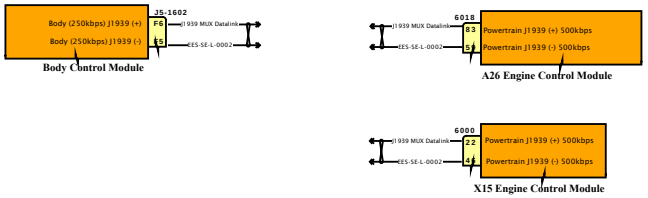

DESIGN DESCRIPTION

FEATURE CODES

SOFTWARE FEATURE CODES

NAVISTAR INC. CONFIDENTIAL PROPRIETARY

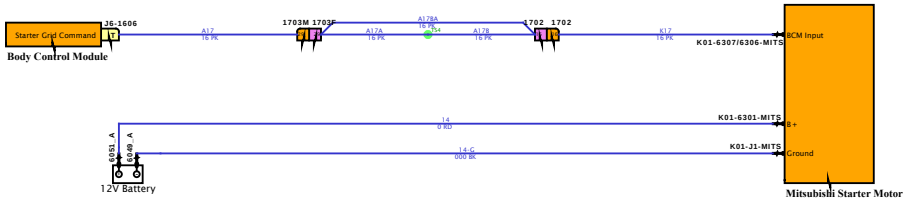

DESIGN DESCRIPTION

FEATURE CODES

SOFTWARE FEATURE CODES

NAVISTAR INC. CONFIDENTIAL PROPRIETARY

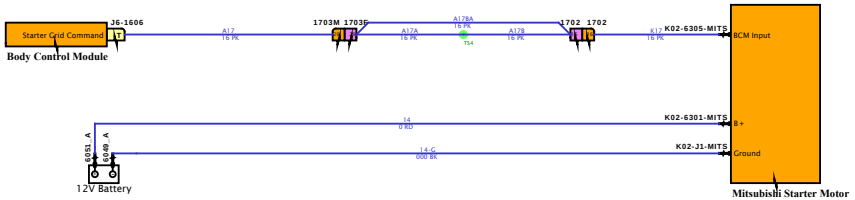

DESIGN DESCRIPTION

FEATURE CODES

SOFTWARE FEATURE CODES

NAVISTAR INC. CONFIDENTIAL PROPRIETARY

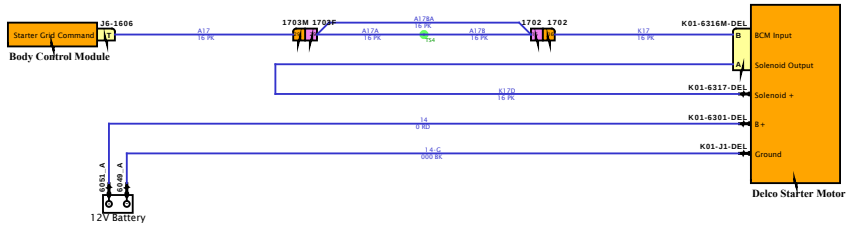

DESIGN DESCRIPTION

FEATURE CODES

SOFTWARE FEATURE CODES

NAVISTAR
NAVISTAR, INC. CONFIDENTIAL PROPRIETARY

Diagram1

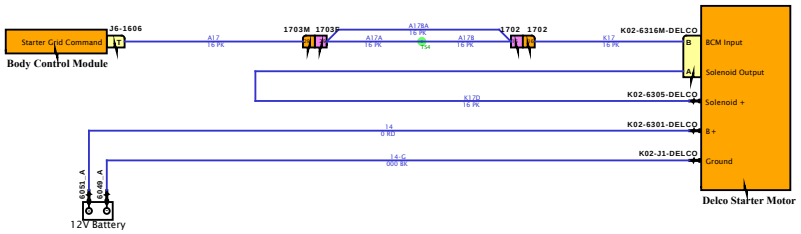

DESIGN DESCRIPTION

FEATURE CODES

SOFTWARE FEATURE CODES

NAVISTAR
NAVISTAR, INC. CONFIDENTIAL PROPRIETARY

DESIGN DESCRIPTION

FEATURE CODES

SOFTWARE FEATURE CODES

Remote Inverter Control Cable P/N 3757368C1

Note that the inverter wiring is composed of purchased assemblies and battery cables. There is a purchased cable assembly that runs through the sleeper harness and connects the remote inverter control in the sleeper control panel to the inverter.

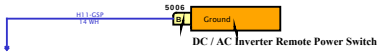

NAVISTAR INC. CONFIDENTIAL PROPRIETARY

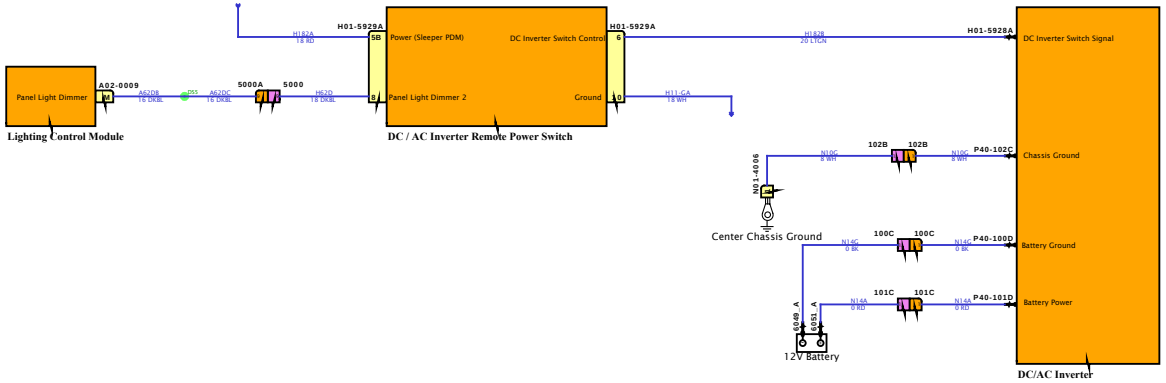

DESIGN DESCRIPTION

FEATURE CODES

SOFTWARE FEATURE CODES

NAVISTAR INC. CONFIDENTIAL PROPRIETARY

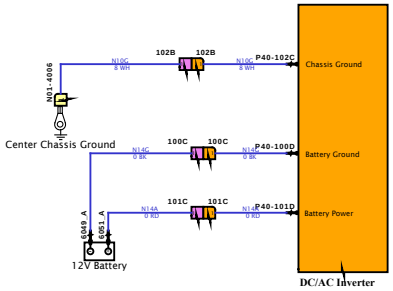

DESIGN DESCRIPTION

FEATURE CODES

SOFTWARE FEATURE CODES

NAVISTAR INC. CONFIDENTIAL PROPRIETARY

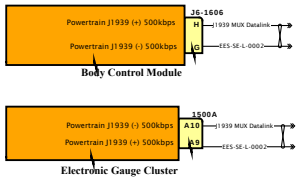

DESIGN DESCRIPTION

FEATURE CODES

SOFTWARE FEATURE CODES

NAVISTAR INC. CONFIDENTIAL PROPRIETARY

Diagram1

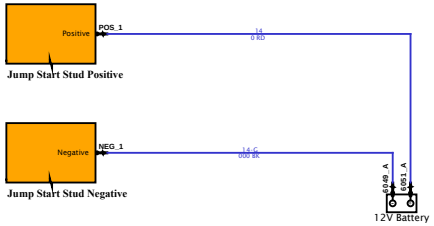

DESIGN DESCRIPTION

FEATURE CODES

SOFTWARE FEATURE CODES

NAVISTAR INC. CONFIDENTIAL PROPRIETARY

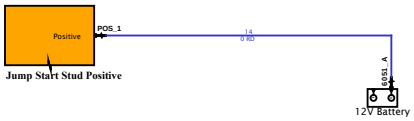

DESIGN DESCRIPTION

FEATURE CODES

SOFTWARE FEATURE CODES

NAVISTAR INC. CONFIDENTIAL PROPRIETARY

Diagram1

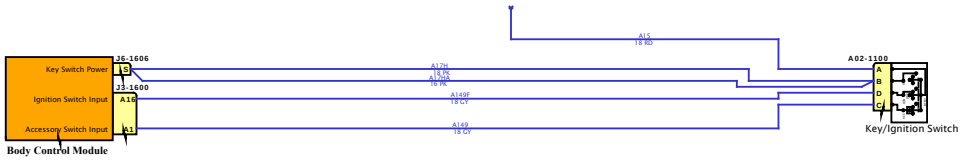

DESIGN DESCRIPTION

FEATURE CODES

SOFTWARE FEATURE CODES

NAVISTAR INC. CONFIDENTIAL PROPRIETARY

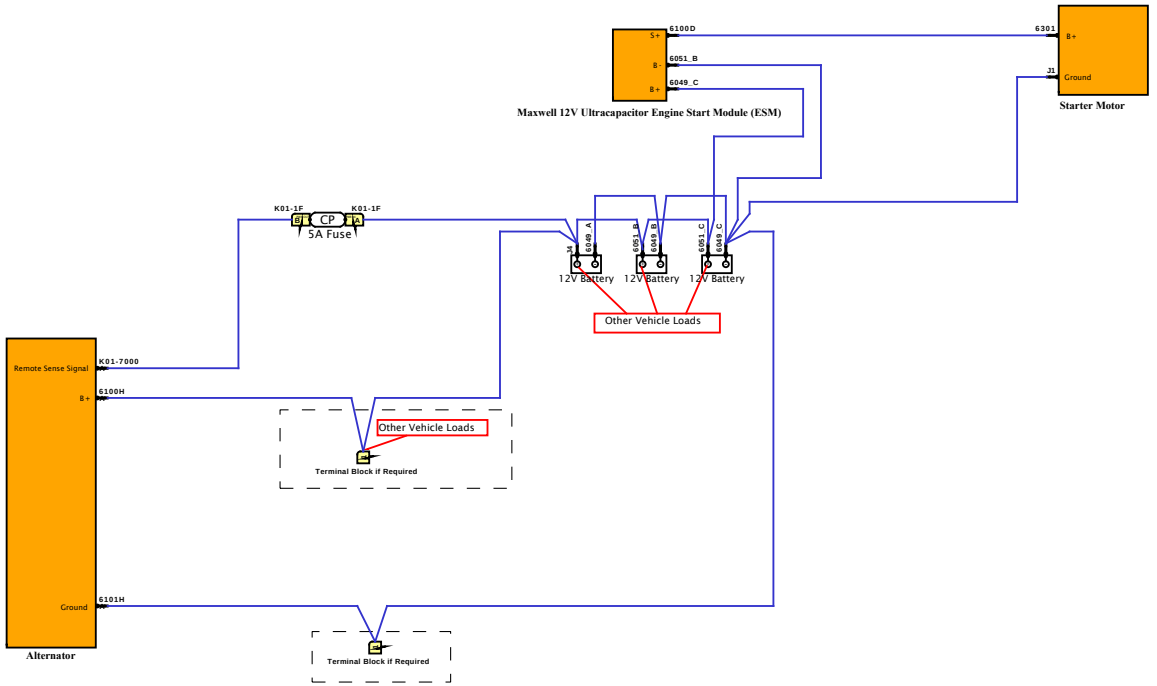

Note: Magnetic Switch Integrated on Starter, may also be mounted on Firewall.

DESIGN DESCRIPTION

FEATURE CODES

SOFTWARE FEATURE CODES

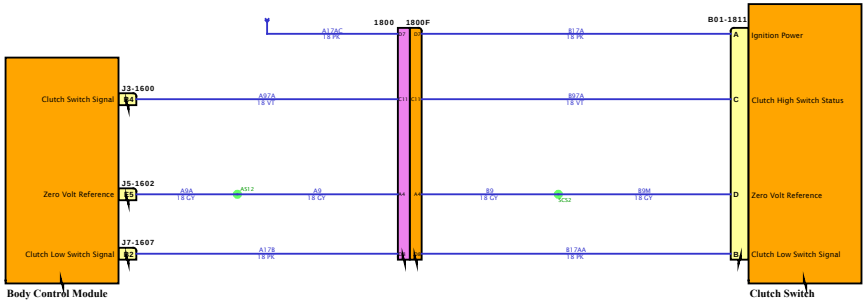

DESIGN DESCRIPTION

FEATURE CODES

SOFTWARE FEATURE CODES

NAVISTAR INC. CONFIDENTIAL PROPRIETARY

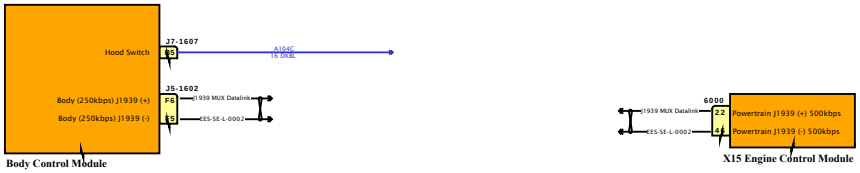

DESIGN DESCRIPTION

FEATURE CODES

SOFTWARE FEATURE CODES

NAVISTAR INC. CONFIDENTIAL PROPRIETARY

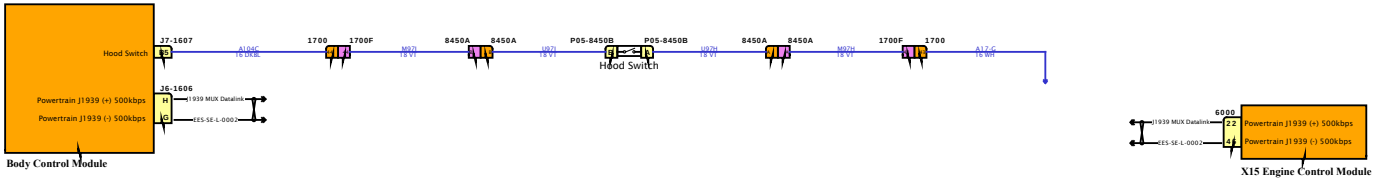

DESIGN DESCRIPTION

FEATURE CODES

SOFTWARE FEATURE CODES

NAVISTAR INC. CONFIDENTIAL PROPRIETARY

Diagram1

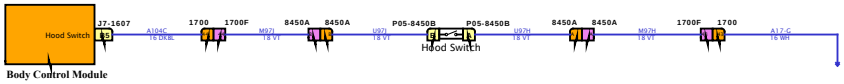

DESIGN DESCRIPTION

FEATURE CODES

SOFTWARE FEATURE CODES

NAVISTAR INC. CONFIDENTIAL PROPRIETARY

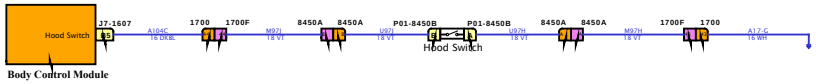

DESIGN DESCRIPTION

FEATURE CODES

SOFTWARE FEATURE CODES

NAVISTAR INC. CONFIDENTIAL PROPRIETARY

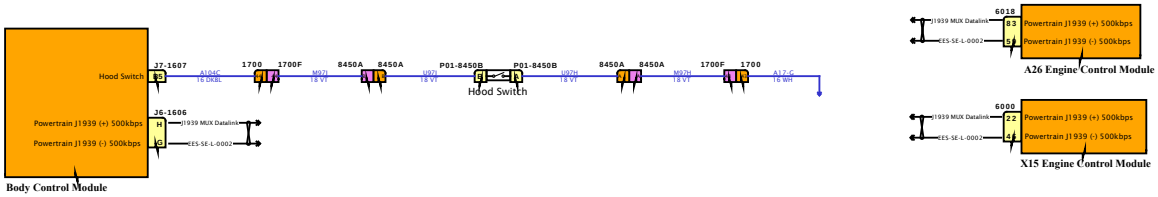

DESIGN DESCRIPTION

FEATURE CODES

SOFTWARE FEATURE CODES

NAVISTAR INC. CONFIDENTIAL PROPRIETARY

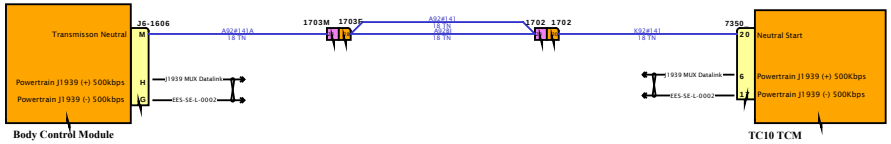

DESIGN DESCRIPTION

FEATURE CODES

SOFTWARE FEATURE CODES

NAVISTAR INC. CONFIDENTIAL PROPRIETARY

Diagram1

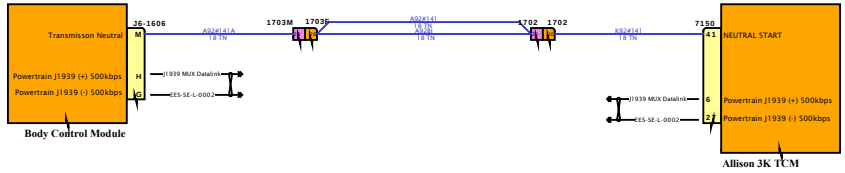

DESIGN DESCRIPTION

FEATURE CODES

SOFTWARE FEATURE CODES

NAVISTAR INC. CONFIDENTIAL PROPRIETARY

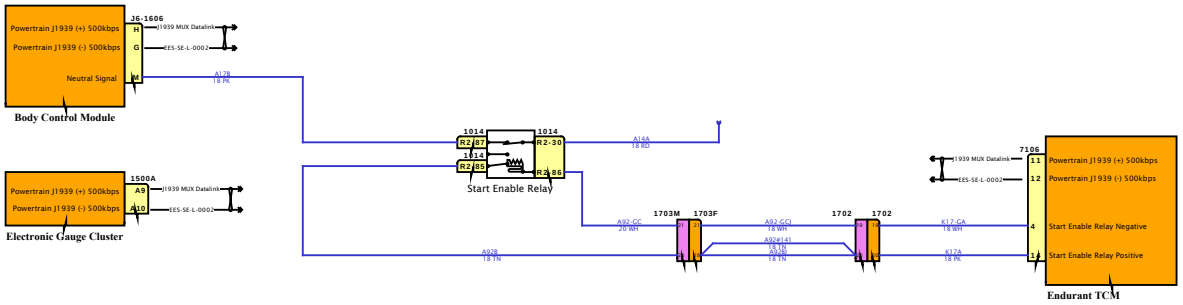

DESIGN DESCRIPTION

FEATURE CODES

SOFTWARE FEATURE CODES

NAVISTAR
NAVISTAR, INC. CONFIDENTIAL PROPRIETARY

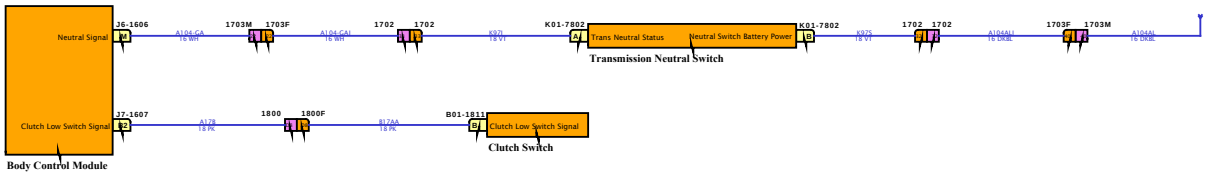

DESIGN DESCRIPTION

FEATURE CODES

SOFTWARE FEATURE CODES

NAVISTAR INC. CONFIDENTIAL PROPRIETARY

Diagram2

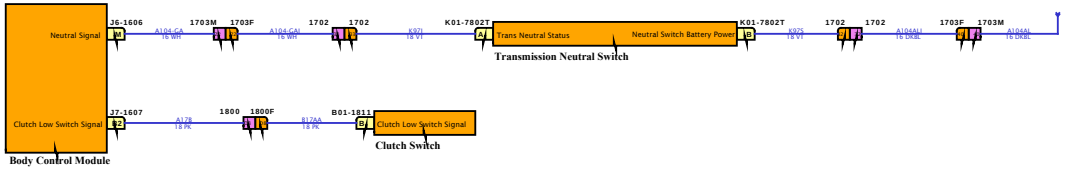

DESIGN DESCRIPTION

FEATURE CODES

SOFTWARE FEATURE CODES

NAVISTAR INC. CONFIDENTIAL PROPRIETARY

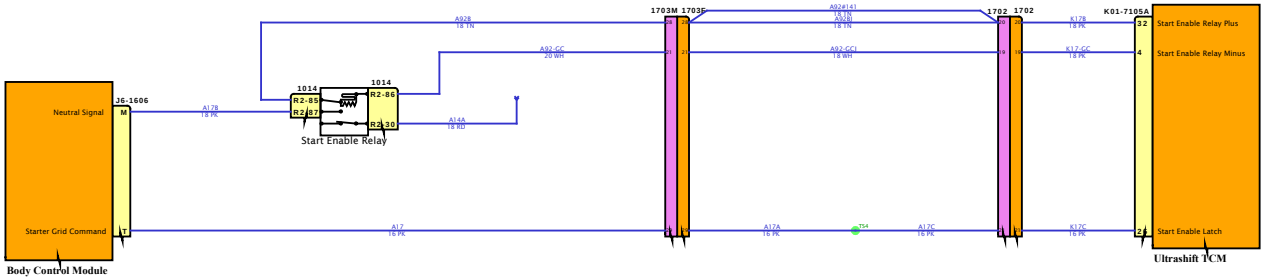

DESIGN DESCRIPTION

FEATURE CODES

SOFTWARE FEATURE CODES

NAVISTAR INC. CONFIDENTIAL PROPRIETARY

Diagram1

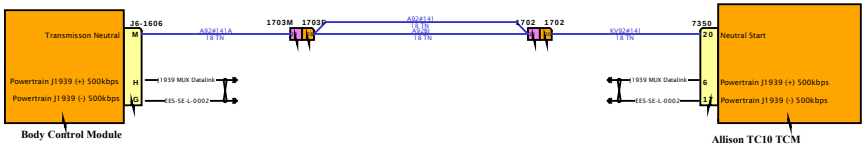

DESIGN DESCRIPTION

FEATURE CODES

SOFTWARE FEATURE CODES

NAVISTAR INC. CONFIDENTIAL PROPRIETARY

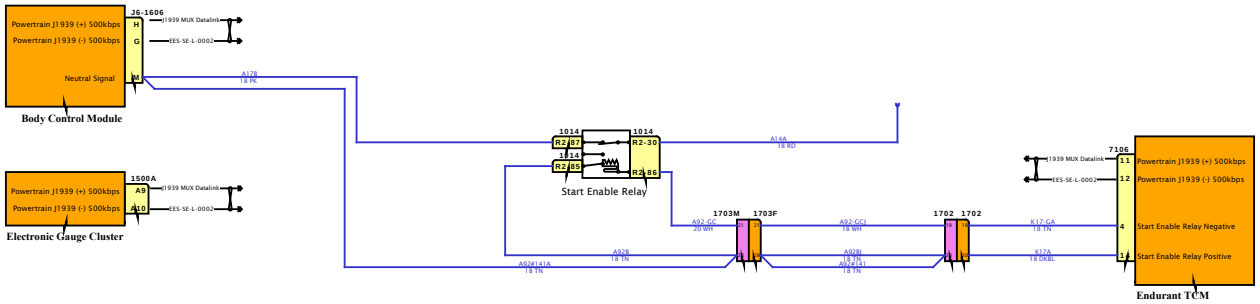

DESIGN DESCRIPTION

FEATURE CODES

SOFTWARE FEATURE CODES

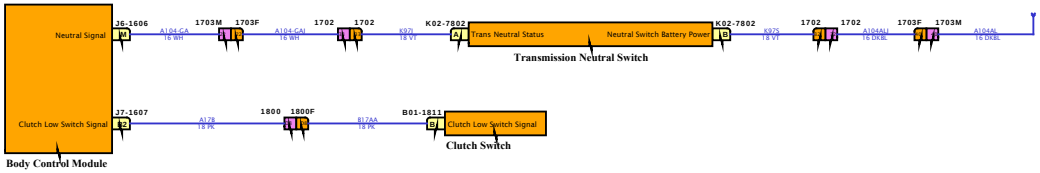

DESIGN DESCRIPTION

FEATURE CODES

SOFTWARE FEATURE CODES

NAVISTAR INC. CONFIDENTIAL PROPRIETARY

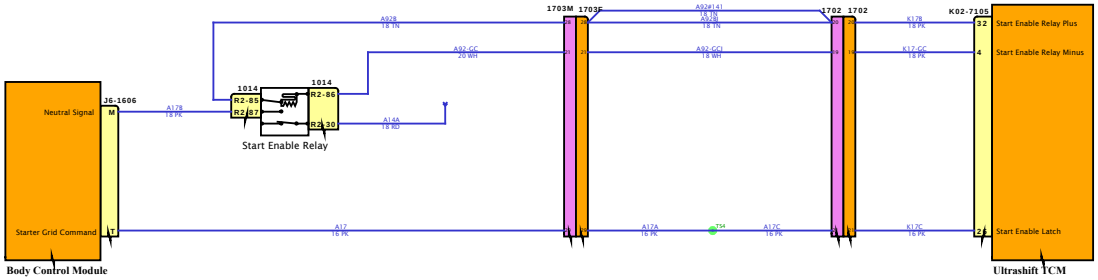

DESIGN DESCRIPTION

FEATURE CODES

SOFTWARE FEATURE CODES

NAVISTAR INC. CONFIDENTIAL PROPRIETARY

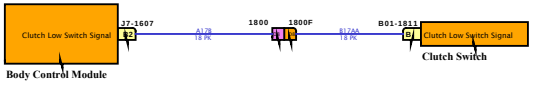

DESIGN DESCRIPTION

FEATURE CODES

SOFTWARE FEATURE CODES

NAVISTAR INC. CONFIDENTIAL PROPRIETARY

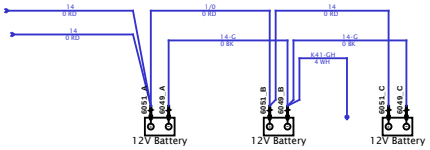

DESIGN DESCRIPTION

FEATURE CODES

SOFTWARE FEATURE CODES

NAVISTAR

NAVISTAR, INC. CONFIDENTIAL PROPRIETARY

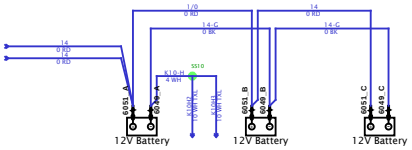

DESIGN DESCRIPTION

FEATURE CODES

SOFTWARE FEATURE CODES

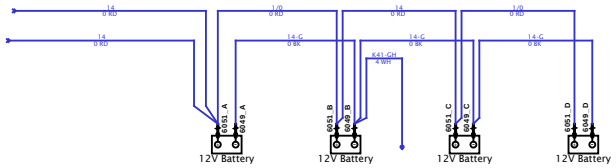

DESIGN DESCRIPTION

FEATURE CODES

SOFTWARE FEATURE CODES

NAVISTAR INC. CONFIDENTIAL PROPRIETARY

Diagram1

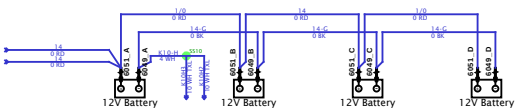

DESIGN DESCRIPTION

FEATURE CODES

SOFTWARE FEATURE CODES

NAVISTAR INC. CONFIDENTIAL PROPRIETARY

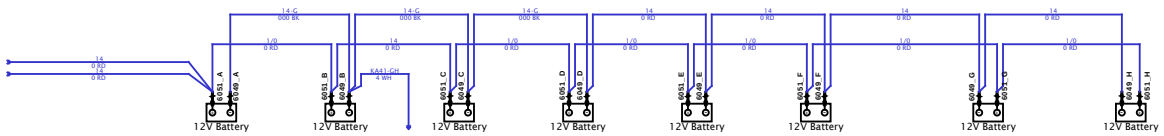

DESIGN DESCRIPTION

FEATURE CODES

SOFTWARE FEATURE CODES

NAVISTAR INC. CONFIDENTIAL PROPRIETARY

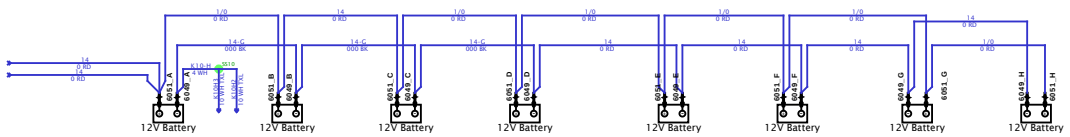

DESIGN DESCRIPTION

FEATURE CODES

SOFTWARE FEATURE CODES

NAVISTAR INC. CONFIDENTIAL PROPRIETARY

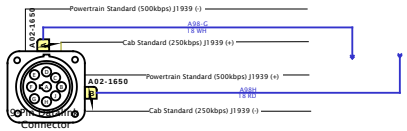

DESIGN DESCRIPTION

FEATURE CODES

SOFTWARE FEATURE CODES

NAVISTAR INC. CONFIDENTIAL PROPRIETARY

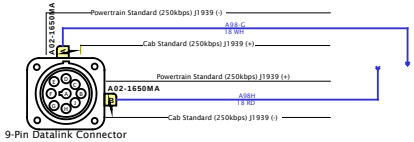

DESIGN DESCRIPTION

FEATURE CODES

SOFTWARE FEATURE CODES

NAVISTAR INC. CONFIDENTIAL PROPRIETARY

Connector Name	A01-1110M
Part Number	3928059C1
Instances	LoneStar - X15 - Trailer Interface (ABS) - Center Pin Circuit:Diagram1 LoneStar - X15 - Trailer Interface (ABS) - Center Pin Circuit:Diagram2 LoneStar - X15 - Trailer Interface (ABS) - Center Pin Circuit:Diagram3 LoneStar - X15 - Trailer Interface (ABS) - Center Pin Circuit:Diagram4 LT/RH - X15/A26 - Trailer Interface (ABS) - Center Pin Circuit:Diagram1 LT/RH - X15/A26 - Trailer Interface (ABS) - Center Pin Circuit:Diagram2 LT/RH - X15/A26 - Trailer Interface (ABS) - Center Pin Circuit:Diagram3 LT/RH - X15/A26 - Trailer Interface (ABS) - Center Pin Circuit:Diagram4
Mates	SW-TRLR_AUX-01

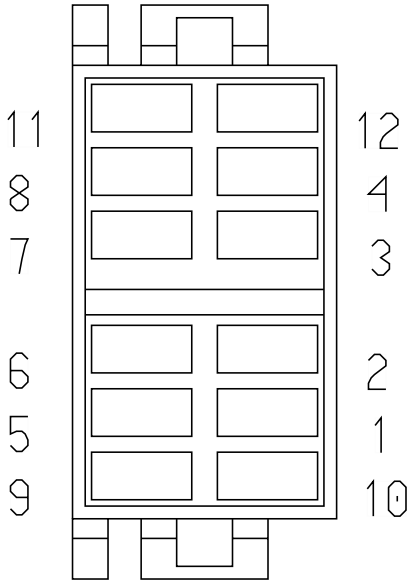

Name	Terminal Part Number	V-Min	Name	Wire Part Number	Wire CSA	Wire Spec	Wire Material description	Wire Color Description	Wire Length	End2 Terminal Part Number	End2 Pin Name	End2 Connector
2	-	-	FR72EB	3510316 R1	0.53	20.0	Thin Wall XLPE Primary Cable	ORANGE	1885.0	-	52	1700
4	-	-	FR72EC	3510316 R1	0.53	20.0	Thin Wall XLPE Primary Cable	ORANGE	250.0	-	X	-
9	-	-	FR72-GB1	3510358 R1	0.53	20.0	Thin Wall XLPE Primary Cable	WHITE	400.0	-	X	-
10	-	-	FR72ED	3510316 R1	0.53	20.0	Thin Wall XLPE Primary Cable	ORANGE	250.0	-	X	-

Name	Terminal Part Number	V-Min	Name	Wire Part Number	Wire CSA	Wire Spec	Wire Material description	Wire Color Description	Wire Length	End2 Terminal Part Number	End2 Pin Name	End2 Connect or
11	-	-	FR72-GB2	3510358 R1	0.53	20.0	Thin Wall XLPE Primary Cable	WHITE	400.0	-	X	-
12	-	-	XW62DG	3510352 R1	0.53	20.0	Thin Wall XLPE Primary Cable	DARK BLUE	1580.0	-	-	-

Connector Name	A01-1114M
Part Number	3928059C1
Instances	LT/RH A26 - Auto Start Stop and Sleeper Auto Climate / Cab Temp / Oil Mapping Manual Trans:Diagram1 LT/RH A26 - Auto Start Stop Battery & Oil Temp Mapping Auto Trans:Diagram1 LT/RH A26 - Auto Start Stop Battery & Oil Temp Mapping Manual Trans:Diagram1 LT/RH A26 - Auto Start Stop with Sleeper Auto Climate / Cab Temp / Oil Mapping Auto Trans:Diagram1 LT/RH/LoneStar X15 - Auto Start Stop Oil Temp Sensor Auto Trans:Diagram1 LT/RH/LoneStar X15 - Auto Start Stop Oil Temp Sensor Manual Trans:Diagram1 LT/RH/LoneStar X15 - Auto Start Stop with Sleeper Auto Climate / Cab Temp with Oil Temp Sensor Auto Trans:Diagram1 LT/RH/LoneStar X15 - Auto Start Stop with Sleeper Auto Climate / Cab Temp with Oil Temp Sensor Manual Trans:Diagram1
Mates	SW-AUTO_SS_ENABLE-01

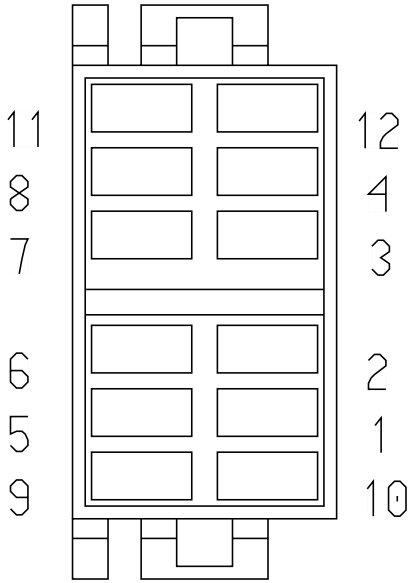

Name	Terminal Part Number	V-Min	Name	Wire Part Number	Wire CSA	Wire Spec	Wire Material description	Wire Color Description	Wire Length	End2 Terminal Part Number	End2 Pin Name	End2 Connector
1	-	-	HA104SS	3510352 R1	0.53	20.0	Thin Wall XLPE Primary Cable	DARK BLUE	2045.0	-	A2	J7-1607
2	-	-	HA11-GT	3510359 R1	0.79	18.0	Thin Wall XLPE Primary Cable	WHITE	0.0	-	11	A01-1114M
2	-	-	HA11-GAM	3510359 R1	0.79	18.0	Thin Wall XLPE Primary Cable	WHITE	0.0	-	9	A01-1114M
4	-	-	HA104SP	3510352 R1	0.53	20.0	Thin Wall XLPE Primary Cable	DARK BLUE	2045.0	-	A1	J7-1607

Name	Terminal Part Number	V-Min	Name	Wire Part Number	Wire CSA	Wire Spec	Wire Material description	Wire Color Description	Wire Length	End2 Terminal Part Number	End2 Pin Name	End2 Connect or
9	-	-	HA11-GAM	3510359 R1	0.79	18.0	Thin Wall XLPE Primary Cable	WHITE	0.0	-	2	A01-1114M
10	-	-	HA104BC	3510352 R1	0.53	20.0	Thin Wall XLPE Primary Cable	DARK BLUE	1985.0	-	F1	J4-1601
11	-	-	HA11-GAT	3510359 R1	0.79	18.0	Thin Wall XLPE Primary Cable	WHITE	675.0	-	-	-
11	-	-	HA11-GT	3510359 R1	0.79	18.0	Thin Wall XLPE Primary Cable	WHITE	0.0	-	2	A01-1114M
12	-	-	HA62DF	3510352 R1	0.53	20.0	Thin Wall XLPE Primary Cable	DARK BLUE	1580.0	-	-	-

Connector Name	A01-1119M
Part Number	3928059C1
Instances	LT/RH - X15/A26 - Land Departure Warning - (Bendix - AutoVue W/ Qualcomm Safety Direct):Diagram1 LT/RH - X15/A26 - Lane Departure Warning - (Bendix - AutoVue N/ Qualcomm Safety Direct):Diagram1
Mates	SW-LDW_DISBLE-01

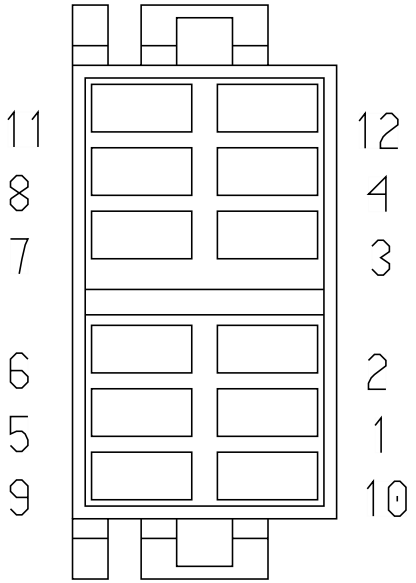

Name	Terminal Part Number	V-Min	Name	Wire Part Number	Wire CSA	Wire Spec	Wire Material description	Wire Color Description	Wire Length	End2 Terminal Part Number	End2 Pin Name	End2 Connect or
1	-	-	2V67COG1	3510310 R1	0.53	20.0	Thin Wall XLPE Primary Cable	GREY	330.0	-	X	-
2	-	-	2V11COG1	3510358 R1	0.53	20.0	Thin Wall XLPE Primary Cable	WHITE	910.0	-	X	-
4	-	-	2V67COG2	3510310 R1	0.53	20.0	Thin Wall XLPE Primary Cable	GREY	330.0	-	X	-
9	-	-	2V67EN	3510328 R1	0.53	20.0	Thin Wall XLPE Primary Cable	TAN	1935.0	-	A	16B

Name	Terminal Part Number	V-Min	Name	Wire Part Number	Wire CSA	Wire Spec	Wire Material description	Wire Color Description	Wire Length	End2 Terminal Part Number	End2 Pin Name	End2 Connect or
10	-	-	2V13COG3	3510322 R1	0.53	20.0	Thin Wall XLPE Primary Cable	PINK	360.0	-	X	-
11	-	-	2V67NA	3510346 R1	0.53	20.0	Thin Wall XLPE Primary Cable	VIOLET	1935.0	-	B	16B
12	-	-	2V13COG1	3510322 R1	0.53	20.0	Thin Wall XLPE Primary Cable	PINK	360.0	-	X	-

Connector Name	A01-1126M
Part Number	3928059C1
Instances	LoneStar - X15 - Adaptive Cruise Control (Bendix - Fusion W/O DIU & N/ Safety Direct & Tweeters):Diagram1 LoneStar - X15 - Adaptive Cruise Control (Bendix - Fusion W/O DIU & W/ Safety Direct & Reg Speakers) Option 1:Diagram1 LoneStar - X15 - Adaptive Cruise Control (Bendix - Fusion W/O DIU & W/ Safety Direct & Reg Speakers) Option 2:Diagram1 LoneStar - X15 - Adaptive Cruise Control (Bendix - Fusion W/O DIU & W/ Safety Direct & W/ Tweeters):Diagram1 LoneStar - X15 - Lane Departure Warning - (Bendix Fusion W/ Safety Direct))(US & Canada):Diagram1 LoneStar - X15 - Lane Departure Warning - (Bendix Fusion W/ Safety Direct))(US & Canada)-:Diagram1 LT/RH - X15/A26 - Adaptive Cruise Control (Bendix - Fusion W/ O DIU & N/ Safety Direct & Tweeters):Diagram1 LT/RH - X15/A26 - Adaptive Cruise Control (Bendix - Fusion W/ O DIU & N/ Safety Direct & Reg Speakers):Diagram1 LT/RH - X15/A26 - Adaptive Cruise Control (Bendix - Fusion W/ O DIU & W/ Safety Direct & Reg Speakers):Diagram1 LT/RH - X15/A26 - Adaptive Cruise Control (Bendix - Fusion W/ O DIU & W/ Safety Direct & W/ Tweeters):Diagram1 LT/RH - X15/A26 - Lane Departure Warning - (Bendix Fusion W/ Safety Direct))(US & Canada):Diagram1 LT/RH - X15/A26 - Lane Departure Warning - Bendix:Diagram1
Mates	SW-LDW_DISABLE_BENDIX_FUSI ON-3020-02-1A

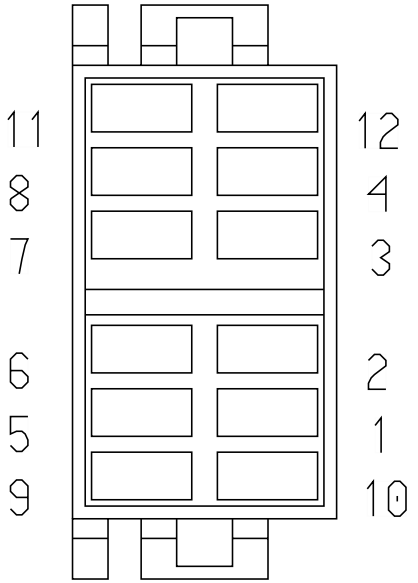

Name	Terminal Part Number	V-Min	Name	Wire Part Number	Wire CSA	Wire Spec	Wire Material description	Wire Color Description	Wire Length	End2 Terminal Part Number	End2 Pin Name	End2 Connect or
1	-	-	CS67COG1	3510310 R1	0.53	20.0	Thin Wall XLPE Primary Cable	GREY	240.0	-	X	-
1	-	-	YK67COG1	3510311 R1	0.79	18.0	Thin Wall XLPE Primary Cable	GREY	240.0	-	X	-

Name	Terminal Part Number	V-Min	Name	Wire Part Number	Wire CSA	Wire Spec	Wire Material description	Wire Color Description	Wire Length	End2 Terminal Part Number	End2 Pin Name	End2 Connector
2	-	-	CS11COG1	3510358 R1	0.53	20.0	Thin Wall XLPE Primary Cable	WHITE	910.0	-	X	-
2	-	-	YK11COG1	3510359 R1	0.79	18.0	Thin Wall XLPE Primary Cable	WHITE	910.0	-	X	-
4	-	-	CS67COG2	3510310 R1	0.53	20.0	Thin Wall XLPE Primary Cable	GREY	240.0	-	X	-
4	-	-	YK67COG2	3510311 R1	0.79	18.0	Thin Wall XLPE Primary Cable	GREY	240.0	-	X	-
11	-	-	CS67NB	3510346 R1	0.53	20.0	Thin Wall XLPE Primary Cable	VIOLET	910.0	-	X	-
11	-	-	YK67NB	3510348 R1	1.16	16.0	Thin Wall XLPE Primary Cable	VIOLET	910.0	-	X	-
12	-	-	CS62A	3510352 R1	0.53	20.0	Thin Wall XLPE Primary Cable	DARK BLUE	1570.0	-	-	-
12	-	-	YK62A	3510353 R1	0.79	18.0	Thin Wall XLPE Primary Cable	DARK BLUE	1570.0	-	-	-

Connector Name	A01-1200A
Part Number	3768152C1
Instances	LT/RH A26 - A26 - Heating Ventilation & Air Conditioning (HVAC) Manual:Diagram1 - HVAC - Option1 LT/RH A26 - A26 - Heating Ventilation & Air Conditioning (HVAC) Manual:Diagram2 - HVAC - Option2 LT/RH A26 - A26 - Heating Ventilation & Air Conditioning (HVAC) Manual:Diagram3 - Actuators - Option1 LT/RH A26 - A26 - Heating Ventilation & Air Conditioning (HVAC) Manual:Diagram4 - Actuators - Option2 LT/RH A26 - Heating Ventilation & Air Conditioning (HVAC) Auto Temp Control:Diagram1 - HVAC - Option1 LT/RH A26 - Heating Ventilation & Air Conditioning (HVAC) Auto Temp Control:Diagram2 - HVAC - Option2 LT/RH A26 - Heating Ventilation & Air Conditioning (HVAC) Auto Temp Control:Diagram3 - Actuators - Option1 LT/RH A26 - Heating Ventilation & Air Conditioning (HVAC) Auto Temp Control:Diagram4 - Actuators - Option2 LT/RH A26 - Heating Ventilation & Air Conditioning (HVAC) Auto Temp Control:Diagram5 - Sensors - Option1 LT/RH A26 - Heating Ventilation & Air Conditioning (HVAC) Auto Temp Control:Diagram6 - Sensors - Option2 LT/RH/LoneStar X15 - Heating Ventilation & Air Conditioning (HVAC) Auto Temp Control:Diagram1 - HVAC LT/RH/LoneStar X15 - Heating Ventilation & Air Conditioning (HVAC) Auto Temp Control:Diagram2 - Actuators LT/RH/LoneStar X15 - Heating Ventilation & Air Conditioning (HVAC) Auto Temp Control:Diagram3 - Sensors LT/RH/LoneStar X15 - Heating Ventilation & Air Conditioning (HVAC) Manual:Diagram1 - HVAC LT/RH/LoneStar X15 - Heating Ventilation & Air Conditioning (HVAC) Manual:Diagram2 - Actuators
Mates	MODU-HVAC_CRTL_HEAD-6003-A 01-1200A-A01-1200B

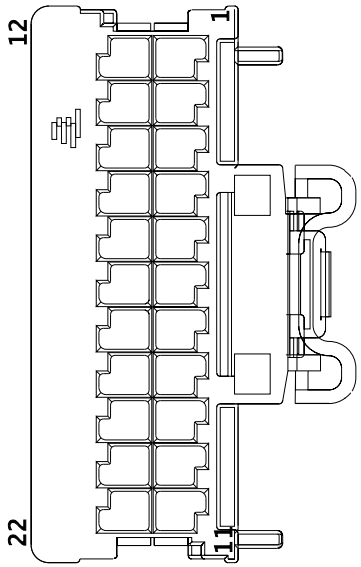

Name	Terminal Part Number	V-Min	Name	Wire Part Number	Wire CSA	Wire Spec	Wire Material description	Wire Color Description	Wire Length	End2 Terminal Part Number	End2 Pin Name	End2 Connect or
1	-	-	AA73A	3510298 R1	0.53	20.0	Thin Wall XLPE Primary Cable	LIGHT GREEN	150.0	-	X	-

Name	Terminal Part Number	V-Min	Name	Wire Part Number	Wire CSA	Wire Spec	Wire Material description	Wire Color Description	Wire Length	End2 Terminal Part Number	End2 Pin Name	End2 Connector
2	-	-	AA74-G	3510358 R1	0.53	20.0	Thin Wall XLPE Primary Cable	WHITE	1405.0	-	-	-
3	-	-	2E75D-G	2645643 R1	0.35	22.0	Thin Wall XLPE Primary Cable	LIGHT GREEN	2725.0	-	5	A02-1053
4	-	-	2E75D	2645643 R1	0.35	22.0	Thin Wall XLPE Primary Cable	LIGHT GREEN	2725.0	-	1	A02-1053
5	-	-	AA75B	3510298 R1	0.53	20.0	Thin Wall XLPE Primary Cable	LIGHT GREEN	2000.0	-	P	A01-1200E
6	-	-	DH75A	3510298 R1	0.53	20.0	Thin Wall XLPE Primary Cable	LIGHT GREEN	695.0	-	X	-
7	-	-	-	-	-	-	-	-	-	-	-	-
8	-	-	-	-	-	-	-	-	-	-	-	-
9	-	-	AA74A2	3510298 R1	0.53	20.0	Thin Wall XLPE Primary Cable	LIGHT GREEN	2000.0	-	B	A01-1200E
10	-	-	AA74B2	3510298 R1	0.53	20.0	Thin Wall XLPE Primary Cable	LIGHT GREEN	2000.0	-	G	A01-1200E
11	-	-	AA74D5	3510298 R1	0.53	20.0	Thin Wall XLPE Primary Cable	LIGHT GREEN	1850.0	-	K	A01-1200C

Name	Terminal Part Number	V-Min	Name	Wire Part Number	Wire CSA	Wire Spec	Wire Material description	Wire Color Description	Wire Length	End2 Terminal Part Number	End2 Pin Name	End2 Connector
12	-	-	AA73B	3510298 R1	0.53	20.0	Thin Wall XLPE Primary Cable	LIGHT GREEN	150.0	-	X	-
13	-	-	AA74-GA	3510358 R1	0.53	20.0	Thin Wall XLPE Primary Cable	WHITE	1405.0	-	-	-
14	-	-	2E75TS1	3510298 R1	0.53	20.0	Thin Wall XLPE Primary Cable	LIGHT GREEN	1780.0	-	2	A02-1200F
15	-	-	2E75TS2	3510298 R1	0.53	20.0	Thin Wall XLPE Primary Cable	LIGHT GREEN	1780.0	-	1	A02-1200F
16	-	-	2E75TS3	3510298 R1	0.53	20.0	Thin Wall XLPE Primary Cable	LIGHT GREEN	1780.0	-	4	A02-1200F
17	-	-	2E75TS4	3510298 R1	0.53	20.0	Thin Wall XLPE Primary Cable	LIGHT GREEN	1780.0	-	3	A02-1200F
18	-	-	AA74C2	3510298 R1	0.53	20.0	Thin Wall XLPE Primary Cable	LIGHT GREEN	1850.0	-	B	A01-1200C
19	-	-	AA74E2	3510298 R1	0.53	20.0	Thin Wall XLPE Primary Cable	LIGHT GREEN	1850.0	-	M	A01-1200C

Name	Terminal Part Number	V-Min	Name	Wire Part Number	Wire CSA	Wire Spec	Wire Material description	Wire Color Description	Wire Length	End2 Terminal Part Number	End2 Pin Name	End2 Connector
21	-	-	AA74D2	3510298 R1	0.53	20.0	Thin Wall XLPE Primary Cable	LIGHT GREEN	1850.0	-	G	A01-1200C
22	-	-	AA74D4	3510298 R1	0.53	20.0	Thin Wall XLPE Primary Cable	LIGHT GREEN	1850.0	-	J	A01-1200C

Connector Name	A01-1200B
Part Number	3768153C1
Instances	LT/RH A26 - A26 - Heating Ventilation & Air Conditioning (HVAC) Manual:Diagram3 - Actuators - Option1 LT/RH A26 - A26 - Heating Ventilation & Air Conditioning (HVAC) Manual:Diagram4 - Actuators - Option2 LT/RH A26 - Heating Ventilation & Air Conditioning (HVAC) Auto Temp Control:Diagram3 - Actuators - Option1 LT/RH A26 - Heating Ventilation & Air Conditioning (HVAC) Auto Temp Control:Diagram4 - Actuators - Option2 LT/RH/LoneStar X15 - Heating Ventilation & Air Conditioning (HVAC) Auto Temp Control:Diagram2 - Actuators LT/RH/LoneStar X15 - Heating Ventilation & Air Conditioning (HVAC) Manual:Diagram2 - Actuators
Mates	MODU-HVAC_CRTL_HEAD-6003-A 01-1200A-A01-1200B

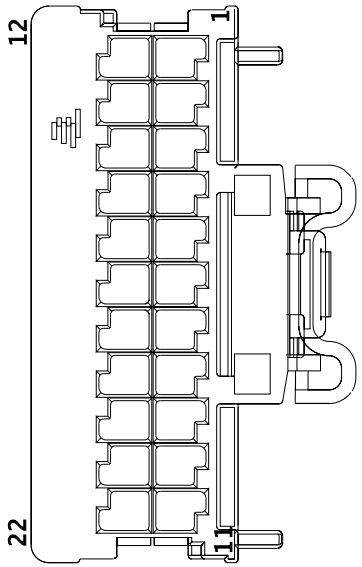

Name	Terminal Part Number	V-Min	Name	Wire Part Number	Wire CSA	Wire Spec	Wire Material description	Wire Color Description	Wire Length	End2 Terminal Part Number	End2 Pin Name	End2 Connector
1	-	-	AA74B1	3510298 R1	0.53	20.0	Thin Wall XLPE Primary Cable	LIGHT GREEN	2000.0	-	F	A01-1200E
2	-	-	AA74B3	3510298 R1	0.53	20.0	Thin Wall XLPE Primary Cable	LIGHT GREEN	2000.0	-	H	A01-1200E
3	-	-	AA74B4	3510298 R1	0.53	20.0	Thin Wall XLPE Primary Cable	LIGHT GREEN	2000.0	-	J	A01-1200E
4	-	-	AA74C1	3510298 R1	0.53	20.0	Thin Wall XLPE Primary Cable	LIGHT GREEN	1850.0	-	A	A01-1200C

Name	Terminal Part Number	V-Min	Name	Wire Part Number	Wire CSA	Wire Spec	Wire Material description	Wire Color Description	Wire Length	End2 Terminal Part Number	End2 Pin Name	End2 Connector
5	-	-	AA74C3	3510298 R1	0.53	20.0	Thin Wall XLPE Primary Cable	LIGHT GREEN	1850.0	-	C	A01-1200C
6	-	-	AA74C4	3510298 R1	0.53	20.0	Thin Wall XLPE Primary Cable	LIGHT GREEN	1850.0	-	D	A01-1200C
7	-	-	AA74C5	3510298 R1	0.53	20.0	Thin Wall XLPE Primary Cable	LIGHT GREEN	1850.0	-	E	A01-1200C
8	-	-	AA74E1	3510298 R1	0.53	20.0	Thin Wall XLPE Primary Cable	LIGHT GREEN	1850.0	-	L	A01-1200C
9	-	-	AA74E3	3510298 R1	0.53	20.0	Thin Wall XLPE Primary Cable	LIGHT GREEN	1850.0	-	N	A01-1200C
10	-	-	AA74E4	3510298 R1	0.53	20.0	Thin Wall XLPE Primary Cable	LIGHT GREEN	1850.0	-	P	A01-1200C
11	-	-	AA74E5	3510298 R1	0.53	20.0	Thin Wall XLPE Primary Cable	LIGHT GREEN	1850.0	-	S	A01-1200C
12	-	-	AA74B5	3510298 R1	0.53	20.0	Thin Wall XLPE Primary Cable	LIGHT GREEN	2000.0	-	K	A01-1200E

Name	Terminal Part Number	V-Min	Name	Wire Part Number	Wire CSA	Wire Spec	Wire Material description	Wire Color Description	Wire Length	End2 Terminal Part Number	End2 Pin Name	End2 Connector
13	-	-	AA74A1	3510298 R1	0.53	20.0	Thin Wall XLPE Primary Cable	LIGHT GREEN	2000.0	-	A	A01-1200E
14	-	-	AA74A3	3510298 R1	0.53	20.0	Thin Wall XLPE Primary Cable	LIGHT GREEN	2000.0	-	C	A01-1200E
15	-	-	AA74A4	3510298 R1	0.53	20.0	Thin Wall XLPE Primary Cable	LIGHT GREEN	2000.0	-	D	A01-1200E
16	-	-	AA74A5	3510298 R1	0.53	20.0	Thin Wall XLPE Primary Cable	LIGHT GREEN	2000.0	-	E	A01-1200E
21	-	-	AA74D1	3510298 R1	0.53	20.0	Thin Wall XLPE Primary Cable	LIGHT GREEN	1850.0	-	F	A01-1200C
22	-	-	AA74D3	3510298 R1	0.53	20.0	Thin Wall XLPE Primary Cable	LIGHT GREEN	1850.0	-	H	A01-1200C

Connector Name	A01-1200C
Part Number	4057474C1
Instances	LT/RH A26 - A26 - Heating Ventilation & Air Conditioning (HVAC) Manual:Diagram3 - Actuators - Option1 LT/RH A26 - A26 - Heating Ventilation & Air Conditioning (HVAC) Manual:Diagram4 - Actuators - Option2 LT/RH A26 - Heating Ventilation & Air Conditioning (HVAC) Auto Temp Control:Diagram3 - Actuators - Option1 LT/RH A26 - Heating Ventilation & Air Conditioning (HVAC) Auto Temp Control:Diagram4 - Actuators - Option2 LT/RH/LoneStar X15 - Heating Ventilation & Air Conditioning (HVAC) Auto Temp Control:Diagram2 - Actuators LT/RH/LoneStar X15 - Heating Ventilation & Air Conditioning (HVAC) Manual:Diagram2 - Actuators
Mates	MODU-HEAT/EVAP-6003-A01-12 00C/D/E

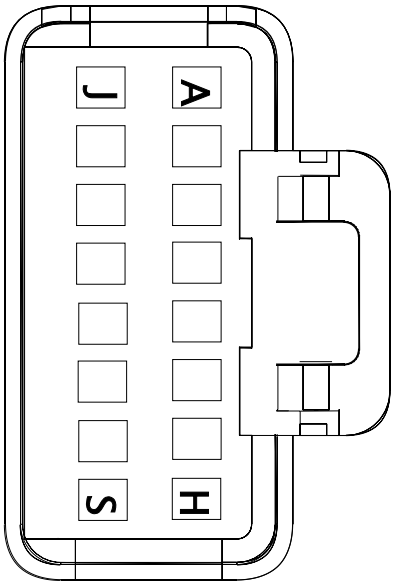

Name	Terminal Part Number	V-Min	Name	Wire Part Number	Wire CSA	Wire Spec	Wire Material description	Wire Color Description	Wire Length	End2 Terminal Part Number	End2 Pin Name	End2 Connector
A	-	-	AA74C1	3510298 R1	0.53	20.0	Thin Wall XLPE Primary Cable	LIGHT GREEN	1850.0	-	4	A01-1200B
B	-	-	AA74C2	3510298 R1	0.53	20.0	Thin Wall XLPE Primary Cable	LIGHT GREEN	1850.0	-	18	A01-1200A
C	-	-	AA74C3	3510298 R1	0.53	20.0	Thin Wall XLPE Primary Cable	LIGHT GREEN	1850.0	-	5	A01-1200B
D	-	-	AA74C4	3510298 R1	0.53	20.0	Thin Wall XLPE Primary Cable	LIGHT GREEN	1850.0	-	6	A01-1200B

Name	Terminal Part Number	V-Min	Name	Wire Part Number	Wire CSA	Wire Spec	Wire Material description	Wire Color Description	Wire Length	End2 Terminal Part Number	End2 Pin Name	End2 Connector
E	-	-	AA74C5	3510298 R1	0.53	20.0	Thin Wall XLPE Primary Cable	LIGHT GREEN	1850.0	-	7	A01-1200B
F	-	-	AA74D1	3510298 R1	0.53	20.0	Thin Wall XLPE Primary Cable	LIGHT GREEN	1850.0	-	21	A01-1200B
G	-	-	AA74D2	3510298 R1	0.53	20.0	Thin Wall XLPE Primary Cable	LIGHT GREEN	1850.0	-	21	A01-1200A
H	-	-	AA74D3	3510298 R1	0.53	20.0	Thin Wall XLPE Primary Cable	LIGHT GREEN	1850.0	-	22	A01-1200B
J	-	-	AA74D4	3510298 R1	0.53	20.0	Thin Wall XLPE Primary Cable	LIGHT GREEN	1850.0	-	22	A01-1200A
K	-	-	AA74D5	3510298 R1	0.53	20.0	Thin Wall XLPE Primary Cable	LIGHT GREEN	1850.0	-	11	A01-1200A
L	-	-	AA74E1	3510298 R1	0.53	20.0	Thin Wall XLPE Primary Cable	LIGHT GREEN	1850.0	-	8	A01-1200B
M	-	-	AA74E2	3510298 R1	0.53	20.0	Thin Wall XLPE Primary Cable	LIGHT GREEN	1850.0	-	19	A01-1200A

Name	Terminal Part Number	V-Min	Name	Wire Part Number	Wire CSA	Wire Spec	Wire Material description	Wire Color Description	Wire Length	End2 Terminal Part Number	End2 Pin Name	End2 Connector
N	-	-	AA74E3	3510298 R1	0.53	20.0	Thin Wall XLPE Primary Cable	LIGHT GREEN	1850.0	-	9	A01-1200B
P	-	-	AA74E4	3510298 R1	0.53	20.0	Thin Wall XLPE Primary Cable	LIGHT GREEN	1850.0	-	10	A01-1200B
S	-	-	AA74E5	3510298 R1	0.53	20.0	Thin Wall XLPE Primary Cable	LIGHT GREEN	1850.0	-	11	A01-1200B

Connector Name	A01-1200D
Part Number	4061870C1
Instances	LT/RH A26 - A26 - Heating Ventilation & Air Conditioning (HVAC) Manual:Diagram1 - HVAC - Option1 LT/RH A26 - A26 - Heating Ventilation & Air Conditioning (HVAC) Manual:Diagram2 - HVAC - Option2 LT/RH A26 - Heating Ventilation & Air Conditioning (HVAC) Auto Temp Control:Diagram1 - HVAC - Option1 LT/RH A26 - Heating Ventilation & Air Conditioning (HVAC) Auto Temp Control:Diagram2 - HVAC - Option2 LT/RH/LoneStar X15 - Heating Ventilation & Air Conditioning (HVAC) Auto Temp Control:Diagram1 - HVAC LT/RH/LoneStar X15 - Heating Ventilation & Air Conditioning (HVAC) Manual:Diagram1 - HVAC
Mates	MODU-HEAT/EVAP-6003-A01-12 00C/D/E

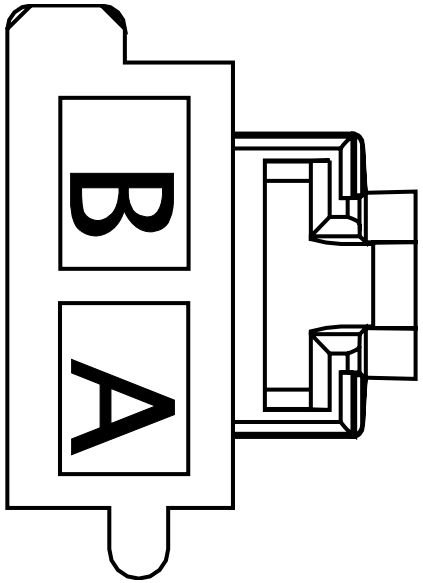

Name	Terminal Part Number	V-Min	Name	Wire Part Number	Wire CSA	Wire Spec	Wire Material description	Wire Color Description	Wire Length	End2 Terminal Part Number	End2 Pin Name	End2 Connect or
A	-	-	DH75	3510368 R1	3.01	12.0	Thin Wall XLPE Primary Cable	RED	2940.0	-	-	-
B	-	-	AA75-G	3510362 R1	3.01	12.0	Thin Wall XLPE Primary Cable	WHITE	1875.0	-	-	-

Connector Name A01-1200E

Part Number 4057658C1

Instances LT/RH A26 - A26 - Heating Ventilation & Air Conditioning (HVAC) Manual:Diagram1 - HVAC - Option1
LT/RH A26 - A26 - Heating Ventilation & Air Conditioning (HVAC) Manual:Diagram2 - HVAC - Option2
LT/RH A26 - A26 - Heating Ventilation & Air Conditioning (HVAC) Manual:Diagram3 - Actuators - Option1
LT/RH A26 - A26 - Heating Ventilation & Air Conditioning (HVAC) Manual:Diagram4 - Actuators - Option2
LT/RH A26 - Heating Ventilation & Air Conditioning (HVAC) Auto Temp Control:Diagram1 - HVAC - Option1
LT/RH A26 - Heating Ventilation & Air Conditioning (HVAC) Auto Temp Control:Diagram2 - HVAC - Option2
LT/RH A26 - Heating Ventilation & Air Conditioning (HVAC) Auto Temp Control:Diagram3 - Actuators - Option1
LT/RH A26 - Heating Ventilation & Air Conditioning (HVAC) Auto Temp Control:Diagram4 - Actuators - Option2
LT/RH/LoneStar X15 - Heating Ventilation & Air Conditioning (HVAC) Auto Temp Control:Diagram1 - HVAC
LT/RH/LoneStar X15 - Heating Ventilation & Air Conditioning (HVAC) Auto Temp Control:Diagram2 - Actuators
LT/RH/LoneStar X15 - Heating Ventilation & Air Conditioning (HVAC) Manual:Diagram1 - HVAC
LT/RH/LoneStar X15 - Heating Ventilation & Air Conditioning (HVAC) Manual:Diagram2 - Actuators

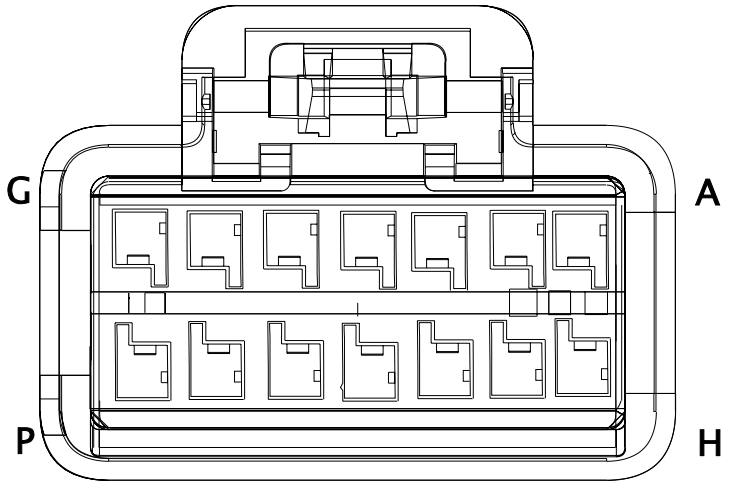

Mates MODU-HEAT/EVAP-6003-A01-12 00C/D/E

Name	Terminal Part Number	V-Min	Name	Wire Part Number	Wire CSA	Wire Spec	Wire Material description	Wire Color Description	Wire Length	End2 Terminal Part Number	End2 Pin Name	End2 Connector
A	-	-	AA74A1	3510298 R1	0.53	20.0	Thin Wall XLPE Primary Cable	LIGHT GREEN	2000.0	-	13	A01-1200B
B	-	-	AA74A2	3510298 R1	0.53	20.0	Thin Wall XLPE Primary Cable	LIGHT GREEN	2000.0	-	9	A01-1200A

Name	Terminal Part Number	V-Min	Name	Wire Part Number	Wire CSA	Wire Spec	Wire Material description	Wire Color Description	Wire Length	End2 Terminal Part Number	End2 Pin Name	End2 Connector
C	-	-	AA74A3	3510298 R1	0.53	20.0	Thin Wall XLPE Primary Cable	LIGHT GREEN	2000.0	-	14	A01-1200B
D	-	-	AA74A4	3510298 R1	0.53	20.0	Thin Wall XLPE Primary Cable	LIGHT GREEN	2000.0	-	15	A01-1200B
E	-	-	AA74A5	3510298 R1	0.53	20.0	Thin Wall XLPE Primary Cable	LIGHT GREEN	2000.0	-	16	A01-1200B
F	-	-	AA74B1	3510298 R1	0.53	20.0	Thin Wall XLPE Primary Cable	LIGHT GREEN	2000.0	-	1	A01-1200B
G	-	-	AA74B2	3510298 R1	0.53	20.0	Thin Wall XLPE Primary Cable	LIGHT GREEN	2000.0	-	10	A01-1200A
H	-	-	AA74B3	3510298 R1	0.53	20.0	Thin Wall XLPE Primary Cable	LIGHT GREEN	2000.0	-	2	A01-1200B
J	-	-	AA74B4	3510298 R1	0.53	20.0	Thin Wall XLPE Primary Cable	LIGHT GREEN	2000.0	-	3	A01-1200B
K	-	-	AA74B5	3510298 R1	0.53	20.0	Thin Wall XLPE Primary Cable	LIGHT GREEN	2000.0	-	12	A01-1200B

Name	Terminal Part Number	V-Min	Name	Wire Part Number	Wire CSA	Wire Spec	Wire Material description	Wire Color Description	Wire Length	End2 Terminal Part Number	End2 Pin Name	End2 Connect or
L	-	-	AA77D	3510298 R1	0.53	20.0	Thin Wall XLPE Primary Cable	LIGHT GREEN	2800.0	-	A10	J7-1607
M	-	-	AA6AM	3510310 R1	0.53	20.0	Thin Wall XLPE Primary Cable	GREY	2800.0	-	B10	J7-1607
N	-	-	DH75AB	3510299 R1	0.79	18.0	Thin Wall XLPE Primary Cable	LIGHT GREEN	1305.0	-	X	-
P	-	-	AA75B	3510298 R1	0.53	20.0	Thin Wall XLPE Primary Cable	LIGHT GREEN	2000.0	-	5	A01-1200A

Connector Name	A01-1400
Part Number	3596926C1
Instances	LoneStar - X15 - Antilock Brake System (ABS) [Bendix 6 Channel Implementation]:Diagram1 LoneStar - X15 - Antilock Brake System (ABS) [Bendix 6 Channel Implementation]:Diagram2 LoneStar - X15 - Antilock Brake System (ABS) [Bendix 6 Channel Implementation]:Diagram3 LoneStar - X15 - Antilock Brake System (ABS)-BENDIX 4 Channel Implemenation:Diagram1 LoneStar - X15 - Antilock Brake System (ABS)-BENDIX 4 Channel Implemenation:Diagram2 LoneStar - X15 - Antilock Brake System (ABS)-BENDIX 4 Channel Implemenation:Diagram3 LoneStar - X15 - Antilock Brake System (ABS)-BENDIX 4 Channel Implemenation:Diagram4 LT/RH - X15/A26 - Antilock Brake System (ABS) BENDIX 4 Channel Implemenation:Diagram1 LT/RH - X15/A26 - Antilock Brake System (ABS) BENDIX 4 Channel Implemenation:Diagram2 LT/RH - X15/A26 - Antilock Brake System (ABS) BENDIX 4 Channel Implemenation:Diagram3 LT/RH - X15/A26 - Antilock Brake System (ABS) BENDIX 4 Channel Implemenation:Diagram4 LT/RH - X15/A26 - Antilock Brake System (ABS) Bendix 6 Channel Implementation:Diagram1 LT/RH - X15/A26 - Antilock Brake System (ABS) Bendix 6 Channel Implementation:Diagram2 LT/RH - X15/A26 - Antilock Brake System (ABS) Bendix 6 Channel Implementation:Diagram3 LT/RH - X15/A26 - Bendix Stability Control For Tractor or Tractors with Trailer Tow:Diagram1 LT/RH - X15/A26 - Bendix Stability Control For Tractor or Tractors with Trailer Tow:Diagram2 LT/RH - X15/A26 - Bendix; Tractor or Towing Truck; W/ Air SUSP; J1939 Driven Lamp:Diagram1 LT/RH - X15/A26 - Bendix; Tractor or Towing Truck; W/ Air SUSP; J1939 Driven Lamp:Diagram2 LT/RH/LoneStar - X15/A26 - Hill Start Aid (Wabco):Diagram1 LT/RH/LoneStar - X15/A26 - Traction Control (Bendix Controller):Diagram1 LT/RH/LoneStar - X15/A26 - Traction Control (Bendix Controller):Diagram2

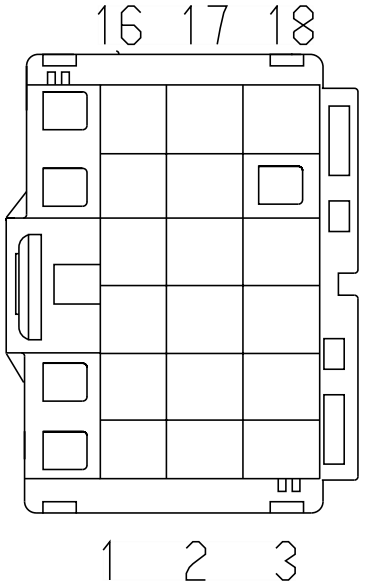

LT/RH/LoneStar - X15/A26 - Traction Control (Bendix Controller)
Option 2:Diagram1
LT/RH/LoneStar - X15/A26 - Traction Control (Bendix Controller)
Option 2:Diagram2

Mates MODU-ABS-3003-01-02A Bendix

Name	Terminal Part Number	V-Min	Name	Wire Part Number	Wire CSA	Wire Spec	Wire Material description	Wire Color Description	Wire Length	End2 Terminal Part Number	End2 Pin Name	End2 Connect or
1	-	-	XY94-GA	3510362 R1	3.01	12.0	Thin Wall XLPE Primary Cable	WHITE	2270.0	-	-	-
2	-	-	3F94AA	3510311 R1	0.79	18.0	Thin Wall XLPE Primary Cable	GREY	2375.0	-	61	1701
3	-	-	XY94V	3510311 R1	0.79	18.0	Thin Wall XLPE Primary Cable	GREY	2820.0	-	-	-
4	-	-	XX94BN	3510311 R1	0.79	18.0	Thin Wall XLPE Primary Cable	GREY	2375.0	-	15	1701
5	-	-	XX94BM	3510311 R1	0.79	18.0	Thin Wall XLPE Primary Cable	GREY	2375.0	-	14	1701
7	-	-	-	-	-	-	-	-	-	-	-	-
8	-	-	-	-	-	-	-	-	-	-	-	-
10	-	-	XY94BH	3510312 R1	1.16	16.0	Thin Wall XLPE Primary Cable	GREY	2375.0	-	18	1701

Name	Terminal Part Number	V-Min	Name	Wire Part Number	Wire CSA	Wire Spec	Wire Material description	Wire Color Description	Wire Length	End2 Terminal Part Number	End2 Pin Name	End2 Connect or
11	-	-	XY94BF	3510312 R1	1.16	16.0	Thin Wall XLPE Primary Cable	GREY	2375.0	-	19	1701
16	-	-	XY94AY	3510314 R1	3.01	12.0	Thin Wall XLPE Primary Cable	GREY	2635.0	-	-	-

Connector Name A01-1401

Part Number 3596929C1

Instances LoneStar - X15 - Antilock Brake System (ABS) [Bendix 6 Channel Implementation]:Diagram1
LoneStar - X15 - Antilock Brake System (ABS) [Bendix 6 Channel Implementation]:Diagram2
LoneStar - X15 - Antilock Brake System (ABS) [Bendix 6 Channel Implementation]:Diagram3
LoneStar - X15 - Antilock Brake System (ABS)-BENDIX 4 Channel Implemenation:Diagram1
LoneStar - X15 - Antilock Brake System (ABS)-BENDIX 4 Channel Implemenation:Diagram2
LoneStar - X15 - Antilock Brake System (ABS)-BENDIX 4 Channel Implemenation:Diagram3
LoneStar - X15 - Antilock Brake System (ABS)-BENDIX 4 Channel Implemenation:Diagram4
LT/RH - X15/A26 - Antilock Brake System (ABS) BENDIX 4 Channel Implemenation:Diagram1
LT/RH - X15/A26 - Antilock Brake System (ABS) BENDIX 4 Channel Implemenation:Diagram2
LT/RH - X15/A26 - Antilock Brake System (ABS) BENDIX 4 Channel Implemenation:Diagram3
LT/RH - X15/A26 - Antilock Brake System (ABS) BENDIX 4 Channel Implemenation:Diagram4
LT/RH - X15/A26 - Antilock Brake System (ABS) Bendix 6 Channel Implementation:Diagram1
LT/RH - X15/A26 - Antilock Brake System (ABS) Bendix 6 Channel Implementation:Diagram2
LT/RH - X15/A26 - Antilock Brake System (ABS) Bendix 6 Channel Implementation:Diagram3

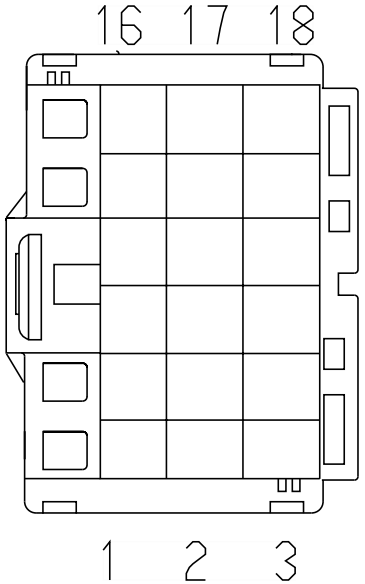

Mates MODU-ABS-3003-01-02A Bendix

Name	Terminal Part Number	V-Min	Name	Wire Part Number	Wire CSA	Wire Spec	Wire Material description	Wire Color Description	Wire Length	End2 Terminal Part Number	End2 Pin Name	End2 Connect or
1	-	-	XY94B	3510311 R1	0.79	18.0	Thin Wall XLPE Primary Cable	GREY	2325.0	-	29	1700

Name	Terminal Part Number	V-Min	Name	Wire Part Number	Wire CSA	Wire Spec	Wire Material description	Wire Color Description	Wire Length	End2 Terminal Part Number	End2 Pin Name	End2 Connector
2	-	-	XY94	3510311 R1	0.79	18.0	Thin Wall XLPE Primary Cable	GREY	2325.0	-	27	1700
3	-	-	XY94A	3510311 R1	0.79	18.0	Thin Wall XLPE Primary Cable	GREY	2325.0	-	28	1700
4	-	-	XY94K	3510311 R1	0.79	18.0	Thin Wall XLPE Primary Cable	GREY	2325.0	-	36	1700
5	-	-	XY94C	3510312 R1	1.16	16.0	Thin Wall XLPE Primary Cable	GREY	2325.0	-	30	1700
6	-	-	XY94J	3510311 R1	0.79	18.0	Thin Wall XLPE Primary Cable	GREY	2325.0	-	35	1700
7	-	-	XY94H	3510311 R1	0.79	18.0	Thin Wall XLPE Primary Cable	GREY	2325.0	-	34	1700
8	-	-	XY94D	3510312 R1	1.16	16.0	Thin Wall XLPE Primary Cable	GREY	2325.0	-	31	1700
9	-	-	XY94BK	3510311 R1	0.79	18.0	Thin Wall XLPE Primary Cable	GREY	2405.0	-	22	1701

Name	Terminal Part Number	V-Min	Name	Wire Part Number	Wire CSA	Wire Spec	Wire Material description	Wire Color Description	Wire Length	End2 Terminal Part Number	End2 Pin Name	End2 Connector
10	-	-	XY94BL	3510311 R1	0.79	18.0	Thin Wall XLPE Primary Cable	GREY	2405.0	-	20	1701
11	-	-	XY94E	3510312 R1	1.16	16.0	Thin Wall XLPE Primary Cable	GREY	2325.0	-	32	1700
12	-	-	XY94BB	3510311 R1	0.79	18.0	Thin Wall XLPE Primary Cable	GREY	2405.0	-	24	1701
13	-	-	XY94BJ	3510311 R1	0.79	18.0	Thin Wall XLPE Primary Cable	GREY	2405.0	-	21	1701
14	-	-	XY94F	3510312 R1	1.16	16.0	Thin Wall XLPE Primary Cable	GREY	2325.0	-	33	1700
15	-	-	XY94BE	3510312 R1	1.16	16.0	Thin Wall XLPE Primary Cable	GREY	2405.0	-	16	1701
16	-	-	XY94BC	3510311 R1	0.79	18.0	Thin Wall XLPE Primary Cable	GREY	2405.0	-	25	1701
17	-	-	XY94BA	3510311 R1	0.79	18.0	Thin Wall XLPE Primary Cable	GREY	2405.0	-	23	1701
18	-	-	XY94BD	3510312 R1	1.16	16.0	Thin Wall XLPE Primary Cable	GREY	2405.0	-	17	1701

Connector Name	A01-1402
Part Number	3596928C1
Instances	LoneStar - X15 - Antilock Brake System (ABS) [Bendix 6 Channel Implementation]:Diagram1 LoneStar - X15 - Antilock Brake System (ABS) [Bendix 6 Channel Implementation]:Diagram2 LoneStar - X15 - Antilock Brake System (ABS) [Bendix 6 Channel Implementation]:Diagram3 LT/RH - X15/A26 - Antilock Brake System (ABS) Bendix 6 Channel Implementation:Diagram1 LT/RH - X15/A26 - Antilock Brake System (ABS) Bendix 6 Channel Implementation:Diagram2 LT/RH - X15/A26 - Antilock Brake System (ABS) Bendix 6 Channel Implementation:Diagram3 LT/RH - X15/A26 - Bendix Stability Control For Tractor or Tractors with Trailer Tow:Diagram1 LT/RH - X15/A26 - Bendix Stability Control For Tractor or Tractors with Trailer Tow:Diagram2 LT/RH - X15/A26 - Bendix; Tractor or Towing Truck; W/ Air SUSP; J1939 Driven Lamp:Diagram1 LT/RH - X15/A26 - Bendix; Tractor or Towing Truck; W/ Air SUSP; J1939 Driven Lamp:Diagram2 LT/RH/LoneStar - X15/A26 - Hill Start Aid (Bendix):Diagram1 LT/RH/LoneStar - X15/A26 - Hill Start Aid (Bendix):Diagram2 LT/RH/LoneStar - X15/A26 - Hill Start Aid (Bendix):Diagram3
Mates	MODU-ABS-3003-01-02A Bendix

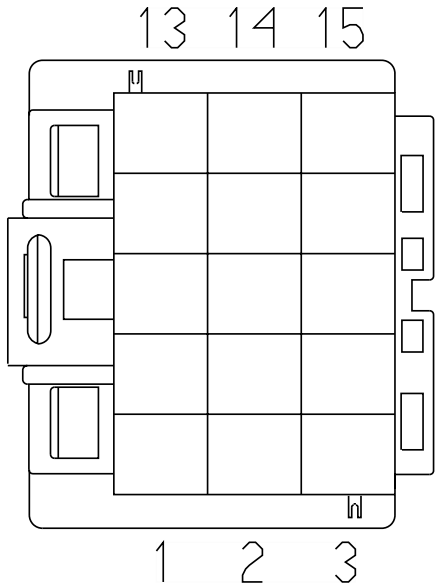

Name	Terminal Part Number	V-Min	Name	Wire Part Number	Wire CSA	Wire Spec	Wire Material description	Wire Color Description	Wire Length	End2 Terminal Part Number	End2 Pin Name	End2 Connector
2	-	-	ZA94HA	3510311 R1	0.79	18.0	Thin Wall XLPE Primary Cable	GREY	2345.0	-	65	1701
2	-	-	ZB94HA	3510311 R1	0.79	18.0	Thin Wall XLPE Primary Cable	GREY	2345.0	-	65	1701

Name	Terminal Part Number	V-Min	Name	Wire Part Number	Wire CSA	Wire Spec	Wire Material description	Wire Color Description	Wire Length	End2 Terminal Part Number	End2 Pin Name	End2 Connector
3	-	-	ZC94SK	3510311 R1	0.79	18.0	Thin Wall XLPE Primary Cable	GREY	2345.0	-	67	1701
3	-	-	ZA94SK	3510311 R1	0.79	18.0	Thin Wall XLPE Primary Cable	GREY	2210.0	-	X	-
3	-	-	ZB94SK	3510311 R1	0.79	18.0	Thin Wall XLPE Primary Cable	GREY	2345.0	-	66	1701
4	-	-	PJ94BP	3510312 R1	1.16	16.0	Thin Wall XLPE Primary Cable	GREY	2345.0	-	54	1701
5	-	-	XZ94SJ	3510311 R1	0.79	18.0	Thin Wall XLPE Primary Cable	GREY	2345.0	-	13	1701
6	-	-	PJ94BNN	3510312 R1	1.16	16.0	Thin Wall XLPE Primary Cable	GREY	2345.0	-	53	1701
7	-	-	PJ94BMM	3510312 R1	1.16	16.0	Thin Wall XLPE Primary Cable	GREY	2345.0	-	52	1701
9	-	-	PJ94BT	2643680 R1	1.16	16.0	Std. Wall XLPE Primary Cable	GREY	2345.0	-	58	1701

Name	Terminal Part Number	V-Min	Name	Wire Part Number	Wire CSA	Wire Spec	Wire Material description	Wire Color Description	Wire Length	End2 Terminal Part Number	End2 Pin Name	End2 Connector
10	-	-	PJ94BU	2643680 R1	1.16	16.0	Std. Wall XLPE Primary Cable	GREY	2345.0	-	59	1701
11	-	-	PJ94BR	3510312 R1	1.16	16.0	Thin Wall XLPE Primary Cable	GREY	2345.0	-	56	1701
12	-	-	PJ94BW	3510312 R1	1.16	16.0	Thin Wall XLPE Primary Cable	GREY	2345.0	-	64	1701
13	-	-	PJ94BS	2643680 R1	1.16	16.0	Std. Wall XLPE Primary Cable	GREY	2345.0	-	57	1701
14	-	-	PJ94BQ	3510312 R1	1.16	16.0	Thin Wall XLPE Primary Cable	GREY	2345.0	-	55	1701
15	-	-	PJ94BV	3510312 R1	1.16	16.0	Thin Wall XLPE Primary Cable	GREY	2345.0	-	60	1701

Connector Name	A01-1403
Part Number	3596927C1
Instances	LT/RH - X15/A26 - Bendix Stability Control For Tractor or Tractors with Trailer Tow:Diagram1 LT/RH - X15/A26 - Bendix Stability Control For Tractor or Tractors with Trailer Tow:Diagram2 LT/RH - X15/A26 - Bendix; Tractor or Towing Truck; W/ Air SUSP; J1939 Driven Lamp:Diagram1 LT/RH - X15/A26 - Bendix; Tractor or Towing Truck; W/ Air SUSP; J1939 Driven Lamp:Diagram2
Mates	MODU-ABS-3003-01-02A Bendix

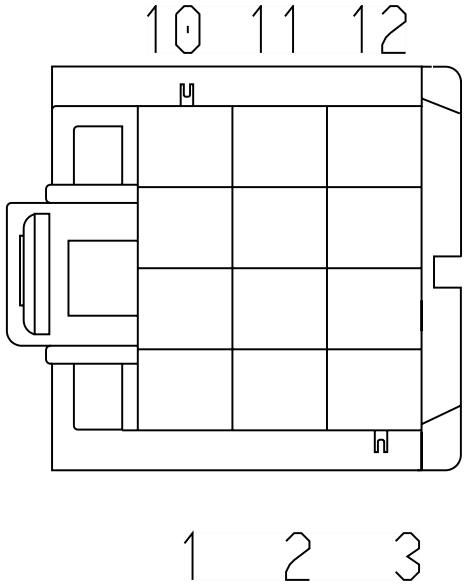

Name	Terminal Part Number	V-Min	Name	Wire Part Number	Wire CSA	Wire Spec	Wire Material description	Wire Color Description	Wire Length	End2 Terminal Part Number	End2 Pin Name	End2 Connector
1	-	-	XZ94SZD	3510312 R1	1.16	16.0	Thin Wall XLPE Primary Cable	GREY	190.0	-	X	-
2	-	-	XZ94SE	3510311 R1	0.79	18.0	Thin Wall XLPE Primary Cable	GREY	1915.0	-	D5	1800
3	-	-	XZ94SH	3510312 R1	1.16	16.0	Thin Wall XLPE Primary Cable	GREY	2480.0	-	76	1701
4	-	-	XZ94SVD	3510312 R1	1.16	16.0	Thin Wall XLPE Primary Cable	GREY	220.0	-	X	-

Name	Terminal Part Number	V-Min	Name	Wire Part Number	Wire CSA	Wire Spec	Wire Material description	Wire Color Description	Wire Length	End2 Terminal Part Number	End2 Pin Name	End2 Connector
5	-	-	XZ94SF	3510312 R1	1.16	16.0	Thin Wall XLPE Primary Cable	GREY	1915.0	-	D6	1800
6	-	-	XZ94SL	3510311 R1	0.79	18.0	Thin Wall XLPE Primary Cable	GREY	2480.0	-	74	1701
7	-	-	-	-	-	-	-	-	-	-	-	-
8	-	-	-	-	-	-	-	-	-	-	-	-
9	-	-	XZ94SM	3510311 R1	0.79	18.0	Thin Wall XLPE Primary Cable	GREY	2480.0	-	72	1701
10	-	-	XZ94SCA	3510311 R1	0.79	18.0	Thin Wall XLPE Primary Cable	GREY	1415.0	-	-	-
11	-	-	XZ94SAA	3510311 R1	0.79	18.0	Thin Wall XLPE Primary Cable	GREY	1415.0	-	-	-
12	-	-	XZ94SN	3510311 R1	0.79	18.0	Thin Wall XLPE Primary Cable	GREY	2480.0	-	73	1701

Connector Name	A01-1420
Part Number	3557922C1
Instances	LoneStar - X15 - Antilock Brake System (ABS) - Wabco 4 Channel Implementation:Diagram1 LoneStar - X15 - Antilock Brake System (ABS) - Wabco 4 Channel Implementation:Diagram2 LoneStar - X15 - Antilock Brake System (ABS) - Wabco 4 Channel Implementation:Diagram3 LoneStar - X15 - Antilock Brake System (ABS) - Wabco 4 Channel Implementation:Diagram4 LoneStar - X15 - Antilock Brake System - Wabco ABS 6 Channel Implementation:Diagram1 LoneStar - X15 - Antilock Brake System - Wabco ABS 6 Channel Implementation:Diagram2 LoneStar - X15 - Antilock Brake System - Wabco ABS 6 Channel Implementation:Diagram3 LT/RH - X15/A26 - Antilock Brake System (ABS) - Wabco 4 Channel Implementation:Diagram1 LT/RH - X15/A26 - Antilock Brake System (ABS) - Wabco 4 Channel Implementation:Diagram2 LT/RH - X15/A26 - Antilock Brake System (ABS) - Wabco 4 Channel Implementation:Diagram3 LT/RH - X15/A26 - Antilock Brake System (ABS) - Wabco 4 Channel Implementation:Diagram4 LT/RH - X15/A26 - Antilock Brake System - Wabco ABS 6 Channel Implementation:Diagram1 LT/RH - X15/A26 - Antilock Brake System - Wabco ABS 6 Channel Implementation:Diagram2 LT/RH - X15/A26 - Antilock Brake System - Wabco ABS 6 Channel Implementation:Diagram3 LT/RH - X15/A26 - Wabco Full Stability Control:Diagram1 LT/RH - X15/A26 - Wabco Full Stability Control:Diagram2 LT/RH/LoneStar - X15/A26 - Traction Control (Wabco Controller):Diagram1 LT/RH/LoneStar - X15/A26 - Traction Control (Wabco Controller):Diagram2 LT/RH/LoneStar - X15/A26 - Traction Control (Wabco Controller):Diagram3
Mates	MODU-ABS-3003-02-02A Wabco

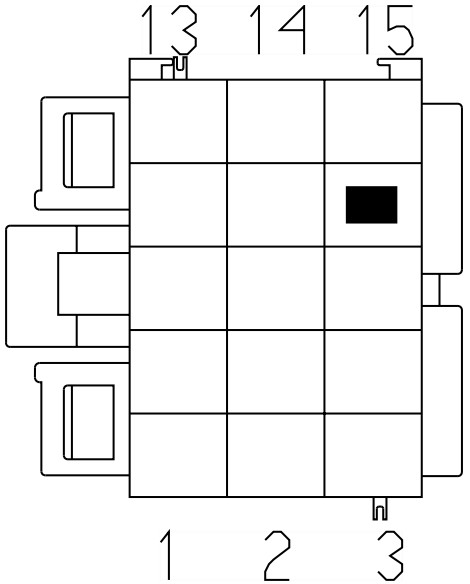

Name	Terminal Part Number	V-Min	Name	Wire Part Number	Wire CSA	Wire Spec	Wire Material description	Wire Color Description	Wire Length	End2 Terminal Part Number	End2 Pin Name	End2 Connector
1	-	-	-	-	-	-	-	-	-	-	-	-
3	-	-	-	-	-	-	-	-	-	-	-	-
4	-	-	GS94-GB	3510359 R1	0.79	18.0	Thin Wall XLPE Primary Cable	WHITE	655.0	-	X	-
4	-	-	3A94-GB	3510359 R1	0.79	18.0	Thin Wall XLPE Primary Cable	WHITE	655.0	-	X	-
7	-	-	GS94V	2643782 R1	1.91	14.0	Std. Wall XLPE Primary Cable	GREY	2935.0	-	-	-
7	-	-	3A94V	2643782 R1	1.91	14.0	Std. Wall XLPE Primary Cable	GREY	2935.0	-	-	-
8	-	-	GS94AY	2643782 R1	1.91	14.0	Std. Wall XLPE Primary Cable	GREY	2750.0	-	-	-
8	-	-	3A94AY	2643782 R1	1.91	14.0	Std. Wall XLPE Primary Cable	GREY	2750.0	-	-	-
9	-	-	GS94-GA	3510359 R1	0.79	18.0	Thin Wall XLPE Primary Cable	WHITE	655.0	-	X	-
9	-	-	3A94-GA	3510359 R1	0.79	18.0	Thin Wall XLPE Primary Cable	WHITE	655.0	-	X	-

Connector Name	A01-1421
Part Number	3557921C1
Instances	LoneStar - X15 - Antilock Brake System (ABS) - Wabco 4 Channel Implementation:Diagram1 LoneStar - X15 - Antilock Brake System (ABS) - Wabco 4 Channel Implementation:Diagram2 LoneStar - X15 - Antilock Brake System (ABS) - Wabco 4 Channel Implementation:Diagram3 LoneStar - X15 - Antilock Brake System (ABS) - Wabco 4 Channel Implementation:Diagram4 LoneStar - X15 - Antilock Brake System - Wabco ABS 6 Channel Implementation:Diagram1 LoneStar - X15 - Antilock Brake System - Wabco ABS 6 Channel Implementation:Diagram2 LoneStar - X15 - Antilock Brake System - Wabco ABS 6 Channel Implementation:Diagram3 LT/RH - X15/A26 - Antilock Brake System (ABS) - Wabco 4 Channel Implementation:Diagram1 LT/RH - X15/A26 - Antilock Brake System (ABS) - Wabco 4 Channel Implementation:Diagram2 LT/RH - X15/A26 - Antilock Brake System (ABS) - Wabco 4 Channel Implementation:Diagram3 LT/RH - X15/A26 - Antilock Brake System (ABS) - Wabco 4 Channel Implementation:Diagram4 LT/RH - X15/A26 - Antilock Brake System - Wabco ABS 6 Channel Implementation:Diagram1 LT/RH - X15/A26 - Antilock Brake System - Wabco ABS 6 Channel Implementation:Diagram2 LT/RH - X15/A26 - Antilock Brake System - Wabco ABS 6 Channel Implementation:Diagram3 LT/RH/LoneStar - X15/A26 - Traction Control (Wabco Controller):Diagram1 LT/RH/LoneStar - X15/A26 - Traction Control (Wabco Controller):Diagram2 LT/RH/LoneStar - X15/A26 - Traction Control (Wabco Controller):Diagram3
Mates	MODU-ABS-3003-02-02A Wabco

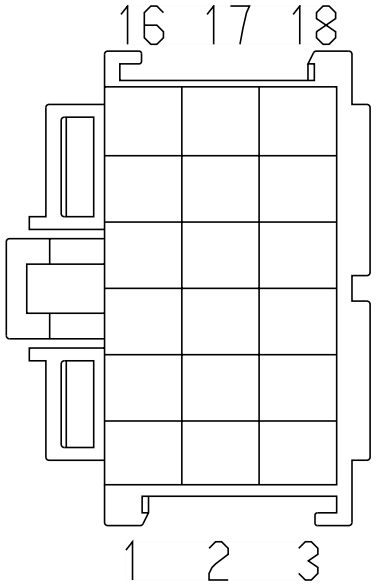

Name	Terminal Part Number	V-Min	Name	Wire Part Number	Wire CSA	Wire Spec	Wire Material description	Wire Color Description	Wire Length	End2 Terminal Part Number	End2 Pin Name	End2 Connector
1	-	-	GS94MK	3510311 R1	0.79	18.0	Thin Wall XLPE Primary Cable	GREY	2365.0	-	36	1700
1	-	-	3A94MK	3510311 R1	0.79	18.0	Thin Wall XLPE Primary Cable	GREY	2365.0	-	36	1700
2	-	-	GS94BC	3510311 R1	0.79	18.0	Thin Wall XLPE Primary Cable	GREY	2445.0	-	25	1701
2	-	-	3A94BC	3510311 R1	0.79	18.0	Thin Wall XLPE Primary Cable	GREY	2445.0	-	25	1701
3	-	-	GS94MB	3510311 R1	0.79	18.0	Thin Wall XLPE Primary Cable	GREY	2365.0	-	29	1700
3	-	-	3A94MB	3510311 R1	0.79	18.0	Thin Wall XLPE Primary Cable	GREY	2365.0	-	29	1700
4	-	-	GS94MH	3510311 R1	0.79	18.0	Thin Wall XLPE Primary Cable	GREY	2365.0	-	34	1700
4	-	-	3A94MH	3510311 R1	0.79	18.0	Thin Wall XLPE Primary Cable	GREY	2365.0	-	34	1700

Name	Terminal Part Number	V-Min	Name	Wire Part Number	Wire CSA	Wire Spec	Wire Material description	Wire Color Description	Wire Length	End2 Terminal Part Number	End2 Pin Name	End2 Connector
5	-	-	GS94BA	3510311 R1	0.79	18.0	Thin Wall XLPE Primary Cable	GREY	2445.0	-	23	1701
5	-	-	3A94BA	3510311 R1	0.79	18.0	Thin Wall XLPE Primary Cable	GREY	2445.0	-	23	1701
6	-	-	GS94M	3510311 R1	0.79	18.0	Thin Wall XLPE Primary Cable	GREY	2365.0	-	27	1700
6	-	-	3A94M	3510311 R1	0.79	18.0	Thin Wall XLPE Primary Cable	GREY	2365.0	-	27	1700
7	-	-	GT94BN	3510311 R1	0.79	18.0	Thin Wall XLPE Primary Cable	GREY	2445.0	-	15	1701
8	-	-	GS94BL	3510313 R1	1.91	14.0	Thin Wall XLPE Primary Cable	GREY	2445.0	-	20	1701
8	-	-	3A94BL	3510313 R1	1.91	14.0	Thin Wall XLPE Primary Cable	GREY	2445.0	-	20	1701
9	-	-	GS94BJ	3510313 R1	1.91	14.0	Thin Wall XLPE Primary Cable	GREY	2445.0	-	21	1701

Name	Terminal Part Number	V-Min	Name	Wire Part Number	Wire CSA	Wire Spec	Wire Material description	Wire Color Description	Wire Length	End2 Terminal Part Number	End2 Pin Name	End2 Connector
9	-	-	3A94BJ	3510313 R1	1.91	14.0	Thin Wall XLPE Primary Cable	GREY	2445.0	-	21	1701
10	-	-	GS94ME	3510311 R1	0.79	18.0	Thin Wall XLPE Primary Cable	GREY	2365.0	-	32	1700
10	-	-	3A94ME	3510311 R1	0.79	18.0	Thin Wall XLPE Primary Cable	GREY	2365.0	-	32	1700
11	-	-	GS94BD	3510311 R1	0.79	18.0	Thin Wall XLPE Primary Cable	GREY	2445.0	-	17	1701
11	-	-	3A94BE	3510311 R1	0.79	18.0	Thin Wall XLPE Primary Cable	GREY	2445.0	-	16	1701
12	-	-	GS94MC	3510311 R1	0.79	18.0	Thin Wall XLPE Primary Cable	GREY	2365.0	-	30	1700
12	-	-	3A94MC	3510311 R1	0.79	18.0	Thin Wall XLPE Primary Cable	GREY	2365.0	-	30	1700
13	-	-	GS94MF	3510311 R1	0.79	18.0	Thin Wall XLPE Primary Cable	GREY	2365.0	-	33	1700

Name	Terminal Part Number	V-Min	Name	Wire Part Number	Wire CSA	Wire Spec	Wire Material description	Wire Color Description	Wire Length	End2 Terminal Part Number	End2 Pin Name	End2 Connector
13	-	-	3A94MF	3510311 R1	0.79	18.0	Thin Wall XLPE Primary Cable	GREY	2365.0	-	33	1700
14	-	-	GS94BE	3510311 R1	0.79	18.0	Thin Wall XLPE Primary Cable	GREY	2445.0	-	16	1701
14	-	-	3A94BD	3510311 R1	0.79	18.0	Thin Wall XLPE Primary Cable	GREY	2445.0	-	17	1701
15	-	-	GS94MD	3510311 R1	0.79	18.0	Thin Wall XLPE Primary Cable	GREY	2365.0	-	31	1700
15	-	-	3A94MD	3510311 R1	0.79	18.0	Thin Wall XLPE Primary Cable	GREY	2365.0	-	31	1700
16	-	-	GT94BM	3510311 R1	0.79	18.0	Thin Wall XLPE Primary Cable	GREY	2445.0	-	14	1701
17	-	-	GS94BH	3510311 R1	0.79	18.0	Thin Wall XLPE Primary Cable	GREY	2445.0	-	18	1701
17	-	-	3A94BH	3510311 R1	0.79	18.0	Thin Wall XLPE Primary Cable	GREY	2445.0	-	18	1701

Name	Terminal Part Number	V-Min	Name	Wire Part Number	Wire CSA	Wire Spec	Wire Material description	Wire Color Description	Wire Length	End2 Terminal Part Number	End2 Pin Name	End2 Connect or
18	-	-	GS94BF	3510311 R1	0.79	18.0	Thin Wall XLPE Primary Cable	GREY	2445.0	-	19	1701
18	-	-	3A94BF	3510311 R1	0.79	18.0	Thin Wall XLPE Primary Cable	GREY	2445.0	-	19	1701

Connector Name A01-1422

Part Number 3548978C1

Instances LoneStar - X15 - Antilock Brake System - Wabco ABS 6 Channel Implementation:Diagram1
LoneStar - X15 - Antilock Brake System - Wabco ABS 6 Channel Implementation:Diagram2
LoneStar - X15 - Antilock Brake System - Wabco ABS 6 Channel Implementation:Diagram3
LT/RH - X15/A26 - Antilock Brake System - Wabco ABS 6 Channel Implementation:Diagram1
LT/RH - X15/A26 - Antilock Brake System - Wabco ABS 6 Channel Implementation:Diagram2
LT/RH - X15/A26 - Antilock Brake System - Wabco ABS 6 Channel Implementation:Diagram3
LT/RH - X15/A26 - Wabco Full Stability Control:Diagram1
LT/RH - X15/A26 - Wabco Full Stability Control:Diagram2

Mates MODU-ABS-3003-02-02A Wabco

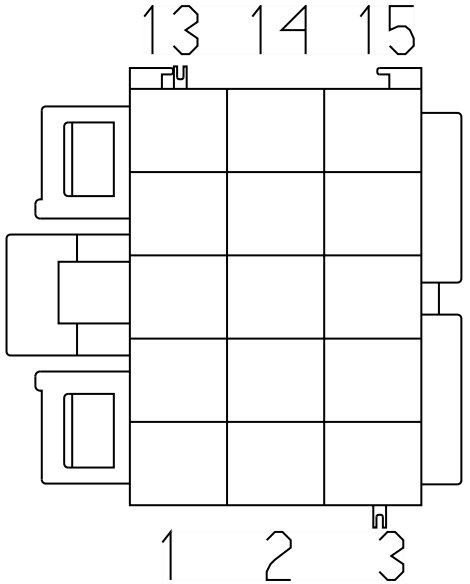

Name	Terminal Part Number	V-Min	Name	Wire Part Number	Wire CSA	Wire Spec	Wire Material description	Wire Color Description	Wire Length	End2 Terminal Part Number	End2 Pin Name	End2 Connect or
2	-	-	3A94BR	3510311 R1	0.79	18.0	Thin Wall XLPE Primary Cable	GREY	2405.0	-	56	1701
3	-	-	3A94BP	3510311 R1	0.79	18.0	Thin Wall XLPE Primary Cable	GREY	2405.0	-	54	1701
5	-	-	3A94BQ	3510311 R1	0.79	18.0	Thin Wall XLPE Primary Cable	GREY	2405.0	-	55	1701
6	-	-	3A94BX	3510311 R1	0.79	18.0	Thin Wall XLPE Primary Cable	GREY	2405.0	-	52	1701

Name	Terminal Part Number	V-Min	Name	Wire Part Number	Wire CSA	Wire Spec	Wire Material description	Wire Color Description	Wire Length	End2 Terminal Part Number	End2 Pin Name	End2 Connect or
8	-	-	XG94SK	3510311 R1	0.79	18.0	Thin Wall XLPE Primary Cable	GREY	2405.0	-	67	1701
11	-	-	3A94BW	3510311 R1	0.79	18.0	Thin Wall XLPE Primary Cable	GREY	2405.0	-	64	1701
12	-	-	3A94BU	3510311 R1	0.79	18.0	Thin Wall XLPE Primary Cable	GREY	2405.0	-	59	1701
13	-	-	XG94SJ	3510311 R1	0.79	18.0	Thin Wall XLPE Primary Cable	GREY	2405.0	-	13	1701
14	-	-	3A94BV	3510311 R1	0.79	18.0	Thin Wall XLPE Primary Cable	GREY	2405.0	-	60	1701
15	-	-	3A94BS	3510311 R1	0.79	18.0	Thin Wall XLPE Primary Cable	GREY	2405.0	-	57	1701

Connector Name A01-1423

Part Number 3846885C1

Instances LT/RH - X15/A26 - Wabco Full Stability Control:Diagram1
LT/RH - X15/A26 - Wabco Full Stability Control:Diagram2

Mates MODU-ABS-3003-02-02A Wabco

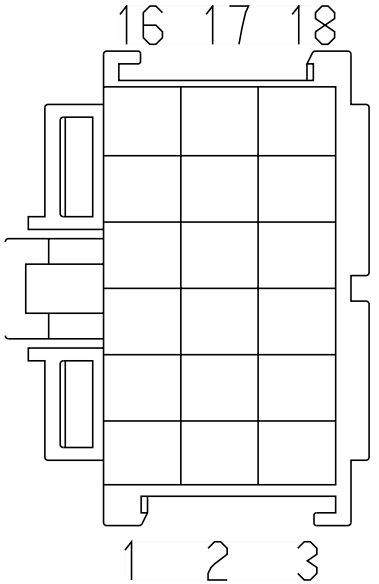

Name	Terminal Part Number	V-Min	Name	Wire Part Number	Wire CSA	Wire Spec	Wire Material description	Wire Color Description	Wire Length	End2 Terminal Part Number	End2 Pin Name	End2 Connect or
1	-	-	-	-	-	-	-	-	-	-	-	-
3	-	-	-	-	-	-	-	-	-	-	-	-
7	-	-	XD94SN	3510311 R1	0.79	18.0	Thin Wall XLPE Primary Cable	GREY	1310.0	-	-	-
8	-	-	GX94BY	3510311 R1	0.79	18.0	Thin Wall XLPE Primary Cable	GREY	1810.0	-	D6	1800
10	-	-	XD94SP	3510311 R1	0.79	18.0	Thin Wall XLPE Primary Cable	GREY	1310.0	-	-	-
11	-	-	GX94-GCC	3510359 R1	0.79	18.0	Thin Wall XLPE Primary Cable	WHITE	1810.0	-	D5	1800

Name	Terminal Part Number	V-Min	Name	Wire Part Number	Wire CSA	Wire Spec	Wire Material description	Wire Color Description	Wire Length	End2 Terminal Part Number	End2 Pin Name	End2 Connect or
13	-	-	XD94SM	3510311 R1	0.79	18.0	Thin Wall XLPE Primary Cable	GREY	2375.0	-	75	1701
14	-	-	GX94MN	3510311 R1	0.79	18.0	Thin Wall XLPE Primary Cable	GREY	1810.0	-	A6	1800
16	-	-	XD94SL	3510311 R1	0.79	18.0	Thin Wall XLPE Primary Cable	GREY	2375.0	-	63	1701

Connector Name A01-1776
Part Number 4062806C1
Instances LT/RH/LoneStar - X15/A26 - Analytic Cruise Control:Diagram1
Mates MODU-NGCC-5077-01-01A

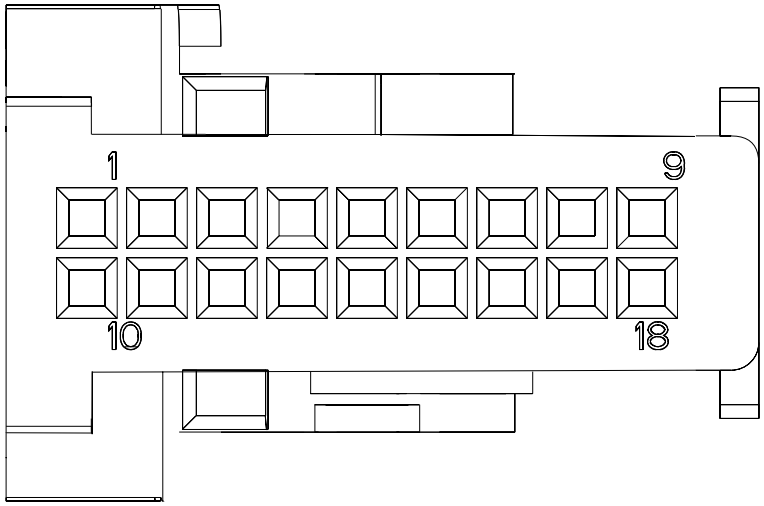

Name	Terminal Part Number	V-Min	Name	Wire Part Number	Wire CSA	Wire Spec	Wire Material description	Wire Color Description	Wire Length	End2 Terminal Part Number	End2 Pin Name	End2 Connector
7	-	-	-	-	-	-	-	-	-	-	-	-
8	-	-	LM971G	3510322 R1	0.53	20.0	Thin Wall XLPE Primary Cable	PINK	1330.0	-	-	-
9	-	-	LM97-G	3510358 R1	0.53	20.0	Thin Wall XLPE Primary Cable	WHITE	1960.0	-	-	-
15	-	-	-	-	-	-	-	-	-	-	-	-
18	-	-	LM97B	3510364 R1	0.53	20.0	Thin Wall XLPE Primary Cable	RED	1145.0	-	-	-

Connector Name	A01-1942
Part Number	3673259C1
Instances	LT/RH/LoneStar - X15/A26 - Collision Avoidance System (Warning):Diagram1
Mates	MODU-SIDE_DISPLAY-3011-02- 02

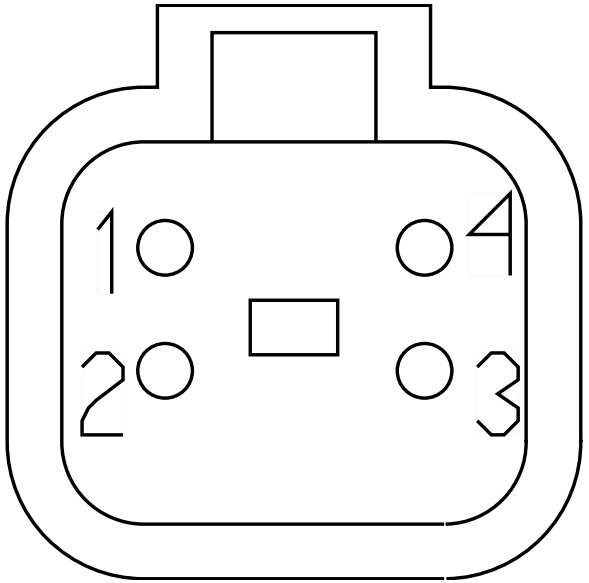

Name	Terminal Part Number	V-Min	Name	Wire Part Number	Wire CSA	Wire Spec	Wire Material description	Wire Color Description	Wire Length	End2 Terminal Part Number	End2 Pin Name	End2 Connector
1	-	-	YD67V	2643673 R1	0.79	18.0	Std. Wall XLPE Primary Cable	GREY	2280.0	-	71	1701
2	-	-	YD67W	2643673 R1	0.79	18.0	Std. Wall XLPE Primary Cable	GREY	2280.0	-	70	1701
3	-	-	YD67U	2643673 R1	0.79	18.0	Std. Wall XLPE Primary Cable	GREY	2280.0	-	69	1701
4	-	-	ZD57AAA	3510316 R1	0.53	20.0	Thin Wall XLPE Primary Cable	ORANGE	1975.0	-	-	-

Connector Name	A01-381
Part Number	BLUNT_SL_VC
Instances	LT/RH - X15/A26 - Lane Departure Warning (Mobileye Per-Wire):Diagram1
Mates	BLNT-WIPER_SIGNAL-3020-03- 01A

Name	Terminal Part Number	V-Min	Name	Wire Part Number	Wire CSA	Wire Spec	Wire Material description	Wire Color Description	Wire Length	End2 Terminal Part Number	End2 Pin Name	End2 Connect or
A	-	-	YH11-GC	3510361 R1	1.91	14.0	Thin Wall XLPE Primary Cable	WHITE	835.0	-	-	-
B	-	-	YH82KB	3510312 R1	1.16	16.0	Thin Wall XLPE Primary Cable	GREY	1055.0	-	X	-

Connector Name	A01-382
Part Number	BLUNT_SL_VC
Instances	LT/RH - X15/A26 - Lane Departure Warning (Mobileye Per-Wire):Diagram1
Mates	BLNT-MOBILEYE_PWR-3020-03- 01A

Name	Terminal Part Number	V-Min	Name	Wire Part Number	Wire CSA	Wire Spec	Wire Material description	Wire Color Description	Wire Length	End2 Terminal Part Number	End2 Pin Name	End2 Connect or
A	-	-	YH13AC	3510324 R1	1.16	16.0	Thin Wall XLPE Primary Cable	PINK	2135.0	-	-	-
B	-	-	YH14AZ	3510365 R1	0.79	18.0	Thin Wall XLPE Primary Cable	RED	1950.0	-	-	-

Connector Name	A02-0009
Part Number	4063156C1
Instances	LoneStar - X15 - Adaptive Cruise Control (Bendix - Fusion W/O DIU & N/ Safety Direct & Tweeters):Diagram1 LoneStar - X15 - Adaptive Cruise Control (Bendix - Fusion W/O DIU & W/ Safety Direct & Reg Speakers) Option 1:Diagram1 LoneStar - X15 - Adaptive Cruise Control (Bendix - Fusion W/O DIU & W/ Safety Direct & Reg Speakers) Option 2:Diagram1 LoneStar - X15 - Adaptive Cruise Control (Bendix - Fusion W/O DIU & W/ Safety Direct & W/ Tweeters):Diagram1 LoneStar - X15 - Headlights Halogen N/INT N/LOWW:Diagram1 LoneStar - X15 - Headlights Halogen N/INT W/LOWW:Diagram1 LoneStar - X15 - Headlights Halogen W/INT N/LOWW:Diagram1 LoneStar - X15 - Headlights Halogen W/INT W/ LOWW:Diagram1 LoneStar - X15 - Lane Departure Warning - (Bendix Fusion W/ Safety Direct))(US & Canada):Diagram1 LoneStar - X15 - Lane Departure Warning - (Bendix Fusion W/ Safety Direct))(US & Canada)-:Diagram1 LoneStar - X15 - Trailer Interface (ABS) - Center Pin Circuit:Diagram1 LoneStar - X15 - Trailer Interface (ABS) - Center Pin Circuit:Diagram2 LoneStar - X15 - Trailer Interface (ABS) - Center Pin Circuit:Diagram3 LoneStar - X15 - Trailer Interface (ABS) - Center Pin Circuit:Diagram4 LT/RH - X15/A26 - Adaptive Cruise Control (Bendix - Fusion W/ O DIU & N/ Safety Direct & Tweeters):Diagram1 LT/RH - X15/A26 - 10 PIN ClockSpring:Diagram1 LT/RH - X15/A26 - Adaptive Cruise Control (Bendix - Fusion W/ O DIU & N/ Safety Direct & Reg Speakers):Diagram1 LT/RH - X15/A26 - Adaptive Cruise Control (Bendix - Fusion W/ O DIU & W/ Safety Direct & Reg Speakers):Diagram1 LT/RH - X15/A26 - Adaptive Cruise Control (Bendix - Fusion W/ O DIU & W/ Safety Direct & W/ Tweeters):Diagram1 LT/RH - X15/A26 - Lane Departure Warning - (Bendix Fusion W/ Safety Direct))(US & Canada):Diagram1 LT/RH - X15/A26 - Lane Departure Warning - Bendix:Diagram1 LT/RH - X15/A26 - Radio W/Steering Wheel Pod N/ Remote:Diagram1 LT/RH - X15/A26 - Trailer Interface (ABS) - Center Pin Circuit:Diagram1

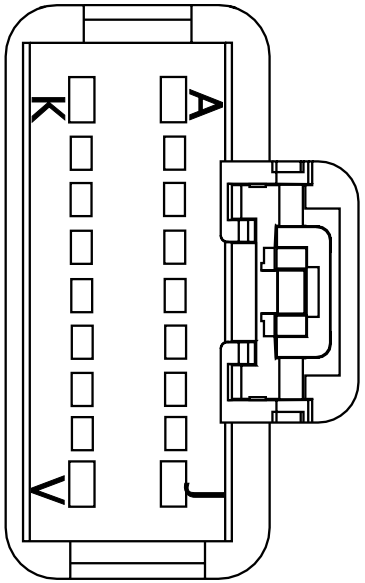

LT/RH - X15/A26 - Trailer Interface (ABS) - Center Pin Circuit:Diagram2
LT/RH - X15/A26 - Trailer Interface (ABS) - Center Pin Circuit:Diagram3
LT/RH - X15/A26 - Trailer Interface (ABS) - Center Pin Circuit:Diagram4
LT/RH A26 - Auto Start Stop and Sleeper Auto Climate / Cab Temp / Oil Mapping Manual Trans:Diagram1
LT/RH A26 - Auto Start Stop Battery & Oil Temp Mapping Auto Trans:Diagram1
LT/RH A26 - Auto Start Stop Battery & Oil Temp Mapping Manual Trans:Diagram1
LT/RH A26 - Auto Start Stop with Sleeper Auto Climate / Cab Temp / Oil Mapping Auto Trans:Diagram1
LT/RH/LoneStar - X15/A26 - Adjustable Engine Speed Control (PTO) 4-pin Clockspring:Diagram1
LT/RH/LoneStar - X15/A26 - Adjustable Engine Speed Control (PTO) 10-PIN ClockSpring:Diagram1
LT/RH/LoneStar - X15/A26 - Automatic Lighting (Dual Sensor Solar/Twilight):Diagram1
LT/RH/LoneStar - X15/A26 - Automatic Lighting (Single Sensor Twilight):Diagram1
LT/RH/LoneStar - X15/A26 - Cabinet Refrigerator W/ Relay:Diagram1
LT/RH/LoneStar - X15/A26 - DC/AC Inverter (1200W W/switch control):Diagram1
LT/RH/LoneStar - X15/A26 - Dual Aux Switch:Diagram1-Combination1
LT/RH/LoneStar - X15/A26 - Engine Idle Increment/Decrement (Steering Wheel Switch - 4 Pin):Diagram1
LT/RH/LoneStar - X15/A26 - Engine Idle Increment/Decrement (Steering Wheel Switch - 10 Pin):Diagram1
LT/RH/LoneStar - X15/A26 - Floor/Search Lights Sleeper:Diagram1
LT/RH/LoneStar - X15/A26 - Floor/Search Lights Sleeper (1 Light):Diagram1
LT/RH/LoneStar - X15/A26 - Hazard Warning (CA 2.0):Diagram1
LT/RH/LoneStar - X15/A26 - Instrument Cluster - Request and Status:Diagram1
LT/RH/LoneStar - X15/A26 - Lighting Sleeper Dome:Diagram1
LT/RH/LoneStar - X15/A26 - MARKER/PARK LIGHTS - W/ Marker Interrupt 10pin CLCKSPRING:Diagram1
LT/RH/LoneStar - X15/A26 - No Idle HVAC - TRI-PAC Prewire:Diagram1

LT/RH/LoneStar - X15/A26 - Radio (Bluetooth) W/Steering Wheel Pod N/ Remote W/MIC:Diagram1
LT/RH/LoneStar - X15/A26 - Radio W/Steering Wheel Pod W/ Remote:Diagram1
LT/RH/LoneStar - X15/A26 - Radio(Bluetooth) W/Steering Wheel W/Remote W/MIC:Diagram1
LT/RH/LoneStar - X15/A26 - Rear AUTO HVAC (No Idle) W/ Pre-Heat (Bergstrom Heat and Cool w/ Condensation) 2 SWITCHES:Diagram2 - No Idle Switching
LT/RH/LoneStar - X15/A26 - Rear HVAC (No Idle) W/ Pre-Heat (Bergstrom Heat and Cool w/ Condensation) 2 SWITCHES Option 1:Diagram2 - No Idle Switching
LT/RH/LoneStar - X15/A26 - Rear HVAC (No Idle) W/ Pre-Heat (Bergstrom Heat and Cool w/ Condensation) 2 SWITCHES Option 2:Diagram2 - No Idle Switching
LT/RH/LoneStar - X15/A26 - Rear HVAC (No Idle) W/ Pre-Heat (Bergstrom Heat and Cool w/ Condensation) 4 SWITCHES Option 1:Diagram2 - No Idle Switching
LT/RH/LoneStar - X15/A26 - Rear HVAC (No Idle) W/ Pre-Heat (Bergstrom Heat and Cool w/ Condensation) 4 SWITCHES Option 2:Diagram2 - No Idle Switching
LT/RH/LoneStar - X15/A26 - Rear HVAC (Sleeper W/ Deluxe):Diagram1
LT/RH/LoneStar - X15/A26 - Rear HVAC (Sleeper W/ Premium):Diagram1
LT/RH/LoneStar - X15/A26 - Rear Interior Dimming (Accent Light):Diagram1
LT/RH/LoneStar - X15/A26 - Rear Manual HVAC (No Idle) W/ Pre-Heat (Bergstrom Heat and Cool w/ Condensation) 2 SWITCHES:Diagram2 - No Idle Switching
LT/RH/LoneStar - X15/A26 - Single Aux Switch:Diagram1
LT/RH/LoneStar - X15/A26 - Single Aux Switch:Diagram2
LT/RH/LoneStar - X15/A26 - Telematics (OMNIVISION W/ J1939 & PANIC BUTTON):Diagram1
LT/RH/LoneStar - X15/A26 - Telematics (OMNIVISION W/ J1939 & PANIC BUTTON):Diagram2
LT/RH/LoneStar - X15/A26 - Telematics QUALCOMM IMCT DAYCAB With MVPC & PANIC BUTTON:Diagram1
LT/RH/LoneStar - X15/A26 - Telematics QUALCOMM IMCT DAYCAB With PANIC BUTTON:Diagram1
LT/RH/LoneStar - X15/A26 - Telematics QUALCOMM TMCT With PANIC BUTTON:Diagram1
LT/RH/LoneStar - X15/A26 - Vehicle Speed Control (Cruise Control) 4 - PIN:Diagram1

LT/RH/LoneStar X15 - Auto Start Stop Oil Temp Sensor Auto Trans:Diagram1
LT/RH/LoneStar X15 - Auto Start Stop Oil Temp Sensor Manual Trans:Diagram1
LT/RH/LoneStar X15 - Auto Start Stop with Sleeper Auto Climate / Cab Temp with Oil Temp Sensor Auto Trans:Diagram1
LT/RH/LoneStar X15 - Auto Start Stop with Sleeper Auto Climate / Cab Temp with Oil Temp Sensor Manual Trans:Diagram1
RH - X15/A26 - Headlights Halogen N/INT N/LOWW:Diagram1
RH - X15/A26 - Headlights Halogen N/INT W/LOWW:Diagram1
RH - X15/A26 - Headlights Halogen W/INT N/LOWW:Diagram1
RH - X15/A26 - Headlights Halogen W/INT W/LOWW:Diagram1
RH - X15/A26 - Headlights LED N/INT N/LOWW LT:Diagram1
RH - X15/A26 - Headlights LED N/INT W/LOWW LT:Diagram1
RH - X15/A26 - Headlights LED W/INT N/LOWW LT:Diagram1
RH - X15/A26 - Headlights LED W/INT W/LOWW LT:Diagram1

Mates MODU-LCM-A004-00-01

Name	Terminal Part Number	V-Min	Name	Wire Part Number	Wire CSA	Wire Spec	Wire Material description	Wire Color Description	Wire Length	End2 Terminal Part Number	End2 Pin Name	End2 Connect or
B	-	-	-	-	-	-	-	-	-	-	-	-
C	-	-	-	-	-	-	-	-	-	-	-	-
E	-	-	ZZ50B	2645629 R1	0.35	22.0	Thin Wall XLPE Primary Cable	RED	1420.0	-	2	A02-1053
E	-	-	ZX50B	3510335 R1	0.79	18.0	Thin Wall XLPE Primary Cable	YELLOW 2	1420.0	-	A	A02-1052
H	-	-	ZX50A	3510335 R1	0.79	18.0	Thin Wall XLPE Primary Cable	YELLOW 2	1420.0	-	B	A02-1052
L	-	-	AA62	3510353 R1	0.79	18.0	Thin Wall XLPE Primary Cable	DARK BLUE	300.0	-	X	-

Name	Terminal Part Number	V-Min	Name	Wire Part Number	Wire CSA	Wire Spec	Wire Material description	Wire Color Description	Wire Length	End2 Terminal Part Number	End2 Pin Name	End2 Connect or
M	-	-	DA62DA	3510354 R1	1.16	16.0	Thin Wall XLPE Primary Cable	DARK BLUE	1220.0	-	-	-
M	-	-	4G62DB	3510354 R1	1.16	16.0	Thin Wall XLPE Primary Cable	DARK BLUE	330.0	-	-	-
M	-	-	4G62DB	3510354 R1	1.16	16.0	Thin Wall XLPE Primary Cable	DARK BLUE	330.0	-	X	-
M	-	-	DA62DA	3510354 R1	1.16	16.0	Thin Wall XLPE Primary Cable	DARK BLUE	1220.0	-	M	0009
N	-	-	DX62A	3510353 R1	0.79	18.0	Thin Wall XLPE Primary Cable	DARK BLUE	2380.0	-	31	5000A
P	-	-	AA50	3510335 R1	0.79	18.0	Thin Wall XLPE Primary Cable	YELLOW 2	1300.0	-	E11	J5-1602

Connector Name	A02-1TB1
Part Number	3722128C1
Instances	LT/RH/LoneStar - X15/A26 - Telematics (TRIPMASTER DAYCAB):Diagram1
Mates	MODU-TRIPMASTER-2035-10-04A

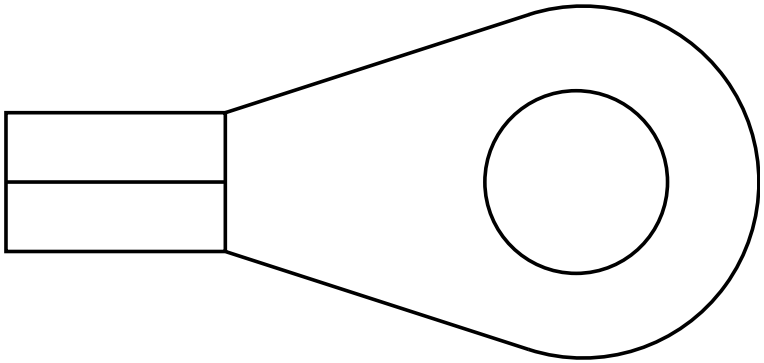

Name	Terminal Part Number	V-Min	Name	Wire Part Number	Wire CSA	Wire Spec	Wire Material description	Wire Color Description	Wire Length	End2 Terminal Part Number	End2 Pin Name	End2 Connect or
A	-	-	CF14SD	3510365 R1	0.79	18.0	Thin Wall XLPE Primary Cable	RED	4475.0	-	-	-

Connector Name	A02-1TB2
Part Number	3722128C1
Instances	LT/RH/LoneStar - X15/A26 - Telematics (TRIPMASTER DAYCAB):Diagram1
Mates	MODU-TRIPMASTER-2035-10-04A

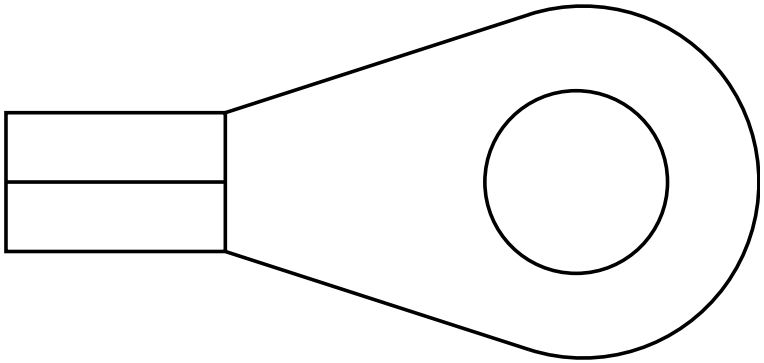

Name	Terminal Part Number	V-Min	Name	Wire Part Number	Wire CSA	Wire Spec	Wire Material description	Wire Color Description	Wire Length	End2 Terminal Part Number	End2 Pin Name	End2 Connect or
A	-	-	CF70E	3510317 R1	0.79	18.0	Thin Wall XLPE Primary Cable	ORANGE	3650.0	-	D1	1800

Connector Name A02-1000A

Part Number 4063415C1

Instances LT/RH/LoneStar - X15/A26 - Auxilary Gauges (Secondary):Diagram1
LT/RH/LoneStar - X15/A26 - Auxiliary Gauges (Primary):Diagram1

Mates MODU-AUX-0004-00-04A

Name	Terminal Part Number	V-Min	Name	Wire Part Number	Wire CSA	Wire Spec	Wire Material description	Wire Color Description	Wire Length	End2 Terminal Part Number	End2 Pin Name	End2 Connector
1	-	-	AT28A	3510328 R1	0.53	20.0	Thin Wall XLPE Primary Cable	TAN	1095.0	-	B9	A02-1500A
3	-	-	AT28B	3510328 R1	0.53	20.0	Thin Wall XLPE Primary Cable	TAN	1095.0	-	B10	A02-1500A
4	-	-	AT28C	3510328 R1	0.53	20.0	Thin Wall XLPE Primary Cable	TAN	1095.0	-	B8	A02-1500A

Connector Name	A02-1020
Part Number	4063041C1
Instances	LT/RH/LoneStar - X15/A26 - Instrument Cluster - Request and Status:Diagram1
Mates	MODU-CDC-0004-00-04A

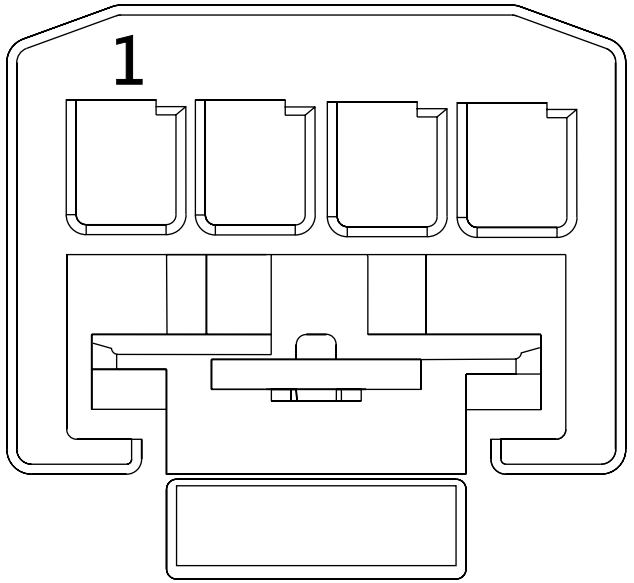

Name	Terminal Part Number	V-Min	Name	Wire Part Number	Wire CSA	Wire Spec	Wire Material description	Wire Color Description	Wire Length	End2 Terminal Part Number	End2 Pin Name	End2 Connect or
1	-	-	AK28A	3510328 R1	0.53	20.0	Thin Wall XLPE Primary Cable	TAN	1160.0	-	A9	J7-1607
2	-	-	AK9CDC	3510310 R1	0.53	20.0	Thin Wall XLPE Primary Cable	GREY	835.0	-	-	-
3	-	-	AK62F	3510352 R1	0.53	20.0	Thin Wall XLPE Primary Cable	DARK BLUE	895.0	-	-	-
4	-	-	AK11-GKF	3510358 R1	0.53	20.0	Thin Wall XLPE Primary Cable	WHITE	1135.0	-	-	-

Connector Name	A02-1021
Part Number	3613769C1
Instances	LT/RH/LoneStar - X15/A26 - Panel Dimmer Splice Pack - 1021:Diagram1
Mates	SP-Panel_Dimmer-B003-10-AA

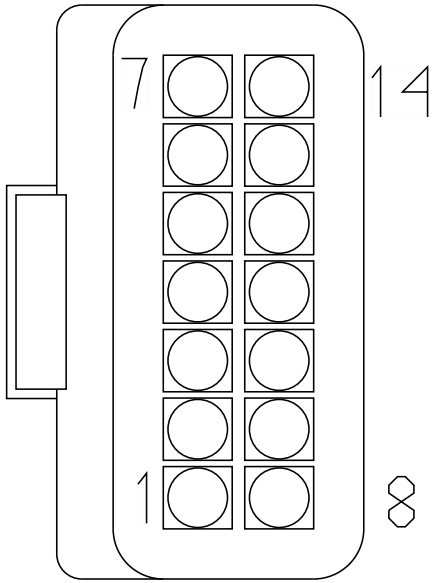

Name	Terminal Part Number	V-Min	Name	Wire Part Number	Wire CSA	Wire Spec	Wire Material description	Wire Color Description	Wire Length	End2 Terminal Part Number	End2 Pin Name	End2 Connect or
1	-	-	4G62DA	3510354 R1	1.16	16.0	Thin Wall XLPE Primary Cable	DARK BLUE	890.0	-	X	-
1	-	-	DA62DA	3510354 R1	1.16	16.0	Thin Wall XLPE Primary Cable	DARK BLUE	1220.0	-	-	-
3	-	-	CD62DJ	3510352 R1	0.53	20.0	Thin Wall XLPE Primary Cable	DARK BLUE	1515.0	-	-	-
4	-	-	CS62A	3510352 R1	0.53	20.0	Thin Wall XLPE Primary Cable	DARK BLUE	1570.0	-	-	-

Name	Terminal Part Number	V-Min	Name	Wire Part Number	Wire CSA	Wire Spec	Wire Material description	Wire Color Description	Wire Length	End2 Terminal Part Number	End2 Pin Name	End2 Connector
4	-	-	YK62A	3510353 R1	0.79	18.0	Thin Wall XLPE Primary Cable	DARK BLUE	1570.0	-	-	-
5	-	-	CE62DK	3510352 R1	0.53	20.0	Thin Wall XLPE Primary Cable	DARK BLUE	1515.0	-	-	-
6	-	-	HA62DF	3510352 R1	0.53	20.0	Thin Wall XLPE Primary Cable	DARK BLUE	1580.0	-	-	-
7	-	-	XW62DG	3510352 R1	0.53	20.0	Thin Wall XLPE Primary Cable	DARK BLUE	1580.0	-	-	-
8	-	-	CN62DH	3510352 R1	0.53	20.0	Thin Wall XLPE Primary Cable	DARK BLUE	1580.0	-	-	-
8	-	-	CR62DH	3510352 R1	0.53	20.0	Thin Wall XLPE Primary Cable	DARK BLUE	1580.0	-	-	-
8	-	-	ZY62DH	3510352 R1	0.53	20.0	Thin Wall XLPE Primary Cable	DARK BLUE	1580.0	-	-	-
9	-	-	EM62DL	3510352 R1	0.53	20.0	Thin Wall XLPE Primary Cable	DARK BLUE	1530.0	-	-	-

Name	Terminal Part Number	V-Min	Name	Wire Part Number	Wire CSA	Wire Spec	Wire Material description	Wire Color Description	Wire Length	End2 Terminal Part Number	End2 Pin Name	End2 Connect or
9	-	-	GN62DL	3510352 R1	0.53	20.0	Thin Wall XLPE Primary Cable	DARK BLUE	1530.0	-	-	-
10	-	-	DF62DD	3510353 R1	0.79	18.0	Thin Wall XLPE Primary Cable	DARK BLUE	1185.0	-	-	-
11	-	-	DK62DF	3510352 R1	0.53	20.0	Thin Wall XLPE Primary Cable	DARK BLUE	1580.0	-	-	-
12	-	-	YJ62DA	3510352 R1	0.53	20.0	Thin Wall XLPE Primary Cable	DARK BLUE	1480.0	-	-	-
13	-	-	YJ62DB	3510352 R1	0.53	20.0	Thin Wall XLPE Primary Cable	DARK BLUE	1480.0	-	-	-
14	-	-	AK62F	3510352 R1	0.53	20.0	Thin Wall XLPE Primary Cable	DARK BLUE	895.0	-	-	-

Connector Name	A02-1028
Part Number	3613769C1
Instances	LT/RH/LoneStar - X15/A26 - Marker/Park Lights Splice Pack - 1028:Diagram1
Mates	SP-MARKER_LT_SPLICE_PACK-B 0003-10-A1

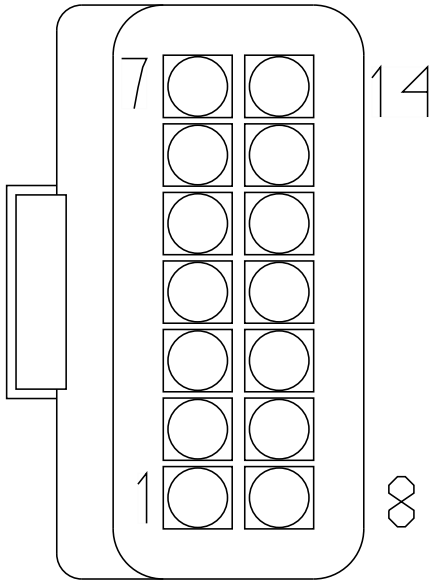

Name	Terminal Part Number	V-Min	Name	Wire Part Number	Wire CSA	Wire Spec	Wire Material description	Wire Color Description	Wire Length	End2 Terminal Part Number	End2 Pin Name	End2 Connect or
1	-	-	AA58TA	3510306 R1	1.16	16.0	Thin Wall XLPE Primary Cable	BROWN	1245.0	-	-	-
3	-	-	2A58	3510306 R1	1.16	16.0	Thin Wall XLPE Primary Cable	BROWN	1245.0	-	-	-
4	-	-	AA54	3510306 R1	1.16	16.0	Thin Wall XLPE Primary Cable	BROWN	1355.0	-	-	-
5	-	-	AA68A	3510305 R1	0.79	18.0	Thin Wall XLPE Primary Cable	BROWN	1325.0	-	-	-

Name	Terminal Part Number	V-Min	Name	Wire Part Number	Wire CSA	Wire Spec	Wire Material description	Wire Color Description	Wire Length	End2 Terminal Part Number	End2 Pin Name	End2 Connector
7	-	-	AA54A	3510306 R1	1.16	16.0	Thin Wall XLPE Primary Cable	BROWN	1515.0	-	-	-
8	-	-	2D58DA	3510305 R1	0.79	18.0	Thin Wall XLPE Primary Cable	BROWN	1305.0	-	-	-
11	-	-	AA58TB	3510305 R1	0.79	18.0	Thin Wall XLPE Primary Cable	BROWN	1275.0	-	-	-
13	-	-	2D58DB	3510305 R1	0.79	18.0	Thin Wall XLPE Primary Cable	BROWN	1185.0	-	-	-
14	-	-	CW58B	3510304 R1	0.53	20.0	Thin Wall XLPE Primary Cable	BROWN	1700.0	-	-	-
14	-	-	CX58B	3510304 R1	0.53	20.0	Thin Wall XLPE Primary Cable	BROWN	1700.0	-	-	-

Connector Name	A02-1030
Part Number	3700745C1
Instances	LT/RH/LoneStar - X15/A26 - Front Turn Signal & Back-Up Light Splice Packs - 1030 & 1040:Diagram1
Mates	SP-TURN_LT_SPLICE_PACK-B00 4-10-AA

Name	Terminal Part Number	V-Min	Name	Wire Part Number	Wire CSA	Wire Spec	Wire Material description	Wire Color Description	Wire Length	End2 Terminal Part Number	End2 Pin Name	End2 Connect or
A	-	-	ZF56AAA	2645577 R1	0.79	18A	Thin Wall XLPE Primary Cable	ORANGE	685.0	-	-	-
B	-	-	2C56D	3510317 R1	0.79	18.0	Thin Wall XLPE Primary Cable	ORANGE	685.0	-	-	-
D	-	-	AA56C	3510318 R1	1.16	16.0	Thin Wall XLPE Primary Cable	ORANGE	735.0	-	-	-
E	-	-	AA56F	3510318 R1	1.16	16.0	Thin Wall XLPE Primary Cable	ORANGE	625.0	-	-	-
F	-	-	AA56G	3510318 R1	1.16	16.0	Thin Wall XLPE Primary Cable	ORANGE	625.0	-	-	-
G	-	-	AA57A	3510318 R1	1.16	16.0	Thin Wall XLPE Primary Cable	ORANGE	2375.0	-	-	-
H	-	-	AA57	3510318 R1	1.16	16.0	Thin Wall XLPE Primary Cable	ORANGE	625.0	-	-	-

Name	Terminal Part Number	V-Min	Name	Wire Part Number	Wire CSA	Wire Spec	Wire Material description	Wire Color Description	Wire Length	End2 Terminal Part Number	End2 Pin Name	End2 Connector
J	-	-	AA57F	3510318 R1	1.16	16.0	Thin Wall XLPE Primary Cable	ORANGE	735.0	-	-	-
K	-	-	PA57BA	3510318 R1	1.16	16.0	Thin Wall XLPE Primary Cable	ORANGE	2375.0	-	-	-
L	-	-	2C57B	3510317 R1	0.79	18.0	Thin Wall XLPE Primary Cable	ORANGE	2045.0	-	-	-
M	-	-	ZF57AAA	3510316 R1	0.53	20.0	Thin Wall XLPE Primary Cable	ORANGE	685.0	-	-	-
M	-	-	ZD57AAA	3510316 R1	0.53	20.0	Thin Wall XLPE Primary Cable	ORANGE	1975.0	-	-	-

Connector Name	A02-1040
Part Number	3601838C1
Instances	LT/RH/LoneStar - X15/A26 - Front Turn Signal & Back-Up Light Splice Packs - 1030 & 1040:Diagram1
Mates	SP-REAR-BACKUP_LT_SPLICE_P ACK-B004-10-AB

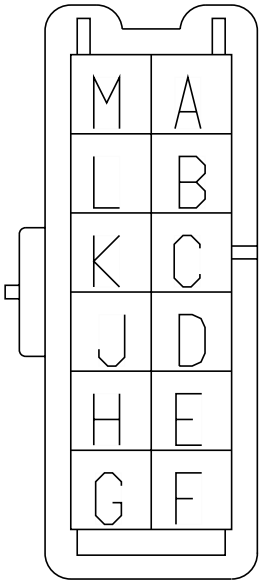

Name	Terminal Part Number	V-Min	Name	Wire Part Number	Wire CSA	Wire Spec	Wire Material description	Wire Color Description	Wire Length	End2 Terminal Part Number	End2 Pin Name	End2 Connect or
A	-	-	3T71BA	3510318 R1	1.16	16.0	Thin Wall XLPE Primary Cable	ORANGE	1715.0	-	-	-
A	-	-	BJ71BA	3510318 R1	1.16	16.0	Thin Wall XLPE Primary Cable	ORANGE	1715.0	-	-	-
A	-	-	BK71B	3510318 R1	1.16	16.0	Thin Wall XLPE Primary Cable	ORANGE	660.0	-	-	-
A	-	-	GM71BA	3510318 R1	1.16	16.0	Thin Wall XLPE Primary Cable	ORANGE	660.0	-	-	-

Name	Terminal Part Number	V-Min	Name	Wire Part Number	Wire CSA	Wire Spec	Wire Material description	Wire Color Description	Wire Length	End2 Terminal Part Number	End2 Pin Name	End2 Connector
A	-	-	BP71B	3510318 R1	1.16	16.0	Thin Wall XLPE Primary Cable	ORANGE	2325.0	-	-	-
A	-	-	EY71BD	3510318 R1	1.16	16.0	Thin Wall XLPE Primary Cable	ORANGE	1420.0	-	X	-
B	-	-	3T71BC	3510318 R1	1.16	16.0	Thin Wall XLPE Primary Cable	ORANGE	655.0	-	-	-
B	-	-	BJ71BC	3510318 R1	1.16	16.0	Thin Wall XLPE Primary Cable	ORANGE	655.0	-	-	-
B	-	-	BK71BA	3510318 R1	1.16	16.0	Thin Wall XLPE Primary Cable	ORANGE	655.0	-	-	-
B	-	-	BP71BA	3510318 R1	1.16	16.0	Thin Wall XLPE Primary Cable	ORANGE	655.0	-	-	-
B	-	-	EY71BE	3510318 R1	1.16	16.0	Thin Wall XLPE Primary Cable	ORANGE	655.0	-	-	-
B	-	-	GM71BE	3510318 R1	1.16	16.0	Thin Wall XLPE Primary Cable	ORANGE	655.0	-	-	-

Name	Terminal Part Number	V-Min	Name	Wire Part Number	Wire CSA	Wire Spec	Wire Material description	Wire Color Description	Wire Length	End2 Terminal Part Number	End2 Pin Name	End2 Connector
C	-	-	BL71BB	3510342 R1	1.16	16.0	Thin Wall XLPE Primary Cable	LIGHT BLUE	575.0	-	-	-
D	-	-	AA56A	3510318 R1	1.16	16.0	Thin Wall XLPE Primary Cable	ORANGE	635.0	-	-	-
E	-	-	AA56AB	3510318 R1	1.16	16.0	Thin Wall XLPE Primary Cable	ORANGE	619.0	-	-	-
F	-	-	BL56BC	3510336 R1	1.16	16.0	Thin Wall XLPE Primary Cable	YELLOW 2	575.0	-	-	-
G	-	-	AA57C	3510318 R1	1.16	16.0	Thin Wall XLPE Primary Cable	ORANGE	635.0	-	-	-
H	-	-	AA57CA	3510318 R1	1.16	16.0	Thin Wall XLPE Primary Cable	ORANGE	624.0	-	-	-
J	-	-	BL57BC	3510300 R1	1.16	16.0	Thin Wall XLPE Primary Cable	LIGHT GREEN	575.0	-	-	-

Connector Name	A02-1050
Part Number	1661259C1
Instances	LoneStar - X15 - Adaptive Cruise Control (Bendix - Fusion W/O DIU & N/ Safety Direct & Tweeters):Diagram1 LoneStar - X15 - Adaptive Cruise Control (Bendix - Fusion W/O DIU & W/ Safety Direct & W/ Tweeters):Diagram1 LT/RH - X15/A26 - Adaptive Cruise Control (Bendix - Fusion W/O DIU & N/ Safety Direct & Tweeters):Diagram1 LT/RH - X15/A26 - Adaptive Cruise Control (Bendix - Fusion W/O DIU & W/ Safety Direct & W/ Tweeters):Diagram1 LT/RH LoneStar - X15/A26 - Speakers:Speakers N/BT W/AMP N/QC:Diagram1 LT/RH LoneStar - X15/A26 - Speakers:Speakers W/BT W/AMP N/QC:Diagram1
Mates	SPKR-RIGHT_TWEETER-2058-01A

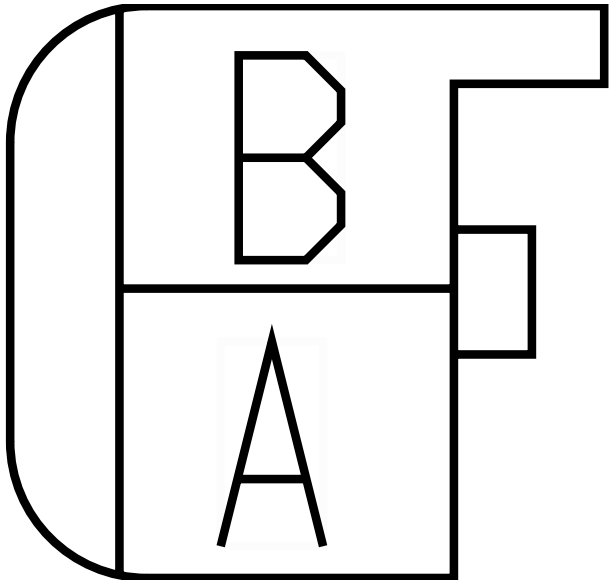

Name	Terminal Part Number	V-Min	Name	Wire Part Number	Wire CSA	Wire Spec	Wire Material description	Wire Color Description	Wire Length	End2 Terminal Part Number	End2 Pin Name	End2 Connect or
A	-	-	LR86AT	3510299 R1	0.79	18.0	Thin Wall XLPE Primary Cable	LIGHT GREEN	2005.0	-	8	2000
A	-	-	MX86AT	3510299 R1	0.79	18.0	Thin Wall XLPE Primary Cable	LIGHT GREEN	3480.0	-	H	5011M
B	-	-	LR86AU	3510299 R1	0.79	18.0	Thin Wall XLPE Primary Cable	LIGHT GREEN	1500.0	-	X	-
B	-	-	MX86AU	3510299 R1	0.79	18.0	Thin Wall XLPE Primary Cable	LIGHT GREEN	3480.0	-	J	5011M

Connector Name	A02-1051
Part Number	1661259C1
Instances	LT/RH - X15/A26 - Adaptive Cruise Control (Bendix - Fusion W/ O DIU & N/ Safety Direct & Tweeters):Diagram1 LT/RH - X15/A26 - Adaptive Cruise Control (Bendix - Fusion W/ O DIU & W/ Safety Direct & W/ Tweeters):Diagram1 LT/RH LoneStar - X15/A26 - Speakers:Speakers N/BT W/AMP N/QC:Diagram1 LT/RH LoneStar - X15/A26 - Speakers:Speakers W/BT W/AMP N/QC:Diagram1
Mates	SPKR-LEFT_TWEETER-2058-01A

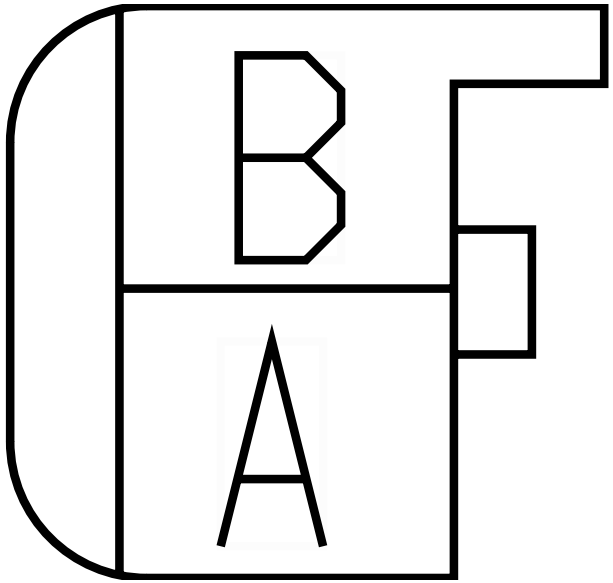

Name	Terminal Part Number	V-Min	Name	Wire Part Number	Wire CSA	Wire Spec	Wire Material description	Wire Color Description	Wire Length	End2 Terminal Part Number	End2 Pin Name	End2 Connect or
A	-	-	LR86AR	3510299 R1	0.79	18.0	Thin Wall XLPE Primary Cable	LIGHT GREEN	865.0	-	7	2000
A	-	-	MX86AR	3510299 R1	0.79	18.0	Thin Wall XLPE Primary Cable	LIGHT GREEN	2340.0	-	F	5011M
B	-	-	LR86AS	3510299 R1	0.79	18.0	Thin Wall XLPE Primary Cable	LIGHT GREEN	360.0	-	X	-
B	-	-	MX86AS	3510299 R1	0.79	18.0	Thin Wall XLPE Primary Cable	LIGHT GREEN	2340.0	-	G	5011M

Connector Name	A02-1052
Part Number	1661259C1
Instances	LT/RH/LoneStar - X15/A26 - Automatic Lighting (Single Sensor Twilight):Diagram1
Mates	SNSR-AMB_LT-1018-01-02A

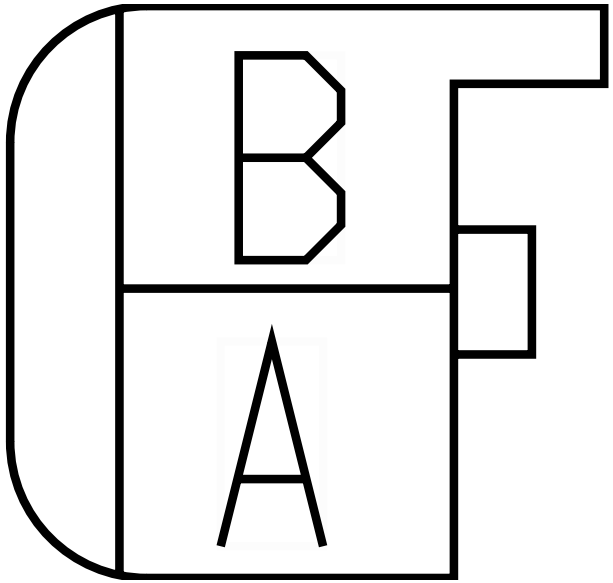

Name	Terminal Part Number	V-Min	Name	Wire Part Number	Wire CSA	Wire Spec	Wire Material description	Wire Color Description	Wire Length	End2 Terminal Part Number	End2 Pin Name	End2 Connect or
A	-	-	ZX50B	3510335 R1	0.79	18.0	Thin Wall XLPE Primary Cable	YELLOW 2	1420.0	-	E	A02-0009
B	-	-	ZX50A	3510335 R1	0.79	18.0	Thin Wall XLPE Primary Cable	YELLOW 2	1420.0	-	H	A02-0009

Connector Name	A02-1053
Part Number	4116776C1
Instances	LT/RH A26 - Heating Ventilation & Air Conditioning (HVAC) Auto Temp Control:Diagram5 - Sensors - Option1 LT/RH A26 - Heating Ventilation & Air Conditioning (HVAC) Auto Temp Control:Diagram6 - Sensors - Option2 LT/RH/LoneStar - X15/A26 - Automatic Lighting (Dual Sensor Solar/Twilight):Diagram1 LT/RH/LoneStar X15 - Heating Ventilation & Air Conditioning (HVAC) Auto Temp Control:Diagram3 - Sensors
Mates	DEV-SENSOR_SUN_LOAD_TWILIG HT-01

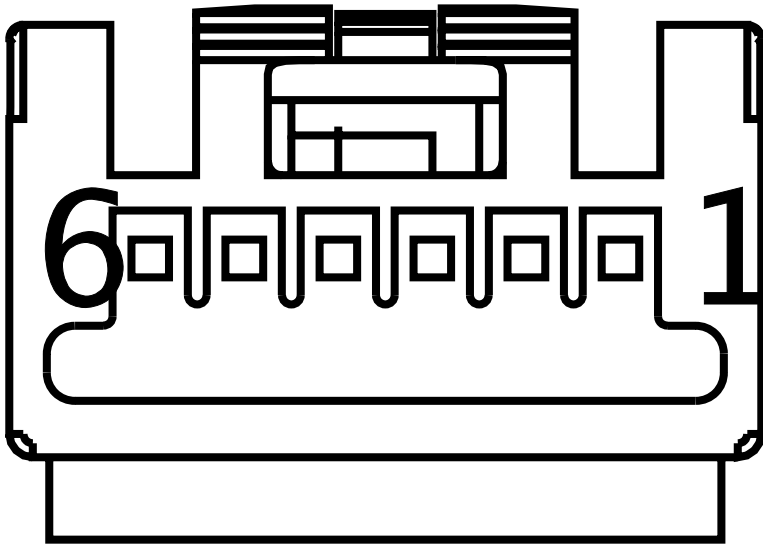

Name	Terminal Part Number	V-Min	Name	Wire Part Number	Wire CSA	Wire Spec	Wire Material description	Wire Color Description	Wire Length	End2 Terminal Part Number	End2 Pin Name	End2 Connector
1	-	-	2E75D	2645643 R1	0.35	22.0	Thin Wall XLPE Primary Cable	LIGHT GREEN	2725.0	-	4	A01-1200A
2	-	-	ZZ50B	2645629 R1	0.35	22.0	Thin Wall XLPE Primary Cable	RED	1420.0	-	E	A02-0009
3	-	-	ZZ14SUN	2645629 R1	0.35	22.0	Thin Wall XLPE Primary Cable	RED	2485.0	-	-	-
4	-	-	ZZ50A	2645625 R1	0.35	22.0	Thin Wall XLPE Primary Cable	YELLOW 2	2080.0	-	-	-

Name	Terminal Part Number	V-Min	Name	Wire Part Number	Wire CSA	Wire Spec	Wire Material description	Wire Color Description	Wire Length	End2 Terminal Part Number	End2 Pin Name	End2 Connector
5	-	-	2E75D-G	2645643 R1	0.35	22.0	Thin Wall XLPE Primary Cable	LIGHT GREEN	2725.0	-	3	A01-1200A

Connector Name	A02-1100
Part Number	3546518C1
Instances	LT/RH/LoneStar - X15/A26 - Key Switch (Operator Input):Diagram1
Mates	SW-KEY-5039-01-01A

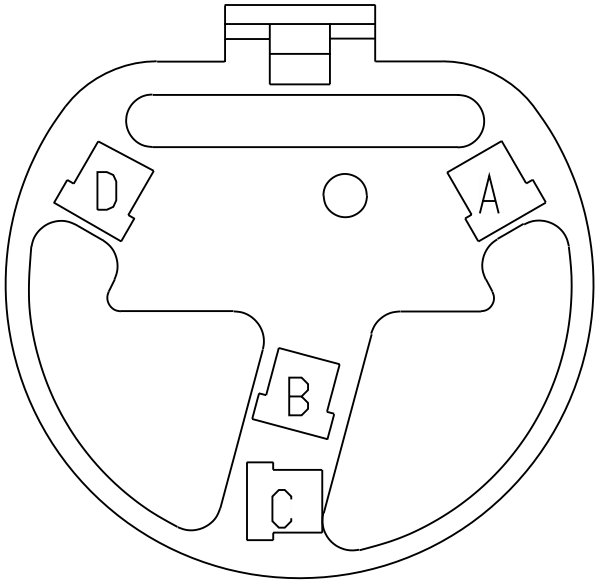

Name	Terminal Part Number	V-Min	Name	Wire Part Number	Wire CSA	Wire Spec	Wire Material description	Wire Color Description	Wire Length	End2 Terminal Part Number	End2 Pin Name	End2 Connect or
A	-	-	AA15	3510365 R1	0.79	18.0	Thin Wall XLPE Primary Cable	RED	1540.0	-	-	-
B	-	-	ND17HA	3510324 R1	1.16	16.0	Thin Wall XLPE Primary Cable	PINK	1615.0	-	S	J6-1606
B	-	-	NE17H	3510323 R1	0.79	18.0	Thin Wall XLPE Primary Cable	PINK	1615.0	-	S	J6-1606
C	-	-	AA149	3510311 R1	0.79	18.0	Thin Wall XLPE Primary Cable	GREY	1455.0	-	A1	J3-1600

Name	Terminal Part Number	V-Min	Name	Wire Part Number	Wire CSA	Wire Spec	Wire Material description	Wire Color Description	Wire Length	End2 Terminal Part Number	End2 Pin Name	End2 Connect or
D	-	-	AA149F	3510311 R1	0.79	18.0	Thin Wall XLPE Primary Cable	GREY	1455.0	-	A16	J3-1600

Connector Name	A02-1101M
Part Number	3522071C1
Instances	LT/RH/LoneStar - X15/A26 - Multiplexed Switch Pack (Primary Switch):Diagram1
Mates	SW-J1939_PACK-0009-00-02A

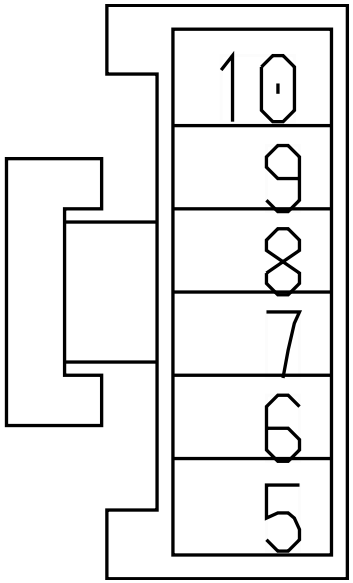

Name	Terminal Part Number	V-Min	Name	Wire Part Number	Wire CSA	Wire Spec	Wire Material description	Wire Color Description	Wire Length	End2 Terminal Part Number	End2 Pin Name	End2 Connect or
5	-	-	-	-	-	-	-	-	-	-	-	-
6	-	-	-	-	-	-	-	-	-	-	-	-
8	-	-	AA11-GKD	3510359 R1	0.79	18.0	Thin Wall XLPE Primary Cable	WHITE	1380.0	-	-	-
10	-	-	2G14MUX	3510365 R1	0.79	18.0	Thin Wall XLPE Primary Cable	RED	965.0	-	X	-

Connector Name	A02-1111M
Part Number	3928059C1
Instances	LT/RH/LoneStar - X15/A26 - Telematics (OMNIVISION W/ J1939 & PANIC BUTTON):Diagram1 LT/RH/LoneStar - X15/A26 - Telematics (OMNIVISION W/ J1939 & PANIC BUTTON):Diagram2 LT/RH/LoneStar - X15/A26 - Telematics QUALCOMM IMCT DAYCAB With MVPC & PANIC BUTTON:Diagram1 LT/RH/LoneStar - X15/A26 - Telematics QUALCOMM IMCT DAYCAB With PANIC BUTTON:Diagram1 LT/RH/LoneStar - X15/A26 - Telematics QUALCOMM IMCT DAYCAB With PANIC BUTTON:Diagram2 LT/RH/LoneStar - X15/A26 - Telematics QUALCOMM TMCT With PANIC BUTTON:Diagram1
Mates	SW-PANIC_BUTTON-2035-01-05B

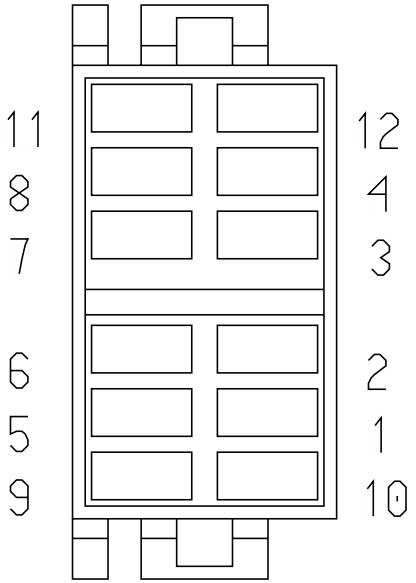

Name	Terminal Part Number	V-Min	Name	Wire Part Number	Wire CSA	Wire Spec	Wire Material description	Wire Color Description	Wire Length	End2 Terminal Part Number	End2 Pin Name	End2 Connect or
2	-	-	CR11-GBC	3510358 R1	0.53	20.0	Thin Wall XLPE Primary Cable	WHITE	1615.0	-	X	-
2	-	-	CN11-GBC	3510358 R1	0.53	20.0	Thin Wall XLPE Primary Cable	WHITE	1615.0	-	X	-
2	-	-	ZY11-GBC	3510358 R1	0.53	20.0	Thin Wall XLPE Primary Cable	WHITE	1615.0	-	X	-
4	-	-	CR98J	3510293 R1	0.79	18.0	Thin Wall XLPE Primary Cable	BLACK	4120.0	-	F	1970

Name	Terminal Part Number	V-Min	Name	Wire Part Number	Wire CSA	Wire Spec	Wire Material description	Wire Color Description	Wire Length	End2 Terminal Part Number	End2 Pin Name	End2 Connector
4	-	-	CN98J	3510293 R1	0.79	18.0	Thin Wall XLPE Primary Cable	BLACK	3390.0	-	A	A02-1921
4	-	-	ZY98J	3510293 R1	0.79	18.0	Thin Wall XLPE Primary Cable	BLACK	3390.0	-	B	A02-1924
11	-	-	CR11-GBD	3510358 R1	0.53	20.0	Thin Wall XLPE Primary Cable	WHITE	1615.0	-	X	-
11	-	-	CN11-GBD	3510358 R1	0.53	20.0	Thin Wall XLPE Primary Cable	WHITE	1615.0	-	X	-
11	-	-	ZY11-GBD	3510358 R1	0.53	20.0	Thin Wall XLPE Primary Cable	WHITE	1615.0	-	X	-
12	-	-	CR62DH	3510352 R1	0.53	20.0	Thin Wall XLPE Primary Cable	DARK BLUE	1580.0	-	-	-
12	-	-	CN62DH	3510352 R1	0.53	20.0	Thin Wall XLPE Primary Cable	DARK BLUE	1580.0	-	-	-
12	-	-	ZY62DH	3510352 R1	0.53	20.0	Thin Wall XLPE Primary Cable	DARK BLUE	1580.0	-	-	-

Connector Name	A02-1112M
Part Number	3928059C1
Instances	LT/RH/LoneStar - X15/A26 - Cabinet Refrigerator W/ Relay:Diagram1 LT/RH/LoneStar - X15/A26 - Dual Aux Switch:Diagram1-Combination1 LT/RH/LoneStar - X15/A26 - Single Aux Switch:Diagram1
Mates	Vehicle Accessory

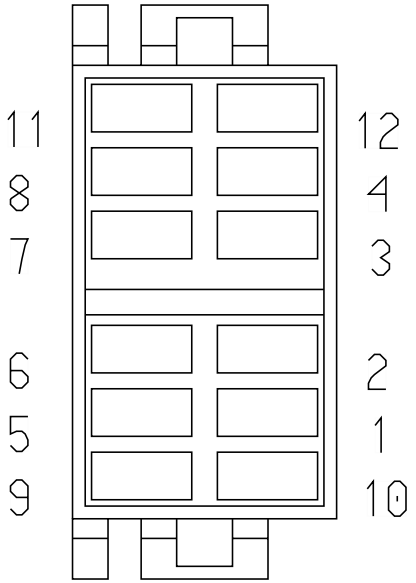

Name	Terminal Part Number	V-Min	Name	Wire Part Number	Wire CSA	Wire Spec	Wire Material description	Wire Color Description	Wire Length	End2 Terminal Part Number	End2 Pin Name	End2 Connect or
2	-	-	CE14SA	3510364 R1	0.53	20.0	Thin Wall XLPE Primary Cable	RED	215.0	-	X	-
2	-	-	CD14SA	3510364 R1	0.53	20.0	Thin Wall XLPE Primary Cable	RED	1145.0	-	-	-
4	-	-	CD14SAA	3510365 R1	0.79	18.0	Thin Wall XLPE Primary Cable	RED	0.0	-	10	A02-1112M
4	-	-	CE14SAB	3510365 R1	0.79	18.0	Thin Wall XLPE Primary Cable	RED	1055.0	-	R2-85	1013

Name	Terminal Part Number	V-Min	Name	Wire Part Number	Wire CSA	Wire Spec	Wire Material description	Wire Color Description	Wire Length	End2 Terminal Part Number	End2 Pin Name	End2 Connect or
4	-	-	CE14SAA	3510365 R1	0.79	18.0	Thin Wall XLPE Primary Cable	RED	100.0	-	10	A02-111 2M
4	-	-	CD14SAB	3510365 R1	0.79	18.0	Thin Wall XLPE Primary Cable	RED	1055.0	-	R2-85	1013
9	-	-	CD14-GSA	3510358 R1	0.53	20.0	Thin Wall XLPE Primary Cable	WHITE	485.0	-	X	-
9	-	-	CE14-GSA	3510358 R1	0.53	20.0	Thin Wall XLPE Primary Cable	WHITE	485.0	-	X	-
10	-	-	CD14SAA	3510365 R1	0.79	18.0	Thin Wall XLPE Primary Cable	RED	0.0	-	4	A02-111 2M
10	-	-	CE14SAA	3510365 R1	0.79	18.0	Thin Wall XLPE Primary Cable	RED	100.0	-	4	A02-111 2M
11	-	-	CD62-GAJ	3510358 R1	0.53	20.0	Thin Wall XLPE Primary Cable	WHITE	485.0	-	X	-
11	-	-	CE62-GA	3510358 R1	0.53	20.0	Thin Wall XLPE Primary Cable	WHITE	485.0	-	X	-
12	-	-	CD62DJ	3510352 R1	0.53	20.0	Thin Wall XLPE Primary Cable	DARK BLUE	1515.0	-	-	-

Connector Name	A02-1112
Part Number	1661260C1
Instances	LT/RH/LoneStar - X15/A26 - Seatbelt Reminder (Warning) (Driver & Passenger in parallel):Diagram1 LT/RH/LoneStar - X15/A26 - Seatbelt Reminder (Warning) (Driver only):Diagram1
Mates	SW-SEATBELT-2017-03-01A

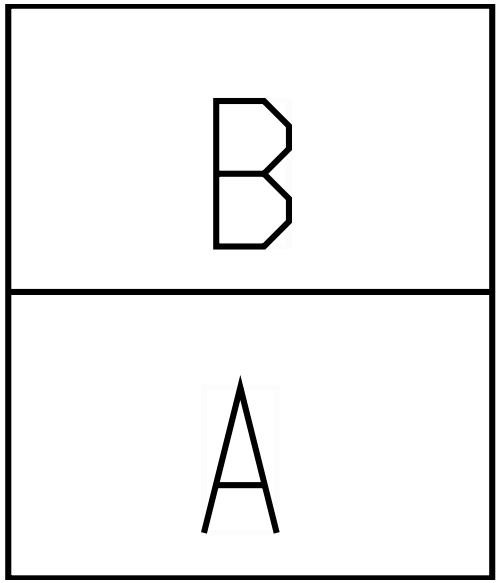

Name	Terminal Part Number	V-Min	Name	Wire Part Number	Wire CSA	Wire Spec	Wire Material description	Wire Color Description	Wire Length	End2 Terminal Part Number	End2 Pin Name	End2 Connect or
A	-	-	FU79B	2643673 R1	0.79	18.0	Std. Wall XLPE Primary Cable	GREY	930.0	-	X	-
A	-	-	JZ79A	3510311 R1	0.79	18.0	Thin Wall XLPE Primary Cable	GREY	3310.0	-	A2	J3-1600
B	-	-	FU9BC	2643673 R1	0.79	18.0	Std. Wall XLPE Primary Cable	GREY	900.0	-	X	-
B	-	-	JZ9BB	3510311 R1	0.79	18.0	Thin Wall XLPE Primary Cable	GREY	4590.0	-	-	-

Connector Name	A02-1113M
Part Number	3928059C1
Instances	LT/RH/LoneStar - X15/A26 - Dual Aux Switch:Diagram1-Combination1 LT/RH/LoneStar - X15/A26 - Single Aux Switch:Diagram2
Mates	SW-ACC_SPARE2-2055-02-01A- A01-1113M

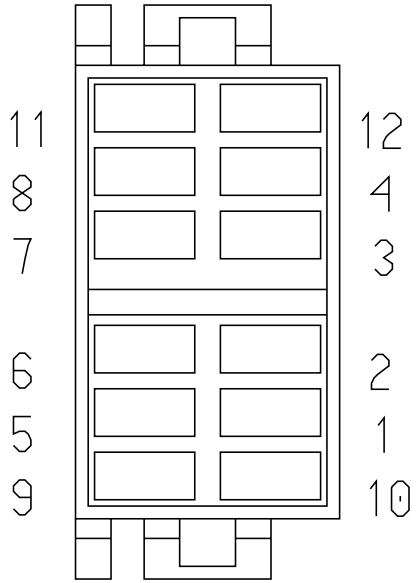

Name	Terminal Part Number	V-Min	Name	Wire Part Number	Wire CSA	Wire Spec	Wire Material description	Wire Color Description	Wire Length	End2 Terminal Part Number	End2 Pin Name	End2 Connect or
2	-	-	CE14SB	3510364 R1	0.53	20.0	Thin Wall XLPE Primary Cable	RED	215.0	-	X	-
4	-	-	CE14SBB	3510365 R1	0.79	18.0	Thin Wall XLPE Primary Cable	RED	1055.0	-	R5-85	1013
4	-	-	CE14SBA	3510365 R1	0.79	18.0	Thin Wall XLPE Primary Cable	RED	100.0	-	10	A02-1113M
9	-	-	CE14-GSC	3510358 R1	0.53	20.0	Thin Wall XLPE Primary Cable	WHITE	485.0	-	X	-

Name	Terminal Part Number	V-Min	Name	Wire Part Number	Wire CSA	Wire Spec	Wire Material description	Wire Color Description	Wire Length	End2 Terminal Part Number	End2 Pin Name	End2 Connect or
10	-	-	CE14SBA	3510365 R1	0.79	18.0	Thin Wall XLPE Primary Cable	RED	100.0	-	4	A02-111 3M
11	-	-	CE62-GB	3510358 R1	0.53	20.0	Thin Wall XLPE Primary Cable	WHITE	485.0	-	X	-
12	-	-	CE62DK	3510352 R1	0.53	20.0	Thin Wall XLPE Primary Cable	DARK BLUE	1515.0	-	-	-

Connector Name	A02-1113
Part Number	1661260C1
Instances	LT/RH/LoneStar - X15/A26 - Seatbelt Reminder (Warning) (Driver & Passenger in parallel):Diagram1
Mates	SW-SEATBELT-2017-03-01B

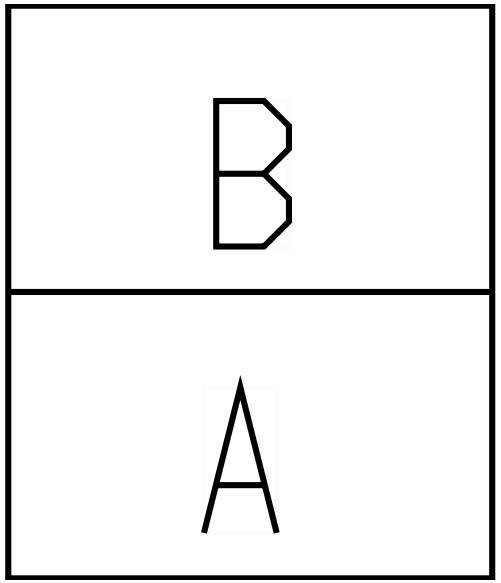

Name	Terminal Part Number	V-Min	Name	Wire Part Number	Wire CSA	Wire Spec	Wire Material description	Wire Color Description	Wire Length	End2 Terminal Part Number	End2 Pin Name	End2 Connect or
A	-	-	FU79C	2643673 R1	0.79	18.0	Std. Wall XLPE Primary Cable	GREY	1630.0	-	X	-
B	-	-	FU9BD	2643673 R1	0.79	18.0	Std. Wall XLPE Primary Cable	GREY	1600.0	-	X	-

Connector Name	A02-1116M
Part Number	3928059C1
Instances	LT/RH/LoneStar - X15/A26 - No Idle HVAC - TRI-PAC Prewire:Diagram1
Mates	SW-TRIPAC-01

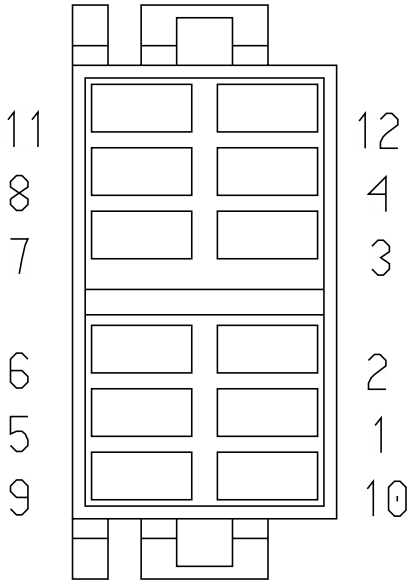

Name	Terminal Part Number	V-Min	Name	Wire Part Number	Wire CSA	Wire Spec	Wire Material description	Wire Color Description	Wire Length	End2 Terminal Part Number	End2 Pin Name	End2 Connect or
1	-	-	DK14TRIA	3510366 R1	1.16	16.0	Thin Wall XLPE Primary Cable	RED	1062.0	-	4	1017
2	-	-	DK77SBY	2643678 R1	1.16	16.0	Std. Wall XLPE Primary Cable	LIGHT GREEN	3390.0	-	B	5754
4	-	-	DK13TRIA	2643752 R1	1.16	16.0	Std. Wall XLPE Primary Cable	PINK	275.0	-	B	5757
11	-	-	DK62-GBN	3510358 R1	0.53	20.0	Thin Wall XLPE Primary Cable	WHITE	675.0	-	-	-

Name	Terminal Part Number	V-Min	Name	Wire Part Number	Wire CSA	Wire Spec	Wire Material description	Wire Color Description	Wire Length	End2 Terminal Part Number	End2 Pin Name	End2 Connector
12	-	-	DK62DF	3510352 R1	0.53	20.0	Thin Wall XLPE Primary Cable	DARK BLUE	1580.0	-	-	-

Connector Name	A02-1117M
Part Number	3928059C1
Instances	LT/RH/LoneStar - X15/A26 - Beacon/Strobe Light:Diagram1 LT/RH/LoneStar - X15/A26 - Beacon/Strobe Light:Diagram2
Mates	SW-BEACON_LIGHT-01

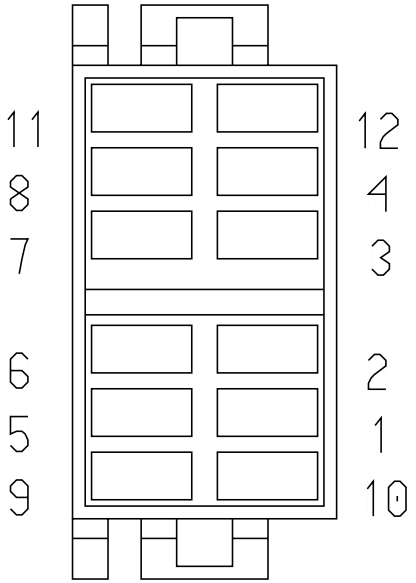

Name	Terminal Part Number	V-Min	Name	Wire Part Number	Wire CSA	Wire Spec	Wire Material description	Wire Color Description	Wire Length	End2 Terminal Part Number	End2 Pin Name	End2 Connector
2	-	-	EM13BL1	3510322 R1	0.53	20.0	Thin Wall XLPE Primary Cable	PINK	1000.0	-	-	-
2	-	-	GN13BL1	3510322 R1	0.53	20.0	Thin Wall XLPE Primary Cable	PINK	1000.0	-	-	-
4	-	-	EM13BL2	3510323 R1	0.79	18.0	Thin Wall XLPE Primary Cable	PINK	0.0	-	10	A02-1117M
4	-	-	EM13BLT	3510323 R1	0.79	18.0	Thin Wall XLPE Primary Cable	PINK	1070.0	-	R1 - 85	1013

Name	Terminal Part Number	V-Min	Name	Wire Part Number	Wire CSA	Wire Spec	Wire Material description	Wire Color Description	Wire Length	End2 Terminal Part Number	End2 Pin Name	End2 Connector
4	-	-	GN13BL2	3510323 R1	0.79	18.0	Thin Wall XLPE Primary Cable	PINK	0.0	-	10	A02-111 7M
4	-	-	GN13BLT	3510323 R1	0.79	18.0	Thin Wall XLPE Primary Cable	PINK	1070.0	-	R1 - 85	1013
9	-	-	GN13-GBL	3510358 R1	0.53	20.0	Thin Wall XLPE Primary Cable	WHITE	1160.0	-	X	-
9	-	-	EM13-GBL	3510358 R1	0.53	20.0	Thin Wall XLPE Primary Cable	WHITE	1160.0	-	X	-
10	-	-	EM13BL2	3510323 R1	0.79	18.0	Thin Wall XLPE Primary Cable	PINK	0.0	-	4	A02-111 7M
10	-	-	GN13BL2	3510323 R1	0.79	18.0	Thin Wall XLPE Primary Cable	PINK	0.0	-	4	A02-111 7M
11	-	-	EM62-GDL	3510358 R1	0.53	20.0	Thin Wall XLPE Primary Cable	WHITE	1160.0	-	X	-
11	-	-	GN62-GDL	3510358 R1	0.53	20.0	Thin Wall XLPE Primary Cable	WHITE	1160.0	-	X	-

Name	Terminal Part Number	V-Min	Name	Wire Part Number	Wire CSA	Wire Spec	Wire Material description	Wire Color Description	Wire Length	End2 Terminal Part Number	End2 Pin Name	End2 Connect or
12	-	-	GN62DL	3510352 R1	0.53	20.0	Thin Wall XLPE Primary Cable	DARK BLUE	1530.0	-	-	-
12	-	-	EM62DL	3510352 R1	0.53	20.0	Thin Wall XLPE Primary Cable	DARK BLUE	1530.0	-	-	-

Connector Name	A02-1127R
Part Number	1667741C1
Instances	LT/RH/LoneStar - X15/A26 - Seats (RolTek) Drivers Seat Only (Hard Wired) - Leather:Diagram1 LT/RH/LoneStar - X15/A26 - Seats (RolTek) Drivers Seat Only (Hard Wired) - Mordura:Diagram1 LT/RH/LoneStar - X15/A26 - Seats (RolTek) Drivers Seat Only (Hard Wired) - Vinyl:Diagram1
Mates	DEV-RESISTOR_390_OHM_2W-01

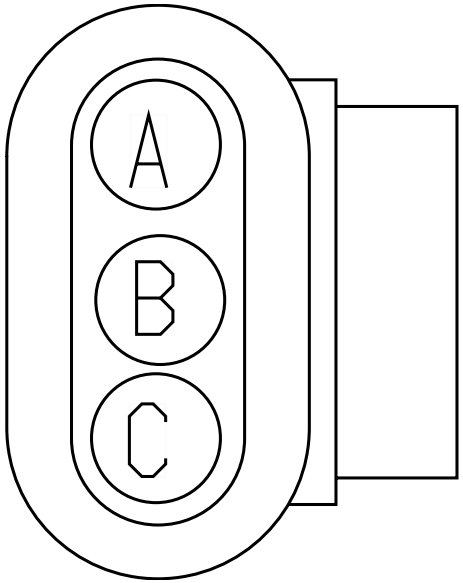

Name	Terminal Part Number	V-Min	Name	Wire Part Number	Wire CSA	Wire Spec	Wire Material description	Wire Color Description	Wire Length	End2 Terminal Part Number	End2 Pin Name	End2 Connect or
A	-	-	5E13BD	3510323 R1	0.79	18.0	Thin Wall XLPE Primary Cable	PINK	0.0	-	X	-
C	-	-	5E179B	3510359 R1	0.79	18.0	Thin Wall XLPE Primary Cable	WHITE	0.0	-	1	-

Connector Name	A02-1200F
Part Number	4116508C1
Instances	LT/RH A26 - Heating Ventilation & Air Conditioning (HVAC) Auto Temp Control:Diagram5 - Sensors - Option1 LT/RH A26 - Heating Ventilation & Air Conditioning (HVAC) Auto Temp Control:Diagram6 - Sensors - Option2 LT/RH/LoneStar X15 - Heating Ventilation & Air Conditioning (HVAC) Auto Temp Control:Diagram3 - Sensors
Mates	DEV-ITOS_SNSR-01

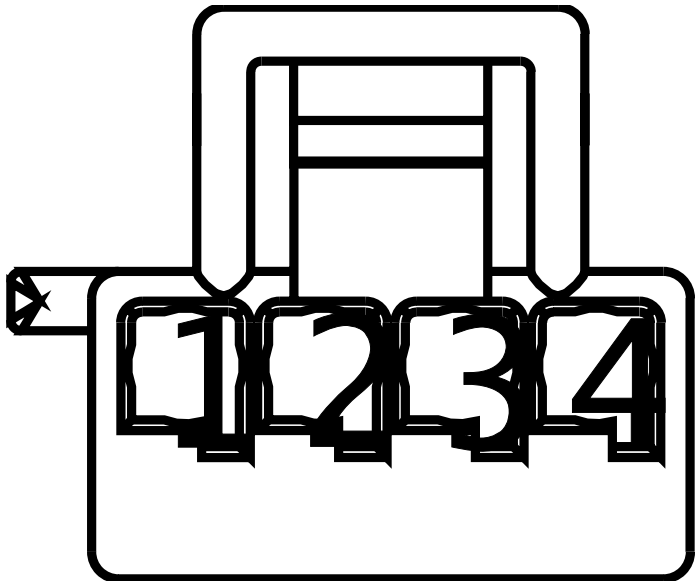

Name	Terminal Part Number	V-Min	Name	Wire Part Number	Wire CSA	Wire Spec	Wire Material description	Wire Color Description	Wire Length	End2 Terminal Part Number	End2 Pin Name	End2 Connect or
1	-	-	2E75TS2	3510298 R1	0.53	20.0	Thin Wall XLPE Primary Cable	LIGHT GREEN	1780.0	-	15	A01-1200A
2	-	-	2E75TS1	3510298 R1	0.53	20.0	Thin Wall XLPE Primary Cable	LIGHT GREEN	1780.0	-	14	A01-1200A
3	-	-	2E75TS4	3510298 R1	0.53	20.0	Thin Wall XLPE Primary Cable	LIGHT GREEN	1780.0	-	17	A01-1200A
4	-	-	2E75TS3	3510298 R1	0.53	20.0	Thin Wall XLPE Primary Cable	LIGHT GREEN	1780.0	-	16	A01-1200A

Connector Name	A02-1202
Part Number	3767197C1
Instances	LT/RH/LoneStar - X15/A26 - Hazard Warning (CA 2.0):Diagram1
Mates	SW-HAZARD-01

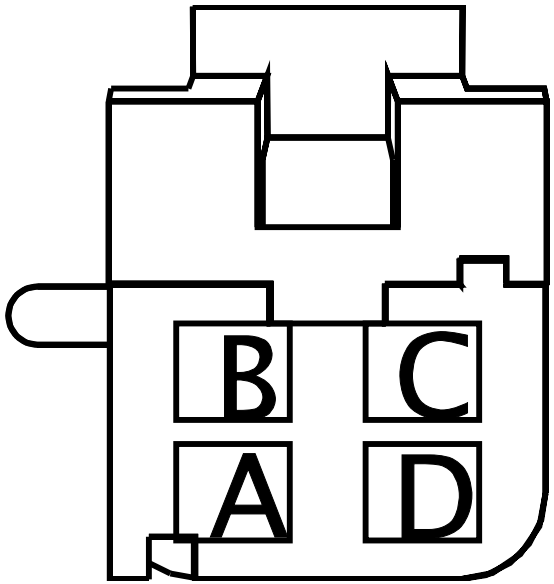

Name	Terminal Part Number	V-Min	Name	Wire Part Number	Wire CSA	Wire Spec	Wire Material description	Wire Color Description	Wire Length	End2 Terminal Part Number	End2 Pin Name	End2 Connect or
A	-	-	AA60-G	3510359 R1	0.79	18.0	Thin Wall XLPE Primary Cable	WHITE	1300.0	-	-	-
B	-	-	AA60C	3510317 R1	0.79	18.0	Thin Wall XLPE Primary Cable	ORANGE	1700.0	-	X	-
C	-	-	AA60A	3510317 R1	0.79	18.0	Thin Wall XLPE Primary Cable	ORANGE	2185.0	-	A6	J7-1607
D	-	-	AA60B	3510317 R1	0.79	18.0	Thin Wall XLPE Primary Cable	ORANGE	2320.0	-	X	-

Connector Name A02-1300

Part Number 3597143C1

Instances LT/RH - X15/A26 - Radio N/ Sterring Wheel Pod N/ Remote:Diagram1
LT/RH - X15/A26 - Radio W/Steering Wheel Pod N/ Remote:Diagram1
LT/RH LoneStar - X15/A26 - Speakers:Four Speakers N/BT N/ QC:Diagram1-Day Cab
LT/RH LoneStar - X15/A26 - Speakers:Four Speakers N/BT N/ QC:Diagram2-Sleeper
LT/RH LoneStar - X15/A26 - Speakers:Four Speakers N/BT W/ QC:Diagram1-Day Cab
LT/RH LoneStar - X15/A26 - Speakers:Four Speakers N/BT W/ QC:Diagram2-Sleeper
LT/RH LoneStar - X15/A26 - Speakers:Four Speakers W/BT N/ QC:Diagram1-Day Cab
LT/RH LoneStar - X15/A26 - Speakers:Four Speakers W/BT N/ QC:Diagram2-Sleeper
LT/RH LoneStar - X15/A26 - Speakers:Four Speakers W/BT W/ QC:Diagram1-Day Cab
LT/RH LoneStar - X15/A26 - Speakers:Four Speakers W/BT W/ QC:Diagram2-Sleeper
LT/RH LoneStar - X15/A26 - Speakers:Speakers N/BT W/AMP N/QC:Diagram1
LT/RH LoneStar - X15/A26 - Speakers:Speakers W/BT W/AMP N/QC:Diagram1
LT/RH/LoneStar - X15/A26 - Radio (Bluetooth) W/Steering Wheel Pod N/ Remote W/MIC:Diagram1
LT/RH/LoneStar - X15/A26 - Radio N/ Steering Wheel Pod W/ Remote:Diagram1
LT/RH/LoneStar - X15/A26 - Radio W/Steering Wheel Pod W/ Remote:Diagram1
LT/RH/LoneStar - X15/A26 - Radio(Bluetooth) W/Steering Wheel W/Remote W/MIC:Diagram1

Mates MODU-Radio-2008-02-01A (Radio W/O Bluetooth)

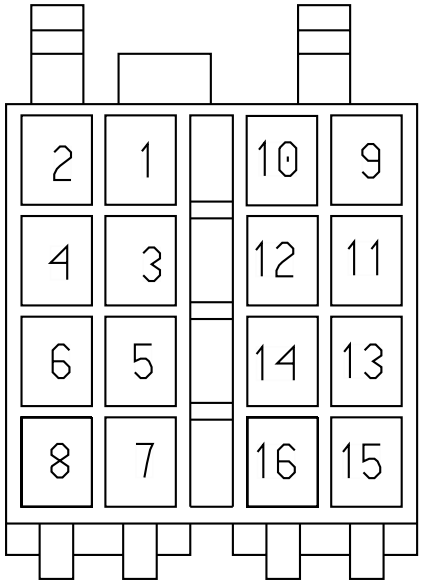

Name	Terminal Part Number	V-Min	Name	Wire Part Number	Wire CSA	Wire Spec	Wire Material description	Wire Color Description	Wire Length	End2 Terminal Part Number	End2 Pin Name	End2 Connect or
1	-	-	-	-	-	-	-	-	-	-	-	-
2	-	-	-	-	-	-	-	-	-	-	-	-

Name	Terminal Part Number	V-Min	Name	Wire Part Number	Wire CSA	Wire Spec	Wire Material description	Wire Color Description	Wire Length	End2 Terminal Part Number	End2 Pin Name	End2 Connector
4	-	-	MR86AE	3510299 R1	0.79	18.0	Thin Wall XLPE Primary Cable	LIGHT GREEN	1750.0	-	-	-
4	-	-	MZ86AE	3510299 R1	0.79	18.0	Thin Wall XLPE Primary Cable	LIGHT GREEN	2870.0	-	B	5011M
5	-	-	MY66AA	3510299 R1	0.79	18.0	Thin Wall XLPE Primary Cable	LIGHT GREEN	2920.0	-	8	5000A
7	-	-	MR86P	3510299 R1	0.79	18.0	Thin Wall XLPE Primary Cable	LIGHT GREEN	1705.0	-	-	-
7	-	-	MZ86AF	3510299 R1	0.79	18.0	Thin Wall XLPE Primary Cable	LIGHT GREEN	900.0	-	X	-
8	-	-	MR86-G	3510359 R1	0.79	18.0	Thin Wall XLPE Primary Cable	WHITE	1025.0	-	-	-
8	-	-	MZ86-G	3510359 R1	0.79	18.0	Thin Wall XLPE Primary Cable	WHITE	1025.0	-	-	-
9	-	-	MW86DB	3510299 R1	0.79	18.0	Thin Wall XLPE Primary Cable	LIGHT GREEN	2920.0	-	5	5000A

Name	Terminal Part Number	V-Min	Name	Wire Part Number	Wire CSA	Wire Spec	Wire Material description	Wire Color Description	Wire Length	End2 Terminal Part Number	End2 Pin Name	End2 Connector
9	-	-	MU86DA	3510299 R1	0.79	18.0	Thin Wall XLPE Primary Cable	LIGHT GREEN	3110.0	-	C	2313
10	-	-	MW86EB	3510299 R1	0.79	18.0	Thin Wall XLPE Primary Cable	LIGHT GREEN	2920.0	-	6	5000A
10	-	-	MU86EA	3510299 R1	0.79	18.0	Thin Wall XLPE Primary Cable	LIGHT GREEN	3110.0	-	D	2313
11	-	-	MV86K	3510299 R1	0.79	18.0	Thin Wall XLPE Primary Cable	LIGHT GREEN	1600.0	-	C	3206M
11	-	-	MX86K	3510299 R1	0.79	18.0	Thin Wall XLPE Primary Cable	LIGHT GREEN	2920.0	-	11	5000A
11	-	-	MB86K	3510299 R1	0.79	18.0	Thin Wall XLPE Primary Cable	LIGHT GREEN	1600.0	-	C	3206M
12	-	-	MV86L	3510299 R1	0.79	18.0	Thin Wall XLPE Primary Cable	LIGHT GREEN	1600.0	-	D	3206M
12	-	-	MX86L	3510299 R1	0.79	18.0	Thin Wall XLPE Primary Cable	LIGHT GREEN	2920.0	-	12	5000A

Name	Terminal Part Number	V-Min	Name	Wire Part Number	Wire CSA	Wire Spec	Wire Material description	Wire Color Description	Wire Length	End2 Terminal Part Number	End2 Pin Name	End2 Connect or
12	-	-	MB86L	3510299 R1	0.79	18.0	Thin Wall XLPE Primary Cable	LIGHT GREEN	1600.0	-	D	3206M
13	-	-	MV86H	3510299 R1	0.79	18.0	Thin Wall XLPE Primary Cable	LIGHT GREEN	1400.0	-	C	3205M
13	-	-	MX86H	3510299 R1	0.79	18.0	Thin Wall XLPE Primary Cable	LIGHT GREEN	2920.0	-	23	5000A
13	-	-	MB86H	3510299 R1	0.79	18.0	Thin Wall XLPE Primary Cable	LIGHT GREEN	1425.0	-	A	A02-1916
14	-	-	MV86J	3510299 R1	0.79	18.0	Thin Wall XLPE Primary Cable	LIGHT GREEN	1400.0	-	D	3205M
14	-	-	MX86J	3510299 R1	0.79	18.0	Thin Wall XLPE Primary Cable	LIGHT GREEN	2920.0	-	24	5000A
14	-	-	MB86J	3510299 R1	0.79	18.0	Thin Wall XLPE Primary Cable	LIGHT GREEN	1425.0	-	B	A02-1916
15	-	-	MW86BB	3510299 R1	0.79	18.0	Thin Wall XLPE Primary Cable	LIGHT GREEN	2920.0	-	3	5000A

Name	Terminal Part Number	V-Min	Name	Wire Part Number	Wire CSA	Wire Spec	Wire Material description	Wire Color Description	Wire Length	End2 Terminal Part Number	End2 Pin Name	End2 Connect or
15	-	-	MU86BA	3510299 R1	0.79	18.0	Thin Wall XLPE Primary Cable	LIGHT GREEN	2890.0	-	C	2312
16	-	-	MW86CB	3510299 R1	0.79	18.0	Thin Wall XLPE Primary Cable	LIGHT GREEN	2920.0	-	4	5000A
16	-	-	MU86CA	3510299 R1	0.79	18.0	Thin Wall XLPE Primary Cable	LIGHT GREEN	2890.0	-	D	2312

Connector Name	A02-1301-MIC
Part Number	3600061C1
Instances	LT/RH LoneStar - X15/A26 - Speakers:Speakers N/BT W/AMP N/QC:Diagram1 LT/RH LoneStar - X15/A26 - Speakers:Speakers W/BT W/AMP N/QC:Diagram1 LT/RH/LoneStar - X15/A26 - Radio (Bluetooth) W/Steering Wheel Pod N/ Remote W/MIC:Diagram1 LT/RH/LoneStar - X15/A26 - Radio(Bluetooth) W/Steering Wheel W/Remote W/MIC:Diagram1 LT/RH/LoneStar - X15/A26 - Vehicle Information Display (VID-W/BT):Diagram1 LT/RH/LoneStar - X15/A26 - Vehicle Information Display (VID-W/O BT):Diagram1
Mates	DEV-Radio_BT-01 (Radio W/Bluetooth)

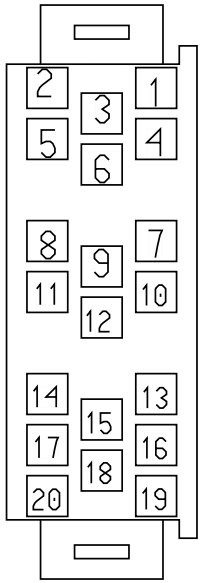

Name	Terminal Part Number	V-Min	Name	Wire Part Number	Wire CSA	Wire Spec	Wire Material description	Wire Color Description	Wire Length	End2 Terminal Part Number	End2 Pin Name	End2 Connect or
1	-	-	-	-	-	-	-	-	-	-	-	-
2	-	-	MY86AC	3510299 R1	0.79	18.0	Thin Wall XLPE Primary Cable	LIGHT GREEN	2920.0	-	10	5000A
2	-	-	-	-	-	-	-	-	-	-	-	-
7	-	-	RF86AA	3510298 R1	0.53	20.0	Thin Wall XLPE Primary Cable	LIGHT GREEN	710.0	-	11	A02-2225
9	-	-	RF86AC	3510298 R1	0.53	20.0	Thin Wall XLPE Primary Cable	LIGHT GREEN	710.0	-	13	A02-2225
10	-	-	RF86AB	3510298 R1	0.53	20.0	Thin Wall XLPE Primary Cable	LIGHT GREEN	710.0	-	12	A02-2225

Name	Terminal Part Number	V-Min	Name	Wire Part Number	Wire CSA	Wire Spec	Wire Material description	Wire Color Description	Wire Length	End2 Terminal Part Number	End2 Pin Name	End2 Connect or
11	-	-	RF86AD	3510298 R1	0.53	20.0	Thin Wall XLPE Primary Cable	LIGHT GREEN	710.0	-	14	A02-2225
15	-	-	YW86A(+)	3510298 R1	0.53	20.0	Thin Wall XLPE Primary Cable	LIGHT GREEN	1425.0	-	2	2505
16	-	-	YW86A(-)	3510298 R1	0.53	20.0	Thin Wall XLPE Primary Cable	LIGHT GREEN	1425.0	-	1	2505

Connector Name	A02-1410
Part Number	3601838C1
Instances	LT/RH/LoneStar - X15/A26 - Ground Splice Packs - 1410:Diagram1
Mates	SP-ABS_SPLICE-B002-00-10-A1

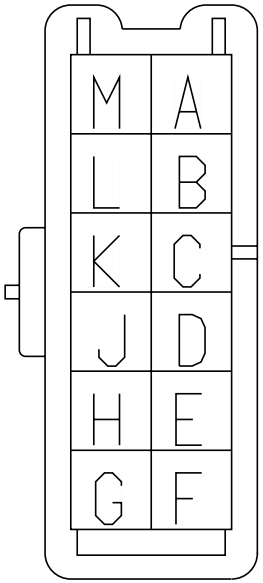

Name	Terminal Part Number	V-Min	Name	Wire Part Number	Wire CSA	Wire Spec	Wire Material description	Wire Color Description	Wire Length	End2 Terminal Part Number	End2 Pin Name	End2 Connect or
A	-	-	XD94SN	3510311 R1	0.79	18.0	Thin Wall XLPE Primary Cable	GREY	1310.0	-	-	-
A	-	-	XZ94SAA	3510311 R1	0.79	18.0	Thin Wall XLPE Primary Cable	GREY	1415.0	-	-	-
B	-	-	XD94SNA	3510311 R1	0.79	18.0	Thin Wall XLPE Primary Cable	GREY	1265.0	-	-	-
B	-	-	XZ94SAB	3510311 R1	0.79	18.0	Thin Wall XLPE Primary Cable	GREY	1265.0	-	-	-

Name	Terminal Part Number	V-Min	Name	Wire Part Number	Wire CSA	Wire Spec	Wire Material description	Wire Color Description	Wire Length	End2 Terminal Part Number	End2 Pin Name	End2 Connector
C	-	-	XD94SNB	3510311 R1	0.79	18.0	Thin Wall XLPE Primary Cable	GREY	750.0	-	-	-
C	-	-	XZ94SA	3510311 R1	0.79	18.0	Thin Wall XLPE Primary Cable	GREY	750.0	-	-	-
D	-	-	XZ94SCA	3510311 R1	0.79	18.0	Thin Wall XLPE Primary Cable	GREY	1415.0	-	-	-
D	-	-	XD94SP	3510311 R1	0.79	18.0	Thin Wall XLPE Primary Cable	GREY	1310.0	-	-	-
E	-	-	XD94SPA	3510311 R1	0.79	18.0	Thin Wall XLPE Primary Cable	GREY	1265.0	-	-	-
E	-	-	XZ94SCB	3510311 R1	0.79	18.0	Thin Wall XLPE Primary Cable	GREY	1265.0	-	-	-
F	-	-	XD94SPB	3510311 R1	0.79	18.0	Thin Wall XLPE Primary Cable	GREY	750.0	-	-	-
F	-	-	XZ94SC	3510311 R1	0.79	18.0	Thin Wall XLPE Primary Cable	GREY	750.0	-	-	-

Name	Terminal Part Number	V-Min	Name	Wire Part Number	Wire CSA	Wire Spec	Wire Material description	Wire Color Description	Wire Length	End2 Terminal Part Number	End2 Pin Name	End2 Connector
G	-	-	XD94SR	3510311 R1	0.79	18.0	Thin Wall XLPE Primary Cable	GREY	1310.0	-	-	-
G	-	-	XZ94SBA	3510311 R1	0.79	18.0	Thin Wall XLPE Primary Cable	GREY	1415.0	-	-	-
H	-	-	XZ94SBB	3510311 R1	0.79	18.0	Thin Wall XLPE Primary Cable	GREY	1265.0	-	-	-
H	-	-	XD94SRA	3510311 R1	0.79	18.0	Thin Wall XLPE Primary Cable	GREY	1265.0	-	-	-
J	-	-	XZ94SB	3510311 R1	0.79	18.0	Thin Wall XLPE Primary Cable	GREY	750.0	-	-	-
J	-	-	XD94SRB	3510311 R1	0.79	18.0	Thin Wall XLPE Primary Cable	GREY	750.0	-	-	-
K	-	-	XZ94SDA	3510299 R1	0.79	18.0	Thin Wall XLPE Primary Cable	LIGHT GREEN	1415.0	-	-	-
K	-	-	XD94SS	3510311 R1	0.79	18.0	Thin Wall XLPE Primary Cable	GREY	1310.0	-	-	-

Name	Terminal Part Number	V-Min	Name	Wire Part Number	Wire CSA	Wire Spec	Wire Material description	Wire Color Description	Wire Length	End2 Terminal Part Number	End2 Pin Name	End2 Connector
L	-	-	XD94SSA	3510311 R1	0.79	18.0	Thin Wall XLPE Primary Cable	GREY	1265.0	-	-	-
L	-	-	XZ94SDB	3510311 R1	0.79	18.0	Thin Wall XLPE Primary Cable	GREY	1265.0	-	-	-
M	-	-	XD94SSB	3510311 R1	0.79	18.0	Thin Wall XLPE Primary Cable	GREY	750.0	-	-	-
M	-	-	XZ94SD	3510311 R1	0.79	18.0	Thin Wall XLPE Primary Cable	GREY	750.0	-	-	-

Connector Name	A02-1500A
Part Number	3710061C1
Instances	LT/RH/LoneStar - X15/A26 - Auxilary Gauges (Secondary):Diagram1 LT/RH/LoneStar - X15/A26 - Auxiliary Gauges (Primary):Diagram1 LT/RH/LoneStar - X15/A26 - Luggage Compartment Lights - W/ No Idle HVAC:Diagram1 LT/RH/LoneStar - X15/A26 - Luggage Compartment Lights - W/ O No Idle HVAC:Diagram1 LT/RH/LoneStar - X15/A26 - Seats (RollTek) Driver and Passenger (Hard Wired):Diagram1 LT/RH/LoneStar - X15/A26 - Seats (RolTek) Drivers Seat Only (Hard Wired) - Leather:Diagram1 LT/RH/LoneStar - X15/A26 - Seats (RolTek) Drivers Seat Only (Hard Wired) - Mordura:Diagram1 LT/RH/LoneStar - X15/A26 - Seats (RolTek) Drivers Seat Only (Hard Wired) - Vinyl:Diagram1 LT/RH/LoneStar - X15/A26 - Telematics (OMNIVISION MD):Diagram1 LT/RH/LoneStar - X15/A26 - Telematics (OMNIVISION MD):Diagram2 LT/RH/LoneStar - X15/A26 - Telematics (OMNIVISION W/ J1939 & PANIC BUTTON):Diagram1 LT/RH/LoneStar - X15/A26 - Telematics (OMNIVISION W/ J1939 & PANIC BUTTON):Diagram2 LT/RH/LoneStar - X15/A26 - Telematics (QUALCOMM MCT w/ TRACS):Diagram1 LT/RH/LoneStar - X15/A26 - Telematics (QUALCOMM MCT w/o Tracs):Diagram1 LT/RH/LoneStar - X15/A26 - Telematics QUALCOMM IMCT DAYCAB With MVPC:Diagram1 LT/RH/LoneStar - X15/A26 - Telematics QUALCOMM IMCT DAYCAB With MVPC & PANIC BUTTON:Diagram1 LT/RH/LoneStar - X15/A26 - Telematics QUALCOMM IMCT DAYCAB With PANIC BUTTON:Diagram1 LT/RH/LoneStar - X15/A26 - Telematics QUALCOMM IMCT DAYCAB With PANIC BUTTON:Diagram2 LT/RH/LoneStar - X15/A26 - Telematics QUALCOMM IMCT MD:Diagram1 LT/RH/LoneStar - X15/A26 - Telematics QUALCOMM IMCT MD:Diagram2

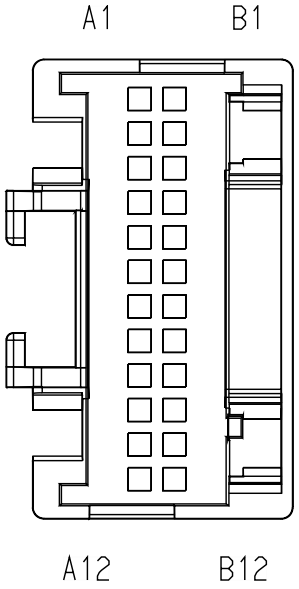

LT/RH/LoneStar - X15/A26 - Telematics QUALCOMM
TMCT:Diagram1
LT/RH/LoneStar - X15/A26 - Telematics QUALCOMM TMCT
With PANIC BUTTON:Diagram1

Mates MODU-EGC-A003-10-00

Name	Terminal Part Number	V-Min	Name	Wire Part Number	Wire CSA	Wire Spec	Wire Material description	Wire Color Description	Wire Length	End2 Terminal Part Number	End2 Pin Name	End2 Connect or
A6	-	-	5E13C	3510323 R1	0.79	18.0	Thin Wall XLPE Primary Cable	PINK	875.0	-	X	-
A7	-	-	5E179A	3510359 R1	0.79	18.0	Thin Wall XLPE Primary Cable	WHITE	2720.0	-	1	-
B5	-	-	CP11-GMW	2643764 R1	0.53	20.0	Std. Wall XLPE Primary Cable	WHITE	3350.0	-	E	1970
B5	-	-	CT11-GMW	3510358 R1	0.53	20.0	Thin Wall XLPE Primary Cable	WHITE	2420.0	-	B	A02-1919
B5	-	-	MB11-GMW	3510358 R1	0.53	20.0	Thin Wall XLPE Primary Cable	WHITE	3550.0	-	B	A02-1919A
B5	-	-	MJ11-GMW	2643764 R1	0.53	20.0	Std. Wall XLPE Primary Cable	WHITE	2420.0	-	F	5900
B5	-	-	MJ11-GMW	2643764 R1	0.53	20.0	Std. Wall XLPE Primary Cable	WHITE	2420.0	-	F	1920

Name	Terminal Part Number	V-Min	Name	Wire Part Number	Wire CSA	Wire Spec	Wire Material description	Wire Color Description	Wire Length	End2 Terminal Part Number	End2 Pin Name	End2 Connector
B6	-	-	DX63AW	3510352 R1	0.53	20.0	Thin Wall XLPE Primary Cable	DARK BLUE	2470.0	-	18	5000A
B8	-	-	AT28C	3510328 R1	0.53	20.0	Thin Wall XLPE Primary Cable	TAN	1095.0	-	4	A02-1000A
B9	-	-	AT28A	3510328 R1	0.53	20.0	Thin Wall XLPE Primary Cable	TAN	1095.0	-	1	A02-1000A
B10	-	-	AT28B	3510328 R1	0.53	20.0	Thin Wall XLPE Primary Cable	TAN	1095.0	-	3	A02-1000A

Connector Name	A02-1620
Part Number	2007315C1
Instances	LT/RH/LoneStar - X15/A26 - Ground Splice Pack 1620:Diagram1
Mates	SP-ZVR_SPLICE_PACK-B000-10 -A1

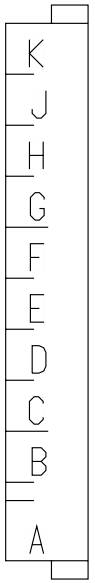

Name	Terminal Part Number	V-Min	Name	Wire Part Number	Wire CSA	Wire Spec	Wire Material description	Wire Color Description	Wire Length	End2 Terminal Part Number	End2 Pin Name	End2 Connect or
A	-	-	AA9Z	3510311 R1	0.79	18.0	Thin Wall XLPE Primary Cable	GREY	1660.0	-	-	-
B	-	-	AK9CDC	3510310 R1	0.53	20.0	Thin Wall XLPE Primary Cable	GREY	835.0	-	-	-
C	-	-	FF109	3510311 R1	0.79	18.0	Thin Wall XLPE Primary Cable	GREY	1265.0	-	-	-
D	-	-	DX109S	3510310 R1	0.53	20.0	Thin Wall XLPE Primary Cable	GREY	2740.0	-	-	-

Name	Terminal Part Number	V-Min	Name	Wire Part Number	Wire CSA	Wire Spec	Wire Material description	Wire Color Description	Wire Length	End2 Terminal Part Number	End2 Pin Name	End2 Connector
E	-	-	AN9BB	3510311 R1	0.79	18.0	Thin Wall XLPE Primary Cable	GREY	1185.0	-	-	-
F	-	-	AA9ZA	3510311 R1	0.79	18.0	Thin Wall XLPE Primary Cable	GREY	1160.0	-	-	-
G	-	-	JL116UV	3510311 R1	0.79	18.0	Thin Wall XLPE Primary Cable	GREY	460.0	-	-	-
H	-	-	RE9A	3510310 R1	0.53	20.0	Thin Wall XLPE Primary Cable	GREY	530.0	-	-	-
J	-	-	JZ9BB	3510311 R1	0.79	18.0	Thin Wall XLPE Primary Cable	GREY	4590.0	-	-	-
J	-	-	FU9BB	3510311 R1	0.79	18.0	Thin Wall XLPE Primary Cable	GREY	3690.0	-	-	-

Connector Name	A02-1650MA
Part Number	3544066C1
Instances	LT/RH/LoneStar - X15/A26 - 9 Pin Diagnostic Connector (Green) (Export):Diagram1
Mates	DEV-9PinDiag-0008-00-10-02A

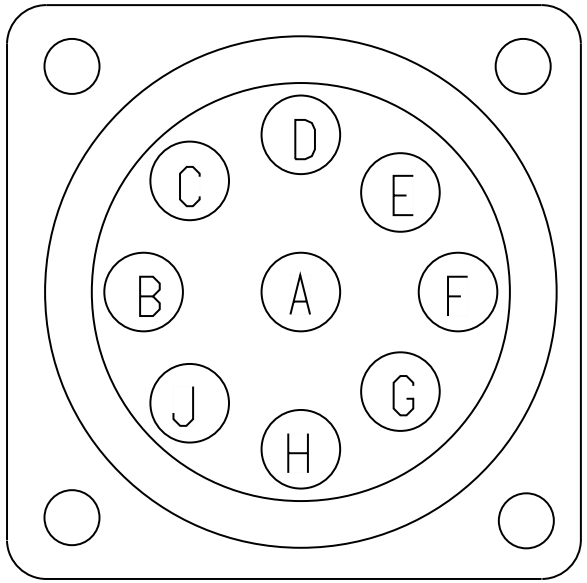

Name	Terminal Part Number	V-Min	Name	Wire Part Number	Wire CSA	Wire Spec	Wire Material description	Wire Color Description	Wire Length	End2 Terminal Part Number	End2 Pin Name	End2 Connect or
A	-	-	ZM98-G	3510359 R1	0.79	18.0	Thin Wall XLPE Primary Cable	WHITE	1525.0	-	-	-
B	-	-	ZM98H	3510365 R1	0.79	18.0	Thin Wall XLPE Primary Cable	RED	1930.0	-	-	-

Connector Name	A02-1650
Part Number	3757649C1
Instances	LT/RH/LoneStar - X15/A26 - 9 Pin Diagnostic Connector (Green):Diagram1
Mates	DEV-9PinDiag-0008-00-10-01A

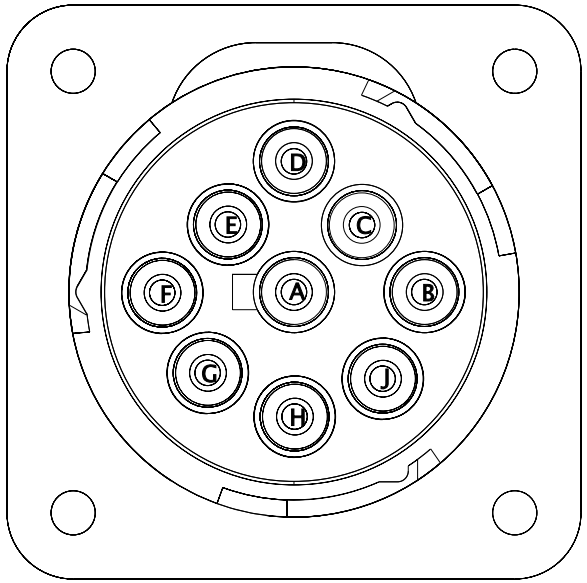

Name	Terminal Part Number	V-Min	Name	Wire Part Number	Wire CSA	Wire Spec	Wire Material description	Wire Color Description	Wire Length	End2 Terminal Part Number	End2 Pin Name	End2 Connect or
A	-	-	ZK98-G	3510359 R1	0.79	18.0	Thin Wall XLPE Primary Cable	WHITE	1525.0	-	-	-
B	-	-	ZK98H	3510365 R1	0.79	18.0	Thin Wall XLPE Primary Cable	RED	1930.0	-	-	-

Connector Name	A02-1901A
Part Number	3590298C1
Instances	LT/RH/LoneStar - X15/A26 - Cigar Lighter Aux APO:Diagram2 LT/RH/LoneStar - X15/A26 - Cigar Lighter Aux APO Overhead APO:Diagram2 LT/RH/LoneStar - X15/A26 - Cigar Lighter Aux APO Rear Std APO Rear APO W/Cover 12V Panel:Diagram3 LT/RH/LoneStar - X15/A26 - Cigar Lighter Aux APO Rear Std APO Rear APO W/Cover 12V Panel:Diagram4 LT/RH/LoneStar - X15/A26 - Cigar Lighter Aux APO Rear Std APO Rear APO w/Cover 12V Panel Overhead APO:Diagram3 LT/RH/LoneStar - X15/A26 - Cigar Lighter Aux APO Rear Std APO Rear APO w/Cover 12V Panel Overhead APO:Diagram4 LT/RH/LoneStar - X15/A26 - Cigar Lighter Aux APO Rear Std APO Rear APO w/Cover 12V Panel Upr Bnk APO:Diagram3 LT/RH/LoneStar - X15/A26 - Cigar Lighter Aux APO Rear Std APO Rear APO w/Cover 12V Panel Upr Bnk APO:Diagram4 LT/RH/LoneStar - X15/A26 - Cigar Lighter Aux APO Rear Std APO Rear APO w/Cover 12V Panel Upr Bnk APO Rear Overhead APO:Diagram1-Combination3 LT/RH/LoneStar - X15/A26 - Cigar Lighter Aux APO Rear Std APO Rear APO w/Cover 12V Panel Upr Bnk APO Rear Overhead APO:Diagram1-Combination4 LT/RH/LoneStar - X15/A26 - Standard APO Aux APO:Diagram2 LT/RH/LoneStar - X15/A26 - Standard APO Aux APO Overhead APO:Diagram2 LT/RH/LoneStar - X15/A26 - Std APO Aux APO Rear Std APO Rear APO W/Cover 12V Panel:Diagram3 LT/RH/LoneStar - X15/A26 - Std APO Aux APO Rear Std APO Rear APO W/Cover 12V Panel:Diagram4 LT/RH/LoneStar - X15/A26 - Std APO Aux APO Rear Std APO Rear APO W/Cover 12V Panel Overhead APO:Diagram3 LT/RH/LoneStar - X15/A26 - Std APO Aux APO Rear Std APO Rear APO W/Cover 12V Panel Overhead APO:Diagram4 LT/RH/LoneStar - X15/A26 - Std APO Aux APO Rear Std APO Rear APO W/Cover 12V Panel Upr Bnk APO:Diagram3 LT/RH/LoneStar - X15/A26 - Std APO Aux APO Rear Std APO Rear APO W/Cover 12V Panel Upr Bnk APO:Diagram4 LT/RH/LoneStar - X15/A26 - Std APO Aux APO Rear Std APO Rear APO w/Cover 12V Panel Upr Bnk APO Rear Overhead APO:Diagram3

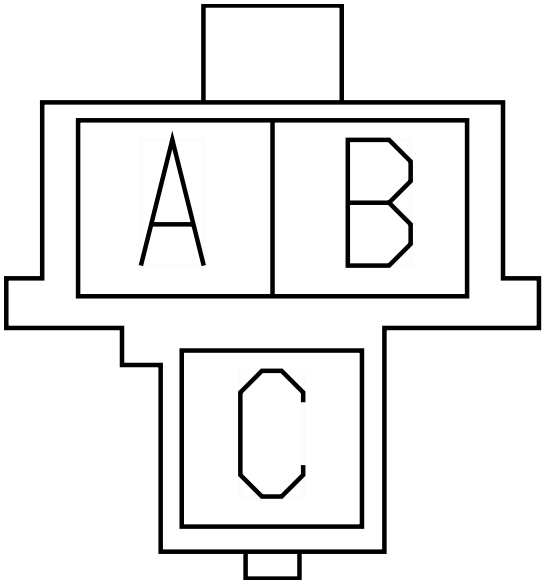

LT/RH/LoneStar - X15/A26 - Std APO Aux APO Rear Std APO Rear APO w/Cover 12V Panel Upr Bnk APO Rear Overhead APO:Diagram4

Mates DEV-APO-2002-01-03A

Name	Terminal Part Number	V-Min	Name	Wire Part Number	Wire CSA	Wire Spec	Wire Material description	Wire Color Description	Wire Length	End2 Terminal Part Number	End2 Pin Name	End2 Connect or
A	-	-	CL84B	3510301 R1	1.91	14.0	Thin Wall XLPE Primary Cable	LIGHT GREEN	950.0	-	X	-
C	-	-	CL84-GAB	3510361 R1	1.91	14.0	Thin Wall XLPE Primary Cable	WHITE	675.0	-	-	-

Connector Name	A02-1901
Part Number	3590298C1
Instances	LT/RH/LoneStar - X15/A26 - Cigar Lighter Aux APO:Diagram1 LT/RH/LoneStar - X15/A26 - Cigar Lighter Aux APO Overhead APO:Diagram1 LT/RH/LoneStar - X15/A26 - Cigar Lighter Aux APO Rear Std APO Rear APO W/Cover 12V Panel:Diagram1 LT/RH/LoneStar - X15/A26 - Cigar Lighter Aux APO Rear Std APO Rear APO W/Cover 12V Panel:Diagram2 LT/RH/LoneStar - X15/A26 - Cigar Lighter Aux APO Rear Std APO Rear APO w/Cover 12V Panel Overhead APO:Diagram1 LT/RH/LoneStar - X15/A26 - Cigar Lighter Aux APO Rear Std APO Rear APO w/Cover 12V Panel Overhead APO:Diagram2 LT/RH/LoneStar - X15/A26 - Cigar Lighter Aux APO Rear Std APO Rear APO w/Cover 12V Panel Upr Bnk APO:Diagram1 LT/RH/LoneStar - X15/A26 - Cigar Lighter Aux APO Rear Std APO Rear APO w/Cover 12V Panel Upr Bnk APO:Diagram2 LT/RH/LoneStar - X15/A26 - Cigar Lighter Aux APO Rear Std APO Rear APO w/Cover 12V Panel Upr Bnk APO Rear Overhead APO:Diagram1-Combination1 LT/RH/LoneStar - X15/A26 - Cigar Lighter Aux APO Rear Std APO Rear APO w/Cover 12V Panel Upr Bnk APO Rear Overhead APO:Diagram1-Combination2 LT/RH/LoneStar - X15/A26 - Standard APO Aux APO:Diagram1 LT/RH/LoneStar - X15/A26 - Standard APO Aux APO Overhead APO:Diagram1 LT/RH/LoneStar - X15/A26 - Std APO Aux APO Rear Std APO Rear APO W/Cover 12V Panel:Diagram1 LT/RH/LoneStar - X15/A26 - Std APO Aux APO Rear Std APO Rear APO W/Cover 12V Panel:Diagram2 LT/RH/LoneStar - X15/A26 - Std APO Aux APO Rear Std APO Rear APO W/Cover 12V Panel Overhead APO:Diagram1 LT/RH/LoneStar - X15/A26 - Std APO Aux APO Rear Std APO Rear APO W/Cover 12V Panel Overhead APO:Diagram2 LT/RH/LoneStar - X15/A26 - Std APO Aux APO Rear Std APO Rear APO W/Cover 12V Panel Upr Bnk APO:Diagram1 LT/RH/LoneStar - X15/A26 - Std APO Aux APO Rear Std APO Rear APO W/Cover 12V Panel Upr Bnk APO:Diagram2 LT/RH/LoneStar - X15/A26 - Std APO Aux APO Rear Std APO Rear APO w/Cover 12V Panel Upr Bnk APO Rear Overhead APO:Diagram1

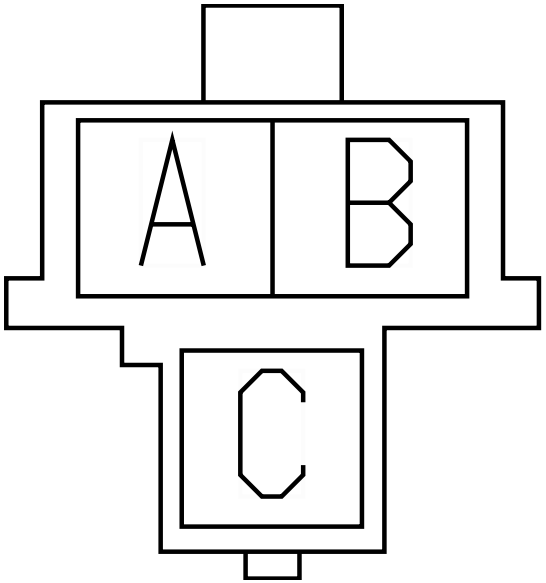

LT/RH/LoneStar - X15/A26 - Std APO Aux APO Rear Std APO Rear APO w/Cover 12V Panel Upr Bnk APO Rear Overhead APO:Diagram2

Name	Terminal Part Number	V-Min	Name	Wire Part Number	Wire CSA	Wire Spec	Wire Material description	Wire Color Description	Wire Length	End2 Terminal Part Number	End2 Pin Name	End2 Connector
A	-	-	CB84A	3510301 R1	1.91	14.0	Thin Wall XLPE Primary Cable	LIGHT GREEN	1050.0	-	X	-
C	-	-	CB84-GBB	3510361 R1	1.91	14.0	Thin Wall XLPE Primary Cable	WHITE	425.0	-	-	-

Connector Name	A02-1903
Part Number	3590298C1
Instances	LT/RH/LoneStar - X15/A26 - Cigar Lighter:Diagram1 LT/RH/LoneStar - X15/A26 - Cigar Lighter Aux APO Overhead APO:Diagram1 LT/RH/LoneStar - X15/A26 - Cigar Lighter Aux APO Overhead APO:Diagram2 LT/RH/LoneStar - X15/A26 - Cigar Lighter Aux APO Rear Std APO Rear APO W/Cover 12V Panel:Diagram1 LT/RH/LoneStar - X15/A26 - Cigar Lighter Aux APO Rear Std APO Rear APO W/Cover 12V Panel:Diagram2 LT/RH/LoneStar - X15/A26 - Cigar Lighter Aux APO Rear Std APO Rear APO W/Cover 12V Panel:Diagram3 LT/RH/LoneStar - X15/A26 - Cigar Lighter Aux APO Rear Std APO Rear APO W/Cover 12V Panel:Diagram4 LT/RH/LoneStar - X15/A26 - Cigar Lighter Aux APO Rear Std APO Rear APO w/Cover 12V Panel Overhead APO:Diagram1 LT/RH/LoneStar - X15/A26 - Cigar Lighter Aux APO Rear Std APO Rear APO w/Cover 12V Panel Overhead APO:Diagram2 LT/RH/LoneStar - X15/A26 - Cigar Lighter Aux APO Rear Std APO Rear APO w/Cover 12V Panel Overhead APO:Diagram3 LT/RH/LoneStar - X15/A26 - Cigar Lighter Aux APO Rear Std APO Rear APO w/Cover 12V Panel Overhead APO:Diagram4 LT/RH/LoneStar - X15/A26 - Cigar Lighter Aux APO Rear Std APO Rear APO w/Cover 12V Panel Upr Bnk APO:Diagram1 LT/RH/LoneStar - X15/A26 - Cigar Lighter Aux APO Rear Std APO Rear APO w/Cover 12V Panel Upr Bnk APO:Diagram2 LT/RH/LoneStar - X15/A26 - Cigar Lighter Aux APO Rear Std APO Rear APO w/Cover 12V Panel Upr Bnk APO:Diagram3 LT/RH/LoneStar - X15/A26 - Cigar Lighter Aux APO Rear Std APO Rear APO w/Cover 12V Panel Upr Bnk APO:Diagram4 LT/RH/LoneStar - X15/A26 - Cigar Lighter Aux APO Rear Std APO Rear APO w/Cover 12V Panel Upr Bnk APO Rear Overhead APO:Diagram1-Combination1 LT/RH/LoneStar - X15/A26 - Cigar Lighter Aux APO Rear Std APO Rear APO w/Cover 12V Panel Upr Bnk APO Rear Overhead APO:Diagram1-Combination2 LT/RH/LoneStar - X15/A26 - Cigar Lighter Aux APO Rear Std APO Rear APO w/Cover 12V Panel Upr Bnk APO Rear Overhead APO:Diagram1-Combination3 LT/RH/LoneStar - X15/A26 - Cigar Lighter Aux APO Rear Std APO Rear APO w/Cover 12V Panel Upr Bnk APO Rear Overhead APO:Diagram1-Combination4

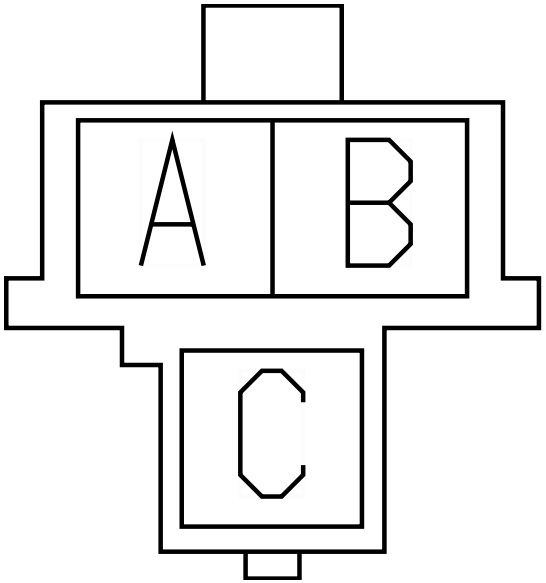

LT/RH/LoneStar - X15/A26 - Cigar Lighter Overhead APO:Diagram1
LT/RH/LoneStar - X15/A26 - Cigar Lighter Rear Std APO APO W/Cover 12V Panel:Diagram1
LT/RH/LoneStar - X15/A26 - Cigar Lighter Rear Std APO APO W/Cover 12V Panel:Diagram2
LT/RH/LoneStar - X15/A26 - Cigar Lighter Rear Std APO Rear APO W/Cover 12V Panel Overhead APO:Diagram1
LT/RH/LoneStar - X15/A26 - Cigar Lighter Rear Std APO Rear APO W/Cover 12V Panel Overhead APO:Diagram2
LT/RH/LoneStar - X15/A26 - Cigar Lighter Rear Std APO Rear APO W/Cover 12V Panel Upr Bnk APO:Diagram1
LT/RH/LoneStar - X15/A26 - Cigar Lighter Rear Std APO Rear APO W/Cover 12V Panel Upr Bnk APO:Diagram2
LT/RH/LoneStar - X15/A26 - Cigar Lighter Rear Std APO Rear APO w/Cover 12V Panel Upr Bnk APO Rear Overhead APO:Diagram1
LT/RH/LoneStar - X15/A26 - Cigar Lighter Rear Std APO Rear APO w/Cover 12V Panel Upr Bnk APO Rear Overhead APO:Diagram2
LT/RH/LoneStar - X15/A26 - Standard APO:Diagram1
LT/RH/LoneStar - X15/A26 - Standard APO Aux APO:Diagram1
LT/RH/LoneStar - X15/A26 - Standard APO Aux APO:Diagram2
LT/RH/LoneStar - X15/A26 - Standard APO Aux APO Overhead APO:Diagram1
LT/RH/LoneStar - X15/A26 - Standard APO Aux APO Overhead APO:Diagram2
LT/RH/LoneStar - X15/A26 - Standard APO Overhead APO:Diagram1
LT/RH/LoneStar - X15/A26 - Std APO Aux APO Rear Std APO Rear APO W/Cover 12V Panel:Diagram1
LT/RH/LoneStar - X15/A26 - Std APO Aux APO Rear Std APO Rear APO W/Cover 12V Panel:Diagram2
LT/RH/LoneStar - X15/A26 - Std APO Aux APO Rear Std APO Rear APO W/Cover 12V Panel:Diagram3
LT/RH/LoneStar - X15/A26 - Std APO Aux APO Rear Std APO Rear APO W/Cover 12V Panel:Diagram4
LT/RH/LoneStar - X15/A26 - Std APO Aux APO Rear Std APO Rear APO W/Cover 12V Panel Overhead APO:Diagram1
LT/RH/LoneStar - X15/A26 - Std APO Aux APO Rear Std APO Rear APO W/Cover 12V Panel Overhead APO:Diagram2
LT/RH/LoneStar - X15/A26 - Std APO Aux APO Rear Std APO Rear APO W/Cover 12V Panel Overhead APO:Diagram3

LT/RH/LoneStar - X15/A26 - Std APO Aux APO Rear Std APO Rear APO W/Cover 12V Panel Overhead APO:Diagram4
LT/RH/LoneStar - X15/A26 - Std APO Aux APO Rear Std APO Rear APO W/Cover 12V Panel Upr Bnk APO:Diagram1
LT/RH/LoneStar - X15/A26 - Std APO Aux APO Rear Std APO Rear APO W/Cover 12V Panel Upr Bnk APO:Diagram2
LT/RH/LoneStar - X15/A26 - Std APO Aux APO Rear Std APO Rear APO W/Cover 12V Panel Upr Bnk APO:Diagram3
LT/RH/LoneStar - X15/A26 - Std APO Aux APO Rear Std APO Rear APO W/Cover 12V Panel Upr Bnk APO:Diagram4
LT/RH/LoneStar - X15/A26 - Std APO Aux APO Rear Std APO Rear APO w/Cover 12V Panel Upr Bnk APO Rear Overhead APO:Diagram1
LT/RH/LoneStar - X15/A26 - Std APO Aux APO Rear Std APO Rear APO w/Cover 12V Panel Upr Bnk APO Rear Overhead APO:Diagram2
LT/RH/LoneStar - X15/A26 - Std APO Aux APO Rear Std APO Rear APO w/Cover 12V Panel Upr Bnk APO Rear Overhead APO:Diagram3
LT/RH/LoneStar - X15/A26 - Std APO Aux APO Rear Std APO Rear APO w/Cover 12V Panel Upr Bnk APO Rear Overhead APO:Diagram4
LT/RH/LoneStar - X15/A26 - Std APO Rear Std APO Rear APO W/Cover 12V Panel:Diagram1
LT/RH/LoneStar - X15/A26 - Std APO Rear Std APO Rear APO W/Cover 12V Panel:Diagram2
LT/RH/LoneStar - X15/A26 - Std APO Rear Std APO Rear APO W/Cover 12V Panel Rear Overhead APO:Diagram1
LT/RH/LoneStar - X15/A26 - Std APO Rear Std APO Rear APO W/Cover 12V Panel Rear Overhead APO:Diagram2
LT/RH/LoneStar - X15/A26 - Std APO Rear Std APO Rear APO W/Cover 12V Panel Upr Bnk APO:Diagram1
LT/RH/LoneStar - X15/A26 - Std APO Rear Std APO Rear APO W/Cover 12V Panel Upr Bnk APO:Diagram2
LT/RH/LoneStar - X15/A26 - Std APO Rear Std APO Rear APO w/Cover 12V Panel Upr Bnk APO Rear Overhead APO:Diagram1
LT/RH/LoneStar - X15/A26 - Std APO Rear Std APO Rear APO w/Cover 12V Panel Upr Bnk APO Rear Overhead APO:Diagram2

Mates DEV-APO-2002-01-01A-1903 APO and CIG

Name	Terminal Part Number	V-Min	Name	Wire Part Number	Wire CSA	Wire Spec	Wire Material description	Wire Color Description	Wire Length	End2 Terminal Part Number	End2 Pin Name	End2 Connector
A	-	-	CB84	3510301 R1	1.91	14.0	Thin Wall XLPE Primary Cable	LIGHT GREEN	1050.0	-	X	-
A	-	-	CL84A	3510301 R1	1.91	14.0	Thin Wall XLPE Primary Cable	LIGHT GREEN	1050.0	-	X	-
A	-	-	CA84	3510301 R1	1.91	14.0	Thin Wall XLPE Primary Cable	LIGHT GREEN	1150.0	-	-	-
C	-	-	CB84-GAF	3510361 R1	1.91	14.0	Thin Wall XLPE Primary Cable	WHITE	775.0	-	-	-
C	-	-	CL84-GAF	3510361 R1	1.91	14.0	Thin Wall XLPE Primary Cable	WHITE	775.0	-	-	-
C	-	-	CA84-GAF	3510361 R1	1.91	14.0	Thin Wall XLPE Primary Cable	WHITE	775.0	-	-	-

Connector Name	A02-1903
Part Number	3590298C1
Instances	LT/RH/LoneStar - X15/A26 - Cigar Lighter Aux APO:Diagram1 LT/RH/LoneStar - X15/A26 - Cigar Lighter Aux APO:Diagram2
Mates	DEV-APO-2002-01-01A-1903 APO and CIG

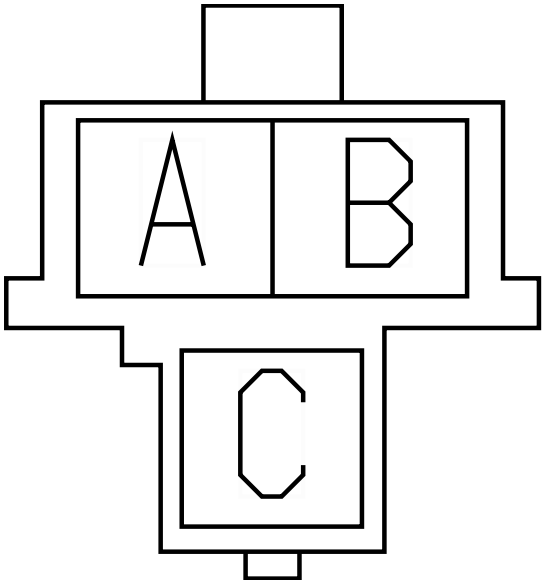

Name	Terminal Part Number	V-Min	Name	Wire Part Number	Wire CSA	Wire Spec	Wire Material description	Wire Color Description	Wire Length	End2 Terminal Part Number	End2 Pin Name	End2 Connect or
A	-	-	CB84	3510301 R1	1.91	14.0	Thin Wall XLPE Primary Cable	LIGHT GREEN	1050.0	-	X	-
A	-	-	CL84A	3510301 R1	1.91	14.0	Thin Wall XLPE Primary Cable	LIGHT GREEN	1050.0	-	X	-
C	-	-	CB84-GAF	3510361 R1	1.91	14.0	Thin Wall XLPE Primary Cable	WHITE	775.0	-	-	-
C	-	-	CL84-GAF	3510361 R1	1.91	14.0	Thin Wall XLPE Primary Cable	WHITE	775.0	-	-	-

Connector Name	A02-1904
Part Number	3768147C1
Instances	LT/RH/LoneStar - X15/A26 - Single USB:Diagram1 LT/RH/LoneStar - X15/A26 - Two USB:Diagram1 LT/RH/LoneStar - X15/A26 - Two USB:Diagram2
Mates	DEV-USB-2060-01-01A

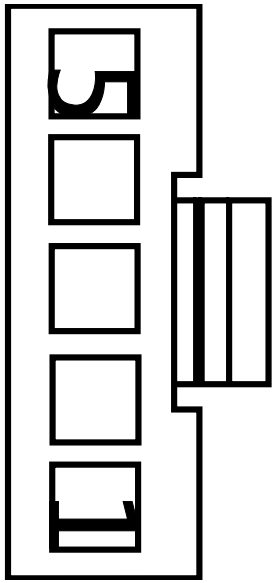

Name	Terminal Part Number	V-Min	Name	Wire Part Number	Wire CSA	Wire Spec	Wire Material description	Wire Color Description	Wire Length	End2 Terminal Part Number	End2 Pin Name	End2 Connect or
1	-	-	CA11-GUA	3510358 R1	0.53	20.0	Thin Wall XLPE Primary Cable	WHITE	775.0	-	-	-
1	-	-	CB11-GUA	3510358 R1	0.53	20.0	Thin Wall XLPE Primary Cable	WHITE	775.0	-	-	-
1	-	-	CL11-GUA	3510358 R1	0.53	20.0	Thin Wall XLPE Primary Cable	WHITE	775.0	-	-	-
2	-	-	CA13UA	3510322 R1	0.53	20.0	Thin Wall XLPE Primary Cable	PINK	1310.0	-	-	-

Name	Terminal Part Number	V-Min	Name	Wire Part Number	Wire CSA	Wire Spec	Wire Material description	Wire Color Description	Wire Length	End2 Terminal Part Number	End2 Pin Name	End2 Connect or
2	-	-	CB13UA	3510322 R1	0.53	20.0	Thin Wall XLPE Primary Cable	PINK	1085.0	-	X	-
2	-	-	CL13UA	3510322 R1	0.53	20.0	Thin Wall XLPE Primary Cable	PINK	1085.0	-	X	-

Connector Name A02-1905A
Part Number 3768147C1
Instances LT/RH/LoneStar - X15/A26 - Two USB:Diagram2

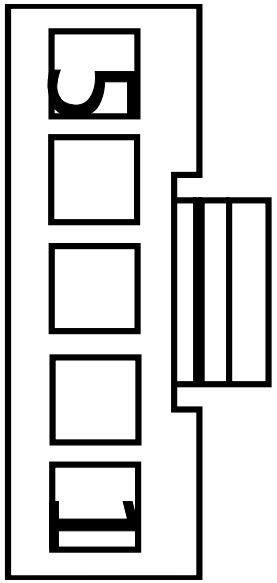

Name	Terminal Part Number	V-Min	Name	Wire Part Number	Wire CSA	Wire Spec	Wire Material description	Wire Color Description	Wire Length	End2 Terminal Part Number	End2 Pin Name	End2 Connect or
1	-	-	CL11-GUB	3510358 R1	0.53	20.0	Thin Wall XLPE Primary Cable	WHITE	675.0	-	-	-
2	-	-	CL13UB	3510322 R1	0.53	20.0	Thin Wall XLPE Primary Cable	PINK	985.0	-	X	-

Connector Name	A02-1905
Part Number	3768147C1
Instances	LT/RH/LoneStar - X15/A26 - Two USB:Diagram1
Mates	DEV-USB-2060-01-02A

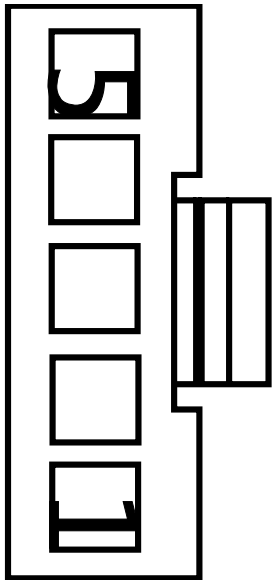

Name	Terminal Part Number	V-Min	Name	Wire Part Number	Wire CSA	Wire Spec	Wire Material description	Wire Color Description	Wire Length	End2 Terminal Part Number	End2 Pin Name	End2 Connect or
1	-	-	CB11-GUB	3510358 R1	0.53	20.0	Thin Wall XLPE Primary Cable	WHITE	425.0	-	-	-
2	-	-	CB13UB	3510322 R1	0.53	20.0	Thin Wall XLPE Primary Cable	PINK	1085.0	-	X	-

Connector Name A02-1916

Part Number 2005836C1

Instances LT/RH LoneStar - X15/A26 - Speakers:Four Speakers N/BT W/ QC:Diagram1-Day Cab
LT/RH LoneStar - X15/A26 - Speakers:Four Speakers N/BT W/ QC:Diagram2-Sleeper
LT/RH LoneStar - X15/A26 - Speakers:Four Speakers W/BT W/ QC:Diagram1-Day Cab
LT/RH LoneStar - X15/A26 - Speakers:Four Speakers W/BT W/ QC:Diagram2-Sleeper
LT/RH/LoneStar - X15/A26 - Telematics (OMNIVISION MD):Diagram1
LT/RH/LoneStar - X15/A26 - Telematics (OMNIVISION MD):Diagram2
LT/RH/LoneStar - X15/A26 - Telematics (OMNIVISION W/ J1939 & PANIC BUTTON):Diagram1
LT/RH/LoneStar - X15/A26 - Telematics (OMNIVISION W/ J1939 & PANIC BUTTON):Diagram2

Mates SW-SPKR-2033-01-02A

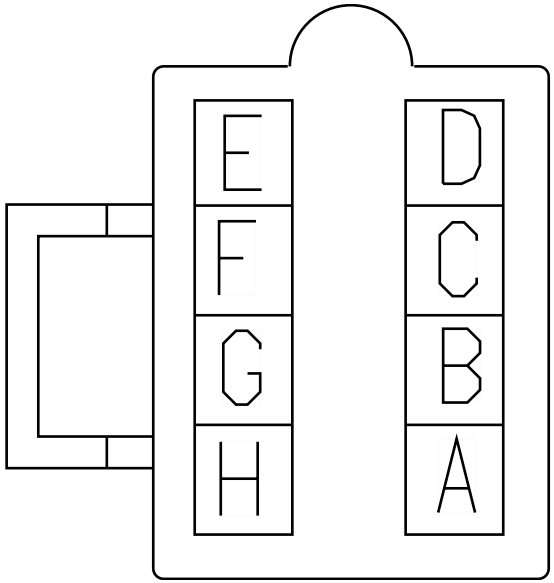

Name	Terminal Part Number	V-Min	Name	Wire Part Number	Wire CSA	Wire Spec	Wire Material description	Wire Color Description	Wire Length	End2 Terminal Part Number	End2 Pin Name	End2 Connector
A	-	-	MB86H	3510299 R1	0.79	18.0	Thin Wall XLPE Primary Cable	LIGHT GREEN	1425.0	-	13	A02-1300
B	-	-	MB86J	3510299 R1	0.79	18.0	Thin Wall XLPE Primary Cable	LIGHT GREEN	1425.0	-	14	A02-1300
C	-	-	MB86HA	3510299 R1	0.79	18.0	Thin Wall XLPE Primary Cable	LIGHT GREEN	4045.0	-	F	A02-1919A
C	-	-	CT86HA	3510299 R1	0.79	18.0	Thin Wall XLPE Primary Cable	LIGHT GREEN	2065.0	-	F	A02-1919

Name	Terminal Part Number	V-Min	Name	Wire Part Number	Wire CSA	Wire Spec	Wire Material description	Wire Color Description	Wire Length	End2 Terminal Part Number	End2 Pin Name	End2 Connector
D	-	-	CT86JA	3510299 R1	0.79	18.0	Thin Wall XLPE Primary Cable	LIGHT GREEN	2065.0	-	G	A02-1919
D	-	-	MB86JA	3510299 R1	0.79	18.0	Thin Wall XLPE Primary Cable	LIGHT GREEN	4045.0	-	G	A02-1919A
E	-	-	CT86-GD1	3510359 R1	0.79	18.0	Thin Wall XLPE Primary Cable	WHITE	970.0	-	X	-
E	-	-	MB86-GD1	3510359 R1	0.79	18.0	Thin Wall XLPE Primary Cable	WHITE	670.0	-	X	-
F	-	-	MB86HB	3510299 R1	0.79	18.0	Thin Wall XLPE Primary Cable	LIGHT GREEN	275.0	-	C	3205M
G	-	-	MB86JB	3510299 R1	0.79	18.0	Thin Wall XLPE Primary Cable	LIGHT GREEN	275.0	-	D	3205M

Connector Name	A02-1917
Part Number	1661197C1
Instances	LT/RH/LoneStar - X15/A26 - Telematics (OMNIVISION MD):Diagram1 LT/RH/LoneStar - X15/A26 - Telematics (OMNIVISION MD):Diagram2 LT/RH/LoneStar - X15/A26 - Telematics (OMNIVISION W/ J1939 & PANIC BUTTON):Diagram1 LT/RH/LoneStar - X15/A26 - Telematics (OMNIVISION W/ J1939 & PANIC BUTTON):Diagram2
Mates	CTRL-REMOTE-2035-03-08A

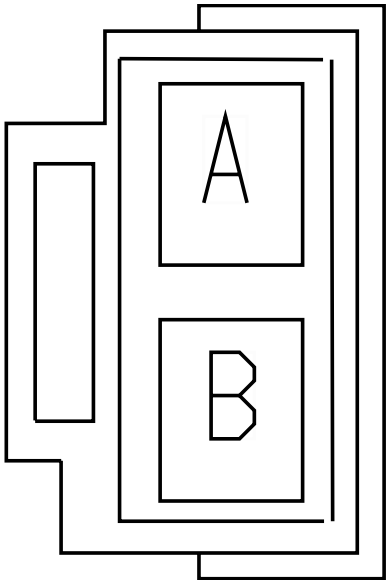

Name	Terminal Part Number	V-Min	Name	Wire Part Number	Wire CSA	Wire Spec	Wire Material description	Wire Color Description	Wire Length	End2 Terminal Part Number	End2 Pin Name	End2 Connect or
A	-	-	CT86RCD	3510299 R1	0.79	18.0	Thin Wall XLPE Primary Cable	LIGHT GREEN	3340.0	-	A	A02-1919
A	-	-	MB86RCD	3510299 R1	0.79	18.0	Thin Wall XLPE Primary Cable	LIGHT GREEN	3050.0	-	A	A02-1919A
B	-	-	CT86-GD2	3510359 R1	0.79	18.0	Thin Wall XLPE Primary Cable	WHITE	2245.0	-	X	-
B	-	-	MB86-GD2	3510359 R1	0.79	18.0	Thin Wall XLPE Primary Cable	WHITE	1225.0	-	X	-

Connector Name A02-1918A

Part Number 1661199C1

Instances LT/RH/LoneStar - X15/A26 - Telematics (OMNIVISION MD):Diagram2
LT/RH/LoneStar - X15/A26 - Telematics (OMNIVISION W/ J1939 & PANIC BUTTON):Diagram2

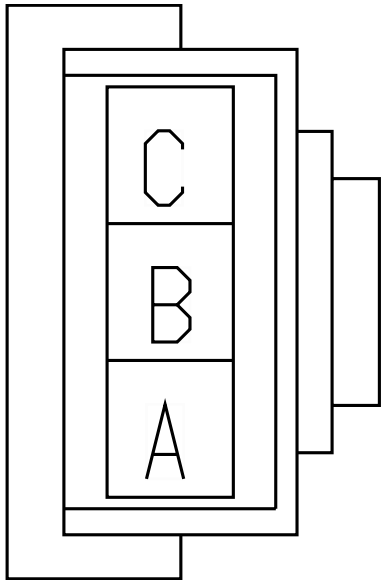

Name	Terminal Part Number	V-Min	Name	Wire Part Number	Wire CSA	Wire Spec	Wire Material description	Wire Color Description	Wire Length	End2 Terminal Part Number	End2 Pin Name	End2 Connect or
A	-	-	MB14ED	3510366 R1	1.16	16.0	Thin Wall XLPE Primary Cable	RED	4325.0	-	-	-
B	-	-	MB13EE	3510324 R1	1.16	16.0	Thin Wall XLPE Primary Cable	PINK	4510.0	-	-	-
C	-	-	MB11-GBE	3510360 R1	1.16	16.0	Thin Wall XLPE Primary Cable	WHITE	2700.0	-	-	-

Connector Name	A02-1918B
Part Number	1661199C1
Instances	LT/RH/LoneStar - X15/A26 - Telematics (QUALCOMM MCP50):Diagram1
Mates	MODU-QULCM_MCP50-2035-07-0 2A

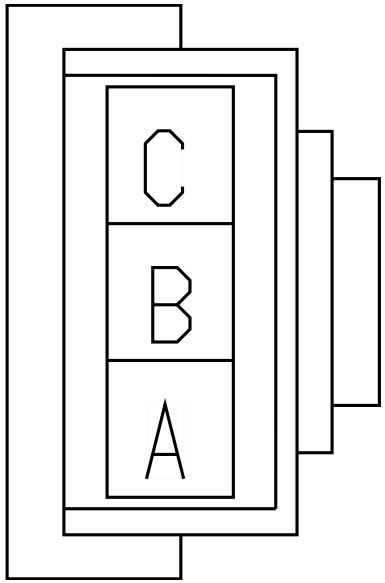

Name	Terminal Part Number	V-Min	Name	Wire Part Number	Wire CSA	Wire Spec	Wire Material description	Wire Color Description	Wire Length	End2 Terminal Part Number	End2 Pin Name	End2 Connect or
A	-	-	KC14ED	3510366 R1	1.16	16.0	Thin Wall XLPE Primary Cable	RED	650.0	-	-	-
B	-	-	KC13EE	3510324 R1	1.16	16.0	Thin Wall XLPE Primary Cable	PINK	835.0	-	-	-
C	-	-	KC11-GBE	3510360 R1	1.16	16.0	Thin Wall XLPE Primary Cable	WHITE	1975.0	-	-	-

Connector Name	A02-1918
Part Number	1661199C1
Instances	LT/RH/LoneStar - X15/A26 - Telematics (OMNIVISION MD):Diagram1 LT/RH/LoneStar - X15/A26 - Telematics (OMNIVISION W/ J1939 & PANIC BUTTON):Diagram1
Mates	MODU-OMNIVISION-2035-03-08A

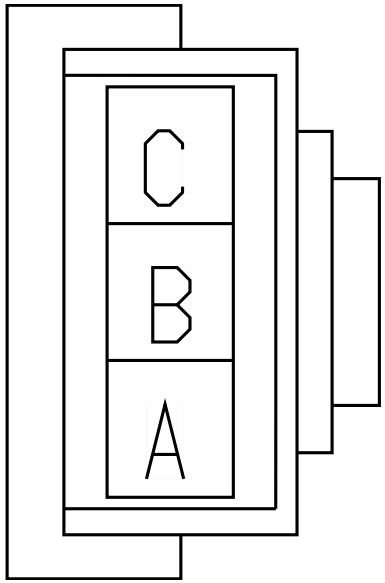

Name	Terminal Part Number	V-Min	Name	Wire Part Number	Wire CSA	Wire Spec	Wire Material description	Wire Color Description	Wire Length	End2 Terminal Part Number	End2 Pin Name	End2 Connect or
A	-	-	CT14ED	3510365 R1	0.79	18.0	Thin Wall XLPE Primary Cable	RED	3395.0	-	-	-
B	-	-	CT13EE	3510323 R1	0.79	18.0	Thin Wall XLPE Primary Cable	PINK	3580.0	-	-	-
C	-	-	CT11-GBE	3510360 R1	1.16	16.0	Thin Wall XLPE Primary Cable	WHITE	3600.0	-	-	-

Connector Name A02-1919A

Part Number 2005836C1

Instances LT/RH/LoneStar - X15/A26 - Telematics (OMNIVISION MD):Diagram2
LT/RH/LoneStar - X15/A26 - Telematics (OMNIVISION W/ J1939 & PANIC BUTTON):Diagram2

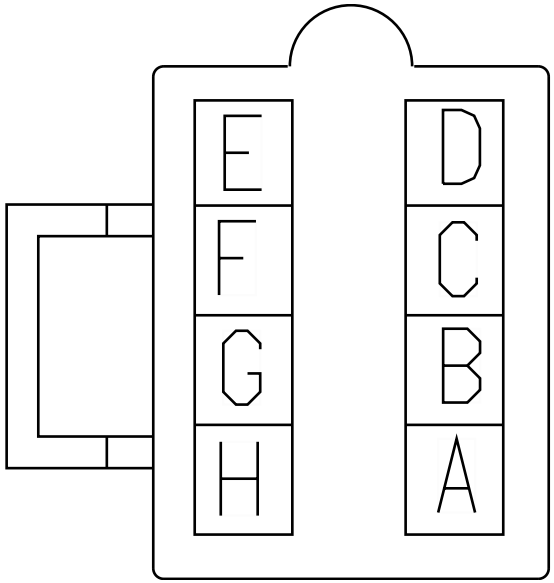

Name	Terminal Part Number	V-Min	Name	Wire Part Number	Wire CSA	Wire Spec	Wire Material description	Wire Color Description	Wire Length	End2 Terminal Part Number	End2 Pin Name	End2 Connect or
A	-	-	MB86RCD	3510299 R1	0.79	18.0	Thin Wall XLPE Primary Cable	LIGHT GREEN	3050.0	-	A	A02-1917
B	-	-	MB11-GMW	3510358 R1	0.53	20.0	Thin Wall XLPE Primary Cable	WHITE	3550.0	-	B5	A02-1500A
C	-	-	-	-	-	-	-	-	-	-	-	-
D	-	-	-	-	-	-	-	-	-	-	-	-
E	-	-	MB86-GND	3510359 R1	0.79	18.0	Thin Wall XLPE Primary Cable	WHITE	3375.0	-	X	-
F	-	-	MB86HA	3510299 R1	0.79	18.0	Thin Wall XLPE Primary Cable	LIGHT GREEN	4045.0	-	C	A02-1916

Name	Terminal Part Number	V-Min	Name	Wire Part Number	Wire CSA	Wire Spec	Wire Material description	Wire Color Description	Wire Length	End2 Terminal Part Number	End2 Pin Name	End2 Connect or
G	-	-	MB86JA	3510299 R1	0.79	18.0	Thin Wall XLPE Primary Cable	LIGHT GREEN	4045.0	-	D	A02-1916

Connector Name	A02-1919
Part Number	2005836C1
Instances	LT/RH/LoneStar - X15/A26 - Telematics (OMNIVISION MD):Diagram1 LT/RH/LoneStar - X15/A26 - Telematics (OMNIVISION W/ J1939 & PANIC BUTTON):Diagram1
Mates	MODU-OMNIVISION-2035-03-08A

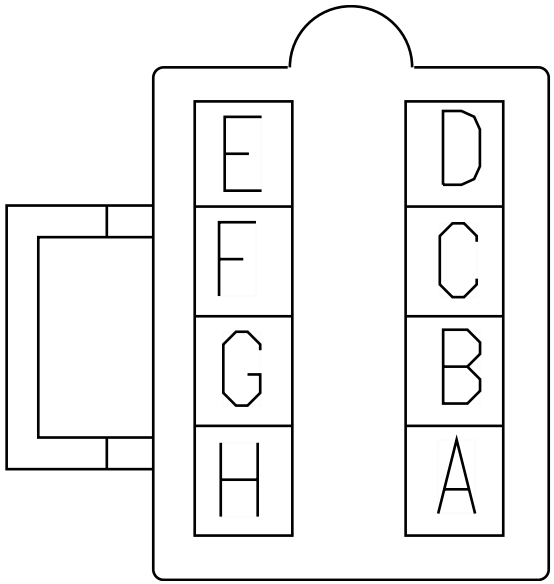

Name	Terminal Part Number	V-Min	Name	Wire Part Number	Wire CSA	Wire Spec	Wire Material description	Wire Color Description	Wire Length	End2 Terminal Part Number	End2 Pin Name	End2 Connect or
A	-	-	CT86RCD	3510299 R1	0.79	18.0	Thin Wall XLPE Primary Cable	LIGHT GREEN	3340.0	-	A	A02-1917
B	-	-	CT11-GMW	3510358 R1	0.53	20.0	Thin Wall XLPE Primary Cable	WHITE	2420.0	-	B5	A02-1500A
C	-	-	-	-	-	-	-	-	-	-	-	-
D	-	-	-	-	-	-	-	-	-	-	-	-
E	-	-	CT86-GND	3510359 R1	0.79	18.0	Thin Wall XLPE Primary Cable	WHITE	1095.0	-	X	-
F	-	-	CT86HA	3510299 R1	0.79	18.0	Thin Wall XLPE Primary Cable	LIGHT GREEN	2065.0	-	C	A02-1916

Name	Terminal Part Number	V-Min	Name	Wire Part Number	Wire CSA	Wire Spec	Wire Material description	Wire Color Description	Wire Length	End2 Terminal Part Number	End2 Pin Name	End2 Connector
G	-	-	CT86JA	3510299 R1	0.79	18.0	Thin Wall XLPE Primary Cable	LIGHT GREEN	2065.0	-	D	A02-1916

Connector Name	A02-1921
Part Number	587565C91
Instances	LT/RH/LoneStar - X15/A26 - Telematics QUALCOMM IMCT DAYCAB With PANIC BUTTON:Diagram1
Mates	SW-PANIC-2035-01-05A

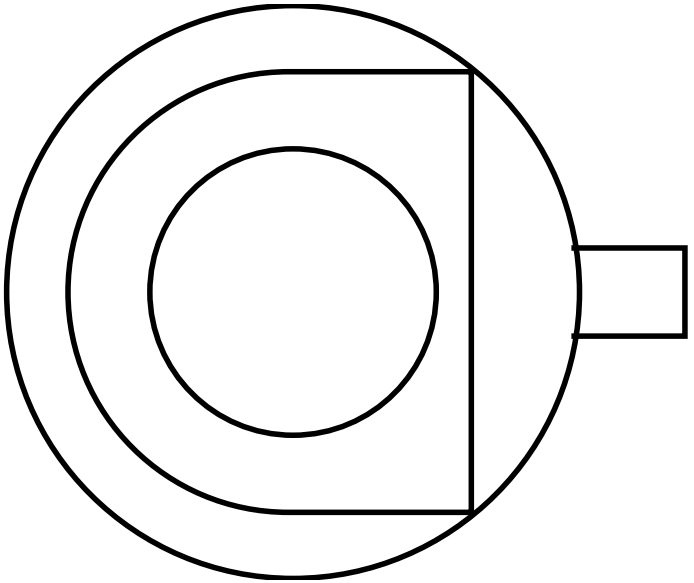

Name	Terminal Part Number	V-Min	Name	Wire Part Number	Wire CSA	Wire Spec	Wire Material description	Wire Color Description	Wire Length	End2 Terminal Part Number	End2 Pin Name	End2 Connect or
A	-	-	CN98J	3510293 R1	0.79	18.0	Thin Wall XLPE Primary Cable	BLACK	3390.0	-	4	A02-1111M

Connector Name	A02-1924
Part Number	1661260C1
Instances	LT/RH/LoneStar - X15/A26 - Telematics (OMNIVISION W/ J1939 & PANIC BUTTON):Diagram1 LT/RH/LoneStar - X15/A26 - Telematics (OMNIVISION W/ J1939 & PANIC BUTTON):Diagram2
Mates	SW-PANIC-2035-03-08A

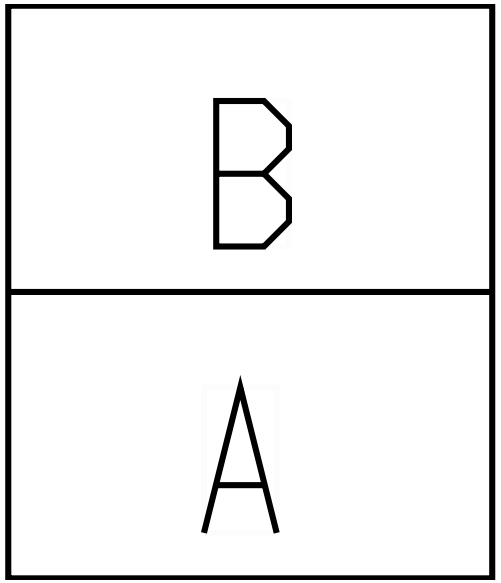

Name	Terminal Part Number	V-Min	Name	Wire Part Number	Wire CSA	Wire Spec	Wire Material description	Wire Color Description	Wire Length	End2 Terminal Part Number	End2 Pin Name	End2 Connect or
A	-	-	ZY98-GBE	3510359 R1	0.79	18.0	Thin Wall XLPE Primary Cable	WHITE	2785.0	-	X	-
B	-	-	ZY98J	3510293 R1	0.79	18.0	Thin Wall XLPE Primary Cable	BLACK	3390.0	-	4	A02-1111M

Connector Name	A02-1925
Part Number	587567C91
Instances	LT/RH/LoneStar - X15/A26 - Seats Climate Controlled (Drivers Heated Seat):Diagram1
Mates	SEAT-DRIVERS-2010-01-01A

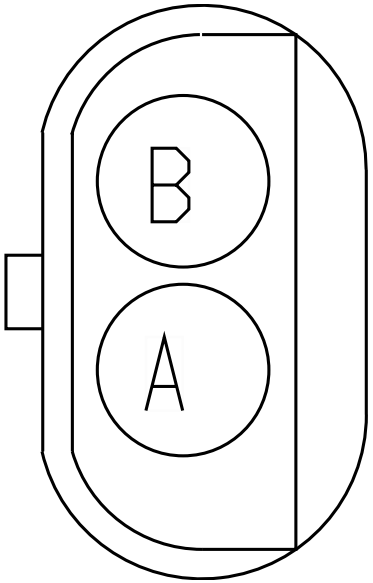

Name	Terminal Part Number	V-Min	Name	Wire Part Number	Wire CSA	Wire Spec	Wire Material description	Wire Color Description	Wire Length	End2 Terminal Part Number	End2 Pin Name	End2 Connect or
A	-	-	HC105-GAP	3510359 R1	0.79	18.0	Thin Wall XLPE Primary Cable	WHITE	3085.0	-	-	-
B	-	-	HC105	3510299 R1	0.79	18.0	Thin Wall XLPE Primary Cable	LIGHT GREEN	3950.0	-	-	-

Connector Name	A02-1926
Part Number	3544677C1
Instances	LT/RH/LoneStar - X15/A26 - Seats (RollTek) Driver and Passenger (Hard Wired):Diagram1 LT/RH/LoneStar - X15/A26 - Seats (RolTek) Drivers Seat Only (Hard Wired) - Leather:Diagram1 LT/RH/LoneStar - X15/A26 - Seats (RolTek) Drivers Seat Only (Hard Wired) - Mordura:Diagram1 LT/RH/LoneStar - X15/A26 - Seats (RolTek) Drivers Seat Only (Hard Wired) - Vinyl:Diagram1
Mates	DEV-DRIVER_SEAT_ROLTEK-01

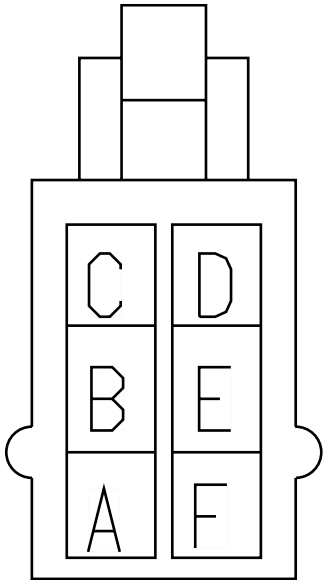

Name	Terminal Part Number	V-Min	Name	Wire Part Number	Wire CSA	Wire Spec	Wire Material description	Wire Color Description	Wire Length	End2 Terminal Part Number	End2 Pin Name	End2 Connect or
A	-	-	5E13BA	3510323 R1	0.79	18.0	Thin Wall XLPE Primary Cable	PINK	3115.0	-	X	-
B	-	-	5E11-GAR	3510359 R1	0.79	18.0	Thin Wall XLPE Primary Cable	WHITE	2580.0	-	-	-
C	-	-	-	-	-	-	-	-	-	-	-	-
D	-	-	-	-	-	-	-	-	-	-	-	-
E	-	-	5E179	3510359 R1	0.79	18.0	Thin Wall XLPE Primary Cable	WHITE	2720.0	-	1	-

Connector Name	A02-1930
Part Number	3572899C1
Instances	LT/RH/LoneStar - X15/A26 - DLB - Remote Power Module (2 RPM w/ Switch Packs):Diagram1
Mates	DEV-RPM-01

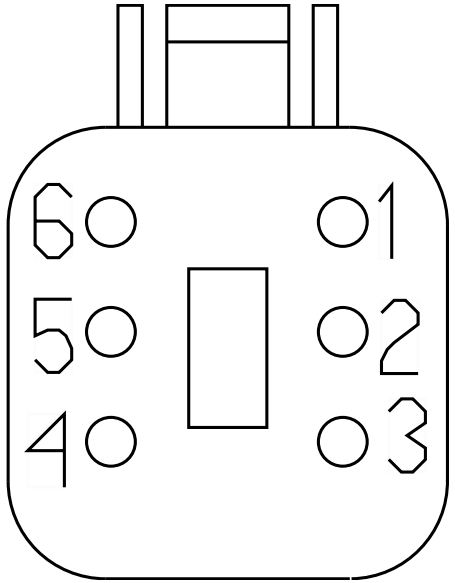

Name	Terminal Part Number	V-Min	Name	Wire Part Number	Wire CSA	Wire Spec	Wire Material description	Wire Color Description	Wire Length	End2 Terminal Part Number	End2 Pin Name	End2 Connect or
2	-	-	EW11-GR	3510361 R1	1.91	14.0	Thin Wall XLPE Primary Cable	WHITE	3490.0	-	-	-
3	-	-	-	-	-	-	-	-	-	-	-	-
4	-	-	-	-	-	-	-	-	-	-	-	-
6	-	-	EW20	2643678 R1	1.16	16.0	Std. Wall XLPE Primary Cable	LIGHT GREEN	5725.0	-	-	-

Connector Name	A02-1931A
Part Number	4110679C1
Instances	LT/RH/LoneStar - X15/A26 - Telematics:OnCommand Telematics Module:Diagram1
Mates	MODU-XIRGO_BOX-2015-01-01A

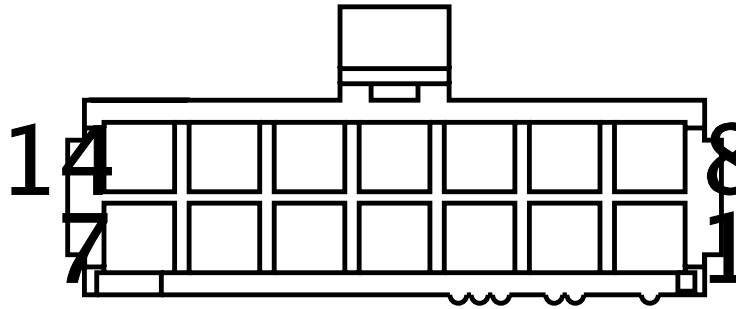

Name	Terminal Part Number	V-Min	Name	Wire Part Number	Wire CSA	Wire Spec	Wire Material description	Wire Color Description	Wire Length	End2 Terminal Part Number	End2 Pin Name	End2 Connector
1	-	-	-	-	-	-	-	-	-	-	-	-
8	-	-	-	-	-	-	-	-	-	-	-	-
13	-	-	XF11-GX	3510358 R1	0.53	20.0	Thin Wall XLPE Primary Cable	WHITE	425.0	-	-	-
14	-	-	XF14L	3510364 R1	0.53	20.0	Thin Wall XLPE Primary Cable	RED	1540.0	-	-	-

Connector Name	A02-1934M
Part Number	3554818C1
Instances	LT/RH/LoneStar - X15/A26 - Telematics (PEOPLE NET DAYCAB):Diagram1
Mates	MODU-PEOPLENET_CONN-2035-0 5-05A

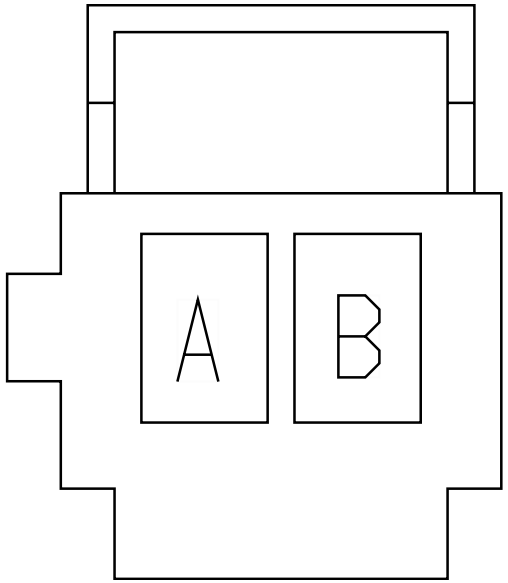

Name	Terminal Part Number	V-Min	Name	Wire Part Number	Wire CSA	Wire Spec	Wire Material description	Wire Color Description	Wire Length	End2 Terminal Part Number	End2 Pin Name	End2 Connect or
A	-	-	RH11-GBE	3510361 R1	1.91	14.0	Thin Wall XLPE Primary Cable	WHITE	510.0	-	-	-
B	-	-	RH14EA	3510367 R1	1.91	14.0	Thin Wall XLPE Primary Cable	RED	2745.0	-	-	-

Connector Name	A02-1940
Part Number	BLUNT_SL_VC
Instances	LT/RH/LoneStar - X15/A26 - Dual Aux Switch:Diagram1-Combination1 LT/RH/LoneStar - X15/A26 - Single Aux Switch:Diagram1 LT/RH/LoneStar - X15/A26 - Single Aux Switch:Diagram2
Mates	BLNT-OWNER_ACC_SW_1-2055-0 1-01A

Name	Terminal Part Number	V-Min	Name	Wire Part Number	Wire CSA	Wire Spec	Wire Material description	Wire Color Description	Wire Length	End2 Terminal Part Number	End2 Pin Name	End2 Connect or
A	-	-	GF14SAD	3510302 R1	3.01	12.0	Thin Wall XLPE Primary Cable	LIGHT GREEN	245.0	-	R2-87	1013
A	-	-	GB14SAG	3510302 R1	3.01	12.0	Thin Wall XLPE Primary Cable	LIGHT GREEN	245.0	-	R2-87	1013

Connector Name	A02-1941
Part Number	BLUNT_SL_VC
Instances	LT/RH/LoneStar - X15/A26 - Dual Aux Switch:Diagram1-Combination1
Mates	BLNT-OWNER_ACC_SW_2-20550- 2-01A

Name	Terminal Part Number	V-Min	Name	Wire Part Number	Wire CSA	Wire Spec	Wire Material description	Wire Color Description	Wire Length	End2 Terminal Part Number	End2 Pin Name	End2 Connect or
A	-	-	CE14SBD	3510302 R1	3.01	12.0	Thin Wall XLPE Primary Cable	LIGHT GREEN	320.0	-	R5-87	1013

Connector Name	A02-2TB1
Part Number	3722128C1
Instances	LT/RH/LoneStar - X15/A26 - Telematics (TRIPMASTER DAYCAB):Diagram1
Mates	MODU-TRIPMASTER-2035-10-04A

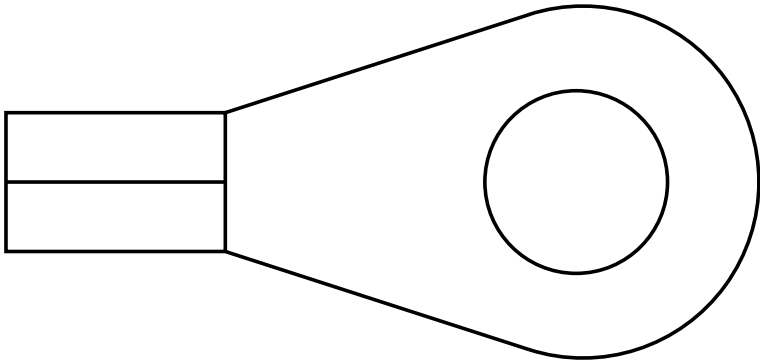

Name	Terminal Part Number	V-Min	Name	Wire Part Number	Wire CSA	Wire Spec	Wire Material description	Wire Color Description	Wire Length	End2 Terminal Part Number	End2 Pin Name	End2 Connect or
A	-	-	CF11-GSD	3510359 R1	0.79	18.0	Thin Wall XLPE Primary Cable	WHITE	2335.0	-	X	-

Connector Name	A02-2TB2
Part Number	3722128C1
Instances	LT/RH/LoneStar - X15/A26 - Telematics (TRIPMASTER DAYCAB):Diagram1
Mates	MODU-TRIPMASTER-2035-10-04A

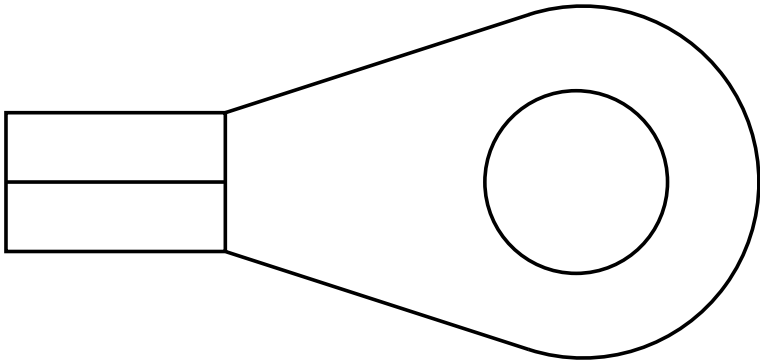

Name	Terminal Part Number	V-Min	Name	Wire Part Number	Wire CSA	Wire Spec	Wire Material description	Wire Color Description	Wire Length	End2 Terminal Part Number	End2 Pin Name	End2 Connect or
A	-	-	CF50S	3510335 R1	0.79	18.0	Thin Wall XLPE Primary Cable	YELLOW 2	4605.0	-	R1-30	1014

Connector Name	A02-2223
Part Number	1669972C1
Instances	LT/RH/LoneStar - X15/A26 - (Rand Mcnallly) GPS Display:Diagram1
Mates	MODU-GPS-DISP-2034-02-01A

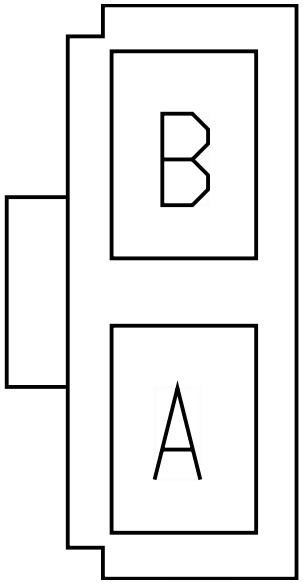

Name	Terminal Part Number	V-Min	Name	Wire Part Number	Wire CSA	Wire Spec	Wire Material description	Wire Color Description	Wire Length	End2 Terminal Part Number	End2 Pin Name	End2 Connect or
A	-	-	BH12A	3510341 R1	0.79	18.0	Thin Wall XLPE Primary Cable	LIGHT BLUE	1840.0	-	-	-
B	-	-	BH11-GAL	3510359 R1	0.79	18.0	Thin Wall XLPE Primary Cable	WHITE	1115.0	-	-	-

Connector Name	A02-2224
Part Number	3833917C1
Instances	LT/RH/LoneStar - X15/A26 - Vehicle Information Display (VID-W/BT):Diagram1 LT/RH/LoneStar - X15/A26 - Vehicle Information Display (VID-W/O BT):Diagram1
Mates	MODU-VID-2025-01-01A

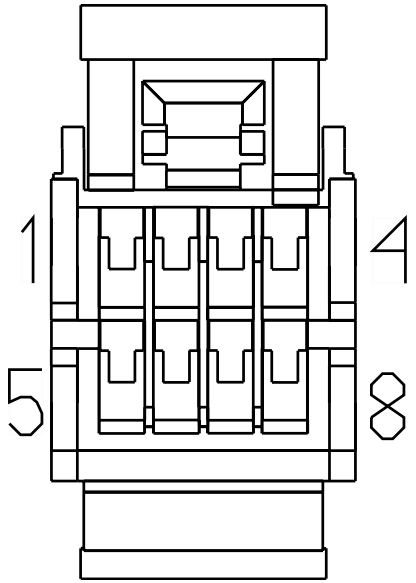

Name	Terminal Part Number	V-Min	Name	Wire Part Number	Wire CSA	Wire Spec	Wire Material description	Wire Color Description	Wire Length	End2 Terminal Part Number	End2 Pin Name	End2 Connect or
1	-	-	RF14AA	3510322 R1	0.53	20.0	Thin Wall XLPE Primary Cable	PINK	1740.0	-	-	-
2	-	-	RE10AA	3510358 R1	0.53	20.0	Thin Wall XLPE Primary Cable	WHITE	150.0	-	X	-
3	-	-	RC12B	3510340 R1	0.53	20.0	Thin Wall XLPE Primary Cable	LIGHT BLUE	1740.0	-	-	-
5	-	-	RE10AB	3510358 R1	0.53	20.0	Thin Wall XLPE Primary Cable	WHITE	150.0	-	X	-

Connector Name	A02-2225
Part Number	3834322C1
Instances	LT/RH/LoneStar - X15/A26 - Vehicle Information Display (VID-W/BT):Diagram1 LT/RH/LoneStar - X15/A26 - Vehicle Information Display (VID-W/O BT):Diagram1
Mates	MODU-VID-2025-01-01A

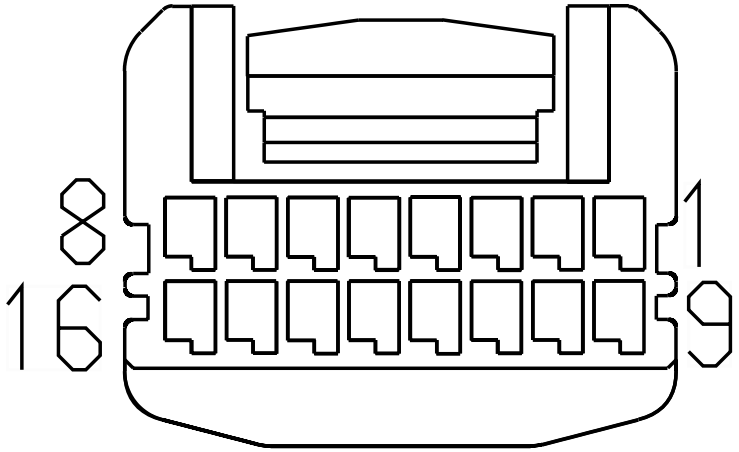

Name	Terminal Part Number	V-Min	Name	Wire Part Number	Wire CSA	Wire Spec	Wire Material description	Wire Color Description	Wire Length	End2 Terminal Part Number	End2 Pin Name	End2 Connector
1	-	-	RE9A	3510310 R1	0.53	20.0	Thin Wall XLPE Primary Cable	GREY	530.0	-	-	-
8	-	-	-	-	-	-	-	-	-	-	-	-
10	-	-	RE10AC	3510358 R1	0.53	20.0	Thin Wall XLPE Primary Cable	WHITE	150.0	-	X	-
11	-	-	RF86AA	3510298 R1	0.53	20.0	Thin Wall XLPE Primary Cable	LIGHT GREEN	710.0	-	7	A02-1301-MIC
12	-	-	RF86AB	3510298 R1	0.53	20.0	Thin Wall XLPE Primary Cable	LIGHT GREEN	710.0	-	10	A02-1301-MIC

Name	Terminal Part Number	V-Min	Name	Wire Part Number	Wire CSA	Wire Spec	Wire Material description	Wire Color Description	Wire Length	End2 Terminal Part Number	End2 Pin Name	End2 Connect or
13	-	-	RF86AC	3510298 R1	0.53	20.0	Thin Wall XLPE Primary Cable	LIGHT GREEN	710.0	-	9	A02-130 1-MIC
14	-	-	RF86AD	3510298 R1	0.53	20.0	Thin Wall XLPE Primary Cable	LIGHT GREEN	710.0	-	11	A02-130 1-MIC
15	-	-	RE10AD	3510358 R1	0.53	20.0	Thin Wall XLPE Primary Cable	WHITE	150.0	-	X	-
16	-	-	-	-	-	-	-	-	-	-	-	-

Connector Name	A02-4TB1
Part Number	3722128C1
Instances	LT/RH/LoneStar - X15/A26 - Telematics (TRIPMASTER DAYCAB):Diagram1
Mates	MODU-TRIPMASTER-2035-10-04A

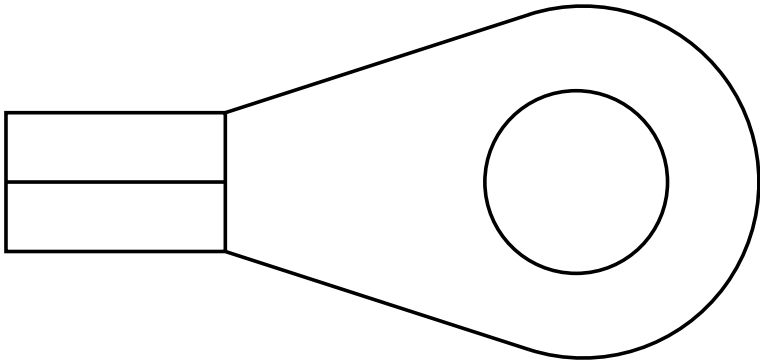

Name	Terminal Part Number	V-Min	Name	Wire Part Number	Wire CSA	Wire Spec	Wire Material description	Wire Color Description	Wire Length	End2 Terminal Part Number	End2 Pin Name	End2 Connect or
A	-	-	CF13SD	3510323 R1	0.79	18.0	Thin Wall XLPE Primary Cable	PINK	4125.0	-	X	-

Connector Name	A02-4500
Part Number	1661375C2
Instances	LT/RH - X15/A26 - Windshield Wipers Cruise Disable & Park Brake W/Wipers ON:Diagram1 LT/RH - X15/A26 - Windshield Wipers Cruise Disable W/Wipers ON:Diagram1 LT/RH/LoneStar - X15/A26 - Windshield Wipers Park Brake W/ Wipers ON:Diagram1 LT/RH/LoneStar - X15/A26 - Windshield Wipers Standard:Diagram1
Mates	MOT-WIPER-1031-03-01A

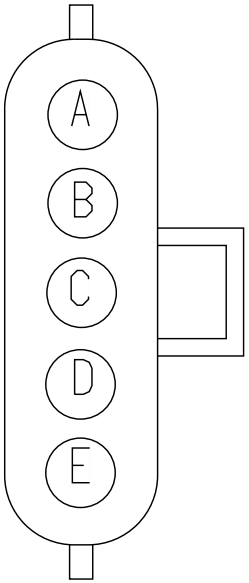

Name	Terminal Part Number	V-Min	Name	Wire Part Number	Wire CSA	Wire Spec	Wire Material description	Wire Color Description	Wire Length	End2 Terminal Part Number	End2 Pin Name	End2 Connect or
A	-	-	AA82DJ	3510312 R1	1.16	16.0	Thin Wall XLPE Primary Cable	GREY	2080.0	-	74	1703F
B	-	-	AA82JJ	3510312 R1	1.16	16.0	Thin Wall XLPE Primary Cable	GREY	2080.0	-	72	1703F
C	-	-	AA82-GJ	3510360 R1	1.16	16.0	Thin Wall XLPE Primary Cable	WHITE	2080.0	-	8	1703F
D	-	-	YG82KJ	3510312 R1	1.16	16.0	Thin Wall XLPE Primary Cable	GREY	2080.0	-	69	1703F

Name	Terminal Part Number	V-Min	Name	Wire Part Number	Wire CSA	Wire Spec	Wire Material description	Wire Color Description	Wire Length	End2 Terminal Part Number	End2 Pin Name	End2 Connect or
E	-	-	AA82LJ	3510312 R1	1.16	16.0	Thin Wall XLPE Primary Cable	GREY	2080.0	-	70	1703F

Connector Name	A02-5759F
Part Number	587567C91
Instances	LT/RH/LoneStar - X15/A26 - Mobile Communications Sensor Wiring Effects for Trailer TRAC:Diagram1
Mates	Trailer Tracs-2035-13-01A

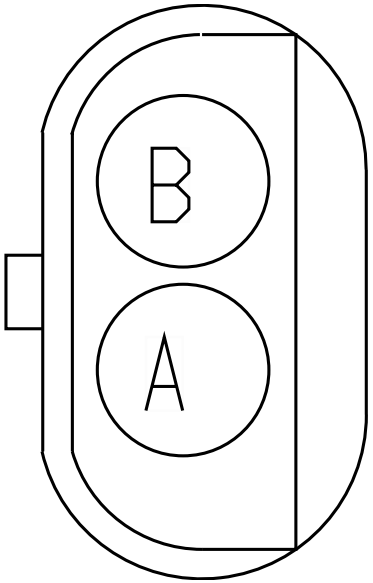

Name	Terminal Part Number	V-Min	Name	Wire Part Number	Wire CSA	Wire Spec	Wire Material description	Wire Color Description	Wire Length	End2 Terminal Part Number	End2 Pin Name	End2 Connect or
A	-	-	HG94TT	3510311 R1	0.79	18.0	Thin Wall XLPE Primary Cable	GREY	4370.0	-	7	1017

Connector Name	A02-6202
Part Number	3590299C1
Instances	LT/RH A26 - A26 - Heating Ventilation & Air Conditioning (HVAC) Manual:Diagram1 - HVAC - Option1 LT/RH A26 - A26 - Heating Ventilation & Air Conditioning (HVAC) Manual:Diagram2 - HVAC - Option2 LT/RH A26 - Heating Ventilation & Air Conditioning (HVAC) Auto Temp Control:Diagram1 - HVAC - Option1 LT/RH A26 - Heating Ventilation & Air Conditioning (HVAC) Auto Temp Control:Diagram2 - HVAC - Option2 LT/RH/LoneStar X15 - Heating Ventilation & Air Conditioning (HVAC) Auto Temp Control:Diagram1 - HVAC LT/RH/LoneStar X15 - Heating Ventilation & Air Conditioning (HVAC) Manual:Diagram1 - HVAC
Mates	DEV-LOW_PRESSURE_SWITCH-01

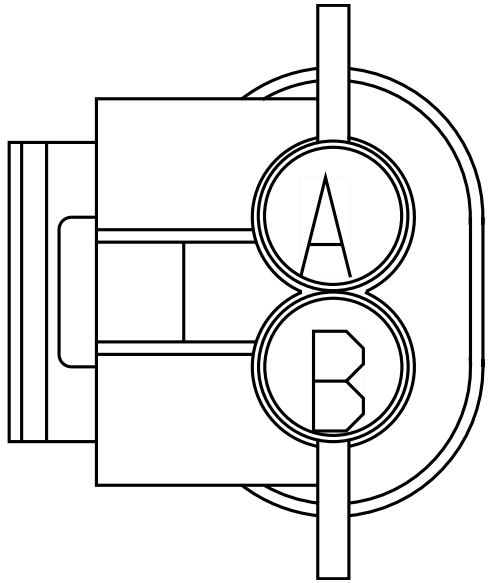

Name	Terminal Part Number	V-Min	Name	Wire Part Number	Wire CSA	Wire Spec	Wire Material description	Wire Color Description	Wire Length	End2 Terminal Part Number	End2 Pin Name	End2 Connect or
A	-	-	AA9AE	3510311 R1	0.79	18.0	Thin Wall XLPE Primary Cable	GREY	1300.0	-	X	-
B	-	-	AA74J	3510299 R1	0.79	18.0	Thin Wall XLPE Primary Cable	LIGHT GREEN	1625.0	-	17	1703F

Connector Name A02-8051
Part Number 1661778C1
Instances LT/RH - X15/A26 - Skirt Light Customer Supplied:Diagram1
Mates LT-CS_RS_Skirt-1040-01-02

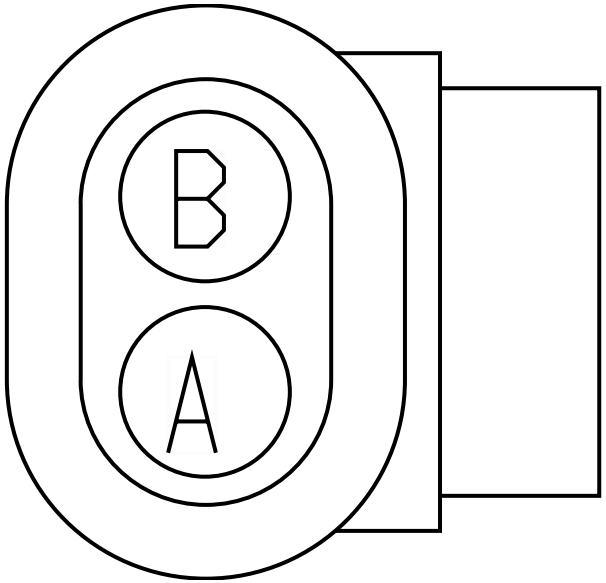

Name	Terminal Part Number	V-Min	Name	Wire Part Number	Wire CSA	Wire Spec	Wire Material description	Wire Color Description	Wire Length	End2 Terminal Part Number	End2 Pin Name	End2 Connect or
A	-	-	DY54XAJ	3510306 R1	1.16	16.0	Thin Wall XLPE Primary Cable	BROWN	325.0	-	76	1703F
B	-	-	DY54-GX AJ	3510360 R1	1.16	16.0	Thin Wall XLPE Primary Cable	WHITE	325.0	-	12	1703F

Connector Name	B01-1802
Part Number	3608496C1
Instances	LoneStar - X15 - City Horn W/ 10PIN CLK W/RKA:Diagram1-Combination1 LoneStar - X15 - City Horn W/ 10PIN CLK W/O RKA:Diagram1-Combination1 LoneStar - X15 - Headlights Halogen W/INT N/LOWW:Diagram1 LoneStar - X15 - Headlights Halogen W/INT W/ LOWW:Diagram1 LT/RH - X15/A26 - 10 PIN ClockSpring:Diagram1 LT/RH - X15/A26 - City Horn W/ 10PIN CLK W/RKA:Diagram1-Combination1 LT/RH - X15/A26 - City Horn W/ 10PIN CLK W/O RKA:Diagram1-Combination1 LT/RH - X15/A26 - Radio W/Steering Wheel Pod N/ Remote:Diagram1 LT/RH/LoneStar - X15/A26 - Adjustable Engine Speed Control (PTO) 10-PIN ClockSpring:Diagram1 LT/RH/LoneStar - X15/A26 - Engine Idle Increment/Decrement (Steering Wheel Switch - 10 Pin):Diagram1 LT/RH/LoneStar - X15/A26 - MARKER/PARK LIGHTS - W/ Marker Interrupt 10pin CLCKSPRING:Diagram1 LT/RH/LoneStar - X15/A26 - Radio (Bluetooth) W/Steering Wheel Pod N/ Remote W/MIC:Diagram1 LT/RH/LoneStar - X15/A26 - Radio W/Steering Wheel Pod W/ Remote:Diagram1 LT/RH/LoneStar - X15/A26 - Radio(Bluetooth) W/Steering Wheel W/Remote W/MIC:Diagram1 RH - X15/A26 - Headlights Halogen W/INT N/LOWW:Diagram1 RH - X15/A26 - Headlights Halogen W/INT W/LOWW:Diagram1 RH - X15/A26 - Headlights LED W/INT N/LOWW LT:Diagram1 RH - X15/A26 - Headlights LED W/INT W/LOWW LT:Diagram1
Mates	DEV-10PIN_CLKSPRING-1005-0 1-03

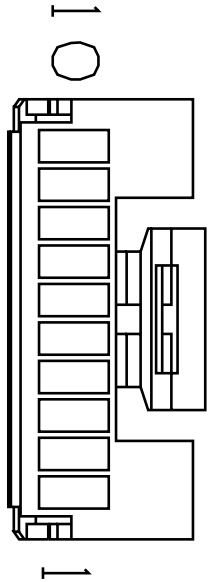

Name	Terminal Part Number	V-Min	Name	Wire Part Number	Wire CSA	Wire Spec	Wire Material description	Wire Color Description	Wire Length	End2 Terminal Part Number	End2 Pin Name	End2 Connect or
1	-	-	BN97	3510310 R1	0.53	20.0	Thin Wall XLPE Primary Cable	GREY	1125.0	-	B12	1800F

Name	Terminal Part Number	V-Min	Name	Wire Part Number	Wire CSA	Wire Spec	Wire Material description	Wire Color Description	Wire Length	End2 Terminal Part Number	End2 Pin Name	End2 Connector
2	-	-	BP100	3510310 R1	0.53	20.0	Thin Wall XLPE Primary Cable	GREY	1125.0	-	B11	1800F
2	-	-	BH100	3510310 R1	0.53	20.0	Thin Wall XLPE Primary Cable	GREY	1125.0	-	B11	1800F
3	-	-	BP85A	3510310 R1	0.53	20.0	Thin Wall XLPE Primary Cable	GREY	1125.0	-	B10	1800F
4	-	-	BH9C	3510311 R1	0.79	18.0	Thin Wall XLPE Primary Cable	GREY	875.0	-	X	-
4	-	-	BP9C	3510311 R1	0.79	18.0	Thin Wall XLPE Primary Cable	GREY	875.0	-	X	-
5	-	-	BP62DD	3510352 R1	0.53	20.0	Thin Wall XLPE Primary Cable	DARK BLUE	1125.0	-	D3	1800F
6	-	-	BH62-GDD	3510359 R1	0.79	18.0	Thin Wall XLPE Primary Cable	WHITE	575.0	-	X	-

Connector Name	B01-1803
Part Number	1678137C1
Instances	LT/RH/LoneStar - X15/A26 - Compressed Air Supply (Primary and Secondary Gauge):Diagram1
Mates	SNSR-AirPress1-3001-02A

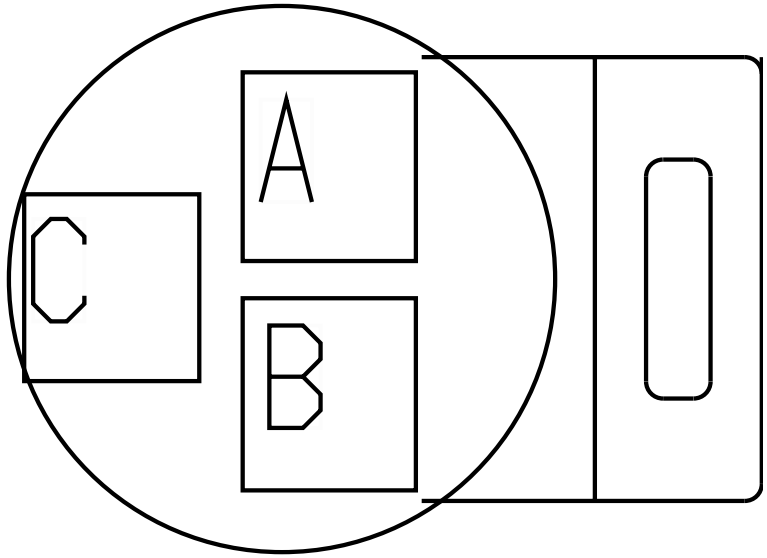

Name	Terminal Part Number	V-Min	Name	Wire Part Number	Wire CSA	Wire Spec	Wire Material description	Wire Color Description	Wire Length	End2 Terminal Part Number	End2 Pin Name	End2 Connector
1	-	-	BN9E	2643673 R1	0.79	18.0	Std. Wall XLPE Primary Cable	GREY	200.0	-	X	-
2	-	-	BA6A	2643673 R1	0.79	18.0	Std. Wall XLPE Primary Cable	GREY	100.0	-	X	-
3	-	-	BA40	2643673 R1	0.79	18.0	Std. Wall XLPE Primary Cable	GREY	650.0	-	C12	1800F

Connector Name	B01-1804
Part Number	1678137C1
Instances	LT/RH/LoneStar - X15/A26 - Compressed Air Supply (Primary and Secondary Gauge):Diagram1
Mates	SNSR-AirPress2-3001-02A

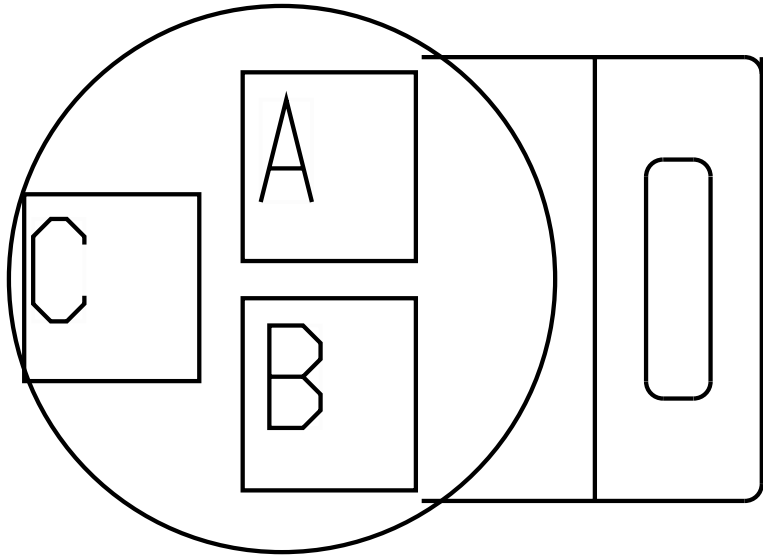

Name	Terminal Part Number	V-Min	Name	Wire Part Number	Wire CSA	Wire Spec	Wire Material description	Wire Color Description	Wire Length	End2 Terminal Part Number	End2 Pin Name	End2 Connector
A	-	-	BM9F	2643673 R1	0.79	18.0	Std. Wall XLPE Primary Cable	GREY	350.0	-	X	-
B	-	-	BA6B	2643673 R1	0.79	18.0	Std. Wall XLPE Primary Cable	GREY	250.0	-	X	-
C	-	-	BA40A	2643673 R1	0.79	18.0	Std. Wall XLPE Primary Cable	GREY	800.0	-	B2	1800F

Connector Name	B01-1805
Part Number	1678137C1
Instances	LT/RH/LoneStar - X15/A26 - Brake Pressure (Auxiliary Gauge):Diagram1 LT/RH/LoneStar - X15/A26 - Brake Pressure (Virtual Gauge):Diagram1
Mates	SNSR-BRAKE-3027-01-02A

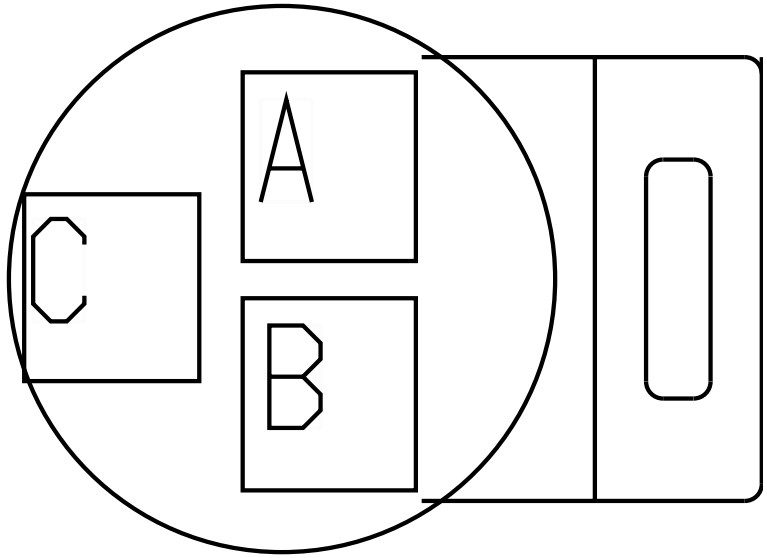

Name	Terminal Part Number	V-Min	Name	Wire Part Number	Wire CSA	Wire Spec	Wire Material description	Wire Color Description	Wire Length	End2 Terminal Part Number	End2 Pin Name	End2 Connect or
A	-	-	BN9H	2643673 R1	0.79	18.0	Std. Wall XLPE Primary Cable	GREY	525.0	-	X	-
B	-	-	BA6C	2643673 R1	0.79	18.0	Std. Wall XLPE Primary Cable	GREY	625.0	-	X	-
C	-	-	BA40B	2643673 R1	0.79	18.0	Std. Wall XLPE Primary Cable	GREY	775.0	-	C2	1800F

Connector Name B01-1806
Part Number 1661777C1
Instances LT/RH/LoneStar - X15/A26 - Brake Switch:Diagram1
Mates SW-BRAKE_SWITCH-3028-01-02A

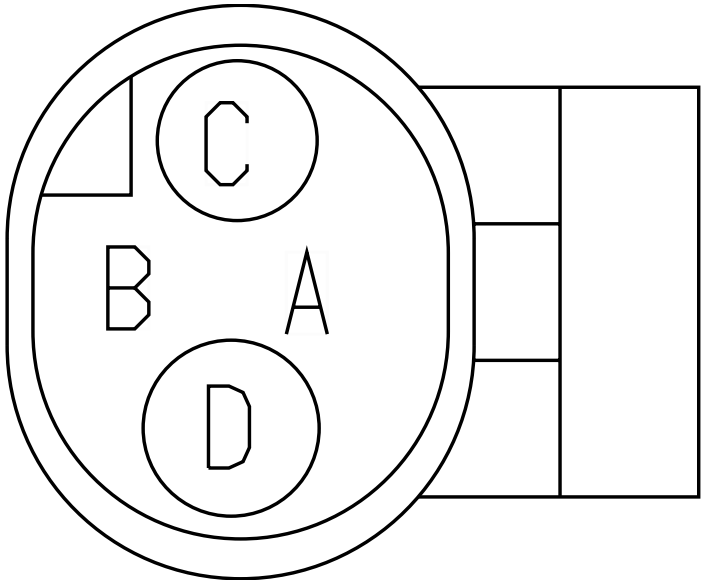

Name	Terminal Part Number	V-Min	Name	Wire Part Number	Wire CSA	Wire Spec	Wire Material description	Wire Color Description	Wire Length	End2 Terminal Part Number	End2 Pin Name	End2 Connect or
C	-	-	BA70	2643675 R1	0.79	18.0	Std. Wall XLPE Primary Cable	ORANGE	775.0	-	B9	1800F
D	-	-	BN9K	2643673 R1	0.79	18.0	Std. Wall XLPE Primary Cable	GREY	525.0	-	X	-

Connector Name B01-1807

Part Number 3547870C1

Instances LoneStar - X15 - City Horn W/ 4PIN CLK W/O RKA:Diagram1-Combination1
LoneStar - X15 - City Horn W/ 4PIN CLK W/RKA:Diagram1-Combination1
LT/RH - X15/A26 - City Horn W/ 4PIN CLK W/O RKA:Diagram1-Combination1
LT/RH - X15/A26 - City Horn W/ 4PIN CLK W/RKA:Diagram1-Combination1
LT/RH/LoneStar - X15/A26 - Adjustable Engine Speed Control (PTO) 4-pin Clockspring:Diagram1
LT/RH/LoneStar - X15/A26 - Engine Idle Increment/Decrement (Steering Wheel Switch - 4 Pin):Diagram1
LT/RH/LoneStar - X15/A26 - PARK LIGHTS - W/Marker Interrupt 4 pin clockspring:Diagram1
LT/RH/LoneStar - X15/A26 - Vehicle Speed Control (Cruise Control) 4 - PIN:Diagram1

Mates DEV-STRNWHL_HEAVY_4PIN_100 5-01-04A

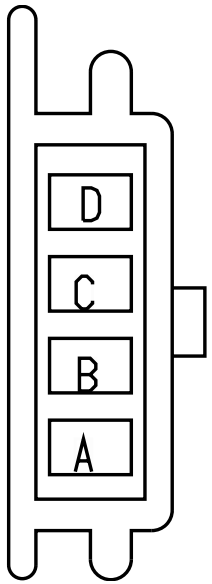

Name	Terminal Part Number	V-Min	Name	Wire Part Number	Wire CSA	Wire Spec	Wire Material description	Wire Color Description	Wire Length	End2 Terminal Part Number	End2 Pin Name	End2 Connector
A	-	-	BR97	3510310 R1	0.53	20.0	Thin Wall XLPE Primary Cable	GREY	1125.0	-	B12	1800F
B	-	-	BJ85A	3510310 R1	0.53	20.0	Thin Wall XLPE Primary Cable	GREY	1125.0	-	B10	1800F
C	-	-	BR62DD	3510352 R1	0.53	20.0	Thin Wall XLPE Primary Cable	DARK BLUE	1125.0	-	D3	1800F
D	-	-	BJ9C	3510311 R1	0.79	18.0	Thin Wall XLPE Primary Cable	GREY	875.0	-	X	-

Name	Terminal Part Number	V-Min	Name	Wire Part Number	Wire CSA	Wire Spec	Wire Material description	Wire Color Description	Wire Length	End2 Terminal Part Number	End2 Pin Name	End2 Connect or
D	-	-	BR9C	3510311 R1	0.79	18.0	Thin Wall XLPE Primary Cable	GREY	875.0	-	X	-

Connector Name	B01-1808
Part Number	1661777C1
Instances	LT/RH - X15/A26 - Park Brake Control (Monitoring) (W/Vehicle Speed):Diagram1 LT/RH - X15/A26 - Park Brake Control (Monitoring)(GEN IV BCM):Diagram1 LT/RH/LoneStar - X15/A26 - Park Brake Controls (Non Lever Park Brake):Diagram1 LT/RH/LoneStar - X15/A26 - Park Brake Controls (with Alarm IGN ON/OFF):Diagram1
Mates	SW-PARK BRAKE-3022-01-01A

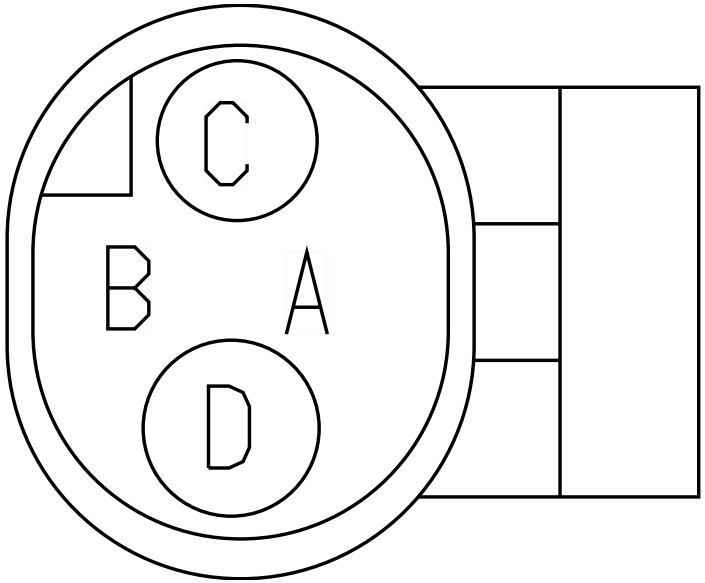

Name	Terminal Part Number	V-Min	Name	Wire Part Number	Wire CSA	Wire Spec	Wire Material description	Wire Color Description	Wire Length	End2 Terminal Part Number	End2 Pin Name	End2 Connect or
C	-	-	BA44	2643673 R1	0.79	18.0	Std. Wall XLPE Primary Cable	GREY	725.0	-	B7	1800F
D	-	-	BM9J	2643673 R1	0.79	18.0	Std. Wall XLPE Primary Cable	GREY	275.0	-	X	-

Connector Name	B01-1809
Part Number	1673744C1
Instances	LT/RH/LoneStar - A26 - Vehicle Acceleration (w/ Two PWR Two GND & Two STS):Diagram1 LT/RH/LoneStar - X15 - Vehicle Acceleration (w/ Two PWR Two GND & Two STS):Diagram1
Mates	MODU-ACC_PEDAL-5075-01-01A

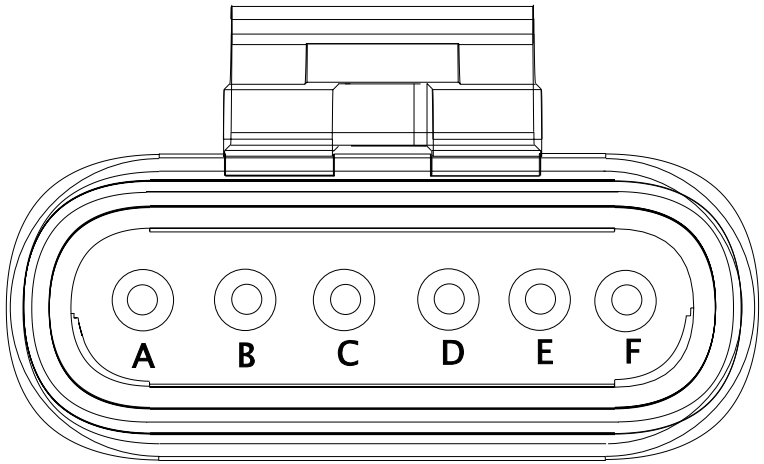

Name	Terminal Part Number	V-Min	Name	Wire Part Number	Wire CSA	Wire Spec	Wire Material description	Wire Color Description	Wire Length	End2 Terminal Part Number	End2 Pin Name	End2 Connect or
A	-	-	BD99B	4092319 R1	0.79	18.0	Std. Wall XLPE Primary Cable	VIOLET/ WHITE	600.0	-	C4	1800F
B	-	-	BD97B	2643718 R1	0.79	18.0	Std. Wall XLPE Primary Cable	VIOLET	600.0	-	B4	1800F
C	-	-	BD97C	4092323 R1	0.79	18.0	Std. Wall XLPE Primary Cable	VIOLET/ BLACK	600.0	-	C5	1800F
D	-	-	BD99D	4092319 R1	0.79	18.0	Std. Wall XLPE Primary Cable	VIOLET/ WHITE	600.0	-	B5	1800F

Name	Terminal Part Number	V-Min	Name	Wire Part Number	Wire CSA	Wire Spec	Wire Material description	Wire Color Description	Wire Length	End2 Terminal Part Number	End2 Pin Name	End2 Connect or
E	-	-	BD97N	2643718 R1	0.79	18.0	Std. Wall XLPE Primary Cable	VIOLET	600.0	-	B6	1800F
F	-	-	BD97M	4092323 R1	0.79	18.0	Std. Wall XLPE Primary Cable	VIOLET/ BLACK	600.0	-	C6	1800F

Connector Name	B01-1811
Part Number	3540757C1
Instances	LT/RH - A26 - Starter Interlock (BCM HSD controlled W/ Clutch Switch W/ Auto Start Stop):Diagram1 LT/RH - A26 - Starter Interlock (BCM HSD controlled W/ Clutch Switch W/ Auto Start Stop):Diagram2 LT/RH/LoneStar - X15 - Starter Interlock (BCM HSD controlled W/ Clutch Switch W/ Auto Start Stop):Diagram1 LT/RH/LoneStar - X15/A26 - Clutch Monitoring (High and Low Switch to BCM):Diagram1 LT/RH/LoneStar - X15/A26 - Starter Interlock (BCM HSD controlled W/ Clutch Switch N/ Auto Start Stop):Diagram1
Mates	SW-CLUTCH-5050-02-01A

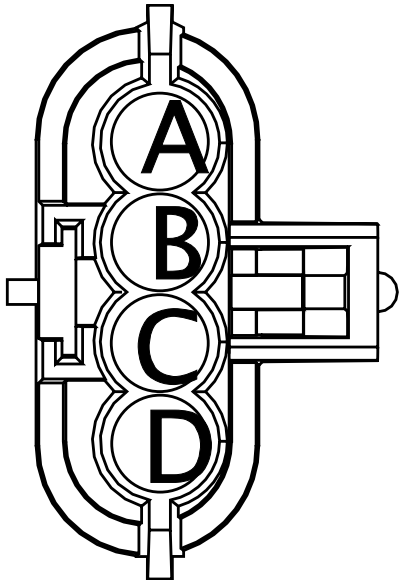

Name	Terminal Part Number	V-Min	Name	Wire Part Number	Wire CSA	Wire Spec	Wire Material description	Wire Color Description	Wire Length	End2 Terminal Part Number	End2 Pin Name	End2 Connect or
A	-	-	BP17A	2643794 R1	0.79	18.0	Std. Wall XLPE Primary Cable	PINK	550.0	-	D7	1800F
B	-	-	BP17AA	2643794 R1	0.79	18.0	Std. Wall XLPE Primary Cable	PINK	550.0	-	D8	1800F
C	-	-	BP97A	2643718 R1	0.79	18.0	Std. Wall XLPE Primary Cable	VIOLET	550.0	-	C11	1800F
D	-	-	BP9M	2643673 R1	0.79	18.0	Std. Wall XLPE Primary Cable	GREY	300.0	-	X	-

Connector Name	B01-1812
Part Number	1661777C1
Instances	LT/RH/LoneStar - X15/A26 - Telematics (TRIPMASTER DAYCAB):Diagram1 LT/RH/LoneStar - X15/A26 - Telematics (TRIPMASTER SLEEPER):Diagram1
Mates	SW-BRAKE-2035-10-04A

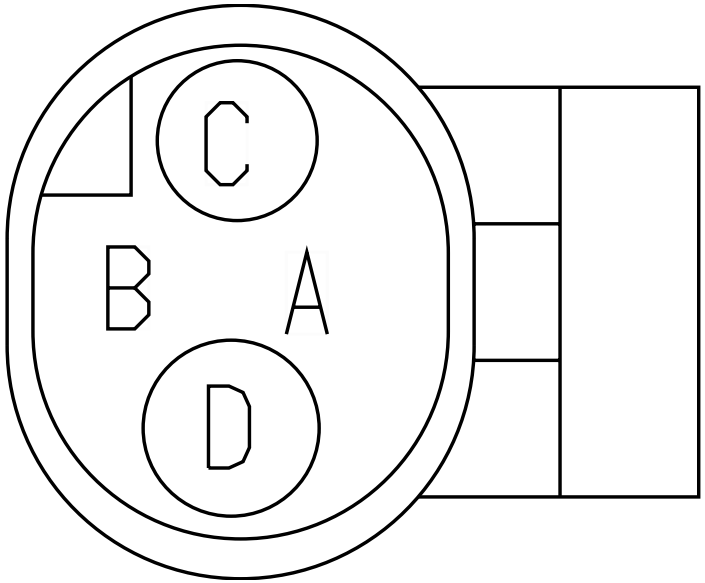

Name	Terminal Part Number	V-Min	Name	Wire Part Number	Wire CSA	Wire Spec	Wire Material description	Wire Color Description	Wire Length	End2 Terminal Part Number	End2 Pin Name	End2 Connect or
C	-	-	BB70E	2643675 R1	0.79	18.0	Std. Wall XLPE Primary Cable	ORANGE	775.0	-	D1	1800F
D	-	-	BB70D	2643673 R1	0.79	18.0	Std. Wall XLPE Primary Cable	GREY	775.0	-	D2	1800F

Connector Name B01-1821A

Part Number 3889458C1

Instances LT/RH - X15/A26 - Wabco Full Stability Control:Diagram1
LT/RH - X15/A26 - Wabco Full Stability Control:Diagram2

Mates SNSR-STEERING_ANGLE-3026-0 2-03A

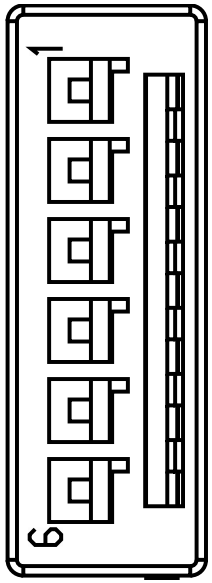

Name	Terminal Part Number	V-Min	Name	Wire Part Number	Wire CSA	Wire Spec	Wire Material description	Wire Color Description	Wire Length	End2 Terminal Part Number	End2 Pin Name	End2 Connect or
1	-	-	-	-	-	-	-	-	-	-	-	-
2	-	-	BG94ST	3510310 R1	0.53	20.0	Thin Wall XLPE Primary Cable	GREY	0.0	-	3	B01-1821A
3	-	-	BG94ST	3510310 R1	0.53	20.0	Thin Wall XLPE Primary Cable	GREY	0.0	-	2	B01-1821A
4	-	-	-	-	-	-	-	-	-	-	-	-
5	-	-	BG94SN	3510310 R1	0.53	20.0	Thin Wall XLPE Primary Cable	GREY	1195.0	-	A	1820F
6	-	-	BG94SP	3510310 R1	0.53	20.0	Thin Wall XLPE Primary Cable	GREY	1195.0	-	B	1820F

Connector Name	B01-1821
Part Number	3601800C1
Instances	LT/RH - X15/A26 - Bendix Stability Control For Tractor or Tractors with Trailer Tow:Diagram1 LT/RH - X15/A26 - Bendix Stability Control For Tractor or Tractors with Trailer Tow:Diagram2 LT/RH - X15/A26 - Bendix; Tractor or Towing Truck; W/ Air SUSP; J1939 Driven Lamp:Diagram1 LT/RH - X15/A26 - Bendix; Tractor or Towing Truck; W/ Air SUSP; J1939 Driven Lamp:Diagram2
Mates	SNSR-STEERING_ANGLE-3026-0 1-01A

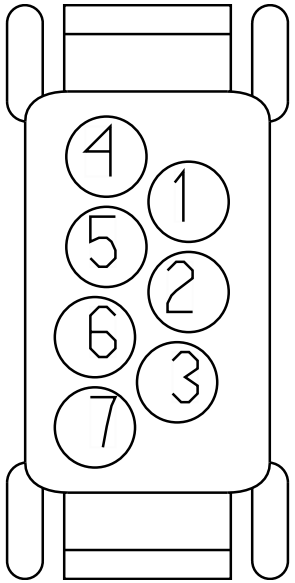

Name	Terminal Part Number	V-Min	Name	Wire Part Number	Wire CSA	Wire Spec	Wire Material description	Wire Color Description	Wire Length	End2 Terminal Part Number	End2 Pin Name	End2 Connect or
1	-	-	BE94SC	3510310 R1	0.53	20.0	Thin Wall XLPE Primary Cable	GREY	1195.0	-	C	1820F
2	-	-	BE94SA	3510310 R1	0.53	20.0	Thin Wall XLPE Primary Cable	GREY	1195.0	-	A	1820F
3	-	-	-	-	-	-	-	-	-	-	-	-
4	-	-	-	-	-	-	-	-	-	-	-	-

Connector Name	B01-1822
Part Number	1678137C1
Instances	LT/RH - X15/A26 - Bendix Stability Control For Tractor or Tractors with Trailer Tow:Diagram1 LT/RH - X15/A26 - Bendix Stability Control For Tractor or Tractors with Trailer Tow:Diagram2 LT/RH - X15/A26 - Bendix; Tractor or Towing Truck; W/ Air SUSP; J1939 Driven Lamp:Diagram1 LT/RH - X15/A26 - Bendix; Tractor or Towing Truck; W/ Air SUSP; J1939 Driven Lamp:Diagram2
Mates	SNSR-PRIMARY_PT-3026-01-01A

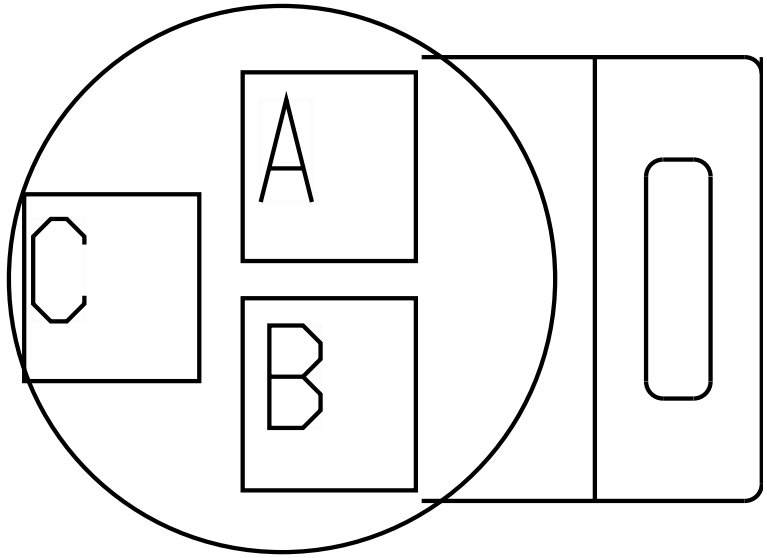

Name	Terminal Part Number	V-Min	Name	Wire Part Number	Wire CSA	Wire Spec	Wire Material description	Wire Color Description	Wire Length	End2 Terminal Part Number	End2 Pin Name	End2 Connector
A	-	-	BE94SZA	2643673 R1	0.79	18.0	Std. Wall XLPE Primary Cable	GREY	475.0	-	X	-
B	-	-	BE94SVA	2643673 R1	0.79	18.0	Std. Wall XLPE Primary Cable	GREY	425.0	-	X	-
C	-	-	BE94SE	2643673 R1	0.79	18.0	Std. Wall XLPE Primary Cable	GREY	700.0	-	D5	1800F

Connector Name	B01-1823
Part Number	1678137C1
Instances	LT/RH - X15/A26 - Bendix Stability Control For Tractor or Tractors with Trailer Tow:Diagram1 LT/RH - X15/A26 - Bendix Stability Control For Tractor or Tractors with Trailer Tow:Diagram2 LT/RH - X15/A26 - Bendix; Tractor or Towing Truck; W/ Air SUSP; J1939 Driven Lamp:Diagram1 LT/RH - X15/A26 - Bendix; Tractor or Towing Truck; W/ Air SUSP; J1939 Driven Lamp:Diagram2
Mates	SNSR-SECONDARY_PT-3026-01- 01B

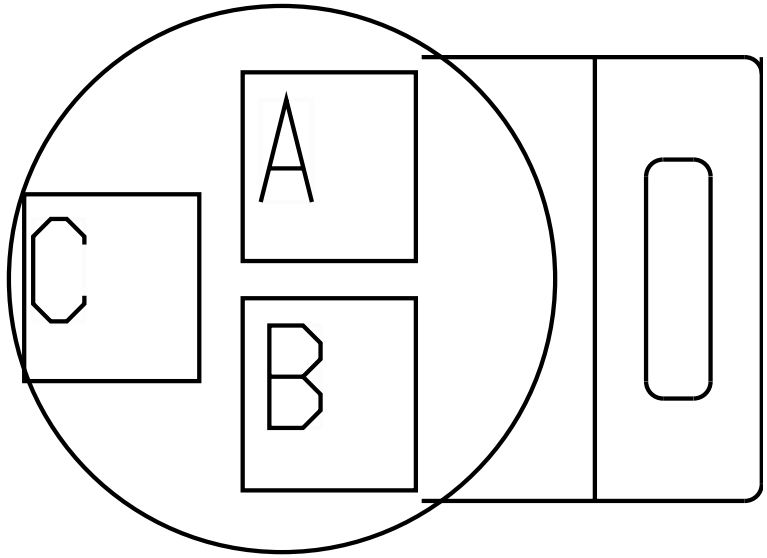

Name	Terminal Part Number	V-Min	Name	Wire Part Number	Wire CSA	Wire Spec	Wire Material description	Wire Color Description	Wire Length	End2 Terminal Part Number	End2 Pin Name	End2 Connector
A	-	-	BE94SZB	2643673 R1	0.79	18.0	Std. Wall XLPE Primary Cable	GREY	125.0	-	X	-
B	-	-	BE94SVB	2643673 R1	0.79	18.0	Std. Wall XLPE Primary Cable	GREY	175.0	-	X	-
C	-	-	BE94SF	2643673 R1	0.79	18.0	Std. Wall XLPE Primary Cable	GREY	600.0	-	D6	1800F

Connector Name	B01-1824
Part Number	3919376C1
Instances	LT/RH - X15/A26 - Wabco Full Stability Control:Diagram1 LT/RH - X15/A26 - Wabco Full Stability Control:Diagram2
Mates	SNSR-DRIVER_DEMAND_PS-3026 -02-01A

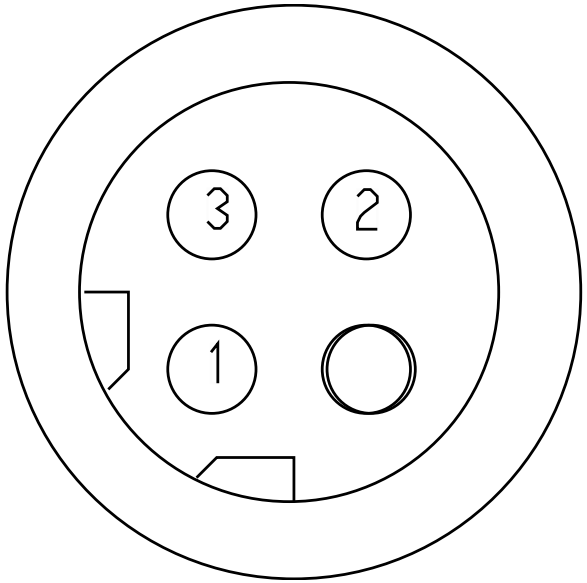

Name	Terminal Part Number	V-Min	Name	Wire Part Number	Wire CSA	Wire Spec	Wire Material description	Wire Color Description	Wire Length	End2 Terminal Part Number	End2 Pin Name	End2 Connect or
1	-	-	[BF94BY]	V-14-TXL	1.91	14.0	Thin Wall XLPE Primary Cable	Not Applica ble	750.0	-	D6	1800F
2	-	-	[BF94-G]	V-14-TXL	1.91	14.0	Thin Wall XLPE Primary Cable	Not Applica ble	750.0	-	D5	1800F
3	-	-	[BF94MN]	V-14-TXL	1.91	14.0	Thin Wall XLPE Primary Cable	Not Applica ble	750.0	-	A6	1800F

Connector Name	B01-1825F
Part Number	4064551C1
Instances	LT/RH - A26 - Transmission Shifter (Eaton Endurant and Eaton Procision):Diagram1 LT/RH - A26 - Transmission Shifter (Universal Shifter - Ultrashift + & FAS):Diagram1 LT/RH/LoneStar - X15 - Transmission Shifter (Eaton Endurant and Eaton Procision):Diagram1 LT/RH/LoneStar - X15 - Transmission Shifter (Universal Shifter - Ultrashift+ & FAS):Diagram1
Mates	MODU-SHF-5040-04-01A

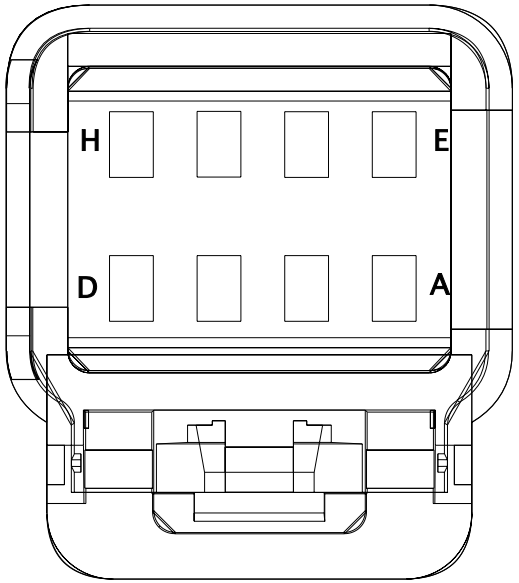

Name	Terminal Part Number	V-Min	Name	Wire Part Number	Wire CSA	Wire Spec	Wire Material description	Wire Color Description	Wire Length	End2 Terminal Part Number	End2 Pin Name	End2 Connector
B	-	-	BK92#134	3510329 R1	0.79	18.0	Thin Wall XLPE Primary Cable	TAN	1365.0	-	B	7900M
C	-	-	XX92	3510329 R1	0.79	18.0	Thin Wall XLPE Primary Cable	TAN	1365.0	-	C	7900M
D	-	-	XX9ZA	3510311 R1	0.79	18.0	Thin Wall XLPE Primary Cable	GREY	1365.0	-	D	7900M
E	-	-	-	-	-	-	-	-	-	-	-	-
F	-	-	-	-	-	-	-	-	-	-	-	-
G	-	-	BK62DC	3510353 R1	0.79	18.0	Thin Wall XLPE Primary Cable	DARK BLUE	1365.0	-	G	7900M

Name	Terminal Part Number	V-Min	Name	Wire Part Number	Wire CSA	Wire Spec	Wire Material description	Wire Color Description	Wire Length	End2 Terminal Part Number	End2 Pin Name	End2 Connect or
H	-	-	BK92-GAH	3510359 R1	0.79	18.0	Thin Wall XLPE Primary Cable	WHITE	1365.0	-	H	7900M

Connector Name	D1N-166M
Part Number	1661889C1
Instances	LoneStar - X15 - Adaptive Cruise Control (Bendix - Fusion W/O DIU & W/ Safety Direct & W/ Tweeters):Diagram1 LT/RH - X15/A26 - Adaptive Cruise Control (Bendix - Fusion W/ O DIU & W/ Safety Direct & W/ Tweeters):Diagram1
Mates	CONN-BENDIX_FUSION_RS232 W/ TWEETER

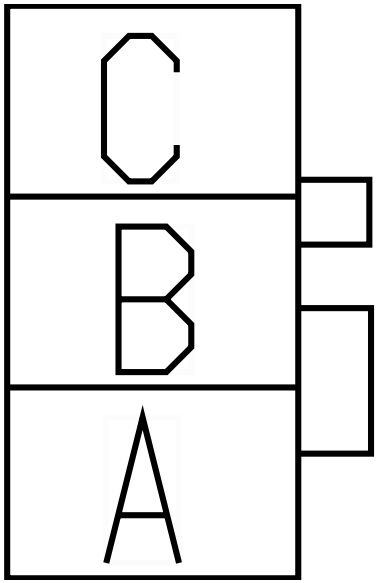

Name	Terminal Part Number	V-Min	Name	Wire Part Number	Wire CSA	Wire Spec	Wire Material description	Wire Color Description	Wire Length	End2 Terminal Part Number	End2 Pin Name	End2 Connect or
A	-	-	11COG1	3510359 R1	0.79	18.0	Thin Wall XLPE Primary Cable	WHITE	2363.0	-	X	-
B	-	-	232-TX	3510334 R1	0.53	20.0	Thin Wall XLPE Primary Cable	YELLOW 2	2513.0	-	3	D1N-1979
C	-	-	232-RX	3510298 R1	0.53	20.0	Thin Wall XLPE Primary Cable	LIGHT GREEN	2513.0	-	4	D1N-1979

Connector Name	D1N-1979A
Part Number	4061584C1
Instances	LoneStar - X15 - Adaptive Cruise Control (Bendix - Fusion W/O DIU & N/ Safety Direct & Tweeters):Diagram1 LoneStar - X15 - Adaptive Cruise Control (Bendix - Fusion W/O DIU & W/ Safety Direct & W/ Tweeters):Diagram1 LT/RH - X15/A26 - Adaptive Cruise Control (Bendix - Fusion W/O DIU & N/ Safety Direct & Tweeters):Diagram1 LT/RH - X15/A26 - Adaptive Cruise Control (Bendix - Fusion W/O DIU & W/ Safety Direct & W/ Tweeters):Diagram1
Mates	DEV-BENDIX_FUSION_FLC_TWEE TER

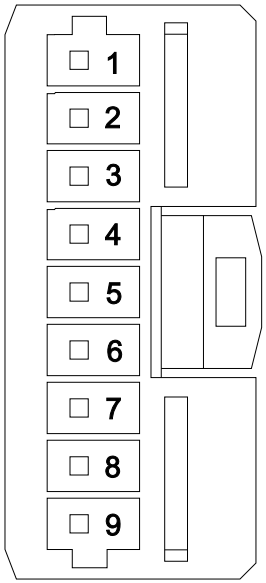

Name	Terminal Part Number	V-Min	Name	Wire Part Number	Wire CSA	Wire Spec	Wire Material description	Wire Color Description	Wire Length	End2 Terminal Part Number	End2 Pin Name	End2 Connect or
1	-	-	14CSB2	3510364 R1	0.53	20.0	Thin Wall XLPE Primary Cable	RED	585.0	-	X	-
3	-	-	-	-	-	-	-	-	-	-	-	-
4	-	-	-	-	-	-	-	-	-	-	-	-
6	-	-	-	-	-	-	-	-	-	-	-	-
7	-	-	-	-	-	-	-	-	-	-	-	-
8	-	-	11COG2	3510358 R1	0.53	20.0	Thin Wall XLPE Primary Cable	WHITE	707.0	-	X	-
9	-	-	13COG2	3510322 R1	0.53	20.0	Thin Wall XLPE Primary Cable	PINK	555.0	-	X	-

Connector Name	D1N-1979
Part Number	3831401C1
Instances	LoneStar - X15 - Adaptive Cruise Control (Bendix - Fusion W/O DIU & N/ Safety Direct & Tweeters):Diagram1 LoneStar - X15 - Adaptive Cruise Control (Bendix - Fusion W/O DIU & W/ Safety Direct & W/ Tweeters):Diagram1 LT/RH - X15/A26 - Adaptive Cruise Control (Bendix - Fusion W/O DIU & N/ Safety Direct & Tweeters):Diagram1 LT/RH - X15/A26 - Adaptive Cruise Control (Bendix - Fusion W/O DIU & W/ Safety Direct & W/ Tweeters):Diagram1
Mates	MODU-BENDIX_FUSION_SAFETY_ DIRECT W/ TWEETER

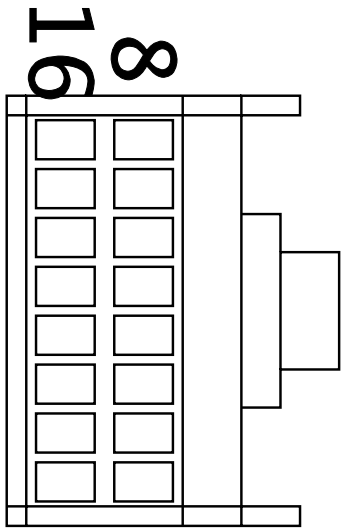

Name	Terminal Part Number	V-Min	Name	Wire Part Number	Wire CSA	Wire Spec	Wire Material description	Wire Color Description	Wire Length	End2 Terminal Part Number	End2 Pin Name	End2 Connect or
1	-	-	14CSB3	3510364 R1	0.53	20.0	Thin Wall XLPE Primary Cable	RED	728.0	-	X	-
2	-	-	YELLOWLR	3510334 R1	0.53	20.0	Thin Wall XLPE Primary Cable	YELLOW 2	2568.0	-	6	2000F
3	-	-	232-TX	3510334 R1	0.53	20.0	Thin Wall XLPE Primary Cable	YELLOW 2	2513.0	-	B	D1N-166M
4	-	-	232-RX	3510298 R1	0.53	20.0	Thin Wall XLPE Primary Cable	LIGHT GREEN	2513.0	-	C	D1N-166M
5	-	-	-	-	-	-	-	-	-	-	-	-
6	-	-	-	-	-	-	-	-	-	-	-	-

Name	Terminal Part Number	V-Min	Name	Wire Part Number	Wire CSA	Wire Spec	Wire Material description	Wire Color Description	Wire Length	End2 Terminal Part Number	End2 Pin Name	End2 Connect or
7	-	-	67COG	3510310 R1	0.53	20.0	Thin Wall XLPE Primary Cable	GREY	2433.0	-	G	1978
9	-	-	13COG3	3510322 R1	0.53	20.0	Thin Wall XLPE Primary Cable	PINK	698.0	-	X	-
10	-	-	GREENL	3510298 R1	0.53	20.0	Thin Wall XLPE Primary Cable	LIGHT GREEN	3145.0	-	7	2000F
11	-	-	GREENR	3510298 R1	0.53	20.0	Thin Wall XLPE Primary Cable	LIGHT GREEN	2864.0	-	8	2000F
12	-	-	-	-	-	-	-	-	-	-	-	-
13	-	-	-	-	-	-	-	-	-	-	-	-
16	-	-	11COG3	3510358 R1	0.53	20.0	Thin Wall XLPE Primary Cable	WHITE	150.0	-	X	-

Connector Name	D1U-348
Part Number	1661197C1
Instances	LT/RH - X15/A26 - Lane Departure Warning - (Wabco OnLane 2.0 w/ roof speakers):Diagram1
Mates	DEV-SPKR_LEFT_LDW-WABCO2

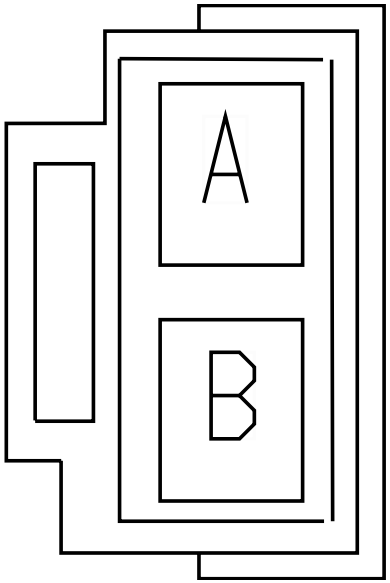

Name	Terminal Part Number	V-Min	Name	Wire Part Number	Wire CSA	Wire Spec	Wire Material description	Wire Color Description	Wire Length	End2 Terminal Part Number	End2 Pin Name	End2 Connect or
A	-	-	GREENL	3510298 R1	0.53	20.0	Thin Wall XLPE Primary Cable	LIGHT GREEN	3145.0	-	13	D1U-1979M
B	-	-	YELLOWL	2643801 R1	0.79	18.0	Std. Wall XLPE Primary Cable	YELLOW 2	2685.0	-	14	D1U-1979M

Connector Name	D1U-349F
Part Number	1661197C1
Instances	LT/RH - X15/A26 - Lane Departure Warning - (Wabco OnLane 2.0 w/ roof speakers):Diagram1
Mates	DEV-SPKR_RIGHT_LDW-WABCO2

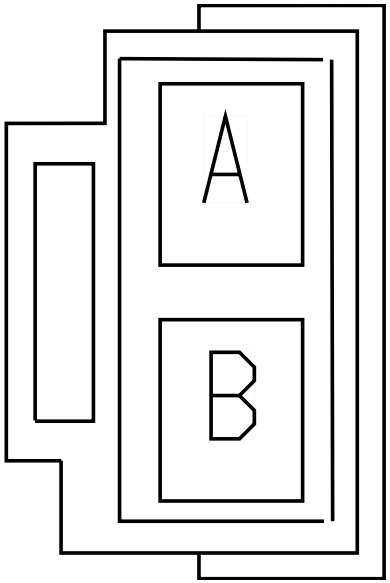

Name	Terminal Part Number	V-Min	Name	Wire Part Number	Wire CSA	Wire Spec	Wire Material description	Wire Color Description	Wire Length	End2 Terminal Part Number	End2 Pin Name	End2 Connect or
A	-	-	GREENR	3510298 R1	0.53	20.0	Thin Wall XLPE Primary Cable	LIGHT GREEN	2864.0	-	15	D1U-1979M
B	-	-	YELLOWR	2643801 R1	0.79	18.0	Std. Wall XLPE Primary Cable	YELLOW 2	2404.0	-	16	D1U-1979M

Connector Name	D2E-241
Part Number	1661259C1
Instances	LT/RH/LoneStar - X15/A26 - Antenna (Film Antenna Sleeper Cab OTAPM and Radio):Diagram1 LT/RH/LoneStar - X15/A26 - Antenna (Shark Fin Day Cab OTAPM and Radio):Diagram1
Mates	DEV-ANTENNA_FILM-01

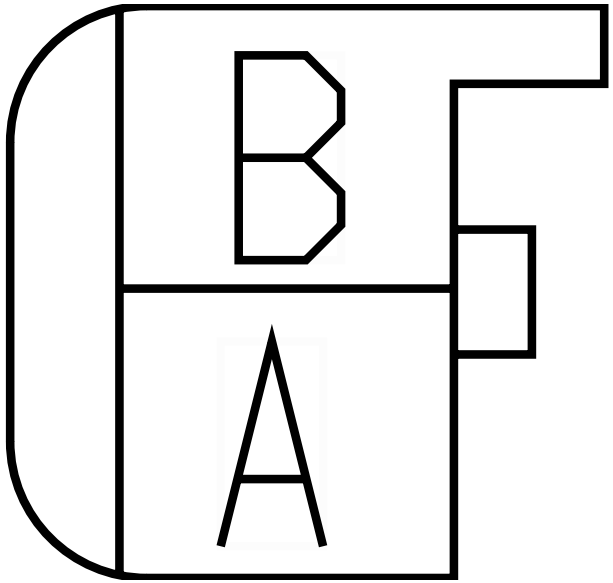

Name	Terminal Part Number	V-Min	Name	Wire Part Number	Wire CSA	Wire Spec	Wire Material description	Wire Color Description	Wire Length	End2 Terminal Part Number	End2 Pin Name	End2 Connect or
A	-	-	D86AK	3510341 R1	0.79	18.0	Thin Wall XLPE Primary Cable	LIGHT BLUE	2715.0	-	D	250F
B	-	-	D86GA	3510353 R1	0.79	18.0	Thin Wall XLPE Primary Cable	DARK BLUE	2815.0	-	X	-

Connector Name	D2E_240
Part Number	3709924C1
Instances	LT/RH/LoneStar - X15/A26 - Navistar Telematics Module - Wiring:Diagram1
Mates	DEV-ONCOMMAND_LINK_N2-01

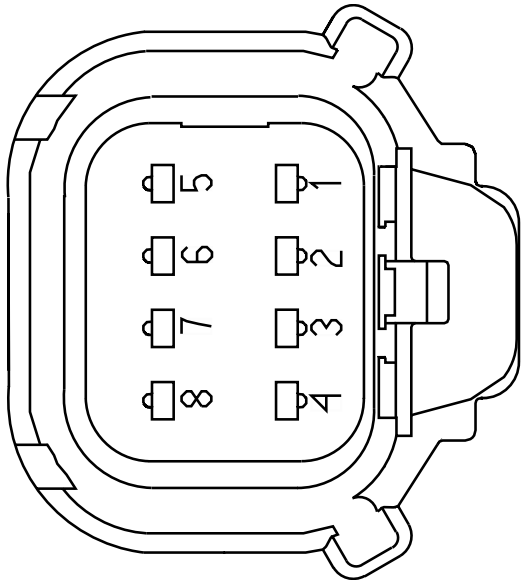

Name	Terminal Part Number	V-Min	Name	Wire Part Number	Wire CSA	Wire Spec	Wire Material description	Wire Color Description	Wire Length	End2 Terminal Part Number	End2 Pin Name	End2 Connect or
1	-	-	D180G	3510353 R1	0.79	18.0	Thin Wall XLPE Primary Cable	DARK BLUE	2083.0	-	X	-
5	-	-	D14KBB	3510365 R1	0.79	18.0	Thin Wall XLPE Primary Cable	RED	3847.0	-	C	250F

Connector Name	D25-1979
Part Number	3710061C1
Instances	LT/RH - X15/A26 - Lane Departure Warning - (Wabco OnLane):Diagram1
Mates	MODU-ECU_Lane_Departure_Wa bco-3020-01-01A

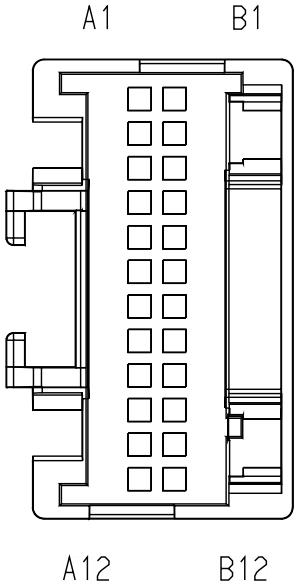

Name	Terminal Part Number	V-Min	Name	Wire Part Number	Wire CSA	Wire Spec	Wire Material description	Wire Color Description	Wire Length	End2 Terminal Part Number	End2 Pin Name	End2 Connect or
A1	-	-	GREENL	3510298 R1	0.53	20.0	Thin Wall XLPE Primary Cable	LIGHT GREEN	3145.0	-	A	D25-348F
A2	-	-	GREENR	3510298 R1	0.53	20.0	Thin Wall XLPE Primary Cable	LIGHT GREEN	2864.0	-	A	D25-349F
A7	-	-	67NA	3510330 R1	1.16	16.0	Thin Wall XLPE Primary Cable	TAN	2163.0	-	B	1978
A9	-	-	13COG	3510324 R1	1.16	16.0	Thin Wall XLPE Primary Cable	PINK	1735.0	-	C	1978
A12	-	-	-	-	-	-	-	-	-	-	-	-

Name	Terminal Part Number	V-Min	Name	Wire Part Number	Wire CSA	Wire Spec	Wire Material description	Wire Color Description	Wire Length	End2 Terminal Part Number	End2 Pin Name	End2 Connect or
B1	-	-	YELLOWL	2643801 R1	0.79	18.0	Std. Wall XLPE Primary Cable	YELLOW 2	2685.0	-	B	D25-348F
B2	-	-	YELLOWR	2643801 R1	0.79	18.0	Std. Wall XLPE Primary Cable	YELLOW 2	2404.0	-	B	D25-349F
B7	-	-	67EN	3510330 R1	1.16	16.0	Thin Wall XLPE Primary Cable	TAN	2163.0	-	A	1978
B8	-	-	67COG	3510310 R1	0.53	20.0	Thin Wall XLPE Primary Cable	GREY	2433.0	-	G	1978
B9	-	-	11COG	3510359 R1	0.79	18.0	Thin Wall XLPE Primary Cable	WHITE	2283.0	-	D	1978
B12	-	-	-	-	-	-	-	-	-	-	-	-

Connector Name	D25-348F
Part Number	1661197C1
Instances	LT/RH - X15/A26 - Lane Departure Warning - (Wabco OnLane):Diagram1
Mates	DEV-SPKR_LEFT_LANE_DEPARTU RE-3020-01-01A

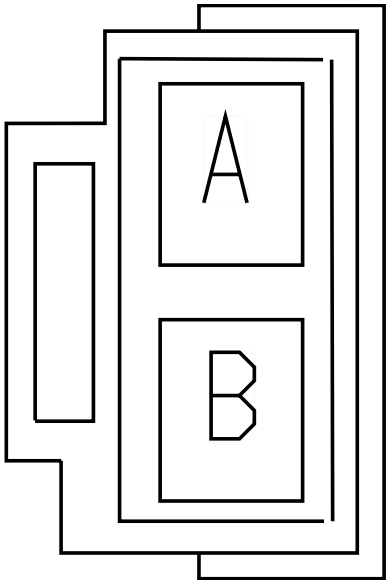

Name	Terminal Part Number	V-Min	Name	Wire Part Number	Wire CSA	Wire Spec	Wire Material description	Wire Color Description	Wire Length	End2 Terminal Part Number	End2 Pin Name	End2 Connect or
A	-	-	GREENL	3510298 R1	0.53	20.0	Thin Wall XLPE Primary Cable	LIGHT GREEN	3145.0	-	A1	D25-1979
B	-	-	YELLOWL	2643801 R1	0.79	18.0	Std. Wall XLPE Primary Cable	YELLOW 2	2685.0	-	B1	D25-1979

Connector Name	D25-349F
Part Number	1661197C1
Instances	LT/RH - X15/A26 - Lane Departure Warning - (Wabco OnLane):Diagram1
Mates	DEV-SPKR_RIGHT_LANE_DEPART URE-3020-01-01A

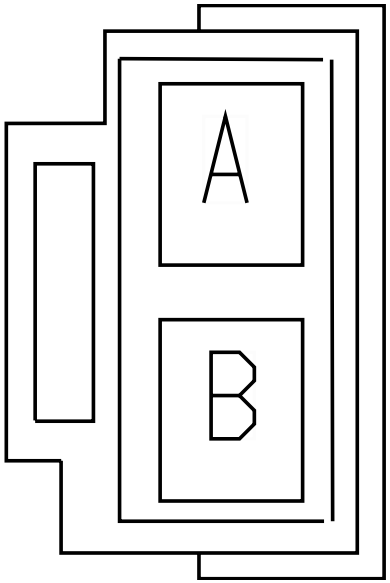

Name	Terminal Part Number	V-Min	Name	Wire Part Number	Wire CSA	Wire Spec	Wire Material description	Wire Color Description	Wire Length	End2 Terminal Part Number	End2 Pin Name	End2 Connect or
A	-	-	GREENR	3510298 R1	0.53	20.0	Thin Wall XLPE Primary Cable	LIGHT GREEN	2864.0	-	A2	D25-1979
B	-	-	YELLOWR	2643801 R1	0.79	18.0	Std. Wall XLPE Primary Cable	YELLOW 2	2404.0	-	B2	D25-1979

Connector Name	D48-166M
Part Number	1661889C1
Instances	LoneStar - X15 - Adaptive Cruise Control (Bendix - Fusion W/O DIU & W/ Safety Direct & Reg Speakers) Option 1:Diagram1 LoneStar - X15 - Lane Departure Warning - (Bendix Fusion W/ Safety Direct))(US & Canada):Diagram1 LT/RH - X15/A26 - Adaptive Cruise Control (Bendix - Fusion W/ O DIU & W/ Safety Direct & Reg Speakers):Diagram1 LT/RH - X15/A26 - Lane Departure Warning - (Bendix Fusion W/ Safety Direct))(US & Canada):Diagram1
Mates	CONN-BENDIX_FUSION_RS232-3 020-02-01A

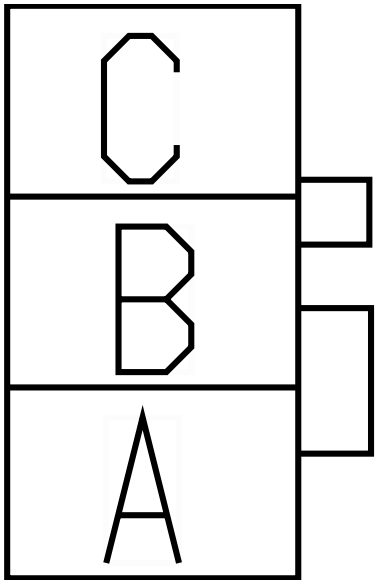

Name	Terminal Part Number	V-Min	Name	Wire Part Number	Wire CSA	Wire Spec	Wire Material description	Wire Color Description	Wire Length	End2 Terminal Part Number	End2 Pin Name	End2 Connect or
A	-	-	11COG1	3510359 R1	0.79	18.0	Thin Wall XLPE Primary Cable	WHITE	2363.0	-	X	-
B	-	-	232-TX	3510334 R1	0.53	20.0	Thin Wall XLPE Primary Cable	YELLOW 2	2513.0	-	3	D48-1979
C	-	-	232-RX	3510298 R1	0.53	20.0	Thin Wall XLPE Primary Cable	LIGHT GREEN	2513.0	-	4	D48-1979

Connector Name D48-1979A

Part Number 4061584C1

Instances LoneStar - X15 - Adaptive Cruise Control (Bendix - Fusion W/O DIU & W/ Safety Direct & Reg Speakers) Option 1:Diagram1
LoneStar - X15 - Adaptive Cruise Control (Bendix - Fusion W/O DIU & W/ Safety Direct & Reg Speakers) Option 2:Diagram1
LoneStar - X15 - Lane Departure Warning - (Bendix Fusion W/ Safety Direct))(US & Canada):Diagram1
LoneStar - X15 - Lane Departure Warning - (Bendix Fusion W/ Safety Direct))(US & Canada)-:Diagram1
LT/RH - X15/A26 - Adaptive Cruise Control (Bendix - Fusion W/ O DIU & N/ Safety Direct & Reg Speakers):Diagram1
LT/RH - X15/A26 - Adaptive Cruise Control (Bendix - Fusion W/ O DIU & W/ Safety Direct & Reg Speakers):Diagram1
LT/RH - X15/A26 - Lane Departure Warning - (Bendix Fusion W/ Safety Direct))(US & Canada):Diagram1
LT/RH - X15/A26 - Lane Departure Warning - Bendix:Diagram1

Mates DEV-BENDIX_FUSION_FLC_20-3 020-02-01A

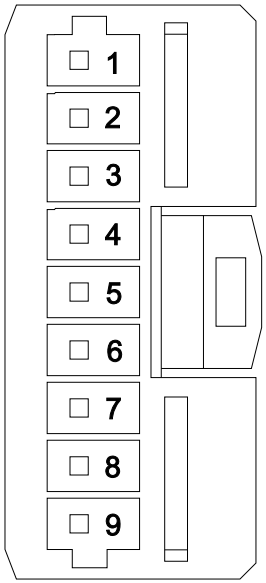

Name	Terminal Part Number	V-Min	Name	Wire Part Number	Wire CSA	Wire Spec	Wire Material description	Wire Color Description	Wire Length	End2 Terminal Part Number	End2 Pin Name	End2 Connect or
1	-	-	14CSB2	3510364 R1	0.53	20.0	Thin Wall XLPE Primary Cable	RED	585.0	-	X	-
3	-	-	-	-	-	-	-	-	-	-	-	-
4	-	-	-	-	-	-	-	-	-	-	-	-
6	-	-	-	-	-	-	-	-	-	-	-	-
7	-	-	-	-	-	-	-	-	-	-	-	-
8	-	-	11COG2	3510358 R1	0.53	20.0	Thin Wall XLPE Primary Cable	WHITE	707.0	-	X	-
9	-	-	13COG2	3510322 R1	0.53	20.0	Thin Wall XLPE Primary Cable	PINK	555.0	-	X	-

Connector Name D48-1979

Part Number 3831401C1

Instances LoneStar - X15 - Adaptive Cruise Control (Bendix - Fusion W/O DIU & W/ Safety Direct & Reg Speakers) Option 1:Diagram1
LoneStar - X15 - Adaptive Cruise Control (Bendix - Fusion W/O DIU & W/ Safety Direct & Reg Speakers) Option 2:Diagram1
LoneStar - X15 - Lane Departure Warning - (Bendix Fusion W/ Safety Direct))(US & Canada):Diagram1
LoneStar - X15 - Lane Departure Warning - (Bendix Fusion W/ Safety Direct))(US & Canada)-:Diagram1
LT/RH - X15/A26 - Adaptive Cruise Control (Bendix - Fusion W/ O DIU & N/ Safety Direct & Reg Speakers):Diagram1
LT/RH - X15/A26 - Adaptive Cruise Control (Bendix - Fusion W/ O DIU & W/ Safety Direct & Reg Speakers):Diagram1
LT/RH - X15/A26 - Lane Departure Warning - (Bendix Fusion W/ Safety Direct))(US & Canada):Diagram1
LT/RH - X15/A26 - Lane Departure Warning - Bendix:Diagram1

Mates MODU-BENDIX_FUSION_SAFETY_ DIRECT-3020-02-01A

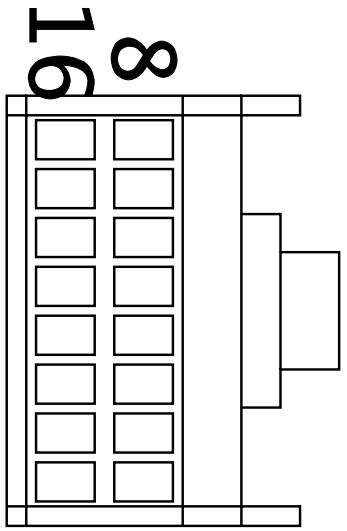

Name	Terminal Part Number	V-Min	Name	Wire Part Number	Wire CSA	Wire Spec	Wire Material description	Wire Color Description	Wire Length	End2 Terminal Part Number	End2 Pin Name	End2 Connect or
1	-	-	14CSB3	3510364 R1	0.53	20.0	Thin Wall XLPE Primary Cable	RED	728.0	-	X	-
2	-	-	YELLOW	3510334 R1	0.53	20.0	Thin Wall XLPE Primary Cable	YELLOW 2	460.0	-	X	-
3	-	-	232-TX	3510334 R1	0.53	20.0	Thin Wall XLPE Primary Cable	YELLOW 2	2513.0	-	B	D48-166M
4	-	-	232-RX	3510298 R1	0.53	20.0	Thin Wall XLPE Primary Cable	LIGHT GREEN	2513.0	-	C	D48-166M
5	-	-	-	-	-	-	-	-	-	-	-	-

Name	Terminal Part Number	V-Min	Name	Wire Part Number	Wire CSA	Wire Spec	Wire Material description	Wire Color Description	Wire Length	End2 Terminal Part Number	End2 Pin Name	End2 Connector
6	-	-	-	-	-	-	-	-	-	-	-	-
7	-	-	67COG	3510310 R1	0.53	20.0	Thin Wall XLPE Primary Cable	GREY	2433.0	-	G	1978
9	-	-	13COG3	3510322 R1	0.53	20.0	Thin Wall XLPE Primary Cable	PINK	698.0	-	X	-
10	-	-	GREENL	3510298 R1	0.53	20.0	Thin Wall XLPE Primary Cable	LIGHT GREEN	3145.0	-	A	D48-346F
11	-	-	GREENR	3510298 R1	0.53	20.0	Thin Wall XLPE Primary Cable	LIGHT GREEN	2864.0	-	A	D48-347F
12	-	-	-	-	-	-	-	-	-	-	-	-
13	-	-	-	-	-	-	-	-	-	-	-	-
16	-	-	11COG3	3510358 R1	0.53	20.0	Thin Wall XLPE Primary Cable	WHITE	150.0	-	X	-

Connector Name	D48-2310
Part Number	BLUNT_SL_VC
Instances	LT/RH/LoneStar - X15/A26 - CB Radio Power Only:Diagram1
Mates	BLNT-CB+VE-2033-01-01A

Name	Terminal Part Number	V-Min	Name	Wire Part Number	Wire CSA	Wire Spec	Wire Material description	Wire Color Description	Wire Length	End2 Terminal Part Number	End2 Pin Name	End2 Connect or
A	-	-	D86M	2643678 R1	1.16	16.0	Std. Wall XLPE Primary Cable	LIGHT GREEN	160.0	-	A	2303F

Connector Name	D48-2311
Part Number	BLUNT_SL_VC
Instances	LT/RH/LoneStar - X15/A26 - CB Radio Power Only:Diagram1
Mates	BLNT-CB-VE-2033-01-01A

Name	Terminal Part Number	V-Min	Name	Wire Part Number	Wire CSA	Wire Spec	Wire Material description	Wire Color Description	Wire Length	End2 Terminal Part Number	End2 Pin Name	End2 Connect or
A	-	-	D86-GG	2643681 R1	1.16	16.0	Std. Wall XLPE Primary Cable	WHITE	160.0	-	B	2303F

Connector Name D48-346F

Part Number 1661197C1

Instances LoneStar - X15 - Adaptive Cruise Control (Bendix - Fusion W/O DIU & W/ Safety Direct & Reg Speakers) Option 1:Diagram1
LoneStar - X15 - Adaptive Cruise Control (Bendix - Fusion W/O DIU & W/ Safety Direct & Reg Speakers) Option 2:Diagram1
LoneStar - X15 - Lane Departure Warning - (Bendix Fusion W/ Safety Direct))(US & Canada):Diagram1
LoneStar - X15 - Lane Departure Warning - (Bendix Fusion W/ Safety Direct))(US & Canada)-:Diagram1
LT/RH - X15/A26 - Adaptive Cruise Control (Bendix - Fusion W/ O DIU & N/ Safety Direct & Reg Speakers):Diagram1
LT/RH - X15/A26 - Adaptive Cruise Control (Bendix - Fusion W/ O DIU & W/ Safety Direct & Reg Speakers):Diagram1
LT/RH - X15/A26 - Lane Departure Warning - (Bendix Fusion W/ Safety Direct))(US & Canada):Diagram1
LT/RH - X15/A26 - Lane Departure Warning - Bendix:Diagram1

Mates SPKR-LEFT_BENDIX_FUSION-30 20-02-01A

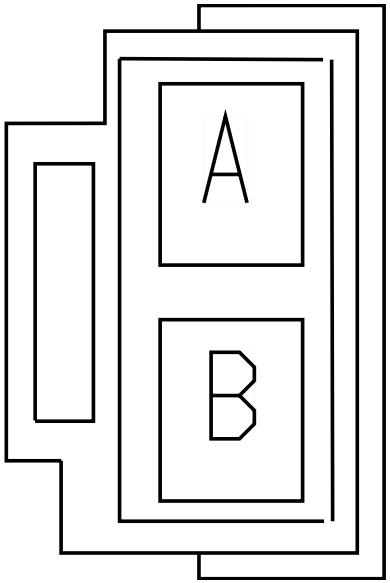

Name	Terminal Part Number	V-Min	Name	Wire Part Number	Wire CSA	Wire Spec	Wire Material description	Wire Color Description	Wire Length	End2 Terminal Part Number	End2 Pin Name	End2 Connect or
A	-	-	GREENL	3510298 R1	0.53	20.0	Thin Wall XLPE Primary Cable	LIGHT GREEN	3145.0	-	10	D48-1979
B	-	-	YELLOWL	2643801 R1	0.79	18.0	Std. Wall XLPE Primary Cable	YELLOW 2	2685.0	-	X	-

Connector Name D48-347F

Part Number 1661197C1

Instances LoneStar - X15 - Adaptive Cruise Control (Bendix - Fusion W/O DIU & W/ Safety Direct & Reg Speakers) Option 1:Diagram1
LoneStar - X15 - Adaptive Cruise Control (Bendix - Fusion W/O DIU & W/ Safety Direct & Reg Speakers) Option 2:Diagram1
LoneStar - X15 - Lane Departure Warning - (Bendix Fusion W/ Safety Direct))(US & Canada):Diagram1
LoneStar - X15 - Lane Departure Warning - (Bendix Fusion W/ Safety Direct))(US & Canada)-:Diagram1
LT/RH - X15/A26 - Adaptive Cruise Control (Bendix - Fusion W/ O DIU & N/ Safety Direct & Reg Speakers):Diagram1
LT/RH - X15/A26 - Adaptive Cruise Control (Bendix - Fusion W/ O DIU & W/ Safety Direct & Reg Speakers):Diagram1
LT/RH - X15/A26 - Lane Departure Warning - (Bendix Fusion W/ Safety Direct))(US & Canada):Diagram1
LT/RH - X15/A26 - Lane Departure Warning - Bendix:Diagram1

Mates SPKR-RIGHT_BENDIX_FUSION-3 020-02-01A

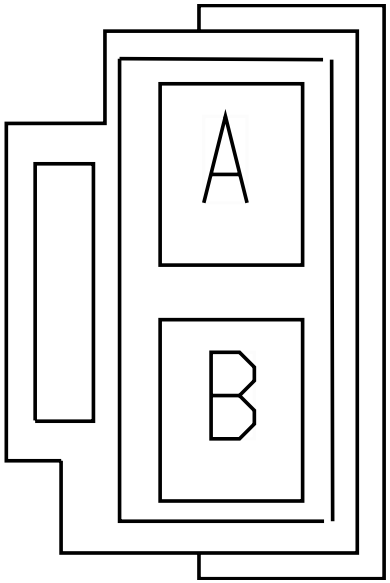

Name	Terminal Part Number	V-Min	Name	Wire Part Number	Wire CSA	Wire Spec	Wire Material description	Wire Color Description	Wire Length	End2 Terminal Part Number	End2 Pin Name	End2 Connect or
A	-	-	GREENR	3510298 R1	0.53	20.0	Thin Wall XLPE Primary Cable	LIGHT GREEN	2864.0	-	11	D48-1979
B	-	-	YELLOWR	2643801 R1	0.79	18.0	Std. Wall XLPE Primary Cable	YELLOW 2	2404.0	-	X	-

Connector Name	D51-166M
Part Number	1661889C1
Instances	LT/RH - X15/A26 - Land Departure Warning - (Bendix - AutoVue W/ Qualcomm Safety Direct):Diagram1
Mates	CONN-BENDIX_AutoVue_RS232- 3020-01-02A

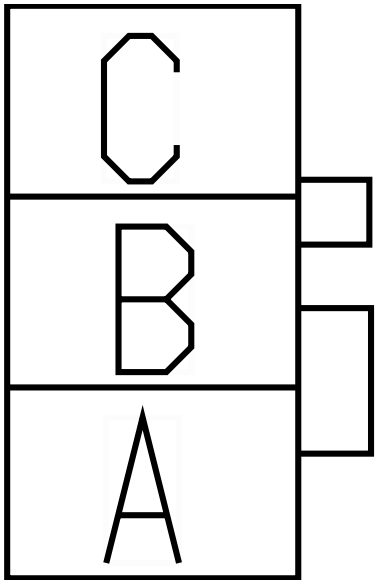

Name	Terminal Part Number	V-Min	Name	Wire Part Number	Wire CSA	Wire Spec	Wire Material description	Wire Color Description	Wire Length	End2 Terminal Part Number	End2 Pin Name	End2 Connect or
A	-	-	11COG1	3510359 R1	0.79	18.0	Thin Wall XLPE Primary Cable	WHITE	2363.0	-	X	-
B	-	-	232-TX	3510334 R1	0.53	20.0	Thin Wall XLPE Primary Cable	YELLOW 2	2513.0	-	A10	D51-1979
C	-	-	232-RX	3510298 R1	0.53	20.0	Thin Wall XLPE Primary Cable	LIGHT GREEN	2513.0	-	B11	D51-1979

Connector Name	D51-1979
Part Number	3710061C1
Instances	LT/RH - X15/A26 - Land Departure Warning - (Bendix - AutoVue W/ Qualcomm Safety Direct):Diagram1 LT/RH - X15/A26 - Lane Departure Warning - (Bendix - AutoVue N/ Qualcomm Safety Direct):Diagram1
Mates	MODU-ECU_Lane_Departure_Be ndix_AutoVue-3020-01-02A

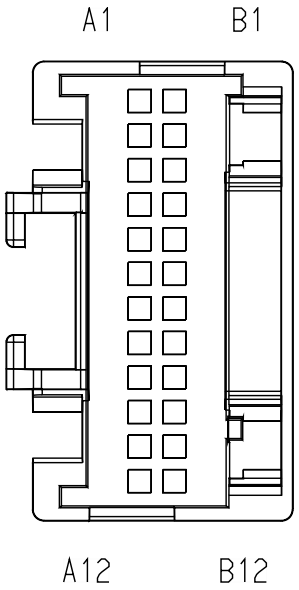

Name	Terminal Part Number	V-Min	Name	Wire Part Number	Wire CSA	Wire Spec	Wire Material description	Wire Color Description	Wire Length	End2 Terminal Part Number	End2 Pin Name	End2 Connect or
A1	-	-	GREENL	3510298 R1	0.53	20.0	Thin Wall XLPE Primary Cable	LIGHT GREEN	3145.0	-	A	D51-348F
A2	-	-	GREENR	3510298 R1	0.53	20.0	Thin Wall XLPE Primary Cable	LIGHT GREEN	2864.0	-	A	D51-349F
A4	-	-	56A2	3510318 R1	1.16	16.0	Thin Wall XLPE Primary Cable	ORANGE	2483.0	-	E	1978
A7	-	-	67NA	3510330 R1	1.16	16.0	Thin Wall XLPE Primary Cable	TAN	2163.0	-	B	1978

Name	Terminal Part Number	V-Min	Name	Wire Part Number	Wire CSA	Wire Spec	Wire Material description	Wire Color Description	Wire Length	End2 Terminal Part Number	End2 Pin Name	End2 Connector
A9	-	-	13COG	3510324 R1	1.16	16.0	Thin Wall XLPE Primary Cable	PINK	1735.0	-	C	1978
A10	-	-	232-TX	3510334 R1	0.53	20.0	Thin Wall XLPE Primary Cable	YELLOW 2	2513.0	-	B	D51-166M
A11	-	-	14CSB	3510366 R1	1.16	16.0	Thin Wall XLPE Primary Cable	RED	1705.0	-	H	1978
A12	-	-	-	-	-	-	-	-	-	-	-	-
B1	-	-	YELLOWL	2643801 R1	0.79	18.0	Std. Wall XLPE Primary Cable	YELLOW 2	2685.0	-	B	D51-348F
B2	-	-	YELLOWR	2643801 R1	0.79	18.0	Std. Wall XLPE Primary Cable	YELLOW 2	2404.0	-	B	D51-349F
B4	-	-	57A4	3510318 R1	1.16	16.0	Thin Wall XLPE Primary Cable	ORANGE	2483.0	-	F	1978
B7	-	-	67EN	3510330 R1	1.16	16.0	Thin Wall XLPE Primary Cable	TAN	2163.0	-	A	1978
B8	-	-	67COG	3510310 R1	0.53	20.0	Thin Wall XLPE Primary Cable	GREY	2433.0	-	G	1978

Name	Terminal Part Number	V-Min	Name	Wire Part Number	Wire CSA	Wire Spec	Wire Material description	Wire Color Description	Wire Length	End2 Terminal Part Number	End2 Pin Name	End2 Connector
B9	-	-	11COG2	3510358 R1	0.53	20.0	Thin Wall XLPE Primary Cable	WHITE	707.0	-	X	-
B11	-	-	232-RX	3510298 R1	0.53	20.0	Thin Wall XLPE Primary Cable	LIGHT GREEN	2513.0	-	C	D51-166M
B12	-	-	-	-	-	-	-	-	-	-	-	-

Connector Name	D51-348F
Part Number	1661197C1
Instances	LT/RH - X15/A26 - Land Departure Warning - (Bendix - AutoVue W/ Qualcomm Safety Direct):Diagram1 LT/RH - X15/A26 - Lane Departure Warning - (Bendix - AutoVue N/ Qualcomm Safety Direct):Diagram1
Mates	DEV-SPKR_LEFT_LANE_DEPARTU RE-3020-01-02A

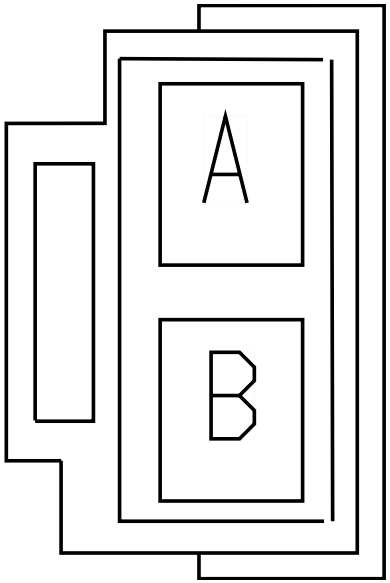

Name	Terminal Part Number	V-Min	Name	Wire Part Number	Wire CSA	Wire Spec	Wire Material description	Wire Color Description	Wire Length	End2 Terminal Part Number	End2 Pin Name	End2 Connect or
A	-	-	GREENL	3510298 R1	0.53	20.0	Thin Wall XLPE Primary Cable	LIGHT GREEN	3145.0	-	A1	D51-1979
B	-	-	YELLOWL	2643801 R1	0.79	18.0	Std. Wall XLPE Primary Cable	YELLOW 2	2685.0	-	B1	D51-1979

Connector Name	D51-349F
Part Number	1661197C1
Instances	LT/RH - X15/A26 - Land Departure Warning - (Bendix - AutoVue W/ Qualcomm Safety Direct):Diagram1 LT/RH - X15/A26 - Lane Departure Warning - (Bendix - AutoVue N/ Qualcomm Safety Direct):Diagram1
Mates	DEV-SPKR_RIGHT_LANE_DEPART URE-3020-01-02A

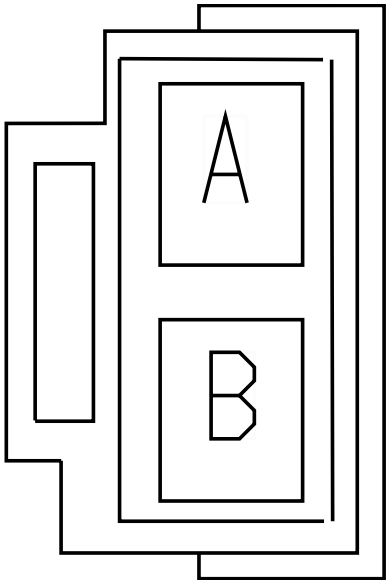

Name	Terminal Part Number	V-Min	Name	Wire Part Number	Wire CSA	Wire Spec	Wire Material description	Wire Color Description	Wire Length	End2 Terminal Part Number	End2 Pin Name	End2 Connect or
A	-	-	GREENR	3510298 R1	0.53	20.0	Thin Wall XLPE Primary Cable	LIGHT GREEN	2864.0	-	A2	D51-1979
B	-	-	YELLOWR	2643801 R1	0.79	18.0	Std. Wall XLPE Primary Cable	YELLOW 2	2404.0	-	B2	D51-1979

Connector Name	D78-745A
Part Number	872291R1
Instances	LT/RH/LoneStar - X15/A26 - Cigar Lighter Aux APO Overhead APO:Diagram1 LT/RH/LoneStar - X15/A26 - Cigar Lighter Aux APO Overhead APO:Diagram2 LT/RH/LoneStar - X15/A26 - Cigar Lighter Aux APO Rear Std APO Rear APO w/Cover 12V Panel Overhead APO:Diagram1 LT/RH/LoneStar - X15/A26 - Cigar Lighter Aux APO Rear Std APO Rear APO w/Cover 12V Panel Overhead APO:Diagram2 LT/RH/LoneStar - X15/A26 - Cigar Lighter Aux APO Rear Std APO Rear APO w/Cover 12V Panel Overhead APO:Diagram3 LT/RH/LoneStar - X15/A26 - Cigar Lighter Aux APO Rear Std APO Rear APO w/Cover 12V Panel Overhead APO:Diagram4 LT/RH/LoneStar - X15/A26 - Cigar Lighter Aux APO Rear Std APO Rear APO w/Cover 12V Panel Upr Bnk APO Rear Overhead APO:Diagram1-Combination1 LT/RH/LoneStar - X15/A26 - Cigar Lighter Aux APO Rear Std APO Rear APO w/Cover 12V Panel Upr Bnk APO Rear Overhead APO:Diagram1-Combination2 LT/RH/LoneStar - X15/A26 - Cigar Lighter Aux APO Rear Std APO Rear APO w/Cover 12V Panel Upr Bnk APO Rear Overhead APO:Diagram1-Combination3 LT/RH/LoneStar - X15/A26 - Cigar Lighter Aux APO Rear Std APO Rear APO w/Cover 12V Panel Upr Bnk APO Rear Overhead APO:Diagram1-Combination4 LT/RH/LoneStar - X15/A26 - Cigar Lighter Overhead APO:Diagram1 LT/RH/LoneStar - X15/A26 - Cigar Lighter Rear Std APO Rear APO W/Cover 12V Panel Overhead APO:Diagram1 LT/RH/LoneStar - X15/A26 - Cigar Lighter Rear Std APO Rear APO W/Cover 12V Panel Overhead APO:Diagram2 LT/RH/LoneStar - X15/A26 - Cigar Lighter Rear Std APO Rear APO w/Cover 12V Panel Upr Bnk APO Rear Overhead APO:Diagram1 LT/RH/LoneStar - X15/A26 - Cigar Lighter Rear Std APO Rear APO w/Cover 12V Panel Upr Bnk APO Rear Overhead APO:Diagram2 LT/RH/LoneStar - X15/A26 - Standard APO Aux APO Overhead APO:Diagram1 LT/RH/LoneStar - X15/A26 - Standard APO Aux APO Overhead APO:Diagram2

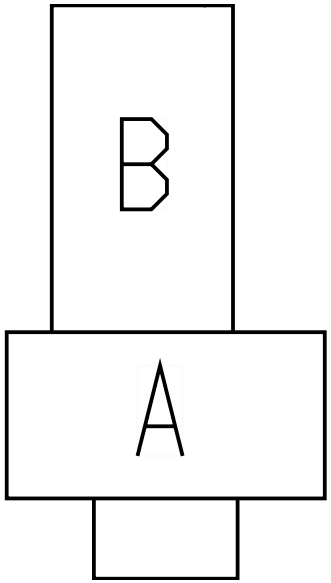

LT/RH/LoneStar - X15/A26 - Standard APO Overhead APO:Diagram1
LT/RH/LoneStar - X15/A26 - Std APO Aux APO Rear Std APO Rear APO W/Cover 12V Panel Overhead APO:Diagram1
LT/RH/LoneStar - X15/A26 - Std APO Aux APO Rear Std APO Rear APO W/Cover 12V Panel Overhead APO:Diagram2
LT/RH/LoneStar - X15/A26 - Std APO Aux APO Rear Std APO Rear APO W/Cover 12V Panel Overhead APO:Diagram3
LT/RH/LoneStar - X15/A26 - Std APO Aux APO Rear Std APO Rear APO W/Cover 12V Panel Overhead APO:Diagram4
LT/RH/LoneStar - X15/A26 - Std APO Aux APO Rear Std APO Rear APO w/Cover 12V Panel Upr Bnk APO Rear Overhead APO:Diagram1
LT/RH/LoneStar - X15/A26 - Std APO Aux APO Rear Std APO Rear APO w/Cover 12V Panel Upr Bnk APO Rear Overhead APO:Diagram2
LT/RH/LoneStar - X15/A26 - Std APO Aux APO Rear Std APO Rear APO w/Cover 12V Panel Upr Bnk APO Rear Overhead APO:Diagram3
LT/RH/LoneStar - X15/A26 - Std APO Aux APO Rear Std APO Rear APO w/Cover 12V Panel Upr Bnk APO Rear Overhead APO:Diagram4
LT/RH/LoneStar - X15/A26 - Std APO Rear Std APO Rear APO W/Cover 12V Panel Rear Overhead APO:Diagram1
LT/RH/LoneStar - X15/A26 - Std APO Rear Std APO Rear APO W/Cover 12V Panel Rear Overhead APO:Diagram2
LT/RH/LoneStar - X15/A26 - Std APO Rear Std APO Rear APO w/Cover 12V Panel Upr Bnk APO Rear Overhead APO:Diagram1
LT/RH/LoneStar - X15/A26 - Std APO Rear Std APO Rear APO w/Cover 12V Panel Upr Bnk APO Rear Overhead APO:Diagram2

Mates DEV-APO-2002-01-13A

Name	Terminal Part Number	V-Min	Name	Wire Part Number	Wire CSA	Wire Spec	Wire Material description	Wire Color Description	Wire Length	End2 Terminal Part Number	End2 Pin Name	End2 Connect or
A	-	-	4A	2643687 R1	1.91	14.0	Std. Wall XLPE Primary Cable	LIGHT GREEN	130.0	-	X	-

Name	Terminal Part Number	V-Min	Name	Wire Part Number	Wire CSA	Wire Spec	Wire Material description	Wire Color Description	Wire Length	End2 Terminal Part Number	End2 Pin Name	End2 Connect or
B	-	-	4G	2643689 R1	1.91	14.0	Std. Wall XLPE Primary Cable	WHITE	90.0	-	X	-

Connector Name	D81-2102F
Part Number	1669972C1
Instances	LT/RH/LoneStar - X15/A26 - Interior Task Lights (Map Light-Separate map light from cab dome) - Sleeper Cab:Diagram1
Mates	DEV-DS_MAP_LIGHT-01

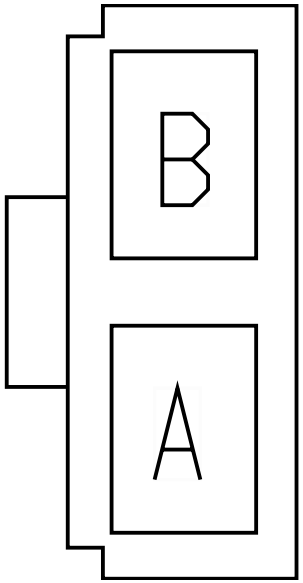

Name	Terminal Part Number	V-Min	Name	Wire Part Number	Wire CSA	Wire Spec	Wire Material description	Wire Color Description	Wire Length	End2 Terminal Part Number	End2 Pin Name	End2 Connect or
A	-	-	D63M	2643720 R1	0.79	18.0	Std. Wall XLPE Primary Cable	DARK BLUE	400.0	-	A	2102M
B	-	-	D63-GE	2643674 R1	0.79	18.0	Std. Wall XLPE Primary Cable	WHITE	400.0	-	B	2102M

Connector Name	D82-2102F
Part Number	1669972C1
Instances	LT/RH/LoneStar - X15/A26 - Interior Task Lights (Map Light-Separate map light from cab dome) - Sleeper Cab:Diagram1
Mates	DEV-PS_MAP_LIGHT-01

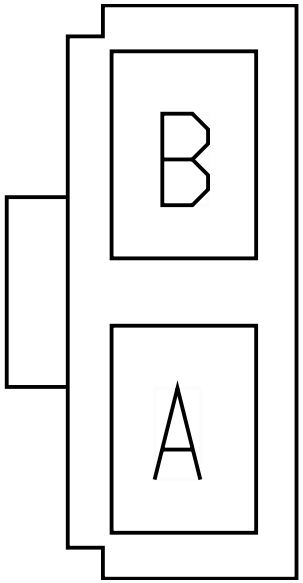

Name	Terminal Part Number	V-Min	Name	Wire Part Number	Wire CSA	Wire Spec	Wire Material description	Wire Color Description	Wire Length	End2 Terminal Part Number	End2 Pin Name	End2 Connect or
A	-	-	D63M	2643720 R1	0.79	18.0	Std. Wall XLPE Primary Cable	DARK BLUE	400.0	-	-	-
B	-	-	D63-GE	2643674 R1	0.79	18.0	Std. Wall XLPE Primary Cable	WHITE	400.0	-	-	-

Connector Name	D99-2100M
Part Number	1661889C1
Instances	LT/RH/LoneStar - X15/A26 - Cab Dome Light (Day Cab):Diagram1 LT/RH/LoneStar - X15/A26 - Interior Task Lights (Map) (Cab Dome / Map Combo) - DayCab:Diagram1
Mates	DEV-FRONT_CAB_DOME_DAY-01

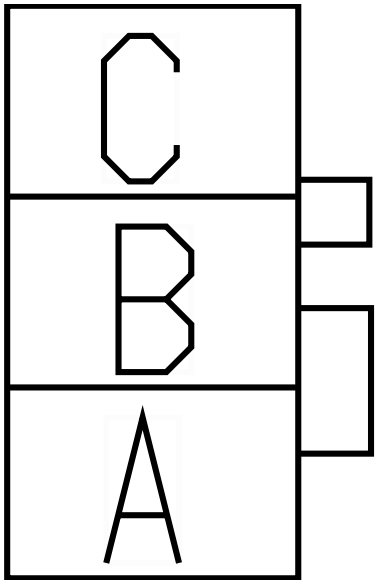

Name	Terminal Part Number	V-Min	Name	Wire Part Number	Wire CSA	Wire Spec	Wire Material description	Wire Color Description	Wire Length	End2 Terminal Part Number	End2 Pin Name	End2 Connect or
A	-	-	C63E	2643720 R1	0.79	18.0	Std. Wall XLPE Primary Cable	DARK BLUE	1150.0	-	D	2500M
B	-	-	C63-GE	2643674 R1	0.79	18.0	Std. Wall XLPE Primary Cable	WHITE	980.0	-	X	-
C	-	-	C63D	2643720 R1	0.79	18.0	Std. Wall XLPE Primary Cable	DARK BLUE	1150.0	-	C	2500M

Connector Name E05-3000

Part Number 3538634C1

Instances LT/RH - X15/A26 - Mirrors (Heat) [Switch Pack Actuated Relay Driven]:Diagram1
LT/RH A26 - Ambient Air Temperature Option 1:Diagram1
LT/RH A26 - Ambient Air Temperature Option 2:Diagram1
LT/RH/LoneStar - X15/A26 - Heated Mirrors (Door Pod Actuated Cab and Hood Mounted):Diagram1
LT/RH/LoneStar - X15/A26 - Heated Mirrors (Door Pod Actuated Cab Mounted):Diagram1
LT/RH/LoneStar - X15/A26 - Mirror Lighting (Turns with Door Pods):Diagram1
LT/RH/LoneStar - X15/A26 - Mirror Lighting (Turns without Door Pods):Diagram1
LT/RH/LoneStar - X15/A26 - Mirrors (Power) [Door Pod Actuated]:Diagram1
LT/RH/LoneStar X15 - Ambient Air Temperature Option 1:Diagram1
LT/RH/LoneStar X15 - Ambient Air Temperature Option 2:Diagram1

Mates MODU-DS-MIRROR-1019-01-01A

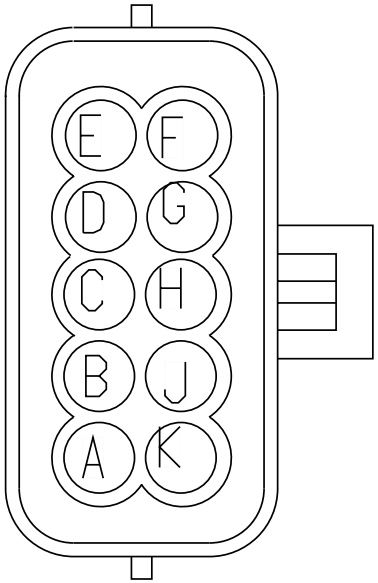

Name	Terminal Part Number	V-Min	Name	Wire Part Number	Wire CSA	Wire Spec	Wire Material description	Wire Color Description	Wire Length	End2 Terminal Part Number	End2 Pin Name	End2 Connector
A	-	-	E05-EB78G	2643671 R1	0.79	18.0	Std. Wall XLPE Primary Cable	LIGHT GREEN	1130.0	-	5	E05-3203M
B	-	-	E05-EB78C	2643671 R1	0.79	18.0	Std. Wall XLPE Primary Cable	LIGHT GREEN	1130.0	-	4	E05-3203M
C	-	-	E05-ET41D	3510329 R1	0.79	18.0	Thin Wall XLPE Primary Cable	TAN	1025.0	-	E	3200F

Name	Terminal Part Number	V-Min	Name	Wire Part Number	Wire CSA	Wire Spec	Wire Material description	Wire Color Description	Wire Length	End2 Terminal Part Number	End2 Pin Name	End2 Connector
D	-	-	E05-ET41E	3510329 R1	0.79	18.0	Thin Wall XLPE Primary Cable	TAN	1025.0	-	F	3200F
E	-	-	E05-EL56D	2643675 R1	0.79	18.0	Std. Wall XLPE Primary Cable	ORANGE	980.0	-	A	3000M
F	-	-	E05-EB78H	3510334 R1	0.53	20.0	Thin Wall XLPE Primary Cable	YELLOW 2	1130.0	-	6	E05-3203M
G	-	-	E05-EA78AA	3510300 R1	1.16	16.0	Thin Wall XLPE Primary Cable	LIGHT GREEN	1130.0	-	1	E05-3203M
G	-	-	E05-EH78A	2643671 R1	0.79	18.0	Std. Wall XLPE Primary Cable	LIGHT GREEN	980.0	-	B	3000M
H	-	-	E05-EH78-GE	3510360 R1	1.16	16.0	Thin Wall XLPE Primary Cable	WHITE	1025.0	-	D	3200F
H	-	-	E05-EA78-GF	3510360 R1	1.16	16.0	Thin Wall XLPE Primary Cable	WHITE	1130.0	-	8	E05-3203M

Connector Name	E05-3003M
Part Number	1671610C1
Instances	LT/RH/LoneStar - X15/A26 - Power Door Locks:Diagram1
Mates	MOT-DS_LOCK-2016-01-01A

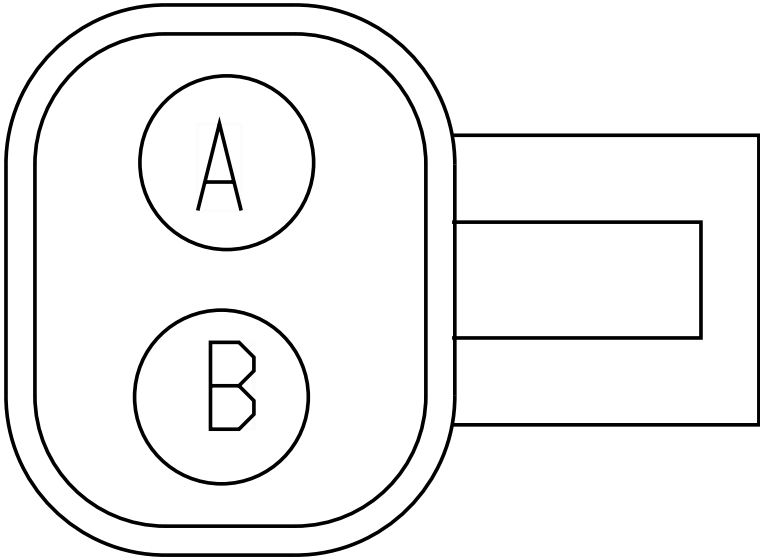

Name	Terminal Part Number	V-Min	Name	Wire Part Number	Wire CSA	Wire Spec	Wire Material description	Wire Color Description	Wire Length	End2 Terminal Part Number	End2 Pin Name	End2 Connect or
A	-	-	E05-EC81LA	3510301R1	1.91	14.0	Thin Wall XLPE Primary Cable	LIGHT GREEN	1760.0	-	3	E05-3201M
B	-	-	E05-EC81LB	3510301R1	1.91	14.0	Thin Wall XLPE Primary Cable	LIGHT GREEN	1760.0	-	4	E05-3201M

Connector Name	E05-3100M
Part Number	3767181C1
Instances	LT/RH/LoneStar - X15/A26 - Power Windows:Diagram1
Mates	MOT-DS_WINDOW-2013-01-01A

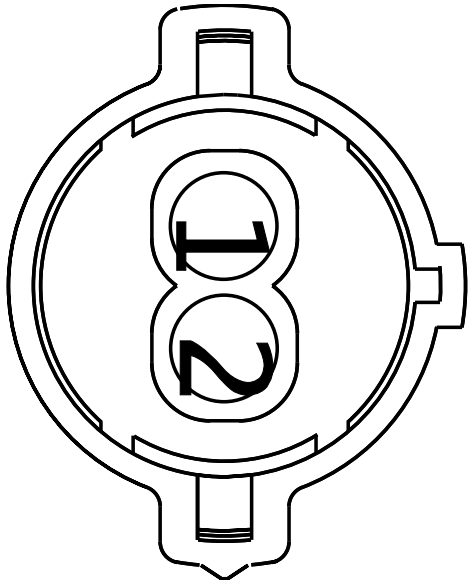

Name	Terminal Part Number	V-Min	Name	Wire Part Number	Wire CSA	Wire Spec	Wire Material description	Wire Color Description	Wire Length	End2 Terminal Part Number	End2 Pin Name	End2 Connect or
1	-	-	E05-EC83B	3510301R1	1.91	14.0	Thin Wall XLPE Primary Cable	LIGHT GREEN	1300.0	-	2	E05-3201M
2	-	-	E05-EC83A	3510301R1	1.91	14.0	Thin Wall XLPE Primary Cable	LIGHT GREEN	1300.0	-	1	E05-3201M

Connector Name	E05-3201M
Part Number	3709437C1
Instances	LT/RH/LoneStar - X15/A26 - Power Door Locks:Diagram1 LT/RH/LoneStar - X15/A26 - Power Windows:Diagram1
Mates	MODU-FRONT-DS_DOOR_POD-201 6-02-02A

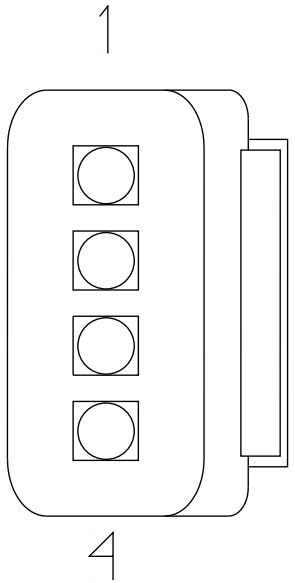

Name	Terminal Part Number	V-Min	Name	Wire Part Number	Wire CSA	Wire Spec	Wire Material description	Wire Color Description	Wire Length	End2 Terminal Part Number	End2 Pin Name	End2 Connect or
1	-	-	E05-EC83A	3510301R1	1.91	14.0	Thin Wall XLPE Primary Cable	LIGHT GREEN	1300.0	-	2	E05-3100M
2	-	-	E05-EC83B	3510301R1	1.91	14.0	Thin Wall XLPE Primary Cable	LIGHT GREEN	1300.0	-	1	E05-3100M
3	-	-	E05-EC81LA	3510301R1	1.91	14.0	Thin Wall XLPE Primary Cable	LIGHT GREEN	1760.0	-	A	E05-3003M
4	-	-	E05-EC81LB	3510301R1	1.91	14.0	Thin Wall XLPE Primary Cable	LIGHT GREEN	1760.0	-	B	E05-3003M

Connector Name	E05-3202M
Part Number	3820176C1
Instances	LT/RH/LoneStar - X15/A26 - Power Door Locks:Diagram1
Mates	MODU-FRONT-DS_DOOR_POD-201 6-02-02A

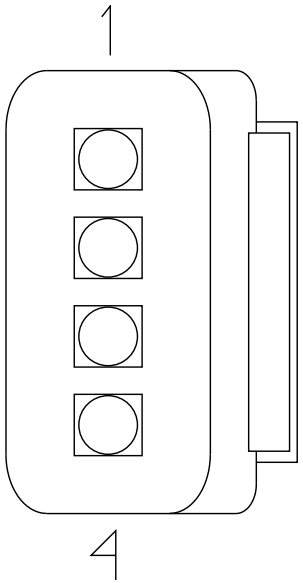

Name	Terminal Part Number	V-Min	Name	Wire Part Number	Wire CSA	Wire Spec	Wire Material description	Wire Color Description	Wire Length	End2 Terminal Part Number	End2 Pin Name	End2 Connect or
1	-	-	E05-EC81B	3510302R1	3.01	12.0	Thin Wall XLPE Primary Cable	LIGHT GREEN	1245.0	-	C	3200F
2	-	-	-	-	-	-	-	-	-	-	-	-
3	-	-	-	-	-	-	-	-	-	-	-	-
4	-	-	E05-EC81-GA	3510362R1	3.01	12.0	Thin Wall XLPE Primary Cable	WHITE	1245.0	-	D	3200F

Connector Name	E05-3203M
Part Number	3709924C1
Instances	LT/RH - X15/A26 - Mirrors (Heat) [Switch Pack Actuated Relay Driven]:Diagram1 LT/RH/LoneStar - X15/A26 - Heated Mirrors (Door Pod Actuated Cab and Hood Mounted):Diagram1 LT/RH/LoneStar - X15/A26 - Heated Mirrors (Door Pod Actuated Cab Mounted):Diagram1 LT/RH/LoneStar - X15/A26 - Mirror Lighting (Turns with Door Pods):Diagram1 LT/RH/LoneStar - X15/A26 - Mirrors (Power) [Door Pod Actuated]:Diagram1
Mates	MODU-FRONT-DS_DOOR_POD-201 6-02-02A

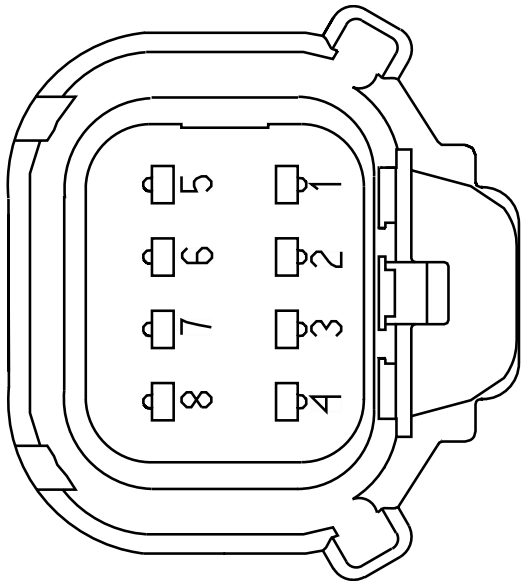

Name	Terminal Part Number	V-Min	Name	Wire Part Number	Wire CSA	Wire Spec	Wire Material description	Wire Color Description	Wire Length	End2 Terminal Part Number	End2 Pin Name	End2 Connect or
1	-	-	E05-EA78AA	3510300R1	1.16	16.0	Thin Wall XLPE Primary Cable	LIGHT GREEN	1130.0	-	G	E05-3000
4	-	-	E05-EB78C	2643671R1	0.79	18.0	Std. Wall XLPE Primary Cable	LIGHT GREEN	1130.0	-	B	E05-3000
5	-	-	E05-EB78G	2643671R1	0.79	18.0	Std. Wall XLPE Primary Cable	LIGHT GREEN	1130.0	-	A	E05-3000
6	-	-	E05-EB78H	3510334R1	0.53	20.0	Thin Wall XLPE Primary Cable	YELLOW 2	1130.0	-	F	E05-3000

Name	Terminal Part Number	V-Min	Name	Wire Part Number	Wire CSA	Wire Spec	Wire Material description	Wire Color Description	Wire Length	End2 Terminal Part Number	End2 Pin Name	End2 Connect or
8	-	-	E05-EA78-GF	3510360 R1	1.16	16.0	Thin Wall XLPE Primary Cable	WHITE	1130.0	-	H	E05-3000

Connector Name E05-3300M

Part Number 3535769C1

Instances LT/RH LoneStar - X15/A26 - Speakers:Four Speakers N/BT N/QC:Diagram1-Day Cab
LT/RH LoneStar - X15/A26 - Speakers:Four Speakers N/BT N/QC:Diagram2-Sleeper
LT/RH LoneStar - X15/A26 - Speakers:Four Speakers N/BT W/QC:Diagram1-Day Cab
LT/RH LoneStar - X15/A26 - Speakers:Four Speakers N/BT W/QC:Diagram2-Sleeper
LT/RH LoneStar - X15/A26 - Speakers:Four Speakers W/BT N/QC:Diagram1-Day Cab
LT/RH LoneStar - X15/A26 - Speakers:Four Speakers W/BT N/QC:Diagram2-Sleeper
LT/RH LoneStar - X15/A26 - Speakers:Four Speakers W/BT W/QC:Diagram1-Day Cab
LT/RH LoneStar - X15/A26 - Speakers:Four Speakers W/BT W/QC:Diagram2-Sleeper
LT/RH LoneStar - X15/A26 - Speakers:Speakers N/BT W/AMP N/QC:Diagram1
LT/RH LoneStar - X15/A26 - Speakers:Speakers W/BT W/AMP N/QC:Diagram1

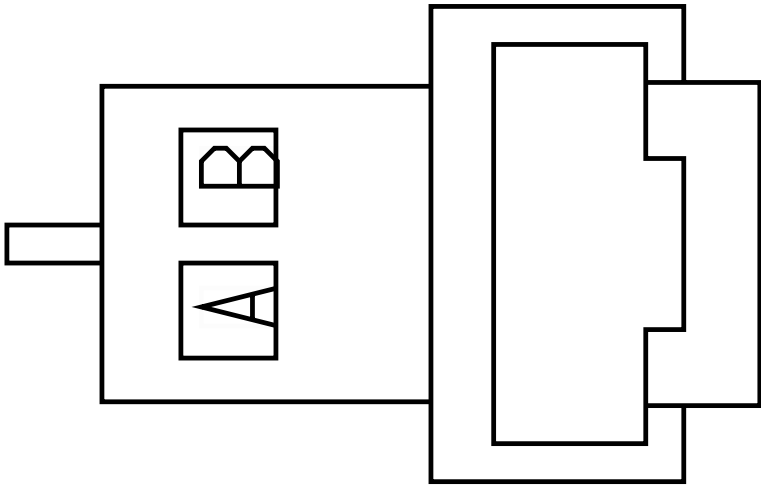

Mates DEV-SPKR_LF-01

Name	Terminal Part Number	V-Min	Name	Wire Part Number	Wire CSA	Wire Spec	Wire Material description	Wire Color Description	Wire Length	End2 Terminal Part Number	End2 Pin Name	End2 Connector
A	-	-	E05-ES86H	2643671R1	0.79	18.0	Std. Wall XLPE Primary Cable	LIGHT GREEN	1050.0	-	C	3205F
B	-	-	E05-ES86J	2643671R1	0.79	18.0	Std. Wall XLPE Primary Cable	LIGHT GREEN	1050.0	-	D	3205F

Connector Name	E05-3400
Part Number	1661259C1
Instances	LT/RH/LoneStar - X15/A26 - Courtesy Light Cab:Diagram1
Mates	LT-LF_COURTESY-2006-01-01A

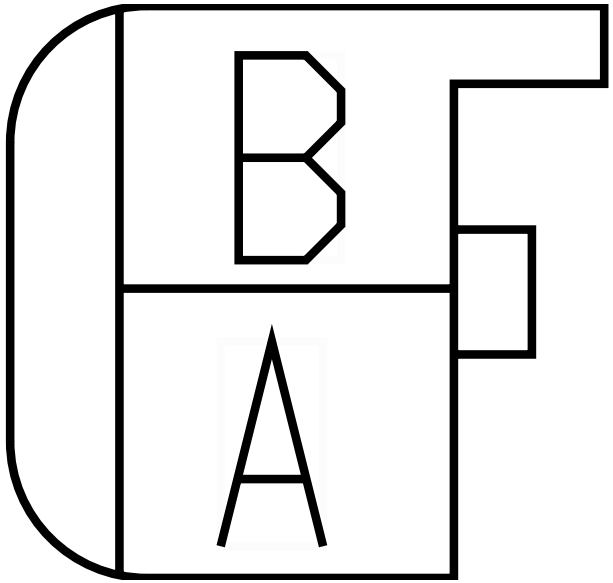

Name	Terminal Part Number	V-Min	Name	Wire Part Number	Wire CSA	Wire Spec	Wire Material description	Wire Color Description	Wire Length	End2 Terminal Part Number	End2 Pin Name	End2 Connect or
A	-	-	E05-ED63BB	3510353 R1	0.79	18.0	Thin Wall XLPE Primary Cable	DARK BLUE	1200.0	-	A	3205F
B	-	-	E05-ED63-G	3510359 R1	0.79	18.0	Thin Wall XLPE Primary Cable	WHITE	1200.0	-	B	3205F

Connector Name	F05-3000
Part Number	3538634C1
Instances	LT/RH - X15/A26 - Mirrors (Heat) [Switch Pack Actuated Relay Driven]:Diagram1 LT/RH/LoneStar - X15/A26 - Heated Mirrors (Door Pod Actuated Cab and Hood Mounted):Diagram1 LT/RH/LoneStar - X15/A26 - Heated Mirrors (Door Pod Actuated Cab Mounted):Diagram1 LT/RH/LoneStar - X15/A26 - Mirror Lighting (Turns with Door Pods):Diagram1 LT/RH/LoneStar - X15/A26 - Mirror Lighting (Turns without Door Pods):Diagram1 LT/RH/LoneStar - X15/A26 - Mirrors (Power) [Door Pod Actuated]:Diagram1
Mates	MODU-PS-MIRROR-1019-01-01A

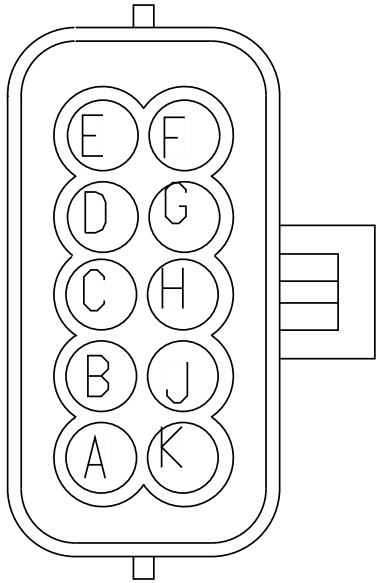

Name	Terminal Part Number	V-Min	Name	Wire Part Number	Wire CSA	Wire Spec	Wire Material description	Wire Color Description	Wire Length	End2 Terminal Part Number	End2 Pin Name	End2 Connect or
A	-	-	F05-EB78G	2643671 R1	0.79	18.0	Std. Wall XLPE Primary Cable	LIGHT GREEN	1130.0	-	5	F05-3203M
B	-	-	F05-EB78C	2643671 R1	0.79	18.0	Std. Wall XLPE Primary Cable	LIGHT GREEN	1130.0	-	4	F05-3203M
E	-	-	F05-EL56D	2643675 R1	0.79	18.0	Std. Wall XLPE Primary Cable	ORANGE	980.0	-	A	3000M
F	-	-	F05-EB78H	3510334 R1	0.53	20.0	Thin Wall XLPE Primary Cable	YELLOW 2	1130.0	-	6	F05-3203M

Name	Terminal Part Number	V-Min	Name	Wire Part Number	Wire CSA	Wire Spec	Wire Material description	Wire Color Description	Wire Length	End2 Terminal Part Number	End2 Pin Name	End2 Connect or
G	-	-	F05-EA78AA	3510300 R1	1.16	16.0	Thin Wall XLPE Primary Cable	LIGHT GREEN	1130.0	-	1	F05-3203M
G	-	-	F05-EH78A	2643671 R1	0.79	18.0	Std. Wall XLPE Primary Cable	LIGHT GREEN	980.0	-	B	3000M
H	-	-	F05-EH78-GE	3510360 R1	1.16	16.0	Thin Wall XLPE Primary Cable	WHITE	1025.0	-	D	3200F
H	-	-	F05-EA78-GF	3510360 R1	1.16	16.0	Thin Wall XLPE Primary Cable	WHITE	1130.0	-	8	F05-3203M

Connector Name	F05-3003M
Part Number	1671610C1
Instances	LT/RH/LoneStar - X15/A26 - Power Door Locks:Diagram1
Mates	DEV-FRONT-PS-LOCK-MOTOR-01

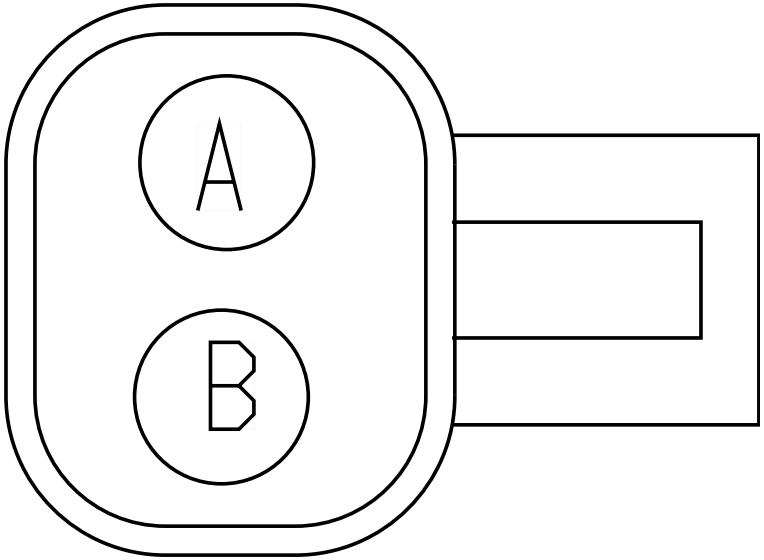

Name	Terminal Part Number	V-Min	Name	Wire Part Number	Wire CSA	Wire Spec	Wire Material description	Wire Color Description	Wire Length	End2 Terminal Part Number	End2 Pin Name	End2 Connect or
A	-	-	F05-EC81LA	3510301R1	1.91	14.0	Thin Wall XLPE Primary Cable	LIGHT GREEN	1760.0	-	3	F05-3201M
B	-	-	F05-EC81LB	3510301R1	1.91	14.0	Thin Wall XLPE Primary Cable	LIGHT GREEN	1760.0	-	4	F05-3201M

Connector Name	F05-3100M
Part Number	3767181C1
Instances	LT/RH/LoneStar - X15/A26 - Power Windows:Diagram1
Mates	MOT-PS_WINDOW-2013-01-01A

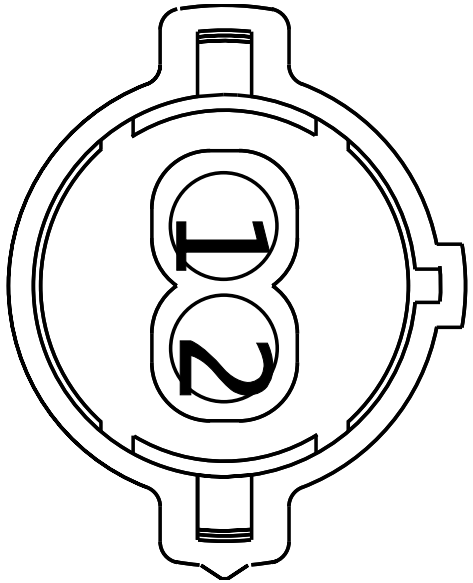

Name	Terminal Part Number	V-Min	Name	Wire Part Number	Wire CSA	Wire Spec	Wire Material description	Wire Color Description	Wire Length	End2 Terminal Part Number	End2 Pin Name	End2 Connect or
1	-	-	F05-EC83B	3510301R1	1.91	14.0	Thin Wall XLPE Primary Cable	LIGHT GREEN	1300.0	-	2	F05-3201M
2	-	-	F05-EC83A	3510301R1	1.91	14.0	Thin Wall XLPE Primary Cable	LIGHT GREEN	1300.0	-	1	F05-3201M

Connector Name	F05-3201M
Part Number	3709437C1
Instances	LT/RH/LoneStar - X15/A26 - Power Door Locks:Diagram1 LT/RH/LoneStar - X15/A26 - Power Windows:Diagram1
Mates	MODU-FRONT-PS_DOOR_POD-201 6-01-02A

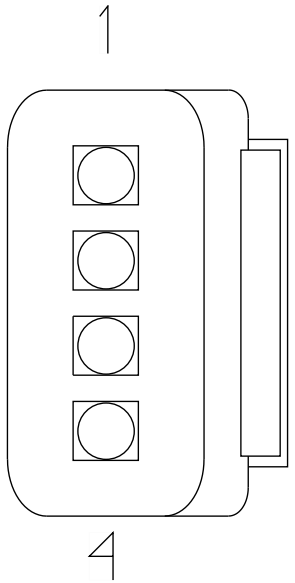

Name	Terminal Part Number	V-Min	Name	Wire Part Number	Wire CSA	Wire Spec	Wire Material description	Wire Color Description	Wire Length	End2 Terminal Part Number	End2 Pin Name	End2 Connect or
1	-	-	F05-EC83A	3510301R1	1.91	14.0	Thin Wall XLPE Primary Cable	LIGHT GREEN	1300.0	-	2	F05-3100M
2	-	-	F05-EC83B	3510301R1	1.91	14.0	Thin Wall XLPE Primary Cable	LIGHT GREEN	1300.0	-	1	F05-3100M
3	-	-	F05-EC81LA	3510301R1	1.91	14.0	Thin Wall XLPE Primary Cable	LIGHT GREEN	1760.0	-	A	F05-3003M
4	-	-	F05-EC81LB	3510301R1	1.91	14.0	Thin Wall XLPE Primary Cable	LIGHT GREEN	1760.0	-	B	F05-3003M

Connector Name	F05-3202M
Part Number	3820176C1
Instances	LT/RH/LoneStar - X15/A26 - Power Door Locks:Diagram1 LT/RH/LoneStar - X15/A26 - Remote Keyless Access:Diagram1
Mates	MODU-FRONT-PS_DOOR_POD-201 6-01-02A

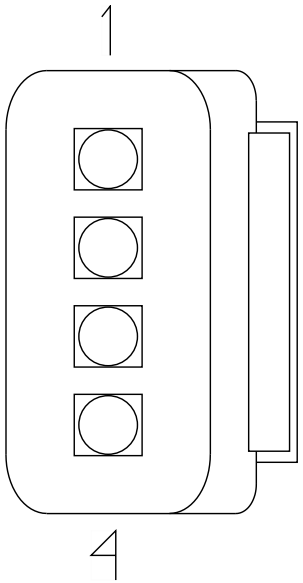

Name	Terminal Part Number	V-Min	Name	Wire Part Number	Wire CSA	Wire Spec	Wire Material description	Wire Color Description	Wire Length	End2 Terminal Part Number	End2 Pin Name	End2 Connect or
1	-	-	F05-EC81B	3510302R1	3.01	12.0	Thin Wall XLPE Primary Cable	LIGHT GREEN	1245.0	-	C	3200F
2	-	-	-	-	-	-	-	-	-	-	-	-
3	-	-	-	-	-	-	-	-	-	-	-	-
4	-	-	F05-EC81-GA	3510362R1	3.01	12.0	Thin Wall XLPE Primary Cable	WHITE	1245.0	-	D	3200F

Connector Name	F05-3203M
Part Number	3709924C1
Instances	LT/RH - X15/A26 - Mirrors (Heat) [Switch Pack Actuated Relay Driven]:Diagram1 LT/RH/LoneStar - X15/A26 - Heated Mirrors (Door Pod Actuated Cab and Hood Mounted):Diagram1 LT/RH/LoneStar - X15/A26 - Heated Mirrors (Door Pod Actuated Cab Mounted):Diagram1 LT/RH/LoneStar - X15/A26 - Mirror Lighting (Turns with Door Pods):Diagram1 LT/RH/LoneStar - X15/A26 - Mirrors (Power) [Door Pod Actuated]:Diagram1
Mates	MODU-FRONT-PS_DOOR_POD-201 6-01-02A

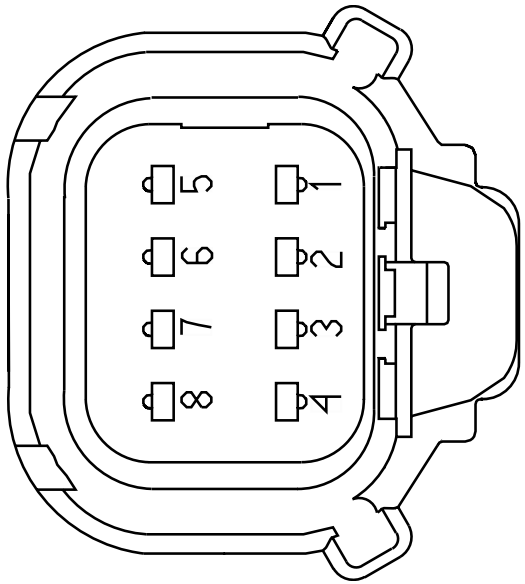

Name	Terminal Part Number	V-Min	Name	Wire Part Number	Wire CSA	Wire Spec	Wire Material description	Wire Color Description	Wire Length	End2 Terminal Part Number	End2 Pin Name	End2 Connect or
1	-	-	F05-EA78AA	3510300R1	1.16	16.0	Thin Wall XLPE Primary Cable	LIGHT GREEN	1130.0	-	G	F05-3000
4	-	-	F05-EB78C	2643671R1	0.79	18.0	Std. Wall XLPE Primary Cable	LIGHT GREEN	1130.0	-	B	F05-3000
5	-	-	F05-EB78G	2643671R1	0.79	18.0	Std. Wall XLPE Primary Cable	LIGHT GREEN	1130.0	-	A	F05-3000
6	-	-	F05-EB78H	3510334R1	0.53	20.0	Thin Wall XLPE Primary Cable	YELLOW 2	1130.0	-	F	F05-3000

Name	Terminal Part Number	V-Min	Name	Wire Part Number	Wire CSA	Wire Spec	Wire Material description	Wire Color Description	Wire Length	End2 Terminal Part Number	End2 Pin Name	End2 Connect or
8	-	-	F05-EA78-GF	3510360 R1	1.16	16.0	Thin Wall XLPE Primary Cable	WHITE	1130.0	-	H	F05-3000

Connector Name F05-3300M

Part Number 3535769C1

Instances LT/RH LoneStar - X15/A26 - Speakers:Four Speakers N/BT N/QC:Diagram1-Day Cab
LT/RH LoneStar - X15/A26 - Speakers:Four Speakers N/BT N/QC:Diagram2-Sleeper
LT/RH LoneStar - X15/A26 - Speakers:Four Speakers N/BT W/QC:Diagram1-Day Cab
LT/RH LoneStar - X15/A26 - Speakers:Four Speakers N/BT W/QC:Diagram2-Sleeper
LT/RH LoneStar - X15/A26 - Speakers:Four Speakers W/BT N/QC:Diagram1-Day Cab
LT/RH LoneStar - X15/A26 - Speakers:Four Speakers W/BT N/QC:Diagram2-Sleeper
LT/RH LoneStar - X15/A26 - Speakers:Four Speakers W/BT W/QC:Diagram1-Day Cab
LT/RH LoneStar - X15/A26 - Speakers:Four Speakers W/BT W/QC:Diagram2-Sleeper
LT/RH LoneStar - X15/A26 - Speakers:Speakers N/BT W/AMP N/QC:Diagram1
LT/RH LoneStar - X15/A26 - Speakers:Speakers W/BT W/AMP N/QC:Diagram1

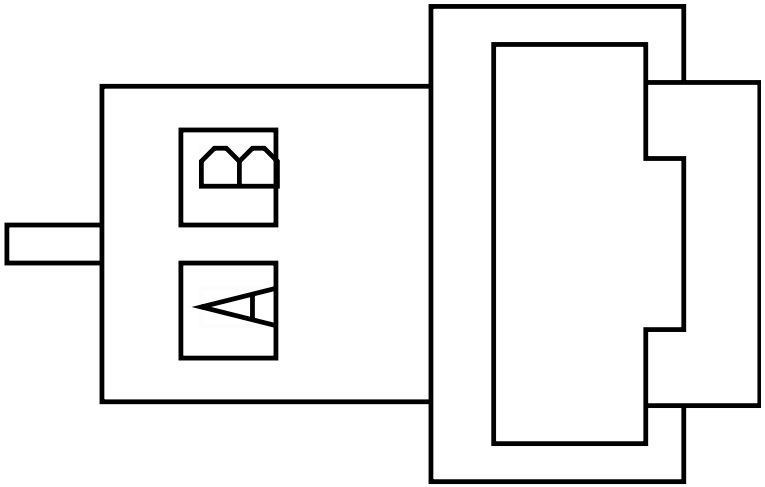

Mates DEV-SPKR_RF-01

Name	Terminal Part Number	V-Min	Name	Wire Part Number	Wire CSA	Wire Spec	Wire Material description	Wire Color Description	Wire Length	End2 Terminal Part Number	End2 Pin Name	End2 Connector
A	-	-	F05-ES86H	2643671R1	0.79	18.0	Std. Wall XLPE Primary Cable	LIGHT GREEN	1050.0	-	C	3205F
B	-	-	F05-ES86J	2643671R1	0.79	18.0	Std. Wall XLPE Primary Cable	LIGHT GREEN	1050.0	-	D	3205F

Connector Name	F05-3400
Part Number	1661259C1
Instances	LT/RH/LoneStar - X15/A26 - Courtesy Light Cab:Diagram1
Mates	LT-RF_COURTESY-2006-01-01A

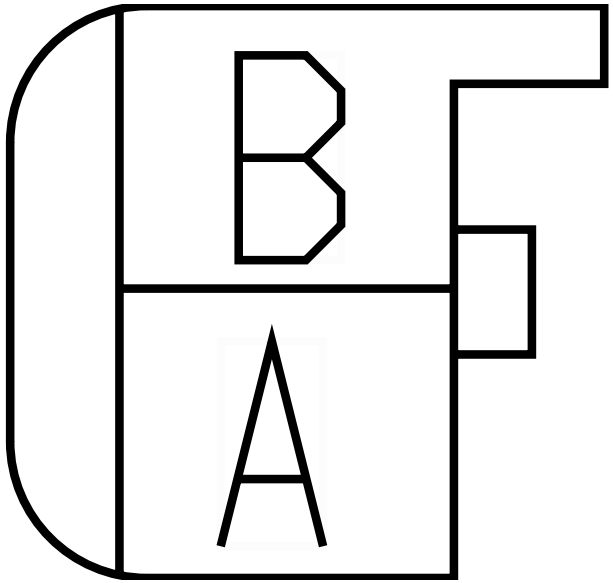

Name	Terminal Part Number	V-Min	Name	Wire Part Number	Wire CSA	Wire Spec	Wire Material description	Wire Color Description	Wire Length	End2 Terminal Part Number	End2 Pin Name	End2 Connect or
A	-	-	F05-ED63BB	3510353 R1	0.79	18.0	Thin Wall XLPE Primary Cable	DARK BLUE	1200.0	-	A	3205F
B	-	-	F05-ED63-G	3510359 R1	0.79	18.0	Thin Wall XLPE Primary Cable	WHITE	1200.0	-	B	3205F

Connector Name	H01-1305
Part Number	969541R1
Instances	LT/RH LoneStar - X15/A26 - Fan - Sleeper/Bunk:Diagram1
Mates	DEV_BUNK_FAN-2057-01-01A

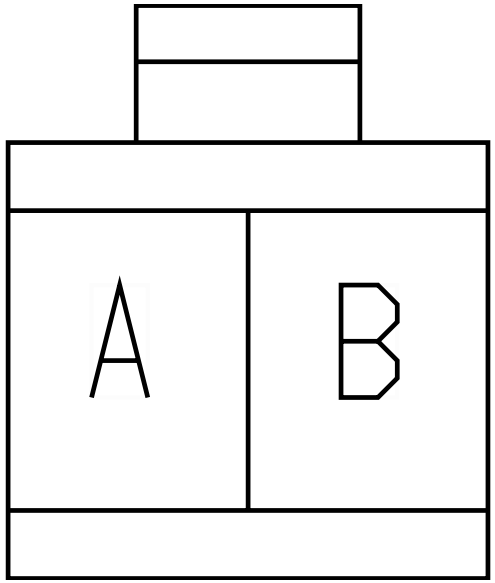

Name	Terminal Part Number	V-Min	Name	Wire Part Number	Wire CSA	Wire Spec	Wire Material description	Wire Color Description	Wire Length	End2 Terminal Part Number	End2 Pin Name	End2 Connect or
A	-	-	JH76	2643671 R1	0.79	18.0	Std. Wall XLPE Primary Cable	LIGHT GREEN	6417.0	-	-	-
B	-	-	JH76-G	2643674 R1	0.79	18.0	Std. Wall XLPE Primary Cable	WHITE	6367.0	-	-	-

Connector Name H01-5001B

Part Number 4100325C1

Instances LT/RH/LoneStar - X15/A26 - Lighting Sleeper Dome:Diagram1
LT/RH/LoneStar - X15/A26 - Luggage Compartment Lights - W/ No Idle HVAC:Diagram1

Mates RLY-SLPRDOME-2003-02-04

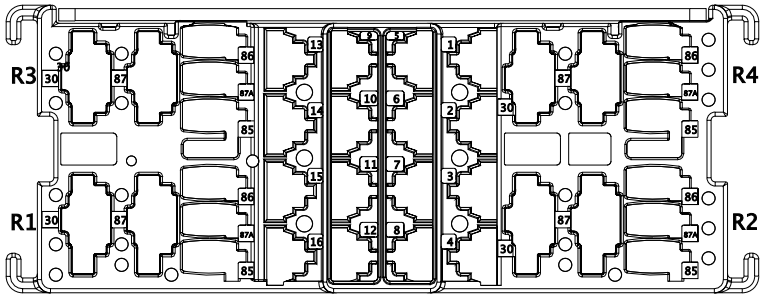

Name	Terminal Part Number	V-Min	Name	Wire Part Number	Wire CSA	Wire Spec	Wire Material description	Wire Color Description	Wire Length	End2 Terminal Part Number	End2 Pin Name	End2 Connect or
R2-30	-	-	LD63SJ	2643720 R1	0.79	18.0	Std. Wall XLPE Primary Cable	DARK BLUE	2340.0	-	A	H01-5110
R2-85	-	-	LD63SH	2643720 R1	0.79	18.0	Std. Wall XLPE Primary Cable	DARK BLUE	795.0	-	X	-
R2-86	-	-	LD63-GSA	2643674 R1	0.79	18.0	Std. Wall XLPE Primary Cable	WHITE	1535.0	-	X	-
R2-87	-	-	LD63SF	2643720 R1	0.79	18.0	Std. Wall XLPE Primary Cable	DARK BLUE	795.0	-	X	-

Name	Terminal Part Number	V-Min	Name	Wire Part Number	Wire CSA	Wire Spec	Wire Material description	Wire Color Description	Wire Length	End2 Terminal Part Number	End2 Pin Name	End2 Connector
R2-87A	-	-	HA63SCA	2643720 R1	0.79	18.0	Std. Wall XLPE Primary Cable	DARK BLUE	3285.0	-	A	H01-5133
R4-30	-	-	HA63DV	2643720 R1	0.79	18.0	Std. Wall XLPE Primary Cable	DARK BLUE	0.0	-	-	-
R4-85	-	-	HA63-GD	2643674 R1	0.79	18.0	Std. Wall XLPE Primary Cable	WHITE	1600.0	-	-	-
R4-86	-	-	HA63C	2643720 R1	0.79	18.0	Std. Wall XLPE Primary Cable	DARK BLUE	1340.0	-	37	5000
R4-87	-	-	HA63D	2643720 R1	0.79	18.0	Std. Wall XLPE Primary Cable	DARK BLUE	2415.0	-	-	-

Connector Name H01-5001B

Part Number 4100325C1

Instances LT/RH/LoneStar - X15/A26 - Luggage Compartment Lights - W/O No Idle HVAC:Diagram1

Mates RLY-LUGGAGE-2012-01-03A

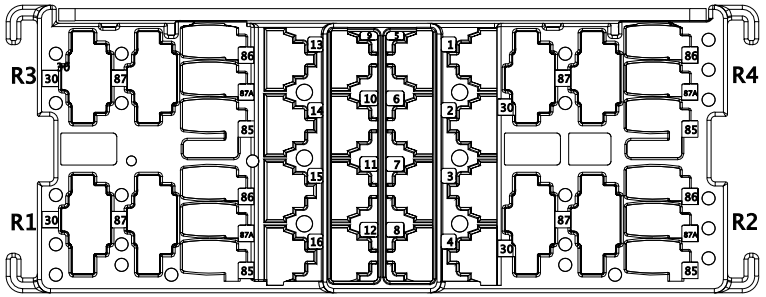

Name	Terminal Part Number	V-Min	Name	Wire Part Number	Wire CSA	Wire Spec	Wire Material description	Wire Color Description	Wire Length	End2 Terminal Part Number	End2 Pin Name	End2 Connect or
R2-30	-	-	LE63SJ	2643720 R1	0.79	18.0	Std. Wall XLPE Primary Cable	DARK BLUE	1605.0	-	X	-
R2-85	-	-	LE63SH	2643720 R1	0.79	18.0	Std. Wall XLPE Primary Cable	DARK BLUE	845.0	-	X	-
R2-86	-	-	LE63-GSA	2643720 R1	0.79	18.0	Std. Wall XLPE Primary Cable	DARK BLUE	1575.0	-	X	-
R2-87	-	-	LE63SF	2643720 R1	0.79	18.0	Std. Wall XLPE Primary Cable	DARK BLUE	845.0	-	X	-

Name	Terminal Part Number	V-Min	Name	Wire Part Number	Wire CSA	Wire Spec	Wire Material description	Wire Color Description	Wire Length	End2 Terminal Part Number	End2 Pin Name	End2 Connect or
R2-87A	-	-	HA63SCA	2643720 R1	0.79	18.0	Std. Wall XLPE Primary Cable	DARK BLUE	3285.0	-	A	H01-5133

Connector Name	H01-5003
Part Number	3613000C1
Instances	LT/RH/LoneStar - X15/A26 - Cigar Lighter Aux APO Rear Std APO Rear APO W/Cover 12V Panel:Diagram1 LT/RH/LoneStar - X15/A26 - Cigar Lighter Aux APO Rear Std APO Rear APO W/Cover 12V Panel:Diagram2 LT/RH/LoneStar - X15/A26 - Cigar Lighter Aux APO Rear Std APO Rear APO W/Cover 12V Panel:Diagram3 LT/RH/LoneStar - X15/A26 - Cigar Lighter Aux APO Rear Std APO Rear APO W/Cover 12V Panel:Diagram4 LT/RH/LoneStar - X15/A26 - Cigar Lighter Aux APO Rear Std APO Rear APO w/Cover 12V Panel Overhead APO:Diagram1 LT/RH/LoneStar - X15/A26 - Cigar Lighter Aux APO Rear Std APO Rear APO w/Cover 12V Panel Overhead APO:Diagram2 LT/RH/LoneStar - X15/A26 - Cigar Lighter Aux APO Rear Std APO Rear APO w/Cover 12V Panel Overhead APO:Diagram3 LT/RH/LoneStar - X15/A26 - Cigar Lighter Aux APO Rear Std APO Rear APO w/Cover 12V Panel Overhead APO:Diagram4 LT/RH/LoneStar - X15/A26 - Cigar Lighter Aux APO Rear Std APO Rear APO w/Cover 12V Panel Upr Bnk APO:Diagram1 LT/RH/LoneStar - X15/A26 - Cigar Lighter Aux APO Rear Std APO Rear APO w/Cover 12V Panel Upr Bnk APO:Diagram2 LT/RH/LoneStar - X15/A26 - Cigar Lighter Aux APO Rear Std APO Rear APO w/Cover 12V Panel Upr Bnk APO:Diagram3 LT/RH/LoneStar - X15/A26 - Cigar Lighter Aux APO Rear Std APO Rear APO w/Cover 12V Panel Upr Bnk APO:Diagram4 LT/RH/LoneStar - X15/A26 - Cigar Lighter Aux APO Rear Std APO Rear APO w/Cover 12V Panel Upr Bnk APO Rear Overhead APO:Diagram1-Combination1 LT/RH/LoneStar - X15/A26 - Cigar Lighter Aux APO Rear Std APO Rear APO w/Cover 12V Panel Upr Bnk APO Rear Overhead APO:Diagram1-Combination2 LT/RH/LoneStar - X15/A26 - Cigar Lighter Aux APO Rear Std APO Rear APO w/Cover 12V Panel Upr Bnk APO Rear Overhead APO:Diagram1-Combination3 LT/RH/LoneStar - X15/A26 - Cigar Lighter Aux APO Rear Std APO Rear APO w/Cover 12V Panel Upr Bnk APO Rear Overhead APO:Diagram1-Combination4 LT/RH/LoneStar - X15/A26 - Cigar Lighter Rear Std APO APO W/Cover 12V Panel:Diagram1 LT/RH/LoneStar - X15/A26 - Cigar Lighter Rear Std APO APO W/Cover 12V Panel:Diagram2

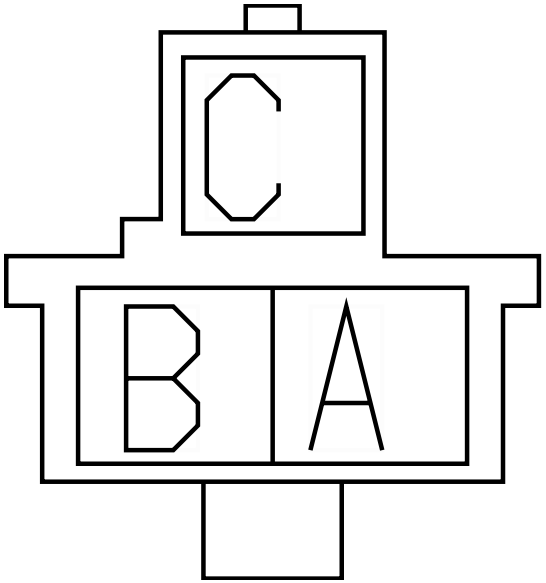

LT/RH/LoneStar - X15/A26 - Cigar Lighter Rear Std APO Rear APO W/Cover 12V Panel Overhead APO:Diagram1
LT/RH/LoneStar - X15/A26 - Cigar Lighter Rear Std APO Rear APO W/Cover 12V Panel Overhead APO:Diagram2
LT/RH/LoneStar - X15/A26 - Cigar Lighter Rear Std APO Rear APO W/Cover 12V Panel Upr Bnk APO:Diagram1
LT/RH/LoneStar - X15/A26 - Cigar Lighter Rear Std APO Rear APO W/Cover 12V Panel Upr Bnk APO:Diagram2
LT/RH/LoneStar - X15/A26 - Cigar Lighter Rear Std APO Rear APO w/Cover 12V Panel Upr Bnk APO Rear Overhead APO:Diagram1
LT/RH/LoneStar - X15/A26 - Cigar Lighter Rear Std APO Rear APO w/Cover 12V Panel Upr Bnk APO Rear Overhead APO:Diagram2
LT/RH/LoneStar - X15/A26 - Std APO Aux APO Rear Std APO Rear APO W/Cover 12V Panel:Diagram1
LT/RH/LoneStar - X15/A26 - Std APO Aux APO Rear Std APO Rear APO W/Cover 12V Panel:Diagram2
LT/RH/LoneStar - X15/A26 - Std APO Aux APO Rear Std APO Rear APO W/Cover 12V Panel:Diagram3
LT/RH/LoneStar - X15/A26 - Std APO Aux APO Rear Std APO Rear APO W/Cover 12V Panel:Diagram4
LT/RH/LoneStar - X15/A26 - Std APO Aux APO Rear Std APO Rear APO W/Cover 12V Panel Overhead APO:Diagram1
LT/RH/LoneStar - X15/A26 - Std APO Aux APO Rear Std APO Rear APO W/Cover 12V Panel Overhead APO:Diagram2
LT/RH/LoneStar - X15/A26 - Std APO Aux APO Rear Std APO Rear APO W/Cover 12V Panel Overhead APO:Diagram3
LT/RH/LoneStar - X15/A26 - Std APO Aux APO Rear Std APO Rear APO W/Cover 12V Panel Overhead APO:Diagram4
LT/RH/LoneStar - X15/A26 - Std APO Aux APO Rear Std APO Rear APO W/Cover 12V Panel Upr Bnk APO:Diagram1
LT/RH/LoneStar - X15/A26 - Std APO Aux APO Rear Std APO Rear APO W/Cover 12V Panel Upr Bnk APO:Diagram2
LT/RH/LoneStar - X15/A26 - Std APO Aux APO Rear Std APO Rear APO W/Cover 12V Panel Upr Bnk APO:Diagram3
LT/RH/LoneStar - X15/A26 - Std APO Aux APO Rear Std APO Rear APO W/Cover 12V Panel Upr Bnk APO:Diagram4
LT/RH/LoneStar - X15/A26 - Std APO Aux APO Rear Std APO Rear APO w/Cover 12V Panel Upr Bnk APO Rear Overhead APO:Diagram1
LT/RH/LoneStar - X15/A26 - Std APO Aux APO Rear Std APO Rear APO w/Cover 12V Panel Upr Bnk APO Rear Overhead APO:Diagram2

LT/RH/LoneStar - X15/A26 - Std APO Aux APO Rear Std APO Rear APO w/Cover 12V Panel Upr Bnk APO Rear Overhead APO:Diagram3
LT/RH/LoneStar - X15/A26 - Std APO Aux APO Rear Std APO Rear APO w/Cover 12V Panel Upr Bnk APO Rear Overhead APO:Diagram4
LT/RH/LoneStar - X15/A26 - Std APO Rear Std APO Rear APO W/Cover 12V Panel:Diagram1
LT/RH/LoneStar - X15/A26 - Std APO Rear Std APO Rear APO W/Cover 12V Panel:Diagram2
LT/RH/LoneStar - X15/A26 - Std APO Rear Std APO Rear APO W/Cover 12V Panel Rear Overhead APO:Diagram1
LT/RH/LoneStar - X15/A26 - Std APO Rear Std APO Rear APO W/Cover 12V Panel Rear Overhead APO:Diagram2
LT/RH/LoneStar - X15/A26 - Std APO Rear Std APO Rear APO W/Cover 12V Panel Upr Bnk APO:Diagram1
LT/RH/LoneStar - X15/A26 - Std APO Rear Std APO Rear APO W/Cover 12V Panel Upr Bnk APO:Diagram2
LT/RH/LoneStar - X15/A26 - Std APO Rear Std APO Rear APO w/Cover 12V Panel Upr Bnk APO Rear Overhead APO:Diagram1
LT/RH/LoneStar - X15/A26 - Std APO Rear Std APO Rear APO w/Cover 12V Panel Upr Bnk APO Rear Overhead APO:Diagram2

Mates DEV-APO-2002-01-09B

Name	Terminal Part Number	V-Min	Name	Wire Part Number	Wire CSA	Wire Spec	Wire Material description	Wire Color Description	Wire Length	End2 Terminal Part Number	End2 Pin Name	End2 Connect or
A	-	-	HA86SBA	2643806 R1	1.16	16.0	Std. Wall XLPE Primary Cable	LIGHT BLUE	1520.0	-	X	-
C	-	-	HA86-GSA	2643681 R1	1.16	16.0	Std. Wall XLPE Primary Cable	WHITE	305.0	-	-	-

Connector Name	H01-5005
Part Number	872291R1
Instances	LT/RH/LoneStar - X15/A26 - Cigar Lighter Aux APO Rear Std APO Rear APO W/Cover 12V Panel:Diagram1 LT/RH/LoneStar - X15/A26 - Cigar Lighter Aux APO Rear Std APO Rear APO W/Cover 12V Panel:Diagram2 LT/RH/LoneStar - X15/A26 - Cigar Lighter Aux APO Rear Std APO Rear APO W/Cover 12V Panel:Diagram3 LT/RH/LoneStar - X15/A26 - Cigar Lighter Aux APO Rear Std APO Rear APO W/Cover 12V Panel:Diagram4 LT/RH/LoneStar - X15/A26 - Cigar Lighter Aux APO Rear Std APO Rear APO w/Cover 12V Panel Overhead APO:Diagram1 LT/RH/LoneStar - X15/A26 - Cigar Lighter Aux APO Rear Std APO Rear APO w/Cover 12V Panel Overhead APO:Diagram2 LT/RH/LoneStar - X15/A26 - Cigar Lighter Aux APO Rear Std APO Rear APO w/Cover 12V Panel Overhead APO:Diagram3 LT/RH/LoneStar - X15/A26 - Cigar Lighter Aux APO Rear Std APO Rear APO w/Cover 12V Panel Overhead APO:Diagram4 LT/RH/LoneStar - X15/A26 - Cigar Lighter Aux APO Rear Std APO Rear APO w/Cover 12V Panel Upr Bnk APO:Diagram1 LT/RH/LoneStar - X15/A26 - Cigar Lighter Aux APO Rear Std APO Rear APO w/Cover 12V Panel Upr Bnk APO:Diagram2 LT/RH/LoneStar - X15/A26 - Cigar Lighter Aux APO Rear Std APO Rear APO w/Cover 12V Panel Upr Bnk APO:Diagram3 LT/RH/LoneStar - X15/A26 - Cigar Lighter Aux APO Rear Std APO Rear APO w/Cover 12V Panel Upr Bnk APO:Diagram4 LT/RH/LoneStar - X15/A26 - Cigar Lighter Aux APO Rear Std APO Rear APO w/Cover 12V Panel Upr Bnk APO Rear Overhead APO:Diagram1-Combination1 LT/RH/LoneStar - X15/A26 - Cigar Lighter Aux APO Rear Std APO Rear APO w/Cover 12V Panel Upr Bnk APO Rear Overhead APO:Diagram1-Combination2 LT/RH/LoneStar - X15/A26 - Cigar Lighter Aux APO Rear Std APO Rear APO w/Cover 12V Panel Upr Bnk APO Rear Overhead APO:Diagram1-Combination3 LT/RH/LoneStar - X15/A26 - Cigar Lighter Aux APO Rear Std APO Rear APO w/Cover 12V Panel Upr Bnk APO Rear Overhead APO:Diagram1-Combination4 LT/RH/LoneStar - X15/A26 - Cigar Lighter Rear Std APO APO W/Cover 12V Panel:Diagram1 LT/RH/LoneStar - X15/A26 - Cigar Lighter Rear Std APO APO W/Cover 12V Panel:Diagram2

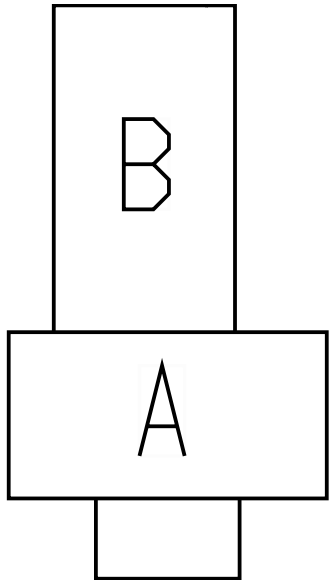

LT/RH/LoneStar - X15/A26 - Cigar Lighter Rear Std APO Rear APO W/Cover 12V Panel Overhead APO:Diagram1
LT/RH/LoneStar - X15/A26 - Cigar Lighter Rear Std APO Rear APO W/Cover 12V Panel Overhead APO:Diagram2
LT/RH/LoneStar - X15/A26 - Cigar Lighter Rear Std APO Rear APO W/Cover 12V Panel Upr Bnk APO:Diagram1
LT/RH/LoneStar - X15/A26 - Cigar Lighter Rear Std APO Rear APO W/Cover 12V Panel Upr Bnk APO:Diagram2
LT/RH/LoneStar - X15/A26 - Cigar Lighter Rear Std APO Rear APO w/Cover 12V Panel Upr Bnk APO Rear Overhead APO:Diagram1
LT/RH/LoneStar - X15/A26 - Cigar Lighter Rear Std APO Rear APO w/Cover 12V Panel Upr Bnk APO Rear Overhead APO:Diagram2
LT/RH/LoneStar - X15/A26 - Std APO Aux APO Rear Std APO Rear APO W/Cover 12V Panel:Diagram1
LT/RH/LoneStar - X15/A26 - Std APO Aux APO Rear Std APO Rear APO W/Cover 12V Panel:Diagram2
LT/RH/LoneStar - X15/A26 - Std APO Aux APO Rear Std APO Rear APO W/Cover 12V Panel:Diagram3
LT/RH/LoneStar - X15/A26 - Std APO Aux APO Rear Std APO Rear APO W/Cover 12V Panel:Diagram4
LT/RH/LoneStar - X15/A26 - Std APO Aux APO Rear Std APO Rear APO W/Cover 12V Panel Overhead APO:Diagram1
LT/RH/LoneStar - X15/A26 - Std APO Aux APO Rear Std APO Rear APO W/Cover 12V Panel Overhead APO:Diagram2
LT/RH/LoneStar - X15/A26 - Std APO Aux APO Rear Std APO Rear APO W/Cover 12V Panel Overhead APO:Diagram3
LT/RH/LoneStar - X15/A26 - Std APO Aux APO Rear Std APO Rear APO W/Cover 12V Panel Overhead APO:Diagram4
LT/RH/LoneStar - X15/A26 - Std APO Aux APO Rear Std APO Rear APO W/Cover 12V Panel Upr Bnk APO:Diagram1
LT/RH/LoneStar - X15/A26 - Std APO Aux APO Rear Std APO Rear APO W/Cover 12V Panel Upr Bnk APO:Diagram2
LT/RH/LoneStar - X15/A26 - Std APO Aux APO Rear Std APO Rear APO W/Cover 12V Panel Upr Bnk APO:Diagram3
LT/RH/LoneStar - X15/A26 - Std APO Aux APO Rear Std APO Rear APO W/Cover 12V Panel Upr Bnk APO:Diagram4
LT/RH/LoneStar - X15/A26 - Std APO Aux APO Rear Std APO Rear APO w/Cover 12V Panel Upr Bnk APO Rear Overhead APO:Diagram1
LT/RH/LoneStar - X15/A26 - Std APO Aux APO Rear Std APO Rear APO w/Cover 12V Panel Upr Bnk APO Rear Overhead APO:Diagram2

LT/RH/LoneStar - X15/A26 - Std APO Aux APO Rear Std APO Rear APO w/Cover 12V Panel Upr Bnk APO Rear Overhead APO:Diagram3
LT/RH/LoneStar - X15/A26 - Std APO Aux APO Rear Std APO Rear APO w/Cover 12V Panel Upr Bnk APO Rear Overhead APO:Diagram4
LT/RH/LoneStar - X15/A26 - Std APO Rear Std APO Rear APO W/Cover 12V Panel:Diagram1
LT/RH/LoneStar - X15/A26 - Std APO Rear Std APO Rear APO W/Cover 12V Panel:Diagram2
LT/RH/LoneStar - X15/A26 - Std APO Rear Std APO Rear APO W/Cover 12V Panel Rear Overhead APO:Diagram1
LT/RH/LoneStar - X15/A26 - Std APO Rear Std APO Rear APO W/Cover 12V Panel Rear Overhead APO:Diagram2
LT/RH/LoneStar - X15/A26 - Std APO Rear Std APO Rear APO W/Cover 12V Panel Upr Bnk APO:Diagram1
LT/RH/LoneStar - X15/A26 - Std APO Rear Std APO Rear APO W/Cover 12V Panel Upr Bnk APO:Diagram2
LT/RH/LoneStar - X15/A26 - Std APO Rear Std APO Rear APO w/Cover 12V Panel Upr Bnk APO Rear Overhead APO:Diagram1
LT/RH/LoneStar - X15/A26 - Std APO Rear Std APO Rear APO w/Cover 12V Panel Upr Bnk APO Rear Overhead APO:Diagram2

Mates DEV-APO_W/COVER-2002-01-09A

Name	Terminal Part Number	V-Min	Name	Wire Part Number	Wire CSA	Wire Spec	Wire Material description	Wire Color Description	Wire Length	End2 Terminal Part Number	End2 Pin Name	End2 Connect or
A	-	-	HA86-GSC	2643681 R1	1.16	16.0	Std. Wall XLPE Primary Cable	WHITE	1276.0	-	-	-
B	-	-	HA86SA	2643678 R1	1.16	16.0	Std. Wall XLPE Primary Cable	LIGHT GREEN	2926.0	-	X	-

Connector Name	H01-5012
Part Number	872291R1
Instances	LT/RH/LoneStar - X15/A26 - Cigar Lighter Aux APO Rear Std APO Rear APO W/Cover 12V Panel:Diagram1 LT/RH/LoneStar - X15/A26 - Cigar Lighter Aux APO Rear Std APO Rear APO W/Cover 12V Panel:Diagram3 LT/RH/LoneStar - X15/A26 - Cigar Lighter Aux APO Rear Std APO Rear APO w/Cover 12V Panel Overhead APO:Diagram1 LT/RH/LoneStar - X15/A26 - Cigar Lighter Aux APO Rear Std APO Rear APO w/Cover 12V Panel Overhead APO:Diagram3 LT/RH/LoneStar - X15/A26 - Cigar Lighter Aux APO Rear Std APO Rear APO w/Cover 12V Panel Upr Bnk APO:Diagram1 LT/RH/LoneStar - X15/A26 - Cigar Lighter Aux APO Rear Std APO Rear APO w/Cover 12V Panel Upr Bnk APO:Diagram3 LT/RH/LoneStar - X15/A26 - Cigar Lighter Aux APO Rear Std APO Rear APO w/Cover 12V Panel Upr Bnk APO Rear Overhead APO:Diagram1-Combination1 LT/RH/LoneStar - X15/A26 - Cigar Lighter Aux APO Rear Std APO Rear APO w/Cover 12V Panel Upr Bnk APO Rear Overhead APO:Diagram1-Combination3 LT/RH/LoneStar - X15/A26 - Cigar Lighter Rear Std APO APO W/Cover 12V Panel:Diagram1 LT/RH/LoneStar - X15/A26 - Cigar Lighter Rear Std APO Rear APO W/Cover 12V Panel Overhead APO:Diagram1 LT/RH/LoneStar - X15/A26 - Cigar Lighter Rear Std APO Rear APO W/Cover 12V Panel Upr Bnk APO:Diagram1 LT/RH/LoneStar - X15/A26 - Cigar Lighter Rear Std APO Rear APO w/Cover 12V Panel Upr Bnk APO Rear Overhead APO:Diagram1 LT/RH/LoneStar - X15/A26 - Std APO Aux APO Rear Std APO Rear APO W/Cover 12V Panel:Diagram1 LT/RH/LoneStar - X15/A26 - Std APO Aux APO Rear Std APO Rear APO W/Cover 12V Panel:Diagram3 LT/RH/LoneStar - X15/A26 - Std APO Aux APO Rear Std APO Rear APO W/Cover 12V Panel Overhead APO:Diagram1 LT/RH/LoneStar - X15/A26 - Std APO Aux APO Rear Std APO Rear APO W/Cover 12V Panel Overhead APO:Diagram3 LT/RH/LoneStar - X15/A26 - Std APO Aux APO Rear Std APO Rear APO W/Cover 12V Panel Upr Bnk APO:Diagram1 LT/RH/LoneStar - X15/A26 - Std APO Aux APO Rear Std APO Rear APO W/Cover 12V Panel Upr Bnk APO:Diagram3

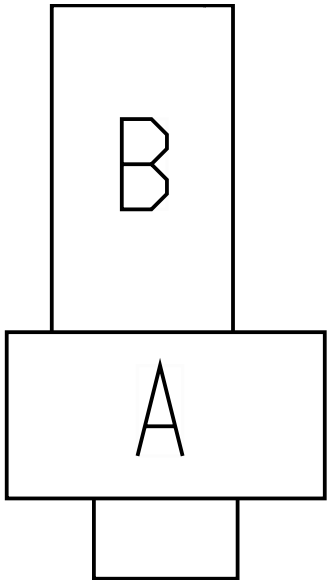

LT/RH/LoneStar - X15/A26 - Std APO Aux APO Rear Std APO Rear APO w/Cover 12V Panel Upr Bnk APO Rear Overhead APO:Diagram1
LT/RH/LoneStar - X15/A26 - Std APO Aux APO Rear Std APO Rear APO w/Cover 12V Panel Upr Bnk APO Rear Overhead APO:Diagram3
LT/RH/LoneStar - X15/A26 - Std APO Rear Std APO Rear APO W/Cover 12V Panel:Diagram1
LT/RH/LoneStar - X15/A26 - Std APO Rear Std APO Rear APO W/Cover 12V Panel Rear Overhead APO:Diagram1
LT/RH/LoneStar - X15/A26 - Std APO Rear Std APO Rear APO W/Cover 12V Panel Upr Bnk APO:Diagram1
LT/RH/LoneStar - X15/A26 - Std APO Rear Std APO Rear APO w/Cover 12V Panel Upr Bnk APO Rear Overhead APO:Diagram1

Mates DEV-12V_Panel-2002-01-17A

Name	Terminal Part Number	V-Min	Name	Wire Part Number	Wire CSA	Wire Spec	Wire Material description	Wire Color Description	Wire Length	End2 Terminal Part Number	End2 Pin Name	End2 Connect or
A	-	-	JL86-GSB	2643681 R1	1.16	16.0	Std. Wall XLPE Primary Cable	WHITE	5842.0	-	-	-
B	-	-	JL86SBB	2643678 R1	1.16	16.0	Std. Wall XLPE Primary Cable	LIGHT GREEN	5862.0	-	-	-

Connector Name	H01-5013
Part Number	872291R1
Instances	LT/RH/LoneStar - X15/A26 - Cigar Lighter Aux APO Rear Std APO Rear APO W/Cover 12V Panel:Diagram2 LT/RH/LoneStar - X15/A26 - Cigar Lighter Aux APO Rear Std APO Rear APO W/Cover 12V Panel:Diagram4 LT/RH/LoneStar - X15/A26 - Cigar Lighter Aux APO Rear Std APO Rear APO w/Cover 12V Panel Overhead APO:Diagram2 LT/RH/LoneStar - X15/A26 - Cigar Lighter Aux APO Rear Std APO Rear APO w/Cover 12V Panel Overhead APO:Diagram4 LT/RH/LoneStar - X15/A26 - Cigar Lighter Aux APO Rear Std APO Rear APO w/Cover 12V Panel Upr Bnk APO:Diagram2 LT/RH/LoneStar - X15/A26 - Cigar Lighter Aux APO Rear Std APO Rear APO w/Cover 12V Panel Upr Bnk APO:Diagram4 LT/RH/LoneStar - X15/A26 - Cigar Lighter Aux APO Rear Std APO Rear APO w/Cover 12V Panel Upr Bnk APO Rear Overhead APO:Diagram1-Combination2 LT/RH/LoneStar - X15/A26 - Cigar Lighter Aux APO Rear Std APO Rear APO w/Cover 12V Panel Upr Bnk APO Rear Overhead APO:Diagram1-Combination4 LT/RH/LoneStar - X15/A26 - Cigar Lighter Rear Std APO APO W/Cover 12V Panel:Diagram2 LT/RH/LoneStar - X15/A26 - Cigar Lighter Rear Std APO Rear APO W/Cover 12V Panel Overhead APO:Diagram2 LT/RH/LoneStar - X15/A26 - Cigar Lighter Rear Std APO Rear APO W/Cover 12V Panel Upr Bnk APO:Diagram2 LT/RH/LoneStar - X15/A26 - Cigar Lighter Rear Std APO Rear APO w/Cover 12V Panel Upr Bnk APO Rear Overhead APO:Diagram2 LT/RH/LoneStar - X15/A26 - Std APO Aux APO Rear Std APO Rear APO W/Cover 12V Panel:Diagram2 LT/RH/LoneStar - X15/A26 - Std APO Aux APO Rear Std APO Rear APO W/Cover 12V Panel:Diagram4 LT/RH/LoneStar - X15/A26 - Std APO Aux APO Rear Std APO Rear APO W/Cover 12V Panel Overhead APO:Diagram2 LT/RH/LoneStar - X15/A26 - Std APO Aux APO Rear Std APO Rear APO W/Cover 12V Panel Overhead APO:Diagram4 LT/RH/LoneStar - X15/A26 - Std APO Aux APO Rear Std APO Rear APO W/Cover 12V Panel Upr Bnk APO:Diagram2 LT/RH/LoneStar - X15/A26 - Std APO Aux APO Rear Std APO Rear APO W/Cover 12V Panel Upr Bnk APO:Diagram4

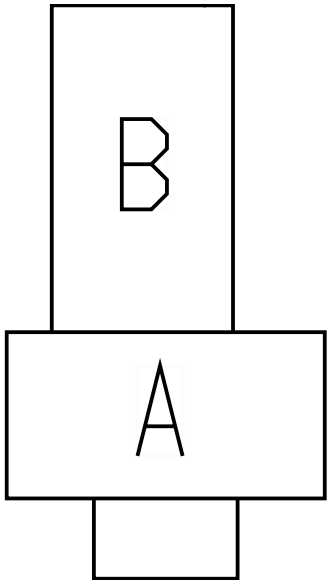

LT/RH/LoneStar - X15/A26 - Std APO Aux APO Rear Std APO Rear APO w/Cover 12V Panel Upr Bnk APO Rear Overhead APO:Diagram2
LT/RH/LoneStar - X15/A26 - Std APO Aux APO Rear Std APO Rear APO w/Cover 12V Panel Upr Bnk APO Rear Overhead APO:Diagram4
LT/RH/LoneStar - X15/A26 - Std APO Rear Std APO Rear APO W/Cover 12V Panel:Diagram2
LT/RH/LoneStar - X15/A26 - Std APO Rear Std APO Rear APO W/Cover 12V Panel Rear Overhead APO:Diagram2
LT/RH/LoneStar - X15/A26 - Std APO Rear Std APO Rear APO W/Cover 12V Panel Upr Bnk APO:Diagram2
LT/RH/LoneStar - X15/A26 - Std APO Rear Std APO Rear APO w/Cover 12V Panel Upr Bnk APO Rear Overhead APO:Diagram2

Name	Terminal Part Number	V-Min	Name	Wire Part Number	Wire CSA	Wire Spec	Wire Material description	Wire Color Description	Wire Length	End2 Terminal Part Number	End2 Pin Name	End2 Connect or
A	-	-	JN86-GSB	2643681 R1	1.16	16.0	Std. Wall XLPE Primary Cable	WHITE	5657.0	-	-	-
A	-	-	ZL86-GSB	2643681 R1	1.16	16.0	Std. Wall XLPE Primary Cable	WHITE	5657.0	-	-	-
B	-	-	JN86SBB	2643678 R1	1.16	16.0	Std. Wall XLPE Primary Cable	LIGHT GREEN	5677.0	-	-	-
B	-	-	ZL86SBB	2643678 R1	1.16	16.0	Std. Wall XLPE Primary Cable	LIGHT GREEN	5662.0	-	X	-

Connector Name	H01-5110
Part Number	1661196C1
Instances	LT/RH/LoneStar - X15/A26 - Luggage Compartment Lights - W/ No Idle HVAC:Diagram1 LT/RH/LoneStar - X15/A26 - Luggage Compartment Lights - W/ O No Idle HVAC:Diagram1
Mates	LT-LS_LUGGAGE-2012-01-05

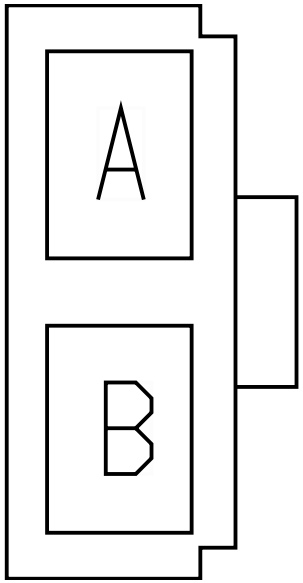

Name	Terminal Part Number	V-Min	Name	Wire Part Number	Wire CSA	Wire Spec	Wire Material description	Wire Color Description	Wire Length	End2 Terminal Part Number	End2 Pin Name	End2 Connect or
A	-	-	LD63SJ	2643720 R1	0.79	18.0	Std. Wall XLPE Primary Cable	DARK BLUE	2340.0	-	R2-30	H01-5001B
A	-	-	LE63SJA	2643720 R1	0.79	18.0	Std. Wall XLPE Primary Cable	DARK BLUE	735.0	-	X	-
B	-	-	LD63-GSB	2643720 R1	0.79	18.0	Std. Wall XLPE Primary Cable	DARK BLUE	805.0	-	X	-
B	-	-	LE63-GSB	2643720 R1	0.79	18.0	Std. Wall XLPE Primary Cable	DARK BLUE	765.0	-	X	-

Connector Name	H01-5111
Part Number	1661196C1
Instances	LT/RH/LoneStar - X15/A26 - Luggage Compartment Lights - W/ O No Idle HVAC:Diagram1
Mates	LT-RS_LUGGAGE-2012-01-05

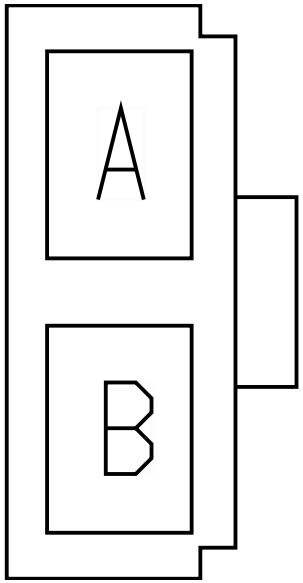

Name	Terminal Part Number	V-Min	Name	Wire Part Number	Wire CSA	Wire Spec	Wire Material description	Wire Color Description	Wire Length	End2 Terminal Part Number	End2 Pin Name	End2 Connect or
A	-	-	LE63SJB	2643720 R1	0.79	18.0	Std. Wall XLPE Primary Cable	DARK BLUE	2075.0	-	X	-
B	-	-	LE63-GSC	2643720 R1	0.79	18.0	Std. Wall XLPE Primary Cable	DARK BLUE	2105.0	-	X	-

Connector Name	H01-5112
Part Number	239808R1
Instances	LT/RH/LoneStar - X15/A26 - Luggage Compartment Lights - W/ No Idle HVAC:Diagram1 LT/RH/LoneStar - X15/A26 - Luggage Compartment Lights - W/ O No Idle HVAC:Diagram1
Mates	SW-LS_DOOR-2012-01-05

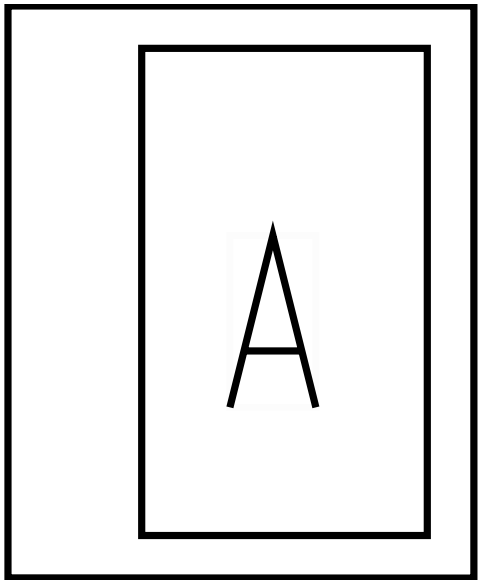

Name	Terminal Part Number	V-Min	Name	Wire Part Number	Wire CSA	Wire Spec	Wire Material description	Wire Color Description	Wire Length	End2 Terminal Part Number	End2 Pin Name	End2 Connect or
A	-	-	LD63SD	2643721 R1	1.16	16.0	Std. Wall XLPE Primary Cable	DARK BLUE	80.0	-	X	-
A	-	-	LE63SD	2643721 R1	1.16	16.0	Std. Wall XLPE Primary Cable	DARK BLUE	130.0	-	X	-

Connector Name	H01-5113
Part Number	239808R1
Instances	LT/RH/LoneStar - X15/A26 - Luggage Compartment Lights - W/ No Idle HVAC:Diagram1 LT/RH/LoneStar - X15/A26 - Luggage Compartment Lights - W/ O No Idle HVAC:Diagram1
Mates	SW-LS_DOOR-2012-01-05

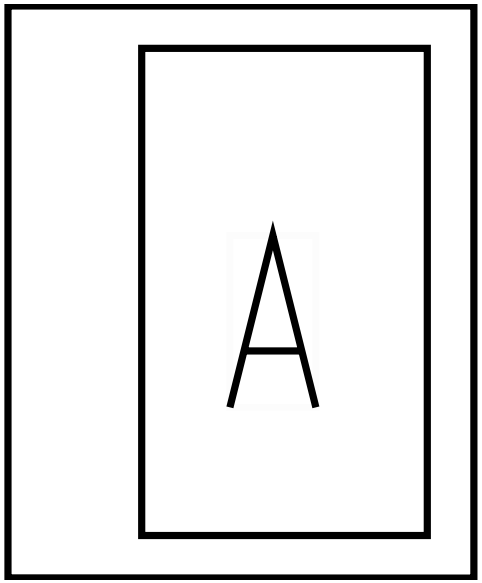

Name	Terminal Part Number	V-Min	Name	Wire Part Number	Wire CSA	Wire Spec	Wire Material description	Wire Color Description	Wire Length	End2 Terminal Part Number	End2 Pin Name	End2 Connect or
A	-	-	LD63SDA	2643721 R1	1.16	16.0	Std. Wall XLPE Primary Cable	DARK BLUE	230.0	-	X	-
A	-	-	LE63SDA	2643721 R1	1.16	16.0	Std. Wall XLPE Primary Cable	DARK BLUE	180.0	-	X	-

Connector Name	H01-5114
Part Number	239808R1
Instances	LT/RH/LoneStar - X15/A26 - Luggage Compartment Lights - W/O No Idle HVAC:Diagram1
Mates	SW-RS_DOOR-2012-01-05

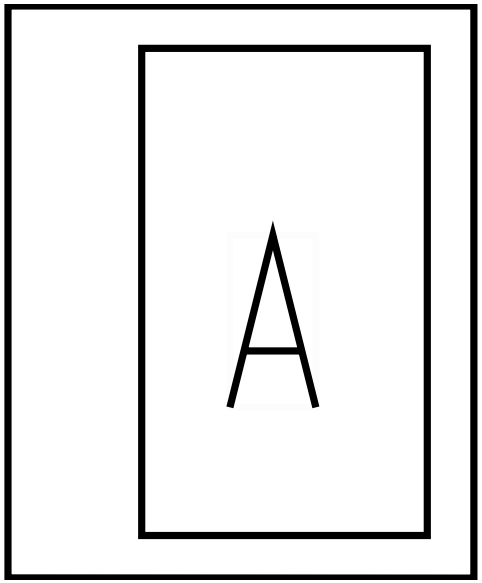

Name	Terminal Part Number	V-Min	Name	Wire Part Number	Wire CSA	Wire Spec	Wire Material description	Wire Color Description	Wire Length	End2 Terminal Part Number	End2 Pin Name	End2 Connect or
A	-	-	LE63SE	2643721 R1	1.16	16.0	Std. Wall XLPE Primary Cable	DARK BLUE	4242.0	-	X	-

Connector Name	H01-5115
Part Number	239808R1
Instances	LT/RH/LoneStar - X15/A26 - Luggage Compartment Lights - W/O No Idle HVAC:Diagram1
Mates	SW-RS_DOOR-2012-01-05

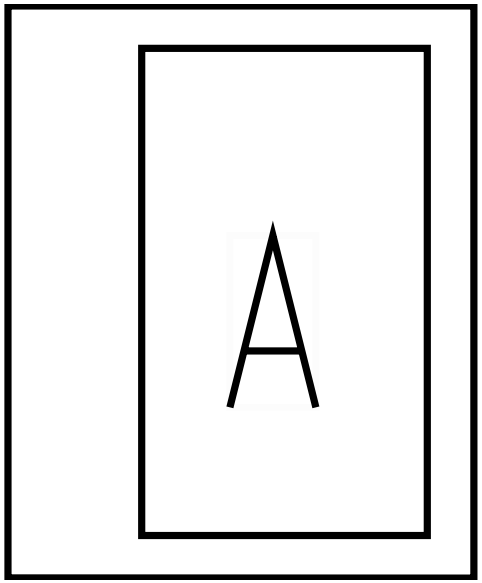

Name	Terminal Part Number	V-Min	Name	Wire Part Number	Wire CSA	Wire Spec	Wire Material description	Wire Color Description	Wire Length	End2 Terminal Part Number	End2 Pin Name	End2 Connect or
A	-	-	LE63SEA	2643721 R1	1.16	16.0	Std. Wall XLPE Primary Cable	DARK BLUE	4192.0	-	X	-

Connector Name	H01-5128
Part Number	1661259C1
Instances	LT/RH/LoneStar - X15/A26 - Floor/Search Lights Sleeper:Diagram1
Mates	LT-SLPR_LF_FLOOR-2009-02-0 2A

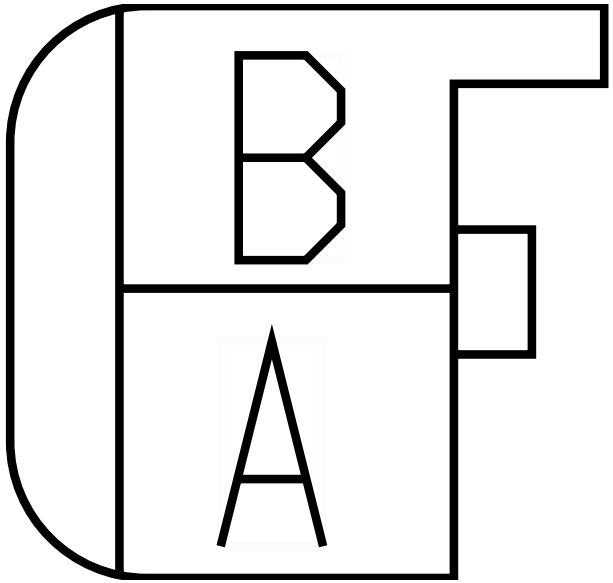

Name	Terminal Part Number	V-Min	Name	Wire Part Number	Wire CSA	Wire Spec	Wire Material description	Wire Color Description	Wire Length	End2 Terminal Part Number	End2 Pin Name	End2 Connect or
A	-	-	ZA63JBA	2643720 R1	0.79	18.0	Std. Wall XLPE Primary Cable	DARK BLUE	200.0	-	X	-
B	-	-	ZP63-GJA	2643674 R1	0.79	18.0	Std. Wall XLPE Primary Cable	WHITE	925.0	-	-	-

Connector Name	H01-5129
Part Number	1661259C1
Instances	LT/RH/LoneStar - X15/A26 - Floor/Search Lights Sleeper:Diagram1
Mates	LT-SLPR_RT_FLOOR-2009-02-0 2A

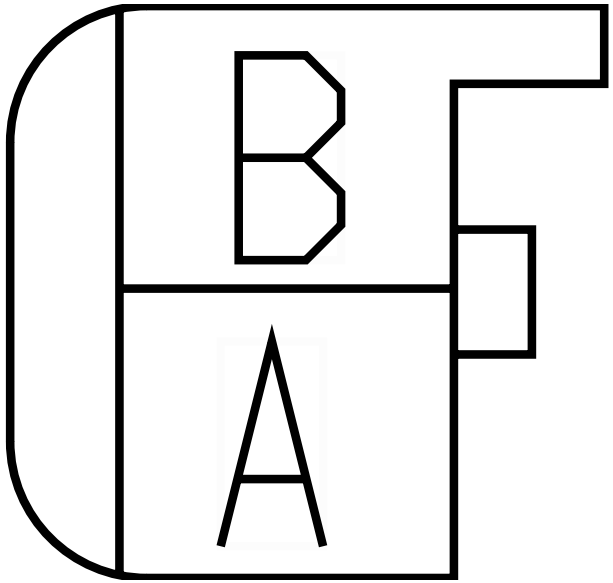

Name	Terminal Part Number	V-Min	Name	Wire Part Number	Wire CSA	Wire Spec	Wire Material description	Wire Color Description	Wire Length	End2 Terminal Part Number	End2 Pin Name	End2 Connect or
A	-	-	ZA63JBB	2643720 R1	0.79	18.0	Std. Wall XLPE Primary Cable	DARK BLUE	2185.0	-	X	-
B	-	-	ZP63-GJB	2643674 R1	0.79	18.0	Std. Wall XLPE Primary Cable	WHITE	2817.0	-	-	-

Connector Name	H01-5130
Part Number	1669972C1
Instances	LT/RH/LoneStar - X15/A26 - Reading Lighting - W/ Lower:Diagram1 LT/RH/LoneStar - X15/A26 - Reading Lighting - W/Upper& Lower:Diagram1
Mates	LT-Sleeper Lower Reading Light-2019-03-01A

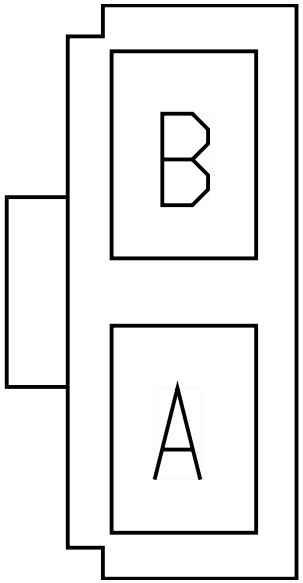

Name	Terminal Part Number	V-Min	Name	Wire Part Number	Wire CSA	Wire Spec	Wire Material description	Wire Color Description	Wire Length	End2 Terminal Part Number	End2 Pin Name	End2 Connect or
A	-	-	ZK63SB	2643720 R1	0.79	18.0	Std. Wall XLPE Primary Cable	DARK BLUE	1188.0	-	X	-
A	-	-	ZW63SB	2643720 R1	0.79	18.0	Std. Wall XLPE Primary Cable	DARK BLUE	1540.0	-	-	-
B	-	-	HA63-GSD	2643674 R1	0.79	18.0	Std. Wall XLPE Primary Cable	WHITE	2560.0	-	-	-

Connector Name	H01-5132
Part Number	4092975C1
Instances	LT/RH/LoneStar - X15/A26 - Luggage Compartment Lights - W/ No Idle HVAC:Diagram1 LT/RH/LoneStar - X15/A26 - Luggage Compartment Lights - W/ O No Idle HVAC:Diagram1
Mates	SW-LUGGAGE_LT-2012-01-05

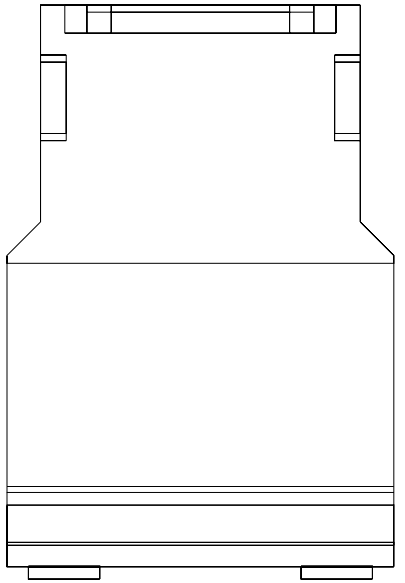

Name	Terminal Part Number	V-Min	Name	Wire Part Number	Wire CSA	Wire Spec	Wire Material description	Wire Color Description	Wire Length	End2 Terminal Part Number	End2 Pin Name	End2 Connect or
A	-	-	LD63SC	2643720 R1	0.79	18.0	Std. Wall XLPE Primary Cable	DARK BLUE	3310.0	-	X	-
A	-	-	LE63SC	2643720 R1	0.79	18.0	Std. Wall XLPE Primary Cable	DARK BLUE	3260.0	-	X	-

Connector Name	H01-5133
Part Number	4092975C1
Instances	LT/RH/LoneStar - X15/A26 - Luggage Compartment Lights - W/ No Idle HVAC:Diagram1 LT/RH/LoneStar - X15/A26 - Luggage Compartment Lights - W/ O No Idle HVAC:Diagram1
Mates	SW-LUGGAGE_LT-2012-01-05

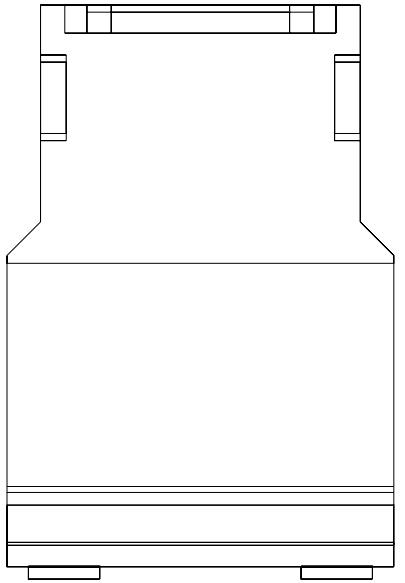

Name	Terminal Part Number	V-Min	Name	Wire Part Number	Wire CSA	Wire Spec	Wire Material description	Wire Color Description	Wire Length	End2 Terminal Part Number	End2 Pin Name	End2 Connect or
A	-	-	HA63SCA	2643720 R1	0.79	18.0	Std. Wall XLPE Primary Cable	DARK BLUE	3285.0	-	R2-87A	H01-500 1B

Connector Name	H01-5200-SPLR_HVAC_PANEL
Part Number	2029979C1
Instances	LT/RH/LoneStar - X15/A26 - Rear HVAC (No Idle) W/ Pre-Heat (Bergstrom Heat and Cool w/ Condensation) 2 SWITCHES Option 1:Diagram1 - Powers, Grounds & Controls LT/RH/LoneStar - X15/A26 - Rear HVAC (No Idle) W/ Pre-Heat (Bergstrom Heat and Cool w/ Condensation) 2 SWITCHES Option 2:Diagram1 - Powers, Grounds & Controls LT/RH/LoneStar - X15/A26 - Rear HVAC (No Idle) W/ Pre-Heat (Bergstrom Heat and Cool w/ Condensation) 4 SWITCHES Option 1:Diagram1 - Powers, Grounds & Controls LT/RH/LoneStar - X15/A26 - Rear HVAC (No Idle) W/ Pre-Heat (Bergstrom Heat and Cool w/ Condensation) 4 SWITCHES Option 2:Diagram1 - Powers, Grounds & Controls LT/RH/LoneStar - X15/A26 - Rear HVAC (Sleeper W/ Premium):Diagram2
Mates	MODU-SPLR_HVAC_PANEL-6002- 01-02A

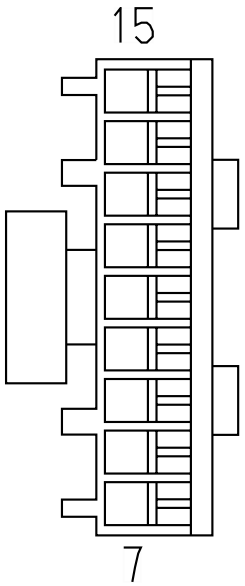

Name	Terminal Part Number	V-Min	Name	Wire Part Number	Wire CSA	Wire Spec	Wire Material description	Wire Color Description	Wire Length	End2 Terminal Part Number	End2 Pin Name	End2 Connector
7	-	-	BA75F	2643671 R1	0.79	18.0	Std. Wall XLPE Primary Cable	LIGHT GREEN	5302.0	-	A11	5205
7	-	-	ZE75F	2643671 R1	0.79	18.0	Std. Wall XLPE Primary Cable	LIGHT GREEN	5302.0	-	A11	5205
7	-	-	HD75F	3510299 R1	0.79	18.0	Thin Wall XLPE Primary Cable	LIGHT GREEN	4927.0	-	24	H01-5210
8	-	-	BA75-GA	2643674 R1	0.79	18.0	Std. Wall XLPE Primary Cable	WHITE	5302.0	-	A2	5205

Name	Terminal Part Number	V-Min	Name	Wire Part Number	Wire CSA	Wire Spec	Wire Material description	Wire Color Description	Wire Length	End2 Terminal Part Number	End2 Pin Name	End2 Connector
8	-	-	ZE75-GA	2643674 R1	0.79	18.0	Std. Wall XLPE Primary Cable	WHITE	5302.0	-	A2	5205
8	-	-	HD75-GA	3510359 R1	0.79	18.0	Thin Wall XLPE Primary Cable	WHITE	4927.0	-	25	H01-5210
9	-	-	BA75AB	3510299 R1	0.79	18.0	Thin Wall XLPE Primary Cable	LIGHT GREEN	5302.0	-	B1	5205
9	-	-	ZE75AB	3510299 R1	0.79	18.0	Thin Wall XLPE Primary Cable	LIGHT GREEN	5302.0	-	B1	5205
9	-	-	HD75R	3510299 R1	0.79	18.0	Thin Wall XLPE Primary Cable	LIGHT GREEN	4927.0	-	26	H01-5210
10	-	-	BA75AA	3510299 R1	0.79	18.0	Thin Wall XLPE Primary Cable	LIGHT GREEN	5302.0	-	B2	5205
10	-	-	ZE75AA	3510299 R1	0.79	18.0	Thin Wall XLPE Primary Cable	LIGHT GREEN	5302.0	-	B2	5205
10	-	-	HD75H	3510299 R1	0.79	18.0	Thin Wall XLPE Primary Cable	LIGHT GREEN	4927.0	-	27	H01-5210

Name	Terminal Part Number	V-Min	Name	Wire Part Number	Wire CSA	Wire Spec	Wire Material description	Wire Color Description	Wire Length	End2 Terminal Part Number	End2 Pin Name	End2 Connector
11	-	-	BA75J	3510299 R1	0.79	18.0	Thin Wall XLPE Primary Cable	LIGHT GREEN	5302.0	-	B3	5205
11	-	-	ZE75J	3510299 R1	0.79	18.0	Thin Wall XLPE Primary Cable	LIGHT GREEN	5302.0	-	B3	5205
11	-	-	HD75J	3510299 R1	0.79	18.0	Thin Wall XLPE Primary Cable	LIGHT GREEN	4927.0	-	28	H01-5210
12	-	-	BA75K	3510299 R1	0.79	18.0	Thin Wall XLPE Primary Cable	LIGHT GREEN	5302.0	-	B4	5205
12	-	-	ZE75K	3510299 R1	0.79	18.0	Thin Wall XLPE Primary Cable	LIGHT GREEN	5302.0	-	B4	5205
12	-	-	HD75K	3510299 R1	0.79	18.0	Thin Wall XLPE Primary Cable	LIGHT GREEN	4927.0	-	29	H01-5210
13	-	-	BA75L	3510299 R1	0.79	18.0	Thin Wall XLPE Primary Cable	LIGHT GREEN	5302.0	-	B5	5205
13	-	-	ZE75L	3510299 R1	0.79	18.0	Thin Wall XLPE Primary Cable	LIGHT GREEN	5302.0	-	B5	5205

Name	Terminal Part Number	V-Min	Name	Wire Part Number	Wire CSA	Wire Spec	Wire Material description	Wire Color Description	Wire Length	End2 Terminal Part Number	End2 Pin Name	End2 Connector
13	-	-	HD75L	3510299 R1	0.79	18.0	Thin Wall XLPE Primary Cable	LIGHT GREEN	4927.0	-	30	H01-5210
14	-	-	BA75M	3510299 R1	0.79	18.0	Thin Wall XLPE Primary Cable	LIGHT GREEN	5302.0	-	B6	5205
14	-	-	ZE75M	3510299 R1	0.79	18.0	Thin Wall XLPE Primary Cable	LIGHT GREEN	5302.0	-	B6	5205
14	-	-	HD75M	3510299 R1	0.79	18.0	Thin Wall XLPE Primary Cable	LIGHT GREEN	4927.0	-	31	H01-5210
15	-	-	BA75N	2643720 R1	0.79	18.0	Std. Wall XLPE Primary Cable	DARK BLUE	5302.0	-	A12	5205
15	-	-	ZE75N	2643720 R1	0.79	18.0	Std. Wall XLPE Primary Cable	DARK BLUE	5302.0	-	A12	5205
15	-	-	HD75N	3510299 R1	0.79	18.0	Thin Wall XLPE Primary Cable	LIGHT GREEN	4927.0	-	32	H01-5210

Connector Name	H01-5200
Part Number	2029979C1
Instances	LT/RH/LoneStar - X15/A26 - Rear AUTO HVAC (No Idle) W/ Pre-Heat (Bergstrom Heat and Cool w/ Condensation) 2 SWITCHES:Diagram1 - Powers, Grounds & Controls LT/RH/LoneStar - X15/A26 - Rear Manual HVAC (No Idle) W/ Pre-Heat (Bergstrom Heat and Cool w/ Condensation) 2 SWITCHES:Diagram1 - Powers, Grounds & Controls
Mates	SW-HVAC_CTRL-6002-05-01A

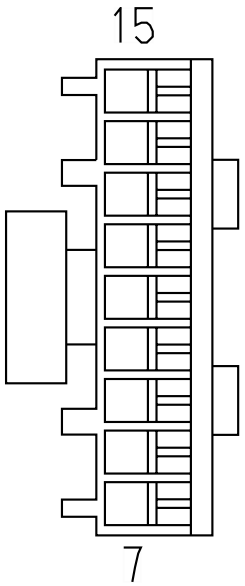

Name	Terminal Part Number	V-Min	Name	Wire Part Number	Wire CSA	Wire Spec	Wire Material description	Wire Color Description	Wire Length	End2 Terminal Part Number	End2 Pin Name	End2 Connect or
7	-	-	ZE75F	2643671 R1	0.79	18.0	Std. Wall XLPE Primary Cable	LIGHT GREEN	5302.0	-	A11	H01-5205
8	-	-	ZE75-GA	2643674 R1	0.79	18.0	Std. Wall XLPE Primary Cable	WHITE	5302.0	-	A2	H01-5205
9	-	-	ZE75AB	3510299 R1	0.79	18.0	Thin Wall XLPE Primary Cable	LIGHT GREEN	5302.0	-	B1	H01-5205
10	-	-	ZE75AA	3510299 R1	0.79	18.0	Thin Wall XLPE Primary Cable	LIGHT GREEN	5302.0	-	B2	H01-5205

Name	Terminal Part Number	V-Min	Name	Wire Part Number	Wire CSA	Wire Spec	Wire Material description	Wire Color Description	Wire Length	End2 Terminal Part Number	End2 Pin Name	End2 Connector
11	-	-	ZE75J	3510299 R1	0.79	18.0	Thin Wall XLPE Primary Cable	LIGHT GREEN	5302.0	-	B3	H01-5205
12	-	-	ZE75K	3510299 R1	0.79	18.0	Thin Wall XLPE Primary Cable	LIGHT GREEN	5302.0	-	B4	H01-5205
13	-	-	ZE75L	3510299 R1	0.79	18.0	Thin Wall XLPE Primary Cable	LIGHT GREEN	5302.0	-	B5	H01-5205
14	-	-	ZE75M	3510299 R1	0.79	18.0	Thin Wall XLPE Primary Cable	LIGHT GREEN	5302.0	-	B6	H01-5205
15	-	-	ZE75N	2643720 R1	0.79	18.0	Std. Wall XLPE Primary Cable	DARK BLUE	5302.0	-	A12	H01-5205

Connector Name	H01-5201
Part Number	3536187C1
Instances	LT/RH/LoneStar - X15/A26 - Rear HVAC (Sleeper W/ Deluxe):Diagram2
Mates	SW-BLOWER_SPEED_CTRL-6002- 06-01A

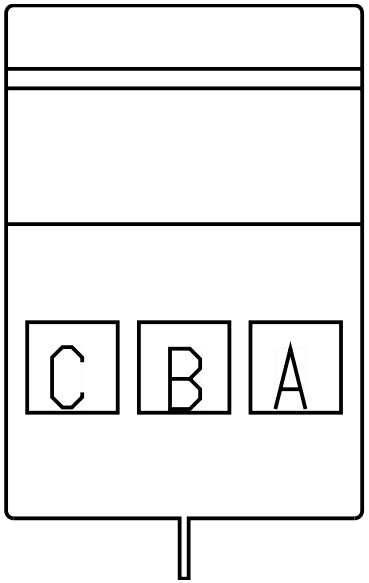

Name	Terminal Part Number	V-Min	Name	Wire Part Number	Wire CSA	Wire Spec	Wire Material description	Wire Color Description	Wire Length	End2 Terminal Part Number	End2 Pin Name	End2 Connect or
A	-	-	HC77TVB	2643671 R1	0.79	18.0	Std. Wall XLPE Primary Cable	LIGHT GREEN	210.0	-	X	-
B	-	-	HC77TB	3510299 R1	0.79	18.0	Thin Wall XLPE Primary Cable	LIGHT GREEN	4947.0	-	23	H01-5210
C	-	-	HC77TZB	2643671 R1	0.79	18.0	Std. Wall XLPE Primary Cable	LIGHT GREEN	335.0	-	X	-

Connector Name	H01-5202
Part Number	3599251C1
Instances	LT/RH/LoneStar - X15/A26 - Rear HVAC (Sleeper W/ Deluxe):Diagram2
Mates	SW-TEMP_CTRL-6002-06-01A

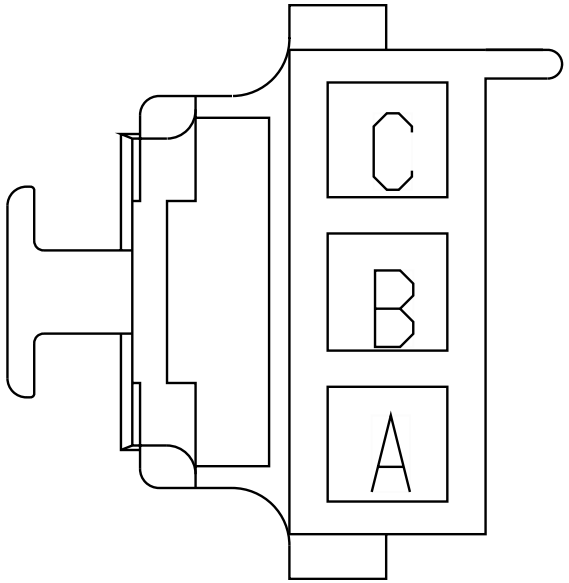

Name	Terminal Part Number	V-Min	Name	Wire Part Number	Wire CSA	Wire Spec	Wire Material description	Wire Color Description	Wire Length	End2 Terminal Part Number	End2 Pin Name	End2 Connect or
A	-	-	HC77TVT	2643671 R1	0.79	18.0	Std. Wall XLPE Primary Cable	LIGHT GREEN	220.0	-	X	-
B	-	-	HC77TT	3510299 R1	0.79	18.0	Thin Wall XLPE Primary Cable	LIGHT GREEN	4887.0	-	21	H01-5210
C	-	-	HC77TZT	2643671 R1	0.79	18.0	Std. Wall XLPE Primary Cable	LIGHT GREEN	275.0	-	X	-

Connector Name H01-5205

Part Number 3544870C1

Instances LT/RH/LoneStar - X15/A26 - Rear AUTO HVAC (No Idle) W/ Pre-Heat (Bergstrom Heat and Cool w/ Condensation) 2 SWITCHES:Diagram1 - Powers, Grounds & Controls
LT/RH/LoneStar - X15/A26 - Rear AUTO HVAC (No Idle) W/ Pre-Heat (Bergstrom Heat and Cool w/ Condensation) 2 SWITCHES:Diagram2 - No Idle Switching
LT/RH/LoneStar - X15/A26 - Rear AUTO HVAC (No Idle) W/ Pre-Heat (Bergstrom Heat and Cool w/ Condensation) 2 SWITCHES:Diagram3 - Espar Circuit
LT/RH/LoneStar - X15/A26 - Rear Manual HVAC (No Idle) W/ Pre-Heat (Bergstrom Heat and Cool w/ Condensation) 2 SWITCHES:Diagram1 - Powers, Grounds & Controls
LT/RH/LoneStar - X15/A26 - Rear Manual HVAC (No Idle) W/ Pre-Heat (Bergstrom Heat and Cool w/ Condensation) 2 SWITCHES:Diagram2 - No Idle Switching
LT/RH/LoneStar - X15/A26 - Rear Manual HVAC (No Idle) W/ Pre-Heat (Bergstrom Heat and Cool w/ Condensation) 2 SWITCHES:Diagram3 - Espar Circuit

Mates MODU-BERG_NO-IDLE-6002-01- 02 Bergstrom Aux HVAC

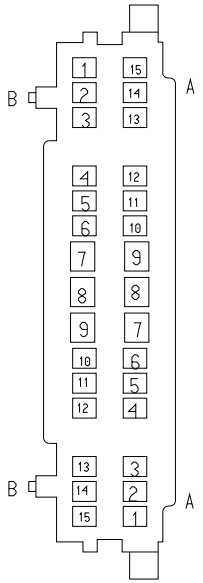

Name	Terminal Part Number	V-Min	Name	Wire Part Number	Wire CSA	Wire Spec	Wire Material description	Wire Color Description	Wire Length	End2 Terminal Part Number	End2 Pin Name	End2 Connector
A1	-	-	BF75AR	2643671 R1	0.79	18.0	Std. Wall XLPE Primary Cable	LIGHT GREEN	5202.0	-	C	5220
A1	-	-	BD75ARB	2643671 R1	0.79	18.0	Std. Wall XLPE Primary Cable	LIGHT GREEN	3802.0	-	X	-
A2	-	-	ZE75-GA	2643674 R1	0.79	18.0	Std. Wall XLPE Primary Cable	WHITE	5302.0	-	8	H01-5200

Name	Terminal Part Number	V-Min	Name	Wire Part Number	Wire CSA	Wire Spec	Wire Material description	Wire Color Description	Wire Length	End2 Terminal Part Number	End2 Pin Name	End2 Connector
A3	-	-	ZE75AJ	2643671 R1	0.79	18.0	Std. Wall XLPE Primary Cable	LIGHT GREEN	550.0	-	X	-
A4	-	-	ZE75X	2643671 R1	0.79	18.0	Std. Wall XLPE Primary Cable	LIGHT GREEN	4422.0	-	29	5000
A7	-	-	ZE14HA	2643695 R1	3.01	12.0	Std. Wall XLPE Primary Cable	RED	600.0	-	C	100A
A8	-	-	ZE14HB	2643695 R1	3.01	12.0	Std. Wall XLPE Primary Cable	RED	600.0	-	D	100A
A9	-	-	MF104	2643695 R1	3.01	12.0	Std. Wall XLPE Primary Cable	RED	600.0	-	A	100B
A11	-	-	ZE75F	2643671 R1	0.79	18.0	Std. Wall XLPE Primary Cable	LIGHT GREEN	5302.0	-	7	H01-5200
A12	-	-	ZE75N	2643720 R1	0.79	18.0	Std. Wall XLPE Primary Cable	DARK BLUE	5302.0	-	15	H01-5200
B1	-	-	ZE75AB	3510299 R1	0.79	18.0	Thin Wall XLPE Primary Cable	LIGHT GREEN	5302.0	-	9	H01-5200

Name	Terminal Part Number	V-Min	Name	Wire Part Number	Wire CSA	Wire Spec	Wire Material description	Wire Color Description	Wire Length	End2 Terminal Part Number	End2 Pin Name	End2 Connector
B2	-	-	ZE75AA	3510299 R1	0.79	18.0	Thin Wall XLPE Primary Cable	LIGHT GREEN	5302.0	-	10	H01-5200
B3	-	-	ZE75J	3510299 R1	0.79	18.0	Thin Wall XLPE Primary Cable	LIGHT GREEN	5302.0	-	11	H01-5200
B4	-	-	ZE75K	3510299 R1	0.79	18.0	Thin Wall XLPE Primary Cable	LIGHT GREEN	5302.0	-	12	H01-5200
B5	-	-	ZE75L	3510299 R1	0.79	18.0	Thin Wall XLPE Primary Cable	LIGHT GREEN	5302.0	-	13	H01-5200
B6	-	-	ZE75M	3510299 R1	0.79	18.0	Thin Wall XLPE Primary Cable	LIGHT GREEN	5302.0	-	14	H01-5200
B7	-	-	ZE75-GBA	2643787 R1	3.01	12.0	Std. Wall XLPE Primary Cable	WHITE	600.0	-	A	100A
B8	-	-	ZE75-GBB	2643787 R1	3.01	12.0	Std. Wall XLPE Primary Cable	WHITE	600.0	-	B	100A
B9	-	-	MF104-G	2643787 R1	3.01	12.0	Std. Wall XLPE Primary Cable	WHITE	600.0	-	B	100B

Name	Terminal Part Number	V-Min	Name	Wire Part Number	Wire CSA	Wire Spec	Wire Material description	Wire Color Description	Wire Length	End2 Terminal Part Number	End2 Pin Name	End2 Connector
B12	-	-	BF77NF	3510299 R1	0.79	18.0	Thin Wall XLPE Primary Cable	LIGHT GREEN	5177.0	-	B	5230
B12	-	-	BD77NFB	3510299 R1	0.79	18.0	Thin Wall XLPE Primary Cable	LIGHT GREEN	3862.0	-	X	-
B12	-	-	ZE77NF	3510299 R1	0.79	18.0	Thin Wall XLPE Primary Cable	LIGHT GREEN	5227.0	-	B	5230A
B13	-	-	ZE77NE	3510299 R1	0.79	18.0	Thin Wall XLPE Primary Cable	LIGHT GREEN	5227.0	-	A	5230A
B14	-	-	BD75AGB	3510299 R1	0.79	18.0	Thin Wall XLPE Primary Cable	LIGHT GREEN	3772.0	-	X	-
B14	-	-	ZE75AG	3510299 R1	0.79	18.0	Thin Wall XLPE Primary Cable	LIGHT GREEN	5202.0	-	A	5220
B15	-	-	BD75AFB	3510299 R1	0.79	18.0	Thin Wall XLPE Primary Cable	LIGHT GREEN	3742.0	-	X	-
B15	-	-	BF75AF	3510299 R1	0.79	18.0	Thin Wall XLPE Primary Cable	LIGHT GREEN	5202.0	-	B	5220

Connector Name	H01-5210
Part Number	3548957C91
Instances	LT/RH/LoneStar - X15/A26 - Rear HVAC (Sleeper W/ Deluxe):Diagram1 LT/RH/LoneStar - X15/A26 - Rear HVAC (Sleeper W/ Deluxe):Diagram2 LT/RH/LoneStar - X15/A26 - Rear HVAC (Sleeper W/ Premium):Diagram1 LT/RH/LoneStar - X15/A26 - Rear HVAC (Sleeper W/ Premium):Diagram2
Mates	MODU-HVAC_BEHR_STD-6002-05 -01A

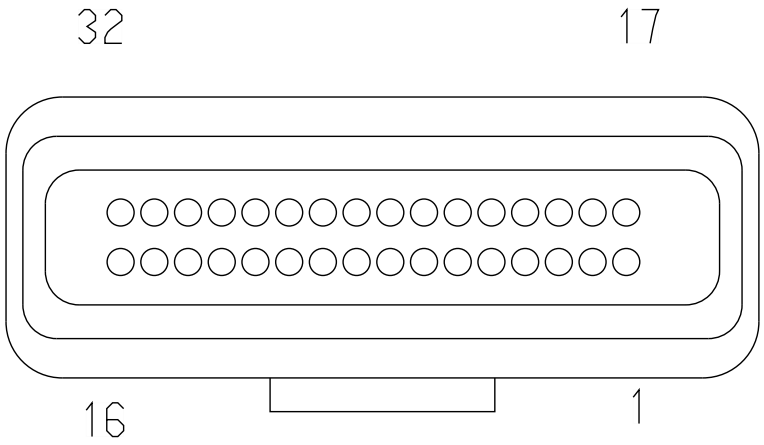

Name	Terminal Part Number	V-Min	Name	Wire Part Number	Wire CSA	Wire Spec	Wire Material description	Wire Color Description	Wire Length	End2 Terminal Part Number	End2 Pin Name	End2 Connect or
3	-	-	HG12B	3510347 R1	0.79	18.0	Thin Wall XLPE Primary Cable	VIOLET	3257.0	-	-	-
4	-	-	HG75-GBB	3510299 R1	0.79	18.0	Thin Wall XLPE Primary Cable	LIGHT GREEN	3237.0	-	-	-
5	-	-	HG75CB	3510299 R1	0.79	18.0	Thin Wall XLPE Primary Cable	LIGHT GREEN	435.0	-	3	H01-5214
7	-	-	HG77TFA	3510299 R1	0.79	18.0	Thin Wall XLPE Primary Cable	LIGHT GREEN	635.0	-	10	H01-5212

Name	Terminal Part Number	V-Min	Name	Wire Part Number	Wire CSA	Wire Spec	Wire Material description	Wire Color Description	Wire Length	End2 Terminal Part Number	End2 Pin Name	End2 Connector
8	-	-	HG77TF	3510299 R1	0.79	18.0	Thin Wall XLPE Primary Cable	LIGHT GREEN	635.0	-	9	H01-5212
9	-	-	HG77TFB	3510299 R1	0.79	18.0	Thin Wall XLPE Primary Cable	LIGHT GREEN	635.0	-	7	H01-5212
10	-	-	HG77TMB	3510299 R1	0.79	18.0	Thin Wall XLPE Primary Cable	LIGHT GREEN	635.0	-	6	H01-5212
11	-	-	HG77TMA	3510299 R1	0.79	18.0	Thin Wall XLPE Primary Cable	LIGHT GREEN	635.0	-	5	H01-5212
12	-	-	HG77TSB	3510298 R1	0.53	20.0	Thin Wall XLPE Primary Cable	LIGHT GREEN	1415.0	-	2	H01-5213
13	-	-	HG77TSA	3510298 R1	0.53	20.0	Thin Wall XLPE Primary Cable	LIGHT GREEN	1415.0	-	1	H01-5213
15	-	-	-	-	-	-	-	-	-	-	-	-
16	-	-	-	-	-	-	-	-	-	-	-	-
17	-	-	HG62AH	3510353 R1	0.79	18.0	Thin Wall XLPE Primary Cable	DARK BLUE	275.0	-	X	-
18	-	-	HC77TV	3510299 R1	0.79	18.0	Thin Wall XLPE Primary Cable	LIGHT GREEN	4737.0	-	X	-

Name	Terminal Part Number	V-Min	Name	Wire Part Number	Wire CSA	Wire Spec	Wire Material description	Wire Color Description	Wire Length	End2 Terminal Part Number	End2 Pin Name	End2 Connector
19	-	-	HC77TZ	3510299 R1	0.79	18.0	Thin Wall XLPE Primary Cable	LIGHT GREEN	4612.0	-	X	-
21	-	-	HC77TT	3510299 R1	0.79	18.0	Thin Wall XLPE Primary Cable	LIGHT GREEN	4887.0	-	B	H01-5202
23	-	-	HC77TB	3510299 R1	0.79	18.0	Thin Wall XLPE Primary Cable	LIGHT GREEN	4947.0	-	B	H01-5201
24	-	-	HD75F	3510299 R1	0.79	18.0	Thin Wall XLPE Primary Cable	LIGHT GREEN	4927.0	-	7	H01-5200-SPLR_HVAC_PANEL
25	-	-	HD75-GA	3510359 R1	0.79	18.0	Thin Wall XLPE Primary Cable	WHITE	4927.0	-	8	H01-5200-SPLR_HVAC_PANEL
26	-	-	HD75R	3510299 R1	0.79	18.0	Thin Wall XLPE Primary Cable	LIGHT GREEN	4927.0	-	9	H01-5200-SPLR_HVAC_PANEL
27	-	-	HD75H	3510299 R1	0.79	18.0	Thin Wall XLPE Primary Cable	LIGHT GREEN	4927.0	-	10	H01-5200-SPLR_HVAC_PANEL
28	-	-	HD75J	3510299 R1	0.79	18.0	Thin Wall XLPE Primary Cable	LIGHT GREEN	4927.0	-	11	H01-5200-SPLR_HVAC_PANEL

Name	Terminal Part Number	V-Min	Name	Wire Part Number	Wire CSA	Wire Spec	Wire Material description	Wire Color Description	Wire Length	End2 Terminal Part Number	End2 Pin Name	End2 Connector
29	-	-	HD75K	3510299 R1	0.79	18.0	Thin Wall XLPE Primary Cable	LIGHT GREEN	4927.0	-	12	H01-5200-SPLR_HVAC_PANEL
30	-	-	HD75L	3510299 R1	0.79	18.0	Thin Wall XLPE Primary Cable	LIGHT GREEN	4927.0	-	13	H01-5200-SPLR_HVAC_PANEL
31	-	-	HD75M	3510299 R1	0.79	18.0	Thin Wall XLPE Primary Cable	LIGHT GREEN	4927.0	-	14	H01-5200-SPLR_HVAC_PANEL
32	-	-	HD75N	3510299 R1	0.79	18.0	Thin Wall XLPE Primary Cable	LIGHT GREEN	4927.0	-	15	H01-5200-SPLR_HVAC_PANEL

Connector Name	H01-5212
Part Number	3522071C1
Instances	LT/RH/LoneStar - X15/A26 - Rear HVAC (Sleeper W/ Deluxe):Diagram2 LT/RH/LoneStar - X15/A26 - Rear HVAC (Sleeper W/ Premium):Diagram2
Mates	BLENDER-BEHR-01

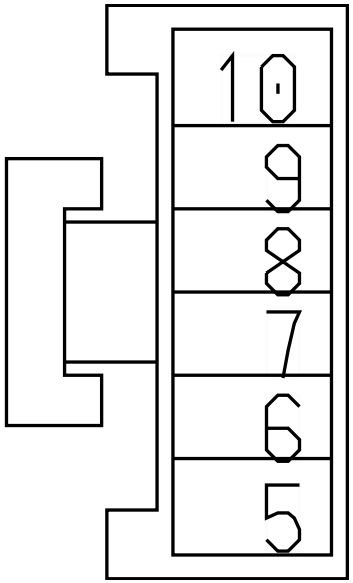

Name	Terminal Part Number	V-Min	Name	Wire Part Number	Wire CSA	Wire Spec	Wire Material description	Wire Color Description	Wire Length	End2 Terminal Part Number	End2 Pin Name	End2 Connect or
5	-	-	HG77TMA	3510299 R1	0.79	18.0	Thin Wall XLPE Primary Cable	LIGHT GREEN	635.0	-	11	H01-5210
6	-	-	HG77TMB	3510299 R1	0.79	18.0	Thin Wall XLPE Primary Cable	LIGHT GREEN	635.0	-	10	H01-5210
7	-	-	HG77TFB	3510299 R1	0.79	18.0	Thin Wall XLPE Primary Cable	LIGHT GREEN	635.0	-	9	H01-5210
9	-	-	HG77TF	3510299 R1	0.79	18.0	Thin Wall XLPE Primary Cable	LIGHT GREEN	635.0	-	8	H01-5210

Name	Terminal Part Number	V-Min	Name	Wire Part Number	Wire CSA	Wire Spec	Wire Material description	Wire Color Description	Wire Length	End2 Terminal Part Number	End2 Pin Name	End2 Connect or
10	-	-	HG77TFA	3510299 R1	0.79	18.0	Thin Wall XLPE Primary Cable	LIGHT GREEN	635.0	-	7	H01-5210

Connector Name	H01-5213
Part Number	3602659C1
Instances	LT/RH/LoneStar - X15/A26 - Rear HVAC (Sleeper W/ Deluxe):Diagram1 LT/RH/LoneStar - X15/A26 - Rear HVAC (Sleeper W/ Premium):Diagram1
Mates	SNSR-TEMP-6002-05-01A

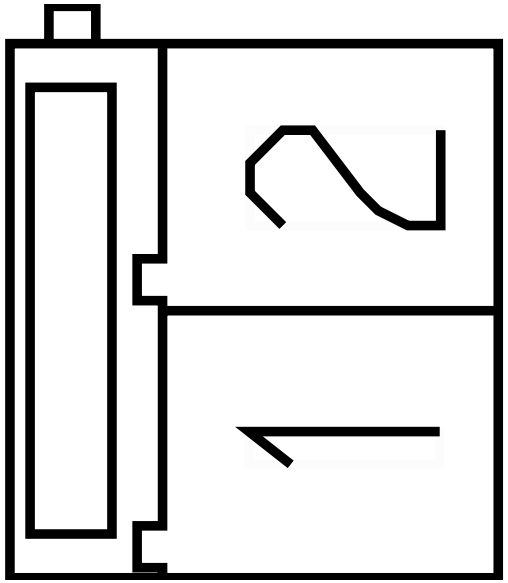

Name	Terminal Part Number	V-Min	Name	Wire Part Number	Wire CSA	Wire Spec	Wire Material description	Wire Color Description	Wire Length	End2 Terminal Part Number	End2 Pin Name	End2 Connect or
1	-	-	HG77TSA	3510298 R1	0.53	20.0	Thin Wall XLPE Primary Cable	LIGHT GREEN	1415.0	-	13	H01-5210
2	-	-	HG77TSB	3510298 R1	0.53	20.0	Thin Wall XLPE Primary Cable	LIGHT GREEN	1415.0	-	12	H01-5210

Connector Name	H01-5214
Part Number	3627940C1
Instances	LT/RH/LoneStar - X15/A26 - Rear HVAC (Sleeper W/ Deluxe):Diagram1 LT/RH/LoneStar - X15/A26 - Rear HVAC (Sleeper W/ Premium):Diagram1
Mates	DEV-BLOWER_LPM-01

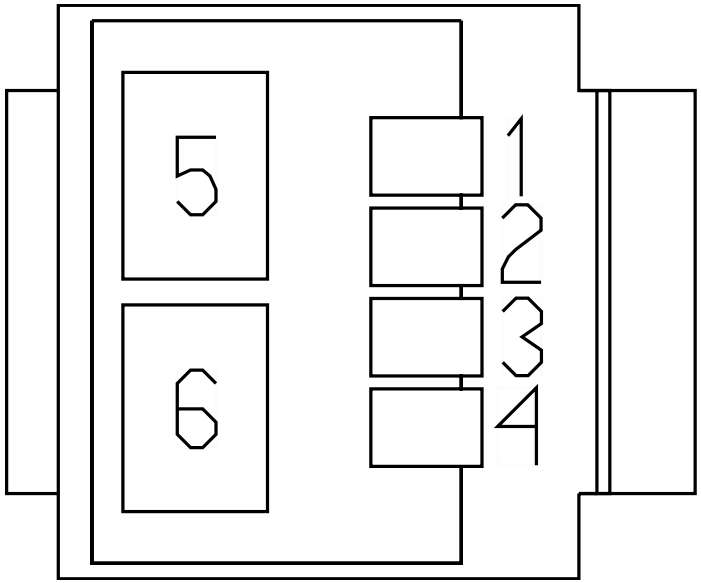

Name	Terminal Part Number	V-Min	Name	Wire Part Number	Wire CSA	Wire Spec	Wire Material description	Wire Color Description	Wire Length	End2 Terminal Part Number	End2 Pin Name	End2 Connect or
3	-	-	HG75CB	3510299 R1	0.79	18.0	Thin Wall XLPE Primary Cable	LIGHT GREEN	435.0	-	5	H01-5210
5	-	-	ZP11-GSM	2643787 R1	3.01	12.0	Std. Wall XLPE Primary Cable	WHITE	3472.0	-	-	-
6	-	-	HG75C	2643753 R1	3.01	12.0	Std. Wall XLPE Primary Cable	LIGHT GREEN	3542.0	-	-	-

Connector Name	H01-5218A
Part Number	3602659C1
Instances	LT/RH A26 - Auto Start Stop and Sleeper Auto Climate / Cab Temp / Oil Mapping Manual Trans:Diagram1 LT/RH A26 - Auto Start Stop with Sleeper Auto Climate / Cab Temp / Oil Mapping Auto Trans:Diagram1 LT/RH/LoneStar X15 - Auto Start Stop with Sleeper Auto Climate / Cab Temp with Oil Temp Sensor Auto Trans:Diagram1 LT/RH/LoneStar X15 - Auto Start Stop with Sleeper Auto Climate / Cab Temp with Oil Temp Sensor Manual Trans:Diagram1
Mates	SNSR-CAB_TEMP-01

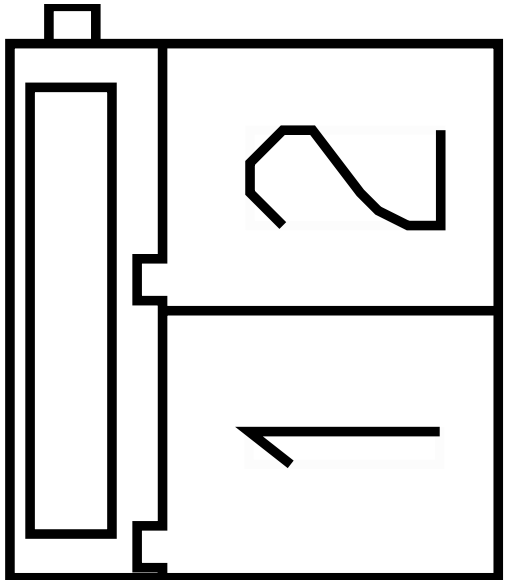

Name	Terminal Part Number	V-Min	Name	Wire Part Number	Wire CSA	Wire Spec	Wire Material description	Wire Color Description	Wire Length	End2 Terminal Part Number	End2 Pin Name	End2 Connect or
1	-	-	ZF77A	3510298 R1	0.53	20.0	Thin Wall XLPE Primary Cable	LIGHT GREEN	3952.0	-	28	5000
2	-	-	ZF77B	3510298 R1	0.53	20.0	Thin Wall XLPE Primary Cable	LIGHT GREEN	3952.0	-	29	5000

Connector Name	H01-5236
Part Number	3540613C1
Instances	LT/RH/LoneStar - X15/A26 - Rear HVAC (No Idle Heater) (Webasto Std N/Swift) N/ Heat Swtich:Diagram1 LT/RH/LoneStar - X15/A26 - Rear HVAC (No Idle Heater) (Webasto Std W/Swift) N/ Heat Switch:Diagram1
Mates	MODU-WEBASTO-HTR-H02-5236

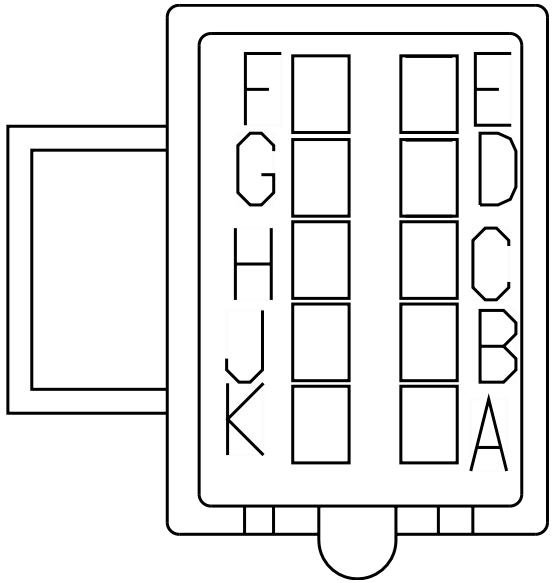

Name	Terminal Part Number	V-Min	Name	Wire Part Number	Wire CSA	Wire Spec	Wire Material description	Wire Color Description	Wire Length	End2 Terminal Part Number	End2 Pin Name	End2 Connect or
A	-	-	GS75WA	2643760 R1	1.16	16.0	Std. Wall XLPE Primary Cable	RED	1335.0	-	-	-
B	-	-	MJ75WG	2643674 R1	0.79	18.0	Std. Wall XLPE Primary Cable	WHITE	800.0	-	X	-
C	-	-	GX75WB	3510365 R1	0.79	18.0	Thin Wall XLPE Primary Cable	RED	1365.0	-	-	-
D	-	-	GS75WP	2643671 R1	0.79	18.0	Std. Wall XLPE Primary Cable	LIGHT GREEN	2125.0	-	26	5000

Name	Terminal Part Number	V-Min	Name	Wire Part Number	Wire CSA	Wire Spec	Wire Material description	Wire Color Description	Wire Length	End2 Terminal Part Number	End2 Pin Name	End2 Connect or
E	-	-	GS75WC	3510299 R1	0.79	18.0	Thin Wall XLPE Primary Cable	LIGHT GREEN	2880.0	-	A	5230
F	-	-	GS75WDA	3510299 R1	0.79	18.0	Thin Wall XLPE Primary Cable	LIGHT GREEN	1310.0	-	X	-
G	-	-	GS75WE	3510299 R1	0.79	18.0	Thin Wall XLPE Primary Cable	LIGHT GREEN	2880.0	-	C	5230
H	-	-	GS75WF	3510299 R1	0.79	18.0	Thin Wall XLPE Primary Cable	LIGHT GREEN	2880.0	-	D	5230

Connector Name	H01-5237
Part Number	3598711C1
Instances	LT/RH/LoneStar - X15/A26 - Rear HVAC (No Idle Heater) (Webasto Smartemp):Diagram1
Mates	HTR_WEBASTO_SMART-6002-04- 01A

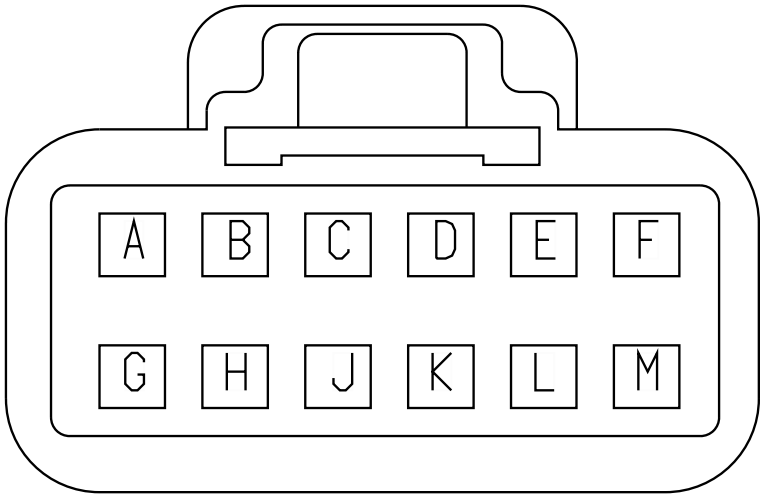

Name	Terminal Part Number	V-Min	Name	Wire Part Number	Wire CSA	Wire Spec	Wire Material description	Wire Color Description	Wire Length	End2 Terminal Part Number	End2 Pin Name	End2 Connect or
A	-	-	ZC75WA	2643760 R1	1.16	16.0	Std. Wall XLPE Primary Cable	RED	1335.0	-	-	-
B	-	-	ZC75-GA	2643681 R1	1.16	16.0	Std. Wall XLPE Primary Cable	WHITE	1315.0	-	-	-
C	-	-	ZC75WK	3510299 R1	0.79	18.0	Thin Wall XLPE Primary Cable	LIGHT GREEN	2880.0	-	F	5231
D	-	-	ZC75WP	2643671 R1	0.79	18.0	Std. Wall XLPE Primary Cable	LIGHT GREEN	2125.0	-	26	5000

Name	Terminal Part Number	V-Min	Name	Wire Part Number	Wire CSA	Wire Spec	Wire Material description	Wire Color Description	Wire Length	End2 Terminal Part Number	End2 Pin Name	End2 Connect or
E	-	-	ZC75WFA	2643761 R1	0.53	20.0	Std. Wall XLPE Primary Cable	LIGHT GREEN	2880.0	-	A	5231
F	-	-	ZC75WD	2643758 R1	0.53	20.0	Std. Wall XLPE Primary Cable	RED	1310.0	-	X	-
G	-	-	ZC75WC	2643762 R1	0.53	20.0	Std. Wall XLPE Primary Cable	BROWN	2880.0	-	C	5231
H	-	-	ZC75WE	2643771 R1	0.53	20.0	Std. Wall XLPE Primary Cable	DARK BLUE	2880.0	-	E	5231
J	-	-	ZC75WG	2643763 R1	0.53	20.0	Std. Wall XLPE Primary Cable	GREY	2880.0	-	G	5231
K	-	-	ZC75WJ	2643758 R1	0.53	20.0	Std. Wall XLPE Primary Cable	RED	2880.0	-	D	5231
L	-	-	ZC75WF	2643768 R1	0.53	20.0	Std. Wall XLPE Primary Cable	YELLOW 2	2880.0	-	H	5231

Connector Name	H01-5238
Part Number	3540613C1
Instances	LT/RH/LoneStar - X15/A26 - Rear AUTO HVAC (No Idle) W/ Pre-Heat (Bergstrom Heat and Cool w/ Condensation) 2 SWITCHES:Diagram3 - Espar Circuit LT/RH/LoneStar - X15/A26 - Rear HVAC (No Idle Heater) (Espar) Option 1:Diagram1 LT/RH/LoneStar - X15/A26 - Rear HVAC (No Idle Heater) (Espar) Option 2:Diagram1 LT/RH/LoneStar - X15/A26 - Rear Manual HVAC (No Idle) W/ Pre-Heat (Bergstrom Heat and Cool w/ Condensation) 2 SWITCHES:Diagram3 - Espar Circuit
Mates	HTR-NO_IDLE-ESPAR-6002-02- 01A

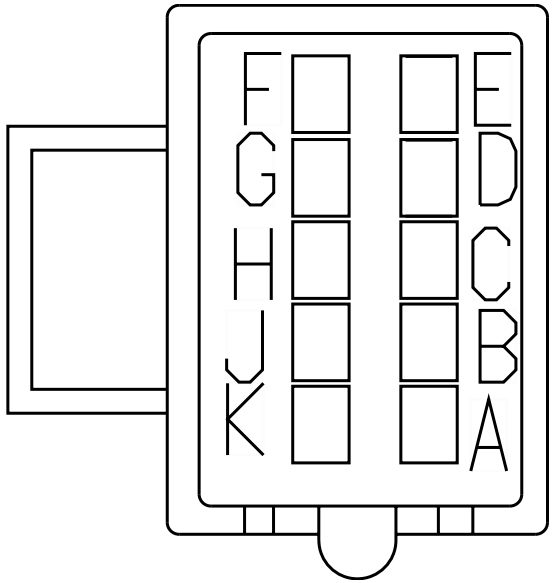

Name	Terminal Part Number	V-Min	Name	Wire Part Number	Wire CSA	Wire Spec	Wire Material description	Wire Color Description	Wire Length	End2 Terminal Part Number	End2 Pin Name	End2 Connect or
A	-	-	GV75WA	2643760 R1	1.16	16.0	Std. Wall XLPE Primary Cable	RED	1335.0	-	-	-
A	-	-	ZE75WA	2643760 R1	1.16	16.0	Std. Wall XLPE Primary Cable	RED	1335.0	-	-	-
B	-	-	MK75WG	2643674 R1	0.79	18.0	Std. Wall XLPE Primary Cable	WHITE	1315.0	-	-	-
B	-	-	ZG75WG	2643674 R1	0.79	18.0	Std. Wall XLPE Primary Cable	WHITE	1215.0	-	X	-

Name	Terminal Part Number	V-Min	Name	Wire Part Number	Wire CSA	Wire Spec	Wire Material description	Wire Color Description	Wire Length	End2 Terminal Part Number	End2 Pin Name	End2 Connector
B	-	-	ZE75WG	2643674 R1	0.79	18.0	Std. Wall XLPE Primary Cable	WHITE	1215.0	-	X	-
C	-	-	GV75WB	3510365 R1	0.79	18.0	Thin Wall XLPE Primary Cable	RED	1365.0	-	-	-
C	-	-	ZE75WB	3510365 R1	0.79	18.0	Thin Wall XLPE Primary Cable	RED	1365.0	-	-	-
D	-	-	GV75WP	3510299 R1	0.79	18.0	Thin Wall XLPE Primary Cable	LIGHT GREEN	2125.0	-	26	5000
D	-	-	ZE75WP	3510299 R1	0.79	18.0	Thin Wall XLPE Primary Cable	LIGHT GREEN	2125.0	-	26	5000
E	-	-	ZG75WC	3510299 R1	0.79	18.0	Thin Wall XLPE Primary Cable	LIGHT GREEN	2880.0	-	A	5230
E	-	-	ZE75WC	3510299 R1	0.79	18.0	Thin Wall XLPE Primary Cable	LIGHT GREEN	2880.0	-	A	5230
F	-	-	ZG75WDA	2643671 R1	0.79	18.0	Std. Wall XLPE Primary Cable	LIGHT GREEN	1595.0	-	X	-

Name	Terminal Part Number	V-Min	Name	Wire Part Number	Wire CSA	Wire Spec	Wire Material description	Wire Color Description	Wire Length	End2 Terminal Part Number	End2 Pin Name	End2 Connector
F	-	-	GV75WDA	3510299 R1	0.79	18.0	Thin Wall XLPE Primary Cable	LIGHT GREEN	1310.0	-	X	-
F	-	-	ZE75WDA	3510299 R1	0.79	18.0	Thin Wall XLPE Primary Cable	LIGHT GREEN	590.0	-	X	-
G	-	-	ZG75WE	3510299 R1	0.79	18.0	Thin Wall XLPE Primary Cable	LIGHT GREEN	2880.0	-	C	5230
G	-	-	ZE75WE	3510299 R1	0.79	18.0	Thin Wall XLPE Primary Cable	LIGHT GREEN	2880.0	-	C	5230
H	-	-	GV75WF	3510299 R1	0.79	18.0	Thin Wall XLPE Primary Cable	LIGHT GREEN	2880.0	-	D	5230
H	-	-	ZE75WF	3510299 R1	0.79	18.0	Thin Wall XLPE Primary Cable	LIGHT GREEN	2880.0	-	D	5230
J	-	-	MK75WJ	3510359 R1	0.79	18.0	Thin Wall XLPE Primary Cable	WHITE	2880.0	-	E	5230
J	-	-	ZE75WJ	3510359 R1	0.79	18.0	Thin Wall XLPE Primary Cable	WHITE	2880.0	-	E	5230

Name	Terminal Part Number	V-Min	Name	Wire Part Number	Wire CSA	Wire Spec	Wire Material description	Wire Color Description	Wire Length	End2 Terminal Part Number	End2 Pin Name	End2 Connect or
K	-	-	GV75WK	3510299 R1	0.79	18.0	Thin Wall XLPE Primary Cable	LIGHT GREEN	2880.0	-	F	5230
K	-	-	ZE75WK	3510299 R1	0.79	18.0	Thin Wall XLPE Primary Cable	LIGHT GREEN	2880.0	-	F	5230

Connector Name	H01-5312
Part Number	3663001C1
Instances	LT/RH LoneStar - X15/A26 - Speakers:Speakers N/BT W/AMP N/QC:Diagram1 LT/RH LoneStar - X15/A26 - Speakers:Speakers W/BT W/AMP N/QC:Diagram1
Mates	MODU-AMPLIFIER-2058-01A

Name	Terminal Part Number	V-Min	Name	Wire Part Number	Wire CSA	Wire Spec	Wire Material description	Wire Color Description	Wire Length	End2 Terminal Part Number	End2 Pin Name	End2 Connector
1	-	-	HH86AH	2643671 R1	0.79	18.0	Std. Wall XLPE Primary Cable	LIGHT GREEN	1520.0	-	15	5000
2	-	-	HH86AK	2643671 R1	0.79	18.0	Std. Wall XLPE Primary Cable	LIGHT GREEN	1520.0	-	13	5000
4	-	-	HH86AC	2643671 R1	0.79	18.0	Std. Wall XLPE Primary Cable	LIGHT GREEN	1520.0	-	10	5000
5	-	-	HH86BBP	2643671 R1	0.79	18.0	Std. Wall XLPE Primary Cable	LIGHT GREEN	2310.0	-	A	5300
6	-	-	HH86DBP	2643671 R1	0.79	18.0	Std. Wall XLPE Primary Cable	LIGHT GREEN	2310.0	-	C	5300
9	-	-	HH86AJ	2643671 R1	0.79	18.0	Std. Wall XLPE Primary Cable	LIGHT GREEN	1520.0	-	16	5000
10	-	-	HH86AL	2643671 R1	0.79	18.0	Std. Wall XLPE Primary Cable	LIGHT GREEN	1520.0	-	14	5000

Name	Terminal Part Number	V-Min	Name	Wire Part Number	Wire CSA	Wire Spec	Wire Material description	Wire Color Description	Wire Length	End2 Terminal Part Number	End2 Pin Name	End2 Connect or
13	-	-	HH86CBP	2643671 R1	0.79	18.0	Std. Wall XLPE Primary Cable	LIGHT GREEN	2310.0	-	B	5300
14	-	-	HH86EBP	2643671 R1	0.79	18.0	Std. Wall XLPE Primary Cable	LIGHT GREEN	2310.0	-	D	5300

Connector Name	H01-5313
Part Number	3663000C1
Instances	LT/RH LoneStar - X15/A26 - Speakers:Speakers N/BT W/AMP N/QC:Diagram1 LT/RH LoneStar - X15/A26 - Speakers:Speakers W/BT W/AMP N/QC:Diagram1
Mates	MODU-AMPLIFIER-2058-01A

Name	Terminal Part Number	V-Min	Name	Wire Part Number	Wire CSA	Wire Spec	Wire Material description	Wire Color Description	Wire Length	End2 Terminal Part Number	End2 Pin Name	End2 Connector
1	-	-	HH86DBA	2643671 R1	0.79	18.0	Std. Wall XLPE Primary Cable	LIGHT GREEN	200.0	-	1	H01-5314
2	-	-	HH86BBA	2643671 R1	0.79	18.0	Std. Wall XLPE Primary Cable	LIGHT GREEN	200.0	-	2	H01-5314
3	-	-	JT86AR	2643671 R1	0.79	18.0	Std. Wall XLPE Primary Cable	LIGHT GREEN	1595.0	-	F	5011F
4	-	-	JT86AT	2643671 R1	0.79	18.0	Std. Wall XLPE Primary Cable	LIGHT GREEN	1595.0	-	H	5011F
6	-	-	HH86AA	2643671 R1	0.79	18.0	Std. Wall XLPE Primary Cable	LIGHT GREEN	1520.0	-	8	5000
7	-	-	HH86DB	2643671 R1	0.79	18.0	Std. Wall XLPE Primary Cable	LIGHT GREEN	1520.0	-	5	5000
8	-	-	HH86BB	2643671 R1	0.79	18.0	Std. Wall XLPE Primary Cable	LIGHT GREEN	1520.0	-	3	5000

Name	Terminal Part Number	V-Min	Name	Wire Part Number	Wire CSA	Wire Spec	Wire Material description	Wire Color Description	Wire Length	End2 Terminal Part Number	End2 Pin Name	End2 Connector
9	-	-	HH86K	2643671 R1	0.79	18.0	Std. Wall XLPE Primary Cable	LIGHT GREEN	1520.0	-	11	5000
10	-	-	HH86H	2643671 R1	0.79	18.0	Std. Wall XLPE Primary Cable	LIGHT GREEN	1520.0	-	23	5000
11	-	-	HH86APX	2643671 R1	0.79	18.0	Std. Wall XLPE Primary Cable	LIGHT GREEN	145.0	-	X	-
12	-	-	HH86APY	2643671 R1	0.79	18.0	Std. Wall XLPE Primary Cable	LIGHT GREEN	145.0	-	X	-
13	-	-	HH86APZ	2643671 R1	0.79	18.0	Std. Wall XLPE Primary Cable	LIGHT GREEN	145.0	-	X	-
14	-	-	HH86CBA	2643671 R1	0.79	18.0	Std. Wall XLPE Primary Cable	LIGHT GREEN	200.0	-	3	H01-5314
15	-	-	HH86EBA	2643671 R1	0.79	18.0	Std. Wall XLPE Primary Cable	LIGHT GREEN	200.0	-	4	H01-5314
16	-	-	JT86AS	2643671 R1	0.79	18.0	Std. Wall XLPE Primary Cable	LIGHT GREEN	1595.0	-	G	5011F

Name	Terminal Part Number	V-Min	Name	Wire Part Number	Wire CSA	Wire Spec	Wire Material description	Wire Color Description	Wire Length	End2 Terminal Part Number	End2 Pin Name	End2 Connector
17	-	-	JT86AU	2643671 R1	0.79	18.0	Std. Wall XLPE Primary Cable	LIGHT GREEN	1595.0	-	J	5011F
20	-	-	HH86EB	2643671 R1	0.79	18.0	Std. Wall XLPE Primary Cable	LIGHT GREEN	1520.0	-	6	5000
21	-	-	HH86CB	2643671 R1	0.79	18.0	Std. Wall XLPE Primary Cable	LIGHT GREEN	1520.0	-	4	5000
22	-	-	HH86L	2643671 R1	0.79	18.0	Std. Wall XLPE Primary Cable	LIGHT GREEN	1520.0	-	12	5000
23	-	-	HH86J	2643671 R1	0.79	18.0	Std. Wall XLPE Primary Cable	LIGHT GREEN	1520.0	-	24	5000
24	-	-	HH86-GHX	2643671 R1	0.79	18.0	Std. Wall XLPE Primary Cable	LIGHT GREEN	170.0	-	X	-
25	-	-	HH86-GHY	2643671 R1	0.79	18.0	Std. Wall XLPE Primary Cable	LIGHT GREEN	170.0	-	X	-
26	-	-	HH86-GHZ	2643671 R1	0.79	18.0	Std. Wall XLPE Primary Cable	LIGHT GREEN	170.0	-	X	-

Connector Name	H01-5314
Part Number	1661200C1
Instances	LT/RH LoneStar - X15/A26 - Speakers:Speakers N/BT W/AMP N/QC:Diagram1 LT/RH LoneStar - X15/A26 - Speakers:Speakers W/BT W/AMP N/QC:Diagram1
Mates	MODU-SUBWOOFER-2058-01A

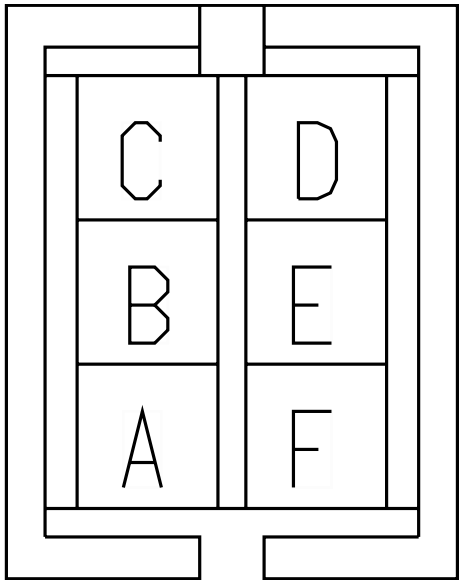

Name	Terminal Part Number	V-Min	Name	Wire Part Number	Wire CSA	Wire Spec	Wire Material description	Wire Color Description	Wire Length	End2 Terminal Part Number	End2 Pin Name	End2 Connect or
1	-	-	HH86DBA	2643671 R1	0.79	18.0	Std. Wall XLPE Primary Cable	LIGHT GREEN	200.0	-	1	H01-5313
2	-	-	HH86BBA	2643671 R1	0.79	18.0	Std. Wall XLPE Primary Cable	LIGHT GREEN	200.0	-	2	H01-5313
3	-	-	HH86CBA	2643671 R1	0.79	18.0	Std. Wall XLPE Primary Cable	LIGHT GREEN	200.0	-	14	H01-5313
4	-	-	HH86EBA	2643671 R1	0.79	18.0	Std. Wall XLPE Primary Cable	LIGHT GREEN	200.0	-	15	H01-5313

Connector Name	H01-5500
Part Number	872291R1
Instances	LT/RH/LoneStar - X15/A26 - Cabinet Refrigerator N/ Relay:Diagram1 LT/RH/LoneStar - X15/A26 - Cabinet Refrigerator W/ Relay:Diagram1
Mates	DEV-REFRIGERATOR-2053-01-0 1A

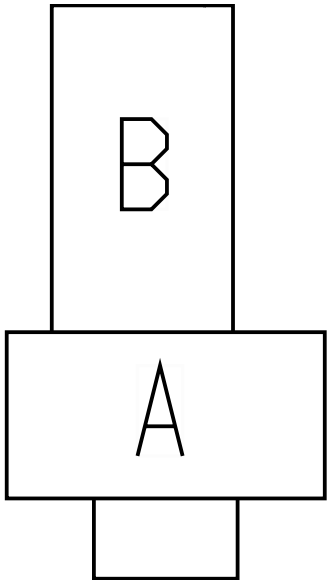

Name	Terminal Part Number	V-Min	Name	Wire Part Number	Wire CSA	Wire Spec	Wire Material description	Wire Color Description	Wire Length	End2 Terminal Part Number	End2 Pin Name	End2 Connect or
A	-	-	LG86-GK	3510363 R1	4.81	10.0	Thin Wall XLPE Primary Cable	WHITE	4217.0	-	-	-
A	-	-	HB86-GK	3510363 R1	4.81	10.0	Thin Wall XLPE Primary Cable	WHITE	4217.0	-	-	-
B	-	-	LG86AG	2643687 R1	1.91	14.0	Std. Wall XLPE Primary Cable	LIGHT GREEN	5027.0	-	30	5000
B	-	-	HB86AG	2643753 R1	3.01	12.0	Std. Wall XLPE Primary Cable	LIGHT GREEN	4267.0	-	-	-

Connector Name	H01-5501
Part Number	872291R1
Instances	LT/RH/LoneStar - X15/A26 - Underbunk Refrigerator N/ Relay:Diagram1
Mates	DEV-REFRIGERATOR-2053-02-0 1A

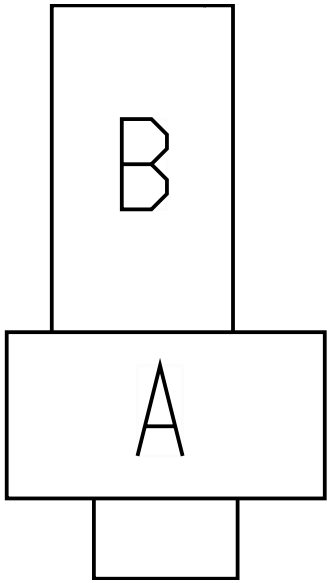

Name	Terminal Part Number	V-Min	Name	Wire Part Number	Wire CSA	Wire Spec	Wire Material description	Wire Color Description	Wire Length	End2 Terminal Part Number	End2 Pin Name	End2 Connect or
A	-	-	LF86-GK	3510363 R1	4.81	10.0	Thin Wall XLPE Primary Cable	WHITE	2282.0	-	-	-
B	-	-	LF86AG	2643753 R1	3.01	12.0	Std. Wall XLPE Primary Cable	LIGHT GREEN	2332.0	-	-	-

Connector Name	H01-5530
Part Number	2011340C1
Instances	LT/RH/LoneStar - X15/A26 - Telematics (PEOPLE NET SLEEPER):Diagram1
Mates	MODU-PEOPLENET_COMM-2035-0 5-05A

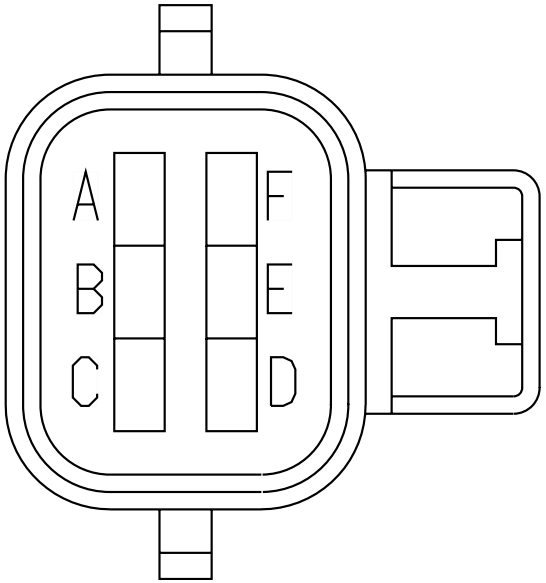

Name	Terminal Part Number	V-Min	Name	Wire Part Number	Wire CSA	Wire Spec	Wire Material description	Wire Color Description	Wire Length	End2 Terminal Part Number	End2 Pin Name	End2 Connect or
C	-	-	RF14ED	2643759 R1	0.79	18.0	Std. Wall XLPE Primary Cable	RED	3177.0	-	A	5010
D	-	-	RF11-GMB	2643674 R1	0.79	18.0	Std. Wall XLPE Primary Cable	WHITE	1455.0	-	-	-
E	-	-	RF13EE	2643794 R1	0.79	18.0	Std. Wall XLPE Primary Cable	PINK	3177.0	-	B	5010

Connector Name	H01-5704
Part Number	872291R1
Instances	LT/RH/LoneStar - X15/A26 - Rear AUTO HVAC (No Idle) W/ Pre-Heat (Bergstrom Heat and Cool w/ Condensation) 2 SWITCHES:Diagram3 - Espar Circuit LT/RH/LoneStar - X15/A26 - Rear Manual HVAC (No Idle) W/ Pre-Heat (Bergstrom Heat and Cool w/ Condensation) 2 SWITCHES:Diagram3 - Espar Circuit
Mates	DEV-DIODE_HYDRONIC_HEATER- 01

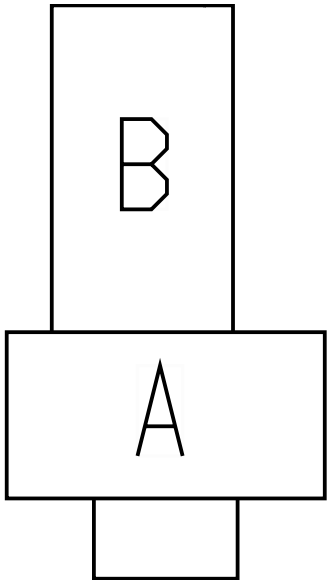

Name	Terminal Part Number	V-Min	Name	Wire Part Number	Wire CSA	Wire Spec	Wire Material description	Wire Color Description	Wire Length	End2 Terminal Part Number	End2 Pin Name	End2 Connect or
A	-	-	ZE75AJC	2643671 R1	0.79	18.0	Std. Wall XLPE Primary Cable	LIGHT GREEN	1135.0	-	X	-
B	-	-	ZE75AJB	2643671 R1	0.79	18.0	Std. Wall XLPE Primary Cable	LIGHT GREEN	4677.0	-	X	-

Connector Name	H01-5706
Part Number	872291R1
Instances	LT/RH/LoneStar - X15/A26 - Rear AUTO HVAC (No Idle) W/ Pre-Heat (Bergstrom Heat and Cool w/ Condensation) 2 SWITCHES:Diagram3 - Espar Circuit LT/RH/LoneStar - X15/A26 - Rear Manual HVAC (No Idle) W/ Pre-Heat (Bergstrom Heat and Cool w/ Condensation) 2 SWITCHES:Diagram3 - Espar Circuit
Mates	DEV-DIODE_NO_IDLE_HEATER-01

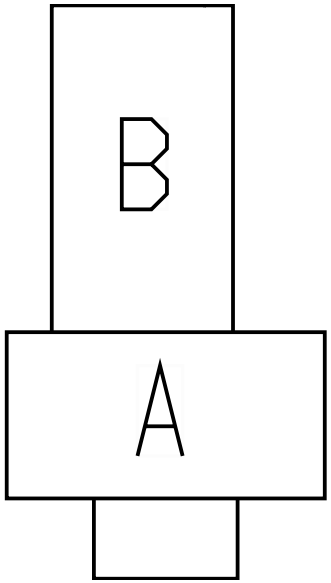

Name	Terminal Part Number	V-Min	Name	Wire Part Number	Wire CSA	Wire Spec	Wire Material description	Wire Color Description	Wire Length	End2 Terminal Part Number	End2 Pin Name	End2 Connect or
A	-	-	ZE75WDC	3510299 R1	0.79	18.0	Thin Wall XLPE Primary Cable	LIGHT GREEN	775.0	-	X	-
B	-	-	ZE75WDB	3510299 R1	0.79	18.0	Thin Wall XLPE Primary Cable	LIGHT GREEN	1780.0	-	X	-

Connector Name	H01-5756
Part Number	366817C2
Instances	LT/RH/LoneStar - X15/A26 - No Idle HVAC - TRI-PAC Prewire:Diagram1
Mates	TRI-PAC STAND-BY

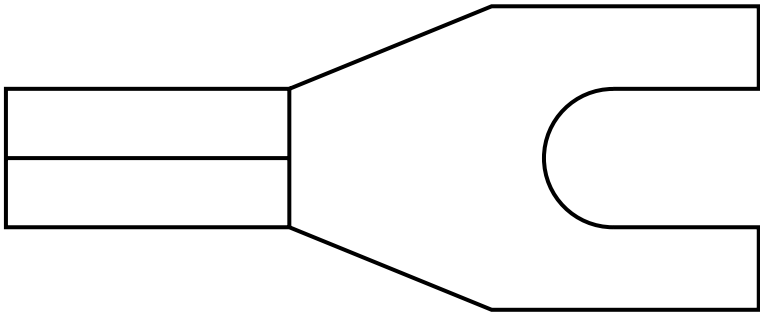

Name	Terminal Part Number	V-Min	Name	Wire Part Number	Wire CSA	Wire Spec	Wire Material description	Wire Color Description	Wire Length	End2 Terminal Part Number	End2 Pin Name	End2 Connect or
A	-	-	JY77SBY	2643678 R1	1.16	16.0	Std. Wall XLPE Primary Cable	LIGHT GREEN	4770.0	-	B	5754

Connector Name H01-5759F

Part Number 587567C91

Instances LT/RH/LoneStar - X15/A26 - Mobile Communications Sensor Wiring Effects for Trailer TRAC:Diagram2

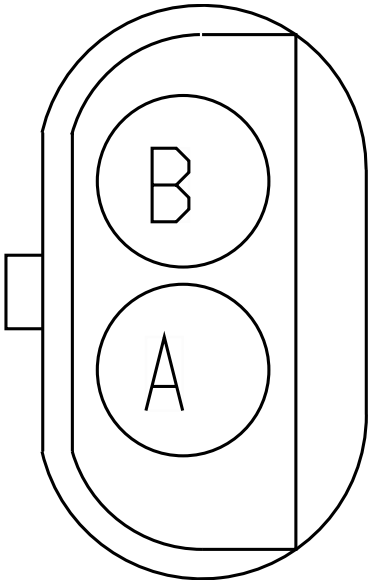

Name	Terminal Part Number	V-Min	Name	Wire Part Number	Wire CSA	Wire Spec	Wire Material description	Wire Color Description	Wire Length	End2 Terminal Part Number	End2 Pin Name	End2 Connect or
A	-	-	GT94TT	2643782 R1	1.91	14.0	Std. Wall XLPE Primary Cable	GREY	3335.0	-	A	5758M

Connector Name	H01-5901
Part Number	587565C91
Instances	LT/RH/LoneStar - X15/A26 - Telematics QUALCOMM IMCT DAYCAB With MVPC & PANIC BUTTON:Diagram1 LT/RH/LoneStar - X15/A26 - Telematics QUALCOMM IMCT DAYCAB With PANIC BUTTON:Diagram2 LT/RH/LoneStar - X15/A26 - Telematics QUALCOMM TMCT With PANIC BUTTON:Diagram1
Mates	SW-PANIC-2035-01-05A

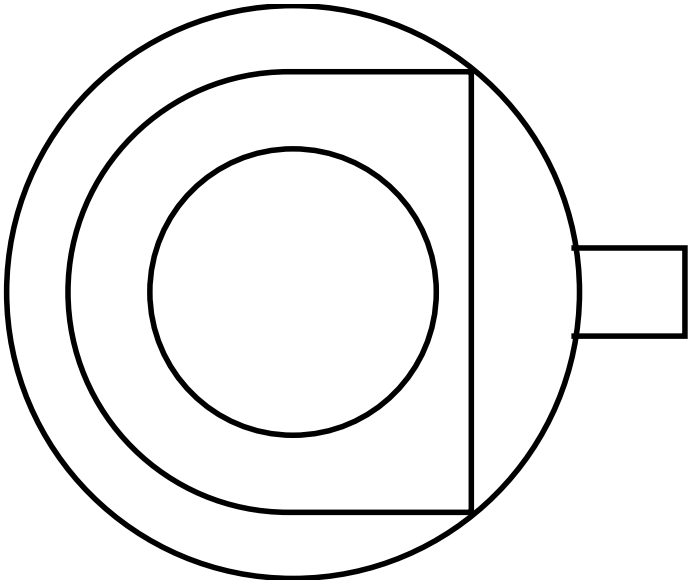

Name	Terminal Part Number	V-Min	Name	Wire Part Number	Wire CSA	Wire Spec	Wire Material description	Wire Color Description	Wire Length	End2 Terminal Part Number	End2 Pin Name	End2 Connect or
A	-	-	HY11-GSC	2643674 R1	0.79	18.0	Std. Wall XLPE Primary Cable	WHITE	3177.0	-	F	5010

Connector Name	H01-5906
Part Number	2028493C1
Instances	LT/RH/LoneStar - X15/A26 - Telematics (QUALCOMM MCT w/ TRACS):Diagram1
Mates	MODU-QUALCOMM_MCT-2035-08- 02B

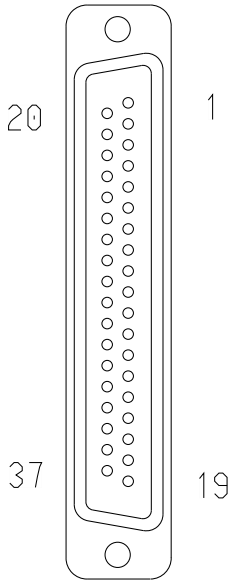

Name	Terminal Part Number	V-Min	Name	Wire Part Number	Wire CSA	Wire Spec	Wire Material description	Wire Color Description	Wire Length	End2 Terminal Part Number	End2 Pin Name	End2 Connect or
5	-	-	-	-	-	-	-	-	-	-	-	-
6	-	-	-	-	-	-	-	-	-	-	-	-
37	-	-	GP94TT	2643763 R1	0.53	20.0	Std. Wall XLPE Primary Cable	GREY	2740.0	-	A	5758M

Connector Name	H01-5907
Part Number	2017533C1
Instances	LT/RH/LoneStar - X15/A26 - Telematics (QUALCOMM MCT w/ TRACS):Diagram1 LT/RH/LoneStar - X15/A26 - Telematics (QUALCOMM MCT w/o Tracs):Diagram1
Mates	MODU-QUALCOMM_MCT-2035-08- 02

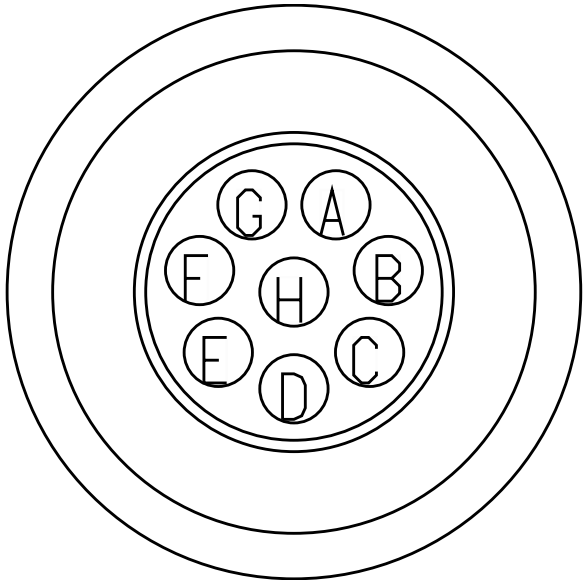

Name	Terminal Part Number	V-Min	Name	Wire Part Number	Wire CSA	Wire Spec	Wire Material description	Wire Color Description	Wire Length	End2 Terminal Part Number	End2 Pin Name	End2 Connect or
A	-	-	JZ14EA	2643759 R1	0.79	18.0	Std. Wall XLPE Primary Cable	RED	500.0	-	X	-
B	-	-	JZ14EB	2643759 R1	0.79	18.0	Std. Wall XLPE Primary Cable	RED	500.0	-	X	-
C	-	-	JZ11-GMA	2643674 R1	0.79	18.0	Std. Wall XLPE Primary Cable	WHITE	300.0	-	X	-
D	-	-	JZ11-GMC	2643674 R1	0.79	18.0	Std. Wall XLPE Primary Cable	WHITE	300.0	-	X	-

Name	Terminal Part Number	V-Min	Name	Wire Part Number	Wire CSA	Wire Spec	Wire Material description	Wire Color Description	Wire Length	End2 Terminal Part Number	End2 Pin Name	End2 Connect or
E	-	-	JZ13EE	2643794 R1	0.79	18.0	Std. Wall XLPE Primary Cable	PINK	3577.0	-	B	5010
F	-	-	JZ98F	2643670 R1	0.79	18.0	Std. Wall XLPE Primary Cable	BLACK	3577.0	-	E	5010

Connector Name	H01-5909
Part Number	2005835C1
Instances	LT/RH/LoneStar - X15/A26 - Telematics (DRIVERTECH SLEEPER W/ J1939):Diagram1
Mates	MODU-DRIVERTECH-2035-12-05

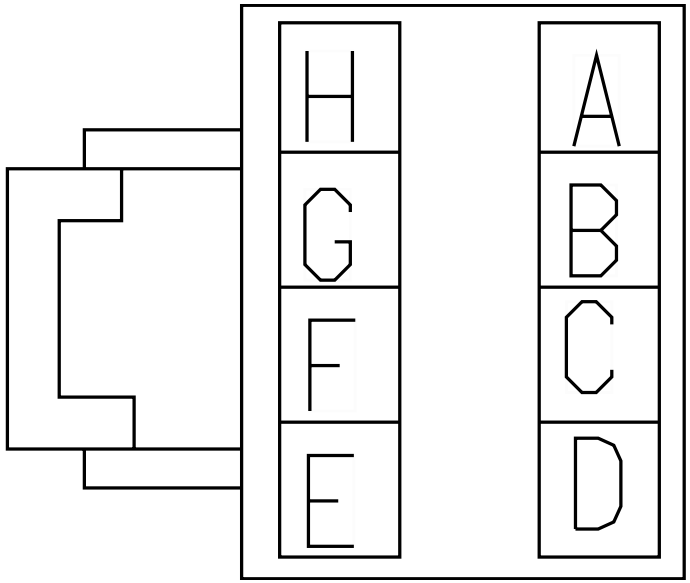

Name	Terminal Part Number	V-Min	Name	Wire Part Number	Wire CSA	Wire Spec	Wire Material description	Wire Color Description	Wire Length	End2 Terminal Part Number	End2 Pin Name	End2 Connect or
A	-	-	GD14ED	2643759 R1	0.79	18.0	Std. Wall XLPE Primary Cable	RED	5632.0	-	A	5010
C	-	-	GD11-GMB	2643674 R1	0.79	18.0	Std. Wall XLPE Primary Cable	WHITE	5632.0	-	F	5010
E	-	-	GD13EE	2643794 R1	0.79	18.0	Std. Wall XLPE Primary Cable	PINK	5632.0	-	B	5010
F	-	-	-	-	-	-	-	-	-	-	-	-
G	-	-	-	-	-	-	-	-	-	-	-	-

Connector Name	H01-5927
Part Number	2005836C1
Instances	LT/RH/LoneStar - X15/A26 - Telematics (TRIPMASTER SLEEPER):Diagram1
Mates	MODU-TRIPMASTER-2035-10-05A

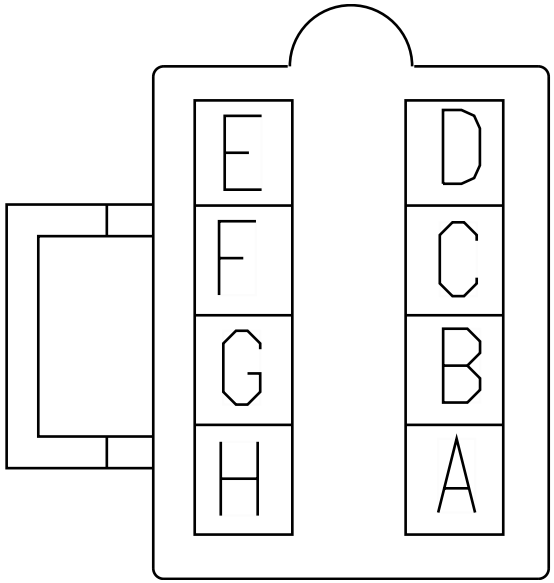

Name	Terminal Part Number	V-Min	Name	Wire Part Number	Wire CSA	Wire Spec	Wire Material description	Wire Color Description	Wire Length	End2 Terminal Part Number	End2 Pin Name	End2 Connector
A	-	-	-	-	-	-	-	-	-	-	-	-
B	-	-	-	-	-	-	-	-	-	-	-	-
C	-	-	HT13SD	2643794 R1	0.79	18.0	Std. Wall XLPE Primary Cable	PINK	3382.0	-	B	5010
D	-	-	HT11-GSD	2643674 R1	0.79	18.0	Std. Wall XLPE Primary Cable	WHITE	2450.0	-	-	-
E	-	-	HT14SD	2643759 R1	0.79	18.0	Std. Wall XLPE Primary Cable	RED	3382.0	-	A	5010
F	-	-	HT50S	2643801 R1	0.79	18.0	Std. Wall XLPE Primary Cable	YELLOW 2	3382.0	-	K	5010

Name	Terminal Part Number	V-Min	Name	Wire Part Number	Wire CSA	Wire Spec	Wire Material description	Wire Color Description	Wire Length	End2 Terminal Part Number	End2 Pin Name	End2 Connect or
G	-	-	HT70E	2643675 R1	0.79	18.0	Std. Wall XLPE Primary Cable	ORANGE	3382.0	-	J	5010

Connector Name	H01-5928A
Part Number	4125377C1
Instances	LT/RH/LoneStar - X15/A26 - DC/AC Inverter (1200W W/switch control):Diagram1
Mates	DC_AC_Inverter-2042-02-01

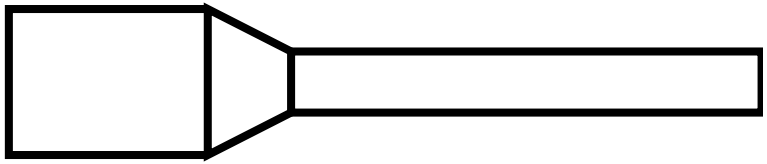

Name	Terminal Part Number	V-Min	Name	Wire Part Number	Wire CSA	Wire Spec	Wire Material description	Wire Color Description	Wire Length	End2 Terminal Part Number	End2 Pin Name	End2 Connect or
A	-	-	RH182B	2643761 R1	0.53	20.0	Std. Wall XLPE Primary Cable	LIGHT GREEN	4147.0	-	6	H01-5929A

Connector Name	H01-5929A
Part Number	3520850C1
Instances	LT/RH/LoneStar - X15/A26 - DC/AC Inverter (1200W W/switch control):Diagram1
Mates	SW-DC_AC_Inverter-2042-02- 01

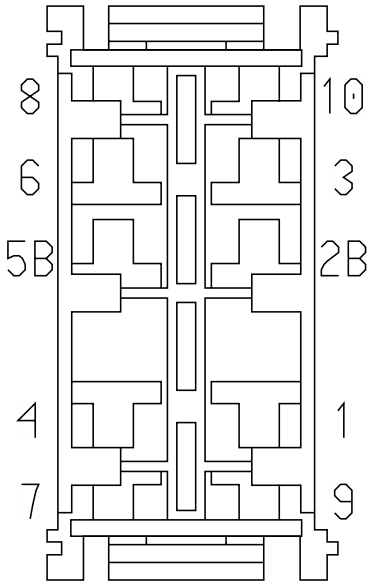

Name	Terminal Part Number	V-Min	Name	Wire Part Number	Wire CSA	Wire Spec	Wire Material description	Wire Color Description	Wire Length	End2 Terminal Part Number	End2 Pin Name	End2 Connect or
5B	-	-	RH182A	2643759 R1	0.79	18.0	Std. Wall XLPE Primary Cable	RED	2115.0	-	-	-
6	-	-	RH182B	2643761 R1	0.53	20.0	Std. Wall XLPE Primary Cable	LIGHT GREEN	4147.0	-	A	H01-592 8A
8	-	-	RH62D	2643720 R1	0.79	18.0	Std. Wall XLPE Primary Cable	DARK BLUE	2565.0	-	9	5000
10	-	-	RH11-GA	2643674 R1	0.79	18.0	Std. Wall XLPE Primary Cable	WHITE	1875.0	-	-	-

Connector Name	H02-5124
Part Number	3520850C1
Instances	LT/RH/LoneStar - X15/A26 - Floor/Search Lights Sleeper:Diagram1 LT/RH/LoneStar - X15/A26 - Floor/Search Lights Sleeper (1 Light):Diagram1 LT/RH/LoneStar - X15/A26 - Lighting Sleeper Dome:Diagram1
Mates	SW-SLPRDOME/FLOOR-2003-02- 01A

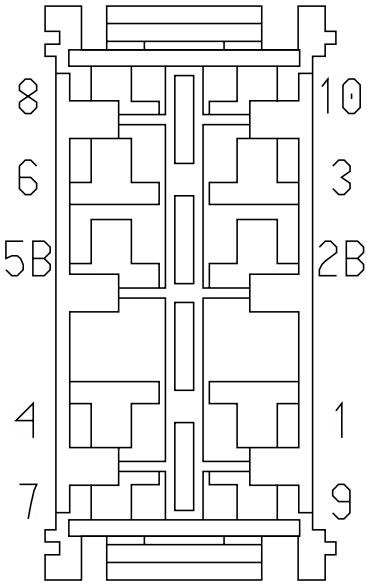

Name	Terminal Part Number	V-Min	Name	Wire Part Number	Wire CSA	Wire Spec	Wire Material description	Wire Color Description	Wire Length	End2 Terminal Part Number	End2 Pin Name	End2 Connect or
1	-	-	AA63F	2643720 R1	0.79	18.0	Std. Wall XLPE Primary Cable	DARK BLUE	405.0	-	F	5125
2B	-	-	AA109SA	2643673 R1	0.79	18.0	Std. Wall XLPE Primary Cable	GREY	405.0	-	E	5125
3	-	-	AA63EA	2643720 R1	0.79	18.0	Std. Wall XLPE Primary Cable	DARK BLUE	405.0	-	B	5125
7	-	-	AD62AU	2643720 R1	0.79	18.0	Std. Wall XLPE Primary Cable	DARK BLUE	0.0	-	8	H02-5124

Name	Terminal Part Number	V-Min	Name	Wire Part Number	Wire CSA	Wire Spec	Wire Material description	Wire Color Description	Wire Length	End2 Terminal Part Number	End2 Pin Name	End2 Connector
7	-	-	AD62D	2643720 R1	0.79	18.0	Std. Wall XLPE Primary Cable	DARK BLUE	225.0	-	X	-
8	-	-	AD62AU	2643720 R1	0.79	18.0	Std. Wall XLPE Primary Cable	DARK BLUE	0.0	-	7	H02-5124
9	-	-	AA62-GSD	2643720 R1	0.79	18.0	Std. Wall XLPE Primary Cable	DARK BLUE	405.0	-	C	5125

Connector Name	H02-5222
Part Number	3520850C1
Instances	LT/RH/LoneStar - X15/A26 - Rear AUTO HVAC (No Idle) W/ Pre-Heat (Bergstrom Heat and Cool w/ Condensation) 2 SWITCHES:Diagram2 - No Idle Switching LT/RH/LoneStar - X15/A26 - Rear Manual HVAC (No Idle) W/ Pre-Heat (Bergstrom Heat and Cool w/ Condensation) 2 SWITCHES:Diagram2 - No Idle Switching
Mates	SW-Rear_Engine_Heat-6002-0 3-02A

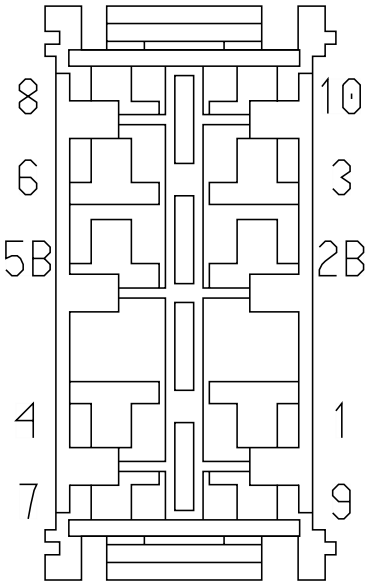

Name	Terminal Part Number	V-Min	Name	Wire Part Number	Wire CSA	Wire Spec	Wire Material description	Wire Color Description	Wire Length	End2 Terminal Part Number	End2 Pin Name	End2 Connector
2B	-	-	AK75AF	2643671 R1	0.79	18.0	Std. Wall XLPE Primary Cable	LIGHT GREEN	355.0	-	B	5220
3	-	-	AH75AT	2643671 R1	0.79	18.0	Std. Wall XLPE Primary Cable	LIGHT GREEN	0.0	-	7	H02-5222
3	-	-	AR75HB	2643671 R1	0.79	18.0	Std. Wall XLPE Primary Cable	LIGHT GREEN	150.0	-	7	H02-5233
7	-	-	AH75AT	2643671 R1	0.79	18.0	Std. Wall XLPE Primary Cable	LIGHT GREEN	0.0	-	3	H02-5222

Name	Terminal Part Number	V-Min	Name	Wire Part Number	Wire CSA	Wire Spec	Wire Material description	Wire Color Description	Wire Length	End2 Terminal Part Number	End2 Pin Name	End2 Connector
7	-	-	AR75AT	2643671 R1	0.79	18.0	Std. Wall XLPE Primary Cable	LIGHT GREEN	150.0	-	7	H02-5233
7	-	-	AH75AR	2643671 R1	0.79	18.0	Std. Wall XLPE Primary Cable	LIGHT GREEN	355.0	-	C	5220
8	-	-	AE62J	2643720 R1	0.79	18.0	Std. Wall XLPE Primary Cable	DARK BLUE	325.0	-	X	-
8	-	-	AP62J	2643720 R1	0.79	18.0	Std. Wall XLPE Primary Cable	DARK BLUE	225.0	-	X	-
8	-	-	AP62AA	2643720 R1	0.79	18.0	Std. Wall XLPE Primary Cable	DARK BLUE	150.0	-	8	H02-5233
9	-	-	AK75AG	2643671 R1	0.79	18.0	Std. Wall XLPE Primary Cable	LIGHT GREEN	355.0	-	A	5220
10	-	-	AR75-GAS	2643671 R1	0.79	18.0	Std. Wall XLPE Primary Cable	LIGHT GREEN	355.0	-	D	5220
10	-	-	BA75HA	2643671 R1	0.79	18.0	Std. Wall XLPE Primary Cable	LIGHT GREEN	150.0	-	10	H02-5233

Connector Name	H02-5233
Part Number	3520850C1
Instances	LT/RH/LoneStar - X15/A26 - Rear AUTO HVAC (No Idle) W/ Pre-Heat (Bergstrom Heat and Cool w/ Condensation) 2 SWITCHES:Diagram2 - No Idle Switching LT/RH/LoneStar - X15/A26 - Rear Manual HVAC (No Idle) W/ Pre-Heat (Bergstrom Heat and Cool w/ Condensation) 2 SWITCHES:Diagram2 - No Idle Switching
Mates	SW-Rear_Engine_Cool-6002-0 3-02A

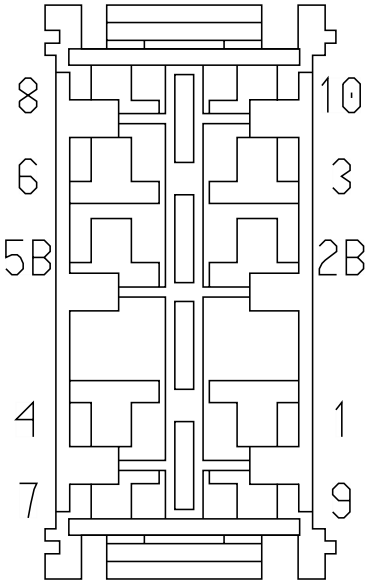

Name	Terminal Part Number	V-Min	Name	Wire Part Number	Wire CSA	Wire Spec	Wire Material description	Wire Color Description	Wire Length	End2 Terminal Part Number	End2 Pin Name	End2 Connector
2B	-	-	BA77NE	2643671 R1	0.79	18.0	Std. Wall XLPE Primary Cable	LIGHT GREEN	325.0	-	A	5230A
7	-	-	BC75AR	2643671 R1	0.79	18.0	Std. Wall XLPE Primary Cable	LIGHT GREEN	305.0	-	C	5220
7	-	-	AR75AT	2643671 R1	0.79	18.0	Std. Wall XLPE Primary Cable	LIGHT GREEN	150.0	-	7	H02-5222
7	-	-	AR75HB	2643671 R1	0.79	18.0	Std. Wall XLPE Primary Cable	LIGHT GREEN	150.0	-	3	H02-5222

Name	Terminal Part Number	V-Min	Name	Wire Part Number	Wire CSA	Wire Spec	Wire Material description	Wire Color Description	Wire Length	End2 Terminal Part Number	End2 Pin Name	End2 Connect or
8	-	-	AF62J	2643720 R1	0.79	18.0	Std. Wall XLPE Primary Cable	DARK BLUE	275.0	-	X	-
8	-	-	AP62AA	2643720 R1	0.79	18.0	Std. Wall XLPE Primary Cable	DARK BLUE	150.0	-	8	H02-5222
9	-	-	AR77NF	2643671 R1	0.79	18.0	Std. Wall XLPE Primary Cable	LIGHT GREEN	325.0	-	B	5230
9	-	-	BA77NF	2643671 R1	0.79	18.0	Std. Wall XLPE Primary Cable	LIGHT GREEN	325.0	-	B	5230A
10	-	-	BC75-GAS	2643671 R1	0.79	18.0	Std. Wall XLPE Primary Cable	LIGHT GREEN	305.0	-	D	5220
10	-	-	BA75HA	2643671 R1	0.79	18.0	Std. Wall XLPE Primary Cable	LIGHT GREEN	150.0	-	10	H02-5222

Connector Name	H02-5235
Part Number	1667529C1
Instances	LT/RH/LoneStar - X15/A26 - Rear HVAC (No Idle Heater) (Webasto Std N/Swift) N/ Heat Swtich:Diagram1 LT/RH/LoneStar - X15/A26 - Rear HVAC (No Idle Heater) (Webasto Std W/Swift) N/ Heat Switch:Diagram1
Mates	Modu-Webasto_Driver_Cntrl- 6002-01-01

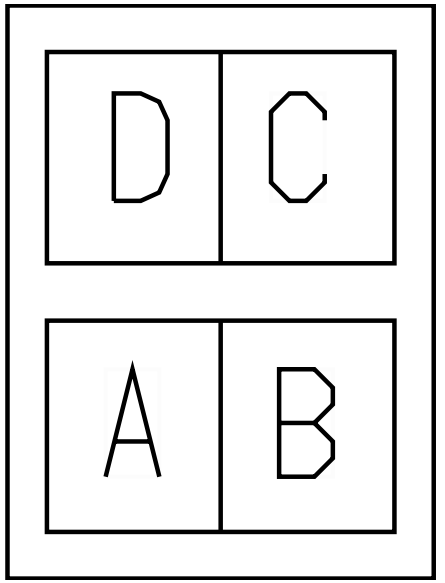

Name	Terminal Part Number	V-Min	Name	Wire Part Number	Wire CSA	Wire Spec	Wire Material description	Wire Color Description	Wire Length	End2 Terminal Part Number	End2 Pin Name	End2 Connect or
A	-	-	AM75WF	2643671 R1	0.79	18.0	Std. Wall XLPE Primary Cable	LIGHT GREEN	150.0	-	D	5230
B	-	-	AM75WE	2643671 R1	0.79	18.0	Std. Wall XLPE Primary Cable	LIGHT GREEN	150.0	-	C	5230
C	-	-	AM75WC	2643671 R1	0.79	18.0	Std. Wall XLPE Primary Cable	LIGHT GREEN	150.0	-	A	5230
D	-	-	AM75WD	2643671 R1	0.79	18.0	Std. Wall XLPE Primary Cable	LIGHT GREEN	150.0	-	B	5230

Connector Name	H02-5236
Part Number	3515763C1
Instances	LT/RH/LoneStar - X15/A26 - Rear HVAC (No Idle Heater) (Webasto Smartemp):Diagram1
Mates	Modu-Webasto_Driver_CNTRL

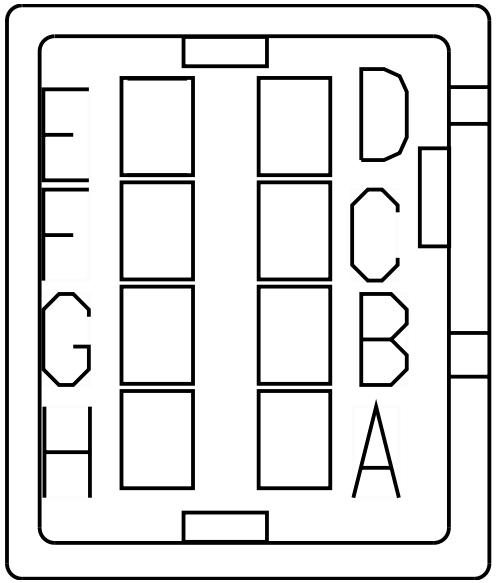

Name	Terminal Part Number	V-Min	Name	Wire Part Number	Wire CSA	Wire Spec	Wire Material description	Wire Color Description	Wire Length	End2 Terminal Part Number	End2 Pin Name	End2 Connect or
A	-	-	AV75WA	2643765 R1	0.53	20.0	Std. Wall XLPE Primary Cable	ORANGE	150.0	-	A	5231
B	-	-	AV75WB	2643757 R1	0.53	20.0	Std. Wall XLPE Primary Cable	BLACK	150.0	-	B	5231
C	-	-	AV75WC	2643762 R1	0.53	20.0	Std. Wall XLPE Primary Cable	BROWN	150.0	-	C	5231
D	-	-	AV75WD	2643758 R1	0.53	20.0	Std. Wall XLPE Primary Cable	RED	150.0	-	D	5231

Name	Terminal Part Number	V-Min	Name	Wire Part Number	Wire CSA	Wire Spec	Wire Material description	Wire Color Description	Wire Length	End2 Terminal Part Number	End2 Pin Name	End2 Connect or
E	-	-	AV75WE	2643771 R1	0.53	20.0	Std. Wall XLPE Primary Cable	DARK BLUE	150.0	-	E	5231
F	-	-	AV75WF	2643768 R1	0.53	20.0	Std. Wall XLPE Primary Cable	YELLOW 2	150.0	-	F	5231
G	-	-	AV75WG	2643763 R1	0.53	20.0	Std. Wall XLPE Primary Cable	GREY	150.0	-	G	5231
H	-	-	AV75WH	2643761 R1	0.53	20.0	Std. Wall XLPE Primary Cable	LIGHT GREEN	150.0	-	H	5231

Connector Name	H02-5237
Part Number	1661200C1
Instances	LT/RH/LoneStar - X15/A26 - Rear AUTO HVAC (No Idle) W/ Pre-Heat (Bergstrom Heat and Cool w/ Condensation) 2 SWITCHES:Diagram3 - Espar Circuit LT/RH/LoneStar - X15/A26 - Rear HVAC (No Idle Heater) (Espar) Option 1:Diagram1 LT/RH/LoneStar - X15/A26 - Rear HVAC (No Idle Heater) (Espar) Option 2:Diagram1 LT/RH/LoneStar - X15/A26 - Rear Manual HVAC (No Idle) W/ Pre-Heat (Bergstrom Heat and Cool w/ Condensation) 2 SWITCHES:Diagram3 - Espar Circuit
Mates	MODU-ESPAR_DRIVER_CTRL-600 0-02-01A

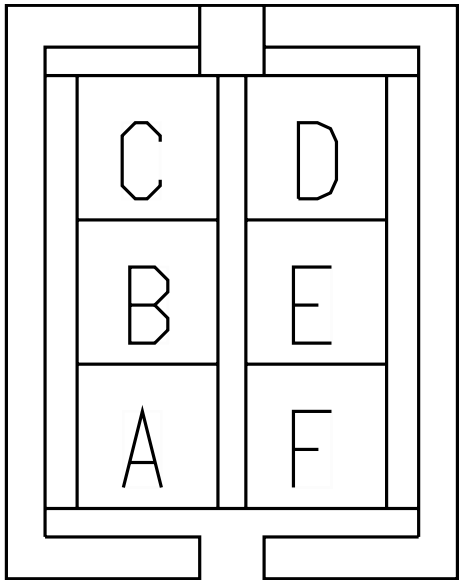

Name	Terminal Part Number	V-Min	Name	Wire Part Number	Wire CSA	Wire Spec	Wire Material description	Wire Color Description	Wire Length	End2 Terminal Part Number	End2 Pin Name	End2 Connect or
A	-	-	AT75WC	2643671 R1	0.79	18.0	Std. Wall XLPE Primary Cable	LIGHT GREEN	200.0	-	A	5230
B	-	-	BE75WD	2643671 R1	0.79	18.0	Std. Wall XLPE Primary Cable	LIGHT GREEN	200.0	-	B	5230
C	-	-	BE75WE	2643671 R1	0.79	18.0	Std. Wall XLPE Primary Cable	LIGHT GREEN	200.0	-	C	5230
D	-	-	AT75WF	2643671 R1	0.79	18.0	Std. Wall XLPE Primary Cable	LIGHT GREEN	200.0	-	D	5230

Name	Terminal Part Number	V-Min	Name	Wire Part Number	Wire CSA	Wire Spec	Wire Material description	Wire Color Description	Wire Length	End2 Terminal Part Number	End2 Pin Name	End2 Connect or
E	-	-	AT75WJ	2643671 R1	0.79	18.0	Std. Wall XLPE Primary Cable	LIGHT GREEN	200.0	-	E	5230
F	-	-	BE75WK	2643671 R1	0.79	18.0	Std. Wall XLPE Primary Cable	LIGHT GREEN	200.0	-	F	5230

Connector Name	H03-5100
Part Number	3522068C1
Instances	LT/RH - A26 - Work Lights - LED W/ Sw Pack - Customer Supplied - Sleeper W/ RKE W/MAN REV:Diagram1 LT/RH - A26 - Work Lights - LED W/ Sw Pack - Customer Supplied - Sleeper W/ RKE W/MAN REV:Diagram2 LT/RH - A26 - Work Lights - LED W/ Sw Pack - Customer Supplied - Sleeper W/ RKE W/MAN REV:Diagram3 LT/RH - A26 - Work Lights - LED W/ Sw Pack - Customer Supplied - Sleeper W/ RKE W/MAN REV:Diagram4 LT/RH - A26 - Work Lights - LED W/ Sw Pack - Customer Supplied - Sleeper W/O RKE W/MAN REV:Diagram1 LT/RH - A26 - Work Lights - LED W/ Sw Pack - Customer Supplied - Sleeper W/O RKE W/MAN REV:Diagram2 LT/RH - A26 - Work Lights - LED W/ Sw Pack - Customer Supplied - Sleeper W/O RKE W/MAN REV:Diagram3 LT/RH - A26 - Work Lights - LED W/ Sw Pack - Customer Supplied - Sleeper W/O RKE W/MAN REV:Diagram4 LT/RH - A26 - Work Lights -LED W/ Sw Pack - Sleeper W/ RKE W/MAN REV:Diagram1 LT/RH - A26 - Work Lights -LED W/ Sw Pack - Sleeper W/ RKE W/MAN REV:Diagram2 LT/RH - A26 - Work Lights -LED W/ Sw Pack - Sleeper W/O RKE W/MAN REV:Diagram1 LT/RH - A26 - Work Lights -LED W/ Sw Pack - Sleeper W/O RKE W/MAN REV:Diagram2 LT/RH/LoneStar - X15 - Work Lights - LED W/ Sw Pack - Customer Supplied - Sleeper W/ RKE W/MAN REV:Diagram1 LT/RH/LoneStar - X15 - Work Lights - LED W/ Sw Pack - Customer Supplied - Sleeper W/ RKE W/MAN REV:Diagram2 LT/RH/LoneStar - X15 - Work Lights - LED W/ Sw Pack - Customer Supplied - Sleeper W/O RKE W/MAN REV:Diagram1 LT/RH/LoneStar - X15 - Work Lights - LED W/ Sw Pack - Customer Supplied - Sleeper W/O RKE W/MAN REV:Diagram2 LT/RH/LoneStar - X15 - Work Lights -LED W/ Sw Pack - Sleeper W/ RKE W/MAN REV:Diagram1 LT/RH/LoneStar - X15 - Work Lights -LED W/ Sw Pack - Sleeper W/O RKE W/MAN REV:Diagram1 LT/RH/LoneStar - X15/A26 - Work Lights - LED W/ Sw Pack - Customer Supplied - Sleeper:Diagram1 LT/RH/LoneStar - X15/A26 - Work Lights - LED W/ Sw Pack - Customer Supplied - Sleeper:Diagram2

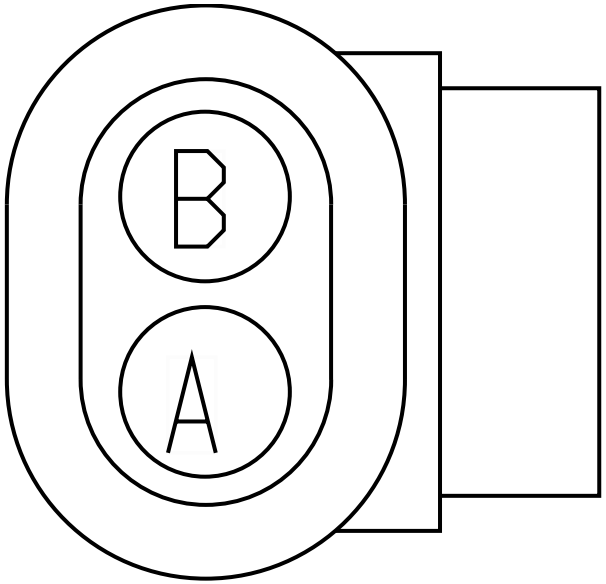

LT/RH/LoneStar - X15/A26 - Work Lights - LED W/ Sw Pack - Customer Supplied - Sleeper W/ RKE W/AUTO REV:Diagram1
LT/RH/LoneStar - X15/A26 - Work Lights - LED W/ Sw Pack - Customer Supplied - Sleeper W/ RKE W/AUTO REV:Diagram2
LT/RH/LoneStar - X15/A26 - Work Lights - LED W/ Sw Pack - Customer Supplied - Sleeper W/O RKE:Diagram1
LT/RH/LoneStar - X15/A26 - Work Lights - LED W/ Sw Pack - Customer Supplied - Sleeper W/O RKE:Diagram2
LT/RH/LoneStar - X15/A26 - Work Lights - LED W/ Sw Pack - Customer Supplied - Sleeper W/O RKE W/AUTO REV:Diagram1
LT/RH/LoneStar - X15/A26 - Work Lights - LED W/ Sw Pack - Customer Supplied - Sleeper W/O RKE W/AUTO REV:Diagram2
LT/RH/LoneStar - X15/A26 - Work Lights -LED W/ Sw Pack - Sleeper:Diagram1
LT/RH/LoneStar - X15/A26 - Work Lights -LED W/ Sw Pack - Sleeper W/ RKE W/AUTO REV:Diagram1
LT/RH/LoneStar - X15/A26 - Work Lights -LED W/ Sw Pack - Sleeper W/O RKE:Diagram1
LT/RH/LoneStar - X15/A26 - Work Lights -LED W/ Sw Pack - Sleeper W/O RKE W/AUTO REV:Diagram1

Mates LT-LED-WORK_SLPR-1032-01-0 6A

Name	Terminal Part Number	V-Min	Name	Wire Part Number	Wire CSA	Wire Spec	Wire Material description	Wire Color Description	Wire Length	End2 Terminal Part Number	End2 Pin Name	End2 Connector
A	-	-	V65B	3510318 R1	1.16	16.0	Thin Wall XLPE Primary Cable	ORANGE	300.0	-	X	-
B	-	-	V65-GA	3510360 R1	1.16	16.0	Thin Wall XLPE Primary Cable	WHITE	200.0	-	X	-

Connector Name	H03-5101
Part Number	3522068C1
Instances	LT/RH - A26 - Work Lights - LED W/ Sw Pack - Customer Supplied - Sleeper W/ RKE W/MAN REV:Diagram1 LT/RH - A26 - Work Lights - LED W/ Sw Pack - Customer Supplied - Sleeper W/ RKE W/MAN REV:Diagram2 LT/RH - A26 - Work Lights - LED W/ Sw Pack - Customer Supplied - Sleeper W/ RKE W/MAN REV:Diagram3 LT/RH - A26 - Work Lights - LED W/ Sw Pack - Customer Supplied - Sleeper W/ RKE W/MAN REV:Diagram4 LT/RH - A26 - Work Lights - LED W/ Sw Pack - Customer Supplied - Sleeper W/O RKE W/MAN REV:Diagram1 LT/RH - A26 - Work Lights - LED W/ Sw Pack - Customer Supplied - Sleeper W/O RKE W/MAN REV:Diagram2 LT/RH - A26 - Work Lights - LED W/ Sw Pack - Customer Supplied - Sleeper W/O RKE W/MAN REV:Diagram3 LT/RH - A26 - Work Lights - LED W/ Sw Pack - Customer Supplied - Sleeper W/O RKE W/MAN REV:Diagram4 LT/RH - A26 - Work Lights -LED W/ Sw Pack - Sleeper W/ RKE W/MAN REV:Diagram1 LT/RH - A26 - Work Lights -LED W/ Sw Pack - Sleeper W/ RKE W/MAN REV:Diagram2 LT/RH - A26 - Work Lights -LED W/ Sw Pack - Sleeper W/O RKE W/MAN REV:Diagram1 LT/RH - A26 - Work Lights -LED W/ Sw Pack - Sleeper W/O RKE W/MAN REV:Diagram2 LT/RH/LoneStar - X15 - Work Lights - LED W/ Sw Pack - Customer Supplied - Sleeper W/ RKE W/MAN REV:Diagram1 LT/RH/LoneStar - X15 - Work Lights - LED W/ Sw Pack - Customer Supplied - Sleeper W/ RKE W/MAN REV:Diagram2 LT/RH/LoneStar - X15 - Work Lights - LED W/ Sw Pack - Customer Supplied - Sleeper W/O RKE W/MAN REV:Diagram1 LT/RH/LoneStar - X15 - Work Lights - LED W/ Sw Pack - Customer Supplied - Sleeper W/O RKE W/MAN REV:Diagram2 LT/RH/LoneStar - X15 - Work Lights -LED W/ Sw Pack - Sleeper W/ RKE W/MAN REV:Diagram1 LT/RH/LoneStar - X15 - Work Lights -LED W/ Sw Pack - Sleeper W/O RKE W/MAN REV:Diagram1 LT/RH/LoneStar - X15/A26 - Work Lights - LED W/ Sw Pack - Customer Supplied - Sleeper:Diagram1 LT/RH/LoneStar - X15/A26 - Work Lights - LED W/ Sw Pack - Customer Supplied - Sleeper:Diagram2

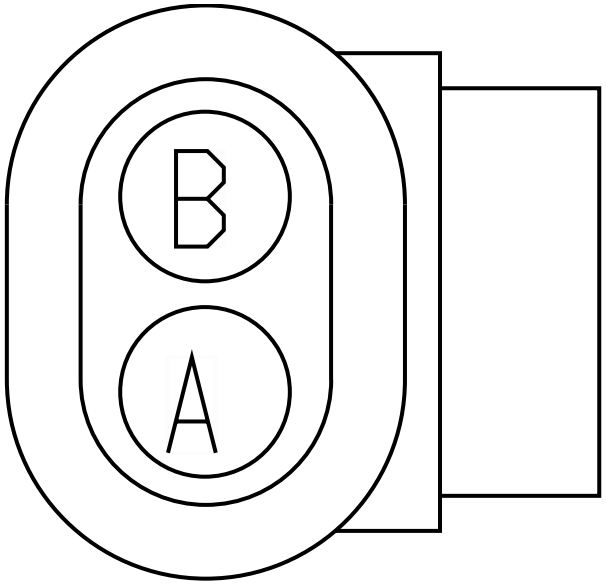

LT/RH/LoneStar - X15/A26 - Work Lights - LED W/ Sw Pack - Customer Supplied - Sleeper W/ RKE W/AUTO REV:Diagram1
LT/RH/LoneStar - X15/A26 - Work Lights - LED W/ Sw Pack - Customer Supplied - Sleeper W/ RKE W/AUTO REV:Diagram2
LT/RH/LoneStar - X15/A26 - Work Lights - LED W/ Sw Pack - Customer Supplied - Sleeper W/O RKE:Diagram1
LT/RH/LoneStar - X15/A26 - Work Lights - LED W/ Sw Pack - Customer Supplied - Sleeper W/O RKE:Diagram2
LT/RH/LoneStar - X15/A26 - Work Lights - LED W/ Sw Pack - Customer Supplied - Sleeper W/O RKE W/AUTO REV:Diagram1
LT/RH/LoneStar - X15/A26 - Work Lights - LED W/ Sw Pack - Customer Supplied - Sleeper W/O RKE W/AUTO REV:Diagram2
LT/RH/LoneStar - X15/A26 - Work Lights -LED W/ Sw Pack - Sleeper:Diagram1
LT/RH/LoneStar - X15/A26 - Work Lights -LED W/ Sw Pack - Sleeper W/ RKE W/AUTO REV:Diagram1
LT/RH/LoneStar - X15/A26 - Work Lights -LED W/ Sw Pack - Sleeper W/O RKE:Diagram1
LT/RH/LoneStar - X15/A26 - Work Lights -LED W/ Sw Pack - Sleeper W/O RKE W/AUTO REV:Diagram1

Mates LT-LED-WORK_SLPR-1032-01-0 6B

Name	Terminal Part Number	V-Min	Name	Wire Part Number	Wire CSA	Wire Spec	Wire Material description	Wire Color Description	Wire Length	End2 Terminal Part Number	End2 Pin Name	End2 Connector
A	-	-	V65A	3510318 R1	1.16	16.0	Thin Wall XLPE Primary Cable	ORANGE	615.0	-	X	-
B	-	-	V65-GB	3510360 R1	1.16	16.0	Thin Wall XLPE Primary Cable	WHITE	415.0	-	X	-

Connector Name	H03-5301
Part Number	3535769C1
Instances	LT/RH LoneStar - X15/A26 - Speakers:Four Speakers N/BT N/QC:Diagram2-Sleeper LT/RH LoneStar - X15/A26 - Speakers:Four Speakers N/BT W/QC:Diagram2-Sleeper LT/RH LoneStar - X15/A26 - Speakers:Four Speakers W/BT N/QC:Diagram2-Sleeper LT/RH LoneStar - X15/A26 - Speakers:Four Speakers W/BT W/QC:Diagram2-Sleeper LT/RH LoneStar - X15/A26 - Speakers:Speakers N/BT W/AMP N/QC:Diagram1 LT/RH LoneStar - X15/A26 - Speakers:Speakers W/BT W/AMP N/QC:Diagram1

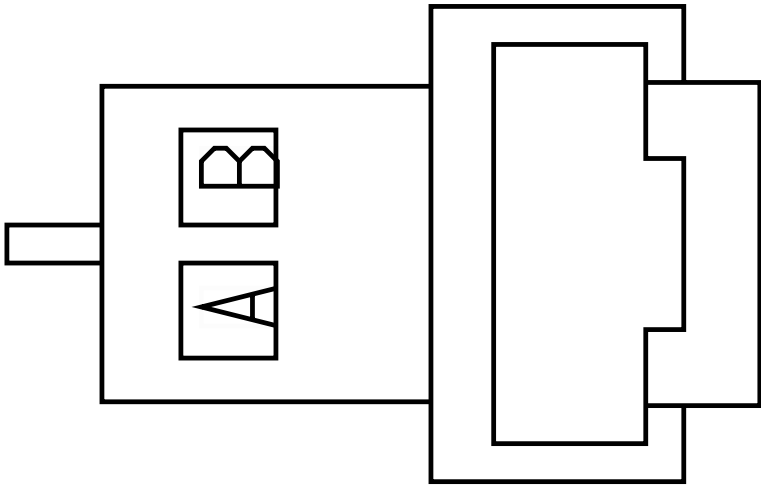

Name	Terminal Part Number	V-Min	Name	Wire Part Number	Wire CSA	Wire Spec	Wire Material description	Wire Color Description	Wire Length	End2 Terminal Part Number	End2 Pin Name	End2 Connector
A	-	-	V86BB	2643671 R1	0.79	18.0	Std. Wall XLPE Primary Cable	LIGHT GREEN	720.0	-	A	5300
B	-	-	V86CB	2643671 R1	0.79	18.0	Std. Wall XLPE Primary Cable	LIGHT GREEN	720.0	-	B	5300

Connector Name	H03-5302
Part Number	3535769C1
Instances	LT/RH LoneStar - X15/A26 - Speakers:Four Speakers N/BT N/QC:Diagram2-Sleeper LT/RH LoneStar - X15/A26 - Speakers:Four Speakers N/BT W/QC:Diagram2-Sleeper LT/RH LoneStar - X15/A26 - Speakers:Four Speakers W/BT N/QC:Diagram2-Sleeper LT/RH LoneStar - X15/A26 - Speakers:Four Speakers W/BT W/QC:Diagram2-Sleeper LT/RH LoneStar - X15/A26 - Speakers:Speakers N/BT W/AMP N/QC:Diagram1 LT/RH LoneStar - X15/A26 - Speakers:Speakers W/BT W/AMP N/QC:Diagram1

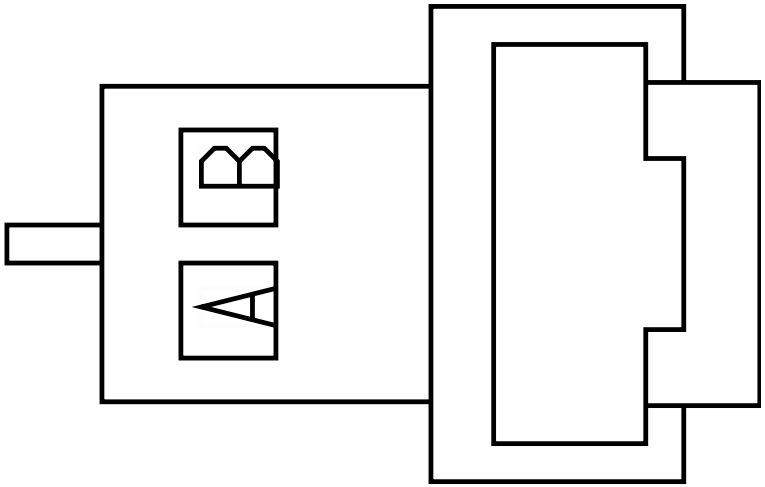

Name	Terminal Part Number	V-Min	Name	Wire Part Number	Wire CSA	Wire Spec	Wire Material description	Wire Color Description	Wire Length	End2 Terminal Part Number	End2 Pin Name	End2 Connect or
A	-	-	V86DB	2643671 R1	0.79	18.0	Std. Wall XLPE Primary Cable	LIGHT GREEN	1435.0	-	C	5300
B	-	-	V86EB	2643671 R1	0.79	18.0	Std. Wall XLPE Primary Cable	LIGHT GREEN	1435.0	-	D	5300

Connector Name	J1-1603
Part Number	3598711C1
Instances	LoneStar - X15 - Body Builder Lighting - (BOC EOF In Cab) (8HAB 8HAE 8HAU) (Automatic):Diagram1 LoneStar - X15 - Body Builder Lighting - (BOC EOF In Cab) (8HAB 8HAE 8HAU) (Automatic):Diagram2 LoneStar - X15 - Body Builder Lighting - (BOC EOF In Cab) (8HAB 8HAE 8HAU) (Manual):Diagram1 LoneStar - X15 - Body Builder Lighting - (BOC EOF In Cab) (8HAB 8HAE 8HAU) (Manual):Diagram2 LoneStar - X15 - City Horn W/ 4PIN CLK W/O RKA:Diagram1-Combination1 LoneStar - X15 - City Horn W/ 4PIN CLK W/RKA:Diagram1-Combination1 LoneStar - X15 - City Horn W/ 10PIN CLK W/RKA:Diagram1-Combination1 LoneStar - X15 - City Horn W/ 10PIN CLK W/O RKA:Diagram1-Combination1 LoneStar - X15 - Headlights Halogen N/INT N/LOWW:Diagram1 LoneStar - X15 - Headlights Halogen N/INT W/LOWW:Diagram1 LoneStar - X15 - Headlights Halogen W/INT N/LOWW:Diagram1 LoneStar - X15 - Headlights Halogen W/INT W/ LOWW:Diagram1 LT/RH - A26 - Body Builder Lighting - (BOC EOF In Cab) (8HAB 8HAE 8HAU) (Manual):Diagram1 LT/RH - A26 - Body Builder Lighting - (BOC EOF In Cab) (8HAB 8HAE 8HAU) (Manual):Diagram2 LT/RH - A26 - Body Builder Lighting - (BOC EOF In Cab) (8HAB 8HAE 8HAU) (Manual):Diagram3 LT/RH - A26 - Body Builder Lighting - (BOC EOF In Cab) (8HAB 8HAE 8HAU) (Manual):Diagram4 LT/RH - A26 - Work Lights (2 Blunt Cuts Only W/O Relay) W/ Backup W/Manual Trans Day Cab:Diagram1 LT/RH - A26 - Work Lights (2 Blunt Cuts Only W/O Relay) W/ Backup W/Manual Trans Day Cab:Diagram2 LT/RH - A26 - Work Lights (2 Blunt Cuts Only W/O Relay) W/ Backup W/Manual Trans Day Cab:Diagram3 LT/RH - A26 - Work Lights (2 Blunt Cuts Only W/O Relay) W/ Backup W/Manual Trans Day Cab:Diagram4 LT/RH - A26 - Work Lights - LED W/ Sw Pack - Customer Supplied - Sleeper W/ RKE W/MAN REV:Diagram1 LT/RH - A26 - Work Lights - LED W/ Sw Pack - Customer Supplied - Sleeper W/ RKE W/MAN REV:Diagram2

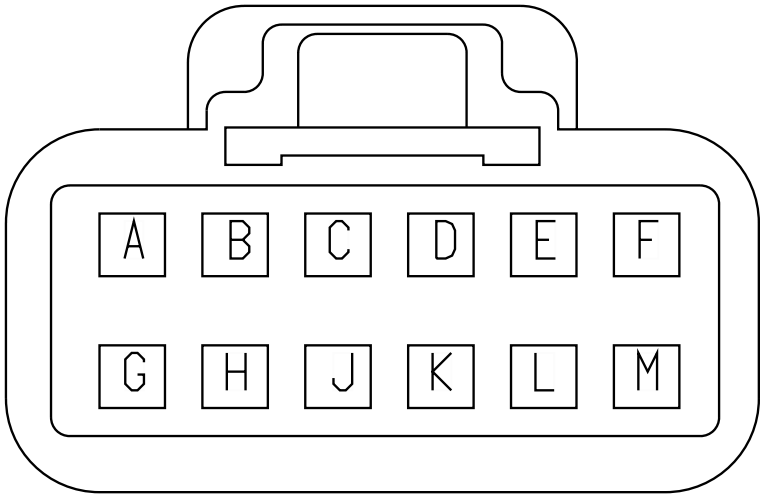

LT/RH - A26 - Work Lights - LED W/ Sw Pack - Customer Supplied - Sleeper W/ RKE W/MAN REV:Diagram3
LT/RH - A26 - Work Lights - LED W/ Sw Pack - Customer Supplied - Sleeper W/ RKE W/MAN REV:Diagram4
LT/RH - A26 - Work Lights - LED W/ Sw Pack - Customer Supplied - Sleeper W/O RKE W/MAN REV:Diagram1
LT/RH - A26 - Work Lights - LED W/ Sw Pack - Customer Supplied - Sleeper W/O RKE W/MAN REV:Diagram2
LT/RH - A26 - Work Lights - LED W/ Sw Pack - Customer Supplied - Sleeper W/O RKE W/MAN REV:Diagram3
LT/RH - A26 - Work Lights - LED W/ Sw Pack - Customer Supplied - Sleeper W/O RKE W/MAN REV:Diagram4
LT/RH - A26 - Work Lights -LED W/ Sw Pack - Sleeper W/ RKE W/MAN REV:Diagram1
LT/RH - A26 - Work Lights -LED W/ Sw Pack - Sleeper W/ RKE W/MAN REV:Diagram2
LT/RH - A26 - Work Lights -LED W/ Sw Pack - Sleeper W/O RKE W/MAN REV:Diagram1
LT/RH - A26 - Work Lights -LED W/ Sw Pack - Sleeper W/O RKE W/MAN REV:Diagram2
LT/RH - A26 - Work Lights LED W/ Sw Pack - Day Cab W/ RKE W/MAN REV:Diagram1
LT/RH - A26 - Work Lights LED W/ Sw Pack - Day Cab W/ RKE W/MAN REV:Diagram2
LT/RH - A26 - Work Lights LED W/ Sw Pack - Day Cab W/O RKE W/MAN REV:Diagram1
LT/RH - A26 - Work Lights LED W/ Sw Pack - Day Cab W/O RKE W/MAN REV:Diagram2
LT/RH - A26 - Work Lights W/ Sw Pack - Customer Supplied W/ RKE W/MAN REV:Diagram1
LT/RH - A26 - Work Lights W/ Sw Pack - Customer Supplied W/ RKE W/MAN REV:Diagram2
LT/RH - A26 - Work Lights W/ Sw Pack - Customer Supplied W/ RKE W/MAN REV:Diagram3
LT/RH - A26 - Work Lights W/ Sw Pack - Customer Supplied W/ RKE W/MAN REV:Diagram4
LT/RH - A26 - Work Lights W/ Sw Pack - Customer Supplied W/ O RKE W/MAN REV:Diagram1
LT/RH - A26 - Work Lights W/ Sw Pack - Customer Supplied W/ O RKE W/MAN REV:Diagram2
LT/RH - A26 - Work Lights W/ Sw Pack - Customer Supplied W/ O RKE W/MAN REV:Diagram3
LT/RH - A26 - Work Lights W/ Sw Pack - Customer Supplied W/ O RKE W/MAN REV:Diagram4

LT/RH - X15 - Body Builder Lighting - (BOC EOF In Cab) (8HAB 8HAE 8HAU) (Manual):Diagram1
LT/RH - X15 - Body Builder Lighting - (BOC EOF In Cab) (8HAB 8HAE 8HAU) (Manual):Diagram2
LT/RH - X15/A26 - Body Builder Lighting - (BOC EOF In Cab) (8HAB 8HAE 8HAU) (Automatic):Diagram1
LT/RH - X15/A26 - Body Builder Lighting - (BOC EOF In Cab) (8HAB 8HAE 8HAU) (Automatic):Diagram2
LT/RH - X15/A26 - City Horn W/ 4PIN CLK W/O RKA:Diagram1-Combination1
LT/RH - X15/A26 - City Horn W/ 4PIN CLK W/RKA:Diagram1-Combination1
LT/RH - X15/A26 - City Horn W/ 10PIN CLK W/RKA:Diagram1-Combination1
LT/RH - X15/A26 - City Horn W/ 10PIN CLK W/O RKA:Diagram1-Combination1
LT/RH - X15/A26 - Work Lights W/ Sw Pack - Customer Supplied:Diagram1
LT/RH - X15/A26 - Work Lights W/ Sw Pack - Customer Supplied:Diagram2
LT/RH A26 - A26 - Heating Ventilation & Air Conditioning (HVAC) Manual:Diagram1 - HVAC - Option1
LT/RH A26 - A26 - Heating Ventilation & Air Conditioning (HVAC) Manual:Diagram2 - HVAC - Option2
LT/RH A26 - Heating Ventilation & Air Conditioning (HVAC) Auto Temp Control:Diagram1 - HVAC - Option1
LT/RH A26 - Heating Ventilation & Air Conditioning (HVAC) Auto Temp Control:Diagram2 - HVAC - Option2
LT/RH/LoneStar - X15 - Work Lights (2 Blunt Cuts Only W/O Relay) W/Backup W/Manual Trans:Diagram1
LT/RH/LoneStar - X15 - Work Lights (2 Blunt Cuts Only W/O Relay) W/Backup W/Manual Trans:Diagram2
LT/RH/LoneStar - X15 - Work Lights - LED W/ Sw Pack - Customer Supplied - Sleeper W/ RKE W/MAN REV:Diagram1
LT/RH/LoneStar - X15 - Work Lights - LED W/ Sw Pack - Customer Supplied - Sleeper W/ RKE W/MAN REV:Diagram2
LT/RH/LoneStar - X15 - Work Lights - LED W/ Sw Pack - Customer Supplied - Sleeper W/O RKE W/MAN REV:Diagram1
LT/RH/LoneStar - X15 - Work Lights - LED W/ Sw Pack - Customer Supplied - Sleeper W/O RKE W/MAN REV:Diagram2
LT/RH/LoneStar - X15 - Work Lights -LED W/ Sw Pack - Sleeper W/ RKE W/MAN REV:Diagram1
LT/RH/LoneStar - X15 - Work Lights -LED W/ Sw Pack - Sleeper W/O RKE W/MAN REV:Diagram1

LT/RH/LoneStar - X15 - Work Lights W/ Sw Pack - Customer Supplied W/ RKE W/MAN REV:Diagram1
LT/RH/LoneStar - X15 - Work Lights W/ Sw Pack - Customer Supplied W/ RKE W/MAN REV:Diagram2
LT/RH/LoneStar - X15 - Work Lights W/ Sw Pack - Customer Supplied W/O RKE W/MAN REV:Diagram1
LT/RH/LoneStar - X15 - Work Lights W/ Sw Pack - Customer Supplied W/O RKE W/MAN REV:Diagram2
LT/RH/LoneStar - X15/A26 - BCM (Body Control Module):Connector J1-1603
LT/RH/LoneStar - X15/A26 - Body Builder Lighting - (Blunt Cut):Diagram1
LT/RH/LoneStar - X15/A26 - Body Builder Lighting - (Blunt Cut):Diagram2
LT/RH/LoneStar - X15/A26 - Rear Lights Stop - Dual Assembly:Diagram1
LT/RH/LoneStar - X15/A26 - Rear Lights Stop - Dual Assembly:Diagram2
LT/RH/LoneStar - X15/A26 - Rear Lights Stop - Single Assembly Option 1:Diagram1
LT/RH/LoneStar - X15/A26 - Rear Lights Stop - Single Assembly Option 1:Diagram2
LT/RH/LoneStar - X15/A26 - Rear Lights Stop - Single Assembly Option 2:Diagram1
LT/RH/LoneStar - X15/A26 - Rear Lights Stop - Single Assembly Option 2:Diagram2
LT/RH/LoneStar - X15/A26 - Telematics (TRIPMASTER DAYCAB):Diagram1
LT/RH/LoneStar - X15/A26 - Telematics (TRIPMASTER SLEEPER):Diagram1
LT/RH/LoneStar - X15/A26 - Trailer Interface (Lighting) – BOC & EOF_NA:Diagram1-Combination1
LT/RH/LoneStar - X15/A26 - Trailer Interface (Lighting) – BOC & EOF_NA:Diagram1-Combination2
LT/RH/LoneStar - X15/A26 - Trailer Interface (Lighting) – BOC & EOF_NA:Diagram1-Combination3
LT/RH/LoneStar - X15/A26 - Trailer Interface (Lighting) – BOC & EOF_NA:Diagram1-Combination4
LT/RH/LoneStar - X15/A26 - Trailer Interface (Lighting) – BOC NA:Diagram1
LT/RH/LoneStar - X15/A26 - Trailer Interface (Lighting) – BOC NA:Diagram2
LT/RH/LoneStar - X15/A26 - Trailer Interface (Lighting) – TRAMEC_NA:Diagram1

LT/RH/LoneStar - X15/A26 - Work Lights (2 Blunt Cuts Only W/O Relay):Diagram1
LT/RH/LoneStar - X15/A26 - Work Lights (2 Blunt Cuts Only W/O Relay):Diagram2
LT/RH/LoneStar - X15/A26 - Work Lights (2 Blunt Cuts Only W/O Relay) W/Backup W/Auto Trans (Allison and Endurant):Diagram1
LT/RH/LoneStar - X15/A26 - Work Lights (2 Blunt Cuts Only W/O Relay) W/Backup W/Auto Trans (Allison and Endurant):Diagram2
LT/RH/LoneStar - X15/A26 - Work Lights - LED W/ Sw Pack - Customer Supplied - Sleeper:Diagram1
LT/RH/LoneStar - X15/A26 - Work Lights - LED W/ Sw Pack - Customer Supplied - Sleeper:Diagram2
LT/RH/LoneStar - X15/A26 - Work Lights - LED W/ Sw Pack - Customer Supplied - Sleeper W/ RKE W/AUTO REV:Diagram1
LT/RH/LoneStar - X15/A26 - Work Lights - LED W/ Sw Pack - Customer Supplied - Sleeper W/ RKE W/AUTO REV:Diagram2
LT/RH/LoneStar - X15/A26 - Work Lights - LED W/ Sw Pack - Customer Supplied - Sleeper W/O RKE:Diagram1
LT/RH/LoneStar - X15/A26 - Work Lights - LED W/ Sw Pack - Customer Supplied - Sleeper W/O RKE:Diagram2
LT/RH/LoneStar - X15/A26 - Work Lights - LED W/ Sw Pack - Customer Supplied - Sleeper W/O RKE W/AUTO REV:Diagram1
LT/RH/LoneStar - X15/A26 - Work Lights - LED W/ Sw Pack - Customer Supplied - Sleeper W/O RKE W/AUTO REV:Diagram2
LT/RH/LoneStar - X15/A26 - Work Lights -LED W/ Sw Pack - Sleeper:Diagram1
LT/RH/LoneStar - X15/A26 - Work Lights -LED W/ Sw Pack - Sleeper W/ RKE W/AUTO REV:Diagram1
LT/RH/LoneStar - X15/A26 - Work Lights -LED W/ Sw Pack - Sleeper W/O RKE:Diagram1
LT/RH/LoneStar - X15/A26 - Work Lights -LED W/ Sw Pack - Sleeper W/O RKE W/AUTO REV:Diagram1
LT/RH/LoneStar - X15/A26 - Work Lights LED W/ Sw Pack - Day Cab:Diagram1
LT/RH/LoneStar - X15/A26 - Work Lights LED W/ Sw Pack - Day Cab W/ RKE W/AUTO REV:Diagram1
LT/RH/LoneStar - X15/A26 - Work Lights LED W/ Sw Pack - Day Cab W/O RKE:Diagram1
LT/RH/LoneStar - X15/A26 - Work Lights LED W/ Sw Pack - Day Cab W/O RKE W/AUTO REV:Diagram1
LT/RH/LoneStar - X15/A26 - Work Lights W/ Sw Pack - Customer Supplied:Diagram1

LT/RH/LoneStar - X15/A26 - Work Lights W/ Sw Pack - Customer Supplied:Diagram2
LT/RH/LoneStar - X15/A26 - Work Lights W/ Sw Pack - Customer Supplied W/ RKE W/AUTO REV:Diagram1
LT/RH/LoneStar - X15/A26 - Work Lights W/ Sw Pack - Customer Supplied W/ RKE W/AUTO REV:Diagram2
LT/RH/LoneStar - X15/A26 - Work Lights W/ Sw Pack - Customer Supplied W/O RKE W/AUTO REV:Diagram1
LT/RH/LoneStar - X15/A26 - Work Lights W/ Sw Pack - Customer Supplied W/O RKE W/AUTO REV:Diagram2
LT/RH/LoneStar X15 - Heating Ventilation & Air Conditioning (HVAC) Auto Temp Control:Diagram1 - HVAC
LT/RH/LoneStar X15 - Heating Ventilation & Air Conditioning (HVAC) Manual:Diagram1 - HVAC
LT/RH/LoneStar X15 - Work Lights LED W/ Sw Pack - Day Cab W/ RKE W/MAN REV:Diagram1
LT/RH/LoneStar X15 - Work Lights LED W/ Sw Pack - Day Cab W/O RKE W/MAN REV:Diagram1
RH - X15/A26 - Headlights Halogen N/INT N/LOWW:Diagram1
RH - X15/A26 - Headlights Halogen N/INT W/LOWW:Diagram1
RH - X15/A26 - Headlights Halogen W/INT N/LOWW:Diagram1
RH - X15/A26 - Headlights Halogen W/INT W/LOWW:Diagram1
RH - X15/A26 - Headlights LED N/INT N/LOWW LT:Diagram1
RH - X15/A26 - Headlights LED N/INT W/LOWW LT:Diagram1
RH - X15/A26 - Headlights LED W/INT N/LOWW LT:Diagram1
RH - X15/A26 - Headlights LED W/INT W/LOWW LT:Diagram1

Mates MODU-BCM-A000-10-00

Name	Terminal Part Number	V-Min	Name	Wire Part Number	Wire CSA	Wire Spec	Wire Material description	Wire Color Description	Wire Length	End2 Terminal Part Number	End2 Pin Name	End2 Connector
A	-	-	BL57BB	3510300 R1	1.16	16.0	Thin Wall XLPE Primary Cable	LIGHT GREEN	560.0	-	71	1700
A	-	-	BG57BB	3510318 R1	1.16	16.0	Thin Wall XLPE Primary Cable	ORANGE	185.0	-	-	-

Name	Terminal Part Number	V-Min	Name	Wire Part Number	Wire CSA	Wire Spec	Wire Material description	Wire Color Description	Wire Length	End2 Terminal Part Number	End2 Pin Name	End2 Connector
A	-	-	BM57T	3510320 R1	3.01	12.0	Thin Wall XLPE Primary Cable	ORANGE	640.0	-	-	-
A	-	-	BL57BB	3510300 R1	1.16	16.0	Thin Wall XLPE Primary Cable	LIGHT GREEN	560.0	-	-	-
A	-	-	BM57T	3510320 R1	3.01	12.0	Thin Wall XLPE Primary Cable	ORANGE	640.0	-	6	1701
B	-	-	BL56BB	3510336 R1	1.16	16.0	Thin Wall XLPE Primary Cable	YELLOW 2	560.0	-	69	1700
B	-	-	BL56BB	3510336 R1	1.16	16.0	Thin Wall XLPE Primary Cable	YELLOW 2	560.0	-	-	-
B	-	-	BG56BB	3510318 R1	1.16	16.0	Thin Wall XLPE Primary Cable	ORANGE	150.0	-	-	-
B	-	-	BM56T	3510320 R1	3.01	12.0	Thin Wall XLPE Primary Cable	ORANGE	640.0	-	-	-
B	-	-	BM56T	3510320 R1	3.01	12.0	Thin Wall XLPE Primary Cable	ORANGE	640.0	-	5	1701

Name	Terminal Part Number	V-Min	Name	Wire Part Number	Wire CSA	Wire Spec	Wire Material description	Wire Color Description	Wire Length	End2 Terminal Part Number	End2 Pin Name	End2 Connector
C	-	-	AA77	3510299 R1	0.79	18.0	Thin Wall XLPE Primary Cable	LIGHT GREEN	2660.0	-	65	1703M
C	-	-	AA77	3510299 R1	0.79	18.0	Thin Wall XLPE Primary Cable	LIGHT GREEN	2660.0	-	-	-
D	-	-	AA56A	3510318 R1	1.16	16.0	Thin Wall XLPE Primary Cable	ORANGE	635.0	-	-	-
E	-	-	AA85	3510312 R1	1.16	16.0	Thin Wall XLPE Primary Cable	GREY	560.0	-	21	1700
E	-	-	AA85	3510312 R1	1.16	16.0	Thin Wall XLPE Primary Cable	GREY	560.0	-	-	-
F	-	-	CU64A	3510336 R1	1.16	16.0	Thin Wall XLPE Primary Cable	YELLOW 2	560.0	-	-	-
G	-	-	BU65	3510318 R1	1.16	16.0	Thin Wall XLPE Primary Cable	ORANGE	535.0	-	X	-
G	-	-	BY65	3510318 R1	1.16	16.0	Thin Wall XLPE Primary Cable	ORANGE	800.0	-	X	-

Name	Terminal Part Number	V-Min	Name	Wire Part Number	Wire CSA	Wire Spec	Wire Material description	Wire Color Description	Wire Length	End2 Terminal Part Number	End2 Pin Name	End2 Connector
G	-	-	BW65	3510318 R1	1.16	16.0	Thin Wall XLPE Primary Cable	ORANGE	535.0	-	X	-
G	-	-	BX65	3510318 R1	1.16	16.0	Thin Wall XLPE Primary Cable	ORANGE	535.0	-	X	-
G	-	-	BS65	3510317 R1	0.79	18.0	Thin Wall XLPE Primary Cable	ORANGE	640.0	-	68	1701
G	-	-	BT65	3510317 R1	0.79	18.0	Thin Wall XLPE Primary Cable	ORANGE	1975.0	-	20	5000A
G	-	-	BS65	3510317 R1	0.79	18.0	Thin Wall XLPE Primary Cable	ORANGE	640.0	-	-	-
G	-	-	BW65	3510318 R1	1.16	16.0	Thin Wall XLPE Primary Cable	ORANGE	535.0	-	-	-
G	-	-	BU65	3510318 R1	1.16	16.0	Thin Wall XLPE Primary Cable	ORANGE	535.0	-	-	-
G	-	-	BX65	3510318 R1	1.16	16.0	Thin Wall XLPE Primary Cable	ORANGE	535.0	-	-	-

Name	Terminal Part Number	V-Min	Name	Wire Part Number	Wire CSA	Wire Spec	Wire Material description	Wire Color Description	Wire Length	End2 Terminal Part Number	End2 Pin Name	End2 Connect or
G	-	-	BT65	3510317 R1	0.79	18.0	Thin Wall XLPE Primary Cable	ORANGE	1975.0	-	-	-
G	-	-	BY65	3510318 R1	1.16	16.0	Thin Wall XLPE Primary Cable	ORANGE	800.0	-	-	-
H	-	-	DE52A	3510337 R1	1.91	14.0	Thin Wall XLPE Primary Cable	YELLOW 2	560.0	-	1	1700
H	-	-	BB52AA	3510337 R1	1.91	14.0	Thin Wall XLPE Primary Cable	YELLOW 2	385.0	-	X	-
H	-	-	BB52AA	3510337 R1	1.91	14.0	Thin Wall XLPE Primary Cable	YELLOW 2	385.0	-	-	-
H	-	-	DE52A	3510337 R1	1.91	14.0	Thin Wall XLPE Primary Cable	YELLOW 2	560.0	-	-	-
J	-	-	2B58	3510306 R1	1.16	16.0	Thin Wall XLPE Primary Cable	BROWN	560.0	-	-	-
K	-	-	CU64B	3510336 R1	1.16	16.0	Thin Wall XLPE Primary Cable	YELLOW 2	560.0	-	-	-

Name	Terminal Part Number	V-Min	Name	Wire Part Number	Wire CSA	Wire Spec	Wire Material description	Wire Color Description	Wire Length	End2 Terminal Part Number	End2 Pin Name	End2 Connect or
L	-	-	DE52B	3510337 R1	1.91	14.0	Thin Wall XLPE Primary Cable	YELLOW 2	560.0	-	3	1700
L	-	-	DE52B	3510337 R1	1.91	14.0	Thin Wall XLPE Primary Cable	YELLOW 2	560.0	-	-	-
M	-	-	AA57C	3510318 R1	1.16	16.0	Thin Wall XLPE Primary Cable	ORANGE	635.0	-	-	-

Connector Name	J1-1603
Part Number	3598711C1
Instances	LoneStar - X15/A26 - Front Fog Lamps:Diagram1 LT - X15/A26 - Headlights Halogen N/INT N/LOWW:Diagram1 LT - X15/A26 - Headlights Halogen N/INT W/LOWW:Diagram1 LT - X15/A26 - Headlights Halogen W/INT N/LOWW:Diagram1 LT - X15/A26 - Headlights Halogen W/INT W/LOWW:Diagram1 LT - X15/A26 - Headlights LED N/ INT N/LOWW:Diagram1 LT - X15/A26 - Headlights LED N/ INT W/LOWW:Diagram1 LT - X15/A26 - Headlights LED W/INT N/LOWW:Diagram1 LT - X15/A26 - Headlights LED W/INT W/LOWW:Diagram1 LT/RH - X15/A26 - Fog Lights Lamps:Diagram1
Mates	MODU-BCM-A000-10-00

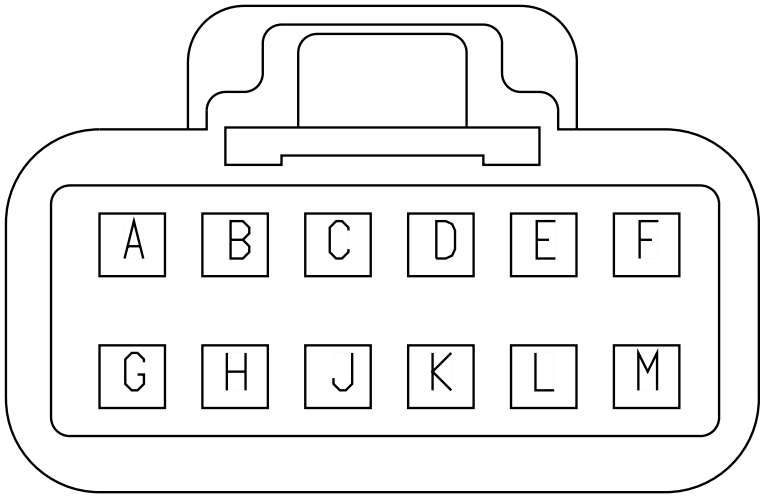

Name	Terminal Part Number	V-Min	Name	Wire Part Number	Wire CSA	Wire Spec	Wire Material description	Wire Color Description	Wire Length	End2 Terminal Part Number	End2 Pin Name	End2 Connect or
F	-	-	CU64A	3510336 R1	1.16	16.0	Thin Wall XLPE Primary Cable	YELLOW 2	560.0	-	22	1700
H	-	-	DE52A	3510337 R1	1.91	14.0	Thin Wall XLPE Primary Cable	YELLOW 2	560.0	-	1	1700
K	-	-	CU64B	3510336 R1	1.16	16.0	Thin Wall XLPE Primary Cable	YELLOW 2	560.0	-	23	1700
L	-	-	DE52B	3510337 R1	1.91	14.0	Thin Wall XLPE Primary Cable	YELLOW 2	560.0	-	3	1700

Connector Name	J1
Part Number	RING-E-1-2_0
Instances	LT/RH - A26/X15 - Maxwell 12V Ultracapacitor Engine Start Module (ESM):Diagram1
Mates	MOT-STARTER-5024-01-03A

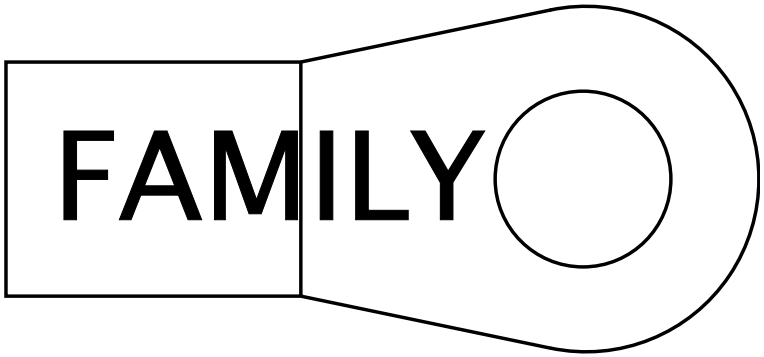

Name	Terminal Part Number	V-Min	Name	Wire Part Number	Wire CSA	Wire Spec	Wire Material description	Wire Color Description	Wire Length	End2 Terminal Part Number	End2 Pin Name	End2 Connect or
A	-	-	WIRE416323	-	0.0	-	-	-	0.0	-	A	6049_C

Connector Name	J2-1604
Part Number	3598710C1
Instances	LoneStar - X15 - Body Builder Lighting - (BOC EOF In Cab) (8HAB 8HAE 8HAU) (Automatic):Diagram1 LoneStar - X15 - Body Builder Lighting - (BOC EOF In Cab) (8HAB 8HAE 8HAU) (Automatic):Diagram2 LoneStar - X15 - Body Builder Lighting - (BOC EOF In Cab) (8HAB 8HAE 8HAU) (Manual):Diagram1 LoneStar - X15 - Body Builder Lighting - (BOC EOF In Cab) (8HAB 8HAE 8HAU) (Manual):Diagram2 LoneStar - X15 - Headlights Halogen N/INT N/LOWW:Diagram1 LoneStar - X15 - Headlights Halogen N/INT W/LOWW:Diagram1 LoneStar - X15 - Headlights Halogen W/INT N/LOWW:Diagram1 LoneStar - X15 - Headlights Halogen W/INT W/ LOWW:Diagram1 LoneStar - X15 - Modesty Lighting W/ Day Cab W/ 2 Turn /0 Marker:Diagram1 LoneStar - X15 - Modesty Lighting W/ Sleeper W/ 4 Side Turns / 0 Marker:Diagram1 LoneStar - X15/A26 - Marker Lights (Halogen):Diagram1 LT/RH - A26 - Body Builder Lighting - (BOC EOF In Cab) (8HAB 8HAE 8HAU) (Manual):Diagram1 LT/RH - A26 - Body Builder Lighting - (BOC EOF In Cab) (8HAB 8HAE 8HAU) (Manual):Diagram2 LT/RH - A26 - Body Builder Lighting - (BOC EOF In Cab) (8HAB 8HAE 8HAU) (Manual):Diagram3 LT/RH - A26 - Body Builder Lighting - (BOC EOF In Cab) (8HAB 8HAE 8HAU) (Manual):Diagram4 LT/RH - X15 - Body Builder Lighting - (BOC EOF In Cab) (8HAB 8HAE 8HAU) (Manual):Diagram1 LT/RH - X15 - Body Builder Lighting - (BOC EOF In Cab) (8HAB 8HAE 8HAU) (Manual):Diagram2 LT/RH - X15/A26 - Land Departure Warning - (Bendix - AutoVue W/ Qualcomm Safety Direct):Diagram1 LT/RH - X15/A26 - Body Builder Lighting - (BOC EOF In Cab) (8HAB 8HAE 8HAU) (Automatic):Diagram1 LT/RH - X15/A26 - Body Builder Lighting - (BOC EOF In Cab) (8HAB 8HAE 8HAU) (Automatic):Diagram2 LT/RH - X15/A26 - Directional Signal (Turn) With HEADLIGHTS:Diagram1 LT/RH - X15/A26 - Directional Signal (Turn) With HEADLIGHTS (HAL-125):Diagram1

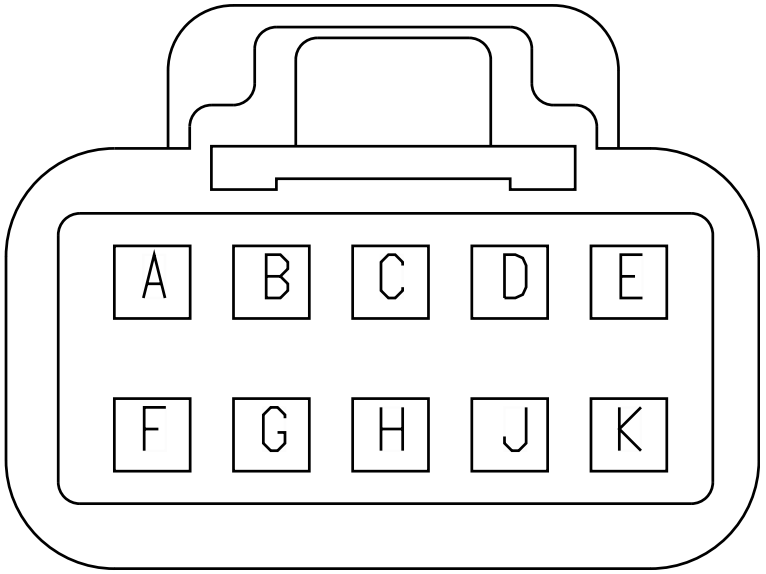

LT/RH - X15/A26 - Directional Signal (Turn) With HEADLIGHTS (LED-125):Diagram1
LT/RH - X15/A26 - Directional Signal (Turn) With HEADLIGHTS Option2:Diagram1
LT/RH - X15/A26 - Lane Departure Warning - (Bendix - AutoVue N/ Qualcomm Safety Direct):Diagram1
LT/RH - X15/A26 - License Plate Light (Dual LED Lamp Tail Light) Option 1:Diagram1
LT/RH - X15/A26 - License Plate Light (Dual LED Lamp Tail Light) Option 1:Diagram2
LT/RH - X15/A26 - License Plate Light (Dual LED Lamp Tail Light) Option 2:Diagram1
LT/RH - X15/A26 - License Plate Light (Dual LED Lamp Tail Light) Option 2:Diagram2
LT/RH - X15/A26 - License Plate Light (Tail Light Single Assy.) Option 1:Diagram1
LT/RH - X15/A26 - License Plate Light (Tail Light Single Assy.) Option 1:Diagram2
LT/RH - X15/A26 - License Plate Light (Tail Light Single Assy.)Option 2:Diagram1
LT/RH - X15/A26 - License Plate Light (Tail Light Single Assy.)Option 2:Diagram2
LT/RH - X15/A26 - Marker Lights (With 113 Halogen):Diagram1
LT/RH - X15/A26 - Marker Lights (With 125 Halogen):Diagram1
LT/RH - X15/A26 - Marker Lights (With 125 LED):Diagram1
LT/RH - X15/A26 - Marker Lights (With113 LED):Diagram1
LT/RH - X15/A26 - Windshield Wipers Cruise Disable & Park Brake W/Wipers ON:Diagram1
LT/RH - X15/A26 - Windshield Wipers Cruise Disable W/Wipers ON:Diagram1
LT/RH/LoneStar - X15/A26 - BCM (Body Control Module):Connector J2-1604
LT/RH/LoneStar - X15/A26 - Body Builder Lighting - (Blunt Cut):Diagram1
LT/RH/LoneStar - X15/A26 - Body Builder Lighting - (Blunt Cut):Diagram2
LT/RH/LoneStar - X15/A26 - Cab Dome Light (Day Cab):Diagram1
LT/RH/LoneStar - X15/A26 - Cab Dome Light - (Sleeper Cab):Diagram1
LT/RH/LoneStar - X15/A26 - Collision Avoidance System (Warning):Diagram1
LT/RH/LoneStar - X15/A26 - Courtesy Light Cab:Diagram1

LT/RH/LoneStar - X15/A26 - License Plate Light (Tail Light Single Assy.) Option 1:Diagram1
LT/RH/LoneStar - X15/A26 - License Plate Light (Tail Light Single Assy.) Option 1:Diagram2
LT/RH/LoneStar - X15/A26 - License Plate Light (Tail Light Single Assy.) Option 2:Diagram1-Combination1
LT/RH/LoneStar - X15/A26 - License Plate Light (Tail Light Single Assy.) Option 2:Diagram1-Combination2
LT/RH/LoneStar - X15/A26 - Mirror Lighting (Turns with Door Pods):Diagram1
LT/RH/LoneStar - X15/A26 - Mirror Lighting (Turns without Door Pods):Diagram1
LT/RH/LoneStar - X15/A26 - Telematics (TRIPMASTER DAYCAB):Diagram1
LT/RH/LoneStar - X15/A26 - Telematics (TRIPMASTER SLEEPER):Diagram1
LT/RH/LoneStar - X15/A26 - Trailer Interface (Lighting) – BOC & EOF_NA:Diagram1-Combination1
LT/RH/LoneStar - X15/A26 - Trailer Interface (Lighting) – BOC & EOF_NA:Diagram1-Combination2
LT/RH/LoneStar - X15/A26 - Trailer Interface (Lighting) – BOC & EOF_NA:Diagram1-Combination3
LT/RH/LoneStar - X15/A26 - Trailer Interface (Lighting) – BOC & EOF_NA:Diagram1-Combination4
LT/RH/LoneStar - X15/A26 - Trailer Interface (Lighting) – BOC NA:Diagram1
LT/RH/LoneStar - X15/A26 - Trailer Interface (Lighting) – BOC NA:Diagram2
LT/RH/LoneStar - X15/A26 - Trailer Interface (Lighting) – TRAMEC_NA:Diagram1
LT/RH/LoneStar - X15/A26 - Windshield Wipers Park Brake W/ Wipers ON:Diagram1
LT/RH/LoneStar - X15/A26 - Windshield Wipers Standard:Diagram1
RH - X15/A26 - Directional Signal (Turn) W/ HEADLIGHTS:Diagram1
RH - X15/A26 - Headlights Halogen N/INT N/LOWW:Diagram1
RH - X15/A26 - Headlights Halogen N/INT W/LOWW:Diagram1
RH - X15/A26 - Headlights Halogen W/INT N/LOWW:Diagram1
RH - X15/A26 - Headlights Halogen W/INT W/LOWW:Diagram1
RH - X15/A26 - Headlights LED N/INT N/LOWW LT:Diagram1
RH - X15/A26 - Headlights LED N/INT W/LOWW LT:Diagram1
RH - X15/A26 - Headlights LED W/INT N/LOWW LT:Diagram1
RH - X15/A26 - Headlights LED W/INT W/LOWW LT:Diagram1

Mates MODU-BCM-A000-10-00

Name	Terminal Part Number	V-Min	Name	Wire Part Number	Wire CSA	Wire Spec	Wire Material description	Wire Color Description	Wire Length	End2 Terminal Part Number	End2 Pin Name	End2 Connect or
A	-	-	AA82	3510312 R1	1.16	16.0	Thin Wall XLPE Primary Cable	GREY	1605.0	-	X	-
A	-	-	AA82	3510312 R1	1.16	16.0	Thin Wall XLPE Primary Cable	GREY	1605.0	-	-	-
B	-	-	DE53A	3510337 R1	1.91	14.0	Thin Wall XLPE Primary Cable	YELLOW 2	610.0	-	2	1700
B	-	-	BB53AA	3510337 R1	1.91	14.0	Thin Wall XLPE Primary Cable	YELLOW 2	405.0	-	X	-
B	-	-	BB53AA	3510337 R1	1.91	14.0	Thin Wall XLPE Primary Cable	YELLOW 2	405.0	-	-	-
B	-	-	DE53A	3510337 R1	1.91	14.0	Thin Wall XLPE Primary Cable	YELLOW 2	610.0	-	-	-
C	-	-	AA56C	3510318 R1	1.16	16.0	Thin Wall XLPE Primary Cable	ORANGE	735.0	-	-	-
D	-	-	BL68BB	3510307 R1	1.91	14.0	Thin Wall XLPE Primary Cable	BROWN	610.0	-	74	1700

Name	Terminal Part Number	V-Min	Name	Wire Part Number	Wire CSA	Wire Spec	Wire Material description	Wire Color Description	Wire Length	End2 Terminal Part Number	End2 Pin Name	End2 Connector
D	-	-	BG68BB	3510307 R1	1.91	14.0	Thin Wall XLPE Primary Cable	BROWN	170.0	-	-	-
D	-	-	BM68T	3510308 R1	3.01	12.0	Thin Wall XLPE Primary Cable	BROWN	690.0	-	-	-
D	-	-	BL68BB	3510307 R1	1.91	14.0	Thin Wall XLPE Primary Cable	BROWN	610.0	-	-	-
D	-	-	BM68T	3510308 R1	3.01	12.0	Thin Wall XLPE Primary Cable	BROWN	690.0	-	8	1701
E	-	-	AA11-GKC	3510362 R1	3.01	12.0	Thin Wall XLPE Primary Cable	WHITE	835.0	-	-	-
F	-	-	BL54BB	3510307 R1	1.91	14.0	Thin Wall XLPE Primary Cable	BROWN	610.0	-	73	1700
F	-	-	BG54BB	3510307 R1	1.91	14.0	Thin Wall XLPE Primary Cable	BROWN	135.0	-	-	-
F	-	-	BM58TC	3510308 R1	3.01	12.0	Thin Wall XLPE Primary Cable	BROWN	690.0	-	-	-

Name	Terminal Part Number	V-Min	Name	Wire Part Number	Wire CSA	Wire Spec	Wire Material description	Wire Color Description	Wire Length	End2 Terminal Part Number	End2 Pin Name	End2 Connector
F	-	-	BL54BB	3510307 R1	1.91	14.0	Thin Wall XLPE Primary Cable	BROWN	610.0	-	-	-
F	-	-	BM58TC	3510308 R1	3.01	12.0	Thin Wall XLPE Primary Cable	BROWN	690.0	-	7	1701
G	-	-	AA54	3510306 R1	1.16	16.0	Thin Wall XLPE Primary Cable	BROWN	1355.0	-	-	-
H	-	-	DE53B	3510337 R1	1.91	14.0	Thin Wall XLPE Primary Cable	YELLOW 2	610.0	-	4	1700
H	-	-	DE53B	3510337 R1	1.91	14.0	Thin Wall XLPE Primary Cable	YELLOW 2	610.0	-	-	-
J	-	-	AA63	3510353 R1	0.79	18.0	Thin Wall XLPE Primary Cable	DARK BLUE	100.0	-	X	-
J	-	-	AA63	3510353 R1	0.79	18.0	Thin Wall XLPE Primary Cable	DARK BLUE	100.0	-	-	-
K	-	-	AA57F	3510318 R1	1.16	16.0	Thin Wall XLPE Primary Cable	ORANGE	735.0	-	-	-

Connector Name J2-1604

Part Number 3598710C1

Instances LT - X15/A26 - Headlights Halogen N/INT N/LOWW:Diagram1
LT - X15/A26 - Headlights Halogen N/INT W/LOWW:Diagram1
LT - X15/A26 - Headlights Halogen W/INT N/LOWW:Diagram1
LT - X15/A26 - Headlights Halogen W/INT W/LOWW:Diagram1
LT - X15/A26 - Headlights LED N/ INT N/LOWW:Diagram1
LT - X15/A26 - Headlights LED N/ INT W/LOWW:Diagram1
LT - X15/A26 - Headlights LED W/INT N/LOWW:Diagram1
LT - X15/A26 - Headlights LED W/INT W/LOWW:Diagram1
LT/RH - X15/A26 - Modesty Lighting W/ Day Cab W/ 2 Turn /0 Marker:Diagram1
LT/RH - X15/A26 - Modesty Lighting W/ Sleeper W/ 4 Side Turns / 0 Marker:Diagram1
LT/RH/LoneStar - X15/A26 - Air Shield Lighting w/ One Light:Diagram1
LT/RH/LoneStar - X15/A26 - Air Shield Lighting w/ One Light:Diagram2
LT/RH/LoneStar - X15/A26 - Clearance and Identification Lights (W/ Sunshade):Diagram1

Mates MODU-BCM-A000-10-00

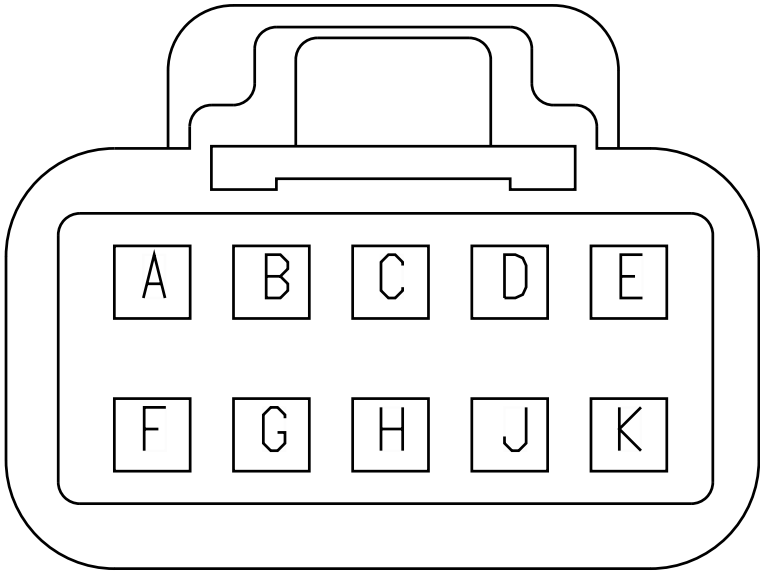

Name	Terminal Part Number	V-Min	Name	Wire Part Number	Wire CSA	Wire Spec	Wire Material description	Wire Color Description	Wire Length	End2 Terminal Part Number	End2 Pin Name	End2 Connector
B	-	-	DE53A	3510337 R1	1.91	14.0	Thin Wall XLPE Primary Cable	YELLOW 2	610.0	-	2	1700
C	-	-	AA56C	3510318 R1	1.16	16.0	Thin Wall XLPE Primary Cable	ORANGE	735.0	-	-	-
G	-	-	AA54	3510306 R1	1.16	16.0	Thin Wall XLPE Primary Cable	BROWN	1355.0	-	-	-

Name	Terminal Part Number	V-Min	Name	Wire Part Number	Wire CSA	Wire Spec	Wire Material description	Wire Color Description	Wire Length	End2 Terminal Part Number	End2 Pin Name	End2 Connector
H	-	-	DE53B	3510337 R1	1.91	14.0	Thin Wall XLPE Primary Cable	YELLOW 2	610.0	-	4	1700
K	-	-	AA57F	3510318 R1	1.16	16.0	Thin Wall XLPE Primary Cable	ORANGE	735.0	-	-	-

Connector Name	J3-1600
Part Number	3598706C1
Instances	LoneStar - X15 - City Horn W/ 4PIN CLK W/O RKA:Diagram1-Combination1 LoneStar - X15 - City Horn W/ 4PIN CLK W/RKA:Diagram1-Combination1 LoneStar - X15 - City Horn W/ 10PIN CLK W/RKA:Diagram1-Combination1 LoneStar - X15 - City Horn W/ 10PIN CLK W/O RKA:Diagram1-Combination1 LoneStar - X15 - Headlights Halogen N/INT N/LOWW:Diagram1 LoneStar - X15 - Headlights Halogen N/INT W/LOWW:Diagram1 LoneStar - X15 - Headlights Halogen W/INT N/LOWW:Diagram1 LoneStar - X15 - Headlights Halogen W/INT W/ LOWW:Diagram1 LoneStar - X15 - Windshield Washer Pump:Diagram1 LoneStar - X15 - Windshield Washer Pump & Low Fluid Sensor:Diagram1 LT/RH - A26 - Transmission Oil Temperature-Manual Trans-Horizon Option 1:Diagram1 LT/RH - A26 - Transmission Oil Temperature-Manual Trans-Horizon Option 1:Diagram2 LT/RH - A26 - Transmission Oil Temperature-Manual Trans-Horizon Option 1:Diagram3 LT/RH - A26 - Transmission Oil Temperature-Manual Trans-Horizon Option 2:Diagram1 LT/RH - A26 - Transmission Oil Temperature-Manual Trans-Horizon Option 2:Diagram2 LT/RH - A26 - Transmission Oil Temperature-Manual Trans-Horizon Option 2:Diagram3 LT/RH - X15/A26 - 10 PIN ClockSpring:Diagram1 LT/RH - X15/A26 - City Horn W/ 4PIN CLK W/O RKA:Diagram1-Combination1 LT/RH - X15/A26 - City Horn W/ 4PIN CLK W/RKA:Diagram1-Combination1 LT/RH - X15/A26 - City Horn W/ 10PIN CLK W/RKA:Diagram1-Combination1 LT/RH - X15/A26 - City Horn W/ 10PIN CLK W/O RKA:Diagram1-Combination1 LT/RH - X15/A26 - Directional Signal (Turn) With HEADLIGHTS (HAL-125):Diagram1 LT/RH - X15/A26 - Park Brake Control (Monitoring) (W/Vehicle Speed):Diagram1

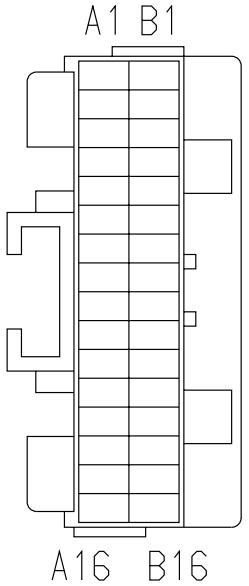

LT/RH - X15/A26 - Park Brake Control (Monitoring)(GEN IV BCM):Diagram1
LT/RH - X15/A26 - Radio W/Steering Wheel Pod N/ Remote:Diagram1
LT/RH - X15/A26 - Windshield Washer Pump:Diagram1
LT/RH - X15/A26 - Windshield Washer Pump & Low Fluid Sensor:Diagram1
LT/RH - X15/A26 - Windshield Wipers Cruise Disable & Park Brake W/Wipers ON:Diagram1
LT/RH - X15/A26 - Windshield Wipers Cruise Disable W/Wipers ON:Diagram1
LT/RH A26 - A26 - Heating Ventilation & Air Conditioning (HVAC) Manual:Diagram1 - HVAC - Option1
LT/RH A26 - A26 - Heating Ventilation & Air Conditioning (HVAC) Manual:Diagram2 - HVAC - Option2
LT/RH A26 - Heating Ventilation & Air Conditioning (HVAC) Auto Temp Control:Diagram1 - HVAC - Option1
LT/RH A26 - Heating Ventilation & Air Conditioning (HVAC) Auto Temp Control:Diagram2 - HVAC - Option2
LT/RH/LoneStar - X15 - Transmission Oil Temperature-Manual Trans-Horizon Option 1:Diagram1
LT/RH/LoneStar - X15 - Transmission Oil Temperature-Manual Trans-Horizon Option 1:Diagram2
LT/RH/LoneStar - X15 - Transmission Oil Temperature-Manual Trans-Horizon Option 1:Diagram3
LT/RH/LoneStar - X15 - Transmission Oil Temperature-Manual Trans-Horizon Option 2:Diagram1
LT/RH/LoneStar - X15 - Transmission Oil Temperature-Manual Trans-Horizon Option 2:Diagram2
LT/RH/LoneStar - X15 - Transmission Oil Temperature-Manual Trans-Horizon Option 2:Diagram3
LT/RH/LoneStar - X15/A26 - Adjustable Engine Speed Control (PTO) 4-pin Clockspring:Diagram1
LT/RH/LoneStar - X15/A26 - Adjustable Engine Speed Control (PTO) 10-PIN ClockSpring:Diagram1
LT/RH/LoneStar - X15/A26 - BCM (Body Control Module):Connector J3-1600
LT/RH/LoneStar - X15/A26 - Brake Pressure (Auxiliary Gauge):Diagram1
LT/RH/LoneStar - X15/A26 - Brake Pressure (Virtual Gauge):Diagram1
LT/RH/LoneStar - X15/A26 - Clutch Monitoring (High and Low Switch to BCM):Diagram1

LT/RH/LoneStar - X15/A26 - Compressed Air Supply (Primary and Secondary Gauge):Diagram1
LT/RH/LoneStar - X15/A26 - Door Ajar Reminder (Entry/Exit):Diagram1
LT/RH/LoneStar - X15/A26 - Engine Idle Increment/Decrement (Steering Wheel Switch - 4 Pin):Diagram1
LT/RH/LoneStar - X15/A26 - Engine Idle Increment/Decrement (Steering Wheel Switch - 10 Pin):Diagram1
LT/RH/LoneStar - X15/A26 - Fuel Level (Single Tank - Left Side):Diagram1
LT/RH/LoneStar - X15/A26 - Fuel Level (Single Tank - Left Side):Diagram2
LT/RH/LoneStar - X15/A26 - Fuel Level (Single Tank - Left Side):Diagram3
LT/RH/LoneStar - X15/A26 - Fuel Level (Single Tank - Left Side):Diagram4
LT/RH/LoneStar - X15/A26 - Fuel Level (Single Tank - Left Side):Diagram5
LT/RH/LoneStar - X15/A26 - Fuel Level (Single Tank - Left Side):Diagram6
LT/RH/LoneStar - X15/A26 - Key Switch (Operator Input):Diagram1
LT/RH/LoneStar - X15/A26 - MARKER/PARK LIGHTS - W/Marker Interrupt 10pin CLCKSPRING:Diagram1
LT/RH/LoneStar - X15/A26 - Park Brake Controls (Non Lever Park Brake):Diagram1
LT/RH/LoneStar - X15/A26 - Park Brake Controls (with Alarm IGN ON/OFF):Diagram1
LT/RH/LoneStar - X15/A26 - PARK LIGHTS - W/Marker Interrupt 4 pin clockspring:Diagram1
LT/RH/LoneStar - X15/A26 - Radio (Bluetooth) W/Steering Wheel Pod N/ Remote W/MIC:Diagram1
LT/RH/LoneStar - X15/A26 - Radio W/Steering Wheel Pod W/Remote:Diagram1
LT/RH/LoneStar - X15/A26 - Radio(Bluetooth) W/Steering Wheel W/Remote W/MIC:Diagram1
LT/RH/LoneStar - X15/A26 - Seatbelt Reminder (Warning) (Driver & Passenger in parallel):Diagram1
LT/RH/LoneStar - X15/A26 - Seatbelt Reminder (Warning) (Driver only):Diagram1
LT/RH/LoneStar - X15/A26 - Single Axle Temperature Monitoring:Diagram1
LT/RH/LoneStar - X15/A26 - Single Axle Temperature Monitoring w/Aux Gauge:Diagram1

	LT/RH/LoneStar - X15/A26 - Tandem Axle Temperature Monitoring:Diagram1 LT/RH/LoneStar - X15/A26 - Tandem Axle Temperature Monitoring:Diagram2 LT/RH/LoneStar - X15/A26 - Tandem Axle Temperature Monitoring w/ Single SNSR and AUX Gauge:Diagram1 LT/RH/LoneStar - X15/A26 - Tandem Axle Temperature Monitoring w/ Single SNSR and AUX Gauge:Diagram1 LT/RH/LoneStar - X15/A26 - Tandem Axle Temperature Monitoring w/Aux Gauge:Diagram1 LT/RH/LoneStar - X15/A26 - Tandem Axle Temperature Monitoring w/Aux Gauge:Diagram2 LT/RH/LoneStar - X15/A26 - Vehicle Speed Control (Cruise Control) 4 - PIN:Diagram1 LT/RH/LoneStar - X15/A26 - Windshield Wipers Park Brake W/ Wipers ON:Diagram1 LT/RH/LoneStar - X15/A26 - Windshield Wipers Standard:Diagram1 LT/RH/LoneStar X15 - Auto Start Stop Oil Temp Sensor Auto Trans:Diagram1 LT/RH/LoneStar X15 - Auto Start Stop Oil Temp Sensor Manual Trans:Diagram1 LT/RH/LoneStar X15 - Auto Start Stop with Sleeper Auto Climate / Cab Temp with Oil Temp Sensor Auto Trans:Diagram1 LT/RH/LoneStar X15 - Auto Start Stop with Sleeper Auto Climate / Cab Temp with Oil Temp Sensor Manual Trans:Diagram1 LT/RH/LoneStar X15 - Heating Ventilation & Air Conditioning (HVAC) Auto Temp Control:Diagram1 - HVAC LT/RH/LoneStar X15 - Heating Ventilation & Air Conditioning (HVAC) Manual:Diagram1 - HVAC RH - X15/A26 - Headlights Halogen N/INT N/LOWW:Diagram1 RH - X15/A26 - Headlights Halogen N/INT W/LOWW:Diagram1 RH - X15/A26 - Headlights Halogen W/INT N/LOWW:Diagram1 RH - X15/A26 - Headlights Halogen W/INT W/LOWW:Diagram1 RH - X15/A26 - Headlights LED N/INT N/LOWW LT:Diagram1 RH - X15/A26 - Headlights LED N/INT W/LOWW LT:Diagram1 RH - X15/A26 - Headlights LED W/INT N/LOWW LT:Diagram1 RH - X15/A26 - Headlights LED W/INT W/LOWW LT:Diagram1
Mates	MODU-BCM-A000-10-00

Name	Terminal Part Number	V-Min	Name	Wire Part Number	Wire CSA	Wire Spec	Wire Material description	Wire Color Description	Wire Length	End2 Terminal Part Number	End2 Pin Name	End2 Connector
A1	-	-	AA149	3510311 R1	0.79	18.0	Thin Wall XLPE Primary Cable	GREY	1455.0	-	C	A02-1100
A1	-	-	AA149	3510311 R1	0.79	18.0	Thin Wall XLPE Primary Cable	GREY	1455.0	-	-	-
A2	-	-	FU79A	3510311 R1	0.79	18.0	Thin Wall XLPE Primary Cable	GREY	2380.0	-	X	-
A2	-	-	JZ79A	3510311 R1	0.79	18.0	Thin Wall XLPE Primary Cable	GREY	3310.0	-	-	-
A2	-	-	FU79A	3510311 R1	0.79	18.0	Thin Wall XLPE Primary Cable	GREY	2380.0	-	-	-
A2	-	-	JZ79A	3510311 R1	0.79	18.0	Thin Wall XLPE Primary Cable	GREY	3310.0	-	A	A02-1112
A4	-	-	AA52D	3510334 R1	0.53	20.0	Thin Wall XLPE Primary Cable	YELLOW 2	1320.0	-	A7	1800
A4	-	-	AA52D	3510334 R1	0.53	20.0	Thin Wall XLPE Primary Cable	YELLOW 2	1320.0	-	-	-

Name	Terminal Part Number	V-Min	Name	Wire Part Number	Wire CSA	Wire Spec	Wire Material description	Wire Color Description	Wire Length	End2 Terminal Part Number	End2 Pin Name	End2 Connector
A5	-	-	AA85A	3510310 R1	0.53	20.0	Thin Wall XLPE Primary Cable	GREY	1320.0	-	B10	1800
A5	-	-	AA85A	3510310 R1	0.53	20.0	Thin Wall XLPE Primary Cable	GREY	1320.0	-	-	-
A6	-	-	AA57B	3510316 R1	0.53	20.0	Thin Wall XLPE Primary Cable	ORANGE	1320.0	-	A2	1800
A6	-	-	AA57B	3510316 R1	0.53	20.0	Thin Wall XLPE Primary Cable	ORANGE	1320.0	-	-	-
A7	-	-	AA56B	3510316 R1	0.53	20.0	Thin Wall XLPE Primary Cable	ORANGE	1320.0	-	A1	1800
A7	-	-	AA56B	3510316 R1	0.53	20.0	Thin Wall XLPE Primary Cable	ORANGE	1320.0	-	-	-
A8	-	-	AN87A	3510311 R1	0.79	18.0	Thin Wall XLPE Primary Cable	GREY	955.0	-	17	1700
A8	-	-	AN87A	3510311 R1	0.79	18.0	Thin Wall XLPE Primary Cable	GREY	955.0	-	-	-

Name	Terminal Part Number	V-Min	Name	Wire Part Number	Wire CSA	Wire Spec	Wire Material description	Wire Color Description	Wire Length	End2 Terminal Part Number	End2 Pin Name	End2 Connector
A9	-	-	AA82A	3510310 R1	0.53	20.0	Thin Wall XLPE Primary Cable	GREY	1320.0	-	C9	1800
A9	-	-	AA82A	3510310 R1	0.53	20.0	Thin Wall XLPE Primary Cable	GREY	1320.0	-	-	-
A10	-	-	AA82B	3510310 R1	0.53	20.0	Thin Wall XLPE Primary Cable	GREY	1320.0	-	C1	1800
A10	-	-	AA82B	3510310 R1	0.53	20.0	Thin Wall XLPE Primary Cable	GREY	1320.0	-	-	-
A11	-	-	AA82C	3510310 R1	0.53	20.0	Thin Wall XLPE Primary Cable	GREY	1320.0	-	B1	1800
A11	-	-	AA82C	3510310 R1	0.53	20.0	Thin Wall XLPE Primary Cable	GREY	1320.0	-	-	-
A12	-	-	AA44	3510310 R1	0.53	20.0	Thin Wall XLPE Primary Cable	GREY	1320.0	-	B7	1800
A12	-	-	AA44	3510310 R1	0.53	20.0	Thin Wall XLPE Primary Cable	GREY	1320.0	-	-	-

Name	Terminal Part Number	V-Min	Name	Wire Part Number	Wire CSA	Wire Spec	Wire Material description	Wire Color Description	Wire Length	End2 Terminal Part Number	End2 Pin Name	End2 Connector
A13	-	-	AA63A	3510354 R1	1.16	16.0	Thin Wall XLPE Primary Cable	DARK BLUE	375.0	-	X	-
A13	-	-	AA63A	3510354 R1	1.16	16.0	Thin Wall XLPE Primary Cable	DARK BLUE	375.0	-	-	-
A14	-	-	AA102A	3510334 R1	0.53	20.0	Thin Wall XLPE Primary Cable	YELLOW 2	1320.0	-	A8	1800
A14	-	-	AA102A	3510334 R1	0.53	20.0	Thin Wall XLPE Primary Cable	YELLOW 2	1320.0	-	-	-
A15	-	-	AA87B	3510310 R1	0.53	20.0	Thin Wall XLPE Primary Cable	GREY	1220.0	-	X	-
A15	-	-	AA87B	3510310 R1	0.53	20.0	Thin Wall XLPE Primary Cable	GREY	1220.0	-	-	-
A16	-	-	AA149F	3510311 R1	0.79	18.0	Thin Wall XLPE Primary Cable	GREY	1455.0	-	D	A02-1100
A16	-	-	AA149F	3510311 R1	0.79	18.0	Thin Wall XLPE Primary Cable	GREY	1455.0	-	-	-

Name	Terminal Part Number	V-Min	Name	Wire Part Number	Wire CSA	Wire Spec	Wire Material description	Wire Color Description	Wire Length	End2 Terminal Part Number	End2 Pin Name	End2 Connector
B1	-	-	MS86A	3510310 R1	0.53	20.0	Thin Wall XLPE Primary Cable	GREY	1320.0	-	B12	1800
B1	-	-	MS86A	3510310 R1	0.53	20.0	Thin Wall XLPE Primary Cable	GREY	1320.0	-	-	-
B2	-	-	AA40	3510310 R1	0.53	20.0	Thin Wall XLPE Primary Cable	GREY	1320.0	-	-	-
B2	-	-	AA40	3510310 R1	0.53	20.0	Thin Wall XLPE Primary Cable	GREY	1320.0	-	C12	1800
B3	-	-	AA40A	3510310 R1	0.53	20.0	Thin Wall XLPE Primary Cable	GREY	1320.0	-	-	-
B3	-	-	AA40A	3510310 R1	0.53	20.0	Thin Wall XLPE Primary Cable	GREY	1320.0	-	B2	1800
B4	-	-	DT97A	3510347 R1	0.79	18.0	Thin Wall XLPE Primary Cable	VIOLET	1320.0	-	-	-
B4	-	-	DT97A	3510347 R1	0.79	18.0	Thin Wall XLPE Primary Cable	VIOLET	1320.0	-	C11	1800

Name	Terminal Part Number	V-Min	Name	Wire Part Number	Wire CSA	Wire Spec	Wire Material description	Wire Color Description	Wire Length	End2 Terminal Part Number	End2 Pin Name	End2 Connector
B5	-	-	AA74	3510299 R1	0.79	18.0	Thin Wall XLPE Primary Cable	LIGHT GREEN	3055.0	-	17	1703M
B5	-	-	AA74	3510299 R1	0.79	18.0	Thin Wall XLPE Primary Cable	LIGHT GREEN	3055.0	-	-	-
B6	-	-	HA30B	3510330 R1	1.16	16.0	Thin Wall XLPE Primary Cable	TAN	3055.0	-	-	-
B6	-	-	HA30B	3510330 R1	1.16	16.0	Thin Wall XLPE Primary Cable	TAN	3055.0	-	16	1703M
B7	-	-	DS31J	3510329 R1	0.79	18.0	Thin Wall XLPE Primary Cable	TAN	3055.0	-	61	1703M
B7	-	-	DS31J	3510329 R1	0.79	18.0	Thin Wall XLPE Primary Cable	TAN	3055.0	-	-	-
B8	-	-	AA36B	3510329 R1	0.79	18.0	Thin Wall XLPE Primary Cable	TAN	1035.0	-	27	1701
B8	-	-	AA36B	3510329 R1	0.79	18.0	Thin Wall XLPE Primary Cable	TAN	1035.0	-	-	-

Name	Terminal Part Number	V-Min	Name	Wire Part Number	Wire CSA	Wire Spec	Wire Material description	Wire Color Description	Wire Length	End2 Terminal Part Number	End2 Pin Name	End2 Connector
B10	-	-	DP32	3510317 R1	0.79	18.0	Thin Wall XLPE Primary Cable	ORANGE	1035.0	-	44	1701
B10	-	-	DP32	3510317 R1	0.79	18.0	Thin Wall XLPE Primary Cable	ORANGE	1035.0	-	-	-
B11	-	-	DN32A	3510329 R1	0.79	18.0	Thin Wall XLPE Primary Cable	TAN	1035.0	-	43	1701
B11	-	-	DP32A	3510317 R1	0.79	18.0	Thin Wall XLPE Primary Cable	ORANGE	1035.0	-	43	1701
B11	-	-	DN32A	3510329 R1	0.79	18.0	Thin Wall XLPE Primary Cable	TAN	1035.0	-	-	-
B11	-	-	DP32A	3510317 R1	0.79	18.0	Thin Wall XLPE Primary Cable	ORANGE	1035.0	-	-	-
B12	-	-	3H77B	3510311 R1	0.79	18.0	Thin Wall XLPE Primary Cable	GREY	3055.0	-	20	1703M
B12	-	-	3H77B	3510311 R1	0.79	18.0	Thin Wall XLPE Primary Cable	GREY	3055.0	-	-	-

Name	Terminal Part Number	V-Min	Name	Wire Part Number	Wire CSA	Wire Spec	Wire Material description	Wire Color Description	Wire Length	End2 Terminal Part Number	End2 Pin Name	End2 Connector
B14	-	-	DV40B	3510311 R1	0.79	18.0	Thin Wall XLPE Primary Cable	GREY	1320.0	-	C2	1800
B14	-	-	DV40B	3510311 R1	0.79	18.0	Thin Wall XLPE Primary Cable	GREY	1320.0	-	-	-
B15	-	-	DH75AA	3510299 R1	0.79	18.0	Thin Wall XLPE Primary Cable	LIGHT GREEN	1890.0	-	-	-
B16	-	-	AA150	3510299 R1	0.79	18.0	Thin Wall XLPE Primary Cable	LIGHT GREEN	1320.0	-	B11	1800
B16	-	-	AA150	3510299 R1	0.79	18.0	Thin Wall XLPE Primary Cable	LIGHT GREEN	1320.0	-	-	-

Connector Name J3-1600

Part Number 3598706C1

Instances
LT - X15/A26 - Headlights Halogen N/INT N/LOWW:Diagram1
LT - X15/A26 - Headlights Halogen N/INT W/LOWW:Diagram1
LT - X15/A26 - Headlights Halogen W/INT N/LOWW:Diagram1
LT - X15/A26 - Headlights Halogen W/INT W/LOWW:Diagram1
LT - X15/A26 - Headlights LED N/ INT N/LOWW:Diagram1
LT - X15/A26 - Headlights LED N/ INT W/LOWW:Diagram1
LT - X15/A26 - Headlights LED W/INT N/LOWW:Diagram1
LT - X15/A26 - Headlights LED W/INT W/LOWW:Diagram1
LT/RH - X15/A26 - Directional Signal (Turn) With HEADLIGHTS:Diagram1
LT/RH - X15/A26 - Directional Signal (Turn) With HEADLIGHTS (LED-125):Diagram1
LT/RH - X15/A26 - Directional Signal (Turn) With HEADLIGHTS Option2:Diagram1
RH - X15/A26 - Directional Signal (Turn) W/ HEADLIGHTS:Diagram1

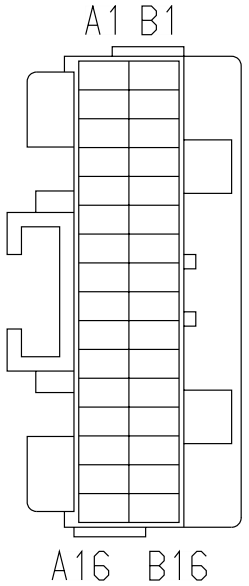

Mates MODU-BCM-A000-10-00

Name	Terminal Part Number	V-Min	Name	Wire Part Number	Wire CSA	Wire Spec	Wire Material description	Wire Color Description	Wire Length	End2 Terminal Part Number	End2 Pin Name	End2 Connector
A4	-	-	AA52D	3510334 R1	0.53	20.0	Thin Wall XLPE Primary Cable	YELLOW 2	1320.0	-	A7	1800
A6	-	-	AA57B	3510316 R1	0.53	20.0	Thin Wall XLPE Primary Cable	ORANGE	1320.0	-	A2	1800
A7	-	-	AA56B	3510316 R1	0.53	20.0	Thin Wall XLPE Primary Cable	ORANGE	1320.0	-	A1	1800
A14	-	-	AA102A	3510334 R1	0.53	20.0	Thin Wall XLPE Primary Cable	YELLOW 2	1320.0	-	A8	1800

Name	Terminal Part Number	V-Min	Name	Wire Part Number	Wire CSA	Wire Spec	Wire Material description	Wire Color Description	Wire Length	End2 Terminal Part Number	End2 Pin Name	End2 Connect or
B16	-	-	AA150	3510299 R1	0.79	18.0	Thin Wall XLPE Primary Cable	LIGHT GREEN	1320.0	-	B11	1800

Connector Name J3

Part Number RING-E-3-8_0

Instances LT/RH/LoneStar - X15/A26 - Rear AUTO HVAC (No Idle) W/ Pre-Heat (Bergstrom Heat and Cool w/ Condensation) 2 SWITCHES:Diagram1 - Powers, Grounds & Controls
LT/RH/LoneStar - X15/A26 - Rear HVAC (No Idle) W/ Pre-Heat (Bergstrom Heat and Cool w/ Condensation) 2 SWITCHES Option 1:Diagram1 - Powers, Grounds & Controls
LT/RH/LoneStar - X15/A26 - Rear HVAC (No Idle) W/ Pre-Heat (Bergstrom Heat and Cool w/ Condensation) 2 SWITCHES Option 2:Diagram1 - Powers, Grounds & Controls
LT/RH/LoneStar - X15/A26 - Rear HVAC (No Idle) W/ Pre-Heat (Bergstrom Heat and Cool w/ Condensation) 4 SWITCHES Option 1:Diagram1 - Powers, Grounds & Controls
LT/RH/LoneStar - X15/A26 - Rear HVAC (No Idle) W/ Pre-Heat (Bergstrom Heat and Cool w/ Condensation) 4 SWITCHES Option 2:Diagram1 - Powers, Grounds & Controls
LT/RH/LoneStar - X15/A26 - Rear Manual HVAC (No Idle) W/ Pre-Heat (Bergstrom Heat and Cool w/ Condensation) 2 SWITCHES:Diagram1 - Powers, Grounds & Controls

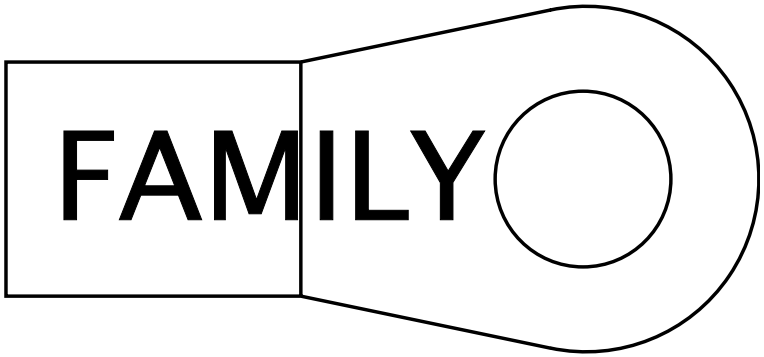

Mates BTRY-INTL_650CCA-BTRY-00-0 2A

Name	Terminal Part Number	V-Min	Name	Wire Part Number	Wire CSA	Wire Spec	Wire Material description	Wire Color Description	Wire Length	End2 Terminal Part Number	End2 Pin Name	End2 Connector
A	-	-	N104-G	2643787 R1	3.01	12.0	Std. Wall XLPE Primary Cable	WHITE	230.0	-	A	100NB1
A	-	-	B(-)	2643789 R1	7.48	8.0	Std. Wall XLPE Primary Cable	WHITE	2250.0	-	1	100
A	-	-	B(-)	2643789 R1	7.48	8.0	Std. Wall XLPE Primary Cable	WHITE	2250.0	-	1	P04-100

Name	Terminal Part Number	V-Min	Name	Wire Part Number	Wire CSA	Wire Spec	Wire Material description	Wire Color Description	Wire Length	End2 Terminal Part Number	End2 Pin Name	End2 Connect or
A	-	-	B(-)	2643789 R1	7.48	8.0	Std. Wall XLPE Primary Cable	WHITE	2250.0	-	X	-

Connector Name	J4-REMOTE SENSE
Part Number	RING-E-3-8_0
Instances	LT/RH - A26 - Bosch LIL165_LIL200 Alternator W/ Remote Sense:Diagram1 LT/RH - A26 - Bosch LIL165_LIL200 Alternator W/ Remote Sense W/ Mitsubishi Starter:Diagram1 LT/RH - A26 - Delco Remy 28SI Alternator W/ Remote Sense:Diagram1 LT/RH - A26 - Delco Remy 28SI Alternator W/ Remote Sense W/ Mitsubishi Starter:Diagram1 LT/RH - A26 - Delco Remy 36SI Alternator W/ Remote Sense:Diagram1 LT/RH - A26 - Delco Remy 36SI Alternator W/ Remote Sense W/ Mitsubishi Starter:Diagram1 LT/RH - A26 - Delco Remy 40SI Alternator W/ Remote Sense Combination 1 W/ Mitsubishi Starter:Diagram1 LT/RH - A26 - Delco Remy 40SI Alternator W/ Remote Sense Combination 2:Diagram1 LT/RH - A26 - Delco Remy 40SI Alternator W/ Remote Sense Combination 1:Diagram1 LT/RH - A26 - Delco Remy 40SI Alternator W/ Remote Sense Combination 2 W/ Mitsubishi Starter:Diagram1 LT/RH - A26 - Leece-Neville - LN 325A Alternator W/ Remote Sense:Diagram1 LT/RH - A26 - Leece-Neville - LN 325A Alternator W/ Remote Sense W/ Mitsubishi Starter:Diagram1 LT/RH - A26 - Leece-Neville AVI160-210A/240A Alternator W/ Remote Sense:Diagram1 LT/RH - A26 - Leece-Neville AVI160-210A/240A Alternator W/ Remote Sense W/ Mitsubishi Starter:Diagram1 LT/RH/LoneStar - X15 - Bosch LIL165_LIL200 Alternator W/ Remote Sense W/ Mitsubishi Starter:Diagram1 LT/RH/LoneStar - X15 - Delco Remy 28SI Alternator W/ Remote Sense W/ Mitsubishi Starter:Diagram1 LT/RH/LoneStar - X15 - Delco Remy 28SI Alternator W/ Remote Sense W/ Mitsubishi Starter:Diagram2 LT/RH/LoneStar - X15 - Delco Remy 36SI Alternator W/ Remote Sense W/ Mitsubishi Starter:Diagram1 LT/RH/LoneStar - X15 - Delco Remy 40SI Alternator W/ Remote Sense W/ Mitsubishi Starter:Diagram1 LT/RH/LoneStar - X15 - Delco Remy 40SI Alternator W/ Remote Sense W/ Mitsubishi Starter:Diagram2

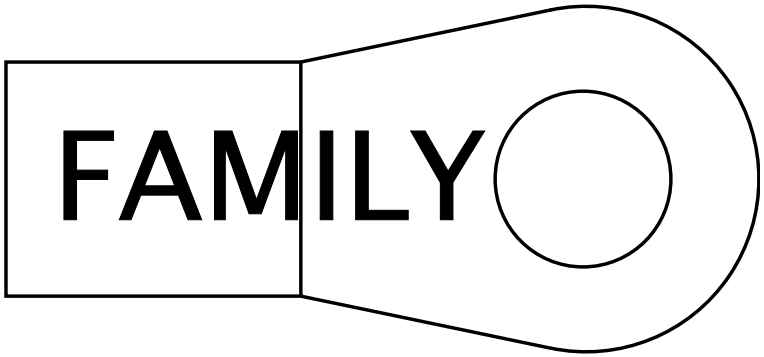

LT/RH/LoneStar - X15 - Leece-Neville - LN 325A Alternator W/ Remote Sense W/ Mitsubishi Starter:Diagram1
LT/RH/LoneStar - X15 - Leece-Neville AVI160-210A/240A Alternator W/ Remote Sense W/ Mitsubishi Starter:Diagram1
LT/RH/LoneStar - X15/A26 - Rear AUTO HVAC (No Idle) W/ Pre-Heat (Bergstrom Heat and Cool w/ Condensation) 2 SWITCHES:Diagram1 - Powers, Grounds & Controls
LT/RH/LoneStar - X15/A26 - Rear HVAC (No Idle) W/ Pre-Heat (Bergstrom Heat and Cool w/ Condensation) 2 SWITCHES Option 1:Diagram1 - Powers, Grounds & Controls
LT/RH/LoneStar - X15/A26 - Rear HVAC (No Idle) W/ Pre-Heat (Bergstrom Heat and Cool w/ Condensation) 2 SWITCHES Option 2:Diagram1 - Powers, Grounds & Controls
LT/RH/LoneStar - X15/A26 - Rear HVAC (No Idle) W/ Pre-Heat (Bergstrom Heat and Cool w/ Condensation) 4 SWITCHES Option 1:Diagram1 - Powers, Grounds & Controls
LT/RH/LoneStar - X15/A26 - Rear HVAC (No Idle) W/ Pre-Heat (Bergstrom Heat and Cool w/ Condensation) 4 SWITCHES Option 2:Diagram1 - Powers, Grounds & Controls
LT/RH/LoneStar - X15/A26 - Rear Manual HVAC (No Idle) W/ Pre-Heat (Bergstrom Heat and Cool w/ Condensation) 2 SWITCHES:Diagram1 - Powers, Grounds & Controls
LT/RH/LoneStar X15 - Bosch LIL165_LIL200 Alternator W/ Remote Sense W/ Delco Starter:Diagram1-Combination1
LT/RH/LoneStar X15 - Delco Remy 28SI Alternator W/ Remote Sense W/ Delco Starter:Diagram1-Combination1
LT/RH/LoneStar X15 - Delco Remy 28SI Alternator W/ Remote Sense W/ Delco Starter:Diagram1-Combination2
LT/RH/LoneStar X15 - Delco Remy 36SI Alternator W/ Remtoe Sense W/ Delco Starter:Diagram1
LT/RH/LoneStar X15 - Delco Remy 40SI Alternator W/ Remote Sense W/ Delco Starter:Diagram1-Combination1
LT/RH/LoneStar X15 - Delco Remy 40SI Alternator W/ Remote Sense W/ Delco Starter:Diagram1-Combination2
LT/RH/LoneStar X15 - Leece-Neville - LN 325A Alternator W/ Remote Sense W/ Delco Starter:Diagram1
LT/RH/LoneStar X15 - Leece-Neville AVI160-210A/240A Alternator W/ Remote Sense W/ Delco Starter:Diagram1-Combination1

Mates BTRY-INTL_650CCA-BTRY-00-0 2A

Name	Terminal Part Number	V-Min	Name	Wire Part Number	Wire CSA	Wire Spec	Wire Material description	Wire Color Description	Wire Length	End2 Terminal Part Number	End2 Pin Name	End2 Connect or
A	-	-	N104AZ	2643695 R1	3.01	12.0	Std. Wall XLPE Primary Cable	RED	210.0	-	A	9255
A	-	-	JS1B	2643692 R1	1.91	14.0	Std. Wall XLPE Primary Cable	TAN	130.0	-	A	K01-1F
A	-	-	JS1B	2643692 R1	1.91	14.0	Std. Wall XLPE Primary Cable	TAN	130.0	-	A	1F
A	-	-	N104AZ	2643695 R1	3.01	12.0	Std. Wall XLPE Primary Cable	RED	210.0	-	A	S05-9255

Connector Name	J4-1601
Part Number	3598707C1
Instances	LoneStar - X15 - Body Builder Lighting - (BOC EOF In Cab) (8HAB 8HAE 8HAU) (Automatic):Diagram1 LoneStar - X15 - Body Builder Lighting - (BOC EOF In Cab) (8HAB 8HAE 8HAU) (Automatic):Diagram2 LoneStar - X15 - Body Builder Lighting - (BOC EOF In Cab) (8HAB 8HAE 8HAU) (Manual):Diagram1 LoneStar - X15 - Body Builder Lighting - (BOC EOF In Cab) (8HAB 8HAE 8HAU) (Manual):Diagram2 LoneStar - X15 - Fuel Heater (Vehicle Powered) (Davco):Diagram1 LT/RH - A26 - Auto Neutral (Allison with Multiplex Switch and Confirmation Telltale):Diagram1 LT/RH - A26 - Body Builder Lighting - (BOC EOF In Cab) (8HAB 8HAE 8HAU) (Manual):Diagram1 LT/RH - A26 - Body Builder Lighting - (BOC EOF In Cab) (8HAB 8HAE 8HAU) (Manual):Diagram2 LT/RH - A26 - Body Builder Lighting - (BOC EOF In Cab) (8HAB 8HAE 8HAU) (Manual):Diagram3 LT/RH - A26 - Body Builder Lighting - (BOC EOF In Cab) (8HAB 8HAE 8HAU) (Manual):Diagram4 LT/RH - X15 - Body Builder Lighting - (BOC EOF In Cab) (8HAB 8HAE 8HAU) (Manual):Diagram1 LT/RH - X15 - Body Builder Lighting - (BOC EOF In Cab) (8HAB 8HAE 8HAU) (Manual):Diagram2 LT/RH - X15/A26 - Body Builder Lighting - (BOC EOF In Cab) (8HAB 8HAE 8HAU) (Automatic):Diagram1 LT/RH - X15/A26 - Body Builder Lighting - (BOC EOF In Cab) (8HAB 8HAE 8HAU) (Automatic):Diagram2 LT/RH - X15/A26 - Fuel Heater (Vehicle Powered) (Davco):Diagram1 LT/RH - X15/A26 - Fuel Heater (Vehicle Powered) (Davco):Diagram2 LT/RH - X15/A26 - Fuel Heater (Vehicle Powered) (RAVCOR):Diagram1 LT/RH - X15/A26 - Mirrors (Heat) [Switch Pack Actuated Relay Driven]:Diagram1 LT/RH - X15/A26 - Skirt Light Customer Supplied:Diagram1 LT/RH - X15/A26 - Windshield Wipers Cruise Disable & Park Brake W/Wipers ON:Diagram1 LT/RH - X15/A26 - Windshield Wipers Cruise Disable W/Wipers ON:Diagram1

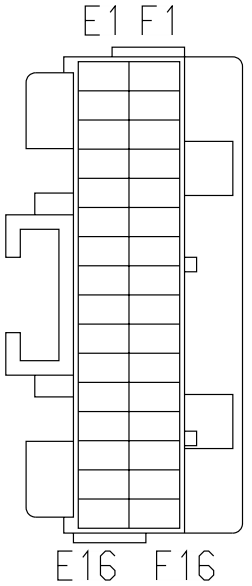

LT/RH A26 - Auto Start Stop and Sleeper Auto Climate / Cab Temp / Oil Mapping Manual Trans:Diagram1
LT/RH A26 - Auto Start Stop Battery & Oil Temp Mapping Auto Trans:Diagram1
LT/RH A26 - Auto Start Stop Battery & Oil Temp Mapping Manual Trans:Diagram1
LT/RH A26 - Auto Start Stop with Sleeper Auto Climate / Cab Temp / Oil Mapping Auto Trans:Diagram1
LT/RH/LoneStar - X15/A26 - Auxiliary Air Solenoids 4-pack (1 pack/4 solenoids):Diagram1
LT/RH/LoneStar - X15/A26 - Auxiliary Air Solenoids 4-pack (1 pack/4 solenoids):Diagram2
LT/RH/LoneStar - X15/A26 - Auxiliary Air Solenoids 4-pack (1 pack/4 solenoids):Diagram3
LT/RH/LoneStar - X15/A26 - Auxiliary Air Solenoids 4-pack (1 pack/4 solenoids):Diagram4
LT/RH/LoneStar - X15/A26 - Auxiliary Air Solenoids 4-pack (1 pack/4 solenoids):Diagram5
LT/RH/LoneStar - X15/A26 - Auxiliary Air Solenoids 4-pack (2 packs/8 solenoids):Diagram1
LT/RH/LoneStar - X15/A26 - Auxiliary Air Solenoids 4-pack (2 packs/8 solenoids):Diagram2
LT/RH/LoneStar - X15/A26 - Auxiliary Air Solenoids 4-pack (2 packs/8 solenoids):Diagram3
LT/RH/LoneStar - X15/A26 - Auxiliary Air Solenoids 4-pack (2 packs/8 solenoids):Diagram4
LT/RH/LoneStar - X15/A26 - Auxiliary Air Solenoids 4-pack (2 packs/8 solenoids):Diagram5
LT/RH/LoneStar - X15/A26 - Auxiliary Trailer Power CAV D:Diagram1
LT/RH/LoneStar - X15/A26 - Auxiliary Trailer Power CAV D:Diagram2
LT/RH/LoneStar - X15/A26 - Auxiliary Trailer Power W/ ISO Trailer Socket:Diagram1
LT/RH/LoneStar - X15/A26 - BCM (Body Control Module):Connector J4-1601
LT/RH/LoneStar - X15/A26 - Body Builder Lighting - (Blunt Cut):Diagram1
LT/RH/LoneStar - X15/A26 - Body Builder Lighting - (Blunt Cut):Diagram2
LT/RH/LoneStar - X15/A26 - Floor/Search Lights DayCab:Diagram1
LT/RH/LoneStar - X15/A26 - Floor/Search Lights Sleeper:Diagram1

LT/RH/LoneStar - X15/A26 - Floor/Search Lights Sleeper (1 Light):Diagram1
LT/RH/LoneStar - X15/A26 - Heated Mirrors (Door Pod Actuated Cab and Hood Mounted):Diagram1
LT/RH/LoneStar - X15/A26 - Lighting Sleeper Dome:Diagram1
LT/RH/LoneStar - X15/A26 - Rear AUTO HVAC (No Idle) W/ Pre-Heat (Bergstrom Heat and Cool w/ Condensation) 2 SWITCHES:Diagram3 - Espar Circuit
LT/RH/LoneStar - X15/A26 - Rear HVAC (No Idle Heater) (Espar) Option 1:Diagram1
LT/RH/LoneStar - X15/A26 - Rear HVAC (No Idle Heater) (Espar) Option 2:Diagram1
LT/RH/LoneStar - X15/A26 - Rear HVAC (No Idle Heater) (Webasto Smartemp):Diagram1
LT/RH/LoneStar - X15/A26 - Rear HVAC (No Idle Heater) (Webasto Std N/Swift) N/ Heat Swtich:Diagram1
LT/RH/LoneStar - X15/A26 - Rear HVAC (No Idle Heater) (Webasto Std W/Swift) N/ Heat Switch:Diagram1
LT/RH/LoneStar - X15/A26 - Rear Manual HVAC (No Idle) W/ Pre-Heat (Bergstrom Heat and Cool w/ Condensation) 2 SWITCHES:Diagram3 - Espar Circuit
LT/RH/LoneStar - X15/A26 - Trailer Interface (Lighting) – BOC & EOF_NA:Diagram1-Combination1
LT/RH/LoneStar - X15/A26 - Trailer Interface (Lighting) – BOC & EOF_NA:Diagram1-Combination2
LT/RH/LoneStar - X15/A26 - Trailer Interface (Lighting) – BOC & EOF_NA:Diagram1-Combination3
LT/RH/LoneStar - X15/A26 - Trailer Interface (Lighting) – BOC & EOF_NA:Diagram1-Combination4
LT/RH/LoneStar - X15/A26 - Trailer Interface (Lighting) – BOC NA:Diagram1
LT/RH/LoneStar - X15/A26 - Trailer Interface (Lighting) – BOC NA:Diagram2
LT/RH/LoneStar - X15/A26 - Trailer Interface (Lighting) – TRAMEC_NA:Diagram1
LT/RH/LoneStar - X15/A26 - Windshield Wipers Park Brake W/ Wipers ON:Diagram1
LT/RH/LoneStar - X15/A26 - Windshield Wipers Standard:Diagram1
LT/RH/LoneStar X15 - Auto Start Stop Oil Temp Sensor Auto Trans:Diagram1
LT/RH/LoneStar X15 - Auto Start Stop Oil Temp Sensor Manual Trans:Diagram1

LT/RH/LoneStar X15 - Auto Start Stop with Sleeper Auto Climate / Cab Temp with Oil Temp Sensor Auto Trans:Diagram1
LT/RH/LoneStar X15 - Auto Start Stop with Sleeper Auto Climate / Cab Temp with Oil Temp Sensor Manual Trans:Diagram1
Relays - Grid Management (N/Load Shed Day Cab):Diagram1
Relays - Grid Management (W/Load Shed Day Cab):Diagram1
Relays - Grid Management (W/Load Shed Sleeper Cab):Diagram1

Mates MODU-BCM-A000-10-00

Name	Terminal Part Number	V-Min	Name	Wire Part Number	Wire CSA	Wire Spec	Wire Material description	Wire Color Description	Wire Length	End2 Terminal Part Number	End2 Pin Name	End2 Connect or
E3	-	-	6K9LC	3510310 R1	0.53	20.0	Thin Wall XLPE Primary Cable	GREY	1785.0	-	X	-
E3	-	-	6K9LC	3510310 R1	0.53	20.0	Thin Wall XLPE Primary Cable	GREY	1785.0	-	-	-
E5	-	-	BC63J	3510352 R1	0.53	20.0	Thin Wall XLPE Primary Cable	DARK BLUE	2000.0	-	R3-85	1011
E5	-	-	BC63J	3510352 R1	0.53	20.0	Thin Wall XLPE Primary Cable	DARK BLUE	2000.0	-	-	-
E6	-	-	AA82H	3510310 R1	0.53	20.0	Thin Wall XLPE Primary Cable	GREY	2000.0	-	R5-86	1011
E6	-	-	AA82H	3510310 R1	0.53	20.0	Thin Wall XLPE Primary Cable	GREY	2000.0	-	-	-

Name	Terminal Part Number	V-Min	Name	Wire Part Number	Wire CSA	Wire Spec	Wire Material description	Wire Color Description	Wire Length	End2 Terminal Part Number	End2 Pin Name	End2 Connector
E7	-	-	AA82F	3510310 R1	0.53	20.0	Thin Wall XLPE Primary Cable	GREY	2000.0	-	R2-86	1011
E7	-	-	AA82F	3510310 R1	0.53	20.0	Thin Wall XLPE Primary Cable	GREY	2000.0	-	-	-
E9	-	-	AA59H	3510311 R1	0.79	18.0	Thin Wall XLPE Primary Cable	GREY	680.0	-	38	1701
E9	-	-	AA59H	3510311 R1	0.79	18.0	Thin Wall XLPE Primary Cable	GREY	680.0	-	-	-
E11	-	-	CC72	3510316 R1	0.53	20.0	Thin Wall XLPE Primary Cable	ORANGE	2090.0	-	R4-85	1012
E11	-	-	CC72	3510316 R1	0.53	20.0	Thin Wall XLPE Primary Cable	ORANGE	2090.0	-	-	-
E12	-	-	AA59C	3510311 R1	0.79	18.0	Thin Wall XLPE Primary Cable	GREY	680.0	-	34	1701
E12	-	-	AA59C	3510311 R1	0.79	18.0	Thin Wall XLPE Primary Cable	GREY	680.0	-	-	-

Name	Terminal Part Number	V-Min	Name	Wire Part Number	Wire CSA	Wire Spec	Wire Material description	Wire Color Description	Wire Length	End2 Terminal Part Number	End2 Pin Name	End2 Connector
E13	-	-	RL59E	3510311 R1	0.79	18.0	Thin Wall XLPE Primary Cable	GREY	680.0	-	36	1701
E13	-	-	RK59E	3510311 R1	0.79	18.0	Thin Wall XLPE Primary Cable	GREY	175.0	-	-	-
E13	-	-	RL59E	3510311 R1	0.79	18.0	Thin Wall XLPE Primary Cable	GREY	680.0	-	-	-
E16	-	-	MD92A	3510329 R1	0.79	18.0	Thin Wall XLPE Primary Cable	TAN	2120.0	-	-	-
E16	-	-	MD92A	3510329 R1	0.79	18.0	Thin Wall XLPE Primary Cable	TAN	2120.0	-	R5-86	1014
F1	-	-	HA104BC	3510352 R1	0.53	20.0	Thin Wall XLPE Primary Cable	DARK BLUE	1985.0	-	10	A01-1114M
F1	-	-	HA104BC	3510352 R1	0.53	20.0	Thin Wall XLPE Primary Cable	DARK BLUE	1985.0	-	-	-
F2	-	-	DX63C	3510352 R1	0.53	20.0	Thin Wall XLPE Primary Cable	DARK BLUE	2015.0	-	37	5000A

Name	Terminal Part Number	V-Min	Name	Wire Part Number	Wire CSA	Wire Spec	Wire Material description	Wire Color Description	Wire Length	End2 Terminal Part Number	End2 Pin Name	End2 Connector
F2	-	-	DX63C	3510352 R1	0.53	20.0	Thin Wall XLPE Primary Cable	DARK BLUE	2015.0	-	-	-
F4	-	-	AA59F	3510311 R1	0.79	18.0	Thin Wall XLPE Primary Cable	GREY	680.0	-	37	1701
F4	-	-	AA59F	3510311 R1	0.79	18.0	Thin Wall XLPE Primary Cable	GREY	680.0	-	-	-
F5	-	-	AA59J	3510311 R1	0.79	18.0	Thin Wall XLPE Primary Cable	GREY	680.0	-	39	1701
F5	-	-	AA59J	3510311 R1	0.79	18.0	Thin Wall XLPE Primary Cable	GREY	680.0	-	-	-
F8	-	-	RL59D	3510311 R1	0.79	18.0	Thin Wall XLPE Primary Cable	GREY	680.0	-	35	1701
F8	-	-	SF59D	3510311 R1	0.79	18.0	Thin Wall XLPE Primary Cable	GREY	210.0	-	-	-
F8	-	-	RL59D	3510311 R1	0.79	18.0	Thin Wall XLPE Primary Cable	GREY	680.0	-	-	-

Name	Terminal Part Number	V-Min	Name	Wire Part Number	Wire CSA	Wire Spec	Wire Material description	Wire Color Description	Wire Length	End2 Terminal Part Number	End2 Pin Name	End2 Connector
F10	-	-	AA59B	3510311 R1	0.79	18.0	Thin Wall XLPE Primary Cable	GREY	680.0	-	33	1701
F10	-	-	AA59B	3510311 R1	0.79	18.0	Thin Wall XLPE Primary Cable	GREY	680.0	-	-	-
F11	-	-	YE75WP	3510299 R1	0.79	18.0	Thin Wall XLPE Primary Cable	LIGHT GREEN	2015.0	-	26	5000A
F11	-	-	YE75WP	3510299 R1	0.79	18.0	Thin Wall XLPE Primary Cable	LIGHT GREEN	2015.0	-	-	-
F12	-	-	DR19A	3510310 R1	0.53	20.0	Thin Wall XLPE Primary Cable	GREY	2000.0	-	R6-85	1011
F12	-	-	DR19A	3510310 R1	0.53	20.0	Thin Wall XLPE Primary Cable	GREY	2000.0	-	-	-
F13	-	-	JA78RC	3510298 R1	0.53	20.0	Thin Wall XLPE Primary Cable	LIGHT GREEN	2090.0	-	R5-85	1012
F13	-	-	DD78RC	3510298 R1	0.53	20.0	Thin Wall XLPE Primary Cable	LIGHT GREEN	2090.0	-	-	-

Name	Terminal Part Number	V-Min	Name	Wire Part Number	Wire CSA	Wire Spec	Wire Material description	Wire Color Description	Wire Length	End2 Terminal Part Number	End2 Pin Name	End2 Connector
F13	-	-	JA78RC	3510298 R1	0.53	20.0	Thin Wall XLPE Primary Cable	LIGHT GREEN	2090.0	-	-	-
F13	-	-	DD78RC	3510298 R1	0.53	20.0	Thin Wall XLPE Primary Cable	LIGHT GREEN	2090.0	-	R5-85	1012
F15	-	-	BL70C	3510365 R1	0.79	18.0	Thin Wall XLPE Primary Cable	RED	2090.0	-	R5-86	1012
F15	-	-	BM70C	3510316 R1	0.53	20.0	Thin Wall XLPE Primary Cable	ORANGE	2000.0	-	-	-
F15	-	-	BG70C	3510317 R1	0.79	18.0	Thin Wall XLPE Primary Cable	ORANGE	1830.0	-	-	-
F15	-	-	BM70C	3510316 R1	0.53	20.0	Thin Wall XLPE Primary Cable	ORANGE	2000.0	-	R1-86	1011
F16	-	-	DY54XD	3510304 R1	0.53	20.0	Thin Wall XLPE Primary Cable	BROWN	2105.0	-	-	-
F16	-	-	PA54XD	3510304 R1	0.53	20.0	Thin Wall XLPE Primary Cable	BROWN	2105.0	-	-	-
F16	-	-	DY54XD	3510304 R1	0.53	20.0	Thin Wall XLPE Primary Cable	BROWN	2105.0	-	R4-86	1013

Connector Name	J4
Part Number	RING-E-3-8_0
Instances	LT/RH - A26/X15 - Maxwell 12V Ultracapacitor Engine Start Module (ESM):Diagram1
Mates	BTRY-INTL_650CCA-BTRY-00-0 2A

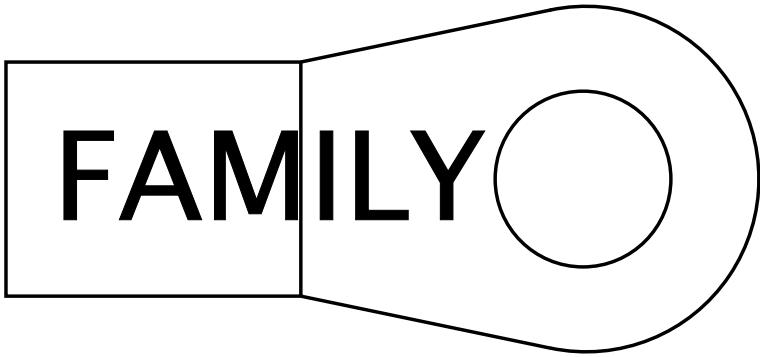

Name	Terminal Part Number	V-Min	Name	Wire Part Number	Wire CSA	Wire Spec	Wire Material description	Wire Color Description	Wire Length	End2 Terminal Part Number	End2 Pin Name	End2 Connect or
A	-	-	WIRE416310	-	0.0	-	-	-	0.0	-	-	-
A	-	-	WIRE416315	-	0.0	-	-	-	0.0	-	1	Terminal Block if Required
A	-	-	WIRE416316	-	0.0	-	-	-	0.0	-	A	K01-1F

Connector Name	J5-1602
Part Number	3598705C1
Instances	Body J1939 (250Kbps) Splice Pack 1024:Body J1939 (250Kbps) Body J1939 (250Kbps) Splice Pack 1025:Body J1939 (250Kbps) Body J1939 (250Kbps) Splice Pack 1029:Body J1939 (250Kbps) Body J1939 (250Kbps) W/ 3 Splice Packs:Body J1939 (250Kbps) LoneStar - X15 - City Horn W/ 4PIN CLK W/O RKA:Diagram1-Combination1 LoneStar - X15 - City Horn W/ 4PIN CLK W/RKA:Diagram1-Combination1 LoneStar - X15 - City Horn W/ 10PIN CLK W/RKA:Diagram1-Combination1 LoneStar - X15 - City Horn W/ 10PIN CLK W/O RKA:Diagram1-Combination1 LoneStar - X15 - Crank Inhibit with Hood Switch - with new BCM Pin:Diagram1 LoneStar - X15 - Headlights Halogen N/INT N/LOWW:Diagram1 LoneStar - X15 - Headlights Halogen N/INT W/LOWW:Diagram1 LoneStar - X15 - Headlights Halogen W/INT N/LOWW:Diagram1 LoneStar - X15 - Headlights Halogen W/INT W/ LOWW:Diagram1 LoneStar - X15 - Tire Pressure (TPMS) (US & Canada):Diagram1 LoneStar - X15 - Windshield Washer Pump & Low Fluid Sensor:Diagram1 LT/RH - A26 - Air Flow Restriction Monitoring A26:Diagram1 LT/RH - A26 - Air Flow Restriction Monitoring A26:Diagram2 LT/RH - A26 - Transmission Oil Temperature-Manual Trans-Horizon Option 1:Diagram1 LT/RH - A26 - Transmission Oil Temperature-Manual Trans-Horizon Option 1:Diagram2 LT/RH - A26 - Transmission Oil Temperature-Manual Trans-Horizon Option 1:Diagram3 LT/RH - A26 - Transmission Oil Temperature-Manual Trans-Horizon Option 2:Diagram1 LT/RH - A26 - Transmission Oil Temperature-Manual Trans-Horizon Option 2:Diagram2 LT/RH - A26 - Transmission Oil Temperature-Manual Trans-Horizon Option 2:Diagram3 LT/RH - A26 - Transmission Power Take Off Dual PTO with Clutch Interlock:Diagram1

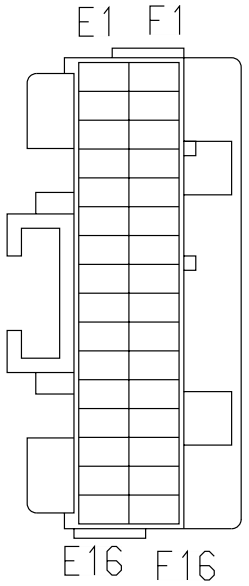

LT/RH - A26 - Transmission Power Take Off Dual Solenoid AUTO:Diagram1
LT/RH - A26 - Transmission Power Take Off Option 1:Diagram1
LT/RH - A26 - Transmission Power Take Off Option 2:Diagram1
LT/RH - A26 - Transmission Power Take Off W/ Clutch Interlock:Diagram1
LT/RH - A26 - Work Lights (2 Blunt Cuts Only W/O Relay) W/ Backup W/Manual Trans Day Cab:Diagram1
LT/RH - A26 - Work Lights (2 Blunt Cuts Only W/O Relay) W/ Backup W/Manual Trans Day Cab:Diagram2
LT/RH - A26 - Work Lights (2 Blunt Cuts Only W/O Relay) W/ Backup W/Manual Trans Day Cab:Diagram3
LT/RH - A26 - Work Lights (2 Blunt Cuts Only W/O Relay) W/ Backup W/Manual Trans Day Cab:Diagram4
LT/RH - A26 - Work Lights - LED W/ Sw Pack - Customer Supplied - Sleeper W/ RKE W/MAN REV:Diagram1
LT/RH - A26 - Work Lights - LED W/ Sw Pack - Customer Supplied - Sleeper W/ RKE W/MAN REV:Diagram2
LT/RH - A26 - Work Lights - LED W/ Sw Pack - Customer Supplied - Sleeper W/ RKE W/MAN REV:Diagram3
LT/RH - A26 - Work Lights - LED W/ Sw Pack - Customer Supplied - Sleeper W/ RKE W/MAN REV:Diagram4
LT/RH - A26 - Work Lights - LED W/ Sw Pack - Customer Supplied - Sleeper W/O RKE W/MAN REV:Diagram1
LT/RH - A26 - Work Lights - LED W/ Sw Pack - Customer Supplied - Sleeper W/O RKE W/MAN REV:Diagram2
LT/RH - A26 - Work Lights - LED W/ Sw Pack - Customer Supplied - Sleeper W/O RKE W/MAN REV:Diagram3
LT/RH - A26 - Work Lights - LED W/ Sw Pack - Customer Supplied - Sleeper W/O RKE W/MAN REV:Diagram4
LT/RH - A26 - Work Lights -LED W/ Sw Pack - Sleeper W/ RKE W/MAN REV:Diagram1
LT/RH - A26 - Work Lights -LED W/ Sw Pack - Sleeper W/ RKE W/MAN REV:Diagram2
LT/RH - A26 - Work Lights -LED W/ Sw Pack - Sleeper W/O RKE W/MAN REV:Diagram1
LT/RH - A26 - Work Lights -LED W/ Sw Pack - Sleeper W/O RKE W/MAN REV:Diagram2
LT/RH - A26 - Work Lights LED W/ Sw Pack - Day Cab W/ RKE W/MAN REV:Diagram1
LT/RH - A26 - Work Lights LED W/ Sw Pack - Day Cab W/ RKE W/MAN REV:Diagram2
LT/RH - A26 - Work Lights LED W/ Sw Pack - Day Cab W/O RKE W/MAN REV:Diagram1

LT/RH - A26 - Work Lights LED W/ Sw Pack - Day Cab W/O RKE W/MAN REV:Diagram2
LT/RH - A26 - Work Lights W/ Sw Pack - Customer Supplied W/ RKE W/MAN REV:Diagram1
LT/RH - A26 - Work Lights W/ Sw Pack - Customer Supplied W/ RKE W/MAN REV:Diagram2
LT/RH - A26 - Work Lights W/ Sw Pack - Customer Supplied W/ RKE W/MAN REV:Diagram3
LT/RH - A26 - Work Lights W/ Sw Pack - Customer Supplied W/ RKE W/MAN REV:Diagram4
LT/RH - A26 - Work Lights W/ Sw Pack - Customer Supplied W/ O RKE W/MAN REV:Diagram1
LT/RH - A26 - Work Lights W/ Sw Pack - Customer Supplied W/ O RKE W/MAN REV:Diagram2
LT/RH - A26 - Work Lights W/ Sw Pack - Customer Supplied W/ O RKE W/MAN REV:Diagram3
LT/RH - A26 - Work Lights W/ Sw Pack - Customer Supplied W/ O RKE W/MAN REV:Diagram4
LT/RH - X15/A26 - 10 PIN ClockSpring:Diagram1
LT/RH - X15/A26 - City Horn W/ 4PIN CLK W/O RKA:Diagram1-Combination1
LT/RH - X15/A26 - City Horn W/ 4PIN CLK W/RKA:Diagram1-Combination1
LT/RH - X15/A26 - City Horn W/ 10PIN CLK W/RKA:Diagram1-Combination1
LT/RH - X15/A26 - City Horn W/ 10PIN CLK W/O RKA:Diagram1-Combination1
LT/RH - X15/A26 - Directional Signal (Turn) With HEADLIGHTS (HAL-125):Diagram1
LT/RH - X15/A26 - Directional Signal (Turn) With HEADLIGHTS (LED-125):Diagram1
LT/RH - X15/A26 - Directional Signal (Turn) With HEADLIGHTS Option2:Diagram1
LT/RH - X15/A26 - Lane Departure Warning - (Wabco OnLane 2.0 w/ roof speakers):Diagram1
LT/RH - X15/A26 - Park Brake Control (Monitoring) (W/Vehicle Speed):Diagram1
LT/RH - X15/A26 - Park Brake Control (Monitoring)(GEN IV BCM):Diagram1
LT/RH - X15/A26 - Radio W/Steering Wheel Pod N/ Remote:Diagram1
LT/RH - X15/A26 - Tire Pressure (TPMS) (US & Canada):Diagram1

LT/RH - X15/A26 - Windshield Washer Pump & Low Fluid Sensor:Diagram1
LT/RH - X15/A26 - Windshield Wipers Cruise Disable & Park Brake W/Wipers ON:Diagram1
LT/RH - X15/A26 - Windshield Wipers Cruise Disable W/Wipers ON:Diagram1
LT/RH A26 - A26 - Heating Ventilation & Air Conditioning (HVAC) Manual:Diagram1 - HVAC - Option1
LT/RH A26 - A26 - Heating Ventilation & Air Conditioning (HVAC) Manual:Diagram2 - HVAC - Option2
LT/RH A26 - Heating Ventilation & Air Conditioning (HVAC) Auto Temp Control:Diagram1 - HVAC - Option1
LT/RH A26 - Heating Ventilation & Air Conditioning (HVAC) Auto Temp Control:Diagram2 - HVAC - Option2
LT/RH/LoneStar - X15 - Air Flow Restriction Monitoring:Diagram1
LT/RH/LoneStar - X15 - Transmission Oil Temperature-Manual Trans-Horizon Option 1:Diagram1
LT/RH/LoneStar - X15 - Transmission Oil Temperature-Manual Trans-Horizon Option 1:Diagram2
LT/RH/LoneStar - X15 - Transmission Oil Temperature-Manual Trans-Horizon Option 1:Diagram3
LT/RH/LoneStar - X15 - Transmission Oil Temperature-Manual Trans-Horizon Option 2:Diagram1
LT/RH/LoneStar - X15 - Transmission Oil Temperature-Manual Trans-Horizon Option 2:Diagram2
LT/RH/LoneStar - X15 - Transmission Oil Temperature-Manual Trans-Horizon Option 2:Diagram3
LT/RH/LoneStar - X15 - Transmission Power Take Off:Diagram1
LT/RH/LoneStar - X15 - Transmission Power Take Off Dual PTO with Clutch Interlock MANUAL:Diagram1
LT/RH/LoneStar - X15 - Transmission Power Take Off Dual Solenoid AUTO:Diagram1
LT/RH/LoneStar - X15 - Transmission Power Take Off W/ Clutch Interlock:Diagram1
LT/RH/LoneStar - X15 - Transmission SINGLE Power Take Off MANUAL:Diagram1
LT/RH/LoneStar - X15 - Work Lights (2 Blunt Cuts Only W/O Relay) W/Backup W/Manual Trans:Diagram1
LT/RH/LoneStar - X15 - Work Lights (2 Blunt Cuts Only W/O Relay) W/Backup W/Manual Trans:Diagram2
LT/RH/LoneStar - X15 - Work Lights - LED W/ Sw Pack - Customer Supplied - Sleeper W/ RKE W/MAN REV:Diagram1

LT/RH/LoneStar - X15 - Work Lights - LED W/ Sw Pack - Customer Supplied - Sleeper W/ RKE W/MAN REV:Diagram2
LT/RH/LoneStar - X15 - Work Lights - LED W/ Sw Pack - Customer Supplied - Sleeper W/O RKE W/MAN REV:Diagram1
LT/RH/LoneStar - X15 - Work Lights - LED W/ Sw Pack - Customer Supplied - Sleeper W/O RKE W/MAN REV:Diagram2
LT/RH/LoneStar - X15 - Work Lights -LED W/ Sw Pack - Sleeper W/ RKE W/MAN REV:Diagram1
LT/RH/LoneStar - X15 - Work Lights -LED W/ Sw Pack - Sleeper W/O RKE W/MAN REV:Diagram1
LT/RH/LoneStar - X15 - Work Lights W/ Sw Pack - Customer Supplied W/ RKE W/MAN REV:Diagram1
LT/RH/LoneStar - X15 - Work Lights W/ Sw Pack - Customer Supplied W/ RKE W/MAN REV:Diagram2
LT/RH/LoneStar - X15 - Work Lights W/ Sw Pack - Customer Supplied W/O RKE W/MAN REV:Diagram1
LT/RH/LoneStar - X15 - Work Lights W/ Sw Pack - Customer Supplied W/O RKE W/MAN REV:Diagram2
LT/RH/LoneStar - X15/A26 - Adjustable Engine Speed Control (PTO) 4-pin Clockspring:Diagram1
LT/RH/LoneStar - X15/A26 - Adjustable Engine Speed Control (PTO) 10-PIN ClockSpring:Diagram1
LT/RH/LoneStar - X15/A26 - Auxiliary Air Solenoids 4-pack (1 pack/4 solenoids):Diagram1
LT/RH/LoneStar - X15/A26 - Auxiliary Air Solenoids 4-pack (1 pack/4 solenoids):Diagram2
LT/RH/LoneStar - X15/A26 - Auxiliary Air Solenoids 4-pack (1 pack/4 solenoids):Diagram3
LT/RH/LoneStar - X15/A26 - Auxiliary Air Solenoids 4-pack (1 pack/4 solenoids):Diagram4
LT/RH/LoneStar - X15/A26 - Auxiliary Air Solenoids 4-pack (1 pack/4 solenoids):Diagram5
LT/RH/LoneStar - X15/A26 - Auxiliary Air Solenoids 4-pack (2 packs/8 solenoids):Diagram1
LT/RH/LoneStar - X15/A26 - Auxiliary Air Solenoids 4-pack (2 packs/8 solenoids):Diagram2
LT/RH/LoneStar - X15/A26 - Auxiliary Air Solenoids 4-pack (2 packs/8 solenoids):Diagram3
LT/RH/LoneStar - X15/A26 - Auxiliary Air Solenoids 4-pack (2 packs/8 solenoids):Diagram4
LT/RH/LoneStar - X15/A26 - Auxiliary Air Solenoids 4-pack (2 packs/8 solenoids):Diagram5
LT/RH/LoneStar - X15/A26 - Axle Loading (Weight) Rear:Diagram1

LT/RH/LoneStar - X15/A26 - Axle Loading (Weight) Rear:Diagram2
LT/RH/LoneStar - X15/A26 - BCM (Body Control Module):Connector J5-1602
LT/RH/LoneStar - X15/A26 - Brake Pressure (Auxiliary Gauge):Diagram1
LT/RH/LoneStar - X15/A26 - Brake Pressure (Virtual Gauge):Diagram1
LT/RH/LoneStar - X15/A26 - Brake Switch:Diagram1
LT/RH/LoneStar - X15/A26 - Clutch Monitoring (High and Low Switch to BCM):Diagram1
LT/RH/LoneStar - X15/A26 - Compressed Air Supply (Primary and Secondary Gauge):Diagram1
LT/RH/LoneStar - X15/A26 - Door Ajar Reminder (Entry/Exit):Diagram1
LT/RH/LoneStar - X15/A26 - Engine Idle Increment/Decrement (Steering Wheel Switch - 4 Pin):Diagram1
LT/RH/LoneStar - X15/A26 - Engine Idle Increment/Decrement (Steering Wheel Switch - 10 Pin):Diagram1
LT/RH/LoneStar - X15/A26 - Engine Speed Inhibit Only:Diagram1
LT/RH/LoneStar - X15/A26 - Floor/Search Lights Sleeper:Diagram1
LT/RH/LoneStar - X15/A26 - Floor/Search Lights Sleeper (1 Light):Diagram1
LT/RH/LoneStar - X15/A26 - Fuel Level (Single Tank - Left Side):Diagram1
LT/RH/LoneStar - X15/A26 - Fuel Level (Single Tank - Left Side):Diagram2
LT/RH/LoneStar - X15/A26 - Fuel Level (Single Tank - Left Side):Diagram3
LT/RH/LoneStar - X15/A26 - Fuel Level (Single Tank - Left Side):Diagram4
LT/RH/LoneStar - X15/A26 - Fuel Level (Single Tank - Left Side):Diagram5
LT/RH/LoneStar - X15/A26 - Fuel Level (Single Tank - Left Side):Diagram6
LT/RH/LoneStar - X15/A26 - Hazard Warning (CA 2.0):Diagram1
LT/RH/LoneStar - X15/A26 - Instrument Cluster (Premium):Diagram1
LT/RH/LoneStar - X15/A26 - Instrument Cluster - Request and Status:Diagram1
LT/RH/LoneStar - X15/A26 - Jaw Monitoring:Diagram1
LT/RH/LoneStar - X15/A26 - Lighting Sleeper Dome:Diagram1

LT/RH/LoneStar - X15/A26 - MARKER/PARK LIGHTS - W/ Marker Interrupt 10pin CLCKSPRING:Diagram1
LT/RH/LoneStar - X15/A26 - Navistar Telematics Module - Programming:Diagram1
LT/RH/LoneStar - X15/A26 - Park Brake Controls (Non Lever Park Brake):Diagram1
LT/RH/LoneStar - X15/A26 - Park Brake Controls (with Alarm IGN ON/OFF):Diagram1
LT/RH/LoneStar - X15/A26 - PARK LIGHTS - W/Marker Interrupt 4 pin clockspring:Diagram1
LT/RH/LoneStar - X15/A26 - Radio (Bluetooth) W/Steering Wheel Pod N/ Remote W/MIC:Diagram1
LT/RH/LoneStar - X15/A26 - Radio W/Steering Wheel Pod W/ Remote:Diagram1
LT/RH/LoneStar - X15/A26 - Radio(Bluetooth) W/Steering Wheel W/Remote W/MIC:Diagram1
LT/RH/LoneStar - X15/A26 - Seatbelt Reminder (Warning) (Driver & Passenger in parallel):Diagram1
LT/RH/LoneStar - X15/A26 - Seatbelt Reminder (Warning) (Driver only):Diagram1
LT/RH/LoneStar - X15/A26 - Seats (RollTek) Driver and Passenger (Hard Wired):Diagram1
LT/RH/LoneStar - X15/A26 - Seats (RolTek) Drivers Seat Only (Hard Wired) - Leather:Diagram1
LT/RH/LoneStar - X15/A26 - Seats (RolTek) Drivers Seat Only (Hard Wired) - Mordura:Diagram1
LT/RH/LoneStar - X15/A26 - Seats (RolTek) Drivers Seat Only (Hard Wired) - Vinyl:Diagram1
LT/RH/LoneStar - X15/A26 - Single Axle Temperature Monitoring:Diagram1
LT/RH/LoneStar - X15/A26 - Single Axle Temperature Monitoring w/Aux Gauge:Diagram1
LT/RH/LoneStar - X15/A26 - Tandem Axle Temperature Monitoring:Diagram1
LT/RH/LoneStar - X15/A26 - Tandem Axle Temperature Monitoring:Diagram2
LT/RH/LoneStar - X15/A26 - Tandem Axle Temperature Monitoring w/ Single SNSR and AUX Gauge:Diagram1
LT/RH/LoneStar - X15/A26 - Tandem Axle Temperature Monitoring w/ Single SNSR and AUX Gauge:Diagram1
LT/RH/LoneStar - X15/A26 - Tandem Axle Temperature Monitoring w/Aux Gauge:Diagram1
LT/RH/LoneStar - X15/A26 - Tandem Axle Temperature Monitoring w/Aux Gauge:Diagram2

LT/RH/LoneStar - X15/A26 - Telematics (DRIVERTECH DAYCAB W/ J1939):Diagram1
LT/RH/LoneStar - X15/A26 - Telematics (DRIVERTECH SLEEPER W/ J1939):Diagram1
LT/RH/LoneStar - X15/A26 - Telematics (OMNIVISION W/ J1939 & PANIC BUTTON):Diagram1
LT/RH/LoneStar - X15/A26 - Telematics (OMNIVISION W/ J1939 & PANIC BUTTON):Diagram2
LT/RH/LoneStar - X15/A26 - Telematics (PEOPLE NET SLEEPER):Diagram1
LT/RH/LoneStar - X15/A26 - Telematics (QUALCOMM MCP50):Diagram1
LT/RH/LoneStar - X15/A26 - Telematics (TRIPMASTER DAYCAB):Diagram1
LT/RH/LoneStar - X15/A26 - Telematics (TRIPMASTER SLEEPER):Diagram1
LT/RH/LoneStar - X15/A26 - Telematics QUALCOMM IMCT DAYCAB With MVPC:Diagram1
LT/RH/LoneStar - X15/A26 - Telematics QUALCOMM IMCT DAYCAB With MVPC & PANIC BUTTON:Diagram1
LT/RH/LoneStar - X15/A26 - Telematics QUALCOMM IMCT DAYCAB With PANIC BUTTON:Diagram1
LT/RH/LoneStar - X15/A26 - Telematics QUALCOMM IMCT DAYCAB With PANIC BUTTON:Diagram2
LT/RH/LoneStar - X15/A26 - Telematics QUALCOMM IMCT MD:Diagram1
LT/RH/LoneStar - X15/A26 - Telematics QUALCOMM IMCT MD:Diagram2
LT/RH/LoneStar - X15/A26 - Telematics QUALCOMM TMCT:Diagram1
LT/RH/LoneStar - X15/A26 - Telematics QUALCOMM TMCT With PANIC BUTTON:Diagram1
LT/RH/LoneStar - X15/A26 - Vehicle Information Display (VID-W/BT):Diagram1
LT/RH/LoneStar - X15/A26 - Vehicle Information Display (VID-W/O BT):Diagram1
LT/RH/LoneStar - X15/A26 - Vehicle Sleep Mode:Diagram1
LT/RH/LoneStar - X15/A26 - Vehicle Speed Control (Cruise Control) 4 - PIN:Diagram1
LT/RH/LoneStar - X15/A26 - Windshield Wipers Park Brake W/ Wipers ON:Diagram1
LT/RH/LoneStar - X15/A26 - Windshield Wipers Standard:Diagram1

LT/RH/LoneStar - X15/A26 - Work Lights (2 Blunt Cuts Only W/O Relay) W/Backup W/Auto Trans (Allison and Endurant):Diagram1
LT/RH/LoneStar - X15/A26 - Work Lights (2 Blunt Cuts Only W/O Relay) W/Backup W/Auto Trans (Allison and Endurant):Diagram2
LT/RH/LoneStar - X15/A26 - Work Lights - LED W/ Sw Pack - Customer Supplied - Sleeper W/ RKE W/AUTO REV:Diagram1
LT/RH/LoneStar - X15/A26 - Work Lights - LED W/ Sw Pack - Customer Supplied - Sleeper W/ RKE W/AUTO REV:Diagram2
LT/RH/LoneStar - X15/A26 - Work Lights - LED W/ Sw Pack - Customer Supplied - Sleeper W/O RKE W/AUTO REV:Diagram1
LT/RH/LoneStar - X15/A26 - Work Lights - LED W/ Sw Pack - Customer Supplied - Sleeper W/O RKE W/AUTO REV:Diagram2
LT/RH/LoneStar - X15/A26 - Work Lights -LED W/ Sw Pack - Sleeper W/ RKE W/AUTO REV:Diagram1
LT/RH/LoneStar - X15/A26 - Work Lights -LED W/ Sw Pack - Sleeper W/O RKE W/AUTO REV:Diagram1
LT/RH/LoneStar - X15/A26 - Work Lights LED W/ Sw Pack - Day Cab W/ RKE W/AUTO REV:Diagram1
LT/RH/LoneStar - X15/A26 - Work Lights LED W/ Sw Pack - Day Cab W/O RKE W/AUTO REV:Diagram1
LT/RH/LoneStar - X15/A26 - Work Lights W/ Sw Pack - Customer Supplied W/ RKE W/AUTO REV:Diagram1
LT/RH/LoneStar - X15/A26 - Work Lights W/ Sw Pack - Customer Supplied W/ RKE W/AUTO REV:Diagram2
LT/RH/LoneStar - X15/A26 - Work Lights W/ Sw Pack - Customer Supplied W/O RKE W/AUTO REV:Diagram1
LT/RH/LoneStar - X15/A26 - Work Lights W/ Sw Pack - Customer Supplied W/O RKE W/AUTO REV:Diagram2
LT/RH/LoneStar X15 - Auto Start Stop Oil Temp Sensor Auto Trans:Diagram1
LT/RH/LoneStar X15 - Auto Start Stop Oil Temp Sensor Manual Trans:Diagram1
LT/RH/LoneStar X15 - Auto Start Stop with Sleeper Auto Climate / Cab Temp with Oil Temp Sensor Auto Trans:Diagram1
LT/RH/LoneStar X15 - Auto Start Stop with Sleeper Auto Climate / Cab Temp with Oil Temp Sensor Manual Trans:Diagram1
LT/RH/LoneStar X15 - Heating Ventilation & Air Conditioning (HVAC) Auto Temp Control:Diagram1 - HVAC
LT/RH/LoneStar X15 - Heating Ventilation & Air Conditioning (HVAC) Manual:Diagram1 - HVAC

LT/RH/LoneStar X15 - Work Lights LED W/ Sw Pack - Day Cab W/ RKE W/MAN REV:Diagram1
LT/RH/LoneStar X15 - Work Lights LED W/ Sw Pack - Day Cab W/O RKE W/MAN REV:Diagram1
RH - X15/A26 - Directional Signal (Turn) W/ HEADLIGHTS:Diagram1
RH - X15/A26 - Headlights Halogen N/INT N/LOWW:Diagram1
RH - X15/A26 - Headlights Halogen N/INT W/LOWW:Diagram1
RH - X15/A26 - Headlights Halogen W/INT N/LOWW:Diagram1
RH - X15/A26 - Headlights Halogen W/INT W/LOWW:Diagram1
RH - X15/A26 - Headlights LED N/INT N/LOWW LT:Diagram1
RH - X15/A26 - Headlights LED N/INT W/LOWW LT:Diagram1
RH - X15/A26 - Headlights LED W/INT N/LOWW LT:Diagram1
RH - X15/A26 - Headlights LED W/INT W/LOWW LT:Diagram1
Telematics J1708:Telematics J1708

Mates MODU-BCM-A000-10-00

Name	Terminal Part Number	V-Min	Name	Wire Part Number	Wire CSA	Wire Spec	Wire Material description	Wire Color Description	Wire Length	End2 Terminal Part Number	End2 Pin Name	End2 Connect or
E1	-	-	-	-	-	-	-	-	-	-	-	-
E1	-	-	WIRE490301	-	0.0	-	-	-	0.0	-	C	1970
E1	-	-	WIRE490309	-	0.0	-	-	-	0.0	-	1	7TB1
E1	-	-	WIRE490310	-	0.0	-	-	-	0.0	-	E	830
E1	-	-	WIRE490311	-	0.0	-	-	-	0.0	-	D	1919A
E1	-	-	WIRE490312	-	0.0	-	-	-	0.0	-	D	1919
E1	-	-	WIRE490313	-	0.0	-	-	-	0.0	-	D	1919B
E1	-	-	WIRE490314	-	0.0	-	-	-	0.0	-	B	1920
E1	-	-	WIRE490315	-	0.0	-	-	-	0.0	-	5	1939M
E2	-	-	-	-	-	-	-	-	-	-	-	-

Name	Terminal Part Number	V-Min	Name	Wire Part Number	Wire CSA	Wire Spec	Wire Material description	Wire Color Description	Wire Length	End2 Terminal Part Number	End2 Pin Name	End2 Connector
E2	-	-	WIRE490300	-	0.0	-	-	-	0.0	-	D	1970
E2	-	-	WIRE490302	-	0.0	-	-	-	0.0	-	1	6TB1
E2	-	-	WIRE490303	-	0.0	-	-	-	0.0	-	D	830
E2	-	-	WIRE490304	-	0.0	-	-	-	0.0	-	C	1919A
E2	-	-	WIRE490305	-	0.0	-	-	-	0.0	-	C	1919
E2	-	-	WIRE490306	-	0.0	-	-	-	0.0	-	C	1919B
E2	-	-	WIRE490307	-	0.0	-	-	-	0.0	-	A	1920
E2	-	-	WIRE490308	-	0.0	-	-	-	0.0	-	4	1939M
E3	-	-	AA9Z	3510311R1	0.79	18.0	Thin Wall XLPE Primary Cable	GREY	1660.0	-	-	-
E3	-	-	AA9Z	3510311R1	0.79	18.0	Thin Wall XLPE Primary Cable	GREY	1660.0	-	X	-
E4	-	-	AA6	3510310R1	0.53	20.0	Thin Wall XLPE Primary Cable	GREY	1340.0	-	B3	1800
E4	-	-	AA6	3510310R1	0.53	20.0	Thin Wall XLPE Primary Cable	GREY	1340.0	-	-	-

Name	Terminal Part Number	V-Min	Name	Wire Part Number	Wire CSA	Wire Spec	Wire Material description	Wire Color Description	Wire Length	End2 Terminal Part Number	End2 Pin Name	End2 Connect or
E5	-	-	AA9A	3510311 R1	0.79	18.0	Thin Wall XLPE Primary Cable	GREY	180.0	-	X	-
E5	-	-	AA9A	3510311 R1	0.79	18.0	Thin Wall XLPE Primary Cable	GREY	180.0	-	-	-
E6	-	-	3H6DB	3510311 R1	0.79	18.0	Thin Wall XLPE Primary Cable	GREY	3075.0	-	19	1703M
E6	-	-	3H6DB	3510311 R1	0.79	18.0	Thin Wall XLPE Primary Cable	GREY	3075.0	-	-	-
E7	-	-	AA9B	3510311 R1	0.79	18.0	Thin Wall XLPE Primary Cable	GREY	245.0	-	X	-
E7	-	-	AA9B	3510311 R1	0.79	18.0	Thin Wall XLPE Primary Cable	GREY	245.0	-	-	-
E8	-	-	FF106	3510311 R1	0.79	18.0	Thin Wall XLPE Primary Cable	GREY	1055.0	-	41	1701
E8	-	-	FF106	3510311 R1	0.79	18.0	Thin Wall XLPE Primary Cable	GREY	1055.0	-	-	-

Name	Terminal Part Number	V-Min	Name	Wire Part Number	Wire CSA	Wire Spec	Wire Material description	Wire Color Description	Wire Length	End2 Terminal Part Number	End2 Pin Name	End2 Connector
E9	-	-	FC88	3510299 R1	0.79	18.0	Thin Wall XLPE Primary Cable	LIGHT GREEN	3075.0	-	-	-
E11	-	-	AA50	3510335 R1	0.79	18.0	Thin Wall XLPE Primary Cable	YELLOW 2	1300.0	-	P	A02-0009
E11	-	-	AA50	3510335 R1	0.79	18.0	Thin Wall XLPE Primary Cable	YELLOW 2	1300.0	-	P	0009
E11	-	-	AA50	3510335 R1	0.79	18.0	Thin Wall XLPE Primary Cable	YELLOW 2	1300.0	-	-	-
E12	-	-	AA59A	3510311 R1	0.79	18.0	Thin Wall XLPE Primary Cable	GREY	1055.0	-	32	1701
E12	-	-	AA59A	3510311 R1	0.79	18.0	Thin Wall XLPE Primary Cable	GREY	1055.0	-	-	-
E14	-	-	AA70	3510316 R1	0.53	20.0	Thin Wall XLPE Primary Cable	ORANGE	1340.0	-	B9	1800
E14	-	-	AA70	3510316 R1	0.53	20.0	Thin Wall XLPE Primary Cable	ORANGE	1340.0	-	-	-

Name	Terminal Part Number	V-Min	Name	Wire Part Number	Wire CSA	Wire Spec	Wire Material description	Wire Color Description	Wire Length	End2 Terminal Part Number	End2 Pin Name	End2 Connector
E15	-	-	ZS70A	3510316 R1	0.53	20.0	Thin Wall XLPE Primary Cable	ORANGE	1340.0	-	-	-
E16	-	-	AA11-GL	3510359 R1	0.79	18.0	Thin Wall XLPE Primary Cable	WHITE	1200.0	-	-	-
F5	-	-	WIRE489 803	-	0.0	-	-	-	0.0	-	PIN1	-
F5	-	-	-	-	-	-	-	-	-	-	-	-
F5	-	-	WIRE489 915	-	0.0	-	-	-	0.0	-	PIN1	-
F5	-	-	WIRE490 001	-	0.0	-	-	-	0.0	-	PIN1	-
F5	-	-	WIRE490 109	-	0.0	-	-	-	0.0	-	PIN1	-
F6	-	-	WIRE489 802	-	0.0	-	-	-	0.0	-	PIN1	-
F6	-	-	-	-	-	-	-	-	-	-	-	-
F6	-	-	WIRE489 914	-	0.0	-	-	-	0.0	-	PIN1	-
F6	-	-	WIRE490 000	-	0.0	-	-	-	0.0	-	PIN1	-
F6	-	-	WIRE490 108	-	0.0	-	-	-	0.0	-	PIN1	-
F7	-	-	FF61B	3510311 R1	0.79	18.0	Thin Wall XLPE Primary Cable	GREY	1055.0	-	40	1701

Name	Terminal Part Number	V-Min	Name	Wire Part Number	Wire CSA	Wire Spec	Wire Material description	Wire Color Description	Wire Length	End2 Terminal Part Number	End2 Pin Name	End2 Connector
F7	-	-	FF61B	3510311 R1	0.79	18.0	Thin Wall XLPE Primary Cable	GREY	1055.0	-	-	-
F9	-	-	AU28BA	3510329 R1	0.79	18.0	Thin Wall XLPE Primary Cable	TAN	3075.0	-	18	1703M
F9	-	-	AU28BA	3510329 R1	0.79	18.0	Thin Wall XLPE Primary Cable	TAN	3075.0	-	-	-
F10	-	-	EY71BC	3510318 R1	1.16	16.0	Thin Wall XLPE Primary Cable	ORANGE	2170.0	-	X	-
F10	-	-	BK92RAB	3510329 R1	0.79	18.0	Thin Wall XLPE Primary Cable	TAN	1410.0	-	X	-
F10	-	-	GM71BC	3510317 R1	0.79	18.0	Thin Wall XLPE Primary Cable	ORANGE	1410.0	-	X	-
F10	-	-	GM71BC	3510317 R1	0.79	18.0	Thin Wall XLPE Primary Cable	ORANGE	1410.0	-	-	-
F10	-	-	EY71BC	3510318 R1	1.16	16.0	Thin Wall XLPE Primary Cable	ORANGE	2170.0	-	-	-

Name	Terminal Part Number	V-Min	Name	Wire Part Number	Wire CSA	Wire Spec	Wire Material description	Wire Color Description	Wire Length	End2 Terminal Part Number	End2 Pin Name	End2 Connector
F11	-	-	JL116LB	3510311 R1	0.79	18.0	Thin Wall XLPE Primary Cable	GREY	2465.0	-	-	-
F11	-	-	JL116LB	3510311 R1	0.79	18.0	Thin Wall XLPE Primary Cable	GREY	2465.0	-	R6-30	1012
F14	-	-	FD88	3510299 R1	0.79	18.0	Thin Wall XLPE Primary Cable	LIGHT GREEN	3075.0	-	60	1703M
F14	-	-	FD88	3510299 R1	0.79	18.0	Thin Wall XLPE Primary Cable	LIGHT GREEN	3075.0	-	-	-
F15	-	-	FE88A	3510299 R1	0.79	18.0	Thin Wall XLPE Primary Cable	LIGHT GREEN	3075.0	-	59	1703M
F15	-	-	FE88A	3510299 R1	0.79	18.0	Thin Wall XLPE Primary Cable	LIGHT GREEN	3075.0	-	-	-
F16	-	-	JL116UB	3510311 R1	0.79	18.0	Thin Wall XLPE Primary Cable	GREY	2465.0	-	-	-
F16	-	-	JL116UB	3510311 R1	0.79	18.0	Thin Wall XLPE Primary Cable	GREY	2465.0	-	R3-30	1012

Connector Name J5-1602

Part Number 3598705C1

Instances LT - X15/A26 - Headlights Halogen N/INT N/LOWW:Diagram1
LT - X15/A26 - Headlights Halogen N/INT W/LOWW:Diagram1
LT - X15/A26 - Headlights Halogen W/INT N/LOWW:Diagram1
LT - X15/A26 - Headlights Halogen W/INT W/LOWW:Diagram1
LT - X15/A26 - Headlights LED N/ INT N/LOWW:Diagram1
LT - X15/A26 - Headlights LED N/ INT W/LOWW:Diagram1
LT - X15/A26 - Headlights LED W/INT N/LOWW:Diagram1
LT - X15/A26 - Headlights LED W/INT W/LOWW:Diagram1
LT/RH - X15/A26 - Directional Signal (Turn) With HEADLIGHTS:Diagram1

Mates MODU-BCM-A000-10-00

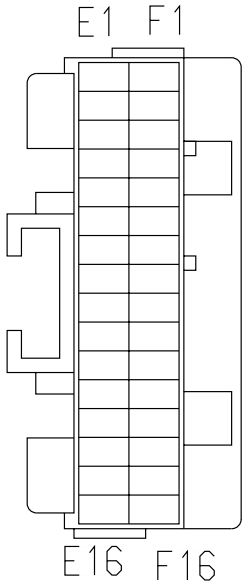

Name	Terminal Part Number	V-Min	Name	Wire Part Number	Wire CSA	Wire Spec	Wire Material description	Wire Color Description	Wire Length	End2 Terminal Part Number	End2 Pin Name	End2 Connect or
E5	-	-	AA9A	3510311 R1	0.79	18.0	Thin Wall XLPE Primary Cable	GREY	180.0	-	X	-
E11	-	-	AA50	3510335 R1	0.79	18.0	Thin Wall XLPE Primary Cable	YELLOW 2	1300.0	-	P	0009

Connector Name	J6-1606
Part Number	3759005C1
Instances	Cab J1939 (250Kbps):Cab J1939 (250Kbps) LoneStar - X15 - Adaptive Cruise Control w/o Display (Bendix):Diagram1 LoneStar - X15 - Adaptive Cruise Control w/o Display (Wabco):Diagram1 LoneStar - X15 - City Horn W/ 4PIN CLK W/RKA:Diagram1-Combination1 LoneStar - X15 - City Horn W/ 10PIN CLK W/RKA:Diagram1-Combination1 LoneStar - X15 - Cooling Fan Control With Switch:Diagram1 LoneStar - X15 - Crank Inhibit with Hood Switch - with new BCM Pin:Diagram2 LoneStar - X15 - Headlights Halogen N/INT N/LOWW:Diagram1 LoneStar - X15 - Headlights Halogen N/INT W/LOWW:Diagram1 LoneStar - X15 - Headlights Halogen W/INT N/LOWW:Diagram1 LoneStar - X15 - Tire Pressure (TPMS) (US & Canada):Diagram1 LoneStar - X15 - Windshield Washer Pump:Diagram1 LoneStar - X15 - Windshield Washer Pump & Low Fluid Sensor:Diagram1 LoneStar - X15/A26 - Front Fog Lamps:Diagram1 LoneStar - X15/A26 - Marker Lights (Halogen):Diagram1 Low Speed J1939 (125Kbps):Low Speed J1939 (125Kbps) LT - X15/A26 - Headlights Halogen N/INT N/LOWW:Diagram1 LT - X15/A26 - Headlights Halogen N/INT W/LOWW:Diagram1 LT - X15/A26 - Headlights Halogen W/INT N/LOWW:Diagram1 LT - X15/A26 - Headlights Halogen W/INT W/LOWW:Diagram1 LT - X15/A26 - Headlights LED N/ INT N/LOWW:Diagram1 LT - X15/A26 - Headlights LED N/ INT W/LOWW:Diagram1 LT - X15/A26 - Headlights LED W/INT N/LOWW:Diagram1 LT - X15/A26 - Headlights LED W/INT W/LOWW:Diagram1 LT/RH - A26 - Air Flow Restriction Monitoring A26:Diagram1 LT/RH - A26 - Air Flow Restriction Monitoring A26:Diagram2 LT/RH - A26 - Auto Neutral (Allison with Multiplex Switch and Confirmation Telltale):Diagram1 LT/RH - A26 - Cranking (Starter) GEN4 BCM W/ Thermal Overcrank - External Switch:Diagram1 LT/RH - A26 - Cranking (Starter) GEN4 BCM W/O Thermal Overcrank Wiring:Diagram1 LT/RH - A26 - DEF Economy Monitor (Cluster):Diagram1

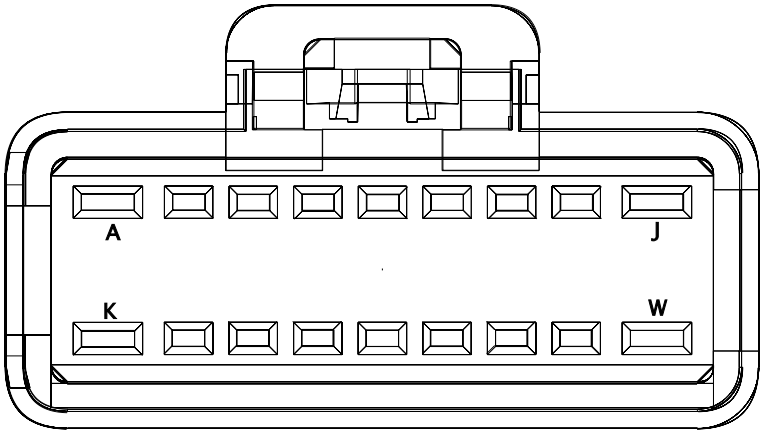

LT/RH - A26 - Starter Interlock (BCM HSD controlled W/ Clutch Switch W/ Auto Start Stop):Diagram1
LT/RH - A26 - Starter Interlock (BCM HSD controlled W/ Clutch Switch W/ Auto Start Stop):Diagram2
LT/RH - A26 - Starter Interlock (BCM LSD Controlled w/ Relay)_EATON XMSN:Diagram1
LT/RH - A26 - Starter Interlocks (Service Brake Interlock):Diagram1
LT/RH - A26 - Starter Interlocks A26 3K:Diagram1
LT/RH - A26 - Starter Interlocks A26 TC10:Diagram1
LT/RH - A26 - Transmission Oil Temperature-Manual Trans-Horizon Option 1:Diagram1
LT/RH - A26 - Transmission Oil Temperature-Manual Trans-Horizon Option 1:Diagram2
LT/RH - A26 - Transmission Oil Temperature-Manual Trans-Horizon Option 1:Diagram3
LT/RH - A26 - Transmission Oil Temperature-Manual Trans-Horizon Option 2:Diagram1
LT/RH - A26 - Transmission Oil Temperature-Manual Trans-Horizon Option 2:Diagram2
LT/RH - A26 - Transmission Oil Temperature-Manual Trans-Horizon Option 2:Diagram3
LT/RH - A26 - Transmission Power Take Off Dual PTO with Clutch Interlock:Diagram1
LT/RH - A26 - Transmission Power Take Off Dual Solenoid AUTO:Diagram1
LT/RH - A26 - Transmission Power Take Off Option 1:Diagram1
LT/RH - A26 - Transmission Power Take Off Option 2:Diagram1
LT/RH - A26 - Transmission Power Take Off W/ Clutch Interlock:Diagram1
LT/RH - A26 - Transmission Shifter (Eaton Endurant and Eaton Procision):Diagram1
LT/RH - A26 - Work Lights (2 Blunt Cuts Only W/O Relay) W/ Backup W/Manual Trans Day Cab:Diagram1
LT/RH - A26 - Work Lights (2 Blunt Cuts Only W/O Relay) W/ Backup W/Manual Trans Day Cab:Diagram2
LT/RH - A26 - Work Lights (2 Blunt Cuts Only W/O Relay) W/ Backup W/Manual Trans Day Cab:Diagram3
LT/RH - A26 - Work Lights (2 Blunt Cuts Only W/O Relay) W/ Backup W/Manual Trans Day Cab:Diagram4
LT/RH - A26 - Work Lights - LED W/ Sw Pack - Customer Supplied - Sleeper W/ RKE W/MAN REV:Diagram1
LT/RH - A26 - Work Lights - LED W/ Sw Pack - Customer Supplied - Sleeper W/ RKE W/MAN REV:Diagram2

LT/RH - A26 - Work Lights - LED W/ Sw Pack - Customer Supplied - Sleeper W/ RKE W/MAN REV:Diagram3
LT/RH - A26 - Work Lights - LED W/ Sw Pack - Customer Supplied - Sleeper W/ RKE W/MAN REV:Diagram4
LT/RH - A26 - Work Lights - LED W/ Sw Pack - Customer Supplied - Sleeper W/O RKE W/MAN REV:Diagram1
LT/RH - A26 - Work Lights - LED W/ Sw Pack - Customer Supplied - Sleeper W/O RKE W/MAN REV:Diagram2
LT/RH - A26 - Work Lights - LED W/ Sw Pack - Customer Supplied - Sleeper W/O RKE W/MAN REV:Diagram3
LT/RH - A26 - Work Lights - LED W/ Sw Pack - Customer Supplied - Sleeper W/O RKE W/MAN REV:Diagram4
LT/RH - A26 - Work Lights -LED W/ Sw Pack - Sleeper W/ RKE W/MAN REV:Diagram1
LT/RH - A26 - Work Lights -LED W/ Sw Pack - Sleeper W/ RKE W/MAN REV:Diagram2
LT/RH - A26 - Work Lights -LED W/ Sw Pack - Sleeper W/O RKE W/MAN REV:Diagram1
LT/RH - A26 - Work Lights -LED W/ Sw Pack - Sleeper W/O RKE W/MAN REV:Diagram2
LT/RH - A26 - Work Lights LED W/ Sw Pack - Day Cab W/ RKE W/MAN REV:Diagram1
LT/RH - A26 - Work Lights LED W/ Sw Pack - Day Cab W/ RKE W/MAN REV:Diagram2
LT/RH - A26 - Work Lights LED W/ Sw Pack - Day Cab W/O RKE W/MAN REV:Diagram1
LT/RH - A26 - Work Lights LED W/ Sw Pack - Day Cab W/O RKE W/MAN REV:Diagram2
LT/RH - A26 - Work Lights W/ Sw Pack - Customer Supplied W/ RKE W/MAN REV:Diagram1
LT/RH - A26 - Work Lights W/ Sw Pack - Customer Supplied W/ RKE W/MAN REV:Diagram2
LT/RH - A26 - Work Lights W/ Sw Pack - Customer Supplied W/ RKE W/MAN REV:Diagram3
LT/RH - A26 - Work Lights W/ Sw Pack - Customer Supplied W/ RKE W/MAN REV:Diagram4
LT/RH - A26 - Work Lights W/ Sw Pack - Customer Supplied W/ O RKE W/MAN REV:Diagram1
LT/RH - A26 - Work Lights W/ Sw Pack - Customer Supplied W/ O RKE W/MAN REV:Diagram2
LT/RH - A26 - Work Lights W/ Sw Pack - Customer Supplied W/ O RKE W/MAN REV:Diagram3
LT/RH - A26 - Work Lights W/ Sw Pack - Customer Supplied W/ O RKE W/MAN REV:Diagram4

LT/RH - X15/A26 - Land Departure Warning - (Bendix - AutoVue W/ Qualcomm Safety Direct):Diagram1
LT/RH - X15/A26 - 10 PIN ClockSpring:Diagram1
LT/RH - X15/A26 - Adaptive Cruise Control w/o Display (Bendix):Diagram1
LT/RH - X15/A26 - Adaptive Cruise Control w/o Display (Wabco):Diagram1
LT/RH - X15/A26 - Bendix; Tractor or Towing Truck; W/ Air SUSP; J1939 Driven Lamp:Diagram1
LT/RH - X15/A26 - Bendix; Tractor or Towing Truck; W/ Air SUSP; J1939 Driven Lamp:Diagram2
LT/RH - X15/A26 - City Horn W/ 4PIN CLK W/RKA:Diagram1-Combination1
LT/RH - X15/A26 - City Horn W/ 10PIN CLK W/RKA:Diagram1-Combination1
LT/RH - X15/A26 - Directional Signal (Turn) With HEADLIGHTS:Diagram1
LT/RH - X15/A26 - Directional Signal (Turn) With HEADLIGHTS (HAL-125):Diagram1
LT/RH - X15/A26 - Directional Signal (Turn) With HEADLIGHTS Option2:Diagram1
LT/RH - X15/A26 - Fog Lights Lamps:Diagram1
LT/RH - X15/A26 - Intake Manifold Pressure AUX gauge:Diagram1
LT/RH - X15/A26 - Lane Departure Warning - (Bendix - AutoVue N/ Qualcomm Safety Direct):Diagram1
LT/RH - X15/A26 - Lane Departure Warning - (Wabco OnLane 2.0 w/ roof speakers):Diagram1
LT/RH - X15/A26 - Lane Departure Warning - (Wabco OnLane):Diagram1
LT/RH - X15/A26 - License Plate Light (Dual LED Lamp Tail Light) Option 1:Diagram1
LT/RH - X15/A26 - License Plate Light (Dual LED Lamp Tail Light) Option 1:Diagram2
LT/RH - X15/A26 - License Plate Light (Dual LED Lamp Tail Light) Option 2:Diagram1
LT/RH - X15/A26 - License Plate Light (Dual LED Lamp Tail Light) Option 2:Diagram2
LT/RH - X15/A26 - License Plate Light (Tail Light Single Assy.) Option 1:Diagram1
LT/RH - X15/A26 - License Plate Light (Tail Light Single Assy.) Option 1:Diagram2
LT/RH - X15/A26 - License Plate Light (Tail Light Single Assy.)Option 2:Diagram1

LT/RH - X15/A26 - License Plate Light (Tail Light Single Assy.)Option 2:Diagram2
LT/RH - X15/A26 - Marker Lights (With 113 Halogen):Diagram1
LT/RH - X15/A26 - Marker Lights (With 125 Halogen):Diagram1
LT/RH - X15/A26 - Marker Lights (With 125 LED):Diagram1
LT/RH - X15/A26 - Marker Lights (With113 LED):Diagram1
LT/RH - X15/A26 - Mirrors (Heat) [Switch Pack Actuated Relay Driven]:Diagram1
LT/RH - X15/A26 - Park Brake Control (Monitoring) (W/Vehicle Speed):Diagram1
LT/RH - X15/A26 - Park Brake Control (Monitoring)(GEN IV BCM):Diagram1
LT/RH - X15/A26 - Tire Pressure (TPMS) (US & Canada):Diagram1
LT/RH - X15/A26 - Windshield Washer Pump:Diagram1
LT/RH - X15/A26 - Windshield Washer Pump & Low Fluid Sensor:Diagram1
LT/RH - X15/A26 - Windshield Wipers Cruise Disable & Park Brake W/Wipers ON:Diagram1
LT/RH - X15/A26 - Windshield Wipers Cruise Disable W/Wipers ON:Diagram1
LT/RH - X15/A26 - with Hood Switch - with new BCM Pin:Diagram1
LT/RH - X15/A26 - Work Lights W/ Sw Pack - Customer Supplied:Diagram1
LT/RH - X15/A26 - Work Lights W/ Sw Pack - Customer Supplied:Diagram2
LT/RH A26 - A26 - Heating Ventilation & Air Conditioning (HVAC) Manual:Diagram1 - HVAC - Option1
LT/RH A26 - A26 - Heating Ventilation & Air Conditioning (HVAC) Manual:Diagram2 - HVAC - Option2
LT/RH A26 - Auto Start Stop and Sleeper Auto Climate / Cab Temp / Oil Mapping Manual Trans:Diagram1
LT/RH A26 - Auto Start Stop Battery & Oil Temp Mapping Auto Trans:Diagram1
LT/RH A26 - Auto Start Stop Battery & Oil Temp Mapping Manual Trans:Diagram1
LT/RH A26 - Auto Start Stop with Sleeper Auto Climate / Cab Temp / Oil Mapping Auto Trans:Diagram1
LT/RH A26 - Heating Ventilation & Air Conditioning (HVAC) Auto Temp Control:Diagram1 - HVAC - Option1
LT/RH A26 - Heating Ventilation & Air Conditioning (HVAC) Auto Temp Control:Diagram2 - HVAC - Option2
LT/RH A26 - Starting Aid (Flame Start):Diagram1

LT/RH A26 - X15/A26 - Up Shift Indicator (CA 2.0):Diagram1
LT/RH X15 - Cooling Fan Control With Switch:Diagram1
LT/RH/LoneStar - X15 - Air Flow Restriction Monitoring:Diagram1
LT/RH/LoneStar - X15 - Cranking (Starter) GEN4 BCM W/ Thermal Overcrank - External Switch:Diagram1
LT/RH/LoneStar - X15 - Cranking (Starter) GEN4 BCM W/O Thermal Overcrank Wiring:Diagram1
LT/RH/LoneStar - X15 - DEF Economy Monitor (GEN IV Cluster w/ Cummins ENG):Diagram1
LT/RH/LoneStar - X15 - Starter Interlock (BCM HSD controlled W/ Clutch Switch W/ Auto Start Stop):Diagram1
LT/RH/LoneStar - X15 - Starter Interlock (BCM LSD Controlled w/ Relay)_EATON XMSN:Diagram1
LT/RH/LoneStar - X15 - Starter Interlocks (Service Brake Interlock):Diagram1
LT/RH/LoneStar - X15 - Starter Interlocks ISX TC10:Diagram1
LT/RH/LoneStar - X15 - Starting Aid (Ether Start):Diagram1
LT/RH/LoneStar - X15 - Transmission Oil Temperature-Manual Trans-Horizon Option 1:Diagram1
LT/RH/LoneStar - X15 - Transmission Oil Temperature-Manual Trans-Horizon Option 1:Diagram2
LT/RH/LoneStar - X15 - Transmission Oil Temperature-Manual Trans-Horizon Option 1:Diagram3
LT/RH/LoneStar - X15 - Transmission Oil Temperature-Manual Trans-Horizon Option 2:Diagram1
LT/RH/LoneStar - X15 - Transmission Oil Temperature-Manual Trans-Horizon Option 2:Diagram2
LT/RH/LoneStar - X15 - Transmission Oil Temperature-Manual Trans-Horizon Option 2:Diagram3
LT/RH/LoneStar - X15 - Transmission Power Take Off:Diagram1
LT/RH/LoneStar - X15 - Transmission Power Take Off Dual PTO with Clutch Interlock MANUAL:Diagram1
LT/RH/LoneStar - X15 - Transmission Power Take Off Dual Solenoid AUTO:Diagram1
LT/RH/LoneStar - X15 - Transmission Power Take Off W/ Clutch Interlock:Diagram1
LT/RH/LoneStar - X15 - Transmission Shifter (Eaton Endurant and Eaton Procision):Diagram1
LT/RH/LoneStar - X15 - Transmission SINGLE Power Take Off MANUAL:Diagram1
LT/RH/LoneStar - X15 - Work Lights (2 Blunt Cuts Only W/O Relay) W/Backup W/Manual Trans:Diagram1

LT/RH/LoneStar - X15 - Work Lights (2 Blunt Cuts Only W/O Relay) W/Backup W/Manual Trans:Diagram2
LT/RH/LoneStar - X15 - Work Lights - LED W/ Sw Pack - Customer Supplied - Sleeper W/ RKE W/MAN REV:Diagram1
LT/RH/LoneStar - X15 - Work Lights - LED W/ Sw Pack - Customer Supplied - Sleeper W/ RKE W/MAN REV:Diagram2
LT/RH/LoneStar - X15 - Work Lights - LED W/ Sw Pack - Customer Supplied - Sleeper W/O RKE W/MAN REV:Diagram1
LT/RH/LoneStar - X15 - Work Lights - LED W/ Sw Pack - Customer Supplied - Sleeper W/O RKE W/MAN REV:Diagram2
LT/RH/LoneStar - X15 - Work Lights -LED W/ Sw Pack - Sleeper W/ RKE W/MAN REV:Diagram1
LT/RH/LoneStar - X15 - Work Lights -LED W/ Sw Pack - Sleeper W/O RKE W/MAN REV:Diagram1
LT/RH/LoneStar - X15 - Work Lights W/ Sw Pack - Customer Supplied W/ RKE W/MAN REV:Diagram1
LT/RH/LoneStar - X15 - Work Lights W/ Sw Pack - Customer Supplied W/ RKE W/MAN REV:Diagram2
LT/RH/LoneStar - X15 - Work Lights W/ Sw Pack - Customer Supplied W/O RKE W/MAN REV:Diagram1
LT/RH/LoneStar - X15 - Work Lights W/ Sw Pack - Customer Supplied W/O RKE W/MAN REV:Diagram2
LT/RH/LoneStar - X15/A26 - 2 Driver Controlled Locking Differential - FR & RR Axle (DANA):Diagram1
LT/RH/LoneStar - X15/A26 - 2 Driver Controlled Locking Differential - FR & RR Axle (MERITOR):Diagram1
LT/RH/LoneStar - X15/A26 - Adjustable Engine Speed Control (PTO) 4-pin Clockspring:Diagram1
LT/RH/LoneStar - X15/A26 - Adjustable Engine Speed Control (PTO) 10-PIN ClockSpring:Diagram1
LT/RH/LoneStar - X15/A26 - Auto Neutral (J1939 Comms TC10 and Ultrashift):Diagram1
LT/RH/LoneStar - X15/A26 - Automatic Lighting (Dual Sensor Solar/Twilight):Diagram1
LT/RH/LoneStar - X15/A26 - Automatic Lighting (Single Sensor Twilight):Diagram1
LT/RH/LoneStar - X15/A26 - Auxiliary Trailer Power CAV D:Diagram1
LT/RH/LoneStar - X15/A26 - Auxiliary Trailer Power CAV D:Diagram2
LT/RH/LoneStar - X15/A26 - Auxiliary Trailer Power W/ ISO Trailer Socket:Diagram1
LT/RH/LoneStar - X15/A26 - Axle Loading (Weight) Rear:Diagram1

LT/RH/LoneStar - X15/A26 - Axle Loading (Weight) Rear:Diagram2
LT/RH/LoneStar - X15/A26 - BCM (Body Control Module):Connector J6-1606
LT/RH/LoneStar - X15/A26 - Brake Pressure (Auxiliary Gauge):Diagram1
LT/RH/LoneStar - X15/A26 - Brake Pressure (Virtual Gauge):Diagram1
LT/RH/LoneStar - X15/A26 - Brake Switch:Diagram1
LT/RH/LoneStar - X15/A26 - Cab Dome Light - (Sleeper Cab):Diagram1
LT/RH/LoneStar - X15/A26 - Compressed Air Supply (Primary and Secondary Gauge):Diagram1
LT/RH/LoneStar - X15/A26 - Coolant Temperature Monitoring (J1939 Comm):Diagram1
LT/RH/LoneStar - X15/A26 - Daytime Running Lights:Diagram1
LT/RH/LoneStar - X15/A26 - Door Ajar Reminder (Entry/ Exit):Diagram1
LT/RH/LoneStar - X15/A26 - DPF Regen Switch Only:Diagram1
LT/RH/LoneStar - X15/A26 - DPF With Monostable Inhibit Switch:Diagram1
LT/RH/LoneStar - X15/A26 - DPF With/ Bi-Stable Inhibit Switch:Diagram1
LT/RH/LoneStar - X15/A26 - Driver Controlled Locking Differential - FR & RR Axle (DANA):Diagram1
LT/RH/LoneStar - X15/A26 - Driver Controlled Locking Differential - FR & RR Axle (MERITOR):Diagram1
LT/RH/LoneStar - X15/A26 - Driver Controlled Locking Differential - FR (MERITOR):Diagram1
LT/RH/LoneStar - X15/A26 - Driver Controlled Locking Differential - RR Axle (DANA):Diagram1
LT/RH/LoneStar - X15/A26 - Driver Controlled Locking Differential - RR Axle (DANA):Diagram2
LT/RH/LoneStar - X15/A26 - Driver Controlled Locking Differential - RR Axle (MERITOR):Diagram1
LT/RH/LoneStar - X15/A26 - Driver Controlled Locking Differential - RR Axle (MERITOR):Diagram2
LT/RH/LoneStar - X15/A26 - Electrical Load Control(Load Shed):Diagram1
LT/RH/LoneStar - X15/A26 - Engine Brake (CA2.0; Mux Switch):Diagram1
LT/RH/LoneStar - X15/A26 - Engine Brake (CA2.0; Stalk Shifter):Diagram1

LT/RH/LoneStar - X15/A26 - Engine Idle Increment/Decrement (Steering Wheel Switch - 4 Pin):Diagram1
LT/RH/LoneStar - X15/A26 - Engine Idle Increment/Decrement (Steering Wheel Switch - 10 Pin):Diagram1
LT/RH/LoneStar - X15/A26 - Engine Oil Pressure:Diagram1
LT/RH/LoneStar - X15/A26 - Engine Oil Temperature (NA MUX_AUX Gauge):Diagram1
LT/RH/LoneStar - X15/A26 - Engine Oil Temperature (NA-Mux):Diagram1
LT/RH/LoneStar - X15/A26 - Engine Usage Monitoring (Base):Diagram1
LT/RH/LoneStar - X15/A26 - Engine Usage Monitoring (VID Option):Diagram1
LT/RH/LoneStar - X15/A26 - Engine/Exhaust Brake:Diagram1
LT/RH/LoneStar - X15/A26 - Exterior Lamp Check:Diagram1
LT/RH/LoneStar - X15/A26 - Exterior Lamp Reminder:Diagram1
LT/RH/LoneStar - X15/A26 - Fifth Wheel Slide:Diagram1
LT/RH/LoneStar - X15/A26 - Floor/Search Lights Sleeper:Diagram1
LT/RH/LoneStar - X15/A26 - Floor/Search Lights Sleeper (1 Light):Diagram1
LT/RH/LoneStar - X15/A26 - Fuel Economy Monitor:Diagram1
LT/RH/LoneStar - X15/A26 - Fuel Level (Single Tank - Left Side):Diagram1
LT/RH/LoneStar - X15/A26 - Fuel Level (Single Tank - Left Side):Diagram2
LT/RH/LoneStar - X15/A26 - Fuel Level (Single Tank - Left Side):Diagram3
LT/RH/LoneStar - X15/A26 - Fuel Level (Single Tank - Left Side):Diagram4
LT/RH/LoneStar - X15/A26 - Fuel Level (Single Tank - Left Side):Diagram5
LT/RH/LoneStar - X15/A26 - Fuel Level (Single Tank - Left Side):Diagram6
LT/RH/LoneStar - X15/A26 - Heated Mirrors (Door Pod Actuated Cab and Hood Mounted):Diagram1
LT/RH/LoneStar - X15/A26 - Height Control:Diagram1
LT/RH/LoneStar - X15/A26 - Hill Start Aid (Bendix):Diagram1
LT/RH/LoneStar - X15/A26 - Hill Start Aid (Bendix):Diagram2
LT/RH/LoneStar - X15/A26 - Hill Start Aid (Bendix):Diagram3
LT/RH/LoneStar - X15/A26 - Hill Start Aid (Wabco):Diagram1
LT/RH/LoneStar - X15/A26 - Instrument Cluster - Bulb Check:Diagram1
LT/RH/LoneStar - X15/A26 - Intake Manifold Pressure:Diagram1

LT/RH/LoneStar - X15/A26 - Jaw Monitoring:Diagram1
LT/RH/LoneStar - X15/A26 - Jaw Unlock Control (Standard):Diagram1
LT/RH/LoneStar - X15/A26 - Jaw Unlock Control W/ SOLENOIDS W/SWITCH PACKS:Diagram1
LT/RH/LoneStar - X15/A26 - Key Switch (Operator Input):Diagram1
LT/RH/LoneStar - X15/A26 - License Plate Light (Tail Light Single Assy.) Option 1:Diagram1
LT/RH/LoneStar - X15/A26 - License Plate Light (Tail Light Single Assy.) Option 1:Diagram2
LT/RH/LoneStar - X15/A26 - License Plate Light (Tail Light Single Assy.) Option 2:Diagram1-Combination1
LT/RH/LoneStar - X15/A26 - License Plate Light (Tail Light Single Assy.) Option 2:Diagram1-Combination2
LT/RH/LoneStar - X15/A26 - Lighting Sleeper Dome:Diagram1
LT/RH/LoneStar - X15/A26 - MARKER/PARK LIGHTS - W/ Marker Interrupt 10pin CLCKSPRING:Diagram1
LT/RH/LoneStar - X15/A26 - Navistar Telematics Module - Programming:Diagram1
LT/RH/LoneStar - X15/A26 - Odometer (Cluster):Diagram1
LT/RH/LoneStar - X15/A26 - Park Brake Controls (Non Lever Park Brake):Diagram1
LT/RH/LoneStar - X15/A26 - Park Brake Controls (with Alarm IGN ON/OFF):Diagram1
LT/RH/LoneStar - X15/A26 - Park Brake Reminder (Non-Stationary) (CA2.0):Diagram1
LT/RH/LoneStar - X15/A26 - PARK LIGHTS - W/Marker Interrupt 4 pin clockspring:Diagram1
LT/RH/LoneStar - X15/A26 - Power Divider Lock Control and Monitoring:Diagram1
LT/RH/LoneStar - X15/A26 - Power Door Locks:Diagram1
LT/RH/LoneStar - X15/A26 - Power Windows:Diagram1
LT/RH/LoneStar - X15/A26 - Real Time Clock (RTC) (Standard):Diagram1
LT/RH/LoneStar - X15/A26 - Rear AUTO HVAC (No Idle) W/ Pre-Heat (Bergstrom Heat and Cool w/ Condensation) 2 SWITCHES:Diagram3 - Espar Circuit
LT/RH/LoneStar - X15/A26 - Rear HVAC (No Idle Heater) (Espar) Option 1:Diagram1
LT/RH/LoneStar - X15/A26 - Rear HVAC (No Idle Heater) (Espar) Option 2:Diagram1
LT/RH/LoneStar - X15/A26 - Rear HVAC (No Idle Heater) (Webasto Smartemp):Diagram1

LT/RH/LoneStar - X15/A26 - Rear HVAC (No Idle Heater) (Webasto Std N/Swift) N/ Heat Swtich:Diagram1
LT/RH/LoneStar - X15/A26 - Rear HVAC (No Idle Heater) (Webasto Std W/Swift) N/ Heat Switch:Diagram1
LT/RH/LoneStar - X15/A26 - Rear HVAC (No Idle) W/ Pre-Heat (Bergstrom Heat and Cool w/ Condensation) 2 SWITCHES Option 1:Diagram1 - Powers, Grounds & Controls
LT/RH/LoneStar - X15/A26 - Rear HVAC (No Idle) W/ Pre-Heat (Bergstrom Heat and Cool w/ Condensation) 2 SWITCHES Option 2:Diagram1 - Powers, Grounds & Controls
LT/RH/LoneStar - X15/A26 - Rear HVAC (No Idle) W/ Pre-Heat (Bergstrom Heat and Cool w/ Condensation) 4 SWITCHES Option 1:Diagram1 - Powers, Grounds & Controls
LT/RH/LoneStar - X15/A26 - Rear HVAC (No Idle) W/ Pre-Heat (Bergstrom Heat and Cool w/ Condensation) 4 SWITCHES Option 2:Diagram1 - Powers, Grounds & Controls
LT/RH/LoneStar - X15/A26 - Rear HVAC (Sleeper W/ Deluxe):Diagram1
LT/RH/LoneStar - X15/A26 - Rear HVAC (Sleeper W/ Premium):Diagram1
LT/RH/LoneStar - X15/A26 - Rear Lights Stop - Dual Assembly:Diagram1
LT/RH/LoneStar - X15/A26 - Rear Lights Stop - Dual Assembly:Diagram2
LT/RH/LoneStar - X15/A26 - Rear Lights Stop - Single Assembly Option 1:Diagram1
LT/RH/LoneStar - X15/A26 - Rear Lights Stop - Single Assembly Option 1:Diagram2
LT/RH/LoneStar - X15/A26 - Rear Lights Stop - Single Assembly Option 2:Diagram1
LT/RH/LoneStar - X15/A26 - Rear Lights Stop - Single Assembly Option 2:Diagram2
LT/RH/LoneStar - X15/A26 - Rear Manual HVAC (No Idle) W/ Pre-Heat (Bergstrom Heat and Cool w/ Condensation) 2 SWITCHES:Diagram3 - Espar Circuit
LT/RH/LoneStar - X15/A26 - Remote Keyless Access:Diagram1
LT/RH/LoneStar - X15/A26 - Seatbelt Reminder (Warning) (Driver & Passenger in parallel):Diagram1
LT/RH/LoneStar - X15/A26 - Seatbelt Reminder (Warning) (Driver only):Diagram1
LT/RH/LoneStar - X15/A26 - Seats (RollTek) Driver and Passenger (Hard Wired):Diagram1
LT/RH/LoneStar - X15/A26 - Seats (RolTek) Drivers Seat Only (Hard Wired) - Leather:Diagram1

LT/RH/LoneStar - X15/A26 - Seats (RolTek) Drivers Seat Only (Hard Wired) - Mordura:Diagram1
LT/RH/LoneStar - X15/A26 - Seats (RolTek) Drivers Seat Only (Hard Wired) - Vinyl:Diagram1
LT/RH/LoneStar - X15/A26 - Single Axle Temperature Monitoring:Diagram1
LT/RH/LoneStar - X15/A26 - Single Axle Temperature Monitoring w/Aux Gauge:Diagram1
LT/RH/LoneStar - X15/A26 - Tandem Axle Temperature Monitoring:Diagram1
LT/RH/LoneStar - X15/A26 - Tandem Axle Temperature Monitoring:Diagram2
LT/RH/LoneStar - X15/A26 - Tandem Axle Temperature Monitoring w/ Single SNSR and AUX Gauge:Diagram1
LT/RH/LoneStar - X15/A26 - Tandem Axle Temperature Monitoring w/ Single SNSR and AUX Gauge:Diagram1
LT/RH/LoneStar - X15/A26 - Tandem Axle Temperature Monitoring w/Aux Gauge:Diagram1
LT/RH/LoneStar - X15/A26 - Tandem Axle Temperature Monitoring w/Aux Gauge:Diagram2
LT/RH/LoneStar - X15/A26 - Theft Deterrent (Standard J1939 Mux SW):Diagram1
LT/RH/LoneStar - X15/A26 - Traction Control (Bendix Controller):Diagram1
LT/RH/LoneStar - X15/A26 - Traction Control (Bendix Controller):Diagram2
LT/RH/LoneStar - X15/A26 - Traction Control (Bendix Controller) Option 2:Diagram1
LT/RH/LoneStar - X15/A26 - Traction Control (Bendix Controller) Option 2:Diagram2
LT/RH/LoneStar - X15/A26 - Traction Control (Wabco Controller):Diagram1
LT/RH/LoneStar - X15/A26 - Traction Control (Wabco Controller):Diagram2
LT/RH/LoneStar - X15/A26 - Traction Control (Wabco Controller):Diagram3
LT/RH/LoneStar - X15/A26 - Transmission - MODE Selection:Diagram1
LT/RH/LoneStar - X15/A26 - Transmission Oil Temperature (Automatic Trans W/ Aux Gauge):Diagram1
LT/RH/LoneStar - X15/A26 - Transmission Oil Temperature (Automatic Trans):Diagram1
LT/RH/LoneStar - X15/A26 - Transmission Range Inhibit (J1939 Comm):Diagram1

LT/RH/LoneStar - X15/A26 - Trip Odometer (Cluster):Diagram1
LT/RH/LoneStar - X15/A26 - Vehicle Information Display (VID-W/BT):Diagram1
LT/RH/LoneStar - X15/A26 - Vehicle Information Display (VID-W/O BT):Diagram1
LT/RH/LoneStar - X15/A26 - Vehicle Speed Control (Cruise Control) 4 - PIN:Diagram1
LT/RH/LoneStar - X15/A26 - Voltage Monitoring (Voltmeter) (with Aux gauge):Diagram1
LT/RH/LoneStar - X15/A26 - Voltage Monitoring (Voltmeter) Option 1:Diagram1
LT/RH/LoneStar - X15/A26 - Voltage Monitoring (Voltmeter) Option 2:Diagram1
LT/RH/LoneStar - X15/A26 - Work Lights (2 Blunt Cuts Only W/O Relay):Diagram1
LT/RH/LoneStar - X15/A26 - Work Lights (2 Blunt Cuts Only W/O Relay):Diagram2
LT/RH/LoneStar - X15/A26 - Work Lights (2 Blunt Cuts Only W/O Relay) W/Backup W/Auto Trans (Allison and Endurant):Diagram1
LT/RH/LoneStar - X15/A26 - Work Lights (2 Blunt Cuts Only W/O Relay) W/Backup W/Auto Trans (Allison and Endurant):Diagram2
LT/RH/LoneStar - X15/A26 - Work Lights - LED W/ Sw Pack - Customer Supplied - Sleeper:Diagram1
LT/RH/LoneStar - X15/A26 - Work Lights - LED W/ Sw Pack - Customer Supplied - Sleeper:Diagram2
LT/RH/LoneStar - X15/A26 - Work Lights - LED W/ Sw Pack - Customer Supplied - Sleeper W/ RKE W/AUTO REV:Diagram1
LT/RH/LoneStar - X15/A26 - Work Lights - LED W/ Sw Pack - Customer Supplied - Sleeper W/ RKE W/AUTO REV:Diagram2
LT/RH/LoneStar - X15/A26 - Work Lights - LED W/ Sw Pack - Customer Supplied - Sleeper W/O RKE:Diagram1
LT/RH/LoneStar - X15/A26 - Work Lights - LED W/ Sw Pack - Customer Supplied - Sleeper W/O RKE:Diagram2
LT/RH/LoneStar - X15/A26 - Work Lights - LED W/ Sw Pack - Customer Supplied - Sleeper W/O RKE W/AUTO REV:Diagram1
LT/RH/LoneStar - X15/A26 - Work Lights - LED W/ Sw Pack - Customer Supplied - Sleeper W/O RKE W/AUTO REV:Diagram2
LT/RH/LoneStar - X15/A26 - Work Lights -LED W/ Sw Pack - Sleeper:Diagram1
LT/RH/LoneStar - X15/A26 - Work Lights -LED W/ Sw Pack - Sleeper W/ RKE W/AUTO REV:Diagram1

LT/RH/LoneStar - X15/A26 - Work Lights -LED W/ Sw Pack - Sleeper W/O RKE:Diagram1
LT/RH/LoneStar - X15/A26 - Work Lights -LED W/ Sw Pack - Sleeper W/O RKE W/AUTO REV:Diagram1
LT/RH/LoneStar - X15/A26 - Work Lights LED W/ Sw Pack - Day Cab:Diagram1
LT/RH/LoneStar - X15/A26 - Work Lights LED W/ Sw Pack - Day Cab W/ RKE W/AUTO REV:Diagram1
LT/RH/LoneStar - X15/A26 - Work Lights LED W/ Sw Pack - Day Cab W/O RKE:Diagram1
LT/RH/LoneStar - X15/A26 - Work Lights W/ Sw Pack - Customer Supplied:Diagram1
LT/RH/LoneStar - X15/A26 - Work Lights W/ Sw Pack - Customer Supplied:Diagram2
LT/RH/LoneStar - X15/A26 - Work Lights W/ Sw Pack - Customer Supplied W/ RKE W/AUTO REV:Diagram1
LT/RH/LoneStar - X15/A26 - Work Lights W/ Sw Pack - Customer Supplied W/ RKE W/AUTO REV:Diagram2
LT/RH/LoneStar - X15/A26 - Work Lights W/ Sw Pack - Customer Supplied W/O RKE W/AUTO REV:Diagram1
LT/RH/LoneStar - X15/A26 - Work Lights W/ Sw Pack - Customer Supplied W/O RKE W/AUTO REV:Diagram2
LT/RH/LoneStar X15 - Auto Start Stop Oil Temp Sensor Auto Trans:Diagram1
LT/RH/LoneStar X15 - Auto Start Stop Oil Temp Sensor Manual Trans:Diagram1
LT/RH/LoneStar X15 - Auto Start Stop with Sleeper Auto Climate / Cab Temp with Oil Temp Sensor Auto Trans:Diagram1
LT/RH/LoneStar X15 - Auto Start Stop with Sleeper Auto Climate / Cab Temp with Oil Temp Sensor Manual Trans:Diagram1
LT/RH/LoneStar X15 - Heating Ventilation & Air Conditioning (HVAC) Auto Temp Control:Diagram1 - HVAC
LT/RH/LoneStar X15 - Heating Ventilation & Air Conditioning (HVAC) Manual:Diagram1 - HVAC
LT/RH/LoneStar X15 - Work Lights LED W/ Sw Pack - Day Cab W/ RKE W/MAN REV:Diagram1
LT/RH/LoneStar X15 - Work Lights LED W/ Sw Pack - Day Cab W/O RKE W/MAN REV:Diagram1
Powertrain J1939 (500Kbps) Edurant Transmission A26:Powertrain J1939 (500Kbps) Edurant Transmission A26
Powertrain J1939 (500Kbps) Allison 3K Transmission A26:Powertrain J1939 (500Kbps) Allison 3K A26

Powertrain J1939 (500Kbps) Eaton Ultrashift+ Transmission
A26:Powertrain J1939 (500Kbps) Eaton Ultrashift+ Transmission A26
Powertrain J1939 (500Kbps) Eaton Ultrashift+ Transmission
X15:Powertrain J1939 (500kbps) Eaton Ultrashift+ X15
Powertrain J1939 (500Kbps) Edurant Transmission
X15:Powertrain J1939 (500kbps) Endurant Transmission X15
Powertrain J1939 (500Kbps) Manual Transmission
A26:Powertrain Standard J1939 (500Kbps) A26 Engine
Powertrain J1939 (500Kbps) Manual Transmission
X15:Powertrain Standard J1939 (500kbps) Manual Transmission X15
Powertrain J1939 (500Kbps) TC10 Transmission A26:Powertrain J1939 (500Kbps) TC10 Transmission A26
Powertrain J1939 (500Kbps) TC10 Transmission X15:Powertrain J1939 (500kbps) TC10 Transmission X15
Relays - Grid Management (N/Load Shed Day Cab):Diagram1
Relays - Grid Management (W/Load Shed Day Cab):Diagram1
Relays - Grid Management (W/Load Shed Sleeper Cab):Diagram1
RH - X15/A26 - Directional Signal (Turn) W/ HEADLIGHTS:Diagram1
RH - X15/A26 - Headlights Halogen N/INT N/LOWW:Diagram1
RH - X15/A26 - Headlights Halogen N/INT W/LOWW:Diagram1
RH - X15/A26 - Headlights Halogen W/INT N/LOWW:Diagram1
RH - X15/A26 - Headlights LED N/INT N/LOWW LT:Diagram1
RH - X15/A26 - Headlights LED N/INT W/LOWW LT:Diagram1
RH - X15/A26 - Headlights LED W/INT N/LOWW LT:Diagram1

Mates MODU-BCM-A000-10-00

Name	Terminal Part Number	V-Min	Name	Wire Part Number	Wire CSA	Wire Spec	Wire Material description	Wire Color Description	Wire Length	End2 Terminal Part Number	End2 Pin Name	End2 Connect or
A	-	-	AV12	3510340 R1	0.53	20.0	Thin Wall XLPE Primary Cable	LIGHT BLUE	2515.0	-	R4-85	1011
A	-	-	AW12	3510340 R1	0.53	20.0	Thin Wall XLPE Primary Cable	LIGHT BLUE	730.0	-	X	-

Name	Terminal Part Number	V-Min	Name	Wire Part Number	Wire CSA	Wire Spec	Wire Material description	Wire Color Description	Wire Length	End2 Terminal Part Number	End2 Pin Name	End2 Connector
A	-	-	AV12	3510340 R1	0.53	20.0	Thin Wall XLPE Primary Cable	LIGHT BLUE	2515.0	-	-	-
A	-	-	3Y12	3510340 R1	0.53	20.0	Thin Wall XLPE Primary Cable	LIGHT BLUE	2360.0	-	-	-
A	-	-	AY12	3510341 R1	0.79	18.0	Thin Wall XLPE Primary Cable	LIGHT BLUE	2360.0	-	-	-
A	-	-	AW12	3510340 R1	0.53	20.0	Thin Wall XLPE Primary Cable	LIGHT BLUE	730.0	-	-	-
B	-	-	6K166B	3510298 R1	0.53	20.0	Thin Wall XLPE Primary Cable	LIGHT GREEN	2330.0	-	X	-
B	-	-	6K166B	3510298 R1	0.53	20.0	Thin Wall XLPE Primary Cable	LIGHT GREEN	2330.0	-	-	-
D	-	-	-	-	-	-	-	-	-	-	-	-
D	-	-	WIRE223939	-	0.0	-	-	-	0.0	-	PIN1	-
E	-	-	-	-	-	-	-	-	-	-	-	-
E	-	-	WIRE223938	-	0.0	-	-	-	0.0	-	PIN1	-
G	-	-	WIRE223774	-	0.0	-	-	-	0.0	-	PIN1	-
G	-	-	-	-	-	-	-	-	-	-	-	-

Name	Terminal Part Number	V-Min	Name	Wire Part Number	Wire CSA	Wire Spec	Wire Material description	Wire Color Description	Wire Length	End2 Terminal Part Number	End2 Pin Name	End2 Connector
H	-	-	WIRE223773	-	0.0	-	-	-	0.0	-	PIN1	-
H	-	-	-	-	-	-	-	-	-	-	-	-
J	-	-	AH166A	3510298 R1	0.53	20.0	Thin Wall XLPE Primary Cable	LIGHT GREEN	2710.0	-	R1-86	1016
J	-	-	AG166A	3510298 R1	0.53	20.0	Thin Wall XLPE Primary Cable	LIGHT GREEN	430.0	-	X	-
J	-	-	AG166A	3510298 R1	0.53	20.0	Thin Wall XLPE Primary Cable	LIGHT GREEN	430.0	-	-	-
J	-	-	AH166A	3510298 R1	0.53	20.0	Thin Wall XLPE Primary Cable	LIGHT GREEN	2710.0	-	-	-
K	-	-	6K11-GE	3510358 R1	0.53	20.0	Thin Wall XLPE Primary Cable	WHITE	1825.0	-	-	-
L	-	-	AP75WC	3510299 R1	0.79	18.0	Thin Wall XLPE Primary Cable	LIGHT GREEN	1500.0	-	27	5000A
L	-	-	AP75WC	3510299 R1	0.79	18.0	Thin Wall XLPE Primary Cable	LIGHT GREEN	1500.0	-	-	-
M	-	-	GY92#14 1A	3510329 R1	0.79	18.0	Thin Wall XLPE Primary Cable	TAN	3215.0	-	28	1703M

Name	Terminal Part Number	V-Min	Name	Wire Part Number	Wire CSA	Wire Spec	Wire Material description	Wire Color Description	Wire Length	End2 Terminal Part Number	End2 Pin Name	End2 Connector
M	-	-	AZ17B	3510323 R1	0.79	18.0	Thin Wall XLPE Primary Cable	PINK	2635.0	-	R2-87	1014
M	-	-	DT104-GA	3510360 R1	1.16	16.0	Thin Wall XLPE Primary Cable	WHITE	3215.0	-	22	1703M
M	-	-	AZ17B	3510323 R1	0.79	18.0	Thin Wall XLPE Primary Cable	PINK	2635.0	-	-	-
M	-	-	DT104-GA	3510360 R1	1.16	16.0	Thin Wall XLPE Primary Cable	WHITE	3215.0	-	-	-
N	-	-	-	-	-	-	-	-	-	-	-	-
N	-	-	WIRE234463	-	0.0	-	-	-	0.0	-	PIN1	-
P	-	-	-	-	-	-	-	-	-	-	-	-
P	-	-	WIRE234462	-	0.0	-	-	-	0.0	-	PIN1	-
S	-	-	ND17HA	3510324 R1	1.16	16.0	Thin Wall XLPE Primary Cable	PINK	1615.0	-	B	A02-1100
S	-	-	NE17H	3510323 R1	0.79	18.0	Thin Wall XLPE Primary Cable	PINK	1615.0	-	B	A02-1100
S	-	-	ND17HA	3510324 R1	1.16	16.0	Thin Wall XLPE Primary Cable	PINK	1615.0	-	-	-

Name	Terminal Part Number	V-Min	Name	Wire Part Number	Wire CSA	Wire Spec	Wire Material description	Wire Color Description	Wire Length	End2 Terminal Part Number	End2 Pin Name	End2 Connector
S	-	-	NE17H	3510323 R1	0.79	18.0	Thin Wall XLPE Primary Cable	PINK	1615.0	-	-	-
T	-	-	3B17	3510324 R1	1.16	16.0	Thin Wall XLPE Primary Cable	PINK	3215.0	-	29	1703M
T	-	-	3B17	3510324 R1	1.16	16.0	Thin Wall XLPE Primary Cable	PINK	3215.0	-	-	-
T	-	-	AF17	3510324 R1	1.16	16.0	Thin Wall XLPE Primary Cable	PINK	3215.0	-	-	-
T	-	-	GP17	3510324 R1	1.16	16.0	Thin Wall XLPE Primary Cable	PINK	3215.0	-	-	-
W	-	-	AH166AA	3510298 R1	0.53	20.0	Thin Wall XLPE Primary Cable	LIGHT GREEN	2710.0	-	R1-85	1016
W	-	-	AG166BAB	3510298 R1	0.53	20.0	Thin Wall XLPE Primary Cable	LIGHT GREEN	545.0	-	X	-
W	-	-	AH166AA	3510298 R1	0.53	20.0	Thin Wall XLPE Primary Cable	LIGHT GREEN	2710.0	-	-	-
W	-	-	AG166BAB	3510298 R1	0.53	20.0	Thin Wall XLPE Primary Cable	LIGHT GREEN	545.0	-	-	-

Connector Name	J6-1606
Part Number	3759005C1
Instances	LT/RH A26 - Cooling Fan Control With Switch:Diagram1
Mates	MODU-BCM-A000-10-00

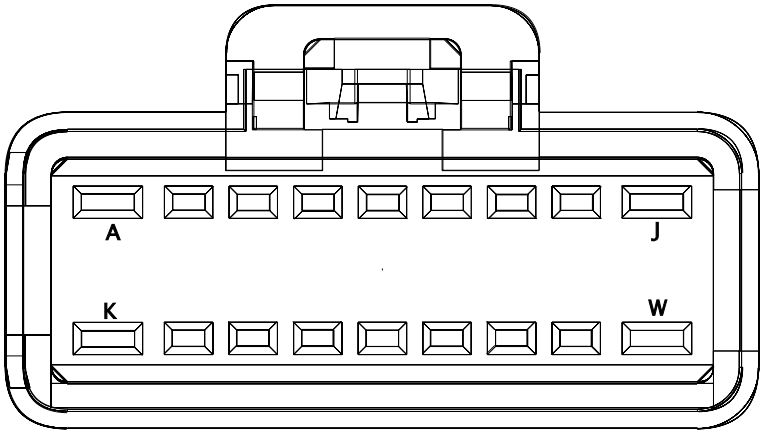

Name	Terminal Part Number	V-Min	Name	Wire Part Number	Wire CSA	Wire Spec	Wire Material description	Wire Color Description	Wire Length	End2 Terminal Part Number	End2 Pin Name	End2 Connector
G	-	-	-	-	-	-	-	-	-	-	-	-
H	-	-	-	-	-	-	-	-	-	-	-	-
N	-	-	-	-	-	-	-	-	-	-	-	-
P	-	-	-	-	-	-	-	-	-	-	-	-

Connector Name	J6-1606
Part Number	3759005C1
Instances	LT/RH - X15/A26 - Directional Signal (Turn) With HEADLIGHTS (LED-125):Diagram1
Mates	MODU-BCM-A000-10-00

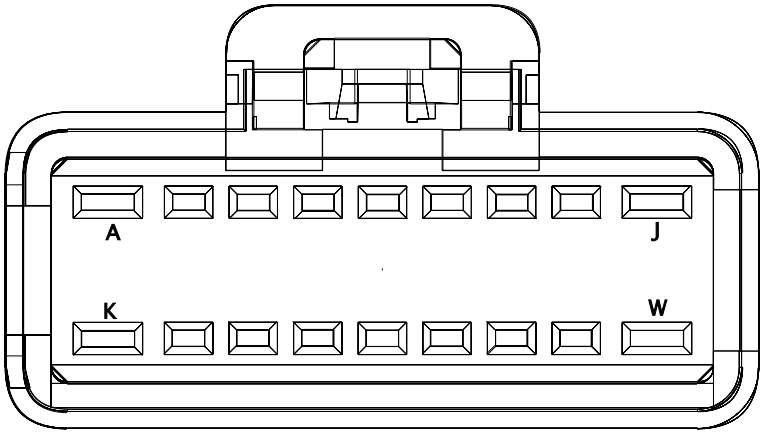

Name	Terminal Part Number	V-Min	Name	Wire Part Number	Wire CSA	Wire Spec	Wire Material description	Wire Color Description	Wire Length	End2 Terminal Part Number	End2 Pin Name	End2 Connector
N	-	-	-	-	-	-	-	-	-	-	-	-
P	-	-	-	-	-	-	-	-	-	-	-	-

Connector Name	J6-1606
Part Number	3759005C1
Instances	LT/RH/LoneStar - X15/A26 - Work Lights LED W/ Sw Pack - Day Cab W/O RKE W/AUTO REV:Diagram1
Mates	MODU-BCM-A000-10-00

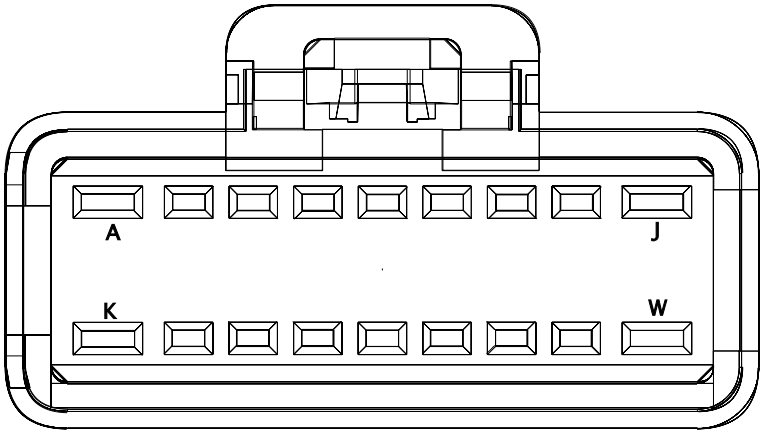

Name	Terminal Part Number	V-Min	Name	Wire Part Number	Wire CSA	Wire Spec	Wire Material description	Wire Color Description	Wire Length	End2 Terminal Part Number	End2 Pin Name	End2 Connector
N	-	-	-	-	-	-	-	-	-	-	-	-
P	-	-	-	-	-	-	-	-	-	-	-	-

Connector Name	J6-1606
Part Number	3759005C1
Instances	LT/RH/LoneStar - X15/A26 - Floor/Search Lights DayCab:Diagram1
Mates	MODU-BCM-A000-10-00

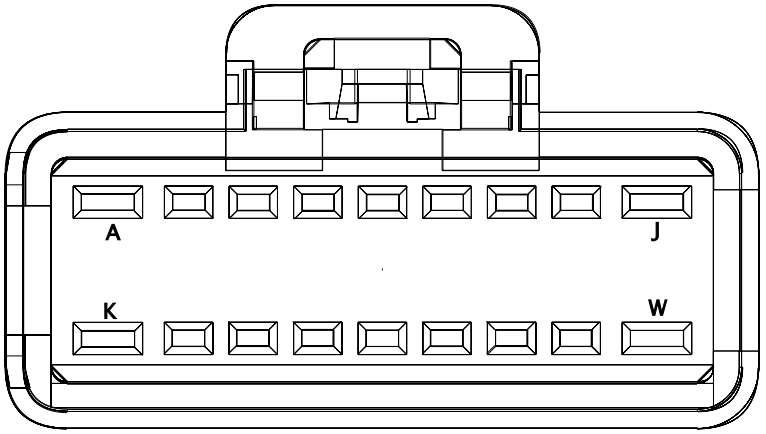

Name	Terminal Part Number	V-Min	Name	Wire Part Number	Wire CSA	Wire Spec	Wire Material description	Wire Color Description	Wire Length	End2 Terminal Part Number	End2 Pin Name	End2 Connector
N	-	-	-	-	-	-	-	-	-	-	-	-
P	-	-	-	-	-	-	-	-	-	-	-	-

Connector Name	J7-1607
Part Number	3710061C1
Instances	LoneStar - X15 - Crank Inhibit with Hood Switch - with new BCM Pin:Diagram1 LoneStar - X15 - Crank Inhibit with Hood Switch - with new BCM Pin:Diagram2 LoneStar - X15 - Hood Switch:Diagram1 LT/RH - A26 - Starter Interlock (BCM HSD controlled W/ Clutch Switch W/ Auto Start Stop):Diagram1 LT/RH - A26 - Starter Interlock (BCM HSD controlled W/ Clutch Switch W/ Auto Start Stop):Diagram2 LT/RH - X15/A26 - Hood Switch:Diagram1 LT/RH - X15/A26 - with Hood Switch - with new BCM Pin:Diagram1 LT/RH A26 - A26 - Heating Ventilation & Air Conditioning (HVAC) Manual:Diagram1 - HVAC - Option1 LT/RH A26 - A26 - Heating Ventilation & Air Conditioning (HVAC) Manual:Diagram2 - HVAC - Option2 LT/RH A26 - Auto Start Stop and Sleeper Auto Climate / Cab Temp / Oil Mapping Manual Trans:Diagram1 LT/RH A26 - Auto Start Stop Battery & Oil Temp Mapping Auto Trans:Diagram1 LT/RH A26 - Auto Start Stop Battery & Oil Temp Mapping Manual Trans:Diagram1 LT/RH A26 - Auto Start Stop with Sleeper Auto Climate / Cab Temp / Oil Mapping Auto Trans:Diagram1 LT/RH A26 - Heating Ventilation & Air Conditioning (HVAC) Auto Temp Control:Diagram1 - HVAC - Option1 LT/RH A26 - Heating Ventilation & Air Conditioning (HVAC) Auto Temp Control:Diagram2 - HVAC - Option2 LT/RH/LoneStar - X15 - Starter Interlock (BCM HSD controlled W/ Clutch Switch W/ Auto Start Stop):Diagram1 LT/RH/LoneStar - X15/A26 - 2 Driver Controlled Locking Differential - FR & RR Axle (DANA):Diagram1 LT/RH/LoneStar - X15/A26 - 2 Driver Controlled Locking Differential - FR & RR Axle (MERITOR):Diagram1 LT/RH/LoneStar - X15/A26 - BCM (Body Control Module):Connector J7-1607 LT/RH/LoneStar - X15/A26 - Clutch Monitoring (High and Low Switch to BCM):Diagram1 LT/RH/LoneStar - X15/A26 - Driver Controlled Locking Differential - FR & RR Axle (DANA):Diagram1

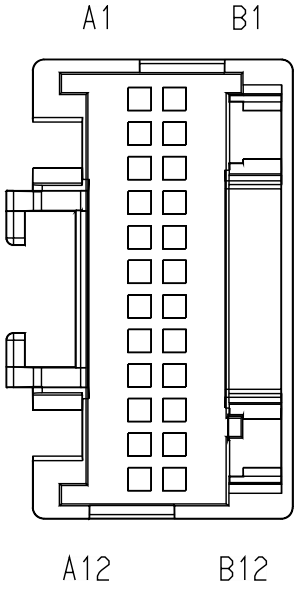

LT/RH/LoneStar - X15/A26 - Driver Controlled Locking Differential - FR & RR Axle (MERITOR):Diagram1
LT/RH/LoneStar - X15/A26 - Driver Controlled Locking Differential - FR (MERITOR):Diagram1
LT/RH/LoneStar - X15/A26 - Driver Controlled Locking Differential - RR Axle (DANA):Diagram1
LT/RH/LoneStar - X15/A26 - Driver Controlled Locking Differential - RR Axle (DANA):Diagram2
LT/RH/LoneStar - X15/A26 - Driver Controlled Locking Differential - RR Axle (MERITOR):Diagram1
LT/RH/LoneStar - X15/A26 - Driver Controlled Locking Differential - RR Axle (MERITOR):Diagram2
LT/RH/LoneStar - X15/A26 - Floor/Search Lights Sleeper:Diagram1
LT/RH/LoneStar - X15/A26 - Floor/Search Lights Sleeper (1 Light):Diagram1
LT/RH/LoneStar - X15/A26 - Hazard Warning (CA 2.0):Diagram1
LT/RH/LoneStar - X15/A26 - Instrument Cluster (Premium):Diagram1
LT/RH/LoneStar - X15/A26 - Instrument Cluster - Request and Status:Diagram1
LT/RH/LoneStar - X15/A26 - Lighting Sleeper Dome:Diagram1
LT/RH/LoneStar - X15/A26 - Rear AUTO HVAC (No Idle) W/ Pre-Heat (Bergstrom Heat and Cool w/ Condensation) 2 SWITCHES:Diagram3 - Espar Circuit
LT/RH/LoneStar - X15/A26 - Rear HVAC (No Idle) W/ Pre-Heat (Bergstrom Heat and Cool w/ Condensation) 2 SWITCHES Option 1:Diagram1 - Powers, Grounds & Controls
LT/RH/LoneStar - X15/A26 - Rear HVAC (No Idle) W/ Pre-Heat (Bergstrom Heat and Cool w/ Condensation) 2 SWITCHES Option 2:Diagram1 - Powers, Grounds & Controls
LT/RH/LoneStar - X15/A26 - Rear HVAC (No Idle) W/ Pre-Heat (Bergstrom Heat and Cool w/ Condensation) 4 SWITCHES Option 1:Diagram1 - Powers, Grounds & Controls
LT/RH/LoneStar - X15/A26 - Rear HVAC (No Idle) W/ Pre-Heat (Bergstrom Heat and Cool w/ Condensation) 4 SWITCHES Option 2:Diagram1 - Powers, Grounds & Controls
LT/RH/LoneStar - X15/A26 - Rear Manual HVAC (No Idle) W/ Pre-Heat (Bergstrom Heat and Cool w/ Condensation) 2 SWITCHES:Diagram3 - Espar Circuit
LT/RH/LoneStar - X15/A26 - Starter Interlock (BCM HSD controlled W/ Clutch Switch N/ Auto Start Stop):Diagram1
LT/RH/LoneStar X15 - Auto Start Stop Oil Temp Sensor Auto Trans:Diagram1

LT/RH/LoneStar X15 - Auto Start Stop Oil Temp Sensor Manual Trans:Diagram1
LT/RH/LoneStar X15 - Auto Start Stop with Sleeper Auto Climate / Cab Temp with Oil Temp Sensor Auto Trans:Diagram1
LT/RH/LoneStar X15 - Auto Start Stop with Sleeper Auto Climate / Cab Temp with Oil Temp Sensor Manual Trans:Diagram1
LT/RH/LoneStar X15 - Heating Ventilation & Air Conditioning (HVAC) Auto Temp Control:Diagram1 - HVAC
LT/RH/LoneStar X15 - Heating Ventilation & Air Conditioning (HVAC) Manual:Diagram1 - HVAC

Mates MODU-BCM-A000-10-00

Name	Terminal Part Number	V-Min	Name	Wire Part Number	Wire CSA	Wire Spec	Wire Material description	Wire Color Description	Wire Length	End2 Terminal Part Number	End2 Pin Name	End2 Connect or
A1	-	-	HA104SP	3510352 R1	0.53	20.0	Thin Wall XLPE Primary Cable	DARK BLUE	2045.0	-	4	A01-1114M
A1	-	-	HA104SP	3510352 R1	0.53	20.0	Thin Wall XLPE Primary Cable	DARK BLUE	2045.0	-	-	-
A2	-	-	HA104SS	3510352 R1	0.53	20.0	Thin Wall XLPE Primary Cable	DARK BLUE	2045.0	-	1	A01-1114M
A2	-	-	HA104SS	3510352 R1	0.53	20.0	Thin Wall XLPE Primary Cable	DARK BLUE	2045.0	-	-	-
A3	-	-	CY49	3510311 R1	0.79	18.0	Thin Wall XLPE Primary Cable	GREY	740.0	-	45	1701
A3	-	-	CY49	3510311 R1	0.79	18.0	Thin Wall XLPE Primary Cable	GREY	740.0	-	-	-

Name	Terminal Part Number	V-Min	Name	Wire Part Number	Wire CSA	Wire Spec	Wire Material description	Wire Color Description	Wire Length	End2 Terminal Part Number	End2 Pin Name	End2 Connector
A4	-	-	CZ49A	3510311 R1	0.79	18.0	Thin Wall XLPE Primary Cable	GREY	740.0	-	50	1701
A4	-	-	CZ49A	3510311 R1	0.79	18.0	Thin Wall XLPE Primary Cable	GREY	740.0	-	-	-
A6	-	-	AA60A	3510317 R1	0.79	18.0	Thin Wall XLPE Primary Cable	ORANGE	2185.0	-	-	-
A6	-	-	AA60A	3510317 R1	0.79	18.0	Thin Wall XLPE Primary Cable	ORANGE	2185.0	-	C	A02-1202
A9	-	-	AK28A	3510328 R1	0.53	20.0	Thin Wall XLPE Primary Cable	TAN	1160.0	-	1	A02-1020
A9	-	-	AK28A	3510328 R1	0.53	20.0	Thin Wall XLPE Primary Cable	TAN	1160.0	-	-	-
A9	-	-	AK28A	3510328 R1	0.53	20.0	Thin Wall XLPE Primary Cable	TAN	1160.0	-	1	1020
A10	-	-	AA77D	3510298 R1	0.53	20.0	Thin Wall XLPE Primary Cable	LIGHT GREEN	2800.0	-	L	A01-1200E

Name	Terminal Part Number	V-Min	Name	Wire Part Number	Wire CSA	Wire Spec	Wire Material description	Wire Color Description	Wire Length	End2 Terminal Part Number	End2 Pin Name	End2 Connector
A10	-	-	AA77D	3510298 R1	0.53	20.0	Thin Wall XLPE Primary Cable	LIGHT GREEN	2800.0	-	-	-
A12	-	-	3H77BA	3510299 R1	0.79	18.0	Thin Wall XLPE Primary Cable	LIGHT GREEN	2760.0	-	23	1703M
A12	-	-	3H77BA	3510299 R1	0.79	18.0	Thin Wall XLPE Primary Cable	LIGHT GREEN	2760.0	-	-	-
B1	-	-	3G77A	3510298 R1	0.53	20.0	Thin Wall XLPE Primary Cable	LIGHT GREEN	2075.0	-	28	5000A
B1	-	-	3G77A	3510298 R1	0.53	20.0	Thin Wall XLPE Primary Cable	LIGHT GREEN	2075.0	-	-	-
B2	-	-	DT17B	3510323 R1	0.79	18.0	Thin Wall XLPE Primary Cable	PINK	1025.0	-	D8	1800
B2	-	-	DT17B	3510323 R1	0.79	18.0	Thin Wall XLPE Primary Cable	PINK	1025.0	-	-	-
B4	-	-	EL63F	3510353 R1	0.79	18.0	Thin Wall XLPE Primary Cable	DARK BLUE	2075.0	-	33	5000A

Name	Terminal Part Number	V-Min	Name	Wire Part Number	Wire CSA	Wire Spec	Wire Material description	Wire Color Description	Wire Length	End2 Terminal Part Number	End2 Pin Name	End2 Connector
B4	-	-	EL63F	3510353 R1	0.79	18.0	Thin Wall XLPE Primary Cable	DARK BLUE	2075.0	-	-	-
B5	-	-	HV104C	3510354 R1	1.16	16.0	Thin Wall XLPE Primary Cable	DARK BLUE	660.0	-	44	1700
B5	-	-	HV104C	3510354 R1	1.16	16.0	Thin Wall XLPE Primary Cable	DARK BLUE	660.0	-	-	-
B6	-	-	DX63E	3510352 R1	0.53	20.0	Thin Wall XLPE Primary Cable	DARK BLUE	2075.0	-	32	5000A
B6	-	-	DX63E	3510352 R1	0.53	20.0	Thin Wall XLPE Primary Cable	DARK BLUE	2075.0	-	-	-
B9	-	-	3G77B	3510298 R1	0.53	20.0	Thin Wall XLPE Primary Cable	LIGHT GREEN	2075.0	-	29	5000A
B9	-	-	3G77B	3510298 R1	0.53	20.0	Thin Wall XLPE Primary Cable	LIGHT GREEN	2075.0	-	-	-
B10	-	-	AA6AM	3510310 R1	0.53	20.0	Thin Wall XLPE Primary Cable	GREY	2800.0	-	M	A01-1200E
B10	-	-	AA6AM	3510310 R1	0.53	20.0	Thin Wall XLPE Primary Cable	GREY	2800.0	-	-	-

Connector Name	K01-J1-DEL
Part Number	RING-E-1-2_0
Instances	LT/RH - A26 - Bosch LH160_LH200 Alternator:Diagram1 LT/RH - A26 - Bosch LIL165_LIL200 Alternator W/ Remote Sense:Diagram1 LT/RH - A26 - Delco Remy 28SI Alternator W/ Remote Sense:Diagram1 LT/RH - A26 - Delco Remy 36SI Alternator W/ Remote Sense:Diagram1 LT/RH - A26 - Delco Remy 40SI Alternator W/ Remote Sense Combination 2:Diagram1 LT/RH - A26 - Delco Remy 40SI Alternator W/ Remote Sense Combination 1:Diagram1 LT/RH - A26 - Leece-Neville - LN 325A Alternator W/ Remote Sense:Diagram1 LT/RH - A26 - Leece-Neville AVI160-210A/240A Alternator W/ Remote Sense:Diagram1
Mates	MOT-STARTER-5024-01-03A

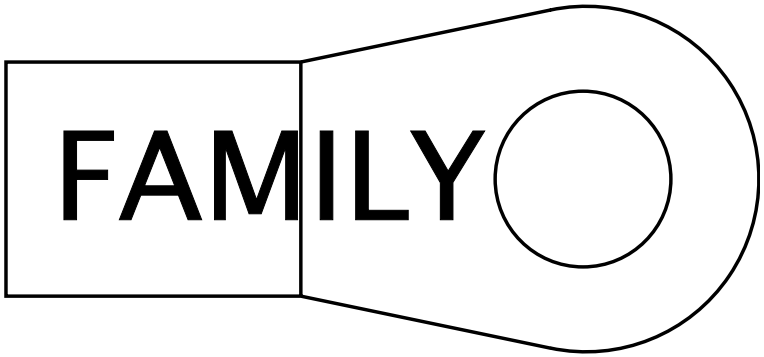

Name	Terminal Part Number	V-Min	Name	Wire Part Number	Wire CSA	Wire Spec	Wire Material description	Wire Color Description	Wire Length	End2 Terminal Part Number	End2 Pin Name	End2 Connect or
A	-	-	2-G	2645227 R1	61.89	0.0	SGX FLEX 125C	BLACK	280.0	-	1	K01-6314

Connector Name	K01-J1-DEL
Part Number	RING-M-12_0
Instances	LT/RH - A26 - Leece-Neville 320PAH Alternator:Diagram1 LT/RH - A26 - Cranking (Starter) GEN4 BCM W/ Thermal Overcrank - External Switch:Diagram1
Mates	MOT-STARTER-5024-01-03A

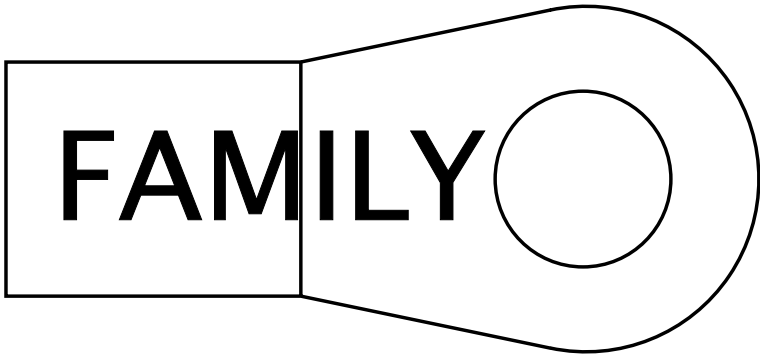

Name	Terminal Part Number	V-Min	Name	Wire Part Number	Wire CSA	Wire Spec	Wire Material description	Wire Color Description	Wire Length	End2 Terminal Part Number	End2 Pin Name	End2 Connect or
A	-	-	2-G	2645227 R1	61.89	0.0	SGX FLEX 125C	BLACK	280.0	-	1	K01-6314
A	-	-	14-G	2645943 R1	80.32	0.0	SGR 125	BLACK	1140.0	-	A	6049_A

Connector Name K01-J1-MITS

Part Number RING-E-1-2_0

Instances LT/RH - A26 - Bosch LH160_LH200 Alternator W/ Mitsubishi Starter:Diagram1
LT/RH - A26 - Bosch LIL165_LIL200 Alternator W/ Remote Sense W/ Mitsubishi Starter:Diagram1
LT/RH - A26 - Cranking (Starter) GEN4 BCM W/O Thermal Overcrank Wiring:Diagram1
LT/RH - A26 - Delco Remy 28SI Alternator W/ Remote Sense W/ Mitsubishi Starter:Diagram1
LT/RH - A26 - Delco Remy 36SI Alternator W/ Remote Sense W/ Mitsubishi Starter:Diagram1
LT/RH - A26 - Delco Remy 40SI Alternator W/ Remote Sense Combination 1 W/ Mitsubishi Starter:Diagram1
LT/RH - A26 - Delco Remy 40SI Alternator W/ Remote Sense Combination 2 W/ Mitsubishi Starter:Diagram1
LT/RH - A26 - Leece-Neville - LN 325A Alternator W/ Remote Sense W/ Mitsubishi Starter:Diagram1
LT/RH - A26 - Leece-Neville 320PAH Alternator W/ Mitsubishi Starter:Diagram1
LT/RH - A26 - Leece-Neville AVI160 Alternator N/ Remote Sense:Diagram1
LT/RH - A26 - Leece-Neville AVI160 Alternator N/ Remote Sense W/ Mitsubishi Starter:Diagram1
LT/RH - A26 - Leece-Neville AVI160-210A/240A Alternator W/ Remote Sense W/ Mitsubishi Starter:Diagram1

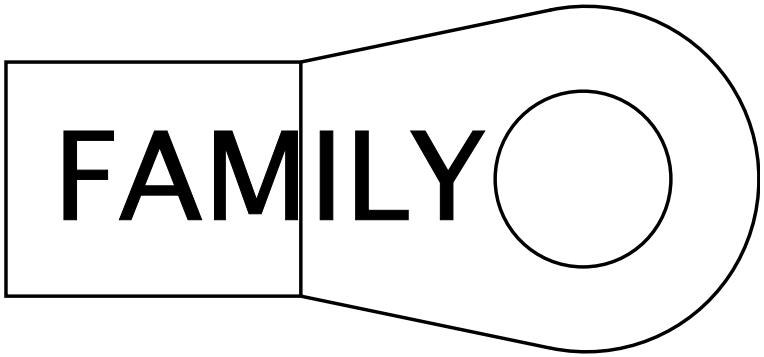

Mates MOT-STARTER-5024-01-03A

Name	Terminal Part Number	V-Min	Name	Wire Part Number	Wire CSA	Wire Spec	Wire Material description	Wire Color Description	Wire Length	End2 Terminal Part Number	End2 Pin Name	End2 Connect or
A	-	-	2-G	2645227 R1	61.89	0.0	SGX FLEX 125C	BLACK	280.0	-	1	K01-6314
A	-	-	14-G	2645943 R1	80.32	0.0	SGR 125	BLACK	1140.0	-	A	6049_A

Connector Name K01-1F

Part Number 1667639C1

Instances LT/RH - A26 - Bosch LIL165_LIL200 Alternator W/ Remote Sense:Diagram1
LT/RH - A26 - Bosch LIL165_LIL200 Alternator W/ Remote Sense W/ Mitsubishi Starter:Diagram1
LT/RH - A26 - Delco Remy 28SI Alternator W/ Remote Sense:Diagram1
LT/RH - A26 - Delco Remy 28SI Alternator W/ Remote Sense W/ Mitsubishi Starter:Diagram1
LT/RH - A26 - Delco Remy 36SI Alternator W/ Remote Sense:Diagram1
LT/RH - A26 - Delco Remy 36SI Alternator W/ Remote Sense W/ Mitsubishi Starter:Diagram1
LT/RH - A26 - Delco Remy 40SI Alternator W/ Remote Sense Combination 1 W/ Mitsubishi Starter:Diagram1
LT/RH - A26 - Delco Remy 40SI Alternator W/ Remote Sense Combination 2:Diagram1
LT/RH - A26 - Delco Remy 40SI Alternator W/ Remote Sense Combination 1:Diagram1
LT/RH - A26 - Delco Remy 40SI Alternator W/ Remote Sense Combination 2 W/ Mitsubishi Starter:Diagram1
LT/RH - A26 - Leece-Neville - LN 325A Alternator W/ Remote Sense:Diagram1
LT/RH - A26 - Leece-Neville - LN 325A Alternator W/ Remote Sense W/ Mitsubishi Starter:Diagram1
LT/RH - A26 - Leece-Neville AVI160-210A/240A Alternator W/ Remote Sense:Diagram1
LT/RH - A26 - Leece-Neville AVI160-210A/240A Alternator W/ Remote Sense W/ Mitsubishi Starter:Diagram1

Mates DEV-FUSE_5A_Inline-4004-01 -04C

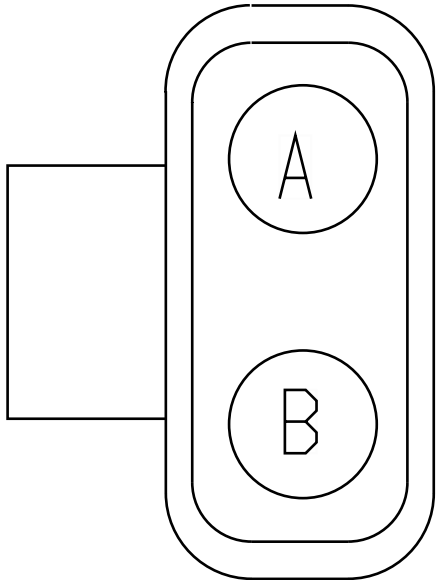

Name	Terminal Part Number	V-Min	Name	Wire Part Number	Wire CSA	Wire Spec	Wire Material description	Wire Color Description	Wire Length	End2 Terminal Part Number	End2 Pin Name	End2 Connect or
A	-	-	JS1B	2643692 R1	1.91	14.0	Std. Wall XLPE Primary Cable	TAN	130.0	-	A	J4-REMO TE SENSE

Name	Terminal Part Number	V-Min	Name	Wire Part Number	Wire CSA	Wire Spec	Wire Material description	Wire Color Description	Wire Length	End2 Terminal Part Number	End2 Pin Name	End2 Connect or
B	-	-	JS1A	2643694 R1	1.91	14.0	Std. Wall XLPE Primary Cable	LIGHT BLUE	3755.0	-	A	K01-7000

Connector Name	K01-1F
Part Number	1667639C1
Instances	LT/RH - A26/X15 - Maxwell 12V Ultracapacitor Engine Start Module (ESM):Diagram1
Mates	DEV-FUSE_5A_Inline-4004-01 -04C

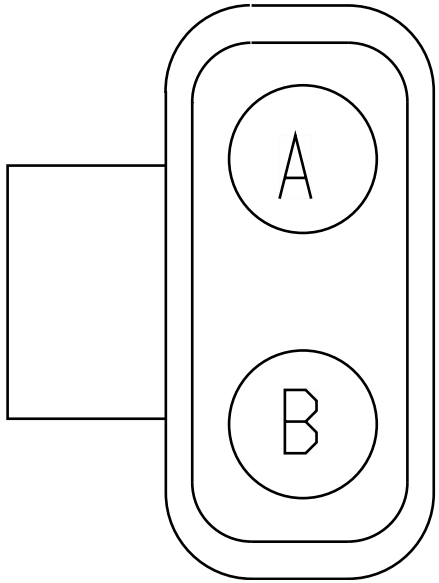

Name	Terminal Part Number	V-Min	Name	Wire Part Number	Wire CSA	Wire Spec	Wire Material description	Wire Color Description	Wire Length	End2 Terminal Part Number	End2 Pin Name	End2 Connect or
A	-	-	WIRE416316	-	0.0	-	-	-	0.0	-	A	J4
B	-	-	WIRE416317	-	0.0	-	-	-	0.0	-	A	K01-7000

Connector Name K01-1874C
Part Number 3590390C1
Instances LT/RH - A26 - Water In Fuel (WIF) DAVCO N/ Heater:Diagram2

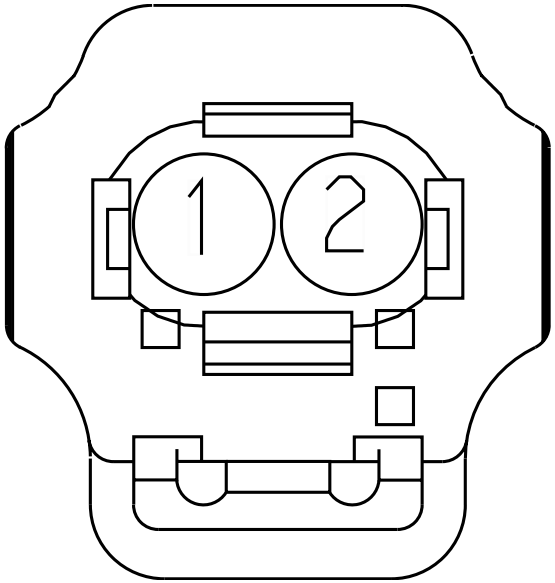

Name	Terminal Part Number	V-Min	Name	Wire Part Number	Wire CSA	Wire Spec	Wire Material description	Wire Color Description	Wire Length	End2 Terminal Part Number	End2 Pin Name	End2 Connect or
1	-	-	VE95W	3510329 R1	0.79	18.0	Thin Wall XLPE Primary Cable	TAN	1670.0	-	-	-
2	-	-	VE95-GF	3510359 R1	0.79	18.0	Thin Wall XLPE Primary Cable	WHITE	2100.0	-	55	K01-6018

Connector Name	K01-1874
Part Number	3590390C1
Instances	LT/RH - A26 - Water In Fuel (WIF) DAVCO N/ Heater:Diagram1 LT/RH - A26 - Water In Fuel (WIF) Davco W/Heater:Diagram1 LT/RH - A26 - Water In Fuel (WIF) Davco W/Heater:Diagram2 LT/RH - A26 - Water In Fuel (WIF) RACOR N/ Heater:Diagram1
Mates	DEV-FUEL_FILTER_ASSY-07-A26

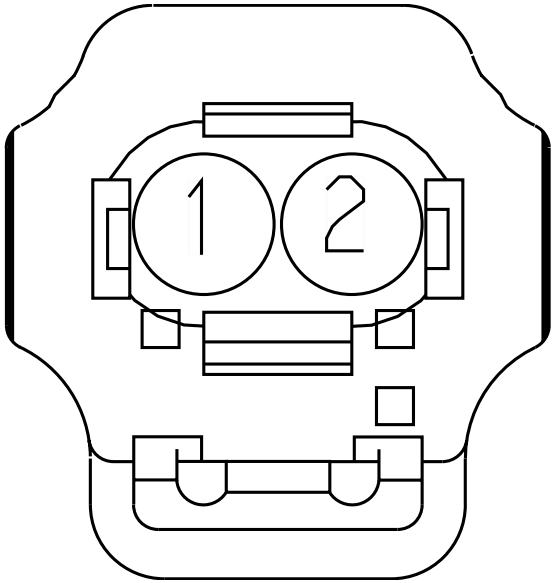

Name	Terminal Part Number	V-Min	Name	Wire Part Number	Wire CSA	Wire Spec	Wire Material description	Wire Color Description	Wire Length	End2 Terminal Part Number	End2 Pin Name	End2 Connect or
1	-	-	VA95W	3510329 R1	0.79	18.0	Thin Wall XLPE Primary Cable	TAN	1320.0	-	-	-
2	-	-	VA95-GF	3510359 R1	0.79	18.0	Thin Wall XLPE Primary Cable	WHITE	1750.0	-	55	K01-6018

Connector Name	K01-6018
Part Number	3952655C1
Instances	LT/RH - A26 - Interface Connector:Diagram1 LT/RH - A26 - Selective Catalytic Reduction (SCR):Diagram1 - Heater & Supply Module Relays-Combination1 LT/RH - A26 - Selective Catalytic Reduction (SCR):Diagram1 - Heater & Supply Module Relays-Combination2 LT/RH - A26 - Selective Catalytic Reduction (SCR):Diagram1 - Heater & Supply Module Relays-Combination3 LT/RH - A26 - Selective Catalytic Reduction (SCR):Diagram2 - Supply Module, Sensor Table, Quality Sensor, DEF Tank Valve-Combination1 LT/RH - A26 - Selective Catalytic Reduction (SCR):Diagram2 - Supply Module, Sensor Table, Quality Sensor, DEF Tank Valve-Combination2 LT/RH - A26 - Selective Catalytic Reduction (SCR):Diagram2 - Supply Module, Sensor Table, Quality Sensor, DEF Tank Valve-Combination3 LT/RH - A26 - VEHICLE SPEEDOMETER SYSTEM (MANUAL XMSN):Diagram1 LT/RH - A26 - VEHICLE SPEEDOMETER SYSTEM (MANUAL XMSN):Diagram2 LT/RH - A26 - Water In Fuel (WIF) DAVCO N/ Heater:Diagram1 LT/RH - A26 - Water In Fuel (WIF) DAVCO N/ Heater:Diagram2 LT/RH - A26 - Water In Fuel (WIF) Davco W/Heater:Diagram1 LT/RH - A26 - Water In Fuel (WIF) Davco W/Heater:Diagram2 LT/RH - A26 - Water In Fuel (WIF) RACOR N/ Heater:Diagram1 LT/RH A26 - Ambient Air Temperature Option 1:Diagram1 LT/RH A26 - Ambient Air Temperature Option 2:Diagram1 LT/RH A26 - Body Builder - Powertrain_MX1:Diagram1 LT/RH A26 - Coolant Level Monitoring:Diagram1 LT/RH A26 - Cooling Fan Control With Switch:Diagram1 LT/RH A26 - Cooling Fan Control Without Switch:Diagram1 LT/RH A26 - Starting Aid (Flame Start):Diagram1 LT/RH A26 - X15/A26 - Up Shift Indicator (CA 2.0):Diagram1 LT/RH/LoneStar - A26 - Vehicle Acceleration (w/ Two PWR Two GND & Two STS):Diagram1
Mates	MODU-ECM-A001-10-00A A26

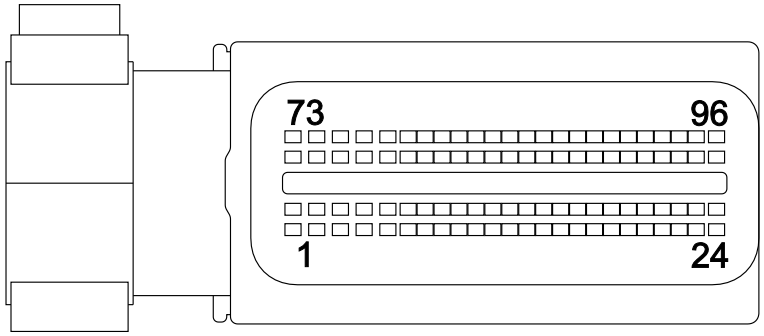

Name	Terminal Part Number	V-Min	Name	Wire Part Number	Wire CSA	Wire Spec	Wire Material description	Wire Color Description	Wire Length	End2 Terminal Part Number	End2 Pin Name	End2 Connector
1	-	-	CC95GE	3510329 R1	0.79	18.0	Thin Wall XLPE Primary Cable	TAN	210.0	-	X	-
1	-	-	CD95GE	3510329 R1	0.79	18.0	Thin Wall XLPE Primary Cable	TAN	210.0	-	X	-
1	-	-	CA95GE	3510329 R1	0.79	18.0	Thin Wall XLPE Primary Cable	TAN	2040.0	-	5	674
1	-	-	CB95GE	3510329 R1	0.79	18.0	Thin Wall XLPE Primary Cable	TAN	1460.0	-	5	674B
2	-	-	KA97B	3510347 R1	0.79	18.0	Thin Wall XLPE Primary Cable	VIOLET	1375.0	-	23	1702
4	-	-	AK95F	3510329 R1	0.79	18.0	Thin Wall XLPE Primary Cable	TAN	1460.0	-	2	674B
4	-	-	AJ95F	3510329 R1	0.79	18.0	Thin Wall XLPE Primary Cable	TAN	2040.0	-	2	674
5	-	-	KA95-GC	3510293 R1	0.79	18.0	Thin Wall XLPE Primary Cable	BLACK	1195.0	-	B10	690

Name	Terminal Part Number	V-Min	Name	Wire Part Number	Wire CSA	Wire Spec	Wire Material description	Wire Color Description	Wire Length	End2 Terminal Part Number	End2 Pin Name	End2 Connector
6	-	-	KA97C	3510347 R1	0.79	18.0	Thin Wall XLPE Primary Cable	VIOLET	1375.0	-	22	1702
7	-	-	LE95BC	2645915 R1	0.79	18.0	TXL 150C	TAN	2645.0	-	4	K01-670A
7	-	-	LF95BC	2645915 R1	0.79	18.0	TXL 150C	TAN	2520.0	-	4	K01-670A
8	-	-	KB34D	3510329 R1	0.79	18.0	Thin Wall XLPE Primary Cable	TAN	2605.0	-	A	K01-6401
9	-	-	VL41E	3510329 R1	0.79	18.0	Thin Wall XLPE Primary Cable	TAN	1375.0	-	15	1702
10	-	-	LE95BA	2645915 R1	0.79	18.0	TXL 150C	TAN	2645.0	-	3	K01-670A
10	-	-	LF95BA	2645915 R1	0.79	18.0	TXL 150C	TAN	2520.0	-	3	K01-670A
11	-	-	KA41-GA	3510359 R1	0.79	18.0	Thin Wall XLPE Primary Cable	WHITE	1490.0	-	F	K01-6033
12	-	-	KA97P	3510329 R1	0.79	18.0	Thin Wall XLPE Primary Cable	TAN	1375.0	-	30	1702
14	-	-	KJ92A19	3510329 R1	0.79	18.0	Thin Wall XLPE Primary Cable	TAN	1025.0	-	J	4706

Name	Terminal Part Number	V-Min	Name	Wire Part Number	Wire CSA	Wire Spec	Wire Material description	Wire Color Description	Wire Length	End2 Terminal Part Number	End2 Pin Name	End2 Connector
16	-	-	KJ92A13	3510329 R1	0.79	18.0	Thin Wall XLPE Primary Cable	TAN	1025.0	-	D	4705
20	-	-	KJ92A2	3510329 R1	0.79	18.0	Thin Wall XLPE Primary Cable	TAN	1025.0	-	E	4706
21	-	-	KJ92A17	3510329 R1	0.79	18.0	Thin Wall XLPE Primary Cable	TAN	1025.0	-	J	4705
22	-	-	KJ92A14	3510329 R1	0.79	18.0	Thin Wall XLPE Primary Cable	TAN	1025.0	-	D	4706
23	-	-	KJ92A6	3510329 R1	0.79	18.0	Thin Wall XLPE Primary Cable	TAN	1025.0	-	F	4706
24	-	-	KA95GBE	3510330 R1	1.16	16.0	Thin Wall XLPE Primary Cable	TAN	1480.0	-	X	-
25	-	-	ZB23A	3510329 R1	0.79	18.0	Thin Wall XLPE Primary Cable	TAN	1325.0	-	B	K01-6400A
25	-	-	ZC23A	3510329 R1	0.79	18.0	Thin Wall XLPE Primary Cable	TAN	765.0	-	X	-

Name	Terminal Part Number	V-Min	Name	Wire Part Number	Wire CSA	Wire Spec	Wire Material description	Wire Color Description	Wire Length	End2 Terminal Part Number	End2 Pin Name	End2 Connector
28	-	-	AJ95AB	3510329 R1	0.79	18.0	Thin Wall XLPE Primary Cable	TAN	2040.0	-	6	674
28	-	-	AK95AB	3510329 R1	0.79	18.0	Thin Wall XLPE Primary Cable	TAN	1460.0	-	6	674B
29	-	-	KA97N	3510346 R1	0.53	20.0	Thin Wall XLPE Primary Cable	VIOLET	1160.0	-	29	1702
31	-	-	KA41A	3510329 R1	0.79	18.0	Thin Wall XLPE Primary Cable	TAN	1490.0	-	E	K01-6033
33	-	-	KA99B	3510347 R1	0.79	18.0	Thin Wall XLPE Primary Cable	VIOLET	1375.0	-	28	1702
34	-	-	LE95K	2645915 R1	0.79	18.0	TXL 150C	TAN	2645.0	-	8	K01-670A
34	-	-	LF95K	2645915 R1	0.79	18.0	TXL 150C	TAN	2520.0	-	8	K01-670A
36	-	-	ZE95DA	3510329 R1	0.79	18.0	Thin Wall XLPE Primary Cable	TAN	815.0	-	X	-
36	-	-	ZG95DA	3510329 R1	0.79	18.0	Thin Wall XLPE Primary Cable	TAN	815.0	-	X	-
36	-	-	ZD95DA	2645915 R1	0.79	18.0	TXL 150C	TAN	2645.0	-	5	K01-670A

Name	Terminal Part Number	V-Min	Name	Wire Part Number	Wire CSA	Wire Spec	Wire Material description	Wire Color Description	Wire Length	End2 Terminal Part Number	End2 Pin Name	End2 Connector
36	-	-	ZF95DA	2645915 R1	0.79	18.0	TXL 150C	TAN	2520.0	-	5	K01-670A
39	-	-	KJ92A1	3510329 R1	0.79	18.0	Thin Wall XLPE Primary Cable	TAN	1025.0	-	H	4706
40	-	-	KJ92A9	3510329 R1	0.79	18.0	Thin Wall XLPE Primary Cable	TAN	1025.0	-	E	4705
46	-	-	KJ92A16	3510329 R1	0.79	18.0	Thin Wall XLPE Primary Cable	TAN	1025.0	-	H	4705
50	-	-	CD99D	3510347 R1	0.79	18.0	Thin Wall XLPE Primary Cable	VIOLET	1640.0	-	1	K01-6104
55	-	-	VA95-GF	3510359 R1	0.79	18.0	Thin Wall XLPE Primary Cable	WHITE	1750.0	-	2	K01-1874
55	-	-	VE95-GF	3510359 R1	0.79	18.0	Thin Wall XLPE Primary Cable	WHITE	2100.0	-	2	K01-1874C
56	-	-	KJ92A5	3510329 R1	0.79	18.0	Thin Wall XLPE Primary Cable	TAN	1025.0	-	A	4706
57	-	-	KA97M	3510346 R1	0.53	20.0	Thin Wall XLPE Primary Cable	VIOLET	1160.0	-	24	1702

Name	Terminal Part Number	V-Min	Name	Wire Part Number	Wire CSA	Wire Spec	Wire Material description	Wire Color Description	Wire Length	End2 Terminal Part Number	End2 Pin Name	End2 Connector
58	-	-	AK95H	3510329 R1	0.79	18.0	Thin Wall XLPE Primary Cable	TAN	1460.0	-	3	674B
58	-	-	AJ95H	3510329 R1	0.79	18.0	Thin Wall XLPE Primary Cable	TAN	2040.0	-	3	674
59	-	-	-	-	-	-	-	-	-	-	-	-
63	-	-	AY9A	3510329 R1	0.79	18.0	Thin Wall XLPE Primary Cable	TAN	160.0	-	-	-
63	-	-	LF9A	2645915 R1	0.79	18.0	TXL 150C	TAN	160.0	-	-	-
63	-	-	LE9A	2645915 R1	0.79	18.0	TXL 150C	TAN	160.0	-	X	-
63	-	-	LF9A	2645915 R1	0.79	18.0	TXL 150C	TAN	160.0	-	X	-
63	-	-	AY9A	3510329 R1	0.79	18.0	Thin Wall XLPE Primary Cable	TAN	160.0	-	X	-
64	-	-	AK95AT2	3510329 R1	0.79	18.0	Thin Wall XLPE Primary Cable	TAN	1130.0	-	PIN1	-
64	-	-	AJ95AT2	3510329 R1	0.79	18.0	Thin Wall XLPE Primary Cable	TAN	1130.0	-	X	-
65	-	-	KJ92A7	3510329 R1	0.79	18.0	Thin Wall XLPE Primary Cable	TAN	1025.0	-	G	4706

Name	Terminal Part Number	V-Min	Name	Wire Part Number	Wire CSA	Wire Spec	Wire Material description	Wire Color Description	Wire Length	End2 Terminal Part Number	End2 Pin Name	End2 Connector
66	-	-	SG92A11	3510329 R1	0.79	18.0	Thin Wall XLPE Primary Cable	TAN	1025.0	-	B	4705
67	-	-	AK95AR2	3510365 R1	0.79	18.0	Thin Wall XLPE Primary Cable	RED	1250.0	-	PIN1	-
67	-	-	AJ95AR2	3510365 R1	0.79	18.0	Thin Wall XLPE Primary Cable	RED	1250.0	-	X	-
69	-	-	AK95AU2	3510329 R1	0.79	18.0	Thin Wall XLPE Primary Cable	TAN	1100.0	-	X	-
69	-	-	AJ95AU2	3510329 R1	0.79	18.0	Thin Wall XLPE Primary Cable	TAN	1100.0	-	X	-
72	-	-	KA95TB	3510311 R1	0.79	18.0	Thin Wall XLPE Primary Cable	GREY	2270.0	-	E10	690
76	-	-	ZA23-G	3510359 R1	0.79	18.0	Thin Wall XLPE Primary Cable	WHITE	1325.0	-	A	K01-6400A
77	-	-	KJ92A8	3510329 R1	0.79	18.0	Thin Wall XLPE Primary Cable	TAN	1025.0	-	G	4705

Name	Terminal Part Number	V-Min	Name	Wire Part Number	Wire CSA	Wire Spec	Wire Material description	Wire Color Description	Wire Length	End2 Terminal Part Number	End2 Pin Name	End2 Connector
78	-	-	KJ92A10	3510329 R1	0.79	18.0	Thin Wall XLPE Primary Cable	TAN	1025.0	-	F	4705
83	-	-	-	-	-	-	-	-	-	-	-	-
87	-	-	AK95AS2	3510329 R1	0.79	18.0	Thin Wall XLPE Primary Cable	TAN	1220.0	-	X	-
87	-	-	AJ95AS2	3510329 R1	0.79	18.0	Thin Wall XLPE Primary Cable	TAN	1220.0	-	X	-
90	-	-	KJ92A12	3510329 R1	0.79	18.0	Thin Wall XLPE Primary Cable	TAN	1025.0	-	C	4705
91	-	-	XN47	3510311 R1	0.79	18.0	Thin Wall XLPE Primary Cable	GREY	2695.0	-	A	K01-7600
91	-	-	PL47	3510311 R1	0.79	18.0	Thin Wall XLPE Primary Cable	GREY	2830.0	-	A	K01-7600T
92	-	-	XN47A	3510311 R1	0.79	18.0	Thin Wall XLPE Primary Cable	GREY	2695.0	-	B	K01-7600
92	-	-	PL47A	3510311 R1	0.79	18.0	Thin Wall XLPE Primary Cable	GREY	2830.0	-	B	K01-7600T

Connector Name K01-6019

Part Number 3952656C1

Instances LT/RH - A26 - Selective Catalytic Reduction (SCR):Diagram1 - Heater & Supply Module Relays-Combination1
LT/RH - A26 - Selective Catalytic Reduction (SCR):Diagram1 - Heater & Supply Module Relays-Combination2
LT/RH - A26 - Selective Catalytic Reduction (SCR):Diagram1 - Heater & Supply Module Relays-Combination3
LT/RH - A26 - Selective Catalytic Reduction (SCR):Diagram2 - Supply Module, Sensor Table, Quality Sensor, DEF Tank Valve-Combination1
LT/RH - A26 - Selective Catalytic Reduction (SCR):Diagram2 - Supply Module, Sensor Table, Quality Sensor, DEF Tank Valve-Combination2
LT/RH - A26 - Selective Catalytic Reduction (SCR):Diagram2 - Supply Module, Sensor Table, Quality Sensor, DEF Tank Valve-Combination3

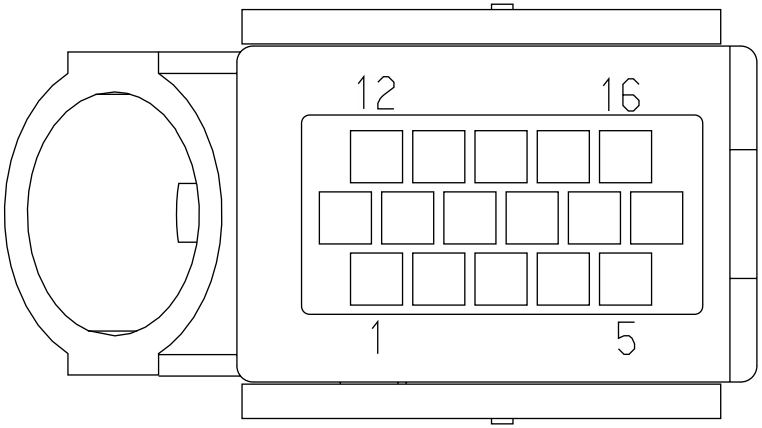

Mates MODU-ECM-A001-10-00A A26

Name	Terminal Part Number	V-Min	Name	Wire Part Number	Wire CSA	Wire Spec	Wire Material description	Wire Color Description	Wire Length	End2 Terminal Part Number	End2 Pin Name	End2 Connect or
1	-	-	LE95DVH	4073403 R1	0.53	20.0	TXL 150C	TAN	2795.0	-	2	K01-670A
1	-	-	LF95DVH	4073403 R1	0.53	20.0	TXL 150C	TAN	2670.0	-	2	K01-670A
2	-	-	AK95E	3510328 R1	0.53	20.0	Thin Wall XLPE Primary Cable	TAN	1610.0	-	1	674B
2	-	-	AJ95E	3510328 R1	0.53	20.0	Thin Wall XLPE Primary Cable	TAN	2190.0	-	1	674
6	-	-	LE95DVL	4073403 R1	0.53	20.0	TXL 150C	TAN	2795.0	-	1	K01-670A
6	-	-	LF95DVL	4073403 R1	0.53	20.0	TXL 150C	TAN	2670.0	-	1	K01-670A

Name	Terminal Part Number	V-Min	Name	Wire Part Number	Wire CSA	Wire Spec	Wire Material description	Wire Color Description	Wire Length	End2 Terminal Part Number	End2 Pin Name	End2 Connect or
11	-	-	KA95SB	3510328 R1	0.53	20.0	Thin Wall XLPE Primary Cable	TAN	1880.0	-	A12	690

Connector Name	K01-6033
Part Number	3917967C1
Instances	LT/RH - A26 - Interface Connector:Diagram1 LT/RH - A26 - Selective Catalytic Reduction (SCR):Diagram2 - Supply Module, Sensor Table, Quality Sensor, DEF Tank Valve-Combination1 LT/RH - A26 - Selective Catalytic Reduction (SCR):Diagram2 - Supply Module, Sensor Table, Quality Sensor, DEF Tank Valve-Combination2 LT/RH - A26 - Selective Catalytic Reduction (SCR):Diagram2 - Supply Module, Sensor Table, Quality Sensor, DEF Tank Valve-Combination3 LT/RH A26 - Starting Aid (Flame Start):Diagram1
Mates	CONN-ENGINE_INTERFACE-5057 -01-01A

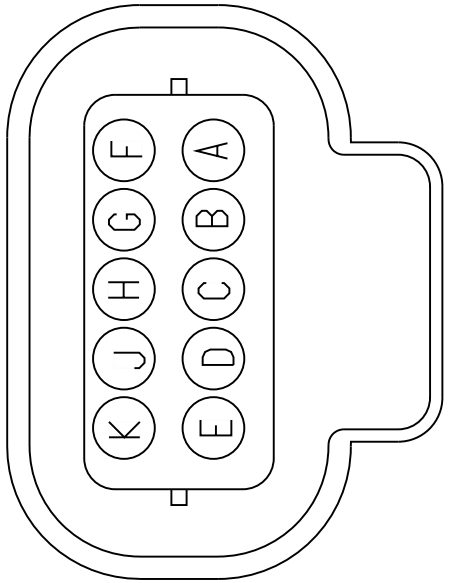

Name	Terminal Part Number	V-Min	Name	Wire Part Number	Wire CSA	Wire Spec	Wire Material description	Wire Color Description	Wire Length	End2 Terminal Part Number	End2 Pin Name	End2 Connect or
A	-	-	CD21B1	3510329 R1	0.79	18.0	Thin Wall XLPE Primary Cable	TAN	1280.0	-	6	K01-8410
B	-	-	CD21B2	3510329 R1	0.79	18.0	Thin Wall XLPE Primary Cable	TAN	1280.0	-	7	K01-8410
C	-	-	CD21B3	3510329 R1	0.79	18.0	Thin Wall XLPE Primary Cable	TAN	1280.0	-	8	K01-8410
D	-	-	AM13AB	3510365 R1	0.79	18.0	Thin Wall XLPE Primary Cable	RED	1660.0	-	X	-

Name	Terminal Part Number	V-Min	Name	Wire Part Number	Wire CSA	Wire Spec	Wire Material description	Wire Color Description	Wire Length	End2 Terminal Part Number	End2 Pin Name	End2 Connect or
D	-	-	AS13AB	3510365 R1	0.79	18.0	Thin Wall XLPE Primary Cable	RED	1660.0	-	X	-
D	-	-	AL13AB	3510365 R1	0.79	18.0	Thin Wall XLPE Primary Cable	RED	1660.0	-	X	-
E	-	-	KA41A	3510329 R1	0.79	18.0	Thin Wall XLPE Primary Cable	TAN	1490.0	-	31	K01-6018
F	-	-	KA41-GA	3510359 R1	0.79	18.0	Thin Wall XLPE Primary Cable	WHITE	1490.0	-	11	K01-6018
G	-	-	KA41-GB	3510359 R1	0.79	18.0	Thin Wall XLPE Primary Cable	WHITE	1665.0	-	X	-
H	-	-	KA41-GC	3510359 R1	0.79	18.0	Thin Wall XLPE Primary Cable	WHITE	1665.0	-	X	-

Connector Name	K01-6104
Part Number	6113104C1
Instances	LT/RH A26 - Starting Aid (Flame Start):Diagram1
Mates	SOL-COLD_START-5022-02-01A

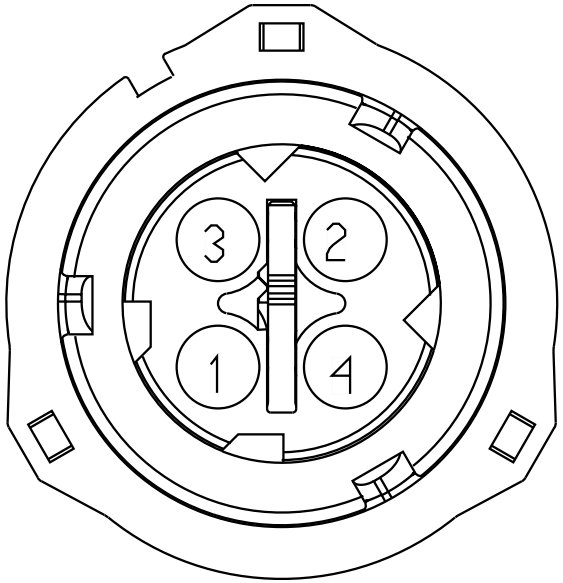

Name	Terminal Part Number	V-Min	Name	Wire Part Number	Wire CSA	Wire Spec	Wire Material description	Wire Color Description	Wire Length	End2 Terminal Part Number	End2 Pin Name	End2 Connect or
1	-	-	CD99D	3510347 R1	0.79	18.0	Thin Wall XLPE Primary Cable	VIOLET	1640.0	-	50	K01-6018
2	-	-	CC95GC	2643718 R1	0.79	18.0	Std. Wall XLPE Primary Cable	VIOLET	1430.0	-	X	-
2	-	-	CD95GC	2643718 R1	0.79	18.0	Std. Wall XLPE Primary Cable	VIOLET	1430.0	-	X	-

Connector Name	K01-6200
Part Number	1671610C1
Instances	LT/RH A26 - A26 - Heating Ventilation & Air Conditioning (HVAC) Manual:Diagram1 - HVAC - Option1 LT/RH A26 - A26 - Heating Ventilation & Air Conditioning (HVAC) Manual:Diagram2 - HVAC - Option2 LT/RH A26 - Heating Ventilation & Air Conditioning (HVAC) Auto Temp Control:Diagram1 - HVAC - Option1 LT/RH A26 - Heating Ventilation & Air Conditioning (HVAC) Auto Temp Control:Diagram2 - HVAC - Option2
Mates	DEV-FREON_COMPRESSOR-A26

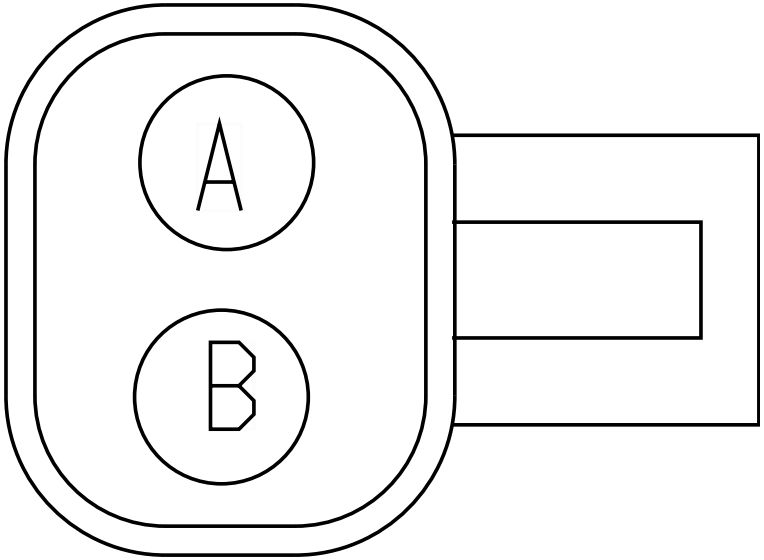

Name	Terminal Part Number	V-Min	Name	Wire Part Number	Wire CSA	Wire Spec	Wire Material description	Wire Color Description	Wire Length	End2 Terminal Part Number	End2 Pin Name	End2 Connect or
A	-	-	KG10-GD	2643681 R1	1.16	16.0	Std. Wall XLPE Primary Cable	WHITE	3280.0	-	-	-
A	-	-	WA10-GA	2643681 R1	1.16	16.0	Std. Wall XLPE Primary Cable	WHITE	4250.0	-	-	-
A	-	-	WC10-GA	2643787 R1	3.01	12.0	Std. Wall XLPE Primary Cable	WHITE	4115.0	-	-	-
B	-	-	KA77	3510300 R1	1.16	16.0	Thin Wall XLPE Primary Cable	LIGHT GREEN	2280.0	-	10	1702

Connector Name K01-6201B

Part Number 3600324C1

Instances LT/RH A26 - A26 - Heating Ventilation & Air Conditioning (HVAC) Manual:Diagram1 - HVAC - Option1
LT/RH A26 - Heating Ventilation & Air Conditioning (HVAC) Auto Temp Control:Diagram1 - HVAC - Option1

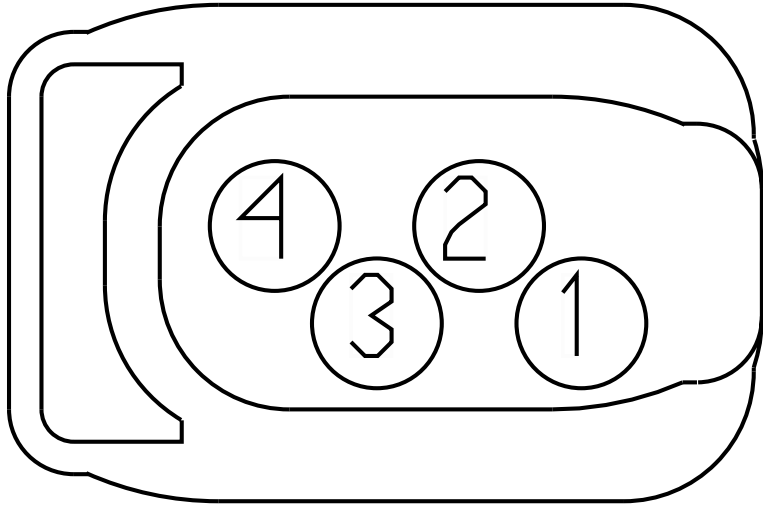

Name	Terminal Part Number	V-Min	Name	Wire Part Number	Wire CSA	Wire Spec	Wire Material description	Wire Color Description	Wire Length	End2 Terminal Part Number	End2 Pin Name	End2 Connect or
1	-	-	YN9AB	3510310 R1	0.53	20.0	Thin Wall XLPE Primary Cable	GREY	1970.0	-	-	-
2	-	-	YN77B	3510298 R1	0.53	20.0	Thin Wall XLPE Primary Cable	LIGHT GREEN	2485.0	-	4	1702
3	-	-	YN77C	3510298 R1	0.53	20.0	Thin Wall XLPE Primary Cable	LIGHT GREEN	2485.0	-	42	1702
4	-	-	YN6DB	3510310 R1	0.53	20.0	Thin Wall XLPE Primary Cable	GREY	2485.0	-	3	1702

Connector Name K01-6201P

Part Number 3600324C1

Instances LT/RH A26 - A26 - Heating Ventilation & Air Conditioning (HVAC) Manual:Diagram2 - HVAC - Option2
LT/RH A26 - Heating Ventilation & Air Conditioning (HVAC) Auto Temp Control:Diagram2 - HVAC - Option2

Mates DEV-AC_PT_TRANSDUCER-A26

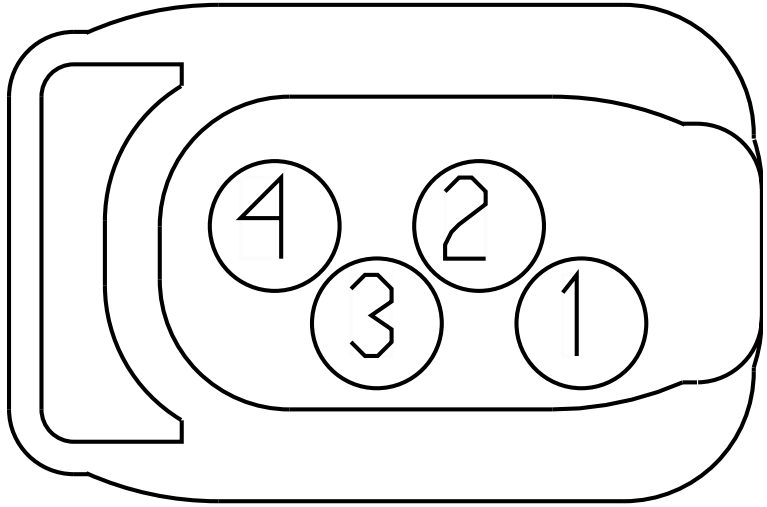

Name	Terminal Part Number	V-Min	Name	Wire Part Number	Wire CSA	Wire Spec	Wire Material description	Wire Color Description	Wire Length	End2 Terminal Part Number	End2 Pin Name	End2 Connect or
1	-	-	YL9AB	3510310 R1	0.53	20.0	Thin Wall XLPE Primary Cable	GREY	2150.0	-	-	-
2	-	-	YL77B	3510298 R1	0.53	20.0	Thin Wall XLPE Primary Cable	LIGHT GREEN	2665.0	-	4	1702
3	-	-	YL77C	3510298 R1	0.53	20.0	Thin Wall XLPE Primary Cable	LIGHT GREEN	2665.0	-	42	1702
4	-	-	YL6DB	3510310 R1	0.53	20.0	Thin Wall XLPE Primary Cable	GREY	2665.0	-	3	1702

Connector Name K01-6301-DEL

Part Number RING-E-1-2_0

Instances LT/RH - A26 - Leece-Neville 320PAH Alternator:Diagram1
LT/RH - A26 - Bosch LH160_LH200 Alternator:Diagram1
LT/RH - A26 - Bosch LIL165_LIL200 Alternator W/ Remote Sense:Diagram1
LT/RH - A26 - Delco Remy 28SI Alternator W/ Remote Sense:Diagram1
LT/RH - A26 - Delco Remy 36SI Alternator W/ Remote Sense:Diagram1
LT/RH - A26 - Delco Remy 40SI Alternator W/ Remote Sense Combination 2:Diagram1
LT/RH - A26 - Delco Remy 40SI Alternator W/ Remote Sense Combination 1:Diagram1
LT/RH - A26 - Leece-Neville - LN 325A Alternator W/ Remote Sense:Diagram1
LT/RH - A26 - Leece-Neville AVI160 Alternator N/ Remote Sense:Diagram1
LT/RH - A26 - Leece-Neville AVI160-210A/240A Alternator W/ Remote Sense:Diagram1

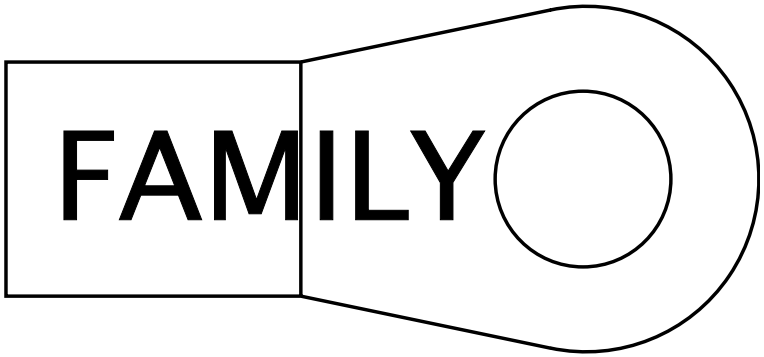

Mates MOT-STARTER-5024-01-03A

Name	Terminal Part Number	V-Min	Name	Wire Part Number	Wire CSA	Wire Spec	Wire Material description	Wire Color Description	Wire Length	End2 Terminal Part Number	End2 Pin Name	End2 Connector
A	-	-	VM2A-FL	2643473 R1	4.81	10.0	FUSEABLE LINK	RUST	160.0	-	X	-
A	-	-	VM2B-FL	2643473 R1	4.81	10.0	FUSEABLE LINK	RUST	160.0	-	X	-
A	-	-	LC2C-FL	2643473 R1	4.81	10.0	FUSEABLE LINK	RUST	160.0	-	X	-
A	-	-	LC2A-FL	2643473 R1	4.81	10.0	FUSEABLE LINK	RUST	160.0	-	X	-
A	-	-	LC2B-FL	2643473 R1	4.81	10.0	FUSEABLE LINK	RUST	160.0	-	X	-
A	-	-	LD2A-FL	2643473 R1	4.81	10.0	FUSEABLE LINK	RUST	160.0	-	X	-
A	-	-	LD2B-FL	2643473 R1	4.81	10.0	FUSEABLE LINK	RUST	160.0	-	X	-

Name	Terminal Part Number	V-Min	Name	Wire Part Number	Wire CSA	Wire Spec	Wire Material description	Wire Color Description	Wire Length	End2 Terminal Part Number	End2 Pin Name	End2 Connector
A	-	-	K2B-FL	2643473 R1	4.81	10.0	FUSEABLE LINK	RUST	210.0	-	X	-
A	-	-	K2C-FL	2643473 R1	4.81	10.0	FUSEABLE LINK	RUST	210.0	-	X	-
A	-	-	K2D-FL	2643473 R1	4.81	10.0	FUSEABLE LINK	RUST	210.0	-	X	-
A	-	-	K2A-FL	2643473 R1	4.81	10.0	FUSEABLE LINK	RUST	210.0	-	X	-
A	-	-	VG2B-FL	2643473 R1	4.81	10.0	FUSEABLE LINK	RUST	160.0	-	X	-
A	-	-	VG2A-FL	2643473 R1	4.81	10.0	FUSEABLE LINK	RUST	160.0	-	X	-
A	-	-	DL2A-FL	2643473 R1	4.81	10.0	FUSEABLE LINK	RUST	160.0	-	X	-
A	-	-	DL2B-FL	2643473 R1	4.81	10.0	FUSEABLE LINK	RUST	160.0	-	X	-
A	-	-	DL2C-FL	2643473 R1	4.81	10.0	FUSEABLE LINK	RUST	160.0	-	X	-
A	-	-	DL2D-FL	2643473 R1	4.81	10.0	FUSEABLE LINK	RUST	160.0	-	X	-
A	-	-	VH2A-FL	2643473 R1	4.81	10.0	FUSEABLE LINK	RUST	160.0	-	X	-
A	-	-	VH2C-FL	2643473 R1	4.81	10.0	FUSEABLE LINK	RUST	160.0	-	X	-
A	-	-	VH2B-FL	2643473 R1	4.81	10.0	FUSEABLE LINK	RUST	160.0	-	X	-

Connector Name	K01-6301-DEL
Part Number	RING-M-12_0
Instances	LT/RH - A26 - Cranking (Starter) GEN4 BCM W/ Thermal Overcrank - External Switch:Diagram1
Mates	MOT-STARTER-5024-01-03A

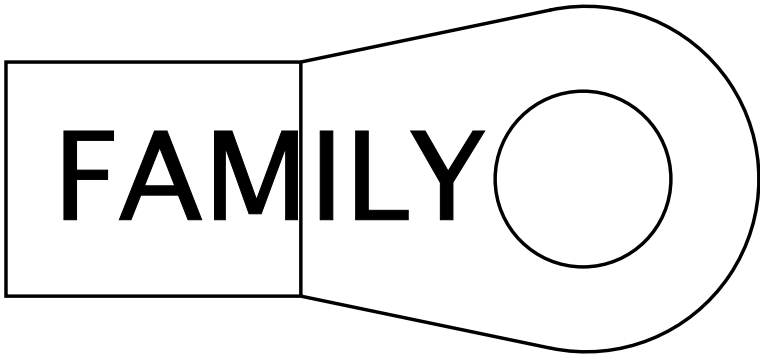

Name	Terminal Part Number	V-Min	Name	Wire Part Number	Wire CSA	Wire Spec	Wire Material description	Wire Color Description	Wire Length	End2 Terminal Part Number	End2 Pin Name	End2 Connect or
A	-	-	14	2645962 R1	49.99	0.0	SGX NFLEX 125	RED	700.0	-	A	6051_A

Connector Name K01-6301-MITS

Part Number RING-E-1-2_0

Instances LT/RH - A26 - Bosch LH160_LH200 Alternator W/ Mitsubishi Starter:Diagram1
LT/RH - A26 - Bosch LIL165_LIL200 Alternator W/ Remote Sense W/ Mitsubishi Starter:Diagram1
LT/RH - A26 - Cranking (Starter) GEN4 BCM W/O Thermal Overcrank Wiring:Diagram1
LT/RH - A26 - Delco Remy 28SI Alternator W/ Remote Sense W/ Mitsubishi Starter:Diagram1
LT/RH - A26 - Delco Remy 36SI Alternator W/ Remote Sense W/ Mitsubishi Starter:Diagram1
LT/RH - A26 - Delco Remy 40SI Alternator W/ Remote Sense Combination 1 W/ Mitsubishi Starter:Diagram1
LT/RH - A26 - Delco Remy 40SI Alternator W/ Remote Sense Combination 2 W/ Mitsubishi Starter:Diagram1
LT/RH - A26 - Leece-Neville - LN 325A Alternator W/ Remote Sense W/ Mitsubishi Starter:Diagram1
LT/RH - A26 - Leece-Neville 320PAH Alternator W/ Mitsubishi Starter:Diagram1
LT/RH - A26 - Leece-Neville AVI160 Alternator N/ Remote Sense W/ Mitsubishi Starter:Diagram1
LT/RH - A26 - Leece-Neville AVI160-210A/240A Alternator W/ Remote Sense W/ Mitsubishi Starter:Diagram1
LT/RH/LoneStar - X15 - Leece-Neville - LN 325A Alternator W/ Remote Sense W/ Mitsubishi Starter:Diagram1

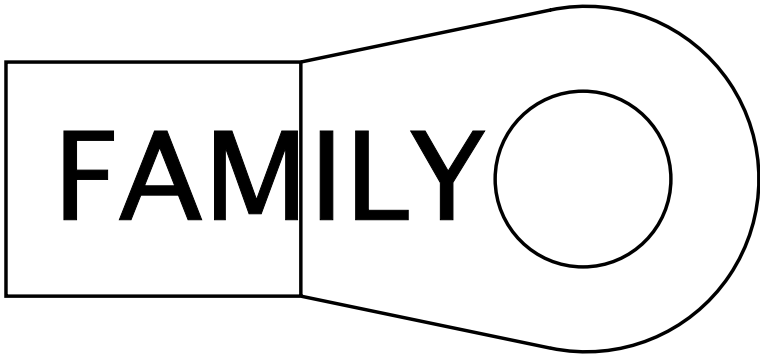

Mates MOT-STARTER-5024-01-04A

Name	Terminal Part Number	V-Min	Name	Wire Part Number	Wire CSA	Wire Spec	Wire Material description	Wire Color Description	Wire Length	End2 Terminal Part Number	End2 Pin Name	End2 Connect or
A	-	-	VM2A-FL	2643473 R1	4.81	10.0	FUSEABLE LINK	RUST	160.0	-	X	-
A	-	-	VM2B-FL	2643473 R1	4.81	10.0	FUSEABLE LINK	RUST	160.0	-	X	-
A	-	-	VG2B-FL	2643473 R1	4.81	10.0	FUSEABLE LINK	RUST	160.0	-	X	-
A	-	-	VG2A-FL	2643473 R1	4.81	10.0	FUSEABLE LINK	RUST	160.0	-	X	-

Name	Terminal Part Number	V-Min	Name	Wire Part Number	Wire CSA	Wire Spec	Wire Material description	Wire Color Description	Wire Length	End2 Terminal Part Number	End2 Pin Name	End2 Connector
A	-	-	DL2A-FL	2643473 R1	4.81	10.0	FUSEABLE LINK	RUST	160.0	-	X	-
A	-	-	DL2B-FL	2643473 R1	4.81	10.0	FUSEABLE LINK	RUST	160.0	-	X	-
A	-	-	DL2C-FL	2643473 R1	4.81	10.0	FUSEABLE LINK	RUST	160.0	-	X	-
A	-	-	DL2D-FL	2643473 R1	4.81	10.0	FUSEABLE LINK	RUST	160.0	-	X	-
A	-	-	K2B-FL	2643473 R1	4.81	10.0	FUSEABLE LINK	RUST	210.0	-	X	-
A	-	-	K2C-FL	2643473 R1	4.81	10.0	FUSEABLE LINK	RUST	210.0	-	X	-
A	-	-	K2D-FL	2643473 R1	4.81	10.0	FUSEABLE LINK	RUST	210.0	-	X	-
A	-	-	K2A-FL	2643473 R1	4.81	10.0	FUSEABLE LINK	RUST	210.0	-	X	-
A	-	-	VH2A-FL	2643473 R1	4.81	10.0	FUSEABLE LINK	RUST	160.0	-	X	-
A	-	-	VH2C-FL	2643473 R1	4.81	10.0	FUSEABLE LINK	RUST	160.0	-	X	-
A	-	-	VH2B-FL	2643473 R1	4.81	10.0	FUSEABLE LINK	RUST	160.0	-	X	-
A	-	-	14	2645962 R1	49.99	0.0	SGX NFLEX 125	RED	700.0	-	A	6051_A
A	-	-	LC2C-FL	2643473 R1	4.81	10.0	FUSEABLE LINK	RUST	160.0	-	X	-
A	-	-	LC2A-FL	2643473 R1	4.81	10.0	FUSEABLE LINK	RUST	160.0	-	X	-
A	-	-	LC2B-FL	2643473 R1	4.81	10.0	FUSEABLE LINK	RUST	160.0	-	X	-
A	-	-	LD2A-FL	2643473 R1	4.81	10.0	FUSEABLE LINK	RUST	160.0	-	X	-

Name	Terminal Part Number	V-Min	Name	Wire Part Number	Wire CSA	Wire Spec	Wire Material description	Wire Color Description	Wire Length	End2 Terminal Part Number	End2 Pin Name	End2 Connector
A	-	-	LD2B-FL	2643473 R1	4.81	10.0	FUSEABLE LINK	RUST	160.0	-	X	-

Connector Name	K01-6307/6306-MITS
Part Number	RING-M-6_0
Instances	LT/RH - A26 - Cranking (Starter) GEN4 BCM W/O Thermal Overcrank Wiring:Diagram1
Mates	MOT-STARTER-5024-01-04

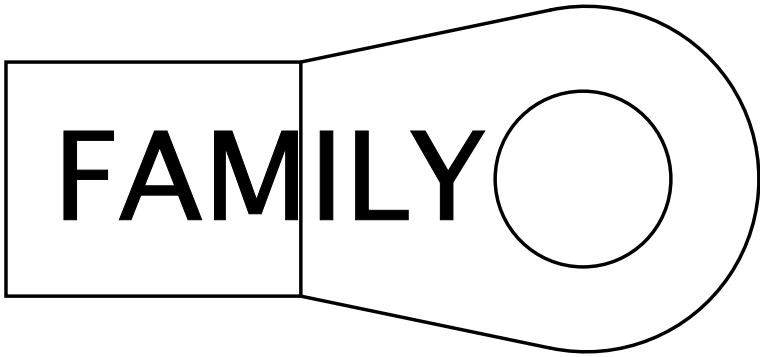

Name	Terminal Part Number	V-Min	Name	Wire Part Number	Wire CSA	Wire Spec	Wire Material description	Wire Color Description	Wire Length	End2 Terminal Part Number	End2 Pin Name	End2 Connect or
A	-	-	KR17	2643752 R1	1.16	16.0	Std. Wall XLPE Primary Cable	PINK	3545.0	-	16	1702

Connector Name	K01-6316M-DEL
Part Number	2036583C1
Instances	LT/RH - A26 - Cranking (Starter) GEN4 BCM W/ Thermal Overcrank - External Switch:Diagram1
Mates	MOT-STARTER-5024-01-03A

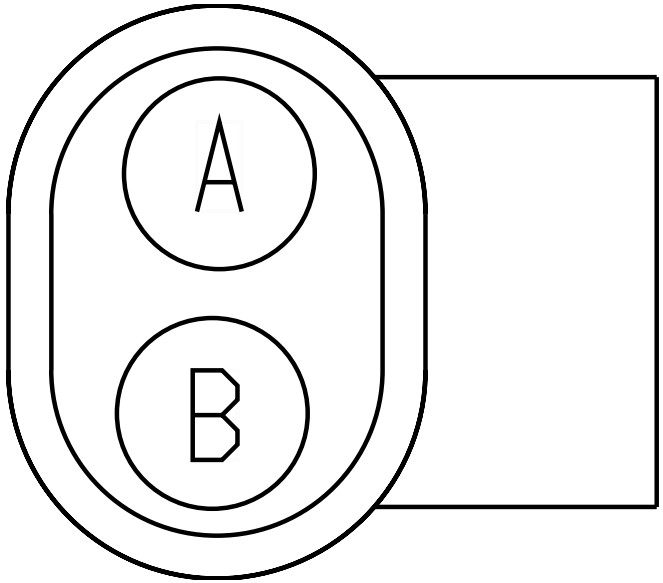

Name	Terminal Part Number	V-Min	Name	Wire Part Number	Wire CSA	Wire Spec	Wire Material description	Wire Color Description	Wire Length	End2 Terminal Part Number	End2 Pin Name	End2 Connect or
A	-	-	LB17D	2643752 R1	1.16	16.0	Std. Wall XLPE Primary Cable	PINK	1185.0	-	A	K01-6317-DEL
B	-	-	LB17	2643752 R1	1.16	16.0	Std. Wall XLPE Primary Cable	PINK	3440.0	-	16	1702

Connector Name	K01-6317-DEL
Part Number	RING-M-5_0
Instances	LT/RH - A26 - Cranking (Starter) GEN4 BCM W/ Thermal Overcrank - External Switch:Diagram1
Mates	MOT-STARTER-5024-01-03A

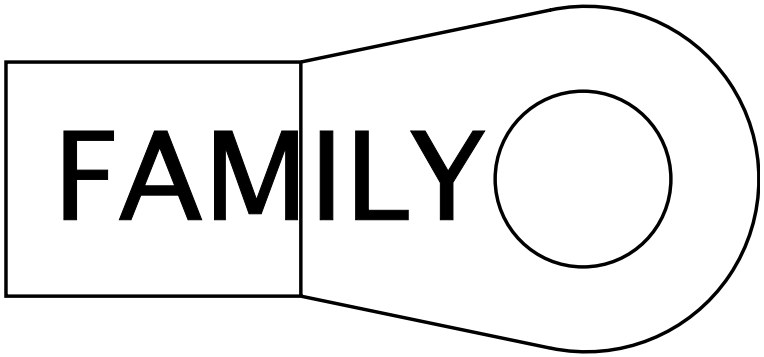

Name	Terminal Part Number	V-Min	Name	Wire Part Number	Wire CSA	Wire Spec	Wire Material description	Wire Color Description	Wire Length	End2 Terminal Part Number	End2 Pin Name	End2 Connect or
A	-	-	LB17D	2643752 R1	1.16	16.0	Std. Wall XLPE Primary Cable	PINK	1185.0	-	A	K01-6316M-DEL

Connector Name	K01-6400A
Part Number	3522068C1
Instances	LT/RH A26 - Cooling Fan Control With Switch:Diagram1 LT/RH A26 - Cooling Fan Control Without Switch:Diagram1
Mates	DEV-ENGINE_FAN-01-A26

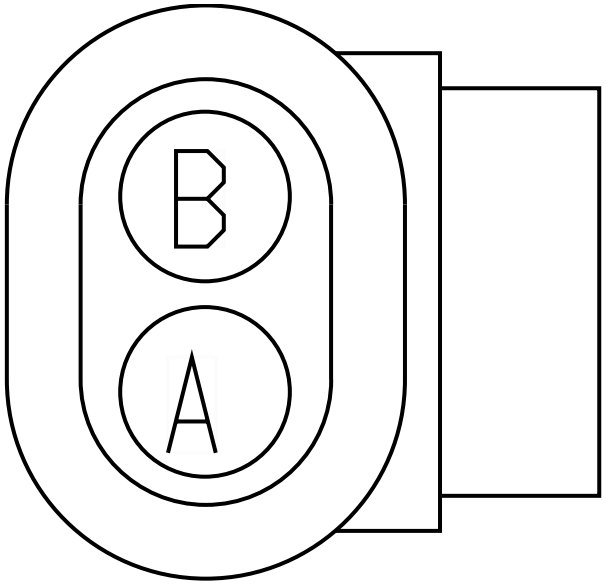

Name	Terminal Part Number	V-Min	Name	Wire Part Number	Wire CSA	Wire Spec	Wire Material description	Wire Color Description	Wire Length	End2 Terminal Part Number	End2 Pin Name	End2 Connect or
A	-	-	ZA23-G	3510359 R1	0.79	18.0	Thin Wall XLPE Primary Cable	WHITE	1325.0	-	76	K01-6018
B	-	-	ZB23A	3510329 R1	0.79	18.0	Thin Wall XLPE Primary Cable	TAN	1325.0	-	25	K01-6018
B	-	-	ZC23A2	3510329 R1	0.79	18.0	Thin Wall XLPE Primary Cable	TAN	560.0	-	X	-

Connector Name	K01-6401
Part Number	3662425C1
Instances	LT/RH A26 - Coolant Level Monitoring:Diagram1
Mates	SNSR-COOLANT-LEV-5012-04-0 1A

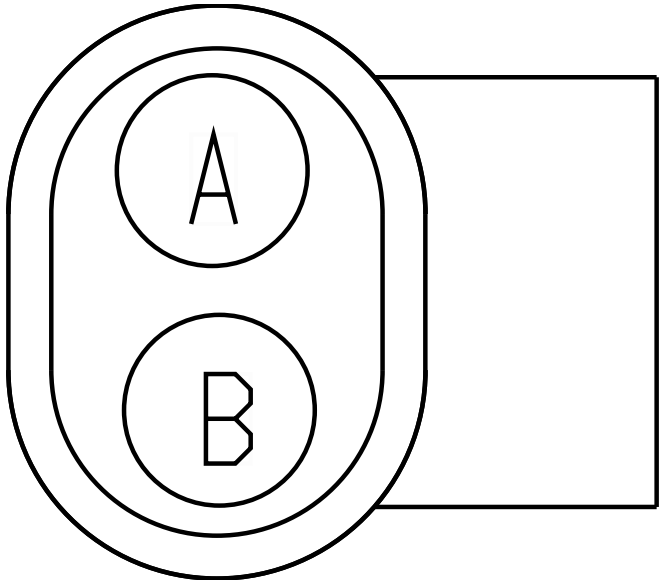

Name	Terminal Part Number	V-Min	Name	Wire Part Number	Wire CSA	Wire Spec	Wire Material description	Wire Color Description	Wire Length	End2 Terminal Part Number	End2 Pin Name	End2 Connect or
A	-	-	KB34D	3510329 R1	0.79	18.0	Thin Wall XLPE Primary Cable	TAN	2605.0	-	8	K01-6018
B	-	-	KB34B	3510329 R1	0.79	18.0	Thin Wall XLPE Primary Cable	TAN	2175.0	-	-	-

Connector Name	K01-6564
Part Number	374377C2
Instances	LT/RH A26 - Starting Aid (Flame Start):Diagram1
Mates	DEV-FLAME_START_GLOW-5022- 02-01A

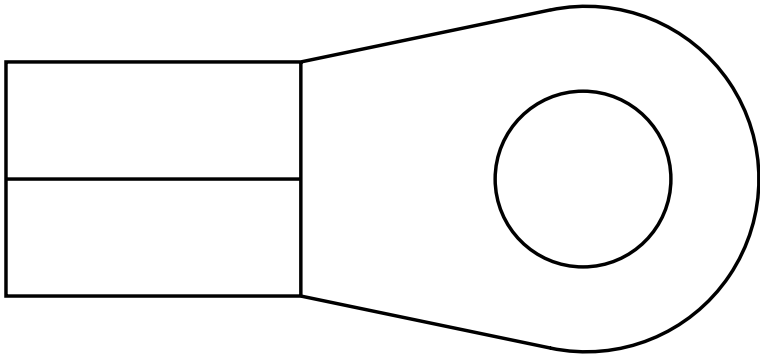

Name	Terminal Part Number	V-Min	Name	Wire Part Number	Wire CSA	Wire Spec	Wire Material description	Wire Color Description	Wire Length	End2 Terminal Part Number	End2 Pin Name	End2 Connect or
A	-	-	CC21A2	2643797 R1	3.01	12.0	Std. Wall XLPE Primary Cable	TAN	1350.0	-	2	K01-8410
A	-	-	CC21A1	2643797 R1	3.01	12.0	Std. Wall XLPE Primary Cable	TAN	1350.0	-	1	K01-8410

Connector Name	K01-670A
Part Number	3573078C1
Instances	LT/RH - A26 - Selective Catalytic Reduction (SCR):Diagram2 - Supply Module, Sensor Table, Quality Sensor, DEF Tank Valve-Combination1 LT/RH - A26 - Selective Catalytic Reduction (SCR):Diagram2 - Supply Module, Sensor Table, Quality Sensor, DEF Tank Valve-Combination2 LT/RH - A26 - Selective Catalytic Reduction (SCR):Diagram2 - Supply Module, Sensor Table, Quality Sensor, DEF Tank Valve-Combination3
Mates	DPF-SensrTable-5041-01-01A

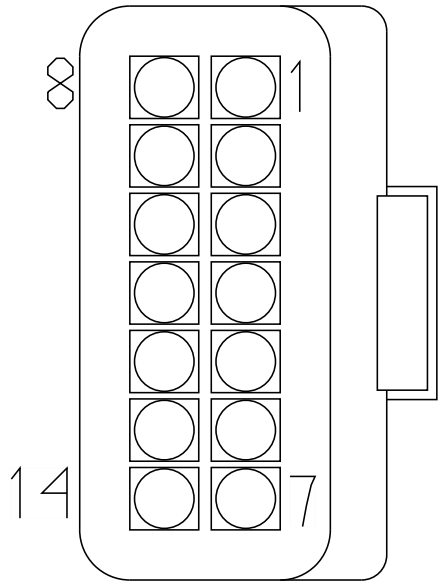

Name	Terminal Part Number	V-Min	Name	Wire Part Number	Wire CSA	Wire Spec	Wire Material description	Wire Color Description	Wire Length	End2 Terminal Part Number	End2 Pin Name	End2 Connect or
1	-	-	LE95DVL	4073403 R1	0.53	20.0	TXL 150C	TAN	2795.0	-	6	K01-6019
1	-	-	LF95DVL	4073403 R1	0.53	20.0	TXL 150C	TAN	2670.0	-	6	K01-6019
2	-	-	LE95DVH	4073403 R1	0.53	20.0	TXL 150C	TAN	2795.0	-	1	K01-6019
2	-	-	LF95DVH	4073403 R1	0.53	20.0	TXL 150C	TAN	2670.0	-	1	K01-6019
3	-	-	LE95BA	2645915 R1	0.79	18.0	TXL 150C	TAN	2645.0	-	10	K01-6018
3	-	-	LF95BA	2645915 R1	0.79	18.0	TXL 150C	TAN	2520.0	-	10	K01-6018
4	-	-	LE95BC	2645915 R1	0.79	18.0	TXL 150C	TAN	2645.0	-	7	K01-6018
4	-	-	LF95BC	2645915 R1	0.79	18.0	TXL 150C	TAN	2520.0	-	7	K01-6018

Name	Terminal Part Number	V-Min	Name	Wire Part Number	Wire CSA	Wire Spec	Wire Material description	Wire Color Description	Wire Length	End2 Terminal Part Number	End2 Pin Name	End2 Connector
5	-	-	ZD95DA	2645915 R1	0.79	18.0	TXL 150C	TAN	2645.0	-	36	K01-6018
5	-	-	ZE95DB	4073403 R1	0.53	20.0	TXL 150C	TAN	2440.0	-	X	-
5	-	-	ZF95DA	2645915 R1	0.79	18.0	TXL 150C	TAN	2520.0	-	36	K01-6018
5	-	-	ZG95DB	4073403 R1	0.53	20.0	TXL 150C	TAN	2315.0	-	X	-
7	-	-	AP9	4073403 R1	0.53	20.0	TXL 150C	TAN	2485.0	-	X	-
7	-	-	LE9	4073403 R1	0.53	20.0	TXL 150C	TAN	2485.0	-	X	-
7	-	-	LF9	4073403 R1	0.53	20.0	TXL 150C	TAN	2360.0	-	X	-
7	-	-	AY9	4073403 R1	0.53	20.0	TXL 150C	TAN	2360.0	-	X	-
8	-	-	LE95K	2645915 R1	0.79	18.0	TXL 150C	TAN	2645.0	-	34	K01-6018
8	-	-	LF95K	2645915 R1	0.79	18.0	TXL 150C	TAN	2520.0	-	34	K01-6018
11	-	-	AM10-AG	4085637 R1	3.01	12.0	TXL 150C	WHITE	630.0	-	X	-
11	-	-	AL10-AG	4085637 R1	3.01	12.0	TXL 150C	WHITE	630.0	-	X	-
11	-	-	AS10-AG	4085637 R1	3.01	12.0	TXL 150C	WHITE	630.0	-	X	-
12	-	-	AM13R	4085639 R1	3.01	12.0	TXL 150C	PINK	600.0	-	X	-
12	-	-	AL13R	4085639 R1	3.01	12.0	TXL 150C	PINK	600.0	-	X	-
12	-	-	AS13R	4085639 R1	3.01	12.0	TXL 150C	PINK	600.0	-	X	-

Name	Terminal Part Number	V-Min	Name	Wire Part Number	Wire CSA	Wire Spec	Wire Material description	Wire Color Description	Wire Length	End2 Terminal Part Number	End2 Pin Name	End2 Connector
13	-	-	-	-	-	-	-	-	-	-	-	-
14	-	-	-	-	-	-	-	-	-	-	-	-

Connector Name	K01-6702
Part Number	3551896C1
Instances	LT/RH A26 - ZVR Splice Packs - 6702 & 6704B:Diagram1
Mates	SP-N13-B000-00-10-K1A

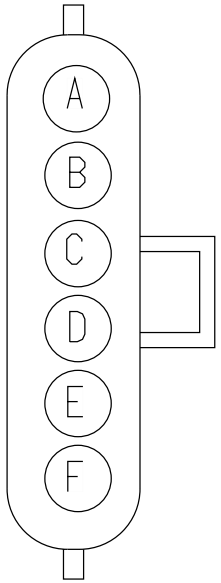

Name	Terminal Part Number	V-Min	Name	Wire Part Number	Wire CSA	Wire Spec	Wire Material description	Wire Color Description	Wire Length	End2 Terminal Part Number	End2 Pin Name	End2 Connect or
A	-	-	YK9AA	3510312 R1	1.16	16.0	Thin Wall XLPE Primary Cable	GREY	715.0	-	-	-
B	-	-	YN9AB	3510310 R1	0.53	20.0	Thin Wall XLPE Primary Cable	GREY	1970.0	-	-	-
B	-	-	YL9AB	3510310 R1	0.53	20.0	Thin Wall XLPE Primary Cable	GREY	2150.0	-	-	-
C	-	-	KK9AAD	2643673 R1	0.79	18.0	Std. Wall XLPE Primary Cable	GREY	2705.0	-	-	-

Name	Terminal Part Number	V-Min	Name	Wire Part Number	Wire CSA	Wire Spec	Wire Material description	Wire Color Description	Wire Length	End2 Terminal Part Number	End2 Pin Name	End2 Connector
C	-	-	WP9AAD	2643673 R1	0.79	18.0	Std. Wall XLPE Primary Cable	GREY	3235.0	-	-	-
C	-	-	PC9AAD	3510311 R1	0.79	18.0	Thin Wall XLPE Primary Cable	GREY	3170.0	-	-	-
D	-	-	KE9AAB	3510311 R1	0.79	18.0	Thin Wall XLPE Primary Cable	GREY	1920.0	-	-	-
D	-	-	JE9AAB	2643673 R1	0.79	18.0	Std. Wall XLPE Primary Cable	GREY	1110.0	-	-	-

Connector Name K01-6703A
Part Number 3522068C1
Instances LT/RH - A26 - Air Flow Restriction Monitoring A26:Diagram2

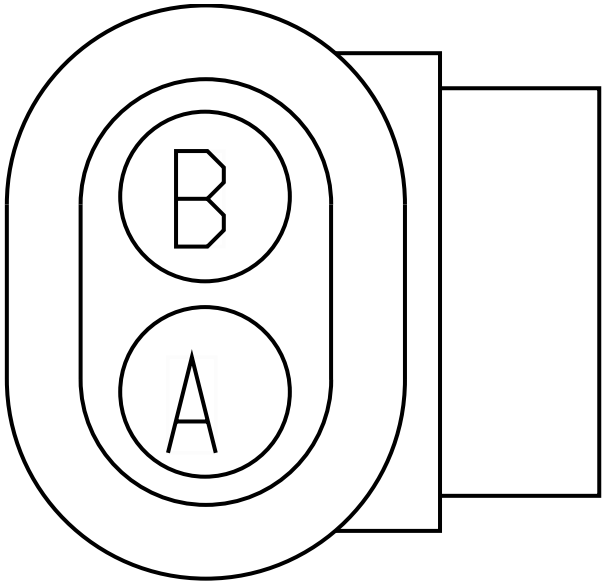

Name	Terminal Part Number	V-Min	Name	Wire Part Number	Wire CSA	Wire Spec	Wire Material description	Wire Color Description	Wire Length	End2 Terminal Part Number	End2 Pin Name	End2 Connect or
A	-	-	JE9AAB	2643673 R1	0.79	18.0	Std. Wall XLPE Primary Cable	GREY	1110.0	-	-	-
B	-	-	JE28	2643676 R1	0.79	18.0	Std. Wall XLPE Primary Cable	TAN	1625.0	-	5	1702

Connector Name	K01-6703B
Part Number	3522068C1
Instances	LT/RH - A26 - Air Flow Restriction Monitoring A26:Diagram1
Mates	GAUG-AIR_RESTRICTION-5010- 01-01B

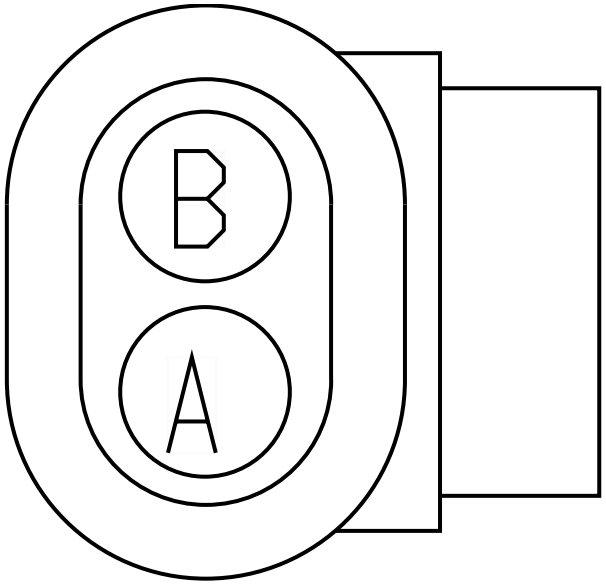

Name	Terminal Part Number	V-Min	Name	Wire Part Number	Wire CSA	Wire Spec	Wire Material description	Wire Color Description	Wire Length	End2 Terminal Part Number	End2 Pin Name	End2 Connect or
A	-	-	KE9AAB	3510311 R1	0.79	18.0	Thin Wall XLPE Primary Cable	GREY	1920.0	-	-	-
B	-	-	KE28	3510329 R1	0.79	18.0	Thin Wall XLPE Primary Cable	TAN	2330.0	-	5	1702

Connector Name	K01-6704B
Part Number	3551896C1
Instances	LT/RH A26 - ZVR Splice Packs - 6702 & 6704B:Diagram1
Mates	SP-N13-B000-00-10-K1B

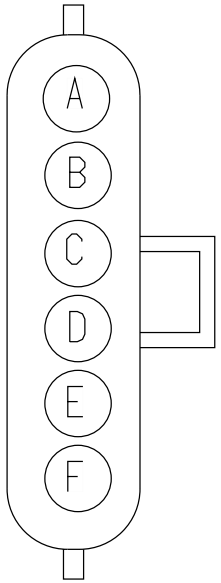

Name	Terminal Part Number	V-Min	Name	Wire Part Number	Wire CSA	Wire Spec	Wire Material description	Wire Color Description	Wire Length	End2 Terminal Part Number	End2 Pin Name	End2 Connect or
A	-	-	LE9B	3510347 R1	0.79	18.0	Thin Wall XLPE Primary Cable	VIOLET	430.0	-	X	-
A	-	-	AY9B	3510347 R1	0.79	18.0	Thin Wall XLPE Primary Cable	VIOLET	430.0	-	X	-
B	-	-	WC92B20	3510329 R1	0.79	18.0	Thin Wall XLPE Primary Cable	TAN	285.0	-	-	-
B	-	-	KD92B20	3510329 R1	0.79	18.0	Thin Wall XLPE Primary Cable	TAN	285.0	-	-	-

Name	Terminal Part Number	V-Min	Name	Wire Part Number	Wire CSA	Wire Spec	Wire Material description	Wire Color Description	Wire Length	End2 Terminal Part Number	End2 Pin Name	End2 Connect or
B	-	-	WA92B20	3510329 R1	0.79	18.0	Thin Wall XLPE Primary Cable	TAN	285.0	-	-	-
C	-	-	SG92A3	3510329 R1	0.79	18.0	Thin Wall XLPE Primary Cable	TAN	595.0	-	-	-
D	-	-	VE95W	3510329 R1	0.79	18.0	Thin Wall XLPE Primary Cable	TAN	1670.0	-	-	-
D	-	-	VA95W	3510329 R1	0.79	18.0	Thin Wall XLPE Primary Cable	TAN	1320.0	-	-	-
F	-	-	KB34B	3510329 R1	0.79	18.0	Thin Wall XLPE Primary Cable	TAN	2175.0	-	-	-

Connector Name K01-7000

Part Number 365876C2

Instances LT/RH - A26 - Bosch LIL165_LIL200 Alternator W/ Remote Sense:Diagram1
LT/RH - A26 - Bosch LIL165_LIL200 Alternator W/ Remote Sense W/ Mitsubishi Starter:Diagram1
LT/RH - A26 - Delco Remy 28SI Alternator W/ Remote Sense:Diagram1
LT/RH - A26 - Delco Remy 28SI Alternator W/ Remote Sense W/ Mitsubishi Starter:Diagram1
LT/RH - A26 - Delco Remy 36SI Alternator W/ Remote Sense:Diagram1
LT/RH - A26 - Delco Remy 36SI Alternator W/ Remote Sense W/ Mitsubishi Starter:Diagram1
LT/RH - A26 - Delco Remy 40SI Alternator W/ Remote Sense Combination 1 W/ Mitsubishi Starter:Diagram1
LT/RH - A26 - Delco Remy 40SI Alternator W/ Remote Sense Combination 2:Diagram1
LT/RH - A26 - Delco Remy 40SI Alternator W/ Remote Sense Combination 1:Diagram1
LT/RH - A26 - Delco Remy 40SI Alternator W/ Remote Sense Combination 2 W/ Mitsubishi Starter:Diagram1
LT/RH - A26 - Leece-Neville - LN 325A Alternator W/ Remote Sense:Diagram1
LT/RH - A26 - Leece-Neville - LN 325A Alternator W/ Remote Sense W/ Mitsubishi Starter:Diagram1
LT/RH - A26 - Leece-Neville AVI160-210A/240A Alternator W/ Remote Sense:Diagram1
LT/RH - A26 - Leece-Neville AVI160-210A/240A Alternator W/ Remote Sense W/ Mitsubishi Starter:Diagram1

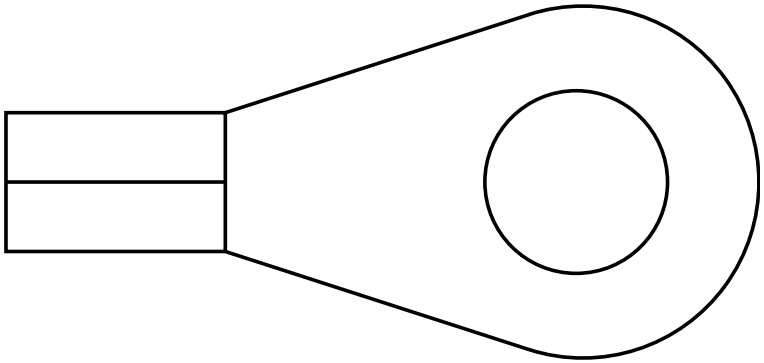

Mates DEV-Bosch_LIL165_LIL200_Al ternator-4004-01-08B

Name	Terminal Part Number	V-Min	Name	Wire Part Number	Wire CSA	Wire Spec	Wire Material description	Wire Color Description	Wire Length	End2 Terminal Part Number	End2 Pin Name	End2 Connect or
A	-	-	JS1A	2643694 R1	1.91	14.0	Std. Wall XLPE Primary Cable	LIGHT BLUE	3755.0	-	B	K01-1F

Connector Name	K01-7000
Part Number	365876C2
Instances	LT/RH - A26/X15 - Maxwell 12V Ultracapacitor Engine Start Module (ESM):Diagram1
Mates	DEV-Delco_Remy_28SI_Altern ator-4004-01-05B

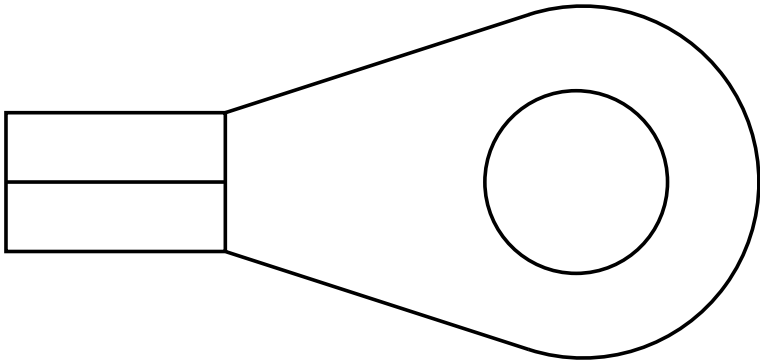

Name	Terminal Part Number	V-Min	Name	Wire Part Number	Wire CSA	Wire Spec	Wire Material description	Wire Color Description	Wire Length	End2 Terminal Part Number	End2 Pin Name	End2 Connect or
A	-	-	WIRE416317	-	0.0	-	-	-	0.0	-	B	K01-1F

Connector Name	K01-7105A
Part Number	3599542C1
Instances	LT/RH - A26 - Starter Interlock (BCM LSD Controlled w/ Relay)_EATON XMSN:Diagram1 LT/RH - A26 - Transmission Shifter (Universal Shifter - Ultrashift + & FAS):Diagram1 LT/RH A26 - Transmission (Ultrashift+ w/Body Builder):Diagram1 LT/RH A26 - Ultrashift Plus:Diagram1
Mates	MODU-TCM-A002-10-01B Ultrashift A26

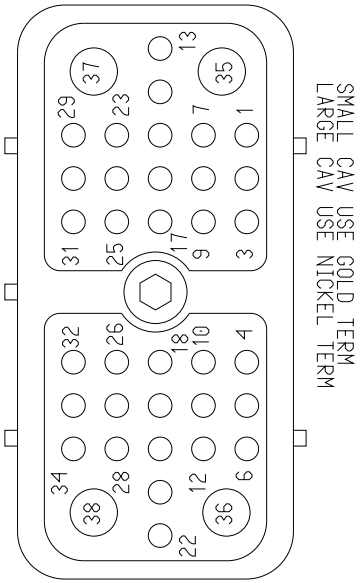

Name	Terminal Part Number	V-Min	Name	Wire Part Number	Wire CSA	Wire Spec	Wire Material description	Wire Color Description	Wire Length	End2 Terminal Part Number	End2 Pin Name	End2 Connect or
2	-	-	-	-	-	-	-	-	-	-	-	-
3	-	-	-	-	-	-	-	-	-	-	-	-
4	-	-	KH17-GC	2643794 R1	0.79	18.0	Std. Wall XLPE Primary Cable	PINK	3385.0	-	19	1702
4	-	-	KH17-GC	2643794 R1	0.79	18.0	Std. Wall XLPE Primary Cable	PINK	3385.0	-	-	-
16	-	-	TG92A	2643676 R1	0.79	18.0	Std. Wall XLPE Primary Cable	TAN	3385.0	-	12	1702
16	-	-	TG92A	2643676 R1	0.79	18.0	Std. Wall XLPE Primary Cable	TAN	3385.0	-	-	-

Name	Terminal Part Number	V-Min	Name	Wire Part Number	Wire CSA	Wire Spec	Wire Material description	Wire Color Description	Wire Length	End2 Terminal Part Number	End2 Pin Name	End2 Connector
17	-	-	TG92B	2643676 R1	0.79	18.0	Std. Wall XLPE Primary Cable	TAN	3385.0	-	40	1702
17	-	-	TG92B	2643676 R1	0.79	18.0	Std. Wall XLPE Primary Cable	TAN	3385.0	-	-	-
18	-	-	VY92DP	2643676 R1	0.79	18.0	Std. Wall XLPE Primary Cable	TAN	285.0	-	A	K01-7502
18	-	-	VY92DP	2643676 R1	0.79	18.0	Std. Wall XLPE Primary Cable	TAN	285.0	-	-	-
24	-	-	SJ92DN	2643676 R1	0.79	18.0	Std. Wall XLPE Primary Cable	TAN	3385.0	-	-	-
26	-	-	KH17C	3510324 R1	1.16	16.0	Thin Wall XLPE Primary Cable	PINK	3385.0	-	21	1702
26	-	-	KH17C	3510324 R1	1.16	16.0	Thin Wall XLPE Primary Cable	PINK	3385.0	-	-	-
32	-	-	KH17B	2643794 R1	0.79	18.0	Std. Wall XLPE Primary Cable	PINK	3385.0	-	20	1702

Name	Terminal Part Number	V-Min	Name	Wire Part Number	Wire CSA	Wire Spec	Wire Material description	Wire Color Description	Wire Length	End2 Terminal Part Number	End2 Pin Name	End2 Connector
32	-	-	KH17B	2643794 R1	0.79	18.0	Std. Wall XLPE Primary Cable	PINK	3385.0	-	-	-
34	-	-	VY92DR	2643676 R1	0.79	18.0	Std. Wall XLPE Primary Cable	TAN	285.0	-	B	K01-7502
34	-	-	VY92DR	2643676 R1	0.79	18.0	Std. Wall XLPE Primary Cable	TAN	285.0	-	-	-
35	-	-	KH13A	2643691 R1	1.91	14.0	Std. Wall XLPE Primary Cable	PINK	3385.0	-	8	1702
36	-	-	WC10-GE	2643787 R1	3.01	12.0	Std. Wall XLPE Primary Cable	WHITE	185.0	-	-	-
38	-	-	LJ14A	3510368 R1	3.01	12.0	Thin Wall XLPE Primary Cable	RED	3890.0	-	-	-

Connector Name	K01-7106
Part Number	3765544C1
Instances	LT/RH - A26 - Transmission Power Take Off Dual Solenoid AUTO:Diagram1 LT/RH - A26 - Transmission Power Take Off Option 1:Diagram1 LT/RH - A26 - Transmission Shifter (Eaton Endurant and Eaton Procision):Diagram1 LT/RH A26 - Auto Start Stop and Sleeper Auto Climate / Cab Temp / Oil Mapping Manual Trans:Diagram1 LT/RH A26 - Auto Start Stop Battery & Oil Temp Mapping Auto Trans:Diagram1 LT/RH A26 - Auto Start Stop Battery & Oil Temp Mapping Manual Trans:Diagram1 LT/RH A26 - Auto Start Stop with Sleeper Auto Climate / Cab Temp / Oil Mapping Auto Trans:Diagram1 LT/RH A26 - Endurant Transmission:Diagram1 LT/RH A26 - Transmission I/O (Endurant Pressure Sensor):Diagram1 LT/RH/LoneStar - X15/A26 - Hill Start Aid (Bendix):Diagram1 LT/RH/LoneStar - X15/A26 - Hill Start Aid (Bendix):Diagram2 LT/RH/LoneStar - X15/A26 - Hill Start Aid (Bendix):Diagram3 LT/RH/LoneStar - X15/A26 - Hill Start Aid (Wabco):Diagram1 LT/RH/LoneStar - X15/A26 - Transmission - MODE Selection:Diagram1 LT/RH/LoneStar - X15/A26 - Transmission Oil Temperature (Automatic Trans W/ Aux Gauge):Diagram1 LT/RH/LoneStar - X15/A26 - Transmission Oil Temperature (Automatic Trans):Diagram1 LT/RH/LoneStar - X15/A26 - Transmission Range Inhibit (J1939 Comm):Diagram1 LT/RH/LoneStar - X15/A26 - Vehicle Speedometer System (W/ AMT/AUTO TRANS):Diagram1 Powertrain J1939 (500Kbps) Edurant Transmission A26:Powertrain J1939 (500Kbps) Edurant Transmission A26
Mates	MODU-TCM-A002-10-02A Endurant A26

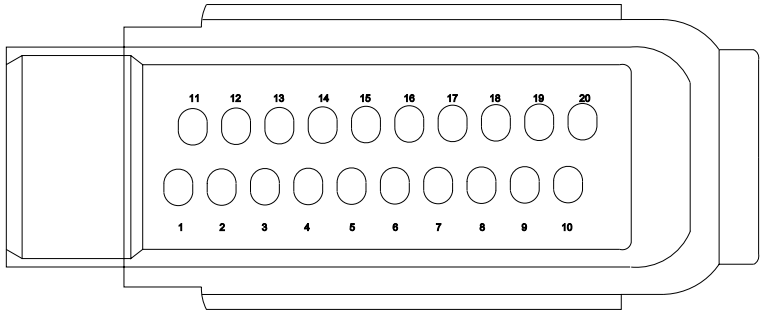

Name	Terminal Part Number	V-Min	Name	Wire Part Number	Wire CSA	Wire Spec	Wire Material description	Wire Color Description	Wire Length	End2 Terminal Part Number	End2 Pin Name	End2 Connector
4	-	-	KG17-GA	3510359 R1	0.79	18.0	Thin Wall XLPE Primary Cable	WHITE	2720.0	-	-	-
5	-	-	KG10-GB	3510294 R1	1.16	16.0	Thin Wall XLPE Primary Cable	BLACK	505.0	-	-	-
6	-	-	KG14A	3510366 R1	1.16	16.0	Thin Wall XLPE Primary Cable	RED	3225.0	-	-	-
7	-	-	KG31A	3510329 R1	0.79	18.0	Thin Wall XLPE Primary Cable	TAN	705.0	-	3	K01-7135
7	-	-	KG31A	3510329 R1	0.79	18.0	Thin Wall XLPE Primary Cable	TAN	705.0	-	-	-
9	-	-	KG92A	3510329 R1	0.79	18.0	Thin Wall XLPE Primary Cable	TAN	2720.0	-	21	1702
9	-	-	KG92A	3510329 R1	0.79	18.0	Thin Wall XLPE Primary Cable	TAN	2720.0	-	-	-
10	-	-	KG13A	3510323 R1	0.79	18.0	Thin Wall XLPE Primary Cable	PINK	2720.0	-	8	1702
11	-	-	-	-	-	-	-	-	-	-	-	-
11	-	-	KG5A (+)	-	0.0	-	-	-	0.0	-	PIN1	-
12	-	-	-	-	-	-	-	-	-	-	-	-

Name	Terminal Part Number	V-Min	Name	Wire Part Number	Wire CSA	Wire Spec	Wire Material description	Wire Color Description	Wire Length	End2 Terminal Part Number	End2 Pin Name	End2 Connector
12	-	-	KG5A (-)	-	0.0	-	-	-	0.0	-	PIN1	-
14	-	-	KG17A	3510323 R1	0.79	18.0	Thin Wall XLPE Primary Cable	PINK	2720.0	-	-	-
15	-	-	KG10-GA	3510294 R1	1.16	16.0	Thin Wall XLPE Primary Cable	BLACK	505.0	-	-	-
16	-	-	KG14B	3510366 R1	1.16	16.0	Thin Wall XLPE Primary Cable	RED	3225.0	-	-	-
18	-	-	KG31B	3510329 R1	0.79	18.0	Thin Wall XLPE Primary Cable	TAN	705.0	-	2	K01-7135
18	-	-	KG31B	3510329 R1	0.79	18.0	Thin Wall XLPE Primary Cable	TAN	705.0	-	-	-
19	-	-	KG31C	3510329 R1	0.79	18.0	Thin Wall XLPE Primary Cable	TAN	705.0	-	1	K01-7135
19	-	-	KG31C	3510329 R1	0.79	18.0	Thin Wall XLPE Primary Cable	TAN	705.0	-	-	-

Connector Name	K01-7107
Part Number	3765545C1
Instances	LT/RH A26 - Backup Light (Dual Reverse Light):Diagram1 LT/RH A26 - Backup Light (Dual Reverse Light):Diagram2 LT/RH A26 - Backup Light (Single Reverse Light):Diagram1 LT/RH A26 - Backup Light (Single Reverse Light):Diagram2 LT/RH A26 - Backup Light (Single Reverse Light) Endurant:Diagram1 LT/RH A26 - Backup Light (Single Reverse Light) Endurant:Diagram2 LT/RH A26 - Backup Light Endurant Trans:Diagram1 LT/RH A26 - Backup Light Endurant Trans:Diagram2 LT/RH A26 - Endurant Transmission:Diagram1
Mates	MODU-TCM-A002-10-02A Endurant A26

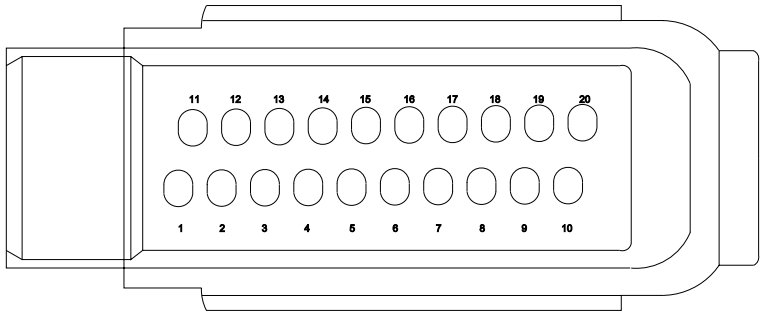

Name	Terminal Part Number	V-Min	Name	Wire Part Number	Wire CSA	Wire Spec	Wire Material description	Wire Color Description	Wire Length	End2 Terminal Part Number	End2 Pin Name	End2 Connect or
1	-	-	KG71K	3510341 R1	0.79	18.0	Thin Wall XLPE Primary Cable	LIGHT BLUE	2810.0	-	7	1702
1	-	-	KG71K	3510341 R1	0.79	18.0	Thin Wall XLPE Primary Cable	LIGHT BLUE	2810.0	-	-	-
2	-	-	KT92#202	3510341 R1	0.79	18.0	Thin Wall XLPE Primary Cable	LIGHT BLUE	2300.0	-	-	-
5	-	-	KP71L	3510317 R1	0.79	18.0	Thin Wall XLPE Primary Cable	ORANGE	2350.0	-	6	1702

Name	Terminal Part Number	V-Min	Name	Wire Part Number	Wire CSA	Wire Spec	Wire Material description	Wire Color Description	Wire Length	End2 Terminal Part Number	End2 Pin Name	End2 Connect or
5	-	-	KP71L	3510317 R1	0.79	18.0	Thin Wall XLPE Primary Cable	ORANGE	2350.0	-	-	-
5	-	-	KT71A	3510341 R1	0.79	18.0	Thin Wall XLPE Primary Cable	LIGHT BLUE	1150.0	-	X	-
14	-	-	KT92#214	3510329 R1	0.79	18.0	Thin Wall XLPE Primary Cable	TAN	2300.0	-	-	-
15	-	-	KT92#215	3510329 R1	0.79	18.0	Thin Wall XLPE Primary Cable	TAN	2300.0	-	-	-
16	-	-	KT92#216	3510329 R1	0.79	18.0	Thin Wall XLPE Primary Cable	TAN	2300.0	-	-	-

Connector Name	K01-7135
Part Number	4104389C1
Instances	LT/RH A26 - Transmission I/O (Endurant Pressure Sensor):Diagram1
Mates	SNSR_Fluid_Pessure_5045_06 _01A

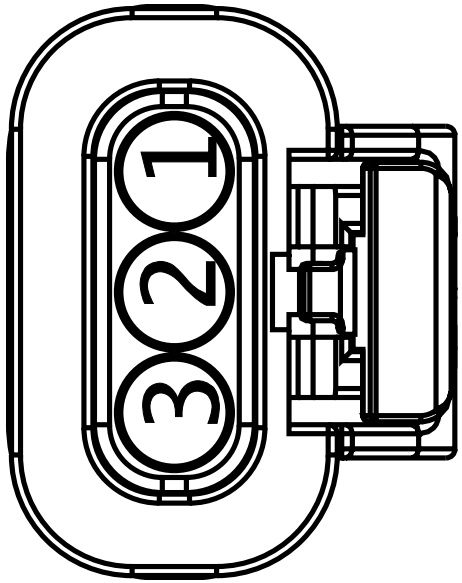

Name	Terminal Part Number	V-Min	Name	Wire Part Number	Wire CSA	Wire Spec	Wire Material description	Wire Color Description	Wire Length	End2 Terminal Part Number	End2 Pin Name	End2 Connector
1	-	-	KG31C	3510329 R1	0.79	18.0	Thin Wall XLPE Primary Cable	TAN	705.0	-	19	K01-7106
2	-	-	KG31B	3510329 R1	0.79	18.0	Thin Wall XLPE Primary Cable	TAN	705.0	-	18	K01-7106
3	-	-	KG31A	3510329 R1	0.79	18.0	Thin Wall XLPE Primary Cable	TAN	705.0	-	7	K01-7106

Connector Name	K01-7150
Part Number	3605713C1
Instances	LT/RH - A26 - Auto Neutral (Allison with Multiplex Switch and Confirmation Telltale):Diagram1 LT/RH A26 - Backup Light (Dual Reverse Light) Allison-3K:Diagram1 LT/RH A26 - Backup Light (Dual Reverse Light) Allison-3K:Diagram2 LT/RH A26 - Backup Light (Reverse Light) Allison-3K:Diagram1 LT/RH A26 - Backup Light (Reverse Light) Allison-3K:Diagram2 LT/RH A26 - Backup Light (Single Reverse Light) Allison 3K:Diagram1 LT/RH A26 - Backup Light (Single Reverse Light) Allison 3K:Diagram2 LT/RH A26 - Backup Light (Single Reverse Light) W/Allison 3K:Diagram1 LT/RH A26 - Backup Light (Single Reverse Light) W/Allison 3K:Diagram2 LT/RH A26 - Transmission (Allison 3K/4K):Diagram1 LT/RH A26 - Transmission I/O (Allison 3K with Body Builder):Diagram1 LT/RH A26 - Transmission I/O (Allison 3K with Body Builder):Diagram2 LT/RH A26 - Transmission I/O (Allison 3K with Body Builder):Diagram3
Mates	MODU-TCM-A002-10-03 Allison 3K A26

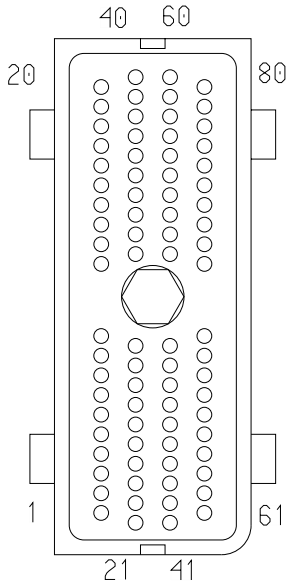

Name	Terminal Part Number	V-Min	Name	Wire Part Number	Wire CSA	Wire Spec	Wire Material description	Wire Color Description	Wire Length	End2 Terminal Part Number	End2 Pin Name	End2 Connect or
1	-	-	TD92#101	3510341 R1	0.79	18.0	Thin Wall XLPE Primary Cable	LIGHT BLUE	3180.0	-	-	-
1	-	-	TD92#101	3510341 R1	0.79	18.0	Thin Wall XLPE Primary Cable	LIGHT BLUE	3180.0	-	A	K01-7206

Name	Terminal Part Number	V-Min	Name	Wire Part Number	Wire CSA	Wire Spec	Wire Material description	Wire Color Description	Wire Length	End2 Terminal Part Number	End2 Pin Name	End2 Connector
3	-	-	TW92#103	3510335 R1	0.79	18.0	Thin Wall XLPE Primary Cable	YELLOW 2	2775.0	-	-	-
3	-	-	TW92#103	3510335 R1	0.79	18.0	Thin Wall XLPE Primary Cable	YELLOW 2	2775.0	-	X	-
5	-	-	TD92#105	3510329 R1	0.79	18.0	Thin Wall XLPE Primary Cable	TAN	3180.0	-	-	-
5	-	-	TD92#105	3510329 R1	0.79	18.0	Thin Wall XLPE Primary Cable	TAN	3180.0	-	F	K01-7205
6	-	-	-	-	-	-	-	-	-	-	-	-
9	-	-	TD92#109	3510311 R1	0.79	18.0	Thin Wall XLPE Primary Cable	GREY	120.0	-	X	-
10	-	-	TD92#110	3510323 R1	0.79	18.0	Thin Wall XLPE Primary Cable	PINK	145.0	-	X	-
11	-	-	TD92#111	3510317 R1	0.79	18.0	Thin Wall XLPE Primary Cable	ORANGE	1125.0	-	-	-
11	-	-	TD92#111	3510317 R1	0.79	18.0	Thin Wall XLPE Primary Cable	ORANGE	1125.0	-	1	K01-7250

Name	Terminal Part Number	V-Min	Name	Wire Part Number	Wire CSA	Wire Spec	Wire Material description	Wire Color Description	Wire Length	End2 Terminal Part Number	End2 Pin Name	End2 Connector
12	-	-	TW92#112	3510329 R1	0.79	18.0	Thin Wall XLPE Primary Cable	TAN	1125.0	-	-	-
12	-	-	TW92#112	3510329 R1	0.79	18.0	Thin Wall XLPE Primary Cable	TAN	1125.0	-	16	K01-7250
16	-	-	TD92#116	3510341 R1	0.79	18.0	Thin Wall XLPE Primary Cable	LIGHT BLUE	1125.0	-	-	-
16	-	-	TD92#116	3510341 R1	0.79	18.0	Thin Wall XLPE Primary Cable	LIGHT BLUE	1125.0	-	15	K01-7250
17	-	-	SA92#117	3510329 R1	0.79	18.0	Thin Wall XLPE Primary Cable	TAN	3180.0	-	-	-
17	-	-	SD92#117	3510329 R1	0.79	18.0	Thin Wall XLPE Primary Cable	TAN	3555.0	-	-	-
17	-	-	SC92A117	3510329 R1	0.79	18.0	Thin Wall XLPE Primary Cable	TAN	270.0	-	X	-
17	-	-	SD92#117	3510329 R1	0.79	18.0	Thin Wall XLPE Primary Cable	TAN	3555.0	-	25	1702

Name	Terminal Part Number	V-Min	Name	Wire Part Number	Wire CSA	Wire Spec	Wire Material description	Wire Color Description	Wire Length	End2 Terminal Part Number	End2 Pin Name	End2 Connector
17	-	-	SA92#117	3510329 R1	0.79	18.0	Thin Wall XLPE Primary Cable	TAN	3180.0	-	B	K01-7206
18	-	-	TD92#118	3510329 R1	0.79	18.0	Thin Wall XLPE Primary Cable	TAN	1125.0	-	-	-
18	-	-	TD92#118	3510329 R1	0.79	18.0	Thin Wall XLPE Primary Cable	TAN	1125.0	-	17	K01-7250
20	-	-	TP92#120	3510341 R1	0.79	18.0	Thin Wall XLPE Primary Cable	LIGHT BLUE	1125.0	-	-	-
20	-	-	TP92#120	3510341 R1	0.79	18.0	Thin Wall XLPE Primary Cable	LIGHT BLUE	1125.0	-	14	K01-7250
22	-	-	TD92#122	3510335 R1	0.79	18.0	Thin Wall XLPE Primary Cable	YELLOW 2	3180.0	-	-	-
22	-	-	TD92#122	3510335 R1	0.79	18.0	Thin Wall XLPE Primary Cable	YELLOW 2	3180.0	-	E	K01-7205
23	-	-	TD92#123	3510341 R1	0.79	18.0	Thin Wall XLPE Primary Cable	LIGHT BLUE	3180.0	-	-	-

Name	Terminal Part Number	V-Min	Name	Wire Part Number	Wire CSA	Wire Spec	Wire Material description	Wire Color Description	Wire Length	End2 Terminal Part Number	End2 Pin Name	End2 Connector
23	-	-	TD92#123	3510341 R1	0.79	18.0	Thin Wall XLPE Primary Cable	LIGHT BLUE	3180.0	-	H	K01-7206
24	-	-	TW92#124	3510329 R1	0.79	18.0	Thin Wall XLPE Primary Cable	TAN	3180.0	-	-	-
24	-	-	TW92#124	3510329 R1	0.79	18.0	Thin Wall XLPE Primary Cable	TAN	3180.0	-	D	K01-7205
25	-	-	XP47A125	3510329 R1	0.79	18.0	Thin Wall XLPE Primary Cable	TAN	3200.0	-	-	-
27	-	-	-	-	-	-	-	-	-	-	-	-
30	-	-	TD92#130	3510359 R1	0.79	18.0	Thin Wall XLPE Primary Cable	WHITE	3180.0	-	-	-
30	-	-	TD92#130	3510359 R1	0.79	18.0	Thin Wall XLPE Primary Cable	WHITE	3180.0	-	G	K01-7206
31	-	-	TU92#131	3510335 R1	0.79	18.0	Thin Wall XLPE Primary Cable	YELLOW 2	1125.0	-	-	-
31	-	-	TU92#131	3510335 R1	0.79	18.0	Thin Wall XLPE Primary Cable	YELLOW 2	1125.0	-	11	K01-7250

Name	Terminal Part Number	V-Min	Name	Wire Part Number	Wire CSA	Wire Spec	Wire Material description	Wire Color Description	Wire Length	End2 Terminal Part Number	End2 Pin Name	End2 Connector
33	-	-	TD92#133	3510335 R1	0.79	18.0	Thin Wall XLPE Primary Cable	YELLOW 2	1125.0	-	-	-
33	-	-	TD92#133	3510335 R1	0.79	18.0	Thin Wall XLPE Primary Cable	YELLOW 2	1125.0	-	9	K01-7250
34	-	-	TD92#134	3510329 R1	0.79	18.0	Thin Wall XLPE Primary Cable	TAN	3555.0	-	-	-
36	-	-	TD92#136	3510317 R1	0.79	18.0	Thin Wall XLPE Primary Cable	ORANGE	1125.0	-	-	-
36	-	-	TD92#136	3510317 R1	0.79	18.0	Thin Wall XLPE Primary Cable	ORANGE	1125.0	-	4	K01-7250
37	-	-	TD92#137	3510329 R1	0.79	18.0	Thin Wall XLPE Primary Cable	TAN	1125.0	-	-	-
37	-	-	TD92#137	3510329 R1	0.79	18.0	Thin Wall XLPE Primary Cable	TAN	1125.0	-	12	K01-7250
39	-	-	TP48#139	3510317 R1	0.79	18.0	Thin Wall XLPE Primary Cable	ORANGE	1720.0	-	-	-

Name	Terminal Part Number	V-Min	Name	Wire Part Number	Wire CSA	Wire Spec	Wire Material description	Wire Color Description	Wire Length	End2 Terminal Part Number	End2 Pin Name	End2 Connector
39	-	-	TP48#139	3510317 R1	0.79	18.0	Thin Wall XLPE Primary Cable	ORANGE	1720.0	-	B	K01-760 3M
40	-	-	TD47#140	3510299 R1	0.79	18.0	Thin Wall XLPE Primary Cable	LIGHT GREEN	1130.0	-	-	-
40	-	-	TD47#140	3510299 R1	0.79	18.0	Thin Wall XLPE Primary Cable	LIGHT GREEN	1130.0	-	B	K01-7605
41	-	-	TD92#141	3510329 R1	0.79	18.0	Thin Wall XLPE Primary Cable	TAN	3555.0	-	-	-
42	-	-	SC92#142	3510329 R1	0.79	18.0	Thin Wall XLPE Primary Cable	TAN	270.0	-	X	-
43	-	-	TD92#143	3510341 R1	0.79	18.0	Thin Wall XLPE Primary Cable	LIGHT BLUE	3180.0	-	-	-
43	-	-	TD92#143	3510341 R1	0.79	18.0	Thin Wall XLPE Primary Cable	LIGHT BLUE	3180.0	-	D	K01-7206
45	-	-	SD92#145	3510317 R1	0.79	18.0	Thin Wall XLPE Primary Cable	ORANGE	3555.0	-	6	1702

Name	Terminal Part Number	V-Min	Name	Wire Part Number	Wire CSA	Wire Spec	Wire Material description	Wire Color Description	Wire Length	End2 Terminal Part Number	End2 Pin Name	End2 Connect or
45	-	-	SA92#145	3510317 R1	0.79	18.0	Thin Wall XLPE Primary Cable	ORANGE	3180.0	-	-	-
45	-	-	SC92#145	3510317 R1	0.79	18.0	Thin Wall XLPE Primary Cable	ORANGE	3555.0	-	6	1702
45	-	-	SA92#145	3510317 R1	0.79	18.0	Thin Wall XLPE Primary Cable	ORANGE	3180.0	-	F	K01-7206
51	-	-	TD92#151	3510359 R1	0.79	18.0	Thin Wall XLPE Primary Cable	WHITE	1125.0	-	-	-
51	-	-	TD92#151	3510359 R1	0.79	18.0	Thin Wall XLPE Primary Cable	WHITE	1125.0	-	10	K01-7250
52	-	-	TD92#152	3510299 R1	0.79	18.0	Thin Wall XLPE Primary Cable	LIGHT GREEN	1125.0	-	-	-
52	-	-	TD92#152	3510299 R1	0.79	18.0	Thin Wall XLPE Primary Cable	LIGHT GREEN	1125.0	-	5	K01-7250
54	-	-	TD92#154	3510329 R1	0.79	18.0	Thin Wall XLPE Primary Cable	TAN	1125.0	-	-	-

Name	Terminal Part Number	V-Min	Name	Wire Part Number	Wire CSA	Wire Spec	Wire Material description	Wire Color Description	Wire Length	End2 Terminal Part Number	End2 Pin Name	End2 Connector
54	-	-	TD92#154	3510329 R1	0.79	18.0	Thin Wall XLPE Primary Cable	TAN	1125.0	-	18	K01-7250
55	-	-	TD92#155	3510329 R1	0.79	18.0	Thin Wall XLPE Primary Cable	TAN	1125.0	-	-	-
55	-	-	TD92#155	3510329 R1	0.79	18.0	Thin Wall XLPE Primary Cable	TAN	1125.0	-	2	K01-7250
57	-	-	TD92#157	3510359 R1	0.79	18.0	Thin Wall XLPE Primary Cable	WHITE	3180.0	-	-	-
57	-	-	TD92#157	3510359 R1	0.79	18.0	Thin Wall XLPE Primary Cable	WHITE	3180.0	-	C	K01-7205
58	-	-	TU92#158	3510299 R1	0.79	18.0	Thin Wall XLPE Primary Cable	LIGHT GREEN	1125.0	-	-	-
58	-	-	TU92#158	3510299 R1	0.79	18.0	Thin Wall XLPE Primary Cable	LIGHT GREEN	1125.0	-	19	K01-7250
59	-	-	TP48#159	3510329 R1	0.79	18.0	Thin Wall XLPE Primary Cable	TAN	1720.0	-	-	-

Name	Terminal Part Number	V-Min	Name	Wire Part Number	Wire CSA	Wire Spec	Wire Material description	Wire Color Description	Wire Length	End2 Terminal Part Number	End2 Pin Name	End2 Connector
59	-	-	TP48#159	3510329 R1	0.79	18.0	Thin Wall XLPE Primary Cable	TAN	1720.0	-	A	K01-760 3M
60	-	-	TD47#160	3510335 R1	0.79	18.0	Thin Wall XLPE Primary Cable	YELLOW 2	1130.0	-	-	-
60	-	-	TD47#160	3510335 R1	0.79	18.0	Thin Wall XLPE Primary Cable	YELLOW 2	1130.0	-	A	K01-7605
61	-	-	TW92#161	3510329 R1	0.79	18.0	Thin Wall XLPE Primary Cable	TAN	3180.0	-	-	-
61	-	-	TW92#161	3510329 R1	0.79	18.0	Thin Wall XLPE Primary Cable	TAN	3180.0	-	B	K01-7205
62	-	-	TD92#162	3510335 R1	0.79	18.0	Thin Wall XLPE Primary Cable	YELLOW 2	3180.0	-	-	-
62	-	-	TD92#162	3510335 R1	0.79	18.0	Thin Wall XLPE Primary Cable	YELLOW 2	3180.0	-	H	K01-7205
63	-	-	TD92#163	3510329 R1	0.79	18.0	Thin Wall XLPE Primary Cable	TAN	3555.0	-	8	1702

Name	Terminal Part Number	V-Min	Name	Wire Part Number	Wire CSA	Wire Spec	Wire Material description	Wire Color Description	Wire Length	End2 Terminal Part Number	End2 Pin Name	End2 Connector
64	-	-	TD92#164	3510341 R1	0.79	18.0	Thin Wall XLPE Primary Cable	LIGHT BLUE	3180.0	-	-	-
64	-	-	TD92#164	3510341 R1	0.79	18.0	Thin Wall XLPE Primary Cable	LIGHT BLUE	3180.0	-	G	K01-7205
65	-	-	TD92#165	3510329 R1	0.79	18.0	Thin Wall XLPE Primary Cable	TAN	3555.0	-	-	-
65	-	-	TD92#165	3510329 R1	0.79	18.0	Thin Wall XLPE Primary Cable	TAN	3555.0	-	7	1702
69	-	-	TD92#169	3510329 R1	0.79	18.0	Thin Wall XLPE Primary Cable	TAN	120.0	-	X	-
70	-	-	TD92#170	3510329 R1	0.79	18.0	Thin Wall XLPE Primary Cable	TAN	145.0	-	X	-
71	-	-	TD92#171	3510329 R1	0.79	18.0	Thin Wall XLPE Primary Cable	TAN	1125.0	-	-	-
71	-	-	TD92#171	3510329 R1	0.79	18.0	Thin Wall XLPE Primary Cable	TAN	1125.0	-	6	K01-7250

Name	Terminal Part Number	V-Min	Name	Wire Part Number	Wire CSA	Wire Spec	Wire Material description	Wire Color Description	Wire Length	End2 Terminal Part Number	End2 Pin Name	End2 Connector
74	-	-	TD92#174	3510329 R1	0.79	18.0	Thin Wall XLPE Primary Cable	TAN	1125.0	-	-	-
74	-	-	TD92#174	3510329 R1	0.79	18.0	Thin Wall XLPE Primary Cable	TAN	1125.0	-	8	K01-7250
76	-	-	TD92#176	3510335 R1	0.79	18.0	Thin Wall XLPE Primary Cable	YELLOW 2	1125.0	-	-	-
76	-	-	TD92#176	3510335 R1	0.79	18.0	Thin Wall XLPE Primary Cable	YELLOW 2	1125.0	-	20	K01-7250
77	-	-	TD92#177	3510299 R1	0.79	18.0	Thin Wall XLPE Primary Cable	LIGHT GREEN	1125.0	-	-	-
77	-	-	TD92#177	3510299 R1	0.79	18.0	Thin Wall XLPE Primary Cable	LIGHT GREEN	1125.0	-	3	K01-7250
80	-	-	TP92#180	3510329 R1	0.79	18.0	Thin Wall XLPE Primary Cable	TAN	1125.0	-	-	-
80	-	-	TP92#180	3510329 R1	0.79	18.0	Thin Wall XLPE Primary Cable	TAN	1125.0	-	13	K01-7250

Connector Name	K01-7205
Part Number	3525872C1
Instances	LT/RH A26 - Transmission I/O (Allison 3K with Body Builder):Diagram3
Mates	DEV-BODY_BUILDER_CONN-01

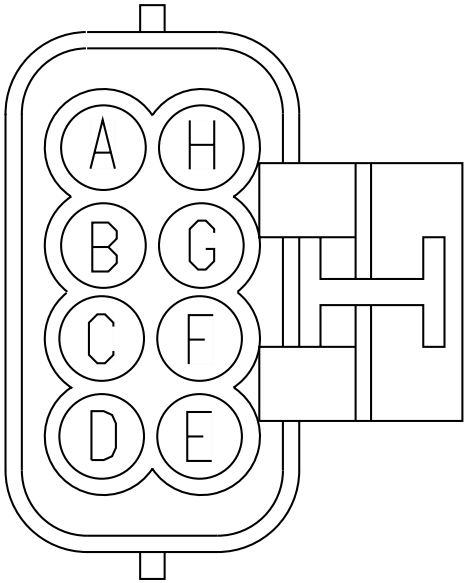

Name	Terminal Part Number	V-Min	Name	Wire Part Number	Wire CSA	Wire Spec	Wire Material description	Wire Color Description	Wire Length	End2 Terminal Part Number	End2 Pin Name	End2 Connect or
A	-	-	TW92B103	3510335 R1	0.79	18.0	Thin Wall XLPE Primary Cable	YELLOW 2	405.0	-	X	-
B	-	-	TW92#161	3510329 R1	0.79	18.0	Thin Wall XLPE Primary Cable	TAN	3180.0	-	61	K01-7150
C	-	-	TD92#157	3510359 R1	0.79	18.0	Thin Wall XLPE Primary Cable	WHITE	3180.0	-	57	K01-7150
D	-	-	TW92#124	3510329 R1	0.79	18.0	Thin Wall XLPE Primary Cable	TAN	3180.0	-	24	K01-7150

Name	Terminal Part Number	V-Min	Name	Wire Part Number	Wire CSA	Wire Spec	Wire Material description	Wire Color Description	Wire Length	End2 Terminal Part Number	End2 Pin Name	End2 Connector
E	-	-	TD92#122	3510335 R1	0.79	18.0	Thin Wall XLPE Primary Cable	YELLOW 2	3180.0	-	22	K01-7150
F	-	-	TD92#105	3510329 R1	0.79	18.0	Thin Wall XLPE Primary Cable	TAN	3180.0	-	5	K01-7150
G	-	-	TD92#164	3510341 R1	0.79	18.0	Thin Wall XLPE Primary Cable	LIGHT BLUE	3180.0	-	64	K01-7150
H	-	-	TD92#162	3510335 R1	0.79	18.0	Thin Wall XLPE Primary Cable	YELLOW 2	3180.0	-	62	K01-7150

Connector Name	K01-7206
Part Number	3525874C1
Instances	LT/RH A26 - Transmission I/O (Allison 3K with Body Builder):Diagram3
Mates	DEV-BODY_BUILDER_CONN-02

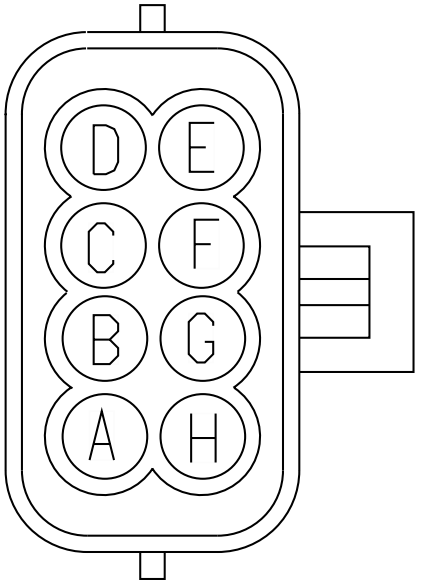

Name	Terminal Part Number	V-Min	Name	Wire Part Number	Wire CSA	Wire Spec	Wire Material description	Wire Color Description	Wire Length	End2 Terminal Part Number	End2 Pin Name	End2 Connect or
A	-	-	TD92#101	3510341 R1	0.79	18.0	Thin Wall XLPE Primary Cable	LIGHT BLUE	3180.0	-	1	K01-7150
B	-	-	SA92#117	3510329 R1	0.79	18.0	Thin Wall XLPE Primary Cable	TAN	3180.0	-	17	K01-7150
C	-	-	TW92A103	3510335 R1	0.79	18.0	Thin Wall XLPE Primary Cable	YELLOW 2	405.0	-	X	-
D	-	-	TD92#143	3510341 R1	0.79	18.0	Thin Wall XLPE Primary Cable	LIGHT BLUE	3180.0	-	43	K01-7150

Name	Terminal Part Number	V-Min	Name	Wire Part Number	Wire CSA	Wire Spec	Wire Material description	Wire Color Description	Wire Length	End2 Terminal Part Number	End2 Pin Name	End2 Connector
F	-	-	SA92#145	3510317 R1	0.79	18.0	Thin Wall XLPE Primary Cable	ORANGE	3180.0	-	45	K01-7150
G	-	-	TD92#130	3510359 R1	0.79	18.0	Thin Wall XLPE Primary Cable	WHITE	3180.0	-	30	K01-7150
H	-	-	TD92#123	3510341 R1	0.79	18.0	Thin Wall XLPE Primary Cable	LIGHT BLUE	3180.0	-	23	K01-7150

Connector Name	K01-7207
Part Number	3525872C1
Instances	LT/RH A26 - Transmission (TC10 Series A65 w/Body Builder):Diagram1 LT/RH/LoneStar X15 - Transmission (TC10 Series A65 w/Body Builder):Diagram1
Mates	CONN-BODY_BUILDER-01-A26

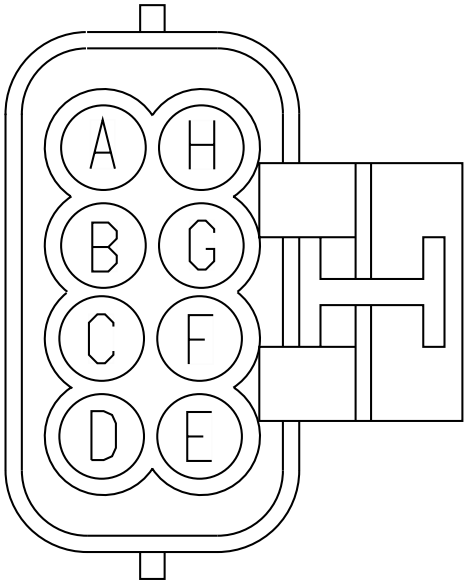

Name	Terminal Part Number	V-Min	Name	Wire Part Number	Wire CSA	Wire Spec	Wire Material description	Wire Color Description	Wire Length	End2 Terminal Part Number	End2 Pin Name	End2 Connect or
A	-	-	XT92#113	3510329 R1	0.79	18.0	Thin Wall XLPE Primary Cable	TAN	2305.0	-	13	K01-7350
A	-	-	XT92#113	3510329 R1	0.79	18.0	Thin Wall XLPE Primary Cable	TAN	2305.0	-	13	K02-7350
B	-	-	XT92#107	3510329 R1	0.79	18.0	Thin Wall XLPE Primary Cable	TAN	2305.0	-	7	K01-7350
B	-	-	XT92#107	3510329 R1	0.79	18.0	Thin Wall XLPE Primary Cable	TAN	2305.0	-	7	K02-7350

Name	Terminal Part Number	V-Min	Name	Wire Part Number	Wire CSA	Wire Spec	Wire Material description	Wire Color Description	Wire Length	End2 Terminal Part Number	End2 Pin Name	End2 Connect or
D	-	-	XT92#109	3510329 R1	0.79	18.0	Thin Wall XLPE Primary Cable	TAN	2305.0	-	9	K01-7350
D	-	-	XT92#109	3510329 R1	0.79	18.0	Thin Wall XLPE Primary Cable	TAN	2305.0	-	9	K02-7350
E	-	-	XT92#115	3510329 R1	0.79	18.0	Thin Wall XLPE Primary Cable	TAN	2305.0	-	15	K01-7350
E	-	-	XT92#115	3510329 R1	0.79	18.0	Thin Wall XLPE Primary Cable	TAN	2305.0	-	15	K02-7350
H	-	-	XT92#101	3510329 R1	0.79	18.0	Thin Wall XLPE Primary Cable	TAN	2305.0	-	1	K01-7350
H	-	-	XT92#101	3510329 R1	0.79	18.0	Thin Wall XLPE Primary Cable	TAN	2305.0	-	1	K02-7350

Connector Name	K01-7250
Part Number	3605715C1
Instances	LT/RH A26 - Transmission I/O (Allison 3K with Body Builder):Diagram1
Mates	DEV-3K_TRANS-01

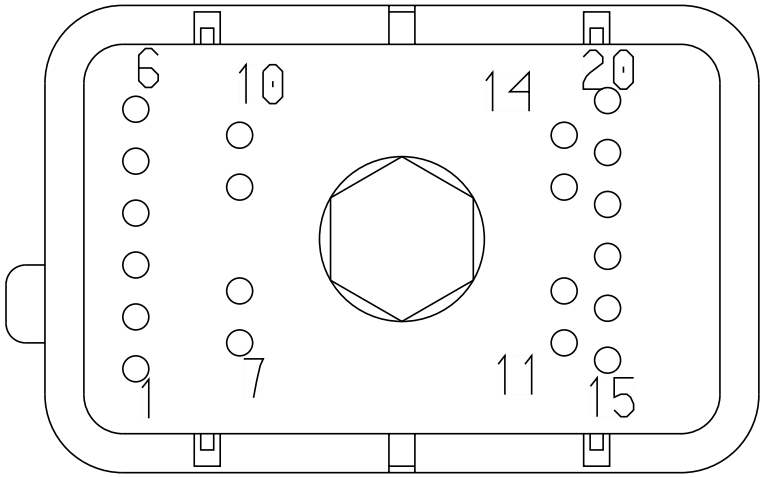

Name	Terminal Part Number	V-Min	Name	Wire Part Number	Wire CSA	Wire Spec	Wire Material description	Wire Color Description	Wire Length	End2 Terminal Part Number	End2 Pin Name	End2 Connector
1	-	-	TD92#111	3510317 R1	0.79	18.0	Thin Wall XLPE Primary Cable	ORANGE	1125.0	-	11	K01-7150
2	-	-	TD92#155	3510329 R1	0.79	18.0	Thin Wall XLPE Primary Cable	TAN	1125.0	-	55	K01-7150
3	-	-	TD92#177	3510299 R1	0.79	18.0	Thin Wall XLPE Primary Cable	LIGHT GREEN	1125.0	-	77	K01-7150
4	-	-	TD92#136	3510317 R1	0.79	18.0	Thin Wall XLPE Primary Cable	ORANGE	1125.0	-	36	K01-7150

Name	Terminal Part Number	V-Min	Name	Wire Part Number	Wire CSA	Wire Spec	Wire Material description	Wire Color Description	Wire Length	End2 Terminal Part Number	End2 Pin Name	End2 Connector
5	-	-	TD92#152	3510299 R1	0.79	18.0	Thin Wall XLPE Primary Cable	LIGHT GREEN	1125.0	-	52	K01-7150
6	-	-	TD92#171	3510329 R1	0.79	18.0	Thin Wall XLPE Primary Cable	TAN	1125.0	-	71	K01-7150
8	-	-	TD92#174	3510329 R1	0.79	18.0	Thin Wall XLPE Primary Cable	TAN	1125.0	-	74	K01-7150
9	-	-	TD92#133	3510335 R1	0.79	18.0	Thin Wall XLPE Primary Cable	YELLOW 2	1125.0	-	33	K01-7150
10	-	-	TD92#151	3510359 R1	0.79	18.0	Thin Wall XLPE Primary Cable	WHITE	1125.0	-	51	K01-7150
11	-	-	TU92#131	3510335 R1	0.79	18.0	Thin Wall XLPE Primary Cable	YELLOW 2	1125.0	-	31	K01-7150
12	-	-	TD92#137	3510329 R1	0.79	18.0	Thin Wall XLPE Primary Cable	TAN	1125.0	-	37	K01-7150
13	-	-	TP92#180	3510329 R1	0.79	18.0	Thin Wall XLPE Primary Cable	TAN	1125.0	-	80	K01-7150

Name	Terminal Part Number	V-Min	Name	Wire Part Number	Wire CSA	Wire Spec	Wire Material description	Wire Color Description	Wire Length	End2 Terminal Part Number	End2 Pin Name	End2 Connector
14	-	-	TP92#120	3510341 R1	0.79	18.0	Thin Wall XLPE Primary Cable	LIGHT BLUE	1125.0	-	20	K01-7150
15	-	-	TD92#116	3510341 R1	0.79	18.0	Thin Wall XLPE Primary Cable	LIGHT BLUE	1125.0	-	16	K01-7150
16	-	-	TW92#112	3510329 R1	0.79	18.0	Thin Wall XLPE Primary Cable	TAN	1125.0	-	12	K01-7150
17	-	-	TD92#118	3510329 R1	0.79	18.0	Thin Wall XLPE Primary Cable	TAN	1125.0	-	18	K01-7150
18	-	-	TD92#154	3510329 R1	0.79	18.0	Thin Wall XLPE Primary Cable	TAN	1125.0	-	54	K01-7150
19	-	-	TU92#158	3510299 R1	0.79	18.0	Thin Wall XLPE Primary Cable	LIGHT GREEN	1125.0	-	58	K01-7150
20	-	-	TD92#176	3510335 R1	0.79	18.0	Thin Wall XLPE Primary Cable	YELLOW 2	1125.0	-	76	K01-7150

Connector Name K01-7350

Part Number 3755755C1

Instances LT/RH A26 - Backup Light (Dual Reverse Light) Allison-TC10:Diagram1
LT/RH A26 - Backup Light (Dual Reverse Light) Allison-TC10:Diagram2
LT/RH A26 - Backup Light (Reverse Light) Allison TC10:Diagram1
LT/RH A26 - Backup Light (Reverse Light) Allison TC10:Diagram2
LT/RH A26 - Backup Light (Single Reverse Light) Allison TC10:Diagram1
LT/RH A26 - Backup Light (Single Reverse Light) Allison TC10:Diagram2
LT/RH A26 - Backup Light (Single Reverse Light) W/Allison TC10:Diagram1
LT/RH A26 - Backup Light (Single Reverse Light) W/Allison TC10:Diagram2
LT/RH A26 - TC10 Series:Diagram1
LT/RH A26 - Transmission (TC10 Series A65 w/Body Builder):Diagram1

Mates MODU-TCM-A002-10-00A TC10 A26

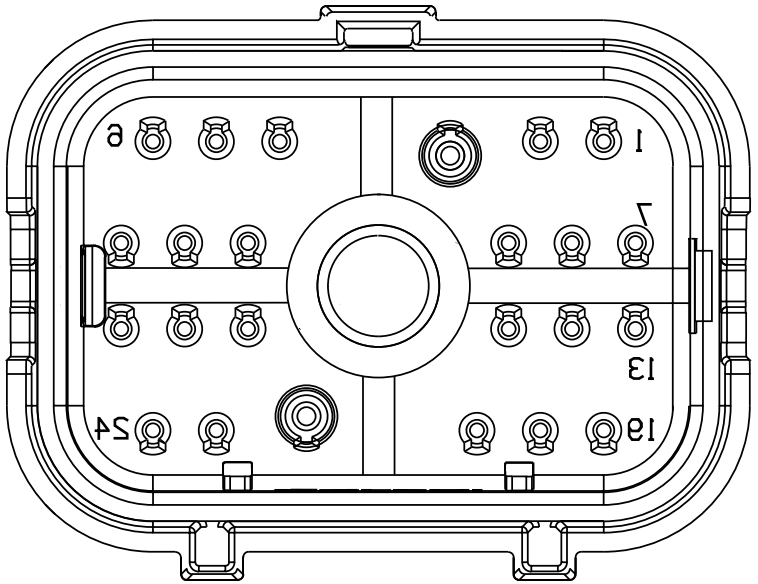

Name	Terminal Part Number	V-Min	Name	Wire Part Number	Wire CSA	Wire Spec	Wire Material description	Wire Color Description	Wire Length	End2 Terminal Part Number	End2 Pin Name	End2 Connector
1	-	-	XT92#101	3510329 R1	0.79	18.0	Thin Wall XLPE Primary Cable	TAN	2305.0	-	H	K01-7207
1	-	-	XT92#101	3510329 R1	0.79	18.0	Thin Wall XLPE Primary Cable	TAN	2305.0	-	-	-
3	-	-	XV92-G	3510362 R1	3.01	12.0	Thin Wall XLPE Primary Cable	WHITE	1650.0	-	-	-

Name	Terminal Part Number	V-Min	Name	Wire Part Number	Wire CSA	Wire Spec	Wire Material description	Wire Color Description	Wire Length	End2 Terminal Part Number	End2 Pin Name	End2 Connector
4	-	-	XV92#165	3510329 R1	0.79	18.0	Thin Wall XLPE Primary Cable	TAN	3160.0	-	7	1702
4	-	-	XV92#165	3510329 R1	0.79	18.0	Thin Wall XLPE Primary Cable	TAN	3160.0	-	-	-
6	-	-	-	-	-	-	-	-	-	-	-	-
7	-	-	XT92#107	3510329 R1	0.79	18.0	Thin Wall XLPE Primary Cable	TAN	2305.0	-	B	K01-7207
7	-	-	XT92#107	3510329 R1	0.79	18.0	Thin Wall XLPE Primary Cable	TAN	2305.0	-	-	-
9	-	-	XT92#109	3510329 R1	0.79	18.0	Thin Wall XLPE Primary Cable	TAN	2305.0	-	D	K01-7207
9	-	-	XT92#109	3510329 R1	0.79	18.0	Thin Wall XLPE Primary Cable	TAN	2305.0	-	-	-
10	-	-	XY47A125	3510329 R1	0.79	18.0	Thin Wall XLPE Primary Cable	TAN	2805.0	-	-	-
13	-	-	XT92#113	3510329 R1	0.79	18.0	Thin Wall XLPE Primary Cable	TAN	2305.0	-	A	K01-7207

Name	Terminal Part Number	V-Min	Name	Wire Part Number	Wire CSA	Wire Spec	Wire Material description	Wire Color Description	Wire Length	End2 Terminal Part Number	End2 Pin Name	End2 Connect or
13	-	-	XT92#113	3510329 R1	0.79	18.0	Thin Wall XLPE Primary Cable	TAN	2305.0	-	-	-
15	-	-	XT92#115	3510329 R1	0.79	18.0	Thin Wall XLPE Primary Cable	TAN	2305.0	-	E	K01-7207
15	-	-	XT92#115	3510329 R1	0.79	18.0	Thin Wall XLPE Primary Cable	TAN	2305.0	-	-	-
16	-	-	XV92#163	3510329 R1	0.79	18.0	Thin Wall XLPE Primary Cable	TAN	3160.0	-	8	1702
17	-	-	-	-	-	-	-	-	-	-	-	-
19	-	-	XV92#134	3510329 R1	0.79	18.0	Thin Wall XLPE Primary Cable	TAN	3160.0	-	-	-
20	-	-	XV92#141	3510329 R1	0.79	18.0	Thin Wall XLPE Primary Cable	TAN	3160.0	-	-	-
22	-	-	XV92#110	3510368 R1	3.01	12.0	Thin Wall XLPE Primary Cable	RED	3665.0	-	-	-

Connector Name	K01-7500T
Part Number	1661778C1
Instances	LT/RH - A26 - Body Builder Lighting - (BOC EOF In Cab) (8HAB 8HAE 8HAU) (Manual):Diagram1 LT/RH - A26 - Body Builder Lighting - (BOC EOF In Cab) (8HAB 8HAE 8HAU) (Manual):Diagram2 LT/RH - A26 - Work Lights (2 Blunt Cuts Only W/O Relay) W/ Backup W/Manual Trans Day Cab:Diagram1 LT/RH - A26 - Work Lights (2 Blunt Cuts Only W/O Relay) W/ Backup W/Manual Trans Day Cab:Diagram2 LT/RH - A26 - Work Lights - LED W/ Sw Pack - Customer Supplied - Sleeper W/ RKE W/MAN REV:Diagram1 LT/RH - A26 - Work Lights - LED W/ Sw Pack - Customer Supplied - Sleeper W/ RKE W/MAN REV:Diagram2 LT/RH - A26 - Work Lights - LED W/ Sw Pack - Customer Supplied - Sleeper W/O RKE W/MAN REV:Diagram1 LT/RH - A26 - Work Lights - LED W/ Sw Pack - Customer Supplied - Sleeper W/O RKE W/MAN REV:Diagram2 LT/RH - A26 - Work Lights -LED W/ Sw Pack - Sleeper W/ RKE W/MAN REV:Diagram1 LT/RH - A26 - Work Lights -LED W/ Sw Pack - Sleeper W/O RKE W/MAN REV:Diagram1 LT/RH - A26 - Work Lights LED W/ Sw Pack - Day Cab W/ RKE W/MAN REV:Diagram1 LT/RH - A26 - Work Lights LED W/ Sw Pack - Day Cab W/O RKE W/MAN REV:Diagram1 LT/RH - A26 - Work Lights W/ Sw Pack - Customer Supplied W/ RKE W/MAN REV:Diagram1 LT/RH - A26 - Work Lights W/ Sw Pack - Customer Supplied W/ RKE W/MAN REV:Diagram2 LT/RH - A26 - Work Lights W/ Sw Pack - Customer Supplied W/ O RKE W/MAN REV:Diagram1 LT/RH - A26 - Work Lights W/ Sw Pack - Customer Supplied W/ O RKE W/MAN REV:Diagram2 LT/RH A26 - Back-Up Alarm (Manual) and UltraShift+:Diagram1 LT/RH A26 - Back-Up Alarm (Manual) and UltraShift+:Diagram2 LT/RH A26 - Back-Up Alarm (Manual) and UltraShift+:Diagram3 LT/RH A26 - Back-Up Alarm (Manual) and UltraShift+:Diagram4 LT/RH A26 - Back-Up Alarm (Manual) (W/ Tail Light Bar Assy):Diagram1 LT/RH A26 - Back-Up Alarm (Manual) (W/ Tail Light Bar Assy):Diagram2

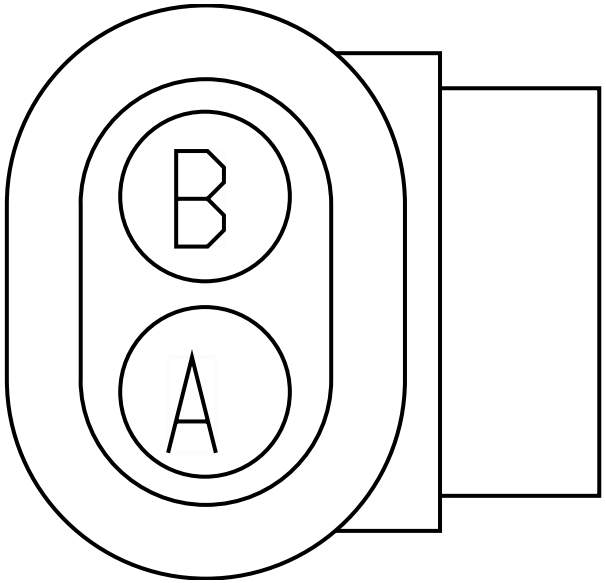

LT/RH A26 - Backup Lights (Dual Reverse Light) Eaton/Manual Trans:Diagram1
LT/RH A26 - Backup Lights (Dual Reverse Light) Eaton/Manual Trans:Diagram2
LT/RH A26 - Backup Lights (Reverse Light) Eaton/Manual Trans:Diagram1
LT/RH A26 - Backup Lights (Reverse Light) Eaton/Manual Trans:Diagram2
LT/RH A26 - Backup Lights (Reverse Lights) Eaton/Manual Trans:Diagram1
LT/RH A26 - Backup Lights (Reverse Lights) Eaton/Manual Trans:Diagram2
LT/RH A26 - Backup Lights (Single Reverse Light) Eaton/Manual Trans:Diagram1
LT/RH A26 - Backup Lights (Single Reverse Light) Eaton/Manual Trans:Diagram2
LT/RH A26 - Backup Lights (Single Reverse Light) Eaton/Manual Trans/:Diagram1
LT/RH A26 - Backup Lights (Single Reverse Light) Eaton/Manual Trans/:Diagram2

Mates SW-TRANSSWITCH-1023-01-02B

Name	Terminal Part Number	V-Min	Name	Wire Part Number	Wire CSA	Wire Spec	Wire Material description	Wire Color Description	Wire Length	End2 Terminal Part Number	End2 Pin Name	End2 Connect or
A	-	-	PF71A	2643676 R1	0.79	18.0	Std. Wall XLPE Primary Cable	TAN	2165.0	-	6	1702
B	-	-	PF71B	2643682 R1	1.16	16.0	Std. Wall XLPE Primary Cable	ORANGE	2165.0	-	7	1702

Connector Name	K01-7500W
Part Number	1661778C1
Instances	LT/RH - A26 - Body Builder Lighting - (BOC EOF In Cab) (8HAB 8HAE 8HAU) (Manual):Diagram3 LT/RH - A26 - Body Builder Lighting - (BOC EOF In Cab) (8HAB 8HAE 8HAU) (Manual):Diagram4 LT/RH - A26 - Work Lights (2 Blunt Cuts Only W/O Relay) W/ Backup W/Manual Trans Day Cab:Diagram3 LT/RH - A26 - Work Lights (2 Blunt Cuts Only W/O Relay) W/ Backup W/Manual Trans Day Cab:Diagram4 LT/RH - A26 - Work Lights - LED W/ Sw Pack - Customer Supplied - Sleeper W/ RKE W/MAN REV:Diagram3 LT/RH - A26 - Work Lights - LED W/ Sw Pack - Customer Supplied - Sleeper W/ RKE W/MAN REV:Diagram4 LT/RH - A26 - Work Lights - LED W/ Sw Pack - Customer Supplied - Sleeper W/O RKE W/MAN REV:Diagram3 LT/RH - A26 - Work Lights - LED W/ Sw Pack - Customer Supplied - Sleeper W/O RKE W/MAN REV:Diagram4 LT/RH - A26 - Work Lights -LED W/ Sw Pack - Sleeper W/ RKE W/MAN REV:Diagram2 LT/RH - A26 - Work Lights -LED W/ Sw Pack - Sleeper W/O RKE W/MAN REV:Diagram2 LT/RH - A26 - Work Lights LED W/ Sw Pack - Day Cab W/ RKE W/MAN REV:Diagram2 LT/RH - A26 - Work Lights LED W/ Sw Pack - Day Cab W/O RKE W/MAN REV:Diagram2 LT/RH - A26 - Work Lights W/ Sw Pack - Customer Supplied W/ RKE W/MAN REV:Diagram3 LT/RH - A26 - Work Lights W/ Sw Pack - Customer Supplied W/ RKE W/MAN REV:Diagram4 LT/RH - A26 - Work Lights W/ Sw Pack - Customer Supplied W/ O RKE W/MAN REV:Diagram3 LT/RH - A26 - Work Lights W/ Sw Pack - Customer Supplied W/ O RKE W/MAN REV:Diagram4 LT/RH A26 - Back-Up Alarm (Manual) and UltraShift+:Diagram5 LT/RH A26 - Back-Up Alarm (Manual) and UltraShift+:Diagram6 LT/RH A26 - Back-Up Alarm (Manual) and UltraShift+:Diagram7 LT/RH A26 - Back-Up Alarm (Manual) and UltraShift+:Diagram8 LT/RH A26 - Back-Up Alarm (Manual) (W/ Tail Light Bar Assy):Diagram3 LT/RH A26 - Back-Up Alarm (Manual) (W/ Tail Light Bar Assy):Diagram4

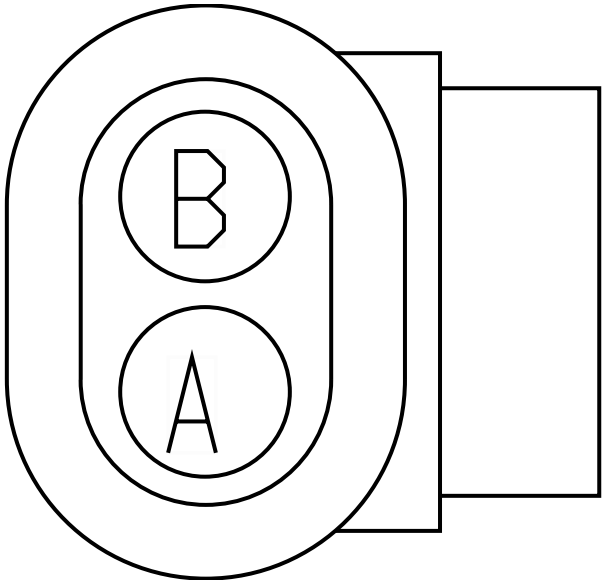

LT/RH A26 - Backup Lights (Dual Reverse Light) Eaton/Manual Trans:Diagram3
LT/RH A26 - Backup Lights (Dual Reverse Light) Eaton/Manual Trans:Diagram4
LT/RH A26 - Backup Lights (Reverse Light) Eaton/Manual Trans:Diagram3
LT/RH A26 - Backup Lights (Reverse Light) Eaton/Manual Trans:Diagram4
LT/RH A26 - Backup Lights (Reverse Lights) Eaton/Manual Trans:Diagram3
LT/RH A26 - Backup Lights (Reverse Lights) Eaton/Manual Trans:Diagram4
LT/RH A26 - Backup Lights (Single Reverse Light) Eaton/Manual Trans:Diagram3
LT/RH A26 - Backup Lights (Single Reverse Light) Eaton/Manual Trans:Diagram4
LT/RH A26 - Backup Lights (Single Reverse Light) Eaton/Manual Trans/:Diagram3
LT/RH A26 - Backup Lights (Single Reverse Light) Eaton/Manual Trans/:Diagram4

Mates SW-TRANSSWITCH-1023-01-02B

Name	Terminal Part Number	V-Min	Name	Wire Part Number	Wire CSA	Wire Spec	Wire Material description	Wire Color Description	Wire Length	End2 Terminal Part Number	End2 Pin Name	End2 Connector
A	-	-	KW71A	2643682 R1	1.16	16.0	Std. Wall XLPE Primary Cable	ORANGE	2850.0	-	6	1702
B	-	-	KW71B	2643682 R1	1.16	16.0	Std. Wall XLPE Primary Cable	ORANGE	1510.0	-	7	1702
B	-	-	KW71B	2643682 R1	1.16	16.0	Std. Wall XLPE Primary Cable	ORANGE	2850.0	-	7	1702

Connector Name	K01-7501
Part Number	3577412C1
Instances	LT/RH A26 - Transmission (Ultrashift+ w/Body Builder):Diagram1 LT/RH/LoneStar X15 - Transmission (Ultrashift+ w/Body Builder):Diagram1
Mates	DEV-Electronic_Clutch_Actu ator-5045-01-02A

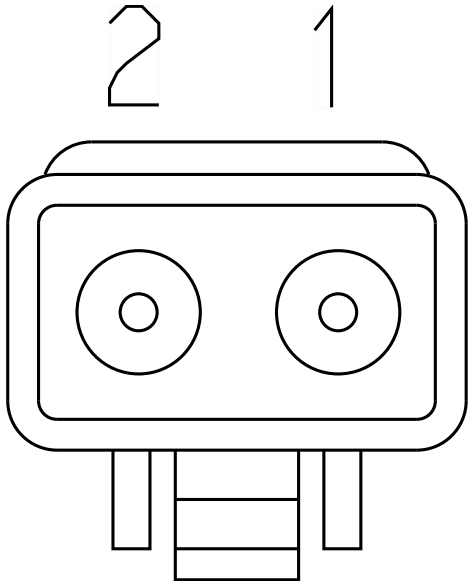

Name	Terminal Part Number	V-Min	Name	Wire Part Number	Wire CSA	Wire Spec	Wire Material description	Wire Color Description	Wire Length	End2 Terminal Part Number	End2 Pin Name	End2 Connect or
1	-	-	WC11-G	3510363 R1	4.81	10.0	Thin Wall XLPE Primary Cable	WHITE	700.0	-	-	-
1	-	-	KH11-G	3510363 R1	4.81	10.0	Thin Wall XLPE Primary Cable	WHITE	2310.0	-	X	-
2	-	-	VV14N	2643698 R1	4.81	10.0	Std. Wall XLPE Primary Cable	RED	4495.0	-	-	-
2	-	-	KH14K	3510369 R1	4.81	10.0	Thin Wall XLPE Primary Cable	RED	2770.0	-	-	-

Connector Name	K01-7502
Part Number	587567C91
Instances	LT/RH A26 - Transmission (Ultrashift+ w/Body Builder):Diagram1
Mates	CONN-BODY_BUILDER-5045-01- 02A

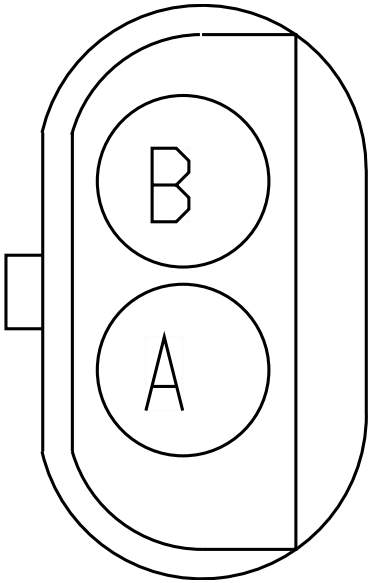

Name	Terminal Part Number	V-Min	Name	Wire Part Number	Wire CSA	Wire Spec	Wire Material description	Wire Color Description	Wire Length	End2 Terminal Part Number	End2 Pin Name	End2 Connector
A	-	-	VY92DP	2643676 R1	0.79	18.0	Std. Wall XLPE Primary Cable	TAN	285.0	-	18	K01-7105A
B	-	-	VY92DR	2643676 R1	0.79	18.0	Std. Wall XLPE Primary Cable	TAN	285.0	-	34	K01-7105A

Connector Name K01-7600T

Part Number 3662425C1

Instances LT/RH - A26 - VEHICLE SPEEDOMETER SYSTEM (MANUAL XMSN):Diagram2

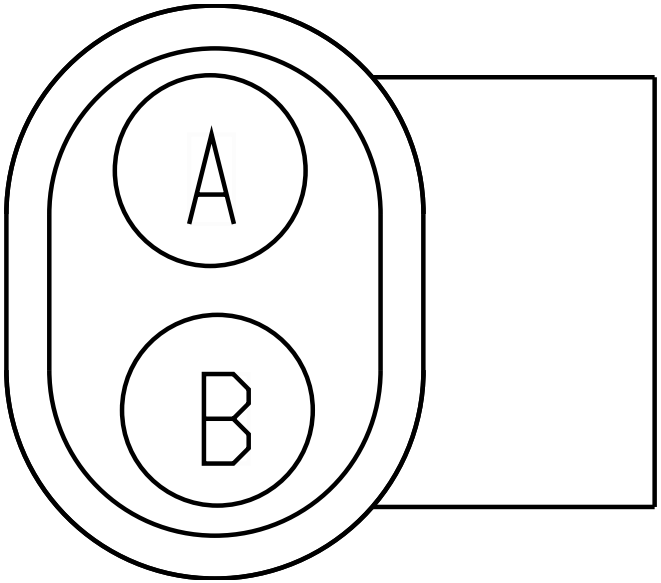

Name	Terminal Part Number	V-Min	Name	Wire Part Number	Wire CSA	Wire Spec	Wire Material description	Wire Color Description	Wire Length	End2 Terminal Part Number	End2 Pin Name	End2 Connect or
A	-	-	PL47	3510311 R1	0.79	18.0	Thin Wall XLPE Primary Cable	GREY	2830.0	-	91	K01-6018
B	-	-	PL47A	3510311 R1	0.79	18.0	Thin Wall XLPE Primary Cable	GREY	2830.0	-	92	K01-6018

Connector Name	K01-7600
Part Number	3662425C1
Instances	LT/RH - A26 - VEHICLE SPEEDOMETER SYSTEM (MANUAL XMSN):Diagram1
Mates	DEV-VSS_SNRS-01

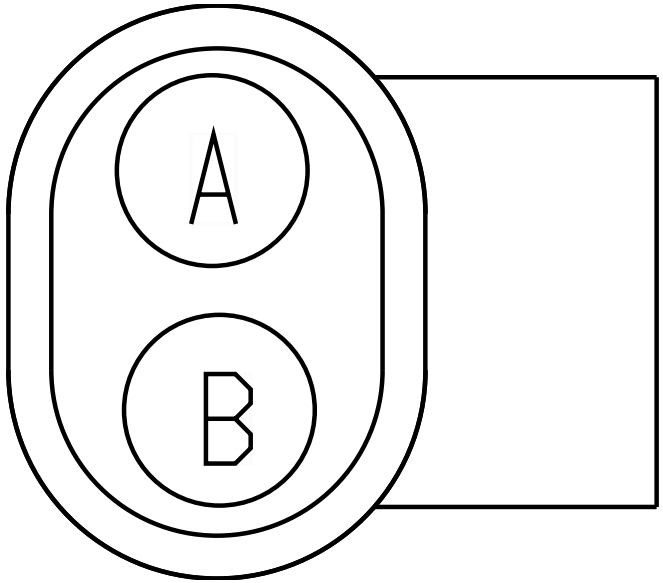

Name	Terminal Part Number	V-Min	Name	Wire Part Number	Wire CSA	Wire Spec	Wire Material description	Wire Color Description	Wire Length	End2 Terminal Part Number	End2 Pin Name	End2 Connect or
A	-	-	XN47	3510311 R1	0.79	18.0	Thin Wall XLPE Primary Cable	GREY	2695.0	-	91	K01-6018
B	-	-	XN47A	3510311 R1	0.79	18.0	Thin Wall XLPE Primary Cable	GREY	2695.0	-	92	K01-6018

Connector Name	K01-7603M
Part Number	3610533C1
Instances	LT/RH A26 - Transmission I/O (Allison 3K with Body Builder):Diagram2
Mates	DEV-3K_TRANS-01

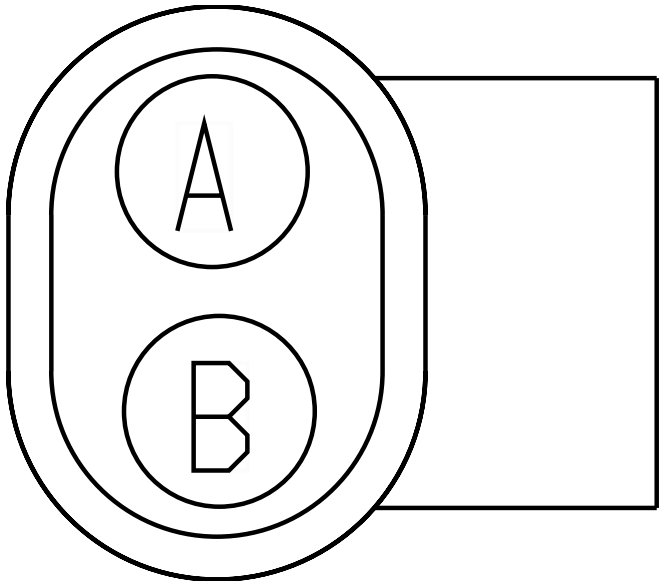

Name	Terminal Part Number	V-Min	Name	Wire Part Number	Wire CSA	Wire Spec	Wire Material description	Wire Color Description	Wire Length	End2 Terminal Part Number	End2 Pin Name	End2 Connect or
A	-	-	TP48#159	3510329 R1	0.79	18.0	Thin Wall XLPE Primary Cable	TAN	1720.0	-	59	K01-7150
B	-	-	TP48#139	3510317 R1	0.79	18.0	Thin Wall XLPE Primary Cable	ORANGE	1720.0	-	39	K01-7150

Connector Name	K01-7605
Part Number	3610533C1
Instances	LT/RH A26 - Transmission I/O (Allison 3K with Body Builder):Diagram2
Mates	DEV-3K_TRANS-01

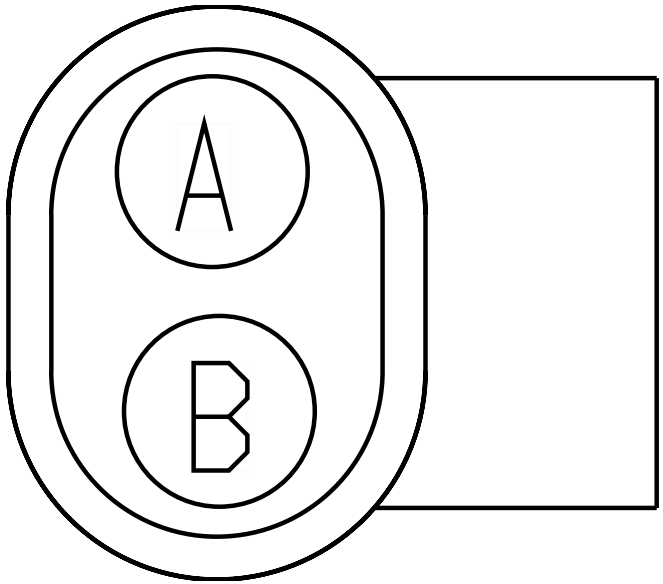

Name	Terminal Part Number	V-Min	Name	Wire Part Number	Wire CSA	Wire Spec	Wire Material description	Wire Color Description	Wire Length	End2 Terminal Part Number	End2 Pin Name	End2 Connect or
A	-	-	TD47#160	3510335 R1	0.79	18.0	Thin Wall XLPE Primary Cable	YELLOW 2	1130.0	-	60	K01-7150
B	-	-	TD47#140	3510299 R1	0.79	18.0	Thin Wall XLPE Primary Cable	LIGHT GREEN	1130.0	-	40	K01-7150

Connector Name	K01-7700K
Part Number	3536864C1
Instances	LT/RH - A26 - Transmission Oil Temperature-Manual Trans-Horizon Option 1:Diagram1 LT/RH - A26 - Transmission Oil Temperature-Manual Trans-Horizon Option 2:Diagram1

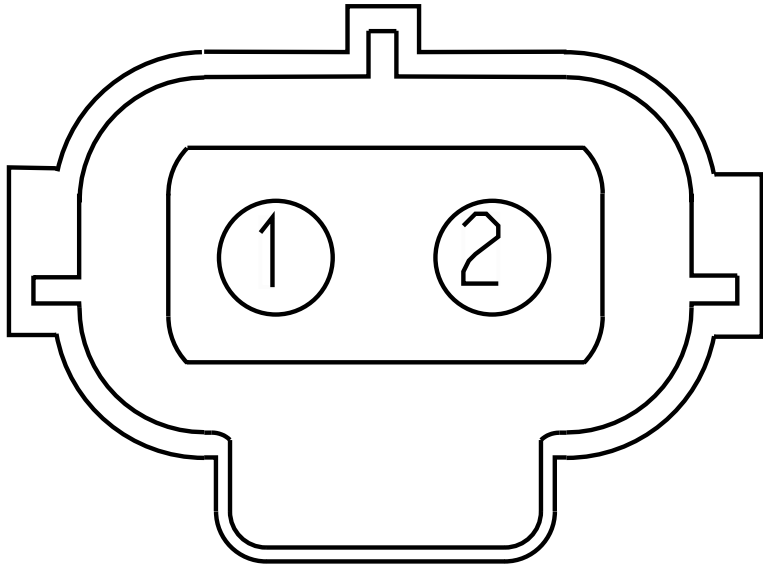

Name	Terminal Part Number	V-Min	Name	Wire Part Number	Wire CSA	Wire Spec	Wire Material description	Wire Color Description	Wire Length	End2 Terminal Part Number	End2 Pin Name	End2 Connect or
1	-	-	KK31	2643676 R1	0.79	18.0	Std. Wall XLPE Primary Cable	TAN	2990.0	-	13	1702
2	-	-	KK9AAD	2643673 R1	0.79	18.0	Std. Wall XLPE Primary Cable	GREY	2705.0	-	-	-

Connector Name	K01-7700L
Part Number	3536864C1
Instances	LT/RH - A26 - Transmission Oil Temperature-Manual Trans-Horizon Option 1:Diagram2 LT/RH - A26 - Transmission Oil Temperature-Manual Trans-Horizon Option 2:Diagram2
Mates	SNSR-TRANS_OIL_TEMP-5046-0 1-01B

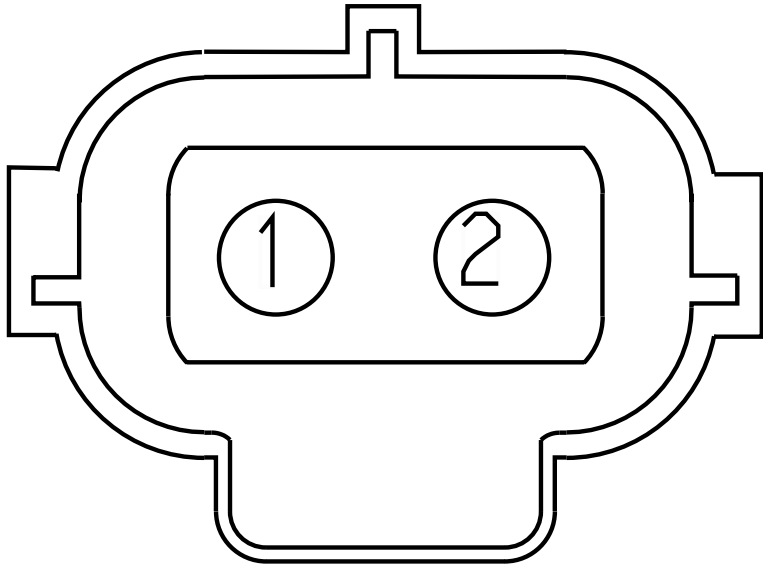

Name	Terminal Part Number	V-Min	Name	Wire Part Number	Wire CSA	Wire Spec	Wire Material description	Wire Color Description	Wire Length	End2 Terminal Part Number	End2 Pin Name	End2 Connect or
1	-	-	WP31	2643676 R1	0.79	18.0	Std. Wall XLPE Primary Cable	TAN	3520.0	-	13	1702
2	-	-	WP9AAD	2643673 R1	0.79	18.0	Std. Wall XLPE Primary Cable	GREY	3235.0	-	-	-

Connector Name K01-7700T

Part Number 3536864C1

Instances LT/RH - A26 - Transmission Oil Temperature-Manual Trans-Horizon Option 1:Diagram3
LT/RH - A26 - Transmission Oil Temperature-Manual Trans-Horizon Option 2:Diagram3

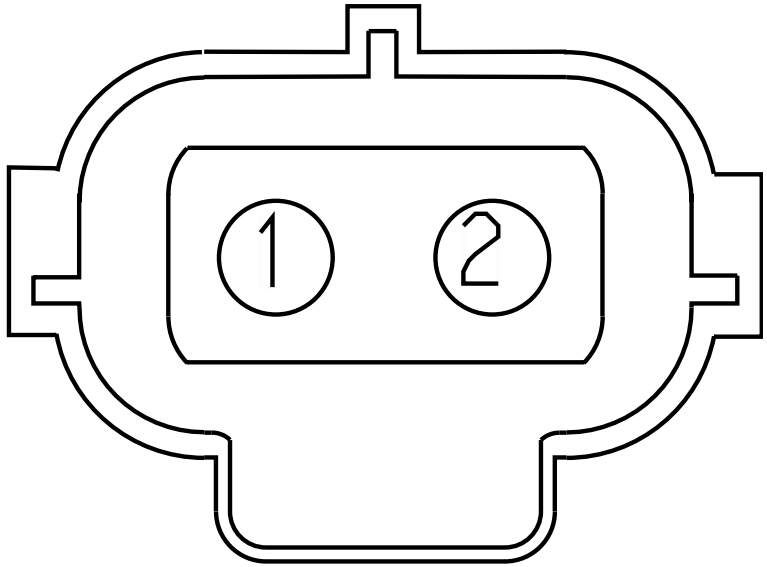

Name	Terminal Part Number	V-Min	Name	Wire Part Number	Wire CSA	Wire Spec	Wire Material description	Wire Color Description	Wire Length	End2 Terminal Part Number	End2 Pin Name	End2 Connect or
1	-	-	PC31	2643676 R1	0.79	18.0	Std. Wall XLPE Primary Cable	TAN	3455.0	-	13	1702
2	-	-	PC9AAD	3510311 R1	0.79	18.0	Thin Wall XLPE Primary Cable	GREY	3170.0	-	-	-

Connector Name	K01-7800
Part Number	BLUNT_SL_VC
Instances	LT/RH - A26 - Transmission Power Take Off Dual PTO with Clutch Interlock:Diagram1 LT/RH - A26 - Transmission Power Take Off Dual Solenoid AUTO:Diagram1 LT/RH - A26 - Transmission Power Take Off Option 1:Diagram1 LT/RH - A26 - Transmission Power Take Off Option 2:Diagram1 LT/RH - A26 - Transmission Power Take Off W/ Clutch Interlock:Diagram1
Mates	SW-PTOA-BLUNTA

Name	Terminal Part Number	V-Min	Name	Wire Part Number	Wire CSA	Wire Spec	Wire Material description	Wire Color Description	Wire Length	End2 Terminal Part Number	End2 Pin Name	End2 Connect or
A	-	-	KM88	2643678 R1	1.16	16.0	Std. Wall XLPE Primary Cable	LIGHT GREEN	3380.0	-	14	1702

Connector Name	K01-7801
Part Number	BLUNT_SL_VC
Instances	LT/RH - A26 - Transmission Power Take Off Dual PTO with Clutch Interlock:Diagram1 LT/RH - A26 - Transmission Power Take Off Dual Solenoid AUTO:Diagram1
Mates	SW-PTOB-BLUNTB

Name	Terminal Part Number	V-Min	Name	Wire Part Number	Wire CSA	Wire Spec	Wire Material description	Wire Color Description	Wire Length	End2 Terminal Part Number	End2 Pin Name	End2 Connect or
A	-	-	KN88A	2643718 R1	0.79	18.0	Std. Wall XLPE Primary Cable	VIOLET	3380.0	-	41	1702

Connector Name K01-7802T

Part Number 3540051C91

Instances LT/RH - A26 - Starter Interlock (BCM HSD controlled W/ Clutch Switch W/ Auto Start Stop):Diagram2

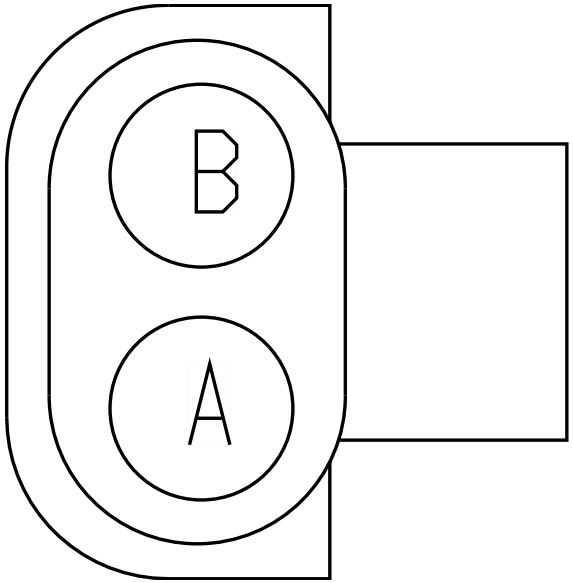

Name	Terminal Part Number	V-Min	Name	Wire Part Number	Wire CSA	Wire Spec	Wire Material description	Wire Color Description	Wire Length	End2 Terminal Part Number	End2 Pin Name	End2 Connect or
A	-	-	PY97J	2643718 R1	0.79	18.0	Std. Wall XLPE Primary Cable	VIOLET	2165.0	-	33	1702
B	-	-	PY97S	2643718 R1	0.79	18.0	Std. Wall XLPE Primary Cable	VIOLET	2165.0	-	32	1702

Connector Name	K01-7802
Part Number	3540051C91
Instances	LT/RH - A26 - Starter Interlock (BCM HSD controlled W/ Clutch Switch W/ Auto Start Stop):Diagram1
Mates	SW-TRANS_NEUTRAL-5023-07-0 2B

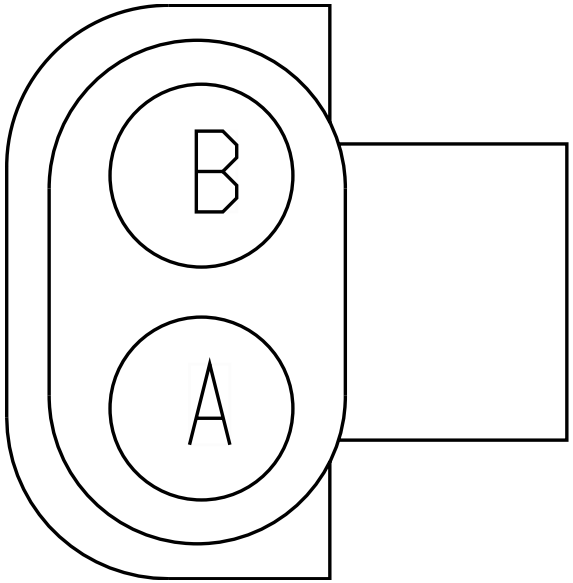

Name	Terminal Part Number	V-Min	Name	Wire Part Number	Wire CSA	Wire Spec	Wire Material description	Wire Color Description	Wire Length	End2 Terminal Part Number	End2 Pin Name	End2 Connect or
A	-	-	KY97J	2643718 R1	0.79	18.0	Std. Wall XLPE Primary Cable	VIOLET	2850.0	-	33	1702
B	-	-	KY97S	2643718 R1	0.79	18.0	Std. Wall XLPE Primary Cable	VIOLET	2850.0	-	32	1702

Connector Name	K01-8410
Part Number	3664985C1
Instances	LT/RH A26 - Starting Aid (Flame Start):Diagram1
Mates	RLY-FLAME_START-5022-02-01A

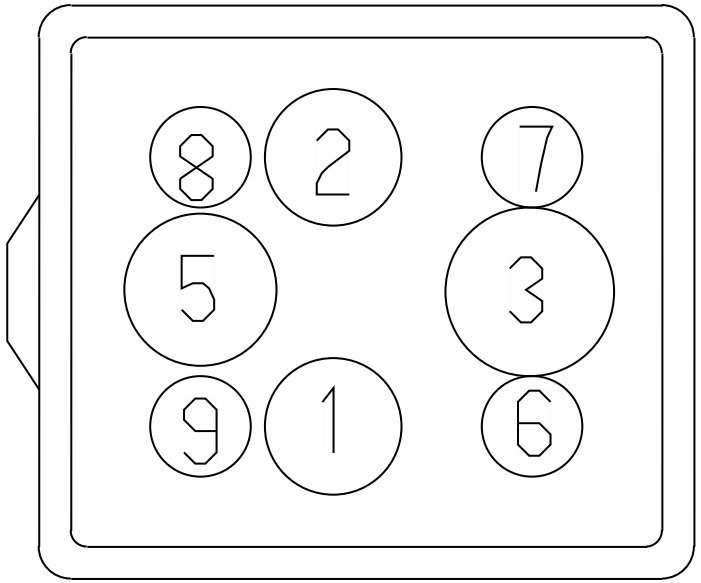

Name	Terminal Part Number	V-Min	Name	Wire Part Number	Wire CSA	Wire Spec	Wire Material description	Wire Color Description	Wire Length	End2 Terminal Part Number	End2 Pin Name	End2 Connect or
1	-	-	CC21A1	2643797 R1	3.01	12.0	Std. Wall XLPE Primary Cable	TAN	1350.0	-	A	K01-6564
2	-	-	CC21A2	2643797 R1	3.01	12.0	Std. Wall XLPE Primary Cable	TAN	1350.0	-	A	K01-6564
3	-	-	CC14A	3525611 R1	7.48	8.0	Thin Wall XLPE Primary Cable	RED	1720.0	-	-	-
6	-	-	CD21B1	3510329 R1	0.79	18.0	Thin Wall XLPE Primary Cable	TAN	1280.0	-	A	K01-6033

Name	Terminal Part Number	V-Min	Name	Wire Part Number	Wire CSA	Wire Spec	Wire Material description	Wire Color Description	Wire Length	End2 Terminal Part Number	End2 Pin Name	End2 Connect or
7	-	-	CD21B2	3510329 R1	0.79	18.0	Thin Wall XLPE Primary Cable	TAN	1280.0	-	B	K01-6033
8	-	-	CD21B3	3510329 R1	0.79	18.0	Thin Wall XLPE Primary Cable	TAN	1280.0	-	C	K01-6033

Connector Name K02-J1-DELCO

Part Number RING-M-12_0

Instances LT/RH/LoneStar - X15 - Cranking (Starter) GEN4 BCM W/ Thermal Overcrank - External Switch:Diagram1
LT/RH/LoneStar X15 - Bosch LH160_LH200 Alternator W/ Delco Starter:Diagram1-Combination1
LT/RH/LoneStar X15 - Bosch LIL165_LIL200 Alternator W/ Remote Sense W/ Delco Starter:Diagram1-Combination1
LT/RH/LoneStar X15 - Delco Remy 28SI Alternator W/ Remote Sense W/ Delco Starter:Diagram1-Combination1
LT/RH/LoneStar X15 - Delco Remy 28SI Alternator W/ Remote Sense W/ Delco Starter:Diagram1-Combination2
LT/RH/LoneStar X15 - Delco Remy 36SI Alternator W/ Remtoe Sense W/ Delco Starter:Diagram1
LT/RH/LoneStar X15 - Delco Remy 40SI Alternator W/ Remote Sense W/ Delco Starter:Diagram1-Combination1
LT/RH/LoneStar X15 - Leece-Neville AVI160 Alternator W/ Delco Starter:Diagram1-Combination1
LT/RH/LoneStar X15 - Leece-Neville AVI160-210A/240A Alternator W/ Remote Sense W/ Delco Starter:Diagram1-Combination1

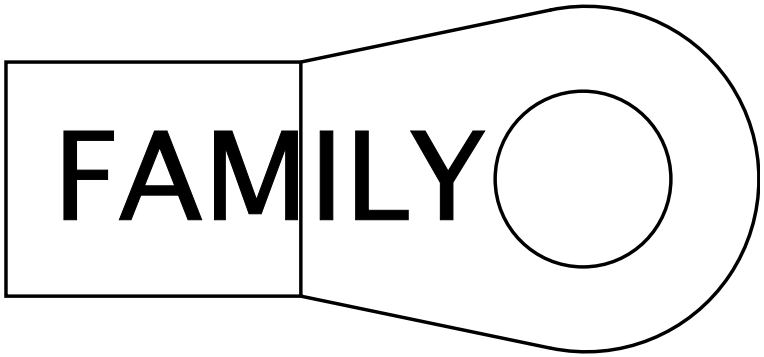

Mates MOT-STARTER-5024-01-03

Name	Terminal Part Number	V-Min	Name	Wire Part Number	Wire CSA	Wire Spec	Wire Material description	Wire Color Description	Wire Length	End2 Terminal Part Number	End2 Pin Name	End2 Connector
A	-	-	WX2-G	3592741 R1	32.19	2.0	Std. Wall XLPE Battery Cable	WHITE	3020.0	-	A	K02-610 1H
A	-	-	VE2-G	3592741 R1	32.19	2.0	Std. Wall XLPE Battery Cable	WHITE	3020.0	-	A	K02-610 1F
A	-	-	KR2-G	3592741 R1	32.19	2.0	Std. Wall XLPE Battery Cable	WHITE	3040.0	-	A	K02-610 1A/J
A	-	-	VG2-G	2645931 R1	32.19	2.0	SGR 125	BLACK	2880.0	-	A	K02-610 1A/J

Name	Terminal Part Number	V-Min	Name	Wire Part Number	Wire CSA	Wire Spec	Wire Material description	Wire Color Description	Wire Length	End2 Terminal Part Number	End2 Pin Name	End2 Connector
A	-	-	VF2-G	3592741 R1	32.19	2.0	Std. Wall XLPE Battery Cable	WHITE	3020.0	-	A	K02-6101G
A	-	-	VM2-G	2645931 R1	32.19	2.0	SGR 125	BLACK	2900.0	-	A	K02-6101E
A	-	-	KB2-G	3592741 R1	32.19	2.0	Std. Wall XLPE Battery Cable	WHITE	3020.0	-	A	K02-6101B
A	-	-	VD2-G	3592742 R1	39.43	1.0	Std. Wall XLPE Battery Cable	WHITE	3020.0	-	A	K02-6101D
A	-	-	14-G	2645943 R1	80.32	0.0	SGR 125	BLACK	1140.0	-	A	6049_A

Connector Name K02-J1-MITS

Part Number RING-E-1-2_0

Instances LT/RH/LoneStar - X15 - Bosch LH160_LH200 Alternator W/ Mitsubishi Starter:Diagram1
LT/RH/LoneStar - X15 - Bosch LIL165_LIL200 Alternator W/ Remote Sense W/ Mitsubishi Starter:Diagram1
LT/RH/LoneStar - X15 - Cranking (Starter) GEN4 BCM W/O Thermal Overcrank Wiring:Diagram1
LT/RH/LoneStar - X15 - Delco Remy 28SI Alternator W/ Remote Sense W/ Mitsubishi Starter:Diagram1
LT/RH/LoneStar - X15 - Delco Remy 28SI Alternator W/ Remote Sense W/ Mitsubishi Starter:Diagram2
LT/RH/LoneStar - X15 - Delco Remy 36SI Alternator W/ Remote Sense W/ Mitsubishi Starter:Diagram1
LT/RH/LoneStar - X15 - Delco Remy 40SI Alternator W/ Remote Sense W/ Mitsubishi Starter:Diagram1
LT/RH/LoneStar - X15 - Leece-Neville AVI160 Alternator W/ Mitsubishi Starter:Diagram1
LT/RH/LoneStar - X15 - Leece-Neville AVI160-210A/240A Alternator W/ Remote Sense W/ Mitsubishi Starter:Diagram1

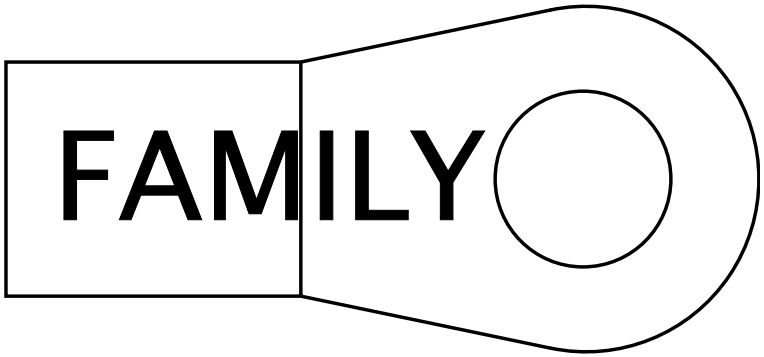

Mates MOT-STARTER-5024-01-04

Name	Terminal Part Number	V-Min	Name	Wire Part Number	Wire CSA	Wire Spec	Wire Material description	Wire Color Description	Wire Length	End2 Terminal Part Number	End2 Pin Name	End2 Connector
A	-	-	WX2-G	3592741 R1	32.19	2.0	Std. Wall XLPE Battery Cable	WHITE	3020.0	-	A	K02-6101H
A	-	-	VE2-G	3592741 R1	32.19	2.0	Std. Wall XLPE Battery Cable	WHITE	3020.0	-	A	K02-6101F
A	-	-	VM2-G	2645931 R1	32.19	2.0	SGR 125	BLACK	2900.0	-	A	K02-6101E
A	-	-	14-G	2645943 R1	80.32	0.0	SGR 125	BLACK	1140.0	-	A	6049_A
A	-	-	VG2-G	2645931 R1	32.19	2.0	SGR 125	BLACK	2880.0	-	A	K02-6101A/J

Name	Terminal Part Number	V-Min	Name	Wire Part Number	Wire CSA	Wire Spec	Wire Material description	Wire Color Description	Wire Length	End2 Terminal Part Number	End2 Pin Name	End2 Connector
A	-	-	KR2-G	3592741 R1	32.19	2.0	Std. Wall XLPE Battery Cable	WHITE	3040.0	-	A	K02-610 1A/J
A	-	-	VF2-G	3592741 R1	32.19	2.0	Std. Wall XLPE Battery Cable	WHITE	3020.0	-	A	K02-610 1G
A	-	-	KB2-G	3592741 R1	32.19	2.0	Std. Wall XLPE Battery Cable	WHITE	3020.0	-	A	K02-610 1B
A	-	-	VD2-G	3592742 R1	39.43	1.0	Std. Wall XLPE Battery Cable	WHITE	3020.0	-	A	K02-610 1D

Connector Name	K02-1378
Part Number	1687789C1
Instances	LT/RH/LoneStar - X15 - Coolant Level Monitoring:Diagram1
Mates	MODU-COOLANT-LEV-5012-05-0 3A

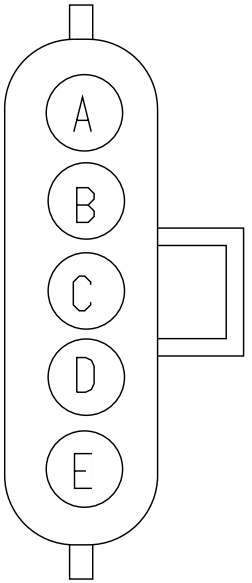

Name	Terminal Part Number	V-Min	Name	Wire Part Number	Wire CSA	Wire Spec	Wire Material description	Wire Color Description	Wire Length	End2 Terminal Part Number	End2 Pin Name	End2 Connect or
A	-	-	GN6B	2643770 R1	0.53	20.0	Std. Wall XLPE Primary Cable	VIOLET	1565.0	-	X	-
B	-	-	KD34	3510330 R1	1.16	16.0	Thin Wall XLPE Primary Cable	TAN	1095.0	-	A	K02-6401
C	-	-	KD34E	3510328 R1	0.53	20.0	Thin Wall XLPE Primary Cable	TAN	2335.0	-	35	K02-6000
D	-	-	GN34B	3510330 R1	1.16	16.0	Thin Wall XLPE Primary Cable	TAN	1615.0	-	X	-

Name	Terminal Part Number	V-Min	Name	Wire Part Number	Wire CSA	Wire Spec	Wire Material description	Wire Color Description	Wire Length	End2 Terminal Part Number	End2 Pin Name	End2 Connect or
D	-	-	GM34B	3510330 R1	1.16	16.0	Thin Wall XLPE Primary Cable	TAN	1615.0	-	X	-
E	-	-	KD34A	3510330 R1	1.16	16.0	Thin Wall XLPE Primary Cable	TAN	1095.0	-	B	K02-6401

Connector Name	K02-1874A
Part Number	3977821C1
Instances	LT/RH/LoneStar - X15 - Water In Fuel (WIF) RACOR N/ Heater:Diagram1
Mates	DEV-FUEL FILTER ASSY-3036-01-09A

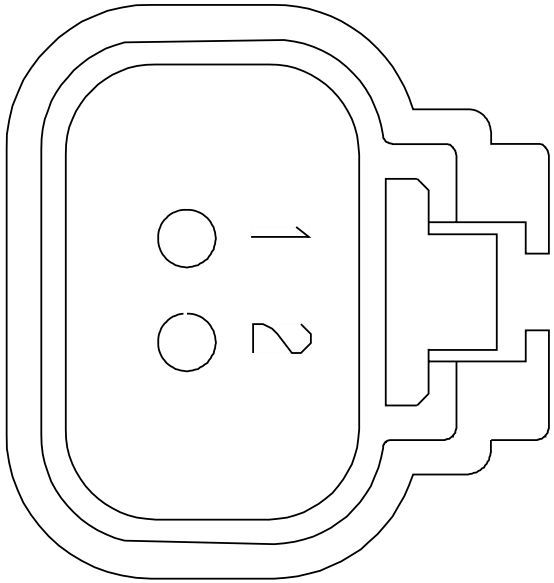

Name	Terminal Part Number	V-Min	Name	Wire Part Number	Wire CSA	Wire Spec	Wire Material description	Wire Color Description	Wire Length	End2 Terminal Part Number	End2 Pin Name	End2 Connect or
1	-	-	KY95W	2643676 R1	0.79	18.0	Std. Wall XLPE Primary Cable	TAN	950.0	-	X	-
2	-	-	KY95-GG	2643674 R1	0.79	18.0	Std. Wall XLPE Primary Cable	WHITE	1595.0	-	-	-

Connector Name	K02-1874B
Part Number	3590390C1
Instances	LT/RH/LoneStar - X15 - Water In Fuel (WIF) DAVCO N/ Heater:Diagram2 LT/RH/LoneStar - X15 - Water In Fuel (WIF) DAVCO W/ Heater:Diagram2
Mates	DEV-FUEL_FILTER_ASSY-07-ISX

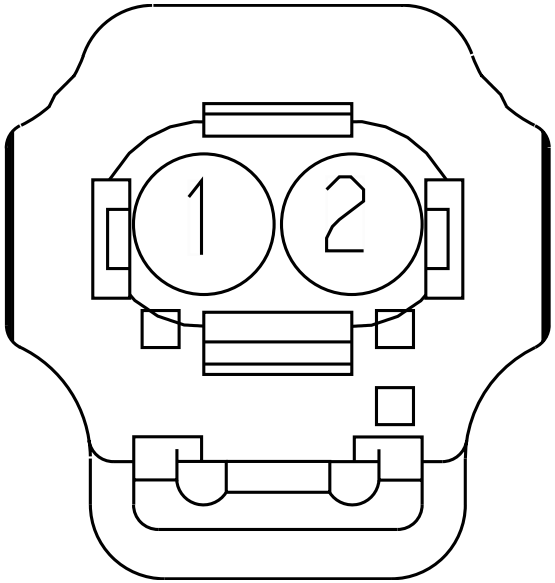

Name	Terminal Part Number	V-Min	Name	Wire Part Number	Wire CSA	Wire Spec	Wire Material description	Wire Color Description	Wire Length	End2 Terminal Part Number	End2 Pin Name	End2 Connect or
1	-	-	GA95W	2643767 R1	0.53	20.0	Std. Wall XLPE Primary Cable	TAN	850.0	-	X	-
2	-	-	GA95-GF	2643764 R1	0.53	20.0	Std. Wall XLPE Primary Cable	WHITE	1495.0	-	-	-

Connector Name K02-1874

Part Number 3590390C1

Instances LT/RH/LoneStar - X15 - Water In Fuel (WIF) DAVCO N/ Heater:Diagram1
LT/RH/LoneStar - X15 - Water In Fuel (WIF) DAVCO W/ Heater:Diagram1

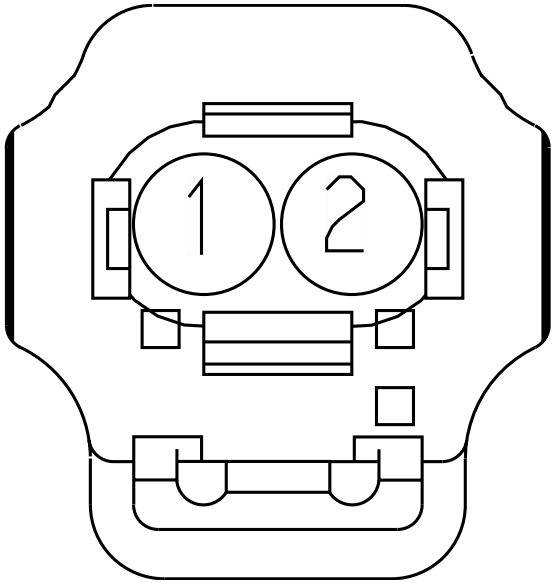

Name	Terminal Part Number	V-Min	Name	Wire Part Number	Wire CSA	Wire Spec	Wire Material description	Wire Color Description	Wire Length	End2 Terminal Part Number	End2 Pin Name	End2 Connect or
1	-	-	KJ95W	2643767 R1	0.53	20.0	Std. Wall XLPE Primary Cable	TAN	900.0	-	X	-
2	-	-	KJ95-GF	2643764 R1	0.53	20.0	Std. Wall XLPE Primary Cable	WHITE	1545.0	-	-	-

Connector Name	K02-2010
Part Number	2036584C1
Instances	LT/RH/LoneStar X15 - Auto Start Stop Oil Temp Sensor Auto Trans:Diagram1 LT/RH/LoneStar X15 - Auto Start Stop Oil Temp Sensor Manual Trans:Diagram1 LT/RH/LoneStar X15 - Auto Start Stop with Sleeper Auto Climate / Cab Temp with Oil Temp Sensor Auto Trans:Diagram1 LT/RH/LoneStar X15 - Auto Start Stop with Sleeper Auto Climate / Cab Temp with Oil Temp Sensor Manual Trans:Diagram1
Mates	SNSR-ENGINE OIL TEMP-6000-07-01A

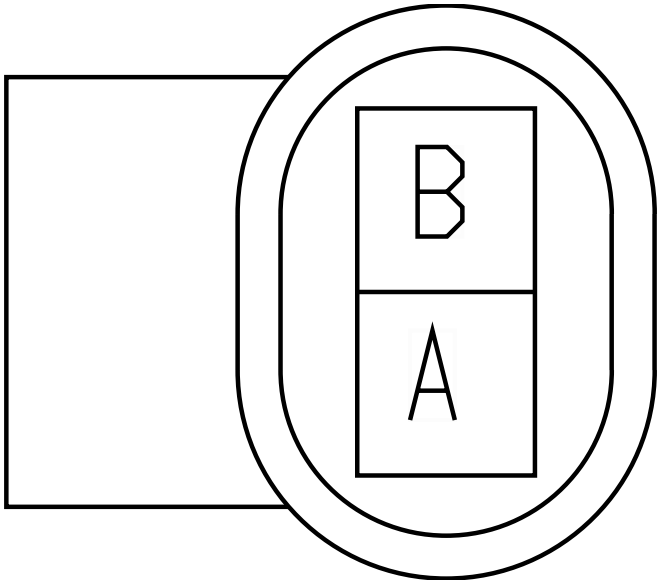

Name	Terminal Part Number	V-Min	Name	Wire Part Number	Wire CSA	Wire Spec	Wire Material description	Wire Color Description	Wire Length	End2 Terminal Part Number	End2 Pin Name	End2 Connect or
A	-	-	WN30BC	2643683 R1	1.16	16.0	Std. Wall XLPE Primary Cable	TAN	3080.0	-	34	1702
B	-	-	KZ9AAC	2643673 R1	0.79	18.0	Std. Wall XLPE Primary Cable	GREY	4155.0	-	-	-

Connector Name	K02-6000
Part Number	3945694C1
Instances	LoneStar - X15 - Cooling Fan Control With Switch:Diagram1 LoneStar - X15 - Cooling Fan Control Without Switch:Diagram1 LT/RH - X15 - Accelerator Interlock W/ Park Brake Controls:Diagram1 LT/RH X15 - Coolant Level Monitoring:Diagram1 LT/RH X15 - Cooling Fan Control With Switch:Diagram1 LT/RH X15 - Cooling Fan Control Without Switch:Diagram1 LT/RH/LoneStar - X15 - Coolant Level Monitoring:Diagram1 LT/RH/LoneStar - X15 - Selective Catalytic Reduction (SCR):Diagram1 - Heater & Supply Module Relays-Combination1 LT/RH/LoneStar - X15 - Selective Catalytic Reduction (SCR):Diagram1 - Heater & Supply Module Relays-Combination2 LT/RH/LoneStar - X15 - Selective Catalytic Reduction (SCR):Diagram1 - Heater & Supply Module Relays-Combination3 LT/RH/LoneStar - X15 - Selective Catalytic Reduction (SCR):Diagram2 - Supply Module, Sensor Table, Quality Sensor, DEF Tank Valve-Combination1 LT/RH/LoneStar - X15 - Selective Catalytic Reduction (SCR):Diagram2 - Supply Module, Sensor Table, Quality Sensor, DEF Tank Valve-Combination2 LT/RH/LoneStar - X15 - Selective Catalytic Reduction (SCR):Diagram2 - Supply Module, Sensor Table, Quality Sensor, DEF Tank Valve-Combination3 LT/RH/LoneStar - X15 - Starting Aid (Ether Start):Diagram1 LT/RH/LoneStar - X15 - Vehicle Acceleration (w/ Two PWR Two GND & Two STS):Diagram1 LT/RH/LoneStar - X15 - Vehicle Speedometer System (Manual XMSN) ISX:Diagram1 LT/RH/LoneStar - X15 - Water In Fuel (WIF) DAVCO N/ Heater:Diagram1 LT/RH/LoneStar - X15 - Water In Fuel (WIF) DAVCO N/ Heater:Diagram2 LT/RH/LoneStar - X15 - Water In Fuel (WIF) DAVCO W/ Heater:Diagram1 LT/RH/LoneStar - X15 - Water In Fuel (WIF) DAVCO W/ Heater:Diagram2 LT/RH/LoneStar - X15 - Water In Fuel (WIF) RACOR N/ Heater:Diagram1

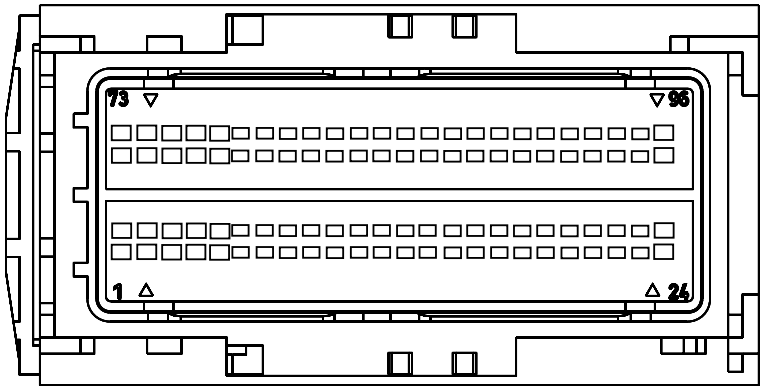

LT/RH/LoneStar X15 - Ambient Air Temperature Option
1:Diagram1
LT/RH/LoneStar X15 - Ambient Air Temperature Option
2:Diagram1

Mates MODU-ECM-A001-10-01A X15

Name	Terminal Part Number	V-Min	Name	Wire Part Number	Wire CSA	Wire Spec	Wire Material description	Wire Color Description	Wire Length	End2 Terminal Part Number	End2 Pin Name	End2 Connect or
3	-	-	KA95GBE	3510330 R1	1.16	16.0	Thin Wall XLPE Primary Cable	TAN	1480.0	-	X	-
6	-	-	TK95F	3510328 R1	0.53	20.0	Thin Wall XLPE Primary Cable	TAN	1150.0	-	2	674B
6	-	-	TJ95F	3510328 R1	0.53	20.0	Thin Wall XLPE Primary Cable	TAN	1870.0	-	2	674
8	-	-	GM6A	3510346 R1	0.53	20.0	Thin Wall XLPE Primary Cable	VIOLET	770.0	-	X	-
8	-	-	GN6A	3510346 R1	0.53	20.0	Thin Wall XLPE Primary Cable	VIOLET	770.0	-	X	-
9	-	-	TK97C	3510346 R1	0.53	20.0	Thin Wall XLPE Primary Cable	VIOLET	1160.0	-	22	1702
10	-	-	TK99B	3510346 R1	0.53	20.0	Thin Wall XLPE Primary Cable	VIOLET	1160.0	-	28	1702

Name	Terminal Part Number	V-Min	Name	Wire Part Number	Wire CSA	Wire Spec	Wire Material description	Wire Color Description	Wire Length	End2 Terminal Part Number	End2 Pin Name	End2 Connector
13	-	-	KJ95WA	3510328 R1	0.53	20.0	Thin Wall XLPE Primary Cable	TAN	500.0	-	X	-
13	-	-	GA95WA	3510328 R1	0.53	20.0	Thin Wall XLPE Primary Cable	TAN	500.0	-	X	-
13	-	-	KY95WA	3510328 R1	0.53	20.0	Thin Wall XLPE Primary Cable	TAN	500.0	-	X	-
16	-	-	TP95K	4073403 R1	0.53	20.0	TXL 150C	TAN	2305.0	-	8	K02-670A
16	-	-	TY95K	4073403 R1	0.53	20.0	TXL 150C	TAN	4030.0	-	8	K02-670A
22	-	-	-	-	-	-	-	-	-	-	-	-
32	-	-	GM9A	3510328 R1	0.53	20.0	Thin Wall XLPE Primary Cable	TAN	720.0	-	X	-
32	-	-	GN9A	3510328 R1	0.53	20.0	Thin Wall XLPE Primary Cable	TAN	720.0	-	X	-
33	-	-	TK97B	3510346 R1	0.53	20.0	Thin Wall XLPE Primary Cable	VIOLET	1160.0	-	23	1702
35	-	-	GK34	3510328 R1	0.53	20.0	Thin Wall XLPE Primary Cable	TAN	2810.0	-	X	-

Name	Terminal Part Number	V-Min	Name	Wire Part Number	Wire CSA	Wire Spec	Wire Material description	Wire Color Description	Wire Length	End2 Terminal Part Number	End2 Pin Name	End2 Connector
35	-	-	KD34E	3510328 R1	0.53	20.0	Thin Wall XLPE Primary Cable	TAN	2335.0	-	C	K02-1378
38	-	-	TK95AT2	3510328 R1	0.53	20.0	Thin Wall XLPE Primary Cable	TAN	820.0	-	X	-
38	-	-	TJ95AT2	3510328 R1	0.53	20.0	Thin Wall XLPE Primary Cable	TAN	820.0	-	X	-
39	-	-	TK95AS2	3510328 R1	0.53	20.0	Thin Wall XLPE Primary Cable	TAN	910.0	-	X	-
39	-	-	TJ95AS2	3510328 R1	0.53	20.0	Thin Wall XLPE Primary Cable	TAN	910.0	-	X	-
40	-	-	TK95AU2	3510328 R1	0.53	20.0	Thin Wall XLPE Primary Cable	TAN	790.0	-	X	-
40	-	-	TJ95AU2	3510328 R1	0.53	20.0	Thin Wall XLPE Primary Cable	TAN	790.0	-	X	-
41	-	-	TP95BA	4073403 R1	0.53	20.0	TXL 150C	TAN	2305.0	-	3	K02-670A
41	-	-	TY95BA	4073403 R1	0.53	20.0	TXL 150C	TAN	4030.0	-	3	K02-670A
42	-	-	TP95BC	4073403 R1	0.53	20.0	TXL 150C	TAN	2305.0	-	4	K02-670A

Name	Terminal Part Number	V-Min	Name	Wire Part Number	Wire CSA	Wire Spec	Wire Material description	Wire Color Description	Wire Length	End2 Terminal Part Number	End2 Pin Name	End2 Connector
42	-	-	TY95BC	4073403 R1	0.53	20.0	TXL 150C	TAN	4030.0	-	4	K02-670A
46	-	-	-	-	-	-	-	-	-	-	-	-
53	-	-	TP95DVL	4073403 R1	0.53	20.0	TXL 150C	TAN	2305.0	-	1	K02-670A
53	-	-	TY95DVL	4073403 R1	0.53	20.0	TXL 150C	TAN	4030.0	-	1	K02-670A
54	-	-	TK95E	3510328 R1	0.53	20.0	Thin Wall XLPE Primary Cable	TAN	1150.0	-	1	674B
54	-	-	TJ95E	3510328 R1	0.53	20.0	Thin Wall XLPE Primary Cable	TAN	1870.0	-	1	674
57	-	-	TJ95AA	3510328 R1	0.53	20.0	Thin Wall XLPE Primary Cable	TAN	430.0	-	X	-
57	-	-	TK95AA	3510328 R1	0.53	20.0	Thin Wall XLPE Primary Cable	TAN	430.0	-	X	-
59	-	-	KF47AA	3510310 R1	0.53	20.0	Thin Wall XLPE Primary Cable	GREY	1190.0	-	X	-
60	-	-	KF47	3510310 R1	0.53	20.0	Thin Wall XLPE Primary Cable	GREY	1225.0	-	X	-
61	-	-	KA97N	3510346 R1	0.53	20.0	Thin Wall XLPE Primary Cable	VIOLET	1160.0	-	29	1702

Name	Terminal Part Number	V-Min	Name	Wire Part Number	Wire CSA	Wire Spec	Wire Material description	Wire Color Description	Wire Length	End2 Terminal Part Number	End2 Pin Name	End2 Connector
62	-	-	KA95G	3510358 R1	0.53	20.0	Thin Wall XLPE Primary Cable	WHITE	645.0	-	-	-
64	-	-	KA97M	3510346 R1	0.53	20.0	Thin Wall XLPE Primary Cable	VIOLET	1160.0	-	24	1702
65	-	-	KC41E	3510328 R1	0.53	20.0	Thin Wall XLPE Primary Cable	TAN	340.0	-	X	-
75	-	-	KU21	3510330 R1	1.16	16.0	Thin Wall XLPE Primary Cable	TAN	1300.0	-	A	K02-6550
76	-	-	KU21A	3510330 R1	1.16	16.0	Thin Wall XLPE Primary Cable	TAN	1300.0	-	B	K02-6550
77	-	-	TP95DVH	4073403 R1	0.53	20.0	TXL 150C	TAN	2305.0	-	2	K02-670A
77	-	-	TY95DVH	4073403 R1	0.53	20.0	TXL 150C	TAN	4030.0	-	2	K02-670A
78	-	-	TK23	3510328 R1	0.53	20.0	Thin Wall XLPE Primary Cable	TAN	1180.0	-	A	K02-6400
79	-	-	KA95SB	3510328 R1	0.53	20.0	Thin Wall XLPE Primary Cable	TAN	1880.0	-	A12	690

Name	Terminal Part Number	V-Min	Name	Wire Part Number	Wire CSA	Wire Spec	Wire Material description	Wire Color Description	Wire Length	End2 Terminal Part Number	End2 Pin Name	End2 Connector
82	-	-	TK95AC	3510328 R1	0.53	20.0	Thin Wall XLPE Primary Cable	TAN	1150.0	-	5	674B
82	-	-	TJ95AC	3510328 R1	0.53	20.0	Thin Wall XLPE Primary Cable	TAN	1870.0	-	5	674
93	-	-	GE44A	3510310 R1	0.53	20.0	Thin Wall XLPE Primary Cable	GREY	1480.0	-	C	1814

Connector Name	K02-6100A/J
Part Number	RING-M-8_0
Instances	LT/RH/LoneStar - X15 - Leece-Neville AVI160 Alternator W/ Mitsubishi Starter:Diagram1 LT/RH/LoneStar X15 - Leece-Neville AVI160 Alternator W/ Delco Starter:Diagram1-Combination1
Mates	DEV-Leece_Neville_AVI_160_ Alternator-4004-01-02A

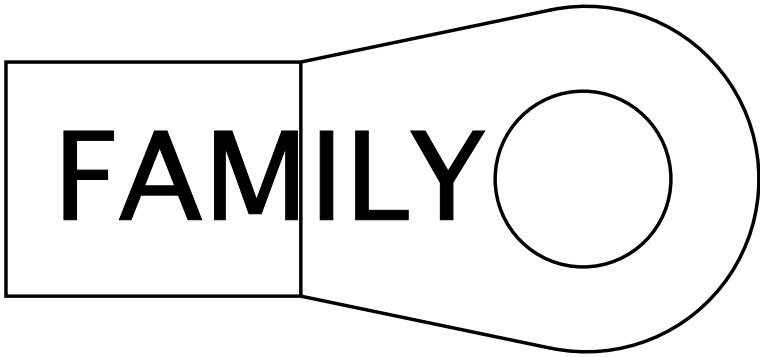

Name	Terminal Part Number	V-Min	Name	Wire Part Number	Wire CSA	Wire Spec	Wire Material description	Wire Color Description	Wire Length	End2 Terminal Part Number	End2 Pin Name	End2 Connect or
A	-	-	KR2	3592739 R1	32.19	2.0	Std. Wall XLPE Battery Cable	RED	2774.0	-	X	-
A	-	-	VG2	2645955 R1	32.19	2.0	SGR 125	RED	2925.0	-	PIN1	-

Connector Name	K02-6100B
Part Number	RING-M-8_0
Instances	LT/RH/LoneStar - X15 - Bosch LH160_LH200 Alternator W/ Mitsubishi Starter:Diagram1 LT/RH/LoneStar - X15 - Bosch LIL165_LIL200 Alternator W/ Remote Sense W/ Mitsubishi Starter:Diagram1 LT/RH/LoneStar X15 - Bosch LH160_LH200 Alternator W/ Delco Starter:Diagram1-Combination1 LT/RH/LoneStar X15 - Bosch LIL165_LIL200 Alternator W/ Remote Sense W/ Delco Starter:Diagram1-Combination1
Mates	DEV-Bosch_LH160_LG200_Alte rnator- 4004-01-01A

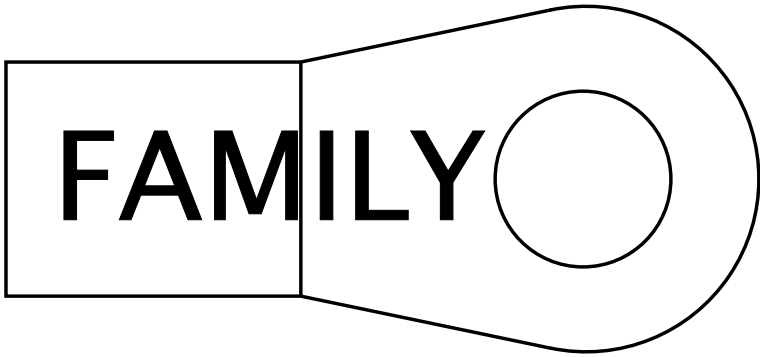

Name	Terminal Part Number	V-Min	Name	Wire Part Number	Wire CSA	Wire Spec	Wire Material description	Wire Color Description	Wire Length	End2 Terminal Part Number	End2 Pin Name	End2 Connect or
A	-	-	KB2	3592739 R1	32.19	2.0	Std. Wall XLPE Battery Cable	RED	2854.0	-	X	-

Connector Name	K02-6100D
Part Number	RING-E-5-16_0
Instances	LT/RH/LoneStar - X15 - Delco Remy 40SI Alternator W/ Remote Sense W/ Mitsubishi Starter:Diagram1 LT/RH/LoneStar X15 - Delco Remy 40SI Alternator W/ Remote Sense W/ Delco Starter:Diagram1-Combination1

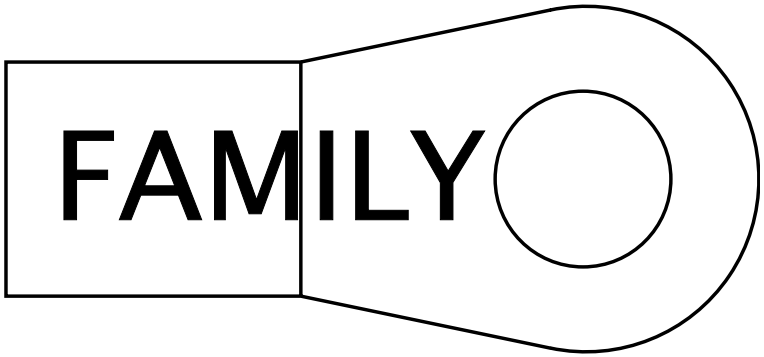

Name	Terminal Part Number	V-Min	Name	Wire Part Number	Wire CSA	Wire Spec	Wire Material description	Wire Color Description	Wire Length	End2 Terminal Part Number	End2 Pin Name	End2 Connect or
A	-	-	VD2	3592740 R1	39.43	1.0	Std. Wall XLPE Battery Cable	RED	2870.0	-	X	-

Connector Name	K02-6100E
Part Number	RING-M-8_0
Instances	LT/RH/LoneStar - X15 - Leece-Neville AVI160-210A/240A Alternator W/ Remote Sense W/ Mitsubishi Starter:Diagram1 LT/RH/LoneStar X15 - Leece-Neville AVI160-210A/240A Alternator W/ Remote Sense W/ Delco Starter:Diagram1-Combination1
Mates	DEV-Leece_Neville_AVI160_2 10A_240A_Alternator-4004-01-04A

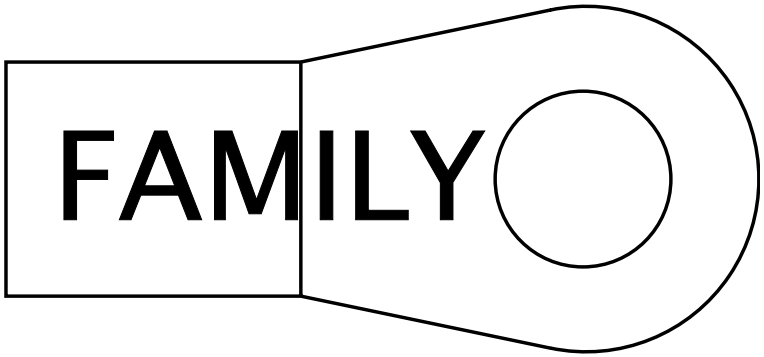

Name	Terminal Part Number	V-Min	Name	Wire Part Number	Wire CSA	Wire Spec	Wire Material description	Wire Color Description	Wire Length	End2 Terminal Part Number	End2 Pin Name	End2 Connect or
A	-	-	VM2	2645955 R1	32.19	2.0	SGR 125	RED	2955.0	-	X	-

Connector Name K02-6100F

Part Number RING-M-8_0

Instances LT/RH/LoneStar - X15 - Delco Remy 28SI Alternator W/ Remote Sense W/ Mitsubishi Starter:Diagram1
LT/RH/LoneStar X15 - Delco Remy 28SI Alternator W/ Remote Sense W/ Delco Starter:Diagram1-Combination1

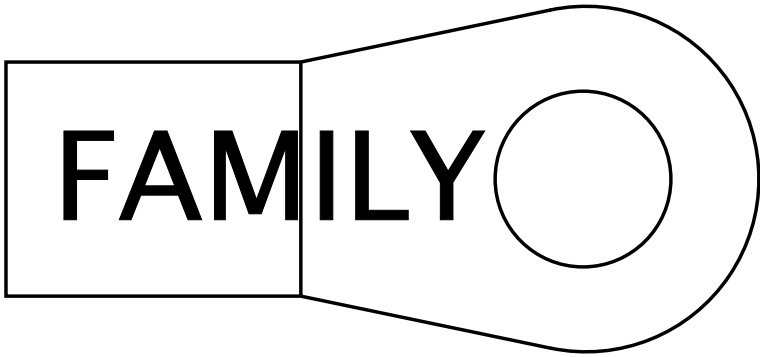

Name	Terminal Part Number	V-Min	Name	Wire Part Number	Wire CSA	Wire Spec	Wire Material description	Wire Color Description	Wire Length	End2 Terminal Part Number	End2 Pin Name	End2 Connect or
A	-	-	VE2	3592739 R1	32.19	2.0	Std. Wall XLPE Battery Cable	RED	2815.0	-	X	-

Connector Name	K02-6100G
Part Number	RING-E-1-4_0
Instances	LT/RH/LoneStar - X15 - Delco Remy 36SI Alternator W/ Remote Sense W/ Mitsubishi Starter:Diagram1 LT/RH/LoneStar X15 - Delco Remy 36SI Alternator W/ Remtoe Sense W/ Delco Starter:Diagram1
Mates	DEV-Delco_Remy_36SI_Altern ator-4004-01-07A

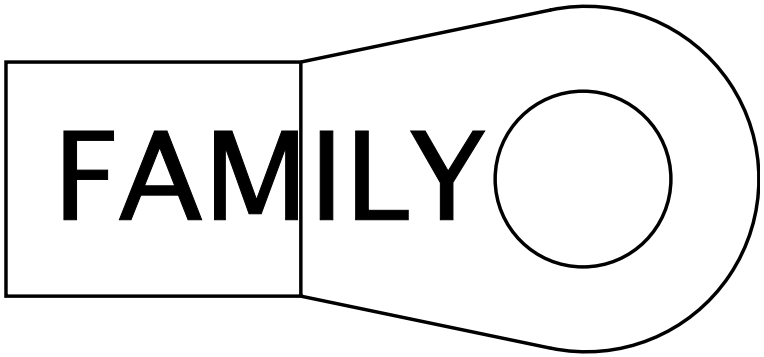

Name	Terminal Part Number	V-Min	Name	Wire Part Number	Wire CSA	Wire Spec	Wire Material description	Wire Color Description	Wire Length	End2 Terminal Part Number	End2 Pin Name	End2 Connect or
A	-	-	VF2	3592739 R1	32.19	2.0	Std. Wall XLPE Battery Cable	RED	2772.0	-	X	-

Connector Name	K02-6100H
Part Number	RING-M-8_0
Instances	LT/RH/LoneStar - X15 - Delco Remy 28SI Alternator W/ Remote Sense W/ Mitsubishi Starter:Diagram2 LT/RH/LoneStar X15 - Delco Remy 28SI Alternator W/ Remote Sense W/ Delco Starter:Diagram1-Combination2
Mates	DEV-Delco_Remy_28SI_Altern ator-4004-01-05A

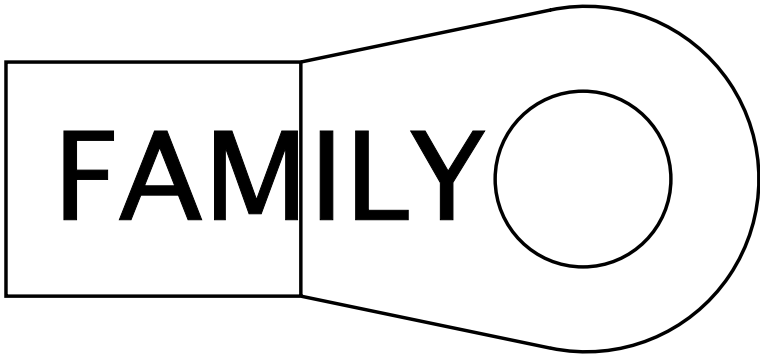

Name	Terminal Part Number	V-Min	Name	Wire Part Number	Wire CSA	Wire Spec	Wire Material description	Wire Color Description	Wire Length	End2 Terminal Part Number	End2 Pin Name	End2 Connect or
A	-	-	WX2	3592739 R1	32.19	2.0	Std. Wall XLPE Battery Cable	RED	2863.0	-	X	-

Connector Name	K02-6101A/J
Part Number	RING-M-8_0
Instances	LT/RH/LoneStar - X15 - Leece-Neville AVI160 Alternator W/ Mitsubishi Starter:Diagram1 LT/RH/LoneStar X15 - Leece-Neville AVI160 Alternator W/ Delco Starter:Diagram1-Combination1
Mates	DEV-Leece_Neville_AVI_160_ Alternator-4004-01-02A

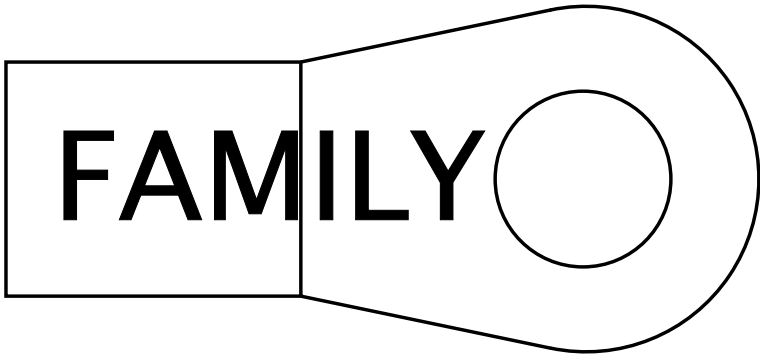

Name	Terminal Part Number	V-Min	Name	Wire Part Number	Wire CSA	Wire Spec	Wire Material description	Wire Color Description	Wire Length	End2 Terminal Part Number	End2 Pin Name	End2 Connect or
A	-	-	KR2-G	3592741 R1	32.19	2.0	Std. Wall XLPE Battery Cable	WHITE	3040.0	-	A	K02-J1-DELCO
A	-	-	VG2-G	2645931 R1	32.19	2.0	SGR 125	BLACK	2880.0	-	A	K02-J1-DELCO
A	-	-	VG2-G	2645931 R1	32.19	2.0	SGR 125	BLACK	2880.0	-	A	K02-J1-MITS
A	-	-	KR2-G	3592741 R1	32.19	2.0	Std. Wall XLPE Battery Cable	WHITE	3040.0	-	A	K02-J1-MITS

Connector Name	K02-6101B
Part Number	RING-M-6_0
Instances	LT/RH/LoneStar - X15 - Bosch LH160_LH200 Alternator W/ Mitsubishi Starter:Diagram1 LT/RH/LoneStar - X15 - Bosch LIL165_LIL200 Alternator W/ Remote Sense W/ Mitsubishi Starter:Diagram1 LT/RH/LoneStar X15 - Bosch LH160_LH200 Alternator W/ Delco Starter:Diagram1-Combination1 LT/RH/LoneStar X15 - Bosch LIL165_LIL200 Alternator W/ Remote Sense W/ Delco Starter:Diagram1-Combination1
Mates	DEV-Bosch_LH160_LG200_Alte rnator- 4004-01-01A

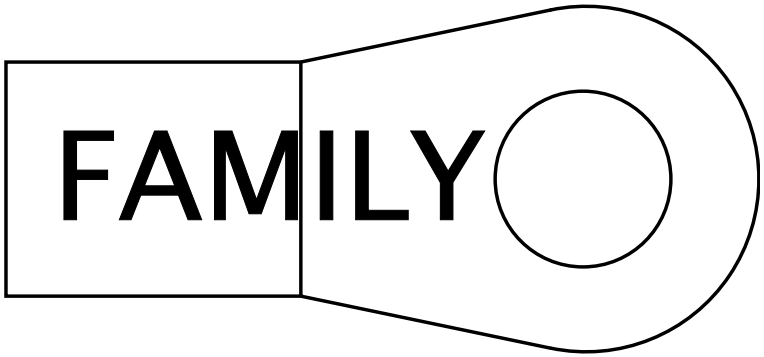

Name	Terminal Part Number	V-Min	Name	Wire Part Number	Wire CSA	Wire Spec	Wire Material description	Wire Color Description	Wire Length	End2 Terminal Part Number	End2 Pin Name	End2 Connect or
A	-	-	KB2-G	3592741 R1	32.19	2.0	Std. Wall XLPE Battery Cable	WHITE	3020.0	-	A	K02-J1-DELCO
A	-	-	KB2-G	3592741 R1	32.19	2.0	Std. Wall XLPE Battery Cable	WHITE	3020.0	-	A	K02-J1-MITS

Connector Name K02-6101D

Part Number RING-E-5-16_0

Instances LT/RH/LoneStar - X15 - Delco Remy 40SI Alternator W/ Remote Sense W/ Mitsubishi Starter:Diagram1
LT/RH/LoneStar X15 - Delco Remy 40SI Alternator W/ Remote Sense W/ Delco Starter:Diagram1-Combination1

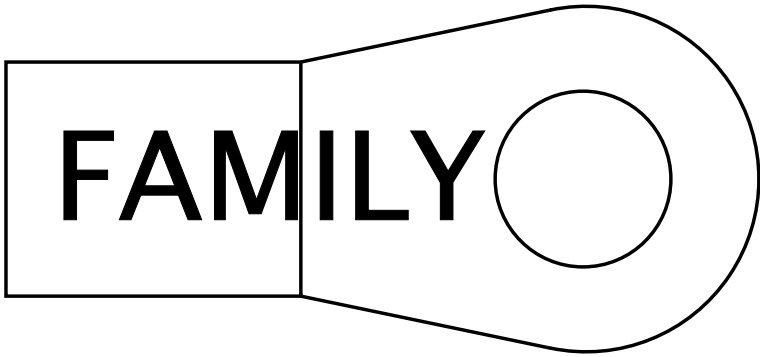

Name	Terminal Part Number	V-Min	Name	Wire Part Number	Wire CSA	Wire Spec	Wire Material description	Wire Color Description	Wire Length	End2 Terminal Part Number	End2 Pin Name	End2 Connect or
A	-	-	VD2-G	3592742 R1	39.43	1.0	Std. Wall XLPE Battery Cable	WHITE	3020.0	-	A	K02-J1-MITS
A	-	-	VD2-G	3592742 R1	39.43	1.0	Std. Wall XLPE Battery Cable	WHITE	3020.0	-	A	K02-J1-DELCO

Connector Name	K02-6101E
Part Number	RING-M-8_0
Instances	LT/RH/LoneStar - X15 - Leece-Neville AVI160-210A/240A Alternator W/ Remote Sense W/ Mitsubishi Starter:Diagram1 LT/RH/LoneStar X15 - Leece-Neville AVI160-210A/240A Alternator W/ Remote Sense W/ Delco Starter:Diagram1-Combination1
Mates	DEV-Leece_Neville_AVI160_2 10A_240A_Alternator-4004-01-04A

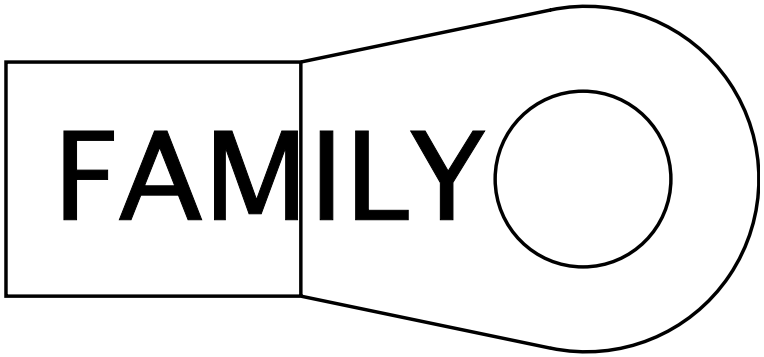

Name	Terminal Part Number	V-Min	Name	Wire Part Number	Wire CSA	Wire Spec	Wire Material description	Wire Color Description	Wire Length	End2 Terminal Part Number	End2 Pin Name	End2 Connect or
A	-	-	VM2-G	2645931 R1	32.19	2.0	SGR 125	BLACK	2900.0	-	A	K02-J1-MITS
A	-	-	VM2-G	2645931 R1	32.19	2.0	SGR 125	BLACK	2900.0	-	A	K02-J1-DELCO

Connector Name K02-6101F

Part Number RING-M-6_0

Instances LT/RH/LoneStar - X15 - Delco Remy 28SI Alternator W/ Remote Sense W/ Mitsubishi Starter:Diagram1
LT/RH/LoneStar X15 - Delco Remy 28SI Alternator W/ Remote Sense W/ Delco Starter:Diagram1-Combination1

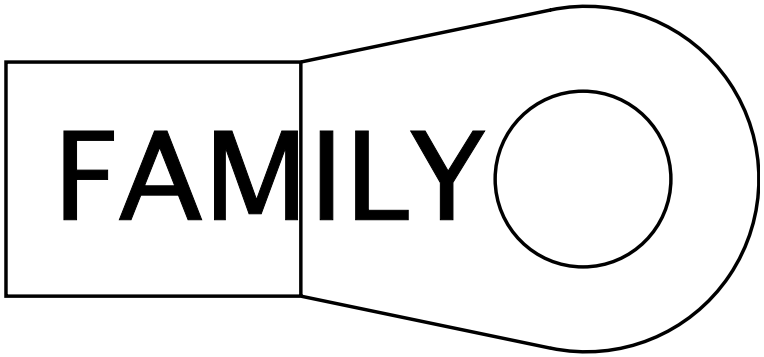

Name	Terminal Part Number	V-Min	Name	Wire Part Number	Wire CSA	Wire Spec	Wire Material description	Wire Color Description	Wire Length	End2 Terminal Part Number	End2 Pin Name	End2 Connect or
A	-	-	VE2-G	3592741 R1	32.19	2.0	Std. Wall XLPE Battery Cable	WHITE	3020.0	-	A	K02-J1-DELCO
A	-	-	VE2-G	3592741 R1	32.19	2.0	Std. Wall XLPE Battery Cable	WHITE	3020.0	-	A	K02-J1-MITS

Connector Name	K02-6101G
Part Number	RING-E-1-4_0
Instances	LT/RH/LoneStar - X15 - Delco Remy 36SI Alternator W/ Remote Sense W/ Mitsubishi Starter:Diagram1 LT/RH/LoneStar X15 - Delco Remy 36SI Alternator W/ Remtoe Sense W/ Delco Starter:Diagram1
Mates	DEV-Delco_Remy_36SI_Altern ator-4004-01-07A

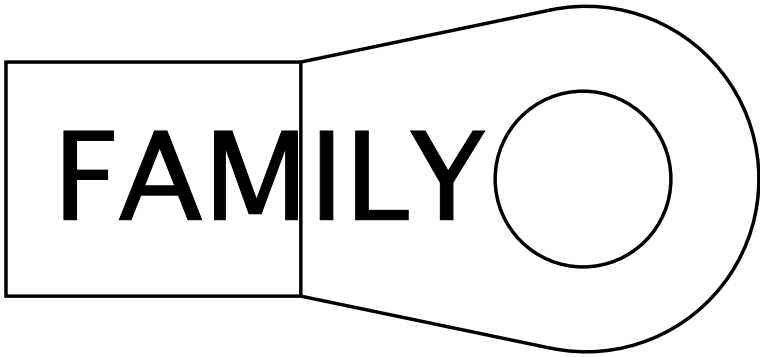

Name	Terminal Part Number	V-Min	Name	Wire Part Number	Wire CSA	Wire Spec	Wire Material description	Wire Color Description	Wire Length	End2 Terminal Part Number	End2 Pin Name	End2 Connect or
A	-	-	VF2-G	3592741 R1	32.19	2.0	Std. Wall XLPE Battery Cable	WHITE	3020.0	-	A	K02-J1-DELCO
A	-	-	VF2-G	3592741 R1	32.19	2.0	Std. Wall XLPE Battery Cable	WHITE	3020.0	-	A	K02-J1-MITS

Connector Name	K02-6101H
Part Number	RING-M-6_0
Instances	LT/RH/LoneStar - X15 - Delco Remy 28SI Alternator W/ Remote Sense W/ Mitsubishi Starter:Diagram2 LT/RH/LoneStar X15 - Delco Remy 28SI Alternator W/ Remote Sense W/ Delco Starter:Diagram1-Combination2
Mates	DEV-Delco_Remy_28SI_Altern ator-4004-01-05A

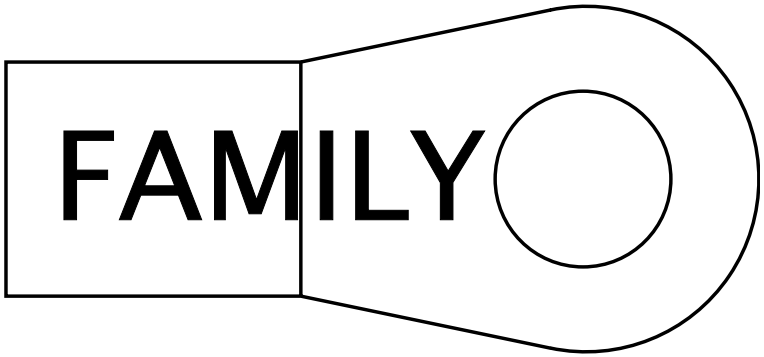

Name	Terminal Part Number	V-Min	Name	Wire Part Number	Wire CSA	Wire Spec	Wire Material description	Wire Color Description	Wire Length	End2 Terminal Part Number	End2 Pin Name	End2 Connect or
A	-	-	WX2-G	3592741 R1	32.19	2.0	Std. Wall XLPE Battery Cable	WHITE	3020.0	-	A	K02-J1-DELCO
A	-	-	WX2-G	3592741 R1	32.19	2.0	Std. Wall XLPE Battery Cable	WHITE	3020.0	-	A	K02-J1-MITS

Connector Name	K02-6200
Part Number	1671610C1
Instances	LT/RH/LoneStar X15 - Heating Ventilation & Air Conditioning (HVAC) Auto Temp Control:Diagram1 - HVAC LT/RH/LoneStar X15 - Heating Ventilation & Air Conditioning (HVAC) Manual:Diagram1 - HVAC
Mates	DEV-FREON_COMPRESSOR-ISX

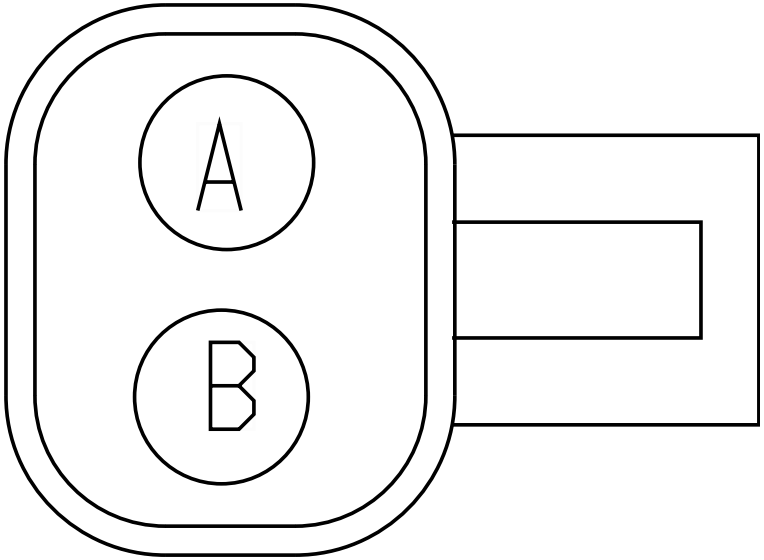

Name	Terminal Part Number	V-Min	Name	Wire Part Number	Wire CSA	Wire Spec	Wire Material description	Wire Color Description	Wire Length	End2 Terminal Part Number	End2 Pin Name	End2 Connect or
A	-	-	KA77-G	3510360 R1	1.16	16.0	Thin Wall XLPE Primary Cable	WHITE	2610.0	-	X	-
B	-	-	KA77	3510300 R1	1.16	16.0	Thin Wall XLPE Primary Cable	LIGHT GREEN	2280.0	-	10	1702

Connector Name K02-6201

Part Number 3600324C1

Instances LT/RH/LoneStar X15 - Heating Ventilation & Air Conditioning (HVAC) Auto Temp Control:Diagram1 - HVAC
LT/RH/LoneStar X15 - Heating Ventilation & Air Conditioning (HVAC) Manual:Diagram1 - HVAC

Mates DEV-AC_PT_TRANSDUCER-ISX

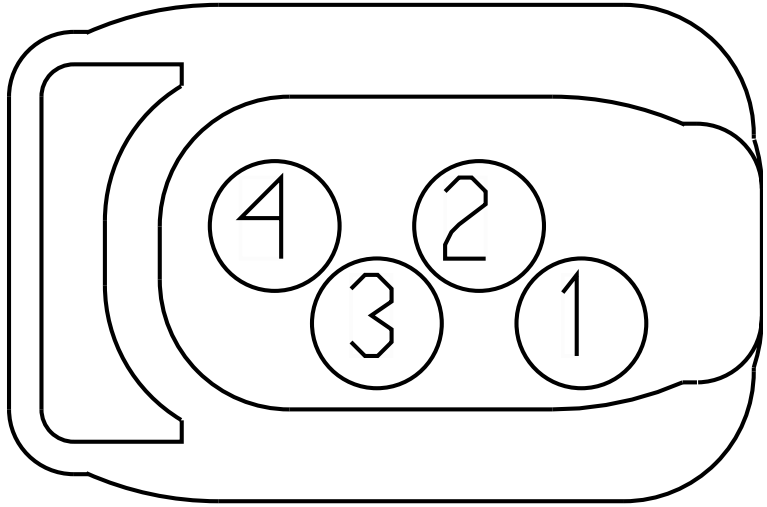

Name	Terminal Part Number	V-Min	Name	Wire Part Number	Wire CSA	Wire Spec	Wire Material description	Wire Color Description	Wire Length	End2 Terminal Part Number	End2 Pin Name	End2 Connect or
1	-	-	YB9AB	3510310 R1	0.53	20.0	Thin Wall XLPE Primary Cable	GREY	1265.0	-	-	-
2	-	-	YB77B	3510298 R1	0.53	20.0	Thin Wall XLPE Primary Cable	LIGHT GREEN	2870.0	-	4	1702
3	-	-	YB77C	3510298 R1	0.53	20.0	Thin Wall XLPE Primary Cable	LIGHT GREEN	2870.0	-	42	1702
4	-	-	YB6DB	3510310 R1	0.53	20.0	Thin Wall XLPE Primary Cable	GREY	2870.0	-	3	1702

Connector Name K02-6301-DELCO

Part Number RING-M-12_0

Instances LT/RH/LoneStar - X15 - Cranking (Starter) GEN4 BCM W/ Thermal Overcrank - External Switch:Diagram1
LT/RH/LoneStar X15 - Bosch LH160_LH200 Alternator W/ Delco Starter:Diagram1-Combination1
LT/RH/LoneStar X15 - Bosch LIL165_LIL200 Alternator W/ Remote Sense W/ Delco Starter:Diagram1-Combination1
LT/RH/LoneStar X15 - Delco Remy 28SI Alternator W/ Remote Sense W/ Delco Starter:Diagram1-Combination1
LT/RH/LoneStar X15 - Delco Remy 28SI Alternator W/ Remote Sense W/ Delco Starter:Diagram1-Combination2
LT/RH/LoneStar X15 - Delco Remy 36SI Alternator W/ Remtoe Sense W/ Delco Starter:Diagram1
LT/RH/LoneStar X15 - Delco Remy 40SI Alternator W/ Remote Sense W/ Delco Starter:Diagram1-Combination1
LT/RH/LoneStar X15 - Delco Remy 40SI Alternator W/ Remote Sense W/ Delco Starter:Diagram1-Combination2
LT/RH/LoneStar X15 - Leece-Neville - LN 325A Alternator W/ Remote Sense W/ Delco Starter:Diagram1
LT/RH/LoneStar X15 - Leece-Neville 320PAH Alternator W/ Delco Starter:Diagram1-Combination1
LT/RH/LoneStar X15 - Leece-Neville AVI160 Alternator W/ Delco Starter:Diagram1-Combination1
LT/RH/LoneStar X15 - Leece-Neville AVI160-210A/240A Alternator W/ Remote Sense W/ Delco Starter:Diagram1-Combination1

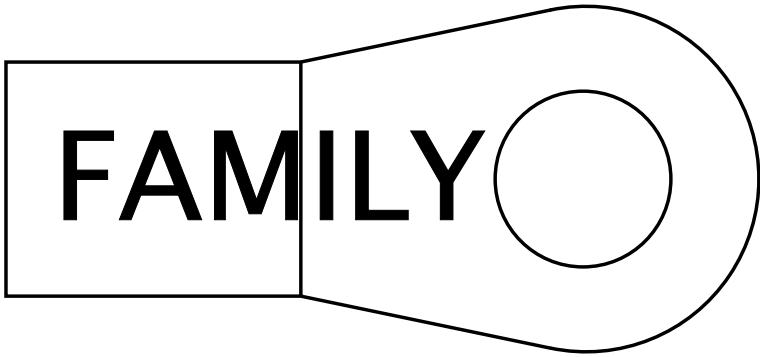

Mates MOT-STARTER-5024-01-03

Name	Terminal Part Number	V-Min	Name	Wire Part Number	Wire CSA	Wire Spec	Wire Material description	Wire Color Description	Wire Length	End2 Terminal Part Number	End2 Pin Name	End2 Connect or
A	-	-	VE2A-FL	2643473 R1	4.81	10.0	FUSEABLE LINK	RUST	255.0	-	X	-
A	-	-	WX2A-FL	2643473 R1	4.81	10.0	FUSEABLE LINK	RUST	207.0	-	X	-
A	-	-	WX2B-FL	2643473 R1	4.81	10.0	FUSEABLE LINK	RUST	207.0	-	X	-
A	-	-	VE2B-FL	2643473 R1	4.81	10.0	FUSEABLE LINK	RUST	255.0	-	X	-

Name	Terminal Part Number	V-Min	Name	Wire Part Number	Wire CSA	Wire Spec	Wire Material description	Wire Color Description	Wire Length	End2 Terminal Part Number	End2 Pin Name	End2 Connector
A	-	-	KR2B-FL	2643473 R1	4.81	10.0	FUSEABLE LINK	RUST	191.0	-	X	-
A	-	-	KR2A-FL	2643473 R1	4.81	10.0	FUSEABLE LINK	RUST	191.0	-	X	-
A	-	-	VG2B-FL	2643473 R1	4.81	10.0	FUSEABLE LINK	RUST	160.0	-	PIN1	-
A	-	-	VG2A-FL	2643473 R1	4.81	10.0	FUSEABLE LINK	RUST	160.0	-	PIN1	-
A	-	-	VF2A-FL	2643473 R1	4.81	10.0	FUSEABLE LINK	RUST	223.0	-	X	-
A	-	-	VF2B-FL	2643473 R1	4.81	10.0	FUSEABLE LINK	RUST	223.0	-	X	-
A	-	-	K2C-FL	2643473 R1	4.81	10.0	FUSEABLE LINK	RUST	210.0	-	X	-
A	-	-	K2A-FL	2643473 R1	4.81	10.0	FUSEABLE LINK	RUST	210.0	-	X	-
A	-	-	K2D-FL	2643473 R1	4.81	10.0	FUSEABLE LINK	RUST	210.0	-	X	-
A	-	-	K2B-FL	2643473 R1	4.81	10.0	FUSEABLE LINK	RUST	210.0	-	X	-
A	-	-	VM2C-FL	2643473 R1	4.81	10.0	FUSEABLE LINK	RUST	205.0	-	X	-
A	-	-	VM2A-FL	2643473 R1	4.81	10.0	FUSEABLE LINK	RUST	160.0	-	X	-
A	-	-	VM2B-FL	2643473 R1	4.81	10.0	FUSEABLE LINK	RUST	160.0	-	X	-
A	-	-	KB2A-FL	2643473 R1	4.81	10.0	FUSEABLE LINK	RUST	191.0	-	X	-
A	-	-	KB2B-FL	2643473 R1	4.81	10.0	FUSEABLE LINK	RUST	191.0	-	X	-
A	-	-	VD2A-FL	2643473 R1	4.81	10.0	FUSEABLE LINK	RUST	175.0	-	X	-

Name	Terminal Part Number	V-Min	Name	Wire Part Number	Wire CSA	Wire Spec	Wire Material description	Wire Color Description	Wire Length	End2 Terminal Part Number	End2 Pin Name	End2 Connector
A	-	-	VD2C-FL	2643473 R1	4.81	10.0	FUSEABLE LINK	RUST	175.0	-	X	-
A	-	-	VD2B-FL	2643473 R1	4.81	10.0	FUSEABLE LINK	RUST	175.0	-	X	-
A	-	-	14	2645962 R1	49.99	0.0	SGX NFLEX 125	RED	700.0	-	A	6051_A

Connector Name K02-6301-MITS

Part Number RING-E-1-2_0

Instances LT/RH/LoneStar - X15 - Bosch LH160_LH200 Alternator W/ Mitsubishi Starter:Diagram1
LT/RH/LoneStar - X15 - Bosch LIL165_LIL200 Alternator W/ Remote Sense W/ Mitsubishi Starter:Diagram1
LT/RH/LoneStar - X15 - Cranking (Starter) GEN4 BCM W/O Thermal Overcrank Wiring:Diagram1
LT/RH/LoneStar - X15 - Delco Remy 28SI Alternator W/ Remote Sense W/ Mitsubishi Starter:Diagram1
LT/RH/LoneStar - X15 - Delco Remy 28SI Alternator W/ Remote Sense W/ Mitsubishi Starter:Diagram2
LT/RH/LoneStar - X15 - Delco Remy 36SI Alternator W/ Remote Sense W/ Mitsubishi Starter:Diagram1
LT/RH/LoneStar - X15 - Delco Remy 40SI Alternator W/ Remote Sense W/ Mitsubishi Starter:Diagram1
LT/RH/LoneStar - X15 - Delco Remy 40SI Alternator W/ Remote Sense W/ Mitsubishi Starter:Diagram2
LT/RH/LoneStar - X15 - Leece-Neville 320PAH Alternator W/ Mitsubishi Starter:Diagram1
LT/RH/LoneStar - X15 - Leece-Neville AVI160 Alternator W/ Mitsubishi Starter:Diagram1
LT/RH/LoneStar - X15 - Leece-Neville AVI160-210A/240A Alternator W/ Remote Sense W/ Mitsubishi Starter:Diagram1

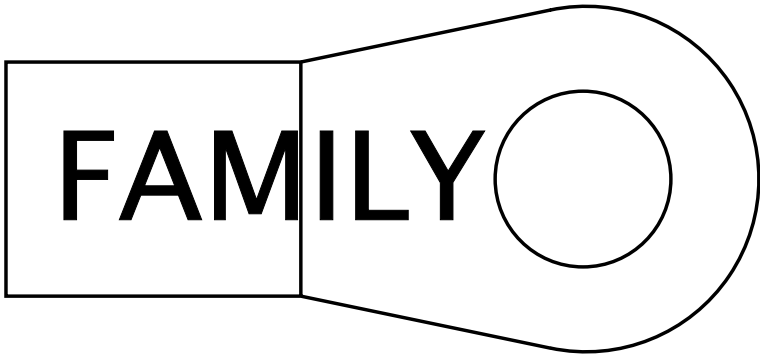

Mates MOT-STARTER-5024-01-04

Name	Terminal Part Number	V-Min	Name	Wire Part Number	Wire CSA	Wire Spec	Wire Material description	Wire Color Description	Wire Length	End2 Terminal Part Number	End2 Pin Name	End2 Connect or
A	-	-	VE2A-FL	2643473 R1	4.81	10.0	FUSEABLE LINK	RUST	255.0	-	X	-
A	-	-	WX2A-FL	2643473 R1	4.81	10.0	FUSEABLE LINK	RUST	207.0	-	X	-
A	-	-	WX2B-FL	2643473 R1	4.81	10.0	FUSEABLE LINK	RUST	207.0	-	X	-
A	-	-	VE2B-FL	2643473 R1	4.81	10.0	FUSEABLE LINK	RUST	255.0	-	X	-
A	-	-	VM2C-FL	2643473 R1	4.81	10.0	FUSEABLE LINK	RUST	205.0	-	X	-

Name	Terminal Part Number	V-Min	Name	Wire Part Number	Wire CSA	Wire Spec	Wire Material description	Wire Color Description	Wire Length	End2 Terminal Part Number	End2 Pin Name	End2 Connector
A	-	-	VM2A-FL	2643473 R1	4.81	10.0	FUSEABLE LINK	RUST	160.0	-	X	-
A	-	-	VM2B-FL	2643473 R1	4.81	10.0	FUSEABLE LINK	RUST	160.0	-	X	-
A	-	-	14	2645962 R1	49.99	0.0	SGX NFLEX 125	RED	700.0	-	A	6051_A
A	-	-	VG2B-FL	2643473 R1	4.81	10.0	FUSEABLE LINK	RUST	160.0	-	PIN1	-
A	-	-	VG2A-FL	2643473 R1	4.81	10.0	FUSEABLE LINK	RUST	160.0	-	PIN1	-
A	-	-	KR2B-FL	2643473 R1	4.81	10.0	FUSEABLE LINK	RUST	191.0	-	X	-
A	-	-	KR2A-FL	2643473 R1	4.81	10.0	FUSEABLE LINK	RUST	191.0	-	X	-
A	-	-	VF2A-FL	2643473 R1	4.81	10.0	FUSEABLE LINK	RUST	223.0	-	X	-
A	-	-	VF2B-FL	2643473 R1	4.81	10.0	FUSEABLE LINK	RUST	223.0	-	X	-
A	-	-	KB2A-FL	2643473 R1	4.81	10.0	FUSEABLE LINK	RUST	191.0	-	X	-
A	-	-	KB2B-FL	2643473 R1	4.81	10.0	FUSEABLE LINK	RUST	191.0	-	X	-
A	-	-	VD2A-FL	2643473 R1	4.81	10.0	FUSEABLE LINK	RUST	175.0	-	X	-
A	-	-	VD2C-FL	2643473 R1	4.81	10.0	FUSEABLE LINK	RUST	175.0	-	X	-
A	-	-	K2D-FL	2643473 R1	4.81	10.0	FUSEABLE LINK	RUST	210.0	-	X	-
A	-	-	K2C-FL	2643473 R1	4.81	10.0	FUSEABLE LINK	RUST	210.0	-	X	-
A	-	-	VD2B-FL	2643473 R1	4.81	10.0	FUSEABLE LINK	RUST	175.0	-	X	-

Name	Terminal Part Number	V-Min	Name	Wire Part Number	Wire CSA	Wire Spec	Wire Material description	Wire Color Description	Wire Length	End2 Terminal Part Number	End2 Pin Name	End2 Connector
A	-	-	K2A-FL	2643473 R1	4.81	10.0	FUSEABLE LINK	RUST	210.0	-	X	-
A	-	-	K2B-FL	2643473 R1	4.81	10.0	FUSEABLE LINK	RUST	210.0	-	X	-

Connector Name	K02-6305-DELCO
Part Number	RING-M-5_0
Instances	LT/RH/LoneStar - X15 - Cranking (Starter) GEN4 BCM W/ Thermal Overcrank - External Switch:Diagram1
Mates	MOT-STARTER-5024-01-03

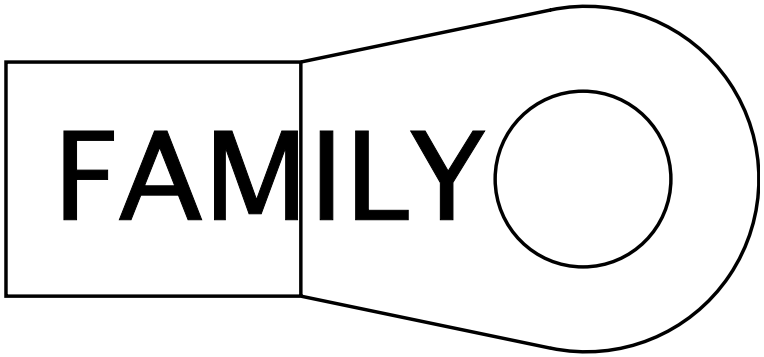

Name	Terminal Part Number	V-Min	Name	Wire Part Number	Wire CSA	Wire Spec	Wire Material description	Wire Color Description	Wire Length	End2 Terminal Part Number	End2 Pin Name	End2 Connect or
A	-	-	VK17D	2643752 R1	1.16	16.0	Std. Wall XLPE Primary Cable	PINK	750.0	-	A	K02-6316M-DELCO

Connector Name	K02-6305-MITS
Part Number	RING-M-6_0
Instances	LT/RH/LoneStar - X15 - Cranking (Starter) GEN4 BCM W/O Thermal Overcrank Wiring:Diagram1
Mates	MOT-STARTER-5024-01-04

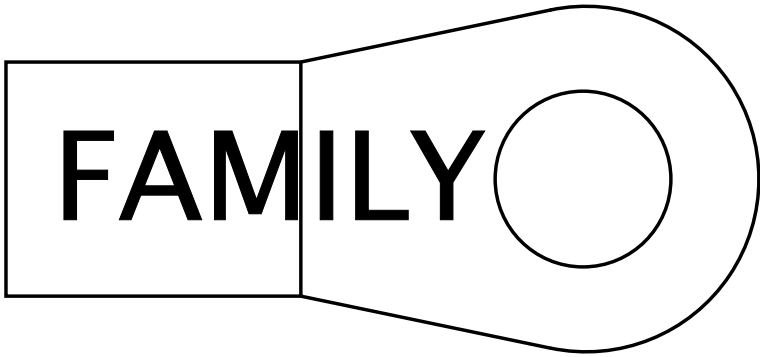

Name	Terminal Part Number	V-Min	Name	Wire Part Number	Wire CSA	Wire Spec	Wire Material description	Wire Color Description	Wire Length	End2 Terminal Part Number	End2 Pin Name	End2 Connect or
A	-	-	VT17	2643752 R1	1.16	16.0	Std. Wall XLPE Primary Cable	PINK	1310.0	-	16	1702

Connector Name	K02-6316M-DELCO
Part Number	2036583C1
Instances	LT/RH/LoneStar - X15 - Cranking (Starter) GEN4 BCM W/ Thermal Overcrank - External Switch:Diagram1
Mates	MOT-STARTER-5024-01-03

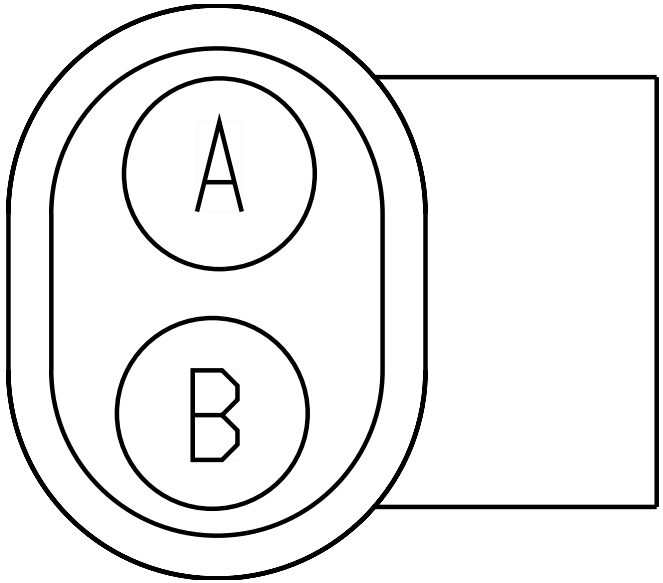

Name	Terminal Part Number	V-Min	Name	Wire Part Number	Wire CSA	Wire Spec	Wire Material description	Wire Color Description	Wire Length	End2 Terminal Part Number	End2 Pin Name	End2 Connect or
A	-	-	VK17D	2643752 R1	1.16	16.0	Std. Wall XLPE Primary Cable	PINK	750.0	-	A	K02-6305-DELCO
B	-	-	VK17	2643752 R1	1.16	16.0	Std. Wall XLPE Primary Cable	PINK	1310.0	-	16	1702

Connector Name	K02-6400
Part Number	3522068C1
Instances	LoneStar - X15 - Cooling Fan Control With Switch:Diagram1 LoneStar - X15 - Cooling Fan Control Without Switch:Diagram1 LT/RH X15 - Cooling Fan Control With Switch:Diagram1 LT/RH X15 - Cooling Fan Control Without Switch:Diagram1
Mates	DEV-ENGINE_FAN-01-ISX

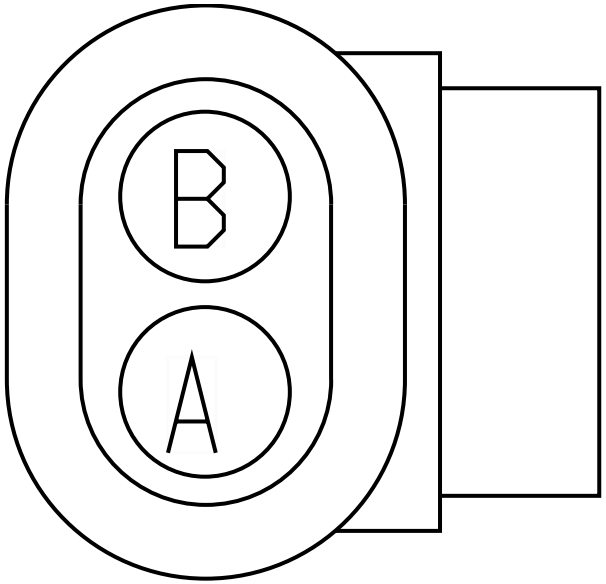

Name	Terminal Part Number	V-Min	Name	Wire Part Number	Wire CSA	Wire Spec	Wire Material description	Wire Color Description	Wire Length	End2 Terminal Part Number	End2 Pin Name	End2 Connect or
A	-	-	TK23	3510328 R1	0.53	20.0	Thin Wall XLPE Primary Cable	TAN	1180.0	-	78	K02-6000
B	-	-	TK23-G	3510328 R1	0.53	20.0	Thin Wall XLPE Primary Cable	TAN	750.0	-	X	-
B	-	-	TJ23-G	3510328 R1	0.53	20.0	Thin Wall XLPE Primary Cable	TAN	750.0	-	X	-

Connector Name	K02-6401
Part Number	1671610C1
Instances	LT/RH/LoneStar - X15 - Coolant Level Monitoring:Diagram1
Mates	SNSR-COOLANT-LEV-5012-05-0 3A

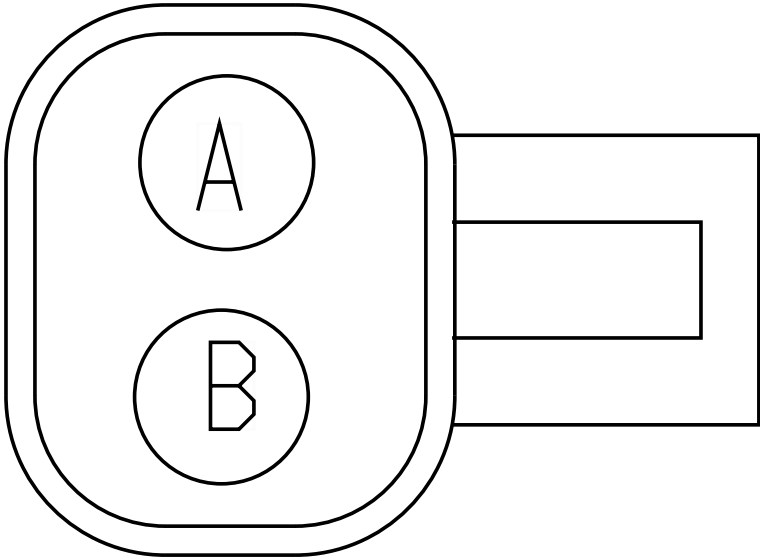

Name	Terminal Part Number	V-Min	Name	Wire Part Number	Wire CSA	Wire Spec	Wire Material description	Wire Color Description	Wire Length	End2 Terminal Part Number	End2 Pin Name	End2 Connect or
A	-	-	KD34	3510330 R1	1.16	16.0	Thin Wall XLPE Primary Cable	TAN	1095.0	-	B	K02-1378
B	-	-	KD34A	3510330 R1	1.16	16.0	Thin Wall XLPE Primary Cable	TAN	1095.0	-	E	K02-1378

Connector Name K02-6402
Part Number 3662425C1
Instances LT/RH X15 - Coolant Level Monitoring:Diagram1
Mates DEV-COOLANT_SENSOR-02

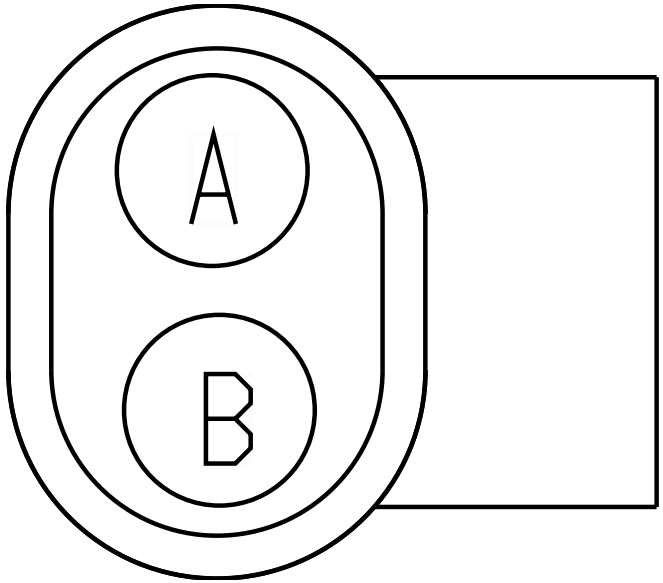

Name	Terminal Part Number	V-Min	Name	Wire Part Number	Wire CSA	Wire Spec	Wire Material description	Wire Color Description	Wire Length	End2 Terminal Part Number	End2 Pin Name	End2 Connect or
A	-	-	GK34A	3510329 R1	0.79	18.0	Thin Wall XLPE Primary Cable	TAN	270.0	-	X	-
B	-	-	GK34-G	3510329 R1	0.79	18.0	Thin Wall XLPE Primary Cable	TAN	2585.0	-	-	-

Connector Name	K02-6550
Part Number	1671610C1
Instances	LT/RH/LoneStar - X15 - Starting Aid (Ether Start):Diagram1
Mates	SO-ETHER_CTRL-VALVE-5022-0 1-01A

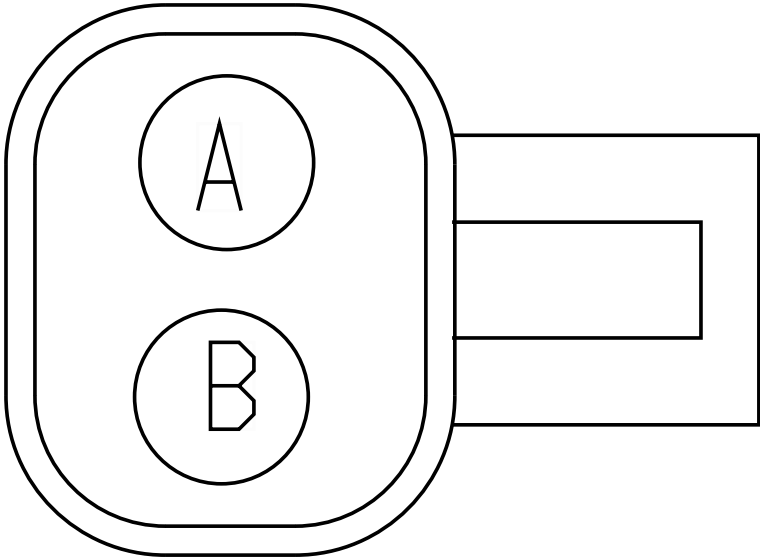

Name	Terminal Part Number	V-Min	Name	Wire Part Number	Wire CSA	Wire Spec	Wire Material description	Wire Color Description	Wire Length	End2 Terminal Part Number	End2 Pin Name	End2 Connect or
A	-	-	KU21	3510330 R1	1.16	16.0	Thin Wall XLPE Primary Cable	TAN	1300.0	-	75	K02-6000
B	-	-	KU21A	3510330 R1	1.16	16.0	Thin Wall XLPE Primary Cable	TAN	1300.0	-	76	K02-6000

Connector Name	K02-670A
Part Number	3573078C1
Instances	LT/RH/LoneStar - X15 - Selective Catalytic Reduction (SCR):Diagram2 - Supply Module, Sensor Table, Quality Sensor, DEF Tank Valve-Combination1 LT/RH/LoneStar - X15 - Selective Catalytic Reduction (SCR):Diagram2 - Supply Module, Sensor Table, Quality Sensor, DEF Tank Valve-Combination2 LT/RH/LoneStar - X15 - Selective Catalytic Reduction (SCR):Diagram2 - Supply Module, Sensor Table, Quality Sensor, DEF Tank Valve-Combination3
Mates	DPF-SensrTable-5041-01-01A

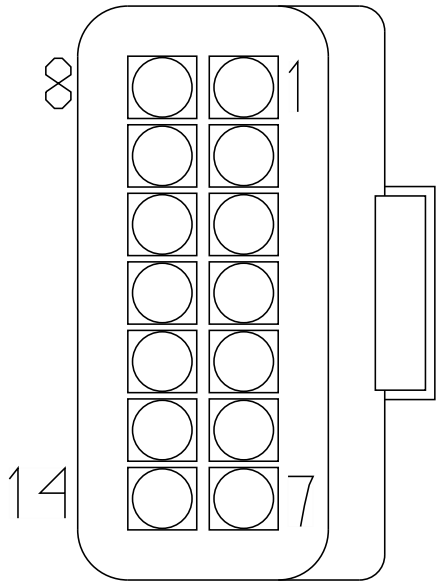

Name	Terminal Part Number	V-Min	Name	Wire Part Number	Wire CSA	Wire Spec	Wire Material description	Wire Color Description	Wire Length	End2 Terminal Part Number	End2 Pin Name	End2 Connect or
1	-	-	TP95DVL	4073403 R1	0.53	20.0	TXL 150C	TAN	2305.0	-	53	K02-6000
1	-	-	TY95DVL	4073403 R1	0.53	20.0	TXL 150C	TAN	4030.0	-	53	K02-6000
2	-	-	TP95DVH	4073403 R1	0.53	20.0	TXL 150C	TAN	2305.0	-	77	K02-6000
2	-	-	TY95DVH	4073403 R1	0.53	20.0	TXL 150C	TAN	4030.0	-	77	K02-6000
3	-	-	TP95BA	4073403 R1	0.53	20.0	TXL 150C	TAN	2305.0	-	41	K02-6000
3	-	-	TY95BA	4073403 R1	0.53	20.0	TXL 150C	TAN	4030.0	-	41	K02-6000
4	-	-	TP95BC	4073403 R1	0.53	20.0	TXL 150C	TAN	2305.0	-	42	K02-6000
4	-	-	TY95BC	4073403 R1	0.53	20.0	TXL 150C	TAN	4030.0	-	42	K02-6000

Name	Terminal Part Number	V-Min	Name	Wire Part Number	Wire CSA	Wire Spec	Wire Material description	Wire Color Description	Wire Length	End2 Terminal Part Number	End2 Pin Name	End2 Connector
5	-	-	GM6	2645915 R1	0.79	18.0	TXL 150C	TAN	2155.0	-	X	-
5	-	-	GN6	2645915 R1	0.79	18.0	TXL 150C	TAN	3880.0	-	X	-
7	-	-	GM9	2645915 R1	0.79	18.0	TXL 150C	TAN	2105.0	-	X	-
7	-	-	GN9	2645915 R1	0.79	18.0	TXL 150C	TAN	3830.0	-	X	-
8	-	-	TP95K	4073403 R1	0.53	20.0	TXL 150C	TAN	2305.0	-	16	K02-6000
8	-	-	TY95K	4073403 R1	0.53	20.0	TXL 150C	TAN	4030.0	-	16	K02-6000
11	-	-	TM10-AH	4085637 R1	3.01	12.0	TXL 150C	WHITE	600.0	-	X	-
11	-	-	TL10-AH	4085637 R1	3.01	12.0	TXL 150C	WHITE	600.0	-	X	-
11	-	-	TS10-AH	4085637 R1	3.01	12.0	TXL 150C	WHITE	600.0	-	X	-
12	-	-	TL13R2	4085639 R1	3.01	12.0	TXL 150C	PINK	630.0	-	X	-
12	-	-	TM13R2	4085639 R1	3.01	12.0	TXL 150C	PINK	630.0	-	X	-
12	-	-	TS13R2	4085639 R1	3.01	12.0	TXL 150C	PINK	630.0	-	X	-
13	-	-	-	-	-	-	-	-	-	-	-	-
14	-	-	-	-	-	-	-	-	-	-	-	-

Connector Name	K02-6702
Part Number	3551896C1
Instances	LT/RH/LoneStar X15 - ZVR Splice Packs - 6702 & 6703:Diagram1
Mates	SP-ISX-B000-00-10-K1B

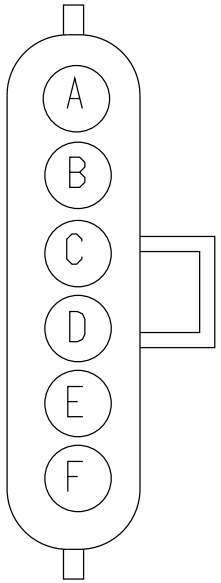

Name	Terminal Part Number	V-Min	Name	Wire Part Number	Wire CSA	Wire Spec	Wire Material description	Wire Color Description	Wire Length	End2 Terminal Part Number	End2 Pin Name	End2 Connect or
A	-	-	YA9AA	3510312 R1	1.16	16.0	Thin Wall XLPE Primary Cable	GREY	1755.0	-	-	-
B	-	-	YB9AB	3510310 R1	0.53	20.0	Thin Wall XLPE Primary Cable	GREY	1265.0	-	-	-
C	-	-	YC9AAD	2643673 R1	0.79	18.0	Std. Wall XLPE Primary Cable	GREY	3655.0	-	-	-
C	-	-	YG9AAD	2643673 R1	0.79	18.0	Std. Wall XLPE Primary Cable	GREY	3385.0	-	-	-

Name	Terminal Part Number	V-Min	Name	Wire Part Number	Wire CSA	Wire Spec	Wire Material description	Wire Color Description	Wire Length	End2 Terminal Part Number	End2 Pin Name	End2 Connector
C	-	-	YE9AAD	2643673 R1	0.79	18.0	Std. Wall XLPE Primary Cable	GREY	3185.0	-	-	-
D	-	-	KE9AAB	3510311 R1	0.79	18.0	Thin Wall XLPE Primary Cable	GREY	1920.0	-	-	-
E	-	-	KZ9AAC	2643673 R1	0.79	18.0	Std. Wall XLPE Primary Cable	GREY	4155.0	-	-	-

Connector Name	K02-6703
Part Number	3551896C1
Instances	LT/RH/LoneStar X15 - ZVR Splice Packs - 6702 & 6703:Diagram1
Mates	SP-ISX-B000-00-10-K1A

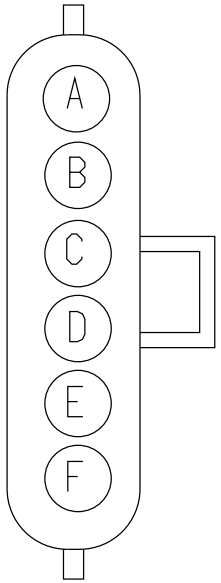

Name	Terminal Part Number	V-Min	Name	Wire Part Number	Wire CSA	Wire Spec	Wire Material description	Wire Color Description	Wire Length	End2 Terminal Part Number	End2 Pin Name	End2 Connect or
A	-	-	KA95G	3510358 R1	0.53	20.0	Thin Wall XLPE Primary Cable	WHITE	645.0	-	-	-
B	-	-	KC41D	3510358 R1	0.53	20.0	Thin Wall XLPE Primary Cable	WHITE	665.0	-	-	-
C	-	-	KY95-GG	2643674 R1	0.79	18.0	Std. Wall XLPE Primary Cable	WHITE	1595.0	-	-	-
C	-	-	GA95-GF	2643764 R1	0.53	20.0	Std. Wall XLPE Primary Cable	WHITE	1495.0	-	-	-

Name	Terminal Part Number	V-Min	Name	Wire Part Number	Wire CSA	Wire Spec	Wire Material description	Wire Color Description	Wire Length	End2 Terminal Part Number	End2 Pin Name	End2 Connect or
C	-	-	KJ95-GF	2643764 R1	0.53	20.0	Std. Wall XLPE Primary Cable	WHITE	1545.0	-	-	-
D	-	-	GE44G	3510311 R1	0.79	18.0	Thin Wall XLPE Primary Cable	GREY	985.0	-	-	-
E	-	-	GK34-G	3510329 R1	0.79	18.0	Thin Wall XLPE Primary Cable	TAN	2585.0	-	-	-

Connector Name	K02-7000
Part Number	365876C2
Instances	LT/RH/LoneStar - X15 - Bosch LIL165_LIL200 Alternator W/ Remote Sense W/ Mitsubishi Starter:Diagram1 LT/RH/LoneStar - X15 - Delco Remy 28SI Alternator W/ Remote Sense W/ Mitsubishi Starter:Diagram1 LT/RH/LoneStar - X15 - Delco Remy 28SI Alternator W/ Remote Sense W/ Mitsubishi Starter:Diagram2 LT/RH/LoneStar - X15 - Delco Remy 36SI Alternator W/ Remote Sense W/ Mitsubishi Starter:Diagram1 LT/RH/LoneStar - X15 - Delco Remy 40SI Alternator W/ Remote Sense W/ Mitsubishi Starter:Diagram1 LT/RH/LoneStar - X15 - Delco Remy 40SI Alternator W/ Remote Sense W/ Mitsubishi Starter:Diagram2 LT/RH/LoneStar - X15 - Leece-Neville - LN 325A Alternator W/ Remote Sense W/ Mitsubishi Starter:Diagram1 LT/RH/LoneStar - X15 - Leece-Neville AVI160-210A/240A Alternator W/ Remote Sense W/ Mitsubishi Starter:Diagram1 LT/RH/LoneStar X15 - Bosch LIL165_LIL200 Alternator W/ Remote Sense W/ Delco Starter:Diagram1-Combination1 LT/RH/LoneStar X15 - Delco Remy 28SI Alternator W/ Remote Sense W/ Delco Starter:Diagram1-Combination1 LT/RH/LoneStar X15 - Delco Remy 28SI Alternator W/ Remote Sense W/ Delco Starter:Diagram1-Combination2 LT/RH/LoneStar X15 - Delco Remy 36SI Alternator W/ Remtoe Sense W/ Delco Starter:Diagram1 LT/RH/LoneStar X15 - Delco Remy 40SI Alternator W/ Remote Sense W/ Delco Starter:Diagram1-Combination1 LT/RH/LoneStar X15 - Delco Remy 40SI Alternator W/ Remote Sense W/ Delco Starter:Diagram1-Combination2 LT/RH/LoneStar X15 - Leece-Neville - LN 325A Alternator W/ Remote Sense W/ Delco Starter:Diagram1 LT/RH/LoneStar X15 - Leece-Neville AVI160-210A/240A Alternator W/ Remote Sense W/ Delco Starter:Diagram1-Combination1
Mates	DEV-Bosch_LH160_LG200_Alte rnator- 4004-01-01A-6100B

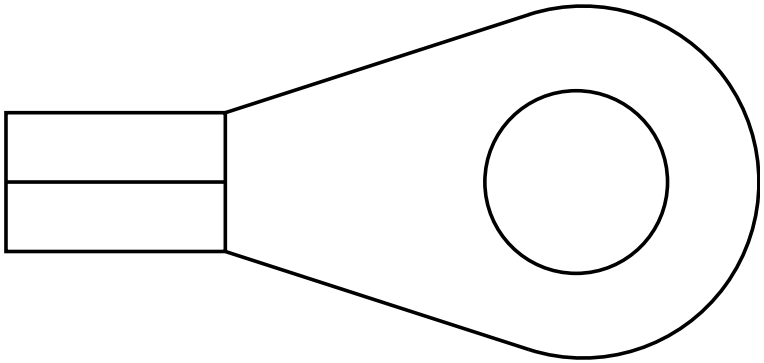

Name	Terminal Part Number	V-Min	Name	Wire Part Number	Wire CSA	Wire Spec	Wire Material description	Wire Color Description	Wire Length	End2 Terminal Part Number	End2 Pin Name	End2 Connect or
A	-	-	JS1A	2643694 R1	1.91	14.0	Std. Wall XLPE Primary Cable	LIGHT BLUE	3755.0	-	B	1F

Connector Name	K02-7105
Part Number	3599542C1
Instances	LT/RH/LoneStar - X15 - Starter Interlock (BCM LSD Controlled w/ Relay)_EATON XMSN:Diagram1 LT/RH/LoneStar - X15 - Transmission Shifter (Universal Shifter - Ultrashift+ & FAS):Diagram1 LT/RH/LoneStar X15 - Transmission (Ultrashift+ w/Body Builder):Diagram1 LT/RH/LoneStar X15 - Ultrashift Plus:Diagram1
Mates	MODU-TCM-A002-11-01A Ultrashift X15

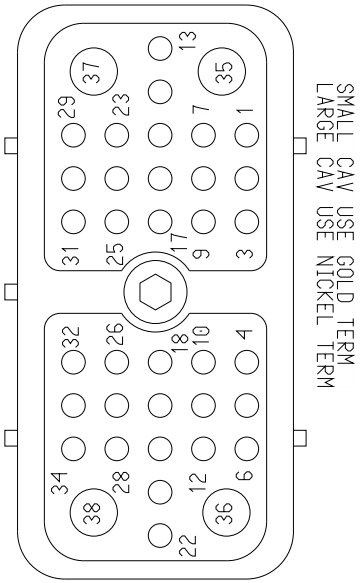

Name	Terminal Part Number	V-Min	Name	Wire Part Number	Wire CSA	Wire Spec	Wire Material description	Wire Color Description	Wire Length	End2 Terminal Part Number	End2 Pin Name	End2 Connect or
2	-	-	-	-	-	-	-	-	-	-	-	-
3	-	-	-	-	-	-	-	-	-	-	-	-
4	-	-	KH17-GC	2643794 R1	0.79	18.0	Std. Wall XLPE Primary Cable	PINK	3385.0	-	-	-
4	-	-	KH17-GC	2643794 R1	0.79	18.0	Std. Wall XLPE Primary Cable	PINK	3385.0	-	19	1702
16	-	-	KH92A	2643676 R1	0.79	18.0	Std. Wall XLPE Primary Cable	TAN	2315.0	-	-	-
16	-	-	KH92A	2643676 R1	0.79	18.0	Std. Wall XLPE Primary Cable	TAN	2315.0	-	12	1702

Name	Terminal Part Number	V-Min	Name	Wire Part Number	Wire CSA	Wire Spec	Wire Material description	Wire Color Description	Wire Length	End2 Terminal Part Number	End2 Pin Name	End2 Connector
17	-	-	KH92B	2643676 R1	0.79	18.0	Std. Wall XLPE Primary Cable	TAN	2315.0	-	-	-
17	-	-	KH92B	2643676 R1	0.79	18.0	Std. Wall XLPE Primary Cable	TAN	2315.0	-	40	1702
18	-	-	KH92DP	2643676 R1	0.79	18.0	Std. Wall XLPE Primary Cable	TAN	485.0	-	A	K02-7502
18	-	-	KH92DP	2643676 R1	0.79	18.0	Std. Wall XLPE Primary Cable	TAN	485.0	-	-	-
26	-	-	KH17C	3510324 R1	1.16	16.0	Thin Wall XLPE Primary Cable	PINK	3385.0	-	-	-
26	-	-	KH17C	3510324 R1	1.16	16.0	Thin Wall XLPE Primary Cable	PINK	3385.0	-	21	1702
32	-	-	KH17B	2643794 R1	0.79	18.0	Std. Wall XLPE Primary Cable	PINK	3385.0	-	-	-
32	-	-	KH17B	2643794 R1	0.79	18.0	Std. Wall XLPE Primary Cable	PINK	3385.0	-	20	1702

Name	Terminal Part Number	V-Min	Name	Wire Part Number	Wire CSA	Wire Spec	Wire Material description	Wire Color Description	Wire Length	End2 Terminal Part Number	End2 Pin Name	End2 Connect or
34	-	-	KH92DR	2643676 R1	0.79	18.0	Std. Wall XLPE Primary Cable	TAN	485.0	-	B	K02-7502
34	-	-	KH92DR	2643676 R1	0.79	18.0	Std. Wall XLPE Primary Cable	TAN	485.0	-	-	-
35	-	-	KH13A	2643691 R1	1.91	14.0	Std. Wall XLPE Primary Cable	PINK	3385.0	-	8	1702
36	-	-	KH10-GK	3510362 R1	3.01	12.0	Thin Wall XLPE Primary Cable	WHITE	1995.0	-	X	-
38	-	-	KH14A	3510368 R1	3.01	12.0	Thin Wall XLPE Primary Cable	RED	2465.0	-	-	-

Connector Name	K02-7106-ISX
Part Number	3765544C1
Instances	LT/RH/LoneStar - X15 - Transmission Shifter (Eaton Endurant and Eaton Procision):Diagram1 LT/RH/LoneStar X15 - Endurant Transmission:Diagram1 LT/RH/LoneStar X15 - Transmission I/O (Endurant Pressure Sensor):Diagram1
Mates	MODU-TCM-A002-10-02B Endurant X15

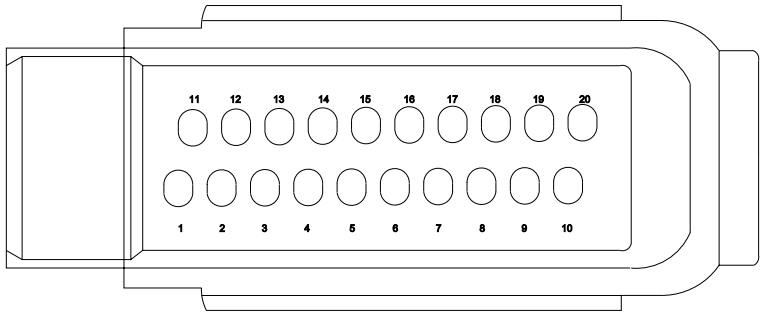

Name	Terminal Part Number	V-Min	Name	Wire Part Number	Wire CSA	Wire Spec	Wire Material description	Wire Color Description	Wire Length	End2 Terminal Part Number	End2 Pin Name	End2 Connect or
4	-	-	KL17-GA	3510329 R1	0.79	18.0	Thin Wall XLPE Primary Cable	TAN	2310.0	-	-	-
5	-	-	KL10B	3510294 R1	1.16	16.0	Thin Wall XLPE Primary Cable	BLACK	585.0	-	X	-
6	-	-	KL14A	2643759 R1	0.79	18.0	Std. Wall XLPE Primary Cable	RED	4125.0	-	-	-
7	-	-	KL31A	3510329 R1	0.79	18.0	Thin Wall XLPE Primary Cable	TAN	755.0	-	-	-

Name	Terminal Part Number	V-Min	Name	Wire Part Number	Wire CSA	Wire Spec	Wire Material description	Wire Color Description	Wire Length	End2 Terminal Part Number	End2 Pin Name	End2 Connector
7	-	-	KL31A	3510329 R1	0.79	18.0	Thin Wall XLPE Primary Cable	TAN	755.0	-	3	K02-7135
9	-	-	KL92A	3510329 R1	0.79	18.0	Thin Wall XLPE Primary Cable	TAN	2310.0	-	21	1702
9	-	-	KL92A	3510329 R1	0.79	18.0	Thin Wall XLPE Primary Cable	TAN	2310.0	-	-	-
10	-	-	KL13A	3510324 R1	1.16	16.0	Thin Wall XLPE Primary Cable	PINK	2310.0	-	8	1702
11	-	-	-	-	-	-	-	-	-	-	-	-
12	-	-	-	-	-	-	-	-	-	-	-	-
14	-	-	KL17A	3510353 R1	0.79	18.0	Thin Wall XLPE Primary Cable	DARK BLUE	2310.0	-	-	-
15	-	-	KL10A	3510294 R1	1.16	16.0	Thin Wall XLPE Primary Cable	BLACK	585.0	-	X	-
16	-	-	KL14B	3510366 R1	1.16	16.0	Thin Wall XLPE Primary Cable	RED	2460.0	-	-	-
18	-	-	KL31B	3510329 R1	0.79	18.0	Thin Wall XLPE Primary Cable	TAN	755.0	-	-	-

Name	Terminal Part Number	V-Min	Name	Wire Part Number	Wire CSA	Wire Spec	Wire Material description	Wire Color Description	Wire Length	End2 Terminal Part Number	End2 Pin Name	End2 Connect or
18	-	-	KL31B	3510329 R1	0.79	18.0	Thin Wall XLPE Primary Cable	TAN	755.0	-	2	K02-7135
19	-	-	KL31C	3510329 R1	0.79	18.0	Thin Wall XLPE Primary Cable	TAN	755.0	-	-	-
19	-	-	KL31C	3510329 R1	0.79	18.0	Thin Wall XLPE Primary Cable	TAN	755.0	-	1	K02-7135

Connector Name K02-7107-ISX

Part Number 3765545C1

Instances LT/RH X15 - Backup Light (Dual Reverse LT) Procosion/ Endurant:Diagram1
LT/RH X15 - Backup Light (Dual Reverse LT) Procosion/ Endurant:Diagram2
LT/RH X15 - Backup Light (Single Reverse Light) Endurant:Diagram1
LT/RH X15 - Backup Light (Single Reverse Light) Endurant:Diagram2
LT/RH/LoneStar X15 - Backup Light (Single Reverse Light) Endurant:Diagram1
LT/RH/LoneStar X15 - Backup Light (Single Reverse Light) Endurant:Diagram2
LT/RH/LoneStar X15 - Backup Light Endurant:Diagram1
LT/RH/LoneStar X15 - Backup Light Endurant:Diagram2
LT/RH/LoneStar X15 - Endurant Transmission:Diagram1

Mates MODU-TCM-A002-10-02B Endurant X15

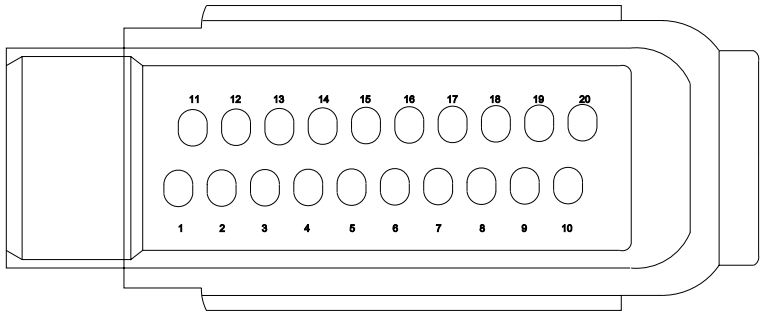

Name	Terminal Part Number	V-Min	Name	Wire Part Number	Wire CSA	Wire Spec	Wire Material description	Wire Color Description	Wire Length	End2 Terminal Part Number	End2 Pin Name	End2 Connect or
1	-	-	KL71K	3510341 R1	0.79	18.0	Thin Wall XLPE Primary Cable	LIGHT BLUE	2350.0	-	7	1702
1	-	-	KL71K	3510341 R1	0.79	18.0	Thin Wall XLPE Primary Cable	LIGHT BLUE	2350.0	-	-	-
2	-	-	KT92#202	3510341 R1	0.79	18.0	Thin Wall XLPE Primary Cable	LIGHT BLUE	2300.0	-	-	-
5	-	-	KP71L	3510317 R1	0.79	18.0	Thin Wall XLPE Primary Cable	ORANGE	2350.0	-	6	1702

Name	Terminal Part Number	V-Min	Name	Wire Part Number	Wire CSA	Wire Spec	Wire Material description	Wire Color Description	Wire Length	End2 Terminal Part Number	End2 Pin Name	End2 Connector
5	-	-	KT71A	3510341 R1	0.79	18.0	Thin Wall XLPE Primary Cable	LIGHT BLUE	1150.0	-	-	-
5	-	-	KP71L	3510317 R1	0.79	18.0	Thin Wall XLPE Primary Cable	ORANGE	2350.0	-	-	-
14	-	-	KT92#214	3510329 R1	0.79	18.0	Thin Wall XLPE Primary Cable	TAN	2300.0	-	-	-
15	-	-	KT92#215	3510329 R1	0.79	18.0	Thin Wall XLPE Primary Cable	TAN	2300.0	-	-	-
16	-	-	KT92#216	3510329 R1	0.79	18.0	Thin Wall XLPE Primary Cable	TAN	2300.0	-	-	-

Connector Name	K02-7135
Part Number	4104389C1
Instances	LT/RH/LoneStar X15 - Transmission I/O (Endurant Pressure Sensor):Diagram1
Mates	SNSR_Fluid_Pessure_5045_07 _01B

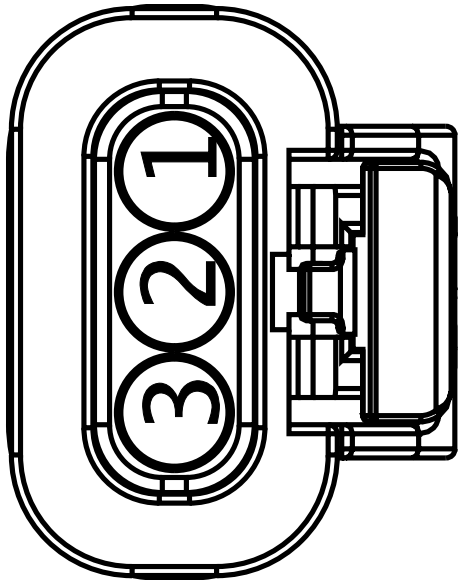

Name	Terminal Part Number	V-Min	Name	Wire Part Number	Wire CSA	Wire Spec	Wire Material description	Wire Color Description	Wire Length	End2 Terminal Part Number	End2 Pin Name	End2 Connector
1	-	-	KL31C	3510329 R1	0.79	18.0	Thin Wall XLPE Primary Cable	TAN	755.0	-	19	K02-7106-ISX
2	-	-	KL31B	3510329 R1	0.79	18.0	Thin Wall XLPE Primary Cable	TAN	755.0	-	18	K02-7106-ISX
3	-	-	KL31A	3510329 R1	0.79	18.0	Thin Wall XLPE Primary Cable	TAN	755.0	-	7	K02-7106-ISX

Connector Name	K02-7303
Part Number	3522068C1
Instances	LT/RH/LoneStar - X15 - Air Flow Restriction Monitoring:Diagram1
Mates	GAUG-AIR_RESTRICTION-5010- 01-01A

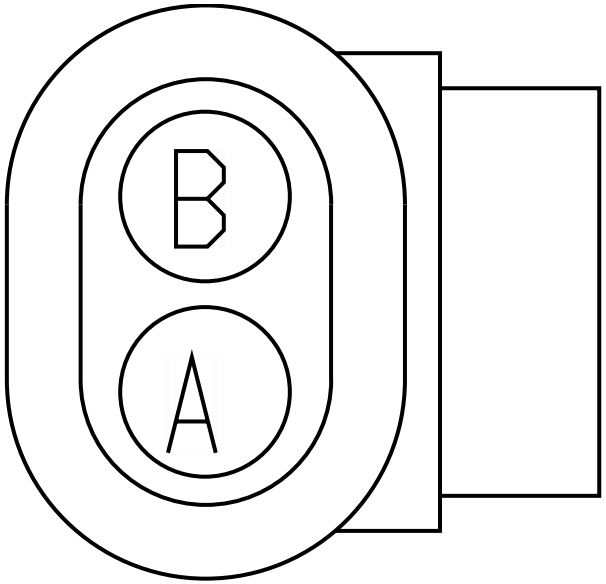

Name	Terminal Part Number	V-Min	Name	Wire Part Number	Wire CSA	Wire Spec	Wire Material description	Wire Color Description	Wire Length	End2 Terminal Part Number	End2 Pin Name	End2 Connect or
A	-	-	KE28	3510329 R1	0.79	18.0	Thin Wall XLPE Primary Cable	TAN	2330.0	-	5	1702
B	-	-	KE9AAB	3510311 R1	0.79	18.0	Thin Wall XLPE Primary Cable	GREY	1920.0	-	-	-

Connector Name K02-7350

Part Number 3755755C1

Instances LT/RH X15 - Backup Light (Dual Reverse Light) Allison-TC10:Diagram1
LT/RH X15 - Backup Light (Dual Reverse Light) Allison-TC10:Diagram2
LT/RH X15 - Backup Light (Reverse Light) Allison TC10:Diagram1
LT/RH X15 - Backup Light (Reverse Light) Allison TC10:Diagram2
LT/RH X15 - Backup Light (Single Reverse Light) Allison TC10:Diagram1
LT/RH X15 - Backup Light (Single Reverse Light) Allison TC10:Diagram2
LT/RH/LoneStar X15 - Backup Light (Single Reverse Light) W/ Allison TC10:Diagram1
LT/RH/LoneStar X15 - Backup Light (Single Reverse Light) W/ Allison TC10:Diagram2
LT/RH/LoneStar X15 - Transmission (TC10 Series A65 w/Body Builder):Diagram1

Mates MODU-TCM-A002-10-00B Allison TC10 X15

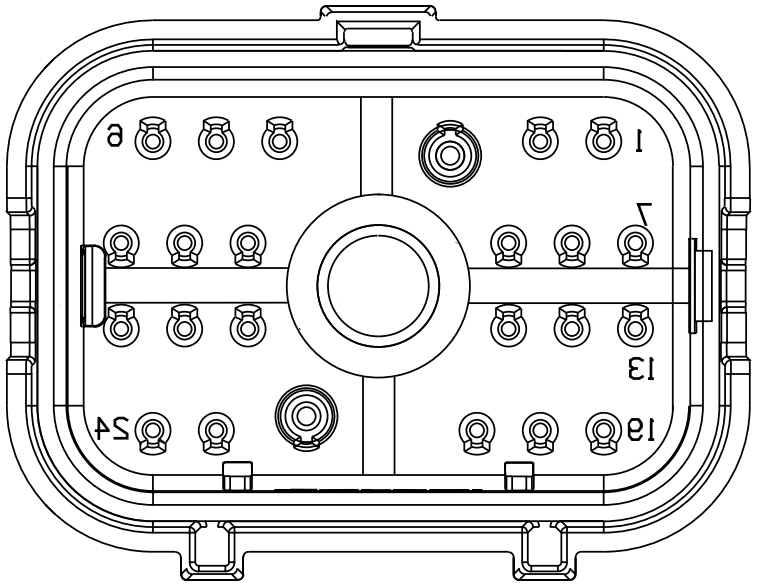

Name	Terminal Part Number	V-Min	Name	Wire Part Number	Wire CSA	Wire Spec	Wire Material description	Wire Color Description	Wire Length	End2 Terminal Part Number	End2 Pin Name	End2 Connector
1	-	-	XT92#101	3510329 R1	0.79	18.0	Thin Wall XLPE Primary Cable	TAN	2305.0	-	H	K01-7207
4	-	-	KV92#165	3510329 R1	0.79	18.0	Thin Wall XLPE Primary Cable	TAN	2355.0	-	7	1702
7	-	-	XT92#107	3510329 R1	0.79	18.0	Thin Wall XLPE Primary Cable	TAN	2305.0	-	B	K01-7207

Name	Terminal Part Number	V-Min	Name	Wire Part Number	Wire CSA	Wire Spec	Wire Material description	Wire Color Description	Wire Length	End2 Terminal Part Number	End2 Pin Name	End2 Connect or
9	-	-	XT92#109	3510329 R1	0.79	18.0	Thin Wall XLPE Primary Cable	TAN	2305.0	-	D	K01-7207
13	-	-	XT92#113	3510329 R1	0.79	18.0	Thin Wall XLPE Primary Cable	TAN	2305.0	-	A	K01-7207
15	-	-	XT92#115	3510329 R1	0.79	18.0	Thin Wall XLPE Primary Cable	TAN	2305.0	-	E	K01-7207

Connector Name	K02-7350
Part Number	3755755C1
Instances	LT/RH/LoneStar X15 - TC10 Series:Diagram1
Mates	MODU-TCM-A002-10-00B Allison TC10 X15

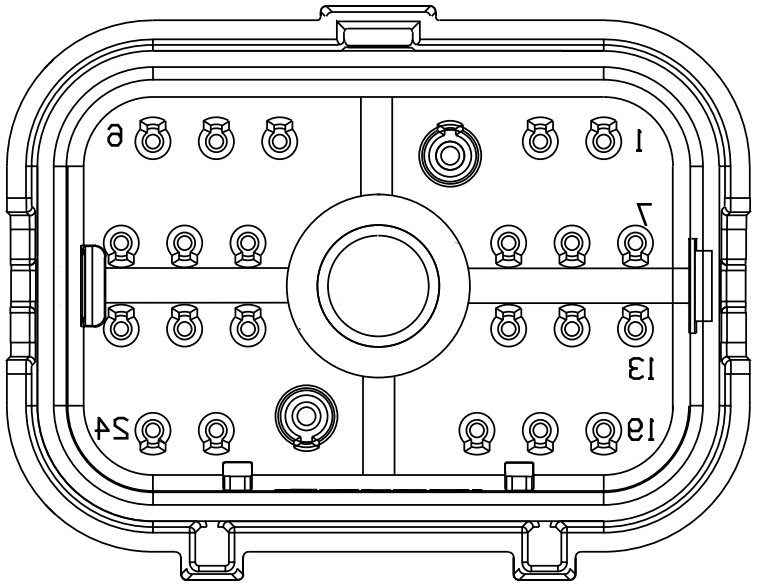

Name	Terminal Part Number	V-Min	Name	Wire Part Number	Wire CSA	Wire Spec	Wire Material description	Wire Color Description	Wire Length	End2 Terminal Part Number	End2 Pin Name	End2 Connect or
1	-	-	XT92#101	3510329 R1	0.79	18.0	Thin Wall XLPE Primary Cable	TAN	2305.0	-	-	-
3	-	-	KV92-G	3510362 R1	3.01	12.0	Thin Wall XLPE Primary Cable	WHITE	1430.0	-	-	-
4	-	-	KV92#165	3510329 R1	0.79	18.0	Thin Wall XLPE Primary Cable	TAN	2355.0	-	-	-
6	-	-	-	-	-	-	-	-	-	-	-	-
7	-	-	XT92#107	3510329 R1	0.79	18.0	Thin Wall XLPE Primary Cable	TAN	2305.0	-	-	-

Name	Terminal Part Number	V-Min	Name	Wire Part Number	Wire CSA	Wire Spec	Wire Material description	Wire Color Description	Wire Length	End2 Terminal Part Number	End2 Pin Name	End2 Connect or
9	-	-	XT92#109	3510329 R1	0.79	18.0	Thin Wall XLPE Primary Cable	TAN	2305.0	-	-	-
10	-	-	XY47A125	3510329 R1	0.79	18.0	Thin Wall XLPE Primary Cable	TAN	2805.0	-	-	-
13	-	-	XT92#113	3510329 R1	0.79	18.0	Thin Wall XLPE Primary Cable	TAN	2305.0	-	-	-
15	-	-	XT92#115	3510329 R1	0.79	18.0	Thin Wall XLPE Primary Cable	TAN	2305.0	-	-	-
16	-	-	KV92#163	3510329 R1	0.79	18.0	Thin Wall XLPE Primary Cable	TAN	2355.0	-	8	1702
17	-	-	-	-	-	-	-	-	-	-	-	-
19	-	-	KV92#134	3510329 R1	0.79	18.0	Thin Wall XLPE Primary Cable	TAN	2355.0	-	-	-
20	-	-	KV92#141	3510329 R1	0.79	18.0	Thin Wall XLPE Primary Cable	TAN	2379.0	-	-	-
22	-	-	KV92#110	3510368 R1	3.01	12.0	Thin Wall XLPE Primary Cable	RED	2505.0	-	-	-

Connector Name	K02-7500W
Part Number	1661778C1
Instances	LoneStar - X15 - Body Builder Lighting - (BOC EOF In Cab) (8HAB 8HAE 8HAU) (Manual):Diagram1 LoneStar - X15 - Body Builder Lighting - (BOC EOF In Cab) (8HAB 8HAE 8HAU) (Manual):Diagram2 LT/RH X15 - Backup Lights (Dual Reverse Light) Eaton/Manual Trans:Diagram1 LT/RH X15 - Backup Lights (Dual Reverse Light) Eaton/Manual Trans:Diagram2 LT/RH X15 - Backup Lights (Reverse Light) Eaton/Manual Trans:Diagram1 LT/RH X15 - Backup Lights (Reverse Light) Eaton/Manual Trans:Diagram2 LT/RH X15 - Backup Lights (Reverse Lights) Eaton/Manual Trans:Diagram1 LT/RH X15 - Backup Lights (Reverse Lights) Eaton/Manual Trans:Diagram2 LT/RH X15 - Backup Lights (Single Reverse Light) Eaton/Manual Trans:Diagram1 LT/RH X15 - Backup Lights (Single Reverse Light) Eaton/Manual Trans:Diagram2 LT/RH - X15 - Body Builder Lighting - (BOC EOF In Cab) (8HAB 8HAE 8HAU) (Manual):Diagram1 LT/RH - X15 - Body Builder Lighting - (BOC EOF In Cab) (8HAB 8HAE 8HAU) (Manual):Diagram2 LT/RH/LoneStar - X15 - Work Lights (2 Blunt Cuts Only W/O Relay) W/Backup W/Manual Trans:Diagram1 LT/RH/LoneStar - X15 - Work Lights (2 Blunt Cuts Only W/O Relay) W/Backup W/Manual Trans:Diagram2 LT/RH/LoneStar - X15 - Work Lights - LED W/ Sw Pack - Customer Supplied - Sleeper W/ RKE W/MAN REV:Diagram1 LT/RH/LoneStar - X15 - Work Lights - LED W/ Sw Pack - Customer Supplied - Sleeper W/ RKE W/MAN REV:Diagram2 LT/RH/LoneStar - X15 - Work Lights - LED W/ Sw Pack - Customer Supplied - Sleeper W/O RKE W/MAN REV:Diagram1 LT/RH/LoneStar - X15 - Work Lights - LED W/ Sw Pack - Customer Supplied - Sleeper W/O RKE W/MAN REV:Diagram2 LT/RH/LoneStar - X15 - Work Lights -LED W/ Sw Pack - Sleeper W/ RKE W/MAN REV:Diagram1 LT/RH/LoneStar - X15 - Work Lights -LED W/ Sw Pack - Sleeper W/O RKE W/MAN REV:Diagram1

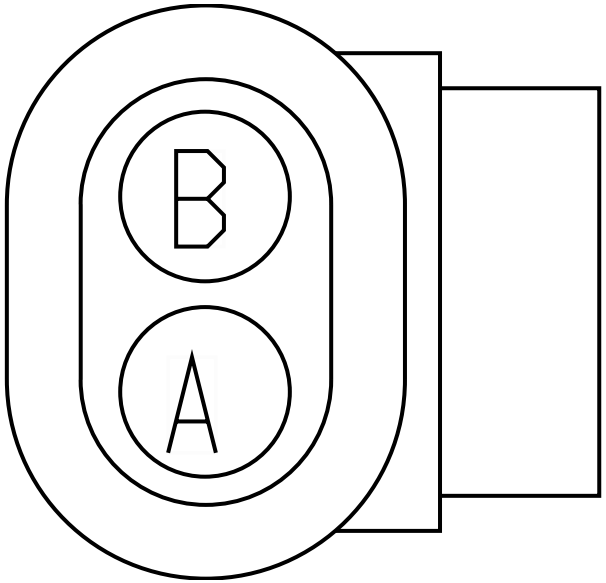

LT/RH/LoneStar - X15 - Work Lights W/ Sw Pack - Customer Supplied W/ RKE W/MAN REV:Diagram1
LT/RH/LoneStar - X15 - Work Lights W/ Sw Pack - Customer Supplied W/ RKE W/MAN REV:Diagram2
LT/RH/LoneStar - X15 - Work Lights W/ Sw Pack - Customer Supplied W/O RKE W/MAN REV:Diagram1
LT/RH/LoneStar X15 - Back-Up Alarm (Manual) and UltraShift +:Diagram1
LT/RH/LoneStar X15 - Back-Up Alarm (Manual) and UltraShift +:Diagram2
LT/RH/LoneStar X15 - Back-Up Alarm (Manual) and UltraShift +:Diagram3
LT/RH/LoneStar X15 - Back-Up Alarm (Manual) and UltraShift +:Diagram4
LT/RH/LoneStar X15 - Back-Up Alarm (Manual) (W/ Tail Light Bar Assy):Diagram1
LT/RH/LoneStar X15 - Back-Up Alarm (Manual) (W/ Tail Light Bar Assy):Diagram2
LT/RH/LoneStar X15 - Backup Lights (Single Reverse Light) Eaton/Manual Trans:Diagram1
LT/RH/LoneStar X15 - Backup Lights (Single Reverse Light) Eaton/Manual Trans:Diagram2
LT/RH/LoneStar X15 - Work Lights LED W/ Sw Pack - Day Cab W/ RKE W/MAN REV:Diagram1
LT/RH/LoneStar X15 - Work Lights LED W/ Sw Pack - Day Cab W/O RKE W/MAN REV:Diagram1

Mates SW-TRANSSWITCH-1023-01-02A

Name	Terminal Part Number	V-Min	Name	Wire Part Number	Wire CSA	Wire Spec	Wire Material description	Wire Color Description	Wire Length	End2 Terminal Part Number	End2 Pin Name	End2 Connect or
A	-	-	KW71A	2643682 R1	1.16	16.0	Std. Wall XLPE Primary Cable	ORANGE	2850.0	-	6	1702
B	-	-	KW71B	2643682 R1	1.16	16.0	Std. Wall XLPE Primary Cable	ORANGE	1510.0	-	7	1702

Name	Terminal Part Number	V-Min	Name	Wire Part Number	Wire CSA	Wire Spec	Wire Material description	Wire Color Description	Wire Length	End2 Terminal Part Number	End2 Pin Name	End2 Connect or
B	-	-	KW71B	2643682 R1	1.16	16.0	Std. Wall XLPE Primary Cable	ORANGE	2850.0	-	7	1702

Connector Name	K02-7500W
Part Number	1661778C1
Instances	LT/RH/LoneStar - X15 - Work Lights W/ Sw Pack - Customer Supplied W/O RKE W/MAN REV:Diagram2

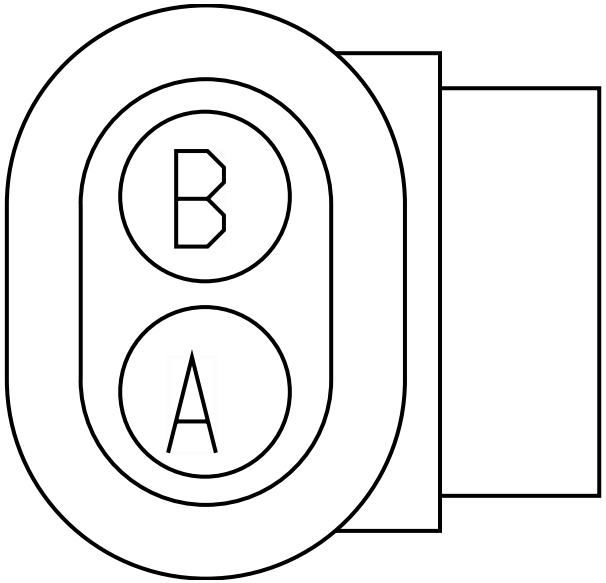

Name	Terminal Part Number	V-Min	Name	Wire Part Number	Wire CSA	Wire Spec	Wire Material description	Wire Color Description	Wire Length	End2 Terminal Part Number	End2 Pin Name	End2 Connect or
B	-	-	KW71B	2643682 R1	1.16	16.0	Std. Wall XLPE Primary Cable	ORANGE	1510.0	-	-	-

Connector Name	K02-7502
Part Number	587567C91
Instances	LT/RH/LoneStar X15 - Transmission (Ultrashift+ w/Body Builder):Diagram1
Mates	CONN-BODY_BUILDER-5045-01- 02A

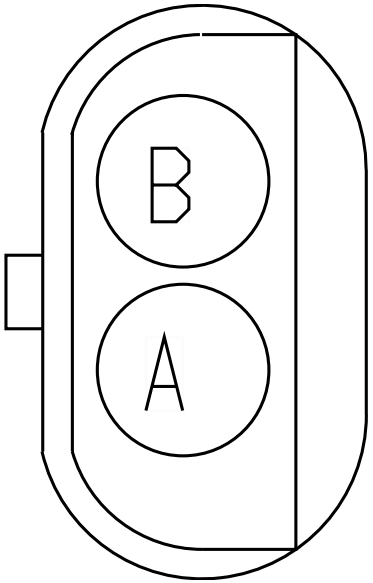

Name	Terminal Part Number	V-Min	Name	Wire Part Number	Wire CSA	Wire Spec	Wire Material description	Wire Color Description	Wire Length	End2 Terminal Part Number	End2 Pin Name	End2 Connect or
A	-	-	KH92DP	2643676 R1	0.79	18.0	Std. Wall XLPE Primary Cable	TAN	485.0	-	18	K02-7105
B	-	-	KH92DR	2643676 R1	0.79	18.0	Std. Wall XLPE Primary Cable	TAN	485.0	-	34	K02-7105

Connector Name	K02-7600
Part Number	3662425C1
Instances	LT/RH/LoneStar - X15 - Vehicle Speedometer System (Manual XMSN) ISX:Diagram1
Mates	SNSR-VSS-5055-01-01A

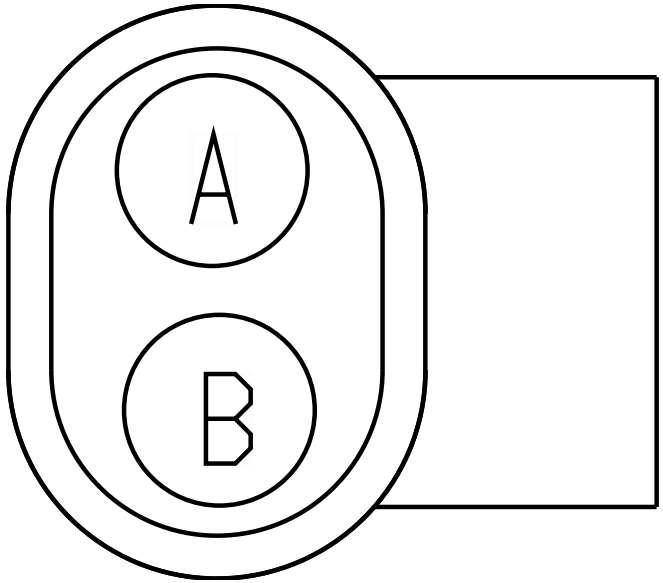

Name	Terminal Part Number	V-Min	Name	Wire Part Number	Wire CSA	Wire Spec	Wire Material description	Wire Color Description	Wire Length	End2 Terminal Part Number	End2 Pin Name	End2 Connect or
A	-	-	KF47B	3510311 R1	0.79	18.0	Thin Wall XLPE Primary Cable	GREY	365.0	-	X	-
B	-	-	KF47A	3510311 R1	0.79	18.0	Thin Wall XLPE Primary Cable	GREY	400.0	-	X	-

Connector Name K02-7700K

Part Number 3536864C1

Instances LT/RH/LoneStar - X15 - Transmission Oil Temperature-Manual Trans-Horizon Option 1:Diagram1
LT/RH/LoneStar - X15 - Transmission Oil Temperature-Manual Trans-Horizon Option 2:Diagram1

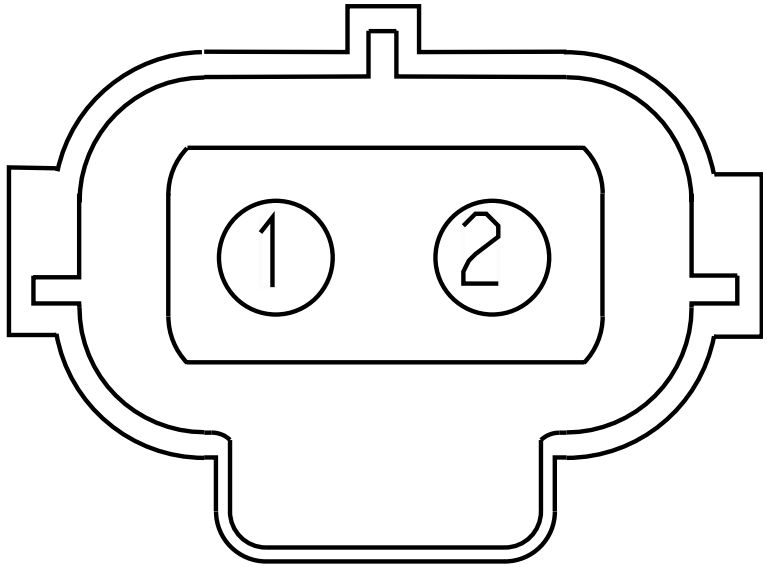

Name	Terminal Part Number	V-Min	Name	Wire Part Number	Wire CSA	Wire Spec	Wire Material description	Wire Color Description	Wire Length	End2 Terminal Part Number	End2 Pin Name	End2 Connect or
1	-	-	KK31	2643676 R1	0.79	18.0	Std. Wall XLPE Primary Cable	TAN	2990.0	-	13	1702
2	-	-	YG9AAD	2643673 R1	0.79	18.0	Std. Wall XLPE Primary Cable	GREY	3385.0	-	-	-

Connector Name	K02-7700M
Part Number	3536864C1
Instances	LT/RH/LoneStar - X15 - Transmission Oil Temperature-Manual Trans-Horizon Option 1:Diagram2 LT/RH/LoneStar - X15 - Transmission Oil Temperature-Manual Trans-Horizon Option 2:Diagram2
Mates	SNSR-TRANS_OIL_TEMP-5046-0 1-01A

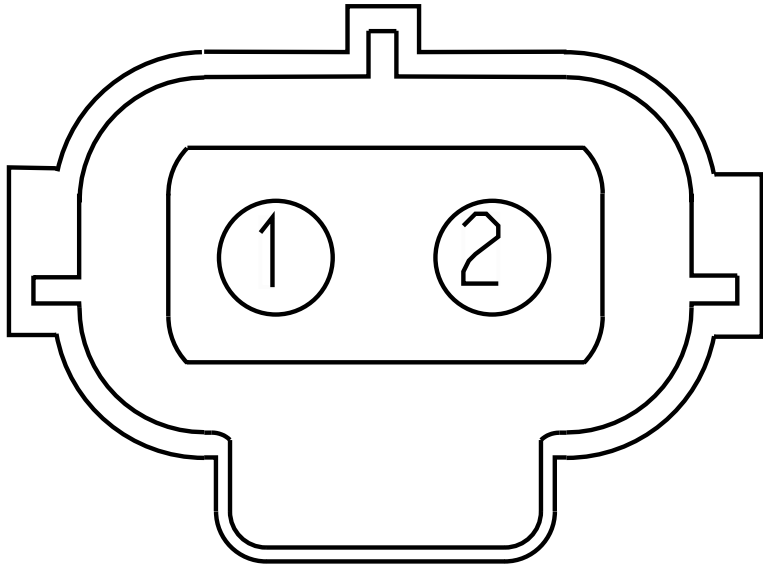

Name	Terminal Part Number	V-Min	Name	Wire Part Number	Wire CSA	Wire Spec	Wire Material description	Wire Color Description	Wire Length	End2 Terminal Part Number	End2 Pin Name	End2 Connect or
1	-	-	XA31	2643676 R1	0.79	18.0	Std. Wall XLPE Primary Cable	TAN	2580.0	-	13	1702
2	-	-	YC9AAD	2643673 R1	0.79	18.0	Std. Wall XLPE Primary Cable	GREY	3655.0	-	-	-

Connector Name K02-7700T

Part Number 3536864C1

Instances LT/RH/LoneStar - X15 - Transmission Oil Temperature-Manual Trans-Horizon Option 1:Diagram3
LT/RH/LoneStar - X15 - Transmission Oil Temperature-Manual Trans-Horizon Option 2:Diagram3

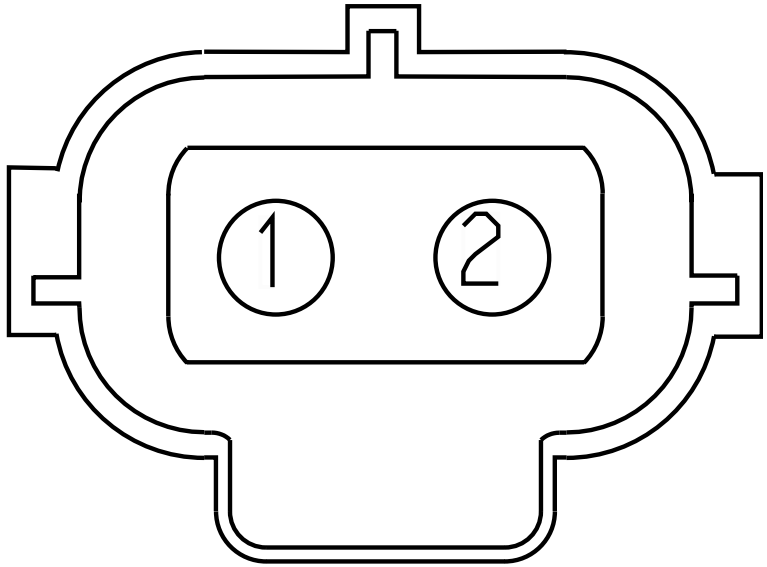

Name	Terminal Part Number	V-Min	Name	Wire Part Number	Wire CSA	Wire Spec	Wire Material description	Wire Color Description	Wire Length	End2 Terminal Part Number	End2 Pin Name	End2 Connect or
1	-	-	TA31	2643676 R1	0.79	18.0	Std. Wall XLPE Primary Cable	TAN	2110.0	-	13	1702
2	-	-	YE9AAD	2643673 R1	0.79	18.0	Std. Wall XLPE Primary Cable	GREY	3185.0	-	-	-

Connector Name	K02-7800
Part Number	BLUNT_SL_VC
Instances	LT/RH/LoneStar - X15 - Transmission Power Take Off:Diagram1 LT/RH/LoneStar - X15 - Transmission Power Take Off Dual PTO with Clutch Interlock MANUAL:Diagram1 LT/RH/LoneStar - X15 - Transmission Power Take Off Dual Solenoid AUTO:Diagram1 LT/RH/LoneStar - X15 - Transmission Power Take Off W/ Clutch Interlock:Diagram1 LT/RH/LoneStar - X15 - Transmission SINGLE Power Take Off MANUAL:Diagram1
Mates	SW-PTOA-BLUNT

Name	Terminal Part Number	V-Min	Name	Wire Part Number	Wire CSA	Wire Spec	Wire Material description	Wire Color Description	Wire Length	End2 Terminal Part Number	End2 Pin Name	End2 Connect or
A	-	-	KM88	2643678 R1	1.16	16.0	Std. Wall XLPE Primary Cable	LIGHT GREEN	3380.0	-	14	1702

Connector Name	K02-7801
Part Number	BLUNT_SL_VC
Instances	LT/RH/LoneStar - X15 - Transmission Power Take Off Dual PTO with Clutch Interlock MANUAL:Diagram1 LT/RH/LoneStar - X15 - Transmission Power Take Off Dual Solenoid AUTO:Diagram1
Mates	SW-PTOB-BLUNT

Name	Terminal Part Number	V-Min	Name	Wire Part Number	Wire CSA	Wire Spec	Wire Material description	Wire Color Description	Wire Length	End2 Terminal Part Number	End2 Pin Name	End2 Connect or
A	-	-	KN88A	2643718 R1	0.79	18.0	Std. Wall XLPE Primary Cable	VIOLET	3380.0	-	41	1702

Connector Name	K02-7802
Part Number	3540051C91
Instances	LT/RH/LoneStar - X15 - Starter Interlock (BCM HSD controlled W/ Clutch Switch W/ Auto Start Stop):Diagram1
Mates	SW-TRANS_NEUTRAL-5023-07-0 2A

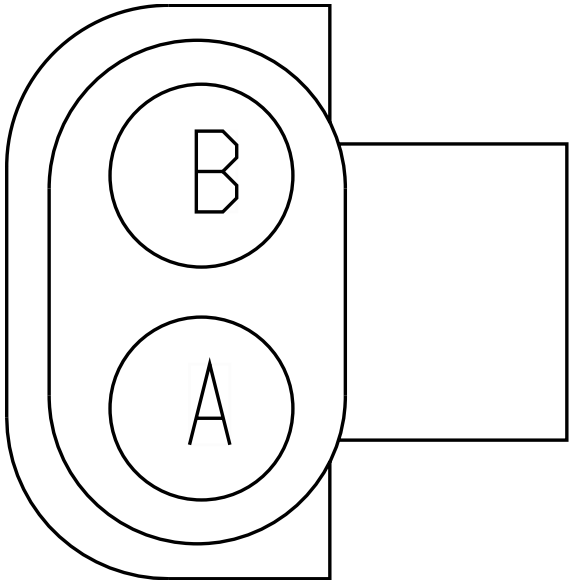

Name	Terminal Part Number	V-Min	Name	Wire Part Number	Wire CSA	Wire Spec	Wire Material description	Wire Color Description	Wire Length	End2 Terminal Part Number	End2 Pin Name	End2 Connect or
A	-	-	WV97J	2643718 R1	0.79	18.0	Std. Wall XLPE Primary Cable	VIOLET	1510.0	-	33	1702
B	-	-	WV97S	2643718 R1	0.79	18.0	Std. Wall XLPE Primary Cable	VIOLET	1510.0	-	32	1702

Connector Name K02-8500

Part Number 6114576C1

Instances LT/RH/LoneStar - X15 - Selective Catalytic Reduction (SCR):Diagram1 - Heater & Supply Module Relays-Combination1
LT/RH/LoneStar - X15 - Selective Catalytic Reduction (SCR):Diagram1 - Heater & Supply Module Relays-Combination2
LT/RH/LoneStar - X15 - Selective Catalytic Reduction (SCR):Diagram1 - Heater & Supply Module Relays-Combination3
LT/RH/LoneStar - X15 - Selective Catalytic Reduction (SCR):Diagram2 - Supply Module, Sensor Table, Quality Sensor, DEF Tank Valve-Combination1
LT/RH/LoneStar - X15 - Selective Catalytic Reduction (SCR):Diagram2 - Supply Module, Sensor Table, Quality Sensor, DEF Tank Valve-Combination2
LT/RH/LoneStar - X15 - Selective Catalytic Reduction (SCR):Diagram2 - Supply Module, Sensor Table, Quality Sensor, DEF Tank Valve-Combination3

Mates DEV-ISX ENG-5041-02-02A

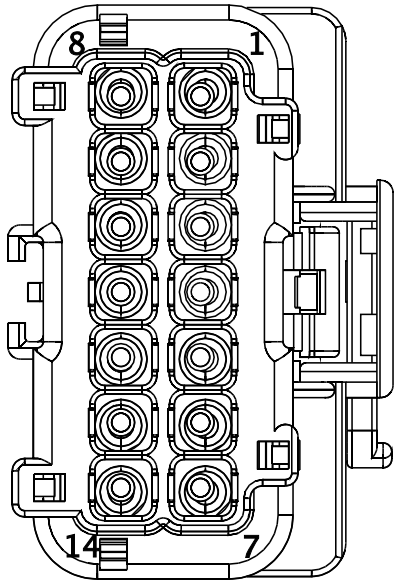

Name	Terminal Part Number	V-Min	Name	Wire Part Number	Wire CSA	Wire Spec	Wire Material description	Wire Color Description	Wire Length	End2 Terminal Part Number	End2 Pin Name	End2 Connector
1	-	-	TK95H	3510329 R1	0.79	18.0	Thin Wall XLPE Primary Cable	TAN	1170.0	-	3	674B
1	-	-	TJ95H	3510329 R1	0.79	18.0	Thin Wall XLPE Primary Cable	TAN	1890.0	-	3	674
2	-	-	-	-	-	-	-	-	-	-	-	-
5	-	-	KA95TB	3510311 R1	0.79	18.0	Thin Wall XLPE Primary Cable	GREY	2270.0	-	E10	690

Name	Terminal Part Number	V-Min	Name	Wire Part Number	Wire CSA	Wire Spec	Wire Material description	Wire Color Description	Wire Length	End2 Terminal Part Number	End2 Pin Name	End2 Connector
6	-	-	TM13AB	3510365 R1	0.79	18.0	Thin Wall XLPE Primary Cable	RED	900.0	-	X	-
6	-	-	TL13AB	3510365 R1	0.79	18.0	Thin Wall XLPE Primary Cable	RED	900.0	-	X	-
6	-	-	TS13AB	3510365 R1	0.79	18.0	Thin Wall XLPE Primary Cable	RED	1650.0	-	X	-
8	-	-	TK95AR2	3510365 R1	0.79	18.0	Thin Wall XLPE Primary Cable	RED	960.0	-	X	-
8	-	-	TJ95AR2	3510365 R1	0.79	18.0	Thin Wall XLPE Primary Cable	RED	960.0	-	X	-
9	-	-	-	-	-	-	-	-	-	-	-	-
13	-	-	TM10-GK	3510294 R1	1.16	16.0	Thin Wall XLPE Primary Cable	BLACK	730.0	-	X	-
13	-	-	TL10-GK	3510294 R1	1.16	16.0	Thin Wall XLPE Primary Cable	BLACK	730.0	-	X	-
13	-	-	TS10-GK	3510294 R1	1.16	16.0	Thin Wall XLPE Primary Cable	BLACK	730.0	-	X	-

Connector Name	LED 113
Part Number	1661375C2
Instances	RH - X15/A26 - Headlights LED N/INT N/LOWW LT:Diagram1 RH - X15/A26 - Headlights LED N/INT W/LOWW LT:Diagram1 RH - X15/A26 - Headlights LED W/INT N/LOWW LT:Diagram1 RH - X15/A26 - Headlights LED W/INT W/LOWW LT:Diagram1
Mates	RH-LEFT_HEADLIGHT_LED-1016 -08-03

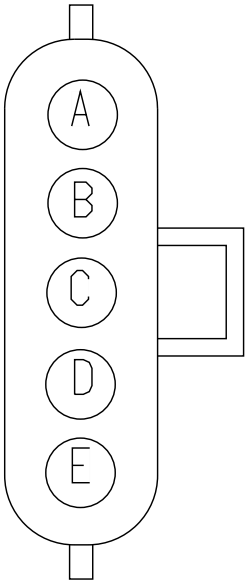

Name	Terminal Part Number	V-Min	Name	Wire Part Number	Wire CSA	Wire Spec	Wire Material description	Wire Color Description	Wire Length	End2 Terminal Part Number	End2 Pin Name	End2 Connect or
A	-	-	MA52A	2643693 R1	1.91	14.0	Std. Wall XLPE Primary Cable	YELLOW 2	3290.0	-	1	1700F
A	-	-	MA52B	2643693 R1	1.91	14.0	Std. Wall XLPE Primary Cable	YELLOW 2	4215.0	-	3	1700F
B	-	-	MA11-GB	2643689 R1	1.91	14.0	Std. Wall XLPE Primary Cable	WHITE	1795.0	-	-	-
B	-	-	MA11-GA	2643689 R1	1.91	14.0	Std. Wall XLPE Primary Cable	WHITE	870.0	-	-	-

Name	Terminal Part Number	V-Min	Name	Wire Part Number	Wire CSA	Wire Spec	Wire Material description	Wire Color Description	Wire Length	End2 Terminal Part Number	End2 Pin Name	End2 Connect or
C	-	-	MA53A	2643693 R1	1.91	14.0	Std. Wall XLPE Primary Cable	YELLOW 2	3290.0	-	2	1700F
C	-	-	MA53B	2643693 R1	1.91	14.0	Std. Wall XLPE Primary Cable	YELLOW 2	4215.0	-	4	1700F

Connector Name	LF 5162
Part Number	3612305C1
Short Description	HEADLIGHT T/S HARNESS CONNECTOR
Instances	LoneStar - X15/A26 - Marker Lights (Halogen):Diagram1 RH - X15/A26 - Directional Signal (Turn) W/ HEADLIGHTS:Diagram1 RH - X15/A26 - Headlights Halogen N/INT N/LOWW:Diagram1 RH - X15/A26 - Headlights Halogen N/INT W/LOWW:Diagram1 RH - X15/A26 - Headlights Halogen W/INT N/LOWW:Diagram1 RH - X15/A26 - Headlights Halogen W/INT W/LOWW:Diagram1
Mates	8002

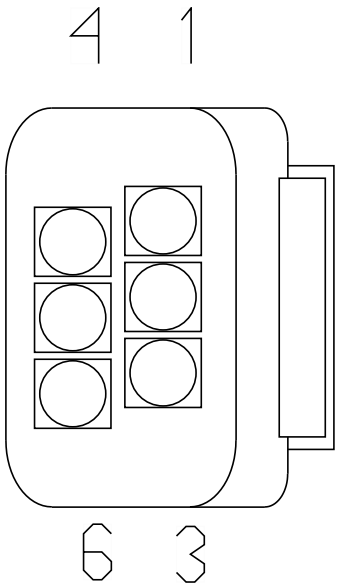

Name	Terminal Part Number	V-Min	Name	Wire Part Number	Wire CSA	Wire Spec	Wire Material description	Wire Color Description	Wire Length	End2 Terminal Part Number	End2 Pin Name	End2 Connect or
1	-	-	U52A	2643693 R1	1.91	14.0	Std. Wall XLPE Primary Cable	YELLOW 2	1835.0	-	1	8003L
2	-	-	U11-GA	2643689 R1	1.91	14.0	Std. Wall XLPE Primary Cable	WHITE	1485.0	-	2	RS 5162
3	-	-	U53A	2643693 R1	1.91	14.0	Std. Wall XLPE Primary Cable	YELLOW 2	1835.0	-	1	8002L
3	-	-	U53A	2643693 R1	1.91	14.0	Std. Wall XLPE Primary Cable	YELLOW 2	1835.0	-	-	-

Name	Terminal Part Number	V-Min	Name	Wire Part Number	Wire CSA	Wire Spec	Wire Material description	Wire Color Description	Wire Length	End2 Terminal Part Number	End2 Pin Name	End2 Connect or
4	-	-	U56	3510318 R1	1.16	16.0	Thin Wall XLPE Primary Cable	ORANGE	2080.0	-	3	8005L
5	-	-	U58A	2643679 R1	1.16	16.0	Std. Wall XLPE Primary Cable	BROWN	1435.0	-	X	-

Connector Name	LINE
Part Number	RING-E-3-8_0
Instances	LT/RH - X15/A26 - Battery Disconnect:Diagram1
Mates	DEV-Battery_Disconnect_Swi tch-01

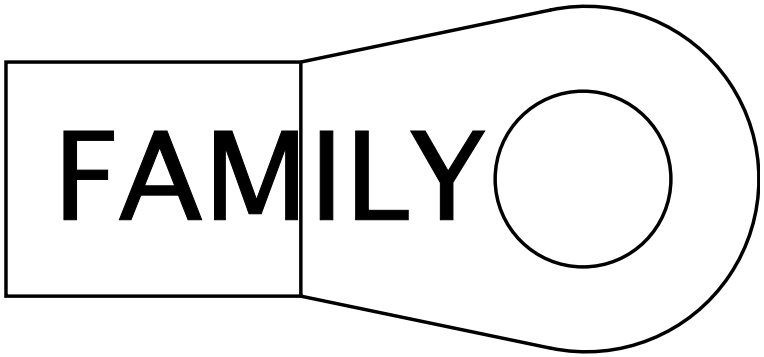

Name	Terminal Part Number	V-Min	Name	Wire Part Number	Wire CSA	Wire Spec	Wire Material description	Wire Color Description	Wire Length	End2 Terminal Part Number	End2 Pin Name	End2 Connect or
A	-	-	14	2645962 R1	49.99	0.0	SGX NFLEX 125	RED	700.0	-	A	LOAD

Connector Name	LOAD
Part Number	RING-E-3-8_0
Instances	LT/RH - X15/A26 - Battery Disconnect:Diagram1
Mates	DEV-Battery_Disconnect_Swi tch-01

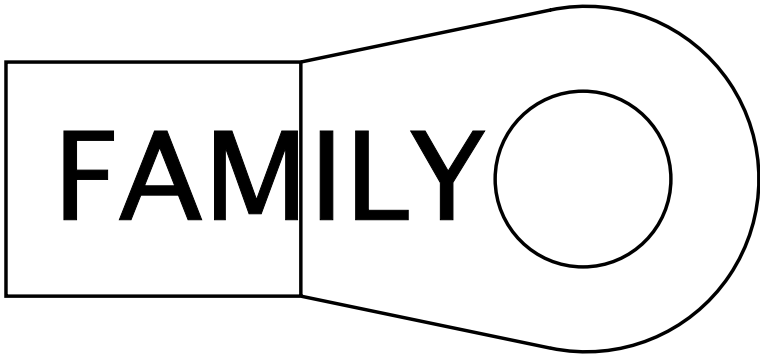

Name	Terminal Part Number	V-Min	Name	Wire Part Number	Wire CSA	Wire Spec	Wire Material description	Wire Color Description	Wire Length	End2 Terminal Part Number	End2 Pin Name	End2 Connect or
A	-	-	14	2645962 R1	49.99	0.0	SGX NFLEX 125	RED	700.0	-	A	LINE

Connector Name	LS 8053F
Part Number	1667740C1
Instances	LoneStar - X15 - Modesty Lighting W/ Day Cab W/ 2 Turn /0 Marker:Diagram1 LoneStar - X15 - Modesty Lighting W/ Sleeper W/ 4 Side Turns / 0 Marker:Diagram1
Mates	8054

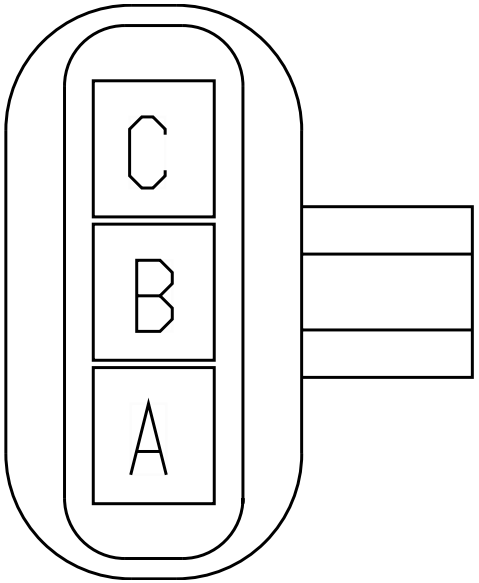

Name	Terminal Part Number	V-Min	Name	Wire Part Number	Wire CSA	Wire Spec	Wire Material description	Wire Color Description	Wire Length	End2 Terminal Part Number	End2 Pin Name	End2 Connect or
A	-	-	J11GB	2643681 R1	1.16	16.0	Std. Wall XLPE Primary Cable	WHITE	100.0	-	-	-
B	-	-	J56A	2643682 R1	1.16	16.0	Std. Wall XLPE Primary Cable	ORANGE	150.0	-	B	LS 8100F
B	-	-	J56A	2643682 R1	1.16	16.0	Std. Wall XLPE Primary Cable	ORANGE	150.0	-	-	-
C	-	-	J58A	2643679 R1	1.16	16.0	Std. Wall XLPE Primary Cable	BROWN	200.0	-	X	-

Connector Name	LS 8100F
Part Number	1667740C1
Short Description	MODESTY TURN LAMP HARNESS CONNECTION
Instances	LoneStar - X15 - Modesty Lighting W/ Day Cab W/ 2 Turn /0 Marker:Diagram1 LoneStar - X15 - Modesty Lighting W/ Sleeper W/ 4 Side Turns / 0 Marker:Diagram1
Mates	8100

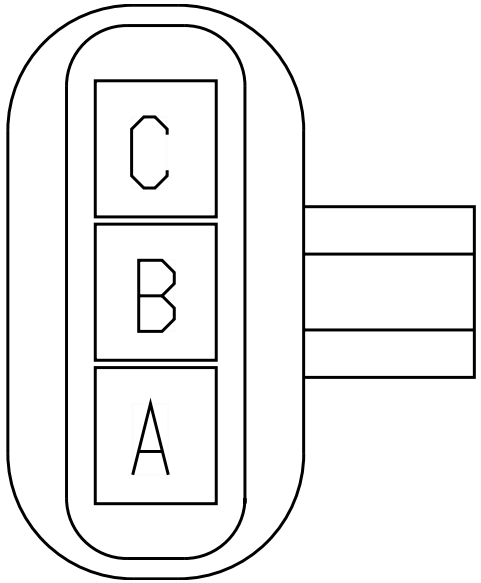

Name	Terminal Part Number	V-Min	Name	Wire Part Number	Wire CSA	Wire Spec	Wire Material description	Wire Color Description	Wire Length	End2 Terminal Part Number	End2 Pin Name	End2 Connect or
A	-	-	J11GB	2643681 R1	1.16	16.0	Std. Wall XLPE Primary Cable	WHITE	100.0	-	X	-
B	-	-	J56A	2643682 R1	1.16	16.0	Std. Wall XLPE Primary Cable	ORANGE	150.0	-	B	LS 8053F
B	-	-	J56A	2643682 R1	1.16	16.0	Std. Wall XLPE Primary Cable	ORANGE	150.0	-	X	-
C	-	-	J58A	2643679 R1	1.16	16.0	Std. Wall XLPE Primary Cable	BROWN	200.0	-	-	-

Connector Name	LT 8054F
Part Number	1667740C1
Short Description	MODESTY TURN LAMP HARNESS CONNECTION
Instances	LT/RH - X15/A26 - Modesty Lighting W/ Day Cab W/ 2 Turn /0 Marker:Diagram1 LT/RH - X15/A26 - Modesty Lighting W/ Sleeper W/ 4 Side Turns / 0 Marker:Diagram1
Mates	8054

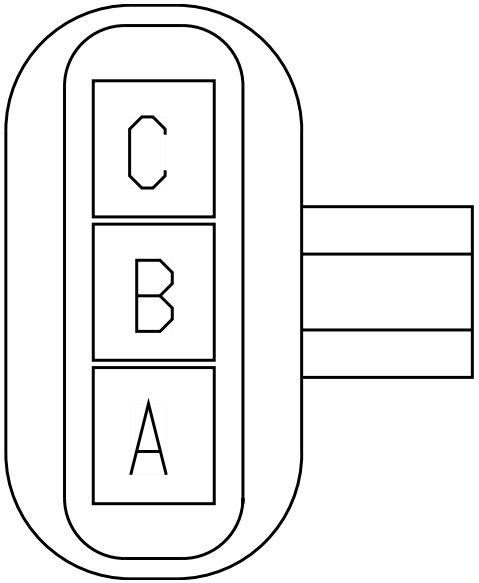

Name	Terminal Part Number	V-Min	Name	Wire Part Number	Wire CSA	Wire Spec	Wire Material description	Wire Color Description	Wire Length	End2 Terminal Part Number	End2 Pin Name	End2 Connect or
A	-	-	J11GB	2643681 R1	1.16	16.0	Std. Wall XLPE Primary Cable	WHITE	100.0	-	A	8100F
B	-	-	J56A	2643682 R1	1.16	16.0	Std. Wall XLPE Primary Cable	ORANGE	150.0	-	B	8100F
B	-	-	J56A	2643682 R1	1.16	16.0	Std. Wall XLPE Primary Cable	ORANGE	150.0	-	-	-
C	-	-	J58A	2643679 R1	1.16	16.0	Std. Wall XLPE Primary Cable	BROWN	200.0	-	X	-

Name	Terminal Part Number	V-Min	Name	Wire Part Number	Wire CSA	Wire Spec	Wire Material description	Wire Color Description	Wire Length	End2 Terminal Part Number	End2 Pin Name	End2 Connect or
C	-	-	J58A	2643679 R1	1.16	16.0	Std. Wall XLPE Primary Cable	BROWN	200.0	-	-	-

Connector Name	L01-675
Part Number	3854665C91
Instances	LT/RH/LoneStar - X15 - Selective Catalytic Reduction (SCR):Diagram1 - Heater & Supply Module Relays-Combination1
Mates	HTR-BACKFLOW-5041-01-01A

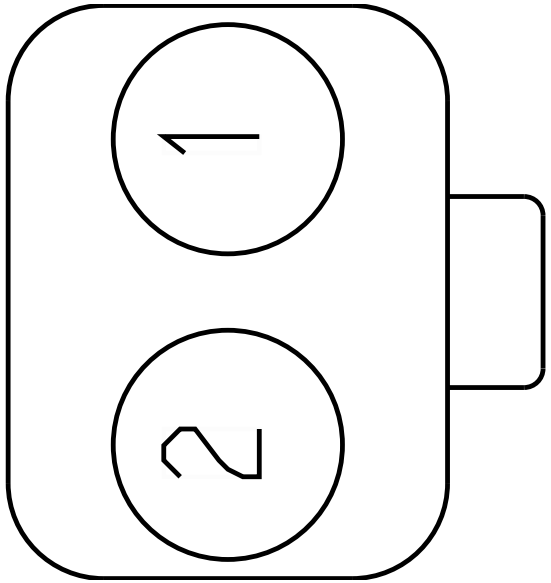

Name	Terminal Part Number	V-Min	Name	Wire Part Number	Wire CSA	Wire Spec	Wire Material description	Wire Color Description	Wire Length	End2 Terminal Part Number	End2 Pin Name	End2 Connect or
1	-	-	95AS	3510329 R1	0.79	18.0	Thin Wall XLPE Primary Cable	TAN	510.0	-	7	674
2	-	-	95-GA	3510330 R1	1.16	16.0	Thin Wall XLPE Primary Cable	TAN	180.0	-	X	-

Connector Name	L01-676
Part Number	3854666C91
Instances	LT/RH/LoneStar - X15 - Selective Catalytic Reduction (SCR):Diagram1 - Heater & Supply Module Relays-Combination1
Mates	HTR-PRESSURE-5041-01-01A

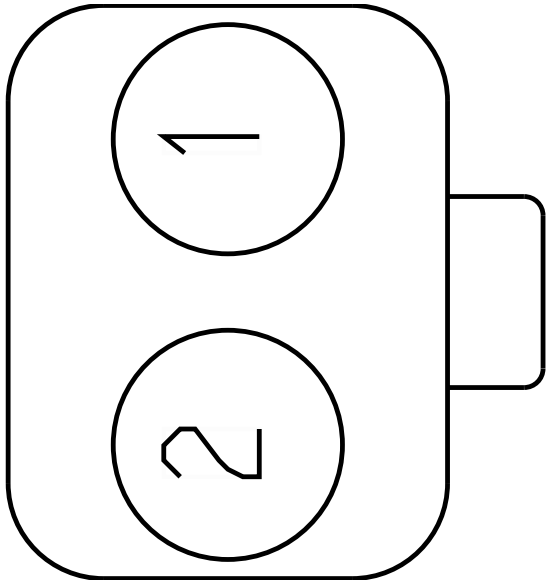

Name	Terminal Part Number	V-Min	Name	Wire Part Number	Wire CSA	Wire Spec	Wire Material description	Wire Color Description	Wire Length	End2 Terminal Part Number	End2 Pin Name	End2 Connect or
1	-	-	95AT	3510329 R1	0.79	18.0	Thin Wall XLPE Primary Cable	TAN	680.0	-	8	674
2	-	-	95-GB	3510330 R1	1.16	16.0	Thin Wall XLPE Primary Cable	TAN	350.0	-	X	-

Connector Name	L01-677
Part Number	3854645C91
Instances	LT/RH/LoneStar - X15 - Selective Catalytic Reduction (SCR):Diagram1 - Heater & Supply Module Relays-Combination1
Mates	HTR-SUCTION-5041-01-01A

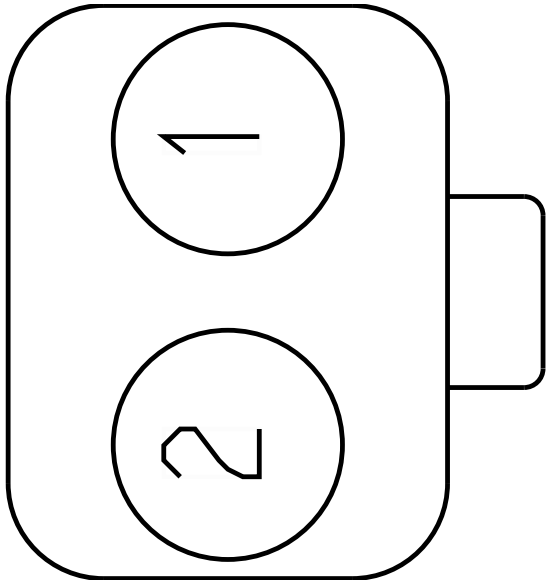

Name	Terminal Part Number	V-Min	Name	Wire Part Number	Wire CSA	Wire Spec	Wire Material description	Wire Color Description	Wire Length	End2 Terminal Part Number	End2 Pin Name	End2 Connect or
1	-	-	95AU	3510329 R1	0.79	18.0	Thin Wall XLPE Primary Cable	TAN	680.0	-	9	674
2	-	-	95-GC	3510330 R1	1.16	16.0	Thin Wall XLPE Primary Cable	TAN	350.0	-	X	-

Connector Name	L01-678
Part Number	3991593C1
Instances	LT/RH/LoneStar - X15 - Selective Catalytic Reduction (SCR):Diagram2 - Supply Module, Sensor Table, Quality Sensor, DEF Tank Valve-Combination1 LT/RH/LoneStar - X15 - Selective Catalytic Reduction (SCR):Diagram2 - Supply Module, Sensor Table, Quality Sensor, DEF Tank Valve-Combination2 LT/RH/LoneStar - X15 - Selective Catalytic Reduction (SCR):Diagram2 - Supply Module, Sensor Table, Quality Sensor, DEF Tank Valve-Combination3
Mates	SNSR-DEF_TANK_QUAL-5041-01 -01A

Name	Terminal Part Number	V-Min	Name	Wire Part Number	Wire CSA	Wire Spec	Wire Material description	Wire Color Description	Wire Length	End2 Terminal Part Number	End2 Pin Name	End2 Connect or
1	-	-	-	-	-	-	-	-	-	-	-	-
2	-	-	-	-	-	-	-	-	-	-	-	-
3	-	-	10-GL	3510359 R1	0.79	18.0	Thin Wall XLPE Primary Cable	WHITE	530.0	-	-	-
4	-	-	13A	3510323 R1	0.79	18.0	Thin Wall XLPE Primary Cable	PINK	530.0	-	-	-

Connector Name L01-680

Part Number 3993814C1

Instances LT/RH/LoneStar - X15 - Selective Catalytic Reduction (SCR):Diagram1 - Heater & Supply Module Relays-Combination1
LT/RH/LoneStar - X15 - Selective Catalytic Reduction (SCR):Diagram2 - Supply Module, Sensor Table, Quality Sensor, DEF Tank Valve-Combination1

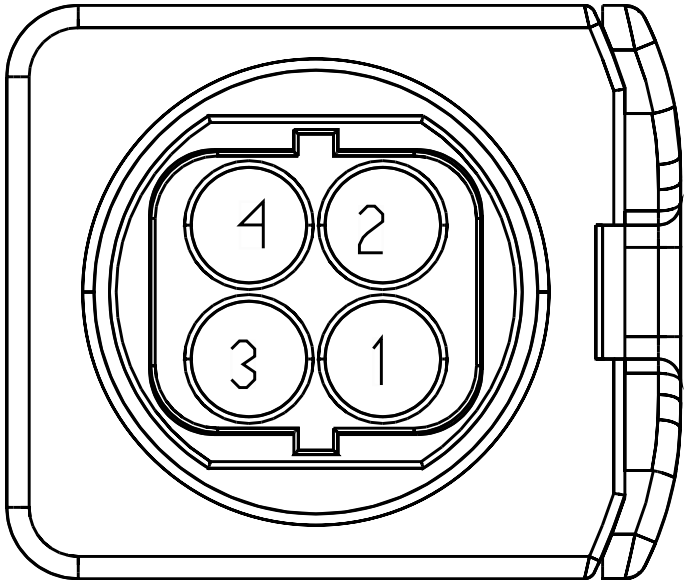

Name	Terminal Part Number	V-Min	Name	Wire Part Number	Wire CSA	Wire Spec	Wire Material description	Wire Color Description	Wire Length	End2 Terminal Part Number	End2 Pin Name	End2 Connect or
1	-	-	95H	3510329 R1	0.79	18.0	Thin Wall XLPE Primary Cable	TAN	1090.0	-	-	-
2	-	-	95AR	3510329 R1	0.79	18.0	Thin Wall XLPE Primary Cable	TAN	1090.0	-	4	674
3	-	-	95F	3510329 R1	0.79	18.0	Thin Wall XLPE Primary Cable	TAN	1090.0	-	-	-
4	-	-	95E	3510329 R1	0.79	18.0	Thin Wall XLPE Primary Cable	TAN	1090.0	-	-	-

Connector Name	L01-691
Part Number	3714731C1
Instances	LT/RH/LoneStar - X15 - Selective Catalytic Reduction (SCR):Diagram2 - Supply Module, Sensor Table, Quality Sensor, DEF Tank Valve-Combination1
Mates	VALV-DEF_TANK_HT-5041-01-0 1A

Name	Terminal Part Number	V-Min	Name	Wire Part Number	Wire CSA	Wire Spec	Wire Material description	Wire Color Description	Wire Length	End2 Terminal Part Number	End2 Pin Name	End2 Connect or
1	-	-	95AC	3510329 R1	0.79	18.0	Thin Wall XLPE Primary Cable	TAN	670.0	-	-	-
4	-	-	95AB	3510347 R1	0.79	18.0	Thin Wall XLPE Primary Cable	PURPLE	670.0	-	-	-

Connector Name L03-675

Part Number 3854665C91

Instances LT/RH/LoneStar - X15 - Selective Catalytic Reduction (SCR):Diagram1 - Heater & Supply Module Relays-Combination2
LT/RH/LoneStar - X15 - Selective Catalytic Reduction (SCR):Diagram1 - Heater & Supply Module Relays-Combination3

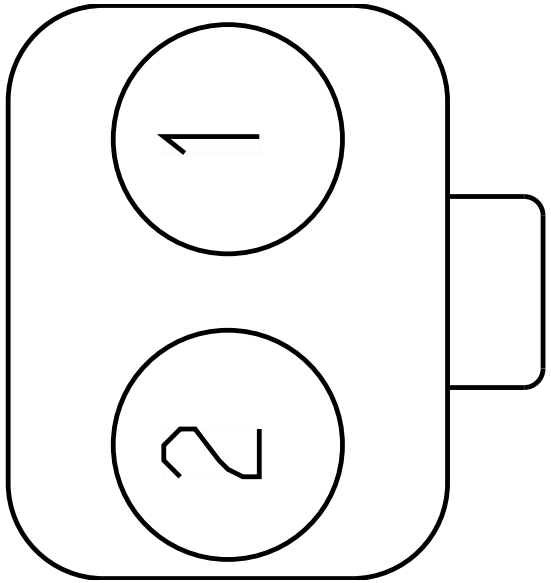

Name	Terminal Part Number	V-Min	Name	Wire Part Number	Wire CSA	Wire Spec	Wire Material description	Wire Color Description	Wire Length	End2 Terminal Part Number	End2 Pin Name	End2 Connect or
1	-	-	95AS	3510329 R1	0.79	18.0	Thin Wall XLPE Primary Cable	TAN	510.0	-	-	-
2	-	-	95-GA	3510330 R1	1.16	16.0	Thin Wall XLPE Primary Cable	TAN	180.0	-	-	-

Connector Name L03-676

Part Number 3854666C91

Instances LT/RH/LoneStar - X15 - Selective Catalytic Reduction (SCR):Diagram1 - Heater & Supply Module Relays-Combination2
LT/RH/LoneStar - X15 - Selective Catalytic Reduction (SCR):Diagram1 - Heater & Supply Module Relays-Combination3

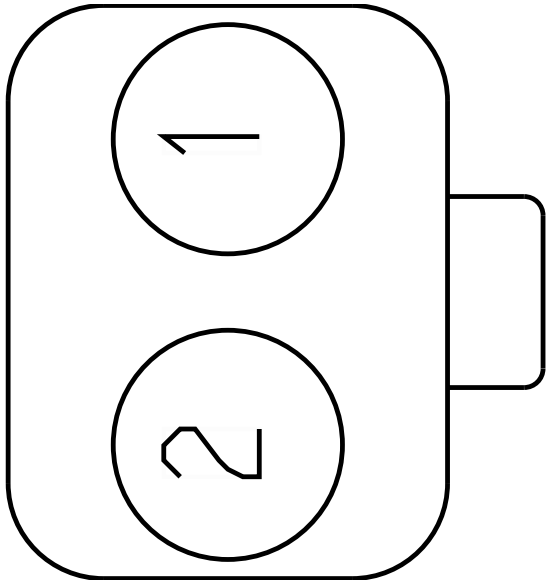

Name	Terminal Part Number	V-Min	Name	Wire Part Number	Wire CSA	Wire Spec	Wire Material description	Wire Color Description	Wire Length	End2 Terminal Part Number	End2 Pin Name	End2 Connect or
1	-	-	95AT	3510329 R1	0.79	18.0	Thin Wall XLPE Primary Cable	TAN	680.0	-	-	-
2	-	-	95-GB	3510330 R1	1.16	16.0	Thin Wall XLPE Primary Cable	TAN	350.0	-	-	-

Connector Name L03-677

Part Number 3854645C91

Instances LT/RH/LoneStar - X15 - Selective Catalytic Reduction (SCR):Diagram1 - Heater & Supply Module Relays-Combination2
LT/RH/LoneStar - X15 - Selective Catalytic Reduction (SCR):Diagram1 - Heater & Supply Module Relays-Combination3

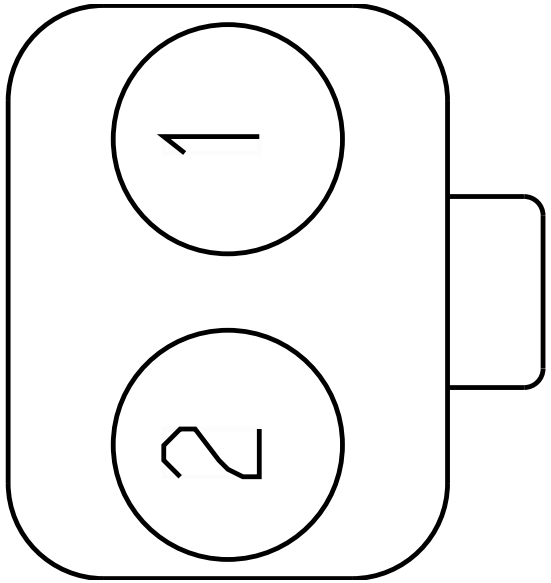

Name	Terminal Part Number	V-Min	Name	Wire Part Number	Wire CSA	Wire Spec	Wire Material description	Wire Color Description	Wire Length	End2 Terminal Part Number	End2 Pin Name	End2 Connect or
1	-	-	95AU	3510329 R1	0.79	18.0	Thin Wall XLPE Primary Cable	TAN	680.0	-	-	-
2	-	-	95-GC	3510330 R1	1.16	16.0	Thin Wall XLPE Primary Cable	TAN	350.0	-	-	-

Connector Name L03-678

Part Number 3991593C1

Instances LT/RH/LoneStar - X15 - Selective Catalytic Reduction (SCR):Diagram2 - Supply Module, Sensor Table, Quality Sensor, DEF Tank Valve-Combination2
LT/RH/LoneStar - X15 - Selective Catalytic Reduction (SCR):Diagram2 - Supply Module, Sensor Table, Quality Sensor, DEF Tank Valve-Combination3

Name	Terminal Part Number	V-Min	Name	Wire Part Number	Wire CSA	Wire Spec	Wire Material description	Wire Color Description	Wire Length	End2 Terminal Part Number	End2 Pin Name	End2 Connect or
3	-	-	10-GL	3510359 R1	0.79	18.0	Thin Wall XLPE Primary Cable	WHITE	530.0	-	11	674
4	-	-	13A	3510323 R1	0.79	18.0	Thin Wall XLPE Primary Cable	PINK	530.0	-	12	674

Connector Name	L03-680
Part Number	3993814C1
Instances	LT/RH/LoneStar - X15 - Selective Catalytic Reduction (SCR):Diagram1 - Heater & Supply Module Relays-Combination2 LT/RH/LoneStar - X15 - Selective Catalytic Reduction (SCR):Diagram1 - Heater & Supply Module Relays-Combination3 LT/RH/LoneStar - X15 - Selective Catalytic Reduction (SCR):Diagram2 - Supply Module, Sensor Table, Quality Sensor, DEF Tank Valve-Combination2 LT/RH/LoneStar - X15 - Selective Catalytic Reduction (SCR):Diagram2 - Supply Module, Sensor Table, Quality Sensor, DEF Tank Valve-Combination3
Mates	MODU-SUPPLY-5041-01-01A

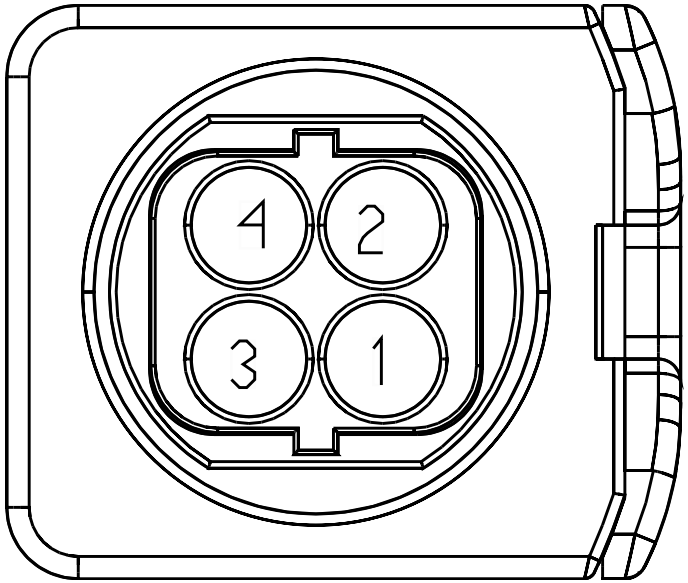

Name	Terminal Part Number	V-Min	Name	Wire Part Number	Wire CSA	Wire Spec	Wire Material description	Wire Color Description	Wire Length	End2 Terminal Part Number	End2 Pin Name	End2 Connector
1	-	-	95H	3510329 R1	0.79	18.0	Thin Wall XLPE Primary Cable	TAN	1090.0	-	3	674
2	-	-	95AR	3510329 R1	0.79	18.0	Thin Wall XLPE Primary Cable	TAN	1090.0	-	-	-
3	-	-	95F	3510329 R1	0.79	18.0	Thin Wall XLPE Primary Cable	TAN	1090.0	-	2	674
4	-	-	95E	3510329 R1	0.79	18.0	Thin Wall XLPE Primary Cable	TAN	1090.0	-	1	674

Connector Name L03-691

Part Number 3714731C1

Instances LT/RH/LoneStar - X15 - Selective Catalytic Reduction (SCR):Diagram2 - Supply Module, Sensor Table, Quality Sensor, DEF Tank Valve-Combination2
LT/RH/LoneStar - X15 - Selective Catalytic Reduction (SCR):Diagram2 - Supply Module, Sensor Table, Quality Sensor, DEF Tank Valve-Combination3

Name	Terminal Part Number	V-Min	Name	Wire Part Number	Wire CSA	Wire Spec	Wire Material description	Wire Color Description	Wire Length	End2 Terminal Part Number	End2 Pin Name	End2 Connect or
1	-	-	95AC	3510329 R1	0.79	18.0	Thin Wall XLPE Primary Cable	TAN	670.0	-	5	674
4	-	-	95AB	3510347 R1	0.79	18.0	Thin Wall XLPE Primary Cable	PURPLE	670.0	-	6	674

Connector Name	L04-675
Part Number	3854665C91
Instances	LT/RH - A26 - Selective Catalytic Reduction (SCR):Diagram1 - Heater & Supply Module Relays-Combination1
Mates	HTR-BACKFLOW-5041-01-01A

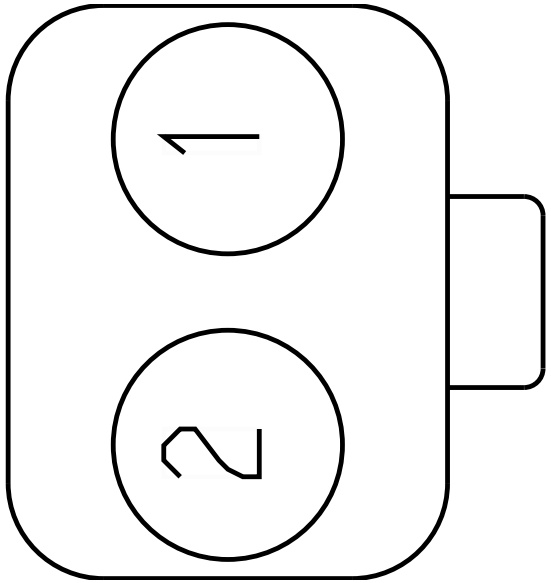

Name	Terminal Part Number	V-Min	Name	Wire Part Number	Wire CSA	Wire Spec	Wire Material description	Wire Color Description	Wire Length	End2 Terminal Part Number	End2 Pin Name	End2 Connect or
1	-	-	95AS	3510329 R1	0.79	18.0	Thin Wall XLPE Primary Cable	TAN	510.0	-	7	674
2	-	-	95-GA	3510330 R1	1.16	16.0	Thin Wall XLPE Primary Cable	TAN	180.0	-	X	-

Connector Name L04-676

Part Number 3854666C91

Instances LT/RH - A26 - Selective Catalytic Reduction (SCR):Diagram1 - Heater & Supply Module Relays-Combination1

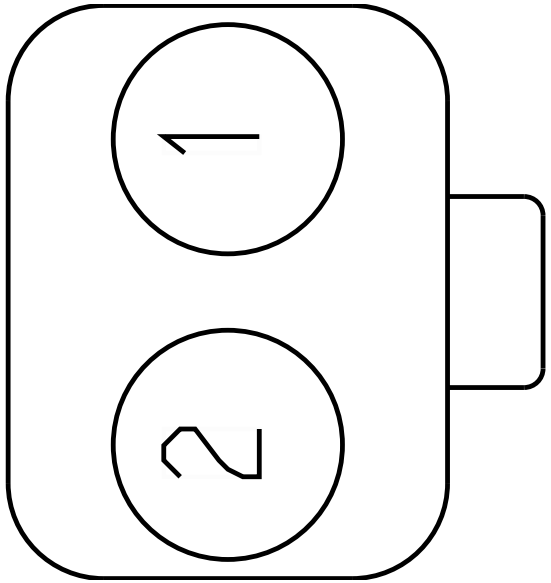

Name	Terminal Part Number	V-Min	Name	Wire Part Number	Wire CSA	Wire Spec	Wire Material description	Wire Color Description	Wire Length	End2 Terminal Part Number	End2 Pin Name	End2 Connect or
1	-	-	95AT	3510329 R1	0.79	18.0	Thin Wall XLPE Primary Cable	TAN	680.0	-	8	674
2	-	-	95-GB	3510330 R1	1.16	16.0	Thin Wall XLPE Primary Cable	TAN	350.0	-	X	-

Connector Name L04-677

Part Number 3854645C91

Instances LT/RH - A26 - Selective Catalytic Reduction (SCR):Diagram1 - Heater & Supply Module Relays-Combination1

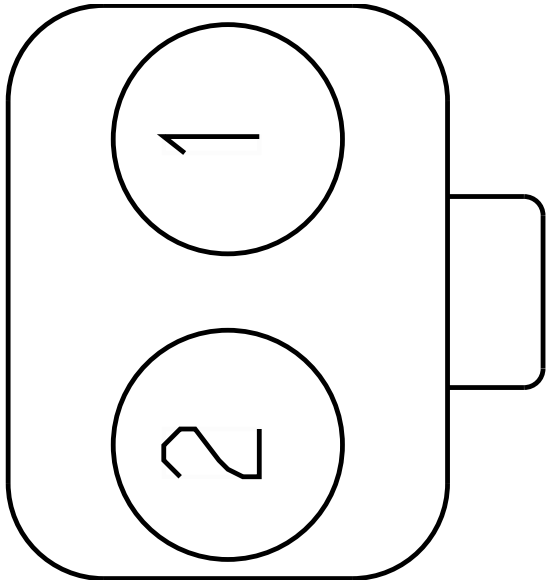

Name	Terminal Part Number	V-Min	Name	Wire Part Number	Wire CSA	Wire Spec	Wire Material description	Wire Color Description	Wire Length	End2 Terminal Part Number	End2 Pin Name	End2 Connect or
1	-	-	95AU	3510329 R1	0.79	18.0	Thin Wall XLPE Primary Cable	TAN	680.0	-	9	674
2	-	-	95-GC	3510330 R1	1.16	16.0	Thin Wall XLPE Primary Cable	TAN	350.0	-	X	-

Connector Name	L04-678
Part Number	3991593C1
Instances	LT/RH - A26 - Selective Catalytic Reduction (SCR):Diagram2 - Supply Module, Sensor Table, Quality Sensor, DEF Tank Valve-Combination1 LT/RH - A26 - Selective Catalytic Reduction (SCR):Diagram2 - Supply Module, Sensor Table, Quality Sensor, DEF Tank Valve-Combination2 LT/RH - A26 - Selective Catalytic Reduction (SCR):Diagram2 - Supply Module, Sensor Table, Quality Sensor, DEF Tank Valve-Combination3
Mates	SNSR-DEF_TANK_QUAL-5041-01 -01A

Name	Terminal Part Number	V-Min	Name	Wire Part Number	Wire CSA	Wire Spec	Wire Material description	Wire Color Description	Wire Length	End2 Terminal Part Number	End2 Pin Name	End2 Connect or
1	-	-	-	-	-	-	-	-	-	-	-	-
2	-	-	-	-	-	-	-	-	-	-	-	-
3	-	-	10-GL	3510359 R1	0.79	18.0	Thin Wall XLPE Primary Cable	WHITE	530.0	-	-	-
4	-	-	13A	3510323 R1	0.79	18.0	Thin Wall XLPE Primary Cable	PINK	530.0	-	-	-

Connector Name	L04-680
Part Number	3993814C1
Instances	LT/RH - A26 - Selective Catalytic Reduction (SCR):Diagram1 - Heater & Supply Module Relays-Combination1 LT/RH - A26 - Selective Catalytic Reduction (SCR):Diagram2 - Supply Module, Sensor Table, Quality Sensor, DEF Tank Valve-Combination1
Mates	MODU-SUPPLY-5041-01-01A

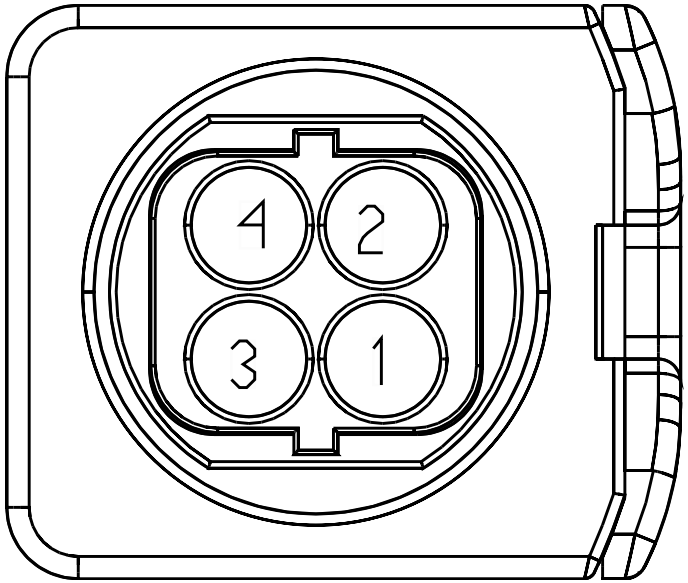

Name	Terminal Part Number	V-Min	Name	Wire Part Number	Wire CSA	Wire Spec	Wire Material description	Wire Color Description	Wire Length	End2 Terminal Part Number	End2 Pin Name	End2 Connect or
1	-	-	95H	3510329 R1	0.79	18.0	Thin Wall XLPE Primary Cable	TAN	1090.0	-	-	-
2	-	-	95AR	3510329 R1	0.79	18.0	Thin Wall XLPE Primary Cable	TAN	1090.0	-	4	674
3	-	-	95F	3510329 R1	0.79	18.0	Thin Wall XLPE Primary Cable	TAN	1090.0	-	-	-
4	-	-	95E	3510329 R1	0.79	18.0	Thin Wall XLPE Primary Cable	TAN	1090.0	-	-	-

Connector Name L04-691

Part Number 3714731C1

Instances LT/RH - A26 - Selective Catalytic Reduction (SCR):Diagram2 - Supply Module, Sensor Table, Quality Sensor, DEF Tank Valve-Combination1

Name	Terminal Part Number	V-Min	Name	Wire Part Number	Wire CSA	Wire Spec	Wire Material description	Wire Color Description	Wire Length	End2 Terminal Part Number	End2 Pin Name	End2 Connect or
1	-	-	95AC	3510329 R1	0.79	18.0	Thin Wall XLPE Primary Cable	TAN	670.0	-	-	-
4	-	-	95AB	3510347 R1	0.79	18.0	Thin Wall XLPE Primary Cable	PURPLE	670.0	-	-	-

Connector Name L05-675

Part Number 3854665C91

Instances LT/RH - A26 - Selective Catalytic Reduction (SCR):Diagram1 - Heater & Supply Module Relays-Combination2
LT/RH - A26 - Selective Catalytic Reduction (SCR):Diagram1 - Heater & Supply Module Relays-Combination3

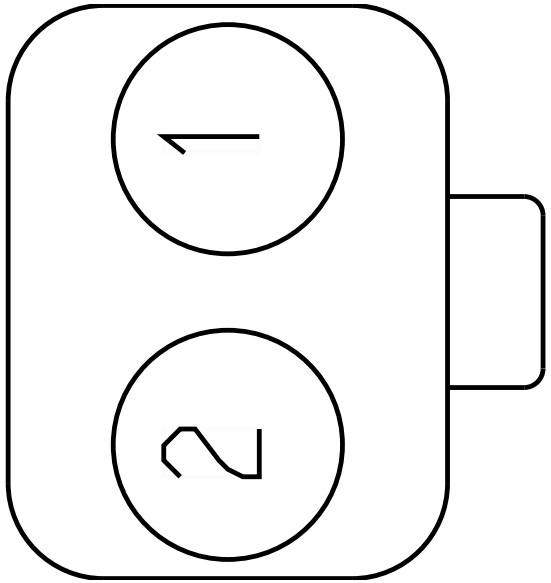

Name	Terminal Part Number	V-Min	Name	Wire Part Number	Wire CSA	Wire Spec	Wire Material description	Wire Color Description	Wire Length	End2 Terminal Part Number	End2 Pin Name	End2 Connect or
1	-	-	95AS	3510329 R1	0.79	18.0	Thin Wall XLPE Primary Cable	TAN	510.0	-	-	-
2	-	-	95-GA	3510330 R1	1.16	16.0	Thin Wall XLPE Primary Cable	TAN	180.0	-	-	-

Connector Name	L05-676
Part Number	3854666C91
Instances	LT/RH - A26 - Selective Catalytic Reduction (SCR):Diagram1 - Heater & Supply Module Relays-Combination2 LT/RH - A26 - Selective Catalytic Reduction (SCR):Diagram1 - Heater & Supply Module Relays-Combination3
Mates	HTR-PRESSURE-5041-01-01A

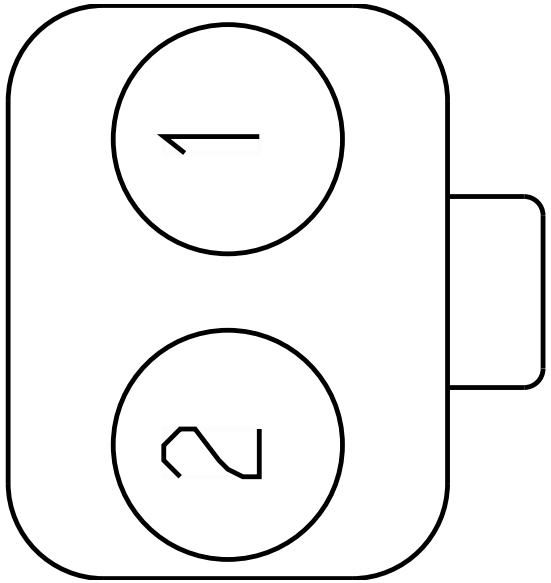

Name	Terminal Part Number	V-Min	Name	Wire Part Number	Wire CSA	Wire Spec	Wire Material description	Wire Color Description	Wire Length	End2 Terminal Part Number	End2 Pin Name	End2 Connect or
1	-	-	95AT	3510329 R1	0.79	18.0	Thin Wall XLPE Primary Cable	TAN	680.0	-	-	-
2	-	-	95-GB	3510330 R1	1.16	16.0	Thin Wall XLPE Primary Cable	TAN	350.0	-	-	-

Connector Name	L05-677
Part Number	3854645C91
Instances	LT/RH - A26 - Selective Catalytic Reduction (SCR):Diagram1 - Heater & Supply Module Relays-Combination2 LT/RH - A26 - Selective Catalytic Reduction (SCR):Diagram1 - Heater & Supply Module Relays-Combination3
Mates	HTR-SUCTION-5041-01-01A

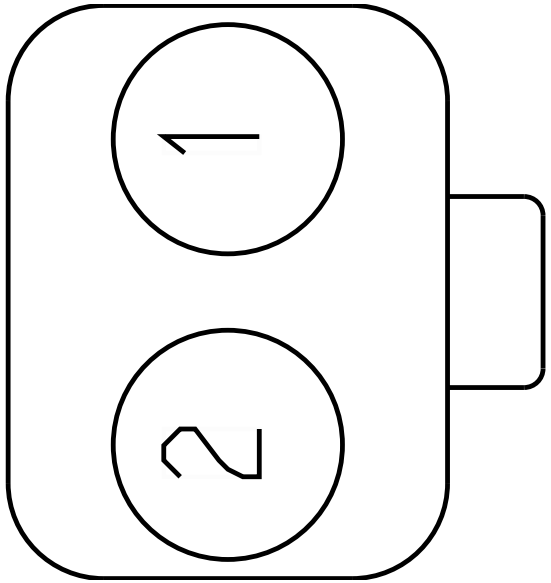

Name	Terminal Part Number	V-Min	Name	Wire Part Number	Wire CSA	Wire Spec	Wire Material description	Wire Color Description	Wire Length	End2 Terminal Part Number	End2 Pin Name	End2 Connect or
1	-	-	95AU	3510329 R1	0.79	18.0	Thin Wall XLPE Primary Cable	TAN	680.0	-	-	-
2	-	-	95-GC	3510330 R1	1.16	16.0	Thin Wall XLPE Primary Cable	TAN	350.0	-	-	-

Connector Name	L05-678
Part Number	3991593C1
Instances	LT/RH - A26 - Selective Catalytic Reduction (SCR):Diagram2 - Supply Module, Sensor Table, Quality Sensor, DEF Tank Valve-Combination2 LT/RH - A26 - Selective Catalytic Reduction (SCR):Diagram2 - Supply Module, Sensor Table, Quality Sensor, DEF Tank Valve-Combination3
Mates	SNSR-DEF_TANK_QUAL-5041-01 -01A

Name	Terminal Part Number	V-Min	Name	Wire Part Number	Wire CSA	Wire Spec	Wire Material description	Wire Color Description	Wire Length	End2 Terminal Part Number	End2 Pin Name	End2 Connect or
3	-	-	10-GL	3510359 R1	0.79	18.0	Thin Wall XLPE Primary Cable	WHITE	530.0	-	11	674
4	-	-	13A	3510323 R1	0.79	18.0	Thin Wall XLPE Primary Cable	PINK	530.0	-	12	674

Connector Name L05-680

Part Number 3993814C1

Instances LT/RH - A26 - Selective Catalytic Reduction (SCR):Diagram1 - Heater & Supply Module Relays-Combination2
LT/RH - A26 - Selective Catalytic Reduction (SCR):Diagram1 - Heater & Supply Module Relays-Combination3
LT/RH - A26 - Selective Catalytic Reduction (SCR):Diagram2 - Supply Module, Sensor Table, Quality Sensor, DEF Tank Valve-Combination2
LT/RH - A26 - Selective Catalytic Reduction (SCR):Diagram2 - Supply Module, Sensor Table, Quality Sensor, DEF Tank Valve-Combination3

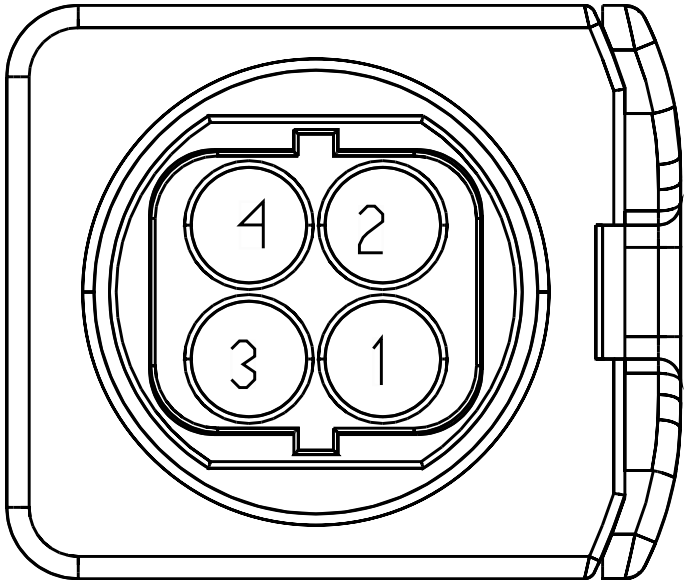

Name	Terminal Part Number	V-Min	Name	Wire Part Number	Wire CSA	Wire Spec	Wire Material description	Wire Color Description	Wire Length	End2 Terminal Part Number	End2 Pin Name	End2 Connector
1	-	-	95H	3510329 R1	0.79	18.0	Thin Wall XLPE Primary Cable	TAN	1090.0	-	3	674
2	-	-	95AR	3510329 R1	0.79	18.0	Thin Wall XLPE Primary Cable	TAN	1090.0	-	-	-
3	-	-	95F	3510329 R1	0.79	18.0	Thin Wall XLPE Primary Cable	TAN	1090.0	-	2	674
4	-	-	95E	3510329 R1	0.79	18.0	Thin Wall XLPE Primary Cable	TAN	1090.0	-	1	674

Connector Name	L05-691
Part Number	3714731C1
Instances	LT/RH - A26 - Selective Catalytic Reduction (SCR):Diagram2 - Supply Module, Sensor Table, Quality Sensor, DEF Tank Valve-Combination2 LT/RH - A26 - Selective Catalytic Reduction (SCR):Diagram2 - Supply Module, Sensor Table, Quality Sensor, DEF Tank Valve-Combination3
Mates	VALV-DEF_TANK_HT-5041-01-0 1A

Name	Terminal Part Number	V-Min	Name	Wire Part Number	Wire CSA	Wire Spec	Wire Material description	Wire Color Description	Wire Length	End2 Terminal Part Number	End2 Pin Name	End2 Connect or
1	-	-	95AC	3510329 R1	0.79	18.0	Thin Wall XLPE Primary Cable	TAN	670.0	-	5	674
4	-	-	95AB	3510347 R1	0.79	18.0	Thin Wall XLPE Primary Cable	PURPLE	670.0	-	6	674

Connector Name	M01-8050
Part Number	1661778C1
Instances	LT/RH - X15/A26 - Skirt Light Customer Supplied:Diagram1
Mates	LT-CS_LS_Skirt-1040-01-02

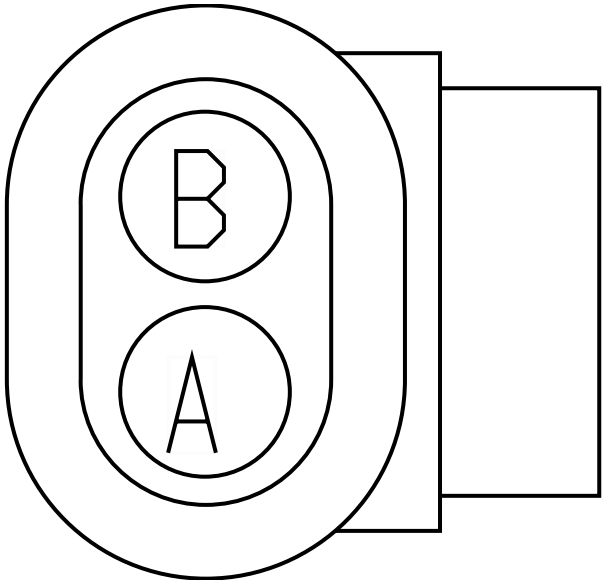

Name	Terminal Part Number	V-Min	Name	Wire Part Number	Wire CSA	Wire Spec	Wire Material description	Wire Color Description	Wire Length	End2 Terminal Part Number	End2 Pin Name	End2 Connect or
A	-	-	MJ54X	2643682 R1	1.16	16.0	Std. Wall XLPE Primary Cable	ORANGE	475.0	-	24	1700F
B	-	-	MJ54-GA	2643681 R1	1.16	16.0	Std. Wall XLPE Primary Cable	WHITE	1970.0	-	-	-

Connector Name	M01-8070
Part Number	587567C91
Instances	LT/RH/LoneStar - X15/A26 - Heated Mirrors (Door Pod Actuated Cab and Hood Mounted):Diagram1
Mates	MODU-DS-HOOD-MIRROR-1017-0 6-01A

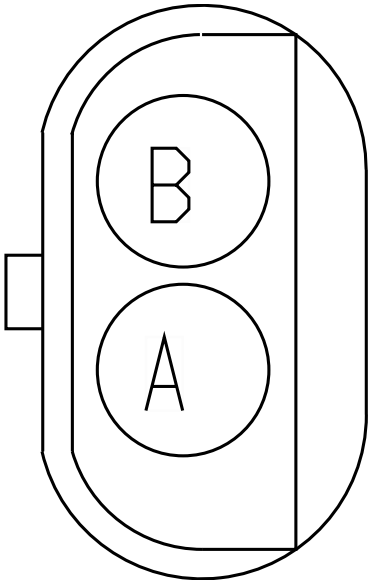

Name	Terminal Part Number	V-Min	Name	Wire Part Number	Wire CSA	Wire Spec	Wire Material description	Wire Color Description	Wire Length	End2 Terminal Part Number	End2 Pin Name	End2 Connect or
A	-	-	PN78B	2643678 R1	1.16	16.0	Std. Wall XLPE Primary Cable	LIGHT GREEN	1990.0	-	X	-
B	-	-	PN78-GA	2643681 R1	1.16	16.0	Std. Wall XLPE Primary Cable	WHITE	1825.0	-	X	-

Connector Name	M01-8071
Part Number	587567C91
Instances	LT/RH/LoneStar - X15/A26 - Heated Mirrors (Door Pod Actuated Cab and Hood Mounted):Diagram1
Mates	MODU-PS-HOOD-MIRROR-1017-0 6-01A

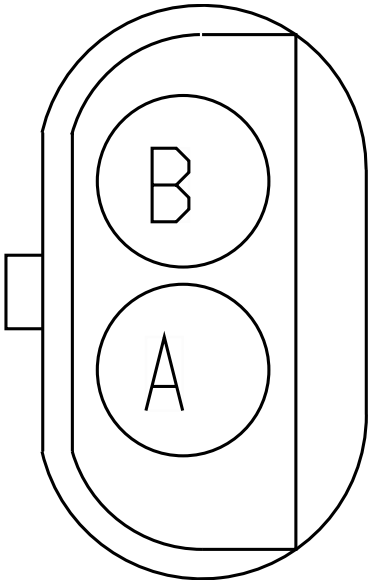

Name	Terminal Part Number	V-Min	Name	Wire Part Number	Wire CSA	Wire Spec	Wire Material description	Wire Color Description	Wire Length	End2 Terminal Part Number	End2 Pin Name	End2 Connect or
A	-	-	PN78C	2643678 R1	1.16	16.0	Std. Wall XLPE Primary Cable	LIGHT GREEN	3365.0	-	X	-
B	-	-	PN78-GB	2643681 R1	1.16	16.0	Std. Wall XLPE Primary Cable	WHITE	3200.0	-	X	-

Connector Name	M01-8350
Part Number	3536864C1
Instances	LT/RH - X15/A26 - Windshield Washer Pump:Diagram1 LT/RH - X15/A26 - Windshield Washer Pump & Low Fluid Sensor:Diagram1
Mates	Washer_Bottle_Assembly-102 9-05-01A-LT

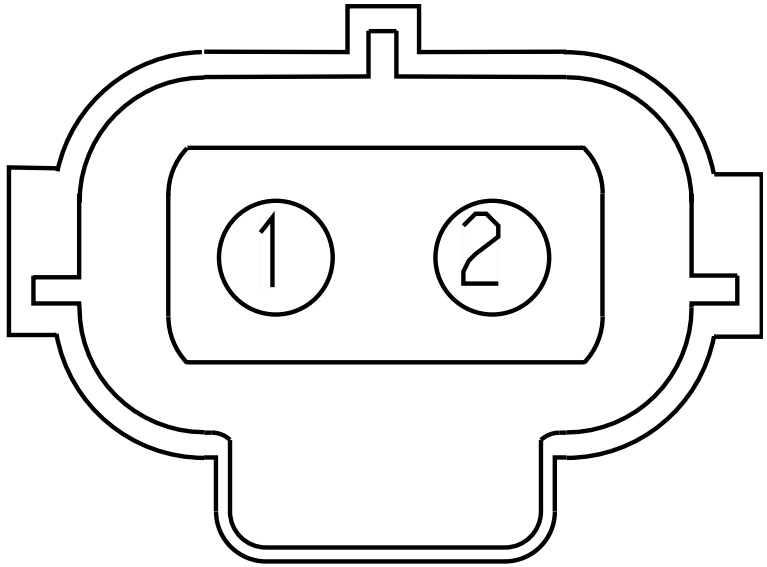

Name	Terminal Part Number	V-Min	Name	Wire Part Number	Wire CSA	Wire Spec	Wire Material description	Wire Color Description	Wire Length	End2 Terminal Part Number	End2 Pin Name	End2 Connect or
1	-	-	MA87C	2643680 R1	1.16	16.0	Std. Wall XLPE Primary Cable	GREY	5165.0	-	19	1700F
2	-	-	MA87D	2643680 R1	1.16	16.0	Std. Wall XLPE Primary Cable	GREY	5165.0	-	20	1700F

Connector Name	M01-8351
Part Number	3554317C1
Instances	LT/RH - X15/A26 - Windshield Washer Pump & Low Fluid Sensor:Diagram1
Mates	Washer_Bottle_Assembly-102 9-05-01A-LT

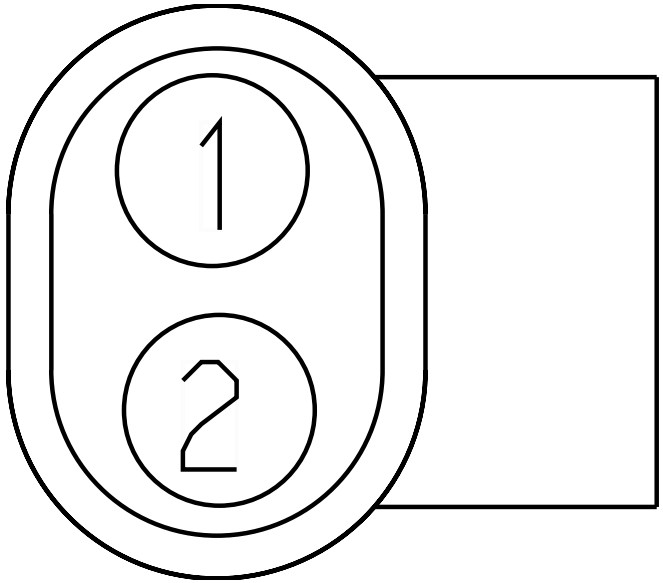

Name	Terminal Part Number	V-Min	Name	Wire Part Number	Wire CSA	Wire Spec	Wire Material description	Wire Color Description	Wire Length	End2 Terminal Part Number	End2 Pin Name	End2 Connect or
1	-	-	WW87A	3510311 R1	0.79	18.0	Thin Wall XLPE Primary Cable	GREY	5205.0	-	17	1700F
2	-	-	WW9BB	3510311 R1	0.79	18.0	Thin Wall XLPE Primary Cable	GREY	5205.0	-	18	1700F

Connector Name	M01-8454
Part Number	1661777C1
Instances	LT/RH - X15/A26 - Trailer Interface (ABS) - Center Pin Circuit:Diagram1 LT/RH - X15/A26 - Trailer Interface (ABS) - Center Pin Circuit:Diagram2 LT/RH - X15/A26 - Trailer Interface (ABS) - Center Pin Circuit:Diagram3 LT/RH - X15/A26 - Trailer Interface (ABS) - Center Pin Circuit:Diagram4
Mates	SW-PARK_BRAKE-3034-01-01A

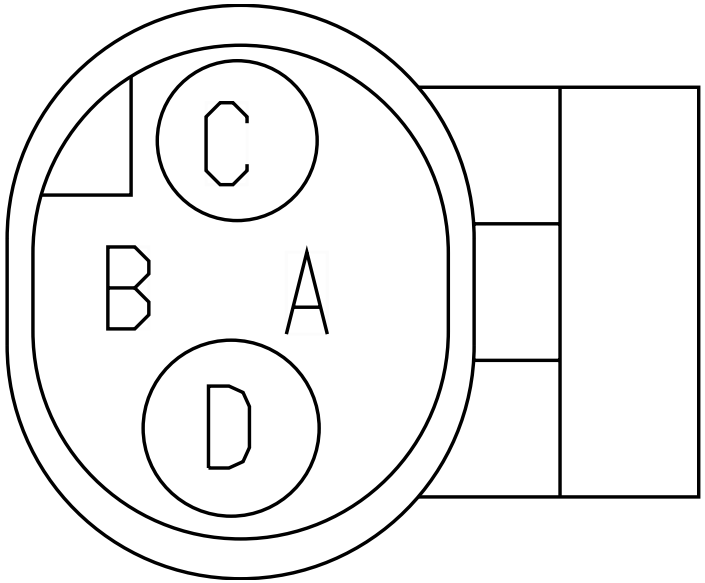

Name	Terminal Part Number	V-Min	Name	Wire Part Number	Wire CSA	Wire Spec	Wire Material description	Wire Color Description	Wire Length	End2 Terminal Part Number	End2 Pin Name	End2 Connect or
C	-	-	NA72EA	2643682 R1	1.16	16.0	Std. Wall XLPE Primary Cable	ORANGE	700.0	-	51	1700F
D	-	-	NA72EB	2643682 R1	1.16	16.0	Std. Wall XLPE Primary Cable	ORANGE	700.0	-	52	1700F

Connector Name M01-8500

Part Number 1686834C1

Instances LT/RH - X15/A26 - Antilock Brake System (ABS) BENDIX 4 Channel Implemenation:Diagram1
LT/RH - X15/A26 - Antilock Brake System (ABS) BENDIX 4 Channel Implemenation:Diagram2
LT/RH - X15/A26 - Antilock Brake System (ABS) BENDIX 4 Channel Implemenation:Diagram3
LT/RH - X15/A26 - Antilock Brake System (ABS) BENDIX 4 Channel Implemenation:Diagram4
LT/RH - X15/A26 - Antilock Brake System (ABS) Bendix 6 Channel Implementation:Diagram1
LT/RH - X15/A26 - Antilock Brake System (ABS) Bendix 6 Channel Implementation:Diagram2
LT/RH - X15/A26 - Antilock Brake System (ABS) Bendix 6 Channel Implementation:Diagram3

Mates MDL-ABS-3003-01-04A

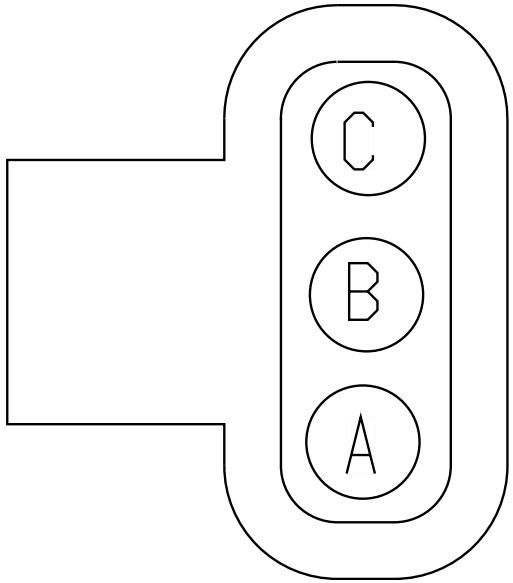

Name	Terminal Part Number	V-Min	Name	Wire Part Number	Wire CSA	Wire Spec	Wire Material description	Wire Color Description	Wire Length	End2 Terminal Part Number	End2 Pin Name	End2 Connect or
A	-	-	MB94	2643673 R1	0.79	18.0	Std. Wall XLPE Primary Cable	GREY	1850.0	-	27	1700F
B	-	-	MB94A	2643673 R1	0.79	18.0	Std. Wall XLPE Primary Cable	GREY	1850.0	-	28	1700F
C	-	-	MB94B	2643673 R1	0.79	18.0	Std. Wall XLPE Primary Cable	GREY	1850.0	-	29	1700F

Connector Name M01-8501

Part Number 1686834C1

Instances LT/RH - X15/A26 - Antilock Brake System (ABS) BENDIX 4 Channel Implemenation:Diagram1
LT/RH - X15/A26 - Antilock Brake System (ABS) BENDIX 4 Channel Implemenation:Diagram2
LT/RH - X15/A26 - Antilock Brake System (ABS) BENDIX 4 Channel Implemenation:Diagram3
LT/RH - X15/A26 - Antilock Brake System (ABS) BENDIX 4 Channel Implemenation:Diagram4
LT/RH - X15/A26 - Antilock Brake System (ABS) Bendix 6 Channel Implementation:Diagram1
LT/RH - X15/A26 - Antilock Brake System (ABS) Bendix 6 Channel Implementation:Diagram2
LT/RH - X15/A26 - Antilock Brake System (ABS) Bendix 6 Channel Implementation:Diagram3

Mates MDL-ABS-3003-01-04B

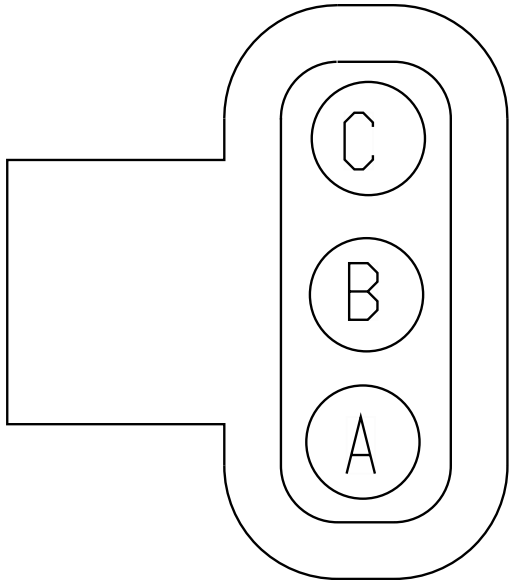

Name	Terminal Part Number	V-Min	Name	Wire Part Number	Wire CSA	Wire Spec	Wire Material description	Wire Color Description	Wire Length	End2 Terminal Part Number	End2 Pin Name	End2 Connect or
A	-	-	MB94H	2643673 R1	0.79	18.0	Std. Wall XLPE Primary Cable	GREY	5775.0	-	34	1700F
B	-	-	MB94J	2643673 R1	0.79	18.0	Std. Wall XLPE Primary Cable	GREY	5775.0	-	35	1700F
C	-	-	MB94K	2643673 R1	0.79	18.0	Std. Wall XLPE Primary Cable	GREY	5775.0	-	36	1700F

Connector Name	M01-8502
Part Number	3757487C1
Instances	LT/RH - X15/A26 - Antilock Brake System (ABS) BENDIX 4 Channel Implemenation:Diagram1 LT/RH - X15/A26 - Antilock Brake System (ABS) BENDIX 4 Channel Implemenation:Diagram2 LT/RH - X15/A26 - Antilock Brake System (ABS) BENDIX 4 Channel Implemenation:Diagram3 LT/RH - X15/A26 - Antilock Brake System (ABS) BENDIX 4 Channel Implemenation:Diagram4 LT/RH - X15/A26 - Antilock Brake System (ABS) Bendix 6 Channel Implementation:Diagram1 LT/RH - X15/A26 - Antilock Brake System (ABS) Bendix 6 Channel Implementation:Diagram2 LT/RH - X15/A26 - Antilock Brake System (ABS) Bendix 6 Channel Implementation:Diagram3
Mates	SNSR-WS-3003-01-04B

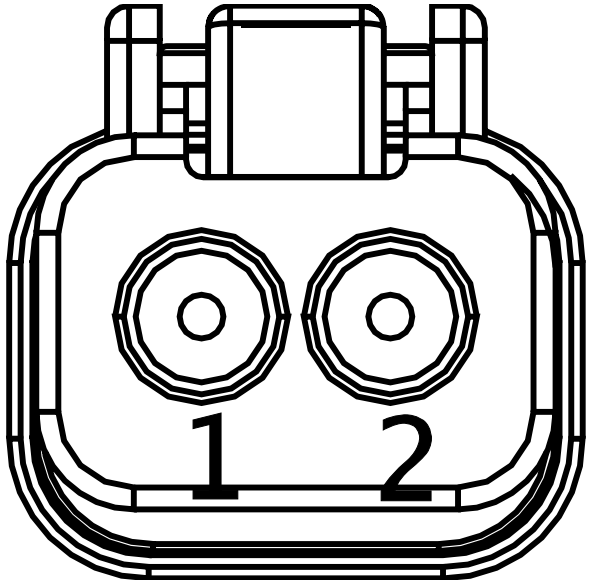

Name	Terminal Part Number	V-Min	Name	Wire Part Number	Wire CSA	Wire Spec	Wire Material description	Wire Color Description	Wire Length	End2 Terminal Part Number	End2 Pin Name	End2 Connect or
1	-	-	NB94C	2643673 R1	0.79	18.0	Std. Wall XLPE Primary Cable	GREY	1900.0	-	30	1700F
2	-	-	NB94D	2643673 R1	0.79	18.0	Std. Wall XLPE Primary Cable	GREY	1900.0	-	31	1700F

Connector Name M01-8503

Part Number 3757487C1

Instances LT/RH - X15/A26 - Antilock Brake System (ABS) BENDIX 4 Channel Implemenation:Diagram1
LT/RH - X15/A26 - Antilock Brake System (ABS) BENDIX 4 Channel Implemenation:Diagram2
LT/RH - X15/A26 - Antilock Brake System (ABS) BENDIX 4 Channel Implemenation:Diagram3
LT/RH - X15/A26 - Antilock Brake System (ABS) BENDIX 4 Channel Implemenation:Diagram4
LT/RH - X15/A26 - Antilock Brake System (ABS) Bendix 6 Channel Implementation:Diagram1
LT/RH - X15/A26 - Antilock Brake System (ABS) Bendix 6 Channel Implementation:Diagram2
LT/RH - X15/A26 - Antilock Brake System (ABS) Bendix 6 Channel Implementation:Diagram3

Mates SNSR-WS-3003-01-04C

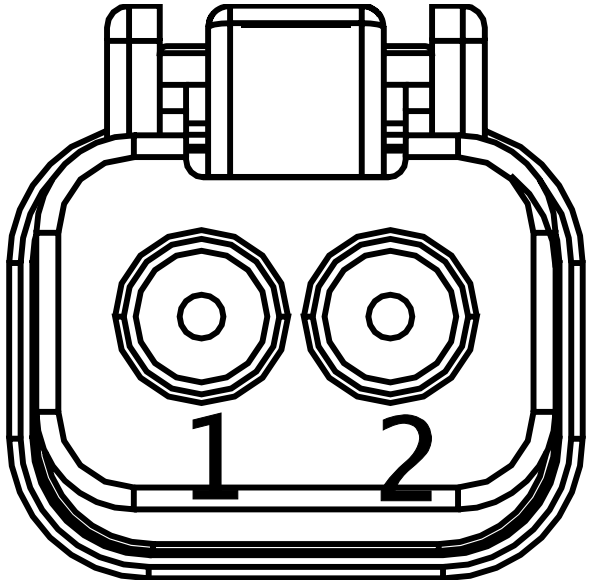

Name	Terminal Part Number	V-Min	Name	Wire Part Number	Wire CSA	Wire Spec	Wire Material description	Wire Color Description	Wire Length	End2 Terminal Part Number	End2 Pin Name	End2 Connect or
1	-	-	NB94E	2643673 R1	0.79	18.0	Std. Wall XLPE Primary Cable	GREY	5875.0	-	32	1700F
2	-	-	NB94F	2643673 R1	0.79	18.0	Std. Wall XLPE Primary Cable	GREY	5875.0	-	33	1700F

Connector Name M01-8504

Part Number 3919376C1

Instances LT/RH - X15/A26 - Antilock Brake System (ABS) - Wabco 4 Channel Implementation:Diagram1
LT/RH - X15/A26 - Antilock Brake System (ABS) - Wabco 4 Channel Implementation:Diagram2
LT/RH - X15/A26 - Antilock Brake System (ABS) - Wabco 4 Channel Implementation:Diagram3
LT/RH - X15/A26 - Antilock Brake System (ABS) - Wabco 4 Channel Implementation:Diagram4
LT/RH - X15/A26 - Antilock Brake System - Wabco ABS 6 Channel Implementation:Diagram1
LT/RH - X15/A26 - Antilock Brake System - Wabco ABS 6 Channel Implementation:Diagram2
LT/RH - X15/A26 - Antilock Brake System - Wabco ABS 6 Channel Implementation:Diagram3

Mates MDL-ABS_SA_LEFT-01

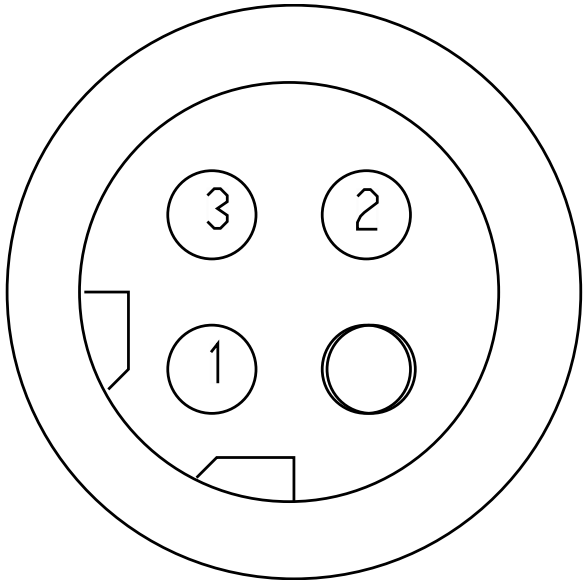

Name	Terminal Part Number	V-Min	Name	Wire Part Number	Wire CSA	Wire Spec	Wire Material description	Wire Color Description	Wire Length	End2 Terminal Part Number	End2 Pin Name	End2 Connect or
1	-	-	MX94M	3510311 R1	0.79	18.0	Thin Wall XLPE Primary Cable	GREY	1810.0	-	27	1700F
2	-	-	MX94MA	3510311 R1	0.79	18.0	Thin Wall XLPE Primary Cable	GREY	1810.0	-	28	1700F
3	-	-	MX94MB	3510311 R1	0.79	18.0	Thin Wall XLPE Primary Cable	GREY	1810.0	-	29	1700F

Connector Name M01-8505

Part Number 3919376C1

Instances LT/RH - X15/A26 - Antilock Brake System (ABS) - Wabco 4 Channel Implementation:Diagram1
LT/RH - X15/A26 - Antilock Brake System (ABS) - Wabco 4 Channel Implementation:Diagram2
LT/RH - X15/A26 - Antilock Brake System (ABS) - Wabco 4 Channel Implementation:Diagram3
LT/RH - X15/A26 - Antilock Brake System (ABS) - Wabco 4 Channel Implementation:Diagram4
LT/RH - X15/A26 - Antilock Brake System - Wabco ABS 6 Channel Implementation:Diagram1
LT/RH - X15/A26 - Antilock Brake System - Wabco ABS 6 Channel Implementation:Diagram2
LT/RH - X15/A26 - Antilock Brake System - Wabco ABS 6 Channel Implementation:Diagram3

Mates MDL-ABS_SA_RIGHT-01

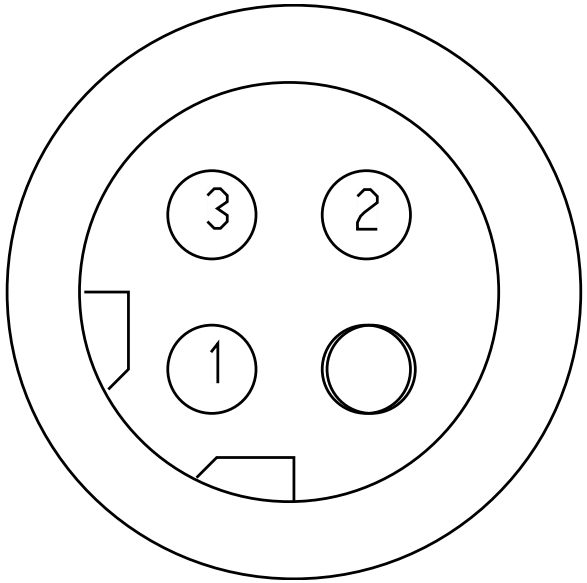

Name	Terminal Part Number	V-Min	Name	Wire Part Number	Wire CSA	Wire Spec	Wire Material description	Wire Color Description	Wire Length	End2 Terminal Part Number	End2 Pin Name	End2 Connect or
1	-	-	MZ94MH	3510311 R1	0.79	18.0	Thin Wall XLPE Primary Cable	GREY	5865.0	-	34	1700F
2	-	-	MZ94MJ	3510311 R1	0.79	18.0	Thin Wall XLPE Primary Cable	GREY	5865.0	-	35	1700F
3	-	-	MZ94MK	3510311 R1	0.79	18.0	Thin Wall XLPE Primary Cable	GREY	5865.0	-	36	1700F

Connector Name M01-8506

Part Number 6111844C1

Instances LT/RH - X15/A26 - Antilock Brake System (ABS) - Wabco 4 Channel Implementation:Diagram1
LT/RH - X15/A26 - Antilock Brake System (ABS) - Wabco 4 Channel Implementation:Diagram2
LT/RH - X15/A26 - Antilock Brake System (ABS) - Wabco 4 Channel Implementation:Diagram3
LT/RH - X15/A26 - Antilock Brake System (ABS) - Wabco 4 Channel Implementation:Diagram4
LT/RH - X15/A26 - Antilock Brake System - Wabco ABS 6 Channel Implementation:Diagram1
LT/RH - X15/A26 - Antilock Brake System - Wabco ABS 6 Channel Implementation:Diagram2
LT/RH - X15/A26 - Antilock Brake System - Wabco ABS 6 Channel Implementation:Diagram3

Mates SNSR-WS_SA_LEFT-01

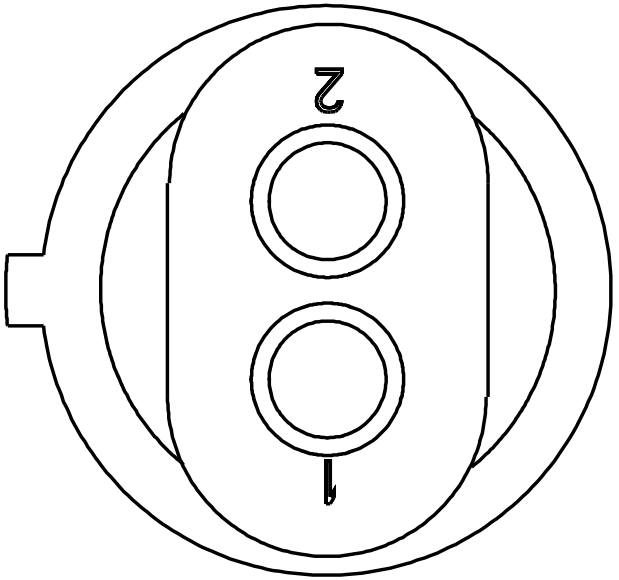

Name	Terminal Part Number	V-Min	Name	Wire Part Number	Wire CSA	Wire Spec	Wire Material description	Wire Color Description	Wire Length	End2 Terminal Part Number	End2 Pin Name	End2 Connect or
1	-	-	NC94MC	3510311 R1	0.79	18.0	Thin Wall XLPE Primary Cable	GREY	1770.0	-	30	1700F
2	-	-	NC94MD	3510311 R1	0.79	18.0	Thin Wall XLPE Primary Cable	GREY	1770.0	-	31	1700F

Connector Name M01-8507

Part Number 6111844C1

Instances LT/RH - X15/A26 - Antilock Brake System (ABS) - Wabco 4 Channel Implementation:Diagram1
LT/RH - X15/A26 - Antilock Brake System (ABS) - Wabco 4 Channel Implementation:Diagram2
LT/RH - X15/A26 - Antilock Brake System (ABS) - Wabco 4 Channel Implementation:Diagram3
LT/RH - X15/A26 - Antilock Brake System (ABS) - Wabco 4 Channel Implementation:Diagram4
LT/RH - X15/A26 - Antilock Brake System - Wabco ABS 6 Channel Implementation:Diagram1
LT/RH - X15/A26 - Antilock Brake System - Wabco ABS 6 Channel Implementation:Diagram2
LT/RH - X15/A26 - Antilock Brake System - Wabco ABS 6 Channel Implementation:Diagram3

Mates SNSR-WS_SA_RIGHT-01

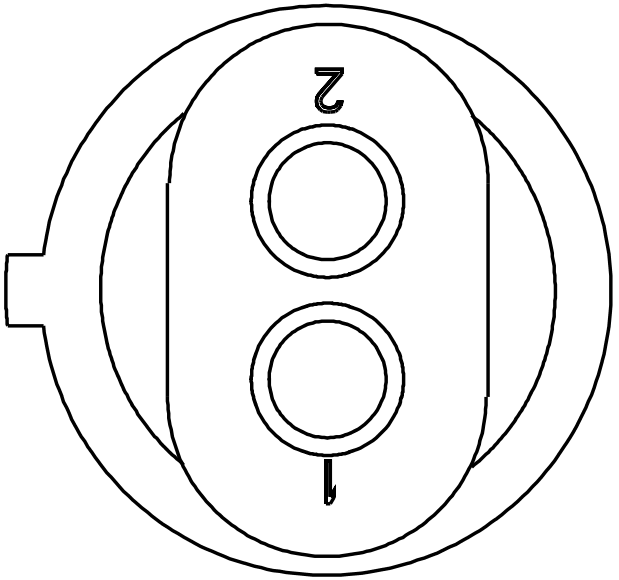

Name	Terminal Part Number	V-Min	Name	Wire Part Number	Wire CSA	Wire Spec	Wire Material description	Wire Color Description	Wire Length	End2 Terminal Part Number	End2 Pin Name	End2 Connect or
1	-	-	PC94ME	3510311 R1	0.79	18.0	Thin Wall XLPE Primary Cable	GREY	5865.0	-	32	1700F
2	-	-	PC94MF	3510311 R1	0.79	18.0	Thin Wall XLPE Primary Cable	GREY	5865.0	-	33	1700F

Connector Name	M01-8550B
Part Number	587567C91
Instances	LT/RH - X15/A26 - Fuel Heater (Vehicle Powered) (Davco):Diagram2
Mates	DEV-FUEL_FILTER_ASSY-01-A2 6-HRZN-HTR

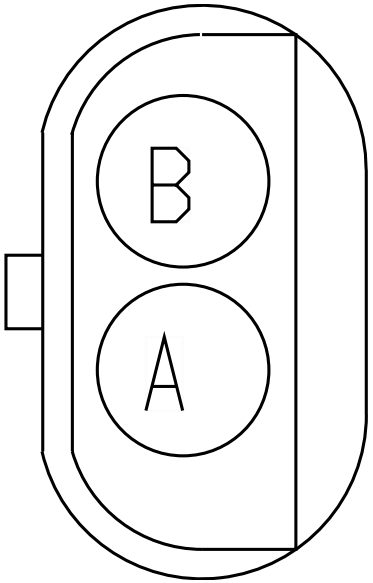

Name	Terminal Part Number	V-Min	Name	Wire Part Number	Wire CSA	Wire Spec	Wire Material description	Wire Color Description	Wire Length	End2 Terminal Part Number	End2 Pin Name	End2 Connect or
A	-	-	MH19	2643782 R1	1.91	14.0	Std. Wall XLPE Primary Cable	GREY	1745.0	-	6	1700F
B	-	-	MH19-GA	2643689 R1	1.91	14.0	Std. Wall XLPE Primary Cable	WHITE	2425.0	-	-	-

Connector Name M01-8550

Part Number 587567C91

Instances LT/RH - X15/A26 - Fuel Heater (Vehicle Powered) (Davco):Diagram1
LT/RH - X15/A26 - Fuel Heater (Vehicle Powered) (RAVCOR):Diagram1

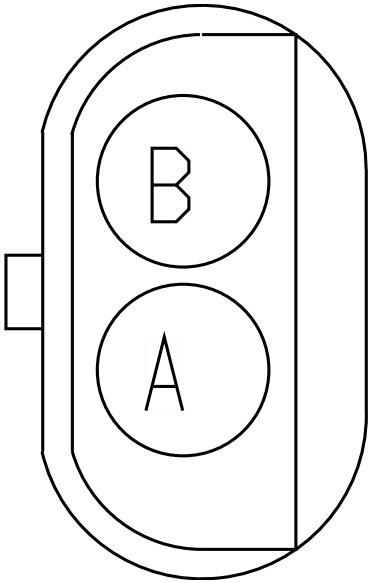

Name	Terminal Part Number	V-Min	Name	Wire Part Number	Wire CSA	Wire Spec	Wire Material description	Wire Color Description	Wire Length	End2 Terminal Part Number	End2 Pin Name	End2 Connect or
A	-	-	MK19	2643782 R1	1.91	14.0	Std. Wall XLPE Primary Cable	GREY	1945.0	-	6	1700F
B	-	-	MK19-GA	2643689 R1	1.91	14.0	Std. Wall XLPE Primary Cable	WHITE	1140.0	-	-	-

Connector Name	M01-8600
Part Number	587566C91
Instances	LT/RH A26 - Cooling Fan Control With Switch:Diagram1 LT/RH A26 - Cooling Fan Control Without Switch:Diagram1 LT/RH X15 - Cooling Fan Control With Switch:Diagram1 LT/RH X15 - Cooling Fan Control Without Switch:Diagram1
Mates	GND-RADIATOR-5014-01-03A

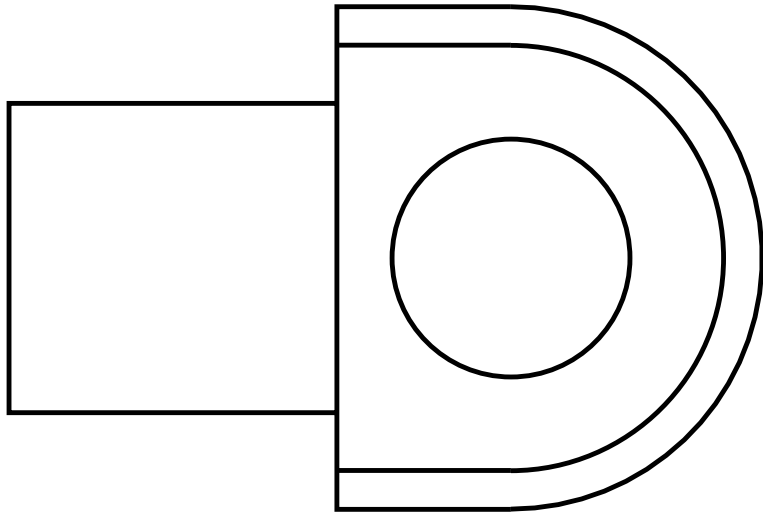

Name	Terminal Part Number	V-Min	Name	Wire Part Number	Wire CSA	Wire Spec	Wire Material description	Wire Color Description	Wire Length	End2 Terminal Part Number	End2 Pin Name	End2 Connect or
A	-	-	MA11-GC	2643787 R1	3.01	12.0	Std. Wall XLPE Primary Cable	WHITE	1960.0	-	A	4005B

Connector Name	M01-8903
Part Number	6111813C1
Instances	LT/RH - X15/A26 - Adaptive Cruise Control (Bendix - Fusion W/ O DIU & N/ Safety Direct & Tweeters):Diagram1 LT/RH - X15/A26 - Adaptive Cruise Control (Bendix - Fusion W/ O DIU & N/ Safety Direct & Reg Speakers):Diagram1 LT/RH - X15/A26 - Adaptive Cruise Control (Bendix - Fusion W/ O DIU & W/ Safety Direct & Reg Speakers):Diagram1 LT/RH - X15/A26 - Adaptive Cruise Control (Bendix - Fusion W/ O DIU & W/ Safety Direct & W/ Tweeters):Diagram1 LT/RH - X15/A26 - Adaptive Cruise Control w/o Display (Bendix):Diagram1 LT/RH - X15/A26 - Lane Departure Warning - (Bendix Fusion W/ Safety Direct))(US & Canada):Diagram1 LT/RH - X15/A26 - Lane Departure Warning - Bendix:Diagram1
Mates	SNSR-BENDIX_RADR-3000-03-0 1A-M01-8903

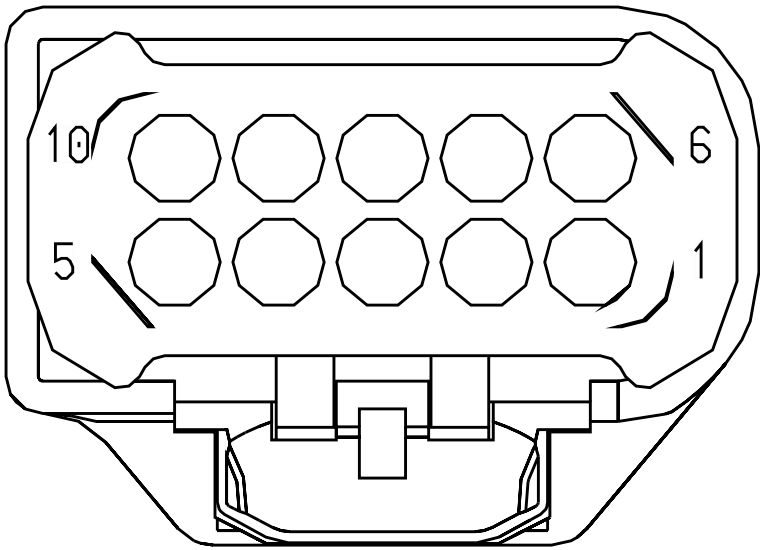

Name	Terminal Part Number	V-Min	Name	Wire Part Number	Wire CSA	Wire Spec	Wire Material description	Wire Color Description	Wire Length	End2 Terminal Part Number	End2 Pin Name	End2 Connector
1	-	-	-	-	-	-	-	-	-	-	-	-
2	-	-	-	-	-	-	-	-	-	-	-	-
5	-	-	NW67-GG	3510358 R1	0.53	20.0	Thin Wall XLPE Primary Cable	WHITE	4135.0	-	37	1700F
5	-	-	NW67-GG	3510358 R1	0.53	20.0	Thin Wall XLPE Primary Cable	WHITE	4135.0	-	-	-
6	-	-	-	-	-	-	-	-	-	-	-	-
7	-	-	-	-	-	-	-	-	-	-	-	-
8	-	-	NW67Y	3510322 R1	0.53	20.0	Thin Wall XLPE Primary Cable	PINK	4135.0	-	38	1700F

Connector Name	M01-8904
Part Number	3852527C1
Instances	LT/RH - X15/A26 - Adaptive Cruise Control w/o Display (Wabco):Diagram1
Mates	SNSR-WABCO_RADR-3000-04-01A

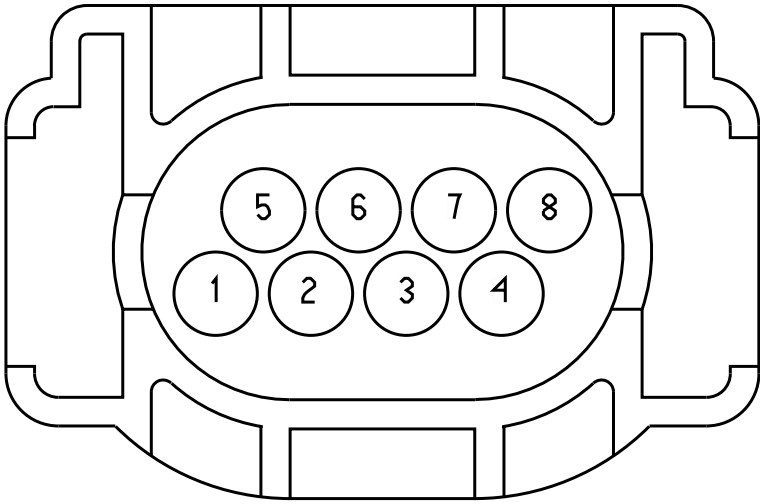

Name	Terminal Part Number	V-Min	Name	Wire Part Number	Wire CSA	Wire Spec	Wire Material description	Wire Color Description	Wire Length	End2 Terminal Part Number	End2 Pin Name	End2 Connect or
1	-	-	WU67YB	3510322 R1	0.53	20.0	Thin Wall XLPE Primary Cable	PINK	690.0	-	X	-
2	-	-	WU67YC	3510322 R1	0.53	20.0	Thin Wall XLPE Primary Cable	PINK	690.0	-	X	-
3	-	-	-	-	-	-	-	-	-	-	-	-
6	-	-	-	-	-	-	-	-	-	-	-	-
8	-	-	WU67-G	3510358 R1	0.53	20.0	Thin Wall XLPE Primary Cable	WHITE	4135.0	-	37	1700F

Connector Name	M01-8993F
Part Number	3823761C1
Instances	LT/RH - X15/A26 - Tire Pressure (TPMS) (US & Canada):Diagram1
Mates	MODU-TPMS-01

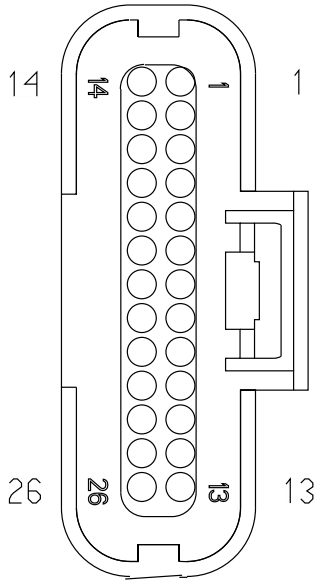

Name	Terminal Part Number	V-Min	Name	Wire Part Number	Wire CSA	Wire Spec	Wire Material description	Wire Color Description	Wire Length	End2 Terminal Part Number	End2 Pin Name	End2 Connector
1	-	-	NS22AG	3510359 R1	0.79	18.0	Thin Wall XLPE Primary Cable	WHITE	1770.0	-	48	1700F
2	-	-	NS22AA	3510323 R1	0.79	18.0	Thin Wall XLPE Primary Cable	PINK	1770.0	-	47	1700F
11	-	-	-	-	-	-	-	-	-	-	-	-
12	-	-	-	-	-	-	-	-	-	-	-	-

Connector Name	M02-8351
Part Number	3554317C1
Instances	LoneStar - X15 - Windshield Washer Pump & Low Fluid Sensor:Diagram1
Mates	Washer_Bottle-1029-04-01A- LS

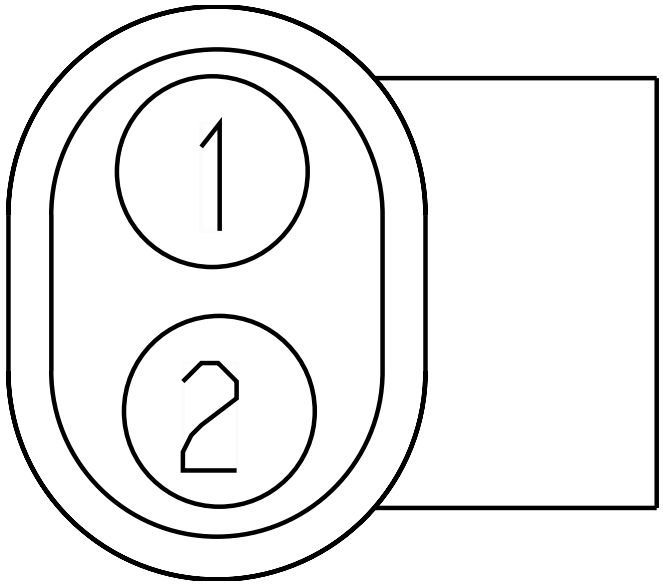

Name	Terminal Part Number	V-Min	Name	Wire Part Number	Wire CSA	Wire Spec	Wire Material description	Wire Color Description	Wire Length	End2 Terminal Part Number	End2 Pin Name	End2 Connect or
1	-	-	WW87A	3510311 R1	0.79	18.0	Thin Wall XLPE Primary Cable	GREY	5205.0	-	17	1700F
2	-	-	WW9BB	3510311 R1	0.79	18.0	Thin Wall XLPE Primary Cable	GREY	5205.0	-	18	1700F

Connector Name	M02-8352
Part Number	3536864C1
Instances	LoneStar - X15 - Windshield Washer Pump:Diagram1 LoneStar - X15 - Windshield Washer Pump & Low Fluid Sensor:Diagram1
Mates	Washer_Bottle-1029-04-01A- LS

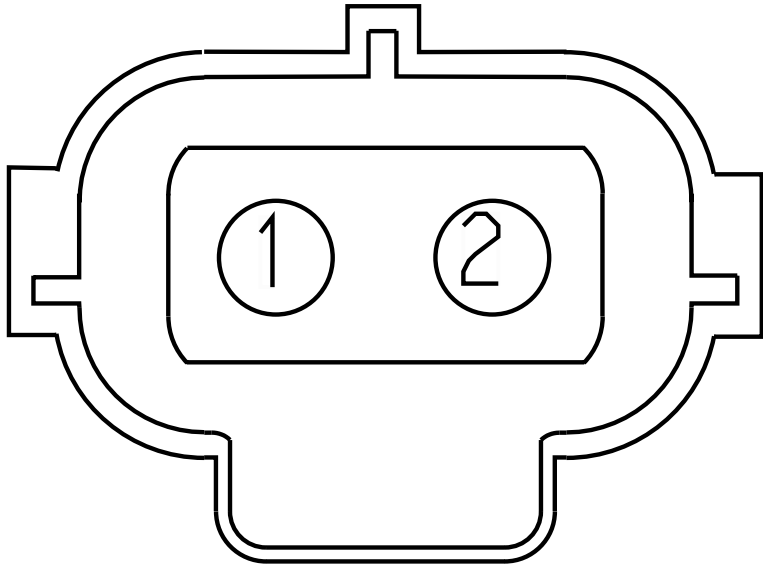

Name	Terminal Part Number	V-Min	Name	Wire Part Number	Wire CSA	Wire Spec	Wire Material description	Wire Color Description	Wire Length	End2 Terminal Part Number	End2 Pin Name	End2 Connect or
1	-	-	MA87C	2643680 R1	1.16	16.0	Std. Wall XLPE Primary Cable	GREY	5165.0	-	19	1700F
2	-	-	MA87D	2643680 R1	1.16	16.0	Std. Wall XLPE Primary Cable	GREY	5165.0	-	20	1700F

Connector Name	M02-8454
Part Number	1661777C1
Instances	LoneStar - X15 - Trailer Interface (ABS) - Center Pin Circuit:Diagram1 LoneStar - X15 - Trailer Interface (ABS) - Center Pin Circuit:Diagram2 LoneStar - X15 - Trailer Interface (ABS) - Center Pin Circuit:Diagram3 LoneStar - X15 - Trailer Interface (ABS) - Center Pin Circuit:Diagram4
Mates	SW-PARK_BRAKE-3034-01-01A

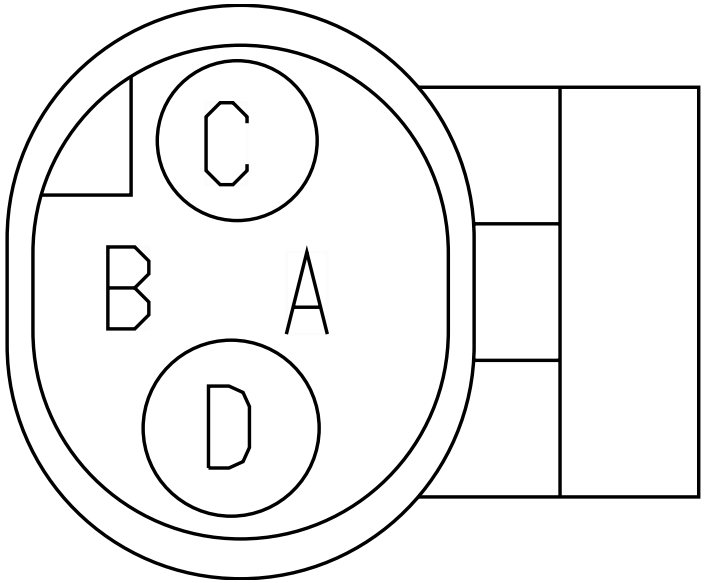

Name	Terminal Part Number	V-Min	Name	Wire Part Number	Wire CSA	Wire Spec	Wire Material description	Wire Color Description	Wire Length	End2 Terminal Part Number	End2 Pin Name	End2 Connect or
C	-	-	NA72EA	2643682 R1	1.16	16.0	Std. Wall XLPE Primary Cable	ORANGE	700.0	-	51	1700F
D	-	-	NA72EB	2643682 R1	1.16	16.0	Std. Wall XLPE Primary Cable	ORANGE	700.0	-	52	1700F

Connector Name M02-8500

Part Number 1686834C1

Instances LoneStar - X15 - Antilock Brake System (ABS) [Bendix 6 Channel Implementation]:Diagram1
LoneStar - X15 - Antilock Brake System (ABS) [Bendix 6 Channel Implementation]:Diagram2
LoneStar - X15 - Antilock Brake System (ABS) [Bendix 6 Channel Implementation]:Diagram3
LoneStar - X15 - Antilock Brake System (ABS)-BENDIX 4 Channel Implemenation:Diagram1
LoneStar - X15 - Antilock Brake System (ABS)-BENDIX 4 Channel Implemenation:Diagram2
LoneStar - X15 - Antilock Brake System (ABS)-BENDIX 4 Channel Implemenation:Diagram3
LoneStar - X15 - Antilock Brake System (ABS)-BENDIX 4 Channel Implemenation:Diagram4

Mates MDL-ABS-3003-01-04A

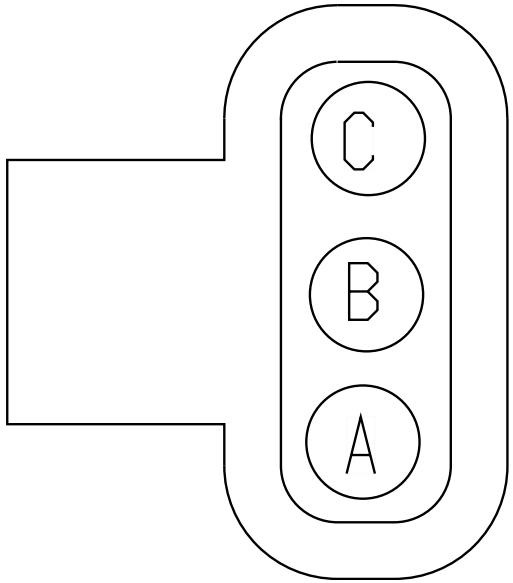

Name	Terminal Part Number	V-Min	Name	Wire Part Number	Wire CSA	Wire Spec	Wire Material description	Wire Color Description	Wire Length	End2 Terminal Part Number	End2 Pin Name	End2 Connect or
A	-	-	MB94	2643673 R1	0.79	18.0	Std. Wall XLPE Primary Cable	GREY	1850.0	-	27	1700F
B	-	-	MB94A	2643673 R1	0.79	18.0	Std. Wall XLPE Primary Cable	GREY	1850.0	-	28	1700F
C	-	-	MB94B	2643673 R1	0.79	18.0	Std. Wall XLPE Primary Cable	GREY	1850.0	-	29	1700F

Connector Name M02-8501

Part Number 1686834C1

Instances LoneStar - X15 - Antilock Brake System (ABS) [Bendix 6 Channel Implementation]:Diagram1
LoneStar - X15 - Antilock Brake System (ABS) [Bendix 6 Channel Implementation]:Diagram2
LoneStar - X15 - Antilock Brake System (ABS) [Bendix 6 Channel Implementation]:Diagram3
LoneStar - X15 - Antilock Brake System (ABS)-BENDIX 4 Channel Implemenation:Diagram1
LoneStar - X15 - Antilock Brake System (ABS)-BENDIX 4 Channel Implemenation:Diagram2
LoneStar - X15 - Antilock Brake System (ABS)-BENDIX 4 Channel Implemenation:Diagram3
LoneStar - X15 - Antilock Brake System (ABS)-BENDIX 4 Channel Implemenation:Diagram4

Mates MDL-ABS-3003-01-04B

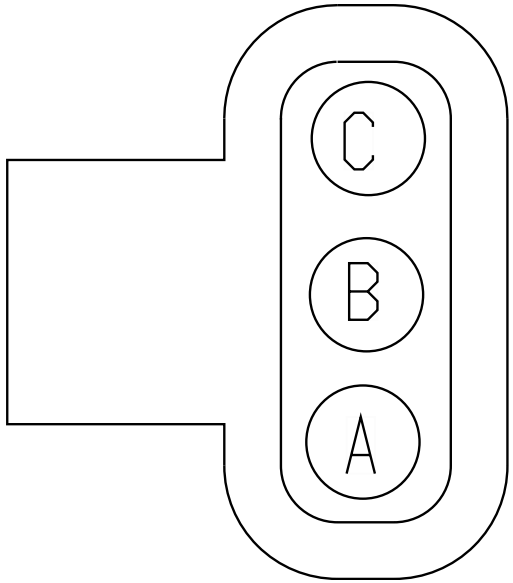

Name	Terminal Part Number	V-Min	Name	Wire Part Number	Wire CSA	Wire Spec	Wire Material description	Wire Color Description	Wire Length	End2 Terminal Part Number	End2 Pin Name	End2 Connect or
A	-	-	MB94H	2643673 R1	0.79	18.0	Std. Wall XLPE Primary Cable	GREY	5775.0	-	34	1700F
B	-	-	MB94J	2643673 R1	0.79	18.0	Std. Wall XLPE Primary Cable	GREY	5775.0	-	35	1700F
C	-	-	MB94K	2643673 R1	0.79	18.0	Std. Wall XLPE Primary Cable	GREY	5775.0	-	36	1700F

Connector Name M02-8502

Part Number 3757487C1

Instances LoneStar - X15 - Antilock Brake System (ABS) [Bendix 6 Channel Implementation]:Diagram1
LoneStar - X15 - Antilock Brake System (ABS) [Bendix 6 Channel Implementation]:Diagram2
LoneStar - X15 - Antilock Brake System (ABS) [Bendix 6 Channel Implementation]:Diagram3
LoneStar - X15 - Antilock Brake System (ABS)-BENDIX 4 Channel Implemenation:Diagram1
LoneStar - X15 - Antilock Brake System (ABS)-BENDIX 4 Channel Implemenation:Diagram2
LoneStar - X15 - Antilock Brake System (ABS)-BENDIX 4 Channel Implemenation:Diagram3
LoneStar - X15 - Antilock Brake System (ABS)-BENDIX 4 Channel Implemenation:Diagram4

Mates SNSR-WS-3003-01-04B

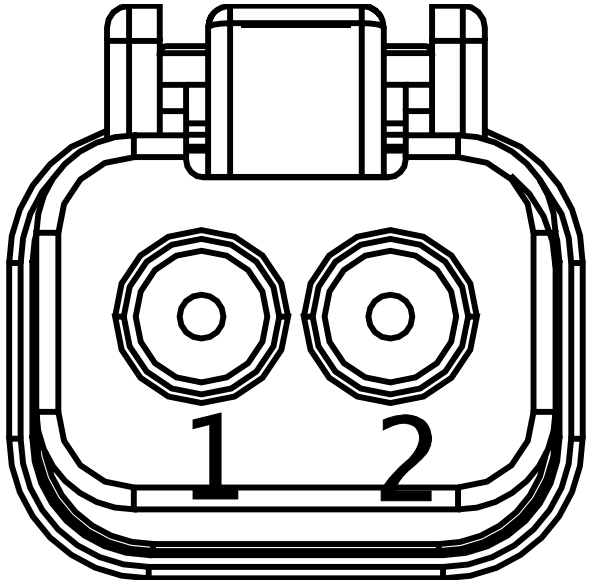

Name	Terminal Part Number	V-Min	Name	Wire Part Number	Wire CSA	Wire Spec	Wire Material description	Wire Color Description	Wire Length	End2 Terminal Part Number	End2 Pin Name	End2 Connect or
1	-	-	NB94C	2643673 R1	0.79	18.0	Std. Wall XLPE Primary Cable	GREY	1900.0	-	30	1700F
2	-	-	NB94D	2643673 R1	0.79	18.0	Std. Wall XLPE Primary Cable	GREY	1900.0	-	31	1700F

Connector Name M02-8503

Part Number 3757487C1

Instances LoneStar - X15 - Antilock Brake System (ABS) [Bendix 6 Channel Implementation]:Diagram1
LoneStar - X15 - Antilock Brake System (ABS) [Bendix 6 Channel Implementation]:Diagram2
LoneStar - X15 - Antilock Brake System (ABS) [Bendix 6 Channel Implementation]:Diagram3
LoneStar - X15 - Antilock Brake System (ABS)-BENDIX 4 Channel Implemenation:Diagram1
LoneStar - X15 - Antilock Brake System (ABS)-BENDIX 4 Channel Implemenation:Diagram2
LoneStar - X15 - Antilock Brake System (ABS)-BENDIX 4 Channel Implemenation:Diagram3
LoneStar - X15 - Antilock Brake System (ABS)-BENDIX 4 Channel Implemenation:Diagram4

Mates SNSR-WS-3003-01-04C

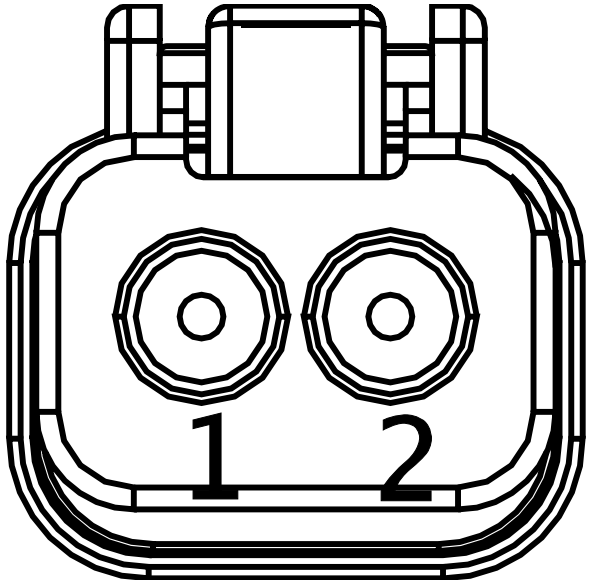

Name	Terminal Part Number	V-Min	Name	Wire Part Number	Wire CSA	Wire Spec	Wire Material description	Wire Color Description	Wire Length	End2 Terminal Part Number	End2 Pin Name	End2 Connect or
1	-	-	NB94E	2643673 R1	0.79	18.0	Std. Wall XLPE Primary Cable	GREY	5875.0	-	32	1700F
2	-	-	NB94F	2643673 R1	0.79	18.0	Std. Wall XLPE Primary Cable	GREY	5875.0	-	33	1700F

Connector Name M02-8504

Part Number 3919376C1

Instances LoneStar - X15 - Antilock Brake System (ABS) - Wabco 4 Channel Implementation:Diagram1
LoneStar - X15 - Antilock Brake System (ABS) - Wabco 4 Channel Implementation:Diagram2
LoneStar - X15 - Antilock Brake System (ABS) - Wabco 4 Channel Implementation:Diagram3
LoneStar - X15 - Antilock Brake System (ABS) - Wabco 4 Channel Implementation:Diagram4
LoneStar - X15 - Antilock Brake System - Wabco ABS 6 Channel Implementation:Diagram1
LoneStar - X15 - Antilock Brake System - Wabco ABS 6 Channel Implementation:Diagram2
LoneStar - X15 - Antilock Brake System - Wabco ABS 6 Channel Implementation:Diagram3

Mates MDL-ABS_SA_LEFT-01

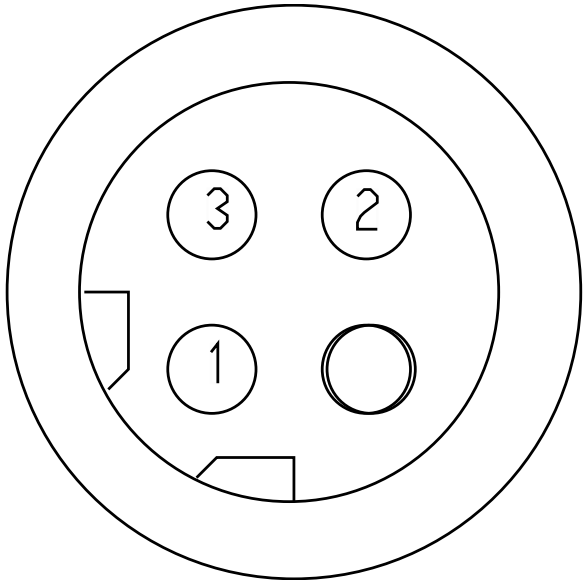

Name	Terminal Part Number	V-Min	Name	Wire Part Number	Wire CSA	Wire Spec	Wire Material description	Wire Color Description	Wire Length	End2 Terminal Part Number	End2 Pin Name	End2 Connect or
1	-	-	MX94M	3510311 R1	0.79	18.0	Thin Wall XLPE Primary Cable	GREY	1810.0	-	27	1700F
2	-	-	MX94MA	3510311 R1	0.79	18.0	Thin Wall XLPE Primary Cable	GREY	1810.0	-	28	1700F
3	-	-	MX94MB	3510311 R1	0.79	18.0	Thin Wall XLPE Primary Cable	GREY	1810.0	-	29	1700F

Connector Name M02-8505

Part Number 3919376C1

Instances LoneStar - X15 - Antilock Brake System (ABS) - Wabco 4 Channel Implementation:Diagram1
LoneStar - X15 - Antilock Brake System (ABS) - Wabco 4 Channel Implementation:Diagram2
LoneStar - X15 - Antilock Brake System (ABS) - Wabco 4 Channel Implementation:Diagram3
LoneStar - X15 - Antilock Brake System (ABS) - Wabco 4 Channel Implementation:Diagram4
LoneStar - X15 - Antilock Brake System - Wabco ABS 6 Channel Implementation:Diagram1
LoneStar - X15 - Antilock Brake System - Wabco ABS 6 Channel Implementation:Diagram2
LoneStar - X15 - Antilock Brake System - Wabco ABS 6 Channel Implementation:Diagram3

Mates MDL-ABS_SA_RIGHT-01

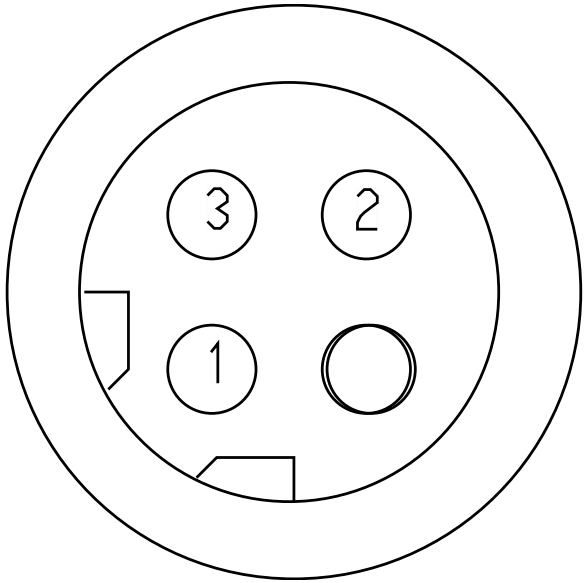

Name	Terminal Part Number	V-Min	Name	Wire Part Number	Wire CSA	Wire Spec	Wire Material description	Wire Color Description	Wire Length	End2 Terminal Part Number	End2 Pin Name	End2 Connect or
1	-	-	MZ94MH	3510311 R1	0.79	18.0	Thin Wall XLPE Primary Cable	GREY	5865.0	-	34	1700F
2	-	-	MZ94MJ	3510311 R1	0.79	18.0	Thin Wall XLPE Primary Cable	GREY	5865.0	-	35	1700F
3	-	-	MZ94MK	3510311 R1	0.79	18.0	Thin Wall XLPE Primary Cable	GREY	5865.0	-	36	1700F

Connector Name M02-8506

Part Number 6111844C1

Instances LoneStar - X15 - Antilock Brake System (ABS) - Wabco 4 Channel Implementation:Diagram1
LoneStar - X15 - Antilock Brake System (ABS) - Wabco 4 Channel Implementation:Diagram2
LoneStar - X15 - Antilock Brake System (ABS) - Wabco 4 Channel Implementation:Diagram3
LoneStar - X15 - Antilock Brake System (ABS) - Wabco 4 Channel Implementation:Diagram4
LoneStar - X15 - Antilock Brake System - Wabco ABS 6 Channel Implementation:Diagram1
LoneStar - X15 - Antilock Brake System - Wabco ABS 6 Channel Implementation:Diagram2
LoneStar - X15 - Antilock Brake System - Wabco ABS 6 Channel Implementation:Diagram3

Mates SNSR-WS_SA_LEFT-01

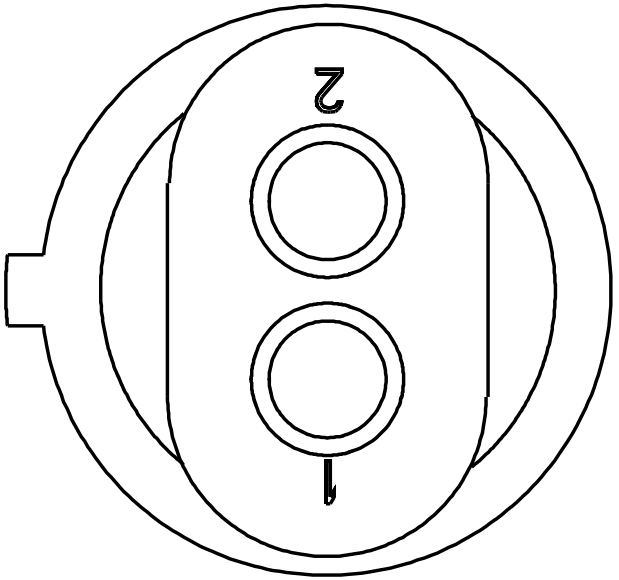

Name	Terminal Part Number	V-Min	Name	Wire Part Number	Wire CSA	Wire Spec	Wire Material description	Wire Color Description	Wire Length	End2 Terminal Part Number	End2 Pin Name	End2 Connect or
1	-	-	NC94MC	3510311 R1	0.79	18.0	Thin Wall XLPE Primary Cable	GREY	1770.0	-	30	1700F
2	-	-	NC94MD	3510311 R1	0.79	18.0	Thin Wall XLPE Primary Cable	GREY	1770.0	-	31	1700F

Connector Name M02-8507

Part Number 6111844C1

Instances LoneStar - X15 - Antilock Brake System (ABS) - Wabco 4 Channel Implementation:Diagram1
LoneStar - X15 - Antilock Brake System (ABS) - Wabco 4 Channel Implementation:Diagram2
LoneStar - X15 - Antilock Brake System (ABS) - Wabco 4 Channel Implementation:Diagram3
LoneStar - X15 - Antilock Brake System (ABS) - Wabco 4 Channel Implementation:Diagram4
LoneStar - X15 - Antilock Brake System - Wabco ABS 6 Channel Implementation:Diagram1
LoneStar - X15 - Antilock Brake System - Wabco ABS 6 Channel Implementation:Diagram2
LoneStar - X15 - Antilock Brake System - Wabco ABS 6 Channel Implementation:Diagram3

Mates SNSR-WS_SA_RIGHT-01

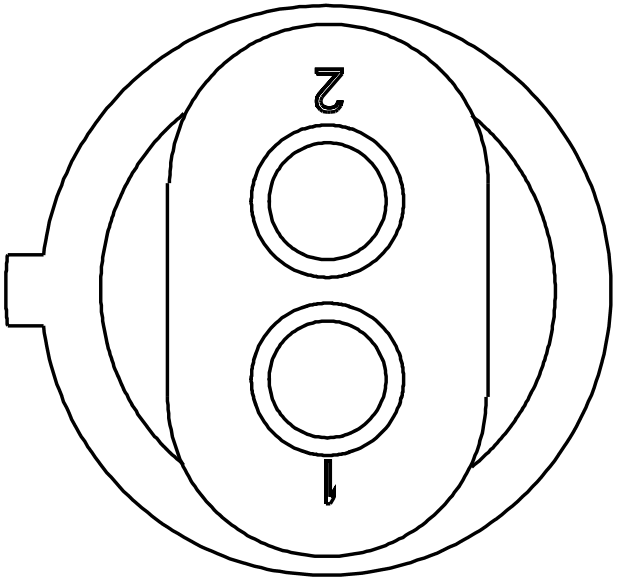

Name	Terminal Part Number	V-Min	Name	Wire Part Number	Wire CSA	Wire Spec	Wire Material description	Wire Color Description	Wire Length	End2 Terminal Part Number	End2 Pin Name	End2 Connect or
1	-	-	PC94ME	3510311 R1	0.79	18.0	Thin Wall XLPE Primary Cable	GREY	5865.0	-	32	1700F
2	-	-	PC94MF	3510311 R1	0.79	18.0	Thin Wall XLPE Primary Cable	GREY	5865.0	-	33	1700F

Connector Name	M02-8550
Part Number	587567C91
Instances	LoneStar - X15 - Fuel Heater (Vehicle Powered) (Davco):Diagram1
Mates	DEV-FUEL_FILTER_ASSY-01-LS -HTR

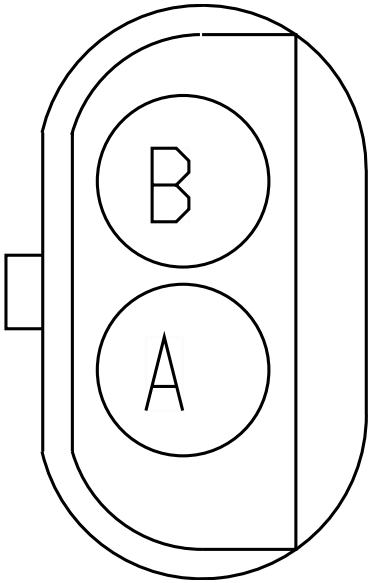

Name	Terminal Part Number	V-Min	Name	Wire Part Number	Wire CSA	Wire Spec	Wire Material description	Wire Color Description	Wire Length	End2 Terminal Part Number	End2 Pin Name	End2 Connect or
A	-	-	MH19	2643782 R1	1.91	14.0	Std. Wall XLPE Primary Cable	GREY	1745.0	-	6	1700F
B	-	-	MH19-GA	2643689 R1	1.91	14.0	Std. Wall XLPE Primary Cable	WHITE	2425.0	-	-	-

Connector Name	M02-8600
Part Number	587566C91
Instances	LoneStar - X15 - Cooling Fan Control With Switch:Diagram1 LoneStar - X15 - Cooling Fan Control Without Switch:Diagram1
Mates	GND-RADIATOR-5014-01-03A

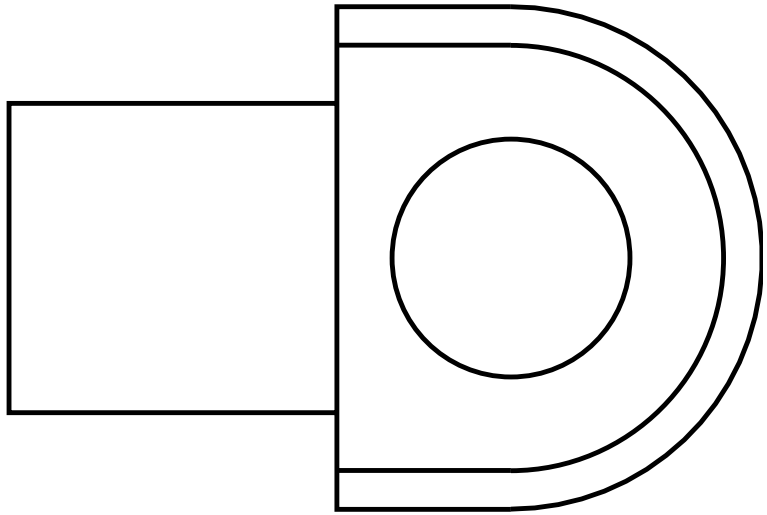

Name	Terminal Part Number	V-Min	Name	Wire Part Number	Wire CSA	Wire Spec	Wire Material description	Wire Color Description	Wire Length	End2 Terminal Part Number	End2 Pin Name	End2 Connect or
A	-	-	MA11-GC	2643787 R1	3.01	12.0	Std. Wall XLPE Primary Cable	WHITE	1960.0	-	A	4005B

Connector Name M02-8903

Part Number 6111813C1

Instances LoneStar - X15 - Adaptive Cruise Control (Bendix - Fusion W/O DIU & N/ Safety Direct & Tweeters):Diagram1
LoneStar - X15 - Adaptive Cruise Control (Bendix - Fusion W/O DIU & W/ Safety Direct & Reg Speakers) Option 1:Diagram1
LoneStar - X15 - Adaptive Cruise Control (Bendix - Fusion W/O DIU & W/ Safety Direct & Reg Speakers) Option 2:Diagram1
LoneStar - X15 - Adaptive Cruise Control (Bendix - Fusion W/O DIU & W/ Safety Direct & W/ Tweeters):Diagram1
LoneStar - X15 - Adaptive Cruise Control w/o Display (Bendix):Diagram1
LoneStar - X15 - Lane Departure Warning - (Bendix Fusion W/ Safety Direct))(US & Canada):Diagram1
LoneStar - X15 - Lane Departure Warning - (Bendix Fusion W/ Safety Direct))(US & Canada)-:Diagram1

Mates SNSR-BENDIX_RADR-3000-03-0 1A

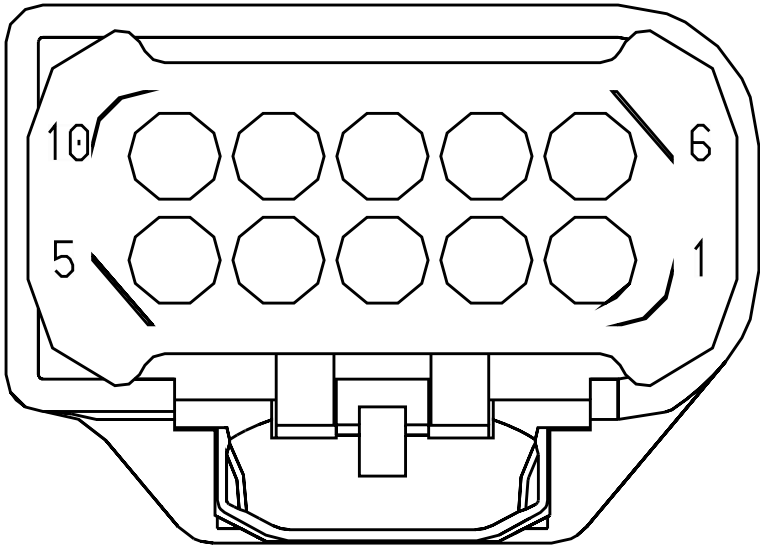

Name	Terminal Part Number	V-Min	Name	Wire Part Number	Wire CSA	Wire Spec	Wire Material description	Wire Color Description	Wire Length	End2 Terminal Part Number	End2 Pin Name	End2 Connector
1	-	-	-	-	-	-	-	-	-	-	-	-
2	-	-	-	-	-	-	-	-	-	-	-	-
5	-	-	NW67-GG	3510358 R1	0.53	20.0	Thin Wall XLPE Primary Cable	WHITE	4135.0	-	37	1700F
6	-	-	-	-	-	-	-	-	-	-	-	-
7	-	-	-	-	-	-	-	-	-	-	-	-
8	-	-	NW67Y	3510322 R1	0.53	20.0	Thin Wall XLPE Primary Cable	PINK	4135.0	-	38	1700F

Connector Name	M02-8904
Part Number	3852527C1
Instances	LoneStar - X15 - Adaptive Cruise Control w/o Display (Wabco):Diagram1
Mates	SNSR-WABCO_RADR-3000-04-01A

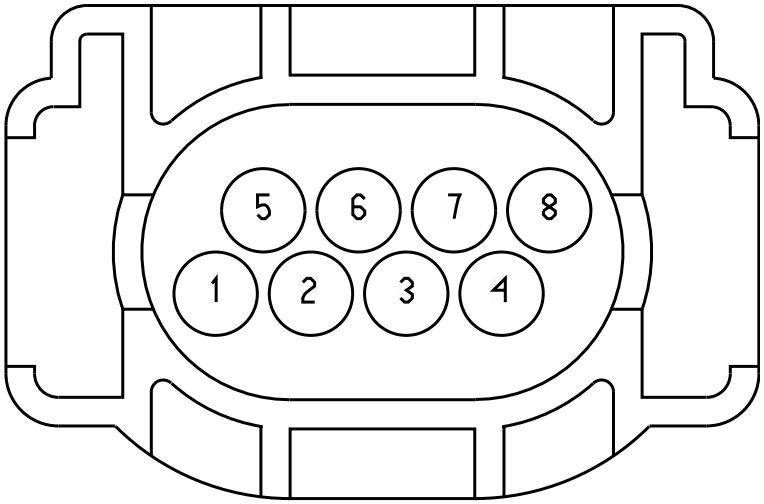

Name	Terminal Part Number	V-Min	Name	Wire Part Number	Wire CSA	Wire Spec	Wire Material description	Wire Color Description	Wire Length	End2 Terminal Part Number	End2 Pin Name	End2 Connect or
1	-	-	WU67YB	3510322 R1	0.53	20.0	Thin Wall XLPE Primary Cable	PINK	690.0	-	X	-
2	-	-	WU67YC	3510322 R1	0.53	20.0	Thin Wall XLPE Primary Cable	PINK	690.0	-	X	-
3	-	-	-	-	-	-	-	-	-	-	-	-
6	-	-	-	-	-	-	-	-	-	-	-	-
8	-	-	WU67-G	3510358 R1	0.53	20.0	Thin Wall XLPE Primary Cable	WHITE	4135.0	-	37	1700F

Connector Name	M02-8993F
Part Number	3823761C1
Instances	LoneStar - X15 - Tire Pressure (TPMS) (US & Canada):Diagram1
Mates	MODU-TPMS-01

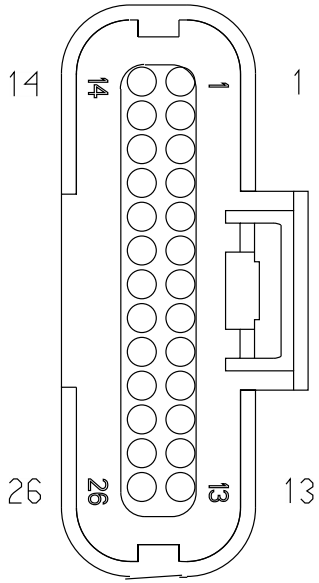

Name	Terminal Part Number	V-Min	Name	Wire Part Number	Wire CSA	Wire Spec	Wire Material description	Wire Color Description	Wire Length	End2 Terminal Part Number	End2 Pin Name	End2 Connector
1	-	-	NS22AG	3510359 R1	0.79	18.0	Thin Wall XLPE Primary Cable	WHITE	1770.0	-	48	1700F
2	-	-	NS22AA	3510323 R1	0.79	18.0	Thin Wall XLPE Primary Cable	PINK	1770.0	-	47	1700F
11	-	-	-	-	-	-	-	-	-	-	-	-
12	-	-	-	-	-	-	-	-	-	-	-	-

Connector Name	NEG_1
Part Number	RING-E-3-8_0
Instances	LT/RH/LoneStar - X15/A26 - JUMP START STUD (DUAL):Diagram1
Mates	DEV-JUMP_START_STUD_NEGATI VE-01

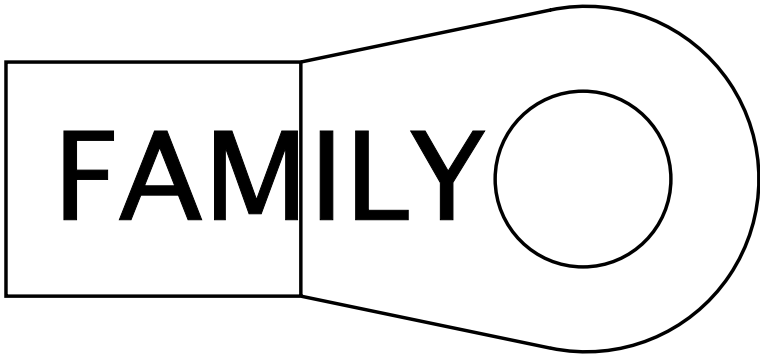

Name	Terminal Part Number	V-Min	Name	Wire Part Number	Wire CSA	Wire Spec	Wire Material description	Wire Color Description	Wire Length	End2 Terminal Part Number	End2 Pin Name	End2 Connect or
A	-	-	14-G	2645943 R1	80.32	0.0	SGR 125	BLACK	1140.0	-	A	6049_A

Connector Name N01-3741A

Part Number 1661375C2

Instances LT/RH/LoneStar - X15/A26 - Auxiliary Air Solenoids 4-pack (2 packs/8 solenoids):Diagram5

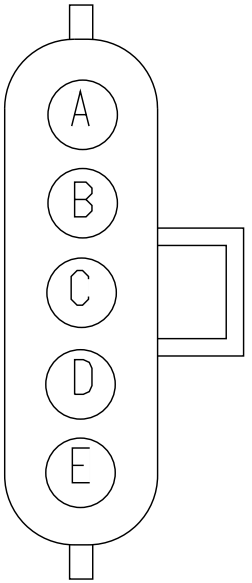

Name	Terminal Part Number	V-Min	Name	Wire Part Number	Wire CSA	Wire Spec	Wire Material description	Wire Color Description	Wire Length	End2 Terminal Part Number	End2 Pin Name	End2 Connect or
A	-	-	SV59-GA	2643689 R1	1.91	14.0	Std. Wall XLPE Primary Cable	WHITE	2160.0	-	-	-
B	-	-	SV59E	2643673 R1	0.79	18.0	Std. Wall XLPE Primary Cable	GREY	3210.0	-	36	1701F
C	-	-	SV59F	2643673 R1	0.79	18.0	Std. Wall XLPE Primary Cable	GREY	3210.0	-	37	1701F
D	-	-	SV59H	2643673 R1	0.79	18.0	Std. Wall XLPE Primary Cable	GREY	3210.0	-	38	1701F

Name	Terminal Part Number	V-Min	Name	Wire Part Number	Wire CSA	Wire Spec	Wire Material description	Wire Color Description	Wire Length	End2 Terminal Part Number	End2 Pin Name	End2 Connect or
E	-	-	SV59J	2643673 R1	0.79	18.0	Std. Wall XLPE Primary Cable	GREY	3210.0	-	39	1701F

Connector Name N01-3741

Part Number 1661375C2

Instances LT/RH/LoneStar - X15/A26 - Auxiliary Air Solenoids 4-pack (1 pack/4 solenoids):Diagram1
LT/RH/LoneStar - X15/A26 - Auxiliary Air Solenoids 4-pack (2 packs/8 solenoids):Diagram5

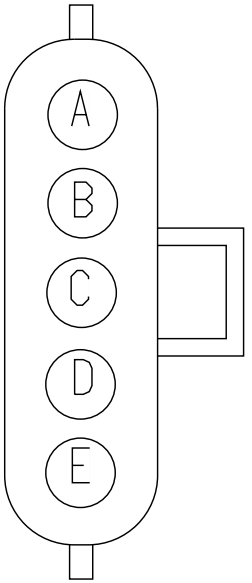

Name	Terminal Part Number	V-Min	Name	Wire Part Number	Wire CSA	Wire Spec	Wire Material description	Wire Color Description	Wire Length	End2 Terminal Part Number	End2 Pin Name	End2 Connect or
A	-	-	CE59-G	2643689 R1	1.91	14.0	Std. Wall XLPE Primary Cable	WHITE	2260.0	-	-	-
B	-	-	CE59A	2643673 R1	0.79	18.0	Std. Wall XLPE Primary Cable	GREY	3310.0	-	32	1701F
C	-	-	CE59B	2643673 R1	0.79	18.0	Std. Wall XLPE Primary Cable	GREY	3310.0	-	33	1701F
D	-	-	CE59C	2643673 R1	0.79	18.0	Std. Wall XLPE Primary Cable	GREY	3310.0	-	34	1701F

Name	Terminal Part Number	V-Min	Name	Wire Part Number	Wire CSA	Wire Spec	Wire Material description	Wire Color Description	Wire Length	End2 Terminal Part Number	End2 Pin Name	End2 Connect or
E	-	-	CE59D	2643673 R1	0.79	18.0	Std. Wall XLPE Primary Cable	GREY	3310.0	-	35	1701F

Connector Name	N01-8802
Part Number	3551896C1
Instances	LT/RH/LoneStar - X15/A26 - Center Chassis ZVR Splice Packs - 8802:Diagram1
Mates	SP-B000-00-10-N1A

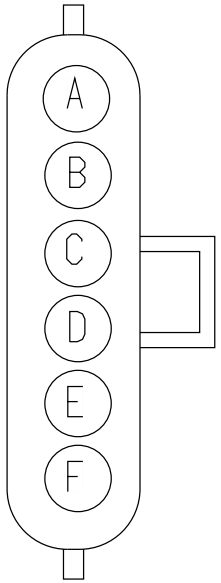

Name	Terminal Part Number	V-Min	Name	Wire Part Number	Wire CSA	Wire Spec	Wire Material description	Wire Color Description	Wire Length	End2 Terminal Part Number	End2 Pin Name	End2 Connect or
A	-	-	PB9BC	2643673 R1	0.79	18.0	Std. Wall XLPE Primary Cable	GREY	2085.0	-	-	-
C	-	-	FB9BE	2643673 R1	0.79	18.0	Std. Wall XLPE Primary Cable	GREY	1875.0	-	-	-
C	-	-	FA9BE	2643673 R1	0.79	18.0	Std. Wall XLPE Primary Cable	GREY	850.0	-	-	-
C	-	-	FF9BE	2643673 R1	0.79	18.0	Std. Wall XLPE Primary Cable	GREY	2045.0	-	-	-

Name	Terminal Part Number	V-Min	Name	Wire Part Number	Wire CSA	Wire Spec	Wire Material description	Wire Color Description	Wire Length	End2 Terminal Part Number	End2 Pin Name	End2 Connector
C	-	-	FE9BE	2643673 R1	0.79	18.0	Std. Wall XLPE Primary Cable	GREY	750.0	-	-	-
C	-	-	FD9BE	2643673 R1	0.79	18.0	Std. Wall XLPE Primary Cable	GREY	1685.0	-	-	-
C	-	-	FC9BE	2643673 R1	0.79	18.0	Std. Wall XLPE Primary Cable	GREY	1950.0	-	-	-
D	-	-	NR9BF	2643673 R1	0.79	18.0	Std. Wall XLPE Primary Cable	GREY	1400.0	-	-	-

Connector Name N01-9100A

Part Number 1661778C1

Instances LT/RH/LoneStar - X15/A26 - Fuel Level (Single Tank - Left Side):Diagram1

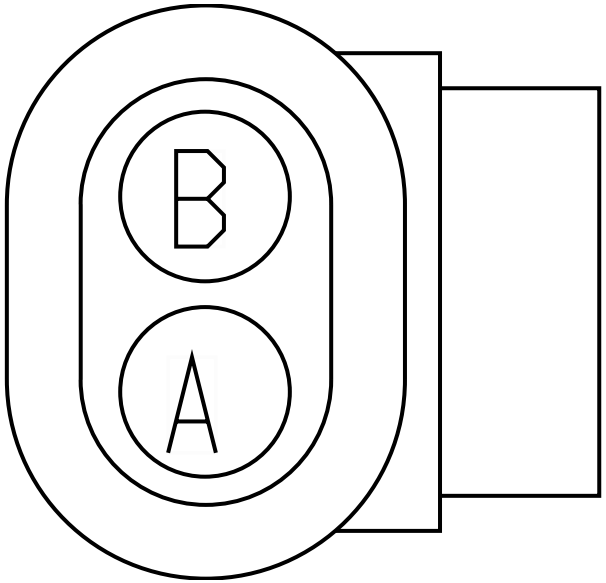

Name	Terminal Part Number	V-Min	Name	Wire Part Number	Wire CSA	Wire Spec	Wire Material description	Wire Color Description	Wire Length	End2 Terminal Part Number	End2 Pin Name	End2 Connect or
A	-	-	FA36A	2643676 R1	0.79	18.0	Std. Wall XLPE Primary Cable	TAN	2685.0	-	27	1701F
B	-	-	FA9BE	2643673 R1	0.79	18.0	Std. Wall XLPE Primary Cable	GREY	850.0	-	-	-

Connector Name N01-9100B

Part Number 1661778C1

Instances LT/RH/LoneStar - X15/A26 - Fuel Level (Single Tank - Left Side):Diagram2

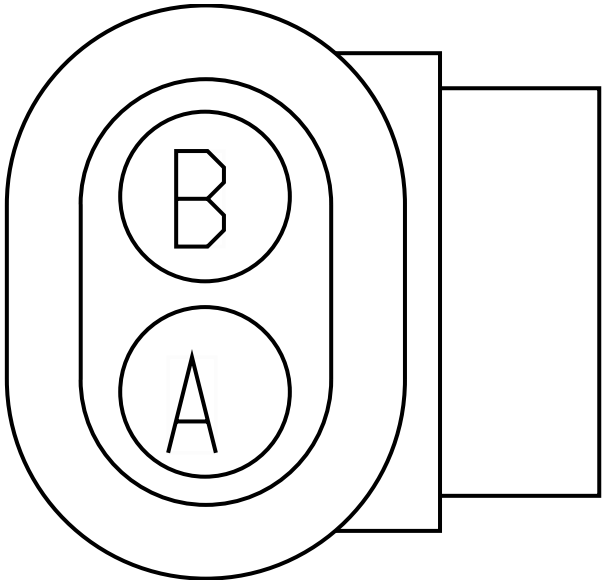

Name	Terminal Part Number	V-Min	Name	Wire Part Number	Wire CSA	Wire Spec	Wire Material description	Wire Color Description	Wire Length	End2 Terminal Part Number	End2 Pin Name	End2 Connect or
A	-	-	FB36A	2643676 R1	0.79	18.0	Std. Wall XLPE Primary Cable	TAN	3710.0	-	27	1701F
B	-	-	FB9BE	2643673 R1	0.79	18.0	Std. Wall XLPE Primary Cable	GREY	1875.0	-	-	-

Connector Name N01-9100C

Part Number 1661778C1

Instances LT/RH/LoneStar - X15/A26 - Fuel Level (Single Tank - Left Side):Diagram3

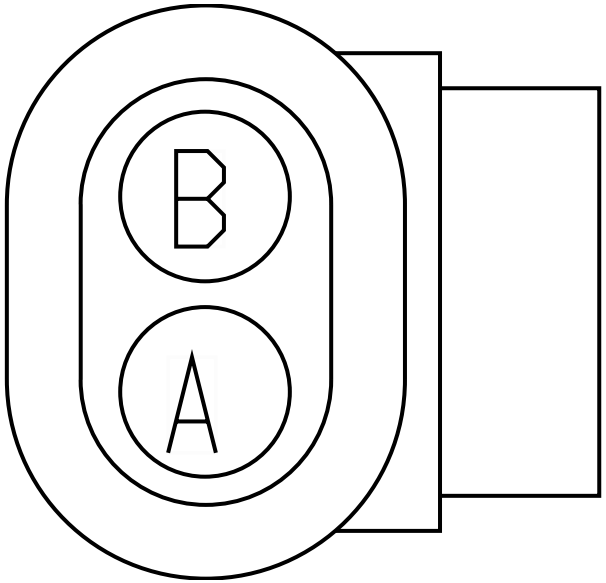

Name	Terminal Part Number	V-Min	Name	Wire Part Number	Wire CSA	Wire Spec	Wire Material description	Wire Color Description	Wire Length	End2 Terminal Part Number	End2 Pin Name	End2 Connect or
A	-	-	FC36A	2643676 R1	0.79	18.0	Std. Wall XLPE Primary Cable	TAN	3785.0	-	27	1701F
B	-	-	FC9BE	2643673 R1	0.79	18.0	Std. Wall XLPE Primary Cable	GREY	1950.0	-	-	-

Connector Name	N01-9100D
Part Number	1661778C1
Instances	LT/RH/LoneStar - X15/A26 - Fuel Level (Single Tank - Left Side):Diagram4
Mates	SNSR-Fuel_Sender-3017-06-0 1A

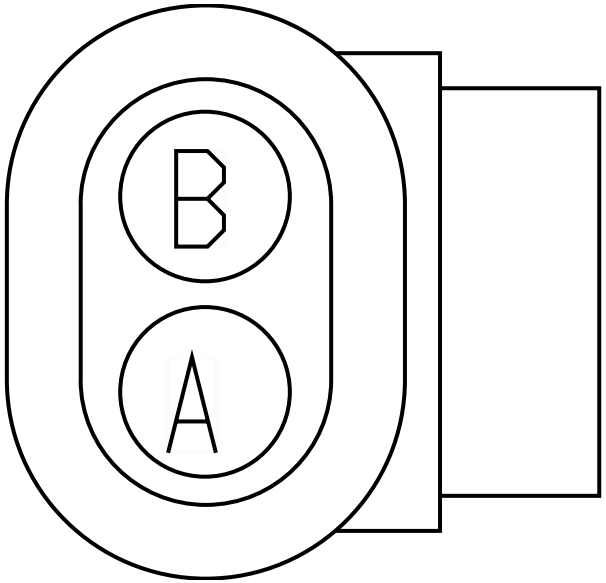

Name	Terminal Part Number	V-Min	Name	Wire Part Number	Wire CSA	Wire Spec	Wire Material description	Wire Color Description	Wire Length	End2 Terminal Part Number	End2 Pin Name	End2 Connect or
A	-	-	FD36A	2643676 R1	0.79	18.0	Std. Wall XLPE Primary Cable	TAN	2000.0	-	27	1701F
B	-	-	FD9BE	2643673 R1	0.79	18.0	Std. Wall XLPE Primary Cable	GREY	1685.0	-	-	-

Connector Name N01-9100E

Part Number 1661778C1

Instances LT/RH/LoneStar - X15/A26 - Fuel Level (Single Tank - Left Side):Diagram5

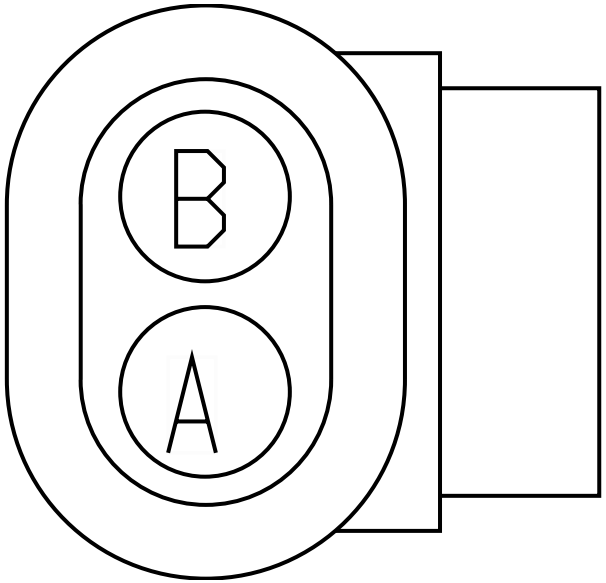

Name	Terminal Part Number	V-Min	Name	Wire Part Number	Wire CSA	Wire Spec	Wire Material description	Wire Color Description	Wire Length	End2 Terminal Part Number	End2 Pin Name	End2 Connect or
A	-	-	FE36A	2643676 R1	0.79	18.0	Std. Wall XLPE Primary Cable	TAN	2585.0	-	27	1701F
B	-	-	FE9BE	2643673 R1	0.79	18.0	Std. Wall XLPE Primary Cable	GREY	750.0	-	-	-

Connector Name N01-9100F

Part Number 1661778C1

Instances LT/RH/LoneStar - X15/A26 - Fuel Level (Single Tank - Left Side):Diagram6

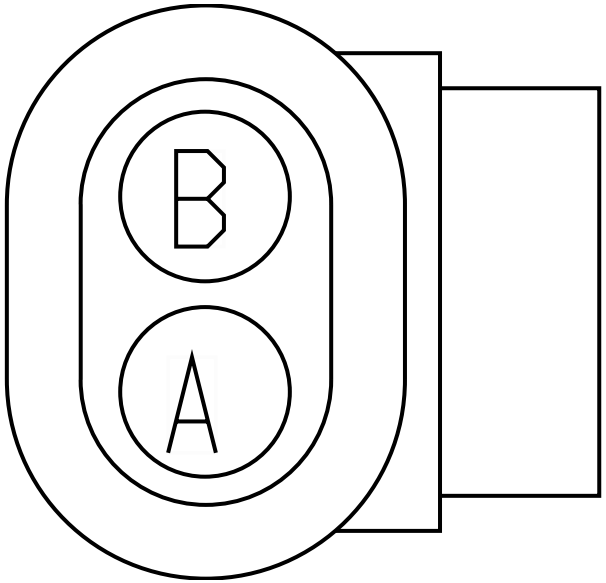

Name	Terminal Part Number	V-Min	Name	Wire Part Number	Wire CSA	Wire Spec	Wire Material description	Wire Color Description	Wire Length	End2 Terminal Part Number	End2 Pin Name	End2 Connect or
A	-	-	FF36A	2643676 R1	0.79	18.0	Std. Wall XLPE Primary Cable	TAN	3880.0	-	27	1701F
B	-	-	FF9BE	2643673 R1	0.79	18.0	Std. Wall XLPE Primary Cable	GREY	2045.0	-	-	-

Connector Name N01-9511A

Part Number 3601685C1

Instances LT/RH - X15/A26 - Bendix Stability Control For Tractor or Tractors with Trailer Tow:Diagram2
LT/RH - X15/A26 - Bendix; Tractor or Towing Truck; W/ Air SUSP; J1939 Driven Lamp:Diagram2

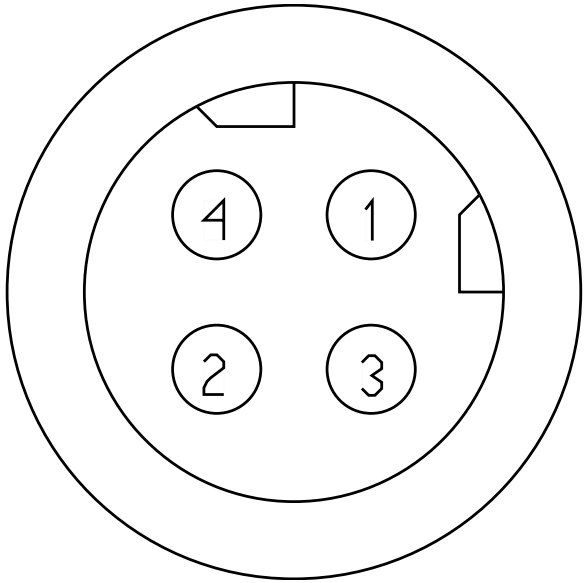

Name	Terminal Part Number	V-Min	Name	Wire Part Number	Wire CSA	Wire Spec	Wire Material description	Wire Color Description	Wire Length	End2 Terminal Part Number	End2 Pin Name	End2 Connect or
1	-	-	PR94SAB	2643673 R1	0.79	18.0	Std. Wall XLPE Primary Cable	GREY	5120.0	-	46	1701F
2	-	-	PR94SBB	2643673 R1	0.79	18.0	Std. Wall XLPE Primary Cable	GREY	5120.0	-	47	1701F
3	-	-	-	-	-	-	-	-	-	-	-	-
4	-	-	-	-	-	-	-	-	-	-	-	-

Connector Name	N01-9511B
Part Number	3601685C1
Instances	LT/RH - X15/A26 - Wabco Full Stability Control:Diagram1
Mates	SNSR-YAW_RATE-3026-02-03A

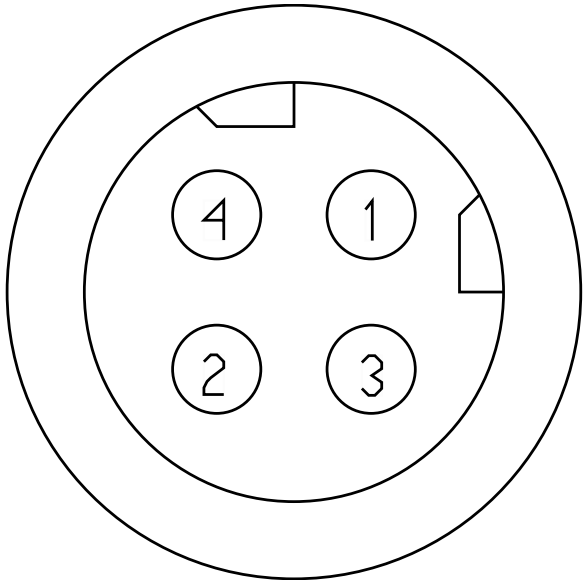

Name	Terminal Part Number	V-Min	Name	Wire Part Number	Wire CSA	Wire Spec	Wire Material description	Wire Color Description	Wire Length	End2 Terminal Part Number	End2 Pin Name	End2 Connect or
1	-	-	[YJ94SN]	V-18-GXL	0.79	18.0	Std. Wall XLPE Primary Cable	Not Applica ble	3010.0	-	46	1701F
2	-	-	[YJ94SP]	V-18-GXL	0.79	18.0	Std. Wall XLPE Primary Cable	Not Applica ble	3010.0	-	47	1701F
3	-	-	-	-	-	-	-	-	-	-	-	-
4	-	-	-	-	-	-	-	-	-	-	-	-

Connector Name N01-9511D
Part Number 3601685C1
Instances LT/RH - X15/A26 - Wabco Full Stability Control:Diagram2

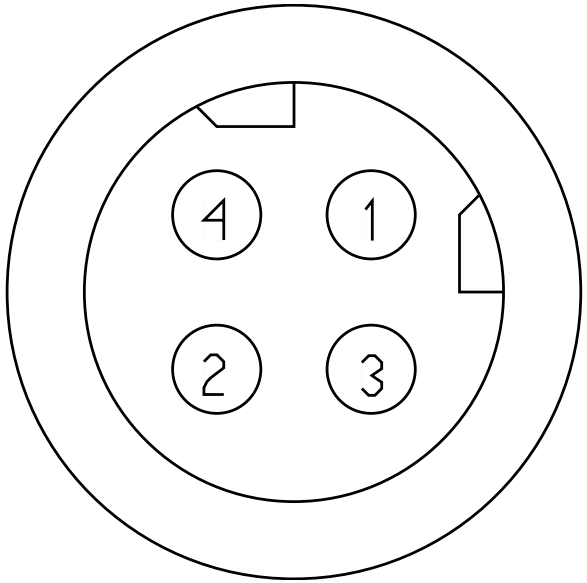

Name	Terminal Part Number	V-Min	Name	Wire Part Number	Wire CSA	Wire Spec	Wire Material description	Wire Color Description	Wire Length	End2 Terminal Part Number	End2 Pin Name	End2 Connect or
1	-	-	[YK94SN]	V-18-GXL	0.79	18.0	Std. Wall XLPE Primary Cable	Not Applica ble	5120.0	-	46	1701F
2	-	-	[YK94SP]	V-18-GXL	0.79	18.0	Std. Wall XLPE Primary Cable	Not Applica ble	5120.0	-	47	1701F
3	-	-	-	-	-	-	-	-	-	-	-	-
4	-	-	-	-	-	-	-	-	-	-	-	-

Connector Name	N01-9511
Part Number	3601685C1
Instances	LT/RH - X15/A26 - Bendix Stability Control For Tractor or Tractors with Trailer Tow:Diagram1 LT/RH - X15/A26 - Bendix; Tractor or Towing Truck; W/ Air SUSP; J1939 Driven Lamp:Diagram1
Mates	SNSR-YAW_RATE-3026-01-01A

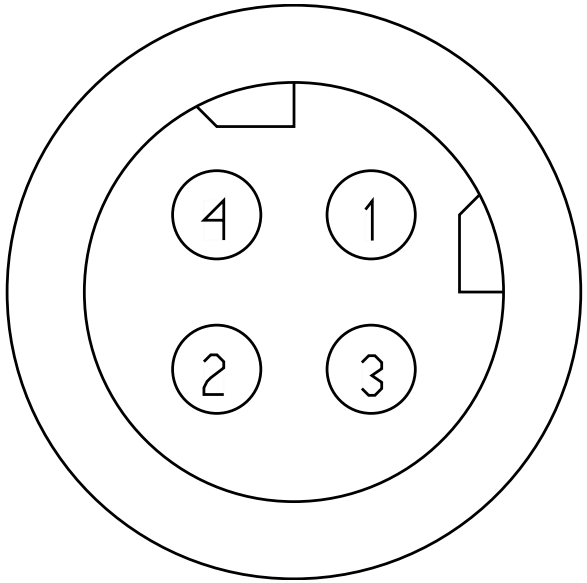

Name	Terminal Part Number	V-Min	Name	Wire Part Number	Wire CSA	Wire Spec	Wire Material description	Wire Color Description	Wire Length	End2 Terminal Part Number	End2 Pin Name	End2 Connect or
1	-	-	PS94SAB	2643673 R1	0.79	18.0	Std. Wall XLPE Primary Cable	GREY	2980.0	-	46	1701F
2	-	-	PS94SBB	2643673 R1	0.79	18.0	Std. Wall XLPE Primary Cable	GREY	2980.0	-	47	1701F
3	-	-	-	-	-	-	-	-	-	-	-	-
4	-	-	-	-	-	-	-	-	-	-	-	-

Connector Name	N01-9512
Part Number	3678796C1
Instances	LT/RH - X15/A26 - Bendix Stability Control For Tractor or Tractors with Trailer Tow:Diagram1 LT/RH - X15/A26 - Bendix Stability Control For Tractor or Tractors with Trailer Tow:Diagram2 LT/RH - X15/A26 - Bendix; Tractor or Towing Truck; W/ Air SUSP; J1939 Driven Lamp:Diagram1 LT/RH - X15/A26 - Bendix; Tractor or Towing Truck; W/ Air SUSP; J1939 Driven Lamp:Diagram2
Mates	SOL-TCV_BENDIX-3026-01-01A

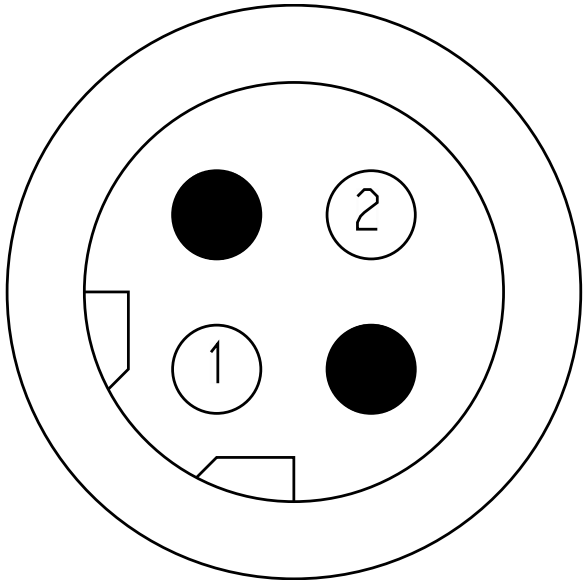

Name	Terminal Part Number	V-Min	Name	Wire Part Number	Wire CSA	Wire Spec	Wire Material description	Wire Color Description	Wire Length	End2 Terminal Part Number	End2 Pin Name	End2 Connector
1	-	-	PM94SJ	2643680 R1	1.16	16.0	Std. Wall XLPE Primary Cable	GREY	1655.0	-	13	1701F
2	-	-	PM94SK	2643680 R1	1.16	16.0	Std. Wall XLPE Primary Cable	GREY	1655.0	-	67	1701F

Connector Name	N01-9513
Part Number	1686834C1
Instances	LT/RH - X15/A26 - Bendix Stability Control For Tractor or Tractors with Trailer Tow:Diagram1 LT/RH - X15/A26 - Bendix Stability Control For Tractor or Tractors with Trailer Tow:Diagram2 LT/RH - X15/A26 - Bendix; Tractor or Towing Truck; W/ Air SUSP; J1939 Driven Lamp:Diagram1 LT/RH - X15/A26 - Bendix; Tractor or Towing Truck; W/ Air SUSP; J1939 Driven Lamp:Diagram2
Mates	MDL-TRAILER-3026-01-02A

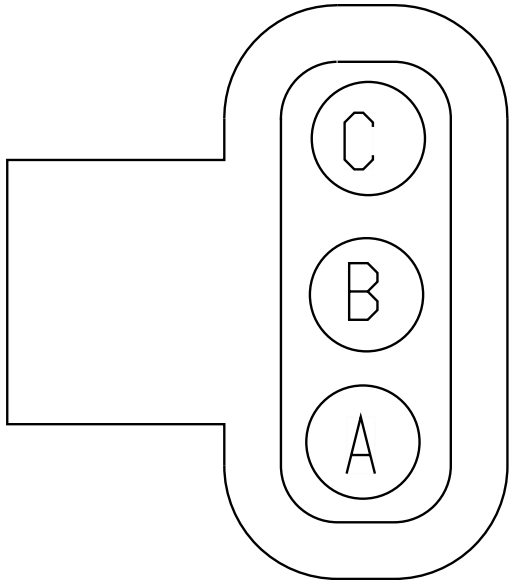

Name	Terminal Part Number	V-Min	Name	Wire Part Number	Wire CSA	Wire Spec	Wire Material description	Wire Color Description	Wire Length	End2 Terminal Part Number	End2 Pin Name	End2 Connector
A	-	-	PM94SM	2643680 R1	1.16	16.0	Std. Wall XLPE Primary Cable	GREY	1400.0	-	72	1701F
B	-	-	PM94SN	2643680 R1	1.16	16.0	Std. Wall XLPE Primary Cable	GREY	1400.0	-	73	1701F
C	-	-	PM94SL	2643680 R1	1.16	16.0	Std. Wall XLPE Primary Cable	GREY	1400.0	-	74	1701F

Connector Name	N01-9514A
Part Number	3678796C1
Instances	LT/RH - X15/A26 - Wabco Full Stability Control:Diagram1 LT/RH - X15/A26 - Wabco Full Stability Control:Diagram2
Mates	SOL-ESC_TCV-3026-02-03A

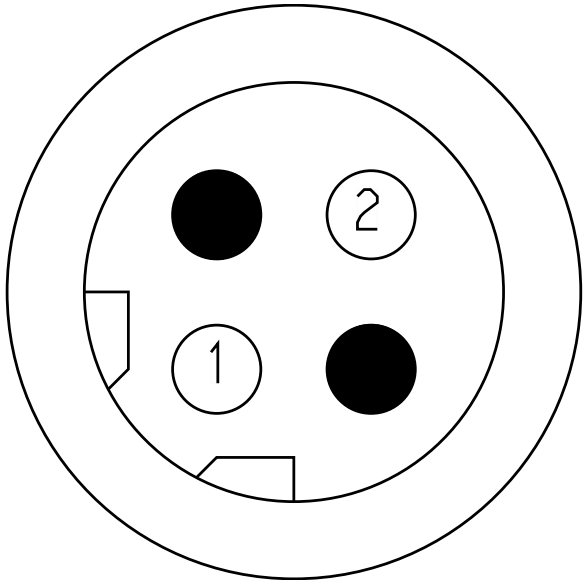

Name	Terminal Part Number	V-Min	Name	Wire Part Number	Wire CSA	Wire Spec	Wire Material description	Wire Color Description	Wire Length	End2 Terminal Part Number	End2 Pin Name	End2 Connect or
1	-	-	[YH94SL]	V-16-GXL	1.16	16.0	Std. Wall XLPE Primary Cable	Not Applica ble	1660.0	-	63	1701F
2	-	-	[YH94SM]	V-16-GXL	1.16	16.0	Std. Wall XLPE Primary Cable	Not Applica ble	1660.0	-	75	1701F

Connector Name	N01-9514
Part Number	PAS2(1,2)
Instances	LT/RH - X15/A26 - Wabco Full Stability Control:Diagram1 LT/RH - X15/A26 - Wabco Full Stability Control:Diagram2
Mates	SOL-TRL-TCV_WABCO-3026-02- 01A

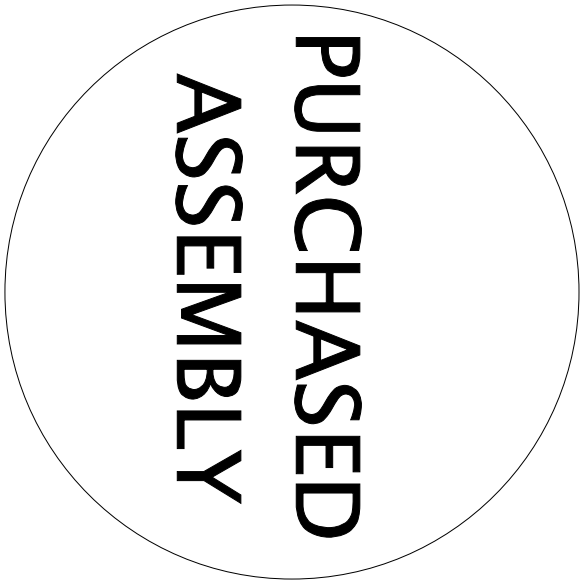

Name	Terminal Part Number	V-Min	Name	Wire Part Number	Wire CSA	Wire Spec	Wire Material description	Wire Color Description	Wire Length	End2 Terminal Part Number	End2 Pin Name	End2 Connect or
1	-	-	[PP94SK]	V-16-GXL	1.16	16.0	Std. Wall XLPE Primary Cable	Not Applica ble	1500.0	-	67	1701F
2	-	-	[PP94SJ]	V-16-GXL	1.16	16.0	Std. Wall XLPE Primary Cable	Not Applica ble	1500.0	-	13	1701F

Connector Name	N01-9515
Part Number	3678796C1
Instances	LT/RH/LoneStar - X15/A26 - Hill Start Aid (Bendix):Diagram1
Mates	SOL-HSA-3019-01-02A

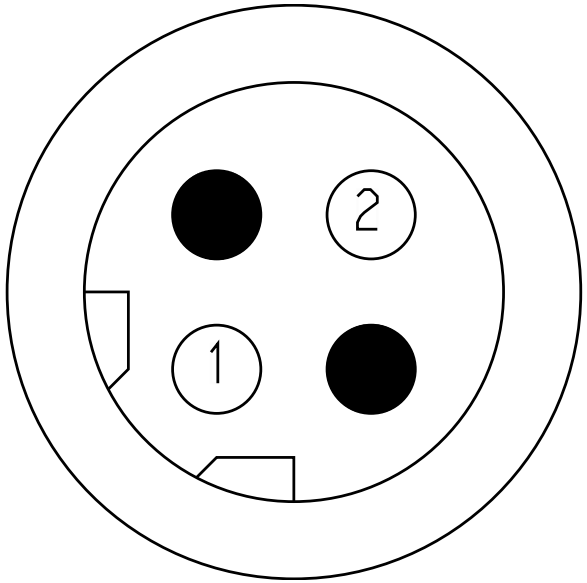

Name	Terminal Part Number	V-Min	Name	Wire Part Number	Wire CSA	Wire Spec	Wire Material description	Wire Color Description	Wire Length	End2 Terminal Part Number	End2 Pin Name	End2 Connect or
1	-	-	HA94A	2643680 R1	1.16	16.0	Std. Wall XLPE Primary Cable	GREY	3785.0	-	65	1701F
2	-	-	HA94B	2643680 R1	1.16	16.0	Std. Wall XLPE Primary Cable	GREY	3785.0	-	66	1701F

Connector Name N01-9516B
Part Number 3678796C1
Instances LT/RH/LoneStar - X15/A26 - Hill Start Aid (Bendix):Diagram3

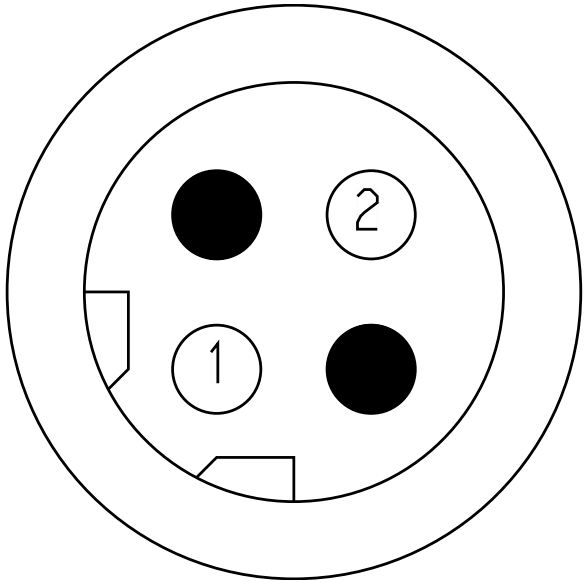

Name	Terminal Part Number	V-Min	Name	Wire Part Number	Wire CSA	Wire Spec	Wire Material description	Wire Color Description	Wire Length	End2 Terminal Part Number	End2 Pin Name	End2 Connect or
1	-	-	HC94A	2643680 R1	1.16	16.0	Std. Wall XLPE Primary Cable	GREY	4660.0	-	65	1701F
2	-	-	HC94B	2643680 R1	1.16	16.0	Std. Wall XLPE Primary Cable	GREY	4660.0	-	66	1701F

Connector Name N01-9516
Part Number 3678796C1
Instances LT/RH/LoneStar - X15/A26 - Hill Start Aid (Bendix):Diagram2

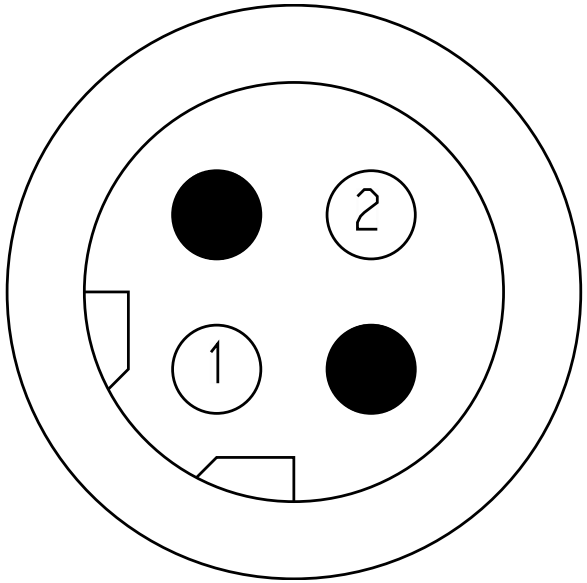

Name	Terminal Part Number	V-Min	Name	Wire Part Number	Wire CSA	Wire Spec	Wire Material description	Wire Color Description	Wire Length	End2 Terminal Part Number	End2 Pin Name	End2 Connect or
1	-	-	HB94A	2643680 R1	1.16	16.0	Std. Wall XLPE Primary Cable	GREY	4310.0	-	65	1701F
2	-	-	HB94B	2643680 R1	1.16	16.0	Std. Wall XLPE Primary Cable	GREY	4310.0	-	66	1701F

Connector Name N01-9719A

Part Number BLUNT_SL_VC

Instances LT/RH - A26 - Work Lights - LED W/ Sw Pack - Customer Supplied - Sleeper W/ RKE W/MAN REV:Diagram1
LT/RH - A26 - Work Lights - LED W/ Sw Pack - Customer Supplied - Sleeper W/ RKE W/MAN REV:Diagram3
LT/RH - A26 - Work Lights - LED W/ Sw Pack - Customer Supplied - Sleeper W/O RKE W/MAN REV:Diagram1
LT/RH - A26 - Work Lights - LED W/ Sw Pack - Customer Supplied - Sleeper W/O RKE W/MAN REV:Diagram3
LT/RH/LoneStar - X15 - Work Lights - LED W/ Sw Pack - Customer Supplied - Sleeper W/ RKE W/MAN REV:Diagram1
LT/RH/LoneStar - X15 - Work Lights - LED W/ Sw Pack - Customer Supplied - Sleeper W/O RKE W/MAN REV:Diagram1
LT/RH/LoneStar - X15/A26 - Work Lights - LED W/ Sw Pack - Customer Supplied - Sleeper:Diagram1
LT/RH/LoneStar - X15/A26 - Work Lights - LED W/ Sw Pack - Customer Supplied - Sleeper W/ RKE W/AUTO REV:Diagram1
LT/RH/LoneStar - X15/A26 - Work Lights - LED W/ Sw Pack - Customer Supplied - Sleeper W/O RKE:Diagram1
LT/RH/LoneStar - X15/A26 - Work Lights - LED W/ Sw Pack - Customer Supplied - Sleeper W/O RKE W/AUTO REV:Diagram1

Name	Terminal Part Number	V-Min	Name	Wire Part Number	Wire CSA	Wire Spec	Wire Material description	Wire Color Description	Wire Length	End2 Terminal Part Number	End2 Pin Name	End2 Connect or
A	-	-	NY65BD	2643682 R1	1.16	16.0	Std. Wall XLPE Primary Cable	ORANGE	3735.0	-	X	-
B	-	-	NY65-GB	2643681 R1	1.16	16.0	Std. Wall XLPE Primary Cable	WHITE	3335.0	-	X	-

Connector Name	N01-9719
Part Number	BLUNT_SL_VC
Instances	LT/RH - A26 - Work Lights (2 Blunt Cuts Only W/O Relay) W/ Backup W/Manual Trans Day Cab:Diagram1 LT/RH - A26 - Work Lights (2 Blunt Cuts Only W/O Relay) W/ Backup W/Manual Trans Day Cab:Diagram3 LT/RH - A26 - Work Lights W/ Sw Pack - Customer Supplied W/ RKE W/MAN REV:Diagram1 LT/RH - A26 - Work Lights W/ Sw Pack - Customer Supplied W/ RKE W/MAN REV:Diagram3 LT/RH - A26 - Work Lights W/ Sw Pack - Customer Supplied W/ O RKE W/MAN REV:Diagram1 LT/RH - A26 - Work Lights W/ Sw Pack - Customer Supplied W/ O RKE W/MAN REV:Diagram3 LT/RH - X15/A26 - Work Lights W/ Sw Pack - Customer Supplied:Diagram1 LT/RH/LoneStar - X15 - Work Lights (2 Blunt Cuts Only W/O Relay) W/Backup W/Manual Trans:Diagram1 LT/RH/LoneStar - X15 - Work Lights W/ Sw Pack - Customer Supplied W/ RKE W/MAN REV:Diagram1 LT/RH/LoneStar - X15 - Work Lights W/ Sw Pack - Customer Supplied W/O RKE W/MAN REV:Diagram1 LT/RH/LoneStar - X15/A26 - Work Lights (2 Blunt Cuts Only W/ O Relay):Diagram1 LT/RH/LoneStar - X15/A26 - Work Lights (2 Blunt Cuts Only W/O Relay) W/Backup W/Auto Trans (Allison and Endurant):Diagram1 LT/RH/LoneStar - X15/A26 - Work Lights W/ Sw Pack - Customer Supplied:Diagram1 LT/RH/LoneStar - X15/A26 - Work Lights W/ Sw Pack - Customer Supplied W/ RKE W/AUTO REV:Diagram1 LT/RH/LoneStar - X15/A26 - Work Lights W/ Sw Pack - Customer Supplied W/O RKE W/AUTO REV:Diagram1
Mates	BLNT-CUST_WORK_LT_PWR-1032 -02-06B

Name	Terminal Part Number	V-Min	Name	Wire Part Number	Wire CSA	Wire Spec	Wire Material description	Wire Color Description	Wire Length	End2 Terminal Part Number	End2 Pin Name	End2 Connect or
A	-	-	NX65BD	2643682 R1	1.16	16.0	Std. Wall XLPE Primary Cable	ORANGE	3435.0	-	X	-
B	-	-	NX65-GB	2643681 R1	1.16	16.0	Std. Wall XLPE Primary Cable	WHITE	4435.0	-	X	-

Connector Name N01-9720A

Part Number BLUNT_SL_VC

Instances LT/RH - A26 - Work Lights - LED W/ Sw Pack - Customer Supplied - Sleeper W/ RKE W/MAN REV:Diagram1
LT/RH - A26 - Work Lights - LED W/ Sw Pack - Customer Supplied - Sleeper W/ RKE W/MAN REV:Diagram3
LT/RH - A26 - Work Lights - LED W/ Sw Pack - Customer Supplied - Sleeper W/O RKE W/MAN REV:Diagram1
LT/RH - A26 - Work Lights - LED W/ Sw Pack - Customer Supplied - Sleeper W/O RKE W/MAN REV:Diagram3
LT/RH/LoneStar - X15 - Work Lights - LED W/ Sw Pack - Customer Supplied - Sleeper W/ RKE W/MAN REV:Diagram1
LT/RH/LoneStar - X15 - Work Lights - LED W/ Sw Pack - Customer Supplied - Sleeper W/O RKE W/MAN REV:Diagram1
LT/RH/LoneStar - X15/A26 - Work Lights - LED W/ Sw Pack - Customer Supplied - Sleeper:Diagram1
LT/RH/LoneStar - X15/A26 - Work Lights - LED W/ Sw Pack - Customer Supplied - Sleeper W/ RKE W/AUTO REV:Diagram1
LT/RH/LoneStar - X15/A26 - Work Lights - LED W/ Sw Pack - Customer Supplied - Sleeper W/O RKE:Diagram1
LT/RH/LoneStar - X15/A26 - Work Lights - LED W/ Sw Pack - Customer Supplied - Sleeper W/O RKE W/AUTO REV:Diagram1

Name	Terminal Part Number	V-Min	Name	Wire Part Number	Wire CSA	Wire Spec	Wire Material description	Wire Color Description	Wire Length	End2 Terminal Part Number	End2 Pin Name	End2 Connect or
A	-	-	NY65BE	2643682 R1	1.16	16.0	Std. Wall XLPE Primary Cable	ORANGE	5935.0	-	X	-
B	-	-	NY65-GC	2643681 R1	1.16	16.0	Std. Wall XLPE Primary Cable	WHITE	5535.0	-	X	-

Connector Name	N01-9720
Part Number	BLUNT_SL_VC
Instances	LT/RH - A26 - Work Lights (2 Blunt Cuts Only W/O Relay) W/ Backup W/Manual Trans Day Cab:Diagram1 LT/RH - A26 - Work Lights (2 Blunt Cuts Only W/O Relay) W/ Backup W/Manual Trans Day Cab:Diagram3 LT/RH - A26 - Work Lights W/ Sw Pack - Customer Supplied W/ RKE W/MAN REV:Diagram1 LT/RH - A26 - Work Lights W/ Sw Pack - Customer Supplied W/ RKE W/MAN REV:Diagram3 LT/RH - A26 - Work Lights W/ Sw Pack - Customer Supplied W/ O RKE W/MAN REV:Diagram1 LT/RH - A26 - Work Lights W/ Sw Pack - Customer Supplied W/ O RKE W/MAN REV:Diagram3 LT/RH - X15/A26 - Work Lights W/ Sw Pack - Customer Supplied:Diagram1 LT/RH/LoneStar - X15 - Work Lights (2 Blunt Cuts Only W/O Relay) W/Backup W/Manual Trans:Diagram1 LT/RH/LoneStar - X15 - Work Lights W/ Sw Pack - Customer Supplied W/ RKE W/MAN REV:Diagram1 LT/RH/LoneStar - X15 - Work Lights W/ Sw Pack - Customer Supplied W/O RKE W/MAN REV:Diagram1 LT/RH/LoneStar - X15/A26 - Work Lights (2 Blunt Cuts Only W/ O Relay):Diagram1 LT/RH/LoneStar - X15/A26 - Work Lights (2 Blunt Cuts Only W/O Relay) W/Backup W/Auto Trans (Allison and Endurant):Diagram1 LT/RH/LoneStar - X15/A26 - Work Lights W/ Sw Pack - Customer Supplied:Diagram1 LT/RH/LoneStar - X15/A26 - Work Lights W/ Sw Pack - Customer Supplied W/ RKE W/AUTO REV:Diagram1 LT/RH/LoneStar - X15/A26 - Work Lights W/ Sw Pack - Customer Supplied W/O RKE W/AUTO REV:Diagram1
Mates	BLNT-CUST_WORK_LT_PWR-1032 -02-06A

Name	Terminal Part Number	V-Min	Name	Wire Part Number	Wire CSA	Wire Spec	Wire Material description	Wire Color Description	Wire Length	End2 Terminal Part Number	End2 Pin Name	End2 Connector
A	-	-	NX65BE	2643682 R1	1.16	16.0	Std. Wall XLPE Primary Cable	ORANGE	4175.0	-	X	-
B	-	-	NX65-GC	2643681 R1	1.16	16.0	Std. Wall XLPE Primary Cable	WHITE	3175.0	-	X	-

Connector Name N01-9736

Part Number 1661375C2

Instances LT/RH/LoneStar - X15/A26 - Auxiliary Air Solenoids 4-pack (1 pack/4 solenoids):Diagram2
LT/RH/LoneStar - X15/A26 - Auxiliary Air Solenoids 4-pack (2 packs/8 solenoids):Diagram1

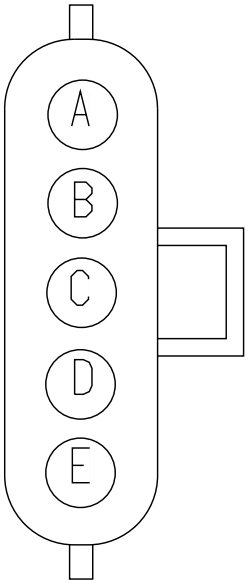

Name	Terminal Part Number	V-Min	Name	Wire Part Number	Wire CSA	Wire Spec	Wire Material description	Wire Color Description	Wire Length	End2 Terminal Part Number	End2 Pin Name	End2 Connect or
A	-	-	CA59-G	2643689 R1	1.91	14.0	Std. Wall XLPE Primary Cable	WHITE	1685.0	-	-	-
B	-	-	CA59A	2643673 R1	0.79	18.0	Std. Wall XLPE Primary Cable	GREY	2735.0	-	32	1701F
C	-	-	CA59B	2643673 R1	0.79	18.0	Std. Wall XLPE Primary Cable	GREY	2735.0	-	33	1701F
D	-	-	CA59C	2643673 R1	0.79	18.0	Std. Wall XLPE Primary Cable	GREY	2735.0	-	34	1701F

Name	Terminal Part Number	V-Min	Name	Wire Part Number	Wire CSA	Wire Spec	Wire Material description	Wire Color Description	Wire Length	End2 Terminal Part Number	End2 Pin Name	End2 Connect or
E	-	-	CA59D	2643673 R1	0.79	18.0	Std. Wall XLPE Primary Cable	GREY	2735.0	-	35	1701F

Connector Name N01-9738B

Part Number 1661375C2

Instances LT/RH/LoneStar - X15/A26 - Auxiliary Air Solenoids 4-pack (2 packs/8 solenoids):Diagram3

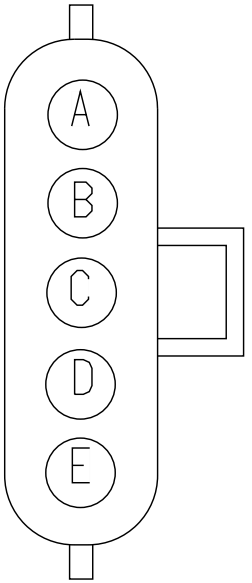

Name	Terminal Part Number	V-Min	Name	Wire Part Number	Wire CSA	Wire Spec	Wire Material description	Wire Color Description	Wire Length	End2 Terminal Part Number	End2 Pin Name	End2 Connect or
A	-	-	SY59-GA	2643689 R1	1.91	14.0	Std. Wall XLPE Primary Cable	WHITE	2210.0	-	-	-
B	-	-	SY59E	2643680 R1	1.16	16.0	Std. Wall XLPE Primary Cable	GREY	3260.0	-	36	1701F
C	-	-	SY59F	2643680 R1	1.16	16.0	Std. Wall XLPE Primary Cable	GREY	3260.0	-	37	1701F
D	-	-	SY59H	2643680 R1	1.16	16.0	Std. Wall XLPE Primary Cable	GREY	3260.0	-	38	1701F

Name	Terminal Part Number	V-Min	Name	Wire Part Number	Wire CSA	Wire Spec	Wire Material description	Wire Color Description	Wire Length	End2 Terminal Part Number	End2 Pin Name	End2 Connect or
E	-	-	SY59J	2643680 R1	1.16	16.0	Std. Wall XLPE Primary Cable	GREY	3260.0	-	39	1701F

Connector Name N01-9738

Part Number 1661375C2

Instances LT/RH/LoneStar - X15/A26 - Auxiliary Air Solenoids 4-pack (1 pack/4 solenoids):Diagram3
LT/RH/LoneStar - X15/A26 - Auxiliary Air Solenoids 4-pack (2 packs/8 solenoids):Diagram3

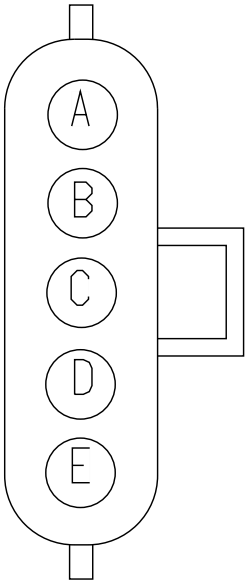

Name	Terminal Part Number	V-Min	Name	Wire Part Number	Wire CSA	Wire Spec	Wire Material description	Wire Color Description	Wire Length	End2 Terminal Part Number	End2 Pin Name	End2 Connect or
A	-	-	CC59-G	2643689 R1	1.91	14.0	Std. Wall XLPE Primary Cable	WHITE	2310.0	-	-	-
B	-	-	CC59A	2643680 R1	1.16	16.0	Std. Wall XLPE Primary Cable	GREY	3360.0	-	32	1701F
C	-	-	CC59B	2643680 R1	1.16	16.0	Std. Wall XLPE Primary Cable	GREY	3360.0	-	33	1701F
D	-	-	CC59C	2643680 R1	1.16	16.0	Std. Wall XLPE Primary Cable	GREY	3360.0	-	34	1701F

Name	Terminal Part Number	V-Min	Name	Wire Part Number	Wire CSA	Wire Spec	Wire Material description	Wire Color Description	Wire Length	End2 Terminal Part Number	End2 Pin Name	End2 Connect or
E	-	-	CC59D	2643680 R1	1.16	16.0	Std. Wall XLPE Primary Cable	GREY	3360.0	-	35	1701F

Connector Name N01-9739B

Part Number 1661375C2

Instances LT/RH/LoneStar - X15/A26 - Auxiliary Air Solenoids 4-pack (2 packs/8 solenoids):Diagram4

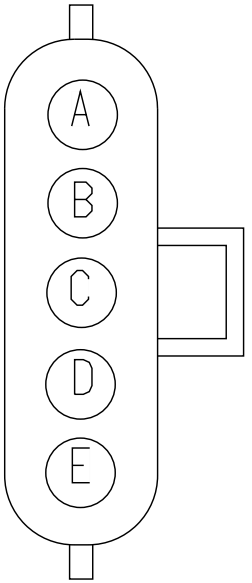

Name	Terminal Part Number	V-Min	Name	Wire Part Number	Wire CSA	Wire Spec	Wire Material description	Wire Color Description	Wire Length	End2 Terminal Part Number	End2 Pin Name	End2 Connect or
A	-	-	SX59-GA	2643680 R1	1.16	16.0	Std. Wall XLPE Primary Cable	GREY	2985.0	-	-	-
B	-	-	SX59E	2643680 R1	1.16	16.0	Std. Wall XLPE Primary Cable	GREY	4035.0	-	36	1701F
C	-	-	SX59F	2643680 R1	1.16	16.0	Std. Wall XLPE Primary Cable	GREY	4035.0	-	37	1701F
D	-	-	SX59H	2643680 R1	1.16	16.0	Std. Wall XLPE Primary Cable	GREY	4035.0	-	38	1701F

Name	Terminal Part Number	V-Min	Name	Wire Part Number	Wire CSA	Wire Spec	Wire Material description	Wire Color Description	Wire Length	End2 Terminal Part Number	End2 Pin Name	End2 Connect or
E	-	-	SX59J	2643680 R1	1.16	16.0	Std. Wall XLPE Primary Cable	GREY	4035.0	-	39	1701F

Connector Name	N01-9739
Part Number	1661375C2
Instances	LT/RH/LoneStar - X15/A26 - Auxiliary Air Solenoids 4-pack (1 pack/4 solenoids):Diagram4 LT/RH/LoneStar - X15/A26 - Auxiliary Air Solenoids 4-pack (2 packs/8 solenoids):Diagram4
Mates	SOL-AIR_4_PACK1-3004

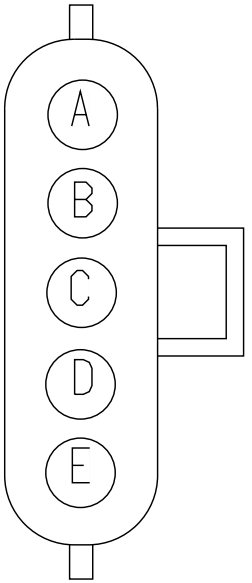

Name	Terminal Part Number	V-Min	Name	Wire Part Number	Wire CSA	Wire Spec	Wire Material description	Wire Color Description	Wire Length	End2 Terminal Part Number	End2 Pin Name	End2 Connect or
A	-	-	CB59-G	2643689 R1	1.91	14.0	Std. Wall XLPE Primary Cable	WHITE	2985.0	-	-	-
B	-	-	CB59A	2643680 R1	1.16	16.0	Std. Wall XLPE Primary Cable	GREY	4035.0	-	32	1701F
C	-	-	CB59B	2643680 R1	1.16	16.0	Std. Wall XLPE Primary Cable	GREY	4035.0	-	33	1701F
D	-	-	CB59C	2643680 R1	1.16	16.0	Std. Wall XLPE Primary Cable	GREY	4035.0	-	34	1701F

Name	Terminal Part Number	V-Min	Name	Wire Part Number	Wire CSA	Wire Spec	Wire Material description	Wire Color Description	Wire Length	End2 Terminal Part Number	End2 Pin Name	End2 Connect or
E	-	-	CB59D	2643680 R1	1.16	16.0	Std. Wall XLPE Primary Cable	GREY	4035.0	-	35	1701F

Connector Name N01-9740A

Part Number 1661375C2

Instances LT/RH/LoneStar - X15/A26 - Auxiliary Air Solenoids 4-pack (2 packs/8 solenoids):Diagram2

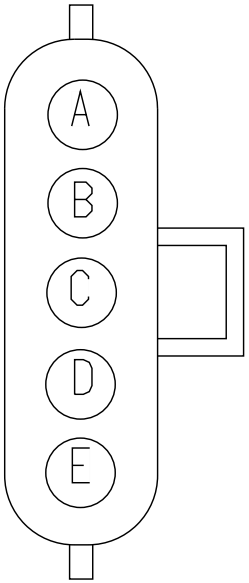

Name	Terminal Part Number	V-Min	Name	Wire Part Number	Wire CSA	Wire Spec	Wire Material description	Wire Color Description	Wire Length	End2 Terminal Part Number	End2 Pin Name	End2 Connect or
A	-	-	SZ59-GA	2643689 R1	1.91	14.0	Std. Wall XLPE Primary Cable	WHITE	1435.0	-	-	-
B	-	-	SZ59E	2643673 R1	0.79	18.0	Std. Wall XLPE Primary Cable	GREY	2485.0	-	36	1701F
C	-	-	SZ59F	2643673 R1	0.79	18.0	Std. Wall XLPE Primary Cable	GREY	2485.0	-	37	1701F
D	-	-	SZ59H	2643673 R1	0.79	18.0	Std. Wall XLPE Primary Cable	GREY	2485.0	-	38	1701F

Name	Terminal Part Number	V-Min	Name	Wire Part Number	Wire CSA	Wire Spec	Wire Material description	Wire Color Description	Wire Length	End2 Terminal Part Number	End2 Pin Name	End2 Connect or
E	-	-	SZ59J	2643673 R1	0.79	18.0	Std. Wall XLPE Primary Cable	GREY	2485.0	-	39	1701F

Connector Name N01-9740

Part Number 1661375C2

Instances LT/RH/LoneStar - X15/A26 - Auxiliary Air Solenoids 4-pack (1 pack/4 solenoids):Diagram5
LT/RH/LoneStar - X15/A26 - Auxiliary Air Solenoids 4-pack (2 packs/8 solenoids):Diagram2

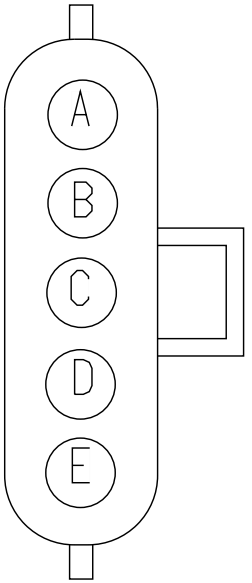

Name	Terminal Part Number	V-Min	Name	Wire Part Number	Wire CSA	Wire Spec	Wire Material description	Wire Color Description	Wire Length	End2 Terminal Part Number	End2 Pin Name	End2 Connect or
A	-	-	CD59-G	2643689 R1	1.91	14.0	Std. Wall XLPE Primary Cable	WHITE	1445.0	-	-	-
B	-	-	CD59A	2643673 R1	0.79	18.0	Std. Wall XLPE Primary Cable	GREY	2495.0	-	32	1701F
C	-	-	CD59B	2643673 R1	0.79	18.0	Std. Wall XLPE Primary Cable	GREY	2495.0	-	33	1701F
D	-	-	CD59C	2643673 R1	0.79	18.0	Std. Wall XLPE Primary Cable	GREY	2495.0	-	34	1701F

Name	Terminal Part Number	V-Min	Name	Wire Part Number	Wire CSA	Wire Spec	Wire Material description	Wire Color Description	Wire Length	End2 Terminal Part Number	End2 Pin Name	End2 Connect or
E	-	-	CD59D	2643673 R1	0.79	18.0	Std. Wall XLPE Primary Cable	GREY	2495.0	-	35	1701F

Connector Name	N01-9769
Part Number	3673640C1
Instances	LT/RH/LoneStar - X15/A26 - Collision Avoidance System (Warning):Diagram1
Mates	SNSR-SIDE_RADAR-3011-03-02

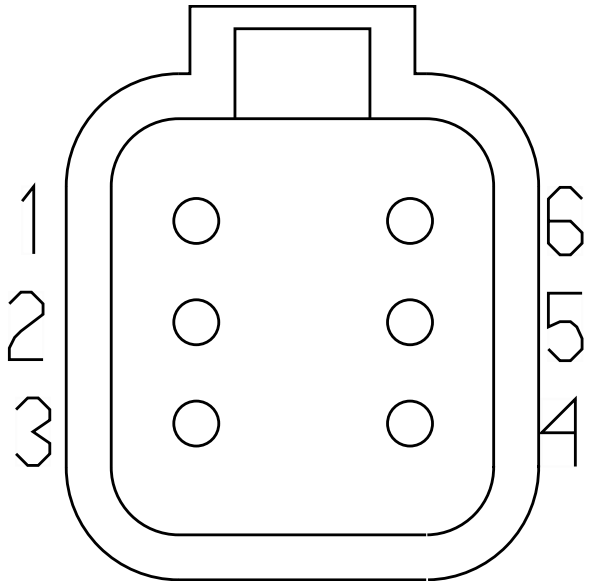

Name	Terminal Part Number	V-Min	Name	Wire Part Number	Wire CSA	Wire Spec	Wire Material description	Wire Color Description	Wire Length	End2 Terminal Part Number	End2 Pin Name	End2 Connect or
1	-	-	UB67TA	2643680 R1	1.16	16.0	Std. Wall XLPE Primary Cable	GREY	3515.0	-	12	1701F
2	-	-	UB67-G	2643681 R1	1.16	16.0	Std. Wall XLPE Primary Cable	WHITE	3865.0	-	-	-
3	-	-	UB67U	2643680 R1	1.16	16.0	Std. Wall XLPE Primary Cable	GREY	3515.0	-	69	1701F
4	-	-	UB67V	2643680 R1	1.16	16.0	Std. Wall XLPE Primary Cable	GREY	3515.0	-	71	1701F

Name	Terminal Part Number	V-Min	Name	Wire Part Number	Wire CSA	Wire Spec	Wire Material description	Wire Color Description	Wire Length	End2 Terminal Part Number	End2 Pin Name	End2 Connect or
5	-	-	UB67W	2643680 R1	1.16	16.0	Std. Wall XLPE Primary Cable	GREY	3515.0	-	70	1701F

Connector Name	N01-9779F1
Part Number	1667732C1
Instances	LT/RH/LoneStar - X15/A26 - Trailer Interface (Lighting) – TRAMEC_NA:Diagram1
Mates	TRLR-SKT_BOC_TRAMEC-02

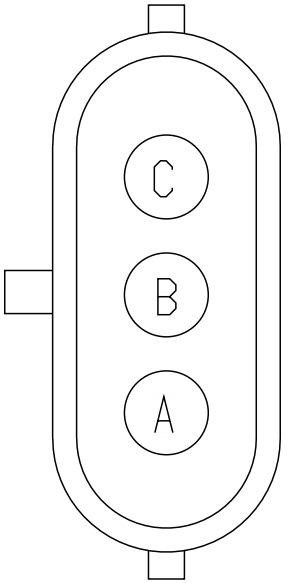

Name	Terminal Part Number	V-Min	Name	Wire Part Number	Wire CSA	Wire Spec	Wire Material description	Wire Color Description	Wire Length	End2 Terminal Part Number	End2 Pin Name	End2 Connect or
A	-	-	RZ58T	2643773 R1	4.81	10.0	Std. Wall XLPE Primary Cable	BLACK	800.0	-	7	1701F
B	-	-	RZ56T	2643802 R1	4.81	10.0	Std. Wall XLPE Primary Cable	YELLOW 2	800.0	-	5	1701F
C	-	-	RZ57T	2643776 R1	4.81	10.0	Std. Wall XLPE Primary Cable	LIGHT GREEN	800.0	-	6	1701F

Connector Name N01-9779F

Part Number 1667732C1

Instances LT/RH/LoneStar - X15/A26 - Trailer Interface (Lighting) – BOC & EOF_NA:Diagram1-Combination1
LT/RH/LoneStar - X15/A26 - Trailer Interface (Lighting) – BOC & EOF_NA:Diagram1-Combination2
LT/RH/LoneStar - X15/A26 - Trailer Interface (Lighting) – BOC NA:Diagram1

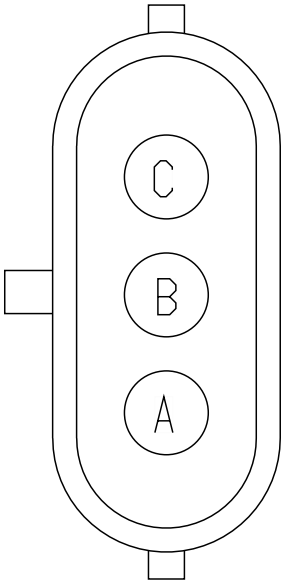

Name	Terminal Part Number	V-Min	Name	Wire Part Number	Wire CSA	Wire Spec	Wire Material description	Wire Color Description	Wire Length	End2 Terminal Part Number	End2 Pin Name	End2 Connect or
A	-	-	NK58U	2643773 R1	4.81	10.0	Std. Wall XLPE Primary Cable	BLACK	500.0	-	X	-
A	-	-	NH58T	2643773 R1	4.81	10.0	Std. Wall XLPE Primary Cable	BLACK	800.0	-	7	1701F
B	-	-	NK56U	2643802 R1	4.81	10.0	Std. Wall XLPE Primary Cable	YELLOW 2	100.0	-	X	-
B	-	-	NH56T	2643802 R1	4.81	10.0	Std. Wall XLPE Primary Cable	YELLOW 2	800.0	-	5	1701F

Name	Terminal Part Number	V-Min	Name	Wire Part Number	Wire CSA	Wire Spec	Wire Material description	Wire Color Description	Wire Length	End2 Terminal Part Number	End2 Pin Name	End2 Connect or
C	-	-	NK57U	2643776 R1	4.81	10.0	Std. Wall XLPE Primary Cable	LIGHT GREEN	400.0	-	X	-
C	-	-	NH57T	2643776 R1	4.81	10.0	Std. Wall XLPE Primary Cable	LIGHT GREEN	800.0	-	6	1701F

Connector Name	N01-9780M1
Part Number	1667733C1
Instances	LT/RH/LoneStar - X15/A26 - Trailer Interface (ABS) - TRAMEC_NA:Diagram1 LT/RH/LoneStar - X15/A26 - Trailer Interface (Lighting) – TRAMEC_NA:Diagram1
Mates	TRLR-SKT_BOC_TRAMEC-02

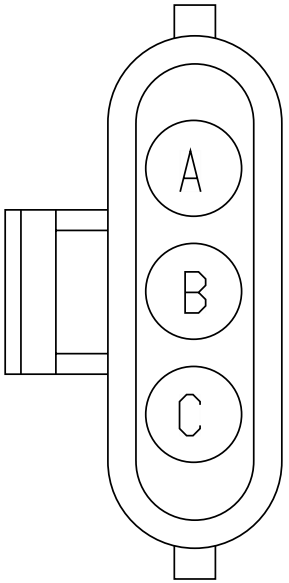

Name	Terminal Part Number	V-Min	Name	Wire Part Number	Wire CSA	Wire Spec	Wire Material description	Wire Color Description	Wire Length	End2 Terminal Part Number	End2 Pin Name	End2 Connect or
A	-	-	RZ94T	3510315 R1	4.81	10.0	Thin Wall XLPE Primary Cable	GREY	800.0	-	10	1701F
B	-	-	RZ68T	3510309 R1	4.81	10.0	Thin Wall XLPE Primary Cable	BROWN	800.0	-	8	1701F
C	-	-	RZ70T	3510369 R1	4.81	10.0	Thin Wall XLPE Primary Cable	RED	800.0	-	9	1701F

Connector Name N01-9780M

Part Number 3535482C1

Instances LoneStar - X15 - Trailer Interface (ABS) - Center Pin Circuit:Diagram1
LoneStar - X15 - Trailer Interface (ABS) - Center Pin Circuit:Diagram2
LT/RH - X15/A26 - Trailer Interface (ABS) - Center Pin Circuit:Diagram1
LT/RH - X15/A26 - Trailer Interface (ABS) - Center Pin Circuit:Diagram2
LT/RH/LoneStar - X15/A26 - Auxiliary Trailer Power CAV D:Diagram1
LT/RH/LoneStar - X15/A26 - Trailer Interface (ABS) - BOC & EOF_NA:Diagram1
LT/RH/LoneStar - X15/A26 - Trailer Interface (ABS) - BOC & EOF_NA:Diagram2
LT/RH/LoneStar - X15/A26 - Trailer Interface (ABS) - BOC_NA:Diagram1
LT/RH/LoneStar - X15/A26 - Trailer Interface (Lighting) – BOC & EOF_NA:Diagram1-Combination1
LT/RH/LoneStar - X15/A26 - Trailer Interface (Lighting) – BOC & EOF_NA:Diagram1-Combination2
LT/RH/LoneStar - X15/A26 - Trailer Interface (Lighting) – BOC NA:Diagram1

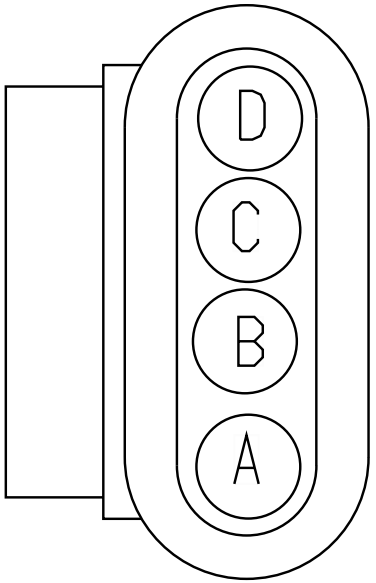

Mates TRLR-SKT_BOC-3035-01-01A

Name	Terminal Part Number	V-Min	Name	Wire Part Number	Wire CSA	Wire Spec	Wire Material description	Wire Color Description	Wire Length	End2 Terminal Part Number	End2 Pin Name	End2 Connect or
A	-	-	NK94U	3510315 R1	4.81	10.0	Thin Wall XLPE Primary Cable	GREY	100.0	-	X	-
A	-	-	NH94T	3510315 R1	4.81	10.0	Thin Wall XLPE Primary Cable	GREY	800.0	-	10	1701F

Name	Terminal Part Number	V-Min	Name	Wire Part Number	Wire CSA	Wire Spec	Wire Material description	Wire Color Description	Wire Length	End2 Terminal Part Number	End2 Pin Name	End2 Connector
A	-	-	ME94T	3510357 R1	4.81	10.0	Thin Wall XLPE Primary Cable	DARK BLUE	800.0	-	10	1701F
B	-	-	NK68U	3510309 R1	4.81	10.0	Thin Wall XLPE Primary Cable	BROWN	550.0	-	X	-
B	-	-	SG68T	3510309 R1	4.81	10.0	Thin Wall XLPE Primary Cable	BROWN	800.0	-	8	1701F
C	-	-	NK70U	3510369 R1	4.81	10.0	Thin Wall XLPE Primary Cable	RED	150.0	-	X	-
C	-	-	SG70T	3510369 R1	4.81	10.0	Thin Wall XLPE Primary Cable	RED	800.0	-	9	1701F
D	-	-	NJ72V	2643755 R1	3.01	12.0	Std. Wall XLPE Primary Cable	ORANGE	800.0	-	11	1701F
D	-	-	MD72V	3510321 R1	4.81	10.0	Thin Wall XLPE Primary Cable	ORANGE	800.0	-	11	1701F

Connector Name	N01-9781F
Part Number	1667732C1
Instances	LT/RH/LoneStar - X15/A26 - Trailer Interface (Lighting) – BOC & EOF_NA:Diagram1-Combination3 LT/RH/LoneStar - X15/A26 - Trailer Interface (Lighting) – BOC & EOF_NA:Diagram1-Combination4 LT/RH/LoneStar - X15/A26 - Trailer Interface (Lighting) – BOC NA:Diagram2
Mates	TRLR-SKT_BOC-3035-01-01A

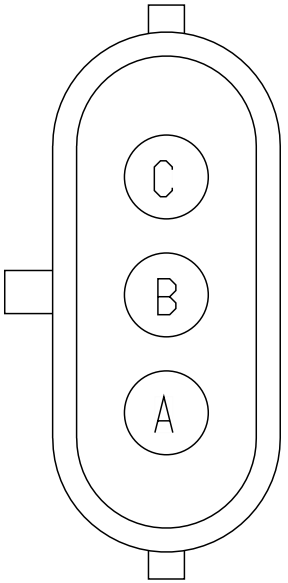

Name	Terminal Part Number	V-Min	Name	Wire Part Number	Wire CSA	Wire Spec	Wire Material description	Wire Color Description	Wire Length	End2 Terminal Part Number	End2 Pin Name	End2 Connect or
A	-	-	YT58U	2643773 R1	4.81	10.0	Std. Wall XLPE Primary Cable	BLACK	900.0	-	X	-
A	-	-	SH58T	2643773 R1	4.81	10.0	Std. Wall XLPE Primary Cable	BLACK	3910.0	-	7	1701F
B	-	-	YT56U	2643802 R1	4.81	10.0	Std. Wall XLPE Primary Cable	YELLOW 2	800.0	-	X	-
B	-	-	RG56T	2643802 R1	4.81	10.0	Std. Wall XLPE Primary Cable	YELLOW 2	3910.0	-	5	1701F

Name	Terminal Part Number	V-Min	Name	Wire Part Number	Wire CSA	Wire Spec	Wire Material description	Wire Color Description	Wire Length	End2 Terminal Part Number	End2 Pin Name	End2 Connect or
C	-	-	YT57U	2643776 R1	4.81	10.0	Std. Wall XLPE Primary Cable	LIGHT GREEN	850.0	-	X	-
C	-	-	RG57T	2643776 R1	4.81	10.0	Std. Wall XLPE Primary Cable	LIGHT GREEN	3910.0	-	6	1701F

Connector Name N01-9782M

Part Number 3535482C1

Instances LoneStar - X15 - Trailer Interface (ABS) - Center Pin Circuit:Diagram3
LoneStar - X15 - Trailer Interface (ABS) - Center Pin Circuit:Diagram4
LT/RH - X15/A26 - Trailer Interface (ABS) - Center Pin Circuit:Diagram3
LT/RH - X15/A26 - Trailer Interface (ABS) - Center Pin Circuit:Diagram4
LT/RH/LoneStar - X15/A26 - Auxiliary Trailer Power CAV D:Diagram2
LT/RH/LoneStar - X15/A26 - Trailer Interface (ABS) - BOC & EOF_NA:Diagram3
LT/RH/LoneStar - X15/A26 - Trailer Interface (ABS) - BOC & EOF_NA:Diagram4
LT/RH/LoneStar - X15/A26 - Trailer Interface (ABS) - BOC_NA:Diagram2
LT/RH/LoneStar - X15/A26 - Trailer Interface (Lighting) – BOC & EOF_NA:Diagram1-Combination3
LT/RH/LoneStar - X15/A26 - Trailer Interface (Lighting) – BOC & EOF_NA:Diagram1-Combination4
LT/RH/LoneStar - X15/A26 - Trailer Interface (Lighting) – BOC NA:Diagram2

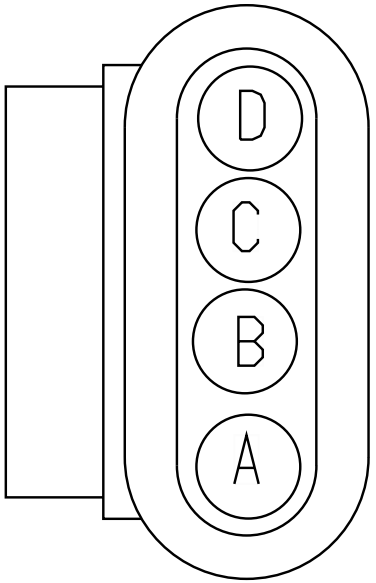

Name	Terminal Part Number	V-Min	Name	Wire Part Number	Wire CSA	Wire Spec	Wire Material description	Wire Color Description	Wire Length	End2 Terminal Part Number	End2 Pin Name	End2 Connector
A	-	-	YT94U	3510315 R1	4.81	10.0	Thin Wall XLPE Primary Cable	GREY	900.0	-	PIN1	-
A	-	-	RG94T	3510315 R1	4.81	10.0	Thin Wall XLPE Primary Cable	GREY	3910.0	-	10	1701F
A	-	-	MH94T	3510357 R1	4.81	10.0	Thin Wall XLPE Primary Cable	DARK BLUE	3910.0	-	10	1701F

Name	Terminal Part Number	V-Min	Name	Wire Part Number	Wire CSA	Wire Spec	Wire Material description	Wire Color Description	Wire Length	End2 Terminal Part Number	End2 Pin Name	End2 Connector
A	-	-	YT94U	3510315 R1	4.81	10.0	Thin Wall XLPE Primary Cable	GREY	900.0	-	X	-
B	-	-	YT68U	3510309 R1	4.81	10.0	Thin Wall XLPE Primary Cable	BROWN	800.0	-	X	-
B	-	-	RG68T	3510309 R1	4.81	10.0	Thin Wall XLPE Primary Cable	BROWN	3910.0	-	8	1701F
C	-	-	YT70U	3510369 R1	4.81	10.0	Thin Wall XLPE Primary Cable	RED	850.0	-	X	-
C	-	-	SH70T	3510369 R1	4.81	10.0	Thin Wall XLPE Primary Cable	RED	3910.0	-	9	1701F
D	-	-	MG72V	3510321 R1	4.81	10.0	Thin Wall XLPE Primary Cable	ORANGE	3910.0	-	11	1701F
D	-	-	RJ72V	2643755 R1	3.01	12.0	Std. Wall XLPE Primary Cable	ORANGE	3910.0	-	11	1701F

Connector Name	N01-9783M
Part Number	2031522C1
Instances	LT/RH/LoneStar - X15/A26 - Auxiliary Trailer Power W/ ISO Trailer Socket:Diagram1
Mates	TRLR-SKT-ISO-3034-02-03

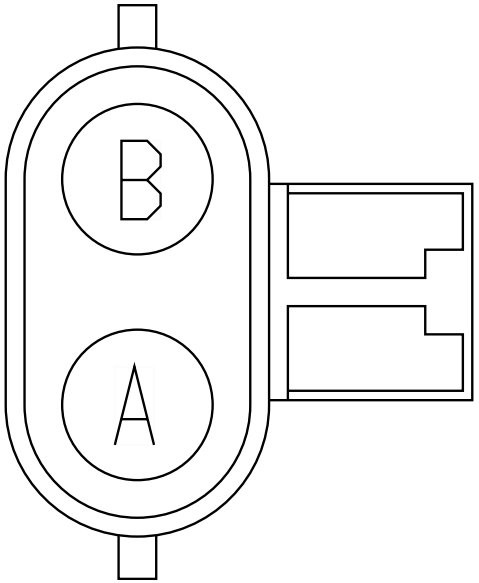

Name	Terminal Part Number	V-Min	Name	Wire Part Number	Wire CSA	Wire Spec	Wire Material description	Wire Color Description	Wire Length	End2 Terminal Part Number	End2 Pin Name	End2 Connect or
A	-	-	MH72V	3510321 R1	4.81	10.0	Thin Wall XLPE Primary Cable	ORANGE	800.0	-	11	1701F

Connector Name	N01-9901A
Part Number	1673790C1
Instances	LT/RH/LoneStar - X15/A26 - Dual Air Dryers:Diagram1 LT/RH/LoneStar - X15/A26 - Left Side Air Dryer-Bendix:Diagram1
Mates	DEV-AIR_DRYER-01

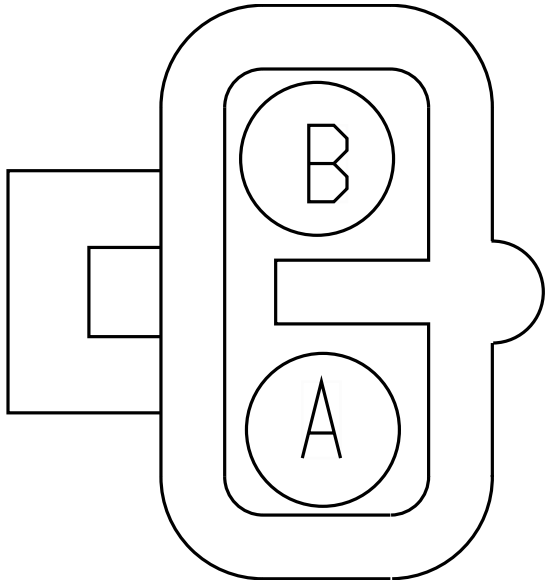

Name	Terminal Part Number	V-Min	Name	Wire Part Number	Wire CSA	Wire Spec	Wire Material description	Wire Color Description	Wire Length	End2 Terminal Part Number	End2 Pin Name	End2 Connect or
A	-	-	GA39	2643680 R1	1.16	16.0	Std. Wall XLPE Primary Cable	GREY	2410.0	-	31	1701F
B	-	-	GA39-G	2643681 R1	1.16	16.0	Std. Wall XLPE Primary Cable	WHITE	1510.0	-	-	-

Connector Name	N01-9901B
Part Number	1673790C1
Instances	LT/RH/LoneStar - X15/A26 - Dual Air Dryers:Diagram1
Mates	DEV-AIR_DRYER-02

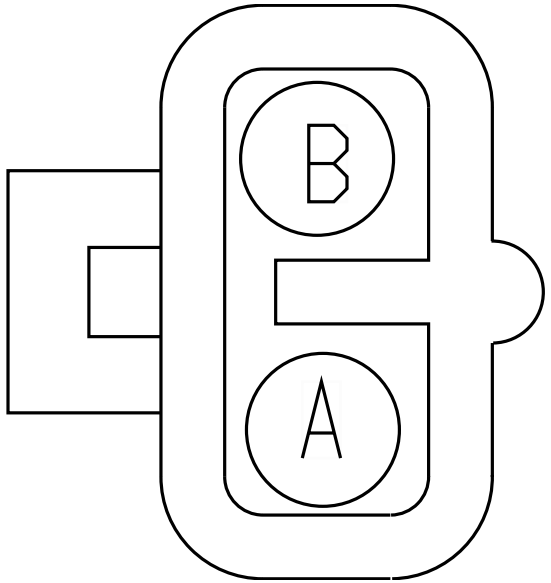

Name	Terminal Part Number	V-Min	Name	Wire Part Number	Wire CSA	Wire Spec	Wire Material description	Wire Color Description	Wire Length	End2 Terminal Part Number	End2 Pin Name	End2 Connect or
A	-	-	GF39A	2643680 R1	1.16	16.0	Std. Wall XLPE Primary Cable	GREY	4115.0	-	30	1701F
B	-	-	GF39-GA	2643681 R1	1.16	16.0	Std. Wall XLPE Primary Cable	WHITE	3215.0	-	-	-

Connector Name N01-9902A
Part Number 1673790C1
Instances LT/RH/LoneStar - X15/A26 - Dual Air Dryers:Diagram2

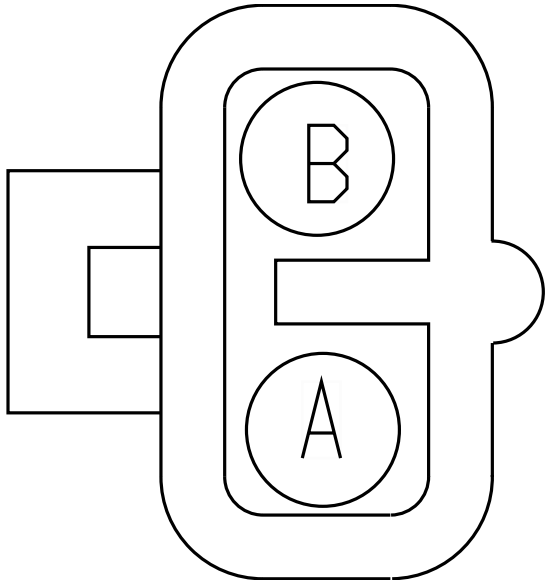

Name	Terminal Part Number	V-Min	Name	Wire Part Number	Wire CSA	Wire Spec	Wire Material description	Wire Color Description	Wire Length	End2 Terminal Part Number	End2 Pin Name	End2 Connect or
A	-	-	GD39A	2643680 R1	1.16	16.0	Std. Wall XLPE Primary Cable	GREY	2585.0	-	30	1701F
B	-	-	GD39-GA	2643681 R1	1.16	16.0	Std. Wall XLPE Primary Cable	WHITE	1685.0	-	-	-

Connector Name N01-9902

Part Number 1673790C1

Instances LT/RH/LoneStar - X15/A26 - Dual Air Dryers:Diagram2
LT/RH/LoneStar - X15/A26 - Left Side Air Dryer-Bendix:Diagram2

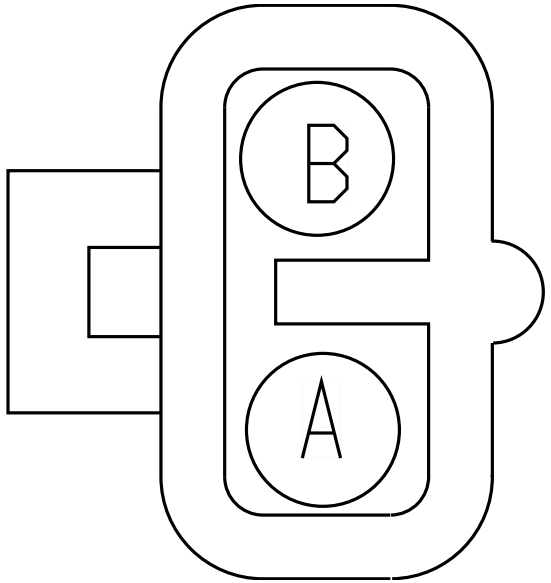

Name	Terminal Part Number	V-Min	Name	Wire Part Number	Wire CSA	Wire Spec	Wire Material description	Wire Color Description	Wire Length	End2 Terminal Part Number	End2 Pin Name	End2 Connect or
A	-	-	GB39	2643680 R1	1.16	16.0	Std. Wall XLPE Primary Cable	GREY	2535.0	-	31	1701F
B	-	-	GB39-G	2643681 R1	1.16	16.0	Std. Wall XLPE Primary Cable	WHITE	1635.0	-	-	-

Connector Name	N01-9903
Part Number	1671610C1
Instances	LT/RH/LoneStar - X15/A26 - Drain Valve Heater:Diagram1
Mates	HTR-DRAIN_VALVE-3042-01-01A

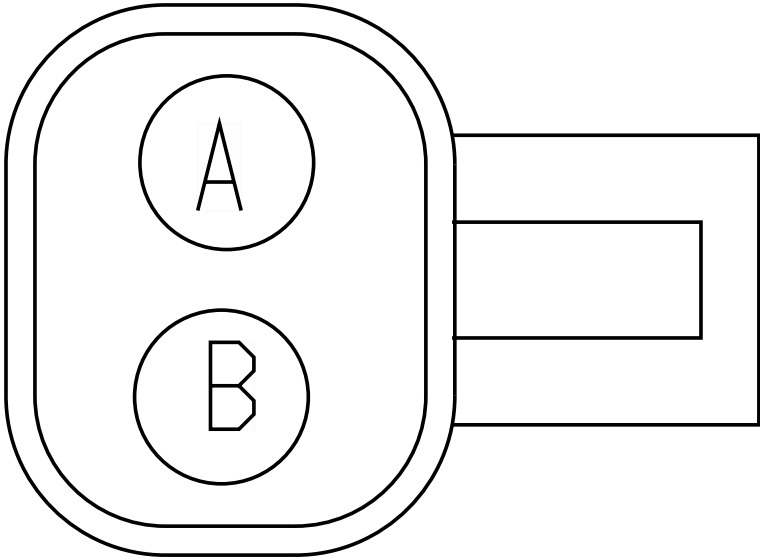

Name	Terminal Part Number	V-Min	Name	Wire Part Number	Wire CSA	Wire Spec	Wire Material description	Wire Color Description	Wire Length	End2 Terminal Part Number	End2 Pin Name	End2 Connect or
A	-	-	RE39A	2643673 R1	0.79	18.0	Std. Wall XLPE Primary Cable	GREY	2800.0	-	X	-
B	-	-	RE39-GA	2643674 R1	0.79	18.0	Std. Wall XLPE Primary Cable	WHITE	2150.0	-	X	-

Connector Name	N01-9904
Part Number	1671610C1
Instances	LT/RH/LoneStar - X15/A26 - Drain Valve Heater:Diagram1
Mates	HTR-DRAIN_VALVE-3042-01-01B

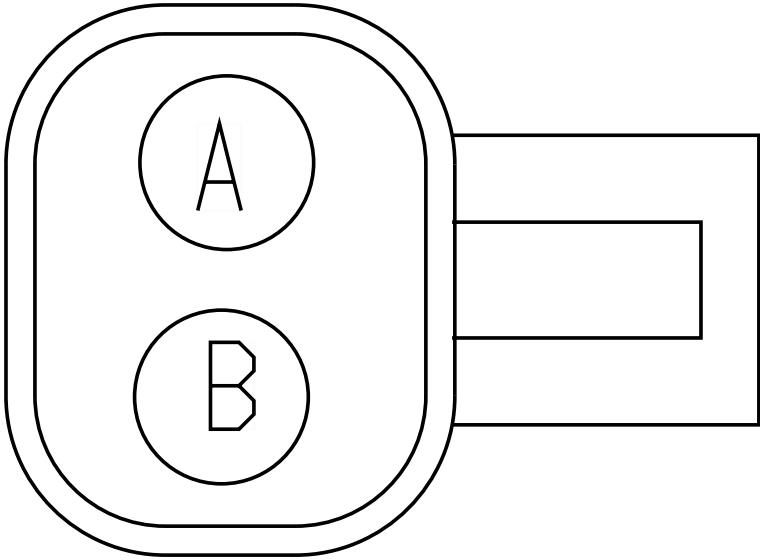

Name	Terminal Part Number	V-Min	Name	Wire Part Number	Wire CSA	Wire Spec	Wire Material description	Wire Color Description	Wire Length	End2 Terminal Part Number	End2 Pin Name	End2 Connect or
A	-	-	RE39B	2643673 R1	0.79	18.0	Std. Wall XLPE Primary Cable	GREY	3050.0	-	X	-
B	-	-	RE39-GB	2643674 R1	0.79	18.0	Std. Wall XLPE Primary Cable	WHITE	2400.0	-	X	-

Connector Name N01-9989B
Part Number 3535481C1
Instances LT/RH/LoneStar - X15/A26 - Jaw Monitoring:Diagram1
Mates DEV-JAW_MONITOR-3039-01-02A

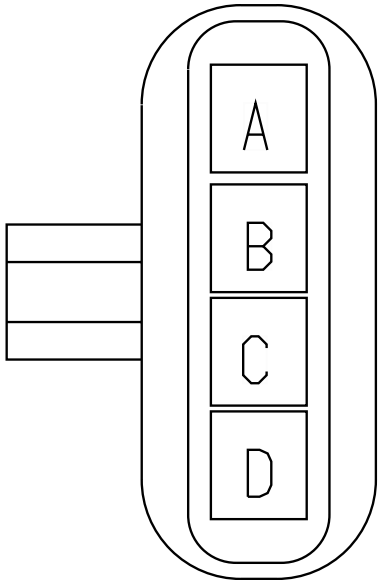

Name	Terminal Part Number	V-Min	Name	Wire Part Number	Wire CSA	Wire Spec	Wire Material description	Wire Color Description	Wire Length	End2 Terminal Part Number	End2 Pin Name	End2 Connect or
A	-	-	YY116M	3510311 R1	0.79	18.0	Thin Wall XLPE Primary Cable	GREY	4810.0	-	29	1701F
B	-	-	YY116U	2643673 R1	0.79	18.0	Std. Wall XLPE Primary Cable	GREY	4810.0	-	30	1701F
C	-	-	YY116L	2643673 R1	0.79	18.0	Std. Wall XLPE Primary Cable	GREY	4810.0	-	26	1701F
D	-	-	YY116-GA	3510359 R1	0.79	18.0	Thin Wall XLPE Primary Cable	WHITE	5160.0	-	-	-

Connector Name	POS_1
Part Number	RING-E-3-8_0
Instances	LT/RH/LoneStar - X15/A26 - JUMP START STUD (DUAL):Diagram1 LT/RH/LoneStar - X15/A26 - JUMP START STUD (SINGLE):Diagram1
Mates	DEV-JUMP_START_STUD_POSITI VE-01

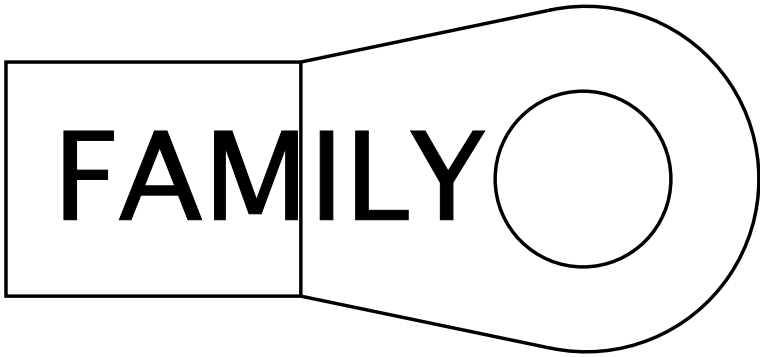

Name	Terminal Part Number	V-Min	Name	Wire Part Number	Wire CSA	Wire Spec	Wire Material description	Wire Color Description	Wire Length	End2 Terminal Part Number	End2 Pin Name	End2 Connect or
A	-	-	14	2645962 R1	49.99	0.0	SGX NFLEX 125	RED	700.0	-	A	6051_A

Connector Name	P01-8450B
Part Number	587568C91
Instances	LT/RH - X15/A26 - Hood Switch:Diagram1 LT/RH - X15/A26 - with Hood Switch - with new BCM Pin:Diagram1
Mates	SW-HOOD-5058-03-01A

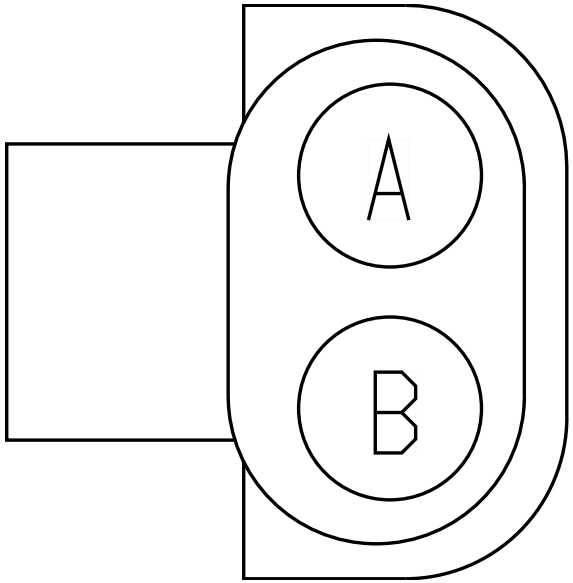

Name	Terminal Part Number	V-Min	Name	Wire Part Number	Wire CSA	Wire Spec	Wire Material description	Wire Color Description	Wire Length	End2 Terminal Part Number	End2 Pin Name	End2 Connect or
A	-	-	U97H	2643718 R1	0.79	18.0	Std. Wall XLPE Primary Cable	VIOLET	1040.0	-	A	8450A
B	-	-	U97J	2643718 R1	0.79	18.0	Std. Wall XLPE Primary Cable	VIOLET	1040.0	-	B	8450A

Connector Name	P02-8311
Part Number	1661778C1
Instances	LT/RH - X15/A26 - City Horn W/ 4PIN CLK W/O RKA:Diagram1-Combination1 LT/RH - X15/A26 - City Horn W/ 4PIN CLK W/RKA:Diagram1-Combination1 LT/RH - X15/A26 - City Horn W/ 10PIN CLK W/RKA:Diagram1-Combination1 LT/RH - X15/A26 - City Horn W/ 10PIN CLK W/O RKA:Diagram1-Combination1
Mates	HORN-CITYHORN-1005-01-01A

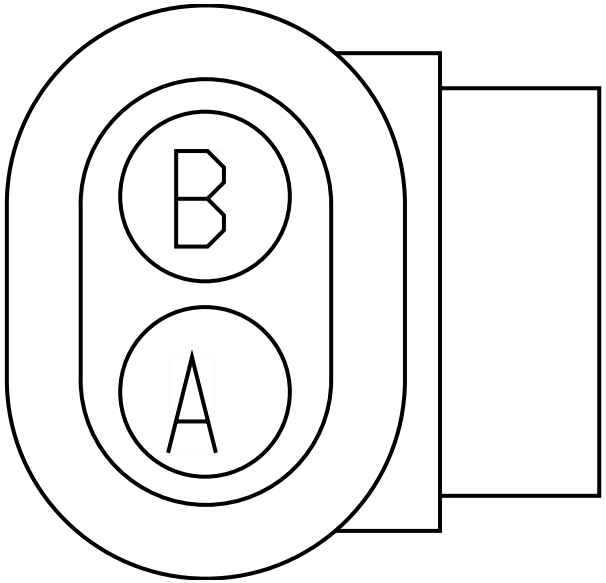

Name	Terminal Part Number	V-Min	Name	Wire Part Number	Wire CSA	Wire Spec	Wire Material description	Wire Color Description	Wire Length	End2 Terminal Part Number	End2 Pin Name	End2 Connect or
A	-	-	M85J	2643680 R1	1.16	16.0	Std. Wall XLPE Primary Cable	GREY	800.0	-	A	8310
B	-	-	M85-GC	2643681 R1	1.16	16.0	Std. Wall XLPE Primary Cable	WHITE	800.0	-	B	8310

Connector Name P03-101_1

Part Number RING-E-3-8_0

Instances LT/RH/LoneStar - X15/A26 - Rear AUTO HVAC (No Idle) W/ Pre-Heat (Bergstrom Heat and Cool w/ Condensation) 2 SWITCHES:Diagram1 - Powers, Grounds & Controls
LT/RH/LoneStar - X15/A26 - Rear HVAC (No Idle) W/ Pre-Heat (Bergstrom Heat and Cool w/ Condensation) 2 SWITCHES Option 1:Diagram1 - Powers, Grounds & Controls
LT/RH/LoneStar - X15/A26 - Rear HVAC (No Idle) W/ Pre-Heat (Bergstrom Heat and Cool w/ Condensation) 2 SWITCHES Option 2:Diagram1 - Powers, Grounds & Controls
LT/RH/LoneStar - X15/A26 - Rear HVAC (No Idle) W/ Pre-Heat (Bergstrom Heat and Cool w/ Condensation) 4 SWITCHES Option 1:Diagram1 - Powers, Grounds & Controls
LT/RH/LoneStar - X15/A26 - Rear HVAC (No Idle) W/ Pre-Heat (Bergstrom Heat and Cool w/ Condensation) 4 SWITCHES Option 2:Diagram1 - Powers, Grounds & Controls
LT/RH/LoneStar - X15/A26 - Rear Manual HVAC (No Idle) W/ Pre-Heat (Bergstrom Heat and Cool w/ Condensation) 2 SWITCHES:Diagram1 - Powers, Grounds & Controls

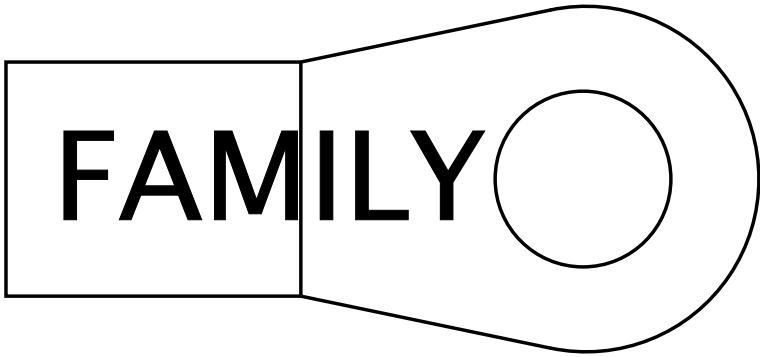

Mates CP-NO_IDLE_CUBE_FUSE-6002- 11-01B

Name	Terminal Part Number	V-Min	Name	Wire Part Number	Wire CSA	Wire Spec	Wire Material description	Wire Color Description	Wire Length	End2 Terminal Part Number	End2 Pin Name	End2 Connect or
A	-	-	B(+)	2643701 R1	7.48	8.0	Std. Wall XLPE Primary Cable	RED	2250.0	-	-	-
A	-	-	B(+)	2643701 R1	7.48	8.0	Std. Wall XLPE Primary Cable	RED	2250.0	-	X	-

Connector Name	P04-100A
Part Number	RING-M-6_0
Instances	LT/RH/LoneStar - X15/A26 - Rear AUTO HVAC (No Idle) W/ Pre-Heat (Bergstrom Heat and Cool w/ Condensation) 2 SWITCHES:Diagram1 - Powers, Grounds & Controls LT/RH/LoneStar - X15/A26 - Rear Manual HVAC (No Idle) W/ Pre-Heat (Bergstrom Heat and Cool w/ Condensation) 2 SWITCHES:Diagram1 - Powers, Grounds & Controls
Mates	MODU-BERG_NO-IDLE-6002-01- 02 Bergstrom Aux HVAC

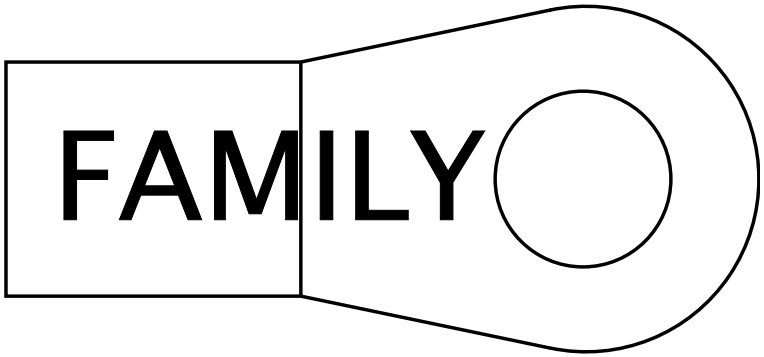

Name	Terminal Part Number	V-Min	Name	Wire Part Number	Wire CSA	Wire Spec	Wire Material description	Wire Color Description	Wire Length	End2 Terminal Part Number	End2 Pin Name	End2 Connect or
A	-	-	B(+)	2643701 R1	7.48	8.0	Std. Wall XLPE Primary Cable	RED	2250.0	-	A	P04-101

Connector Name	P04-100
Part Number	3756780C1
Instances	LT/RH/LoneStar - X15/A26 - Rear AUTO HVAC (No Idle) W/ Pre-Heat (Bergstrom Heat and Cool w/ Condensation) 2 SWITCHES:Diagram1 - Powers, Grounds & Controls LT/RH/LoneStar - X15/A26 - Rear Manual HVAC (No Idle) W/ Pre-Heat (Bergstrom Heat and Cool w/ Condensation) 2 SWITCHES:Diagram1 - Powers, Grounds & Controls
Mates	MODU-BERG_NO-IDLE-6002-01- 02 Bergstrom Aux HVAC

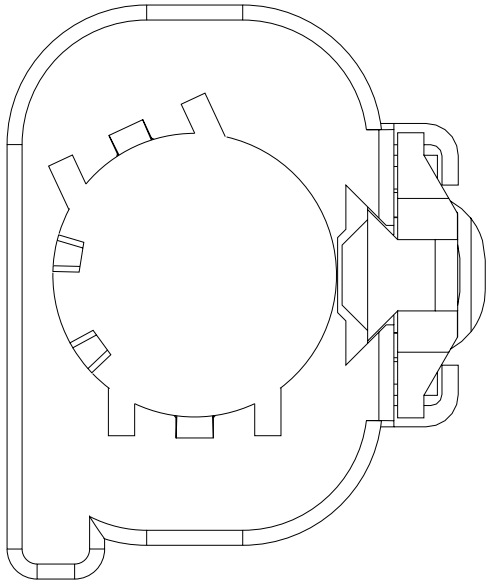

Name	Terminal Part Number	V-Min	Name	Wire Part Number	Wire CSA	Wire Spec	Wire Material description	Wire Color Description	Wire Length	End2 Terminal Part Number	End2 Pin Name	End2 Connect or
1	-	-	B(-)	2643789 R1	7.48	8.0	Std. Wall XLPE Primary Cable	WHITE	2250.0	-	A	J3

Connector Name P04-101

Part Number RING-E-3-8_0

Instances LT/RH/LoneStar - X15/A26 - Rear AUTO HVAC (No Idle) W/ Pre-Heat (Bergstrom Heat and Cool w/ Condensation) 2 SWITCHES:Diagram1 - Powers, Grounds & Controls
LT/RH/LoneStar - X15/A26 - Rear HVAC (No Idle) W/ Pre-Heat (Bergstrom Heat and Cool w/ Condensation) 2 SWITCHES Option 1:Diagram1 - Powers, Grounds & Controls
LT/RH/LoneStar - X15/A26 - Rear HVAC (No Idle) W/ Pre-Heat (Bergstrom Heat and Cool w/ Condensation) 2 SWITCHES Option 2:Diagram1 - Powers, Grounds & Controls
LT/RH/LoneStar - X15/A26 - Rear HVAC (No Idle) W/ Pre-Heat (Bergstrom Heat and Cool w/ Condensation) 4 SWITCHES Option 1:Diagram1 - Powers, Grounds & Controls
LT/RH/LoneStar - X15/A26 - Rear HVAC (No Idle) W/ Pre-Heat (Bergstrom Heat and Cool w/ Condensation) 4 SWITCHES Option 2:Diagram1 - Powers, Grounds & Controls
LT/RH/LoneStar - X15/A26 - Rear Manual HVAC (No Idle) W/ Pre-Heat (Bergstrom Heat and Cool w/ Condensation) 2 SWITCHES:Diagram1 - Powers, Grounds & Controls

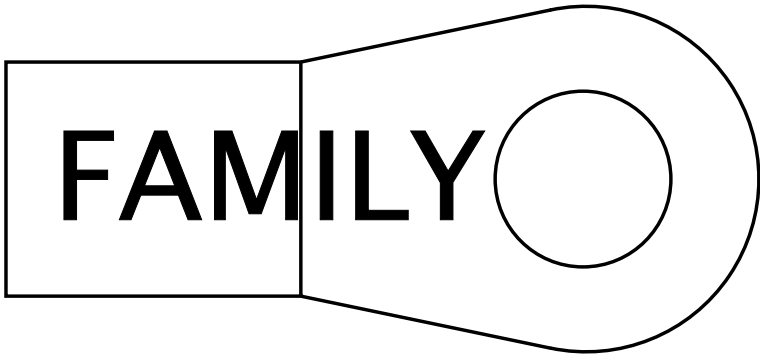

Mates CP-NO_IDLE_CUBE_FUSE-6002- 11-01A

Name	Terminal Part Number	V-Min	Name	Wire Part Number	Wire CSA	Wire Spec	Wire Material description	Wire Color Description	Wire Length	End2 Terminal Part Number	End2 Pin Name	End2 Connector
A	-	-	B(+)	2643701 R1	7.48	8.0	Std. Wall XLPE Primary Cable	RED	2250.0	-	A	100A
A	-	-	B(+)	2643701 R1	7.48	8.0	Std. Wall XLPE Primary Cable	RED	2250.0	-	A	P04-100A
A	-	-	B(+)	2643701 R1	7.48	8.0	Std. Wall XLPE Primary Cable	RED	2250.0	-	-	-

Connector Name	P05-8450B
Part Number	587568C91
Instances	LoneStar - X15 - Crank Inhibit with Hood Switch - with new BCM Pin:Diagram2 LoneStar - X15 - Hood Switch:Diagram1
Mates	SW-HOOD-5058-03-01A

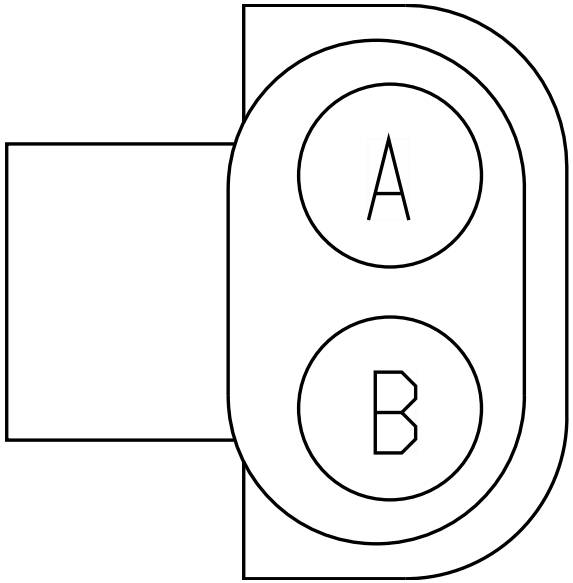

Name	Terminal Part Number	V-Min	Name	Wire Part Number	Wire CSA	Wire Spec	Wire Material description	Wire Color Description	Wire Length	End2 Terminal Part Number	End2 Pin Name	End2 Connect or
A	-	-	U97H	2643718 R1	0.79	18.0	Std. Wall XLPE Primary Cable	VIOLET	1040.0	-	A	8450A
B	-	-	U97J	2643718 R1	0.79	18.0	Std. Wall XLPE Primary Cable	VIOLET	1040.0	-	B	8450A

Connector Name	P06-8311
Part Number	1661778C1
Instances	LoneStar - X15 - City Horn W/ 4PIN CLK W/O RKA:Diagram1-Combination1 LoneStar - X15 - City Horn W/ 4PIN CLK W/RKA:Diagram1-Combination1 LoneStar - X15 - City Horn W/ 10PIN CLK W/RKA:Diagram1-Combination1 LoneStar - X15 - City Horn W/ 10PIN CLK W/O RKA:Diagram1-Combination1
Mates	HORN-CITYHORN-1005-01-01A

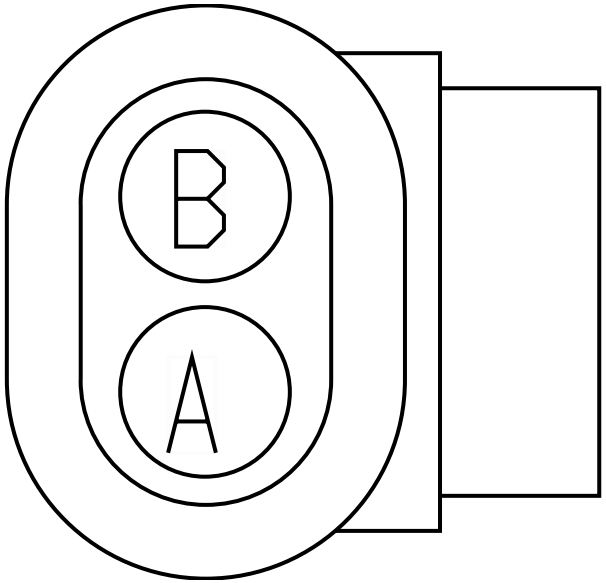

Name	Terminal Part Number	V-Min	Name	Wire Part Number	Wire CSA	Wire Spec	Wire Material description	Wire Color Description	Wire Length	End2 Terminal Part Number	End2 Pin Name	End2 Connect or
A	-	-	M85J	2643680 R1	1.16	16.0	Std. Wall XLPE Primary Cable	GREY	800.0	-	A	8310
B	-	-	M85-GC	2643681 R1	1.16	16.0	Std. Wall XLPE Primary Cable	WHITE	800.0	-	B	8310

Connector Name	P2R-4410A
Part Number	3572899C1
Instances	LT/RH/LoneStar - X15/A26 - DLB - Remote Power Module (2 RPM w/ Switch Packs):Diagram1
Mates	DEV-RPM-02

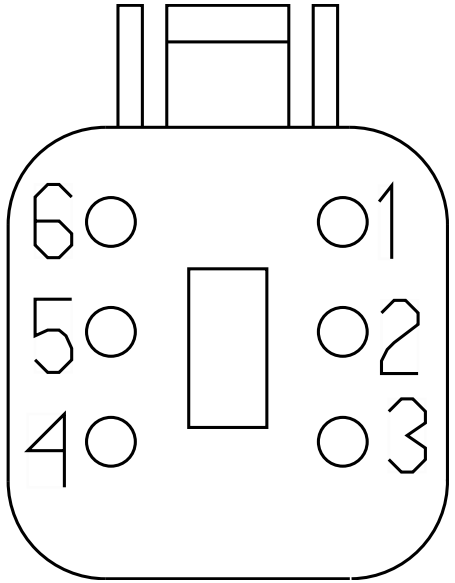

Name	Terminal Part Number	V-Min	Name	Wire Part Number	Wire CSA	Wire Spec	Wire Material description	Wire Color Description	Wire Length	End2 Terminal Part Number	End2 Pin Name	End2 Connect or
2	-	-	N11-GPM	2643689 R1	1.91	14.0	Std. Wall XLPE Primary Cable	WHITE	370.0	-	2	P2R-4410B
6	-	-	N14W	2643760 R1	1.16	16.0	Std. Wall XLPE Primary Cable	RED	370.0	-	6	P2R-4410B

Connector Name	P2R-4410B
Part Number	3572899C1
Instances	LT/RH/LoneStar - X15/A26 - DLB - Remote Power Module (2 RPM w/ Switch Packs):Diagram1
Mates	DEV-RPM-01

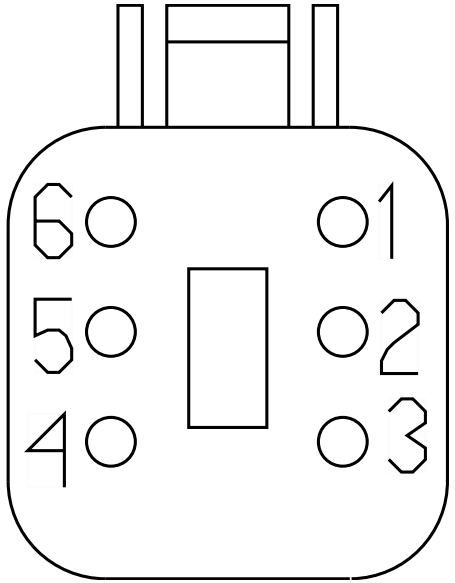

Name	Terminal Part Number	V-Min	Name	Wire Part Number	Wire CSA	Wire Spec	Wire Material description	Wire Color Description	Wire Length	End2 Terminal Part Number	End2 Pin Name	End2 Connect or
2	-	-	N11-GPM	2643689 R1	1.91	14.0	Std. Wall XLPE Primary Cable	WHITE	370.0	-	2	P2R-4410A
6	-	-	N14W	2643760 R1	1.16	16.0	Std. Wall XLPE Primary Cable	RED	370.0	-	6	P2R-4410A

Connector Name	P30-LS 5157
Part Number	3668886C1
Instances	LoneStar - X15/A26 - Front Fog Lamps:Diagram1
Mates	LT-LH_FOG_FRT-1012-03-08A

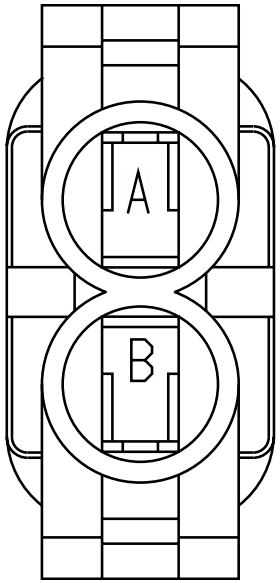

Name	Terminal Part Number	V-Min	Name	Wire Part Number	Wire CSA	Wire Spec	Wire Material description	Wire Color Description	Wire Length	End2 Terminal Part Number	End2 Pin Name	End2 Connect or
A	-	-	S64A	2643684 R1	1.16	16.0	Std. Wall XLPE Primary Cable	YELLOW 2	1081.0	-	1	8203
B	-	-	S64-GA	2643681 R1	1.16	16.0	Std. Wall XLPE Primary Cable	WHITE	1081.0	-	2	8203

Connector Name	P30-LS-5156
Part Number	3668886C1
Instances	LoneStar - X15/A26 - Front Fog Lamps:Diagram1
Mates	LT-RH_FOG_FRT-1012-03-08A

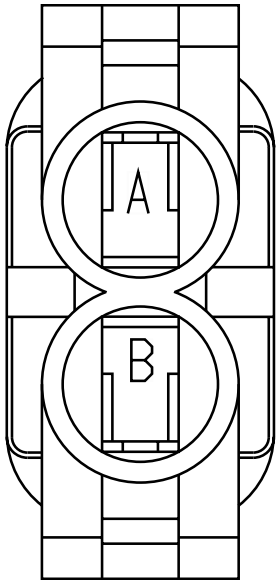

Name	Terminal Part Number	V-Min	Name	Wire Part Number	Wire CSA	Wire Spec	Wire Material description	Wire Color Description	Wire Length	End2 Terminal Part Number	End2 Pin Name	End2 Connect or
A	-	-	S64B	2643684 R1	1.16	16.0	Std. Wall XLPE Primary Cable	YELLOW 2	2043.0	-	3	8203
B	-	-	S64-GB	2643681 R1	1.16	16.0	Std. Wall XLPE Primary Cable	WHITE	2043.0	-	4	8203

Connector Name	P34 DUPA-9305B
Part Number	1671610C1
Instances	LT/RH A26 - Back-Up Alarm (Manual) and UltraShift+:Diagram3 LT/RH A26 - Back-Up Alarm (Manual) and UltraShift+:Diagram7 LT/RH/LoneStar - X15/A26 - Back-Up Alarm (Automatic) TC10:Diagram3 LT/RH/LoneStar X15 - Back-Up Alarm (Manual) and UltraShift +:Diagram3
Mates	ALRM-REVERSE-3009-01-01A

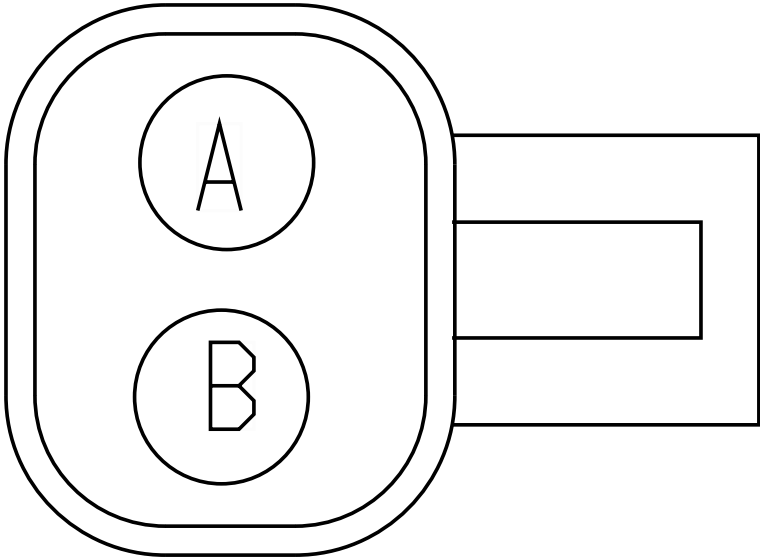

Name	Terminal Part Number	V-Min	Name	Wire Part Number	Wire CSA	Wire Spec	Wire Material description	Wire Color Description	Wire Length	End2 Terminal Part Number	End2 Pin Name	End2 Connect or
A	-	-	71BD	2643690 R1	1.91	14.0	Std. Wall XLPE Primary Cable	ORANGE	1350.0	-	-	-
A	-	-	71BD	2643690 R1	1.91	14.0	Std. Wall XLPE Primary Cable	ORANGE	1350.0	-	X	-
B	-	-	10-GC	2643787 R1	3.01	12.0	Std. Wall XLPE Primary Cable	WHITE	1250.0	-	-	-
B	-	-	10-GC	2643787 R1	3.01	12.0	Std. Wall XLPE Primary Cable	WHITE	1250.0	-	X	-

Connector Name P34-9305B

Part Number 1671610C1

Instances LT/RH A26 - Back-Up Alarm (Manual) and UltraShift+:Diagram4
LT/RH A26 - Back-Up Alarm (Manual) and UltraShift+:Diagram8
LT/RH/LoneStar - X15/A26 - Back-Up Alarm (Automatic) TC10:Diagram4
LT/RH/LoneStar X15 - Back-Up Alarm (Manual) and UltraShift +:Diagram4

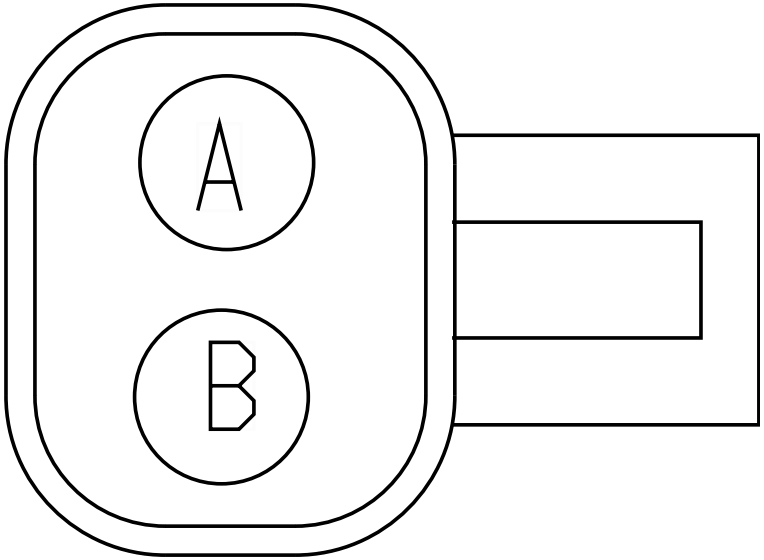

Name	Terminal Part Number	V-Min	Name	Wire Part Number	Wire CSA	Wire Spec	Wire Material description	Wire Color Description	Wire Length	End2 Terminal Part Number	End2 Pin Name	End2 Connect or
A	-	-	71BD	2643690 R1	1.91	14.0	Std. Wall XLPE Primary Cable	ORANGE	1350.0	-	X	-
A	-	-	71BD	2643690 R1	1.91	14.0	Std. Wall XLPE Primary Cable	ORANGE	1350.0	-	-	-
B	-	-	10-GC	2643787 R1	3.01	12.0	Std. Wall XLPE Primary Cable	WHITE	1250.0	-	X	-
B	-	-	10-GC	2643787 R1	3.01	12.0	Std. Wall XLPE Primary Cable	WHITE	1250.0	-	-	-

Connector Name	P40-100D
Part Number	RING-E-5-16_0
Instances	LT/RH/LoneStar - X15/A26 - DC/AC Inverter (1200W W/switch control):Diagram1 LT/RH/LoneStar - X15/A26 - DC/AC Inverter (1800W):Diagram1
Mates	DC_AC_Inverter-2042-02-01

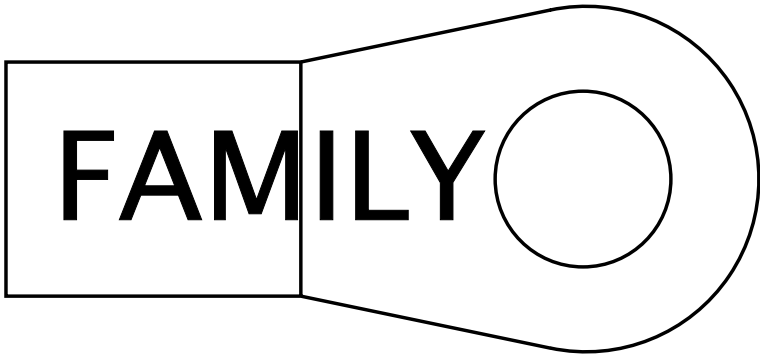

Name	Terminal Part Number	V-Min	Name	Wire Part Number	Wire CSA	Wire Spec	Wire Material description	Wire Color Description	Wire Length	End2 Terminal Part Number	End2 Pin Name	End2 Connect or
A	-	-	N14G	2645938 R1	49.99	0.0	SGX NFLEX 125	BLACK	2850.0	-	-	-

Connector Name	P40-101D
Part Number	RING-E-5-16_0
Instances	LT/RH/LoneStar - X15/A26 - DC/AC Inverter (1200W W/switch control):Diagram1 LT/RH/LoneStar - X15/A26 - DC/AC Inverter (1800W):Diagram1
Mates	DC_AC_Inverter-2042-02-01

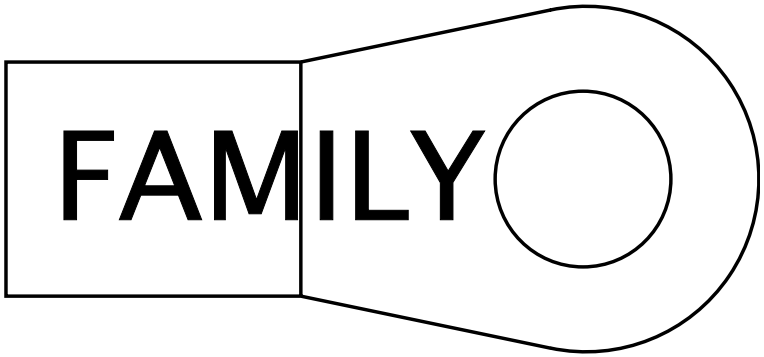

Name	Terminal Part Number	V-Min	Name	Wire Part Number	Wire CSA	Wire Spec	Wire Material description	Wire Color Description	Wire Length	End2 Terminal Part Number	End2 Pin Name	End2 Connect or
A	-	-	N14A	2645961 R1	49.99	0.0	SGR 125	RED	625.0	-	1	101C

Connector Name	P40-102C
Part Number	3877760C1
Instances	LT/RH/LoneStar - X15/A26 - DC/AC Inverter (1200W W/switch control):Diagram1 LT/RH/LoneStar - X15/A26 - DC/AC Inverter (1800W):Diagram1
Mates	DC_AC_Inverter-2042-02-01

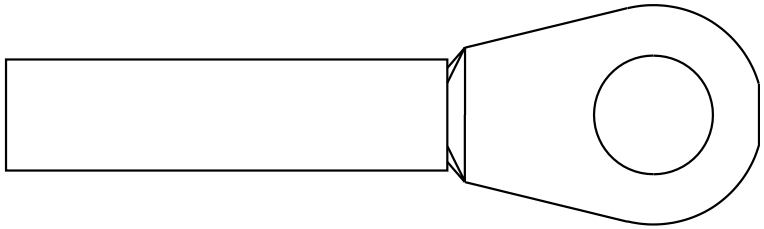

Name	Terminal Part Number	V-Min	Name	Wire Part Number	Wire CSA	Wire Spec	Wire Material description	Wire Color Description	Wire Length	End2 Terminal Part Number	End2 Pin Name	End2 Connect or
A	-	-	N10G	2643789 R1	7.48	8.0	Std. Wall XLPE Primary Cable	WHITE	580.0	-	-	-

Connector Name	RS 5162
Part Number	3612305C1
Short Description	HEADLIGHT T/S HARNESS CONNECTOR
Instances	LoneStar - X15/A26 - Marker Lights (Halogen):Diagram1 RH - X15/A26 - Directional Signal (Turn) W/ HEADLIGHTS:Diagram1 RH - X15/A26 - Headlights Halogen N/INT N/LOWW:Diagram1 RH - X15/A26 - Headlights Halogen N/INT W/LOWW:Diagram1 RH - X15/A26 - Headlights Halogen W/INT N/LOWW:Diagram1 RH - X15/A26 - Headlights Halogen W/INT W/LOWW:Diagram1
Mates	8003

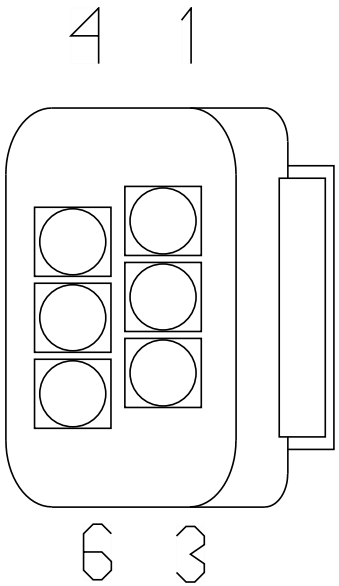

Name	Terminal Part Number	V-Min	Name	Wire Part Number	Wire CSA	Wire Spec	Wire Material description	Wire Color Description	Wire Length	End2 Terminal Part Number	End2 Pin Name	End2 Connect or
1	-	-	U52A	2643693 R1	1.91	14.0	Std. Wall XLPE Primary Cable	YELLOW 2	1835.0	-	-	-
2	-	-	U11-GA	2643689 R1	1.91	14.0	Std. Wall XLPE Primary Cable	WHITE	1485.0	-	2	LF 5162
3	-	-	U53A	2643693 R1	1.91	14.0	Std. Wall XLPE Primary Cable	YELLOW 2	1835.0	-	-	-
3	-	-	U53A	2643693 R1	1.91	14.0	Std. Wall XLPE Primary Cable	YELLOW 2	1835.0	-	1	8002R

Name	Terminal Part Number	V-Min	Name	Wire Part Number	Wire CSA	Wire Spec	Wire Material description	Wire Color Description	Wire Length	End2 Terminal Part Number	End2 Pin Name	End2 Connect or
4	-	-	U56	3510318 R1	1.16	16.0	Thin Wall XLPE Primary Cable	ORANGE	2080.0	-	-	-
5	-	-	U58A	2643679 R1	1.16	16.0	Std. Wall XLPE Primary Cable	BROWN	1435.0	-	-	-

Connector Name	R01-5906E
Part Number	6111844C1
Instances	LoneStar - X15 - Antilock Brake System (ABS) - Wabco 4 Channel Implementation:Diagram4 LoneStar - X15 - Antilock Brake System - Wabco ABS 6 Channel Implementation:Diagram1 LT/RH - X15/A26 - Antilock Brake System (ABS) - Wabco 4 Channel Implementation:Diagram4 LT/RH - X15/A26 - Antilock Brake System - Wabco ABS 6 Channel Implementation:Diagram1
Mates	SNSR-WS-3003-02-04C-R01-95 06E

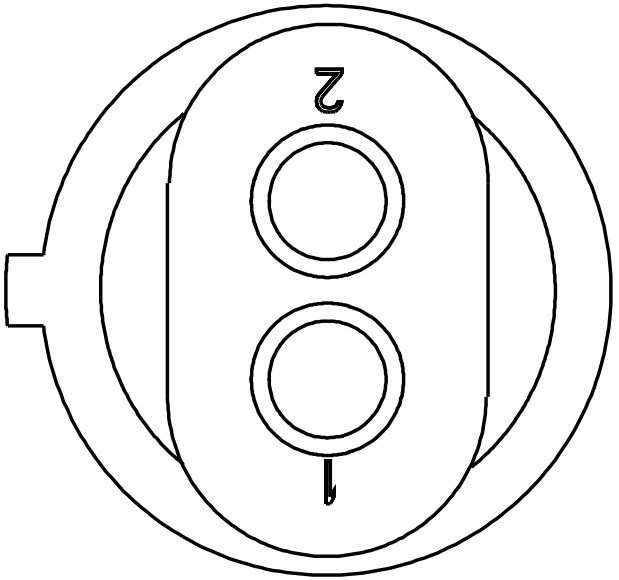

Name	Terminal Part Number	V-Min	Name	Wire Part Number	Wire CSA	Wire Spec	Wire Material description	Wire Color Description	Wire Length	End2 Terminal Part Number	End2 Pin Name	End2 Connect or
1	-	-	SS94MD	3510311 R1	0.79	18.0	Thin Wall XLPE Primary Cable	GREY	2520.0	-	16	9800M
1	-	-	UJ94BRA	3510311 R1	0.79	18.0	Thin Wall XLPE Primary Cable	GREY	1510.0	-	X	-
2	-	-	SS94ME	3510311 R1	0.79	18.0	Thin Wall XLPE Primary Cable	GREY	2520.0	-	17	9800M
2	-	-	UJ94BQA	3510311 R1	0.79	18.0	Thin Wall XLPE Primary Cable	GREY	1890.0	-	X	-

Connector Name	R01-9303A-RL04/05/06
Part Number	3612305C1
Instances	LT/RH - X15/A26 - License Plate Light (Tail Light Single Assy.) Option 1:Diagram2 LT/RH - X15/A26 - License Plate Light (Tail Light Single Assy.)Option 2:Diagram2 LT/RH A26 - Back-Up Alarm (Manual) (W/ Tail Light Bar Assy):Diagram2 LT/RH A26 - Back-Up Alarm (Manual) (W/ Tail Light Bar Assy):Diagram4 LT/RH/LoneStar - X15/A26 - Back-Up Alarm (Automatic) (W/ Tail Light Bar Assy):Diagram2 LT/RH/LoneStar - X15/A26 - License Plate Light (Tail Light Single Assy.) Option 1:Diagram2 LT/RH/LoneStar - X15/A26 - License Plate Light (Tail Light Single Assy.) Option 2:Diagram1-Combination2 LT/RH/LoneStar X15 - Back-Up Alarm (Manual) (W/ Tail Light Bar Assy):Diagram2
Mates	DEV-TAILBOARD-1020-02-06

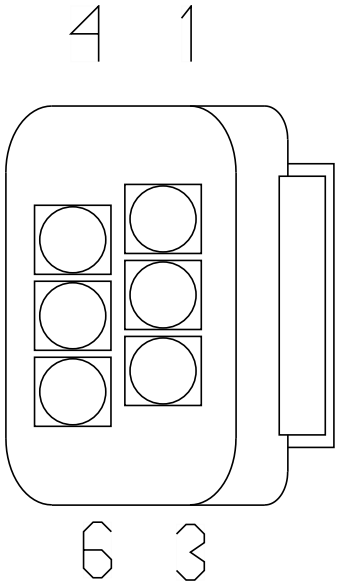

Name	Terminal Part Number	V-Min	Name	Wire Part Number	Wire CSA	Wire Spec	Wire Material description	Wire Color Description	Wire Length	End2 Terminal Part Number	End2 Pin Name	End2 Connector
1	-	-	SA71BA	3510320 R1	3.01	12.0	Thin Wall XLPE Primary Cable	ORANGE	3820.0	-	1	9800M
4	-	-	SA68A	2643688 R1	1.91	14.0	Std. Wall XLPE Primary Cable	BROWN	3820.0	-	4	9800M
5	-	-	SA10-G	3510362 R1	3.01	12.0	Thin Wall XLPE Primary Cable	WHITE	3820.0	-	5	9800M

Connector Name	R01-9303A
Part Number	3612305C1
Instances	LT/RH X15 - Backup Light (Reverse Light) Allison TC10:Diagram2 LT/RH X15 - Backup Light (Single Reverse Light) Allison TC10:Diagram2 LT/RH X15 - Backup Light (Single Reverse Light) Endurant:Diagram2 LT/RH X15 - Backup Lights (Reverse Light) Eaton/Manual Trans:Diagram2 LT/RH X15 - Backup Lights (Reverse Lights) Eaton/Manual Trans:Diagram2 LT/RH X15 - Backup Lights (Single Reverse Light) Eaton/Manual Trans:Diagram2 LT/RH A26 - Backup Light (Reverse Light) Allison TC10:Diagram2 LT/RH A26 - Backup Light (Reverse Light) Allison-3K:Diagram2 LT/RH A26 - Backup Light (Single Reverse Light):Diagram2 LT/RH A26 - Backup Light (Single Reverse Light) Allison 3K:Diagram2 LT/RH A26 - Backup Light (Single Reverse Light) Allison TC10:Diagram2 LT/RH A26 - Backup Light (Single Reverse Light) Endurant:Diagram2 LT/RH A26 - Backup Light (Single Reverse Light) W/Allison 3K:Diagram2 LT/RH A26 - Backup Light (Single Reverse Light) W/Allison TC10:Diagram2 LT/RH A26 - Backup Light Endurant Trans:Diagram2 LT/RH A26 - Backup Lights (Reverse Light) Eaton/Manual Trans:Diagram2 LT/RH A26 - Backup Lights (Reverse Light) Eaton/Manual Trans:Diagram4 LT/RH A26 - Backup Lights (Reverse Lights) Eaton/Manual Trans:Diagram2 LT/RH A26 - Backup Lights (Reverse Lights) Eaton/Manual Trans:Diagram4 LT/RH A26 - Backup Lights (Single Reverse Light) Eaton/Manual Trans:Diagram2 LT/RH A26 - Backup Lights (Single Reverse Light) Eaton/Manual Trans:Diagram4 LT/RH A26 - Backup Lights (Single Reverse Light) Eaton/Manual Trans/:Diagram2

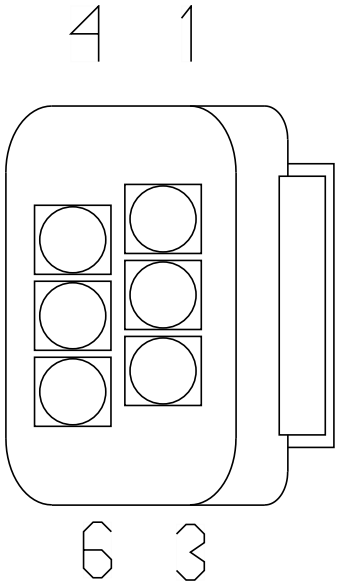

LT/RH A26 - Backup Lights (Single Reverse Light) Eaton/Manual Trans/:Diagram4
LT/RH/LoneStar - X15/A26 - Rear Lights Stop - Single Assembly Option 1:Diagram2
LT/RH/LoneStar - X15/A26 - Rear Lights Stop - Single Assembly Option 2:Diagram2
LT/RH/LoneStar X15 - Backup Light (Single Reverse Light) Endurant:Diagram2
LT/RH/LoneStar X15 - Backup Light (Single Reverse Light) W/ Allison TC10:Diagram2
LT/RH/LoneStar X15 - Backup Light Endurant:Diagram2
LT/RH/LoneStar X15 - Backup Lights (Single Reverse Light) Eaton/Manual Trans:Diagram2

Mates DEV-TAIL_LAMP_ASSY-04/05/0 6-9303A

Name	Terminal Part Number	V-Min	Name	Wire Part Number	Wire CSA	Wire Spec	Wire Material description	Wire Color Description	Wire Length	End2 Terminal Part Number	End2 Pin Name	End2 Connect or
1	-	-	SA71BA	3510320 R1	3.01	12.0	Thin Wall XLPE Primary Cable	ORANGE	3820.0	-	1	9800M
2	-	-	SA56A	2643690 R1	1.91	14.0	Std. Wall XLPE Primary Cable	ORANGE	3820.0	-	2	9800M
3	-	-	SA57A	2643690 R1	1.91	14.0	Std. Wall XLPE Primary Cable	ORANGE	3820.0	-	3	9800M
5	-	-	SA10-G	3510362 R1	3.01	12.0	Thin Wall XLPE Primary Cable	WHITE	3820.0	-	5	9800M
5	-	-	SA10-G	3510362 R1	3.01	12.0	Thin Wall XLPE Primary Cable	WHITE	3820.0	-	2	9800M

Connector Name R01-9303K

Part Number 3612305C1

Instances LT/RH X15 - Backup Light (Dual Reverse Light) Allison-TC10:Diagram1
LT/RH X15 - Backup Light (Dual Reverse LT) Procosion/ Endurant:Diagram1
LT/RH X15 - Backup Lights (Dual Reverse Light) Eaton/Manual Trans:Diagram1
LT/RH - X15/A26 - License Plate Light (Dual LED Lamp Tail Light) Option 1:Diagram1
LT/RH - X15/A26 - License Plate Light (Dual LED Lamp Tail Light) Option 2:Diagram1
LT/RH A26 - Backup Light (Dual Reverse Light):Diagram1
LT/RH A26 - Backup Light (Dual Reverse Light) Allison-3K:Diagram1
LT/RH A26 - Backup Light (Dual Reverse Light) Allison-TC10:Diagram1
LT/RH A26 - Backup Lights (Dual Reverse Light) Eaton/Manual Trans:Diagram1
LT/RH A26 - Backup Lights (Dual Reverse Light) Eaton/Manual Trans:Diagram3
LT/RH/LoneStar - X15/A26 - Rear Lights Stop - Dual Assembly:Diagram1

Mates LT-LS_TAIL_ASSY-1002-01-08

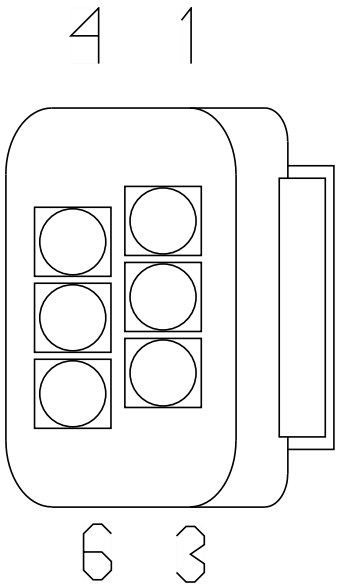

Name	Terminal Part Number	V-Min	Name	Wire Part Number	Wire CSA	Wire Spec	Wire Material description	Wire Color Description	Wire Length	End2 Terminal Part Number	End2 Pin Name	End2 Connect or
1	-	-	VJ71BE	3510320 R1	3.01	12.0	Thin Wall XLPE Primary Cable	ORANGE	550.0	-	X	-
2	-	-	VG56A	2643690 R1	1.91	14.0	Std. Wall XLPE Primary Cable	ORANGE	4220.0	-	2	9800M
2	-	-	VL56AA	2643690 R1	1.91	14.0	Std. Wall XLPE Primary Cable	ORANGE	4220.0	-	2	9800M

Name	Terminal Part Number	V-Min	Name	Wire Part Number	Wire CSA	Wire Spec	Wire Material description	Wire Color Description	Wire Length	End2 Terminal Part Number	End2 Pin Name	End2 Connector
4	-	-	VL68ACA	2643688 R1	1.91	14.0	Std. Wall XLPE Primary Cable	BROWN	600.0	-	X	-
4	-	-	VG68AC	2643688 R1	1.91	14.0	Std. Wall XLPE Primary Cable	BROWN	600.0	-	X	-
5	-	-	VH10-GE	3510362 R1	3.01	12.0	Thin Wall XLPE Primary Cable	WHITE	650.0	-	X	-
5	-	-	VJ10-GE	3510362 R1	3.01	12.0	Thin Wall XLPE Primary Cable	WHITE	650.0	-	X	-

Connector Name R01-9303L

Part Number 3612305C1

Instances LT/RH X15 - Backup Light (Dual Reverse Light) Allison-TC10:Diagram1
LT/RH X15 - Backup Light (Dual Reverse LT) Procosion/ Endurant:Diagram1
LT/RH X15 - Backup Lights (Dual Reverse Light) Eaton/Manual Trans:Diagram1
LT/RH - X15/A26 - License Plate Light (Dual LED Lamp Tail Light) Option 1:Diagram1
LT/RH - X15/A26 - License Plate Light (Dual LED Lamp Tail Light) Option 2:Diagram1
LT/RH A26 - Backup Light (Dual Reverse Light):Diagram1
LT/RH A26 - Backup Light (Dual Reverse Light) Allison-3K:Diagram1
LT/RH A26 - Backup Light (Dual Reverse Light) Allison-TC10:Diagram1
LT/RH A26 - Backup Lights (Dual Reverse Light) Eaton/Manual Trans:Diagram1
LT/RH A26 - Backup Lights (Dual Reverse Light) Eaton/Manual Trans:Diagram3
LT/RH/LoneStar - X15/A26 - Rear Lights Stop - Dual Assembly:Diagram1

Mates LT-RS_TAIL_ASSY-1002-01-08

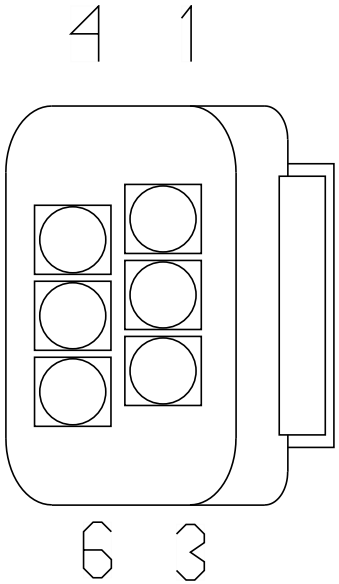

Name	Terminal Part Number	V-Min	Name	Wire Part Number	Wire CSA	Wire Spec	Wire Material description	Wire Color Description	Wire Length	End2 Terminal Part Number	End2 Pin Name	End2 Connect or
1	-	-	VJ71BG	3510320 R1	3.01	12.0	Thin Wall XLPE Primary Cable	ORANGE	700.0	-	X	-
3	-	-	VG57A	2643690 R1	1.91	14.0	Std. Wall XLPE Primary Cable	ORANGE	4570.0	-	3	9800M
3	-	-	VL57AA	2643690 R1	1.91	14.0	Std. Wall XLPE Primary Cable	ORANGE	4570.0	-	3	9800M

Name	Terminal Part Number	V-Min	Name	Wire Part Number	Wire CSA	Wire Spec	Wire Material description	Wire Color Description	Wire Length	End2 Terminal Part Number	End2 Pin Name	End2 Connector
4	-	-	VL68ADA	2643688 R1	1.91	14.0	Std. Wall XLPE Primary Cable	BROWN	650.0	-	X	-
4	-	-	VG68AD	2643688 R1	1.91	14.0	Std. Wall XLPE Primary Cable	BROWN	650.0	-	X	-
5	-	-	VH10-GG	3510362 R1	3.01	12.0	Thin Wall XLPE Primary Cable	WHITE	600.0	-	X	-
5	-	-	VJ10-GG	3510362 R1	3.01	12.0	Thin Wall XLPE Primary Cable	WHITE	600.0	-	X	-

Connector Name	R01-9303M
Part Number	3612305C1
Instances	LT/RH X15 - Backup Light (Dual Reverse Light) Allison-TC10:Diagram2 LT/RH X15 - Backup Light (Dual Reverse LT) Procosion/ Endurant:Diagram2 LT/RH X15 - Backup Lights (Dual Reverse Light) Eaton/Manual Trans:Diagram2 LT/RH - X15/A26 - License Plate Light (Dual LED Lamp Tail Light) Option 1:Diagram2 LT/RH - X15/A26 - License Plate Light (Dual LED Lamp Tail Light) Option 2:Diagram2 LT/RH A26 - Backup Light (Dual Reverse Light):Diagram2 LT/RH A26 - Backup Light (Dual Reverse Light) Allison-3K:Diagram2 LT/RH A26 - Backup Light (Dual Reverse Light) Allison-TC10:Diagram2 LT/RH A26 - Backup Lights (Dual Reverse Light) Eaton/Manual Trans:Diagram2 LT/RH A26 - Backup Lights (Dual Reverse Light) Eaton/Manual Trans:Diagram4 LT/RH/LoneStar - X15/A26 - Rear Lights Stop - Dual Assembly:Diagram2
Mates	LT-LS_TAIL_ASSY-1002-01-08

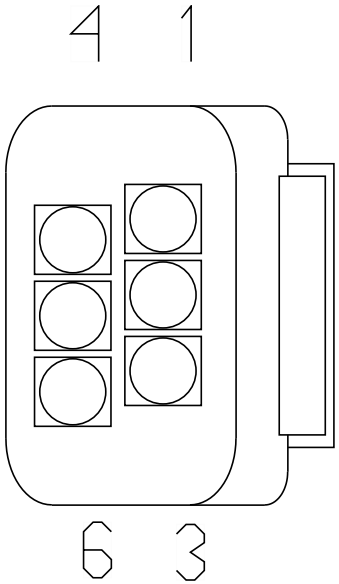

Name	Terminal Part Number	V-Min	Name	Wire Part Number	Wire CSA	Wire Spec	Wire Material description	Wire Color Description	Wire Length	End2 Terminal Part Number	End2 Pin Name	End2 Connector
1	-	-	VK71BC	3510320 R1	3.01	12.0	Thin Wall XLPE Primary Cable	ORANGE	550.0	-	X	-
2	-	-	VE56A	2643690 R1	1.91	14.0	Std. Wall XLPE Primary Cable	ORANGE	3520.0	-	2	9800M
4	-	-	VE68AB	2643688 R1	1.91	14.0	Std. Wall XLPE Primary Cable	BROWN	600.0	-	X	-

Name	Terminal Part Number	V-Min	Name	Wire Part Number	Wire CSA	Wire Spec	Wire Material description	Wire Color Description	Wire Length	End2 Terminal Part Number	End2 Pin Name	End2 Connect or
5	-	-	VF10-GC	3510362 R1	3.01	12.0	Thin Wall XLPE Primary Cable	WHITE	650.0	-	X	-
5	-	-	VK10-GC	3510362 R1	3.01	12.0	Thin Wall XLPE Primary Cable	WHITE	650.0	-	X	-

Connector Name R01-9303N

Part Number 3612305C1

Instances LT/RH X15 - Backup Light (Dual Reverse Light) Allison-TC10:Diagram2
LT/RH X15 - Backup Light (Dual Reverse LT) Procosion/ Endurant:Diagram2
LT/RH X15 - Backup Lights (Dual Reverse Light) Eaton/Manual Trans:Diagram2
LT/RH - X15/A26 - License Plate Light (Dual LED Lamp Tail Light) Option 1:Diagram2
LT/RH - X15/A26 - License Plate Light (Dual LED Lamp Tail Light) Option 2:Diagram2
LT/RH A26 - Backup Light (Dual Reverse Light):Diagram2
LT/RH A26 - Backup Light (Dual Reverse Light) Allison-3K:Diagram2
LT/RH A26 - Backup Light (Dual Reverse Light) Allison-TC10:Diagram2
LT/RH A26 - Backup Lights (Dual Reverse Light) Eaton/Manual Trans:Diagram2
LT/RH A26 - Backup Lights (Dual Reverse Light) Eaton/Manual Trans:Diagram4
LT/RH/LoneStar - X15/A26 - Rear Lights Stop - Dual Assembly:Diagram2

Mates LT-RS_TAIL_ASSY-1002-01-08

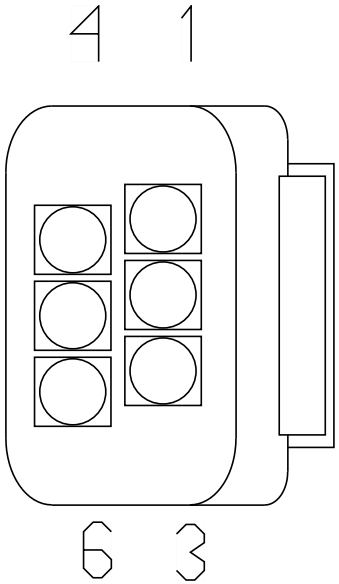

Name	Terminal Part Number	V-Min	Name	Wire Part Number	Wire CSA	Wire Spec	Wire Material description	Wire Color Description	Wire Length	End2 Terminal Part Number	End2 Pin Name	End2 Connect or
1	-	-	VK71BD	3510320 R1	3.01	12.0	Thin Wall XLPE Primary Cable	ORANGE	700.0	-	X	-
3	-	-	VE57A	2643690 R1	1.91	14.0	Std. Wall XLPE Primary Cable	ORANGE	3870.0	-	3	9800M
4	-	-	VE68AA	2643688 R1	1.91	14.0	Std. Wall XLPE Primary Cable	BROWN	650.0	-	X	-

Name	Terminal Part Number	V-Min	Name	Wire Part Number	Wire CSA	Wire Spec	Wire Material description	Wire Color Description	Wire Length	End2 Terminal Part Number	End2 Pin Name	End2 Connect or
5	-	-	VF10-GB	3510362 R1	3.01	12.0	Thin Wall XLPE Primary Cable	WHITE	600.0	-	X	-
5	-	-	VK10-GB	3510362 R1	3.01	12.0	Thin Wall XLPE Primary Cable	WHITE	600.0	-	X	-

Connector Name	R01-9303-RL04/05/06
Part Number	3612305C1
Instances	LT/RH - X15/A26 - License Plate Light (Tail Light Single Assy.) Option 1:Diagram1 LT/RH - X15/A26 - License Plate Light (Tail Light Single Assy.)Option 2:Diagram1 LT/RH A26 - Back-Up Alarm (Manual) (W/ Tail Light Bar Assy):Diagram1 LT/RH A26 - Back-Up Alarm (Manual) (W/ Tail Light Bar Assy):Diagram3 LT/RH/LoneStar - X15/A26 - Back-Up Alarm (Automatic) (W/ Tail Light Bar Assy):Diagram1 LT/RH/LoneStar - X15/A26 - License Plate Light (Tail Light Single Assy.) Option 1:Diagram1 LT/RH/LoneStar - X15/A26 - License Plate Light (Tail Light Single Assy.) Option 2:Diagram1-Combination1 LT/RH/LoneStar X15 - Back-Up Alarm (Manual) (W/ Tail Light Bar Assy):Diagram1
Mates	DEV-TAILBOARD-1020-02-06

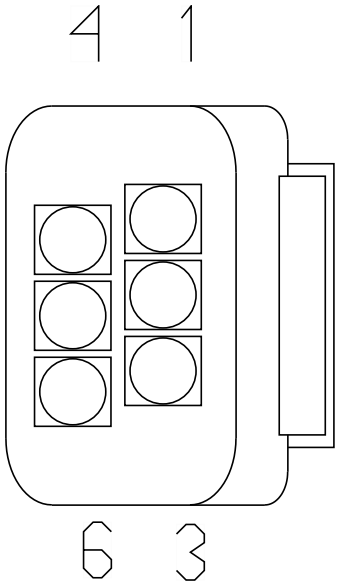

Name	Terminal Part Number	V-Min	Name	Wire Part Number	Wire CSA	Wire Spec	Wire Material description	Wire Color Description	Wire Length	End2 Terminal Part Number	End2 Pin Name	End2 Connector
1	-	-	RA71BA	3510320 R1	3.01	12.0	Thin Wall XLPE Primary Cable	ORANGE	3120.0	-	1	9800M
4	-	-	RA68A	2643688 R1	1.91	14.0	Std. Wall XLPE Primary Cable	BROWN	3120.0	-	4	9800M
5	-	-	RA10-G	3510362 R1	3.01	12.0	Thin Wall XLPE Primary Cable	WHITE	3120.0	-	5	9800M

Connector Name	R01-9303
Part Number	3612305C1
Instances	LT/RH X15 - Backup Light (Reverse Light) Allison TC10:Diagram1 LT/RH X15 - Backup Light (Single Reverse Light) Allison TC10:Diagram1 LT/RH X15 - Backup Light (Single Reverse Light) Endurant:Diagram1 LT/RH X15 - Backup Lights (Reverse Light) Eaton/Manual Trans:Diagram1 LT/RH X15 - Backup Lights (Reverse Lights) Eaton/Manual Trans:Diagram1 LT/RH X15 - Backup Lights (Single Reverse Light) Eaton/Manual Trans:Diagram1 LT/RH A26 - Backup Light (Reverse Light) Allison TC10:Diagram1 LT/RH A26 - Backup Light (Reverse Light) Allison-3K:Diagram1 LT/RH A26 - Backup Light (Single Reverse Light):Diagram1 LT/RH A26 - Backup Light (Single Reverse Light) Allison 3K:Diagram1 LT/RH A26 - Backup Light (Single Reverse Light) Allison TC10:Diagram1 LT/RH A26 - Backup Light (Single Reverse Light) Endurant:Diagram1 LT/RH A26 - Backup Light (Single Reverse Light) W/Allison 3K:Diagram1 LT/RH A26 - Backup Light (Single Reverse Light) W/Allison TC10:Diagram1 LT/RH A26 - Backup Light Endurant Trans:Diagram1 LT/RH A26 - Backup Lights (Reverse Light) Eaton/Manual Trans:Diagram1 LT/RH A26 - Backup Lights (Reverse Light) Eaton/Manual Trans:Diagram3 LT/RH A26 - Backup Lights (Reverse Lights) Eaton/Manual Trans:Diagram1 LT/RH A26 - Backup Lights (Reverse Lights) Eaton/Manual Trans:Diagram3 LT/RH A26 - Backup Lights (Single Reverse Light) Eaton/Manual Trans:Diagram1 LT/RH A26 - Backup Lights (Single Reverse Light) Eaton/Manual Trans:Diagram3 LT/RH A26 - Backup Lights (Single Reverse Light) Eaton/Manual Trans/:Diagram1

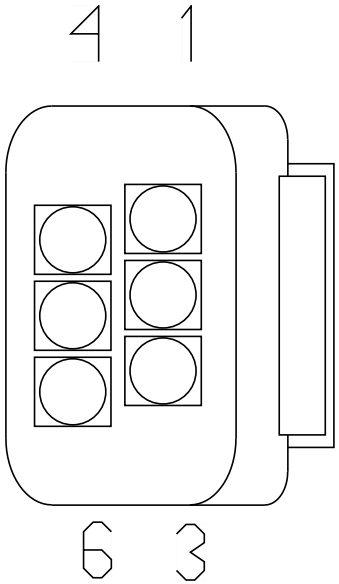

LT/RH A26 - Backup Lights (Single Reverse Light) Eaton/Manual Trans/:Diagram3
LT/RH/LoneStar - X15/A26 - Rear Lights Stop - Single Assembly Option 1:Diagram1
LT/RH/LoneStar - X15/A26 - Rear Lights Stop - Single Assembly Option 2:Diagram1
LT/RH/LoneStar X15 - Backup Light (Single Reverse Light) Endurant:Diagram1
LT/RH/LoneStar X15 - Backup Light (Single Reverse Light) W/ Allison TC10:Diagram1
LT/RH/LoneStar X15 - Backup Light Endurant:Diagram1
LT/RH/LoneStar X15 - Backup Lights (Single Reverse Light) Eaton/Manual Trans:Diagram1

Mates DEV-TAIL_LAMP_ASSY-04/05/0 6-9303

Name	Terminal Part Number	V-Min	Name	Wire Part Number	Wire CSA	Wire Spec	Wire Material description	Wire Color Description	Wire Length	End2 Terminal Part Number	End2 Pin Name	End2 Connect or
1	-	-	RA71BA	3510320 R1	3.01	12.0	Thin Wall XLPE Primary Cable	ORANGE	3120.0	-	1	9800M
2	-	-	RA56A	2643690 R1	1.91	14.0	Std. Wall XLPE Primary Cable	ORANGE	3120.0	-	2	9800M
3	-	-	RA57A	2643690 R1	1.91	14.0	Std. Wall XLPE Primary Cable	ORANGE	3120.0	-	3	9800M
5	-	-	RA10-G	3510362 R1	3.01	12.0	Thin Wall XLPE Primary Cable	WHITE	3120.0	-	5	9800M

Connector Name R01-9305B

Part Number 1671610C1

Instances LT/RH A26 - Back-Up Alarm (Manual) and UltraShift+:Diagram1
LT/RH A26 - Back-Up Alarm (Manual) and UltraShift+:Diagram5
LT/RH/LoneStar - X15/A26 - Back-Up Alarm (Automatic) TC10:Diagram1
LT/RH/LoneStar X15 - Back-Up Alarm (Manual) and UltraShift +:Diagram1

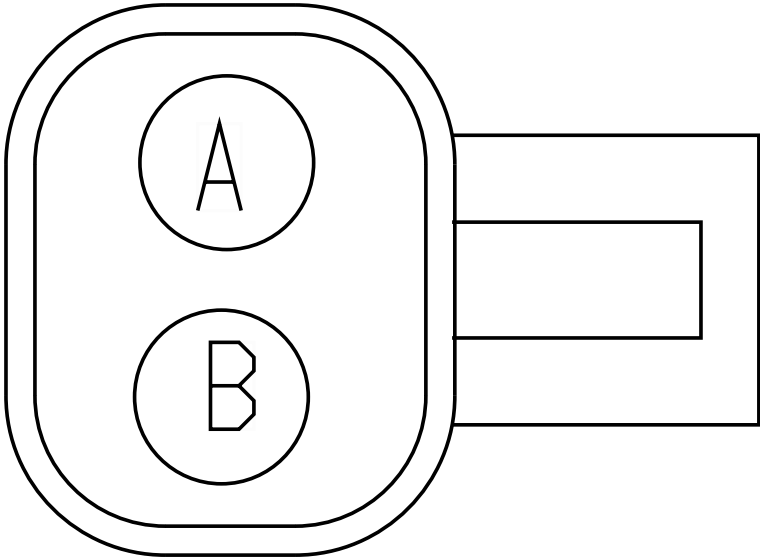

Name	Terminal Part Number	V-Min	Name	Wire Part Number	Wire CSA	Wire Spec	Wire Material description	Wire Color Description	Wire Length	End2 Terminal Part Number	End2 Pin Name	End2 Connect or
A	-	-	VH71BF	2643755 R1	3.01	12.0	Std. Wall XLPE Primary Cable	ORANGE	400.0	-	X	-
B	-	-	VH10-GF	3510362 R1	3.01	12.0	Thin Wall XLPE Primary Cable	WHITE	325.0	-	X	-

Connector Name R01-9305C

Part Number 1671610C1

Instances LT/RH A26 - Back-Up Alarm (Manual) and UltraShift+:Diagram2
LT/RH A26 - Back-Up Alarm (Manual) and UltraShift+:Diagram6
LT/RH/LoneStar - X15/A26 - Back-Up Alarm (Automatic) TC10:Diagram2
LT/RH/LoneStar X15 - Back-Up Alarm (Manual) and UltraShift +:Diagram2

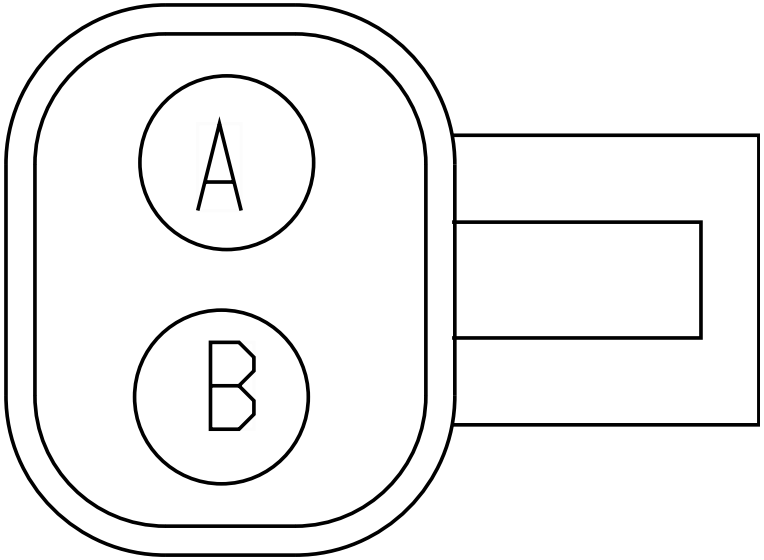

Name	Terminal Part Number	V-Min	Name	Wire Part Number	Wire CSA	Wire Spec	Wire Material description	Wire Color Description	Wire Length	End2 Terminal Part Number	End2 Pin Name	End2 Connect or
A	-	-	VF71BB	3510320 R1	3.01	12.0	Thin Wall XLPE Primary Cable	ORANGE	425.0	-	X	-
B	-	-	VF10-GD	3510362 R1	3.01	12.0	Thin Wall XLPE Primary Cable	WHITE	325.0	-	X	-

Connector Name	R01-9501D DA/AA
Part Number	3757487C1
Instances	LoneStar - X15 - Antilock Brake System (ABS) [Bendix 6 Channel Implementation]:Diagram1 LoneStar - X15 - Antilock Brake System (ABS) [Bendix 6 Channel Implementation]:Diagram2 LoneStar - X15 - Antilock Brake System (ABS)-BENDIX 4 Channel Implemenation:Diagram2 LoneStar - X15 - Antilock Brake System (ABS)-BENDIX 4 Channel Implemenation:Diagram3 LT/RH - X15/A26 - Antilock Brake System (ABS) BENDIX 4 Channel Implemenation:Diagram2 LT/RH - X15/A26 - Antilock Brake System (ABS) BENDIX 4 Channel Implemenation:Diagram3 LT/RH - X15/A26 - Antilock Brake System (ABS) Bendix 6 Channel Implementation:Diagram1 LT/RH - X15/A26 - Antilock Brake System (ABS) Bendix 6 Channel Implementation:Diagram2
Mates	SNSR-WS-3003-01-04D-9501D

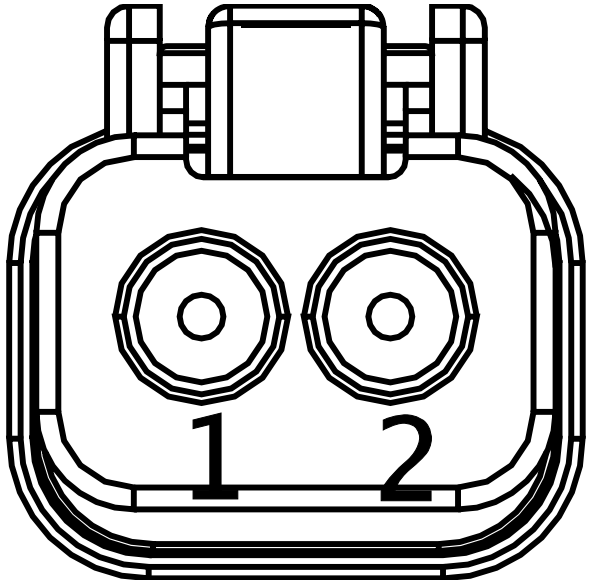

Name	Terminal Part Number	V-Min	Name	Wire Part Number	Wire CSA	Wire Spec	Wire Material description	Wire Color Description	Wire Length	End2 Terminal Part Number	End2 Pin Name	End2 Connector
1	-	-	SB94BE	2643680 R1	1.16	16.0	Std. Wall XLPE Primary Cable	GREY	2720.0	-	17	9800M
1	-	-	SD94BE	2643680 R1	1.16	16.0	Std. Wall XLPE Primary Cable	GREY	2720.0	-	17	9800M
1	-	-	TF94BR	2643680 R1	1.16	16.0	Std. Wall XLPE Primary Cable	GREY	2670.0	-	5	9516M
1	-	-	UP94BR	2643680 R1	1.16	16.0	Std. Wall XLPE Primary Cable	GREY	2670.0	-	5	9516M

Name	Terminal Part Number	V-Min	Name	Wire Part Number	Wire CSA	Wire Spec	Wire Material description	Wire Color Description	Wire Length	End2 Terminal Part Number	End2 Pin Name	End2 Connect or
2	-	-	SD94BD	2643680 R1	1.16	16.0	Std. Wall XLPE Primary Cable	GREY	2720.0	-	16	9800M
2	-	-	SB94BD	2643680 R1	1.16	16.0	Std. Wall XLPE Primary Cable	GREY	2720.0	-	16	9800M
2	-	-	TF94BQ	2643680 R1	1.16	16.0	Std. Wall XLPE Primary Cable	GREY	2670.0	-	4	9516M
2	-	-	UP94BQ	2643680 R1	1.16	16.0	Std. Wall XLPE Primary Cable	GREY	2670.0	-	4	9516M

Connector Name R01-9501 DA

Part Number 3757487C1

Instances LoneStar - X15 - Antilock Brake System (ABS)-BENDIX 4 Channel Implemenation:Diagram1
LT/RH - X15/A26 - Antilock Brake System (ABS) BENDIX 4 Channel Implemenation:Diagram1

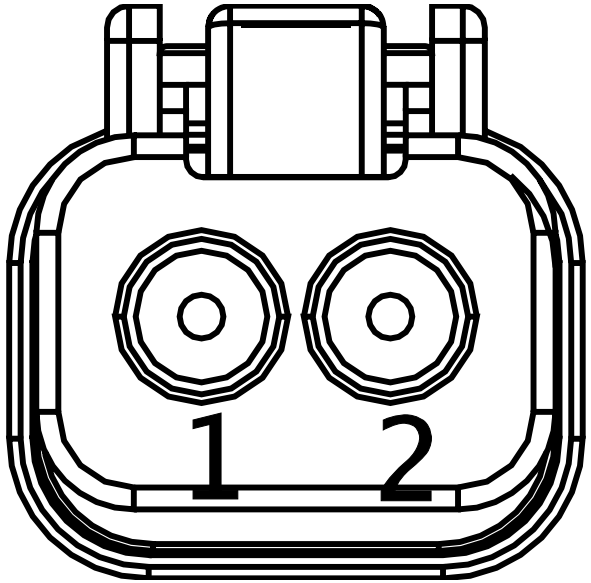

Name	Terminal Part Number	V-Min	Name	Wire Part Number	Wire CSA	Wire Spec	Wire Material description	Wire Color Description	Wire Length	End2 Terminal Part Number	End2 Pin Name	End2 Connect or
1	-	-	RB94BE	2643680 R1	1.16	16.0	Std. Wall XLPE Primary Cable	GREY	1535.0	-	17	9800M
2	-	-	RB94BD	2643680 R1	1.16	16.0	Std. Wall XLPE Primary Cable	GREY	1535.0	-	16	9800M

Connector Name R01-9502A DA

Part Number 1686834C1

Instances LoneStar - X15 - Antilock Brake System (ABS) [Bendix 6 Channel Implementation]:Diagram1
LoneStar - X15 - Antilock Brake System (ABS)-BENDIX 4 Channel Implemenation:Diagram2
LT/RH - X15/A26 - Antilock Brake System (ABS) BENDIX 4 Channel Implemenation:Diagram2
LT/RH - X15/A26 - Antilock Brake System (ABS) Bendix 6 Channel Implementation:Diagram1

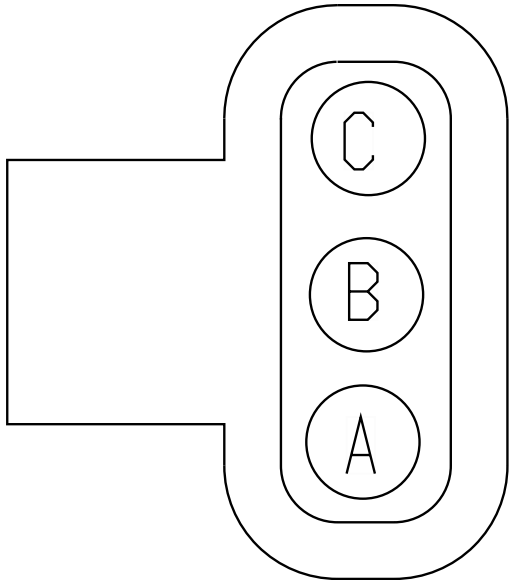

Name	Terminal Part Number	V-Min	Name	Wire Part Number	Wire CSA	Wire Spec	Wire Material description	Wire Color Description	Wire Length	End2 Terminal Part Number	End2 Pin Name	End2 Connect or
A	-	-	SB94BA	2643680 R1	1.16	16.0	Std. Wall XLPE Primary Cable	GREY	1585.0	-	13	9800M
A	-	-	UP94BA	2643680 R1	1.16	16.0	Std. Wall XLPE Primary Cable	GREY	1585.0	-	13	9800M
B	-	-	UP94BB	2643680 R1	1.16	16.0	Std. Wall XLPE Primary Cable	GREY	1585.0	-	14	9800M
B	-	-	SB94BB	2643680 R1	1.16	16.0	Std. Wall XLPE Primary Cable	GREY	1585.0	-	14	9800M

Name	Terminal Part Number	V-Min	Name	Wire Part Number	Wire CSA	Wire Spec	Wire Material description	Wire Color Description	Wire Length	End2 Terminal Part Number	End2 Pin Name	End2 Connect or
C	-	-	SB94BC	2643680 R1	1.16	16.0	Std. Wall XLPE Primary Cable	GREY	1585.0	-	15	9800M
C	-	-	UP94BC	2643680 R1	1.16	16.0	Std. Wall XLPE Primary Cable	GREY	1585.0	-	15	9800M

Connector Name R01-9502B DA/AA

Part Number 1686834C1

Instances LoneStar - X15 - Antilock Brake System (ABS) [Bendix 6 Channel Implementation]:Diagram1
LoneStar - X15 - Antilock Brake System (ABS) [Bendix 6 Channel Implementation]:Diagram2
LoneStar - X15 - Antilock Brake System (ABS)-BENDIX 4 Channel Implemenation:Diagram3
LoneStar - X15 - Antilock Brake System (ABS)-BENDIX 4 Channel Implemenation:Diagram4
LT/RH - X15/A26 - Antilock Brake System (ABS) BENDIX 4 Channel Implemenation:Diagram3
LT/RH - X15/A26 - Antilock Brake System (ABS) BENDIX 4 Channel Implemenation:Diagram4
LT/RH - X15/A26 - Antilock Brake System (ABS) Bendix 6 Channel Implementation:Diagram1
LT/RH - X15/A26 - Antilock Brake System (ABS) Bendix 6 Channel Implementation:Diagram2

Mates MDL-ABS-3003-01-04C-9502B

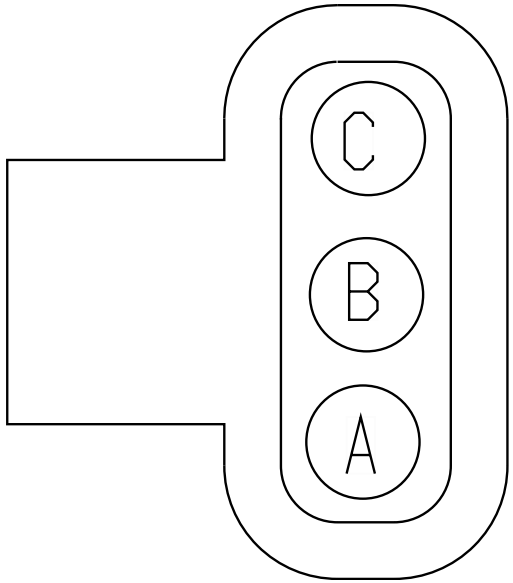

Name	Terminal Part Number	V-Min	Name	Wire Part Number	Wire CSA	Wire Spec	Wire Material description	Wire Color Description	Wire Length	End2 Terminal Part Number	End2 Pin Name	End2 Connect or
A	-	-	SZ94BA	2643680 R1	1.16	16.0	Std. Wall XLPE Primary Cable	GREY	2850.0	-	13	9800M
A	-	-	SD94BA	2643680 R1	1.16	16.0	Std. Wall XLPE Primary Cable	GREY	2850.0	-	13	9800M
A	-	-	UP94BY	2643680 R1	1.16	16.0	Std. Wall XLPE Primary Cable	GREY	2800.0	-	1	9516M
A	-	-	TF94BY	2643680 R1	1.16	16.0	Std. Wall XLPE Primary Cable	GREY	2800.0	-	1	9516M

Name	Terminal Part Number	V-Min	Name	Wire Part Number	Wire CSA	Wire Spec	Wire Material description	Wire Color Description	Wire Length	End2 Terminal Part Number	End2 Pin Name	End2 Connector
B	-	-	SD94BB	2643680 R1	1.16	16.0	Std. Wall XLPE Primary Cable	GREY	2850.0	-	14	9800M
B	-	-	SZ94BB	2643680 R1	1.16	16.0	Std. Wall XLPE Primary Cable	GREY	2850.0	-	14	9800M
B	-	-	TF94BZ	2643680 R1	1.16	16.0	Std. Wall XLPE Primary Cable	GREY	2800.0	-	2	9516M
B	-	-	UP94BZ	2643680 R1	1.16	16.0	Std. Wall XLPE Primary Cable	GREY	2800.0	-	2	9516M
C	-	-	SZ94BC	2643680 R1	1.16	16.0	Std. Wall XLPE Primary Cable	GREY	2850.0	-	15	9800M
C	-	-	SD94BC	2643680 R1	1.16	16.0	Std. Wall XLPE Primary Cable	GREY	2850.0	-	15	9800M
C	-	-	UP94BP	2643680 R1	1.16	16.0	Std. Wall XLPE Primary Cable	GREY	2800.0	-	3	9516M
C	-	-	TF94BP	2643680 R1	1.16	16.0	Std. Wall XLPE Primary Cable	GREY	2800.0	-	3	9516M

Connector Name R01-9502 DA

Part Number 1686834C1

Instances LoneStar - X15 - Antilock Brake System (ABS)-BENDIX 4 Channel Implemenation:Diagram1
LT/RH - X15/A26 - Antilock Brake System (ABS) BENDIX 4 Channel Implemenation:Diagram1

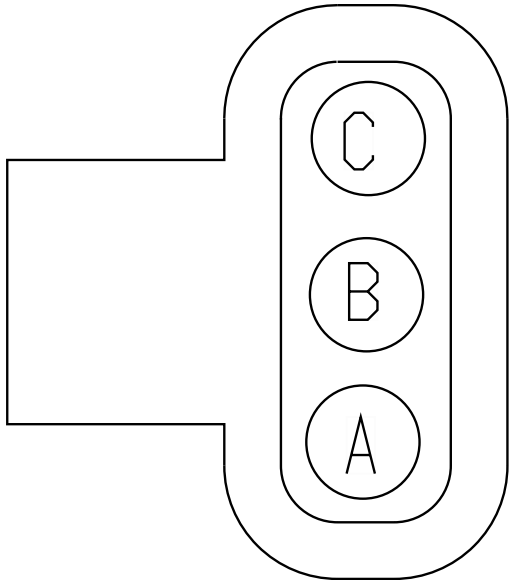

Name	Terminal Part Number	V-Min	Name	Wire Part Number	Wire CSA	Wire Spec	Wire Material description	Wire Color Description	Wire Length	End2 Terminal Part Number	End2 Pin Name	End2 Connect or
A	-	-	RB94BA	2643680 R1	1.16	16.0	Std. Wall XLPE Primary Cable	GREY	1510.0	-	13	9800M
B	-	-	RB94BB	2643680 R1	1.16	16.0	Std. Wall XLPE Primary Cable	GREY	1510.0	-	14	9800M
C	-	-	RB94BC	2643680 R1	1.16	16.0	Std. Wall XLPE Primary Cable	GREY	1510.0	-	15	9800M

Connector Name	R01-9503D DA/AA
Part Number	3757487C1
Instances	LoneStar - X15 - Antilock Brake System (ABS) [Bendix 6 Channel Implementation]:Diagram1 LoneStar - X15 - Antilock Brake System (ABS) [Bendix 6 Channel Implementation]:Diagram2 LoneStar - X15 - Antilock Brake System (ABS)-BENDIX 4 Channel Implemenation:Diagram2 LoneStar - X15 - Antilock Brake System (ABS)-BENDIX 4 Channel Implemenation:Diagram3 LT/RH - X15/A26 - Antilock Brake System (ABS) BENDIX 4 Channel Implemenation:Diagram2 LT/RH - X15/A26 - Antilock Brake System (ABS) BENDIX 4 Channel Implemenation:Diagram3 LT/RH - X15/A26 - Antilock Brake System (ABS) Bendix 6 Channel Implementation:Diagram1 LT/RH - X15/A26 - Antilock Brake System (ABS) Bendix 6 Channel Implementation:Diagram2
Mates	SNSR-WS-3003-01-04A-9503D

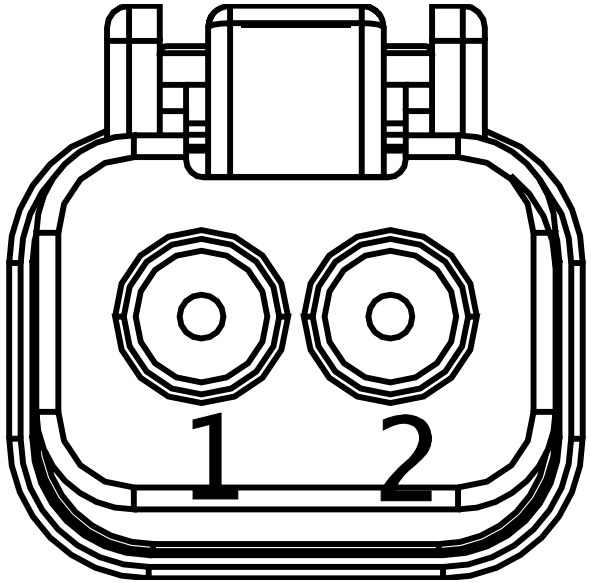

Name	Terminal Part Number	V-Min	Name	Wire Part Number	Wire CSA	Wire Spec	Wire Material description	Wire Color Description	Wire Length	End2 Terminal Part Number	End2 Pin Name	End2 Connector
1	-	-	SB94BH	2643680 R1	1.16	16.0	Std. Wall XLPE Primary Cable	GREY	3295.0	-	19	9800M
1	-	-	SD94BH	2643680 R1	1.16	16.0	Std. Wall XLPE Primary Cable	GREY	3295.0	-	19	9800M
1	-	-	UP94BW	2643680 R1	1.16	16.0	Std. Wall XLPE Primary Cable	GREY	3245.0	-	10	9516M
1	-	-	TF94BW	2643680 R1	1.16	16.0	Std. Wall XLPE Primary Cable	GREY	3245.0	-	10	9516M

Name	Terminal Part Number	V-Min	Name	Wire Part Number	Wire CSA	Wire Spec	Wire Material description	Wire Color Description	Wire Length	End2 Terminal Part Number	End2 Pin Name	End2 Connect or
2	-	-	SD94BF	2643680 R1	1.16	16.0	Std. Wall XLPE Primary Cable	GREY	3295.0	-	18	9800M
2	-	-	SB94BF	2643680 R1	1.16	16.0	Std. Wall XLPE Primary Cable	GREY	3295.0	-	18	9800M
2	-	-	TF94BV	2643680 R1	1.16	16.0	Std. Wall XLPE Primary Cable	GREY	3245.0	-	9	9516M
2	-	-	UP94BV	2643680 R1	1.16	16.0	Std. Wall XLPE Primary Cable	GREY	3245.0	-	9	9516M

Connector Name R01-9503 DA

Part Number 3757487C1

Instances LoneStar - X15 - Antilock Brake System (ABS)-BENDIX 4 Channel Implemenation:Diagram1
LT/RH - X15/A26 - Antilock Brake System (ABS) BENDIX 4 Channel Implemenation:Diagram1

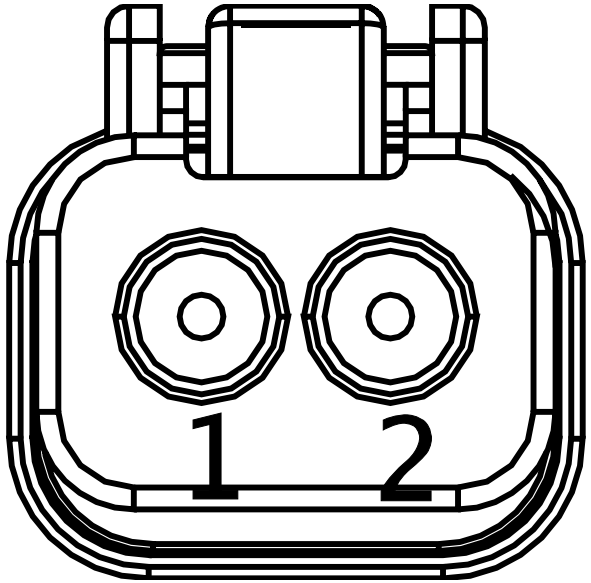

Name	Terminal Part Number	V-Min	Name	Wire Part Number	Wire CSA	Wire Spec	Wire Material description	Wire Color Description	Wire Length	End2 Terminal Part Number	End2 Pin Name	End2 Connect or
1	-	-	RB94BH	2643680 R1	1.16	16.0	Std. Wall XLPE Primary Cable	GREY	2060.0	-	19	9800M
2	-	-	RB94BF	2643680 R1	1.16	16.0	Std. Wall XLPE Primary Cable	GREY	2060.0	-	18	9800M

Connector Name	R01-9504A DA/AA
Part Number	1686834C1
Instances	LoneStar - X15 - Antilock Brake System (ABS) [Bendix 6 Channel Implementation]:Diagram1 LoneStar - X15 - Antilock Brake System (ABS) [Bendix 6 Channel Implementation]:Diagram2 LoneStar - X15 - Antilock Brake System (ABS)-BENDIX 4 Channel Implemenation:Diagram3 LoneStar - X15 - Antilock Brake System (ABS)-BENDIX 4 Channel Implemenation:Diagram4 LT/RH - X15/A26 - Antilock Brake System (ABS) BENDIX 4 Channel Implemenation:Diagram3 LT/RH - X15/A26 - Antilock Brake System (ABS) BENDIX 4 Channel Implemenation:Diagram4 LT/RH - X15/A26 - Antilock Brake System (ABS) Bendix 6 Channel Implementation:Diagram1 LT/RH - X15/A26 - Antilock Brake System (ABS) Bendix 6 Channel Implementation:Diagram2
Mates	MDL-ABS-3003-01-04D-9504A

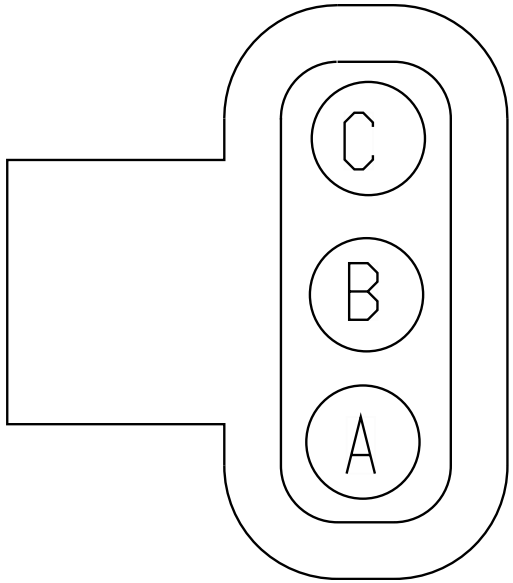

Name	Terminal Part Number	V-Min	Name	Wire Part Number	Wire CSA	Wire Spec	Wire Material description	Wire Color Description	Wire Length	End2 Terminal Part Number	End2 Pin Name	End2 Connect or
A	-	-	SZ94BJ	2643680 R1	1.16	16.0	Std. Wall XLPE Primary Cable	GREY	3470.0	-	20	9800M
A	-	-	SD94BJ	2643680 R1	1.16	16.0	Std. Wall XLPE Primary Cable	GREY	3470.0	-	20	9800M
A	-	-	TF94BS	2643680 R1	1.16	16.0	Std. Wall XLPE Primary Cable	GREY	3420.0	-	6	9516M
A	-	-	UP94BS	2643680 R1	1.16	16.0	Std. Wall XLPE Primary Cable	GREY	3420.0	-	6	9516M

Name	Terminal Part Number	V-Min	Name	Wire Part Number	Wire CSA	Wire Spec	Wire Material description	Wire Color Description	Wire Length	End2 Terminal Part Number	End2 Pin Name	End2 Connector
B	-	-	SD94BK	2643680 R1	1.16	16.0	Std. Wall XLPE Primary Cable	GREY	3470.0	-	21	9800M
B	-	-	SZ94BK	2643680 R1	1.16	16.0	Std. Wall XLPE Primary Cable	GREY	3470.0	-	21	9800M
B	-	-	TF94BT	2643680 R1	1.16	16.0	Std. Wall XLPE Primary Cable	GREY	3420.0	-	7	9516M
B	-	-	UP94BT	2643680 R1	1.16	16.0	Std. Wall XLPE Primary Cable	GREY	3420.0	-	7	9516M
C	-	-	SZ94BL	2643680 R1	1.16	16.0	Std. Wall XLPE Primary Cable	GREY	3470.0	-	22	9800M
C	-	-	SD94BL	2643680 R1	1.16	16.0	Std. Wall XLPE Primary Cable	GREY	3470.0	-	22	9800M
C	-	-	UP94BU	2643680 R1	1.16	16.0	Std. Wall XLPE Primary Cable	GREY	3420.0	-	8	9516M
C	-	-	TF94BU	2643680 R1	1.16	16.0	Std. Wall XLPE Primary Cable	GREY	3420.0	-	8	9516M

Connector Name R01-9504B DA

Part Number 1686834C1

Instances LoneStar - X15 - Antilock Brake System (ABS) [Bendix 6 Channel Implementation]:Diagram1
LoneStar - X15 - Antilock Brake System (ABS)-BENDIX 4 Channel Implemenation:Diagram2
LT/RH - X15/A26 - Antilock Brake System (ABS) BENDIX 4 Channel Implemenation:Diagram2
LT/RH - X15/A26 - Antilock Brake System (ABS) Bendix 6 Channel Implementation:Diagram1

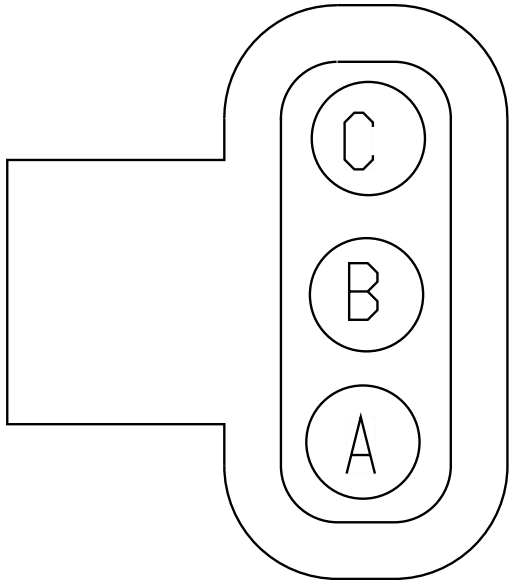

Name	Terminal Part Number	V-Min	Name	Wire Part Number	Wire CSA	Wire Spec	Wire Material description	Wire Color Description	Wire Length	End2 Terminal Part Number	End2 Pin Name	End2 Connect or
A	-	-	SB94BJ	2643680 R1	1.16	16.0	Std. Wall XLPE Primary Cable	GREY	4045.0	-	20	9800M
A	-	-	UP94BJ	2643680 R1	1.16	16.0	Std. Wall XLPE Primary Cable	GREY	4045.0	-	20	9800M
B	-	-	SB94BK	2643680 R1	1.16	16.0	Std. Wall XLPE Primary Cable	GREY	4045.0	-	21	9800M
B	-	-	UP94BK	2643680 R1	1.16	16.0	Std. Wall XLPE Primary Cable	GREY	4045.0	-	21	9800M

Name	Terminal Part Number	V-Min	Name	Wire Part Number	Wire CSA	Wire Spec	Wire Material description	Wire Color Description	Wire Length	End2 Terminal Part Number	End2 Pin Name	End2 Connect or
C	-	-	SB94BL	2643680 R1	1.16	16.0	Std. Wall XLPE Primary Cable	GREY	4045.0	-	22	9800M
C	-	-	UP94BL	2643680 R1	1.16	16.0	Std. Wall XLPE Primary Cable	GREY	4045.0	-	22	9800M

Connector Name R01-9504 DA

Part Number 1686834C1

Instances LoneStar - X15 - Antilock Brake System (ABS)-BENDIX 4 Channel Implemenation:Diagram1
LT/RH - X15/A26 - Antilock Brake System (ABS) BENDIX 4 Channel Implemenation:Diagram1

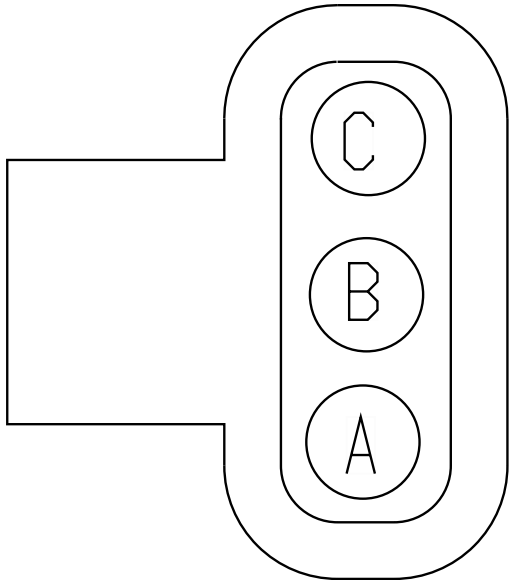

Name	Terminal Part Number	V-Min	Name	Wire Part Number	Wire CSA	Wire Spec	Wire Material description	Wire Color Description	Wire Length	End2 Terminal Part Number	End2 Pin Name	End2 Connect or
A	-	-	RB94BJ	2643680 R1	1.16	16.0	Std. Wall XLPE Primary Cable	GREY	2260.0	-	20	9800M
B	-	-	RB94BK	2643680 R1	1.16	16.0	Std. Wall XLPE Primary Cable	GREY	2260.0	-	21	9800M
C	-	-	RB94BL	2643680 R1	1.16	16.0	Std. Wall XLPE Primary Cable	GREY	2260.0	-	22	9800M

Connector Name	R01-9505A
Part Number	3678796C1
Instances	LT/RH/LoneStar - X15/A26 - Traction Control (Bendix Controller):Diagram2 LT/RH/LoneStar - X15/A26 - Traction Control (Bendix Controller) Option 2:Diagram2
Mates	SOL-TCV_BENDIX-3033-01-01A

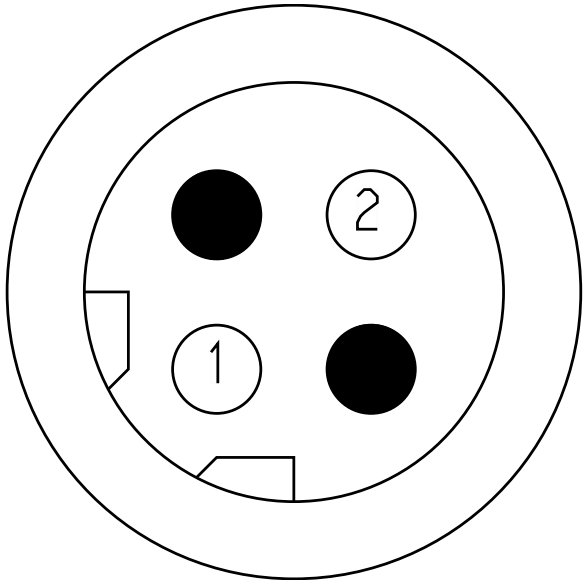

Name	Terminal Part Number	V-Min	Name	Wire Part Number	Wire CSA	Wire Spec	Wire Material description	Wire Color Description	Wire Length	End2 Terminal Part Number	End2 Pin Name	End2 Connect or
1	-	-	SC94BM	2643680 R1	1.16	16.0	Std. Wall XLPE Primary Cable	GREY	2205.0	-	23	9800M
2	-	-	SE94BN	2643680 R1	1.16	16.0	Std. Wall XLPE Primary Cable	GREY	2205.0	-	24	9800M

Connector Name R01-9505

Part Number 3678796C1

Instances LT/RH/LoneStar - X15/A26 - Traction Control (Bendix Controller):Diagram1
LT/RH/LoneStar - X15/A26 - Traction Control (Bendix Controller) Option 2:Diagram1

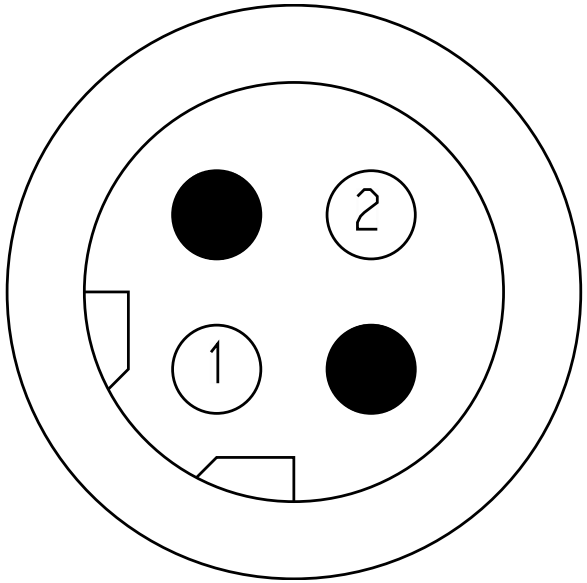

Name	Terminal Part Number	V-Min	Name	Wire Part Number	Wire CSA	Wire Spec	Wire Material description	Wire Color Description	Wire Length	End2 Terminal Part Number	End2 Pin Name	End2 Connect or
1	-	-	RC94BM	2643680 R1	1.16	16.0	Std. Wall XLPE Primary Cable	GREY	1515.0	-	23	9800M
2	-	-	RC94BN	2643680 R1	1.16	16.0	Std. Wall XLPE Primary Cable	GREY	1515.0	-	24	9800M

Connector Name	R01-9506D
Part Number	6111844C1
Instances	LoneStar - X15 - Antilock Brake System (ABS) - Wabco 4 Channel Implementation:Diagram2 LoneStar - X15 - Antilock Brake System (ABS) - Wabco 4 Channel Implementation:Diagram3 LoneStar - X15 - Antilock Brake System - Wabco ABS 6 Channel Implementation:Diagram2 LT/RH - X15/A26 - Antilock Brake System (ABS) - Wabco 4 Channel Implementation:Diagram2 LT/RH - X15/A26 - Antilock Brake System (ABS) - Wabco 4 Channel Implementation:Diagram3 LT/RH - X15/A26 - Antilock Brake System - Wabco ABS 6 Channel Implementation:Diagram2
Mates	SNSR-WS-3003-02-04C-R01-95 06D

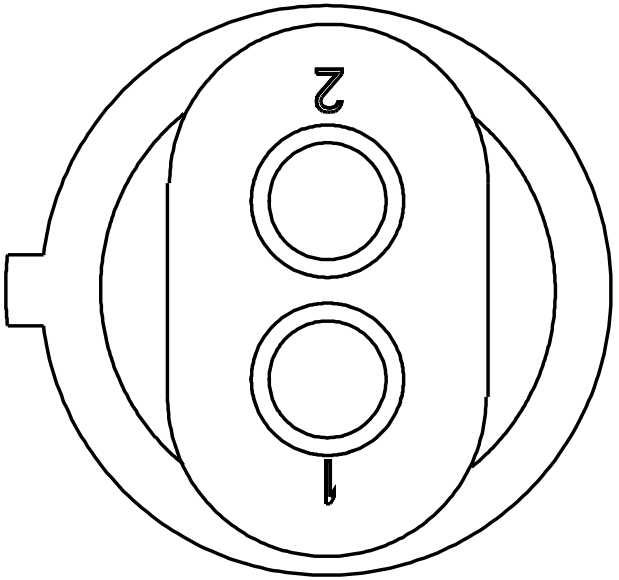

Name	Terminal Part Number	V-Min	Name	Wire Part Number	Wire CSA	Wire Spec	Wire Material description	Wire Color Description	Wire Length	End2 Terminal Part Number	End2 Pin Name	End2 Connect or
1	-	-	SR94MD	3510311 R1	0.79	18.0	Thin Wall XLPE Primary Cable	GREY	2520.0	-	16	9800M
1	-	-	VT94MD	3510311 R1	0.79	18.0	Thin Wall XLPE Primary Cable	GREY	2520.0	-	16	9800M
1	-	-	US94BRA	3510311 R1	0.79	18.0	Thin Wall XLPE Primary Cable	GREY	1510.0	-	X	-
2	-	-	VT94ME	3510311 R1	0.79	18.0	Thin Wall XLPE Primary Cable	GREY	2520.0	-	17	9800M

Name	Terminal Part Number	V-Min	Name	Wire Part Number	Wire CSA	Wire Spec	Wire Material description	Wire Color Description	Wire Length	End2 Terminal Part Number	End2 Pin Name	End2 Connect or
2	-	-	SR94ME	3510311 R1	0.79	18.0	Thin Wall XLPE Primary Cable	GREY	2520.0	-	17	9800M
2	-	-	US94BQA	3510311 R1	0.79	18.0	Thin Wall XLPE Primary Cable	GREY	1890.0	-	PIN1	-

Connector Name	R01-9506
Part Number	6111844C1
Instances	LoneStar - X15 - Antilock Brake System (ABS) - Wabco 4 Channel Implementation:Diagram1 LT/RH - X15/A26 - Antilock Brake System (ABS) - Wabco 4 Channel Implementation:Diagram1
Mates	SNSR-WS_DA_LEFT-01

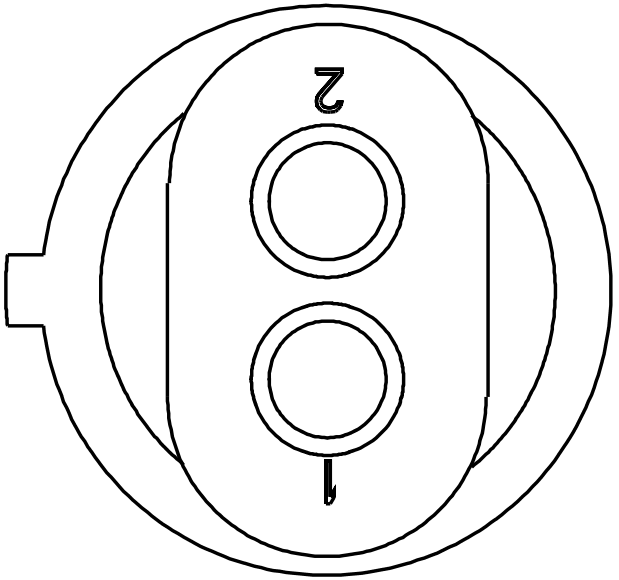

Name	Terminal Part Number	V-Min	Name	Wire Part Number	Wire CSA	Wire Spec	Wire Material description	Wire Color Description	Wire Length	End2 Terminal Part Number	End2 Pin Name	End2 Connect or
1	-	-	ST94MD	3510311 R1	0.79	18.0	Thin Wall XLPE Primary Cable	GREY	1535.0	-	16	9800M
2	-	-	ST94ME	3510311 R1	0.79	18.0	Thin Wall XLPE Primary Cable	GREY	1535.0	-	17	9800M

Connector Name R01-9507A

Part Number 3919376C1

Instances LoneStar - X15 - Antilock Brake System (ABS) - Wabco 4 Channel Implementation:Diagram2
LoneStar - X15 - Antilock Brake System - Wabco ABS 6 Channel Implementation:Diagram2
LT/RH - X15/A26 - Antilock Brake System (ABS) - Wabco 4 Channel Implementation:Diagram2
LT/RH - X15/A26 - Antilock Brake System - Wabco ABS 6 Channel Implementation:Diagram2

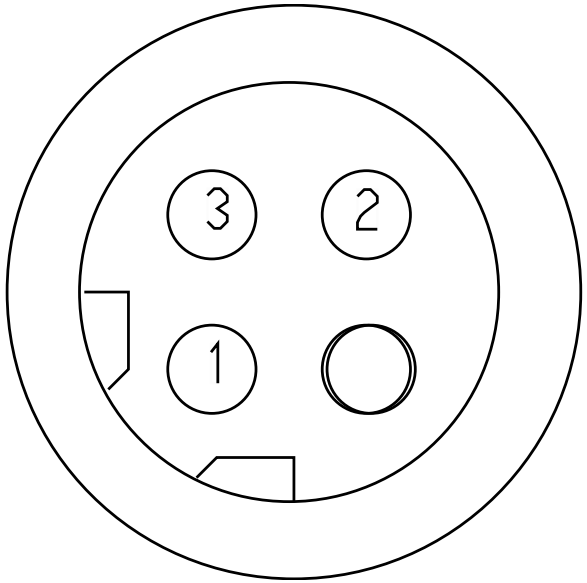

Name	Terminal Part Number	V-Min	Name	Wire Part Number	Wire CSA	Wire Spec	Wire Material description	Wire Color Description	Wire Length	End2 Terminal Part Number	End2 Pin Name	End2 Connect or
1	-	-	SR94MA	3510311 R1	0.79	18.0	Thin Wall XLPE Primary Cable	GREY	1585.0	-	13	9800M
1	-	-	US94MA	3510311 R1	0.79	18.0	Thin Wall XLPE Primary Cable	GREY	1585.0	-	13	9800M
2	-	-	SR94MB	3510311 R1	0.79	18.0	Thin Wall XLPE Primary Cable	GREY	1585.0	-	14	9800M
2	-	-	US94MB	3510311 R1	0.79	18.0	Thin Wall XLPE Primary Cable	GREY	1585.0	-	14	9800M

Name	Terminal Part Number	V-Min	Name	Wire Part Number	Wire CSA	Wire Spec	Wire Material description	Wire Color Description	Wire Length	End2 Terminal Part Number	End2 Pin Name	End2 Connect or
3	-	-	SR94MC	3510311 R1	0.79	18.0	Thin Wall XLPE Primary Cable	GREY	1585.0	-	15	9800M
3	-	-	US94MC	3510311 R1	0.79	18.0	Thin Wall XLPE Primary Cable	GREY	1585.0	-	15	9800M

Connector Name R01-9507B

Part Number 3919376C1

Instances LoneStar - X15 - Antilock Brake System (ABS) - Wabco 4 Channel Implementation:Diagram3
LoneStar - X15 - Antilock Brake System (ABS) - Wabco 4 Channel Implementation:Diagram4
LoneStar - X15 - Antilock Brake System - Wabco ABS 6 Channel Implementation:Diagram1
LoneStar - X15 - Antilock Brake System - Wabco ABS 6 Channel Implementation:Diagram2
LT/RH - X15/A26 - Antilock Brake System (ABS) - Wabco 4 Channel Implementation:Diagram3
LT/RH - X15/A26 - Antilock Brake System (ABS) - Wabco 4 Channel Implementation:Diagram4
LT/RH - X15/A26 - Antilock Brake System - Wabco ABS 6 Channel Implementation:Diagram1
LT/RH - X15/A26 - Antilock Brake System - Wabco ABS 6 Channel Implementation:Diagram2

Mates MDL-ABS-3003-02-04C-R01-95 07B

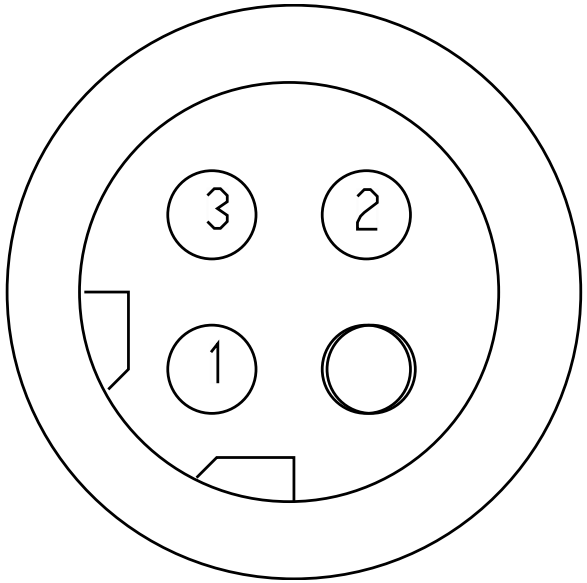

Name	Terminal Part Number	V-Min	Name	Wire Part Number	Wire CSA	Wire Spec	Wire Material description	Wire Color Description	Wire Length	End2 Terminal Part Number	End2 Pin Name	End2 Connector
1	-	-	VT94MA	3510311 R1	0.79	18.0	Thin Wall XLPE Primary Cable	GREY	2420.0	-	13	9800M
1	-	-	SS94MA	3510311 R1	0.79	18.0	Thin Wall XLPE Primary Cable	GREY	2420.0	-	13	9800M
1	-	-	UJ94BYA	3510311 R1	0.79	18.0	Thin Wall XLPE Primary Cable	GREY	660.0	-	X	-
1	-	-	US94BYA	3510311 R1	0.79	18.0	Thin Wall XLPE Primary Cable	GREY	660.0	-	X	-

Name	Terminal Part Number	V-Min	Name	Wire Part Number	Wire CSA	Wire Spec	Wire Material description	Wire Color Description	Wire Length	End2 Terminal Part Number	End2 Pin Name	End2 Connector
2	-	-	SS94MB	3510311 R1	0.79	18.0	Thin Wall XLPE Primary Cable	GREY	2420.0	-	14	9800M
2	-	-	VT94MB	3510311 R1	0.79	18.0	Thin Wall XLPE Primary Cable	GREY	2420.0	-	14	9800M
2	-	-	UJ94BZA	3510311 R1	0.79	18.0	Thin Wall XLPE Primary Cable	GREY	500.0	-	X	-
2	-	-	US94BZA	3510311 R1	0.79	18.0	Thin Wall XLPE Primary Cable	GREY	500.0	-	X	-
3	-	-	SS94MC	3510311 R1	0.79	18.0	Thin Wall XLPE Primary Cable	GREY	2420.0	-	15	9800M
3	-	-	VT94MC	3510311 R1	0.79	18.0	Thin Wall XLPE Primary Cable	GREY	2420.0	-	15	9800M
3	-	-	US94BPA	3510311 R1	0.79	18.0	Thin Wall XLPE Primary Cable	GREY	2045.0	-	X	-
3	-	-	UJ94BPA	3510311 R1	0.79	18.0	Thin Wall XLPE Primary Cable	GREY	2045.0	-	PIN1	-

Connector Name	R01-9507
Part Number	3919376C1
Instances	LoneStar - X15 - Antilock Brake System (ABS) - Wabco 4 Channel Implementation:Diagram1 LT/RH - X15/A26 - Antilock Brake System (ABS) - Wabco 4 Channel Implementation:Diagram1
Mates	MDL-ABS_DA_LEFT-01

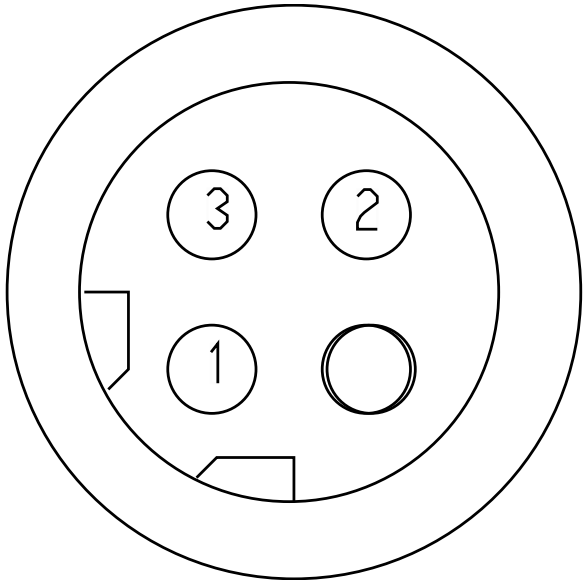

Name	Terminal Part Number	V-Min	Name	Wire Part Number	Wire CSA	Wire Spec	Wire Material description	Wire Color Description	Wire Length	End2 Terminal Part Number	End2 Pin Name	End2 Connect or
1	-	-	ST94MA	3510311 R1	0.79	18.0	Thin Wall XLPE Primary Cable	GREY	1510.0	-	13	9800M
2	-	-	ST94MB	3510311 R1	0.79	18.0	Thin Wall XLPE Primary Cable	GREY	1510.0	-	14	9800M
3	-	-	ST94MC	3510311 R1	0.79	18.0	Thin Wall XLPE Primary Cable	GREY	1510.0	-	15	9800M

Connector Name	R01-9508D
Part Number	6111844C1
Instances	LoneStar - X15 - Antilock Brake System (ABS) - Wabco 4 Channel Implementation:Diagram2 LoneStar - X15 - Antilock Brake System (ABS) - Wabco 4 Channel Implementation:Diagram3 LoneStar - X15 - Antilock Brake System - Wabco ABS 6 Channel Implementation:Diagram2 LT/RH - X15/A26 - Antilock Brake System (ABS) - Wabco 4 Channel Implementation:Diagram2 LT/RH - X15/A26 - Antilock Brake System (ABS) - Wabco 4 Channel Implementation:Diagram3 LT/RH - X15/A26 - Antilock Brake System - Wabco ABS 6 Channel Implementation:Diagram2
Mates	SNSR-WS-3003-02-04D-R01-95 08D

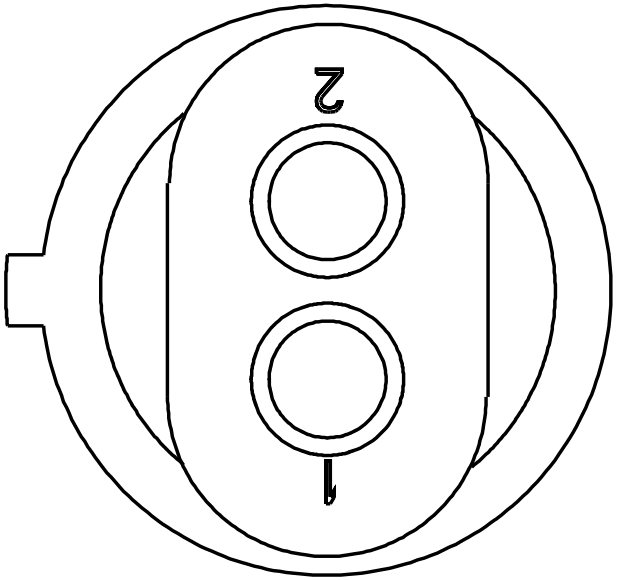

Name	Terminal Part Number	V-Min	Name	Wire Part Number	Wire CSA	Wire Spec	Wire Material description	Wire Color Description	Wire Length	End2 Terminal Part Number	End2 Pin Name	End2 Connect or
1	-	-	SR94MH	3510311 R1	0.79	18.0	Thin Wall XLPE Primary Cable	GREY	3095.0	-	19	9800M
1	-	-	VT94MH	3510311 R1	0.79	18.0	Thin Wall XLPE Primary Cable	GREY	3095.0	-	19	9800M
1	-	-	US94BWA	3510311 R1	0.79	18.0	Thin Wall XLPE Primary Cable	GREY	1510.0	-	X	-
2	-	-	VT94MF	3510311 R1	0.79	18.0	Thin Wall XLPE Primary Cable	GREY	3095.0	-	18	9800M

Name	Terminal Part Number	V-Min	Name	Wire Part Number	Wire CSA	Wire Spec	Wire Material description	Wire Color Description	Wire Length	End2 Terminal Part Number	End2 Pin Name	End2 Connect or
2	-	-	SR94MF	3510311 R1	0.79	18.0	Thin Wall XLPE Primary Cable	GREY	3095.0	-	18	9800M
2	-	-	US94BVA	3510311 R1	0.79	18.0	Thin Wall XLPE Primary Cable	GREY	1585.0	-	X	-

Connector Name	R01-9508E
Part Number	6111844C1
Instances	LoneStar - X15 - Antilock Brake System (ABS) - Wabco 4 Channel Implementation:Diagram4 LoneStar - X15 - Antilock Brake System - Wabco ABS 6 Channel Implementation:Diagram1 LT/RH - X15/A26 - Antilock Brake System (ABS) - Wabco 4 Channel Implementation:Diagram4 LT/RH - X15/A26 - Antilock Brake System - Wabco ABS 6 Channel Implementation:Diagram1
Mates	SNSR-WS-3003-02-04D-R01-95 08E

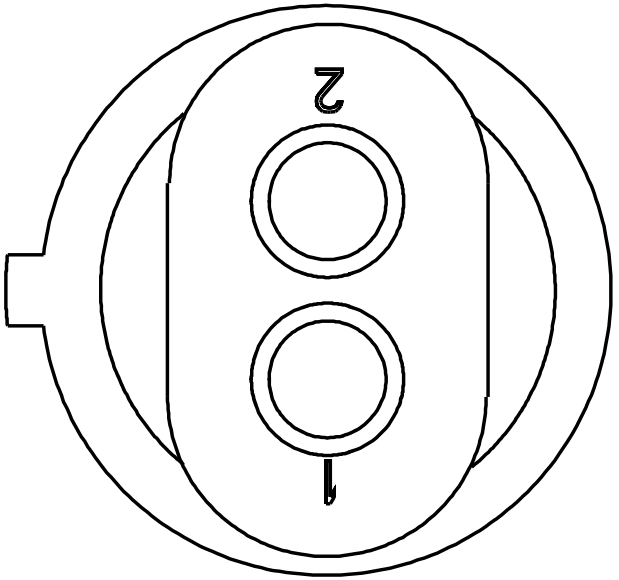

Name	Terminal Part Number	V-Min	Name	Wire Part Number	Wire CSA	Wire Spec	Wire Material description	Wire Color Description	Wire Length	End2 Terminal Part Number	End2 Pin Name	End2 Connect or
1	-	-	SS94MH	3510311 R1	0.79	18.0	Thin Wall XLPE Primary Cable	GREY	3095.0	-	19	9800M
1	-	-	UJ94BWA	3510311 R1	0.79	18.0	Thin Wall XLPE Primary Cable	GREY	1510.0	-	X	-
2	-	-	SS94MF	3510311 R1	0.79	18.0	Thin Wall XLPE Primary Cable	GREY	3095.0	-	18	9800M
2	-	-	UJ94BVA	3510311 R1	0.79	18.0	Thin Wall XLPE Primary Cable	GREY	1585.0	-	X	-

Connector Name	R01-9508
Part Number	6111844C1
Instances	LoneStar - X15 - Antilock Brake System (ABS) - Wabco 4 Channel Implementation:Diagram1 LT/RH - X15/A26 - Antilock Brake System (ABS) - Wabco 4 Channel Implementation:Diagram1
Mates	SNSR-WS_DA_RIGHT-01

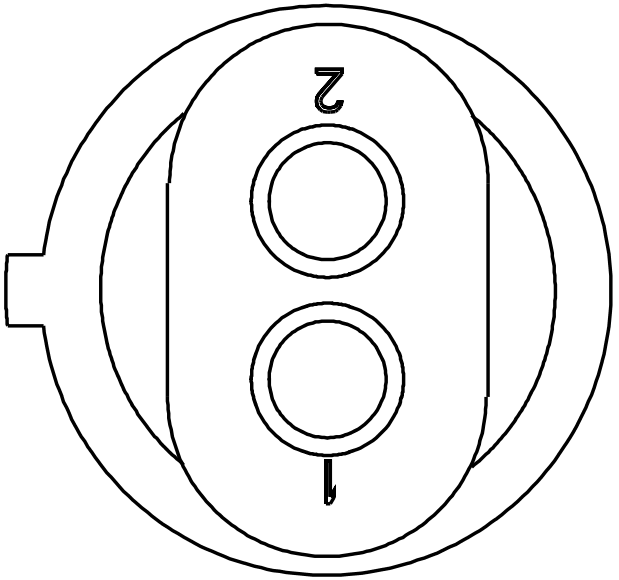

Name	Terminal Part Number	V-Min	Name	Wire Part Number	Wire CSA	Wire Spec	Wire Material description	Wire Color Description	Wire Length	End2 Terminal Part Number	End2 Pin Name	End2 Connect or
1	-	-	ST94MF	3510311 R1	0.79	18.0	Thin Wall XLPE Primary Cable	GREY	2060.0	-	19	9800M
2	-	-	ST94MH	3510311 R1	0.79	18.0	Thin Wall XLPE Primary Cable	GREY	2060.0	-	18	9800M

Connector Name R01-9509A

Part Number 3919376C1

Instances LoneStar - X15 - Antilock Brake System (ABS) - Wabco 4 Channel Implementation:Diagram3
LoneStar - X15 - Antilock Brake System (ABS) - Wabco 4 Channel Implementation:Diagram4
LoneStar - X15 - Antilock Brake System - Wabco ABS 6 Channel Implementation:Diagram1
LoneStar - X15 - Antilock Brake System - Wabco ABS 6 Channel Implementation:Diagram2
LT/RH - X15/A26 - Antilock Brake System (ABS) - Wabco 4 Channel Implementation:Diagram3
LT/RH - X15/A26 - Antilock Brake System (ABS) - Wabco 4 Channel Implementation:Diagram4
LT/RH - X15/A26 - Antilock Brake System - Wabco ABS 6 Channel Implementation:Diagram1
LT/RH - X15/A26 - Antilock Brake System - Wabco ABS 6 Channel Implementation:Diagram2

Mates MDL-ABS-3003-02-04D-9509A

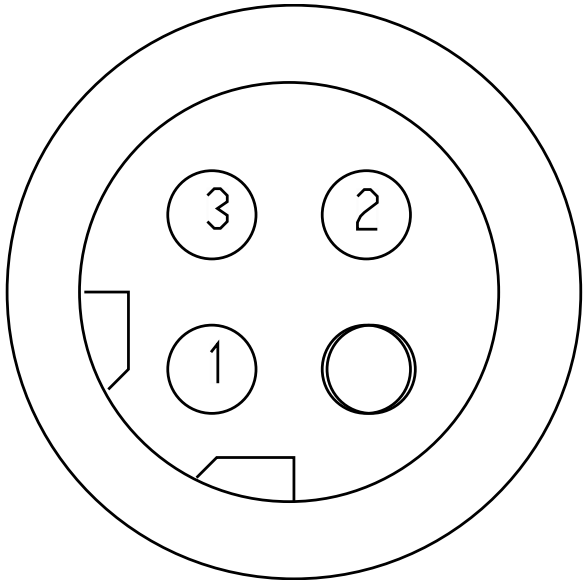

Name	Terminal Part Number	V-Min	Name	Wire Part Number	Wire CSA	Wire Spec	Wire Material description	Wire Color Description	Wire Length	End2 Terminal Part Number	End2 Pin Name	End2 Connector
1	-	-	VT94MJ	3510311 R1	0.79	18.0	Thin Wall XLPE Primary Cable	GREY	3270.0	-	20	9800M
1	-	-	SS94MJ	3510311 R1	0.79	18.0	Thin Wall XLPE Primary Cable	GREY	3270.0	-	20	9800M
1	-	-	UJ94BSA	3510311 R1	0.79	18.0	Thin Wall XLPE Primary Cable	GREY	2200.0	-	PIN1	-
1	-	-	US94BSA	3510311 R1	0.79	18.0	Thin Wall XLPE Primary Cable	GREY	2200.0	-	X	-

Name	Terminal Part Number	V-Min	Name	Wire Part Number	Wire CSA	Wire Spec	Wire Material description	Wire Color Description	Wire Length	End2 Terminal Part Number	End2 Pin Name	End2 Connector
2	-	-	SS94MK	3510311 R1	0.79	18.0	Thin Wall XLPE Primary Cable	GREY	3270.0	-	21	9800M
2	-	-	VT94MK	3510311 R1	0.79	18.0	Thin Wall XLPE Primary Cable	GREY	3270.0	-	21	9800M
2	-	-	UJ94BTA	3510311 R1	0.79	18.0	Thin Wall XLPE Primary Cable	GREY	2120.0	-	X	-
2	-	-	US94BTA	3510311 R1	0.79	18.0	Thin Wall XLPE Primary Cable	GREY	2120.0	-	X	-
3	-	-	VT94ML	3510311 R1	0.79	18.0	Thin Wall XLPE Primary Cable	GREY	3270.0	-	22	9800M
3	-	-	SS94ML	3510311 R1	0.79	18.0	Thin Wall XLPE Primary Cable	GREY	3270.0	-	22	9800M
3	-	-	US94BUA	3510311 R1	0.79	18.0	Thin Wall XLPE Primary Cable	GREY	1860.0	-	X	-
3	-	-	UJ94BUA	3510311 R1	0.79	18.0	Thin Wall XLPE Primary Cable	GREY	1860.0	-	X	-

Connector Name R01-9509B

Part Number 3919376C1

Instances LoneStar - X15 - Antilock Brake System (ABS) - Wabco 4 Channel Implementation:Diagram2
LoneStar - X15 - Antilock Brake System - Wabco ABS 6 Channel Implementation:Diagram2
LT/RH - X15/A26 - Antilock Brake System (ABS) - Wabco 4 Channel Implementation:Diagram2
LT/RH - X15/A26 - Antilock Brake System - Wabco ABS 6 Channel Implementation:Diagram2

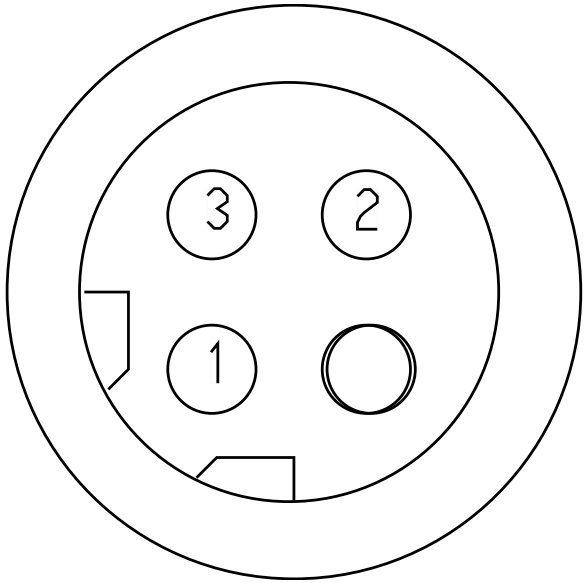

Name	Terminal Part Number	V-Min	Name	Wire Part Number	Wire CSA	Wire Spec	Wire Material description	Wire Color Description	Wire Length	End2 Terminal Part Number	End2 Pin Name	End2 Connect or
1	-	-	SR94MJ	3510311 R1	0.79	18.0	Thin Wall XLPE Primary Cable	GREY	4045.0	-	20	9800M
1	-	-	US94MJ	3510311 R1	0.79	18.0	Thin Wall XLPE Primary Cable	GREY	4045.0	-	20	9800M
2	-	-	SR94MK	3510311 R1	0.79	18.0	Thin Wall XLPE Primary Cable	GREY	4045.0	-	21	9800M
2	-	-	US94MK	3510311 R1	0.79	18.0	Thin Wall XLPE Primary Cable	GREY	4045.0	-	21	9800M

Name	Terminal Part Number	V-Min	Name	Wire Part Number	Wire CSA	Wire Spec	Wire Material description	Wire Color Description	Wire Length	End2 Terminal Part Number	End2 Pin Name	End2 Connect or
3	-	-	SR94ML	3510311 R1	0.79	18.0	Thin Wall XLPE Primary Cable	GREY	4045.0	-	22	9800M
3	-	-	US94ML	3510311 R1	0.79	18.0	Thin Wall XLPE Primary Cable	GREY	4045.0	-	22	9800M

Connector Name	R01-9509
Part Number	3919376C1
Instances	LoneStar - X15 - Antilock Brake System (ABS) - Wabco 4 Channel Implementation:Diagram1 LT/RH - X15/A26 - Antilock Brake System (ABS) - Wabco 4 Channel Implementation:Diagram1
Mates	MDL-ABS_DA_RIGHT-01

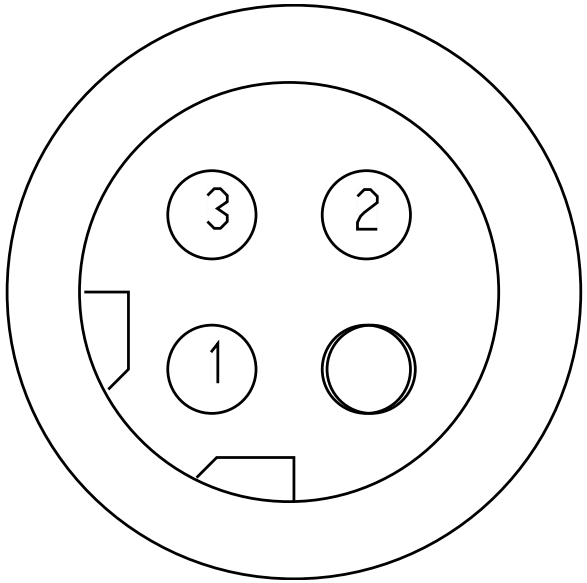

Name	Terminal Part Number	V-Min	Name	Wire Part Number	Wire CSA	Wire Spec	Wire Material description	Wire Color Description	Wire Length	End2 Terminal Part Number	End2 Pin Name	End2 Connect or
1	-	-	ST94MJ	3510311 R1	0.79	18.0	Thin Wall XLPE Primary Cable	GREY	2260.0	-	20	9800M
2	-	-	ST94MK	3510311 R1	0.79	18.0	Thin Wall XLPE Primary Cable	GREY	2260.0	-	21	9800M
3	-	-	ST94ML	3510311 R1	0.79	18.0	Thin Wall XLPE Primary Cable	GREY	2260.0	-	22	9800M

Connector Name	R01-9510A
Part Number	1678137C1
Instances	LT/RH - X15/A26 - Bendix; Tractor or Towing Truck; W/ Air SUSP; J1939 Driven Lamp:Diagram1 LT/RH - X15/A26 - Bendix; Tractor or Towing Truck; W/ Air SUSP; J1939 Driven Lamp:Diagram2
Mates	SNSR-SUSPENSION_PT-3026-01 -03A

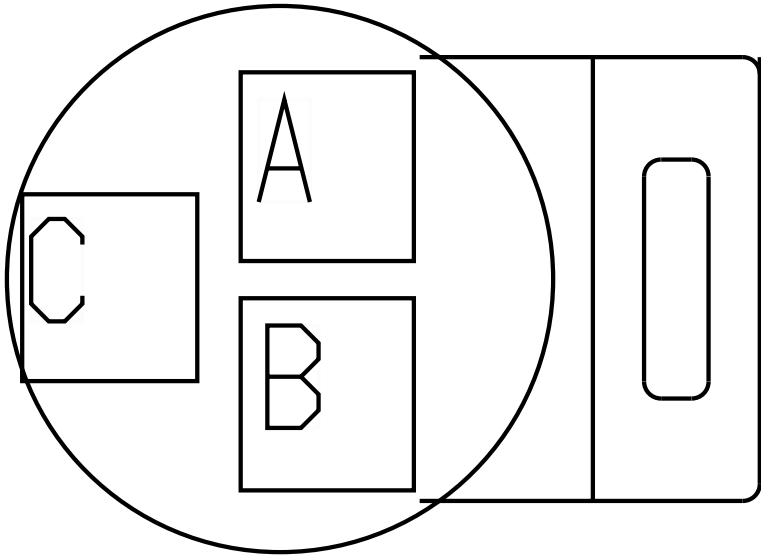

Name	Terminal Part Number	V-Min	Name	Wire Part Number	Wire CSA	Wire Spec	Wire Material description	Wire Color Description	Wire Length	End2 Terminal Part Number	End2 Pin Name	End2 Connect or
A	-	-	SJ94SZC	2643673 R1	0.79	18.0	Std. Wall XLPE Primary Cable	GREY	3345.0	-	A	9510M
B	-	-	SJ94SVC	2643673 R1	0.79	18.0	Std. Wall XLPE Primary Cable	GREY	3345.0	-	B	9510M
C	-	-	SJ94SH	2643673 R1	0.79	18.0	Std. Wall XLPE Primary Cable	GREY	3345.0	-	C	9510M

Connector Name	R01-9511 DA
Part Number	3757487C1
Instances	LoneStar - X15 - Antilock Brake System (ABS) [Bendix 6 Channel Implementation]:Diagram1 LoneStar - X15 - Antilock Brake System (ABS) [Bendix 6 Channel Implementation]:Diagram2 LoneStar - X15 - Antilock Brake System (ABS)-BENDIX 4 Channel Implemenation:Diagram4 LT/RH - X15/A26 - Antilock Brake System (ABS) BENDIX 4 Channel Implemenation:Diagram4 LT/RH - X15/A26 - Antilock Brake System (ABS) Bendix 6 Channel Implementation:Diagram1 LT/RH - X15/A26 - Antilock Brake System (ABS) Bendix 6 Channel Implementation:Diagram2
Mates	SNSR-WS-3003-01-04A

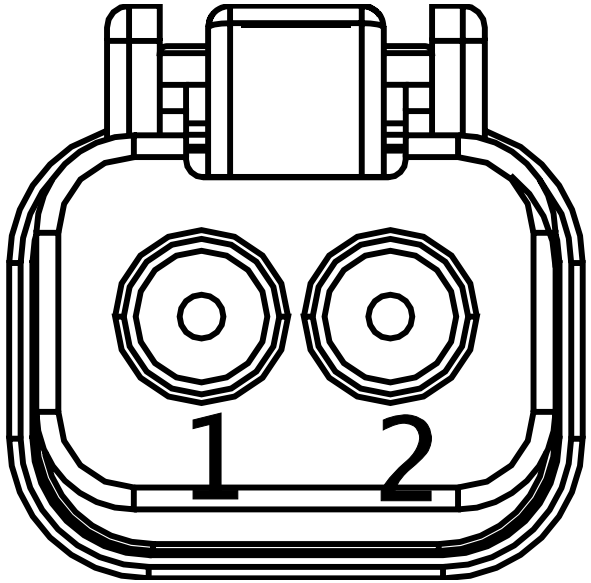

Name	Terminal Part Number	V-Min	Name	Wire Part Number	Wire CSA	Wire Spec	Wire Material description	Wire Color Description	Wire Length	End2 Terminal Part Number	End2 Pin Name	End2 Connect or
1	-	-	SZ94BH	2643680 R1	1.16	16.0	Std. Wall XLPE Primary Cable	GREY	1480.0	-	19	9800M
1	-	-	TF94BH	2643680 R1	1.16	16.0	Std. Wall XLPE Primary Cable	GREY	1480.0	-	19	9800M
1	-	-	UP94BH	2643680 R1	1.16	16.0	Std. Wall XLPE Primary Cable	GREY	1480.0	-	19	9800M
2	-	-	SZ94BF	2643680 R1	1.16	16.0	Std. Wall XLPE Primary Cable	GREY	1480.0	-	18	9800M

Name	Terminal Part Number	V-Min	Name	Wire Part Number	Wire CSA	Wire Spec	Wire Material description	Wire Color Description	Wire Length	End2 Terminal Part Number	End2 Pin Name	End2 Connect or
2	-	-	TF94BF	2643680 R1	1.16	16.0	Std. Wall XLPE Primary Cable	GREY	1480.0	-	18	9800M
2	-	-	UP94BF	2643680 R1	1.16	16.0	Std. Wall XLPE Primary Cable	GREY	1480.0	-	18	9800M

Connector Name	R01-9512 DA
Part Number	3757487C1
Instances	LoneStar - X15 - Antilock Brake System (ABS) [Bendix 6 Channel Implementation]:Diagram1 LoneStar - X15 - Antilock Brake System (ABS) [Bendix 6 Channel Implementation]:Diagram2 LoneStar - X15 - Antilock Brake System (ABS)-BENDIX 4 Channel Implemenation:Diagram4 LT/RH - X15/A26 - Antilock Brake System (ABS) BENDIX 4 Channel Implemenation:Diagram4 LT/RH - X15/A26 - Antilock Brake System (ABS) Bendix 6 Channel Implementation:Diagram1 LT/RH - X15/A26 - Antilock Brake System (ABS) Bendix 6 Channel Implementation:Diagram2
Mates	SNSR-WS-3003-01-04D

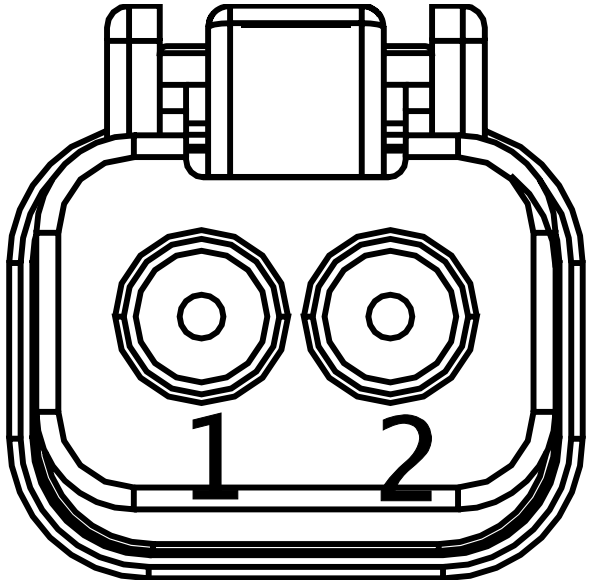

Name	Terminal Part Number	V-Min	Name	Wire Part Number	Wire CSA	Wire Spec	Wire Material description	Wire Color Description	Wire Length	End2 Terminal Part Number	End2 Pin Name	End2 Connector
1	-	-	SZ94BE	2643680 R1	1.16	16.0	Std. Wall XLPE Primary Cable	GREY	1000.0	-	17	9800M
1	-	-	TF94BE	2643680 R1	1.16	16.0	Std. Wall XLPE Primary Cable	GREY	1000.0	-	17	9800M
1	-	-	UP94BE	2643680 R1	1.16	16.0	Std. Wall XLPE Primary Cable	GREY	1000.0	-	17	9800M
2	-	-	SZ94BD	2643680 R1	1.16	16.0	Std. Wall XLPE Primary Cable	GREY	1000.0	-	16	9800M

Name	Terminal Part Number	V-Min	Name	Wire Part Number	Wire CSA	Wire Spec	Wire Material description	Wire Color Description	Wire Length	End2 Terminal Part Number	End2 Pin Name	End2 Connect or
2	-	-	TF94BD	2643680 R1	1.16	16.0	Std. Wall XLPE Primary Cable	GREY	1000.0	-	16	9800M
2	-	-	UP94BD	2643680 R1	1.16	16.0	Std. Wall XLPE Primary Cable	GREY	1000.0	-	16	9800M

Connector Name	R01-9513 DA
Part Number	1686834C1
Instances	LoneStar - X15 - Antilock Brake System (ABS) [Bendix 6 Channel Implementation]:Diagram2 LT/RH - X15/A26 - Antilock Brake System (ABS) Bendix 6 Channel Implementation:Diagram2
Mates	MDL-ABS-3003-01-04C

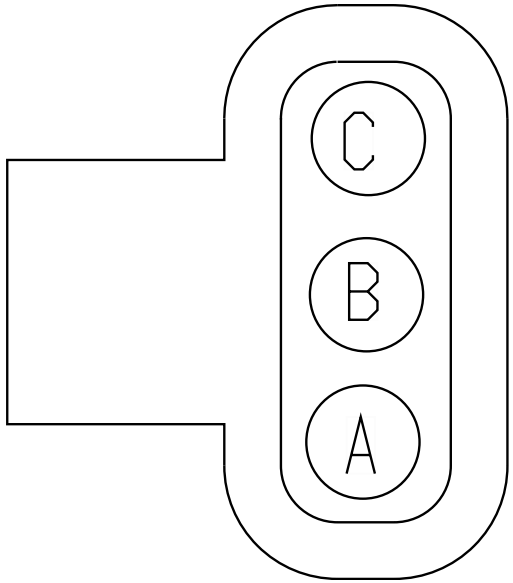

Name	Terminal Part Number	V-Min	Name	Wire Part Number	Wire CSA	Wire Spec	Wire Material description	Wire Color Description	Wire Length	End2 Terminal Part Number	End2 Pin Name	End2 Connect or
A	-	-	TF94BA	2643680 R1	1.16	16.0	Std. Wall XLPE Primary Cable	GREY	1100.0	-	13	9800M
B	-	-	TF94BB	2643680 R1	1.16	16.0	Std. Wall XLPE Primary Cable	GREY	1100.0	-	14	9800M
C	-	-	TF94BC	2643680 R1	1.16	16.0	Std. Wall XLPE Primary Cable	GREY	1100.0	-	15	9800M

Connector Name	R01-9514 DA
Part Number	1686834C1
Instances	LoneStar - X15 - Antilock Brake System (ABS) [Bendix 6 Channel Implementation]:Diagram2 LT/RH - X15/A26 - Antilock Brake System (ABS) Bendix 6 Channel Implementation:Diagram2
Mates	MDL-ABS-3003-01-04D

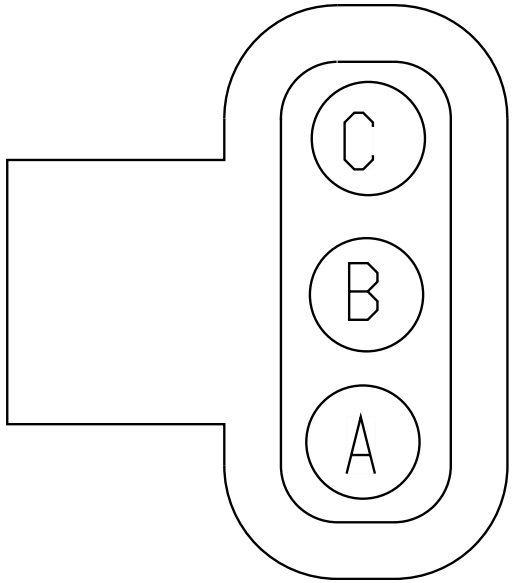

Name	Terminal Part Number	V-Min	Name	Wire Part Number	Wire CSA	Wire Spec	Wire Material description	Wire Color Description	Wire Length	End2 Terminal Part Number	End2 Pin Name	End2 Connect or
A	-	-	TF94BJ	2643680 R1	1.16	16.0	Std. Wall XLPE Primary Cable	GREY	1880.0	-	20	9800M
B	-	-	TF94BK	2643680 R1	1.16	16.0	Std. Wall XLPE Primary Cable	GREY	1880.0	-	21	9800M
C	-	-	TF94BL	2643680 R1	1.16	16.0	Std. Wall XLPE Primary Cable	GREY	1880.0	-	22	9800M

Connector Name	R01-9515B
Part Number	PAS2(1,2)
Instances	LT/RH/LoneStar - X15/A26 - Traction Control (Wabco Controller):Diagram3
Mates	SOL-TCV_WABCO-3033-02-02A

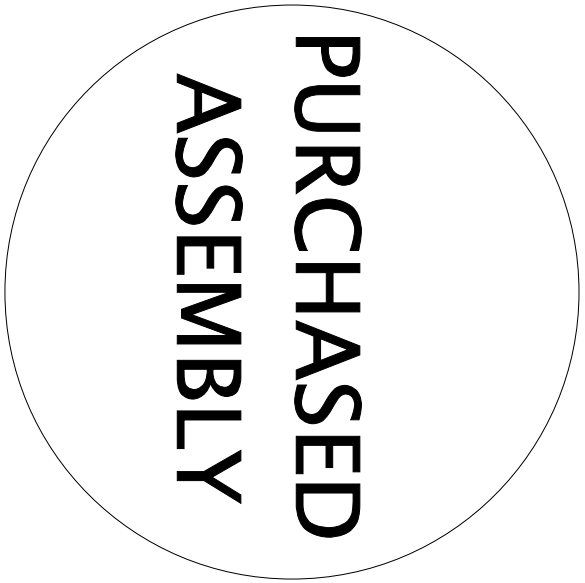

Name	Terminal Part Number	V-Min	Name	Wire Part Number	Wire CSA	Wire Spec	Wire Material description	Wire Color Description	Wire Length	End2 Terminal Part Number	End2 Pin Name	End2 Connect or
1	-	-	[SW94MN]	V-16-GXL	1.16	16.0	Std. Wall XLPE Primary Cable	Not Applica ble	1760.0	-	24	9800M
2	-	-	[SW94MM]	V-16-GXL	1.16	16.0	Std. Wall XLPE Primary Cable	Not Applica ble	1760.0	-	23	9800M

Connector Name R01-9515

Part Number PAS2(1,2)

Instances LT/RH/LoneStar - X15/A26 - Traction Control (Wabco Controller):Diagram1

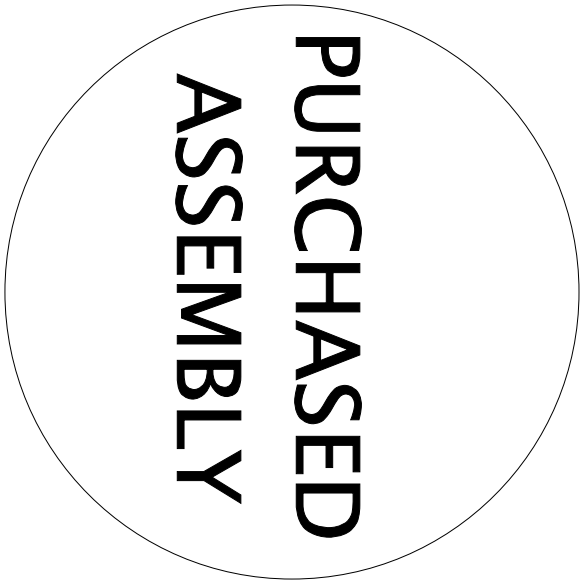

Name	Terminal Part Number	V-Min	Name	Wire Part Number	Wire CSA	Wire Spec	Wire Material description	Wire Color Description	Wire Length	End2 Terminal Part Number	End2 Pin Name	End2 Connect or
1	-	-	[SU94MN]	V-16-GXL	1.16	16.0	Std. Wall XLPE Primary Cable	Not Applica ble	1210.0	-	24	9800M
2	-	-	[SU94MM]	V-16-GXL	1.16	16.0	Std. Wall XLPE Primary Cable	Not Applica ble	1210.0	-	23	9800M

Connector Name	R01-9516
Part Number	3919376C1
Instances	LoneStar - X15 - Antilock Brake System - Wabco ABS 6 Channel Implementation:Diagram1 LT/RH - X15/A26 - Antilock Brake System - Wabco ABS 6 Channel Implementation:Diagram1
Mates	MDL-ABS_DA_RIGHT-01

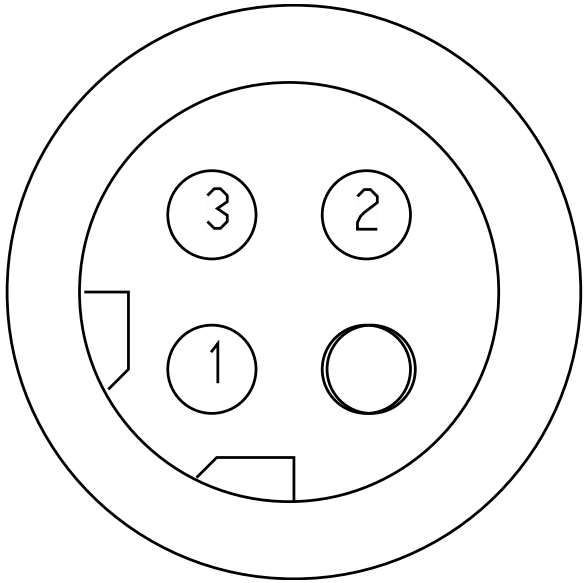

Name	Terminal Part Number	V-Min	Name	Wire Part Number	Wire CSA	Wire Spec	Wire Material description	Wire Color Description	Wire Length	End2 Terminal Part Number	End2 Pin Name	End2 Connect or
1	-	-	UJ94MJ	3510311 R1	0.79	18.0	Thin Wall XLPE Primary Cable	GREY	1880.0	-	20	9800M
2	-	-	UJ94MK	3510311 R1	0.79	18.0	Thin Wall XLPE Primary Cable	GREY	1880.0	-	21	9800M
3	-	-	UJ94ML	3510311 R1	0.79	18.0	Thin Wall XLPE Primary Cable	GREY	1880.0	-	22	9800M

Connector Name	R01-9517
Part Number	6111844C1
Instances	LoneStar - X15 - Antilock Brake System - Wabco ABS 6 Channel Implementation:Diagram1 LoneStar - X15 - Antilock Brake System - Wabco ABS 6 Channel Implementation:Diagram2 LT/RH - X15/A26 - Antilock Brake System - Wabco ABS 6 Channel Implementation:Diagram1 LT/RH - X15/A26 - Antilock Brake System - Wabco ABS 6 Channel Implementation:Diagram2
Mates	SNSR-WS_DA_RIGHT-01

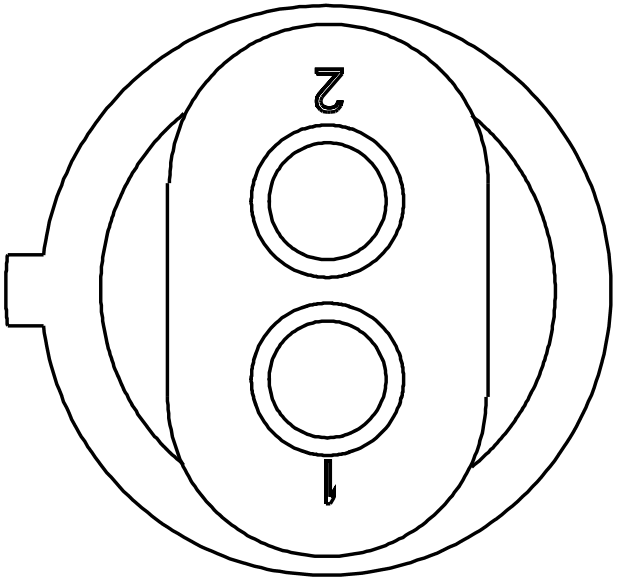

Name	Terminal Part Number	V-Min	Name	Wire Part Number	Wire CSA	Wire Spec	Wire Material description	Wire Color Description	Wire Length	End2 Terminal Part Number	End2 Pin Name	End2 Connect or
1	-	-	UJ94MH	3510311 R1	0.79	18.0	Thin Wall XLPE Primary Cable	GREY	1480.0	-	19	9800M
1	-	-	US94MH	3510311 R1	0.79	18.0	Thin Wall XLPE Primary Cable	GREY	1480.0	-	19	9800M
2	-	-	UJ94MF	3510311 R1	0.79	18.0	Thin Wall XLPE Primary Cable	GREY	1480.0	-	18	9800M
2	-	-	US94MF	3510311 R1	0.79	18.0	Thin Wall XLPE Primary Cable	GREY	1480.0	-	18	9800M

Connector Name	R01-9518
Part Number	6111844C1
Instances	LoneStar - X15 - Antilock Brake System - Wabco ABS 6 Channel Implementation:Diagram1 LoneStar - X15 - Antilock Brake System - Wabco ABS 6 Channel Implementation:Diagram2 LT/RH - X15/A26 - Antilock Brake System - Wabco ABS 6 Channel Implementation:Diagram1 LT/RH - X15/A26 - Antilock Brake System - Wabco ABS 6 Channel Implementation:Diagram2
Mates	SNSR-WS_DA_LEFT-01

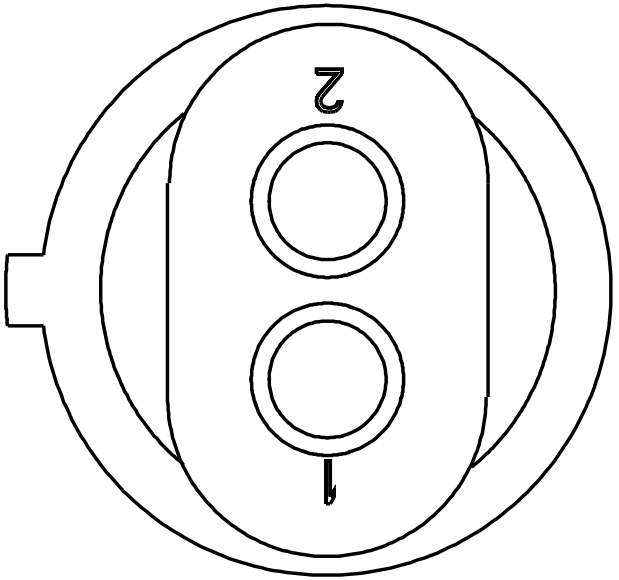

Name	Terminal Part Number	V-Min	Name	Wire Part Number	Wire CSA	Wire Spec	Wire Material description	Wire Color Description	Wire Length	End2 Terminal Part Number	End2 Pin Name	End2 Connect or
1	-	-	UJ94ME	3510311 R1	0.79	18.0	Thin Wall XLPE Primary Cable	GREY	1000.0	-	17	9800M
1	-	-	US94ME	3510311 R1	0.79	18.0	Thin Wall XLPE Primary Cable	GREY	1000.0	-	17	9800M
2	-	-	UJ94MD	3510311 R1	0.79	18.0	Thin Wall XLPE Primary Cable	GREY	1000.0	-	16	9800M
2	-	-	US94MD	3510311 R1	0.79	18.0	Thin Wall XLPE Primary Cable	GREY	1000.0	-	16	9800M

Connector Name	R01-9519
Part Number	3919376C1
Instances	LoneStar - X15 - Antilock Brake System - Wabco ABS 6 Channel Implementation:Diagram1 LT/RH - X15/A26 - Antilock Brake System - Wabco ABS 6 Channel Implementation:Diagram1
Mates	MDL-ABS_DA_LEFT-01

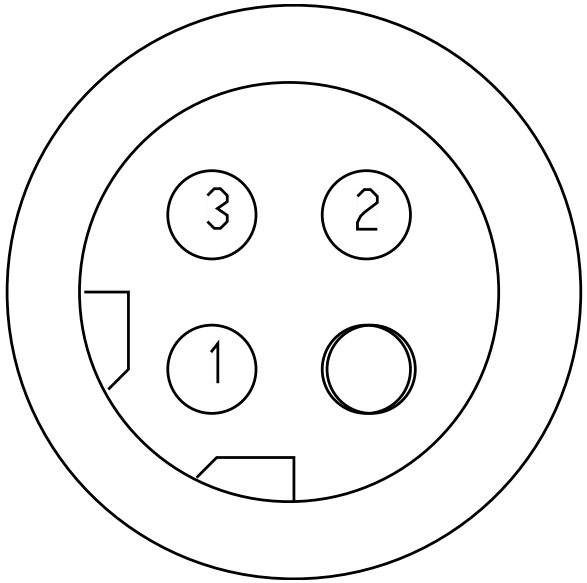

Name	Terminal Part Number	V-Min	Name	Wire Part Number	Wire CSA	Wire Spec	Wire Material description	Wire Color Description	Wire Length	End2 Terminal Part Number	End2 Pin Name	End2 Connect or
1	-	-	UJ94MA	3510311 R1	0.79	18.0	Thin Wall XLPE Primary Cable	GREY	1100.0	-	13	9800M
2	-	-	UJ94MB	3510311 R1	0.79	18.0	Thin Wall XLPE Primary Cable	GREY	1100.0	-	14	9800M
3	-	-	UJ94MC	3510311 R1	0.79	18.0	Thin Wall XLPE Primary Cable	GREY	1100.0	-	15	9800M

Connector Name R01-9520 DA

Part Number 1686834C1

Instances LoneStar - X15 - Antilock Brake System (ABS) [Bendix 6 Channel Implementation]:Diagram3
LT/RH - X15/A26 - Antilock Brake System (ABS) Bendix 6 Channel Implementation:Diagram3

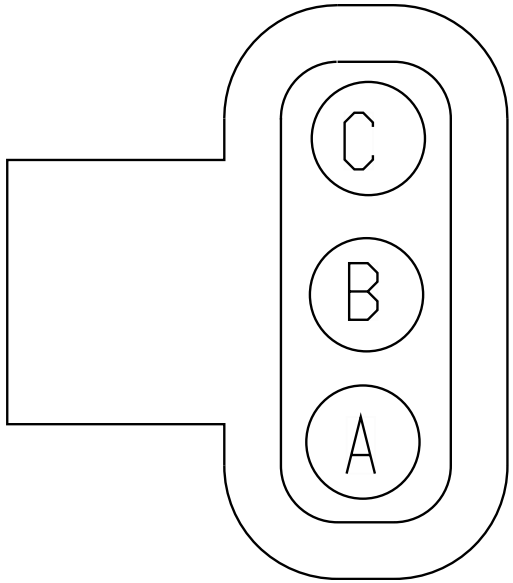

Name	Terminal Part Number	V-Min	Name	Wire Part Number	Wire CSA	Wire Spec	Wire Material description	Wire Color Description	Wire Length	End2 Terminal Part Number	End2 Pin Name	End2 Connect or
A	-	-	VA94BA	2643680 R1	1.16	16.0	Std. Wall XLPE Primary Cable	GREY	1910.0	-	13	9800M
B	-	-	VA94BB	2643680 R1	1.16	16.0	Std. Wall XLPE Primary Cable	GREY	1910.0	-	14	9800M
C	-	-	VA94BC	2643680 R1	1.16	16.0	Std. Wall XLPE Primary Cable	GREY	1910.0	-	15	9800M

Connector Name R01-9521 DA

Part Number 3757487C1

Instances LoneStar - X15 - Antilock Brake System (ABS) [Bendix 6 Channel Implementation]:Diagram3
LT/RH - X15/A26 - Antilock Brake System (ABS) Bendix 6 Channel Implementation:Diagram3

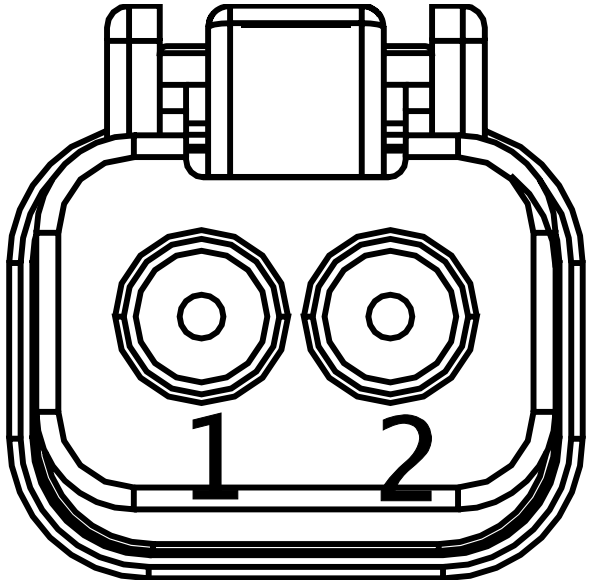

Name	Terminal Part Number	V-Min	Name	Wire Part Number	Wire CSA	Wire Spec	Wire Material description	Wire Color Description	Wire Length	End2 Terminal Part Number	End2 Pin Name	End2 Connect or
1	-	-	VA94BE	2643680 R1	1.16	16.0	Std. Wall XLPE Primary Cable	GREY	2060.0	-	17	9800M
2	-	-	VA94BD	2643680 R1	1.16	16.0	Std. Wall XLPE Primary Cable	GREY	2060.0	-	16	9800M

Connector Name	R01-9522 AA
Part Number	1686834C1
Instances	LoneStar - X15 - Antilock Brake System (ABS) [Bendix 6 Channel Implementation]:Diagram3 LT/RH - X15/A26 - Antilock Brake System (ABS) Bendix 6 Channel Implementation:Diagram3
Mates	MDL-ABS-3003-01-06A

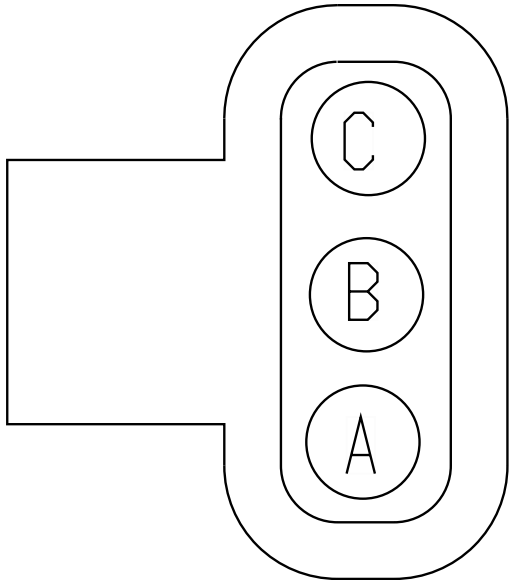

Name	Terminal Part Number	V-Min	Name	Wire Part Number	Wire CSA	Wire Spec	Wire Material description	Wire Color Description	Wire Length	End2 Terminal Part Number	End2 Pin Name	End2 Connect or
A	-	-	VA94BY	2643680 R1	1.16	16.0	Std. Wall XLPE Primary Cable	GREY	2370.0	-	1	9516M
B	-	-	VA94BZ	2643680 R1	1.16	16.0	Std. Wall XLPE Primary Cable	GREY	2370.0	-	2	9516M
C	-	-	VA94BP	2643680 R1	1.16	16.0	Std. Wall XLPE Primary Cable	GREY	2370.0	-	3	9516M

Connector Name	R01-9523 AA
Part Number	3757487C1
Instances	LoneStar - X15 - Antilock Brake System (ABS) [Bendix 6 Channel Implementation]:Diagram3 LT/RH - X15/A26 - Antilock Brake System (ABS) Bendix 6 Channel Implementation:Diagram3
Mates	SNSR-WS-3003-01-06A

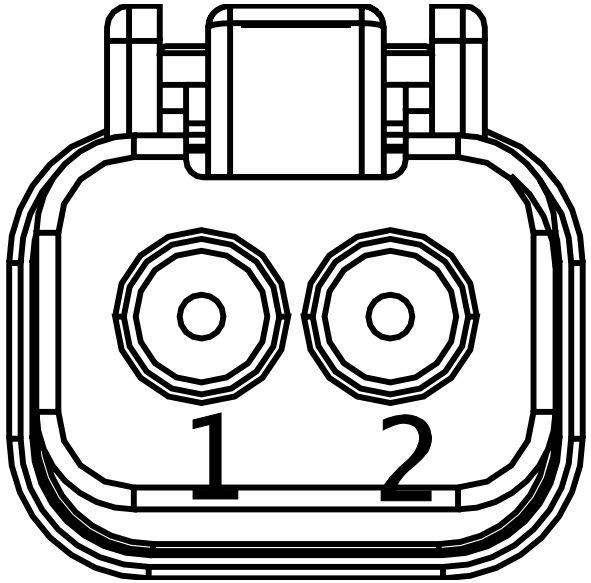

Name	Terminal Part Number	V-Min	Name	Wire Part Number	Wire CSA	Wire Spec	Wire Material description	Wire Color Description	Wire Length	End2 Terminal Part Number	End2 Pin Name	End2 Connect or
1	-	-	VA94BR	2643680 R1	1.16	16.0	Std. Wall XLPE Primary Cable	GREY	2420.0	-	5	9516M
1	-	-	VA94BQ	2643680 R1	1.16	16.0	Std. Wall XLPE Primary Cable	GREY	2420.0	-	4	9516M
2	-	-	VA94BQ	2643680 R1	1.16	16.0	Std. Wall XLPE Primary Cable	GREY	2420.0	-	4	9516M
2	-	-	VA94BR	2643680 R1	1.16	16.0	Std. Wall XLPE Primary Cable	GREY	2420.0	-	5	9516M

Connector Name	R01-9524 AA
Part Number	1686834C1
Instances	LoneStar - X15 - Antilock Brake System (ABS) [Bendix 6 Channel Implementation]:Diagram3 LT/RH - X15/A26 - Antilock Brake System (ABS) Bendix 6 Channel Implementation:Diagram3
Mates	MDL-ABS-3003-01-06B

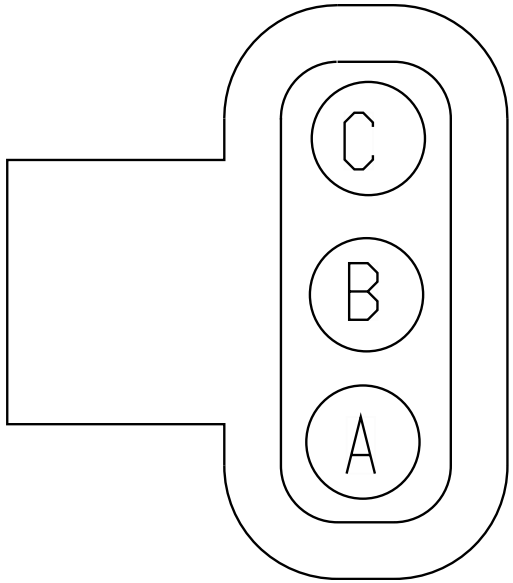

Name	Terminal Part Number	V-Min	Name	Wire Part Number	Wire CSA	Wire Spec	Wire Material description	Wire Color Description	Wire Length	End2 Terminal Part Number	End2 Pin Name	End2 Connect or
A	-	-	VA94BS	2643680 R1	1.16	16.0	Std. Wall XLPE Primary Cable	GREY	3095.0	-	6	9516M
B	-	-	VA94BT	2643680 R1	1.16	16.0	Std. Wall XLPE Primary Cable	GREY	3095.0	-	7	9516M
C	-	-	VA94BU	2643680 R1	1.16	16.0	Std. Wall XLPE Primary Cable	GREY	3095.0	-	8	9516M

Connector Name	R01-9525 AA
Part Number	3757487C1
Instances	LoneStar - X15 - Antilock Brake System (ABS) [Bendix 6 Channel Implementation]:Diagram3 LT/RH - X15/A26 - Antilock Brake System (ABS) Bendix 6 Channel Implementation:Diagram3
Mates	SNSR-WS-3003-01-06B

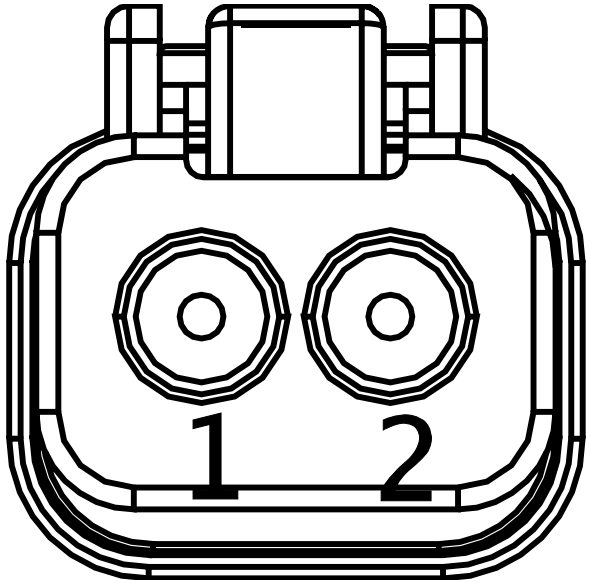

Name	Terminal Part Number	V-Min	Name	Wire Part Number	Wire CSA	Wire Spec	Wire Material description	Wire Color Description	Wire Length	End2 Terminal Part Number	End2 Pin Name	End2 Connect or
1	-	-	VA94BW	2643680 R1	1.16	16.0	Std. Wall XLPE Primary Cable	GREY	3095.0	-	10	9516M
2	-	-	VA94BV	2643680 R1	1.16	16.0	Std. Wall XLPE Primary Cable	GREY	3095.0	-	9	9516M

Connector Name R01-9526 DA

Part Number 1686834C1

Instances LoneStar - X15 - Antilock Brake System (ABS) [Bendix 6 Channel Implementation]:Diagram3
LT/RH - X15/A26 - Antilock Brake System (ABS) Bendix 6 Channel Implementation:Diagram3

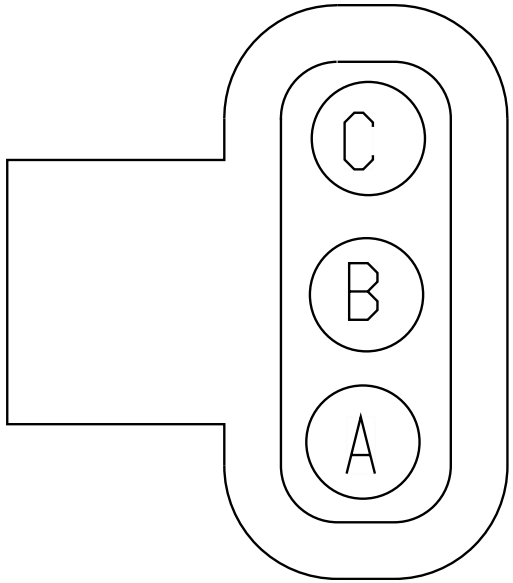

Name	Terminal Part Number	V-Min	Name	Wire Part Number	Wire CSA	Wire Spec	Wire Material description	Wire Color Description	Wire Length	End2 Terminal Part Number	End2 Pin Name	End2 Connect or
A	-	-	VA94BJ	2643680 R1	1.16	16.0	Std. Wall XLPE Primary Cable	GREY	3395.0	-	20	9800M
B	-	-	VA94BK	2643680 R1	1.16	16.0	Std. Wall XLPE Primary Cable	GREY	3395.0	-	21	9800M
C	-	-	VA94BL	2643680 R1	1.16	16.0	Std. Wall XLPE Primary Cable	GREY	3395.0	-	22	9800M

Connector Name R01-9527 DA

Part Number 3757487C1

Instances LoneStar - X15 - Antilock Brake System (ABS) [Bendix 6 Channel Implementation]:Diagram3
LT/RH - X15/A26 - Antilock Brake System (ABS) Bendix 6 Channel Implementation:Diagram3

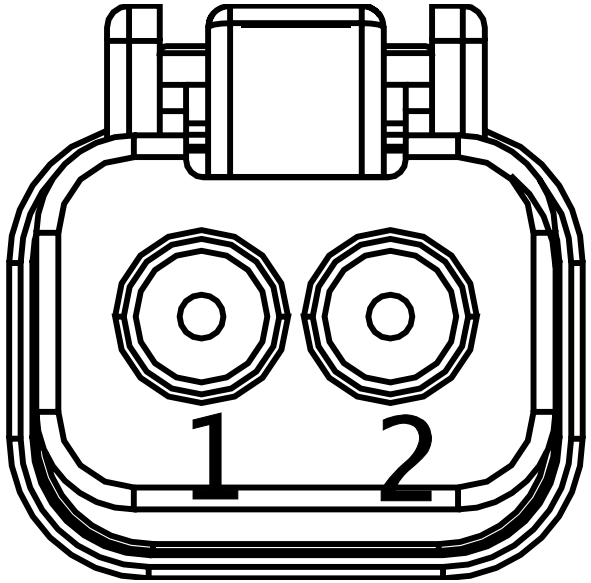

Name	Terminal Part Number	V-Min	Name	Wire Part Number	Wire CSA	Wire Spec	Wire Material description	Wire Color Description	Wire Length	End2 Terminal Part Number	End2 Pin Name	End2 Connect or
1	-	-	VA94BH	2643680 R1	1.16	16.0	Std. Wall XLPE Primary Cable	GREY	3645.0	-	19	9800M
2	-	-	VA94BF	2643680 R1	1.16	16.0	Std. Wall XLPE Primary Cable	GREY	3645.0	-	18	9800M

Connector Name R01-9528

Part Number 3919376C1

Instances LoneStar - X15 - Antilock Brake System - Wabco ABS 6 Channel Implementation:Diagram3
LT/RH - X15/A26 - Antilock Brake System - Wabco ABS 6 Channel Implementation:Diagram3

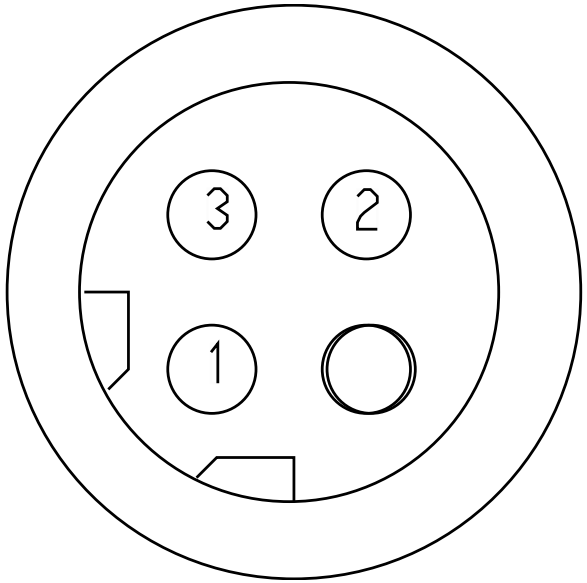

Name	Terminal Part Number	V-Min	Name	Wire Part Number	Wire CSA	Wire Spec	Wire Material description	Wire Color Description	Wire Length	End2 Terminal Part Number	End2 Pin Name	End2 Connect or
1	-	-	VB94MA	3510311 R1	0.79	18.0	Thin Wall XLPE Primary Cable	GREY	1910.0	-	13	9800M
2	-	-	VB94MB	3510311 R1	0.79	18.0	Thin Wall XLPE Primary Cable	GREY	1910.0	-	14	9800M
3	-	-	VB94MC	3510311 R1	0.79	18.0	Thin Wall XLPE Primary Cable	GREY	1910.0	-	15	9800M

Connector Name R01-9529

Part Number 6111844C1

Instances LoneStar - X15 - Antilock Brake System - Wabco ABS 6 Channel Implementation:Diagram3
LT/RH - X15/A26 - Antilock Brake System - Wabco ABS 6 Channel Implementation:Diagram3

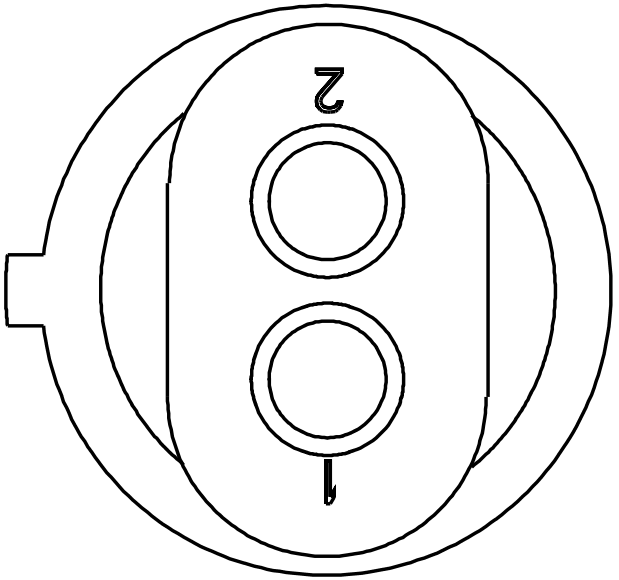

Name	Terminal Part Number	V-Min	Name	Wire Part Number	Wire CSA	Wire Spec	Wire Material description	Wire Color Description	Wire Length	End2 Terminal Part Number	End2 Pin Name	End2 Connect or
1	-	-	VB94ME	3510311 R1	0.79	18.0	Thin Wall XLPE Primary Cable	GREY	2060.0	-	17	9800M
2	-	-	VB94MD	3510311 R1	0.79	18.0	Thin Wall XLPE Primary Cable	GREY	2060.0	-	16	9800M

Connector Name	R01-9530
Part Number	3593684C91
Instances	LT/RH/LoneStar - X15/A26 - 2 Driver Controlled Locking Differential - FR & RR Axle (MERITOR):Diagram1 LT/RH/LoneStar - X15/A26 - Driver Controlled Locking Differential - FR & RR Axle (MERITOR):Diagram1 LT/RH/LoneStar - X15/A26 - Driver Controlled Locking Differential - FR (MERITOR):Diagram1
Mates	DEV-MERITOR_RR_DIFF_LOCK_S TATUS-01-R01-9530

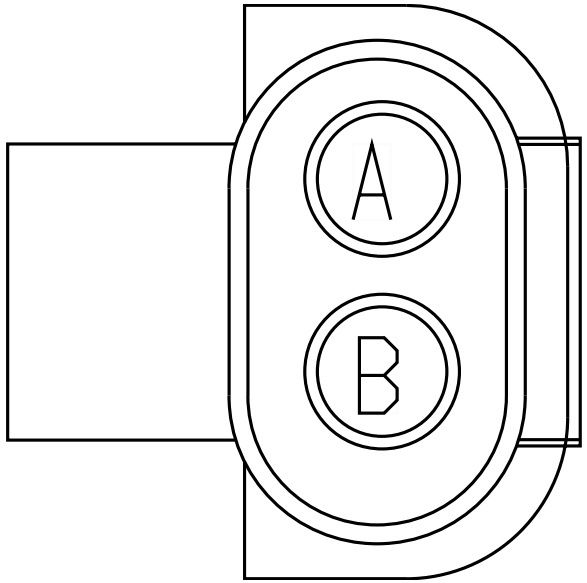

Name	Terminal Part Number	V-Min	Name	Wire Part Number	Wire CSA	Wire Spec	Wire Material description	Wire Color Description	Wire Length	End2 Terminal Part Number	End2 Pin Name	End2 Connect or
A	-	-	UY49A	2643673 R1	0.79	18.0	Std. Wall XLPE Primary Cable	GREY	2330.0	-	11	9800M
B	-	-	UY49-GB	2643674 R1	0.79	18.0	Std. Wall XLPE Primary Cable	WHITE	1815.0	-	X	-
B	-	-	TB49-G	2643674 R1	0.79	18.0	Std. Wall XLPE Primary Cable	WHITE	2330.0	-	10	9800M

Connector Name	R01-9531
Part Number	3593684C91
Instances	LT/RH/LoneStar - X15/A26 - Driver Controlled Locking Differential - RR Axle (MERITOR):Diagram1
Mates	DEV-MERITOR_RR_DIFF_LOCK_S TATUS-01

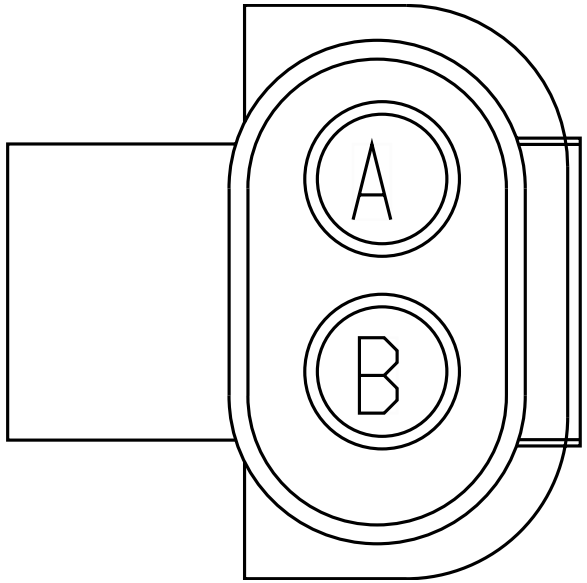

Name	Terminal Part Number	V-Min	Name	Wire Part Number	Wire CSA	Wire Spec	Wire Material description	Wire Color Description	Wire Length	End2 Terminal Part Number	End2 Pin Name	End2 Connect or
A	-	-	UV49	2643673 R1	0.79	18.0	Std. Wall XLPE Primary Cable	GREY	2860.0	-	9	9800M
B	-	-	UV49-G	2643674 R1	0.79	18.0	Std. Wall XLPE Primary Cable	WHITE	2860.0	-	10	9800M

Connector Name	R01-9533
Part Number	3593684C91
Instances	LT/RH/LoneStar - X15/A26 - 2 Driver Controlled Locking Differential - FR & RR Axle (MERITOR):Diagram1 LT/RH/LoneStar - X15/A26 - Driver Controlled Locking Differential - FR & RR Axle (MERITOR):Diagram1 LT/RH/LoneStar - X15/A26 - Driver Controlled Locking Differential - RR Axle (MERITOR):Diagram2
Mates	DEV-MERITOR_RR_DIFF_LOCK_S TATUS-01

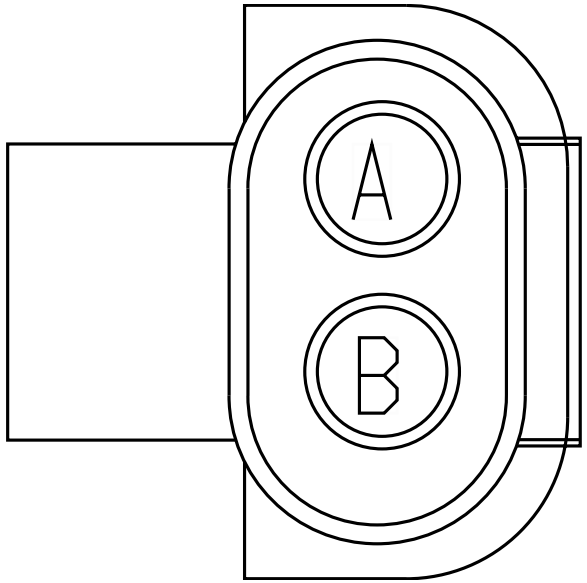

Name	Terminal Part Number	V-Min	Name	Wire Part Number	Wire CSA	Wire Spec	Wire Material description	Wire Color Description	Wire Length	End2 Terminal Part Number	End2 Pin Name	End2 Connect or
A	-	-	UW49	2643673 R1	0.79	18.0	Std. Wall XLPE Primary Cable	GREY	3425.0	-	9	9800M
B	-	-	UY49-GA	2643674 R1	0.79	18.0	Std. Wall XLPE Primary Cable	WHITE	2910.0	-	X	-
B	-	-	UX49-G	2643674 R1	0.79	18.0	Std. Wall XLPE Primary Cable	WHITE	3425.0	-	10	9800M

Connector Name R01-9534

Part Number 3919376C1

Instances LoneStar - X15 - Antilock Brake System - Wabco ABS 6 Channel Implementation:Diagram3
LT/RH - X15/A26 - Antilock Brake System - Wabco ABS 6 Channel Implementation:Diagram3

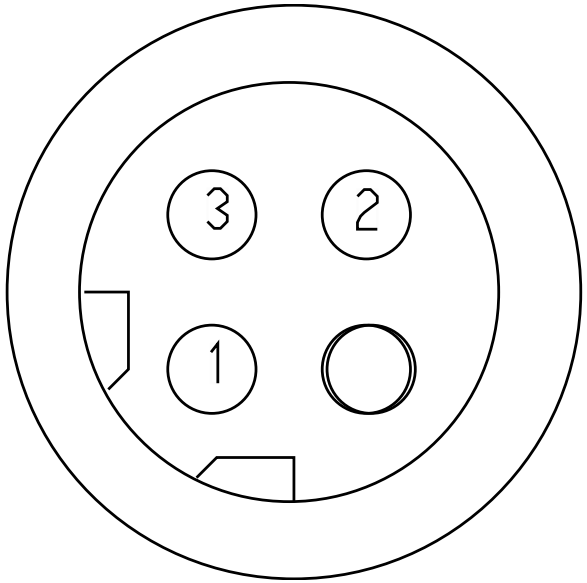

Name	Terminal Part Number	V-Min	Name	Wire Part Number	Wire CSA	Wire Spec	Wire Material description	Wire Color Description	Wire Length	End2 Terminal Part Number	End2 Pin Name	End2 Connector
1	-	-	VB94MJ	3510311 R1	0.79	18.0	Thin Wall XLPE Primary Cable	GREY	3395.0	-	20	9800M
2	-	-	VB94MK	3510311 R1	0.79	18.0	Thin Wall XLPE Primary Cable	GREY	3395.0	-	21	9800M
3	-	-	VB94ML	3510311 R1	0.79	18.0	Thin Wall XLPE Primary Cable	GREY	3395.0	-	22	9800M

Connector Name R01-9535

Part Number 6111844C1

Instances LoneStar - X15 - Antilock Brake System - Wabco ABS 6 Channel Implementation:Diagram3
LT/RH - X15/A26 - Antilock Brake System - Wabco ABS 6 Channel Implementation:Diagram3

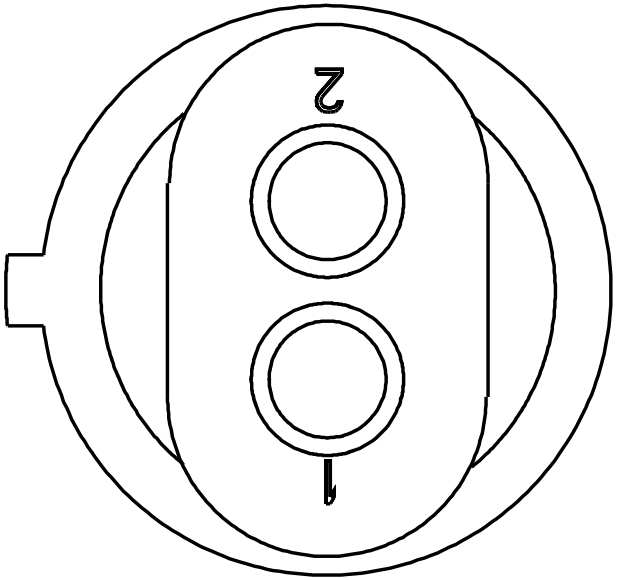

Name	Terminal Part Number	V-Min	Name	Wire Part Number	Wire CSA	Wire Spec	Wire Material description	Wire Color Description	Wire Length	End2 Terminal Part Number	End2 Pin Name	End2 Connect or
1	-	-	VB94MH	3510311 R1	0.79	18.0	Thin Wall XLPE Primary Cable	GREY	3645.0	-	19	9800M
2	-	-	VB94MF	3510311 R1	0.79	18.0	Thin Wall XLPE Primary Cable	GREY	3645.0	-	18	9800M

Connector Name	R01-9537
Part Number	6111844C1
Instances	LoneStar - X15 - Antilock Brake System - Wabco ABS 6 Channel Implementation:Diagram3 LT/RH - X15/A26 - Antilock Brake System - Wabco ABS 6 Channel Implementation:Diagram3
Mates	SNSR-WS_AA_LEFT-01

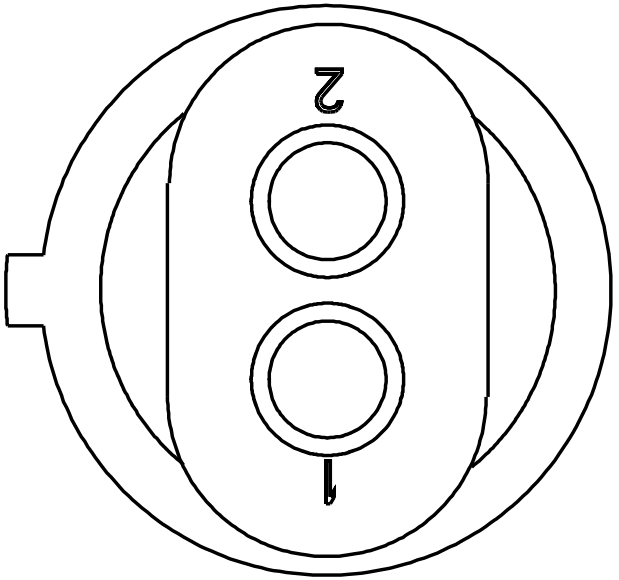

Name	Terminal Part Number	V-Min	Name	Wire Part Number	Wire CSA	Wire Spec	Wire Material description	Wire Color Description	Wire Length	End2 Terminal Part Number	End2 Pin Name	End2 Connect or
1	-	-	VB94BRA	3510311 R1	0.79	18.0	Thin Wall XLPE Primary Cable	GREY	1460.0	-	X	-
2	-	-	VB94BQA	3510311 R1	0.79	18.0	Thin Wall XLPE Primary Cable	GREY	1840.0	-	X	-

Connector Name	R01-9538
Part Number	6111844C1
Instances	LoneStar - X15 - Antilock Brake System - Wabco ABS 6 Channel Implementation:Diagram3 LT/RH - X15/A26 - Antilock Brake System - Wabco ABS 6 Channel Implementation:Diagram3
Mates	SNSR-WS_AA_RIGHT-01

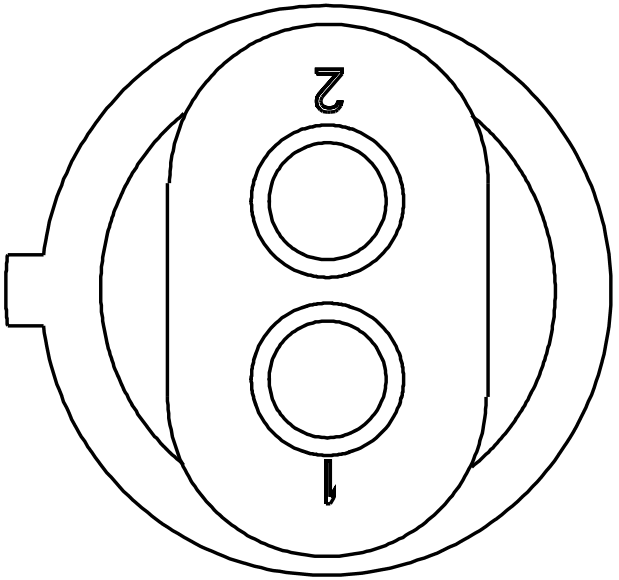

Name	Terminal Part Number	V-Min	Name	Wire Part Number	Wire CSA	Wire Spec	Wire Material description	Wire Color Description	Wire Length	End2 Terminal Part Number	End2 Pin Name	End2 Connect or
1	-	-	VB94BWA	3510311 R1	0.79	18.0	Thin Wall XLPE Primary Cable	GREY	1560.0	-	X	-
2	-	-	VB94BVA	3510311 R1	0.79	18.0	Thin Wall XLPE Primary Cable	GREY	1635.0	-	X	-

Connector Name	R01-9545
Part Number	3522068C1
Instances	LT/RH/LoneStar - X15/A26 - Traction Control (Bendix Controller) Option 2:Diagram1 LT/RH/LoneStar - X15/A26 - Traction Control (Bendix Controller) Option 2:Diagram2
Mates	SOL-ETRAC_BENDIX-3033-07-0 1A

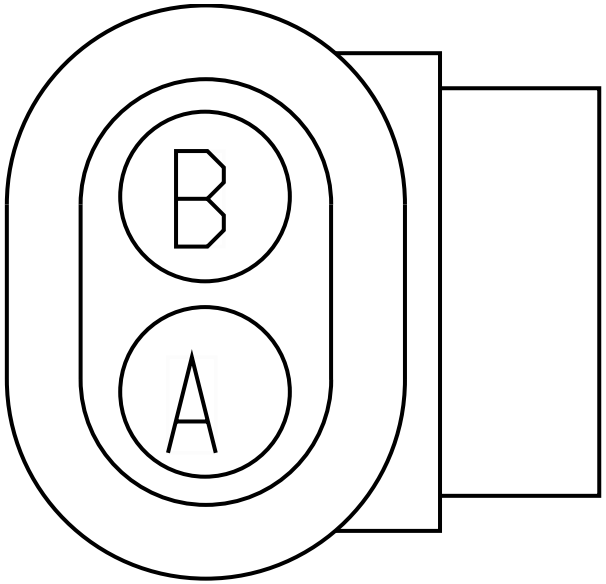

Name	Terminal Part Number	V-Min	Name	Wire Part Number	Wire CSA	Wire Spec	Wire Material description	Wire Color Description	Wire Length	End2 Terminal Part Number	End2 Pin Name	End2 Connect or
A	-	-	MA152AB	3510312 R1	1.16	16.0	Thin Wall XLPE Primary Cable	GREY	960.0	-	2	9540F
B	-	-	MA152AA	3510312 R1	1.16	16.0	Thin Wall XLPE Primary Cable	GREY	960.0	-	1	9540F

Connector Name	R01-9724A
Part Number	BLUNT_SL_VC
Instances	LT/RH/LoneStar - X15/A26 - Body Builder Lighting - (Blunt Cut):Diagram2
Mates	BLNT-BODY-BUILDER-01

Name	Terminal Part Number	V-Min	Name	Wire Part Number	Wire CSA	Wire Spec	Wire Material description	Wire Color Description	Wire Length	End2 Terminal Part Number	End2 Pin Name	End2 Connector
A	-	-	WA10-GBB	2643789 R1	7.48	8.0	Std. Wall XLPE Primary Cable	WHITE	4895.0	-	A	9717F
B	-	-	VY56BB	2643802 R1	4.81	10.0	Std. Wall XLPE Primary Cable	YELLOW 2	4895.0	-	B	9716M
C	-	-	VY57BB	2643776 R1	4.81	10.0	Std. Wall XLPE Primary Cable	LIGHT GREEN	4895.0	-	C	9716M
D	-	-	VY58BB	2643773 R1	4.81	10.0	Std. Wall XLPE Primary Cable	BLACK	4895.0	-	A	9716M
E	-	-	VY68BB	2643779 R1	4.81	10.0	Std. Wall XLPE Primary Cable	BROWN	4895.0	-	B	9715F
F	-	-	VY70BB	2643698 R1	4.81	10.0	Std. Wall XLPE Primary Cable	RED	4895.0	-	A	9715F

Connector Name R01-9724

Part Number BLUNT_SL_VC

Instances LT/RH/LoneStar - X15/A26 - Body Builder Lighting - (Blunt Cut):Diagram1

Name	Terminal Part Number	V-Min	Name	Wire Part Number	Wire CSA	Wire Spec	Wire Material description	Wire Color Description	Wire Length	End2 Terminal Part Number	End2 Pin Name	End2 Connector
A	-	-	VZ10-GBB	2643789 R1	7.48	8.0	Std. Wall XLPE Primary Cable	WHITE	4595.0	-	A	9717F
B	-	-	VX70BB	2643698 R1	4.81	10.0	Std. Wall XLPE Primary Cable	RED	4595.0	-	A	9715F
C	-	-	VX68BB	2643779 R1	4.81	10.0	Std. Wall XLPE Primary Cable	BROWN	4595.0	-	B	9715F
E	-	-	VX58BB	2643773 R1	4.81	10.0	Std. Wall XLPE Primary Cable	BLACK	4595.0	-	A	9716M
F	-	-	VX56BB	2643802 R1	4.81	10.0	Std. Wall XLPE Primary Cable	YELLOW 2	4595.0	-	B	9716M
G	-	-	VX57BB	2643776 R1	4.81	10.0	Std. Wall XLPE Primary Cable	LIGHT GREEN	4595.0	-	C	9716M

Connector Name	R01-9789FA
Part Number	1667732C1
Instances	LT/RH/LoneStar - X15/A26 - Trailer Interface (Lighting) – BOC & EOF_NA:Diagram1-Combination2 LT/RH/LoneStar - X15/A26 - Trailer Interface (Lighting) – BOC & EOF_NA:Diagram1-Combination4
Mates	TRLR-SKT_EOF-3035-01-02A

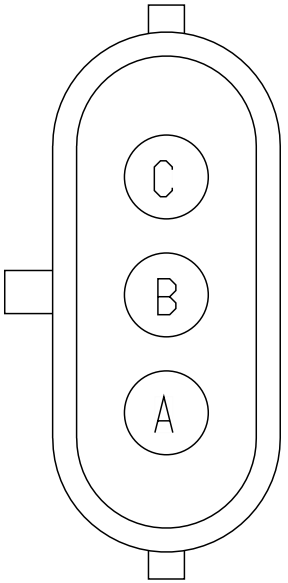

Name	Terminal Part Number	V-Min	Name	Wire Part Number	Wire CSA	Wire Spec	Wire Material description	Wire Color Description	Wire Length	End2 Terminal Part Number	End2 Pin Name	End2 Connect or
A	-	-	RS58W	2643773 R1	4.81	10.0	Std. Wall XLPE Primary Cable	BLACK	3020.0	-	A	9716M
B	-	-	RS56W	2643802 R1	4.81	10.0	Std. Wall XLPE Primary Cable	YELLOW 2	3020.0	-	B	9716M
C	-	-	RS57W	2643776 R1	4.81	10.0	Std. Wall XLPE Primary Cable	LIGHT GREEN	3020.0	-	C	9716M

Connector Name	R01-9789F
Part Number	1667732C1
Instances	LT/RH/LoneStar - X15/A26 - Trailer Interface (Lighting) – BOC & EOF_NA:Diagram1-Combination1 LT/RH/LoneStar - X15/A26 - Trailer Interface (Lighting) – BOC & EOF_NA:Diagram1-Combination3
Mates	TRLR-SKT_EOF-3035-01-02AA

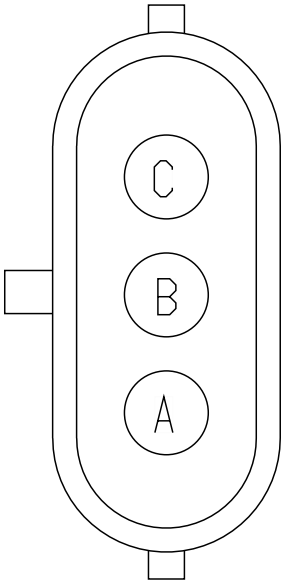

Name	Terminal Part Number	V-Min	Name	Wire Part Number	Wire CSA	Wire Spec	Wire Material description	Wire Color Description	Wire Length	End2 Terminal Part Number	End2 Pin Name	End2 Connect or
A	-	-	RR58W	2643773 R1	4.81	10.0	Std. Wall XLPE Primary Cable	BLACK	2545.0	-	A	9716M
B	-	-	RR56W	2643802 R1	4.81	10.0	Std. Wall XLPE Primary Cable	YELLOW 2	2545.0	-	B	9716M
C	-	-	RR57W	2643776 R1	4.81	10.0	Std. Wall XLPE Primary Cable	LIGHT GREEN	2545.0	-	C	9716M

Connector Name	R01-9790MA
Part Number	1667733C1
Instances	LoneStar - X15 - Trailer Interface (ABS) - Center Pin Circuit:Diagram2 LoneStar - X15 - Trailer Interface (ABS) - Center Pin Circuit:Diagram4 LT/RH - X15/A26 - Trailer Interface (ABS) - Center Pin Circuit:Diagram2 LT/RH - X15/A26 - Trailer Interface (ABS) - Center Pin Circuit:Diagram4 LT/RH/LoneStar - X15/A26 - Trailer Interface (ABS) - BOC & EOF_NA:Diagram2 LT/RH/LoneStar - X15/A26 - Trailer Interface (ABS) - BOC & EOF_NA:Diagram4 LT/RH/LoneStar - X15/A26 - Trailer Interface (Lighting) – BOC & EOF_NA:Diagram1-Combination2 LT/RH/LoneStar - X15/A26 - Trailer Interface (Lighting) – BOC & EOF_NA:Diagram1-Combination4
Mates	TRLR-SKT_EOF-3035-01-02A

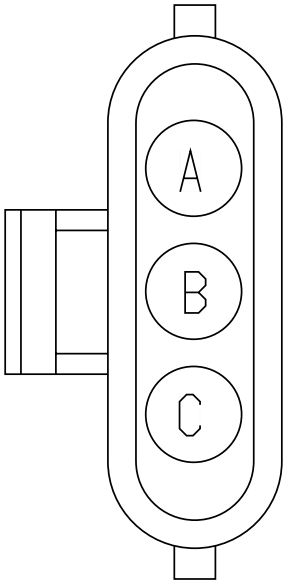

Name	Terminal Part Number	V-Min	Name	Wire Part Number	Wire CSA	Wire Spec	Wire Material description	Wire Color Description	Wire Length	End2 Terminal Part Number	End2 Pin Name	End2 Connector
A	-	-	RS70W	2643698 R1	4.81	10.0	Std. Wall XLPE Primary Cable	RED	3020.0	-	A	9715F
B	-	-	RS68W	2643779 R1	4.81	10.0	Std. Wall XLPE Primary Cable	BROWN	3020.0	-	B	9715F
C	-	-	RS94W	2643816 R1	4.81	10.0	Std. Wall XLPE Primary Cable	DARK BLUE	3020.0	-	C	9715F

Connector Name	R01-9790M
Part Number	1667733C1
Instances	LoneStar - X15 - Trailer Interface (ABS) - Center Pin Circuit:Diagram1 LoneStar - X15 - Trailer Interface (ABS) - Center Pin Circuit:Diagram3 LT/RH - X15/A26 - Trailer Interface (ABS) - Center Pin Circuit:Diagram1 LT/RH - X15/A26 - Trailer Interface (ABS) - Center Pin Circuit:Diagram3 LT/RH/LoneStar - X15/A26 - Trailer Interface (ABS) - BOC & EOF_NA:Diagram1 LT/RH/LoneStar - X15/A26 - Trailer Interface (ABS) - BOC & EOF_NA:Diagram3 LT/RH/LoneStar - X15/A26 - Trailer Interface (Lighting) – BOC & EOF_NA:Diagram1-Combination1 LT/RH/LoneStar - X15/A26 - Trailer Interface (Lighting) – BOC & EOF_NA:Diagram1-Combination3

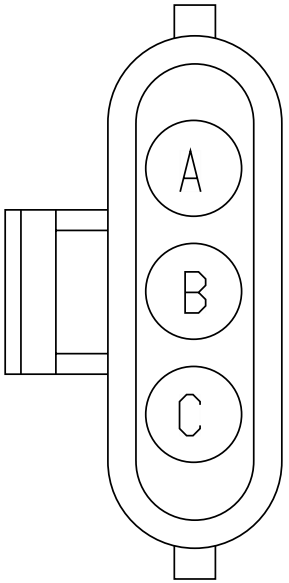

Name	Terminal Part Number	V-Min	Name	Wire Part Number	Wire CSA	Wire Spec	Wire Material description	Wire Color Description	Wire Length	End2 Terminal Part Number	End2 Pin Name	End2 Connector
A	-	-	RR70W	2643698 R1	4.81	10.0	Std. Wall XLPE Primary Cable	RED	2545.0	-	A	9715F
B	-	-	RR68W	2643779 R1	4.81	10.0	Std. Wall XLPE Primary Cable	BROWN	2545.0	-	B	9715F
C	-	-	RR94W	2643816 R1	4.81	10.0	Std. Wall XLPE Primary Cable	DARK BLUE	2545.0	-	C	9715F

Connector Name	R01-9811
Part Number	3536864C1
Instances	LT/RH/LoneStar - X15/A26 - Tandem Axle Temperature Monitoring:Diagram1 LT/RH/LoneStar - X15/A26 - Tandem Axle Temperature Monitoring w/ Single SNSR and AUX Gauge:Diagram1 LT/RH/LoneStar - X15/A26 - Tandem Axle Temperature Monitoring w/ Single SNSR and AUX Gauge:Diagram1 LT/RH/LoneStar - X15/A26 - Tandem Axle Temperature Monitoring w/Aux Gauge:Diagram1
Mates	SNSR-Single_Axl_Temp-3008- 01-01A

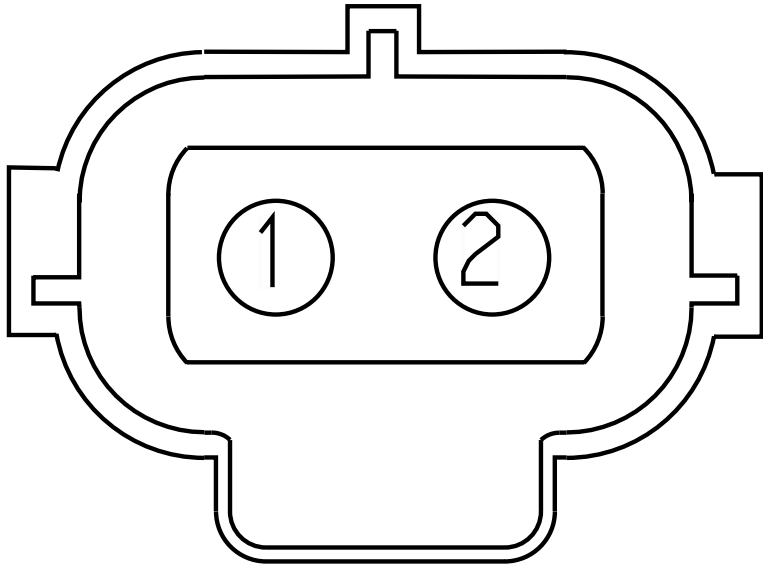

Name	Terminal Part Number	V-Min	Name	Wire Part Number	Wire CSA	Wire Spec	Wire Material description	Wire Color Description	Wire Length	End2 Terminal Part Number	End2 Pin Name	End2 Connector
1	-	-	TA32	2643676 R1	0.79	18.0	Std. Wall XLPE Primary Cable	TAN	2860.0	-	6	9800M
1	-	-	RH32	2643676 R1	0.79	18.0	Std. Wall XLPE Primary Cable	TAN	2860.0	-	8	9800M
2	-	-	TA9C	2643673 R1	0.79	18.0	Std. Wall XLPE Primary Cable	GREY	2860.0	-	7	9800M
2	-	-	RH9C	2643673 R1	0.79	18.0	Std. Wall XLPE Primary Cable	GREY	1950.0	-	X	-

Connector Name R01-9812

Part Number 3536864C1

Instances LT/RH/LoneStar - X15/A26 - Tandem Axle Temperature Monitoring:Diagram1
LT/RH/LoneStar - X15/A26 - Tandem Axle Temperature Monitoring w/Aux Gauge:Diagram1

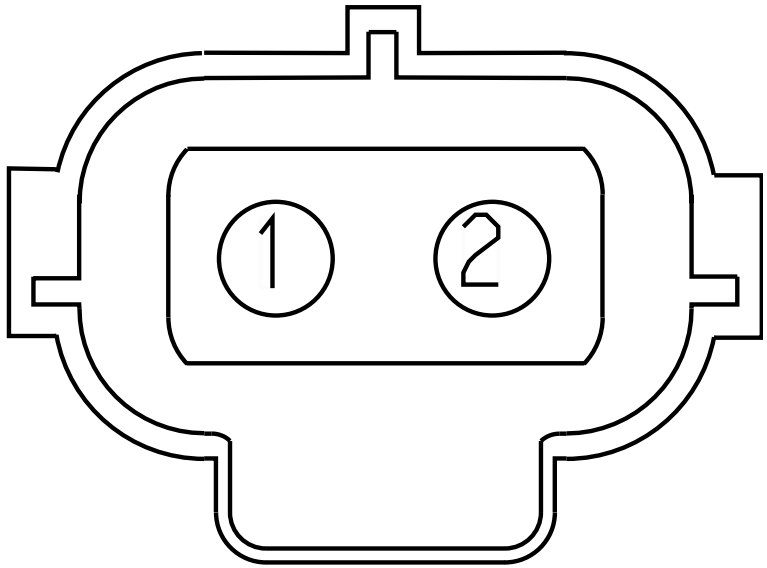

Name	Terminal Part Number	V-Min	Name	Wire Part Number	Wire CSA	Wire Spec	Wire Material description	Wire Color Description	Wire Length	End2 Terminal Part Number	End2 Pin Name	End2 Connect or
1	-	-	RH32A	2643676 R1	0.79	18.0	Std. Wall XLPE Primary Cable	TAN	3385.0	-	6	9800M
2	-	-	RH9B	2643673 R1	0.79	18.0	Std. Wall XLPE Primary Cable	GREY	2475.0	-	X	-

Connector Name	R01-9813
Part Number	3536864C1
Instances	LT/RH/LoneStar - X15/A26 - Single Axle Temperature Monitoring:Diagram1 LT/RH/LoneStar - X15/A26 - Single Axle Temperature Monitoring w/Aux Gauge:Diagram1
Mates	SNSR-Single_Axl_Temp-3008- 01-01A

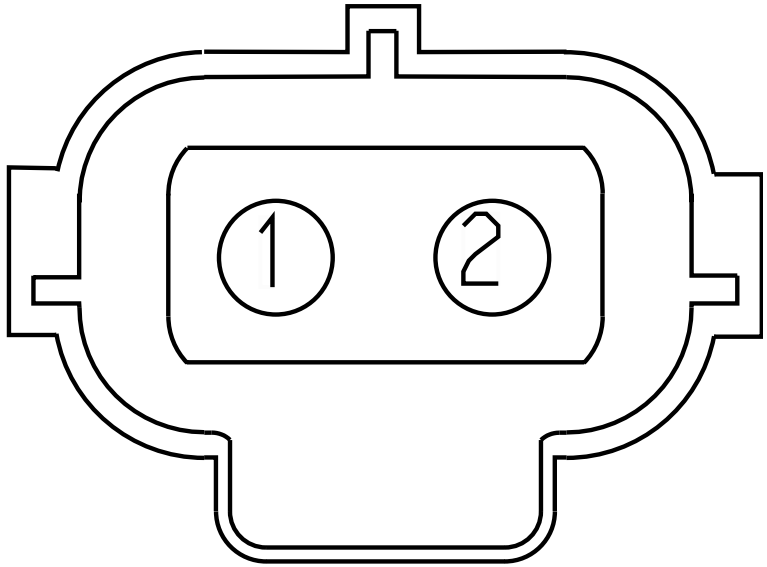

Name	Terminal Part Number	V-Min	Name	Wire Part Number	Wire CSA	Wire Spec	Wire Material description	Wire Color Description	Wire Length	End2 Terminal Part Number	End2 Pin Name	End2 Connect or
1	-	-	RJ32A	2643676 R1	0.79	18.0	Std. Wall XLPE Primary Cable	TAN	3385.0	-	6	9800M
2	-	-	RJ9	2643673 R1	0.79	18.0	Std. Wall XLPE Primary Cable	GREY	3385.0	-	7	9800M

Connector Name R01-9814

Part Number 587567C91

Instances LT/RH/LoneStar - X15/A26 - 2 Driver Controlled Locking Differential - FR & RR Axle (DANA):Diagram1
LT/RH/LoneStar - X15/A26 - Driver Controlled Locking Differential - FR & RR Axle (DANA):Diagram1

Mates SW-FR_DIFF_LOCK-3012-05-01A

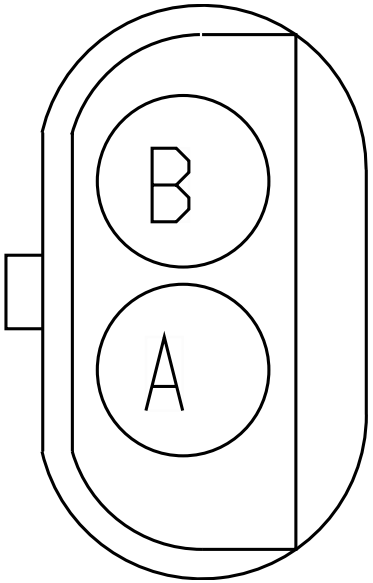

Name	Terminal Part Number	V-Min	Name	Wire Part Number	Wire CSA	Wire Spec	Wire Material description	Wire Color Description	Wire Length	End2 Terminal Part Number	End2 Pin Name	End2 Connect or
A	-	-	RN49A	2643673 R1	0.79	18.0	Std. Wall XLPE Primary Cable	GREY	2130.0	-	11	9800M
B	-	-	RN49-GB	2643674 R1	0.79	18.0	Std. Wall XLPE Primary Cable	WHITE	1655.0	-	X	-

Connector Name	R01-9815
Part Number	587567C91
Instances	LT/RH/LoneStar - X15/A26 - 2 Driver Controlled Locking Differential - FR & RR Axle (DANA):Diagram1 LT/RH/LoneStar - X15/A26 - Driver Controlled Locking Differential - FR & RR Axle (DANA):Diagram1 LT/RH/LoneStar - X15/A26 - Driver Controlled Locking Differential - RR Axle (DANA):Diagram1
Mates	SW-RR_DIFF_LOCK-3012-05-01A

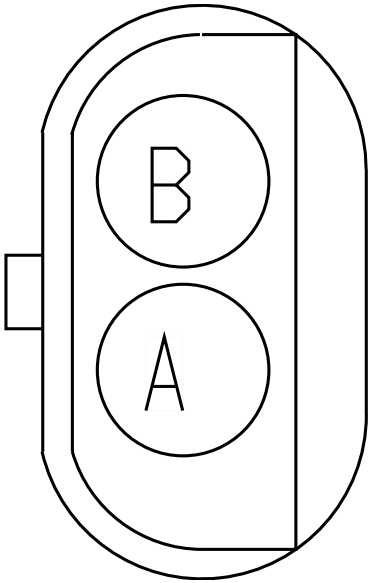

Name	Terminal Part Number	V-Min	Name	Wire Part Number	Wire CSA	Wire Spec	Wire Material description	Wire Color Description	Wire Length	End2 Terminal Part Number	End2 Pin Name	End2 Connect or
A	-	-	RM49	2643673 R1	0.79	18.0	Std. Wall XLPE Primary Cable	GREY	3075.0	-	9	9800M
B	-	-	RN49-GA	2643674 R1	0.79	18.0	Std. Wall XLPE Primary Cable	WHITE	2600.0	-	X	-
B	-	-	RP49-G	2643674 R1	0.79	18.0	Std. Wall XLPE Primary Cable	WHITE	3075.0	-	10	9800M

Connector Name R01-9816

Part Number 587567C91

Instances LT/RH/LoneStar - X15/A26 - Driver Controlled Locking Differential - RR Axle (DANA):Diagram2

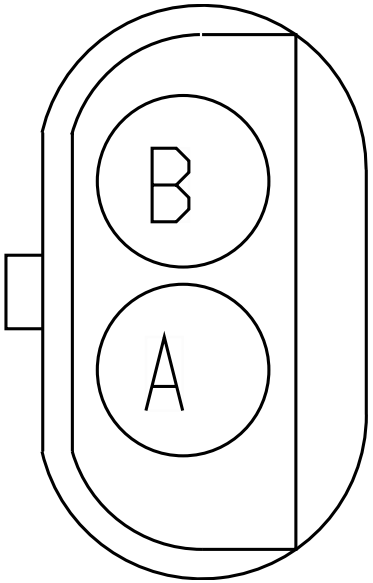

Name	Terminal Part Number	V-Min	Name	Wire Part Number	Wire CSA	Wire Spec	Wire Material description	Wire Color Description	Wire Length	End2 Terminal Part Number	End2 Pin Name	End2 Connect or
A	-	-	RL49	2643673 R1	0.79	18.0	Std. Wall XLPE Primary Cable	GREY	2760.0	-	9	9800M
B	-	-	RL49-G	2643674 R1	0.79	18.0	Std. Wall XLPE Primary Cable	WHITE	2760.0	-	10	9800M

Connector Name R01-9830

Part Number 1678137C1

Instances LT/RH/LoneStar - X15/A26 - Axle Loading (Weight)
Rear:Diagram1

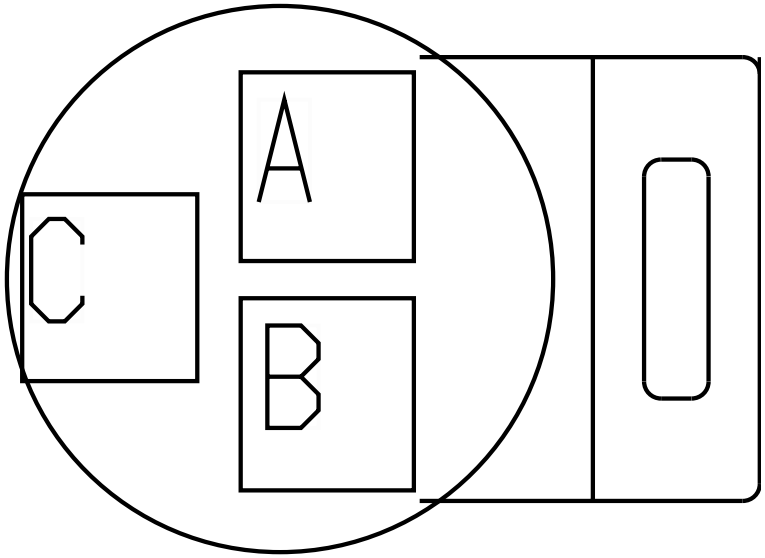

Name	Terminal Part Number	V-Min	Name	Wire Part Number	Wire CSA	Wire Spec	Wire Material description	Wire Color Description	Wire Length	End2 Terminal Part Number	End2 Pin Name	End2 Connector
A	-	-	RD109B	2643673 R1	0.79	18.0	Std. Wall XLPE Primary Cable	GREY	3845.0	-	A	9865M
B	-	-	RD106B	2643673 R1	0.79	18.0	Std. Wall XLPE Primary Cable	GREY	3845.0	-	B	9865M
C	-	-	RD61B	2643673 R1	0.79	18.0	Std. Wall XLPE Primary Cable	GREY	3845.0	-	C	9865M

Connector Name	R01-9832
Part Number	1678137C1
Instances	LT/RH/LoneStar - X15/A26 - Axle Loading (Weight) Rear:Diagram2
Mates	SNSR-RRAXLE-3007-03-01A

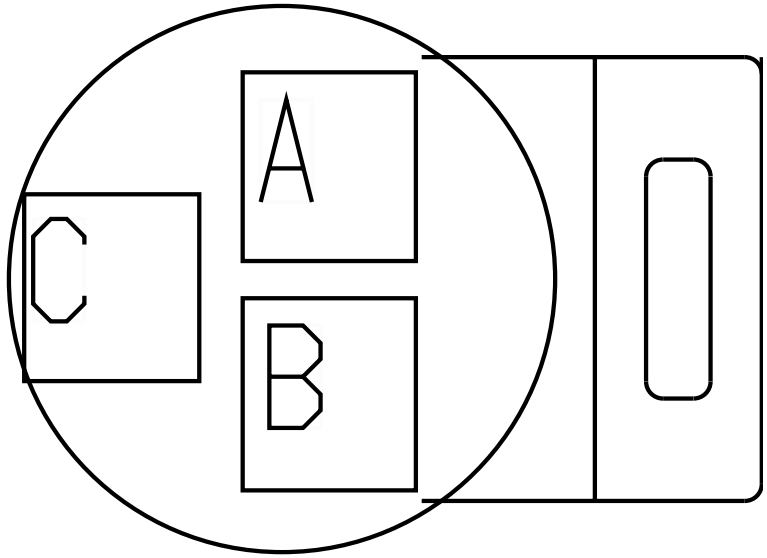

Name	Terminal Part Number	V-Min	Name	Wire Part Number	Wire CSA	Wire Spec	Wire Material description	Wire Color Description	Wire Length	End2 Terminal Part Number	End2 Pin Name	End2 Connect or
A	-	-	RE109B	2643673 R1	0.79	18.0	Std. Wall XLPE Primary Cable	GREY	3345.0	-	A	9865M
B	-	-	RE106B	2643673 R1	0.79	18.0	Std. Wall XLPE Primary Cable	GREY	3345.0	-	B	9865M
C	-	-	RE61B	2643673 R1	0.79	18.0	Std. Wall XLPE Primary Cable	GREY	3345.0	-	C	9865M

Connector Name	R01-9911
Part Number	3536864C1
Instances	LT/RH/LoneStar - X15/A26 - Tandem Axle Temperature Monitoring:Diagram2 LT/RH/LoneStar - X15/A26 - Tandem Axle Temperature Monitoring w/Aux Gauge:Diagram2

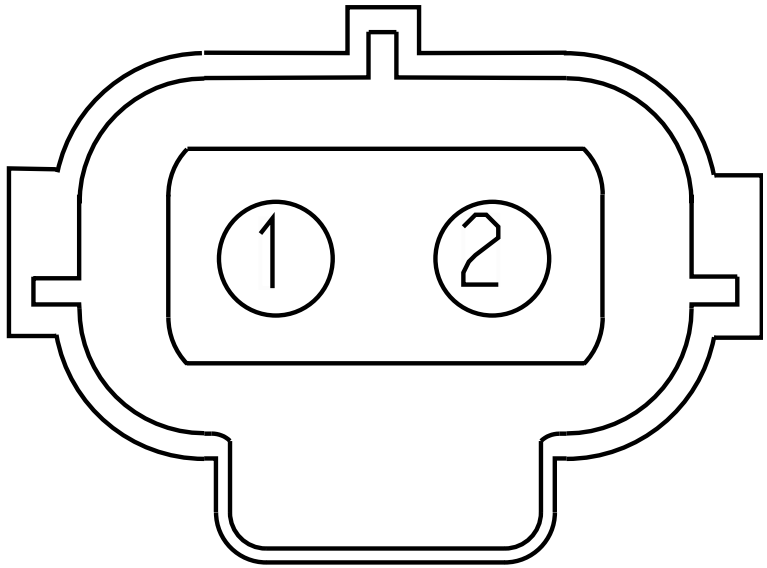

Name	Terminal Part Number	V-Min	Name	Wire Part Number	Wire CSA	Wire Spec	Wire Material description	Wire Color Description	Wire Length	End2 Terminal Part Number	End2 Pin Name	End2 Connect or
1	-	-	UC32	2643676 R1	0.79	18.0	Std. Wall XLPE Primary Cable	TAN	1670.0	-	8	9800M
2	-	-	UC9C	2643673 R1	0.79	18.0	Std. Wall XLPE Primary Cable	GREY	910.0	-	X	-

Connector Name	R01-9912
Part Number	3536864C1
Instances	LT/RH/LoneStar - X15/A26 - Tandem Axle Temperature Monitoring:Diagram2 LT/RH/LoneStar - X15/A26 - Tandem Axle Temperature Monitoring w/Aux Gauge:Diagram2
Mates	SNSR-RR_Axl_Temp-3008-02-0 1A

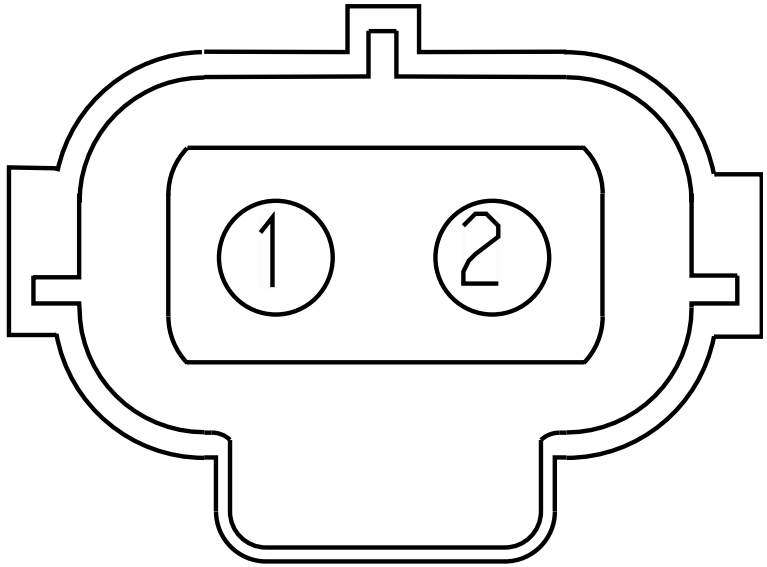

Name	Terminal Part Number	V-Min	Name	Wire Part Number	Wire CSA	Wire Spec	Wire Material description	Wire Color Description	Wire Length	End2 Terminal Part Number	End2 Pin Name	End2 Connect or
1	-	-	UC32A	2643676 R1	0.79	18.0	Std. Wall XLPE Primary Cable	TAN	3535.0	-	6	9800M
2	-	-	UC9B	2643673 R1	0.79	18.0	Std. Wall XLPE Primary Cable	GREY	2625.0	-	X	-

Connector Name	S05-9255
Part Number	1667639C1
Instances	LT/RH/LoneStar - X15/A26 - Rear AUTO HVAC (No Idle) W/ Pre-Heat (Bergstrom Heat and Cool w/ Condensation) 2 SWITCHES:Diagram1 - Powers, Grounds & Controls LT/RH/LoneStar - X15/A26 - Rear Manual HVAC (No Idle) W/ Pre-Heat (Bergstrom Heat and Cool w/ Condensation) 2 SWITCHES:Diagram1 - Powers, Grounds & Controls
Mates	DEV-10A_INLINE_FUSE_HOLDER -6002-11-01A

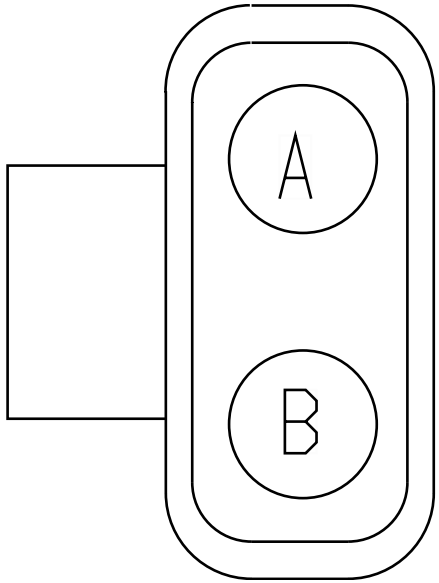

Name	Terminal Part Number	V-Min	Name	Wire Part Number	Wire CSA	Wire Spec	Wire Material description	Wire Color Description	Wire Length	End2 Terminal Part Number	End2 Pin Name	End2 Connect or
A	-	-	N104AZ	2643695 R1	3.01	12.0	Std. Wall XLPE Primary Cable	RED	210.0	-	A	J4-REMO TE SENSE
B	-	-	N104BB	2643695 R1	3.01	12.0	Std. Wall XLPE Primary Cable	RED	200.0	-	A	100PB1

Connector Name	T01-6100G-SENSE
Part Number	RING-M-8_0
Instances	LT/RH - A26 - Bosch LIL165_LIL200 Alternator W/ Remote Sense:Diagram1 LT/RH - A26 - Bosch LIL165_LIL200 Alternator W/ Remote Sense W/ Mitsubishi Starter:Diagram1
Mates	DEV-Bosch_LIL165_LIL200_Al ternator-4004-01-08B

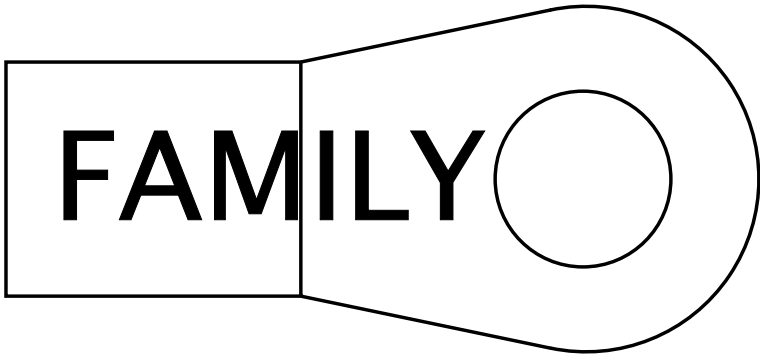

Name	Terminal Part Number	V-Min	Name	Wire Part Number	Wire CSA	Wire Spec	Wire Material description	Wire Color Description	Wire Length	End2 Terminal Part Number	End2 Pin Name	End2 Connect or
A	-	-	VM2	2645955 R1	32.19	2.0	SGR 125	RED	2955.0	-	X	-

Connector Name	T01-6101G-SENSE
Part Number	RING-M-6_0
Instances	LT/RH - A26 - Bosch LIL165_LIL200 Alternator W/ Remote Sense:Diagram1 LT/RH - A26 - Bosch LIL165_LIL200 Alternator W/ Remote Sense W/ Mitsubishi Starter:Diagram1
Mates	DEV-Bosch_LIL165_LIL200_Al ternator-4004-01-08B

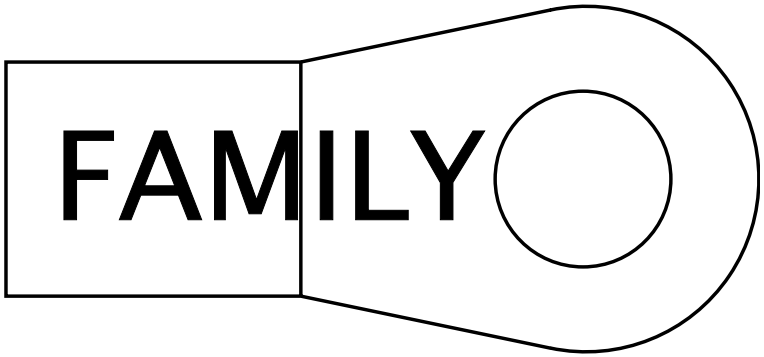

Name	Terminal Part Number	V-Min	Name	Wire Part Number	Wire CSA	Wire Spec	Wire Material description	Wire Color Description	Wire Length	End2 Terminal Part Number	End2 Pin Name	End2 Connect or
A	-	-	VM2-G	2645931 R1	32.19	2.0	SGR 125	BLACK	2900.0	-	1	K01-6314

Connector Name	T02-6100D
Part Number	RING-M-8_0
Instances	LT/RH - A26 - Leece-Neville AVI160-210A/240A Alternator W/ Remote Sense:Diagram1 LT/RH - A26 - Leece-Neville AVI160-210A/240A Alternator W/ Remote Sense W/ Mitsubishi Starter:Diagram1
Mates	DEV-Leece_Neville_AVI160_2 10A_240A_Alternator-4004-01-04B

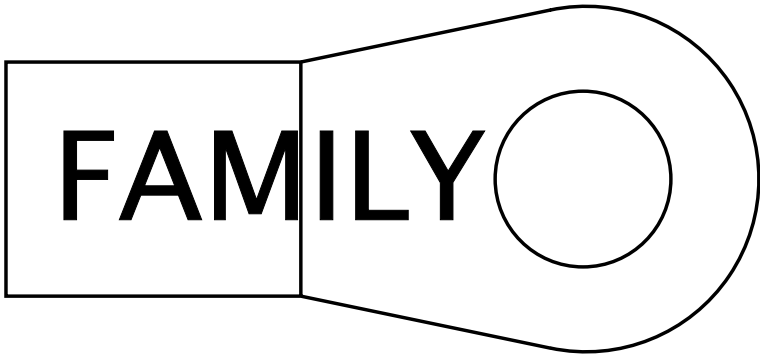

Name	Terminal Part Number	V-Min	Name	Wire Part Number	Wire CSA	Wire Spec	Wire Material description	Wire Color Description	Wire Length	End2 Terminal Part Number	End2 Pin Name	End2 Connect or
A	-	-	VH2	2645958 R1	39.43	1.0	SGR 125	RED	2925.0	-	X	-

Connector Name	T02-6101D
Part Number	RING-M-8_0
Instances	LT/RH - A26 - Leece-Neville AVI160-210A/240A Alternator W/ Remote Sense:Diagram1 LT/RH - A26 - Leece-Neville AVI160-210A/240A Alternator W/ Remote Sense W/ Mitsubishi Starter:Diagram1
Mates	DEV-Leece_Neville_AVI160_2 10A_240A_Alternator-4004-01-04B

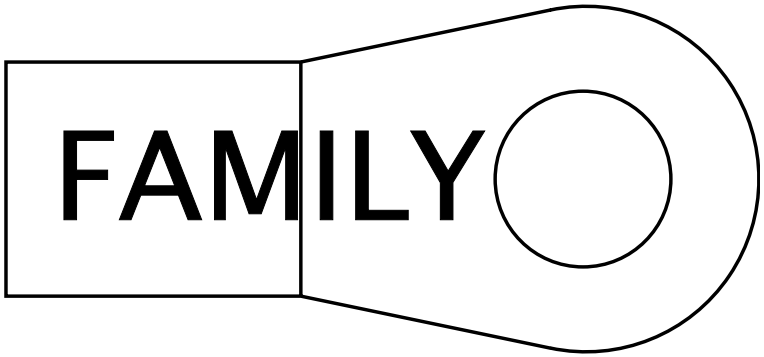

Name	Terminal Part Number	V-Min	Name	Wire Part Number	Wire CSA	Wire Spec	Wire Material description	Wire Color Description	Wire Length	End2 Terminal Part Number	End2 Pin Name	End2 Connect or
A	-	-	VH2-G	2645934 R1	39.43	1.0	SGR 125	BLACK	2880.0	-	1	K01-6314

Connector Name	T04-6101D
Part Number	RING-M-8_0
Instances	LT/RH - A26 - Leece-Neville - LN 325A Alternator W/ Remote Sense:Diagram1 LT/RH - A26 - Leece-Neville - LN 325A Alternator W/ Remote Sense W/ Mitsubishi Starter:Diagram1
Mates	DEV-Leece-Nevile_LN320_Alt ernator-4004-01-09B

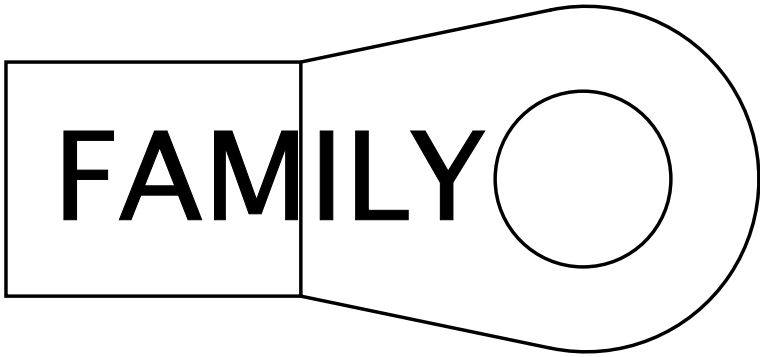

Name	Terminal Part Number	V-Min	Name	Wire Part Number	Wire CSA	Wire Spec	Wire Material description	Wire Color Description	Wire Length	End2 Terminal Part Number	End2 Pin Name	End2 Connect or
A	-	-	K2	2645964 R1	61.89	0.0	SGR 125	RED	2930.0	-	X	-

Connector Name	T04-6101
Part Number	RING-M-8_0
Instances	LT/RH - A26 - Leece-Neville - LN 325A Alternator W/ Remote Sense:Diagram1 LT/RH - A26 - Leece-Neville - LN 325A Alternator W/ Remote Sense W/ Mitsubishi Starter:Diagram1
Mates	DEV-Leece-Nevile_LN320_Alt ernator-4004-01-09B

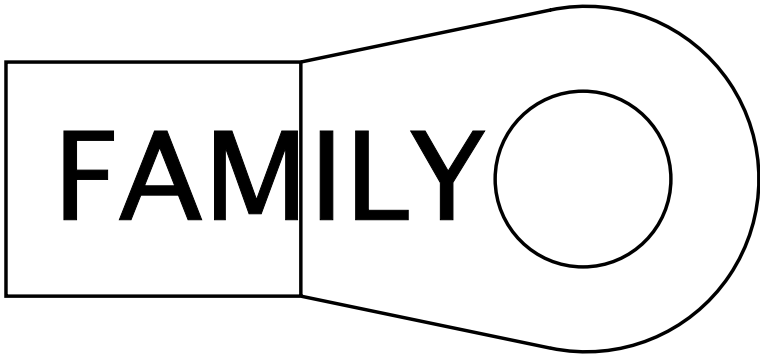

Name	Terminal Part Number	V-Min	Name	Wire Part Number	Wire CSA	Wire Spec	Wire Material description	Wire Color Description	Wire Length	End2 Terminal Part Number	End2 Pin Name	End2 Connect or
A	-	-	K2-G	2645940 R1	61.89	0.0	SGR 125	BLACK	2740.0	-	1	K01-6314

Connector Name	T05-6100H-DELCO-28SI
Part Number	RING-M-8_0
Instances	LT/RH - A26 - Delco Remy 28SI Alternator W/ Remote Sense:Diagram1 LT/RH - A26 - Delco Remy 28SI Alternator W/ Remote Sense W/ Mitsubishi Starter:Diagram1
Mates	DEV-Delco_Remy_28SI_Altern ator-4004-01-05B

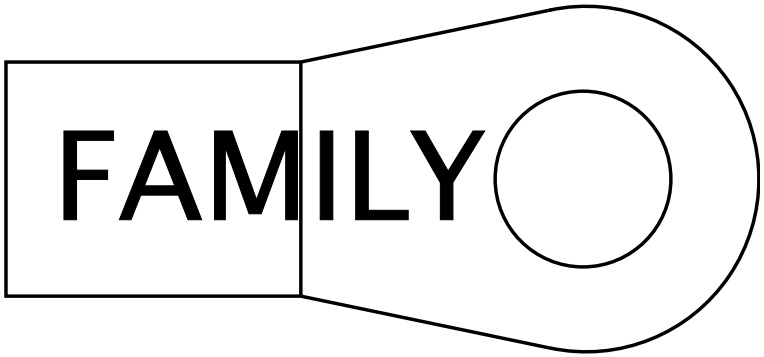

Name	Terminal Part Number	V-Min	Name	Wire Part Number	Wire CSA	Wire Spec	Wire Material description	Wire Color Description	Wire Length	End2 Terminal Part Number	End2 Pin Name	End2 Connect or
A	-	-	LD2	2645955 R1	32.19	2.0	SGR 125	RED	2995.0	-	X	-

Connector Name	T05-6100J-DELCO-36SI
Part Number	RING-E-1-4_0
Instances	LT/RH - A26 - Delco Remy 36SI Alternator W/ Remote Sense:Diagram1 LT/RH - A26 - Delco Remy 36SI Alternator W/ Remote Sense W/ Mitsubishi Starter:Diagram1
Mates	DEV-Delco_Remy_36SI_Altern ator-4004-01-07B

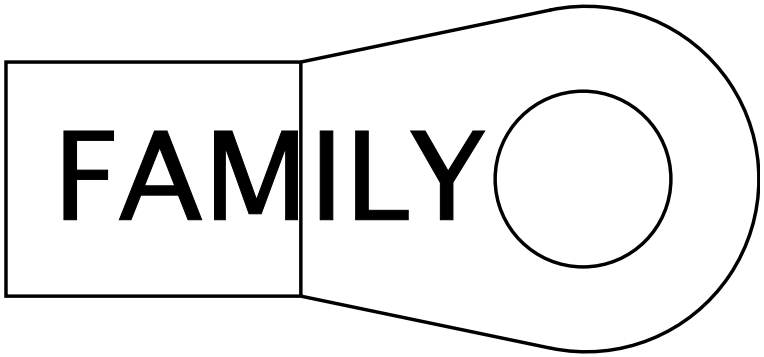

Name	Terminal Part Number	V-Min	Name	Wire Part Number	Wire CSA	Wire Spec	Wire Material description	Wire Color Description	Wire Length	End2 Terminal Part Number	End2 Pin Name	End2 Connect or
A	-	-	LD2	2645955 R1	32.19	2.0	SGR 125	RED	2995.0	-	X	-

Connector Name	T05-6101H-DELCO-28SI
Part Number	RING-M-6_0
Instances	LT/RH - A26 - Delco Remy 28SI Alternator W/ Remote Sense:Diagram1 LT/RH - A26 - Delco Remy 28SI Alternator W/ Remote Sense W/ Mitsubishi Starter:Diagram1
Mates	DEV-Delco_Remy_28SI_Altern ator-4004-01-05B

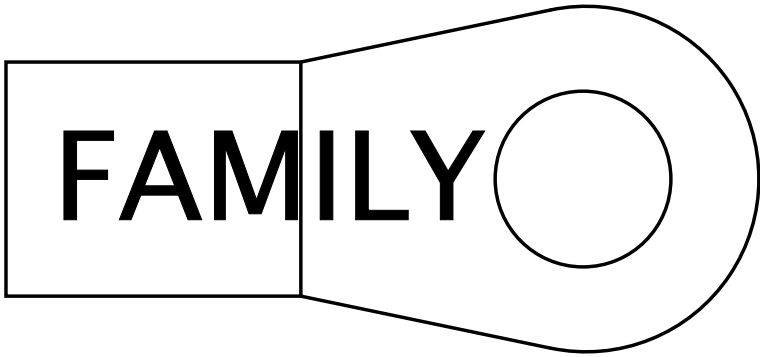

Name	Terminal Part Number	V-Min	Name	Wire Part Number	Wire CSA	Wire Spec	Wire Material description	Wire Color Description	Wire Length	End2 Terminal Part Number	End2 Pin Name	End2 Connect or
A	-	-	LD2-G	2645931 R1	32.19	2.0	SGR 125	BLACK	2885.0	-	1	K01-6314

Connector Name	T05-6101J-DELCO-36SI
Part Number	RING-E-1-4_0
Instances	LT/RH - A26 - Delco Remy 36SI Alternator W/ Remote Sense:Diagram1 LT/RH - A26 - Delco Remy 36SI Alternator W/ Remote Sense W/ Mitsubishi Starter:Diagram1
Mates	DEV-Delco_Remy_36SI_Altern ator-4004-01-07B

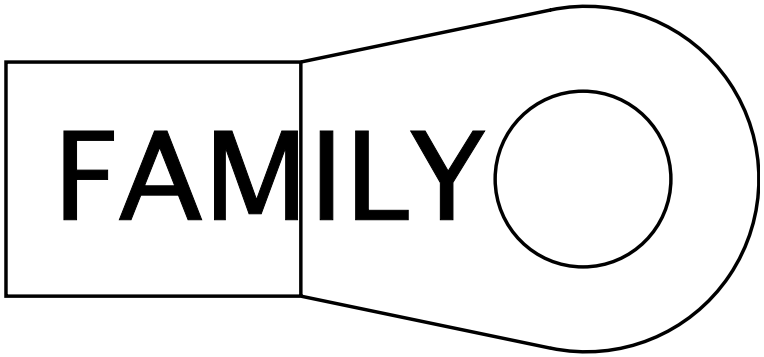

Name	Terminal Part Number	V-Min	Name	Wire Part Number	Wire CSA	Wire Spec	Wire Material description	Wire Color Description	Wire Length	End2 Terminal Part Number	End2 Pin Name	End2 Connect or
A	-	-	LD2-G	2645931 R1	32.19	2.0	SGR 125	BLACK	2885.0	-	1	K01-6314

Connector Name	T08-6100D
Part Number	RING-M-8_0
Instances	LT/RH/LoneStar - X15 - Leece-Neville - LN 325A Alternator W/ Remote Sense W/ Mitsubishi Starter:Diagram1 LT/RH/LoneStar X15 - Leece-Neville - LN 325A Alternator W/ Remote Sense W/ Delco Starter:Diagram1
Mates	DEV-Leece-Nevile_LN320_Alt ernator-4004-01-09B

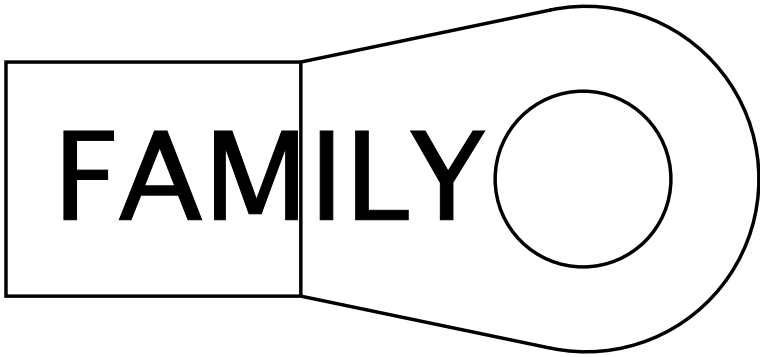

Name	Terminal Part Number	V-Min	Name	Wire Part Number	Wire CSA	Wire Spec	Wire Material description	Wire Color Description	Wire Length	End2 Terminal Part Number	End2 Pin Name	End2 Connect or
A	-	-	K2	2645964 R1	61.89	0.0	SGR 125	RED	2930.0	-	X	-

Connector Name	T08-6101D
Part Number	RING-M-8_0
Instances	LT/RH/LoneStar - X15 - Leece-Neville - LN 325A Alternator W/ Remote Sense W/ Mitsubishi Starter:Diagram1 LT/RH/LoneStar X15 - Leece-Neville - LN 325A Alternator W/ Remote Sense W/ Delco Starter:Diagram1
Mates	DEV-Leece-Nevile_LN320_Alt ernator-4004-01-09B

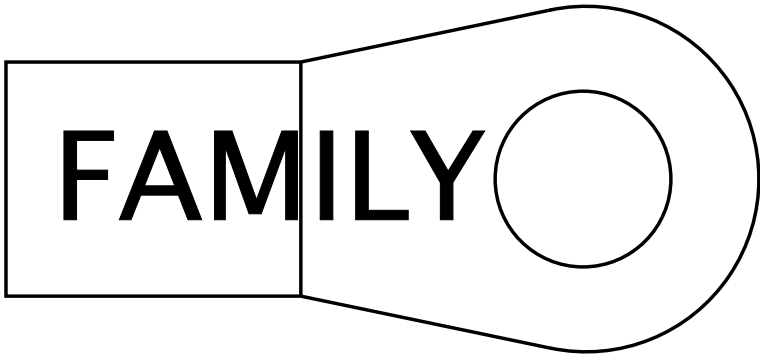

Name	Terminal Part Number	V-Min	Name	Wire Part Number	Wire CSA	Wire Spec	Wire Material description	Wire Color Description	Wire Length	End2 Terminal Part Number	End2 Pin Name	End2 Connect or
A	-	-	K2-G	2645940 R1	61.89	0.0	SGR 125	BLACK	2740.0	-	1	T-6302B

Connector Name	T09-6100D
Part Number	RING-E-5-16_0
Instances	LT/RH/LoneStar - X15 - Delco Remy 40SI Alternator W/ Remote Sense W/ Mitsubishi Starter:Diagram2 LT/RH/LoneStar X15 - Delco Remy 40SI Alternator W/ Remote Sense W/ Delco Starter:Diagram1-Combination2

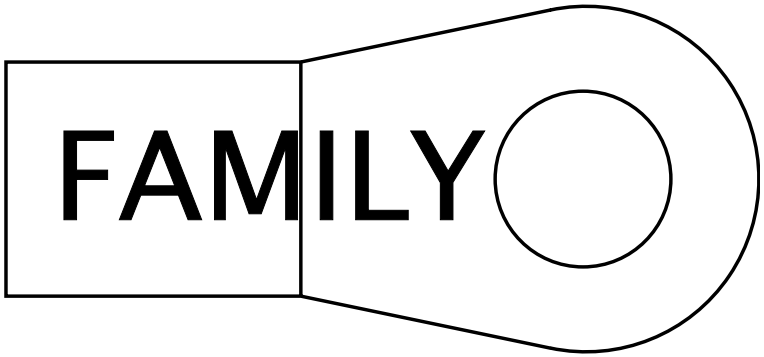

Name	Terminal Part Number	V-Min	Name	Wire Part Number	Wire CSA	Wire Spec	Wire Material description	Wire Color Description	Wire Length	End2 Terminal Part Number	End2 Pin Name	End2 Connect or
A	-	-	K2	2645964 R1	61.89	0.0	SGR 125	RED	2930.0	-	X	-

Connector Name T09-6101D

Part Number RING-E-5-16_0

Instances LT/RH/LoneStar - X15 - Delco Remy 40SI Alternator W/ Remote Sense W/ Mitsubishi Starter:Diagram2
LT/RH/LoneStar X15 - Delco Remy 40SI Alternator W/ Remote Sense W/ Delco Starter:Diagram1-Combination2

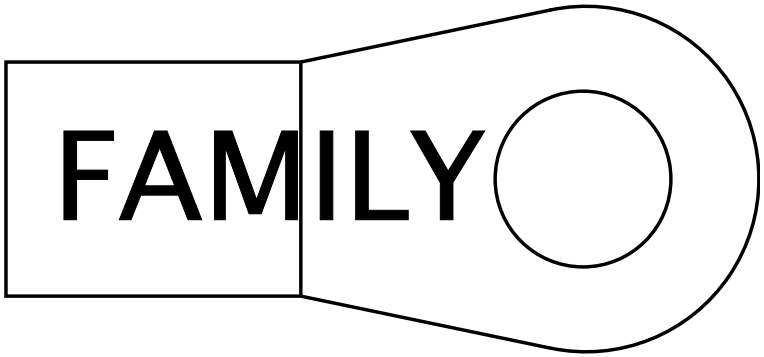

Name	Terminal Part Number	V-Min	Name	Wire Part Number	Wire CSA	Wire Spec	Wire Material description	Wire Color Description	Wire Length	End2 Terminal Part Number	End2 Pin Name	End2 Connect or
A	-	-	K2-G	2645940 R1	61.89	0.0	SGR 125	BLACK	2740.0	-	1	T-6302B

Connector Name	T10-6100D
Part Number	RING-M-8_0
Instances	LT/RH/LoneStar - X15 - Leece-Neville 320PAH Alternator W/ Mitsubishi Starter:Diagram1 LT/RH/LoneStar X15 - Leece-Neville 320PAH Alternator W/ Delco Starter:Diagram1-Combination1
Mates	DEV-Leece_Neville_320PAH_A lternator-4004-01-03A

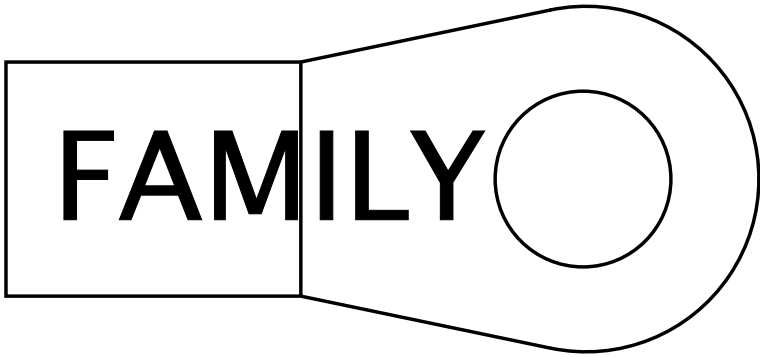

Name	Terminal Part Number	V-Min	Name	Wire Part Number	Wire CSA	Wire Spec	Wire Material description	Wire Color Description	Wire Length	End2 Terminal Part Number	End2 Pin Name	End2 Connect or
A	-	-	K2	2645964 R1	61.89	0.0	SGR 125	RED	2930.0	-	X	-

Connector Name	T10-6101D
Part Number	RING-M-10_0
Instances	LT/RH/LoneStar - X15 - Leece-Neville 320PAH Alternator W/ Mitsubishi Starter:Diagram1 LT/RH/LoneStar X15 - Leece-Neville 320PAH Alternator W/ Delco Starter:Diagram1-Combination1
Mates	DEV-Leece_Neville_320PAH_A lternator-4004-01-03A

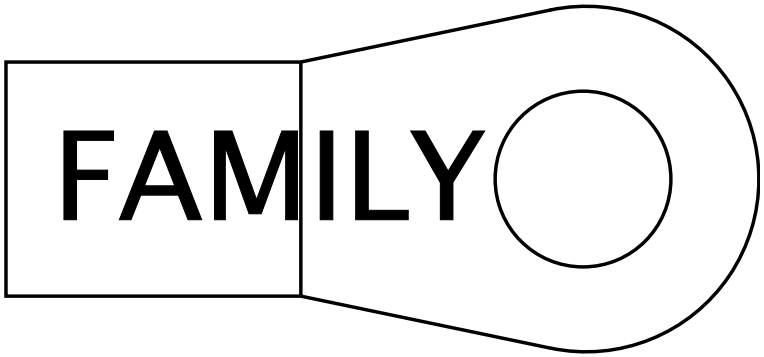

Name	Terminal Part Number	V-Min	Name	Wire Part Number	Wire CSA	Wire Spec	Wire Material description	Wire Color Description	Wire Length	End2 Terminal Part Number	End2 Pin Name	End2 Connect or
A	-	-	K2-G	2645940 R1	61.89	0.0	SGR 125	BLACK	2740.0	-	1	T-6302B

Connector Name	V03-5103
Part Number	1661198C1
Instances	LT/RH/LoneStar - X15/A26 - Rear Interior Dimming (Accent Light):Diagram1 LT/RH/LoneStar - X15/A26 - Rear Interior Dimming (Accent/ Mood):Diagram1
Mates	LT-LS_ACCENT-2000-02-01A

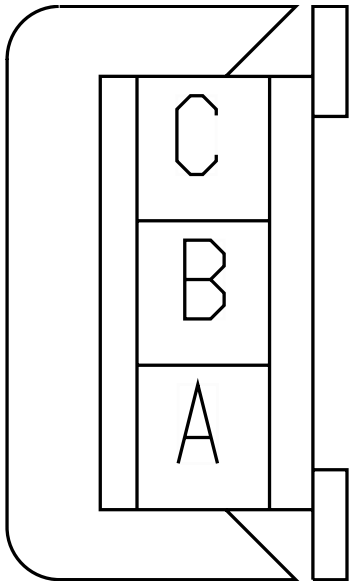

Name	Terminal Part Number	V-Min	Name	Wire Part Number	Wire CSA	Wire Spec	Wire Material description	Wire Color Description	Wire Length	End2 Terminal Part Number	End2 Pin Name	End2 Connect or
A	-	-	V63-GBD	2643674 R1	0.79	18.0	Std. Wall XLPE Primary Cable	WHITE	580.0	-	X	-
B	-	-	V63HBD	2643720 R1	0.79	18.0	Std. Wall XLPE Primary Cable	DARK BLUE	680.0	-	X	-

Connector Name	V03-5104
Part Number	1661198C1
Instances	LT/RH/LoneStar - X15/A26 - Rear Interior Dimming (Accent Light):Diagram1 LT/RH/LoneStar - X15/A26 - Rear Interior Dimming (Accent/ Mood):Diagram1
Mates	LT-RS_ACCENT-2000-02-01A

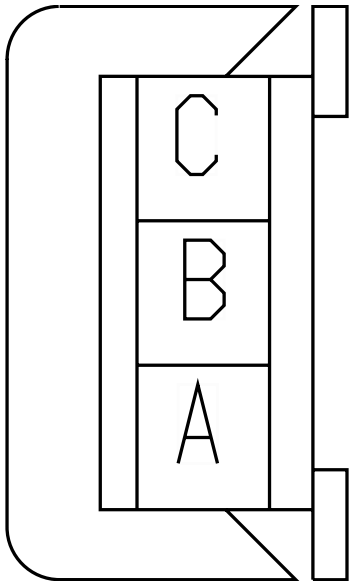

Name	Terminal Part Number	V-Min	Name	Wire Part Number	Wire CSA	Wire Spec	Wire Material description	Wire Color Description	Wire Length	End2 Terminal Part Number	End2 Pin Name	End2 Connect or
A	-	-	V63-GBE	2643674 R1	0.79	18.0	Std. Wall XLPE Primary Cable	WHITE	910.0	-	X	-
B	-	-	V63HBE	2643720 R1	0.79	18.0	Std. Wall XLPE Primary Cable	DARK BLUE	810.0	-	X	-

Connector Name	V13-5015
Part Number	3613000C1
Instances	LT/RH/LoneStar - X15/A26 - Cigar Lighter Aux APO Rear Std APO Rear APO w/Cover 12V Panel Upr Bnk APO:Diagram1 LT/RH/LoneStar - X15/A26 - Cigar Lighter Aux APO Rear Std APO Rear APO w/Cover 12V Panel Upr Bnk APO:Diagram2 LT/RH/LoneStar - X15/A26 - Cigar Lighter Aux APO Rear Std APO Rear APO w/Cover 12V Panel Upr Bnk APO:Diagram3 LT/RH/LoneStar - X15/A26 - Cigar Lighter Aux APO Rear Std APO Rear APO w/Cover 12V Panel Upr Bnk APO:Diagram4 LT/RH/LoneStar - X15/A26 - Cigar Lighter Aux APO Rear Std APO Rear APO w/Cover 12V Panel Upr Bnk APO Rear Overhead APO:Diagram1-Combination1 LT/RH/LoneStar - X15/A26 - Cigar Lighter Aux APO Rear Std APO Rear APO w/Cover 12V Panel Upr Bnk APO Rear Overhead APO:Diagram1-Combination2 LT/RH/LoneStar - X15/A26 - Cigar Lighter Aux APO Rear Std APO Rear APO w/Cover 12V Panel Upr Bnk APO Rear Overhead APO:Diagram1-Combination3 LT/RH/LoneStar - X15/A26 - Cigar Lighter Aux APO Rear Std APO Rear APO w/Cover 12V Panel Upr Bnk APO Rear Overhead APO:Diagram1-Combination4 LT/RH/LoneStar - X15/A26 - Cigar Lighter Rear Std APO Rear APO W/Cover 12V Panel Upr Bnk APO:Diagram1 LT/RH/LoneStar - X15/A26 - Cigar Lighter Rear Std APO Rear APO W/Cover 12V Panel Upr Bnk APO:Diagram2 LT/RH/LoneStar - X15/A26 - Cigar Lighter Rear Std APO Rear APO w/Cover 12V Panel Upr Bnk APO Rear Overhead APO:Diagram1 LT/RH/LoneStar - X15/A26 - Cigar Lighter Rear Std APO Rear APO w/Cover 12V Panel Upr Bnk APO Rear Overhead APO:Diagram2 LT/RH/LoneStar - X15/A26 - Std APO Aux APO Rear Std APO Rear APO W/Cover 12V Panel Upr Bnk APO:Diagram1 LT/RH/LoneStar - X15/A26 - Std APO Aux APO Rear Std APO Rear APO W/Cover 12V Panel Upr Bnk APO:Diagram2 LT/RH/LoneStar - X15/A26 - Std APO Aux APO Rear Std APO Rear APO W/Cover 12V Panel Upr Bnk APO:Diagram3 LT/RH/LoneStar - X15/A26 - Std APO Aux APO Rear Std APO Rear APO W/Cover 12V Panel Upr Bnk APO:Diagram4 LT/RH/LoneStar - X15/A26 - Std APO Aux APO Rear Std APO Rear APO w/Cover 12V Panel Upr Bnk APO Rear Overhead APO:Diagram1

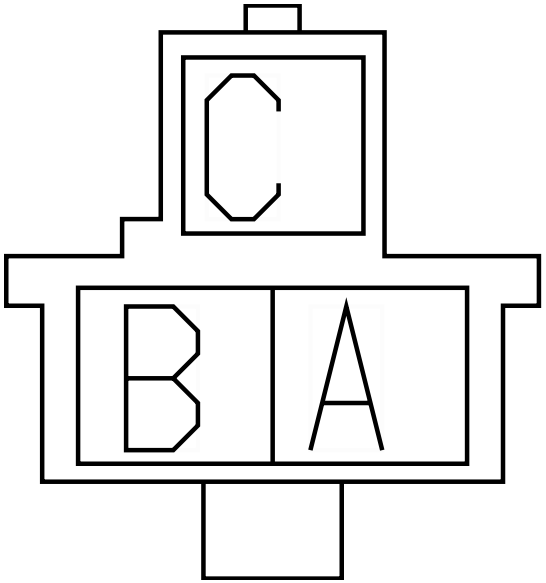

LT/RH/LoneStar - X15/A26 - Std APO Aux APO Rear Std APO Rear APO w/Cover 12V Panel Upr Bnk APO Rear Overhead APO:Diagram2
LT/RH/LoneStar - X15/A26 - Std APO Aux APO Rear Std APO Rear APO w/Cover 12V Panel Upr Bnk APO Rear Overhead APO:Diagram3
LT/RH/LoneStar - X15/A26 - Std APO Aux APO Rear Std APO Rear APO w/Cover 12V Panel Upr Bnk APO Rear Overhead APO:Diagram4
LT/RH/LoneStar - X15/A26 - Std APO Rear Std APO Rear APO W/Cover 12V Panel Upr Bnk APO:Diagram1
LT/RH/LoneStar - X15/A26 - Std APO Rear Std APO Rear APO W/Cover 12V Panel Upr Bnk APO:Diagram2
LT/RH/LoneStar - X15/A26 - Std APO Rear Std APO Rear APO w/Cover 12V Panel Upr Bnk APO Rear Overhead APO:Diagram1
LT/RH/LoneStar - X15/A26 - Std APO Rear Std APO Rear APO w/Cover 12V Panel Upr Bnk APO Rear Overhead APO:Diagram2

Mates DEV-Upr_Bnk_APO-2002-01-25A

Name	Terminal Part Number	V-Min	Name	Wire Part Number	Wire CSA	Wire Spec	Wire Material description	Wire Color Description	Wire Length	End2 Terminal Part Number	End2 Pin Name	End2 Connector
A	-	-	JP86M	2643678 R1	1.16	16.0	Std. Wall XLPE Primary Cable	LIGHT GREEN	1130.0	-	10	1000
C	-	-	JP86-GJJ	2643681 R1	1.16	16.0	Std. Wall XLPE Primary Cable	WHITE	2040.0	-	-	-
C	-	-	JP86-GJJ	2643681 R1	1.16	16.0	Std. Wall XLPE Primary Cable	WHITE	2040.0	-	11	1000

Connector Name V13-5136

Part Number 1669972C1

Instances LT/RH/LoneStar - X15/A26 - Reading Lighting - W/Upper& Lower:Diagram1

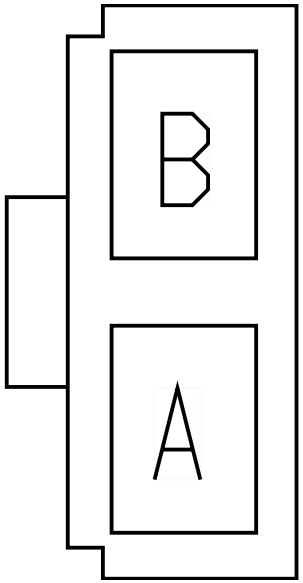

Name	Terminal Part Number	V-Min	Name	Wire Part Number	Wire CSA	Wire Spec	Wire Material description	Wire Color Description	Wire Length	End2 Terminal Part Number	End2 Pin Name	End2 Connect or
A	-	-	JP63U	2643720 R1	0.79	18.0	Std. Wall XLPE Primary Cable	DARK BLUE	1575.0	-	8	1000
B	-	-	JP63-GU	2643674 R1	0.79	18.0	Std. Wall XLPE Primary Cable	WHITE	2040.0	-	9	1000

Connector Name	W01-5909
Part Number	2005835C1
Instances	LT/RH/LoneStar - X15/A26 - Telematics (DRIVERTECH DAYCAB W/ J1939):Diagram1
Mates	MODU-DRIVERTECH-2035-12-05

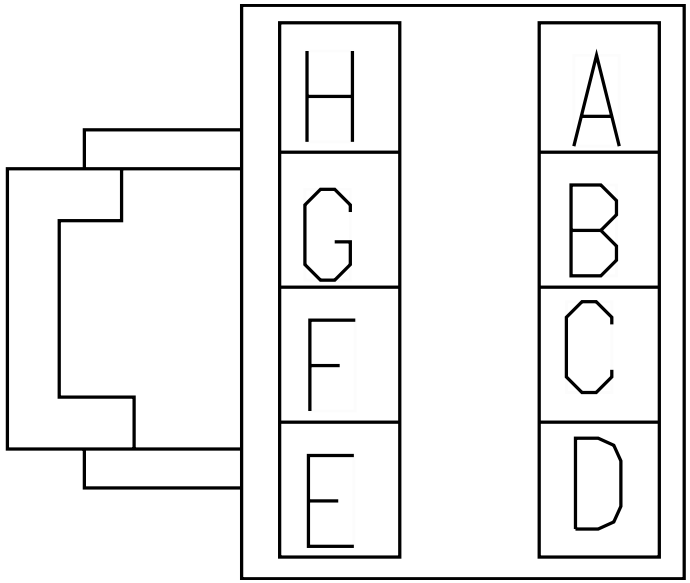

Name	Terminal Part Number	V-Min	Name	Wire Part Number	Wire CSA	Wire Spec	Wire Material description	Wire Color Description	Wire Length	End2 Terminal Part Number	End2 Pin Name	End2 Connect or
A	-	-	14ED	2643759 R1	0.79	18.0	Std. Wall XLPE Primary Cable	RED	2245.0	-	A	5010
C	-	-	11-GMB	2643674 R1	0.79	18.0	Std. Wall XLPE Primary Cable	WHITE	2245.0	-	F	5010
E	-	-	13EE	2643794 R1	0.79	18.0	Std. Wall XLPE Primary Cable	PINK	2245.0	-	B	5010
F	-	-	-	-	-	-	-	-	-	-	-	-
G	-	-	-	-	-	-	-	-	-	-	-	-

Connector Name	W02-LT 8100A
Part Number	1667741C1
Instances	LT/RH - X15/A26 - Modesty Lighting W/ Day Cab W/ 2 Turn /0 Marker:Diagram1 LT/RH - X15/A26 - Modesty Lighting W/ Sleeper W/ 4 Side Turns / 0 Marker:Diagram1
Mates	LT-LF_MODESTY-1039-02-01A

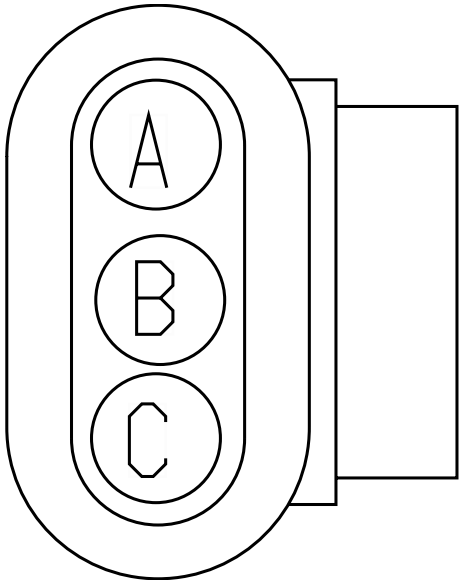

Name	Terminal Part Number	V-Min	Name	Wire Part Number	Wire CSA	Wire Spec	Wire Material description	Wire Color Description	Wire Length	End2 Terminal Part Number	End2 Pin Name	End2 Connect or
A	-	-	J11GBA	2643681 R1	1.16	16.0	Std. Wall XLPE Primary Cable	WHITE	250.0	-	X	-
A	-	-	J11GBA	2643681 R1	1.16	16.0	Std. Wall XLPE Primary Cable	WHITE	250.0	-	-	-
B	-	-	J56AA	2643682 R1	1.16	16.0	Std. Wall XLPE Primary Cable	ORANGE	300.0	-	X	-
B	-	-	J56AA	2643682 R1	1.16	16.0	Std. Wall XLPE Primary Cable	ORANGE	300.0	-	-	-

Name	Terminal Part Number	V-Min	Name	Wire Part Number	Wire CSA	Wire Spec	Wire Material description	Wire Color Description	Wire Length	End2 Terminal Part Number	End2 Pin Name	End2 Connect or
C	-	-	J58AA	2643679 R1	1.16	16.0	Std. Wall XLPE Primary Cable	BROWN	350.0	-	C	W31-LT 8054A
C	-	-	J58AA	2643679 R1	1.16	16.0	Std. Wall XLPE Primary Cable	BROWN	350.0	-	X	-

Connector Name	W02-LT 8100B
Part Number	1667741C1
Instances	LT/RH - X15/A26 - Modesty Lighting W/ Sleeper W/ 4 Side Turns / 0 Marker:Diagram1
Mates	LT-LR_MODESTY-1039-02-02A

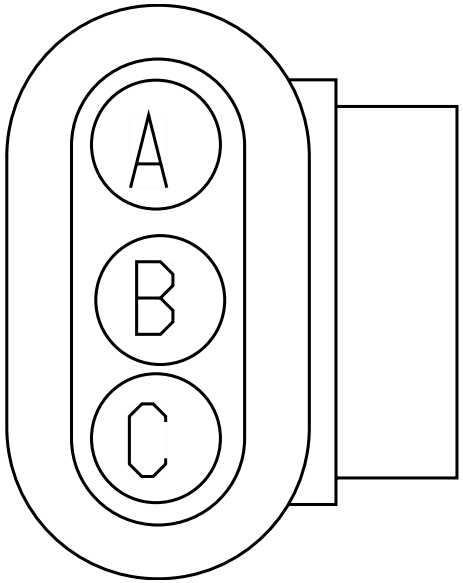

Name	Terminal Part Number	V-Min	Name	Wire Part Number	Wire CSA	Wire Spec	Wire Material description	Wire Color Description	Wire Length	End2 Terminal Part Number	End2 Pin Name	End2 Connect or
A	-	-	J11GBB	2643681 R1	1.16	16.0	Std. Wall XLPE Primary Cable	WHITE	2350.0	-	-	-
B	-	-	J56AB	2643682 R1	1.16	16.0	Std. Wall XLPE Primary Cable	ORANGE	2300.0	-	-	-
C	-	-	J58AB	2643679 R1	1.16	16.0	Std. Wall XLPE Primary Cable	BROWN	2250.0	-	X	-

Connector Name	W08-2300
Part Number	3535769C1
Instances	LT/RH LoneStar - X15/A26 - Speakers:Four Speakers N/BT N/ QC:Diagram1-Day Cab LT/RH LoneStar - X15/A26 - Speakers:Four Speakers N/BT W/ QC:Diagram1-Day Cab LT/RH LoneStar - X15/A26 - Speakers:Four Speakers W/BT N/ QC:Diagram1-Day Cab LT/RH LoneStar - X15/A26 - Speakers:Four Speakers W/BT W/ QC:Diagram1-Day Cab
Mates	DEV-SPKR_LR-01

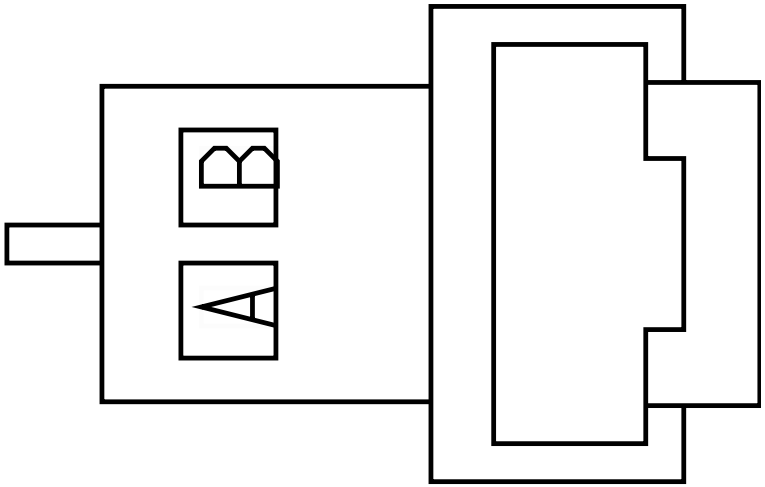

Name	Terminal Part Number	V-Min	Name	Wire Part Number	Wire CSA	Wire Spec	Wire Material description	Wire Color Description	Wire Length	End2 Terminal Part Number	End2 Pin Name	End2 Connect or
A	-	-	86BDA	3510299 R1	0.79	18.0	Thin Wall XLPE Primary Cable	LIGHT GREEN	1050.0	-	-	-
A	-	-	86BDA	3510299 R1	0.79	18.0	Thin Wall XLPE Primary Cable	LIGHT GREEN	1050.0	-	C	23XX
B	-	-	86CEA	3510299 R1	0.79	18.0	Thin Wall XLPE Primary Cable	LIGHT GREEN	1050.0	-	D	23XX
B	-	-	86CEA	3510299 R1	0.79	18.0	Thin Wall XLPE Primary Cable	LIGHT GREEN	1050.0	-	-	-

Connector Name	W08-3500
Part Number	239808R1
Instances	LT/RH/LoneStar - X15/A26 - Door Ajar Reminder (Entry/ Exit):Diagram1
Mates	SW-LEFT_DOOR-2030-01-01A

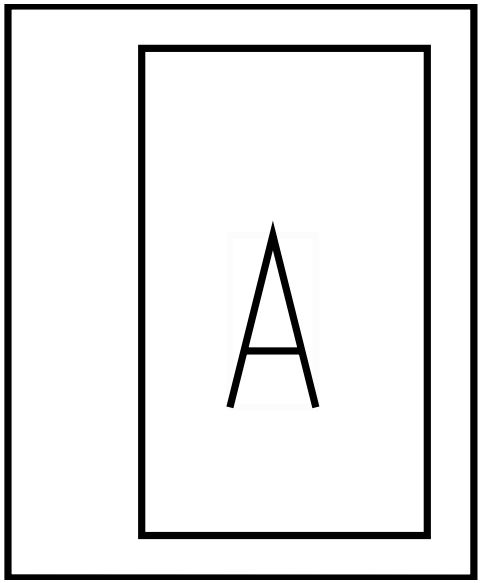

Name	Terminal Part Number	V-Min	Name	Wire Part Number	Wire CSA	Wire Spec	Wire Material description	Wire Color Description	Wire Length	End2 Terminal Part Number	End2 Pin Name	End2 Connect or
A	-	-	63	2643721 R1	1.16	16.0	Std. Wall XLPE Primary Cable	DARK BLUE	1150.0	-	-	-

Connector Name	W08-3501
Part Number	239808R1
Instances	LT/RH/LoneStar - X15/A26 - Door Ajar Reminder (Entry/ Exit):Diagram1
Mates	SW-LEFT_DOOR-2030-01-01A

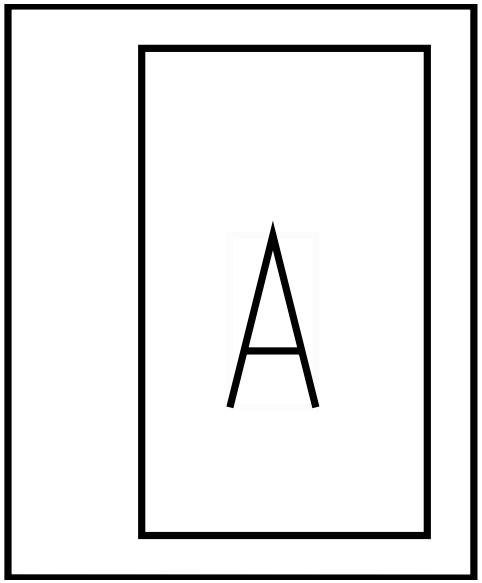

Name	Terminal Part Number	V-Min	Name	Wire Part Number	Wire CSA	Wire Spec	Wire Material description	Wire Color Description	Wire Length	End2 Terminal Part Number	End2 Pin Name	End2 Connect or
A	-	-	9	2643680 R1	1.16	16.0	Std. Wall XLPE Primary Cable	GREY	1150.0	-	-	-

Connector Name	W09-5120
Part Number	BLUNT_SL_VC
Instances	LT/RH/LoneStar - X15/A26 - Air Shield Lighting w/ One Light:Diagram1
Mates	BLNT-AIR_SHIELD-1001-01-02B

Name	Terminal Part Number	V-Min	Name	Wire Part Number	Wire CSA	Wire Spec	Wire Material description	Wire Color Description	Wire Length	End2 Terminal Part Number	End2 Pin Name	End2 Connect or
A	-	-	WHITE	-	0.0	-	-	-	1730.0	-	B	5117

Connector Name	W09-5121
Part Number	BLUNT_SL_VC
Instances	LT/RH/LoneStar - X15/A26 - Air Shield Lighting w/ One Light:Diagram1
Mates	BLNT-AIR_SHIELD-1001-01-02A

Name	Terminal Part Number	V-Min	Name	Wire Part Number	Wire CSA	Wire Spec	Wire Material description	Wire Color Description	Wire Length	End2 Terminal Part Number	End2 Pin Name	End2 Connect or
A	-	-	BLACK	-	0.0	-	-	-	1730.0	-	A	5117

Connector Name	W11-4411M
Part Number	3517760C1
Instances	LT/RH/LoneStar - X15/A26 - DLB - Remote Power Module (2 RPM w/ Switch Packs):Diagram1
Mates	DEV-RPM-01

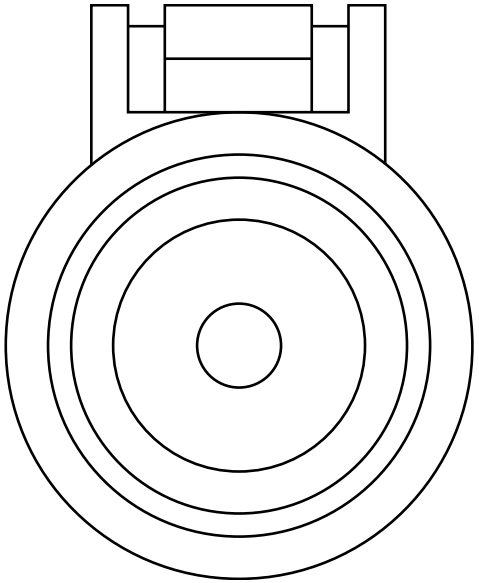

Name	Terminal Part Number	V-Min	Name	Wire Part Number	Wire CSA	Wire Spec	Wire Material description	Wire Color Description	Wire Length	End2 Terminal Part Number	End2 Pin Name	End2 Connect or
A	-	-	14	2645962 R1	49.99	0.0	SGX NFLEX 125	RED	700.0	-	A	4411F

Connector Name	W11-4412M
Part Number	3517760C1
Instances	LT/RH/LoneStar - X15/A26 - DLB - Remote Power Module (2 RPM w/ Switch Packs):Diagram1
Mates	DEV-RPM-02

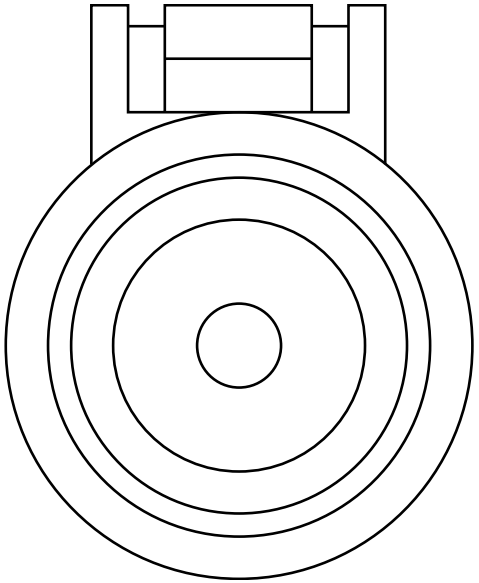

Name	Terminal Part Number	V-Min	Name	Wire Part Number	Wire CSA	Wire Spec	Wire Material description	Wire Color Description	Wire Length	End2 Terminal Part Number	End2 Pin Name	End2 Connect or
A	-	-	14D	2645255 R1	18.94	4.0	SGX FLEX 125C	RED	800.0	-	A	4412F

Connector Name	W13-1000A
Part Number	4063415C1
Instances	LT/RH/LoneStar - X15/A26 - Auxilary Gauges (Secondary):Diagram1
Mates	MODU-AUX-0004-00-04B

Name	Terminal Part Number	V-Min	Name	Wire Part Number	Wire CSA	Wire Spec	Wire Material description	Wire Color Description	Wire Length	End2 Terminal Part Number	End2 Pin Name	End2 Connector
1	-	-	Aux Gauge STS OUTC	2643676 R1	0.79	18.0	Std. Wall XLPE Primary Cable	TAN	210.0	-	1	W13-1000B
3	-	-	Aux Gauge GND OUTA	2643676 R1	0.79	18.0	Std. Wall XLPE Primary Cable	TAN	210.0	-	3	W13-1000B
4	-	-	Aux Gauge PWR OUTB	2643676 R1	0.79	18.0	Std. Wall XLPE Primary Cable	TAN	210.0	-	4	W13-1000B

Connector Name	W13-1000B
Part Number	4063415C1
Instances	LT/RH/LoneStar - X15/A26 - Auxilary Gauges (Secondary):Diagram1
Mates	MODU-AUX-0004-00-04A

Name	Terminal Part Number	V-Min	Name	Wire Part Number	Wire CSA	Wire Spec	Wire Material description	Wire Color Description	Wire Length	End2 Terminal Part Number	End2 Pin Name	End2 Connect or
1	-	-	Aux Gauge STS OUTC	2643676 R1	0.79	18.0	Std. Wall XLPE Primary Cable	TAN	210.0	-	1	W13-1000A
3	-	-	Aux Gauge GND OUTA	2643676 R1	0.79	18.0	Std. Wall XLPE Primary Cable	TAN	210.0	-	3	W13-1000A
4	-	-	Aux Gauge PWR OUTB	2643676 R1	0.79	18.0	Std. Wall XLPE Primary Cable	TAN	210.0	-	4	W13-1000A

Connector Name W17-5120-5121

Part Number BLUNT_SL_VC

Instances LT/RH/LoneStar - X15/A26 - Beacon/Strobe Light:Diagram1

Name	Terminal Part Number	V-Min	Name	Wire Part Number	Wire CSA	Wire Spec	Wire Material description	Wire Color Description	Wire Length	End2 Terminal Part Number	End2 Pin Name	End2 Connector
A	-	-	BLACK	-	0.0	-	-	-	1730.0	-	-	-
B	-	-	WHITE	-	0.0	-	-	-	1730.0	-	-	-

Connector Name	W22-5120-5121-SHIELD BEACON
Part Number	BLUNT_SL_VC
Instances	LT/RH/LoneStar - X15/A26 - Beacon/Strobe Light:Diagram2
Mates	BLNT-RT_BEACON_STROBE-1004 -01-01A

Name	Terminal Part Number	V-Min	Name	Wire Part Number	Wire CSA	Wire Spec	Wire Material description	Wire Color Description	Wire Length	End2 Terminal Part Number	End2 Pin Name	End2 Connect or
A	-	-	BLACK	-	0.0	-	-	-	1730.0	-	A	5117
B	-	-	WHITE	-	0.0	-	-	-	1730.0	-	B	5117

Connector Name W22-5120

Part Number BLUNT_SL_VC

Instances LT/RH/LoneStar - X15/A26 - Air Shield Lighting w/ One Light:Diagram2

Name	Terminal Part Number	V-Min	Name	Wire Part Number	Wire CSA	Wire Spec	Wire Material description	Wire Color Description	Wire Length	End2 Terminal Part Number	End2 Pin Name	End2 Connector
A	-	-	WHITE	-	0.0	-	-	-	1730.0	-	-	-

Connector Name W22-5121

Part Number BLUNT_SL_VC

Instances LT/RH/LoneStar - X15/A26 - Air Shield Lighting w/ One Light:Diagram2

Name	Terminal Part Number	V-Min	Name	Wire Part Number	Wire CSA	Wire Spec	Wire Material description	Wire Color Description	Wire Length	End2 Terminal Part Number	End2 Pin Name	End2 Connector
A	-	-	BLACK	-	0.0	-	-	-	1730.0	-	-	-

Connector Name	W24-2300
Part Number	3535769C1
Instances	LT/RH LoneStar - X15/A26 - Speakers:Four Speakers N/BT N/ QC:Diagram1-Day Cab LT/RH LoneStar - X15/A26 - Speakers:Four Speakers N/BT W/ QC:Diagram1-Day Cab LT/RH LoneStar - X15/A26 - Speakers:Four Speakers W/BT N/ QC:Diagram1-Day Cab LT/RH LoneStar - X15/A26 - Speakers:Four Speakers W/BT W/ QC:Diagram1-Day Cab
Mates	DEV-SPKR_RR-01

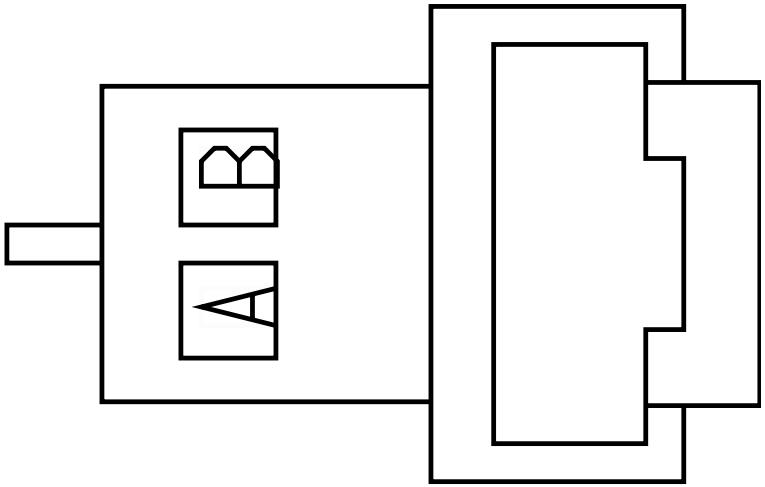

Name	Terminal Part Number	V-Min	Name	Wire Part Number	Wire CSA	Wire Spec	Wire Material description	Wire Color Description	Wire Length	End2 Terminal Part Number	End2 Pin Name	End2 Connect or
A	-	-	86BDA	3510299 R1	0.79	18.0	Thin Wall XLPE Primary Cable	LIGHT GREEN	1050.0	-	C	23XX
A	-	-	86BDA	3510299 R1	0.79	18.0	Thin Wall XLPE Primary Cable	LIGHT GREEN	1050.0	-	-	-
B	-	-	86CEA	3510299 R1	0.79	18.0	Thin Wall XLPE Primary Cable	LIGHT GREEN	1050.0	-	-	-
B	-	-	86CEA	3510299 R1	0.79	18.0	Thin Wall XLPE Primary Cable	LIGHT GREEN	1050.0	-	D	23XX

Connector Name	W24-3500
Part Number	239808R1
Instances	LT/RH/LoneStar - X15/A26 - Door Ajar Reminder (Entry/ Exit):Diagram1
Mates	SW-RIGHT_DOOR-2030-01-01A

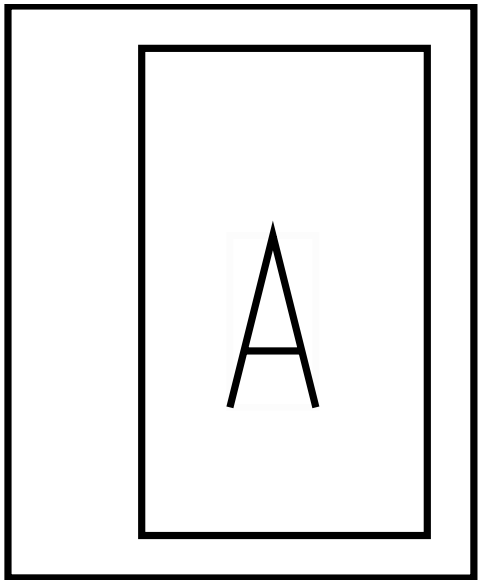

Name	Terminal Part Number	V-Min	Name	Wire Part Number	Wire CSA	Wire Spec	Wire Material description	Wire Color Description	Wire Length	End2 Terminal Part Number	End2 Pin Name	End2 Connect or
A	-	-	63	2643721 R1	1.16	16.0	Std. Wall XLPE Primary Cable	DARK BLUE	1150.0	-	A	23XX

Connector Name	W24-3501
Part Number	239808R1
Instances	LT/RH/LoneStar - X15/A26 - Door Ajar Reminder (Entry/ Exit):Diagram1
Mates	SW-RIGHT_DOOR-2030-01-01A

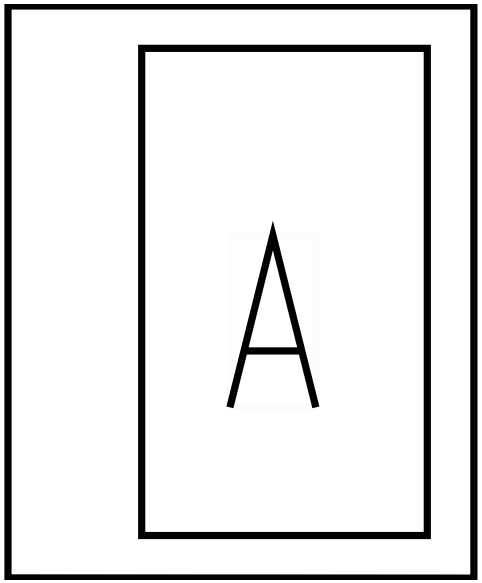

Name	Terminal Part Number	V-Min	Name	Wire Part Number	Wire CSA	Wire Spec	Wire Material description	Wire Color Description	Wire Length	End2 Terminal Part Number	End2 Pin Name	End2 Connect or
A	-	-	9	2643680 R1	1.16	16.0	Std. Wall XLPE Primary Cable	GREY	1150.0	-	B	23XX

Connector Name W25-5122/5123

Part Number BLUNT_SL_VC

Instances LT/RH - A26 - Work Lights - LED W/ Sw Pack - Customer Supplied - Sleeper W/ RKE W/MAN REV:Diagram2
LT/RH - A26 - Work Lights - LED W/ Sw Pack - Customer Supplied - Sleeper W/ RKE W/MAN REV:Diagram4
LT/RH - A26 - Work Lights - LED W/ Sw Pack - Customer Supplied - Sleeper W/O RKE W/MAN REV:Diagram2
LT/RH - A26 - Work Lights - LED W/ Sw Pack - Customer Supplied - Sleeper W/O RKE W/MAN REV:Diagram4
LT/RH/LoneStar - X15 - Work Lights - LED W/ Sw Pack - Customer Supplied - Sleeper W/ RKE W/MAN REV:Diagram2
LT/RH/LoneStar - X15 - Work Lights - LED W/ Sw Pack - Customer Supplied - Sleeper W/O RKE W/MAN REV:Diagram2
LT/RH/LoneStar - X15/A26 - Work Lights - LED W/ Sw Pack - Customer Supplied - Sleeper:Diagram2
LT/RH/LoneStar - X15/A26 - Work Lights - LED W/ Sw Pack - Customer Supplied - Sleeper W/ RKE W/AUTO REV:Diagram2
LT/RH/LoneStar - X15/A26 - Work Lights - LED W/ Sw Pack - Customer Supplied - Sleeper W/O RKE:Diagram2
LT/RH/LoneStar - X15/A26 - Work Lights - LED W/ Sw Pack - Customer Supplied - Sleeper W/O RKE W/AUTO REV:Diagram2

Mates BLNT-CUST_WORK_LT_PWR-1032 -01-09B

Name	Terminal Part Number	V-Min	Name	Wire Part Number	Wire CSA	Wire Spec	Wire Material description	Wire Color Description	Wire Length	End2 Terminal Part Number	End2 Pin Name	End2 Connector
A	-	-	BLACK	-	1.16	16.0	Std. Wall XLPE Primary Cable	BLACK	1730.0	-	A	5117
A	-	-	BLACK	-	1.16	16.0	Std. Wall XLPE Primary Cable	BLACK	1730.0	-	-	-
B	-	-	WHITE	-	1.16	16.0	Std. Wall XLPE Primary Cable	WHITE	1730.0	-	B	5117

Name	Terminal Part Number	V-Min	Name	Wire Part Number	Wire CSA	Wire Spec	Wire Material description	Wire Color Description	Wire Length	End2 Terminal Part Number	End2 Pin Name	End2 Connect or
B	-	-	WHITE	-	1.16	16.0	Std. Wall XLPE Primary Cable	WHITE	1730.0	-	-	-

Connector Name W26-5122/5123

Part Number BLUNT_SL_VC

Instances LT/RH - A26 - Work Lights - LED W/ Sw Pack - Customer Supplied - Sleeper W/ RKE W/MAN REV:Diagram2
LT/RH - A26 - Work Lights - LED W/ Sw Pack - Customer Supplied - Sleeper W/ RKE W/MAN REV:Diagram4
LT/RH - A26 - Work Lights - LED W/ Sw Pack - Customer Supplied - Sleeper W/O RKE W/MAN REV:Diagram2
LT/RH - A26 - Work Lights - LED W/ Sw Pack - Customer Supplied - Sleeper W/O RKE W/MAN REV:Diagram4
LT/RH/LoneStar - X15 - Work Lights - LED W/ Sw Pack - Customer Supplied - Sleeper W/ RKE W/MAN REV:Diagram2
LT/RH/LoneStar - X15 - Work Lights - LED W/ Sw Pack - Customer Supplied - Sleeper W/O RKE W/MAN REV:Diagram2
LT/RH/LoneStar - X15/A26 - Work Lights - LED W/ Sw Pack - Customer Supplied - Sleeper:Diagram2
LT/RH/LoneStar - X15/A26 - Work Lights - LED W/ Sw Pack - Customer Supplied - Sleeper W/ RKE W/AUTO REV:Diagram2
LT/RH/LoneStar - X15/A26 - Work Lights - LED W/ Sw Pack - Customer Supplied - Sleeper W/O RKE:Diagram2
LT/RH/LoneStar - X15/A26 - Work Lights - LED W/ Sw Pack - Customer Supplied - Sleeper W/O RKE W/AUTO REV:Diagram2

Mates BLNT-CUST_WORK_LT_PWR-1032 -01-09A

Name	Terminal Part Number	V-Min	Name	Wire Part Number	Wire CSA	Wire Spec	Wire Material description	Wire Color Description	Wire Length	End2 Terminal Part Number	End2 Pin Name	End2 Connector
A	-	-	BLACK	-	1.16	16.0	Std. Wall XLPE Primary Cable	BLACK	1730.0	-	A	5117
A	-	-	BLACK	-	1.16	16.0	Std. Wall XLPE Primary Cable	BLACK	1730.0	-	-	-
B	-	-	WHITE	-	1.16	16.0	Std. Wall XLPE Primary Cable	WHITE	1730.0	-	B	5117

Name	Terminal Part Number	V-Min	Name	Wire Part Number	Wire CSA	Wire Spec	Wire Material description	Wire Color Description	Wire Length	End2 Terminal Part Number	End2 Pin Name	End2 Connect or
B	-	-	WHITE	-	1.16	16.0	Std. Wall XLPE Primary Cable	WHITE	1730.0	-	-	-

Connector Name	W27-1032
Part Number	3543888C1
Instances	LT/RH - A26 - Work Lights LED W/ Sw Pack - Day Cab W/ RKE W/MAN REV:Diagram1 LT/RH - A26 - Work Lights LED W/ Sw Pack - Day Cab W/ RKE W/MAN REV:Diagram2 LT/RH - A26 - Work Lights LED W/ Sw Pack - Day Cab W/O RKE W/MAN REV:Diagram1 LT/RH - A26 - Work Lights LED W/ Sw Pack - Day Cab W/O RKE W/MAN REV:Diagram2 LT/RH - A26 - Work Lights W/ Sw Pack - Customer Supplied W/ RKE W/MAN REV:Diagram1 LT/RH - A26 - Work Lights W/ Sw Pack - Customer Supplied W/ RKE W/MAN REV:Diagram2 LT/RH - A26 - Work Lights W/ Sw Pack - Customer Supplied W/ RKE W/MAN REV:Diagram3 LT/RH - A26 - Work Lights W/ Sw Pack - Customer Supplied W/ RKE W/MAN REV:Diagram4 LT/RH - A26 - Work Lights W/ Sw Pack - Customer Supplied W/ O RKE W/MAN REV:Diagram1 LT/RH - A26 - Work Lights W/ Sw Pack - Customer Supplied W/ O RKE W/MAN REV:Diagram2 LT/RH - A26 - Work Lights W/ Sw Pack - Customer Supplied W/ O RKE W/MAN REV:Diagram3 LT/RH - A26 - Work Lights W/ Sw Pack - Customer Supplied W/ O RKE W/MAN REV:Diagram4 LT/RH - X15/A26 - Work Lights W/ Sw Pack - Customer Supplied:Diagram1 LT/RH - X15/A26 - Work Lights W/ Sw Pack - Customer Supplied:Diagram2 LT/RH/LoneStar - X15 - Work Lights W/ Sw Pack - Customer Supplied W/ RKE W/MAN REV:Diagram1 LT/RH/LoneStar - X15 - Work Lights W/ Sw Pack - Customer Supplied W/ RKE W/MAN REV:Diagram2 LT/RH/LoneStar - X15 - Work Lights W/ Sw Pack - Customer Supplied W/O RKE W/MAN REV:Diagram1 LT/RH/LoneStar - X15/A26 - Work Lights LED W/ Sw Pack - Day Cab:Diagram1 LT/RH/LoneStar - X15/A26 - Work Lights LED W/ Sw Pack - Day Cab W/ RKE W/AUTO REV:Diagram1 LT/RH/LoneStar - X15/A26 - Work Lights LED W/ Sw Pack - Day Cab W/O RKE:Diagram1

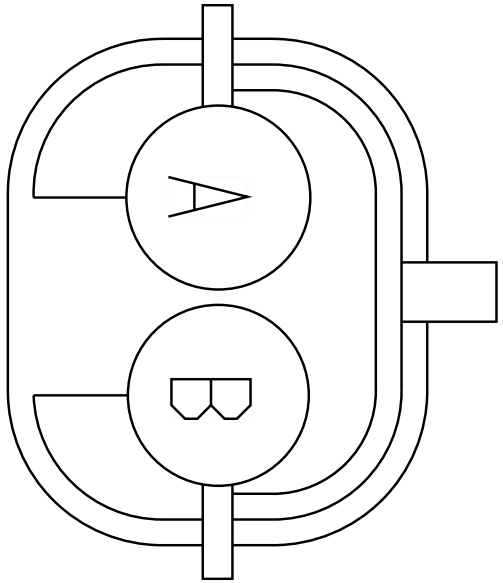

LT/RH/LoneStar - X15/A26 - Work Lights LED W/ Sw Pack - Day Cab W/O RKE W/AUTO REV:Diagram1
LT/RH/LoneStar - X15/A26 - Work Lights W/ Sw Pack - Customer Supplied:Diagram1
LT/RH/LoneStar - X15/A26 - Work Lights W/ Sw Pack - Customer Supplied:Diagram2
LT/RH/LoneStar - X15/A26 - Work Lights W/ Sw Pack - Customer Supplied W/ RKE W/AUTO REV:Diagram1
LT/RH/LoneStar - X15/A26 - Work Lights W/ Sw Pack - Customer Supplied W/ RKE W/AUTO REV:Diagram2
LT/RH/LoneStar - X15/A26 - Work Lights W/ Sw Pack - Customer Supplied W/O RKE W/AUTO REV:Diagram1
LT/RH/LoneStar - X15/A26 - Work Lights W/ Sw Pack - Customer Supplied W/O RKE W/AUTO REV:Diagram2
LT/RH/LoneStar X15 - Work Lights LED W/ Sw Pack - Day Cab W/ RKE W/MAN REV:Diagram1
LT/RH/LoneStar X15 - Work Lights LED W/ Sw Pack - Day Cab W/O RKE W/MAN REV:Diagram1

Mates LT-LED-WORK_DAY-1032-01-05A

Name	Terminal Part Number	V-Min	Name	Wire Part Number	Wire CSA	Wire Spec	Wire Material description	Wire Color Description	Wire Length	End2 Terminal Part Number	End2 Pin Name	End2 Connect or
A	-	-	J65	-	1.16	16.0	Std. Wall XLPE Primary Cable	BLACK	1300.0	-	A	9719
B	-	-	J11-GK	-	1.16	16.0	Std. Wall XLPE Primary Cable	WHITE	1300.0	-	B	9719

Connector Name	W27-1032
Part Number	3543888C1
Instances	LT/RH/LoneStar - X15 - Work Lights W/ Sw Pack - Customer Supplied W/O RKE W/MAN REV:Diagram2
Mates	LT-LED-WORK_DAY-1032-01-05A

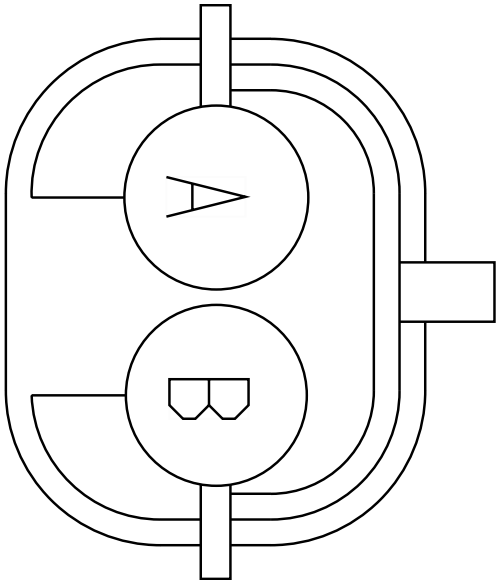

Name	Terminal Part Number	V-Min	Name	Wire Part Number	Wire CSA	Wire Spec	Wire Material description	Wire Color Description	Wire Length	End2 Terminal Part Number	End2 Pin Name	End2 Connect or
A	-	-	J65	-	1.16	16.0	Std. Wall XLPE Primary Cable	BLACK	1300.0	-	A	9719
B	-	-	J11-GK	-	1.16	16.0	Std. Wall XLPE Primary Cable	WHITE	1300.0	-	B	9719

Connector Name	W28-5122/5123
Part Number	BLUNT_SL_VC
Instances	LT/RH - A26 - Work Lights (2 Blunt Cuts Only W/O Relay) W/ Backup W/Manual Trans Day Cab:Diagram2 LT/RH - A26 - Work Lights (2 Blunt Cuts Only W/O Relay) W/ Backup W/Manual Trans Day Cab:Diagram4 LT/RH - A26 - Work Lights W/ Sw Pack - Customer Supplied W/ RKE W/MAN REV:Diagram2 LT/RH - A26 - Work Lights W/ Sw Pack - Customer Supplied W/ RKE W/MAN REV:Diagram4 LT/RH - A26 - Work Lights W/ Sw Pack - Customer Supplied W/ O RKE W/MAN REV:Diagram2 LT/RH - A26 - Work Lights W/ Sw Pack - Customer Supplied W/ O RKE W/MAN REV:Diagram4 LT/RH - X15/A26 - Work Lights W/ Sw Pack - Customer Supplied:Diagram2 LT/RH/LoneStar - X15 - Work Lights (2 Blunt Cuts Only W/O Relay) W/Backup W/Manual Trans:Diagram2 LT/RH/LoneStar - X15 - Work Lights W/ Sw Pack - Customer Supplied W/ RKE W/MAN REV:Diagram2 LT/RH/LoneStar - X15 - Work Lights W/ Sw Pack - Customer Supplied W/O RKE W/MAN REV:Diagram2 LT/RH/LoneStar - X15/A26 - Work Lights (2 Blunt Cuts Only W/ O Relay):Diagram2 LT/RH/LoneStar - X15/A26 - Work Lights (2 Blunt Cuts Only W/O Relay) W/Backup W/Auto Trans (Allison and Endurant):Diagram2 LT/RH/LoneStar - X15/A26 - Work Lights W/ Sw Pack - Customer Supplied:Diagram2 LT/RH/LoneStar - X15/A26 - Work Lights W/ Sw Pack - Customer Supplied W/ RKE W/AUTO REV:Diagram2 LT/RH/LoneStar - X15/A26 - Work Lights W/ Sw Pack - Customer Supplied W/O RKE W/AUTO REV:Diagram2

Name	Terminal Part Number	V-Min	Name	Wire Part Number	Wire CSA	Wire Spec	Wire Material description	Wire Color Description	Wire Length	End2 Terminal Part Number	End2 Pin Name	End2 Connect or
A	-	-	BLACK	-	1.16	16.0	Std. Wall XLPE Primary Cable	BLACK	1730.0	-	A	5117

Name	Terminal Part Number	V-Min	Name	Wire Part Number	Wire CSA	Wire Spec	Wire Material description	Wire Color Description	Wire Length	End2 Terminal Part Number	End2 Pin Name	End2 Connect or
B	-	-	WHITE	-	1.16	16.0	Std. Wall XLPE Primary Cable	WHITE	1730.0	-	B	5117

Connector Name	W29-5122/5123
Part Number	BLUNT_SL_VC
Instances	LT/RH - A26 - Work Lights (2 Blunt Cuts Only W/O Relay) W/ Backup W/Manual Trans Day Cab:Diagram2 LT/RH - A26 - Work Lights (2 Blunt Cuts Only W/O Relay) W/ Backup W/Manual Trans Day Cab:Diagram4 LT/RH - A26 - Work Lights W/ Sw Pack - Customer Supplied W/ RKE W/MAN REV:Diagram2 LT/RH - A26 - Work Lights W/ Sw Pack - Customer Supplied W/ RKE W/MAN REV:Diagram4 LT/RH - A26 - Work Lights W/ Sw Pack - Customer Supplied W/ O RKE W/MAN REV:Diagram2 LT/RH - A26 - Work Lights W/ Sw Pack - Customer Supplied W/ O RKE W/MAN REV:Diagram4 LT/RH - X15/A26 - Work Lights W/ Sw Pack - Customer Supplied:Diagram2 LT/RH/LoneStar - X15 - Work Lights (2 Blunt Cuts Only W/O Relay) W/Backup W/Manual Trans:Diagram2 LT/RH/LoneStar - X15 - Work Lights W/ Sw Pack - Customer Supplied W/ RKE W/MAN REV:Diagram2 LT/RH/LoneStar - X15 - Work Lights W/ Sw Pack - Customer Supplied W/O RKE W/MAN REV:Diagram2 LT/RH/LoneStar - X15/A26 - Work Lights (2 Blunt Cuts Only W/ O Relay):Diagram2 LT/RH/LoneStar - X15/A26 - Work Lights (2 Blunt Cuts Only W/O Relay) W/Backup W/Auto Trans (Allison and Endurant):Diagram2 LT/RH/LoneStar - X15/A26 - Work Lights W/ Sw Pack - Customer Supplied:Diagram2 LT/RH/LoneStar - X15/A26 - Work Lights W/ Sw Pack - Customer Supplied W/ RKE W/AUTO REV:Diagram2 LT/RH/LoneStar - X15/A26 - Work Lights W/ Sw Pack - Customer Supplied W/O RKE W/AUTO REV:Diagram2

Name	Terminal Part Number	V-Min	Name	Wire Part Number	Wire CSA	Wire Spec	Wire Material description	Wire Color Description	Wire Length	End2 Terminal Part Number	End2 Pin Name	End2 Connect or
A	-	-	BLACK	-	1.16	16.0	Std. Wall XLPE Primary Cable	BLACK	1730.0	-	A	5117

Name	Terminal Part Number	V-Min	Name	Wire Part Number	Wire CSA	Wire Spec	Wire Material description	Wire Color Description	Wire Length	End2 Terminal Part Number	End2 Pin Name	End2 Connect or
B	-	-	WHITE	-	1.16	16.0	Std. Wall XLPE Primary Cable	WHITE	1730.0	-	B	5117

Connector Name	W30-LS 8053B
Part Number	1667741C1
Instances	LoneStar - X15 - Modesty Lighting W/ Sleeper W/ 4 Side Turns / 0 Marker:Diagram1
Mates	LT-RR_MODESTY-1039-02-02A

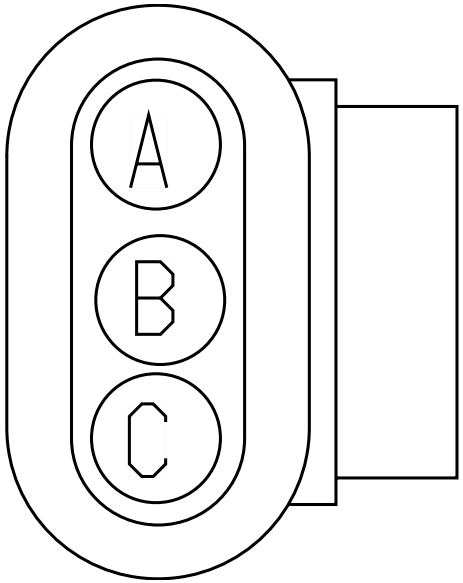

Name	Terminal Part Number	V-Min	Name	Wire Part Number	Wire CSA	Wire Spec	Wire Material description	Wire Color Description	Wire Length	End2 Terminal Part Number	End2 Pin Name	End2 Connect or
A	-	-	J11GBB	2643681 R1	1.16	16.0	Std. Wall XLPE Primary Cable	WHITE	2350.0	-	-	-
B	-	-	J56AB	2643682 R1	1.16	16.0	Std. Wall XLPE Primary Cable	ORANGE	2300.0	-	B	W32-LS 8100B
C	-	-	J58AB	2643679 R1	1.16	16.0	Std. Wall XLPE Primary Cable	BROWN	2250.0	-	X	-

Connector Name	W30-LS-8053A
Part Number	1667741C1
Instances	LoneStar - X15 - Modesty Lighting W/ Day Cab W/ 2 Turn /0 Marker:Diagram1 LoneStar - X15 - Modesty Lighting W/ Sleeper W/ 4 Side Turns / 0 Marker:Diagram1
Mates	LT-RF_MODESTY-1039-02-01A

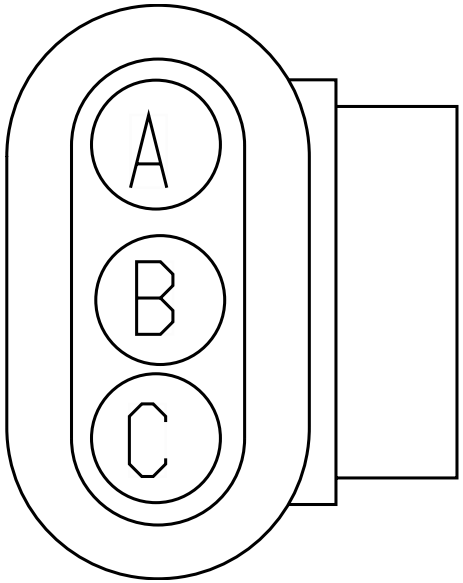

Name	Terminal Part Number	V-Min	Name	Wire Part Number	Wire CSA	Wire Spec	Wire Material description	Wire Color Description	Wire Length	End2 Terminal Part Number	End2 Pin Name	End2 Connect or
A	-	-	J11GBA	2643681 R1	1.16	16.0	Std. Wall XLPE Primary Cable	WHITE	250.0	-	X	-
A	-	-	J11GBA	2643681 R1	1.16	16.0	Std. Wall XLPE Primary Cable	WHITE	250.0	-	-	-
B	-	-	J56AA	2643682 R1	1.16	16.0	Std. Wall XLPE Primary Cable	ORANGE	300.0	-	-	-
C	-	-	J58AA	2643679 R1	1.16	16.0	Std. Wall XLPE Primary Cable	BROWN	350.0	-	-	-

Name	Terminal Part Number	V-Min	Name	Wire Part Number	Wire CSA	Wire Spec	Wire Material description	Wire Color Description	Wire Length	End2 Terminal Part Number	End2 Pin Name	End2 Connector
C	-	-	J58AA	2643679 R1	1.16	16.0	Std. Wall XLPE Primary Cable	BROWN	350.0	-	X	-

Connector Name	W31-LT 8054A
Part Number	1667741C1
Instances	LT/RH - X15/A26 - Modesty Lighting W/ Day Cab W/ 2 Turn /0 Marker:Diagram1 LT/RH - X15/A26 - Modesty Lighting W/ Sleeper W/ 4 Side Turns / 0 Marker:Diagram1
Mates	LT-RF_MODESTY-1039-02-01A

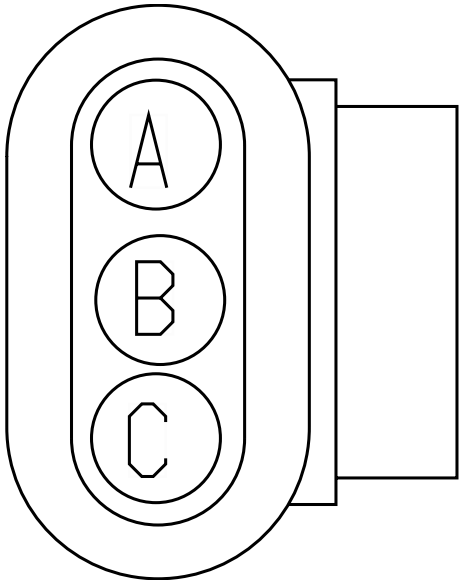

Name	Terminal Part Number	V-Min	Name	Wire Part Number	Wire CSA	Wire Spec	Wire Material description	Wire Color Description	Wire Length	End2 Terminal Part Number	End2 Pin Name	End2 Connect or
A	-	-	J11GBA	2643681 R1	1.16	16.0	Std. Wall XLPE Primary Cable	WHITE	250.0	-	-	-
A	-	-	J11GBA	2643681 R1	1.16	16.0	Std. Wall XLPE Primary Cable	WHITE	250.0	-	X	-
B	-	-	J56AA	2643682 R1	1.16	16.0	Std. Wall XLPE Primary Cable	ORANGE	300.0	-	-	-
B	-	-	J56AA	2643682 R1	1.16	16.0	Std. Wall XLPE Primary Cable	ORANGE	300.0	-	X	-

Name	Terminal Part Number	V-Min	Name	Wire Part Number	Wire CSA	Wire Spec	Wire Material description	Wire Color Description	Wire Length	End2 Terminal Part Number	End2 Pin Name	End2 Connect or
C	-	-	J58AA	2643679 R1	1.16	16.0	Std. Wall XLPE Primary Cable	BROWN	350.0	-	C	W02-LT 8100A
C	-	-	J58AA	2643679 R1	1.16	16.0	Std. Wall XLPE Primary Cable	BROWN	350.0	-	-	-

Connector Name	W31-LT 8054B
Part Number	1667741C1
Instances	LT/RH - X15/A26 - Modesty Lighting W/ Sleeper W/ 4 Side Turns / 0 Marker:Diagram1
Mates	LT-RR_MODESTY-1039-02-02A

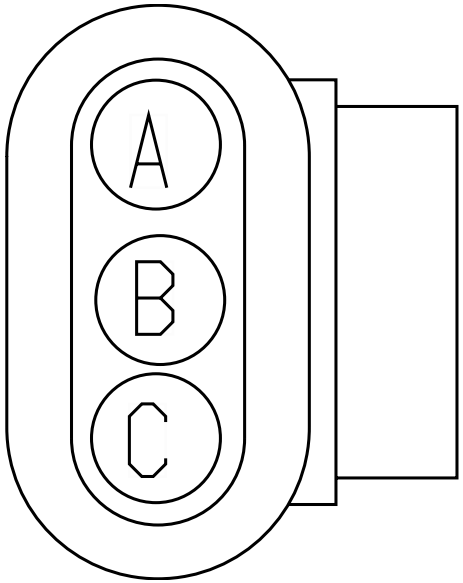

Name	Terminal Part Number	V-Min	Name	Wire Part Number	Wire CSA	Wire Spec	Wire Material description	Wire Color Description	Wire Length	End2 Terminal Part Number	End2 Pin Name	End2 Connect or
A	-	-	J11GBB	2643681 R1	1.16	16.0	Std. Wall XLPE Primary Cable	WHITE	2350.0	-	X	-
B	-	-	J56AB	2643682 R1	1.16	16.0	Std. Wall XLPE Primary Cable	ORANGE	2300.0	-	X	-
C	-	-	J58AB	2643679 R1	1.16	16.0	Std. Wall XLPE Primary Cable	BROWN	2250.0	-	-	-

Connector Name	W32-LS 8100A
Part Number	1667741C1
Instances	LoneStar - X15 - Modesty Lighting W/ Day Cab W/ 2 Turn /0 Marker:Diagram1 LoneStar - X15 - Modesty Lighting W/ Sleeper W/ 4 Side Turns / 0 Marker:Diagram1
Mates	LT-LF_MODESTY-1039-02-01A

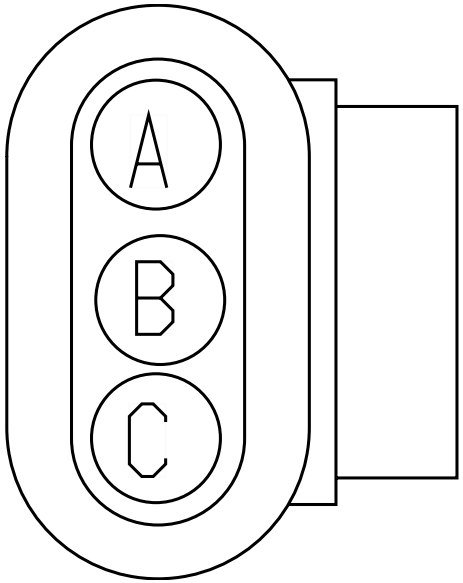

Name	Terminal Part Number	V-Min	Name	Wire Part Number	Wire CSA	Wire Spec	Wire Material description	Wire Color Description	Wire Length	End2 Terminal Part Number	End2 Pin Name	End2 Connect or
A	-	-	J11GBA	2643681 R1	1.16	16.0	Std. Wall XLPE Primary Cable	WHITE	250.0	-	-	-
A	-	-	J11GBA	2643681 R1	1.16	16.0	Std. Wall XLPE Primary Cable	WHITE	250.0	-	X	-
B	-	-	J56AA	2643682 R1	1.16	16.0	Std. Wall XLPE Primary Cable	ORANGE	300.0	-	X	-
C	-	-	J58AA	2643679 R1	1.16	16.0	Std. Wall XLPE Primary Cable	BROWN	350.0	-	X	-

Name	Terminal Part Number	V-Min	Name	Wire Part Number	Wire CSA	Wire Spec	Wire Material description	Wire Color Description	Wire Length	End2 Terminal Part Number	End2 Pin Name	End2 Connect or
C	-	-	J58AA	2643679 R1	1.16	16.0	Std. Wall XLPE Primary Cable	BROWN	350.0	-	-	-

Connector Name	W32-LS 8100B
Part Number	1667741C1
Instances	LoneStar - X15 - Modesty Lighting W/ Sleeper W/ 4 Side Turns / 0 Marker:Diagram1
Mates	LT-LR_MODESTY-1039-02-02A

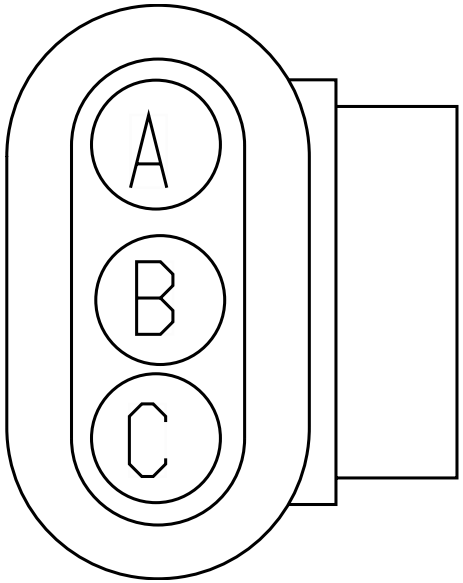

Name	Terminal Part Number	V-Min	Name	Wire Part Number	Wire CSA	Wire Spec	Wire Material description	Wire Color Description	Wire Length	End2 Terminal Part Number	End2 Pin Name	End2 Connect or
A	-	-	J11GBB	2643681 R1	1.16	16.0	Std. Wall XLPE Primary Cable	WHITE	2350.0	-	X	-
B	-	-	J56AB	2643682 R1	1.16	16.0	Std. Wall XLPE Primary Cable	ORANGE	2300.0	-	B	W30-LS 8053B
C	-	-	J58AB	2643679 R1	1.16	16.0	Std. Wall XLPE Primary Cable	BROWN	2250.0	-	-	-

Connector Name	W43-100
Part Number	4124472C1
Instances	LT/RH/LoneStar - X15/A26 - Seats (RollTek) Driver and Passenger (Hard Wired):Diagram1
Mates	DEV-DRIVER_SEAT_ROLTEK-01

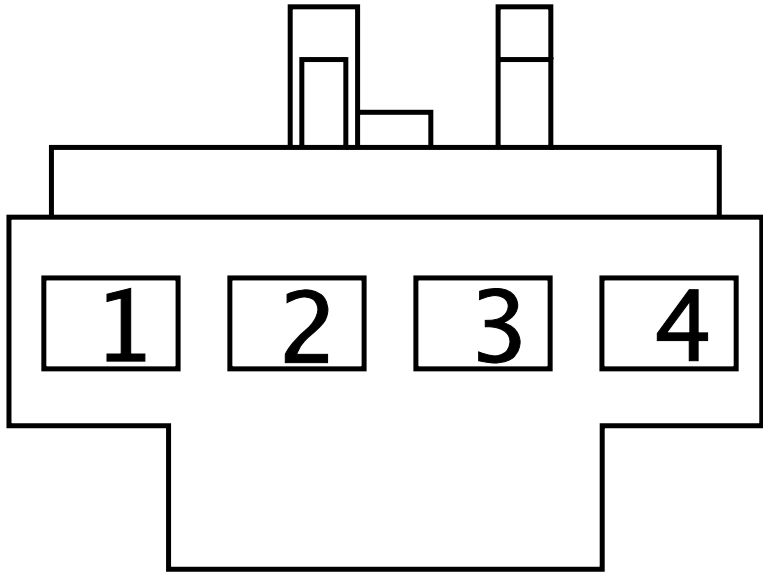

Name	Terminal Part Number	V-Min	Name	Wire Part Number	Wire CSA	Wire Spec	Wire Material description	Wire Color Description	Wire Length	End2 Terminal Part Number	End2 Pin Name	End2 Connect or
1	-	-	179S4(+)	3510346 R1	0.53	20.0	Thin Wall XLPE Primary Cable	VIOLET	1600.0	-	1	W43-101
2	-	-	179S4(-)	3510346 R1	0.53	20.0	Thin Wall XLPE Primary Cable	VIOLET	1600.0	-	2	W43-101
3	-	-	179SRA(+)	3510346 R1	0.53	20.0	Thin Wall XLPE Primary Cable	VIOLET	1600.0	-	3	W43-101
4	-	-	179SRA(-)	3510346 R1	0.53	20.0	Thin Wall XLPE Primary Cable	VIOLET	1600.0	-	4	W43-101

Connector Name	W43-101
Part Number	4124471C1
Instances	LT/RH/LoneStar - X15/A26 - Seats (RollTek) Driver and Passenger (Hard Wired):Diagram1
Mates	ROLLTEK_ECU_PASSENGER-2056 -02-01

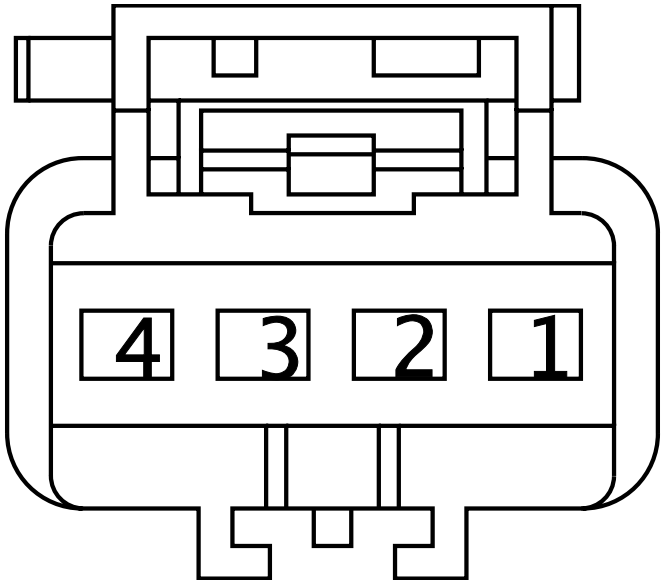

Name	Terminal Part Number	V-Min	Name	Wire Part Number	Wire CSA	Wire Spec	Wire Material description	Wire Color Description	Wire Length	End2 Terminal Part Number	End2 Pin Name	End2 Connect or
1	-	-	179S4(+)	3510346 R1	0.53	20.0	Thin Wall XLPE Primary Cable	VIOLET	1600.0	-	1	W43-100
2	-	-	179S4(-)	3510346 R1	0.53	20.0	Thin Wall XLPE Primary Cable	VIOLET	1600.0	-	2	W43-100
3	-	-	179SRA(+)	3510346 R1	0.53	20.0	Thin Wall XLPE Primary Cable	VIOLET	1600.0	-	3	W43-100
4	-	-	179SRA(-)	3510346 R1	0.53	20.0	Thin Wall XLPE Primary Cable	VIOLET	1600.0	-	4	W43-100

Connector Name	W43-200
Part Number	1661259C1
Instances	LT/RH/LoneStar - X15/A26 - Seats (RollTek) Driver and Passenger (Hard Wired):Diagram1
Mates	DEV-DRIVER_SEAT_ROLTEK-01

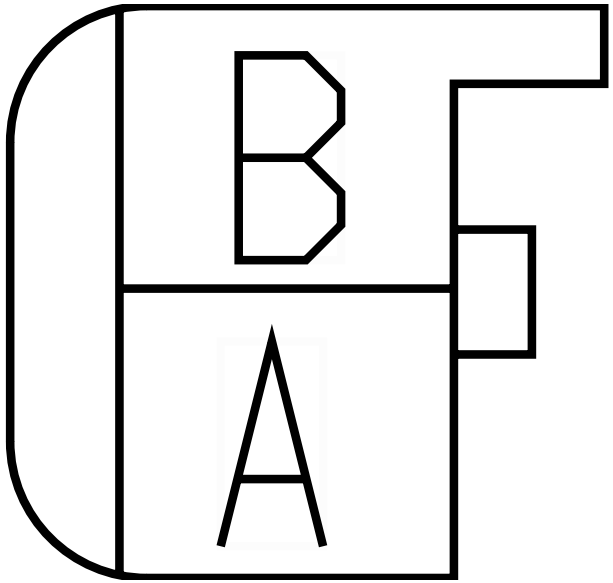

Name	Terminal Part Number	V-Min	Name	Wire Part Number	Wire CSA	Wire Spec	Wire Material description	Wire Color Description	Wire Length	End2 Terminal Part Number	End2 Pin Name	End2 Connect or
A	-	-	179SWCOM	3510346 R1	0.53	20.0	Thin Wall XLPE Primary Cable	VIOLET	1600.0	-	A	W43-201
B	-	-	179SW(NO)	3510346 R1	0.53	20.0	Thin Wall XLPE Primary Cable	VIOLET	1600.0	-	B	W43-201

Connector Name	W43-201
Part Number	1661260C1
Instances	LT/RH/LoneStar - X15/A26 - Seats (RollTek) Driver and Passenger (Hard Wired):Diagram1
Mates	ROLLTEK_ECU_PASSENGER-2056 -02-01

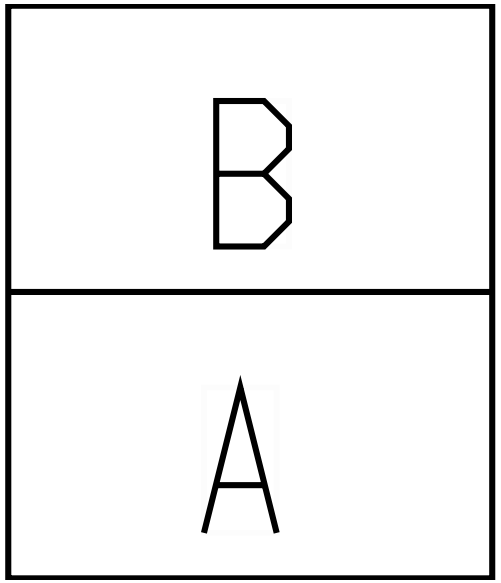

Name	Terminal Part Number	V-Min	Name	Wire Part Number	Wire CSA	Wire Spec	Wire Material description	Wire Color Description	Wire Length	End2 Terminal Part Number	End2 Pin Name	End2 Connect or
A	-	-	179SWCOM	3510346 R1	0.53	20.0	Thin Wall XLPE Primary Cable	VIOLET	1600.0	-	A	W43-200
B	-	-	179SW(NO)	3510346 R1	0.53	20.0	Thin Wall XLPE Primary Cable	VIOLET	1600.0	-	B	W43-200

Connector Name	0009
Part Number	4063156C1
Instances	LoneStar - X15/A26 - Front Fog Lamps:Diagram1 LoneStar - X15/A26 - Marker Lights (Halogen):Diagram1 Low Speed J1939 (125Kbps):Low Speed J1939 (125Kbps) LT - X15/A26 - Headlights Halogen N/INT N/LOWW:Diagram1 LT - X15/A26 - Headlights Halogen N/INT W/LOWW:Diagram1 LT - X15/A26 - Headlights Halogen W/INT N/LOWW:Diagram1 LT - X15/A26 - Headlights Halogen W/INT W/LOWW:Diagram1 LT - X15/A26 - Headlights LED N/ INT N/LOWW:Diagram1 LT - X15/A26 - Headlights LED N/ INT W/LOWW:Diagram1 LT - X15/A26 - Headlights LED W/INT N/LOWW:Diagram1 LT - X15/A26 - Headlights LED W/INT W/LOWW:Diagram1 LT/RH - X15/A26 - Fog Lights Lamps:Diagram1 LT/RH - X15/A26 - License Plate Light (Dual LED Lamp Tail Light) Option 1:Diagram1 LT/RH - X15/A26 - License Plate Light (Dual LED Lamp Tail Light) Option 1:Diagram2 LT/RH - X15/A26 - License Plate Light (Dual LED Lamp Tail Light) Option 2:Diagram1 LT/RH - X15/A26 - License Plate Light (Dual LED Lamp Tail Light) Option 2:Diagram2 LT/RH - X15/A26 - License Plate Light (Tail Light Single Assy.) Option 1:Diagram1 LT/RH - X15/A26 - License Plate Light (Tail Light Single Assy.) Option 1:Diagram2 LT/RH - X15/A26 - License Plate Light (Tail Light Single Assy.)Option 2:Diagram1 LT/RH - X15/A26 - License Plate Light (Tail Light Single Assy.)Option 2:Diagram2 LT/RH - X15/A26 - Marker Lights (With 113 Halogen):Diagram1 LT/RH - X15/A26 - Marker Lights (With 125 Halogen):Diagram1 LT/RH - X15/A26 - Marker Lights (With 125 LED):Diagram1 LT/RH - X15/A26 - Marker Lights (With113 LED):Diagram1 LT/RH - X15/A26 - Radio N/ Sterring Wheel Pod N/ Remote:Diagram1 LT/RH/LoneStar - X15/A26 - Beacon/Strobe Light:Diagram1 LT/RH/LoneStar - X15/A26 - Beacon/Strobe Light:Diagram2 LT/RH/LoneStar - X15/A26 - Exterior Lamp Check:Diagram1 LT/RH/LoneStar - X15/A26 - Instrument Cluster (Premium):Diagram1 LT/RH/LoneStar - X15/A26 - License Plate Light (Tail Light Single Assy.) Option 1:Diagram1

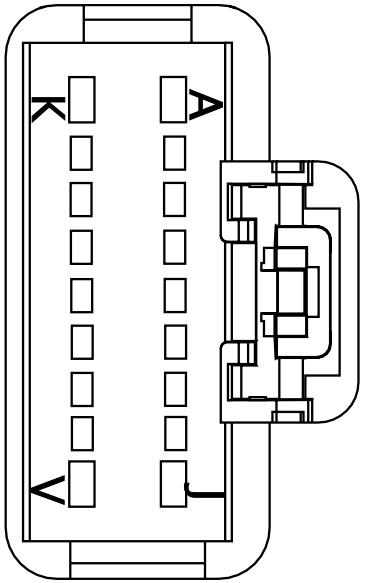

LT/RH/LoneStar - X15/A26 - License Plate Light (Tail Light Single Assy.) Option 1:Diagram2
LT/RH/LoneStar - X15/A26 - License Plate Light (Tail Light Single Assy.) Option 2:Diagram1-Combination1
LT/RH/LoneStar - X15/A26 - License Plate Light (Tail Light Single Assy.) Option 2:Diagram1-Combination2
LT/RH/LoneStar - X15/A26 - Lighting Control Module:Diagram1
LT/RH/LoneStar - X15/A26 - Panel Backlighting (Cabin Dimmer) Option 1:Diagram1
LT/RH/LoneStar - X15/A26 - Panel Backlighting (Cabin Dimmer) Option 2:Diagram1
LT/RH/LoneStar - X15/A26 - PARK LIGHTS - W/Marker Interrupt 4 pin clockspring:Diagram1
LT/RH/LoneStar - X15/A26 - Power Windows:Diagram1
LT/RH/LoneStar - X15/A26 - Radio N/ Steering Wheel Pod W/ Remote:Diagram1
LT/RH/LoneStar - X15/A26 - Telematics QUALCOMM IMCT DAYCAB With PANIC BUTTON:Diagram2

Mates MODU-LCM-A004-00-01

Name	Terminal Part Number	V-Min	Name	Wire Part Number	Wire CSA	Wire Spec	Wire Material description	Wire Color Description	Wire Length	End2 Terminal Part Number	End2 Pin Name	End2 Connect or
A	-	-	AA13D	3510323 R1	0.79	18.0	Thin Wall XLPE Primary Cable	PINK	2050.0	-	-	-
B	-	-	-	-	-	-	-	-	-	-	-	-
B	-	-	WIRE234 470	-	0.0	-	-	-	0.0	-	PIN1	-
C	-	-	-	-	-	-	-	-	-	-	-	-
C	-	-	WIRE234 471	-	0.0	-	-	-	0.0	-	PIN1	-
E	-	-	ZZ50B	2645629 R1	0.35	22.0	Thin Wall XLPE Primary Cable	RED	1420.0	-	-	-

Name	Terminal Part Number	V-Min	Name	Wire Part Number	Wire CSA	Wire Spec	Wire Material description	Wire Color Description	Wire Length	End2 Terminal Part Number	End2 Pin Name	End2 Connector
E	-	-	ZX50B	3510335 R1	0.79	18.0	Thin Wall XLPE Primary Cable	YELLOW 2	1420.0	-	-	-
H	-	-	ZX50A	3510335 R1	0.79	18.0	Thin Wall XLPE Primary Cable	YELLOW 2	1420.0	-	-	-
J	-	-	AA11-GN	3510359 R1	0.79	18.0	Thin Wall XLPE Primary Cable	WHITE	700.0	-	-	-
L	-	-	AA62	3510353 R1	0.79	18.0	Thin Wall XLPE Primary Cable	DARK BLUE	300.0	-	-	-
L	-	-	AA62	3510353 R1	0.79	18.0	Thin Wall XLPE Primary Cable	DARK BLUE	300.0	-	X	-
M	-	-	4G62DB	3510354 R1	1.16	16.0	Thin Wall XLPE Primary Cable	DARK BLUE	330.0	-	-	-
M	-	-	DA62DA	3510354 R1	1.16	16.0	Thin Wall XLPE Primary Cable	DARK BLUE	1220.0	-	-	-
M	-	-	DA62DA	3510354 R1	1.16	16.0	Thin Wall XLPE Primary Cable	DARK BLUE	1220.0	-	M	A02-0009

Name	Terminal Part Number	V-Min	Name	Wire Part Number	Wire CSA	Wire Spec	Wire Material description	Wire Color Description	Wire Length	End2 Terminal Part Number	End2 Pin Name	End2 Connector
N	-	-	DX62A	3510353 R1	0.79	18.0	Thin Wall XLPE Primary Cable	DARK BLUE	2380.0	-	-	-
P	-	-	AA50	3510335 R1	0.79	18.0	Thin Wall XLPE Primary Cable	YELLOW 2	1300.0	-	E11	J5-1602
P	-	-	AA50	3510335 R1	0.79	18.0	Thin Wall XLPE Primary Cable	YELLOW 2	1300.0	-	-	-
R	-	-	AA9ZA	3510311 R1	0.79	18.0	Thin Wall XLPE Primary Cable	GREY	1160.0	-	-	-
S	-	-	2G14LCM	3510365 R1	0.79	18.0	Thin Wall XLPE Primary Cable	RED	1115.0	-	X	-
S	-	-	2F14LCM	3510365 R1	0.79	18.0	Thin Wall XLPE Primary Cable	RED	1865.0	-	-	-

Connector Name	1F
Part Number	1667639C1
Instances	LT/RH/LoneStar - X15 - Bosch LIL165_LIL200 Alternator W/ Remote Sense W/ Mitsubishi Starter:Diagram1 LT/RH/LoneStar - X15 - Delco Remy 28SI Alternator W/ Remote Sense W/ Mitsubishi Starter:Diagram1 LT/RH/LoneStar - X15 - Delco Remy 28SI Alternator W/ Remote Sense W/ Mitsubishi Starter:Diagram2 LT/RH/LoneStar - X15 - Delco Remy 36SI Alternator W/ Remote Sense W/ Mitsubishi Starter:Diagram1 LT/RH/LoneStar - X15 - Delco Remy 40SI Alternator W/ Remote Sense W/ Mitsubishi Starter:Diagram1 LT/RH/LoneStar - X15 - Delco Remy 40SI Alternator W/ Remote Sense W/ Mitsubishi Starter:Diagram2 LT/RH/LoneStar - X15 - Leece-Neville - LN 325A Alternator W/ Remote Sense W/ Mitsubishi Starter:Diagram1 LT/RH/LoneStar - X15 - Leece-Neville AVI160-210A/240A Alternator W/ Remote Sense W/ Mitsubishi Starter:Diagram1 LT/RH/LoneStar X15 - Bosch LIL165_LIL200 Alternator W/ Remote Sense W/ Delco Starter:Diagram1-Combination1 LT/RH/LoneStar X15 - Delco Remy 28SI Alternator W/ Remote Sense W/ Delco Starter:Diagram1-Combination1 LT/RH/LoneStar X15 - Delco Remy 28SI Alternator W/ Remote Sense W/ Delco Starter:Diagram1-Combination2 LT/RH/LoneStar X15 - Delco Remy 36SI Alternator W/ Remtoe Sense W/ Delco Starter:Diagram1 LT/RH/LoneStar X15 - Delco Remy 40SI Alternator W/ Remote Sense W/ Delco Starter:Diagram1-Combination1 LT/RH/LoneStar X15 - Delco Remy 40SI Alternator W/ Remote Sense W/ Delco Starter:Diagram1-Combination2 LT/RH/LoneStar X15 - Leece-Neville - LN 325A Alternator W/ Remote Sense W/ Delco Starter:Diagram1 LT/RH/LoneStar X15 - Leece-Neville AVI160-210A/240A Alternator W/ Remote Sense W/ Delco Starter:Diagram1-Combination1
Mates	DEV-FUSE_5A_Inline-4004-01 -04B

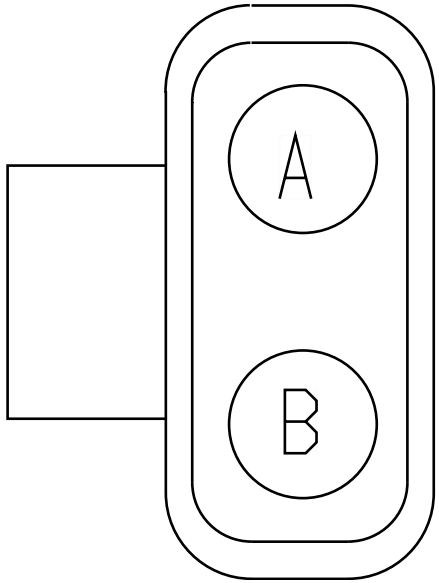

Name	Terminal Part Number	V-Min	Name	Wire Part Number	Wire CSA	Wire Spec	Wire Material description	Wire Color Description	Wire Length	End2 Terminal Part Number	End2 Pin Name	End2 Connect or
A	-	-	JS1B	2643692 R1	1.91	14.0	Std. Wall XLPE Primary Cable	TAN	130.0	-	A	J4-REMO TE SENSE
B	-	-	JS1A	2643694 R1	1.91	14.0	Std. Wall XLPE Primary Cable	LIGHT BLUE	3755.0	-	A	K02-7000

Connector Name	10F
Part Number	1661197C1
Instances	LT/RH/LoneStar - X15/A26 - Banana Plugs Receptacle:Diagram1
Mates	1902

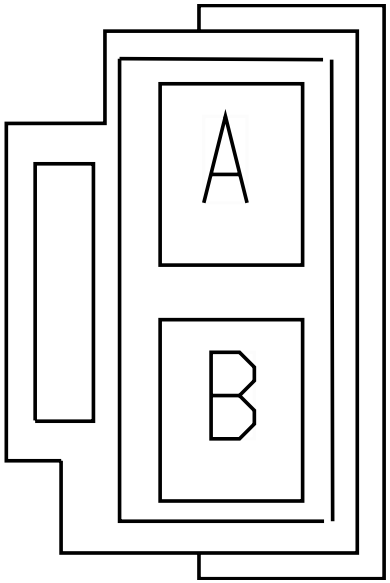

Name	Terminal Part Number	V-Min	Name	Wire Part Number	Wire CSA	Wire Spec	Wire Material description	Wire Color Description	Wire Length	End2 Terminal Part Number	End2 Pin Name	End2 Connect or
A	-	-	A86N	2643687 R1	1.91	14.0	Std. Wall XLPE Primary Cable	LIGHT GREEN	150.0	-	A	1861
B	-	-	A86-GB	2643689 R1	1.91	14.0	Std. Wall XLPE Primary Cable	WHITE	150.0	-	B	1861

Connector Name	100A
Part Number	RING-M-6_0
Instances	LT/RH/LoneStar - X15/A26 - Rear HVAC (No Idle) W/ Pre-Heat (Bergstrom Heat and Cool w/ Condensation) 2 SWITCHES Option 1:Diagram1 - Powers, Grounds & Controls LT/RH/LoneStar - X15/A26 - Rear HVAC (No Idle) W/ Pre-Heat (Bergstrom Heat and Cool w/ Condensation) 2 SWITCHES Option 2:Diagram1 - Powers, Grounds & Controls LT/RH/LoneStar - X15/A26 - Rear HVAC (No Idle) W/ Pre-Heat (Bergstrom Heat and Cool w/ Condensation) 4 SWITCHES Option 1:Diagram1 - Powers, Grounds & Controls LT/RH/LoneStar - X15/A26 - Rear HVAC (No Idle) W/ Pre-Heat (Bergstrom Heat and Cool w/ Condensation) 4 SWITCHES Option 2:Diagram1 - Powers, Grounds & Controls
Mates	MODU-BERG_NO-IDLE-6002-01- 02 Bergstrom Aux HVAC

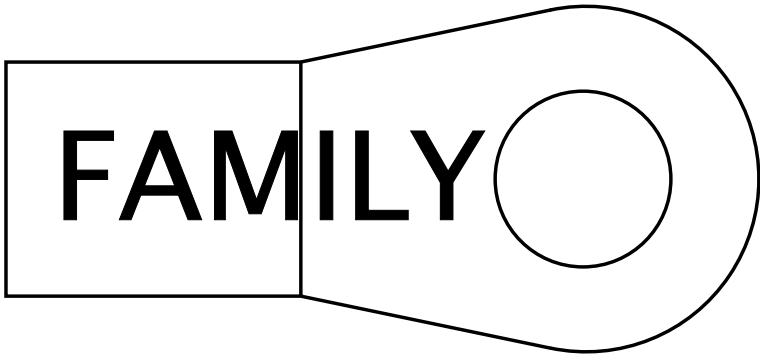

Name	Terminal Part Number	V-Min	Name	Wire Part Number	Wire CSA	Wire Spec	Wire Material description	Wire Color Description	Wire Length	End2 Terminal Part Number	End2 Pin Name	End2 Connect or
A	-	-	B(+)	2643701 R1	7.48	8.0	Std. Wall XLPE Primary Cable	RED	2250.0	-	A	P04-101
A	-	-	B(+)	2643701 R1	7.48	8.0	Std. Wall XLPE Primary Cable	RED	2250.0	-	-	-

Connector Name	100A
Part Number	1661205C1
Short Description	AUX HVAC-BERGSTROM NO IDLE-BATT&GRD
Instances	LT/RH/LoneStar - X15/A26 - Rear AUTO HVAC (No Idle) W/ Pre-Heat (Bergstrom Heat and Cool w/ Condensation) 2 SWITCHES:Diagram1 - Powers, Grounds & Controls LT/RH/LoneStar - X15/A26 - Rear HVAC (No Idle) W/ Pre-Heat (Bergstrom Heat and Cool w/ Condensation) 2 SWITCHES Option 1:Diagram1 - Powers, Grounds & Controls LT/RH/LoneStar - X15/A26 - Rear HVAC (No Idle) W/ Pre-Heat (Bergstrom Heat and Cool w/ Condensation) 2 SWITCHES Option 2:Diagram1 - Powers, Grounds & Controls LT/RH/LoneStar - X15/A26 - Rear HVAC (No Idle) W/ Pre-Heat (Bergstrom Heat and Cool w/ Condensation) 4 SWITCHES Option 1:Diagram1 - Powers, Grounds & Controls LT/RH/LoneStar - X15/A26 - Rear HVAC (No Idle) W/ Pre-Heat (Bergstrom Heat and Cool w/ Condensation) 4 SWITCHES Option 2:Diagram1 - Powers, Grounds & Controls LT/RH/LoneStar - X15/A26 - Rear Manual HVAC (No Idle) W/ Pre-Heat (Bergstrom Heat and Cool w/ Condensation) 2 SWITCHES:Diagram1 - Powers, Grounds & Controls
Mates	100

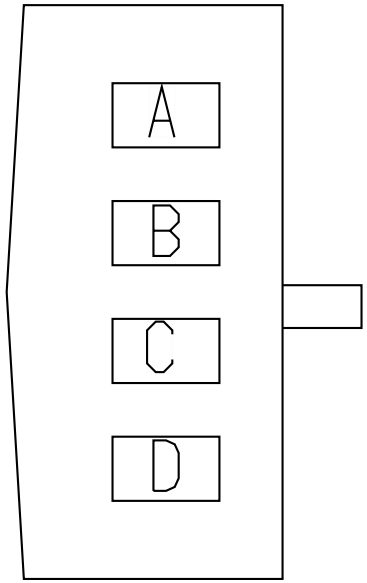

Name	Terminal Part Number	V-Min	Name	Wire Part Number	Wire CSA	Wire Spec	Wire Material description	Wire Color Description	Wire Length	End2 Terminal Part Number	End2 Pin Name	End2 Connect or
A	-	-	BA75-GBA	2643787 R1	3.01	12.0	Std. Wall XLPE Primary Cable	WHITE	600.0	-	B7	5205
A	-	-	ZE75-GBA	2643787 R1	3.01	12.0	Std. Wall XLPE Primary Cable	WHITE	600.0	-	B7	H01-5205
A	-	-	ZE75-GBA	2643787 R1	3.01	12.0	Std. Wall XLPE Primary Cable	WHITE	600.0	-	B7	5205

Name	Terminal Part Number	V-Min	Name	Wire Part Number	Wire CSA	Wire Spec	Wire Material description	Wire Color Description	Wire Length	End2 Terminal Part Number	End2 Pin Name	End2 Connect or
B	-	-	BA75-GBB	2643787 R1	3.01	12.0	Std. Wall XLPE Primary Cable	WHITE	600.0	-	B8	5205
B	-	-	ZE75-GBB	2643787 R1	3.01	12.0	Std. Wall XLPE Primary Cable	WHITE	600.0	-	B8	H01-5205
C	-	-	BA14HA	2643695 R1	3.01	12.0	Std. Wall XLPE Primary Cable	RED	600.0	-	A7	5205
C	-	-	ZE14HA	2643695 R1	3.01	12.0	Std. Wall XLPE Primary Cable	RED	600.0	-	A7	H01-5205
C	-	-	ZE14HA	2643695 R1	3.01	12.0	Std. Wall XLPE Primary Cable	RED	600.0	-	A7	5205
D	-	-	BA14HB	2643695 R1	3.01	12.0	Std. Wall XLPE Primary Cable	RED	600.0	-	A8	5205
D	-	-	ZE14HB	2643695 R1	3.01	12.0	Std. Wall XLPE Primary Cable	RED	600.0	-	A8	H01-5205

Connector Name	100B
Part Number	2031520C1
Short Description	NO IDLE ISOLATED BTRY & FEED
Instances	LT/RH/LoneStar - X15/A26 - Rear AUTO HVAC (No Idle) W/ Pre-Heat (Bergstrom Heat and Cool w/ Condensation) 2 SWITCHES:Diagram1 - Powers, Grounds & Controls LT/RH/LoneStar - X15/A26 - Rear HVAC (No Idle) W/ Pre-Heat (Bergstrom Heat and Cool w/ Condensation) 2 SWITCHES Option 1:Diagram1 - Powers, Grounds & Controls LT/RH/LoneStar - X15/A26 - Rear HVAC (No Idle) W/ Pre-Heat (Bergstrom Heat and Cool w/ Condensation) 2 SWITCHES Option 2:Diagram1 - Powers, Grounds & Controls LT/RH/LoneStar - X15/A26 - Rear HVAC (No Idle) W/ Pre-Heat (Bergstrom Heat and Cool w/ Condensation) 4 SWITCHES Option 1:Diagram1 - Powers, Grounds & Controls LT/RH/LoneStar - X15/A26 - Rear HVAC (No Idle) W/ Pre-Heat (Bergstrom Heat and Cool w/ Condensation) 4 SWITCHES Option 2:Diagram1 - Powers, Grounds & Controls LT/RH/LoneStar - X15/A26 - Rear Manual HVAC (No Idle) W/ Pre-Heat (Bergstrom Heat and Cool w/ Condensation) 2 SWITCHES:Diagram1 - Powers, Grounds & Controls
Mates	100C

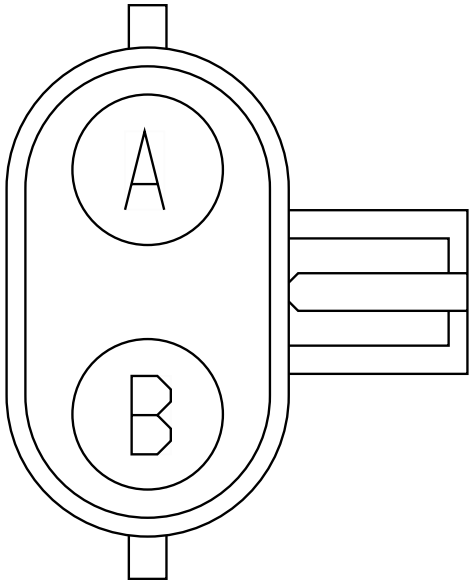

Name	Terminal Part Number	V-Min	Name	Wire Part Number	Wire CSA	Wire Spec	Wire Material description	Wire Color Description	Wire Length	End2 Terminal Part Number	End2 Pin Name	End2 Connect or
A	-	-	MF104	2643695 R1	3.01	12.0	Std. Wall XLPE Primary Cable	RED	600.0	-	A9	5205
A	-	-	MF104	2643695 R1	3.01	12.0	Std. Wall XLPE Primary Cable	RED	600.0	-	A9	H01-5205
B	-	-	MF104-G	2643787 R1	3.01	12.0	Std. Wall XLPE Primary Cable	WHITE	600.0	-	B9	5205

Name	Terminal Part Number	V-Min	Name	Wire Part Number	Wire CSA	Wire Spec	Wire Material description	Wire Color Description	Wire Length	End2 Terminal Part Number	End2 Pin Name	End2 Connector
B	-	-	MF104-G	2643787 R1	3.01	12.0	Std. Wall XLPE Primary Cable	WHITE	600.0	-	B9	H01-5205

Connector Name	100CN
Part Number	1664531C1
Short Description	NO IDLE GROUND VOLTAGE SENSE
Instances	LT/RH/LoneStar - X15/A26 - Rear AUTO HVAC (No Idle) W/ Pre-Heat (Bergstrom Heat and Cool w/ Condensation) 2 SWITCHES:Diagram1 - Powers, Grounds & Controls LT/RH/LoneStar - X15/A26 - Rear Manual HVAC (No Idle) W/ Pre-Heat (Bergstrom Heat and Cool w/ Condensation) 2 SWITCHES:Diagram1 - Powers, Grounds & Controls
Mates	100NB1

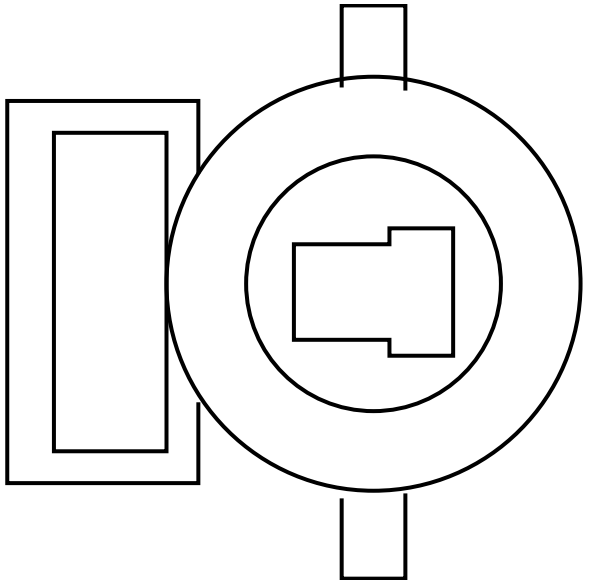

Name	Terminal Part Number	V-Min	Name	Wire Part Number	Wire CSA	Wire Spec	Wire Material description	Wire Color Description	Wire Length	End2 Terminal Part Number	End2 Pin Name	End2 Connect or
A	-	-	104-G	2643787 R1	3.01	12.0	Std. Wall XLPE Primary Cable	WHITE	2915.0	-	B	100C

Connector Name	100CN
Part Number	1664531C1
Short Description	NO IDLE GROUND VOLTAGE SENSE
Instances	LT/RH/LoneStar - X15/A26 - Rear HVAC (No Idle) W/ Pre-Heat (Bergstrom Heat and Cool w/ Condensation) 2 SWITCHES Option 1:Diagram1 - Powers, Grounds & Controls LT/RH/LoneStar - X15/A26 - Rear HVAC (No Idle) W/ Pre-Heat (Bergstrom Heat and Cool w/ Condensation) 2 SWITCHES Option 2:Diagram1 - Powers, Grounds & Controls LT/RH/LoneStar - X15/A26 - Rear HVAC (No Idle) W/ Pre-Heat (Bergstrom Heat and Cool w/ Condensation) 4 SWITCHES Option 1:Diagram1 - Powers, Grounds & Controls LT/RH/LoneStar - X15/A26 - Rear HVAC (No Idle) W/ Pre-Heat (Bergstrom Heat and Cool w/ Condensation) 4 SWITCHES Option 2:Diagram1 - Powers, Grounds & Controls
Mates	100NB1

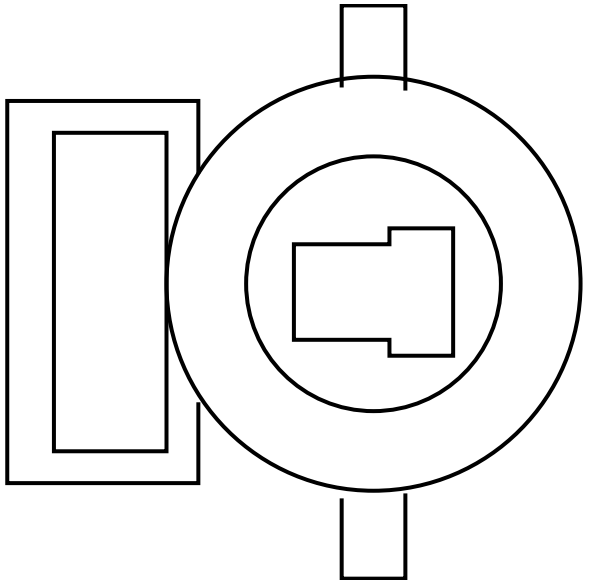

Name	Terminal Part Number	V-Min	Name	Wire Part Number	Wire CSA	Wire Spec	Wire Material description	Wire Color Description	Wire Length	End2 Terminal Part Number	End2 Pin Name	End2 Connect or
A	-	-	104-G	2643787 R1	3.01	12.0	Std. Wall XLPE Primary Cable	WHITE	2915.0	-	B	100C

Connector Name	100CP
Part Number	1669834C1
Short Description	NO IDLE BATTERY VOLTAGE SENSE
Instances	LT/RH/LoneStar - X15/A26 - Rear AUTO HVAC (No Idle) W/ Pre-Heat (Bergstrom Heat and Cool w/ Condensation) 2 SWITCHES:Diagram1 - Powers, Grounds & Controls LT/RH/LoneStar - X15/A26 - Rear Manual HVAC (No Idle) W/ Pre-Heat (Bergstrom Heat and Cool w/ Condensation) 2 SWITCHES:Diagram1 - Powers, Grounds & Controls
Mates	100PB1

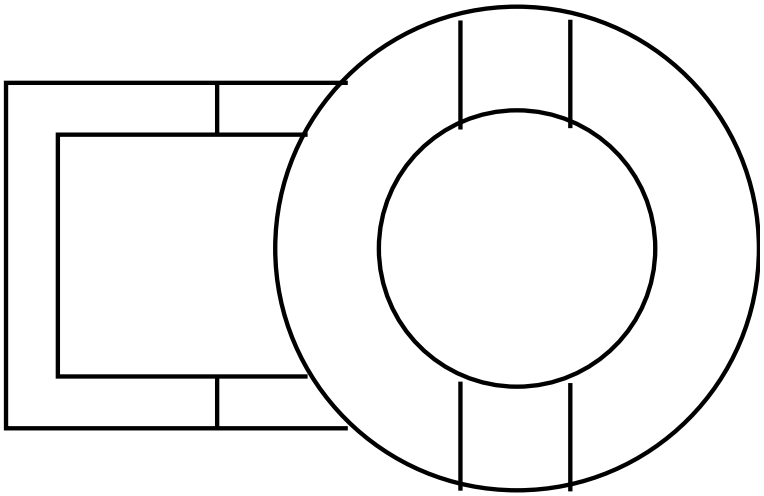

Name	Terminal Part Number	V-Min	Name	Wire Part Number	Wire CSA	Wire Spec	Wire Material description	Wire Color Description	Wire Length	End2 Terminal Part Number	End2 Pin Name	End2 Connect or
A	-	-	104	2643695 R1	3.01	12.0	Std. Wall XLPE Primary Cable	RED	2915.0	-	A	100C

Connector Name	100CP
Part Number	1669834C1
Short Description	NO IDLE BATTERY VOLTAGE SENSE
Instances	LT/RH/LoneStar - X15/A26 - Rear HVAC (No Idle) W/ Pre-Heat (Bergstrom Heat and Cool w/ Condensation) 2 SWITCHES Option 1:Diagram1 - Powers, Grounds & Controls LT/RH/LoneStar - X15/A26 - Rear HVAC (No Idle) W/ Pre-Heat (Bergstrom Heat and Cool w/ Condensation) 2 SWITCHES Option 2:Diagram1 - Powers, Grounds & Controls LT/RH/LoneStar - X15/A26 - Rear HVAC (No Idle) W/ Pre-Heat (Bergstrom Heat and Cool w/ Condensation) 4 SWITCHES Option 1:Diagram1 - Powers, Grounds & Controls LT/RH/LoneStar - X15/A26 - Rear HVAC (No Idle) W/ Pre-Heat (Bergstrom Heat and Cool w/ Condensation) 4 SWITCHES Option 2:Diagram1 - Powers, Grounds & Controls
Mates	100PB1

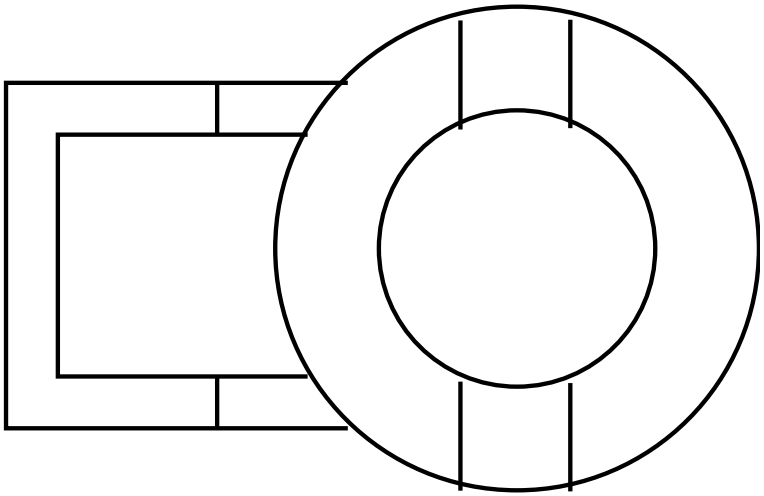

Name	Terminal Part Number	V-Min	Name	Wire Part Number	Wire CSA	Wire Spec	Wire Material description	Wire Color Description	Wire Length	End2 Terminal Part Number	End2 Pin Name	End2 Connect or
A	-	-	104	2643695 R1	3.01	12.0	Std. Wall XLPE Primary Cable	RED	2915.0	-	A	100C

Connector Name	100C
Part Number	2031522C1
Instances	LT/RH/LoneStar - X15/A26 - Rear AUTO HVAC (No Idle) W/ Pre-Heat (Bergstrom Heat and Cool w/ Condensation) 2 SWITCHES:Diagram1 - Powers, Grounds & Controls LT/RH/LoneStar - X15/A26 - Rear HVAC (No Idle) W/ Pre-Heat (Bergstrom Heat and Cool w/ Condensation) 2 SWITCHES Option 1:Diagram1 - Powers, Grounds & Controls LT/RH/LoneStar - X15/A26 - Rear HVAC (No Idle) W/ Pre-Heat (Bergstrom Heat and Cool w/ Condensation) 2 SWITCHES Option 2:Diagram1 - Powers, Grounds & Controls LT/RH/LoneStar - X15/A26 - Rear HVAC (No Idle) W/ Pre-Heat (Bergstrom Heat and Cool w/ Condensation) 4 SWITCHES Option 1:Diagram1 - Powers, Grounds & Controls LT/RH/LoneStar - X15/A26 - Rear HVAC (No Idle) W/ Pre-Heat (Bergstrom Heat and Cool w/ Condensation) 4 SWITCHES Option 2:Diagram1 - Powers, Grounds & Controls LT/RH/LoneStar - X15/A26 - Rear Manual HVAC (No Idle) W/ Pre-Heat (Bergstrom Heat and Cool w/ Condensation) 2 SWITCHES:Diagram1 - Powers, Grounds & Controls
Mates	100B

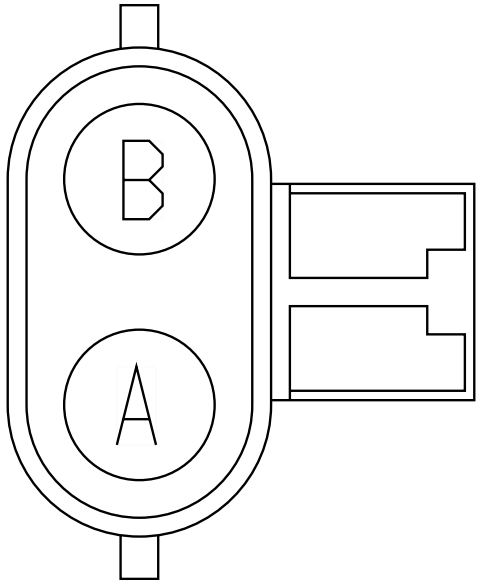

Name	Terminal Part Number	V-Min	Name	Wire Part Number	Wire CSA	Wire Spec	Wire Material description	Wire Color Description	Wire Length	End2 Terminal Part Number	End2 Pin Name	End2 Connector
A	-	-	104	2643695 R1	3.01	12.0	Std. Wall XLPE Primary Cable	RED	2915.0	-	A	100CP
B	-	-	104-G	2643787 R1	3.01	12.0	Std. Wall XLPE Primary Cable	WHITE	2915.0	-	A	100CN

Connector Name	100C
Part Number	3756702C1
Short Description	INVERTER INTERCONNECT
Instances	LT/RH/LoneStar - X15/A26 - DC/AC Inverter (1200W W/switch control):Diagram1 LT/RH/LoneStar - X15/A26 - DC/AC Inverter (1800W):Diagram1
Mates	100C

Name	Terminal Part Number	V-Min	Name	Wire Part Number	Wire CSA	Wire Spec	Wire Material description	Wire Color Description	Wire Length	End2 Terminal Part Number	End2 Pin Name	End2 Connect or
1	-	-	N14G	2645938 R1	49.99	0.0	SGX NFLEX 125	BLACK	2850.0	-	A	6049_A

Connector Name	100C
Part Number	3757369C1
Short Description	INVERTER INTERCONNECT
Instances	LT/RH/LoneStar - X15/A26 - DC/AC Inverter (1200W W/switch control):Diagram1 LT/RH/LoneStar - X15/A26 - DC/AC Inverter (1800W):Diagram1
Mates	100C

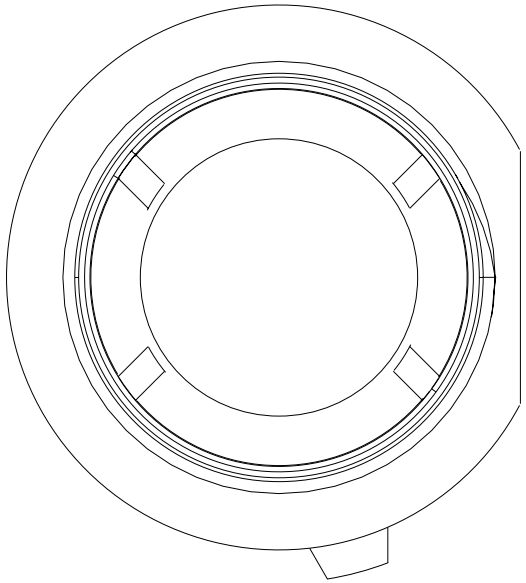

Name	Terminal Part Number	V-Min	Name	Wire Part Number	Wire CSA	Wire Spec	Wire Material description	Wire Color Description	Wire Length	End2 Terminal Part Number	End2 Pin Name	End2 Connect or
1	-	-	N14G	2645938 R1	49.99	0.0	SGX NFLEX 125	BLACK	2850.0	-	-	-

Connector Name	100NB1
Part Number	1669834C1
Short Description	NO IDLE VOLTAGE SENSE
Instances	LT/RH/LoneStar - X15/A26 - Rear AUTO HVAC (No Idle) W/ Pre-Heat (Bergstrom Heat and Cool w/ Condensation) 2 SWITCHES:Diagram1 - Powers, Grounds & Controls LT/RH/LoneStar - X15/A26 - Rear Manual HVAC (No Idle) W/ Pre-Heat (Bergstrom Heat and Cool w/ Condensation) 2 SWITCHES:Diagram1 - Powers, Grounds & Controls
Mates	100CN

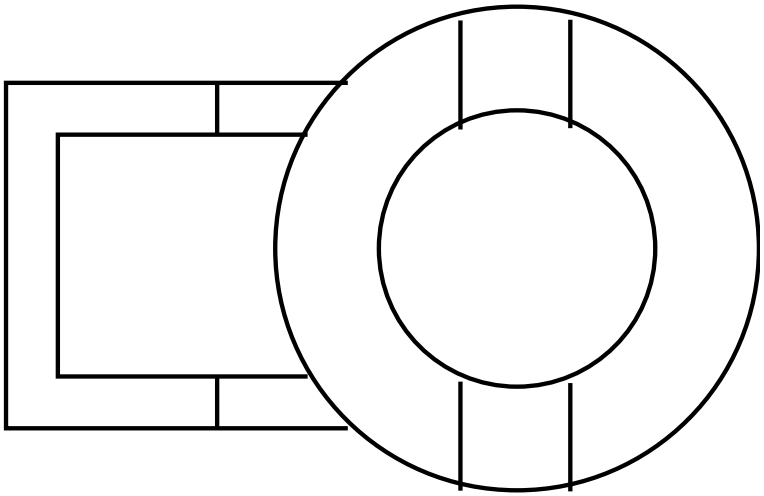

Name	Terminal Part Number	V-Min	Name	Wire Part Number	Wire CSA	Wire Spec	Wire Material description	Wire Color Description	Wire Length	End2 Terminal Part Number	End2 Pin Name	End2 Connect or
A	-	-	N104-G	2643787 R1	3.01	12.0	Std. Wall XLPE Primary Cable	WHITE	230.0	-	A	J3

Connector Name	100NB1
Part Number	1669834C1
Short Description	NO IDLE VOLTAGE SENSE
Instances	LT/RH/LoneStar - X15/A26 - Rear HVAC (No Idle) W/ Pre-Heat (Bergstrom Heat and Cool w/ Condensation) 2 SWITCHES Option 1:Diagram1 - Powers, Grounds & Controls LT/RH/LoneStar - X15/A26 - Rear HVAC (No Idle) W/ Pre-Heat (Bergstrom Heat and Cool w/ Condensation) 2 SWITCHES Option 2:Diagram1 - Powers, Grounds & Controls LT/RH/LoneStar - X15/A26 - Rear HVAC (No Idle) W/ Pre-Heat (Bergstrom Heat and Cool w/ Condensation) 4 SWITCHES Option 1:Diagram1 - Powers, Grounds & Controls LT/RH/LoneStar - X15/A26 - Rear HVAC (No Idle) W/ Pre-Heat (Bergstrom Heat and Cool w/ Condensation) 4 SWITCHES Option 2:Diagram1 - Powers, Grounds & Controls
Mates	100CN

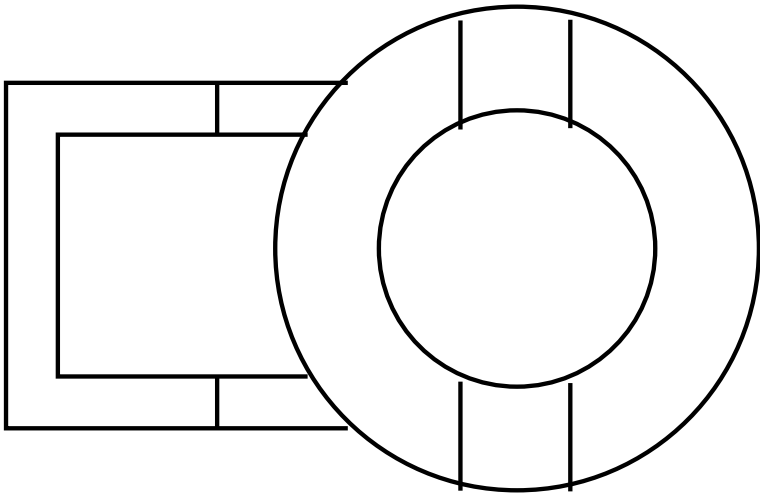

Name	Terminal Part Number	V-Min	Name	Wire Part Number	Wire CSA	Wire Spec	Wire Material description	Wire Color Description	Wire Length	End2 Terminal Part Number	End2 Pin Name	End2 Connect or
A	-	-	N104-G	2643787 R1	3.01	12.0	Std. Wall XLPE Primary Cable	WHITE	230.0	-	A	J3

Connector Name	100PB1
Part Number	1664531C1
Short Description	NO IDLE VOLTAGE SENSE BATTERY
Instances	LT/RH/LoneStar - X15/A26 - Rear AUTO HVAC (No Idle) W/ Pre-Heat (Bergstrom Heat and Cool w/ Condensation) 2 SWITCHES:Diagram1 - Powers, Grounds & Controls LT/RH/LoneStar - X15/A26 - Rear Manual HVAC (No Idle) W/ Pre-Heat (Bergstrom Heat and Cool w/ Condensation) 2 SWITCHES:Diagram1 - Powers, Grounds & Controls
Mates	100CP

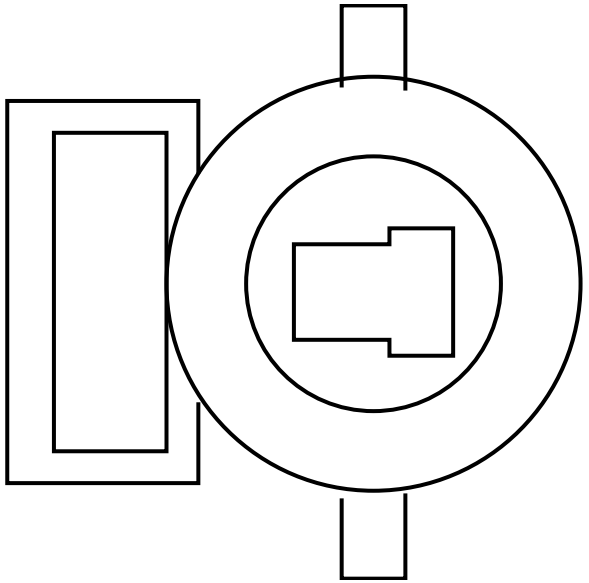

Name	Terminal Part Number	V-Min	Name	Wire Part Number	Wire CSA	Wire Spec	Wire Material description	Wire Color Description	Wire Length	End2 Terminal Part Number	End2 Pin Name	End2 Connect or
A	-	-	N104BB	2643695 R1	3.01	12.0	Std. Wall XLPE Primary Cable	RED	200.0	-	B	S05-9255

Connector Name	100PB1
Part Number	1664531C1
Short Description	NO IDLE VOLTAGE SENSE BATTERY
Instances	LT/RH/LoneStar - X15/A26 - Rear HVAC (No Idle) W/ Pre-Heat (Bergstrom Heat and Cool w/ Condensation) 2 SWITCHES Option 1:Diagram1 - Powers, Grounds & Controls LT/RH/LoneStar - X15/A26 - Rear HVAC (No Idle) W/ Pre-Heat (Bergstrom Heat and Cool w/ Condensation) 2 SWITCHES Option 2:Diagram1 - Powers, Grounds & Controls LT/RH/LoneStar - X15/A26 - Rear HVAC (No Idle) W/ Pre-Heat (Bergstrom Heat and Cool w/ Condensation) 4 SWITCHES Option 1:Diagram1 - Powers, Grounds & Controls LT/RH/LoneStar - X15/A26 - Rear HVAC (No Idle) W/ Pre-Heat (Bergstrom Heat and Cool w/ Condensation) 4 SWITCHES Option 2:Diagram1 - Powers, Grounds & Controls
Mates	100CP

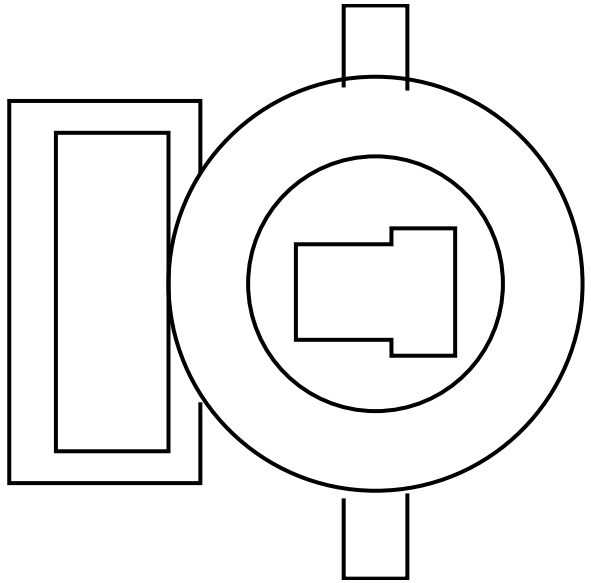

Name	Terminal Part Number	V-Min	Name	Wire Part Number	Wire CSA	Wire Spec	Wire Material description	Wire Color Description	Wire Length	End2 Terminal Part Number	End2 Pin Name	End2 Connect or
A	-	-	N104BB	2643695 R1	3.01	12.0	Std. Wall XLPE Primary Cable	RED	200.0	-	B	9255

Connector Name	1000
Part Number	3825184C1
Short Description	MAIN SLEEPER CONNECTION 1
Instances	LT/RH/LoneStar - X15/A26 - Cigar Lighter Aux APO Rear Std APO Rear APO w/Cover 12V Panel Upr Bnk APO:Diagram1 LT/RH/LoneStar - X15/A26 - Cigar Lighter Aux APO Rear Std APO Rear APO w/Cover 12V Panel Upr Bnk APO:Diagram2 LT/RH/LoneStar - X15/A26 - Cigar Lighter Aux APO Rear Std APO Rear APO w/Cover 12V Panel Upr Bnk APO:Diagram3 LT/RH/LoneStar - X15/A26 - Cigar Lighter Aux APO Rear Std APO Rear APO w/Cover 12V Panel Upr Bnk APO:Diagram4 LT/RH/LoneStar - X15/A26 - Cigar Lighter Aux APO Rear Std APO Rear APO w/Cover 12V Panel Upr Bnk APO Rear Overhead APO:Diagram1-Combination1 LT/RH/LoneStar - X15/A26 - Cigar Lighter Aux APO Rear Std APO Rear APO w/Cover 12V Panel Upr Bnk APO Rear Overhead APO:Diagram1-Combination2 LT/RH/LoneStar - X15/A26 - Cigar Lighter Aux APO Rear Std APO Rear APO w/Cover 12V Panel Upr Bnk APO Rear Overhead APO:Diagram1-Combination3 LT/RH/LoneStar - X15/A26 - Cigar Lighter Aux APO Rear Std APO Rear APO w/Cover 12V Panel Upr Bnk APO Rear Overhead APO:Diagram1-Combination4 LT/RH/LoneStar - X15/A26 - Cigar Lighter Rear Std APO Rear APO W/Cover 12V Panel Upr Bnk APO:Diagram1 LT/RH/LoneStar - X15/A26 - Cigar Lighter Rear Std APO Rear APO W/Cover 12V Panel Upr Bnk APO:Diagram2 LT/RH/LoneStar - X15/A26 - Cigar Lighter Rear Std APO Rear APO w/Cover 12V Panel Upr Bnk APO Rear Overhead APO:Diagram1 LT/RH/LoneStar - X15/A26 - Cigar Lighter Rear Std APO Rear APO w/Cover 12V Panel Upr Bnk APO Rear Overhead APO:Diagram2 LT/RH/LoneStar - X15/A26 - Floor/Search Lights Sleeper:Diagram1 LT/RH/LoneStar - X15/A26 - Floor/Search Lights Sleeper (1 Light):Diagram1 LT/RH/LoneStar - X15/A26 - Lighting Sleeper Dome:Diagram1 LT/RH/LoneStar - X15/A26 - Reading Lighting - W/Upper& Lower:Diagram1 LT/RH/LoneStar - X15/A26 - Rear Interior Dimming (Accent Light):Diagram1

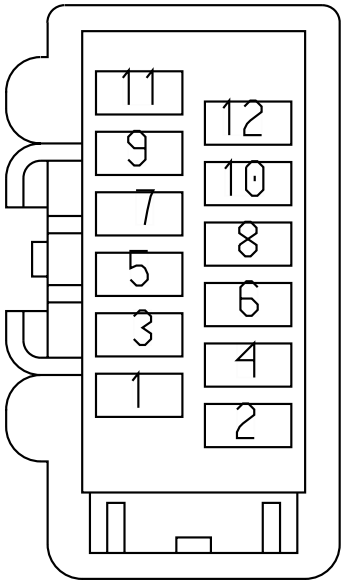

LT/RH/LoneStar - X15/A26 - Rear Interior Dimming (Accent/ Mood):Diagram1
LT/RH/LoneStar - X15/A26 - Std APO Aux APO Rear Std APO Rear APO W/Cover 12V Panel Upr Bnk APO:Diagram1
LT/RH/LoneStar - X15/A26 - Std APO Aux APO Rear Std APO Rear APO W/Cover 12V Panel Upr Bnk APO:Diagram2
LT/RH/LoneStar - X15/A26 - Std APO Aux APO Rear Std APO Rear APO W/Cover 12V Panel Upr Bnk APO:Diagram3
LT/RH/LoneStar - X15/A26 - Std APO Aux APO Rear Std APO Rear APO W/Cover 12V Panel Upr Bnk APO:Diagram4
LT/RH/LoneStar - X15/A26 - Std APO Aux APO Rear Std APO Rear APO w/Cover 12V Panel Upr Bnk APO Rear Overhead APO:Diagram1
LT/RH/LoneStar - X15/A26 - Std APO Aux APO Rear Std APO Rear APO w/Cover 12V Panel Upr Bnk APO Rear Overhead APO:Diagram2
LT/RH/LoneStar - X15/A26 - Std APO Aux APO Rear Std APO Rear APO w/Cover 12V Panel Upr Bnk APO Rear Overhead APO:Diagram3
LT/RH/LoneStar - X15/A26 - Std APO Aux APO Rear Std APO Rear APO w/Cover 12V Panel Upr Bnk APO Rear Overhead APO:Diagram4
LT/RH/LoneStar - X15/A26 - Std APO Rear Std APO Rear APO W/Cover 12V Panel Upr Bnk APO:Diagram1
LT/RH/LoneStar - X15/A26 - Std APO Rear Std APO Rear APO W/Cover 12V Panel Upr Bnk APO:Diagram2
LT/RH/LoneStar - X15/A26 - Std APO Rear Std APO Rear APO w/Cover 12V Panel Upr Bnk APO Rear Overhead APO:Diagram1
LT/RH/LoneStar - X15/A26 - Std APO Rear Std APO Rear APO w/Cover 12V Panel Upr Bnk APO Rear Overhead APO:Diagram2

Mates 1000

Name	Terminal Part Number	V-Min	Name	Wire Part Number	Wire CSA	Wire Spec	Wire Material description	Wire Color Description	Wire Length	End2 Terminal Part Number	End2 Pin Name	End2 Connect or
1	-	-	HA63HB	2643721 R1	1.16	16.0	Std. Wall XLPE Primary Cable	DARK BLUE	805.0	-	A	5102

Name	Terminal Part Number	V-Min	Name	Wire Part Number	Wire CSA	Wire Spec	Wire Material description	Wire Color Description	Wire Length	End2 Terminal Part Number	End2 Pin Name	End2 Connector
1	-	-	HA63HB	2643721 R1	1.16	16.0	Std. Wall XLPE Primary Cable	DARK BLUE	805.0	-	-	-
2	-	-	HA63-GB	2643681 R1	1.16	16.0	Std. Wall XLPE Primary Cable	WHITE	730.0	-	2	1000
2	-	-	HA63-GB	2643681 R1	1.16	16.0	Std. Wall XLPE Primary Cable	WHITE	730.0	-	-	-
3	-	-	HA63D	2643720 R1	0.79	18.0	Std. Wall XLPE Primary Cable	DARK BLUE	2415.0	-	-	-
4	-	-	HA109S	2643673 R1	0.79	18.0	Std. Wall XLPE Primary Cable	GREY	2835.0	-	X	-
4	-	-	HA109S	2643673 R1	0.79	18.0	Std. Wall XLPE Primary Cable	GREY	2835.0	-	-	-
5	-	-	HA109SA	2643673 R1	0.79	18.0	Std. Wall XLPE Primary Cable	GREY	550.0	-	X	-
5	-	-	HA109SA	2643673 R1	0.79	18.0	Std. Wall XLPE Primary Cable	GREY	550.0	-	-	-

Name	Terminal Part Number	V-Min	Name	Wire Part Number	Wire CSA	Wire Spec	Wire Material description	Wire Color Description	Wire Length	End2 Terminal Part Number	End2 Pin Name	End2 Connector
6	-	-	HA63E	2643720 R1	0.79	18.0	Std. Wall XLPE Primary Cable	DARK BLUE	650.0	-	X	-
7	-	-	HA63EA	2643720 R1	0.79	18.0	Std. Wall XLPE Primary Cable	DARK BLUE	650.0	-	X	-
8	-	-	JP63U	2643720 R1	0.79	18.0	Std. Wall XLPE Primary Cable	DARK BLUE	1575.0	-	A	V13-5136
9	-	-	JP63-GU	2643674 R1	0.79	18.0	Std. Wall XLPE Primary Cable	WHITE	2040.0	-	B	V13-5136
10	-	-	JP86M	2643678 R1	1.16	16.0	Std. Wall XLPE Primary Cable	LIGHT GREEN	1130.0	-	A	V13-5015
11	-	-	JP86-GJJ	2643681 R1	1.16	16.0	Std. Wall XLPE Primary Cable	WHITE	2040.0	-	-	-
11	-	-	JP86-GJJ	2643681 R1	1.16	16.0	Std. Wall XLPE Primary Cable	WHITE	2040.0	-	C	V13-5015

Connector Name	1000
Part Number	3825185C1
Short Description	12-WAY CONNECTION FOR T-RAIL
Instances	LT/RH/LoneStar - X15/A26 - Cigar Lighter Aux APO Rear Std APO Rear APO w/Cover 12V Panel Upr Bnk APO:Diagram1 LT/RH/LoneStar - X15/A26 - Cigar Lighter Aux APO Rear Std APO Rear APO w/Cover 12V Panel Upr Bnk APO:Diagram2 LT/RH/LoneStar - X15/A26 - Cigar Lighter Aux APO Rear Std APO Rear APO w/Cover 12V Panel Upr Bnk APO:Diagram3 LT/RH/LoneStar - X15/A26 - Cigar Lighter Aux APO Rear Std APO Rear APO w/Cover 12V Panel Upr Bnk APO:Diagram4 LT/RH/LoneStar - X15/A26 - Cigar Lighter Aux APO Rear Std APO Rear APO w/Cover 12V Panel Upr Bnk APO Rear Overhead APO:Diagram1-Combination1 LT/RH/LoneStar - X15/A26 - Cigar Lighter Aux APO Rear Std APO Rear APO w/Cover 12V Panel Upr Bnk APO Rear Overhead APO:Diagram1-Combination2 LT/RH/LoneStar - X15/A26 - Cigar Lighter Aux APO Rear Std APO Rear APO w/Cover 12V Panel Upr Bnk APO Rear Overhead APO:Diagram1-Combination3 LT/RH/LoneStar - X15/A26 - Cigar Lighter Aux APO Rear Std APO Rear APO w/Cover 12V Panel Upr Bnk APO Rear Overhead APO:Diagram1-Combination4 LT/RH/LoneStar - X15/A26 - Cigar Lighter Rear Std APO Rear APO W/Cover 12V Panel Upr Bnk APO:Diagram1 LT/RH/LoneStar - X15/A26 - Cigar Lighter Rear Std APO Rear APO W/Cover 12V Panel Upr Bnk APO:Diagram2 LT/RH/LoneStar - X15/A26 - Cigar Lighter Rear Std APO Rear APO w/Cover 12V Panel Upr Bnk APO Rear Overhead APO:Diagram1 LT/RH/LoneStar - X15/A26 - Cigar Lighter Rear Std APO Rear APO w/Cover 12V Panel Upr Bnk APO Rear Overhead APO:Diagram2 LT/RH/LoneStar - X15/A26 - Floor/Search Lights Sleeper:Diagram1 LT/RH/LoneStar - X15/A26 - Floor/Search Lights Sleeper (1 Light):Diagram1 LT/RH/LoneStar - X15/A26 - Lighting Sleeper Dome:Diagram1 LT/RH/LoneStar - X15/A26 - Reading Lighting - W/Upper& Lower:Diagram1 LT/RH/LoneStar - X15/A26 - Rear Interior Dimming (Accent Light):Diagram1

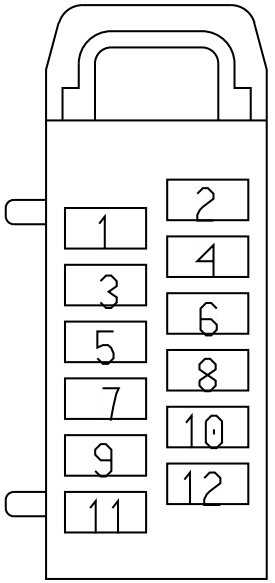

LT/RH/LoneStar - X15/A26 - Rear Interior Dimming (Accent/ Mood):Diagram1
LT/RH/LoneStar - X15/A26 - Std APO Aux APO Rear Std APO Rear APO W/Cover 12V Panel Upr Bnk APO:Diagram1
LT/RH/LoneStar - X15/A26 - Std APO Aux APO Rear Std APO Rear APO W/Cover 12V Panel Upr Bnk APO:Diagram2
LT/RH/LoneStar - X15/A26 - Std APO Aux APO Rear Std APO Rear APO W/Cover 12V Panel Upr Bnk APO:Diagram3
LT/RH/LoneStar - X15/A26 - Std APO Aux APO Rear Std APO Rear APO W/Cover 12V Panel Upr Bnk APO:Diagram4
LT/RH/LoneStar - X15/A26 - Std APO Aux APO Rear Std APO Rear APO w/Cover 12V Panel Upr Bnk APO Rear Overhead APO:Diagram1
LT/RH/LoneStar - X15/A26 - Std APO Aux APO Rear Std APO Rear APO w/Cover 12V Panel Upr Bnk APO Rear Overhead APO:Diagram2
LT/RH/LoneStar - X15/A26 - Std APO Aux APO Rear Std APO Rear APO w/Cover 12V Panel Upr Bnk APO Rear Overhead APO:Diagram3
LT/RH/LoneStar - X15/A26 - Std APO Aux APO Rear Std APO Rear APO w/Cover 12V Panel Upr Bnk APO Rear Overhead APO:Diagram4
LT/RH/LoneStar - X15/A26 - Std APO Rear Std APO Rear APO W/Cover 12V Panel Upr Bnk APO:Diagram1
LT/RH/LoneStar - X15/A26 - Std APO Rear Std APO Rear APO W/Cover 12V Panel Upr Bnk APO:Diagram2
LT/RH/LoneStar - X15/A26 - Std APO Rear Std APO Rear APO w/Cover 12V Panel Upr Bnk APO Rear Overhead APO:Diagram1
LT/RH/LoneStar - X15/A26 - Std APO Rear Std APO Rear APO w/Cover 12V Panel Upr Bnk APO Rear Overhead APO:Diagram2

Mates 1000

Name	Terminal Part Number	V-Min	Name	Wire Part Number	Wire CSA	Wire Spec	Wire Material description	Wire Color Description	Wire Length	End2 Terminal Part Number	End2 Pin Name	End2 Connect or
1	-	-	HA63HB	2643721 R1	1.16	16.0	Std. Wall XLPE Primary Cable	DARK BLUE	805.0	-	-	-

Name	Terminal Part Number	V-Min	Name	Wire Part Number	Wire CSA	Wire Spec	Wire Material description	Wire Color Description	Wire Length	End2 Terminal Part Number	End2 Pin Name	End2 Connector
2	-	-	HA63-GB	2643681 R1	1.16	16.0	Std. Wall XLPE Primary Cable	WHITE	730.0	-	2	1000
2	-	-	HA63-GB	2643681 R1	1.16	16.0	Std. Wall XLPE Primary Cable	WHITE	730.0	-	X	-
2	-	-	HA63-GB	2643681 R1	1.16	16.0	Std. Wall XLPE Primary Cable	WHITE	730.0	-	-	-
3	-	-	HA63D	2643720 R1	0.79	18.0	Std. Wall XLPE Primary Cable	DARK BLUE	2415.0	-	C	5102
4	-	-	HA109S	2643673 R1	0.79	18.0	Std. Wall XLPE Primary Cable	GREY	2835.0	-	-	-
5	-	-	HA109SA	2643673 R1	0.79	18.0	Std. Wall XLPE Primary Cable	GREY	550.0	-	-	-
6	-	-	HA63E	2643720 R1	0.79	18.0	Std. Wall XLPE Primary Cable	DARK BLUE	650.0	-	-	-
7	-	-	HA63EA	2643720 R1	0.79	18.0	Std. Wall XLPE Primary Cable	DARK BLUE	650.0	-	-	-

Name	Terminal Part Number	V-Min	Name	Wire Part Number	Wire CSA	Wire Spec	Wire Material description	Wire Color Description	Wire Length	End2 Terminal Part Number	End2 Pin Name	End2 Connect or
8	-	-	ZK63UA	2643720 R1	0.79	18.0	Std. Wall XLPE Primary Cable	DARK BLUE	1850.0	-	X	-
9	-	-	ZK63-GU	2643674 R1	0.79	18.0	Std. Wall XLPE Primary Cable	WHITE	2145.0	-	-	-
10	-	-	ZL86MA	2643678 R1	1.16	16.0	Std. Wall XLPE Primary Cable	LIGHT GREEN	1880.0	-	X	-
11	-	-	JP86-GJJ	2643681 R1	1.16	16.0	Std. Wall XLPE Primary Cable	WHITE	2040.0	-	X	-
11	-	-	JP86-GJJ	2643681 R1	1.16	16.0	Std. Wall XLPE Primary Cable	WHITE	2040.0	-	-	-

Connector Name	1001
Part Number	3515762C1
Short Description	8-WAY CONNECTION FOR T-RAIL
Instances	LT/RH - A26 - Work Lights - LED W/ Sw Pack - Customer Supplied - Sleeper W/ RKE W/MAN REV:Diagram2 LT/RH - A26 - Work Lights - LED W/ Sw Pack - Customer Supplied - Sleeper W/ RKE W/MAN REV:Diagram4 LT/RH - A26 - Work Lights - LED W/ Sw Pack - Customer Supplied - Sleeper W/O RKE W/MAN REV:Diagram2 LT/RH - A26 - Work Lights - LED W/ Sw Pack - Customer Supplied - Sleeper W/O RKE W/MAN REV:Diagram4 LT/RH/LoneStar - X15 - Work Lights - LED W/ Sw Pack - Customer Supplied - Sleeper W/ RKE W/MAN REV:Diagram2 LT/RH/LoneStar - X15 - Work Lights - LED W/ Sw Pack - Customer Supplied - Sleeper W/O RKE W/MAN REV:Diagram2 LT/RH/LoneStar - X15/A26 - Air Shield Lighting w/ One Light:Diagram2 LT/RH/LoneStar - X15/A26 - Beacon/Strobe Light:Diagram2 LT/RH/LoneStar - X15/A26 - Rear Interior Dimming (Accent/ Mood):Diagram1 LT/RH/LoneStar - X15/A26 - Work Lights - LED W/ Sw Pack - Customer Supplied - Sleeper:Diagram2 LT/RH/LoneStar - X15/A26 - Work Lights - LED W/ Sw Pack - Customer Supplied - Sleeper W/ RKE W/AUTO REV:Diagram2 LT/RH/LoneStar - X15/A26 - Work Lights - LED W/ Sw Pack - Customer Supplied - Sleeper W/O RKE:Diagram2 LT/RH/LoneStar - X15/A26 - Work Lights - LED W/ Sw Pack - Customer Supplied - Sleeper W/O RKE W/AUTO REV:Diagram2
Mates	1001

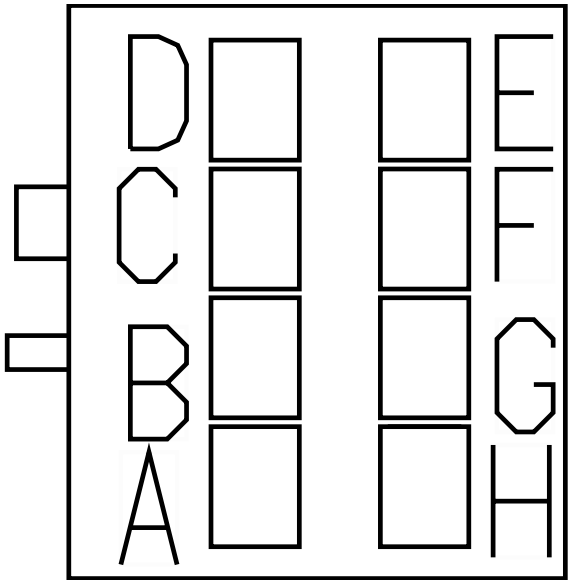

Name	Terminal Part Number	V-Min	Name	Wire Part Number	Wire CSA	Wire Spec	Wire Material description	Wire Color Description	Wire Length	End2 Terminal Part Number	End2 Pin Name	End2 Connector
C	-	-	HE65B	3510318 R1	1.16	16.0	Thin Wall XLPE Primary Cable	ORANGE	1030.0	-	-	-

Name	Terminal Part Number	V-Min	Name	Wire Part Number	Wire CSA	Wire Spec	Wire Material description	Wire Color Description	Wire Length	End2 Terminal Part Number	End2 Pin Name	End2 Connector
C	-	-	HE65B	3510318 R1	1.16	16.0	Thin Wall XLPE Primary Cable	ORANGE	1030.0	-	21	5000
D	-	-	HE65-GE	2643681 R1	1.16	16.0	Std. Wall XLPE Primary Cable	WHITE	2145.0	-	X	-
D	-	-	HE65-GE	2643681 R1	1.16	16.0	Std. Wall XLPE Primary Cable	WHITE	2145.0	-	-	-
D	-	-	HE65-GE	2643681 R1	1.16	16.0	Std. Wall XLPE Primary Cable	WHITE	2145.0	-	D	1001
E	-	-	ZM63VA	2643720 R1	0.79	18.0	Std. Wall XLPE Primary Cable	DARK BLUE	575.0	-	X	-
F	-	-	JP63-GSD	2643674 R1	0.79	18.0	Std. Wall XLPE Primary Cable	WHITE	2040.0	-	X	-
G	-	-	HM58C	3510294 R1	1.16	16.0	Thin Wall XLPE Primary Cable	BLACK	2835.0	-	19	5000
G	-	-	HM58C	3510294 R1	1.16	16.0	Thin Wall XLPE Primary Cable	BLACK	2835.0	-	G	1001

Name	Terminal Part Number	V-Min	Name	Wire Part Number	Wire CSA	Wire Spec	Wire Material description	Wire Color Description	Wire Length	End2 Terminal Part Number	End2 Pin Name	End2 Connect or
H	-	-	HM58-G	3510360 R1	1.16	16.0	Thin Wall XLPE Primary Cable	WHITE	2145.0	-	H	1001
H	-	-	HM58-G	3510360 R1	1.16	16.0	Thin Wall XLPE Primary Cable	WHITE	2075.0	-	H	1001

Connector Name	1001
Part Number	3515763C1
Short Description	MAIN SLEEPER CONNECTION 2
Instances	LT/RH - A26 - Work Lights - LED W/ Sw Pack - Customer Supplied - Sleeper W/ RKE W/MAN REV:Diagram2 LT/RH - A26 - Work Lights - LED W/ Sw Pack - Customer Supplied - Sleeper W/ RKE W/MAN REV:Diagram4 LT/RH - A26 - Work Lights - LED W/ Sw Pack - Customer Supplied - Sleeper W/O RKE W/MAN REV:Diagram2 LT/RH - A26 - Work Lights - LED W/ Sw Pack - Customer Supplied - Sleeper W/O RKE W/MAN REV:Diagram4 LT/RH/LoneStar - X15 - Work Lights - LED W/ Sw Pack - Customer Supplied - Sleeper W/ RKE W/MAN REV:Diagram2 LT/RH/LoneStar - X15 - Work Lights - LED W/ Sw Pack - Customer Supplied - Sleeper W/O RKE W/MAN REV:Diagram2 LT/RH/LoneStar - X15/A26 - Air Shield Lighting w/ One Light:Diagram2 LT/RH/LoneStar - X15/A26 - Beacon/Strobe Light:Diagram2 LT/RH/LoneStar - X15/A26 - Rear Interior Dimming (Accent/ Mood):Diagram1 LT/RH/LoneStar - X15/A26 - Work Lights - LED W/ Sw Pack - Customer Supplied - Sleeper:Diagram2 LT/RH/LoneStar - X15/A26 - Work Lights - LED W/ Sw Pack - Customer Supplied - Sleeper W/ RKE W/AUTO REV:Diagram2 LT/RH/LoneStar - X15/A26 - Work Lights - LED W/ Sw Pack - Customer Supplied - Sleeper W/O RKE:Diagram2 LT/RH/LoneStar - X15/A26 - Work Lights - LED W/ Sw Pack - Customer Supplied - Sleeper W/O RKE W/AUTO REV:Diagram2
Mates	1001

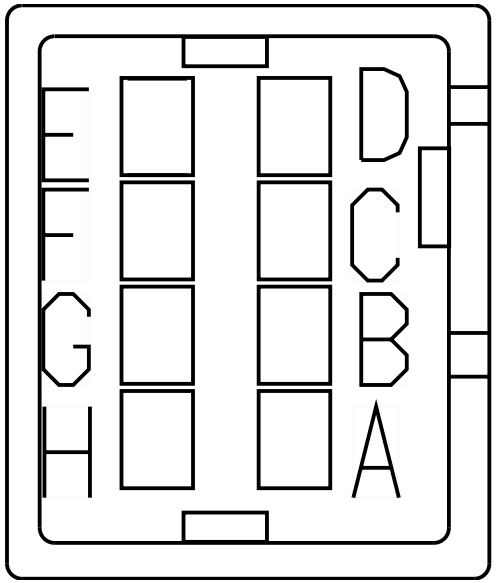

Name	Terminal Part Number	V-Min	Name	Wire Part Number	Wire CSA	Wire Spec	Wire Material description	Wire Color Description	Wire Length	End2 Terminal Part Number	End2 Pin Name	End2 Connect or
C	-	-	HE65B	3510318 R1	1.16	16.0	Thin Wall XLPE Primary Cable	ORANGE	1030.0	-	X	-

Name	Terminal Part Number	V-Min	Name	Wire Part Number	Wire CSA	Wire Spec	Wire Material description	Wire Color Description	Wire Length	End2 Terminal Part Number	End2 Pin Name	End2 Connector
C	-	-	HE65B	3510318 R1	1.16	16.0	Thin Wall XLPE Primary Cable	ORANGE	1030.0	-	-	-
D	-	-	HE65-GE	2643681 R1	1.16	16.0	Std. Wall XLPE Primary Cable	WHITE	2145.0	-	-	-
D	-	-	HE65-GE	2643681 R1	1.16	16.0	Std. Wall XLPE Primary Cable	WHITE	2145.0	-	X	-
D	-	-	HE65-GE	2643681 R1	1.16	16.0	Std. Wall XLPE Primary Cable	WHITE	2145.0	-	D	1001
E	-	-	JP63SB	2643720 R1	0.79	18.0	Std. Wall XLPE Primary Cable	DARK BLUE	1235.0	-	A	5135M
F	-	-	JP63-GSD	2643674 R1	0.79	18.0	Std. Wall XLPE Primary Cable	WHITE	2040.0	-	-	-
G	-	-	HM58C	3510294 R1	1.16	16.0	Thin Wall XLPE Primary Cable	BLACK	2835.0	-	-	-
G	-	-	HM58C	3510294 R1	1.16	16.0	Thin Wall XLPE Primary Cable	BLACK	2835.0	-	G	1001

Name	Terminal Part Number	V-Min	Name	Wire Part Number	Wire CSA	Wire Spec	Wire Material description	Wire Color Description	Wire Length	End2 Terminal Part Number	End2 Pin Name	End2 Connect or
H	-	-	HM58-G	3510360 R1	1.16	16.0	Thin Wall XLPE Primary Cable	WHITE	2145.0	-	H	1001
H	-	-	HM58-G	3510360 R1	1.16	16.0	Thin Wall XLPE Primary Cable	WHITE	2075.0	-	H	1001

Connector Name	100
Part Number	1661204C1
Short Description	IDLE HVAC MODULE
Instances	LT/RH/LoneStar - X15/A26 - Rear AUTO HVAC (No Idle) W/ Pre-Heat (Bergstrom Heat and Cool w/ Condensation) 2 SWITCHES:Diagram1 - Powers, Grounds & Controls LT/RH/LoneStar - X15/A26 - Rear HVAC (No Idle) W/ Pre-Heat (Bergstrom Heat and Cool w/ Condensation) 2 SWITCHES Option 1:Diagram1 - Powers, Grounds & Controls LT/RH/LoneStar - X15/A26 - Rear HVAC (No Idle) W/ Pre-Heat (Bergstrom Heat and Cool w/ Condensation) 2 SWITCHES Option 2:Diagram1 - Powers, Grounds & Controls LT/RH/LoneStar - X15/A26 - Rear HVAC (No Idle) W/ Pre-Heat (Bergstrom Heat and Cool w/ Condensation) 4 SWITCHES Option 1:Diagram1 - Powers, Grounds & Controls LT/RH/LoneStar - X15/A26 - Rear HVAC (No Idle) W/ Pre-Heat (Bergstrom Heat and Cool w/ Condensation) 4 SWITCHES Option 2:Diagram1 - Powers, Grounds & Controls LT/RH/LoneStar - X15/A26 - Rear Manual HVAC (No Idle) W/ Pre-Heat (Bergstrom Heat and Cool w/ Condensation) 2 SWITCHES:Diagram1 - Powers, Grounds & Controls
Mates	100A

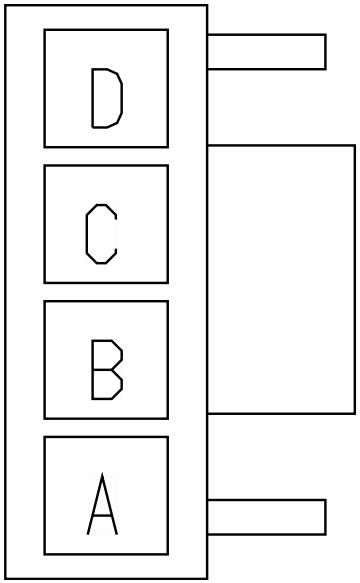

Name	Terminal Part Number	V-Min	Name	Wire Part Number	Wire CSA	Wire Spec	Wire Material description	Wire Color Description	Wire Length	End2 Terminal Part Number	End2 Pin Name	End2 Connect or
A	-	-	GRD-C	2643776 R1	4.81	10.0	Std. Wall XLPE Primary Cable	LIGHT GREEN	90.0	-	X	-
B	-	-	GRD-D	2643776 R1	4.81	10.0	Std. Wall XLPE Primary Cable	LIGHT GREEN	90.0	-	X	-
C	-	-	BATTA	2643698 R1	4.81	10.0	Std. Wall XLPE Primary Cable	RED	110.0	-	X	-

Name	Terminal Part Number	V-Min	Name	Wire Part Number	Wire CSA	Wire Spec	Wire Material description	Wire Color Description	Wire Length	End2 Terminal Part Number	End2 Pin Name	End2 Connect or
D	-	-	BATTB	2643698 R1	4.81	10.0	Std. Wall XLPE Primary Cable	RED	110.0	-	X	-

Connector Name	100
Part Number	3756780C1
Instances	LT/RH/LoneStar - X15/A26 - Rear HVAC (No Idle) W/ Pre-Heat (Bergstrom Heat and Cool w/ Condensation) 2 SWITCHES Option 1:Diagram1 - Powers, Grounds & Controls LT/RH/LoneStar - X15/A26 - Rear HVAC (No Idle) W/ Pre-Heat (Bergstrom Heat and Cool w/ Condensation) 2 SWITCHES Option 2:Diagram1 - Powers, Grounds & Controls LT/RH/LoneStar - X15/A26 - Rear HVAC (No Idle) W/ Pre-Heat (Bergstrom Heat and Cool w/ Condensation) 4 SWITCHES Option 1:Diagram1 - Powers, Grounds & Controls LT/RH/LoneStar - X15/A26 - Rear HVAC (No Idle) W/ Pre-Heat (Bergstrom Heat and Cool w/ Condensation) 4 SWITCHES Option 2:Diagram1 - Powers, Grounds & Controls
Mates	MODU-BERG_NO-IDLE-6002-01- 02 Bergstrom Aux HVAC

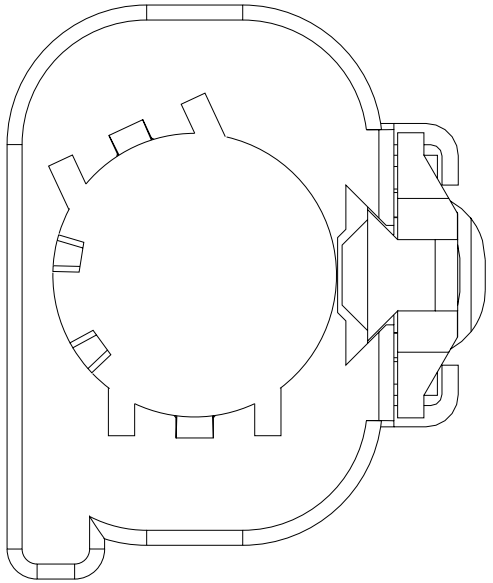

Name	Terminal Part Number	V-Min	Name	Wire Part Number	Wire CSA	Wire Spec	Wire Material description	Wire Color Description	Wire Length	End2 Terminal Part Number	End2 Pin Name	End2 Connect or
1	-	-	B(-)	2643789 R1	7.48	8.0	Std. Wall XLPE Primary Cable	WHITE	2250.0	-	A	J3
1	-	-	B(-)	2643789 R1	7.48	8.0	Std. Wall XLPE Primary Cable	WHITE	2250.0	-	-	-

Connector Name	100_1
Part Number	365684C2
Short Description	PDM CLEAN POWER
Instances	LT/RH A26 - IP Underhood PDM:Diagram1
Mates	BTRY-GENERIC

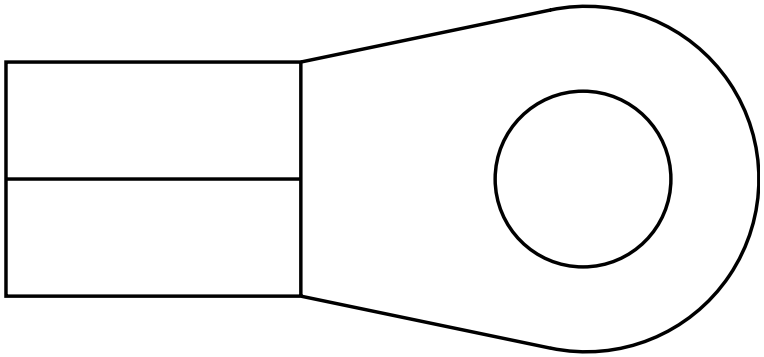

Name	Terminal Part Number	V-Min	Name	Wire Part Number	Wire CSA	Wire Spec	Wire Material description	Wire Color Description	Wire Length	End2 Terminal Part Number	End2 Pin Name	End2 Connect or
1	-	-	14-FL	2643473 R1	4.81	10.0	FUSEABLE LINK	RUST	230.0	-	X	-

Connector Name	100_1
Part Number	365684C2
Short Description	PDM CLEAN POWER
Instances	LT/RH/LoneStar X15 - IP Underhood PDM:Diagram1
Mates	BTRY-GENERIC

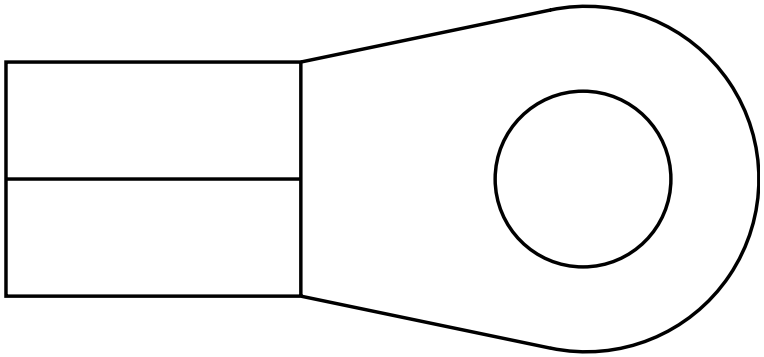

Name	Terminal Part Number	V-Min	Name	Wire Part Number	Wire CSA	Wire Spec	Wire Material description	Wire Color Description	Wire Length	End2 Terminal Part Number	End2 Pin Name	End2 Connect or
1	-	-	14-FL	2643473 R1	4.81	10.0	FUSEABLE LINK	RUST	230.0	-	X	-

Connector Name	100_1
Part Number	475968C1
Short Description	PDM MAIN
Instances	LT/RH A26 - IP Underhood PDM:Diagram1
Mates	CP-CUBE_FUSE-0003-00-10-JA

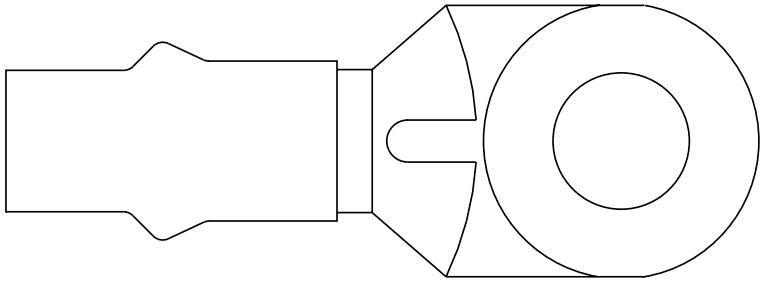

Name	Terminal Part Number	V-Min	Name	Wire Part Number	Wire CSA	Wire Spec	Wire Material description	Wire Color Description	Wire Length	End2 Terminal Part Number	End2 Pin Name	End2 Connect or
1	-	-	14A	2645228 R1	61.89	0.0	SGX FLEX 125C	RED	1650.0	-	A	1005

Connector Name	100_1
Part Number	475968C1
Short Description	PDM MAIN
Instances	LT/RH/LoneStar X15 - IP Underhood PDM:Diagram1
Mates	CP-CUBE_FUSE-0003-00-10-JA

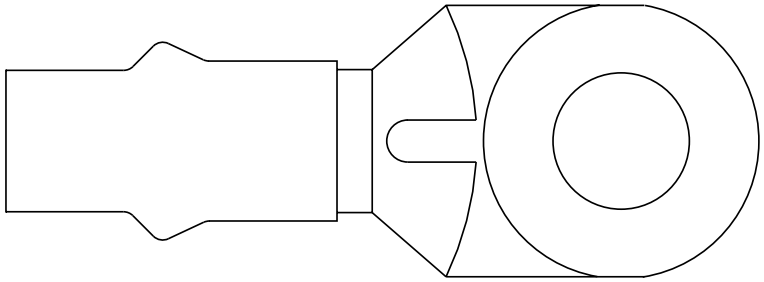

Name	Terminal Part Number	V-Min	Name	Wire Part Number	Wire CSA	Wire Spec	Wire Material description	Wire Color Description	Wire Length	End2 Terminal Part Number	End2 Pin Name	End2 Connect or
1	-	-	14A	2645228 R1	61.89	0.0	SGX FLEX 125C	RED	1650.0	-	A	1005

Connector Name	101C
Part Number	3606342C1
Short Description	INVERTER INTERCONNECT
Instances	LT/RH/LoneStar - X15/A26 - DC/AC Inverter (1200W W/switch control):Diagram1 LT/RH/LoneStar - X15/A26 - DC/AC Inverter (1800W):Diagram1
Mates	101C

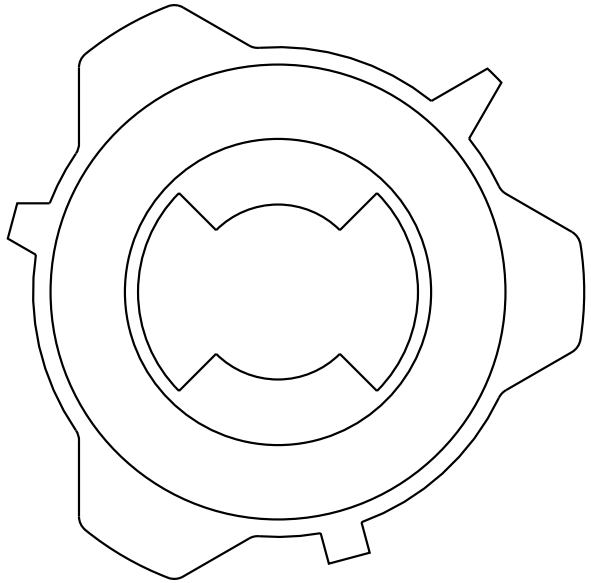

Name	Terminal Part Number	V-Min	Name	Wire Part Number	Wire CSA	Wire Spec	Wire Material description	Wire Color Description	Wire Length	End2 Terminal Part Number	End2 Pin Name	End2 Connect or
1	-	-	N14A	2645961 R1	49.99	0.0	SGR 125	RED	625.0	-	-	-

Connector Name	101C
Part Number	3757370C1
Short Description	INVERTER INTERCONNECT
Instances	LT/RH/LoneStar - X15/A26 - DC/AC Inverter (1200W W/switch control):Diagram1 LT/RH/LoneStar - X15/A26 - DC/AC Inverter (1800W):Diagram1
Mates	101C

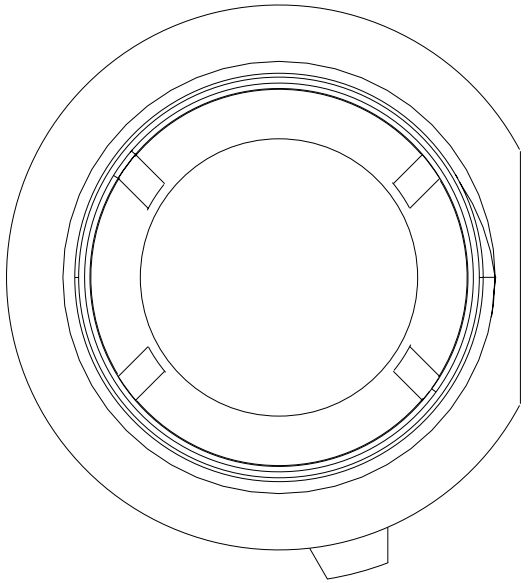

Name	Terminal Part Number	V-Min	Name	Wire Part Number	Wire CSA	Wire Spec	Wire Material description	Wire Color Description	Wire Length	End2 Terminal Part Number	End2 Pin Name	End2 Connect or
1	-	-	N14A	2645961 R1	49.99	0.0	SGR 125	RED	625.0	-	A	P40-101D

Connector Name	1010
Part Number	3768015C1
Instances	Battery Feed:Diagram1
Mates	PDB

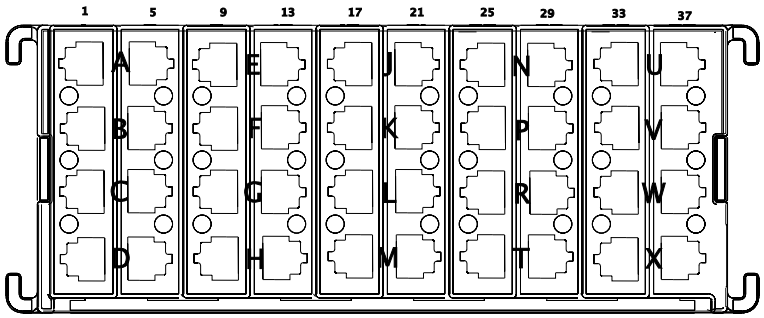

Name	Terminal Part Number	V-Min	Name	Wire Part Number	Wire CSA	Wire Spec	Wire Material description	Wire Color Description	Wire Length	End2 Terminal Part Number	End2 Pin Name	End2 Connector
2	-	-	AL14AJ	3510368 R1	3.01	12.0	Thin Wall XLPE Primary Cable	RED	75.0	-	X	-
5	-	-	AZ14A	3510365 R1	0.79	18.0	Thin Wall XLPE Primary Cable	RED	390.0	-	-	-
6	-	-	BM70J	3510320 R1	3.01	12.0	Thin Wall XLPE Primary Cable	ORANGE	270.0	-	-	-
7	-	-	ZM98H	3510365 R1	0.79	18.0	Thin Wall XLPE Primary Cable	RED	1930.0	-	-	-

Name	Terminal Part Number	V-Min	Name	Wire Part Number	Wire CSA	Wire Spec	Wire Material description	Wire Color Description	Wire Length	End2 Terminal Part Number	End2 Pin Name	End2 Connector
7	-	-	ZK98H	3510365 R1	0.79	18.0	Thin Wall XLPE Primary Cable	RED	1930.0	-	-	-
8	-	-	ZZ14SUN	2645629 R1	0.35	22.0	Thin Wall XLPE Primary Cable	RED	2485.0	-	-	-
10	-	-	AL14AK	3510368 R1	3.01	12.0	Thin Wall XLPE Primary Cable	RED	75.0	-	X	-
13	-	-	AA14EE	3510366 R1	1.16	16.0	Thin Wall XLPE Primary Cable	RED	1455.0	-	-	-
14	-	-	DH75	3510368 R1	3.01	12.0	Thin Wall XLPE Primary Cable	RED	2940.0	-	-	-
15	-	-	AA15	3510365 R1	0.79	18.0	Thin Wall XLPE Primary Cable	RED	1540.0	-	-	-
16	-	-	YH14AZ	3510365 R1	0.79	18.0	Thin Wall XLPE Primary Cable	RED	1950.0	-	-	-
16	-	-	2V14CSB	3510366 R1	1.16	16.0	Thin Wall XLPE Primary Cable	RED	1950.0	-	-	-

Name	Terminal Part Number	V-Min	Name	Wire Part Number	Wire CSA	Wire Spec	Wire Material description	Wire Color Description	Wire Length	End2 Terminal Part Number	End2 Pin Name	End2 Connector
16	-	-	CS14CSB	3510366 R1	1.16	16.0	Thin Wall XLPE Primary Cable	RED	1950.0	-	-	-
18	-	-	AL14AP	3510368 R1	3.01	12.0	Thin Wall XLPE Primary Cable	RED	75.0	-	X	-
21	-	-	NE17AC	3510323 R1	0.79	18.0	Thin Wall XLPE Primary Cable	PINK	1405.0	-	-	-
21	-	-	MM92DC	3510329 R1	0.79	18.0	Thin Wall XLPE Primary Cable	TAN	1530.0	-	-	-
22	-	-	FR94TV	3510314 R1	3.01	12.0	Thin Wall XLPE Primary Cable	GREY	235.0	-	-	-
22	-	-	FB94TW	3510314 R1	3.01	12.0	Thin Wall XLPE Primary Cable	GREY	360.0	-	-	-
22	-	-	HF94TV	3510314 R1	3.01	12.0	Thin Wall XLPE Primary Cable	GREY	360.0	-	-	-
22	-	-	ER94TV	3510314 R1	3.01	12.0	Thin Wall XLPE Primary Cable	GREY	360.0	-	-	-

Name	Terminal Part Number	V-Min	Name	Wire Part Number	Wire CSA	Wire Spec	Wire Material description	Wire Color Description	Wire Length	End2 Terminal Part Number	End2 Pin Name	End2 Connector
22	-	-	HG94TV	3510314 R1	3.01	12.0	Thin Wall XLPE Primary Cable	GREY	360.0	-	-	-
23	-	-	LM97B	3510364 R1	0.53	20.0	Thin Wall XLPE Primary Cable	RED	1145.0	-	-	-
24	-	-	RH14EA	3510367 R1	1.91	14.0	Thin Wall XLPE Primary Cable	RED	2745.0	-	-	-
26	-	-	AL14AT	3510368 R1	3.01	12.0	Thin Wall XLPE Primary Cable	RED	75.0	-	X	-
29	-	-	MR86P	3510299 R1	0.79	18.0	Thin Wall XLPE Primary Cable	LIGHT GREEN	1705.0	-	-	-
29	-	-	MZ86AA	3510299 R1	0.79	18.0	Thin Wall XLPE Primary Cable	LIGHT GREEN	805.0	-	-	-
30	-	-	CV81B	3510368 R1	3.01	12.0	Thin Wall XLPE Primary Cable	RED	1925.0	-	-	-
31	-	-	2F14LCM	3510365 R1	0.79	18.0	Thin Wall XLPE Primary Cable	RED	1865.0	-	-	-

Name	Terminal Part Number	V-Min	Name	Wire Part Number	Wire CSA	Wire Spec	Wire Material description	Wire Color Description	Wire Length	End2 Terminal Part Number	End2 Pin Name	End2 Connector
31	-	-	2G14D	3510365 R1	0.79	18.0	Thin Wall XLPE Primary Cable	RED	1480.0	-	-	-
32	-	-	XF14L	3510364 R1	0.53	20.0	Thin Wall XLPE Primary Cable	RED	1540.0	-	-	-
32	-	-	EW20	2643678 R1	1.16	16.0	Std. Wall XLPE Primary Cable	LIGHT GREEN	5725.0	-	-	-
34	-	-	AL14AM	3510368 R1	3.01	12.0	Thin Wall XLPE Primary Cable	RED	75.0	-	X	-
37	-	-	MB14ED	3510366 R1	1.16	16.0	Thin Wall XLPE Primary Cable	RED	4325.0	-	-	-
37	-	-	CT14ED	3510365 R1	0.79	18.0	Thin Wall XLPE Primary Cable	RED	3395.0	-	-	-
37	-	-	KC14ED	3510366 R1	1.16	16.0	Thin Wall XLPE Primary Cable	RED	650.0	-	-	-
37	-	-	CK14ED	3510365 R1	0.79	18.0	Thin Wall XLPE Primary Cable	RED	3395.0	-	-	-

Name	Terminal Part Number	V-Min	Name	Wire Part Number	Wire CSA	Wire Spec	Wire Material description	Wire Color Description	Wire Length	End2 Terminal Part Number	End2 Pin Name	End2 Connector
37	-	-	CG14SD	3510365 R1	0.79	18.0	Thin Wall XLPE Primary Cable	RED	4125.0	-	-	-
37	-	-	CP14ED	3510365 R1	0.79	18.0	Thin Wall XLPE Primary Cable	RED	4125.0	-	-	-
37	-	-	KL14A	2643759 R1	0.79	18.0	Std. Wall XLPE Primary Cable	RED	4125.0	-	-	-
37	-	-	PH14ED	3510365 R1	0.79	18.0	Thin Wall XLPE Primary Cable	RED	4125.0	-	-	-
37	-	-	CF14SD	3510365 R1	0.79	18.0	Thin Wall XLPE Primary Cable	RED	4475.0	-	-	-
38	-	-	CV81C	3510368 R1	3.01	12.0	Thin Wall XLPE Primary Cable	RED	2585.0	-	-	-
39	-	-	GS94AY	2643782 R1	1.91	14.0	Std. Wall XLPE Primary Cable	GREY	2750.0	-	-	-
39	-	-	XY94AY	3510314 R1	3.01	12.0	Thin Wall XLPE Primary Cable	GREY	2635.0	-	-	-

Name	Terminal Part Number	V-Min	Name	Wire Part Number	Wire CSA	Wire Spec	Wire Material description	Wire Color Description	Wire Length	End2 Terminal Part Number	End2 Pin Name	End2 Connect or
39	-	-	3A94AY	2643782 R1	1.91	14.0	Std. Wall XLPE Primary Cable	GREY	2750.0	-	-	-
40	-	-	DT104AL	3510354 R1	1.16	16.0	Thin Wall XLPE Primary Cable	DARK BLUE	2940.0	-	-	-

Connector Name	1011
Part Number	3768010C1
Instances	LoneStar - X15 - Fuel Heater (Vehicle Powered) (Davco):Diagram1 LT/RH - X15/A26 - Fuel Heater (Vehicle Powered) (Davco):Diagram1 LT/RH - X15/A26 - Fuel Heater (Vehicle Powered) (Davco):Diagram2 LT/RH - X15/A26 - Fuel Heater (Vehicle Powered) (RAVCOR):Diagram1 LT/RH - X15/A26 - Lane Departure Warning (Mobileye Per-Wire):Diagram1 LT/RH - X15/A26 - Windshield Wipers Cruise Disable & Park Brake W/Wipers ON:Diagram1 LT/RH - X15/A26 - Windshield Wipers Cruise Disable W/Wipers ON:Diagram1 LT/RH/LoneStar - X15/A26 - Body Builder Lighting - (Blunt Cut):Diagram1 LT/RH/LoneStar - X15/A26 - Body Builder Lighting - (Blunt Cut):Diagram2 LT/RH/LoneStar - X15/A26 - Floor/Search Lights DayCab:Diagram1 LT/RH/LoneStar - X15/A26 - Floor/Search Lights Sleeper:Diagram1 LT/RH/LoneStar - X15/A26 - Floor/Search Lights Sleeper (1 Light):Diagram1 LT/RH/LoneStar - X15/A26 - Trailer Interface (Lighting) – BOC & EOF_NA:Diagram1-Combination1 LT/RH/LoneStar - X15/A26 - Trailer Interface (Lighting) – BOC & EOF_NA:Diagram1-Combination2 LT/RH/LoneStar - X15/A26 - Trailer Interface (Lighting) – BOC & EOF_NA:Diagram1-Combination3 LT/RH/LoneStar - X15/A26 - Trailer Interface (Lighting) – BOC & EOF_NA:Diagram1-Combination4 LT/RH/LoneStar - X15/A26 - Trailer Interface (Lighting) – BOC NA:Diagram1 LT/RH/LoneStar - X15/A26 - Trailer Interface (Lighting) – BOC NA:Diagram2 LT/RH/LoneStar - X15/A26 - Trailer Interface (Lighting) – TRAMEC_NA:Diagram1 LT/RH/LoneStar - X15/A26 - Windshield Wipers Park Brake W/ Wipers ON:Diagram1

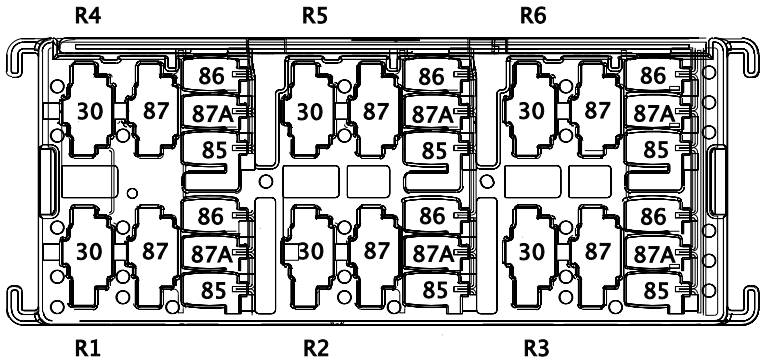

LT/RH/LoneStar - X15/A26 - Windshield Wipers
Standard:Diagram1
Relays - Grid Management (N/Load Shed Day Cab):Diagram1
Relays - Grid Management (W/Load Shed Day Cab):Diagram1
Relays - Grid Management (W/Load Shed Sleeper Cab):Diagram1

Mates Accessory CONV2 Relay

Name	Terminal Part Number	V-Min	Name	Wire Part Number	Wire CSA	Wire Spec	Wire Material description	Wire Color Description	Wire Length	End2 Terminal Part Number	End2 Pin Name	End2 Connector
R1-30	-	-	BM70J	3510320 R1	3.01	12.0	Thin Wall XLPE Primary Cable	ORANGE	270.0	-	-	-
R1-85	-	-	BM70-GT	3510358 R1	0.53	20.0	Thin Wall XLPE Primary Cable	WHITE	1325.0	-	-	-
R1-86	-	-	BM70C	3510316 R1	0.53	20.0	Thin Wall XLPE Primary Cable	ORANGE	2000.0	-	F15	J4-1601
R1-87	-	-	BM70T	3510320 R1	3.01	12.0	Thin Wall XLPE Primary Cable	ORANGE	1980.0	-	9	1701
R2-30	-	-	AA82P	3510312 R1	1.16	16.0	Thin Wall XLPE Primary Cable	GREY	0.0	-	R5-30	1011
R2-85	-	-	AA82M	3510310 R1	0.53	20.0	Thin Wall XLPE Primary Cable	GREY	405.0	-	X	-
R2-86	-	-	AA82F	3510310 R1	0.53	20.0	Thin Wall XLPE Primary Cable	GREY	2000.0	-	E7	J4-1601

Name	Terminal Part Number	V-Min	Name	Wire Part Number	Wire CSA	Wire Spec	Wire Material description	Wire Color Description	Wire Length	End2 Terminal Part Number	End2 Pin Name	End2 Connector
R2-87	-	-	AA82E	3510312 R1	1.16	16.0	Thin Wall XLPE Primary Cable	GREY	405.0	-	X	-
R2-87A	-	-	AA82J	3510312 R1	1.16	16.0	Thin Wall XLPE Primary Cable	GREY	2950.0	-	72	1703M
R3-30	-	-	BC63JV	2643673 R1	0.79	18.0	Std. Wall XLPE Primary Cable	GREY	115.0	-	X	-
R3-85	-	-	BC63J	3510352 R1	0.53	20.0	Thin Wall XLPE Primary Cable	DARK BLUE	2000.0	-	E5	J4-1601
R3-86	-	-	BC63JJ	3510310 R1	0.53	20.0	Thin Wall XLPE Primary Cable	GREY	115.0	-	X	-
R3-87	-	-	EL63JA	3510353 R1	0.79	18.0	Thin Wall XLPE Primary Cable	DARK BLUE	1345.0	-	A	1907
R3-87	-	-	EL63JB	3510353 R1	0.79	18.0	Thin Wall XLPE Primary Cable	DARK BLUE	3455.0	-	7	5000A
R3-87	-	-	MP63JA	3510353 R1	0.79	18.0	Thin Wall XLPE Primary Cable	DARK BLUE	1345.0	-	A	1907

Name	Terminal Part Number	V-Min	Name	Wire Part Number	Wire CSA	Wire Spec	Wire Material description	Wire Color Description	Wire Length	End2 Terminal Part Number	End2 Pin Name	End2 Connector
R4-30	-	-	AL14BB	3510369 R1	4.81	10.0	Thin Wall XLPE Primary Cable	RED	175.0	-	X	-
R4-85	-	-	AV12	3510340 R1	0.53	20.0	Thin Wall XLPE Primary Cable	LIGHT BLUE	2515.0	-	A	J6-1606
R4-85	-	-	AW12A	3510340 R1	0.53	20.0	Thin Wall XLPE Primary Cable	LIGHT BLUE	1785.0	-	X	-
R4-86	-	-	6K9LCA	3510310 R1	0.53	20.0	Thin Wall XLPE Primary Cable	GREY	215.0	-	X	-
R4-87	-	-	AB12M	2643700 R1	4.81	10.0	Std. Wall XLPE Primary Cable	LIGHT BLUE	100.0	-	-	-
R5-30	-	-	AA82P	3510312 R1	1.16	16.0	Thin Wall XLPE Primary Cable	GREY	0.0	-	R2-30	1011
R5-85	-	-	AA82N	3510310 R1	0.53	20.0	Thin Wall XLPE Primary Cable	GREY	405.0	-	X	-
R5-86	-	-	AA82H	3510310 R1	0.53	20.0	Thin Wall XLPE Primary Cable	GREY	2000.0	-	E6	J4-1601

Name	Terminal Part Number	V-Min	Name	Wire Part Number	Wire CSA	Wire Spec	Wire Material description	Wire Color Description	Wire Length	End2 Terminal Part Number	End2 Pin Name	End2 Connector
R5-87	-	-	YG82K	3510312 R1	1.16	16.0	Thin Wall XLPE Primary Cable	GREY	2950.0	-	69	1703M
R5-87	-	-	YH82K	3510312 R1	1.16	16.0	Thin Wall XLPE Primary Cable	GREY	905.0	-	X	-
R5-87A	-	-	AA82L	3510312 R1	1.16	16.0	Thin Wall XLPE Primary Cable	GREY	2950.0	-	70	1703M
R6-30	-	-	DR19	3510313 R1	1.91	14.0	Thin Wall XLPE Primary Cable	GREY	1900.0	-	6	1700
R6-85	-	-	DR19A	3510310 R1	0.53	20.0	Thin Wall XLPE Primary Cable	GREY	2000.0	-	F12	J4-1601
R6-86	-	-	DR19-GB	3510358 R1	0.53	20.0	Thin Wall XLPE Primary Cable	WHITE	1835.0	-	-	-
R6-87	-	-	DR19V	3510313 R1	1.91	14.0	Thin Wall XLPE Primary Cable	GREY	315.0	-	-	-

Connector Name	1012
Part Number	3768010C1
Instances	LoneStar - X15 - Body Builder Lighting - (BOC EOF In Cab) (8HAB 8HAE 8HAU) (Automatic):Diagram1 LoneStar - X15 - Body Builder Lighting - (BOC EOF In Cab) (8HAB 8HAE 8HAU) (Automatic):Diagram2 LoneStar - X15 - Body Builder Lighting - (BOC EOF In Cab) (8HAB 8HAE 8HAU) (Manual):Diagram1 LoneStar - X15 - Trailer Interface (ABS) - Center Pin Circuit:Diagram1 LoneStar - X15 - Trailer Interface (ABS) - Center Pin Circuit:Diagram2 LoneStar - X15 - Trailer Interface (ABS) - Center Pin Circuit:Diagram3 LoneStar - X15 - Trailer Interface (ABS) - Center Pin Circuit:Diagram4 LT/RH X15 - Backup Light (Dual Reverse Light) Allison-TC10:Diagram1 LT/RH X15 - Backup Light (Dual Reverse Light) Allison-TC10:Diagram2 LT/RH X15 - Backup Light (Dual Reverse LT) Procosion/ Endurant:Diagram1 LT/RH X15 - Backup Light (Dual Reverse LT) Procosion/ Endurant:Diagram2 LT/RH X15 - Backup Light (Reverse Light) Allison TC10:Diagram1 LT/RH X15 - Backup Light (Reverse Light) Allison TC10:Diagram2 LT/RH X15 - Backup Light (Single Reverse Light) Allison TC10:Diagram1 LT/RH X15 - Backup Light (Single Reverse Light) Allison TC10:Diagram2 LT/RH X15 - Backup Light (Single Reverse Light) Endurant:Diagram1 LT/RH X15 - Backup Light (Single Reverse Light) Endurant:Diagram2 LT/RH - A26 - Body Builder Lighting - (BOC EOF In Cab) (8HAB 8HAE 8HAU) (Manual):Diagram1 LT/RH - A26 - Body Builder Lighting - (BOC EOF In Cab) (8HAB 8HAE 8HAU) (Manual):Diagram2 LT/RH - A26 - Body Builder Lighting - (BOC EOF In Cab) (8HAB 8HAE 8HAU) (Manual):Diagram3

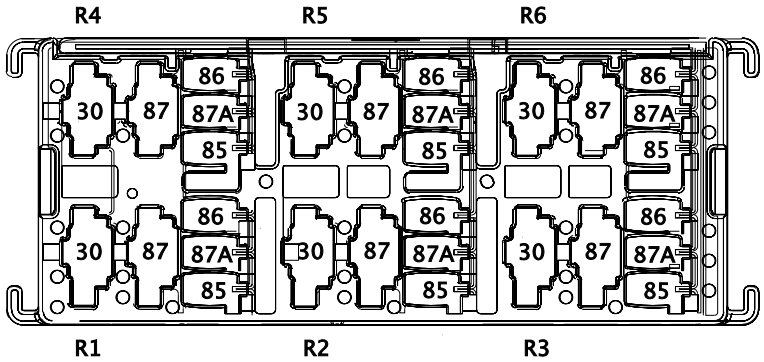

LT/RH - A26 - Body Builder Lighting - (BOC EOF In Cab) (8HAB 8HAE 8HAU) (Manual):Diagram4
LT/RH - X15 - Body Builder Lighting - (BOC EOF In Cab) (8HAB 8HAE 8HAU) (Manual):Diagram1
LT/RH - X15 - Body Builder Lighting - (BOC EOF In Cab) (8HAB 8HAE 8HAU) (Manual):Diagram2
LT/RH - X15/A26 - Body Builder Lighting - (BOC EOF In Cab) (8HAB 8HAE 8HAU) (Automatic):Diagram1
LT/RH - X15/A26 - Body Builder Lighting - (BOC EOF In Cab) (8HAB 8HAE 8HAU) (Automatic):Diagram2
LT/RH - X15/A26 - Mirrors (Heat) [Switch Pack Actuated Relay Driven]:Diagram1
LT/RH - X15/A26 - Trailer Interface (ABS) - Center Pin Circuit:Diagram1
LT/RH - X15/A26 - Trailer Interface (ABS) - Center Pin Circuit:Diagram2
LT/RH - X15/A26 - Trailer Interface (ABS) - Center Pin Circuit:Diagram3
LT/RH - X15/A26 - Trailer Interface (ABS) - Center Pin Circuit:Diagram4
LT/RH A26 - Backup Light (Dual Reverse Light):Diagram1
LT/RH A26 - Backup Light (Dual Reverse Light):Diagram2
LT/RH A26 - Backup Light (Dual Reverse Light) Allison-3K:Diagram1
LT/RH A26 - Backup Light (Dual Reverse Light) Allison-3K:Diagram2
LT/RH A26 - Backup Light (Dual Reverse Light) Allison-TC10:Diagram1
LT/RH A26 - Backup Light (Dual Reverse Light) Allison-TC10:Diagram2
LT/RH A26 - Backup Light (Reverse Light) Allison TC10:Diagram1
LT/RH A26 - Backup Light (Reverse Light) Allison TC10:Diagram2
LT/RH A26 - Backup Light (Reverse Light) Allison-3K:Diagram1
LT/RH A26 - Backup Light (Reverse Light) Allison-3K:Diagram2
LT/RH A26 - Backup Light (Single Reverse Light):Diagram1
LT/RH A26 - Backup Light (Single Reverse Light):Diagram2
LT/RH A26 - Backup Light (Single Reverse Light) Allison 3K:Diagram1
LT/RH A26 - Backup Light (Single Reverse Light) Allison 3K:Diagram2
LT/RH A26 - Backup Light (Single Reverse Light) Allison TC10:Diagram1

LT/RH A26 - Backup Light (Single Reverse Light) Allison TC10:Diagram2
LT/RH A26 - Backup Light (Single Reverse Light) Endurant:Diagram1
LT/RH A26 - Backup Light (Single Reverse Light) Endurant:Diagram2
LT/RH A26 - Backup Light (Single Reverse Light) W/Allison 3K:Diagram1
LT/RH A26 - Backup Light (Single Reverse Light) W/Allison 3K:Diagram2
LT/RH A26 - Backup Light (Single Reverse Light) W/Allison TC10:Diagram1
LT/RH A26 - Backup Light (Single Reverse Light) W/Allison TC10:Diagram2
LT/RH A26 - Backup Light Endurant Trans:Diagram1
LT/RH A26 - Backup Light Endurant Trans:Diagram2
LT/RH/LoneStar - X15/A26 - Auxiliary Trailer Power CAV D:Diagram1
LT/RH/LoneStar - X15/A26 - Auxiliary Trailer Power CAV D:Diagram2
LT/RH/LoneStar - X15/A26 - Auxiliary Trailer Power W/ ISO Trailer Socket:Diagram1
LT/RH/LoneStar - X15/A26 - Back-Up Alarm (Automatic) (W/ Tail Light Bar Assy):Diagram1
LT/RH/LoneStar - X15/A26 - Back-Up Alarm (Automatic) (W/ Tail Light Bar Assy):Diagram2
LT/RH/LoneStar - X15/A26 - Back-Up Alarm (Automatic) TC10:Diagram1
LT/RH/LoneStar - X15/A26 - Back-Up Alarm (Automatic) TC10:Diagram2
LT/RH/LoneStar - X15/A26 - Back-Up Alarm (Automatic) TC10:Diagram3
LT/RH/LoneStar - X15/A26 - Back-Up Alarm (Automatic) TC10:Diagram4
LT/RH/LoneStar - X15/A26 - Heated Mirrors (Door Pod Actuated Cab and Hood Mounted):Diagram1
LT/RH/LoneStar - X15/A26 - Jaw Monitoring:Diagram1
LT/RH/LoneStar - X15/A26 - Mobile Communications Sensor Wiring Effects for Trailer TRAC:Diagram1
LT/RH/LoneStar - X15/A26 - Mobile Communications Sensor Wiring Effects for Trailer TRAC:Diagram2
LT/RH/LoneStar - X15/A26 - Trailer Interface (ABS) - BOC & EOF_NA:Diagram1

LT/RH/LoneStar - X15/A26 - Trailer Interface (ABS) - BOC & EOF_NA:Diagram2
LT/RH/LoneStar - X15/A26 - Trailer Interface (ABS) - BOC & EOF_NA:Diagram3
LT/RH/LoneStar - X15/A26 - Trailer Interface (ABS) - BOC & EOF_NA:Diagram4
LT/RH/LoneStar - X15/A26 - Trailer Interface (ABS) - BOC_NA:Diagram1
LT/RH/LoneStar - X15/A26 - Trailer Interface (ABS) - BOC_NA:Diagram2
LT/RH/LoneStar - X15/A26 - Trailer Interface (ABS) - TRAMEC_NA:Diagram1
LT/RH/LoneStar - X15/A26 - Work Lights (2 Blunt Cuts Only W/O Relay) W/Backup W/Auto Trans (Allison and Endurant):Diagram1
LT/RH/LoneStar - X15/A26 - Work Lights (2 Blunt Cuts Only W/O Relay) W/Backup W/Auto Trans (Allison and Endurant):Diagram2
LT/RH/LoneStar - X15/A26 - Work Lights - LED W/ Sw Pack - Customer Supplied - Sleeper W/ RKE W/AUTO REV:Diagram1
LT/RH/LoneStar - X15/A26 - Work Lights - LED W/ Sw Pack - Customer Supplied - Sleeper W/ RKE W/AUTO REV:Diagram2
LT/RH/LoneStar - X15/A26 - Work Lights - LED W/ Sw Pack - Customer Supplied - Sleeper W/O RKE W/AUTO REV:Diagram1
LT/RH/LoneStar - X15/A26 - Work Lights - LED W/ Sw Pack - Customer Supplied - Sleeper W/O RKE W/AUTO REV:Diagram2
LT/RH/LoneStar - X15/A26 - Work Lights -LED W/ Sw Pack - Sleeper W/ RKE W/AUTO REV:Diagram1
LT/RH/LoneStar - X15/A26 - Work Lights -LED W/ Sw Pack - Sleeper W/O RKE W/AUTO REV:Diagram1
LT/RH/LoneStar - X15/A26 - Work Lights LED W/ Sw Pack - Day Cab W/ RKE W/AUTO REV:Diagram1
LT/RH/LoneStar - X15/A26 - Work Lights LED W/ Sw Pack - Day Cab W/O RKE W/AUTO REV:Diagram1
LT/RH/LoneStar - X15/A26 - Work Lights W/ Sw Pack - Customer Supplied W/ RKE W/AUTO REV:Diagram1
LT/RH/LoneStar - X15/A26 - Work Lights W/ Sw Pack - Customer Supplied W/ RKE W/AUTO REV:Diagram2
LT/RH/LoneStar - X15/A26 - Work Lights W/ Sw Pack - Customer Supplied W/O RKE W/AUTO REV:Diagram1
LT/RH/LoneStar - X15/A26 - Work Lights W/ Sw Pack - Customer Supplied W/O RKE W/AUTO REV:Diagram2
LT/RH/LoneStar X15 - Backup Light (Single Reverse Light) Endurant:Diagram1

LT/RH/LoneStar X15 - Backup Light (Single Reverse Light) Endurant:Diagram2
LT/RH/LoneStar X15 - Backup Light (Single Reverse Light) W/ Allison TC10:Diagram1
LT/RH/LoneStar X15 - Backup Light (Single Reverse Light) W/ Allison TC10:Diagram2
LT/RH/LoneStar X15 - Backup Light Endurant:Diagram1
LT/RH/LoneStar X15 - Backup Light Endurant:Diagram2

Mates RLY-REV_ALARM/LT-3009-01-0 1A

Name	Terminal Part Number	V-Min	Name	Wire Part Number	Wire CSA	Wire Spec	Wire Material description	Wire Color Description	Wire Length	End2 Terminal Part Number	End2 Pin Name	End2 Connect or
R1-30	-	-	ER94TV	3510314 R1	3.01	12.0	Thin Wall XLPE Primary Cable	GREY	360.0	-	-	-
R1-30	-	-	FB94TW	3510314 R1	3.01	12.0	Thin Wall XLPE Primary Cable	GREY	360.0	-	-	-
R1-30	-	-	FR94TV2	3510312 R1	1.16	16.0	Thin Wall XLPE Primary Cable	GREY	125.0	-	X	-
R1-30	-	-	HF94TV	3510314 R1	3.01	12.0	Thin Wall XLPE Primary Cable	GREY	360.0	-	-	-
R1-30	-	-	HG94TV	3510314 R1	3.01	12.0	Thin Wall XLPE Primary Cable	GREY	360.0	-	-	-
R1-30	-	-	BK71A	3510318 R1	1.16	16.0	Thin Wall XLPE Primary Cable	ORANGE	1055.0	-	-	-

Name	Terminal Part Number	V-Min	Name	Wire Part Number	Wire CSA	Wire Spec	Wire Material description	Wire Color Description	Wire Length	End2 Terminal Part Number	End2 Pin Name	End2 Connector
R1-30	-	-	GM71BD	3510318 R1	1.16	16.0	Thin Wall XLPE Primary Cable	ORANGE	1055.0	-	-	-
R1-30	-	-	3T71BA	3510318 R1	1.16	16.0	Thin Wall XLPE Primary Cable	ORANGE	1715.0	-	R2-87	1012
R1-30	-	-	BJ71BA	3510318 R1	1.16	16.0	Thin Wall XLPE Primary Cable	ORANGE	1715.0	-	R2-87	1012
R1-85	-	-	JL116L-G	3510358 R1	0.53	20.0	Thin Wall XLPE Primary Cable	WHITE	335.0	-	X	-
R1-85	-	-	JL116U-G	3510358 R1	0.53	20.0	Thin Wall XLPE Primary Cable	WHITE	335.0	-	X	-
R1-85	-	-	YY13-GFF	3510358 R1	0.53	20.0	Thin Wall XLPE Primary Cable	WHITE	780.0	-	-	-
R1-86	-	-	YY13FF	3510323 R1	0.79	18.0	Thin Wall XLPE Primary Cable	PINK	395.0	-	-	-
R1-87	-	-	HF94TT1	3510314 R1	3.01	12.0	Thin Wall XLPE Primary Cable	GREY	315.0	-	X	-

Name	Terminal Part Number	V-Min	Name	Wire Part Number	Wire CSA	Wire Spec	Wire Material description	Wire Color Description	Wire Length	End2 Terminal Part Number	End2 Pin Name	End2 Connector
R1-87	-	-	FR94TA	3510314 R1	3.01	12.0	Thin Wall XLPE Primary Cable	GREY	100.0	-	X	-
R1-87	-	-	FB94TT3	3510314 R1	3.01	12.0	Thin Wall XLPE Primary Cable	GREY	325.0	-	X	-
R1-87	-	-	ER94T	3510314 R1	3.01	12.0	Thin Wall XLPE Primary Cable	GREY	2070.0	-	10	1701
R1-87	-	-	HG94TT1	3510314 R1	3.01	12.0	Thin Wall XLPE Primary Cable	GREY	315.0	-	X	-
R2-30	-	-	BJ71	3510318 R1	1.16	16.0	Thin Wall XLPE Primary Cable	ORANGE	395.0	-	-	-
R2-30	-	-	3T71A	3510318 R1	1.16	16.0	Thin Wall XLPE Primary Cable	ORANGE	65.0	-	X	-
R2-85	-	-	BJ92R2	3510329 R1	0.79	18.0	Thin Wall XLPE Primary Cable	TAN	3040.0	-	66	1703M
R2-85	-	-	3T71B	3510316 R1	0.53	20.0	Thin Wall XLPE Primary Cable	ORANGE	65.0	-	X	-

Name	Terminal Part Number	V-Min	Name	Wire Part Number	Wire CSA	Wire Spec	Wire Material description	Wire Color Description	Wire Length	End2 Terminal Part Number	End2 Pin Name	End2 Connector
R2-86	-	-	BJ92R1	3510329 R1	0.79	18.0	Thin Wall XLPE Primary Cable	TAN	3040.0	-	45	1703M
R2-86	-	-	3T92#16 5A	3510329 R1	0.79	18.0	Thin Wall XLPE Primary Cable	TAN	3040.0	-	45	1703M
R2-87	-	-	BJ71BA	3510318 R1	1.16	16.0	Thin Wall XLPE Primary Cable	ORANGE	1715.0	-	-	-
R2-87	-	-	3T71BA	3510318 R1	1.16	16.0	Thin Wall XLPE Primary Cable	ORANGE	1715.0	-	-	-
R2-87	-	-	BK71A	3510318 R1	1.16	16.0	Thin Wall XLPE Primary Cable	ORANGE	1055.0	-	X	-
R2-87	-	-	GM71BD	3510318 R1	1.16	16.0	Thin Wall XLPE Primary Cable	ORANGE	1055.0	-	X	-
R2-87	-	-	3T71BA	3510318 R1	1.16	16.0	Thin Wall XLPE Primary Cable	ORANGE	1715.0	-	R1-30	1012
R2-87	-	-	BJ71BA	3510318 R1	1.16	16.0	Thin Wall XLPE Primary Cable	ORANGE	1715.0	-	R1-30	1012

Name	Terminal Part Number	V-Min	Name	Wire Part Number	Wire CSA	Wire Spec	Wire Material description	Wire Color Description	Wire Length	End2 Terminal Part Number	End2 Pin Name	End2 Connector
R3-30	-	-	JL116UB	3510311 R1	0.79	18.0	Thin Wall XLPE Primary Cable	GREY	2465.0	-	F16	J5-1602
R3-85	-	-	JL116U-G	3510358 R1	0.53	20.0	Thin Wall XLPE Primary Cable	WHITE	335.0	-	X	-
R3-86	-	-	JL116U	3510310 R1	0.53	20.0	Thin Wall XLPE Primary Cable	GREY	2070.0	-	30	1701
R3-87	-	-	JL116UZ	3510311 R1	0.79	18.0	Thin Wall XLPE Primary Cable	GREY	1165.0	-	X	-
R4-30	-	-	FR94TV1	3510312 R1	1.16	16.0	Thin Wall XLPE Primary Cable	GREY	125.0	-	X	-
R4-30	-	-	CC14SC	3510368 R1	3.01	12.0	Thin Wall XLPE Primary Cable	RED	405.0	-	-	-
R4-85	-	-	FR72-GB3	3510358 R1	0.53	20.0	Thin Wall XLPE Primary Cable	WHITE	705.0	-	X	-
R4-85	-	-	CC72	3510316 R1	0.53	20.0	Thin Wall XLPE Primary Cable	ORANGE	2090.0	-	E11	J4-1601

Name	Terminal Part Number	V-Min	Name	Wire Part Number	Wire CSA	Wire Spec	Wire Material description	Wire Color Description	Wire Length	End2 Terminal Part Number	End2 Pin Name	End2 Connector
R4-86	-	-	FR72EE	3510316 R1	0.53	20.0	Thin Wall XLPE Primary Cable	ORANGE	855.0	-	X	-
R4-86	-	-	CC72-GA	3510358 R1	0.53	20.0	Thin Wall XLPE Primary Cable	WHITE	1415.0	-	-	-
R4-87	-	-	FR94TB	3510314 R1	3.01	12.0	Thin Wall XLPE Primary Cable	GREY	100.0	-	X	-
R4-87	-	-	CC72A	3510320 R1	3.01	12.0	Thin Wall XLPE Primary Cable	ORANGE	2070.0	-	11	1701
R5-30	-	-	BL70J	3510368 R1	3.01	12.0	Thin Wall XLPE Primary Cable	RED	415.0	-	-	-
R5-30	-	-	BL70J	3510368 R1	3.01	12.0	Thin Wall XLPE Primary Cable	RED	415.0	-	R3-30	1013
R5-30	-	-	JA78RP	3510300 R1	1.16	16.0	Thin Wall XLPE Primary Cable	LIGHT GREEN	395.0	-	-	-
R5-30	-	-	DD78RP	3510300 R1	1.16	16.0	Thin Wall XLPE Primary Cable	LIGHT GREEN	395.0	-	-	-

Name	Terminal Part Number	V-Min	Name	Wire Part Number	Wire CSA	Wire Spec	Wire Material description	Wire Color Description	Wire Length	End2 Terminal Part Number	End2 Pin Name	End2 Connector
R5-85	-	-	BL70-GT	3510359 R1	0.79	18.0	Thin Wall XLPE Primary Cable	WHITE	1415.0	-	-	-
R5-85	-	-	BL70-GT	3510359 R1	0.79	18.0	Thin Wall XLPE Primary Cable	WHITE	1415.0	-	R3-85	1013
R5-85	-	-	JA78RC	3510298 R1	0.53	20.0	Thin Wall XLPE Primary Cable	LIGHT GREEN	2090.0	-	F13	J4-1601
R5-85	-	-	DD78RC	3510298 R1	0.53	20.0	Thin Wall XLPE Primary Cable	LIGHT GREEN	2090.0	-	F13	J4-1601
R5-86	-	-	BL70C	3510365 R1	0.79	18.0	Thin Wall XLPE Primary Cable	RED	2090.0	-	F15	J4-1601
R5-86	-	-	JA79-G	3510358 R1	0.53	20.0	Thin Wall XLPE Primary Cable	WHITE	1415.0	-	-	-
R5-86	-	-	DD78-RG	3510358 R1	0.53	20.0	Thin Wall XLPE Primary Cable	WHITE	1415.0	-	-	-
R5-87	-	-	BL70BB	3510368 R1	3.01	12.0	Thin Wall XLPE Primary Cable	RED	1990.0	-	75	1700

Name	Terminal Part Number	V-Min	Name	Wire Part Number	Wire CSA	Wire Spec	Wire Material description	Wire Color Description	Wire Length	End2 Terminal Part Number	End2 Pin Name	End2 Connect or
R5-87	-	-	JA78	3510300 R1	1.16	16.0	Thin Wall XLPE Primary Cable	LIGHT GREEN	1990.0	-	8	1700
R5-87	-	-	DD78	3510300 R1	1.16	16.0	Thin Wall XLPE Primary Cable	LIGHT GREEN	1085.0	-	X	-
R6-30	-	-	JL116LB	3510311 R1	0.79	18.0	Thin Wall XLPE Primary Cable	GREY	2465.0	-	F11	J5-1602
R6-85	-	-	JL116L-G	3510358 R1	0.53	20.0	Thin Wall XLPE Primary Cable	WHITE	335.0	-	X	-
R6-86	-	-	JL116L	3510310 R1	0.53	20.0	Thin Wall XLPE Primary Cable	GREY	2070.0	-	26	1701
R6-87	-	-	JL116LZ	3510311 R1	0.79	18.0	Thin Wall XLPE Primary Cable	GREY	1165.0	-	X	-

Connector Name 1013

Part Number 3768010C1

Instances LoneStar - X15 - Body Builder Lighting - (BOC EOF In Cab) (8HAB 8HAE 8HAU) (Manual):Diagram2
LT/RH - X15/A26 - Skirt Light Customer Supplied:Diagram1
LT/RH/LoneStar - X15/A26 - Air Shield Lighting w/ One Light:Diagram1
LT/RH/LoneStar - X15/A26 - Air Shield Lighting w/ One Light:Diagram2
LT/RH/LoneStar - X15/A26 - Beacon/Strobe Light:Diagram1
LT/RH/LoneStar - X15/A26 - Beacon/Strobe Light:Diagram2
LT/RH/LoneStar - X15/A26 - Cabinet Refrigerator W/ Relay:Diagram1
LT/RH/LoneStar - X15/A26 - Dual Aux Switch:Diagram1-Combination1
LT/RH/LoneStar - X15/A26 - Single Aux Switch:Diagram1
LT/RH/LoneStar - X15/A26 - Single Aux Switch:Diagram2

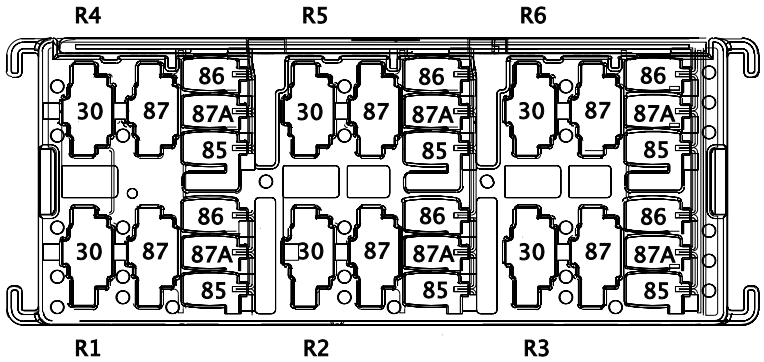

Mates RLY-CUST_ACC_1-2055-01-01A

Name	Terminal Part Number	V-Min	Name	Wire Part Number	Wire CSA	Wire Spec	Wire Material description	Wire Color Description	Wire Length	End2 Terminal Part Number	End2 Pin Name	End2 Connect or
R1 - 30	-	-	CW14FU	3510366 R1	1.16	16.0	Thin Wall XLPE Primary Cable	RED	420.0	-	-	-
R1 - 30	-	-	CX14FU	3510366 R1	1.16	16.0	Thin Wall XLPE Primary Cable	RED	420.0	-	-	-
R1 - 30	-	-	EM14BLT	3510367 R1	1.91	14.0	Thin Wall XLPE Primary Cable	RED	420.0	-	-	-
R1 - 30	-	-	GN14BLT	3510367 R1	1.91	14.0	Thin Wall XLPE Primary Cable	RED	420.0	-	-	-

Name	Terminal Part Number	V-Min	Name	Wire Part Number	Wire CSA	Wire Spec	Wire Material description	Wire Color Description	Wire Length	End2 Terminal Part Number	End2 Pin Name	End2 Connector
R1 - 85	-	-	CX58B	3510304 R1	0.53	20.0	Thin Wall XLPE Primary Cable	BROWN	1700.0	-	-	-
R1 - 85	-	-	CW58B	3510304 R1	0.53	20.0	Thin Wall XLPE Primary Cable	BROWN	1700.0	-	-	-
R1 - 85	-	-	EM13BLT	3510323 R1	0.79	18.0	Thin Wall XLPE Primary Cable	PINK	1070.0	-	4	A02-111 7M
R1 - 85	-	-	GN13BLT	3510323 R1	0.79	18.0	Thin Wall XLPE Primary Cable	PINK	1070.0	-	4	A02-111 7M
R1 - 86	-	-	CX11-GFU	3510358 R1	0.53	20.0	Thin Wall XLPE Primary Cable	WHITE	2550.0	-	-	-
R1 - 86	-	-	CW11-GFU	3510358 R1	0.53	20.0	Thin Wall XLPE Primary Cable	WHITE	2550.0	-	-	-
R1 - 86	-	-	GN13-GBM	2643764 R1	0.53	20.0	Std. Wall XLPE Primary Cable	WHITE	1330.0	-	X	-
R1 - 86	-	-	EM13-GBM	2643764 R1	0.53	20.0	Std. Wall XLPE Primary Cable	WHITE	1330.0	-	X	-

Name	Terminal Part Number	V-Min	Name	Wire Part Number	Wire CSA	Wire Spec	Wire Material description	Wire Color Description	Wire Length	End2 Terminal Part Number	End2 Pin Name	End2 Connector
R1 - 87	-	-	CW58C	3510306 R1	1.16	16.0	Thin Wall XLPE Primary Cable	BROWN	4190.0	-	A	1906
R1 - 87	-	-	CX58C	3510306 R1	1.16	16.0	Thin Wall XLPE Primary Cable	BROWN	3560.0	-	19	5000A
R1 - 87	-	-	GN58BLT	3510306 R1	1.16	16.0	Thin Wall XLPE Primary Cable	BROWN	4190.0	-	A	5118
R1 - 87	-	-	EM58BLT	3510307 R1	1.91	14.0	Thin Wall XLPE Primary Cable	BROWN	3560.0	-	19	5000A
R2-30	-	-	CE14SAC	3510368 R1	3.01	12.0	Thin Wall XLPE Primary Cable	RED	430.0	-	-	-
R2-30	-	-	CD14SAC	3510368 R1	3.01	12.0	Thin Wall XLPE Primary Cable	RED	430.0	-	-	-
R2-85	-	-	CE14SAB	3510365 R1	0.79	18.0	Thin Wall XLPE Primary Cable	RED	1055.0	-	4	A02-1112M
R2-85	-	-	CE14SAB	3510365 R1	0.79	18.0	Thin Wall XLPE Primary Cable	RED	1055.0	-	-	-

Name	Terminal Part Number	V-Min	Name	Wire Part Number	Wire CSA	Wire Spec	Wire Material description	Wire Color Description	Wire Length	End2 Terminal Part Number	End2 Pin Name	End2 Connector
R2-85	-	-	CD14SAB	3510365 R1	0.79	18.0	Thin Wall XLPE Primary Cable	RED	1055.0	-	4	A02-1112M
R2-86	-	-	CE14-GSB	3510358 R1	0.53	20.0	Thin Wall XLPE Primary Cable	WHITE	670.0	-	X	-
R2-86	-	-	CD14-GSB	3510358 R1	0.53	20.0	Thin Wall XLPE Primary Cable	WHITE	670.0	-	X	-
R2-87	-	-	GH14SAF	3510343 R1	1.91	14.0	Thin Wall XLPE Primary Cable	LIGHT BLUE	3560.0	-	30	5000A
R2-87	-	-	GD14SAH	3510343 R1	1.91	14.0	Thin Wall XLPE Primary Cable	LIGHT BLUE	3560.0	-	30	5000A
R2-87	-	-	GF14SAD	3510302 R1	3.01	12.0	Thin Wall XLPE Primary Cable	LIGHT GREEN	245.0	-	A	A02-1940
R2-87	-	-	GB14SAG	3510302 R1	3.01	12.0	Thin Wall XLPE Primary Cable	LIGHT GREEN	245.0	-	A	A02-1940
R3-30	-	-	BL70J	3510368 R1	3.01	12.0	Thin Wall XLPE Primary Cable	RED	415.0	-	R5-30	1012

Name	Terminal Part Number	V-Min	Name	Wire Part Number	Wire CSA	Wire Spec	Wire Material description	Wire Color Description	Wire Length	End2 Terminal Part Number	End2 Pin Name	End2 Connect or
R3-85	-	-	BL70-GT	3510359 R1	0.79	18.0	Thin Wall XLPE Primary Cable	WHITE	1415.0	-	R5-85	1012
R3-86	-	-	BL70C	3510365 R1	0.79	18.0	Thin Wall XLPE Primary Cable	RED	2090.0	-	-	-
R3-87	-	-	BL70BB	3510368 R1	3.01	12.0	Thin Wall XLPE Primary Cable	RED	1990.0	-	-	-
R4-30	-	-	DY54XV	3510306 R1	1.16	16.0	Thin Wall XLPE Primary Cable	BROWN	420.0	-	-	-
R4-85	-	-	DY54-GXB	3510358 R1	0.53	20.0	Thin Wall XLPE Primary Cable	WHITE	2470.0	-	X	-
R4-86	-	-	DY54XD	3510304 R1	0.53	20.0	Thin Wall XLPE Primary Cable	BROWN	2105.0	-	F16	J4-1601
R4-87	-	-	DY54XB	3510306 R1	1.16	16.0	Thin Wall XLPE Primary Cable	BROWN	100.0	-	X	-
R5-30	-	-	CE14SBC	3510368 R1	3.01	12.0	Thin Wall XLPE Primary Cable	RED	430.0	-	-	-

Name	Terminal Part Number	V-Min	Name	Wire Part Number	Wire CSA	Wire Spec	Wire Material description	Wire Color Description	Wire Length	End2 Terminal Part Number	End2 Pin Name	End2 Connect or
R5-85	-	-	CE14SBB	3510365 R1	0.79	18.0	Thin Wall XLPE Primary Cable	RED	1055.0	-	4	A02-111 3M
R5-86	-	-	CE14-GSD	3510358 R1	0.53	20.0	Thin Wall XLPE Primary Cable	WHITE	670.0	-	X	-
R5-87	-	-	CE14SBD	3510302 R1	3.01	12.0	Thin Wall XLPE Primary Cable	LIGHT GREEN	320.0	-	A	A02-1941

Connector Name 1014

Part Number 3768010C1

Instances LT/RH - A26 - Auto Neutral (Allison with Multiplex Switch and Confirmation Telltale):Diagram1
LT/RH - A26 - Starter Interlock (BCM LSD Controlled w/ Relay)_EATON XMSN:Diagram1
LT/RH - A26 - Starter Interlocks (Service Brake Interlock):Diagram1
LT/RH/LoneStar - X15 - Starter Interlock (BCM LSD Controlled w/ Relay)_EATON XMSN:Diagram1
LT/RH/LoneStar - X15 - Starter Interlocks (Service Brake Interlock):Diagram1
LT/RH/LoneStar - X15/A26 - Telematics (TRIPMASTER DAYCAB):Diagram1
LT/RH/LoneStar - X15/A26 - Telematics (TRIPMASTER SLEEPER):Diagram1
Relays - Grid Management (N/Load Shed Day Cab):Diagram1
Relays - Grid Management (W/Load Shed Day Cab):Diagram1
Relays - Grid Management (W/Load Shed Sleeper Cab):Diagram1

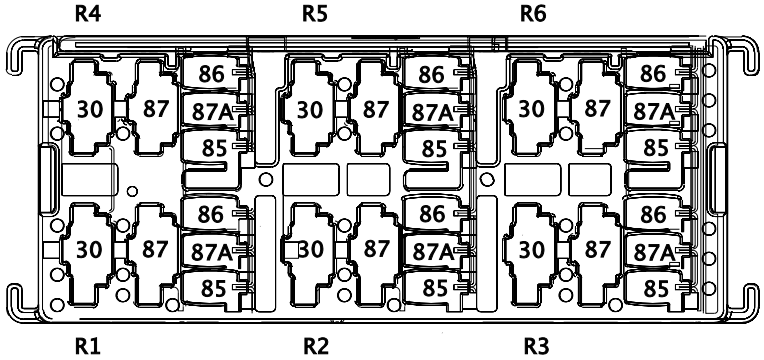

Name	Terminal Part Number	V-Min	Name	Wire Part Number	Wire CSA	Wire Spec	Wire Material description	Wire Color Description	Wire Length	End2 Terminal Part Number	End2 Pin Name	End2 Connect or
R1-30	-	-	CF50S	3510335 R1	0.79	18.0	Thin Wall XLPE Primary Cable	YELLOW 2	4605.0	-	A	A02-2TB2
R1-30	-	-	CG50S	3510335 R1	0.79	18.0	Thin Wall XLPE Primary Cable	YELLOW 2	4255.0	-	K	1970
R1-85	-	-	BB53AC	3510335 R1	0.79	18.0	Thin Wall XLPE Primary Cable	YELLOW 2	1815.0	-	X	-
R1-86	-	-	CF53-G	3510358 R1	0.53	20.0	Thin Wall XLPE Primary Cable	WHITE	2270.0	-	X	-

Name	Terminal Part Number	V-Min	Name	Wire Part Number	Wire CSA	Wire Spec	Wire Material description	Wire Color Description	Wire Length	End2 Terminal Part Number	End2 Pin Name	End2 Connector
R1-86	-	-	CG53-G	3510358 R1	0.53	20.0	Thin Wall XLPE Primary Cable	WHITE	1955.0	-	-	-
R1-87	-	-	BB53AB	3510334 R1	0.53	20.0	Thin Wall XLPE Primary Cable	YELLOW 2	1815.0	-	X	-
R1-87A	-	-	BB52AB	3510335 R1	0.79	18.0	Thin Wall XLPE Primary Cable	YELLOW 2	1845.0	-	X	-
R2-30	-	-	AZ14A	3510365 R1	0.79	18.0	Thin Wall XLPE Primary Cable	RED	390.0	-	-	-
R2-85	-	-	AZ92B	3510329 R1	0.79	18.0	Thin Wall XLPE Primary Cable	TAN	3070.0	-	28	1703M
R2-86	-	-	AZ92-GC	3510358 R1	0.53	20.0	Thin Wall XLPE Primary Cable	WHITE	3070.0	-	21	1703M
R2-87	-	-	AZ17B	3510323 R1	0.79	18.0	Thin Wall XLPE Primary Cable	PINK	2635.0	-	M	J6-1606
R4-30	-	-	AL14AS	3510369 R1	4.81	10.0	Thin Wall XLPE Primary Cable	RED	225.0	-	X	-

Name	Terminal Part Number	V-Min	Name	Wire Part Number	Wire CSA	Wire Spec	Wire Material description	Wire Color Description	Wire Length	End2 Terminal Part Number	End2 Pin Name	End2 Connect or
R4-85	-	-	6K166BB	3510298 R1	0.53	20.0	Thin Wall XLPE Primary Cable	LIGHT GREEN	305.0	-	X	-
R4-86	-	-	6K9LCC	3510310 R1	0.53	20.0	Thin Wall XLPE Primary Cable	GREY	335.0	-	X	-
R4-87	-	-	YY13N	3510326 R1	3.01	12.0	Thin Wall XLPE Primary Cable	PINK	445.0	-	-	-
R5-30	-	-	MD92#117	3510329 R1	0.79	18.0	Thin Wall XLPE Primary Cable	TAN	3070.0	-	31	1703M
R5-85	-	-	MD92-GD	3510359 R1	0.79	18.0	Thin Wall XLPE Primary Cable	WHITE	1955.0	-	-	-
R5-86	-	-	MD92A	3510329 R1	0.79	18.0	Thin Wall XLPE Primary Cable	TAN	2120.0	-	E16	J4-1601
R5-87	-	-	MD92#103	3510329 R1	0.79	18.0	Thin Wall XLPE Primary Cable	TAN	3070.0	-	30	1703M

Connector Name 1015
Part Number 3768015C1
Instances Key Switch Ignition:Diagram1
Mates PDB

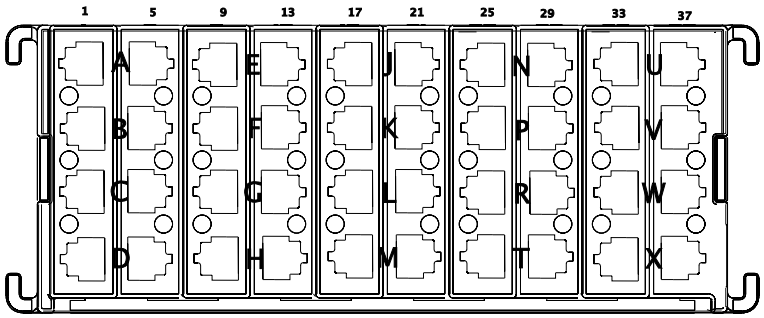

Name	Terminal Part Number	V-Min	Name	Wire Part Number	Wire CSA	Wire Spec	Wire Material description	Wire Color Description	Wire Length	End2 Terminal Part Number	End2 Pin Name	End2 Connect or
2	-	-	YY13PA	3510326 R1	3.01	12.0	Thin Wall XLPE Primary Cable	PINK	240.0	-	X	-
5	-	-	CT13EE	3510323 R1	0.79	18.0	Thin Wall XLPE Primary Cable	PINK	3580.0	-	-	-
5	-	-	KC13EE	3510324 R1	1.16	16.0	Thin Wall XLPE Primary Cable	PINK	835.0	-	-	-
5	-	-	CK13EE	3510323 R1	0.79	18.0	Thin Wall XLPE Primary Cable	PINK	3580.0	-	-	-

Name	Terminal Part Number	V-Min	Name	Wire Part Number	Wire CSA	Wire Spec	Wire Material description	Wire Color Description	Wire Length	End2 Terminal Part Number	End2 Pin Name	End2 Connector
5	-	-	MB13EE	3510324 R1	1.16	16.0	Thin Wall XLPE Primary Cable	PINK	4510.0	-	-	-
5	-	-	CP13EE	3510323 R1	0.79	18.0	Thin Wall XLPE Primary Cable	PINK	4310.0	-	-	-
5	-	-	KL13B	3510323 R1	0.79	18.0	Thin Wall XLPE Primary Cable	PINK	4310.0	-	-	-
5	-	-	PH13EE	3510323 R1	0.79	18.0	Thin Wall XLPE Primary Cable	PINK	4310.0	-	-	-
5	-	-	CF13SD1	3510323 R1	0.79	18.0	Thin Wall XLPE Primary Cable	PINK	535.0	-	X	-
5	-	-	CG13SD1	3510323 R1	0.79	18.0	Thin Wall XLPE Primary Cable	PINK	535.0	-	X	-
6	-	-	AA87C	3510311 R1	0.79	18.0	Thin Wall XLPE Primary Cable	GREY	2075.0	-	-	-
7	-	-	YY13FF	3510323 R1	0.79	18.0	Thin Wall XLPE Primary Cable	PINK	395.0	-	-	-

Name	Terminal Part Number	V-Min	Name	Wire Part Number	Wire CSA	Wire Spec	Wire Material description	Wire Color Description	Wire Length	End2 Terminal Part Number	End2 Pin Name	End2 Connect or
8	-	-	CP98F	3510328 R1	0.53	20.0	Thin Wall XLPE Primary Cable	TAN	1640.0	-	-	-
8	-	-	CT98F	3510328 R1	0.53	20.0	Thin Wall XLPE Primary Cable	TAN	1640.0	-	-	-
8	-	-	MB98F	3510328 R1	0.53	20.0	Thin Wall XLPE Primary Cable	TAN	1640.0	-	-	-
8	-	-	MJ98F	3510328 R1	0.53	20.0	Thin Wall XLPE Primary Cable	TAN	1640.0	-	-	-
10	-	-	YY13PB	3510326 R1	3.01	12.0	Thin Wall XLPE Primary Cable	PINK	240.0	-	X	-
13	-	-	LM971G	3510322 R1	0.53	20.0	Thin Wall XLPE Primary Cable	PINK	1330.0	-	-	-
14	-	-	HC105	3510299 R1	0.79	18.0	Thin Wall XLPE Primary Cable	LIGHT GREEN	3950.0	-	-	-
15	-	-	BJ71	3510318 R1	1.16	16.0	Thin Wall XLPE Primary Cable	ORANGE	395.0	-	-	-

Name	Terminal Part Number	V-Min	Name	Wire Part Number	Wire CSA	Wire Spec	Wire Material description	Wire Color Description	Wire Length	End2 Terminal Part Number	End2 Pin Name	End2 Connector
15	-	-	3T71	3510318 R1	1.16	16.0	Thin Wall XLPE Primary Cable	ORANGE	330.0	-	-	-
15	-	-	GM71	3510318 R1	1.16	16.0	Thin Wall XLPE Primary Cable	ORANGE	330.0	-	-	-
15	-	-	BP71AA	3510318 R1	1.16	16.0	Thin Wall XLPE Primary Cable	ORANGE	3125.0	-	-	-
16	-	-	AA13D	3510323 R1	0.79	18.0	Thin Wall XLPE Primary Cable	PINK	2050.0	-	-	-
18	-	-	YY13PC	3510326 R1	3.01	12.0	Thin Wall XLPE Primary Cable	PINK	240.0	-	X	-
21	-	-	RW22AA	3510324 R1	1.16	16.0	Thin Wall XLPE Primary Cable	PINK	2075.0	-	-	-
22	-	-	DD78RP	3510300 R1	1.16	16.0	Thin Wall XLPE Primary Cable	LIGHT GREEN	395.0	-	-	-
22	-	-	JA78RP	3510300 R1	1.16	16.0	Thin Wall XLPE Primary Cable	LIGHT GREEN	395.0	-	-	-

Name	Terminal Part Number	V-Min	Name	Wire Part Number	Wire CSA	Wire Spec	Wire Material description	Wire Color Description	Wire Length	End2 Terminal Part Number	End2 Pin Name	End2 Connector
23	-	-	AA13EA	3510323 R1	0.79	18.0	Thin Wall XLPE Primary Cable	PINK	1640.0	-	-	-
24	-	-	AZ13A	2643752 R1	1.16	16.0	Std. Wall XLPE Primary Cable	PINK	3125.0	-	-	-
24	-	-	GY92#16 3A	3510324 R1	1.16	16.0	Thin Wall XLPE Primary Cable	PINK	3125.0	-	-	-
26	-	-	YY13PD	3510326 R1	3.01	12.0	Thin Wall XLPE Primary Cable	PINK	240.0	-	X	-
29	-	-	YC67A	3510323 R1	0.79	18.0	Thin Wall XLPE Primary Cable	PINK	2075.0	-	-	-
30	-	-	RT39A	3510312 R1	1.16	16.0	Thin Wall XLPE Primary Cable	GREY	2155.0	-	-	-
31	-	-	JL116M	3510311 R1	0.79	18.0	Thin Wall XLPE Primary Cable	GREY	2155.0	-	-	-
32	-	-	EH97F	3510348 R1	1.16	16.0	Thin Wall XLPE Primary Cable	VIOLET	3125.0	-	-	-

Name	Terminal Part Number	V-Min	Name	Wire Part Number	Wire CSA	Wire Spec	Wire Material description	Wire Color Description	Wire Length	End2 Terminal Part Number	End2 Pin Name	End2 Connector
34	-	-	YY13PE	3510326 R1	3.01	12.0	Thin Wall XLPE Primary Cable	PINK	240.0	-	X	-
37	-	-	3A94V	2643782 R1	1.91	14.0	Std. Wall XLPE Primary Cable	GREY	2935.0	-	-	-
37	-	-	GS94V	2643782 R1	1.91	14.0	Std. Wall XLPE Primary Cable	GREY	2935.0	-	-	-
37	-	-	XY94V	3510311 R1	0.79	18.0	Thin Wall XLPE Primary Cable	GREY	2820.0	-	-	-
38	-	-	RT39	3510312 R1	1.16	16.0	Thin Wall XLPE Primary Cable	GREY	2155.0	-	-	-
39	-	-	YD67TA	3510323 R1	0.79	18.0	Thin Wall XLPE Primary Cable	PINK	2155.0	-	-	-
40	-	-	2V13COG2	3510324 R1	1.16	16.0	Thin Wall XLPE Primary Cable	PINK	820.0	-	-	-
40	-	-	RV13COG2	3510324 R1	1.16	16.0	Thin Wall XLPE Primary Cable	PINK	820.0	-	-	-

Name	Terminal Part Number	V-Min	Name	Wire Part Number	Wire CSA	Wire Spec	Wire Material description	Wire Color Description	Wire Length	End2 Terminal Part Number	End2 Pin Name	End2 Connector
40	-	-	YH13AC	3510324 R1	1.16	16.0	Thin Wall XLPE Primary Cable	PINK	2135.0	-	-	-
40	-	-	SG13COG	3510324 R1	1.16	16.0	Thin Wall XLPE Primary Cable	PINK	2135.0	-	-	-
40	-	-	CS67A	3510324 R1	1.16	16.0	Thin Wall XLPE Primary Cable	PINK	290.0	-	-	-

Connector Name 1016

Part Number 4100070C1

Instances Relays - Grid Management (N/Load Shed Day Cab):Diagram1
Relays - Grid Management (W/Load Shed Day Cab):Diagram1
Relays - Grid Management (W/Load Shed Sleeper Cab):Diagram1

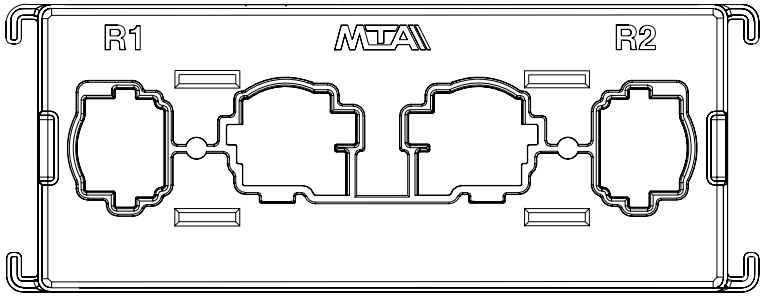

Name	Terminal Part Number	V-Min	Name	Wire Part Number	Wire CSA	Wire Spec	Wire Material description	Wire Color Description	Wire Length	End2 Terminal Part Number	End2 Pin Name	End2 Connector
R1-30	-	-	AL14K	3525611 R1	7.48	8.0	Thin Wall XLPE Primary Cable	RED	395.0	-	X	-
R1-85	-	-	AH166AA	3510298 R1	0.53	20.0	Thin Wall XLPE Primary Cable	LIGHT GREEN	2710.0	-	W	J6-1606
R1-85	-	-	AG166BAA	3510298 R1	0.53	20.0	Thin Wall XLPE Primary Cable	LIGHT GREEN	2165.0	-	X	-
R1-86	-	-	AH166A	3510298 R1	0.53	20.0	Thin Wall XLPE Primary Cable	LIGHT GREEN	2710.0	-	J	J6-1606

Name	Terminal Part Number	V-Min	Name	Wire Part Number	Wire CSA	Wire Spec	Wire Material description	Wire Color Description	Wire Length	End2 Terminal Part Number	End2 Pin Name	End2 Connect or
R1-86	-	-	AG166AA	3510298 R1	0.53	20.0	Thin Wall XLPE Primary Cable	LIGHT GREEN	2580.0	-	X	-
R1-87	-	-	AL14KA	3525611 R1	7.48	8.0	Thin Wall XLPE Primary Cable	RED	415.0	-	-	-
R2-30	-	-	AL14G	3525611 R1	7.48	8.0	Thin Wall XLPE Primary Cable	RED	300.0	-	X	-
R2-85	-	-	6K166BA	3510298 R1	0.53	20.0	Thin Wall XLPE Primary Cable	LIGHT GREEN	380.0	-	X	-
R2-86	-	-	AA166-G	3510310 R1	0.53	20.0	Thin Wall XLPE Primary Cable	GREY	1370.0	-	-	-
R2-87	-	-	YY13P	2643795 R1	7.48	8.0	Std. Wall XLPE Primary Cable	PINK	110.0	-	-	-

Connector Name	1017
Part Number	3768015C1
Instances	Battery Feed:Diagram1 Key Switch Accessory:Diagram1 LT/RH/LoneStar - X15/A26 - Mobile Communications Sensor Wiring Effects for Trailer TRAC:Diagram1 LT/RH/LoneStar - X15/A26 - Mobile Communications Sensor Wiring Effects for Trailer TRAC:Diagram2 LT/RH/LoneStar - X15/A26 - No Idle HVAC - TRI-PAC Prewire:Diagram1 LT/RH/LoneStar - X15/A26 - Special Power Distribution:Diagram1
Mates	PDB

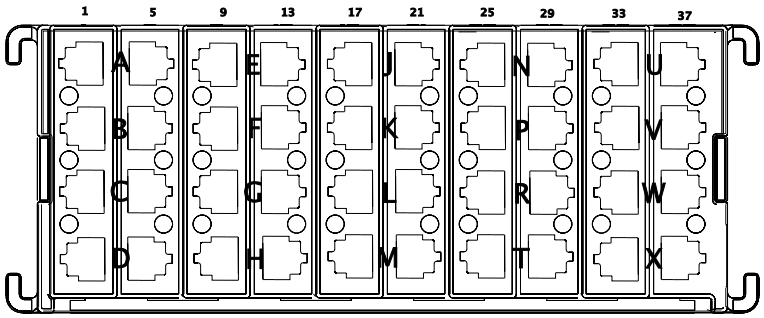

Name	Terminal Part Number	V-Min	Name	Wire Part Number	Wire CSA	Wire Spec	Wire Material description	Wire Color Description	Wire Length	End2 Terminal Part Number	End2 Pin Name	End2 Connector
2	-	-	NJ14S	3510365 R1	0.79	18.0	Thin Wall XLPE Primary Cable	RED	95.0	-	X	-
3	-	-	HF94TT2	3510311 R1	0.79	18.0	Thin Wall XLPE Primary Cable	GREY	260.0	-	-	-
3	-	-	HG94TT2	3510311 R1	0.79	18.0	Thin Wall XLPE Primary Cable	GREY	260.0	-	-	-
3	-	-	HF94TT2	3510311 R1	0.79	18.0	Thin Wall XLPE Primary Cable	GREY	260.0	-	X	-

Name	Terminal Part Number	V-Min	Name	Wire Part Number	Wire CSA	Wire Spec	Wire Material description	Wire Color Description	Wire Length	End2 Terminal Part Number	End2 Pin Name	End2 Connector
3	-	-	HG94TT2	3510311 R1	0.79	18.0	Thin Wall XLPE Primary Cable	GREY	260.0	-	X	-
4	-	-	DK14TRIA	3510366 R1	1.16	16.0	Thin Wall XLPE Primary Cable	RED	1062.0	-	1	A02-1116M
4	-	-	DK14TRIA	3510366 R1	1.16	16.0	Thin Wall XLPE Primary Cable	RED	1062.0	-	-	-
6	-	-	NJ14KBB	3510365 R1	0.79	18.0	Thin Wall XLPE Primary Cable	RED	2780.0	-	-	-
7	-	-	HG94TT	3510311 R1	0.79	18.0	Thin Wall XLPE Primary Cable	GREY	4370.0	-	-	-
7	-	-	HF94TT	3510311 R1	0.79	18.0	Thin Wall XLPE Primary Cable	GREY	3420.0	-	-	-
7	-	-	HF94TT	3510311 R1	0.79	18.0	Thin Wall XLPE Primary Cable	GREY	3420.0	-	A	5758F
7	-	-	HG94TT	3510311 R1	0.79	18.0	Thin Wall XLPE Primary Cable	GREY	4370.0	-	A	A02-5759F

Name	Terminal Part Number	V-Min	Name	Wire Part Number	Wire CSA	Wire Spec	Wire Material description	Wire Color Description	Wire Length	End2 Terminal Part Number	End2 Pin Name	End2 Connect or
8	-	-	DK14TRI	2643760 R1	1.16	16.0	Std. Wall XLPE Primary Cable	RED	3485.0	-	A	5754
8	-	-	DK14TRI	2643760 R1	1.16	16.0	Std. Wall XLPE Primary Cable	RED	3485.0	-	-	-
10	-	-	AL14KAA	3510368 R1	3.01	12.0	Thin Wall XLPE Primary Cable	RED	95.0	-	X	-
13	-	-	RF14AA	3510322 R1	0.53	20.0	Thin Wall XLPE Primary Cable	PINK	1740.0	-	-	-
13	-	-	4Z14A	3510365 R1	0.79	18.0	Thin Wall XLPE Primary Cable	RED	0.0	-	-	-
14	-	-	AD86C	3510301 R1	1.91	14.0	Thin Wall XLPE Primary Cable	LIGHT GREEN	1050.0	-	-	-
15	-	-	AA63BD	3510311 R1	0.79	18.0	Thin Wall XLPE Primary Cable	GREY	1965.0	-	-	-
16	-	-	BC63JK	3510353 R1	0.79	18.0	Thin Wall XLPE Primary Cable	DARK BLUE	200.0	-	-	-

Name	Terminal Part Number	V-Min	Name	Wire Part Number	Wire CSA	Wire Spec	Wire Material description	Wire Color Description	Wire Length	End2 Terminal Part Number	End2 Pin Name	End2 Connector
17	-	-	AL14KAB	3510368 R1	3.01	12.0	Thin Wall XLPE Primary Cable	RED	95.0	-	X	-
18	-	-	AL14KAC	3510368 R1	3.01	12.0	Thin Wall XLPE Primary Cable	RED	95.0	-	X	-
19	-	-	AL14KAD	3510368 R1	3.01	12.0	Thin Wall XLPE Primary Cable	RED	95.0	-	X	-
20	-	-	AL14KAE	3510368 R1	3.01	12.0	Thin Wall XLPE Primary Cable	RED	95.0	-	X	-
21	-	-	DR19V	3510313 R1	1.91	14.0	Thin Wall XLPE Primary Cable	GREY	315.0	-	-	-
22	-	-	CC14SC	3510368 R1	3.01	12.0	Thin Wall XLPE Primary Cable	RED	405.0	-	-	-
23	-	-	CB84B	3510301 R1	1.91	14.0	Thin Wall XLPE Primary Cable	LIGHT GREEN	100.0	-	-	-
23	-	-	CL84	3510301 R1	1.91	14.0	Thin Wall XLPE Primary Cable	LIGHT GREEN	100.0	-	-	-

Name	Terminal Part Number	V-Min	Name	Wire Part Number	Wire CSA	Wire Spec	Wire Material description	Wire Color Description	Wire Length	End2 Terminal Part Number	End2 Pin Name	End2 Connector
23	-	-	CA84	3510301 R1	1.91	14.0	Thin Wall XLPE Primary Cable	LIGHT GREEN	1150.0	-	-	-
24	-	-	CX14FU	3510366 R1	1.16	16.0	Thin Wall XLPE Primary Cable	RED	420.0	-	-	-
24	-	-	EM14BLT	3510367 R1	1.91	14.0	Thin Wall XLPE Primary Cable	RED	420.0	-	-	-
24	-	-	CW14FU	3510366 R1	1.16	16.0	Thin Wall XLPE Primary Cable	RED	420.0	-	-	-
24	-	-	GN14BLT	3510367 R1	1.91	14.0	Thin Wall XLPE Primary Cable	RED	420.0	-	-	-
26	-	-	AB12MA	3510344 R1	3.01	12.0	Thin Wall XLPE Primary Cable	LIGHT BLUE	215.0	-	X	-
29	-	-	4Z12A	3510341 R1	0.79	18.0	Thin Wall XLPE Primary Cable	LIGHT BLUE	0.0	-	-	-
31	-	-	DY54XV	3510306 R1	1.16	16.0	Thin Wall XLPE Primary Cable	BROWN	420.0	-	-	-

Name	Terminal Part Number	V-Min	Name	Wire Part Number	Wire CSA	Wire Spec	Wire Material description	Wire Color Description	Wire Length	End2 Terminal Part Number	End2 Pin Name	End2 Connect or
32	-	-	EM13BL1	3510322 R1	0.53	20.0	Thin Wall XLPE Primary Cable	PINK	1000.0	-	-	-
32	-	-	GN13BL1	3510322 R1	0.53	20.0	Thin Wall XLPE Primary Cable	PINK	1000.0	-	-	-
34	-	-	AB12MB	3510344 R1	3.01	12.0	Thin Wall XLPE Primary Cable	LIGHT BLUE	215.0	-	X	-
38	-	-	MR86F	3510299 R1	0.79	18.0	Thin Wall XLPE Primary Cable	LIGHT GREEN	1965.0	-	-	-
39	-	-	BH12A	3510341 R1	0.79	18.0	Thin Wall XLPE Primary Cable	LIGHT BLUE	1840.0	-	-	-
39	-	-	RC12B	3510340 R1	0.53	20.0	Thin Wall XLPE Primary Cable	LIGHT BLUE	1740.0	-	-	-
40	-	-	MR86AE	3510299 R1	0.79	18.0	Thin Wall XLPE Primary Cable	LIGHT GREEN	1750.0	-	-	-
40	-	-	MZ86R	3510298 R1	0.53	20.0	Thin Wall XLPE Primary Cable	LIGHT GREEN	3440.0	-	-	-
40	-	-	NL86AH	3510299 R1	0.79	18.0	Thin Wall XLPE Primary Cable	LIGHT GREEN	1290.0	-	-	-

Connector Name	1018
Part Number	3768015C1
Instances	Battery Feed:Diagram1 Key Switch Ignition:Diagram1
Mates	PDB

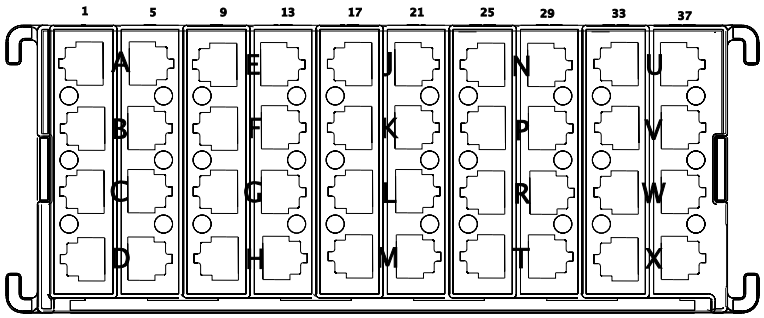

Name	Terminal Part Number	V-Min	Name	Wire Part Number	Wire CSA	Wire Spec	Wire Material description	Wire Color Description	Wire Length	End2 Terminal Part Number	End2 Pin Name	End2 Connector
3	-	-	AL14AC	3510368 R1	3.01	12.0	Thin Wall XLPE Primary Cable	RED	135.0	-	X	-
4	-	-	AL14AD	3510368 R1	3.01	12.0	Thin Wall XLPE Primary Cable	RED	135.0	-	X	-
7	-	-	ZJ98P	3510365 R1	0.79	18.0	Thin Wall XLPE Primary Cable	RED	1820.0	-	-	-
7	-	-	4Z13A	3510323 R1	0.79	18.0	Thin Wall XLPE Primary Cable	PINK	0.0	-	-	-

Name	Terminal Part Number	V-Min	Name	Wire Part Number	Wire CSA	Wire Spec	Wire Material description	Wire Color Description	Wire Length	End2 Terminal Part Number	End2 Pin Name	End2 Connector
8	-	-	4A74RA	3510302 R1	3.01	12.0	Thin Wall XLPE Primary Cable	LIGHT GREEN	630.0	-	-	-
11	-	-	AL14AE	3510368 R1	3.01	12.0	Thin Wall XLPE Primary Cable	RED	135.0	-	X	-
12	-	-	AL14AF	3510368 R1	3.01	12.0	Thin Wall XLPE Primary Cable	RED	135.0	-	X	-
15	-	-	CD14SAC	3510368 R1	3.01	12.0	Thin Wall XLPE Primary Cable	RED	430.0	-	-	-
15	-	-	CE14SAC	3510368 R1	3.01	12.0	Thin Wall XLPE Primary Cable	RED	430.0	-	-	-
16	-	-	CE14SBC	3510368 R1	3.01	12.0	Thin Wall XLPE Primary Cable	RED	430.0	-	-	-
18	-	-	AL14AB	3510368 R1	3.01	12.0	Thin Wall XLPE Primary Cable	RED	135.0	-	X	-
21	-	-	AA73C	3510298 R1	0.53	20.0	Thin Wall XLPE Primary Cable	LIGHT GREEN	2525.0	-	-	-

Name	Terminal Part Number	V-Min	Name	Wire Part Number	Wire CSA	Wire Spec	Wire Material description	Wire Color Description	Wire Length	End2 Terminal Part Number	End2 Pin Name	End2 Connector
22	-	-	CE14S	3510365 R1	0.79	18.0	Thin Wall XLPE Primary Cable	RED	930.0	-	-	-
22	-	-	CD14SA	3510364 R1	0.53	20.0	Thin Wall XLPE Primary Cable	RED	1145.0	-	-	-
22	-	-	BL70J	3510368 R1	3.01	12.0	Thin Wall XLPE Primary Cable	RED	415.0	-	-	-
23	-	-	FR72E	3510317 R1	0.79	18.0	Thin Wall XLPE Primary Cable	ORANGE	2095.0	-	-	-
24	-	-	DW14Z	3510366 R1	1.16	16.0	Thin Wall XLPE Primary Cable	RED	1475.0	-	-	-
26	-	-	YY13PF	3510326 R1	3.01	12.0	Thin Wall XLPE Primary Cable	PINK	260.0	-	X	-
29	-	-	5E13AB	3510323 R1	0.79	18.0	Thin Wall XLPE Primary Cable	PINK	785.0	-	-	-
30	-	-	3F13AA	3510323 R1	0.79	18.0	Thin Wall XLPE Primary Cable	PINK	2175.0	-	-	-
31	-	-	6D13E	3510324 R1	1.16	16.0	Thin Wall XLPE Primary Cable	PINK	3145.0	-	-	-

Connector Name 1018
Part Number 3768015C1
Instances Key Switch Ignition:Diagram1
Mates Fuse 5A B9-V

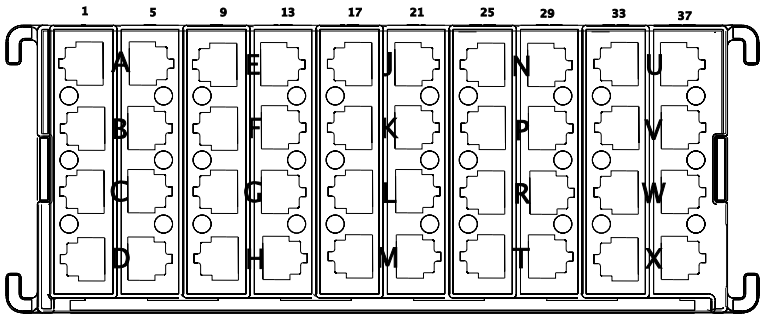

Name	Terminal Part Number	V-Min	Name	Wire Part Number	Wire CSA	Wire Spec	Wire Material description	Wire Color Description	Wire Length	End2 Terminal Part Number	End2 Pin Name	End2 Connector
34	-	-	YY13N	3510326 R1	3.01	12.0	Thin Wall XLPE Primary Cable	PINK	445.0	-	-	-
37	-	-	DW13Z	3510324 R1	1.16	16.0	Thin Wall XLPE Primary Cable	PINK	1475.0	-	-	-
38	-	-	CA13UA	3510322 R1	0.53	20.0	Thin Wall XLPE Primary Cable	PINK	1310.0	-	-	-
38	-	-	CL13U	3510323 R1	0.79	18.0	Thin Wall XLPE Primary Cable	PINK	225.0	-	-	-

Name	Terminal Part Number	V-Min	Name	Wire Part Number	Wire CSA	Wire Spec	Wire Material description	Wire Color Description	Wire Length	End2 Terminal Part Number	End2 Pin Name	End2 Connector
38	-	-	CB13U	3510323 R1	0.79	18.0	Thin Wall XLPE Primary Cable	PINK	225.0	-	-	-
39	-	-	DK13TRIB	2643752 R1	1.16	16.0	Std. Wall XLPE Primary Cable	PINK	1085.0	-	-	-
40	-	-	3S13UC	3510322 R1	0.53	20.0	Thin Wall XLPE Primary Cable	PINK	1210.0	-	-	-

Connector Name	102B
Part Number	3756780C1
Short Description	INVERTER INTERCONNECT
Instances	LT/RH/LoneStar - X15/A26 - DC/AC Inverter (1200W W/switch control):Diagram1 LT/RH/LoneStar - X15/A26 - DC/AC Inverter (1800W):Diagram1
Mates	102B

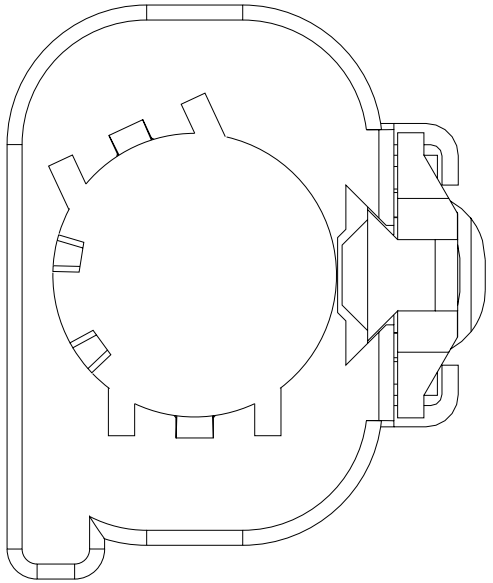

Name	Terminal Part Number	V-Min	Name	Wire Part Number	Wire CSA	Wire Spec	Wire Material description	Wire Color Description	Wire Length	End2 Terminal Part Number	End2 Pin Name	End2 Connect or
1	-	-	N10G	2643789 R1	7.48	8.0	Std. Wall XLPE Primary Cable	WHITE	580.0	-	1	N01-4006

Connector Name	102B
Part Number	3756781C1
Short Description	INVERTER INTERCONNECT
Instances	LT/RH/LoneStar - X15/A26 - DC/AC Inverter (1200W W/switch control):Diagram1 LT/RH/LoneStar - X15/A26 - DC/AC Inverter (1800W):Diagram1
Mates	102B

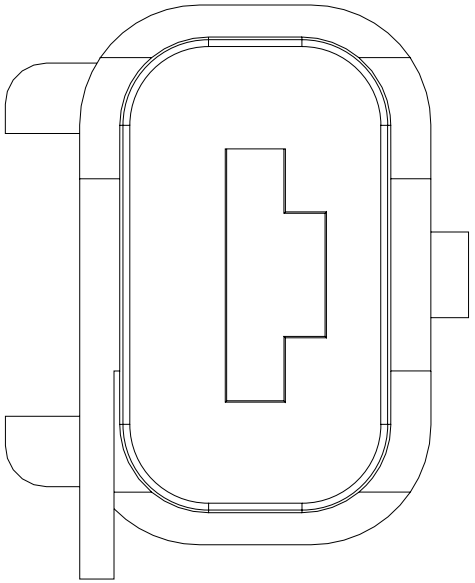

Name	Terminal Part Number	V-Min	Name	Wire Part Number	Wire CSA	Wire Spec	Wire Material description	Wire Color Description	Wire Length	End2 Terminal Part Number	End2 Pin Name	End2 Connect or
1	-	-	N10G	2643789 R1	7.48	8.0	Std. Wall XLPE Primary Cable	WHITE	580.0	-	-	-

Connector Name	1020
Part Number	4063041C1
Instances	LT/RH/LoneStar - X15/A26 - Instrument Cluster (Premium):Diagram1
Mates	MODU-CDC-0004-00-04A

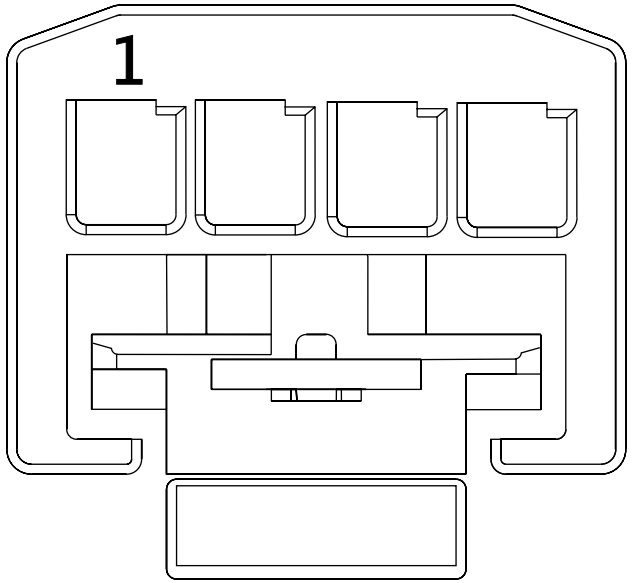

Name	Terminal Part Number	V-Min	Name	Wire Part Number	Wire CSA	Wire Spec	Wire Material description	Wire Color Description	Wire Length	End2 Terminal Part Number	End2 Pin Name	End2 Connect or
1	-	-	AK28A	3510328 R1	0.53	20.0	Thin Wall XLPE Primary Cable	TAN	1160.0	-	A9	J7-1607
2	-	-	AK9CDC	3510310 R1	0.53	20.0	Thin Wall XLPE Primary Cable	GREY	835.0	-	-	-
3	-	-	AK62F	3510352 R1	0.53	20.0	Thin Wall XLPE Primary Cable	DARK BLUE	895.0	-	-	-
4	-	-	AK11-GKF	3510358 R1	0.53	20.0	Thin Wall XLPE Primary Cable	WHITE	1135.0	-	-	-

Connector Name	1022
Part Number	3613769C1
Instances	LT/RH/LoneStar - X15/A26 - Ground Splice Packs - 1022 & 1023:Diagram1
Mates	SP-Ground_1-0003-00-10-A0

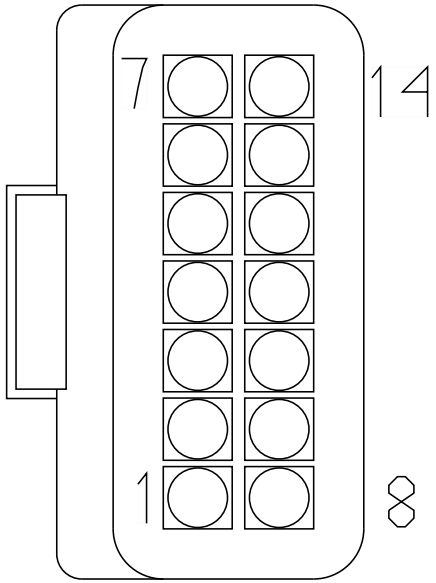

Name	Terminal Part Number	V-Min	Name	Wire Part Number	Wire CSA	Wire Spec	Wire Material description	Wire Color Description	Wire Length	End2 Terminal Part Number	End2 Pin Name	End2 Connect or
1	-	-	RA11-GBA	3510361 R1	1.91	14.0	Thin Wall XLPE Primary Cable	WHITE	275.0	-	X	-
1	-	-	RB11-GBA	3510361 R1	1.91	14.0	Thin Wall XLPE Primary Cable	WHITE	275.0	-	X	-
2	-	-	YH11-GC	3510361 R1	1.91	14.0	Thin Wall XLPE Primary Cable	WHITE	835.0	-	-	-
3	-	-	YC67-G	3510359 R1	0.79	18.0	Thin Wall XLPE Primary Cable	WHITE	775.0	-	-	-

Name	Terminal Part Number	V-Min	Name	Wire Part Number	Wire CSA	Wire Spec	Wire Material description	Wire Color Description	Wire Length	End2 Terminal Part Number	End2 Pin Name	End2 Connector
4	-	-	DD78-GA	3510360 R1	1.16	16.0	Thin Wall XLPE Primary Cable	WHITE	810.0	-	-	-
5	-	-	DD78-RG	3510358 R1	0.53	20.0	Thin Wall XLPE Primary Cable	WHITE	1415.0	-	-	-
5	-	-	JA79-G	3510358 R1	0.53	20.0	Thin Wall XLPE Primary Cable	WHITE	1415.0	-	-	-
5	-	-	BG70-GTA	3510359 R1	0.79	18.0	Thin Wall XLPE Primary Cable	WHITE	1415.0	-	-	-
5	-	-	BL70-GT	3510359 R1	0.79	18.0	Thin Wall XLPE Primary Cable	WHITE	1415.0	-	-	-
6	-	-	YK67-G	3510359 R1	0.79	18.0	Thin Wall XLPE Primary Cable	WHITE	775.0	-	-	-
7	-	-	CC72-GA	3510358 R1	0.53	20.0	Thin Wall XLPE Primary Cable	WHITE	1415.0	-	-	-
7	-	-	BL12-GCL	3510358 R1	0.53	20.0	Thin Wall XLPE Primary Cable	WHITE	1436.0	-	-	-

Name	Terminal Part Number	V-Min	Name	Wire Part Number	Wire CSA	Wire Spec	Wire Material description	Wire Color Description	Wire Length	End2 Terminal Part Number	End2 Pin Name	End2 Connector
7	-	-	BG12-GCL	3510358 R1	0.53	20.0	Thin Wall XLPE Primary Cable	WHITE	1436.0	-	-	-
8	-	-	HV17-G	3510360 R1	1.16	16.0	Thin Wall XLPE Primary Cable	WHITE	775.0	-	-	-
9	-	-	BG70-GT	3510359 R1	0.79	18.0	Thin Wall XLPE Primary Cable	WHITE	1325.0	-	-	-
9	-	-	BM70-GT	3510358 R1	0.53	20.0	Thin Wall XLPE Primary Cable	WHITE	1325.0	-	-	-
10	-	-	SG11COG	3510360 R1	1.16	16.0	Thin Wall XLPE Primary Cable	WHITE	850.0	-	-	-
10	-	-	2V11-GBP	3510359 R1	0.79	18.0	Thin Wall XLPE Primary Cable	WHITE	396.0	-	-	-
10	-	-	CS11-GBP	3510359 R1	0.79	18.0	Thin Wall XLPE Primary Cable	WHITE	396.0	-	-	-
10	-	-	RV11-GBP	3510359 R1	0.79	18.0	Thin Wall XLPE Primary Cable	WHITE	396.0	-	-	-

Name	Terminal Part Number	V-Min	Name	Wire Part Number	Wire CSA	Wire Spec	Wire Material description	Wire Color Description	Wire Length	End2 Terminal Part Number	End2 Pin Name	End2 Connect or
10	-	-	YK11-GBP	3510359 R1	0.79	18.0	Thin Wall XLPE Primary Cable	WHITE	396.0	-	-	-
11	-	-	5E11-GAR	3510359 R1	0.79	18.0	Thin Wall XLPE Primary Cable	WHITE	2580.0	-	-	-
11	-	-	ZR11-G	3510358 R1	0.53	20.0	Thin Wall XLPE Primary Cable	WHITE	1225.0	-	-	-
12	-	-	JY11-GA	3510359 R1	0.79	18.0	Thin Wall XLPE Primary Cable	WHITE	530.0	-	X	-
12	-	-	3S11-GUC	3510358 R1	0.53	20.0	Thin Wall XLPE Primary Cable	WHITE	1310.0	-	-	-
13	-	-	ZJ98-G	3510359 R1	0.79	18.0	Thin Wall XLPE Primary Cable	WHITE	500.0	-	-	-
14	-	-	XF11-GX	3510358 R1	0.53	20.0	Thin Wall XLPE Primary Cable	WHITE	425.0	-	-	-

Connector Name	1023
Part Number	3613769C1
Instances	LT/RH/LoneStar - X15/A26 - Ground Splice Packs - 1022 & 1023:Diagram1
Mates	SP-GROUND_2-0003-00-10-A0

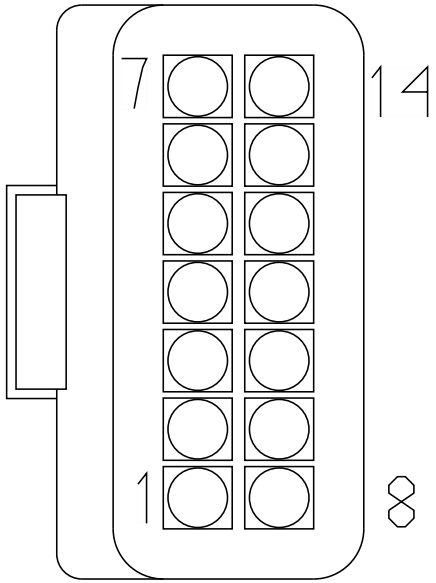

Name	Terminal Part Number	V-Min	Name	Wire Part Number	Wire CSA	Wire Spec	Wire Material description	Wire Color Description	Wire Length	End2 Terminal Part Number	End2 Pin Name	End2 Connect or
1	-	-	RA11-GCB	3510361 R1	1.91	14.0	Thin Wall XLPE Primary Cable	WHITE	985.0	-	X	-
1	-	-	RB11-GCB	3510361 R1	1.91	14.0	Thin Wall XLPE Primary Cable	WHITE	985.0	-	X	-
2	-	-	AD11-GCC	3510361 R1	1.91	14.0	Thin Wall XLPE Primary Cable	WHITE	1820.0	-	-	-
2	-	-	AE11-GCC	3510361 R1	1.91	14.0	Thin Wall XLPE Primary Cable	WHITE	1720.0	-	X	-

Name	Terminal Part Number	V-Min	Name	Wire Part Number	Wire CSA	Wire Spec	Wire Material description	Wire Color Description	Wire Length	End2 Terminal Part Number	End2 Pin Name	End2 Connector
2	-	-	3N11-GCF	3510361 R1	1.91	14.0	Thin Wall XLPE Primary Cable	WHITE	1820.0	-	-	-
3	-	-	MM92-GAH	3510359 R1	0.79	18.0	Thin Wall XLPE Primary Cable	WHITE	1125.0	-	-	-
4	-	-	FR11-GB	3510359 R1	0.79	18.0	Thin Wall XLPE Primary Cable	WHITE	1420.0	-	-	-
5	-	-	CN11-GBF	3510358 R1	0.53	20.0	Thin Wall XLPE Primary Cable	WHITE	205.0	-	-	-
5	-	-	CR11-GBF	3510358 R1	0.53	20.0	Thin Wall XLPE Primary Cable	WHITE	205.0	-	-	-
5	-	-	ZY11-GBF	3510358 R1	0.53	20.0	Thin Wall XLPE Primary Cable	WHITE	205.0	-	-	-
6	-	-	MB11-GBE	3510360 R1	1.16	16.0	Thin Wall XLPE Primary Cable	WHITE	2700.0	-	-	-
6	-	-	PH11-GBE	3510359 R1	0.79	18.0	Thin Wall XLPE Primary Cable	WHITE	2500.0	-	-	-

Name	Terminal Part Number	V-Min	Name	Wire Part Number	Wire CSA	Wire Spec	Wire Material description	Wire Color Description	Wire Length	End2 Terminal Part Number	End2 Pin Name	End2 Connector
6	-	-	SJ11-GBE	3510360 R1	1.16	16.0	Thin Wall XLPE Primary Cable	WHITE	960.0	-	-	-
6	-	-	CK11-GBE	3510359 R1	0.79	18.0	Thin Wall XLPE Primary Cable	WHITE	2990.0	-	-	-
6	-	-	FA11-GBG	3510360 R1	1.16	16.0	Thin Wall XLPE Primary Cable	WHITE	1720.0	-	-	-
6	-	-	KC11-GBE	3510360 R1	1.16	16.0	Thin Wall XLPE Primary Cable	WHITE	1975.0	-	-	-
6	-	-	CG53-G	3510358 R1	0.53	20.0	Thin Wall XLPE Primary Cable	WHITE	1955.0	-	-	-
6	-	-	CF11-GBE	3510359 R1	0.79	18.0	Thin Wall XLPE Primary Cable	WHITE	515.0	-	X	-
7	-	-	AK11-GKF	3510358 R1	0.53	20.0	Thin Wall XLPE Primary Cable	WHITE	1135.0	-	-	-
8	-	-	LM97-G	3510358 R1	0.53	20.0	Thin Wall XLPE Primary Cable	WHITE	1960.0	-	-	-

Name	Terminal Part Number	V-Min	Name	Wire Part Number	Wire CSA	Wire Spec	Wire Material description	Wire Color Description	Wire Length	End2 Terminal Part Number	End2 Pin Name	End2 Connector
9	-	-	DR19-GB	3510358 R1	0.53	20.0	Thin Wall XLPE Primary Cable	WHITE	1835.0	-	-	-
10	-	-	ZK98-G	3510359 R1	0.79	18.0	Thin Wall XLPE Primary Cable	WHITE	1525.0	-	-	-
10	-	-	ZM98-G	3510359 R1	0.79	18.0	Thin Wall XLPE Primary Cable	WHITE	1525.0	-	-	-
11	-	-	4Z11-G	3510358 R1	0.53	20.0	Thin Wall XLPE Primary Cable	WHITE	0.0	-	-	-
13	-	-	MD92-GD	3510359 R1	0.79	18.0	Thin Wall XLPE Primary Cable	WHITE	1955.0	-	-	-
14	-	-	ZZ50A	2645625 R1	0.35	22.0	Thin Wall XLPE Primary Cable	YELLOW 2	2080.0	-	-	-

Connector Name	1024
Part Number	3601838C1
Instances	Body J1939 (250Kbps) Splice Pack 1024:Body J1939 (250Kbps) Body J1939 (250Kbps) W/ 3 Splice Packs:Body J1939 (250Kbps)
Mates	DEV36808

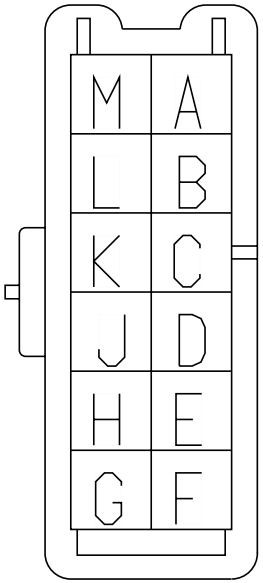

Name	Terminal Part Number	V-Min	Name	Wire Part Number	Wire CSA	Wire Spec	Wire Material description	Wire Color Description	Wire Length	End2 Terminal Part Number	End2 Pin Name	End2 Connect or
A	-	-	WIRE489805	-	0.0	-	-	-	0.0	-	PIN1	-
A	-	-	WIRE233604	-	0.0	-	-	-	0.0	-	PIN1	-
B	-	-	WIRE489819	-	0.0	-	-	-	0.0	-	D	1926
B	-	-	-	-	-	-	-	-	-	-	-	-
C	-	-	WIRE223994	-	0.0	-	-	-	0.0	-	D	1024
D	-	-	WIRE223994	-	0.0	-	-	-	0.0	-	C	1024
E	-	-	WIRE489837	-	0.0	-	-	-	0.0	-	39	5000A
E	-	-	WIRE233645	-	0.0	-	-	-	0.0	-	C	1937N
E	-	-	WIRE233647	-	0.0	-	-	-	0.0	-	C	1937M

Name	Terminal Part Number	V-Min	Name	Wire Part Number	Wire CSA	Wire Spec	Wire Material description	Wire Color Description	Wire Length	End2 Terminal Part Number	End2 Pin Name	End2 Connector
E	-	-	WIRE233651	-	0.0	-	-	-	0.0	-	C	1937P
E	-	-	WIRE490117	-	0.0	-	-	-	0.0	-	9	1950
E	-	-	WIRE490119	-	0.0	-	-	-	0.0	-	39	5000A
F	-	-	WIRE489801	-	0.0	-	-	-	0.0	-	62	1700
F	-	-	WIRE490111	-	0.0	-	-	-	0.0	-	B	1935M
G	-	-	WIRE489800	-	0.0	-	-	-	0.0	-	61	1700
G	-	-	WIRE490110	-	0.0	-	-	-	0.0	-	A	1935M
H	-	-	WIRE489838	-	0.0	-	-	-	0.0	-	38	5000A
H	-	-	WIRE233644	-	0.0	-	-	-	0.0	-	A	1937N
H	-	-	WIRE233646	-	0.0	-	-	-	0.0	-	A	1937M
H	-	-	WIRE233648	-	0.0	-	-	-	0.0	-	A	1937P
H	-	-	WIRE490116	-	0.0	-	-	-	0.0	-	8	1950
H	-	-	WIRE490118	-	0.0	-	-	-	0.0	-	38	5000A
J	-	-	WIRE223993	-	0.0	-	-	-	0.0	-	K	1024
K	-	-	WIRE223993	-	0.0	-	-	-	0.0	-	J	1024
L	-	-	WIRE489820	-	0.0	-	-	-	0.0	-	C	1926

Name	Terminal Part Number	V-Min	Name	Wire Part Number	Wire CSA	Wire Spec	Wire Material description	Wire Color Description	Wire Length	End2 Terminal Part Number	End2 Pin Name	End2 Connect or
L	-	-	-	-	-	-	-	-	-	-	-	-
M	-	-	WIRE489804	-	0.0	-	-	-	0.0	-	PIN1	-
M	-	-	WIRE233603	-	0.0	-	-	-	0.0	-	PIN1	-

Connector Name	1025
Part Number	3601838C1
Instances	Body J1939 (250Kbps) Splice Pack 1025:Body J1939 (250Kbps) Body J1939 (250Kbps) W/ 3 Splice Packs:Body J1939 (250Kbps)
Mates	SP-IP-B001-00-10-A1-1024

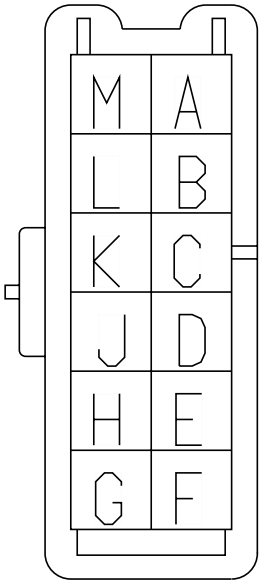

Name	Terminal Part Number	V-Min	Name	Wire Part Number	Wire CSA	Wire Spec	Wire Material description	Wire Color Description	Wire Length	End2 Terminal Part Number	End2 Pin Name	End2 Connect or
A	-	-	WIRE489813	-	0.0	-	-	-	0.0	-	F	1029
A	-	-	WIRE489818	-	0.0	-	-	-	0.0	-	E	250M
A	-	-	WIRE233610	-	0.0	-	-	-	0.0	-	E	250M
A	-	-	WIRE490005	-	0.0	-	-	-	0.0	-	PIN1	-
B	-	-	WIRE489823	-	0.0	-	-	-	0.0	-	4	1930
B	-	-	WIRE490008	-	0.0	-	-	-	0.0	-	4	1930
C	-	-	WIRE489811	-	0.0	-	-	-	0.0	-	D	1025
C	-	-	WIRE490007	-	0.0	-	-	-	0.0	-	D	1025

Name	Terminal Part Number	V-Min	Name	Wire Part Number	Wire CSA	Wire Spec	Wire Material description	Wire Color Description	Wire Length	End2 Terminal Part Number	End2 Pin Name	End2 Connect or
D	-	-	WIRE489811	-	0.0	-	-	-	0.0	-	C	1025
D	-	-	WIRE490007	-	0.0	-	-	-	0.0	-	C	1025
E	-	-	WIRE489830	-	0.0	-	-	-	0.0	-	C	1937P
E	-	-	WIRE489832	-	0.0	-	-	-	0.0	-	2	1939A
E	-	-	WIRE489834	-	0.0	-	-	-	0.0	-	11	1939M
E	-	-	WIRE489836	-	0.0	-	-	-	0.0	-	C	1937N
E	-	-	WIRE233641	-	0.0	-	-	-	0.0	-	2	1939A
E	-	-	WIRE490019	-	0.0	-	-	-	0.0	-	C	1937N
E	-	-	WIRE490020	-	0.0	-	-	-	0.0	-	C	1937P
E	-	-	WIRE490021	-	0.0	-	-	-	0.0	-	11	1939M
F	-	-	WIRE489807	-	0.0	-	-	-	0.0	-	B	1935N
F	-	-	WIRE490023	-	0.0	-	-	-	0.0	-	B	1935N
G	-	-	WIRE489806	-	0.0	-	-	-	0.0	-	A	1935N
G	-	-	WIRE490022	-	0.0	-	-	-	0.0	-	A	1935N
H	-	-	WIRE489829	-	0.0	-	-	-	0.0	-	A	1937P
H	-	-	WIRE489831	-	0.0	-	-	-	0.0	-	7	1939A

Name	Terminal Part Number	V-Min	Name	Wire Part Number	Wire CSA	Wire Spec	Wire Material description	Wire Color Description	Wire Length	End2 Terminal Part Number	End2 Pin Name	End2 Connector
H	-	-	WIRE489833	-	0.0	-	-	-	0.0	-	12	1939M
H	-	-	WIRE489835	-	0.0	-	-	-	0.0	-	A	1937N
H	-	-	WIRE233640	-	0.0	-	-	-	0.0	-	7	1939A
H	-	-	WIRE490016	-	0.0	-	-	-	0.0	-	A	1937N
H	-	-	WIRE490017	-	0.0	-	-	-	0.0	-	A	1937P
H	-	-	WIRE490018	-	0.0	-	-	-	0.0	-	12	1939M
J	-	-	WIRE489810	-	0.0	-	-	-	0.0	-	K	1025
J	-	-	WIRE490006	-	0.0	-	-	-	0.0	-	K	1025
K	-	-	WIRE489810	-	0.0	-	-	-	0.0	-	J	1025
K	-	-	WIRE490006	-	0.0	-	-	-	0.0	-	J	1025
L	-	-	WIRE489824	-	0.0	-	-	-	0.0	-	3	1930
L	-	-	WIRE490009	-	0.0	-	-	-	0.0	-	3	1930
M	-	-	WIRE489812	-	0.0	-	-	-	0.0	-	G	1029
M	-	-	WIRE489817	-	0.0	-	-	-	0.0	-	F	250M
M	-	-	WIRE233609	-	0.0	-	-	-	0.0	-	F	250M
M	-	-	WIRE490004	-	0.0	-	-	-	0.0	-	PIN1	-

Connector Name 1026
Part Number 3601838C1
Instances Cab J1939 (250Kbps):Cab J1939 (250Kbps)
Mates SP-IP-B001-00-10-A1-1026

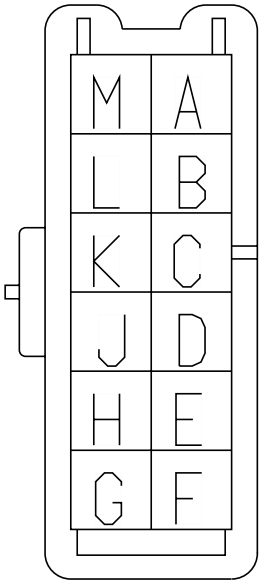

Name	Terminal Part Number	V-Min	Name	Wire Part Number	Wire CSA	Wire Spec	Wire Material description	Wire Color Description	Wire Length	End2 Terminal Part Number	End2 Pin Name	End2 Connect or
A	-	-	WIRE223948	-	0.0	-	-	-	0.0	-	PIN1	-
B	-	-	WIRE223971	-	0.0	-	-	-	0.0	-	B	380
B	-	-	WIRE223973	-	0.0	-	-	-	0.0	-	J	16B
C	-	-	WIRE223952	-	0.0	-	-	-	0.0	-	D	1026
D	-	-	WIRE223952	-	0.0	-	-	-	0.0	-	C	1026
E	-	-	WIRE223951	-	0.0	-	-	-	0.0	-	16	2225
E	-	-	WIRE233664	-	0.0	-	-	-	0.0	-	9	1944_
F	-	-	WIRE223934	-	0.0	-	-	-	0.0	-	PIN1	-

Name	Terminal Part Number	V-Min	Name	Wire Part Number	Wire CSA	Wire Spec	Wire Material description	Wire Color Description	Wire Length	End2 Terminal Part Number	End2 Pin Name	End2 Connect or
G	-	-	WIRE223933	-	0.0	-	-	-	0.0	-	PIN1	-
H	-	-	WIRE223950	-	0.0	-	-	-	0.0	-	8	2225
H	-	-	WIRE233663	-	0.0	-	-	-	0.0	-	2	1944_
J	-	-	WIRE223953	-	0.0	-	-	-	0.0	-	K	1026
K	-	-	WIRE223953	-	0.0	-	-	-	0.0	-	J	1026
L	-	-	WIRE223970	-	0.0	-	-	-	0.0	-	A	380
L	-	-	WIRE223972	-	0.0	-	-	-	0.0	-	K	16B
M	-	-	WIRE223949	-	0.0	-	-	-	0.0	-	PIN1	-

Connector Name	1027
Part Number	3613769C1
Instances	LT/RH/LoneStar - X15/A26 - Ground Splice Packs - 1027:Diagram1
Mates	SP-GROUND_3-0003-00-10-A0

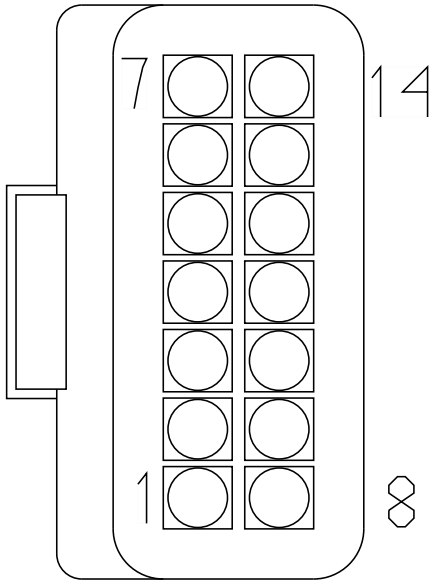

Name	Terminal Part Number	V-Min	Name	Wire Part Number	Wire CSA	Wire Spec	Wire Material description	Wire Color Description	Wire Length	End2 Terminal Part Number	End2 Pin Name	End2 Connect or
1	-	-	RB11-GCC	3510361 R1	1.91	14.0	Thin Wall XLPE Primary Cable	WHITE	1595.0	-	X	-
2	-	-	CW58-GBG	3510360 R1	1.16	16.0	Thin Wall XLPE Primary Cable	WHITE	1840.0	-	-	-
3	-	-	CT11-GBE	3510360 R1	1.16	16.0	Thin Wall XLPE Primary Cable	WHITE	3600.0	-	-	-
3	-	-	JV11-GA	3510359 R1	0.79	18.0	Thin Wall XLPE Primary Cable	WHITE	510.0	-	-	-

Name	Terminal Part Number	V-Min	Name	Wire Part Number	Wire CSA	Wire Spec	Wire Material description	Wire Color Description	Wire Length	End2 Terminal Part Number	End2 Pin Name	End2 Connector
3	-	-	KL11-GA	3510359 R1	0.79	18.0	Thin Wall XLPE Primary Cable	WHITE	510.0	-	-	-
3	-	-	DL11-GBE	3510361 R1	1.91	14.0	Thin Wall XLPE Primary Cable	WHITE	510.0	-	-	-
3	-	-	RH11-GBE	3510361 R1	1.91	14.0	Thin Wall XLPE Primary Cable	WHITE	510.0	-	-	-
4	-	-	DL11-GBH	3510359 R1	0.79	18.0	Thin Wall XLPE Primary Cable	WHITE	2090.0	-	-	-
4	-	-	JV11-GB	3510360 R1	1.16	16.0	Thin Wall XLPE Primary Cable	WHITE	2240.0	-	-	-
5	-	-	DD78-GB	3510360 R1	1.16	16.0	Thin Wall XLPE Primary Cable	WHITE	350.0	-	-	-
6	-	-	DY54-GX	3510360 R1	1.16	16.0	Thin Wall XLPE Primary Cable	WHITE	120.0	-	-	-
7	-	-	EW11-GR	3510361 R1	1.91	14.0	Thin Wall XLPE Primary Cable	WHITE	3490.0	-	-	-

Name	Terminal Part Number	V-Min	Name	Wire Part Number	Wire CSA	Wire Spec	Wire Material description	Wire Color Description	Wire Length	End2 Terminal Part Number	End2 Pin Name	End2 Connector
8	-	-	AA54-GXE	3510360 R1	1.16	16.0	Thin Wall XLPE Primary Cable	WHITE	705.0	-	-	-
9	-	-	EM13-GBP	3510358 R1	0.53	20.0	Thin Wall XLPE Primary Cable	WHITE	1220.0	-	-	-
9	-	-	GN13-GBP	3510361 R1	1.91	14.0	Thin Wall XLPE Primary Cable	WHITE	1220.0	-	-	-
10	-	-	DW11-GZ	3510360 R1	1.16	16.0	Thin Wall XLPE Primary Cable	WHITE	2695.0	-	-	-
14	-	-	CW11-GFU	3510358 R1	0.53	20.0	Thin Wall XLPE Primary Cable	WHITE	2550.0	-	-	-
14	-	-	CX11-GFU	3510358 R1	0.53	20.0	Thin Wall XLPE Primary Cable	WHITE	2550.0	-	-	-

Connector Name	1029
Part Number	3601838C1
Instances	Body J1939 (250Kbps) Splice Pack 1029:Body J1939 (250Kbps) Body J1939 (250Kbps) W/ 3 Splice Packs:Body J1939 (250Kbps)
Mates	DEV36809

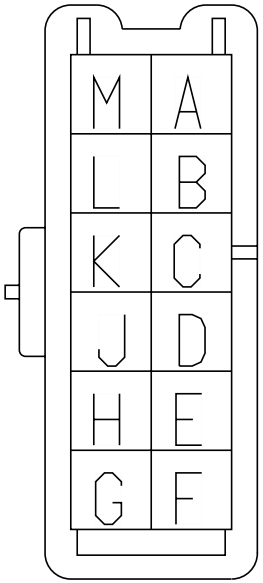

Name	Terminal Part Number	V-Min	Name	Wire Part Number	Wire CSA	Wire Spec	Wire Material description	Wire Color Description	Wire Length	End2 Terminal Part Number	End2 Pin Name	End2 Connect or
A	-	-	WIRE489809	-	0.0	-	-	-	0.0	-	PIN1	-
A	-	-	WIRE489911	-	0.0	-	-	-	0.0	-	PIN1	-
B	-	-	WIRE489828	-	0.0	-	-	-	0.0	-	J	1651
B	-	-	WIRE489918	-	0.0	-	-	-	0.0	-	J	1651
C	-	-	WIRE223996	-	0.0	-	-	-	0.0	-	D	1029
D	-	-	WIRE223996	-	0.0	-	-	-	0.0	-	C	1029
E	-	-	WIRE489822	-	0.0	-	-	-	0.0	-	9	1944
E	-	-	WIRE489826	-	0.0	-	-	-	0.0	-	9	1950

Name	Terminal Part Number	V-Min	Name	Wire Part Number	Wire CSA	Wire Spec	Wire Material description	Wire Color Description	Wire Length	End2 Terminal Part Number	End2 Pin Name	End2 Connector
E	-	-	WIRE489923	-	0.0	-	-	-	0.0	-	9	1944
F	-	-	WIRE489813	-	0.0	-	-	-	0.0	-	A	1025
F	-	-	WIRE489815	-	0.0	-	-	-	0.0	-	A	250M
F	-	-	WIRE489908	-	0.0	-	-	-	0.0	-	E	250M
F	-	-	WIRE489917	-	0.0	-	-	-	0.0	-	62	1700
G	-	-	WIRE489812	-	0.0	-	-	-	0.0	-	M	1025
G	-	-	WIRE489814	-	0.0	-	-	-	0.0	-	B	250M
G	-	-	WIRE489909	-	0.0	-	-	-	0.0	-	F	250M
G	-	-	WIRE489916	-	0.0	-	-	-	0.0	-	61	1700
H	-	-	WIRE489821	-	0.0	-	-	-	0.0	-	2	1944
H	-	-	WIRE489825	-	0.0	-	-	-	0.0	-	8	1950
H	-	-	WIRE489922	-	0.0	-	-	-	0.0	-	2	1944
J	-	-	WIRE223995	-	0.0	-	-	-	0.0	-	K	1029
K	-	-	WIRE223995	-	0.0	-	-	-	0.0	-	J	1029
L	-	-	WIRE489827	-	0.0	-	-	-	0.0	-	H	1651
L	-	-	WIRE489919	-	0.0	-	-	-	0.0	-	H	1651

Name	Terminal Part Number	V-Min	Name	Wire Part Number	Wire CSA	Wire Spec	Wire Material description	Wire Color Description	Wire Length	End2 Terminal Part Number	End2 Pin Name	End2 Connector
M	-	-	WIRE489808	-	0.0	-	-	-	0.0	-	PIN1	-
M	-	-	WIRE489910	-	0.0	-	-	-	0.0	-	PIN1	-

Connector Name	1051
Part Number	1661259C1
Instances	LoneStar - X15 - Adaptive Cruise Control (Bendix - Fusion W/O DIU & N/ Safety Direct & Tweeters):Diagram1 LoneStar - X15 - Adaptive Cruise Control (Bendix - Fusion W/O DIU & W/ Safety Direct & W/ Tweeters):Diagram1
Mates	SPKR-LEFT_TWEETER-2058-01A

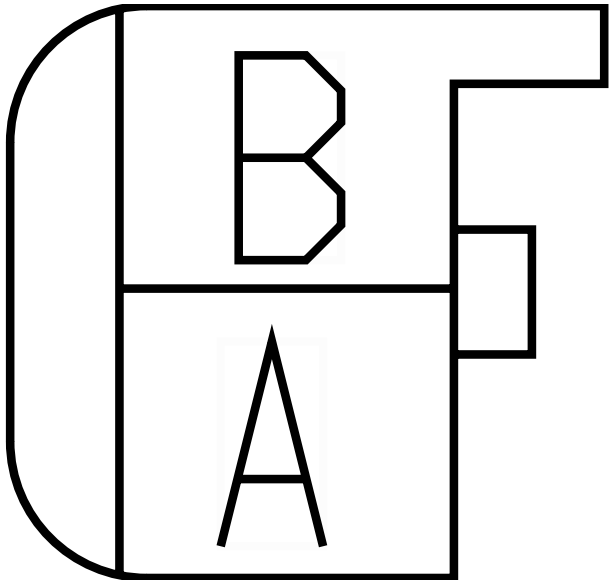

Name	Terminal Part Number	V-Min	Name	Wire Part Number	Wire CSA	Wire Spec	Wire Material description	Wire Color Description	Wire Length	End2 Terminal Part Number	End2 Pin Name	End2 Connect or
A	-	-	LR86AR	3510299 R1	0.79	18.0	Thin Wall XLPE Primary Cable	LIGHT GREEN	865.0	-	7	2000
B	-	-	LR86AS	3510299 R1	0.79	18.0	Thin Wall XLPE Primary Cable	LIGHT GREEN	360.0	-	X	-

Connector Name	1101F
Part Number	3768593C1
Instances	Low Speed J1939 (125Kbps):Low Speed J1939 (125Kbps)
Mates	SW-J1939_PACK-0009-00-02A

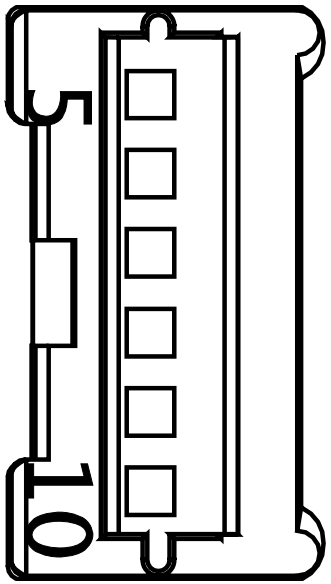

Name	Terminal Part Number	V-Min	Name	Wire Part Number	Wire CSA	Wire Spec	Wire Material description	Wire Color Description	Wire Length	End2 Terminal Part Number	End2 Pin Name	End2 Connect or
5	-	-	WIRE234476	-	0.0	-	-	-	0.0	-	PIN1	-
6	-	-	WIRE234477	-	0.0	-	-	-	0.0	-	PIN1	-

Connector Name	1101M
Part Number	3507395C1
Instances	Low Speed J1939 (125Kbps):Low Speed J1939 (125Kbps)
Mates	SW-J1939_PACK-0009-00-02A

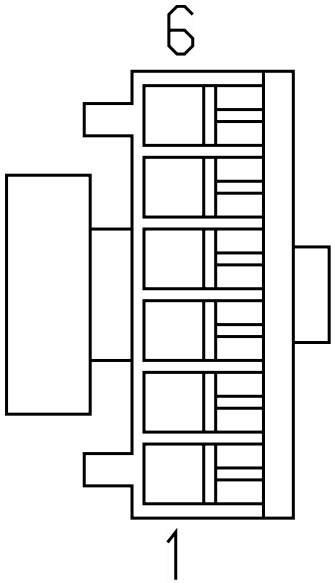

Name	Terminal Part Number	V-Min	Name	Wire Part Number	Wire CSA	Wire Spec	Wire Material description	Wire Color Description	Wire Length	End2 Terminal Part Number	End2 Pin Name	End2 Connect or
1	-	-	WIRE234472	-	0.0	-	-	-	0.0	-	PIN1	-
2	-	-	WIRE234473	-	0.0	-	-	-	0.0	-	PIN1	-

Connector Name	1101M
Part Number	3507395C1
Instances	LoneStar - X15 - Cooling Fan Control With Switch:Diagram1 LT/RH - A26 - Transmission Power Take Off Dual PTO with Clutch Interlock:Diagram1 LT/RH - A26 - Transmission Power Take Off Dual Solenoid AUTO:Diagram1 LT/RH - A26 - Transmission Power Take Off Option 1:Diagram1 LT/RH - A26 - Transmission Power Take Off W/ Clutch Interlock:Diagram1 LT/RH - A26 - Work Lights (2 Blunt Cuts Only W/O Relay) W/ Backup W/Manual Trans Day Cab:Diagram1 LT/RH - A26 - Work Lights (2 Blunt Cuts Only W/O Relay) W/ Backup W/Manual Trans Day Cab:Diagram2 LT/RH - A26 - Work Lights (2 Blunt Cuts Only W/O Relay) W/ Backup W/Manual Trans Day Cab:Diagram3 LT/RH - A26 - Work Lights (2 Blunt Cuts Only W/O Relay) W/ Backup W/Manual Trans Day Cab:Diagram4 LT/RH - A26 - Work Lights - LED W/ Sw Pack - Customer Supplied - Sleeper W/ RKE W/MAN REV:Diagram1 LT/RH - A26 - Work Lights - LED W/ Sw Pack - Customer Supplied - Sleeper W/ RKE W/MAN REV:Diagram2 LT/RH - A26 - Work Lights - LED W/ Sw Pack - Customer Supplied - Sleeper W/ RKE W/MAN REV:Diagram3 LT/RH - A26 - Work Lights - LED W/ Sw Pack - Customer Supplied - Sleeper W/ RKE W/MAN REV:Diagram4 LT/RH - A26 - Work Lights - LED W/ Sw Pack - Customer Supplied - Sleeper W/O RKE W/MAN REV:Diagram1 LT/RH - A26 - Work Lights - LED W/ Sw Pack - Customer Supplied - Sleeper W/O RKE W/MAN REV:Diagram2 LT/RH - A26 - Work Lights - LED W/ Sw Pack - Customer Supplied - Sleeper W/O RKE W/MAN REV:Diagram3 LT/RH - A26 - Work Lights - LED W/ Sw Pack - Customer Supplied - Sleeper W/O RKE W/MAN REV:Diagram4 LT/RH - A26 - Work Lights -LED W/ Sw Pack - Sleeper W/ RKE W/MAN REV:Diagram1 LT/RH - A26 - Work Lights -LED W/ Sw Pack - Sleeper W/ RKE W/MAN REV:Diagram2 LT/RH - A26 - Work Lights -LED W/ Sw Pack - Sleeper W/O RKE W/MAN REV:Diagram1 LT/RH - A26 - Work Lights -LED W/ Sw Pack - Sleeper W/O RKE W/MAN REV:Diagram2

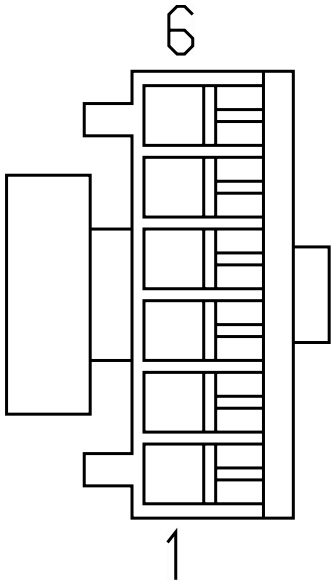

LT/RH - A26 - Work Lights LED W/ Sw Pack - Day Cab W/ RKE W/MAN REV:Diagram1
LT/RH - A26 - Work Lights LED W/ Sw Pack - Day Cab W/ RKE W/MAN REV:Diagram2
LT/RH - A26 - Work Lights LED W/ Sw Pack - Day Cab W/O RKE W/MAN REV:Diagram1
LT/RH - A26 - Work Lights LED W/ Sw Pack - Day Cab W/O RKE W/MAN REV:Diagram2
LT/RH - A26 - Work Lights W/ Sw Pack - Customer Supplied W/ RKE W/MAN REV:Diagram1
LT/RH - A26 - Work Lights W/ Sw Pack - Customer Supplied W/ RKE W/MAN REV:Diagram2
LT/RH - A26 - Work Lights W/ Sw Pack - Customer Supplied W/ RKE W/MAN REV:Diagram3
LT/RH - A26 - Work Lights W/ Sw Pack - Customer Supplied W/ RKE W/MAN REV:Diagram4
LT/RH - A26 - Work Lights W/ Sw Pack - Customer Supplied W/ O RKE W/MAN REV:Diagram1
LT/RH - A26 - Work Lights W/ Sw Pack - Customer Supplied W/ O RKE W/MAN REV:Diagram2
LT/RH - A26 - Work Lights W/ Sw Pack - Customer Supplied W/ O RKE W/MAN REV:Diagram3
LT/RH - A26 - Work Lights W/ Sw Pack - Customer Supplied W/ O RKE W/MAN REV:Diagram4
LT/RH - X15/A26 - Lane Departure Warning - (Wabco OnLane 2.0 w/ roof speakers):Diagram1
LT/RH - X15/A26 - Mirrors (Heat) [Switch Pack Actuated Relay Driven]:Diagram1
LT/RH - X15/A26 - Work Lights W/ Sw Pack - Customer Supplied:Diagram1
LT/RH - X15/A26 - Work Lights W/ Sw Pack - Customer Supplied:Diagram2
LT/RH A26 - Auto Start Stop and Sleeper Auto Climate / Cab Temp / Oil Mapping Manual Trans:Diagram1
LT/RH A26 - Auto Start Stop with Sleeper Auto Climate / Cab Temp / Oil Mapping Auto Trans:Diagram1
LT/RH A26 - Cooling Fan Control With Switch:Diagram1
LT/RH X15 - Cooling Fan Control With Switch:Diagram1
LT/RH/LoneStar - X15 - Transmission Power Take Off Dual PTO with Clutch Interlock MANUAL:Diagram1
LT/RH/LoneStar - X15 - Transmission Power Take Off Dual Solenoid AUTO:Diagram1
LT/RH/LoneStar - X15 - Transmission Power Take Off W/ Clutch Interlock:Diagram1

LT/RH/LoneStar - X15 - Transmission SINGLE Power Take Off MANUAL:Diagram1
LT/RH/LoneStar - X15 - Work Lights (2 Blunt Cuts Only W/O Relay) W/Backup W/Manual Trans:Diagram1
LT/RH/LoneStar - X15 - Work Lights (2 Blunt Cuts Only W/O Relay) W/Backup W/Manual Trans:Diagram2
LT/RH/LoneStar - X15/A26 - 2 Driver Controlled Locking Differential - FR & RR Axle (DANA):Diagram1
LT/RH/LoneStar - X15/A26 - 2 Driver Controlled Locking Differential - FR & RR Axle (MERITOR):Diagram1
LT/RH/LoneStar - X15/A26 - Auxiliary Trailer Power CAV D:Diagram1
LT/RH/LoneStar - X15/A26 - Auxiliary Trailer Power CAV D:Diagram2
LT/RH/LoneStar - X15/A26 - Auxiliary Trailer Power W/ ISO Trailer Socket:Diagram1
LT/RH/LoneStar - X15/A26 - DPF Regen Switch Only:Diagram1
LT/RH/LoneStar - X15/A26 - DPF With Monostable Inhibit Switch:Diagram1
LT/RH/LoneStar - X15/A26 - DPF With/ Bi-Stable Inhibit Switch:Diagram1
LT/RH/LoneStar - X15/A26 - Driver Controlled Locking Differential - FR & RR Axle (DANA):Diagram1
LT/RH/LoneStar - X15/A26 - Driver Controlled Locking Differential - FR & RR Axle (MERITOR):Diagram1
LT/RH/LoneStar - X15/A26 - Driver Controlled Locking Differential - FR (MERITOR):Diagram1
LT/RH/LoneStar - X15/A26 - Driver Controlled Locking Differential - RR Axle (DANA):Diagram1
LT/RH/LoneStar - X15/A26 - Driver Controlled Locking Differential - RR Axle (DANA):Diagram2
LT/RH/LoneStar - X15/A26 - Driver Controlled Locking Differential - RR Axle (MERITOR):Diagram1
LT/RH/LoneStar - X15/A26 - Driver Controlled Locking Differential - RR Axle (MERITOR):Diagram2
LT/RH/LoneStar - X15/A26 - Engine Brake (CA2.0; Mux Switch):Diagram1
LT/RH/LoneStar - X15/A26 - Engine/Exhaust Brake:Diagram1
LT/RH/LoneStar - X15/A26 - Fifth Wheel Slide:Diagram1
LT/RH/LoneStar - X15/A26 - Floor/Search Lights DayCab:Diagram1
LT/RH/LoneStar - X15/A26 - Floor/Search Lights Sleeper:Diagram1

LT/RH/LoneStar - X15/A26 - Floor/Search Lights Sleeper (1 Light):Diagram1
LT/RH/LoneStar - X15/A26 - Height Control:Diagram1
LT/RH/LoneStar - X15/A26 - Hill Start Aid (Bendix):Diagram1
LT/RH/LoneStar - X15/A26 - Hill Start Aid (Bendix):Diagram2
LT/RH/LoneStar - X15/A26 - Hill Start Aid (Bendix):Diagram3
LT/RH/LoneStar - X15/A26 - Hill Start Aid (Wabco):Diagram1
LT/RH/LoneStar - X15/A26 - Jaw Unlock Control (Standard):Diagram1
LT/RH/LoneStar - X15/A26 - Jaw Unlock Control W/ SOLENOIDS W/SWITCH PACKS:Diagram1
LT/RH/LoneStar - X15/A26 - Lighting Sleeper Dome:Diagram1
LT/RH/LoneStar - X15/A26 - Power Divider Lock Control and Monitoring:Diagram1
LT/RH/LoneStar - X15/A26 - Theft Deterrent (Standard J1939 Mux SW):Diagram1
LT/RH/LoneStar - X15/A26 - Traction Control (Bendix Controller):Diagram1
LT/RH/LoneStar - X15/A26 - Traction Control (Bendix Controller):Diagram2
LT/RH/LoneStar - X15/A26 - Traction Control (Bendix Controller) Option 2:Diagram1
LT/RH/LoneStar - X15/A26 - Traction Control (Bendix Controller) Option 2:Diagram2
LT/RH/LoneStar - X15/A26 - Traction Control (Wabco Controller):Diagram1
LT/RH/LoneStar - X15/A26 - Traction Control (Wabco Controller):Diagram2
LT/RH/LoneStar - X15/A26 - Traction Control (Wabco Controller):Diagram3
LT/RH/LoneStar - X15/A26 - Transmission - MODE Selection:Diagram1
LT/RH/LoneStar - X15/A26 - Work Lights (2 Blunt Cuts Only W/ O Relay):Diagram1
LT/RH/LoneStar - X15/A26 - Work Lights (2 Blunt Cuts Only W/ O Relay):Diagram2
LT/RH/LoneStar - X15/A26 - Work Lights (2 Blunt Cuts Only W/O Relay) W/Backup W/Auto Trans (Allison and Endurant):Diagram1
LT/RH/LoneStar - X15/A26 - Work Lights (2 Blunt Cuts Only W/O Relay) W/Backup W/Auto Trans (Allison and Endurant):Diagram2
LT/RH/LoneStar - X15/A26 - Work Lights - LED W/ Sw Pack - Customer Supplied - Sleeper:Diagram1

LT/RH/LoneStar - X15/A26 - Work Lights - LED W/ Sw Pack - Customer Supplied - Sleeper:Diagram2
LT/RH/LoneStar - X15/A26 - Work Lights - LED W/ Sw Pack - Customer Supplied - Sleeper W/ RKE W/AUTO REV:Diagram1
LT/RH/LoneStar - X15/A26 - Work Lights - LED W/ Sw Pack - Customer Supplied - Sleeper W/ RKE W/AUTO REV:Diagram2
LT/RH/LoneStar - X15/A26 - Work Lights - LED W/ Sw Pack - Customer Supplied - Sleeper W/O RKE:Diagram1
LT/RH/LoneStar - X15/A26 - Work Lights - LED W/ Sw Pack - Customer Supplied - Sleeper W/O RKE:Diagram2
LT/RH/LoneStar - X15/A26 - Work Lights - LED W/ Sw Pack - Customer Supplied - Sleeper W/O RKE W/AUTO REV:Diagram1
LT/RH/LoneStar - X15/A26 - Work Lights - LED W/ Sw Pack - Customer Supplied - Sleeper W/O RKE W/AUTO REV:Diagram2
LT/RH/LoneStar - X15/A26 - Work Lights -LED W/ Sw Pack - Sleeper:Diagram1
LT/RH/LoneStar - X15/A26 - Work Lights -LED W/ Sw Pack - Sleeper W/ RKE W/AUTO REV:Diagram1
LT/RH/LoneStar - X15/A26 - Work Lights -LED W/ Sw Pack - Sleeper W/O RKE:Diagram1
LT/RH/LoneStar - X15/A26 - Work Lights -LED W/ Sw Pack - Sleeper W/O RKE W/AUTO REV:Diagram1
LT/RH/LoneStar - X15/A26 - Work Lights LED W/ Sw Pack - Day Cab:Diagram1
LT/RH/LoneStar - X15/A26 - Work Lights LED W/ Sw Pack - Day Cab W/ RKE W/AUTO REV:Diagram1
LT/RH/LoneStar - X15/A26 - Work Lights LED W/ Sw Pack - Day Cab W/O RKE:Diagram1
LT/RH/LoneStar - X15/A26 - Work Lights LED W/ Sw Pack - Day Cab W/O RKE W/AUTO REV:Diagram1
LT/RH/LoneStar - X15/A26 - Work Lights W/ Sw Pack - Customer Supplied:Diagram1
LT/RH/LoneStar - X15/A26 - Work Lights W/ Sw Pack - Customer Supplied:Diagram2
LT/RH/LoneStar - X15/A26 - Work Lights W/ Sw Pack - Customer Supplied W/ RKE W/AUTO REV:Diagram1
LT/RH/LoneStar - X15/A26 - Work Lights W/ Sw Pack - Customer Supplied W/ RKE W/AUTO REV:Diagram2
LT/RH/LoneStar - X15/A26 - Work Lights W/ Sw Pack - Customer Supplied W/O RKE W/AUTO REV:Diagram1
LT/RH/LoneStar - X15/A26 - Work Lights W/ Sw Pack - Customer Supplied W/O RKE W/AUTO REV:Diagram2
LT/RH/LoneStar X15 - Auto Start Stop with Sleeper Auto Climate / Cab Temp with Oil Temp Sensor Auto Trans:Diagram1

Mates SW-J1939_PACK-0009-00-02A

Name	Terminal Part Number	V-Min	Name	Wire Part Number	Wire CSA	Wire Spec	Wire Material description	Wire Color Description	Wire Length	End2 Terminal Part Number	End2 Pin Name	End2 Connect or
1	-	-	-	-	-	-	-	-	-	-	-	-
2	-	-	-	-	-	-	-	-	-	-	-	-

Connector Name	1118M
Part Number	3520850C1
Instances	LT/RH - X15/A26 - Lane Departure Warning - (Wabco OnLane):Diagram1
Mates	SW-Enable_Disable_Lane_ Departure_Wabco-3020-01-01A

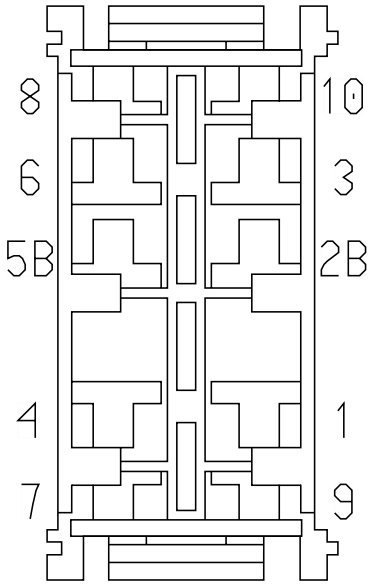

Name	Terminal Part Number	V-Min	Name	Wire Part Number	Wire CSA	Wire Spec	Wire Material description	Wire Color Description	Wire Length	End2 Terminal Part Number	End2 Pin Name	End2 Connect or
1	-	-	RV11COG1	3510359 R1	0.79	18.0	Thin Wall XLPE Primary Cable	WHITE	920.0	-	X	-
2B	-	-	RV67COG	3510359 R1	0.79	18.0	Thin Wall XLPE Primary Cable	WHITE	1945.0	-	G	16B
3	-	-	RV11COG3	3510359 R1	0.79	18.0	Thin Wall XLPE Primary Cable	WHITE	920.0	-	X	-
7	-	-	RV67EN	3510330 R1	1.16	16.0	Thin Wall XLPE Primary Cable	TAN	1945.0	-	A	16B

Name	Terminal Part Number	V-Min	Name	Wire Part Number	Wire CSA	Wire Spec	Wire Material description	Wire Color Description	Wire Length	End2 Terminal Part Number	End2 Pin Name	End2 Connector
8	-	-	RV67NA	3510330 R1	1.16	16.0	Thin Wall XLPE Primary Cable	TAN	1945.0	-	B	16B
9	-	-	RV13COG1	3510324 R1	1.16	16.0	Thin Wall XLPE Primary Cable	PINK	370.0	-	X	-
10	-	-	RV13COG3	3510324 R1	1.16	16.0	Thin Wall XLPE Primary Cable	PINK	370.0	-	X	-

Connector Name	1124M
Part Number	3928059C1
Instances	LT/RH/LoneStar - X15/A26 - Rear HVAC (No Idle) W/ Pre-Heat (Bergstrom Heat and Cool w/ Condensation) 4 SWITCHES Option 1:Diagram2 - No Idle Switching LT/RH/LoneStar - X15/A26 - Rear HVAC (No Idle) W/ Pre-Heat (Bergstrom Heat and Cool w/ Condensation) 4 SWITCHES Option 2:Diagram2 - No Idle Switching
Mates	SW-Front_Engine_Heat-6002- 03-02A

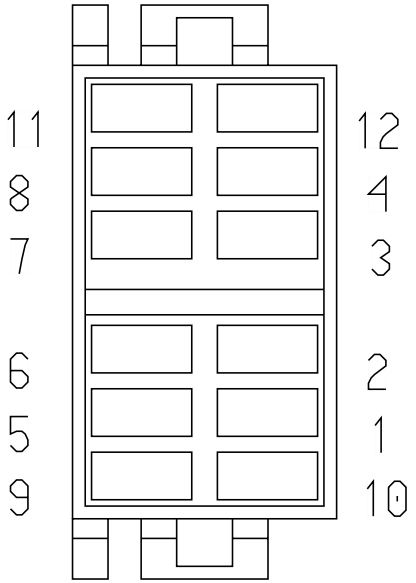

Name	Terminal Part Number	V-Min	Name	Wire Part Number	Wire CSA	Wire Spec	Wire Material description	Wire Color Description	Wire Length	End2 Terminal Part Number	End2 Pin Name	End2 Connect or
2	-	-	HN75AF	3510298 R1	0.53	20.0	Thin Wall XLPE Primary Cable	LIGHT GREEN	3380.0	-	B	1946F
4	-	-	HN75HC	3510298 R1	0.53	20.0	Thin Wall XLPE Primary Cable	LIGHT GREEN	640.0	-	X	-
9	-	-	HN75AG	3510298 R1	0.53	20.0	Thin Wall XLPE Primary Cable	LIGHT GREEN	3380.0	-	A	1946F
10	-	-	HN75AT	3510298 R1	0.53	20.0	Thin Wall XLPE Primary Cable	LIGHT GREEN	640.0	-	X	-

Name	Terminal Part Number	V-Min	Name	Wire Part Number	Wire CSA	Wire Spec	Wire Material description	Wire Color Description	Wire Length	End2 Terminal Part Number	End2 Pin Name	End2 Connect or
11	-	-	HN75-GAS	3510358 R1	0.53	20.0	Thin Wall XLPE Primary Cable	WHITE	3380.0	-	D	1946F
11	-	-	HN75HA	3510298 R1	0.53	20.0	Thin Wall XLPE Primary Cable	LIGHT GREEN	110.0	-	11	1125M
12	-	-	HN62J	3510352 R1	0.53	20.0	Thin Wall XLPE Primary Cable	DARK BLUE	3380.0	-	G	1946F
12	-	-	HN62AA	3510352 R1	0.53	20.0	Thin Wall XLPE Primary Cable	DARK BLUE	110.0	-	12	1125M

Connector Name	1125M
Part Number	3928059C1
Instances	LT/RH/LoneStar - X15/A26 - Rear HVAC (No Idle) W/ Pre-Heat (Bergstrom Heat and Cool w/ Condensation) 4 SWITCHES Option 1:Diagram2 - No Idle Switching LT/RH/LoneStar - X15/A26 - Rear HVAC (No Idle) W/ Pre-Heat (Bergstrom Heat and Cool w/ Condensation) 4 SWITCHES Option 2:Diagram2 - No Idle Switching
Mates	SW-Front_Engine_Cool-6002- 03-02A

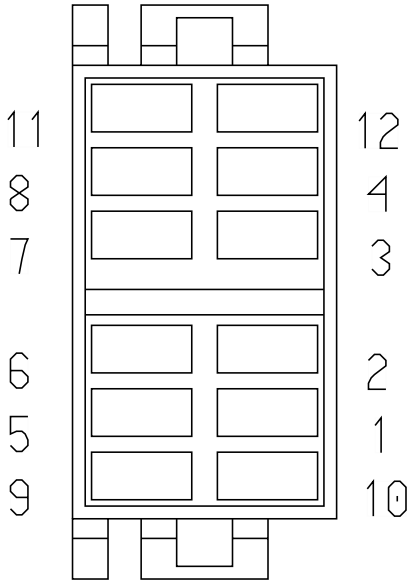

Name	Terminal Part Number	V-Min	Name	Wire Part Number	Wire CSA	Wire Spec	Wire Material description	Wire Color Description	Wire Length	End2 Terminal Part Number	End2 Pin Name	End2 Connect or
2	-	-	HN77NE	3510298 R1	0.53	20.0	Thin Wall XLPE Primary Cable	LIGHT GREEN	3390.0	-	E	1946F
4	-	-	HN75HD	3510298 R1	0.53	20.0	Thin Wall XLPE Primary Cable	LIGHT GREEN	650.0	-	X	-
9	-	-	HN77NF	3510298 R1	0.53	20.0	Thin Wall XLPE Primary Cable	LIGHT GREEN	3390.0	-	F	1946F
10	-	-	HN75HB	3510298 R1	0.53	20.0	Thin Wall XLPE Primary Cable	LIGHT GREEN	650.0	-	X	-

Name	Terminal Part Number	V-Min	Name	Wire Part Number	Wire CSA	Wire Spec	Wire Material description	Wire Color Description	Wire Length	End2 Terminal Part Number	End2 Pin Name	End2 Connect or
11	-	-	HN75HA	3510298 R1	0.53	20.0	Thin Wall XLPE Primary Cable	LIGHT GREEN	110.0	-	11	1124M
12	-	-	HN62AA	3510352 R1	0.53	20.0	Thin Wall XLPE Primary Cable	DARK BLUE	110.0	-	12	1124M

Connector Name	1127R
Part Number	1667741C1
Instances	LT/RH/LoneStar - X15/A26 - Seats (RollTek) Driver and Passenger (Hard Wired):Diagram1
Mates	DEV-RESISTOR_390_OHM_2W-01

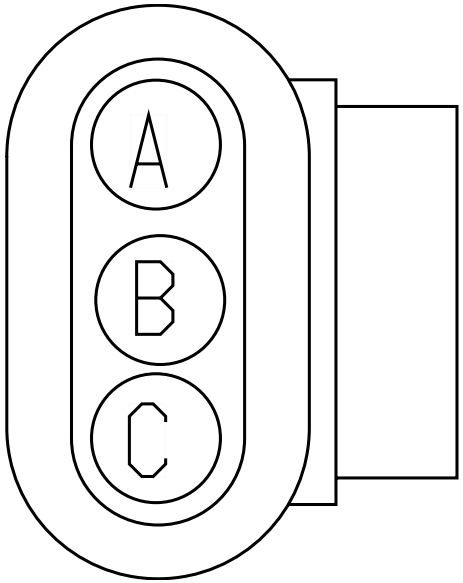

Name	Terminal Part Number	V-Min	Name	Wire Part Number	Wire CSA	Wire Spec	Wire Material description	Wire Color Description	Wire Length	End2 Terminal Part Number	End2 Pin Name	End2 Connect or
A	-	-	5E13BD	3510323 R1	0.79	18.0	Thin Wall XLPE Primary Cable	PINK	0.0	-	X	-
C	-	-	5E179B	3510359 R1	0.79	18.0	Thin Wall XLPE Primary Cable	WHITE	0.0	-	1	-

Connector Name	113I
Part Number	3600049C1
Instances	LT/RH - X15/A26 - Marker Lights (With 113 Halogen):Diagram1
Mates	RH-RIGHT_HEADLIGHT_HALOGEN -1016-08-01A

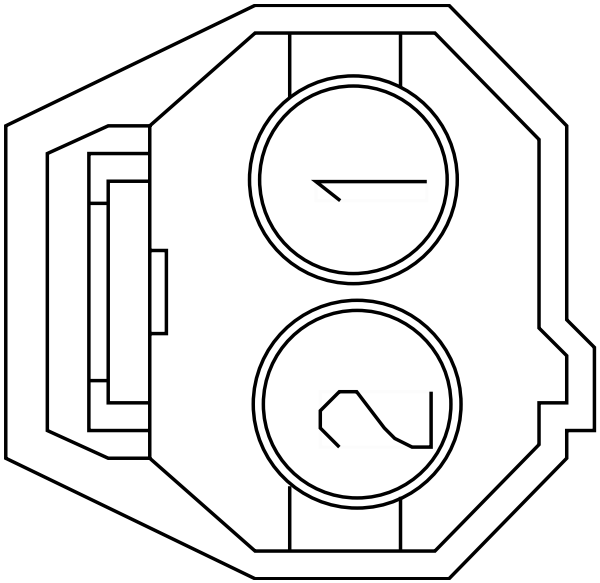

Name	Terminal Part Number	V-Min	Name	Wire Part Number	Wire CSA	Wire Spec	Wire Material description	Wire Color Description	Wire Length	End2 Terminal Part Number	End2 Pin Name	End2 Connect or
1	-	-	U58AA	3510306 R1	1.16	16.0	Thin Wall XLPE Primary Cable	BROWN	470.0	-	-	-
2	-	-	U11-GAD	3510360 R1	1.16	16.0	Thin Wall XLPE Primary Cable	WHITE	420.0	-	-	-

Connector Name	113
Part Number	3600049C1
Instances	LT/RH - X15/A26 - Marker Lights (With 113 Halogen):Diagram1
Mates	RH-LEFT_HEADLIGHT_HALOGEN- 1016-08-01A

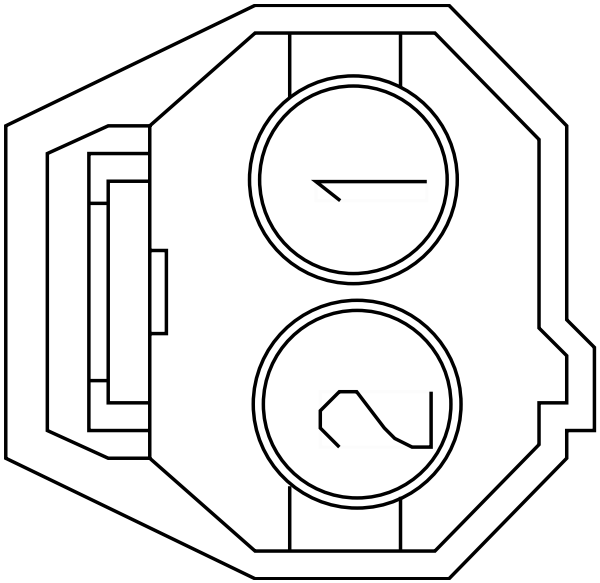

Name	Terminal Part Number	V-Min	Name	Wire Part Number	Wire CSA	Wire Spec	Wire Material description	Wire Color Description	Wire Length	End2 Terminal Part Number	End2 Pin Name	End2 Connect or
1	-	-	U58AA	3510306 R1	1.16	16.0	Thin Wall XLPE Primary Cable	BROWN	470.0	-	X	-
2	-	-	U11-GAD	3510360 R1	1.16	16.0	Thin Wall XLPE Primary Cable	WHITE	420.0	-	X	-

Connector Name	113
Part Number	3625557C1
Instances	LT/RH - X15/A26 - Directional Signal (Turn) With HEADLIGHTS:Diagram1
Mates	RH-LEFT_HEADLIGHT_HALOGEN- 1016-08-01A

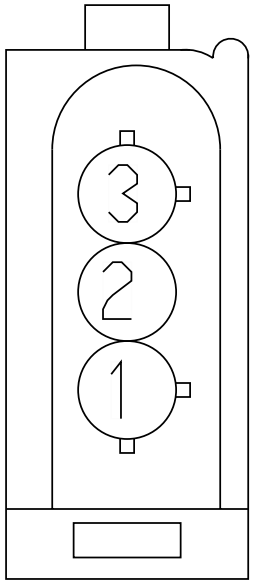

Name	Terminal Part Number	V-Min	Name	Wire Part Number	Wire CSA	Wire Spec	Wire Material description	Wire Color Description	Wire Length	End2 Terminal Part Number	End2 Pin Name	End2 Connect or
1	-	-	U11-GAC	3510360 R1	1.16	16.0	Thin Wall XLPE Primary Cable	WHITE	595.0	-	X	-
3	-	-	U56	3510318 R1	1.16	16.0	Thin Wall XLPE Primary Cable	ORANGE	2080.0	-	-	-

Connector Name	113
Part Number	3625557C1
Instances	LT/RH - X15/A26 - Marker Lights (With 113 Halogen):Diagram1
Mates	RH-RIGHT_HEADLIGHT_HALOGEN -1016-08-01A

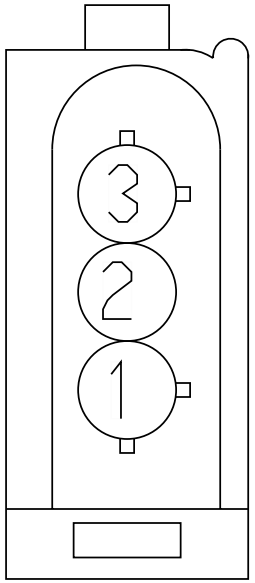

Name	Terminal Part Number	V-Min	Name	Wire Part Number	Wire CSA	Wire Spec	Wire Material description	Wire Color Description	Wire Length	End2 Terminal Part Number	End2 Pin Name	End2 Connect or
1	-	-	U11-GAC	3510360 R1	1.16	16.0	Thin Wall XLPE Primary Cable	WHITE	595.0	-	-	-
2	-	-	U58AB	3510306 R1	1.16	16.0	Thin Wall XLPE Primary Cable	BROWN	645.0	-	-	-

Connector Name	113
Part Number	3625557C1
Instances	LT/RH - X15/A26 - Marker Lights (With 113 Halogen):Diagram1
Mates	RH-LEFT_HEADLIGHT_HALOGEN- 1016-08-01A

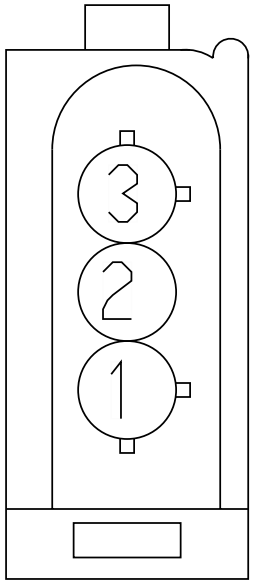

Name	Terminal Part Number	V-Min	Name	Wire Part Number	Wire CSA	Wire Spec	Wire Material description	Wire Color Description	Wire Length	End2 Terminal Part Number	End2 Pin Name	End2 Connect or
1	-	-	U11-GAC	3510360 R1	1.16	16.0	Thin Wall XLPE Primary Cable	WHITE	595.0	-	X	-
2	-	-	U58AB	3510306 R1	1.16	16.0	Thin Wall XLPE Primary Cable	BROWN	645.0	-	X	-

Connector Name	113_
Part Number	3625557C1
Instances	LT/RH - X15/A26 - Directional Signal (Turn) With HEADLIGHTS:Diagram1
Mates	RH-RIGHT_HEADLIGHT_HALOGEN -1016-08-01A

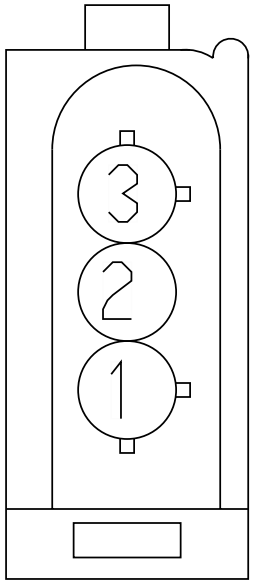

Name	Terminal Part Number	V-Min	Name	Wire Part Number	Wire CSA	Wire Spec	Wire Material description	Wire Color Description	Wire Length	End2 Terminal Part Number	End2 Pin Name	End2 Connect or
1	-	-	U11-GAC	3510360 R1	1.16	16.0	Thin Wall XLPE Primary Cable	WHITE	595.0	-	-	-
3	-	-	U56	3510318 R1	1.16	16.0	Thin Wall XLPE Primary Cable	ORANGE	2080.0	-	D	8000F

Connector Name 1200A

Part Number 3768152C1

Instances Cab J1939 (250Kbps):Cab J1939 (250Kbps)
LT/RH/LoneStar - X15/A26 - Rear AUTO HVAC (No Idle) W/ Pre-Heat (Bergstrom Heat and Cool w/ Condensation) 2 SWITCHES:Diagram1 - Powers, Grounds & Controls
LT/RH/LoneStar - X15/A26 - Rear HVAC (No Idle Heater) (Espar) Option 1:Diagram1
LT/RH/LoneStar - X15/A26 - Rear HVAC (No Idle Heater) (Espar) Option 2:Diagram1
LT/RH/LoneStar - X15/A26 - Rear HVAC (No Idle Heater) (Webasto Std N/Swift) N/ Heat Swtich:Diagram1
LT/RH/LoneStar - X15/A26 - Rear HVAC (No Idle Heater) (Webasto Std W/Swift) N/ Heat Switch:Diagram1
LT/RH/LoneStar - X15/A26 - Rear HVAC (No Idle) W/ Pre-Heat (Bergstrom Heat and Cool w/ Condensation) 2 SWITCHES Option 2:Diagram1 - Powers, Grounds & Controls
LT/RH/LoneStar - X15/A26 - Rear Manual HVAC (No Idle) W/ Pre-Heat (Bergstrom Heat and Cool w/ Condensation) 2 SWITCHES:Diagram1 - Powers, Grounds & Controls

Mates MODU-HVAC_CRTL_HEAD-6003-0 6-01A

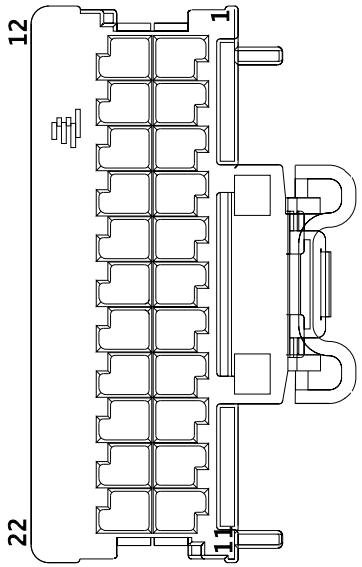

Name	Terminal Part Number	V-Min	Name	Wire Part Number	Wire CSA	Wire Spec	Wire Material description	Wire Color Description	Wire Length	End2 Terminal Part Number	End2 Pin Name	End2 Connector
7	-	-	-	-	-	-	-	-	-	-	-	-
7	-	-	WIRE223929	-	0.0	-	-	-	0.0	-	PIN1	-
8	-	-	-	-	-	-	-	-	-	-	-	-
8	-	-	WIRE223930	-	0.0	-	-	-	0.0	-	PIN1	-

Connector Name	1200A
Part Number	3768152C1
Instances	LT/RH/LoneStar - X15/A26 - Rear HVAC (No Idle) W/ Pre-Heat (Bergstrom Heat and Cool w/ Condensation) 2 SWITCHES Option 1:Diagram1 - Powers, Grounds & Controls
Mates	MODU-HVAC_CRTL_HEAD-6003-0 6-01A

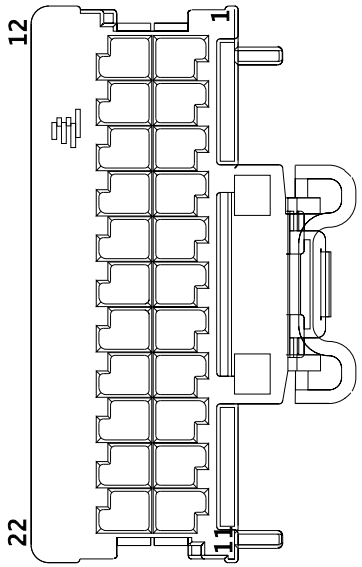

Name	Terminal Part Number	V-Min	Name	Wire Part Number	Wire CSA	Wire Spec	Wire Material description	Wire Color Description	Wire Length	End2 Terminal Part Number	End2 Pin Name	End2 Connect or
7	-	-	-	-	-	-	-	-	-	-	-	-
8	-	-	-	-	-	-	-	-	-	-	-	-

Connector Name	1200A
Part Number	3768152C1
Instances	LT/RH/LoneStar - X15/A26 - Rear HVAC (No Idle) W/ Pre-Heat (Bergstrom Heat and Cool w/ Condensation) 4 SWITCHES Option 1:Diagram1 - Powers, Grounds & Controls
Mates	MODU-HVAC_CRTL_HEAD-6003-0 6-01A

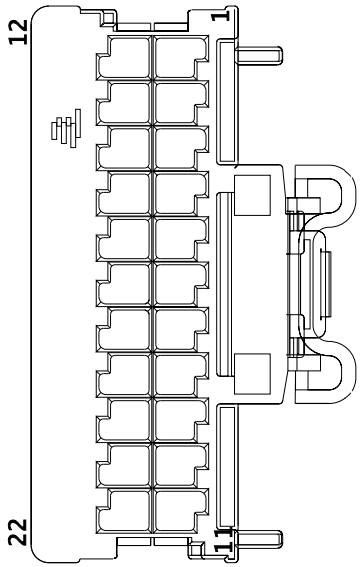

Name	Terminal Part Number	V-Min	Name	Wire Part Number	Wire CSA	Wire Spec	Wire Material description	Wire Color Description	Wire Length	End2 Terminal Part Number	End2 Pin Name	End2 Connect or
7	-	-	-	-	-	-	-	-	-	-	-	-
8	-	-	-	-	-	-	-	-	-	-	-	-

Connector Name	1200A
Part Number	3768152C1
Instances	LT/RH/LoneStar - X15/A26 - Rear HVAC (No Idle) W/ Pre-Heat (Bergstrom Heat and Cool w/ Condensation) 4 SWITCHES Option 2:Diagram1 - Powers, Grounds & Controls
Mates	DEV-HVAC_CTRL_HEAD_AUTO-01

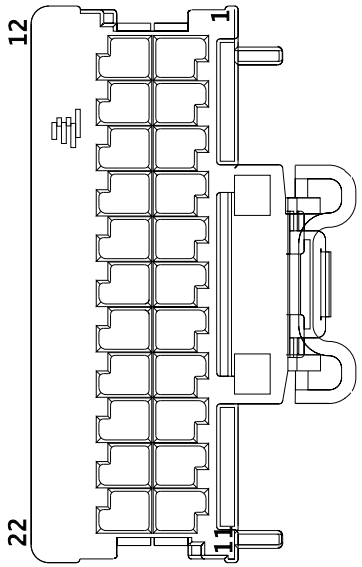

Name	Terminal Part Number	V-Min	Name	Wire Part Number	Wire CSA	Wire Spec	Wire Material description	Wire Color Description	Wire Length	End2 Terminal Part Number	End2 Pin Name	End2 Connect or
7	-	-	-	-	-	-	-	-	-	-	-	-
8	-	-	-	-	-	-	-	-	-	-	-	-

Connector Name	1200A
Part Number	3768152C1
Instances	LT/RH/LoneStar - X15/A26 - Rear HVAC (No Idle Heater) (Webasto Smartemp):Diagram1
Mates	MODU-HVAC_CTRL_HEAD-6003-0 4-04A

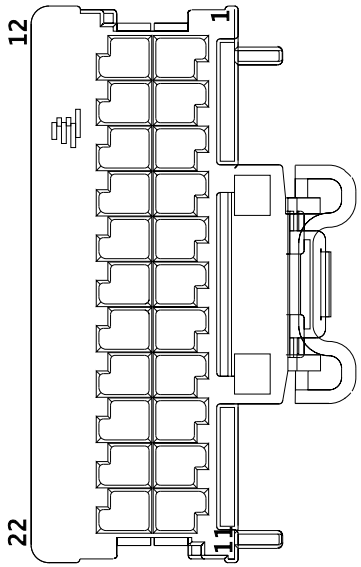

Name	Terminal Part Number	V-Min	Name	Wire Part Number	Wire CSA	Wire Spec	Wire Material description	Wire Color Description	Wire Length	End2 Terminal Part Number	End2 Pin Name	End2 Connector
7	-	-	-	-	-	-	-	-	-	-	-	-
8	-	-	-	-	-	-	-	-	-	-	-	-

Connector Name	125
Part Number	3625557C1
Instances	LT/RH - X15/A26 - Directional Signal (Turn) With HEADLIGHTS (HAL-125):Diagram1
Mates	LT-RS_HEADLIGHT_125HAL/125 LED

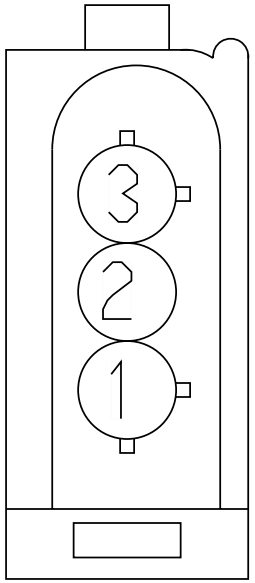

Name	Terminal Part Number	V-Min	Name	Wire Part Number	Wire CSA	Wire Spec	Wire Material description	Wire Color Description	Wire Length	End2 Terminal Part Number	End2 Pin Name	End2 Connect or
1	-	-	U11-GAC	3510360 R1	1.16	16.0	Thin Wall XLPE Primary Cable	WHITE	595.0	-	1	125
3	-	-	U56	3510318 R1	1.16	16.0	Thin Wall XLPE Primary Cable	ORANGE	2080.0	-	-	-

Connector Name	125
Part Number	3625557C1
Instances	LT/RH - X15/A26 - Directional Signal (Turn) With HEADLIGHTS (HAL-125):Diagram1
Mates	LT-LS_HEADLIGHT_125HAL/125 LED

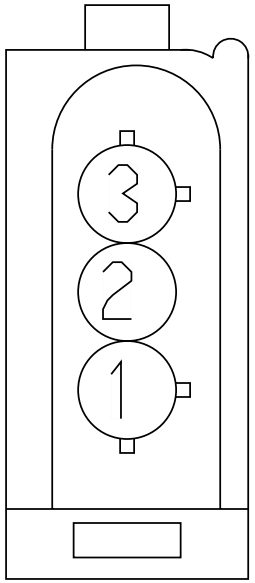

Name	Terminal Part Number	V-Min	Name	Wire Part Number	Wire CSA	Wire Spec	Wire Material description	Wire Color Description	Wire Length	End2 Terminal Part Number	End2 Pin Name	End2 Connect or
1	-	-	U11-GAC	3510360 R1	1.16	16.0	Thin Wall XLPE Primary Cable	WHITE	595.0	-	1	125
3	-	-	U56	3510318 R1	1.16	16.0	Thin Wall XLPE Primary Cable	ORANGE	2080.0	-	D	8001F

Connector Name	125
Part Number	3625557C1
Instances	LT/RH - X15/A26 - Directional Signal (Turn) With HEADLIGHTS (LED-125):Diagram1
Mates	LT-RS_HEADLIGHT_LED-1016-0 1-03

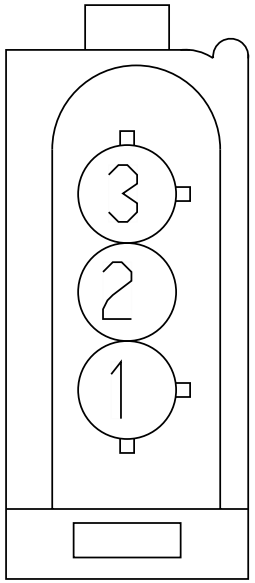

Name	Terminal Part Number	V-Min	Name	Wire Part Number	Wire CSA	Wire Spec	Wire Material description	Wire Color Description	Wire Length	End2 Terminal Part Number	End2 Pin Name	End2 Connect or
1	-	-	U11-GAC	3510360 R1	1.16	16.0	Thin Wall XLPE Primary Cable	WHITE	595.0	-	1	125
3	-	-	U56	3510318 R1	1.16	16.0	Thin Wall XLPE Primary Cable	ORANGE	2080.0	-	-	-

Connector Name	125
Part Number	3625557C1
Instances	LT/RH - X15/A26 - Directional Signal (Turn) With HEADLIGHTS (LED-125):Diagram1
Mates	LT-LS_HEADLIGHT_LED-1016-0 1-03

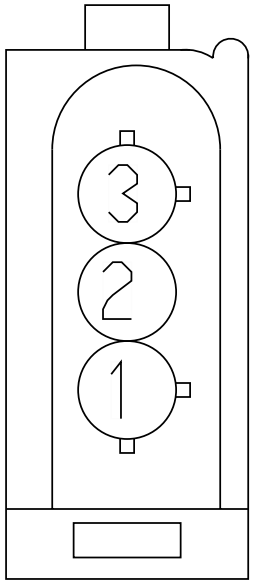

Name	Terminal Part Number	V-Min	Name	Wire Part Number	Wire CSA	Wire Spec	Wire Material description	Wire Color Description	Wire Length	End2 Terminal Part Number	End2 Pin Name	End2 Connect or
1	-	-	U11-GAC	3510360 R1	1.16	16.0	Thin Wall XLPE Primary Cable	WHITE	595.0	-	1	125
3	-	-	U56	3510318 R1	1.16	16.0	Thin Wall XLPE Primary Cable	ORANGE	2080.0	-	D	8001F

Connector Name	125
Part Number	4062974C1
Instances	LT/RH - X15/A26 - Marker Lights (With 125 Halogen):Diagram1 LT/RH - X15/A26 - Marker Lights (With 125 LED):Diagram1
Mates	LT-RS_HEADLIGHT_125HAL/125 LED

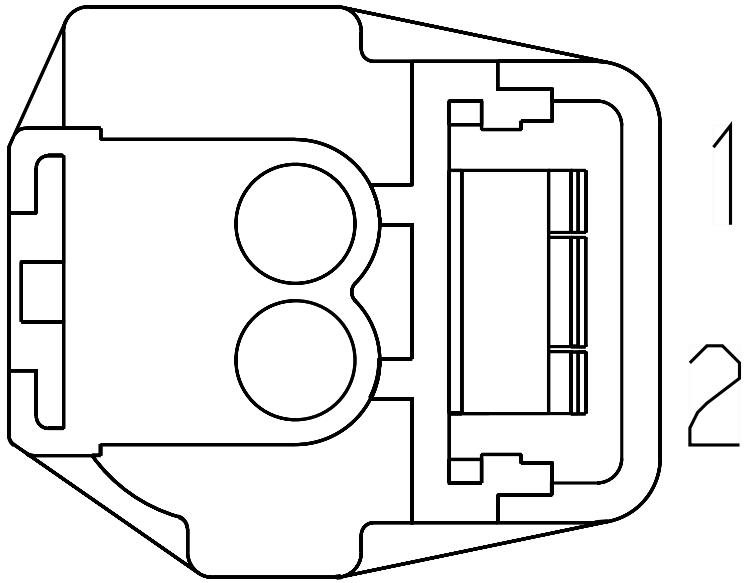

Name	Terminal Part Number	V-Min	Name	Wire Part Number	Wire CSA	Wire Spec	Wire Material description	Wire Color Description	Wire Length	End2 Terminal Part Number	End2 Pin Name	End2 Connect or
1	-	-	U11-GAC	3510360 R1	1.16	16.0	Thin Wall XLPE Primary Cable	WHITE	595.0	-	X	-
1	-	-	U58AA	3510306 R1	1.16	16.0	Thin Wall XLPE Primary Cable	BROWN	470.0	-	X	-
2	-	-	U58AB	3510306 R1	1.16	16.0	Thin Wall XLPE Primary Cable	BROWN	645.0	-	X	-
2	-	-	U11-GAD	3510360 R1	1.16	16.0	Thin Wall XLPE Primary Cable	WHITE	420.0	-	X	-

Connector Name	1300
Part Number	3597143C1
Instances	Cab J1939 (250Kbps):Cab J1939 (250Kbps) LT/RH - X15/A26 - Lane Departure Warning - (Wabco OnLane 2.0 w/ roof speakers):Diagram1
Mates	MODU-RADIO_ASM-2008-01A

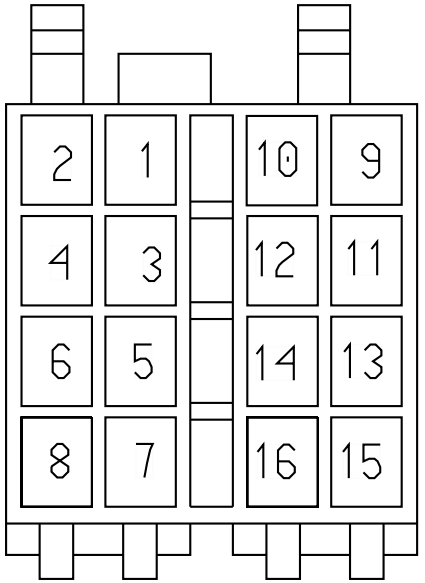

Name	Terminal Part Number	V-Min	Name	Wire Part Number	Wire CSA	Wire Spec	Wire Material description	Wire Color Description	Wire Length	End2 Terminal Part Number	End2 Pin Name	End2 Connect or
1	-	-	WIRE223944	-	0.0	-	-	-	0.0	-	PIN1	-
1	-	-	-	-	-	-	-	-	-	-	-	-
2	-	-	WIRE223945	-	0.0	-	-	-	0.0	-	PIN1	-
2	-	-	-	-	-	-	-	-	-	-	-	-

Connector Name	1400
Part Number	3596926C1
Instances	LoneStar - X15 - Adaptive Cruise Control w/o Display (Bendix):Diagram1 LT/RH - X15/A26 - Adaptive Cruise Control w/o Display (Bendix):Diagram1 LT/RH - X15/A26 - Lane Departure Warning - (Wabco OnLane 2.0 w/ roof speakers):Diagram1 LT/RH A26 - Auto Start Stop and Sleeper Auto Climate / Cab Temp / Oil Mapping Manual Trans:Diagram1 LT/RH A26 - Auto Start Stop Battery & Oil Temp Mapping Auto Trans:Diagram1 LT/RH A26 - Auto Start Stop Battery & Oil Temp Mapping Manual Trans:Diagram1 LT/RH A26 - Auto Start Stop with Sleeper Auto Climate / Cab Temp / Oil Mapping Auto Trans:Diagram1 LT/RH/LoneStar - X15/A26 - Engine Brake (CA2.0; Mux Switch):Diagram1 LT/RH/LoneStar - X15/A26 - Engine Brake (CA2.0; Stalk Shifter):Diagram1 LT/RH/LoneStar - X15/A26 - Hill Start Aid (Bendix):Diagram1 LT/RH/LoneStar - X15/A26 - Hill Start Aid (Bendix):Diagram2 LT/RH/LoneStar - X15/A26 - Hill Start Aid (Bendix):Diagram3 LT/RH/LoneStar - X15/A26 - Jaw Unlock Control W/ SOLENOIDS W/SWITCH PACKS:Diagram1 LT/RH/LoneStar - X15/A26 - Rear Lights Stop - Dual Assembly:Diagram1 LT/RH/LoneStar - X15/A26 - Rear Lights Stop - Dual Assembly:Diagram2 LT/RH/LoneStar - X15/A26 - Rear Lights Stop - Single Assembly Option 1:Diagram1 LT/RH/LoneStar - X15/A26 - Rear Lights Stop - Single Assembly Option 1:Diagram2 LT/RH/LoneStar - X15/A26 - Rear Lights Stop - Single Assembly Option 2:Diagram1 LT/RH/LoneStar - X15/A26 - Rear Lights Stop - Single Assembly Option 2:Diagram2 LT/RH/LoneStar X15 - Auto Start Stop Oil Temp Sensor Auto Trans:Diagram1 LT/RH/LoneStar X15 - Auto Start Stop Oil Temp Sensor Manual Trans:Diagram1 LT/RH/LoneStar X15 - Auto Start Stop with Sleeper Auto Climate / Cab Temp with Oil Temp Sensor Auto Trans:Diagram1

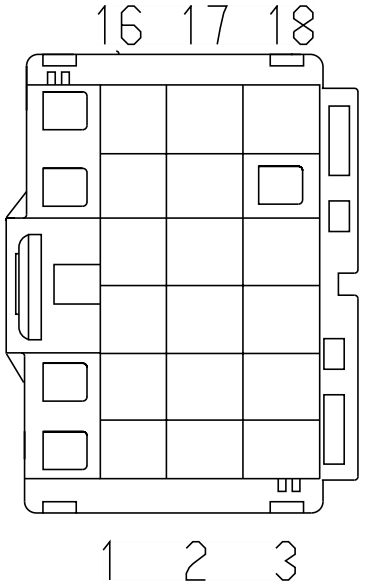

LT/RH/LoneStar X15 - Auto Start Stop with Sleeper
Auto Climate / Cab Temp with Oil Temp Sensor Manual
Trans:Diagram1
Powertrain J1939 (500Kbps) Edurant Transmission
A26:Powertrain J1939 (500Kbps) Edurant Transmission A26
Powertrain J1939 (500Kbps) Allison 3K Transmission
A26:Powertrain J1939 (500Kbps) Allison 3K A26
Powertrain J1939 (500Kbps) Eaton Ultrashift+ Transmission
A26:Powertrain J1939 (500Kbps) Eaton Ultrashift+ Transmission A26
Powertrain J1939 (500Kbps) Eaton Ultrashift+ Transmission
X15:Powertrain J1939 (500kbps) Eaton Ultrashift+ X15
Powertrain J1939 (500Kbps) Edurant Transmission
X15:Powertrain J1939 (500kbps) Endurant Transmission X15
Powertrain J1939 (500Kbps) Manual Transmission
A26:Powertrain Standard J1939 (500Kbps) A26 Engine
Powertrain J1939 (500Kbps) Manual Transmission
X15:Powertrain Standard J1939 (500kbps) Manual Transmission X15
Powertrain J1939 (500Kbps) TC10 Transmission A26:Powertrain J1939 (500Kbps) TC10 Transmission A26
Powertrain J1939 (500Kbps) TC10 Transmission X15:Powertrain J1939 (500kbps) TC10 Transmission X15

Mates MODU-ABS-3003-01-02A Bendix

Name	Terminal Part Number	V-Min	Name	Wire Part Number	Wire CSA	Wire Spec	Wire Material description	Wire Color Description	Wire Length	End2 Terminal Part Number	End2 Pin Name	End2 Connect or
7	-	-	WIRE223782	-	0.0	-	-	-	0.0	-	PIN1	-
7	-	-	-	-	-	-	-	-	-	-	-	-
8	-	-	WIRE223785	-	0.0	-	-	-	0.0	-	PIN1	-
8	-	-	-	-	-	-	-	-	-	-	-	-

Connector Name	1403
Part Number	3596927C1
Instances	ABS Private J1939:ABS Private J1939
Mates	MODU-ABS-3003-01-02A Bendix

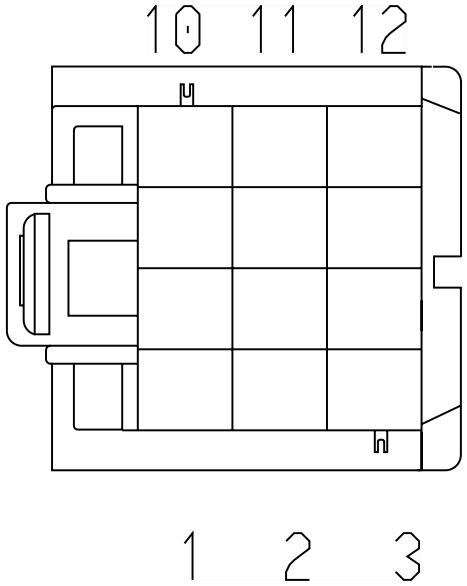

Name	Terminal Part Number	V-Min	Name	Wire Part Number	Wire CSA	Wire Spec	Wire Material description	Wire Color Description	Wire Length	End2 Terminal Part Number	End2 Pin Name	End2 Connect or
7	-	-	XZ94SDA	3510299 R1	0.79	18.0	Thin Wall XLPE Primary Cable	LIGHT GREEN	1415.0	-	K	1410
8	-	-	XZ94SBA	3510311 R1	0.79	18.0	Thin Wall XLPE Primary Cable	GREY	1415.0	-	G	1410
10	-	-	XZ94SCA	3510311 R1	0.79	18.0	Thin Wall XLPE Primary Cable	GREY	1415.0	-	D	1410
11	-	-	XZ94SAA	3510311 R1	0.79	18.0	Thin Wall XLPE Primary Cable	GREY	1415.0	-	A	1410

Connector Name	1410
Part Number	3601838C1
Instances	ABS Private J1939:ABS Private J1939
Mates	SP-ABS_SPLICE-B002-00-10-A1

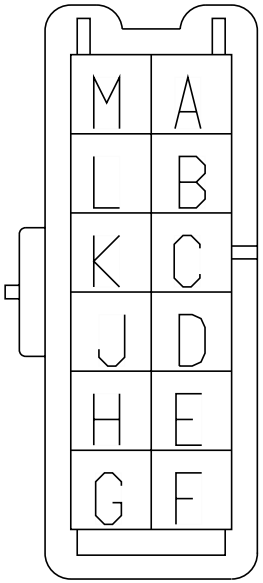

Name	Terminal Part Number	V-Min	Name	Wire Part Number	Wire CSA	Wire Spec	Wire Material description	Wire Color Description	Wire Length	End2 Terminal Part Number	End2 Pin Name	End2 Connect or
A	-	-	XZ94SAA	3510311 R1	0.79	18.0	Thin Wall XLPE Primary Cable	GREY	1415.0	-	11	1403
A	-	-	XD94SN	3510311 R1	0.79	18.0	Thin Wall XLPE Primary Cable	GREY	1310.0	-	7	1423
B	-	-	XD94SNA	3510311 R1	0.79	18.0	Thin Wall XLPE Primary Cable	GREY	1290.0	-	46	1701M
B	-	-	XZ94SAB	3510311 R1	0.79	18.0	Thin Wall XLPE Primary Cable	GREY	1290.0	-	46	1701M

Name	Terminal Part Number	V-Min	Name	Wire Part Number	Wire CSA	Wire Spec	Wire Material description	Wire Color Description	Wire Length	End2 Terminal Part Number	End2 Pin Name	End2 Connector
C	-	-	XZ94SA	3510311 R1	0.79	18.0	Thin Wall XLPE Primary Cable	GREY	750.0	-	A	1820M
C	-	-	XD94SNB	3510311 R1	0.79	18.0	Thin Wall XLPE Primary Cable	GREY	750.0	-	A	1820M
D	-	-	XZ94SCA	3510311 R1	0.79	18.0	Thin Wall XLPE Primary Cable	GREY	1415.0	-	10	1403
D	-	-	XD94SP	3510311 R1	0.79	18.0	Thin Wall XLPE Primary Cable	GREY	1310.0	-	10	1423
E	-	-	XZ94SBB	3510311 R1	0.79	18.0	Thin Wall XLPE Primary Cable	GREY	1290.0	-	47	1701M
E	-	-	XD94SPA	3510311 R1	0.79	18.0	Thin Wall XLPE Primary Cable	GREY	1290.0	-	47	1701M
F	-	-	XZ94SC	3510311 R1	0.79	18.0	Thin Wall XLPE Primary Cable	GREY	750.0	-	C	1820M
F	-	-	XD94SPB	3510311 R1	0.79	18.0	Thin Wall XLPE Primary Cable	GREY	750.0	-	B	1820M

Name	Terminal Part Number	V-Min	Name	Wire Part Number	Wire CSA	Wire Spec	Wire Material description	Wire Color Description	Wire Length	End2 Terminal Part Number	End2 Pin Name	End2 Connector
G	-	-	XZ94SBA	3510311 R1	0.79	18.0	Thin Wall XLPE Primary Cable	GREY	1415.0	-	8	1403
G	-	-	XD94SR	3510311 R1	0.79	18.0	Thin Wall XLPE Primary Cable	GREY	1310.0	-	3	1423
H	-	-	XZ94SCB	3510311 R1	0.79	18.0	Thin Wall XLPE Primary Cable	GREY	1290.0	-	48	1701M
H	-	-	XD94SRA	3510311 R1	0.79	18.0	Thin Wall XLPE Primary Cable	GREY	1290.0	-	48	1701M
J	-	-	XZ94SB	3510311 R1	0.79	18.0	Thin Wall XLPE Primary Cable	GREY	750.0	-	B	1820M
J	-	-	XD94SRB	3510311 R1	0.79	18.0	Thin Wall XLPE Primary Cable	GREY	750.0	-	C	1820M
K	-	-	XZ94SDA	3510299 R1	0.79	18.0	Thin Wall XLPE Primary Cable	LIGHT GREEN	1415.0	-	7	1403
K	-	-	XD94SS	3510311 R1	0.79	18.0	Thin Wall XLPE Primary Cable	GREY	1310.0	-	1	1423

Name	Terminal Part Number	V-Min	Name	Wire Part Number	Wire CSA	Wire Spec	Wire Material description	Wire Color Description	Wire Length	End2 Terminal Part Number	End2 Pin Name	End2 Connect or
L	-	-	XZ94SDB	3510311 R1	0.79	18.0	Thin Wall XLPE Primary Cable	GREY	1290.0	-	49	1701M
L	-	-	XD94SSA	3510311 R1	0.79	18.0	Thin Wall XLPE Primary Cable	GREY	1290.0	-	49	1701M
M	-	-	XZ94SD	3510311 R1	0.79	18.0	Thin Wall XLPE Primary Cable	GREY	750.0	-	D	1820M
M	-	-	XD94SSB	3510311 R1	0.79	18.0	Thin Wall XLPE Primary Cable	GREY	750.0	-	D	1820M

Connector Name	1420
Part Number	3557922C1
Instances	LoneStar - X15 - Adaptive Cruise Control w/o Display (Wabco):Diagram1 LT/RH - X15/A26 - Adaptive Cruise Control w/o Display (Wabco):Diagram1 LT/RH - X15/A26 - Lane Departure Warning - (Wabco OnLane 2.0 w/ roof speakers):Diagram1 LT/RH A26 - Auto Start Stop and Sleeper Auto Climate / Cab Temp / Oil Mapping Manual Trans:Diagram1 LT/RH A26 - Auto Start Stop Battery & Oil Temp Mapping Auto Trans:Diagram1 LT/RH A26 - Auto Start Stop Battery & Oil Temp Mapping Manual Trans:Diagram1 LT/RH A26 - Auto Start Stop with Sleeper Auto Climate / Cab Temp / Oil Mapping Auto Trans:Diagram1 LT/RH/LoneStar - X15/A26 - Engine Brake (CA2.0; Mux Switch):Diagram1 LT/RH/LoneStar - X15/A26 - Engine Brake (CA2.0; Stalk Shifter):Diagram1 LT/RH/LoneStar - X15/A26 - Jaw Unlock Control W/ SOLENOIDS W/SWITCH PACKS:Diagram1 LT/RH/LoneStar - X15/A26 - Rear Lights Stop - Dual Assembly:Diagram1 LT/RH/LoneStar - X15/A26 - Rear Lights Stop - Dual Assembly:Diagram2 LT/RH/LoneStar - X15/A26 - Rear Lights Stop - Single Assembly Option 1:Diagram1 LT/RH/LoneStar - X15/A26 - Rear Lights Stop - Single Assembly Option 1:Diagram2 LT/RH/LoneStar - X15/A26 - Rear Lights Stop - Single Assembly Option 2:Diagram1 LT/RH/LoneStar - X15/A26 - Rear Lights Stop - Single Assembly Option 2:Diagram2 LT/RH/LoneStar X15 - Auto Start Stop Oil Temp Sensor Auto Trans:Diagram1 LT/RH/LoneStar X15 - Auto Start Stop Oil Temp Sensor Manual Trans:Diagram1 LT/RH/LoneStar X15 - Auto Start Stop with Sleeper Auto Climate / Cab Temp with Oil Temp Sensor Auto Trans:Diagram1 LT/RH/LoneStar X15 - Auto Start Stop with Sleeper Auto Climate / Cab Temp with Oil Temp Sensor Manual Trans:Diagram1

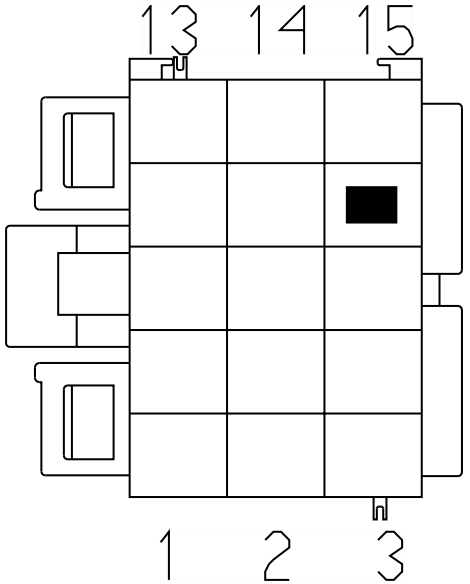

Powertrain J1939 (500Kbps) Edurant Transmission
A26:Powertrain J1939 (500Kbps) Edurant Transmission A26
Powertrain J1939 (500Kbps) Allison 3K Transmission
A26:Powertrain J1939 (500Kbps) Allison 3K A26
Powertrain J1939 (500Kbps) Eaton Ultrashift+ Transmission
A26:Powertrain J1939 (500Kbps) Eaton Ultrashift+ Transmission A26
Powertrain J1939 (500Kbps) Eaton Ultrashift+ Transmission
X15:Powertrain J1939 (500kbps) Eaton Ultrashift+ X15
Powertrain J1939 (500Kbps) Edurant Transmission
X15:Powertrain J1939 (500kbps) Endurant Transmission X15
Powertrain J1939 (500Kbps) Manual Transmission
A26:Powertrain Standard J1939 (500Kbps) A26 Engine
Powertrain J1939 (500Kbps) Manual Transmission
X15:Powertrain Standard J1939 (500kbps) Manual Transmission X15
Powertrain J1939 (500Kbps) TC10 Transmission A26:Powertrain J1939 (500Kbps) TC10 Transmission A26
Powertrain J1939 (500Kbps) TC10 Transmission X15:Powertrain J1939 (500kbps) TC10 Transmission X15

Mates MODU-ABS-3003-02-02A Wabco

Name	Terminal Part Number	V-Min	Name	Wire Part Number	Wire CSA	Wire Spec	Wire Material description	Wire Color Description	Wire Length	End2 Terminal Part Number	End2 Pin Name	End2 Connector
1	-	-	WIRE223757	-	0.0	-	-	-	0.0	-	PIN1	-
1	-	-	-	-	-	-	-	-	-	-	-	-
3	-	-	WIRE223756	-	0.0	-	-	-	0.0	-	PIN1	-
3	-	-	-	-	-	-	-	-	-	-	-	-

Connector Name	1423
Part Number	3846885C1
Instances	ABS Private J1939:ABS Private J1939 LT/RH/LoneStar - X15/A26 - Hill Start Aid (Wabco):Diagram1
Mates	MODU-ABS-3003-02-02A Wabco

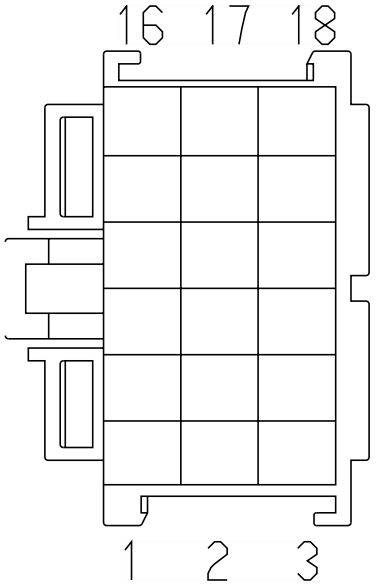

Name	Terminal Part Number	V-Min	Name	Wire Part Number	Wire CSA	Wire Spec	Wire Material description	Wire Color Description	Wire Length	End2 Terminal Part Number	End2 Pin Name	End2 Connect or
1	-	-	XD94SS	3510311 R1	0.79	18.0	Thin Wall XLPE Primary Cable	GREY	1310.0	-	K	1410
1	-	-	-	-	-	-	-	-	-	-	-	-
3	-	-	XD94SR	3510311 R1	0.79	18.0	Thin Wall XLPE Primary Cable	GREY	1310.0	-	G	1410
3	-	-	-	-	-	-	-	-	-	-	-	-
7	-	-	XD94SN	3510311 R1	0.79	18.0	Thin Wall XLPE Primary Cable	GREY	1310.0	-	A	1410
10	-	-	XD94SP	3510311 R1	0.79	18.0	Thin Wall XLPE Primary Cable	GREY	1310.0	-	D	1410

Connector Name	1500A
Part Number	3710061C1
Instances	LoneStar - X15 - Adaptive Cruise Control (Bendix - Fusion W/O DIU & N/ Safety Direct & Tweeters):Diagram1 LoneStar - X15 - Adaptive Cruise Control (Bendix - Fusion W/O DIU & W/ Safety Direct & Reg Speakers) Option 1:Diagram1 LoneStar - X15 - Adaptive Cruise Control (Bendix - Fusion W/O DIU & W/ Safety Direct & Reg Speakers) Option 2:Diagram1 LoneStar - X15 - Adaptive Cruise Control (Bendix - Fusion W/O DIU & W/ Safety Direct & W/ Tweeters):Diagram1 LoneStar - X15 - Adaptive Cruise Control w/o Display (Bendix):Diagram1 LoneStar - X15 - Adaptive Cruise Control w/o Display (Wabco):Diagram1 LoneStar - X15 - Headlights Halogen N/INT N/LOWW:Diagram1 LoneStar - X15 - Headlights Halogen N/INT W/LOWW:Diagram1 LoneStar - X15 - Headlights Halogen W/INT N/LOWW:Diagram1 LoneStar - X15 - Headlights Halogen W/INT W/ LOWW:Diagram1 LoneStar - X15 - Lane Departure Warning - (Bendix Fusion W/ Safety Direct))(US & Canada):Diagram1 LoneStar - X15 - Lane Departure Warning - (Bendix Fusion W/ Safety Direct))(US & Canada)-:Diagram1 LoneStar - X15 - Tire Pressure (TPMS) (US & Canada):Diagram1 LoneStar - X15 - Windshield Washer Pump & Low Fluid Sensor:Diagram1 LT - X15/A26 - Headlights Halogen N/INT N/LOWW:Diagram1 LT - X15/A26 - Headlights Halogen N/INT W/LOWW:Diagram1 LT - X15/A26 - Headlights Halogen W/INT N/LOWW:Diagram1 LT - X15/A26 - Headlights Halogen W/INT W/LOWW:Diagram1 LT - X15/A26 - Headlights LED N/ INT N/LOWW:Diagram1 LT - X15/A26 - Headlights LED N/ INT W/LOWW:Diagram1 LT - X15/A26 - Headlights LED W/INT N/LOWW:Diagram1 LT - X15/A26 - Headlights LED W/INT W/LOWW:Diagram1 LT/RH - A26 - Air Flow Restriction Monitoring A26:Diagram1 LT/RH - A26 - Air Flow Restriction Monitoring A26:Diagram2 LT/RH - A26 - DEF Economy Monitor (Cluster):Diagram1 LT/RH - A26 - Starter Interlocks (Service Brake Interlock):Diagram1 LT/RH - A26 - Transmission Oil Temperature-Manual Trans-Horizon Option 1:Diagram1

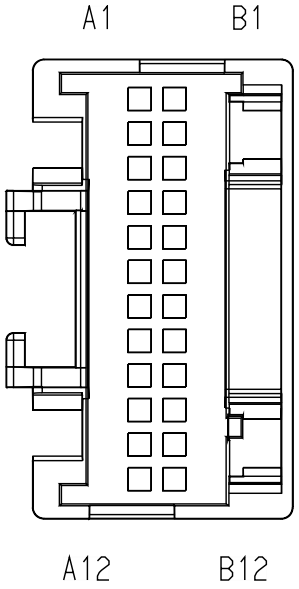

LT/RH - A26 - Transmission Oil Temperature-Manual Trans-Horizon Option 1:Diagram2
LT/RH - A26 - Transmission Oil Temperature-Manual Trans-Horizon Option 1:Diagram3
LT/RH - A26 - Transmission Oil Temperature-Manual Trans-Horizon Option 2:Diagram1
LT/RH - A26 - Transmission Oil Temperature-Manual Trans-Horizon Option 2:Diagram2
LT/RH - A26 - Transmission Oil Temperature-Manual Trans-Horizon Option 2:Diagram3
LT/RH - A26 - Transmission Power Take Off Dual PTO with Clutch Interlock:Diagram1
LT/RH - A26 - Transmission Power Take Off Dual Solenoid AUTO:Diagram1
LT/RH - A26 - Transmission Power Take Off Option 1:Diagram1
LT/RH - A26 - Transmission Power Take Off Option 2:Diagram1
LT/RH - A26 - Transmission Power Take Off W/ Clutch Interlock:Diagram1
LT/RH - A26 - Transmission Shifter (Eaton Endurant and Eaton Procision):Diagram1
LT/RH - A26 - Transmission Shifter (Universal Shifter - Ultrashift + & FAS):Diagram1
LT/RH - A26 - VEHICLE SPEEDOMETER SYSTEM (MANUAL XMSN):Diagram1
LT/RH - A26 - VEHICLE SPEEDOMETER SYSTEM (MANUAL XMSN):Diagram2
LT/RH - A26 - Water In Fuel (WIF) DAVCO N/ Heater:Diagram1
LT/RH - A26 - Water In Fuel (WIF) DAVCO N/ Heater:Diagram2
LT/RH - A26 - Water In Fuel (WIF) Davco W/Heater:Diagram1
LT/RH - A26 - Water In Fuel (WIF) Davco W/Heater:Diagram2
LT/RH - A26 - Water In Fuel (WIF) RACOR N/ Heater:Diagram1
LT/RH - X15/A26 - Adaptive Cruise Control (Bendix - Fusion W/O DIU & N/ Safety Direct & Tweeters):Diagram1
LT/RH - X15/A26 - 10 PIN ClockSpring:Diagram1
LT/RH - X15/A26 - Adaptive Cruise Control (Bendix - Fusion W/O DIU & N/ Safety Direct & Reg Speakers):Diagram1
LT/RH - X15/A26 - Adaptive Cruise Control (Bendix - Fusion W/O DIU & W/ Safety Direct & Reg Speakers):Diagram1
LT/RH - X15/A26 - Adaptive Cruise Control (Bendix - Fusion W/O DIU & W/ Safety Direct & W/ Tweeters):Diagram1
LT/RH - X15/A26 - Adaptive Cruise Control w/o Display (Bendix):Diagram1
LT/RH - X15/A26 - Adaptive Cruise Control w/o Display (Wabco):Diagram1

LT/RH - X15/A26 - Bendix; Tractor or Towing Truck; W/ Air SUSP; J1939 Driven Lamp:Diagram1
LT/RH - X15/A26 - Bendix; Tractor or Towing Truck; W/ Air SUSP; J1939 Driven Lamp:Diagram2
LT/RH - X15/A26 - Engine Oil Level Monitoring (CA2.0):Diagram1
LT/RH - X15/A26 - Intake Manifold Pressure AUX gauge:Diagram1
LT/RH - X15/A26 - Lane Departure Warning - (Bendix Fusion W/ Safety Direct))(US & Canada):Diagram1
LT/RH - X15/A26 - Lane Departure Warning - (Wabco OnLane 2.0 w/ roof speakers):Diagram1
LT/RH - X15/A26 - Lane Departure Warning - Bendix:Diagram1
LT/RH - X15/A26 - Park Brake Control (Monitoring) (W/Vehicle Speed):Diagram1
LT/RH - X15/A26 - Park Brake Control (Monitoring)(GEN IV BCM):Diagram1
LT/RH - X15/A26 - Tire Pressure (TPMS) (US & Canada):Diagram1
LT/RH - X15/A26 - Windshield Washer Pump & Low Fluid Sensor:Diagram1
LT/RH A26 - Ambient Air Temperature Option 1:Diagram1
LT/RH A26 - Coolant Level Monitoring:Diagram1
LT/RH A26 - Starting Aid (Flame Start):Diagram1
LT/RH A26 - Transmission (Ultrashift+ w/Body Builder):Diagram1
LT/RH A26 - Transmission I/O (Endurant Pressure Sensor):Diagram1
LT/RH A26 - X15/A26 - Up Shift Indicator (CA 2.0):Diagram1
LT/RH X15 - Coolant Level Monitoring:Diagram1
LT/RH/LoneStar - X15 - Air Flow Restriction Monitoring:Diagram1
LT/RH/LoneStar - X15 - Coolant Level Monitoring:Diagram1
LT/RH/LoneStar - X15 - DEF Economy Monitor (GEN IV Cluster w/ Cummins ENG):Diagram1
LT/RH/LoneStar - X15 - Starter Interlocks (Service Brake Interlock):Diagram1
LT/RH/LoneStar - X15 - Starting Aid (Ether Start):Diagram1
LT/RH/LoneStar - X15 - Transmission Oil Temperature-Manual Trans-Horizon Option 1:Diagram1
LT/RH/LoneStar - X15 - Transmission Oil Temperature-Manual Trans-Horizon Option 1:Diagram2
LT/RH/LoneStar - X15 - Transmission Oil Temperature-Manual Trans-Horizon Option 1:Diagram3

LT/RH/LoneStar - X15 - Transmission Oil Temperature-Manual Trans-Horizon Option 2:Diagram1
LT/RH/LoneStar - X15 - Transmission Oil Temperature-Manual Trans-Horizon Option 2:Diagram2
LT/RH/LoneStar - X15 - Transmission Oil Temperature-Manual Trans-Horizon Option 2:Diagram3
LT/RH/LoneStar - X15 - Transmission Power Take Off:Diagram1
LT/RH/LoneStar - X15 - Transmission Power Take Off Dual PTO with Clutch Interlock MANUAL:Diagram1
LT/RH/LoneStar - X15 - Transmission Power Take Off Dual Solenoid AUTO:Diagram1
LT/RH/LoneStar - X15 - Transmission Power Take Off W/ Clutch Interlock:Diagram1
LT/RH/LoneStar - X15 - Transmission Shifter (Eaton Endurant and Eaton Procision):Diagram1
LT/RH/LoneStar - X15 - Transmission Shifter (Universal Shifter - Ultrashift+ & FAS):Diagram1
LT/RH/LoneStar - X15 - Transmission SINGLE Power Take Off MANUAL:Diagram1
LT/RH/LoneStar - X15 - Vehicle Speedometer System (Manual XMSN) ISX:Diagram1
LT/RH/LoneStar - X15 - Water In Fuel (WIF) DAVCO N/ Heater:Diagram1
LT/RH/LoneStar - X15 - Water In Fuel (WIF) DAVCO N/ Heater:Diagram2
LT/RH/LoneStar - X15 - Water In Fuel (WIF) DAVCO W/ Heater:Diagram1
LT/RH/LoneStar - X15 - Water In Fuel (WIF) DAVCO W/ Heater:Diagram2
LT/RH/LoneStar - X15 - Water In Fuel (WIF) RACOR N/ Heater:Diagram1
LT/RH/LoneStar - X15/A26 - 2 Driver Controlled Locking Differential - FR & RR Axle (DANA):Diagram1
LT/RH/LoneStar - X15/A26 - 2 Driver Controlled Locking Differential - FR & RR Axle (MERITOR):Diagram1
LT/RH/LoneStar - X15/A26 - Adjustable Engine Speed Control (PTO) 4-pin Clockspring:Diagram1
LT/RH/LoneStar - X15/A26 - Adjustable Engine Speed Control (PTO) 10-PIN ClockSpring:Diagram1
LT/RH/LoneStar - X15/A26 - Analytic Cruise Control:Diagram1
LT/RH/LoneStar - X15/A26 - Axle Loading (Weight) Rear:Diagram1
LT/RH/LoneStar - X15/A26 - Axle Loading (Weight) Rear:Diagram2

LT/RH/LoneStar - X15/A26 - Brake Pressure (Auxiliary Gauge):Diagram1
LT/RH/LoneStar - X15/A26 - Brake Pressure (Virtual Gauge):Diagram1
LT/RH/LoneStar - X15/A26 - Compressed Air Supply (Primary and Secondary Gauge):Diagram1
LT/RH/LoneStar - X15/A26 - Coolant Temperature Monitoring (J1939 Comm):Diagram1
LT/RH/LoneStar - X15/A26 - Door Ajar Reminder (Entry/ Exit):Diagram1
LT/RH/LoneStar - X15/A26 - DPF Regen Switch Only:Diagram1
LT/RH/LoneStar - X15/A26 - DPF With Monostable Inhibit Switch:Diagram1
LT/RH/LoneStar - X15/A26 - DPF With/ Bi-Stable Inhibit Switch:Diagram1
LT/RH/LoneStar - X15/A26 - Driver Controlled Locking Differential - FR & RR Axle (DANA):Diagram1
LT/RH/LoneStar - X15/A26 - Driver Controlled Locking Differential - FR & RR Axle (MERITOR):Diagram1
LT/RH/LoneStar - X15/A26 - Driver Controlled Locking Differential - FR (MERITOR):Diagram1
LT/RH/LoneStar - X15/A26 - Driver Controlled Locking Differential - RR Axle (DANA):Diagram1
LT/RH/LoneStar - X15/A26 - Driver Controlled Locking Differential - RR Axle (DANA):Diagram2
LT/RH/LoneStar - X15/A26 - Driver Controlled Locking Differential - RR Axle (MERITOR):Diagram1
LT/RH/LoneStar - X15/A26 - Driver Controlled Locking Differential - RR Axle (MERITOR):Diagram2
LT/RH/LoneStar - X15/A26 - Electrical Load Control(Load Shed):Diagram1
LT/RH/LoneStar - X15/A26 - Engine Brake (CA2.0; Mux Switch):Diagram1
LT/RH/LoneStar - X15/A26 - Engine Brake (CA2.0; Stalk Shifter):Diagram1
LT/RH/LoneStar - X15/A26 - Engine Oil Pressure:Diagram1
LT/RH/LoneStar - X15/A26 - Engine Oil Temperature (NA MUX_AUX Gauge):Diagram1
LT/RH/LoneStar - X15/A26 - Engine Oil Temperature (NA-Mux):Diagram1
LT/RH/LoneStar - X15/A26 - Engine Speed (Tachometer_J1939):Diagram1
LT/RH/LoneStar - X15/A26 - Engine Usage Monitoring (Base):Diagram1

LT/RH/LoneStar - X15/A26 - Engine Usage Monitoring (VID Option):Diagram1
LT/RH/LoneStar - X15/A26 - Engine Warning (DM1 LAMPS - MUX):Diagram1
LT/RH/LoneStar - X15/A26 - Exterior Lamp Reminder:Diagram1
LT/RH/LoneStar - X15/A26 - Fuel Economy Monitor:Diagram1
LT/RH/LoneStar - X15/A26 - Fuel Level (Single Tank - Left Side):Diagram1
LT/RH/LoneStar - X15/A26 - Fuel Level (Single Tank - Left Side):Diagram2
LT/RH/LoneStar - X15/A26 - Fuel Level (Single Tank - Left Side):Diagram3
LT/RH/LoneStar - X15/A26 - Fuel Level (Single Tank - Left Side):Diagram4
LT/RH/LoneStar - X15/A26 - Fuel Level (Single Tank - Left Side):Diagram5
LT/RH/LoneStar - X15/A26 - Fuel Level (Single Tank - Left Side):Diagram6
LT/RH/LoneStar - X15/A26 - High Exhaust System Temperature (HEST) Monitoring:Diagram1
LT/RH/LoneStar - X15/A26 - Hill Start Aid (Wabco):Diagram1
LT/RH/LoneStar - X15/A26 - Instrument Cluster (Premium):Diagram1
LT/RH/LoneStar - X15/A26 - Instrument Cluster (Standard):Diagram1
LT/RH/LoneStar - X15/A26 - Instrument Cluster - Bulb Check:Diagram1
LT/RH/LoneStar - X15/A26 - Instrument Cluster - Request and Status:Diagram1
LT/RH/LoneStar - X15/A26 - Intake Manifold Pressure:Diagram1
LT/RH/LoneStar - X15/A26 - Jaw Monitoring:Diagram1
LT/RH/LoneStar - X15/A26 - Jaw Unlock Control (Standard):Diagram1
LT/RH/LoneStar - X15/A26 - Jaw Unlock Control W/ SOLENOIDS W/SWITCH PACKS:Diagram1
LT/RH/LoneStar - X15/A26 - Navistar Telematics Module - Programming:Diagram1
LT/RH/LoneStar - X15/A26 - Odometer (Cluster):Diagram1
LT/RH/LoneStar - X15/A26 - Park Brake Controls (Non Lever Park Brake):Diagram1
LT/RH/LoneStar - X15/A26 - Park Brake Controls (with Alarm IGN ON/OFF):Diagram1
LT/RH/LoneStar - X15/A26 - Park Brake Reminder (Non-Stationary) (CA2.0):Diagram1

LT/RH/LoneStar - X15/A26 - Power Divider Lock Control and Monitoring:Diagram1
LT/RH/LoneStar - X15/A26 - Seatbelt Reminder (Warning) (Driver & Passenger in parallel):Diagram1
LT/RH/LoneStar - X15/A26 - Seatbelt Reminder (Warning) (Driver only):Diagram1
LT/RH/LoneStar - X15/A26 - Single Axle Temperature Monitoring:Diagram1
LT/RH/LoneStar - X15/A26 - Single Axle Temperature Monitoring w/Aux Gauge:Diagram1
LT/RH/LoneStar - X15/A26 - Tandem Axle Temperature Monitoring:Diagram1
LT/RH/LoneStar - X15/A26 - Tandem Axle Temperature Monitoring:Diagram2
LT/RH/LoneStar - X15/A26 - Tandem Axle Temperature Monitoring w/ Single SNSR and AUX Gauge:Diagram1
LT/RH/LoneStar - X15/A26 - Tandem Axle Temperature Monitoring w/ Single SNSR and AUX Gauge:Diagram1
LT/RH/LoneStar - X15/A26 - Tandem Axle Temperature Monitoring w/Aux Gauge:Diagram1
LT/RH/LoneStar - X15/A26 - Tandem Axle Temperature Monitoring w/Aux Gauge:Diagram2
LT/RH/LoneStar - X15/A26 - Theft Deterrent (Standard J1939 Mux SW):Diagram1
LT/RH/LoneStar - X15/A26 - Traction Control (Bendix Controller):Diagram1
LT/RH/LoneStar - X15/A26 - Traction Control (Bendix Controller):Diagram2
LT/RH/LoneStar - X15/A26 - Traction Control (Bendix Controller) Option 2:Diagram1
LT/RH/LoneStar - X15/A26 - Traction Control (Bendix Controller) Option 2:Diagram2
LT/RH/LoneStar - X15/A26 - Traction Control (Wabco Controller):Diagram1
LT/RH/LoneStar - X15/A26 - Traction Control (Wabco Controller):Diagram2
LT/RH/LoneStar - X15/A26 - Traction Control (Wabco Controller):Diagram3
LT/RH/LoneStar - X15/A26 - Transmission - MODE Selection:Diagram1
LT/RH/LoneStar - X15/A26 - Transmission Oil Level (Low Level Warning):Diagram1
LT/RH/LoneStar - X15/A26 - Transmission Oil Temperature (Automatic Trans W/ Aux Gauge):Diagram1

LT/RH/LoneStar - X15/A26 - Transmission Oil Temperature (Automatic Trans):Diagram1
LT/RH/LoneStar - X15/A26 - Transmission Range Inhibit (J1939 Comm):Diagram1
LT/RH/LoneStar - X15/A26 - Trip Odometer (Cluster):Diagram1
LT/RH/LoneStar - X15/A26 - Vehicle Speed Control (Cruise Control) 4 - PIN:Diagram1
LT/RH/LoneStar - X15/A26 - Vehicle Speed Limit Override:Diagram1
LT/RH/LoneStar - X15/A26 - Vehicle Speedometer System (W/ AMT/AUTO TRANS):Diagram1
LT/RH/LoneStar - X15/A26 - Voltage Monitoring (Voltmeter) (with Aux gauge):Diagram1
LT/RH/LoneStar - X15/A26 - Voltage Monitoring (Voltmeter) Option 1:Diagram1
LT/RH/LoneStar - X15/A26 - Voltage Monitoring (Voltmeter) Option 2:Diagram1
LT/RH/LoneStar X15 - Ambient Air Temperature Option 1:Diagram1
LT/RH/LoneStar X15 - Transmission (Ultrashift+ w/Body Builder):Diagram1
LT/RH/LoneStar X15 - Transmission I/O (Endurant Pressure Sensor):Diagram1
Powertrain J1939 (500Kbps) Edurant Transmission A26:Powertrain J1939 (500Kbps) Edurant Transmission A26
Powertrain J1939 (500Kbps) Allison 3K Transmission A26:Powertrain J1939 (500Kbps) Allison 3K A26
Powertrain J1939 (500Kbps) Eaton Ultrashift+ Transmission A26:Powertrain J1939 (500Kbps) Eaton Ultrashift+ Transmission A26
Powertrain J1939 (500Kbps) Eaton Ultrashift+ Transmission X15:Powertrain J1939 (500kbps) Eaton Ultrashift+ X15
Powertrain J1939 (500Kbps) Edurant Transmission X15:Powertrain J1939 (500kbps) Endurant Transmission X15
Powertrain J1939 (500Kbps) Manual Transmission A26:Powertrain Standard J1939 (500Kbps) A26 Engine
Powertrain J1939 (500Kbps) Manual Transmission X15:Powertrain Standard J1939 (500kbps) Manual Transmission X15
Powertrain J1939 (500Kbps) TC10 Transmission A26:Powertrain J1939 (500Kbps) TC10 Transmission A26
Powertrain J1939 (500Kbps) TC10 Transmission X15:Powertrain J1939 (500kbps) TC10 Transmission X15

RH - X15/A26 - Directional Signal (Turn) W/ HEADLIGHTS:Diagram1
RH - X15/A26 - Headlights Halogen N/INT N/LOWW:Diagram1
RH - X15/A26 - Headlights Halogen N/INT W/LOWW:Diagram1
RH - X15/A26 - Headlights Halogen W/INT N/LOWW:Diagram1
RH - X15/A26 - Headlights Halogen W/INT W/LOWW:Diagram1
RH - X15/A26 - Headlights LED N/INT N/LOWW LT:Diagram1
RH - X15/A26 - Headlights LED N/INT W/LOWW LT:Diagram1
RH - X15/A26 - Headlights LED W/INT N/LOWW LT:Diagram1
RH - X15/A26 - Headlights LED W/INT W/LOWW LT:Diagram1

Mates MODU-EGC-A003-10-00

Name	Terminal Part Number	V-Min	Name	Wire Part Number	Wire CSA	Wire Spec	Wire Material description	Wire Color Description	Wire Length	End2 Terminal Part Number	End2 Pin Name	End2 Connector
A2	-	-	AA14EE	3510366 R1	1.16	16.0	Thin Wall XLPE Primary Cable	RED	1455.0	-	-	-
A3	-	-	AA13EA	3510323 R1	0.79	18.0	Thin Wall XLPE Primary Cable	PINK	1640.0	-	-	-
A6	-	-	5E13C	3510323 R1	0.79	18.0	Thin Wall XLPE Primary Cable	PINK	875.0	-	X	-
A7	-	-	5E179	3510359 R1	0.79	18.0	Thin Wall XLPE Primary Cable	WHITE	2720.0	-	-	-
A9	-	-	WIRE223764	-	0.0	-	-	-	0.0	-	PIN1	-
A9	-	-	-	-	-	-	-	-	-	-	-	-
A10	-	-	WIRE223763	-	0.0	-	-	-	0.0	-	PIN1	-
A10	-	-	-	-	-	-	-	-	-	-	-	-

Name	Terminal Part Number	V-Min	Name	Wire Part Number	Wire CSA	Wire Spec	Wire Material description	Wire Color Description	Wire Length	End2 Terminal Part Number	End2 Pin Name	End2 Connector
B3	-	-	AA11-GKE	3510360 R1	1.16	16.0	Thin Wall XLPE Primary Cable	WHITE	290.0	-	-	-
B4	-	-	CP98F	3510328 R1	0.53	20.0	Thin Wall XLPE Primary Cable	TAN	1640.0	-	-	-
B4	-	-	CT98F	3510328 R1	0.53	20.0	Thin Wall XLPE Primary Cable	TAN	1640.0	-	-	-
B4	-	-	MB98F	3510328 R1	0.53	20.0	Thin Wall XLPE Primary Cable	TAN	1640.0	-	-	-
B4	-	-	MJ98F	3510328 R1	0.53	20.0	Thin Wall XLPE Primary Cable	TAN	1640.0	-	-	-
B5	-	-	MB11-GMW	3510358 R1	0.53	20.0	Thin Wall XLPE Primary Cable	WHITE	3550.0	-	-	-
B5	-	-	CT11-GMW	3510358 R1	0.53	20.0	Thin Wall XLPE Primary Cable	WHITE	2420.0	-	-	-
B5	-	-	MJ11-GMW	2643764 R1	0.53	20.0	Std. Wall XLPE Primary Cable	WHITE	2420.0	-	-	-

Name	Terminal Part Number	V-Min	Name	Wire Part Number	Wire CSA	Wire Spec	Wire Material description	Wire Color Description	Wire Length	End2 Terminal Part Number	End2 Pin Name	End2 Connect or
B5	-	-	CP11-GMW	2643764 R1	0.53	20.0	Std. Wall XLPE Primary Cable	WHITE	3350.0	-	-	-
B6	-	-	DX63AW	3510352 R1	0.53	20.0	Thin Wall XLPE Primary Cable	DARK BLUE	2470.0	-	-	-
B7	-	-	DX11-GLD	3510358 R1	0.53	20.0	Thin Wall XLPE Primary Cable	WHITE	775.0	-	-	-
B8	-	-	AT28C	3510328 R1	0.53	20.0	Thin Wall XLPE Primary Cable	TAN	1095.0	-	-	-
B9	-	-	AT28A	3510328 R1	0.53	20.0	Thin Wall XLPE Primary Cable	TAN	1095.0	-	-	-
B10	-	-	AT28B	3510328 R1	0.53	20.0	Thin Wall XLPE Primary Cable	TAN	1095.0	-	-	-

Connector Name 16B

Part Number 3540613C1

Instances Cab J1939 (250Kbps):Cab J1939 (250Kbps)
Fusion Private J1939:Fusion Private J1939
LoneStar - X15 - Adaptive Cruise Control (Bendix - Fusion W/O DIU & W/ Safety Direct & Reg Speakers) Option 1:Diagram1
LoneStar - X15 - Adaptive Cruise Control (Bendix - Fusion W/O DIU & W/ Safety Direct & Reg Speakers) Option 2:Diagram1
LoneStar - X15 - Lane Departure Warning - (Bendix Fusion W/ Safety Direct))(US & Canada):Diagram1
LoneStar - X15 - Lane Departure Warning - (Bendix Fusion W/ Safety Direct))(US & Canada)-:Diagram1
LT/RH - X15/A26 - Land Departure Warning - (Bendix - AutoVue W/ Qualcomm Safety Direct):Diagram1
LT/RH - X15/A26 - Adaptive Cruise Control (Bendix - Fusion W/ O DIU & N/ Safety Direct & Reg Speakers):Diagram1
LT/RH - X15/A26 - Adaptive Cruise Control (Bendix - Fusion W/ O DIU & W/ Safety Direct & Reg Speakers):Diagram1
LT/RH - X15/A26 - Lane Departure Warning - (Bendix - AutoVue N/ Qualcomm Safety Direct):Diagram1
LT/RH - X15/A26 - Lane Departure Warning - (Bendix Fusion W/ Safety Direct))(US & Canada):Diagram1
LT/RH - X15/A26 - Lane Departure Warning - (Wabco OnLane 2.0 w/ roof speakers):Diagram1
LT/RH - X15/A26 - Lane Departure Warning - (Wabco OnLane):Diagram1
LT/RH - X15/A26 - Lane Departure Warning - Bendix:Diagram1

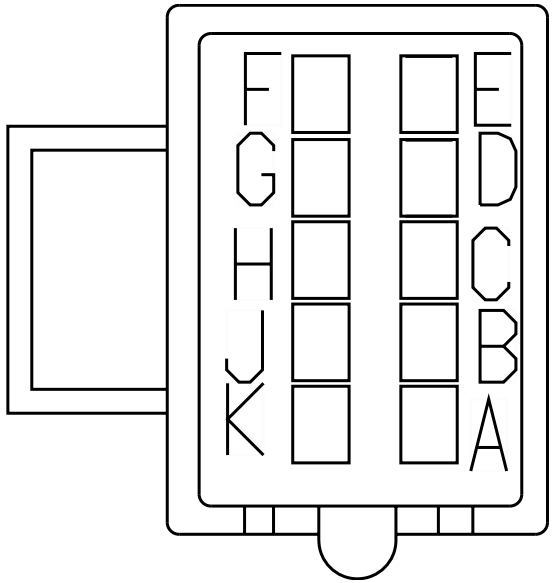

Mates 1978

Name	Terminal Part Number	V-Min	Name	Wire Part Number	Wire CSA	Wire Spec	Wire Material description	Wire Color Description	Wire Length	End2 Terminal Part Number	End2 Pin Name	End2 Connector
A	-	-	2V67EN	3510328 R1	0.53	20.0	Thin Wall XLPE Primary Cable	TAN	1935.0	-	9	A01-1119M
A	-	-	RV67EN	3510330 R1	1.16	16.0	Thin Wall XLPE Primary Cable	TAN	1945.0	-	7	1118M

Name	Terminal Part Number	V-Min	Name	Wire Part Number	Wire CSA	Wire Spec	Wire Material description	Wire Color Description	Wire Length	End2 Terminal Part Number	End2 Pin Name	End2 Connector
B	-	-	2V67NA	3510346 R1	0.53	20.0	Thin Wall XLPE Primary Cable	VIOLET	1935.0	-	11	A01-1119M
B	-	-	RV67NA	3510330 R1	1.16	16.0	Thin Wall XLPE Primary Cable	TAN	1945.0	-	8	1118M
C	-	-	YK13COG	3510324 R1	1.16	16.0	Thin Wall XLPE Primary Cable	PINK	1945.0	-	X	-
C	-	-	2V13COG	3510324 R1	1.16	16.0	Thin Wall XLPE Primary Cable	PINK	1575.0	-	X	-
C	-	-	SG13COG	3510324 R1	1.16	16.0	Thin Wall XLPE Primary Cable	PINK	2135.0	-	-	-
C	-	-	RV13COG	3510324 R1	1.16	16.0	Thin Wall XLPE Primary Cable	PINK	1575.0	-	X	-
D	-	-	CS11COG	3510359 R1	0.79	18.0	Thin Wall XLPE Primary Cable	WHITE	1025.0	-	X	-
D	-	-	2V11COG	3510358 R1	0.53	20.0	Thin Wall XLPE Primary Cable	WHITE	1025.0	-	X	-

Name	Terminal Part Number	V-Min	Name	Wire Part Number	Wire CSA	Wire Spec	Wire Material description	Wire Color Description	Wire Length	End2 Terminal Part Number	End2 Pin Name	End2 Connector
D	-	-	SG11COG	3510360 R1	1.16	16.0	Thin Wall XLPE Primary Cable	WHITE	850.0	-	-	-
D	-	-	RV11COG	3510359 R1	0.79	18.0	Thin Wall XLPE Primary Cable	WHITE	1025.0	-	X	-
E	-	-	WIRE234 455	-	0.0	-	-	-	0.0	-	46	1700
E	-	-	ZF56AAA	2645577 R1	0.79	18A	Thin Wall XLPE Primary Cable	ORANGE	685.0	-	-	-
F	-	-	WIRE234 454	-	0.0	-	-	-	0.0	-	45	1700
F	-	-	ZF57AAA	3510316 R1	0.53	20.0	Thin Wall XLPE Primary Cable	ORANGE	685.0	-	-	-
G	-	-	CS67COG	3510311 R1	0.79	18.0	Thin Wall XLPE Primary Cable	GREY	1695.0	-	X	-
G	-	-	YK67COG	3510311 R1	0.79	18.0	Thin Wall XLPE Primary Cable	GREY	1695.0	-	X	-
G	-	-	2V67COG	3510311 R1	0.79	18.0	Thin Wall XLPE Primary Cable	GREY	1605.0	-	X	-

Name	Terminal Part Number	V-Min	Name	Wire Part Number	Wire CSA	Wire Spec	Wire Material description	Wire Color Description	Wire Length	End2 Terminal Part Number	End2 Pin Name	End2 Connector
G	-	-	RV67COG	3510359 R1	0.79	18.0	Thin Wall XLPE Primary Cable	WHITE	1945.0	-	2B	1118M
H	-	-	CS14CSB	3510366 R1	1.16	16.0	Thin Wall XLPE Primary Cable	RED	1950.0	-	-	-
H	-	-	2V14CSB	3510366 R1	1.16	16.0	Thin Wall XLPE Primary Cable	RED	1950.0	-	-	-
J	-	-	WIRE223 973	-	0.0	-	-	-	0.0	-	B	1026
K	-	-	WIRE223 972	-	0.0	-	-	-	0.0	-	L	1026

Connector Name	16B
Part Number	3540613C1
Short Description	BENDIX/TAKATA LDW ROOF CONN
Instances	LoneStar - X15 - Adaptive Cruise Control (Bendix - Fusion W/O DIU & N/ Safety Direct & Tweeters):Diagram1 LoneStar - X15 - Adaptive Cruise Control (Bendix - Fusion W/O DIU & W/ Safety Direct & W/ Tweeters):Diagram1 LT/RH - X15/A26 - Adaptive Cruise Control (Bendix - Fusion W/O DIU & N/ Safety Direct & Tweeters):Diagram1 LT/RH - X15/A26 - Adaptive Cruise Control (Bendix - Fusion W/O DIU & W/ Safety Direct & W/ Tweeters):Diagram1 Powertrain J1939 (500Kbps) Edurant Transmission A26:Powertrain J1939 (500Kbps) Edurant Transmission A26 Powertrain J1939 (500Kbps) Allison 3K Transmission A26:Powertrain J1939 (500Kbps) Allison 3K A26 Powertrain J1939 (500Kbps) Eaton Ultrashift+ Transmission A26:Powertrain J1939 (500Kbps) Eaton Ultrashift+ Transmission A26 Powertrain J1939 (500Kbps) Eaton Ultrashift+ Transmission X15:Powertrain J1939 (500kbps) Eaton Ultrashift+ X15 Powertrain J1939 (500Kbps) Edurant Transmission X15:Powertrain J1939 (500kbps) Endurant Transmission X15 Powertrain J1939 (500Kbps) Manual Transmission A26:Powertrain Standard J1939 (500Kbps) A26 Engine Powertrain J1939 (500Kbps) Manual Transmission X15:Powertrain Standard J1939 (500kbps) Manual Transmission X15 Powertrain J1939 (500Kbps) TC10 Transmission A26:Powertrain J1939 (500Kbps) TC10 Transmission A26 Powertrain J1939 (500Kbps) TC10 Transmission X15:Powertrain J1939 (500kbps) TC10 Transmission X15
Mates	1978

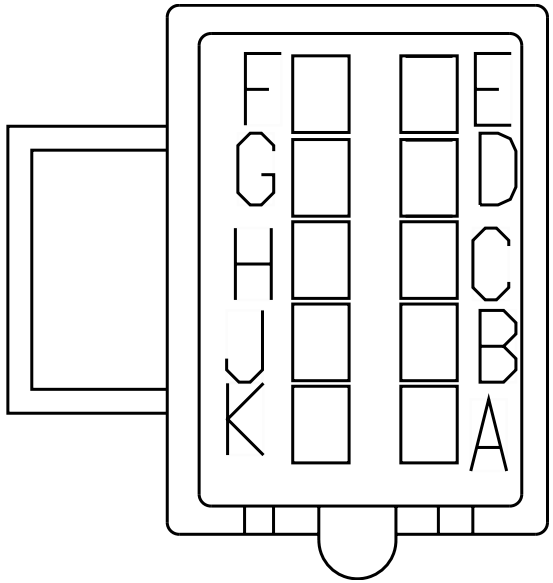

Name	Terminal Part Number	V-Min	Name	Wire Part Number	Wire CSA	Wire Spec	Wire Material description	Wire Color Description	Wire Length	End2 Terminal Part Number	End2 Pin Name	End2 Connect or
C	-	-	YK13COG	3510324 R1	1.16	16.0	Thin Wall XLPE Primary Cable	PINK	1945.0	-	X	-

Name	Terminal Part Number	V-Min	Name	Wire Part Number	Wire CSA	Wire Spec	Wire Material description	Wire Color Description	Wire Length	End2 Terminal Part Number	End2 Pin Name	End2 Connect or
D	-	-	CS11COG	3510359 R1	0.79	18.0	Thin Wall XLPE Primary Cable	WHITE	1025.0	-	X	-
G	-	-	CS67COG	3510311 R1	0.79	18.0	Thin Wall XLPE Primary Cable	GREY	1695.0	-	X	-
H	-	-	CS14CSB	3510366 R1	1.16	16.0	Thin Wall XLPE Primary Cable	RED	1950.0	-	-	-
J	-	-	WIRE223 905	-	0.0	-	-	-	0.0	-	X	-
K	-	-	WIRE223 904	-	0.0	-	-	-	0.0	-	PIN1	-

Connector Name	1605
Part Number	373759C2
Instances	LT/RH/LoneStar - X15/A26 - BCM (Body Control Module):Connector J8 (Power Feed)
Mates	MODU-BCM-A000-10-00

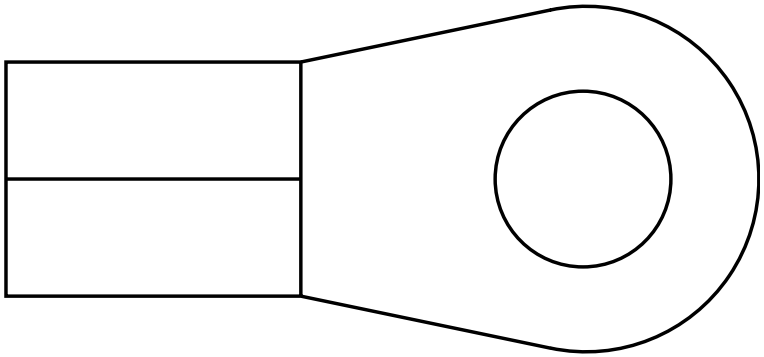

Name	Terminal Part Number	V-Min	Name	Wire Part Number	Wire CSA	Wire Spec	Wire Material description	Wire Color Description	Wire Length	End2 Terminal Part Number	End2 Pin Name	End2 Connect or
A	-	-	AA14J	2644026 R1	18.94	4.0	Std. Wall XLPE Battery Cable	RED	725.0	-	X	-

Connector Name 1650MA

Part Number 3544066C1

Instances Cab J1939 (250Kbps):Cab J1939 (250Kbps)
Powertrain J1939 (500Kbps) Edurant Transmission
A26:Powertrain J1939 (500Kbps) Edurant Transmission A26
Powertrain J1939 (500Kbps) Allison 3K Transmission
A26:Powertrain J1939 (500Kbps) Allison 3K A26
Powertrain J1939 (500Kbps) Eaton Ultrashift+ Transmission
A26:Powertrain J1939 (500Kbps) Eaton Ultrashift+ Transmission A26
Powertrain J1939 (500Kbps) Eaton Ultrashift+ Transmission
X15:Powertrain J1939 (500kbps) Eaton Ultrashift+ X15
Powertrain J1939 (500Kbps) Edurant Transmission
X15:Powertrain J1939 (500kbps) Endurant Transmission X15
Powertrain J1939 (500Kbps) Manual Transmission
X15:Powertrain Standard J1939 (500kbps) Manual Transmission X15
Powertrain J1939 (500Kbps) TC10 Transmission A26:Powertrain J1939 (500Kbps) TC10 Transmission A26
Powertrain J1939 (500Kbps) TC10 Transmission X15:Powertrain J1939 (500kbps) TC10 Transmission X15

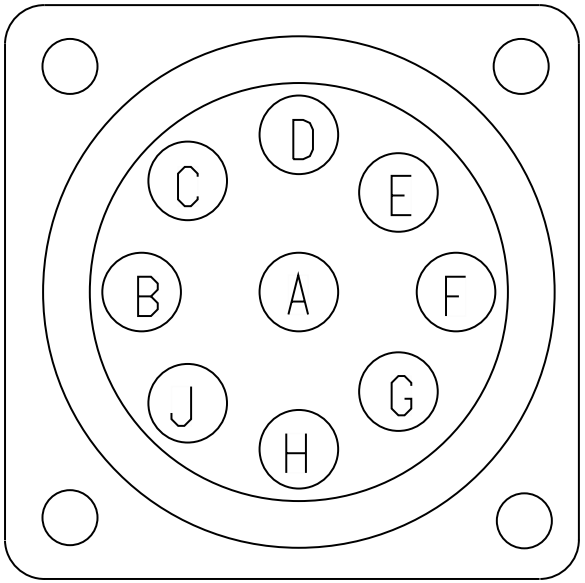

Name	Terminal Part Number	V-Min	Name	Wire Part Number	Wire CSA	Wire Spec	Wire Material description	Wire Color Description	Wire Length	End2 Terminal Part Number	End2 Pin Name	End2 Connect or
C	-	-	WIRE233693	-	0.0	-	-	-	0.0	-	PIN1	-
D	-	-	WIRE233695	-	0.0	-	-	-	0.0	-	PIN1	-
H	-	-	WIRE223980	-	0.0	-	-	-	0.0	-	PIN1	-
J	-	-	WIRE223981	-	0.0	-	-	-	0.0	-	PIN1	-

Connector Name	1650MA_
Part Number	3757649C1
Instances	Powertrain J1939 (500Kbps) Manual Transmission A26:Powertrain Standard J1939 (500Kbps) A26 Engine
Mates	DEV-9PinDiag-0008-00-10-01A

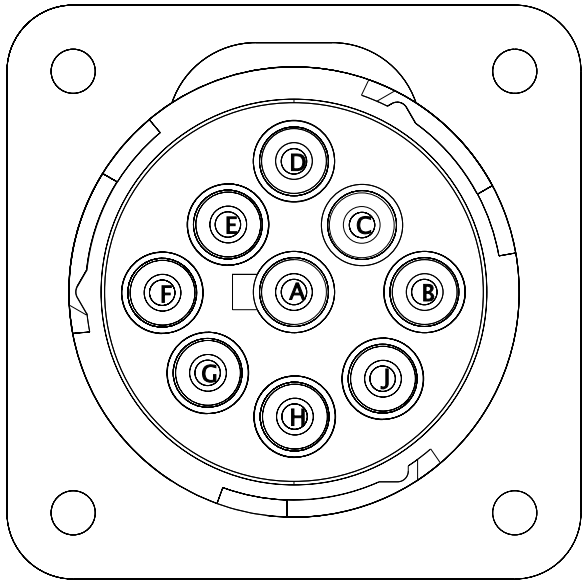

Name	Terminal Part Number	V-Min	Name	Wire Part Number	Wire CSA	Wire Spec	Wire Material description	Wire Color Description	Wire Length	End2 Terminal Part Number	End2 Pin Name	End2 Connect or
C	-	-	WIRE233693	-	0.0	-	-	-	0.0	-	PIN1	-
D	-	-	WIRE233695	-	0.0	-	-	-	0.0	-	PIN1	-

Connector Name 1650

Part Number 3757649C1

Instances Cab J1939 (250Kbps):Cab J1939 (250Kbps)
Powertrain J1939 (500Kbps) Edurant Transmission
A26:Powertrain J1939 (500Kbps) Edurant Transmission A26
Powertrain J1939 (500Kbps) Allison 3K Transmission
A26:Powertrain J1939 (500Kbps) Allison 3K A26
Powertrain J1939 (500Kbps) Eaton Ultrashift+ Transmission
A26:Powertrain J1939 (500Kbps) Eaton Ultrashift+ Transmission A26
Powertrain J1939 (500Kbps) Eaton Ultrashift+ Transmission
X15:Powertrain J1939 (500kbps) Eaton Ultrashift+ X15
Powertrain J1939 (500Kbps) Edurant Transmission
X15:Powertrain J1939 (500kbps) Endurant Transmission X15
Powertrain J1939 (500Kbps) Manual Transmission
A26:Powertrain Standard J1939 (500Kbps) A26 Engine
Powertrain J1939 (500Kbps) Manual Transmission
X15:Powertrain Standard J1939 (500kbps) Manual Transmission X15
Powertrain J1939 (500Kbps) TC10 Transmission A26:Powertrain J1939 (500Kbps) TC10 Transmission A26
Powertrain J1939 (500Kbps) TC10 Transmission X15:Powertrain J1939 (500kbps) TC10 Transmission X15

Mates DEV-9PinDiag-0008-00-10-01A

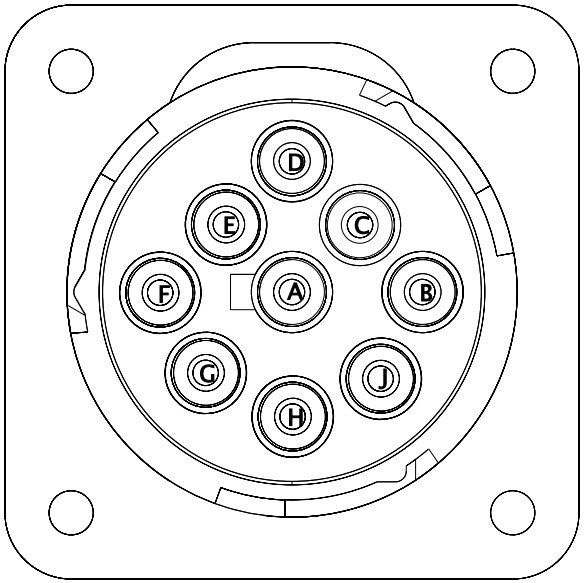

Name	Terminal Part Number	V-Min	Name	Wire Part Number	Wire CSA	Wire Spec	Wire Material description	Wire Color Description	Wire Length	End2 Terminal Part Number	End2 Pin Name	End2 Connector
C	-	-	WIRE223777	-	0.0	-	-	-	0.0	-	PIN1	-
D	-	-	WIRE223778	-	0.0	-	-	-	0.0	-	X	-
H	-	-	WIRE223942	-	0.0	-	-	-	0.0	-	PIN1	-
J	-	-	WIRE223943	-	0.0	-	-	-	0.0	-	PIN1	-

Connector Name 1650_
Part Number 3544066C1
Instances Cab J1939 (250Kbps):Cab J1939 (250Kbps)

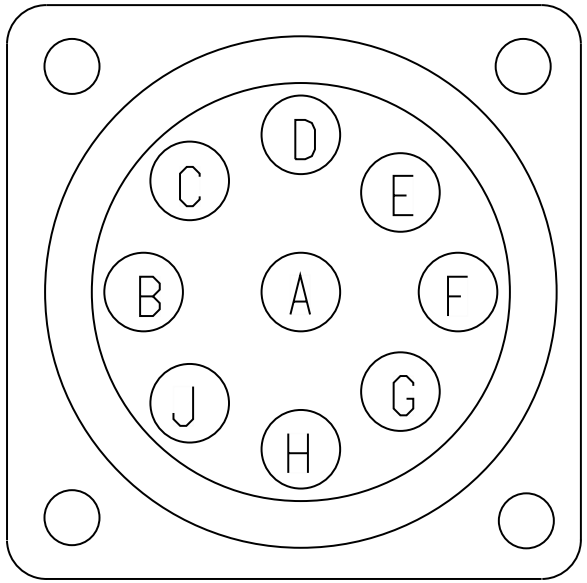

Name	Terminal Part Number	V-Min	Name	Wire Part Number	Wire CSA	Wire Spec	Wire Material description	Wire Color Description	Wire Length	End2 Terminal Part Number	End2 Pin Name	End2 Connect or
H	-	-	WIRE233659	-	0.0	-	-	-	0.0	-	PIN1	-
J	-	-	WIRE233660	-	0.0	-	-	-	0.0	-	PIN1	-

Connector Name 1651

Part Number 3757649C1

Instances Body J1939 (250Kbps) Splice Pack 1029:Body J1939 (250Kbps)
Body J1939 (250Kbps) W/ 3 Splice Packs:Body J1939 (250Kbps)
Powertrain J1939 (500Kbps) Edurant Transmission A26:Powertrain J1939 (500Kbps) Edurant Transmission A26
Powertrain J1939 (500Kbps) Allison 3K Transmission A26:Powertrain J1939 (500Kbps) Allison 3K A26
Powertrain J1939 (500Kbps) Eaton Ultrashift+ Transmission A26:Powertrain J1939 (500Kbps) Eaton Ultrashift+ Transmission A26
Powertrain J1939 (500Kbps) Eaton Ultrashift+ Transmission X15:Powertrain J1939 (500kbps) Eaton Ultrashift+ X15
Powertrain J1939 (500Kbps) Edurant Transmission X15:Powertrain J1939 (500kbps) Endurant Transmission X15
Powertrain J1939 (500Kbps) Manual Transmission A26:Powertrain Standard J1939 (500Kbps) A26 Engine
Powertrain J1939 (500Kbps) Manual Transmission X15:Powertrain Standard J1939 (500kbps) Manual Transmission X15
Powertrain J1939 (500Kbps) TC10 Transmission A26:Powertrain J1939 (500Kbps) TC10 Transmission A26
Powertrain J1939 (500Kbps) TC10 Transmission X15:Powertrain J1939 (500kbps) TC10 Transmission X15

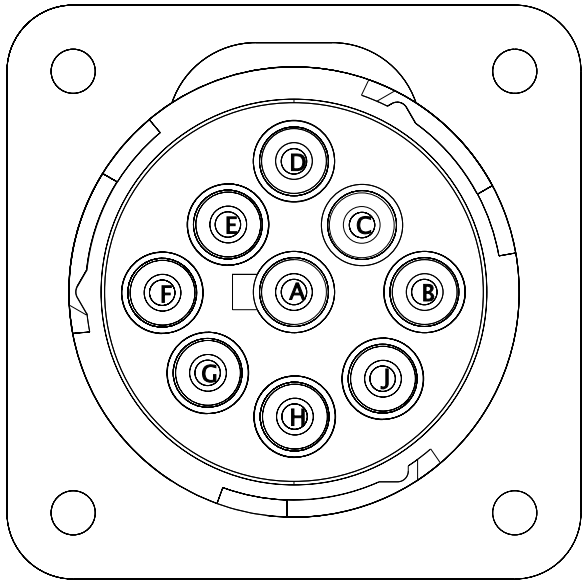

Name	Terminal Part Number	V-Min	Name	Wire Part Number	Wire CSA	Wire Spec	Wire Material description	Wire Color Description	Wire Length	End2 Terminal Part Number	End2 Pin Name	End2 Connector
C	-	-	WIRE223790	-	0.0	-	-	-	0.0	-	PIN1	-
D	-	-	WIRE223791	-	0.0	-	-	-	0.0	-	PIN1	-
H	-	-	WIRE489827	-	0.0	-	-	-	0.0	-	L	1029
H	-	-	WIRE489919	-	0.0	-	-	-	0.0	-	L	1029
J	-	-	WIRE489828	-	0.0	-	-	-	0.0	-	B	1029

Name	Terminal Part Number	V-Min	Name	Wire Part Number	Wire CSA	Wire Spec	Wire Material description	Wire Color Description	Wire Length	End2 Terminal Part Number	End2 Pin Name	End2 Connect or
J	-	-	WIRE489918	-	0.0	-	-	-	0.0	-	B	1029

Connector Name	1700F
Part Number	3595624C1
Short Description	FORWARD CHASSIS CONNECTOR
Instances	Fusion Private J1939:Fusion Private J1939 LoneStar - X15 - Adaptive Cruise Control (Bendix - Fusion W/O DIU & N/ Safety Direct & Tweeters):Diagram1 LoneStar - X15 - Adaptive Cruise Control (Bendix - Fusion W/O DIU & W/ Safety Direct & Reg Speakers) Option 1:Diagram1 LoneStar - X15 - Adaptive Cruise Control (Bendix - Fusion W/O DIU & W/ Safety Direct & Reg Speakers) Option 2:Diagram1 LoneStar - X15 - Adaptive Cruise Control (Bendix - Fusion W/O DIU & W/ Safety Direct & W/ Tweeters):Diagram1 LoneStar - X15 - Adaptive Cruise Control w/o Display (Bendix):Diagram1 LoneStar - X15 - Adaptive Cruise Control w/o Display (Wabco):Diagram1 LoneStar - X15 - Antilock Brake System (ABS) - Wabco 4 Channel Implementation:Diagram1 LoneStar - X15 - Antilock Brake System (ABS) - Wabco 4 Channel Implementation:Diagram2 LoneStar - X15 - Antilock Brake System (ABS) - Wabco 4 Channel Implementation:Diagram3 LoneStar - X15 - Antilock Brake System (ABS) - Wabco 4 Channel Implementation:Diagram4 LoneStar - X15 - Antilock Brake System (ABS) [Bendix 6 Channel Implementation]:Diagram1 LoneStar - X15 - Antilock Brake System (ABS) [Bendix 6 Channel Implementation]:Diagram2 LoneStar - X15 - Antilock Brake System (ABS) [Bendix 6 Channel Implementation]:Diagram3 LoneStar - X15 - Antilock Brake System (ABS)-BENDIX 4 Channel Implemenation:Diagram1 LoneStar - X15 - Antilock Brake System (ABS)-BENDIX 4 Channel Implemenation:Diagram2 LoneStar - X15 - Antilock Brake System (ABS)-BENDIX 4 Channel Implemenation:Diagram3 LoneStar - X15 - Antilock Brake System (ABS)-BENDIX 4 Channel Implemenation:Diagram4 LoneStar - X15 - Antilock Brake System - Wabco ABS 6 Channel Implementation:Diagram1 LoneStar - X15 - Antilock Brake System - Wabco ABS 6 Channel Implementation:Diagram2

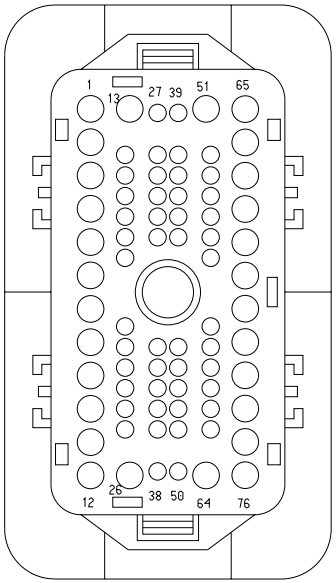

LoneStar - X15 - Antilock Brake System - Wabco ABS 6 Channel Implementation:Diagram3
LoneStar - X15 - Body Builder Lighting - (BOC EOF In Cab) (8HAB 8HAE 8HAU) (Automatic):Diagram1
LoneStar - X15 - Body Builder Lighting - (BOC EOF In Cab) (8HAB 8HAE 8HAU) (Automatic):Diagram2
LoneStar - X15 - Body Builder Lighting - (BOC EOF In Cab) (8HAB 8HAE 8HAU) (Manual):Diagram1
LoneStar - X15 - Body Builder Lighting - (BOC EOF In Cab) (8HAB 8HAE 8HAU) (Manual):Diagram2
LoneStar - X15 - City Horn W/ 4PIN CLK W/O RKA:Diagram1-Combination1
LoneStar - X15 - City Horn W/ 4PIN CLK W/RKA:Diagram1-Combination1
LoneStar - X15 - City Horn W/ 10PIN CLK W/RKA:Diagram1-Combination1
LoneStar - X15 - City Horn W/ 10PIN CLK W/O RKA:Diagram1-Combination1
LoneStar - X15 - Crank Inhibit with Hood Switch - with new BCM Pin:Diagram2
LoneStar - X15 - Fuel Heater (Vehicle Powered) (Davco):Diagram1
LoneStar - X15 - Headlights Halogen N/INT N/LOWW:Diagram1
LoneStar - X15 - Headlights Halogen N/INT W/LOWW:Diagram1
LoneStar - X15 - Headlights Halogen W/INT N/LOWW:Diagram1
LoneStar - X15 - Headlights Halogen W/INT W/ LOWW:Diagram1
LoneStar - X15 - Hood Switch:Diagram1
LoneStar - X15 - Lane Departure Warning - (Bendix Fusion W/ Safety Direct))(US & Canada):Diagram1
LoneStar - X15 - Lane Departure Warning - (Bendix Fusion W/ Safety Direct))(US & Canada)-:Diagram1
LoneStar - X15 - Modesty Lighting W/ Day Cab W/ 2 Turn /0 Marker:Diagram1
LoneStar - X15 - Modesty Lighting W/ Sleeper W/ 4 Side Turns / 0 Marker:Diagram1
LoneStar - X15 - Tire Pressure (TPMS) (US & Canada):Diagram1
LoneStar - X15 - Trailer Interface (ABS) - Center Pin Circuit:Diagram1
LoneStar - X15 - Trailer Interface (ABS) - Center Pin Circuit:Diagram2
LoneStar - X15 - Trailer Interface (ABS) - Center Pin Circuit:Diagram3

LoneStar - X15 - Trailer Interface (ABS) - Center Pin Circuit:Diagram4
LoneStar - X15 - Windshield Washer Pump:Diagram1
LoneStar - X15 - Windshield Washer Pump & Low Fluid Sensor:Diagram1
LoneStar - X15/A26 - Front Fog Lamps:Diagram1
LoneStar - X15/A26 - Marker Lights (Halogen):Diagram1
LT - X15/A26 - Headlights Halogen N/INT N/LOWW:Diagram1
LT - X15/A26 - Headlights Halogen N/INT W/LOWW:Diagram1
LT - X15/A26 - Headlights Halogen W/INT N/LOWW:Diagram1
LT - X15/A26 - Headlights Halogen W/INT W/LOWW:Diagram1
LT - X15/A26 - Headlights LED N/ INT N/LOWW:Diagram1
LT - X15/A26 - Headlights LED N/ INT W/LOWW:Diagram1
LT - X15/A26 - Headlights LED W/INT N/LOWW:Diagram1
LT - X15/A26 - Headlights LED W/INT W/LOWW:Diagram1
LT/RH - A26 - Body Builder Lighting - (BOC EOF In Cab) (8HAB 8HAE 8HAU) (Manual):Diagram1
LT/RH - A26 - Body Builder Lighting - (BOC EOF In Cab) (8HAB 8HAE 8HAU) (Manual):Diagram2
LT/RH - A26 - Body Builder Lighting - (BOC EOF In Cab) (8HAB 8HAE 8HAU) (Manual):Diagram3
LT/RH - A26 - Body Builder Lighting - (BOC EOF In Cab) (8HAB 8HAE 8HAU) (Manual):Diagram4
LT/RH - X15 - Body Builder Lighting - (BOC EOF In Cab) (8HAB 8HAE 8HAU) (Manual):Diagram1
LT/RH - X15 - Body Builder Lighting - (BOC EOF In Cab) (8HAB 8HAE 8HAU) (Manual):Diagram2
LT/RH - X15/A26 - Adaptive Cruise Control (Bendix - Fusion W/ O DIU & N/ Safety Direct & Tweeters):Diagram1
LT/RH - X15/A26 - Adaptive Cruise Control (Bendix - Fusion W/ O DIU & N/ Safety Direct & Reg Speakers):Diagram1
LT/RH - X15/A26 - Adaptive Cruise Control (Bendix - Fusion W/ O DIU & W/ Safety Direct & Reg Speakers):Diagram1
LT/RH - X15/A26 - Adaptive Cruise Control (Bendix - Fusion W/ O DIU & W/ Safety Direct & W/ Tweeters):Diagram1
LT/RH - X15/A26 - Adaptive Cruise Control w/o Display (Bendix):Diagram1
LT/RH - X15/A26 - Adaptive Cruise Control w/o Display (Wabco):Diagram1
LT/RH - X15/A26 - Antilock Brake System (ABS) - Wabco 4 Channel Implementation:Diagram1
LT/RH - X15/A26 - Antilock Brake System (ABS) - Wabco 4 Channel Implementation:Diagram2

LT/RH - X15/A26 - Antilock Brake System (ABS) - Wabco 4 Channel Implementation:Diagram3
LT/RH - X15/A26 - Antilock Brake System (ABS) - Wabco 4 Channel Implementation:Diagram4
LT/RH - X15/A26 - Antilock Brake System (ABS) BENDIX 4 Channel Implemenation:Diagram1
LT/RH - X15/A26 - Antilock Brake System (ABS) BENDIX 4 Channel Implemenation:Diagram2
LT/RH - X15/A26 - Antilock Brake System (ABS) BENDIX 4 Channel Implemenation:Diagram3
LT/RH - X15/A26 - Antilock Brake System (ABS) BENDIX 4 Channel Implemenation:Diagram4
LT/RH - X15/A26 - Antilock Brake System (ABS) Bendix 6 Channel Implementation:Diagram1
LT/RH - X15/A26 - Antilock Brake System (ABS) Bendix 6 Channel Implementation:Diagram2
LT/RH - X15/A26 - Antilock Brake System (ABS) Bendix 6 Channel Implementation:Diagram3
LT/RH - X15/A26 - Antilock Brake System - Wabco ABS 6 Channel Implementation:Diagram1
LT/RH - X15/A26 - Antilock Brake System - Wabco ABS 6 Channel Implementation:Diagram2
LT/RH - X15/A26 - Antilock Brake System - Wabco ABS 6 Channel Implementation:Diagram3
LT/RH - X15/A26 - Body Builder Lighting - (BOC EOF In Cab) (8HAB 8HAE 8HAU) (Automatic):Diagram1
LT/RH - X15/A26 - Body Builder Lighting - (BOC EOF In Cab) (8HAB 8HAE 8HAU) (Automatic):Diagram2
LT/RH - X15/A26 - City Horn W/ 4PIN CLK W/O RKA:Diagram1-Combination1
LT/RH - X15/A26 - City Horn W/ 4PIN CLK W/RKA:Diagram1-Combination1
LT/RH - X15/A26 - City Horn W/ 10PIN CLK W/RKA:Diagram1-Combination1
LT/RH - X15/A26 - City Horn W/ 10PIN CLK W/O RKA:Diagram1-Combination1
LT/RH - X15/A26 - Directional Signal (Turn) With HEADLIGHTS:Diagram1
LT/RH - X15/A26 - Directional Signal (Turn) With HEADLIGHTS (HAL-125):Diagram1
LT/RH - X15/A26 - Directional Signal (Turn) With HEADLIGHTS (LED-125):Diagram1
LT/RH - X15/A26 - Directional Signal (Turn) With HEADLIGHTS Option2:Diagram1

LT/RH - X15/A26 - Fog Lights Lamps:Diagram1
LT/RH - X15/A26 - Fuel Heater (Vehicle Powered) (Davco):Diagram1
LT/RH - X15/A26 - Fuel Heater (Vehicle Powered) (Davco):Diagram2
LT/RH - X15/A26 - Fuel Heater (Vehicle Powered) (RAVCOR):Diagram1
LT/RH - X15/A26 - Hood Switch:Diagram1
LT/RH - X15/A26 - Lane Departure Warning - (Bendix Fusion W/ Safety Direct))(US & Canada):Diagram1
LT/RH - X15/A26 - Lane Departure Warning - Bendix:Diagram1
LT/RH - X15/A26 - Marker Lights (With 113 Halogen):Diagram1
LT/RH - X15/A26 - Marker Lights (With 125 Halogen):Diagram1
LT/RH - X15/A26 - Marker Lights (With 125 LED):Diagram1
LT/RH - X15/A26 - Marker Lights (With113 LED):Diagram1
LT/RH - X15/A26 - Modesty Lighting W/ Day Cab W/ 2 Turn /0 Marker:Diagram1
LT/RH - X15/A26 - Modesty Lighting W/ Sleeper W/ 4 Side Turns / 0 Marker:Diagram1
LT/RH - X15/A26 - Skirt Light Customer Supplied:Diagram1
LT/RH - X15/A26 - Tire Pressure (TPMS) (US & Canada):Diagram1
LT/RH - X15/A26 - Trailer Interface (ABS) - Center Pin Circuit:Diagram1
LT/RH - X15/A26 - Trailer Interface (ABS) - Center Pin Circuit:Diagram2
LT/RH - X15/A26 - Trailer Interface (ABS) - Center Pin Circuit:Diagram3
LT/RH - X15/A26 - Trailer Interface (ABS) - Center Pin Circuit:Diagram4
LT/RH - X15/A26 - Windshield Washer Pump:Diagram1
LT/RH - X15/A26 - Windshield Washer Pump & Low Fluid Sensor:Diagram1
LT/RH - X15/A26 - with Hood Switch - with new BCM Pin:Diagram1
LT/RH/LoneStar - X15/A26 - Heated Mirrors (Door Pod Actuated Cab and Hood Mounted):Diagram1
RH - X15/A26 - Directional Signal (Turn) W/ HEADLIGHTS:Diagram1
RH - X15/A26 - Headlights Halogen N/INT N/LOWW:Diagram1
RH - X15/A26 - Headlights Halogen N/INT W/LOWW:Diagram1
RH - X15/A26 - Headlights Halogen W/INT N/LOWW:Diagram1
RH - X15/A26 - Headlights Halogen W/INT W/LOWW:Diagram1
RH - X15/A26 - Headlights LED N/INT N/LOWW LT:Diagram1

RH - X15/A26 - Headlights LED N/INT W/LOWW LT:Diagram1
RH - X15/A26 - Headlights LED W/INT N/LOWW LT:Diagram1
RH - X15/A26 - Headlights LED W/INT W/LOWW LT:Diagram1

Mates 1700

Name	Terminal Part Number	V-Min	Name	Wire Part Number	Wire CSA	Wire Spec	Wire Material description	Wire Color Description	Wire Length	End2 Terminal Part Number	End2 Pin Name	End2 Connect or
1	-	-	MA52A	2643693 R1	1.91	14.0	Std. Wall XLPE Primary Cable	YELLOW 2	3290.0	-	A	8001
1	-	-	MA52A	2643693 R1	1.91	14.0	Std. Wall XLPE Primary Cable	YELLOW 2	3290.0	-	A	LED 113
1	-	-	MA52A	2643693 R1	1.91	14.0	Std. Wall XLPE Primary Cable	YELLOW 2	3290.0	-	1	8002
2	-	-	MA53A	2643693 R1	1.91	14.0	Std. Wall XLPE Primary Cable	YELLOW 2	3290.0	-	C	8001
2	-	-	MA53A	2643693 R1	1.91	14.0	Std. Wall XLPE Primary Cable	YELLOW 2	3290.0	-	C	LED 113
2	-	-	MA53A	2643693 R1	1.91	14.0	Std. Wall XLPE Primary Cable	YELLOW 2	3290.0	-	3	8002
3	-	-	MA52B	2643693 R1	1.91	14.0	Std. Wall XLPE Primary Cable	YELLOW 2	4215.0	-	A	8000

Name	Terminal Part Number	V-Min	Name	Wire Part Number	Wire CSA	Wire Spec	Wire Material description	Wire Color Description	Wire Length	End2 Terminal Part Number	End2 Pin Name	End2 Connector
3	-	-	MA52B	2643693 R1	1.91	14.0	Std. Wall XLPE Primary Cable	YELLOW 2	4215.0	-	A	LED 113
3	-	-	MA52B	2643693 R1	1.91	14.0	Std. Wall XLPE Primary Cable	YELLOW 2	4215.0	-	1	8003
4	-	-	MA53B	2643693 R1	1.91	14.0	Std. Wall XLPE Primary Cable	YELLOW 2	4215.0	-	C	8000
4	-	-	MA53B	2643693 R1	1.91	14.0	Std. Wall XLPE Primary Cable	YELLOW 2	4215.0	-	C	LED 113
4	-	-	MA53B	2643693 R1	1.91	14.0	Std. Wall XLPE Primary Cable	YELLOW 2	4215.0	-	3	8003
5	-	-	MA58	2643688 R1	1.91	14.0	Std. Wall XLPE Primary Cable	BROWN	2925.0	-	X	-
6	-	-	MK19	2643782 R1	1.91	14.0	Std. Wall XLPE Primary Cable	GREY	1945.0	-	A	M01-8550
6	-	-	MH19	2643782 R1	1.91	14.0	Std. Wall XLPE Primary Cable	GREY	1745.0	-	A	M01-8550B

Name	Terminal Part Number	V-Min	Name	Wire Part Number	Wire CSA	Wire Spec	Wire Material description	Wire Color Description	Wire Length	End2 Terminal Part Number	End2 Pin Name	End2 Connector
6	-	-	MH19	2643782 R1	1.91	14.0	Std. Wall XLPE Primary Cable	GREY	1745.0	-	A	M02-8550
7	-	-	MA58C	2643679 R1	1.16	16.0	Std. Wall XLPE Primary Cable	BROWN	1300.0	-	X	-
7	-	-	MA58C	2643679 R1	1.16	16.0	Std. Wall XLPE Primary Cable	BROWN	1300.0	-	C	8100
8	-	-	PN78A	2643678 R1	1.16	16.0	Std. Wall XLPE Primary Cable	LIGHT GREEN	1860.0	-	X	-
14	-	-	MA56	2643682 R1	1.16	16.0	Std. Wall XLPE Primary Cable	ORANGE	3290.0	-	4	8002
14	-	-	MA56	2643682 R1	1.16	16.0	Std. Wall XLPE Primary Cable	ORANGE	3290.0	-	D	8001
15	-	-	MA57	2643682 R1	1.16	16.0	Std. Wall XLPE Primary Cable	ORANGE	4215.0	-	4	8003
15	-	-	MA57	2643682 R1	1.16	16.0	Std. Wall XLPE Primary Cable	ORANGE	4215.0	-	D	8000_

Name	Terminal Part Number	V-Min	Name	Wire Part Number	Wire CSA	Wire Spec	Wire Material description	Wire Color Description	Wire Length	End2 Terminal Part Number	End2 Pin Name	End2 Connector
15	-	-	MA57	2643682 R1	1.16	16.0	Std. Wall XLPE Primary Cable	ORANGE	4215.0	-	D	8000
16	-	-	MA56A	2643682 R1	1.16	16.0	Std. Wall XLPE Primary Cable	ORANGE	1300.0	-	X	-
16	-	-	MA56A	2643682 R1	1.16	16.0	Std. Wall XLPE Primary Cable	ORANGE	1300.0	-	B	8100
17	-	-	WW87A	3510311 R1	0.79	18.0	Thin Wall XLPE Primary Cable	GREY	5205.0	-	1	M01-8351
17	-	-	WW87A	3510311 R1	0.79	18.0	Thin Wall XLPE Primary Cable	GREY	5205.0	-	1	M02-8351
18	-	-	WW9BB	3510311 R1	0.79	18.0	Thin Wall XLPE Primary Cable	GREY	5205.0	-	2	M01-8351
18	-	-	WW9BB	3510311 R1	0.79	18.0	Thin Wall XLPE Primary Cable	GREY	5205.0	-	2	M02-8351
19	-	-	MA87C	2643680 R1	1.16	16.0	Std. Wall XLPE Primary Cable	GREY	5165.0	-	1	M02-8352

Name	Terminal Part Number	V-Min	Name	Wire Part Number	Wire CSA	Wire Spec	Wire Material description	Wire Color Description	Wire Length	End2 Terminal Part Number	End2 Pin Name	End2 Connect or
19	-	-	MA87C	2643680 R1	1.16	16.0	Std. Wall XLPE Primary Cable	GREY	5165.0	-	1	M01-8350
20	-	-	MA87D	2643680 R1	1.16	16.0	Std. Wall XLPE Primary Cable	GREY	5165.0	-	2	M02-8352
20	-	-	MA87D	2643680 R1	1.16	16.0	Std. Wall XLPE Primary Cable	GREY	5165.0	-	2	M01-8350
21	-	-	MA85	2643680 R1	1.16	16.0	Std. Wall XLPE Primary Cable	GREY	2020.0	-	A	8303
22	-	-	ME64A	2643684 R1	1.16	16.0	Std. Wall XLPE Primary Cable	YELLOW 2	3490.0	-	1	8203
22	-	-	MD64A	3510336 R1	1.16	16.0	Thin Wall XLPE Primary Cable	YELLOW 2	2550.0	-	1	8203
23	-	-	ME64B	2643684 R1	1.16	16.0	Std. Wall XLPE Primary Cable	YELLOW 2	3490.0	-	3	8203
23	-	-	MD64B	3510336 R1	1.16	16.0	Thin Wall XLPE Primary Cable	YELLOW 2	3125.0	-	1	8202

Name	Terminal Part Number	V-Min	Name	Wire Part Number	Wire CSA	Wire Spec	Wire Material description	Wire Color Description	Wire Length	End2 Terminal Part Number	End2 Pin Name	End2 Connector
24	-	-	MJ54X	2643682 R1	1.16	16.0	Std. Wall XLPE Primary Cable	ORANGE	475.0	-	A	M01-8050
27	-	-	MX94M	3510311 R1	0.79	18.0	Thin Wall XLPE Primary Cable	GREY	1810.0	-	1	M02-8504
27	-	-	MB94	2643673 R1	0.79	18.0	Std. Wall XLPE Primary Cable	GREY	1850.0	-	A	M01-8500
27	-	-	MX94M	3510311 R1	0.79	18.0	Thin Wall XLPE Primary Cable	GREY	1810.0	-	1	M01-8504
27	-	-	MB94	2643673 R1	0.79	18.0	Std. Wall XLPE Primary Cable	GREY	1850.0	-	A	M02-8500
28	-	-	MX94MA	3510311 R1	0.79	18.0	Thin Wall XLPE Primary Cable	GREY	1810.0	-	2	M02-8504
28	-	-	MB94A	2643673 R1	0.79	18.0	Std. Wall XLPE Primary Cable	GREY	1850.0	-	B	M01-8500
28	-	-	MX94MA	3510311 R1	0.79	18.0	Thin Wall XLPE Primary Cable	GREY	1810.0	-	2	M01-8504

Name	Terminal Part Number	V-Min	Name	Wire Part Number	Wire CSA	Wire Spec	Wire Material description	Wire Color Description	Wire Length	End2 Terminal Part Number	End2 Pin Name	End2 Connector
28	-	-	MB94A	2643673 R1	0.79	18.0	Std. Wall XLPE Primary Cable	GREY	1850.0	-	B	M02-8500
29	-	-	MX94MB	3510311 R1	0.79	18.0	Thin Wall XLPE Primary Cable	GREY	1810.0	-	3	M02-8504
29	-	-	MB94B	2643673 R1	0.79	18.0	Std. Wall XLPE Primary Cable	GREY	1850.0	-	C	M01-8500
29	-	-	MX94MB	3510311 R1	0.79	18.0	Thin Wall XLPE Primary Cable	GREY	1810.0	-	3	M01-8504
29	-	-	MB94B	2643673 R1	0.79	18.0	Std. Wall XLPE Primary Cable	GREY	1850.0	-	C	M02-8500
30	-	-	NC94MC	3510311 R1	0.79	18.0	Thin Wall XLPE Primary Cable	GREY	1770.0	-	1	M02-8506
30	-	-	NB94C	2643673 R1	0.79	18.0	Std. Wall XLPE Primary Cable	GREY	1900.0	-	1	M01-8502
30	-	-	NC94MC	3510311 R1	0.79	18.0	Thin Wall XLPE Primary Cable	GREY	1770.0	-	1	M01-8506

Name	Terminal Part Number	V-Min	Name	Wire Part Number	Wire CSA	Wire Spec	Wire Material description	Wire Color Description	Wire Length	End2 Terminal Part Number	End2 Pin Name	End2 Connector
30	-	-	NB94C	2643673 R1	0.79	18.0	Std. Wall XLPE Primary Cable	GREY	1900.0	-	1	M02-8502
31	-	-	NC94MD	3510311 R1	0.79	18.0	Thin Wall XLPE Primary Cable	GREY	1770.0	-	2	M02-8506
31	-	-	NB94D	2643673 R1	0.79	18.0	Std. Wall XLPE Primary Cable	GREY	1900.0	-	2	M01-8502
31	-	-	NC94MD	3510311 R1	0.79	18.0	Thin Wall XLPE Primary Cable	GREY	1770.0	-	2	M01-8506
31	-	-	NB94D	2643673 R1	0.79	18.0	Std. Wall XLPE Primary Cable	GREY	1900.0	-	2	M02-8502
32	-	-	PC94ME	3510311 R1	0.79	18.0	Thin Wall XLPE Primary Cable	GREY	5865.0	-	1	M02-8507
32	-	-	NB94E	2643673 R1	0.79	18.0	Std. Wall XLPE Primary Cable	GREY	5875.0	-	1	M01-8503
32	-	-	PC94ME	3510311 R1	0.79	18.0	Thin Wall XLPE Primary Cable	GREY	5865.0	-	1	M01-8507

Name	Terminal Part Number	V-Min	Name	Wire Part Number	Wire CSA	Wire Spec	Wire Material description	Wire Color Description	Wire Length	End2 Terminal Part Number	End2 Pin Name	End2 Connector
32	-	-	NB94E	2643673 R1	0.79	18.0	Std. Wall XLPE Primary Cable	GREY	5875.0	-	1	M02-8503
33	-	-	PC94MF	3510311 R1	0.79	18.0	Thin Wall XLPE Primary Cable	GREY	5865.0	-	2	M02-8507
33	-	-	NB94F	2643673 R1	0.79	18.0	Std. Wall XLPE Primary Cable	GREY	5875.0	-	2	M01-8503
33	-	-	PC94MF	3510311 R1	0.79	18.0	Thin Wall XLPE Primary Cable	GREY	5865.0	-	2	M01-8507
33	-	-	NB94F	2643673 R1	0.79	18.0	Std. Wall XLPE Primary Cable	GREY	5875.0	-	2	M02-8503
34	-	-	MZ94MH	3510311 R1	0.79	18.0	Thin Wall XLPE Primary Cable	GREY	5865.0	-	1	M02-8505
34	-	-	MB94H	2643673 R1	0.79	18.0	Std. Wall XLPE Primary Cable	GREY	5775.0	-	A	M01-8501
34	-	-	MZ94MH	3510311 R1	0.79	18.0	Thin Wall XLPE Primary Cable	GREY	5865.0	-	1	M01-8505

Name	Terminal Part Number	V-Min	Name	Wire Part Number	Wire CSA	Wire Spec	Wire Material description	Wire Color Description	Wire Length	End2 Terminal Part Number	End2 Pin Name	End2 Connector
34	-	-	MB94H	2643673 R1	0.79	18.0	Std. Wall XLPE Primary Cable	GREY	5775.0	-	A	M02-8501
35	-	-	MZ94MJ	3510311 R1	0.79	18.0	Thin Wall XLPE Primary Cable	GREY	5865.0	-	2	M02-8505
35	-	-	MB94J	2643673 R1	0.79	18.0	Std. Wall XLPE Primary Cable	GREY	5775.0	-	B	M01-8501
35	-	-	MZ94MJ	3510311 R1	0.79	18.0	Thin Wall XLPE Primary Cable	GREY	5865.0	-	2	M01-8505
35	-	-	MB94J	2643673 R1	0.79	18.0	Std. Wall XLPE Primary Cable	GREY	5775.0	-	B	M02-8501
36	-	-	MZ94MK	3510311 R1	0.79	18.0	Thin Wall XLPE Primary Cable	GREY	5865.0	-	3	M02-8505
36	-	-	MB94K	2643673 R1	0.79	18.0	Std. Wall XLPE Primary Cable	GREY	5775.0	-	C	M01-8501
36	-	-	MZ94MK	3510311 R1	0.79	18.0	Thin Wall XLPE Primary Cable	GREY	5865.0	-	3	M01-8505

Name	Terminal Part Number	V-Min	Name	Wire Part Number	Wire CSA	Wire Spec	Wire Material description	Wire Color Description	Wire Length	End2 Terminal Part Number	End2 Pin Name	End2 Connector
36	-	-	MB94K	2643673 R1	0.79	18.0	Std. Wall XLPE Primary Cable	GREY	5775.0	-	C	M02-8501
37	-	-	WU67-G	3510358 R1	0.53	20.0	Thin Wall XLPE Primary Cable	WHITE	4135.0	-	8	M02-8904
37	-	-	NW67-GG	3510358 R1	0.53	20.0	Thin Wall XLPE Primary Cable	WHITE	4135.0	-	5	M01-8903
37	-	-	WU67-G	3510358 R1	0.53	20.0	Thin Wall XLPE Primary Cable	WHITE	4135.0	-	8	M01-8904
37	-	-	NW67-GG	3510358 R1	0.53	20.0	Thin Wall XLPE Primary Cable	WHITE	4135.0	-	5	M02-8903
38	-	-	WU67YA	3510322 R1	0.53	20.0	Thin Wall XLPE Primary Cable	PINK	3445.0	-	X	-
38	-	-	NW67Y	3510322 R1	0.53	20.0	Thin Wall XLPE Primary Cable	PINK	4135.0	-	8	M01-8903
38	-	-	NW67Y	3510322 R1	0.53	20.0	Thin Wall XLPE Primary Cable	PINK	4135.0	-	8	M02-8903

Name	Terminal Part Number	V-Min	Name	Wire Part Number	Wire CSA	Wire Spec	Wire Material description	Wire Color Description	Wire Length	End2 Terminal Part Number	End2 Pin Name	End2 Connector
43	-	-	PV97H	2643718 R1	0.79	18.0	Std. Wall XLPE Primary Cable	VIOLET	3050.0	-	A	8450A
44	-	-	PV97J	2643718 R1	0.79	18.0	Std. Wall XLPE Primary Cable	VIOLET	3050.0	-	B	8450A
45	-	-	WIRE234452	-	0.0	-	-	-	0.0	-	2	8903
46	-	-	WIRE234453	-	0.0	-	-	-	0.0	-	7	8903
47	-	-	NS22AA	3510323 R1	0.79	18.0	Thin Wall XLPE Primary Cable	PINK	1770.0	-	2	M02-8993F
47	-	-	NS22AA	3510323 R1	0.79	18.0	Thin Wall XLPE Primary Cable	PINK	1770.0	-	2	M01-8993F
48	-	-	NS22AG	3510359 R1	0.79	18.0	Thin Wall XLPE Primary Cable	WHITE	1770.0	-	1	M02-8993F
48	-	-	NS22AG	3510359 R1	0.79	18.0	Thin Wall XLPE Primary Cable	WHITE	1770.0	-	1	M01-8993F
51	-	-	NA72EA	2643682 R1	1.16	16.0	Std. Wall XLPE Primary Cable	ORANGE	700.0	-	C	M02-8454

Name	Terminal Part Number	V-Min	Name	Wire Part Number	Wire CSA	Wire Spec	Wire Material description	Wire Color Description	Wire Length	End2 Terminal Part Number	End2 Pin Name	End2 Connector
51	-	-	NA72EA	2643682 R1	1.16	16.0	Std. Wall XLPE Primary Cable	ORANGE	700.0	-	C	M01-8454
52	-	-	NA72EB	2643682 R1	1.16	16.0	Std. Wall XLPE Primary Cable	ORANGE	700.0	-	D	M02-8454
52	-	-	NA72EB	2643682 R1	1.16	16.0	Std. Wall XLPE Primary Cable	ORANGE	700.0	-	D	M01-8454
69	-	-	BB56AA	3510336 R1	1.16	16.0	Thin Wall XLPE Primary Cable	YELLOW 2	600.0	-	B	4450F
69	-	-	BB56A	3510336 R1	1.16	16.0	Thin Wall XLPE Primary Cable	YELLOW 2	600.0	-	B	4450F
70	-	-	BB56B	3510336 R1	1.16	16.0	Thin Wall XLPE Primary Cable	YELLOW 2	600.0	-	A	4460F
71	-	-	BB57A	3510300 R1	1.16	16.0	Thin Wall XLPE Primary Cable	LIGHT GREEN	600.0	-	C	4450F
72	-	-	BB57B	3510300 R1	1.16	16.0	Thin Wall XLPE Primary Cable	LIGHT GREEN	600.0	-	B	4460F

Name	Terminal Part Number	V-Min	Name	Wire Part Number	Wire CSA	Wire Spec	Wire Material description	Wire Color Description	Wire Length	End2 Terminal Part Number	End2 Pin Name	End2 Connector
73	-	-	BB54	3510307 R1	1.91	14.0	Thin Wall XLPE Primary Cable	BROWN	600.0	-	D	4450F
74	-	-	BB68	3510307 R1	1.91	14.0	Thin Wall XLPE Primary Cable	BROWN	600.0	-	A	4450F
75	-	-	BB70	3510368 R1	3.01	12.0	Thin Wall XLPE Primary Cable	RED	600.0	-	C	4460F
76	-	-	BB71	3510342 R1	1.16	16.0	Thin Wall XLPE Primary Cable	LIGHT BLUE	609.0	-	E	4450F

Connector Name 1700F

Part Number 3595624C1

Instances Body J1939 (250Kbps) Splice Pack 1024:Body J1939 (250Kbps)
Body J1939 (250Kbps) Splice Pack 1025:Body J1939 (250Kbps)
Body J1939 (250Kbps) Splice Pack 1029:Body J1939 (250Kbps)
Body J1939 (250Kbps) W/ 3 Splice Packs:Body J1939 (250Kbps)
Powertrain J1939 (500Kbps) Edurant Transmission A26:Powertrain J1939 (500Kbps) Edurant Transmission A26
Powertrain J1939 (500Kbps) Allison 3K Transmission A26:Powertrain J1939 (500Kbps) Allison 3K A26
Powertrain J1939 (500Kbps) Eaton Ultrashift+ Transmission A26:Powertrain J1939 (500Kbps) Eaton Ultrashift+ Transmission A26
Powertrain J1939 (500Kbps) Eaton Ultrashift+ Transmission X15:Powertrain J1939 (500kbps) Eaton Ultrashift+ X15
Powertrain J1939 (500Kbps) Edurant Transmission X15:Powertrain J1939 (500kbps) Endurant Transmission X15
Powertrain J1939 (500Kbps) Manual Transmission A26:Powertrain Standard J1939 (500Kbps) A26 Engine
Powertrain J1939 (500Kbps) Manual Transmission X15:Powertrain Standard J1939 (500kbps) Manual Transmission X15
Powertrain J1939 (500Kbps) TC10 Transmission A26:Powertrain J1939 (500Kbps) TC10 Transmission A26
Powertrain J1939 (500Kbps) TC10 Transmission X15:Powertrain J1939 (500kbps) TC10 Transmission X15

Mates 1700

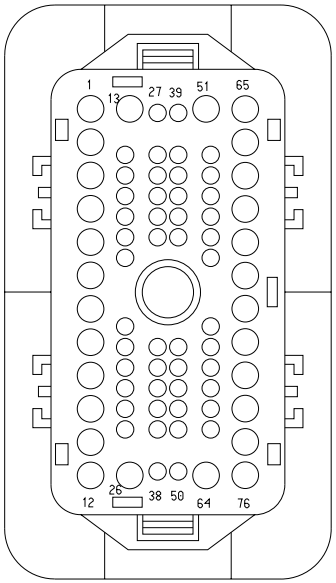

Name	Terminal Part Number	V-Min	Name	Wire Part Number	Wire CSA	Wire Spec	Wire Material description	Wire Color Description	Wire Length	End2 Terminal Part Number	End2 Pin Name	End2 Connector
61	-	-	WIRE489841	-	0.0	-	-	-	0.0	-	X	-
61	-	-	WIRE489900	-	0.0	-	-	-	0.0	-	X	-
61	-	-	WIRE490010	-	0.0	-	-	-	0.0	-	X	-
61	-	-	WIRE490104	-	0.0	-	-	-	0.0	-	X	-

Name	Terminal Part Number	V-Min	Name	Wire Part Number	Wire CSA	Wire Spec	Wire Material description	Wire Color Description	Wire Length	End2 Terminal Part Number	End2 Pin Name	End2 Connector
62	-	-	WIRE489842	-	0.0	-	-	-	0.0	-	PIN1	-
62	-	-	WIRE489901	-	0.0	-	-	-	0.0	-	PIN1	-
62	-	-	WIRE490011	-	0.0	-	-	-	0.0	-	PIN1	-
62	-	-	WIRE490105	-	0.0	-	-	-	0.0	-	PIN1	-
65	-	-	WIRE223912	-	0.0	-	-	-	0.0	-	PIN1	-
66	-	-	WIRE223913	-	0.0	-	-	-	0.0	-	PIN1	-

Connector Name	1700
Part Number	3595625C1
Short Description	FORWARD CHASSIS
Instances	Fusion Private J1939:Fusion Private J1939 LoneStar - X15 - Adaptive Cruise Control (Bendix - Fusion W/O DIU & N/ Safety Direct & Tweeters):Diagram1 LoneStar - X15 - Adaptive Cruise Control (Bendix - Fusion W/O DIU & W/ Safety Direct & Reg Speakers) Option 1:Diagram1 LoneStar - X15 - Adaptive Cruise Control (Bendix - Fusion W/O DIU & W/ Safety Direct & Reg Speakers) Option 2:Diagram1 LoneStar - X15 - Adaptive Cruise Control (Bendix - Fusion W/O DIU & W/ Safety Direct & W/ Tweeters):Diagram1 LoneStar - X15 - Adaptive Cruise Control w/o Display (Bendix):Diagram1 LoneStar - X15 - Adaptive Cruise Control w/o Display (Wabco):Diagram1 LoneStar - X15 - Antilock Brake System (ABS) - Wabco 4 Channel Implementation:Diagram1 LoneStar - X15 - Antilock Brake System (ABS) - Wabco 4 Channel Implementation:Diagram2 LoneStar - X15 - Antilock Brake System (ABS) - Wabco 4 Channel Implementation:Diagram3 LoneStar - X15 - Antilock Brake System (ABS) - Wabco 4 Channel Implementation:Diagram4 LoneStar - X15 - Antilock Brake System (ABS) [Bendix 6 Channel Implementation]:Diagram1 LoneStar - X15 - Antilock Brake System (ABS) [Bendix 6 Channel Implementation]:Diagram2 LoneStar - X15 - Antilock Brake System (ABS) [Bendix 6 Channel Implementation]:Diagram3 LoneStar - X15 - Antilock Brake System (ABS)-BENDIX 4 Channel Implemenation:Diagram1 LoneStar - X15 - Antilock Brake System (ABS)-BENDIX 4 Channel Implemenation:Diagram2 LoneStar - X15 - Antilock Brake System (ABS)-BENDIX 4 Channel Implemenation:Diagram3 LoneStar - X15 - Antilock Brake System (ABS)-BENDIX 4 Channel Implemenation:Diagram4 LoneStar - X15 - Antilock Brake System - Wabco ABS 6 Channel Implementation:Diagram1 LoneStar - X15 - Antilock Brake System - Wabco ABS 6 Channel Implementation:Diagram2

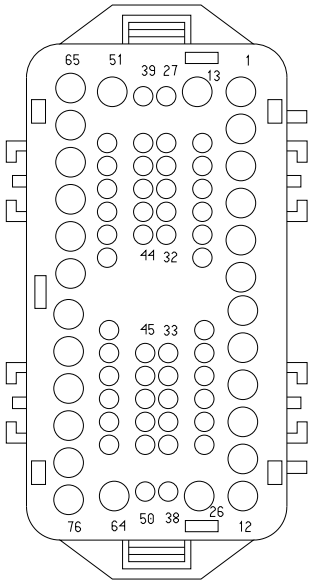

LoneStar - X15 - Antilock Brake System - Wabco ABS 6 Channel Implementation:Diagram3
LoneStar - X15 - Body Builder Lighting - (BOC EOF In Cab) (8HAB 8HAE 8HAU) (Automatic):Diagram1
LoneStar - X15 - Body Builder Lighting - (BOC EOF In Cab) (8HAB 8HAE 8HAU) (Automatic):Diagram2
LoneStar - X15 - Body Builder Lighting - (BOC EOF In Cab) (8HAB 8HAE 8HAU) (Manual):Diagram1
LoneStar - X15 - Body Builder Lighting - (BOC EOF In Cab) (8HAB 8HAE 8HAU) (Manual):Diagram2
LoneStar - X15 - City Horn W/ 4PIN CLK W/O RKA:Diagram1-Combination1
LoneStar - X15 - City Horn W/ 4PIN CLK W/RKA:Diagram1-Combination1
LoneStar - X15 - City Horn W/ 10PIN CLK W/RKA:Diagram1-Combination1
LoneStar - X15 - City Horn W/ 10PIN CLK W/O RKA:Diagram1-Combination1
LoneStar - X15 - Crank Inhibit with Hood Switch - with new BCM Pin:Diagram2
LoneStar - X15 - Fuel Heater (Vehicle Powered) (Davco):Diagram1
LoneStar - X15 - Headlights Halogen N/INT N/LOWW:Diagram1
LoneStar - X15 - Headlights Halogen N/INT W/LOWW:Diagram1
LoneStar - X15 - Headlights Halogen W/INT N/LOWW:Diagram1
LoneStar - X15 - Headlights Halogen W/INT W/ LOWW:Diagram1
LoneStar - X15 - Hood Switch:Diagram1
LoneStar - X15 - Lane Departure Warning - (Bendix Fusion W/ Safety Direct))(US & Canada):Diagram1
LoneStar - X15 - Lane Departure Warning - (Bendix Fusion W/ Safety Direct))(US & Canada)-:Diagram1
LoneStar - X15 - Modesty Lighting W/ Day Cab W/ 2 Turn /0 Marker:Diagram1
LoneStar - X15 - Modesty Lighting W/ Sleeper W/ 4 Side Turns / 0 Marker:Diagram1
LoneStar - X15 - Tire Pressure (TPMS) (US & Canada):Diagram1
LoneStar - X15 - Trailer Interface (ABS) - Center Pin Circuit:Diagram1
LoneStar - X15 - Trailer Interface (ABS) - Center Pin Circuit:Diagram2
LoneStar - X15 - Trailer Interface (ABS) - Center Pin Circuit:Diagram3

LoneStar - X15 - Trailer Interface (ABS) - Center Pin Circuit:Diagram4
LoneStar - X15 - Windshield Washer Pump:Diagram1
LoneStar - X15 - Windshield Washer Pump & Low Fluid Sensor:Diagram1
LoneStar - X15/A26 - Front Fog Lamps:Diagram1
LoneStar - X15/A26 - Marker Lights (Halogen):Diagram1
LT - X15/A26 - Headlights Halogen N/INT N/LOWW:Diagram1
LT - X15/A26 - Headlights Halogen N/INT W/LOWW:Diagram1
LT - X15/A26 - Headlights Halogen W/INT N/LOWW:Diagram1
LT - X15/A26 - Headlights Halogen W/INT W/LOWW:Diagram1
LT - X15/A26 - Headlights LED N/ INT N/LOWW:Diagram1
LT - X15/A26 - Headlights LED N/ INT W/LOWW:Diagram1
LT - X15/A26 - Headlights LED W/INT N/LOWW:Diagram1
LT - X15/A26 - Headlights LED W/INT W/LOWW:Diagram1
LT/RH - A26 - Body Builder Lighting - (BOC EOF In Cab) (8HAB 8HAE 8HAU) (Manual):Diagram1
LT/RH - A26 - Body Builder Lighting - (BOC EOF In Cab) (8HAB 8HAE 8HAU) (Manual):Diagram2
LT/RH - A26 - Body Builder Lighting - (BOC EOF In Cab) (8HAB 8HAE 8HAU) (Manual):Diagram3
LT/RH - A26 - Body Builder Lighting - (BOC EOF In Cab) (8HAB 8HAE 8HAU) (Manual):Diagram4
LT/RH - X15 - Body Builder Lighting - (BOC EOF In Cab) (8HAB 8HAE 8HAU) (Manual):Diagram1
LT/RH - X15 - Body Builder Lighting - (BOC EOF In Cab) (8HAB 8HAE 8HAU) (Manual):Diagram2
LT/RH - X15/A26 - Adaptive Cruise Control (Bendix - Fusion W/ O DIU & N/ Safety Direct & Tweeters):Diagram1
LT/RH - X15/A26 - Adaptive Cruise Control (Bendix - Fusion W/ O DIU & N/ Safety Direct & Reg Speakers):Diagram1
LT/RH - X15/A26 - Adaptive Cruise Control (Bendix - Fusion W/ O DIU & W/ Safety Direct & Reg Speakers):Diagram1
LT/RH - X15/A26 - Adaptive Cruise Control (Bendix - Fusion W/ O DIU & W/ Safety Direct & W/ Tweeters):Diagram1
LT/RH - X15/A26 - Adaptive Cruise Control w/o Display (Bendix):Diagram1
LT/RH - X15/A26 - Adaptive Cruise Control w/o Display (Wabco):Diagram1
LT/RH - X15/A26 - Antilock Brake System (ABS) - Wabco 4 Channel Implementation:Diagram1
LT/RH - X15/A26 - Antilock Brake System (ABS) - Wabco 4 Channel Implementation:Diagram2

LT/RH - X15/A26 - Antilock Brake System (ABS) - Wabco 4 Channel Implementation:Diagram3
LT/RH - X15/A26 - Antilock Brake System (ABS) - Wabco 4 Channel Implementation:Diagram4
LT/RH - X15/A26 - Antilock Brake System (ABS) BENDIX 4 Channel Implemenation:Diagram1
LT/RH - X15/A26 - Antilock Brake System (ABS) BENDIX 4 Channel Implemenation:Diagram2
LT/RH - X15/A26 - Antilock Brake System (ABS) BENDIX 4 Channel Implemenation:Diagram3
LT/RH - X15/A26 - Antilock Brake System (ABS) BENDIX 4 Channel Implemenation:Diagram4
LT/RH - X15/A26 - Antilock Brake System (ABS) Bendix 6 Channel Implementation:Diagram1
LT/RH - X15/A26 - Antilock Brake System (ABS) Bendix 6 Channel Implementation:Diagram2
LT/RH - X15/A26 - Antilock Brake System (ABS) Bendix 6 Channel Implementation:Diagram3
LT/RH - X15/A26 - Antilock Brake System - Wabco ABS 6 Channel Implementation:Diagram1
LT/RH - X15/A26 - Antilock Brake System - Wabco ABS 6 Channel Implementation:Diagram2
LT/RH - X15/A26 - Antilock Brake System - Wabco ABS 6 Channel Implementation:Diagram3
LT/RH - X15/A26 - Body Builder Lighting - (BOC EOF In Cab) (8HAB 8HAE 8HAU) (Automatic):Diagram1
LT/RH - X15/A26 - Body Builder Lighting - (BOC EOF In Cab) (8HAB 8HAE 8HAU) (Automatic):Diagram2
LT/RH - X15/A26 - City Horn W/ 4PIN CLK W/O RKA:Diagram1-Combination1
LT/RH - X15/A26 - City Horn W/ 4PIN CLK W/RKA:Diagram1-Combination1
LT/RH - X15/A26 - City Horn W/ 10PIN CLK W/RKA:Diagram1-Combination1
LT/RH - X15/A26 - City Horn W/ 10PIN CLK W/O RKA:Diagram1-Combination1
LT/RH - X15/A26 - Directional Signal (Turn) With HEADLIGHTS:Diagram1
LT/RH - X15/A26 - Directional Signal (Turn) With HEADLIGHTS (HAL-125):Diagram1
LT/RH - X15/A26 - Directional Signal (Turn) With HEADLIGHTS (LED-125):Diagram1
LT/RH - X15/A26 - Directional Signal (Turn) With HEADLIGHTS Option2:Diagram1

LT/RH - X15/A26 - Fog Lights Lamps:Diagram1
LT/RH - X15/A26 - Fuel Heater (Vehicle Powered) (Davco):Diagram1
LT/RH - X15/A26 - Fuel Heater (Vehicle Powered) (Davco):Diagram2
LT/RH - X15/A26 - Fuel Heater (Vehicle Powered) (RAVCOR):Diagram1
LT/RH - X15/A26 - Hood Switch:Diagram1
LT/RH - X15/A26 - Lane Departure Warning - (Bendix Fusion W/ Safety Direct))(US & Canada):Diagram1
LT/RH - X15/A26 - Lane Departure Warning - Bendix:Diagram1
LT/RH - X15/A26 - Marker Lights (With 113 Halogen):Diagram1
LT/RH - X15/A26 - Marker Lights (With 125 Halogen):Diagram1
LT/RH - X15/A26 - Marker Lights (With 125 LED):Diagram1
LT/RH - X15/A26 - Marker Lights (With113 LED):Diagram1
LT/RH - X15/A26 - Modesty Lighting W/ Day Cab W/ 2 Turn /0 Marker:Diagram1
LT/RH - X15/A26 - Modesty Lighting W/ Sleeper W/ 4 Side Turns / 0 Marker:Diagram1
LT/RH - X15/A26 - Skirt Light Customer Supplied:Diagram1
LT/RH - X15/A26 - Tire Pressure (TPMS) (US & Canada):Diagram1
LT/RH - X15/A26 - Trailer Interface (ABS) - Center Pin Circuit:Diagram1
LT/RH - X15/A26 - Trailer Interface (ABS) - Center Pin Circuit:Diagram2
LT/RH - X15/A26 - Trailer Interface (ABS) - Center Pin Circuit:Diagram3
LT/RH - X15/A26 - Trailer Interface (ABS) - Center Pin Circuit:Diagram4
LT/RH - X15/A26 - Windshield Washer Pump:Diagram1
LT/RH - X15/A26 - Windshield Washer Pump & Low Fluid Sensor:Diagram1
LT/RH - X15/A26 - with Hood Switch - with new BCM Pin:Diagram1
LT/RH/LoneStar - X15/A26 - Heated Mirrors (Door Pod Actuated Cab and Hood Mounted):Diagram1
RH - X15/A26 - Directional Signal (Turn) W/ HEADLIGHTS:Diagram1
RH - X15/A26 - Headlights Halogen N/INT N/LOWW:Diagram1
RH - X15/A26 - Headlights Halogen N/INT W/LOWW:Diagram1
RH - X15/A26 - Headlights Halogen W/INT N/LOWW:Diagram1
RH - X15/A26 - Headlights Halogen W/INT W/LOWW:Diagram1
RH - X15/A26 - Headlights LED N/INT N/LOWW LT:Diagram1

RH - X15/A26 - Headlights LED N/INT W/LOWW LT:Diagram1
RH - X15/A26 - Headlights LED W/INT N/LOWW LT:Diagram1
RH - X15/A26 - Headlights LED W/INT W/LOWW LT:Diagram1

Mates 1700F

Name	Terminal Part Number	V-Min	Name	Wire Part Number	Wire CSA	Wire Spec	Wire Material description	Wire Color Description	Wire Length	End2 Terminal Part Number	End2 Pin Name	End2 Connector
1	-	-	DE52A	3510337 R1	1.91	14.0	Thin Wall XLPE Primary Cable	YELLOW 2	560.0	-	H	J1-1603
2	-	-	DE53A	3510337 R1	1.91	14.0	Thin Wall XLPE Primary Cable	YELLOW 2	610.0	-	B	J2-1604
3	-	-	DE52B	3510337 R1	1.91	14.0	Thin Wall XLPE Primary Cable	YELLOW 2	560.0	-	L	J1-1603
4	-	-	DE53B	3510337 R1	1.91	14.0	Thin Wall XLPE Primary Cable	YELLOW 2	610.0	-	H	J2-1604
5	-	-	2A58	3510306 R1	1.16	16.0	Thin Wall XLPE Primary Cable	BROWN	1245.0	-	-	-
6	-	-	DR19	3510313 R1	1.91	14.0	Thin Wall XLPE Primary Cable	GREY	1900.0	-	R6-30	1011
7	-	-	AA58TA	3510306 R1	1.16	16.0	Thin Wall XLPE Primary Cable	BROWN	1245.0	-	-	-

Name	Terminal Part Number	V-Min	Name	Wire Part Number	Wire CSA	Wire Spec	Wire Material description	Wire Color Description	Wire Length	End2 Terminal Part Number	End2 Pin Name	End2 Connector
8	-	-	JA78	3510300 R1	1.16	16.0	Thin Wall XLPE Primary Cable	LIGHT GREEN	1990.0	-	R5-87	1012
14	-	-	AA56F	3510318 R1	1.16	16.0	Thin Wall XLPE Primary Cable	ORANGE	625.0	-	-	-
15	-	-	AA57	3510318 R1	1.16	16.0	Thin Wall XLPE Primary Cable	ORANGE	625.0	-	-	-
16	-	-	AA56G	3510318 R1	1.16	16.0	Thin Wall XLPE Primary Cable	ORANGE	625.0	-	-	-
17	-	-	AN87A	3510311 R1	0.79	18.0	Thin Wall XLPE Primary Cable	GREY	955.0	-	A8	J3-1600
18	-	-	AN9BB	3510311 R1	0.79	18.0	Thin Wall XLPE Primary Cable	GREY	1185.0	-	-	-
19	-	-	AA87C	3510311 R1	0.79	18.0	Thin Wall XLPE Primary Cable	GREY	2075.0	-	-	-
20	-	-	AA87D	3510311 R1	0.79	18.0	Thin Wall XLPE Primary Cable	GREY	765.0	-	X	-

Name	Terminal Part Number	V-Min	Name	Wire Part Number	Wire CSA	Wire Spec	Wire Material description	Wire Color Description	Wire Length	End2 Terminal Part Number	End2 Pin Name	End2 Connector
21	-	-	AA85	3510312 R1	1.16	16.0	Thin Wall XLPE Primary Cable	GREY	560.0	-	E	J1-1603
22	-	-	CU64A	3510336 R1	1.16	16.0	Thin Wall XLPE Primary Cable	YELLOW 2	560.0	-	F	J1-1603
23	-	-	CU64B	3510336 R1	1.16	16.0	Thin Wall XLPE Primary Cable	YELLOW 2	560.0	-	K	J1-1603
24	-	-	DY54X	3510306 R1	1.16	16.0	Thin Wall XLPE Primary Cable	BROWN	1905.0	-	X	-
27	-	-	GS94M	3510311 R1	0.79	18.0	Thin Wall XLPE Primary Cable	GREY	2365.0	-	6	A01-1421
27	-	-	XY94	3510311 R1	0.79	18.0	Thin Wall XLPE Primary Cable	GREY	2325.0	-	2	A01-1401
27	-	-	3A94M	3510311 R1	0.79	18.0	Thin Wall XLPE Primary Cable	GREY	2365.0	-	6	A01-1421
28	-	-	GS94MA	3510311 R1	0.79	18.0	Thin Wall XLPE Primary Cable	GREY	1755.0	-	X	-

Name	Terminal Part Number	V-Min	Name	Wire Part Number	Wire CSA	Wire Spec	Wire Material description	Wire Color Description	Wire Length	End2 Terminal Part Number	End2 Pin Name	End2 Connector
28	-	-	XY94A	3510311 R1	0.79	18.0	Thin Wall XLPE Primary Cable	GREY	2325.0	-	3	A01-1401
28	-	-	3A94MA	3510311 R1	0.79	18.0	Thin Wall XLPE Primary Cable	GREY	1755.0	-	X	-
29	-	-	GS94MB	3510311 R1	0.79	18.0	Thin Wall XLPE Primary Cable	GREY	2365.0	-	3	A01-1421
29	-	-	XY94B	3510311 R1	0.79	18.0	Thin Wall XLPE Primary Cable	GREY	2325.0	-	1	A01-1401
29	-	-	3A94MB	3510311 R1	0.79	18.0	Thin Wall XLPE Primary Cable	GREY	2365.0	-	3	A01-1421
30	-	-	GS94MC	3510311 R1	0.79	18.0	Thin Wall XLPE Primary Cable	GREY	2365.0	-	12	A01-1421
30	-	-	XY94C	3510312 R1	1.16	16.0	Thin Wall XLPE Primary Cable	GREY	2325.0	-	5	A01-1401
30	-	-	3A94MC	3510311 R1	0.79	18.0	Thin Wall XLPE Primary Cable	GREY	2365.0	-	12	A01-1421

Name	Terminal Part Number	V-Min	Name	Wire Part Number	Wire CSA	Wire Spec	Wire Material description	Wire Color Description	Wire Length	End2 Terminal Part Number	End2 Pin Name	End2 Connector
31	-	-	GS94MD	3510311 R1	0.79	18.0	Thin Wall XLPE Primary Cable	GREY	2365.0	-	15	A01-1421
31	-	-	XY94D	3510312 R1	1.16	16.0	Thin Wall XLPE Primary Cable	GREY	2325.0	-	8	A01-1401
31	-	-	3A94MD	3510311 R1	0.79	18.0	Thin Wall XLPE Primary Cable	GREY	2365.0	-	15	A01-1421
32	-	-	GS94ME	3510311 R1	0.79	18.0	Thin Wall XLPE Primary Cable	GREY	2365.0	-	10	A01-1421
32	-	-	XY94E	3510312 R1	1.16	16.0	Thin Wall XLPE Primary Cable	GREY	2325.0	-	11	A01-1401
32	-	-	3A94ME	3510311 R1	0.79	18.0	Thin Wall XLPE Primary Cable	GREY	2365.0	-	10	A01-1421
33	-	-	GS94MF	3510311 R1	0.79	18.0	Thin Wall XLPE Primary Cable	GREY	2365.0	-	13	A01-1421
33	-	-	XY94F	3510312 R1	1.16	16.0	Thin Wall XLPE Primary Cable	GREY	2325.0	-	14	A01-1401

Name	Terminal Part Number	V-Min	Name	Wire Part Number	Wire CSA	Wire Spec	Wire Material description	Wire Color Description	Wire Length	End2 Terminal Part Number	End2 Pin Name	End2 Connector
33	-	-	3A94MF	3510311 R1	0.79	18.0	Thin Wall XLPE Primary Cable	GREY	2365.0	-	13	A01-1421
34	-	-	GS94MH	3510311 R1	0.79	18.0	Thin Wall XLPE Primary Cable	GREY	2365.0	-	4	A01-1421
34	-	-	XY94H	3510311 R1	0.79	18.0	Thin Wall XLPE Primary Cable	GREY	2325.0	-	7	A01-1401
34	-	-	3A94MH	3510311 R1	0.79	18.0	Thin Wall XLPE Primary Cable	GREY	2365.0	-	4	A01-1421
35	-	-	GS94MJ	3510311 R1	0.79	18.0	Thin Wall XLPE Primary Cable	GREY	1755.0	-	X	-
35	-	-	XY94J	3510311 R1	0.79	18.0	Thin Wall XLPE Primary Cable	GREY	2325.0	-	6	A01-1401
35	-	-	3A94MJ	3510311 R1	0.79	18.0	Thin Wall XLPE Primary Cable	GREY	1755.0	-	X	-
36	-	-	GS94MK	3510311 R1	0.79	18.0	Thin Wall XLPE Primary Cable	GREY	2365.0	-	1	A01-1421

Name	Terminal Part Number	V-Min	Name	Wire Part Number	Wire CSA	Wire Spec	Wire Material description	Wire Color Description	Wire Length	End2 Terminal Part Number	End2 Pin Name	End2 Connector
36	-	-	XY94K	3510311 R1	0.79	18.0	Thin Wall XLPE Primary Cable	GREY	2325.0	-	4	A01-1401
36	-	-	3A94MK	3510311 R1	0.79	18.0	Thin Wall XLPE Primary Cable	GREY	2365.0	-	1	A01-1421
37	-	-	YC67-G	3510359 R1	0.79	18.0	Thin Wall XLPE Primary Cable	WHITE	775.0	-	-	-
37	-	-	YK67-G	3510359 R1	0.79	18.0	Thin Wall XLPE Primary Cable	WHITE	775.0	-	-	-
38	-	-	YC67A	3510323 R1	0.79	18.0	Thin Wall XLPE Primary Cable	PINK	2075.0	-	-	-
38	-	-	YK67Y	3510323 R1	0.79	18.0	Thin Wall XLPE Primary Cable	PINK	1885.0	-	X	-
43	-	-	HV17-G	3510360 R1	1.16	16.0	Thin Wall XLPE Primary Cable	WHITE	775.0	-	-	-
44	-	-	HV104C	3510354 R1	1.16	16.0	Thin Wall XLPE Primary Cable	DARK BLUE	660.0	-	B5	J7-1607
45	-	-	WIRE234454	-	0.0	-	-	-	0.0	-	F	16B

Name	Terminal Part Number	V-Min	Name	Wire Part Number	Wire CSA	Wire Spec	Wire Material description	Wire Color Description	Wire Length	End2 Terminal Part Number	End2 Pin Name	End2 Connector
46	-	-	WIRE234455	-	0.0	-	-	-	0.0	-	E	16B
47	-	-	RW22AA	3510324 R1	1.16	16.0	Thin Wall XLPE Primary Cable	PINK	2075.0	-	-	-
48	-	-	RW22-GAN	3510359 R1	0.79	18.0	Thin Wall XLPE Primary Cable	WHITE	1210.0	-	-	-
51	-	-	FR72E	3510317 R1	0.79	18.0	Thin Wall XLPE Primary Cable	ORANGE	2095.0	-	-	-
52	-	-	FR72EB	3510316 R1	0.53	20.0	Thin Wall XLPE Primary Cable	ORANGE	1885.0	-	2	A01-1110M
69	-	-	BL56BB	3510336 R1	1.16	16.0	Thin Wall XLPE Primary Cable	YELLOW 2	560.0	-	B	J1-1603
70	-	-	BL56BC	3510336 R1	1.16	16.0	Thin Wall XLPE Primary Cable	YELLOW 2	575.0	-	-	-
71	-	-	BL57BB	3510300 R1	1.16	16.0	Thin Wall XLPE Primary Cable	LIGHT GREEN	560.0	-	A	J1-1603
72	-	-	BL57BC	3510300 R1	1.16	16.0	Thin Wall XLPE Primary Cable	LIGHT GREEN	575.0	-	-	-

Name	Terminal Part Number	V-Min	Name	Wire Part Number	Wire CSA	Wire Spec	Wire Material description	Wire Color Description	Wire Length	End2 Terminal Part Number	End2 Pin Name	End2 Connect or
73	-	-	BL54BB	3510307 R1	1.91	14.0	Thin Wall XLPE Primary Cable	BROWN	610.0	-	F	J2-1604
74	-	-	BL68BB	3510307 R1	1.91	14.0	Thin Wall XLPE Primary Cable	BROWN	610.0	-	D	J2-1604
75	-	-	BL70BB	3510368 R1	3.01	12.0	Thin Wall XLPE Primary Cable	RED	1990.0	-	R5-87	1012
76	-	-	BL71BB	3510342 R1	1.16	16.0	Thin Wall XLPE Primary Cable	LIGHT BLUE	575.0	-	-	-

Connector Name 1700

Part Number 3595625C1

Instances Body J1939 (250Kbps) Splice Pack 1024:Body J1939 (250Kbps)
Body J1939 (250Kbps) Splice Pack 1025:Body J1939 (250Kbps)
Body J1939 (250Kbps) Splice Pack 1029:Body J1939 (250Kbps)
Body J1939 (250Kbps) W/ 3 Splice Packs:Body J1939 (250Kbps)
Powertrain J1939 (500Kbps) Edurant Transmission A26:Powertrain J1939 (500Kbps) Edurant Transmission A26
Powertrain J1939 (500Kbps) Allison 3K Transmission A26:Powertrain J1939 (500Kbps) Allison 3K A26
Powertrain J1939 (500Kbps) Eaton Ultrashift+ Transmission A26:Powertrain J1939 (500Kbps) Eaton Ultrashift+ Transmission A26
Powertrain J1939 (500Kbps) Eaton Ultrashift+ Transmission X15:Powertrain J1939 (500kbps) Eaton Ultrashift+ X15
Powertrain J1939 (500Kbps) Edurant Transmission X15:Powertrain J1939 (500kbps) Endurant Transmission X15
Powertrain J1939 (500Kbps) Manual Transmission A26:Powertrain Standard J1939 (500Kbps) A26 Engine
Powertrain J1939 (500Kbps) Manual Transmission X15:Powertrain Standard J1939 (500kbps) Manual Transmission X15
Powertrain J1939 (500Kbps) TC10 Transmission A26:Powertrain J1939 (500Kbps) TC10 Transmission A26
Powertrain J1939 (500Kbps) TC10 Transmission X15:Powertrain J1939 (500kbps) TC10 Transmission X15

Mates 1700F

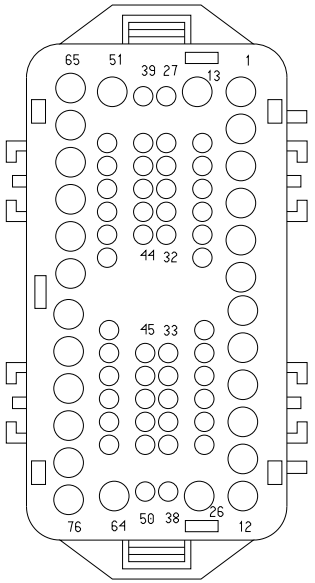

Name	Terminal Part Number	V-Min	Name	Wire Part Number	Wire CSA	Wire Spec	Wire Material description	Wire Color Description	Wire Length	End2 Terminal Part Number	End2 Pin Name	End2 Connector
61	-	-	WIRE489800	-	0.0	-	-	-	0.0	-	G	1024
61	-	-	WIRE489906	-	0.0	-	-	-	0.0	-	B	250M
61	-	-	WIRE489916	-	0.0	-	-	-	0.0	-	G	1029
61	-	-	WIRE490002	-	0.0	-	-	-	0.0	-	PIN1	-

Name	Terminal Part Number	V-Min	Name	Wire Part Number	Wire CSA	Wire Spec	Wire Material description	Wire Color Description	Wire Length	End2 Terminal Part Number	End2 Pin Name	End2 Connect or
61	-	-	WIRE490106	-	0.0	-	-	-	0.0	-	B	250M
61	-	-	WIRE490115	-	0.0	-	-	-	0.0	-	PIN1	-
62	-	-	WIRE489801	-	0.0	-	-	-	0.0	-	F	1024
62	-	-	WIRE489907	-	0.0	-	-	-	0.0	-	A	250M
62	-	-	WIRE489917	-	0.0	-	-	-	0.0	-	F	1029
62	-	-	WIRE490003	-	0.0	-	-	-	0.0	-	PIN1	-
62	-	-	WIRE490107	-	0.0	-	-	-	0.0	-	A	250M
62	-	-	WIRE490114	-	0.0	-	-	-	0.0	-	PIN1	-
65	-	-	WIRE223775	-	0.0	-	-	-	0.0	-	PIN1	-
66	-	-	WIRE223776	-	0.0	-	-	-	0.0	-	PIN1	-

Connector Name	1701F
Part Number	3595622C1
Short Description	CONNECTOR TO DASH HARNESS
Instances	ABS Private J1939:ABS Private J1939
Mates	1701M

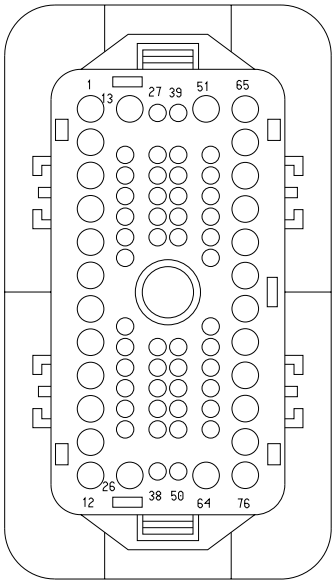

Name	Terminal Part Number	V-Min	Name	Wire Part Number	Wire CSA	Wire Spec	Wire Material description	Wire Color Description	Wire Length	End2 Terminal Part Number	End2 Pin Name	End2 Connect or
46	-	-	PR94SAB	2643673 R1	0.79	18.0	Std. Wall XLPE Primary Cable	GREY	5120.0	-	1	9511/95 11A
46	-	-	YJ94SN	-	0.0	-	-	RED	0.0	-	1	9511B/9 511D
47	-	-	PR94SBB	2643673 R1	0.79	18.0	Std. Wall XLPE Primary Cable	GREY	5120.0	-	3	9511/95 11A
47	-	-	YJ94SP	-	0.0	-	-	BROWN	0.0	-	2	9511B/9 511D
48	-	-	PR94SCB	2643673 R1	0.79	18.0	Std. Wall XLPE Primary Cable	GREY	5120.0	-	2	9511/95 11A
48	-	-	YJ94SR	-	0.0	-	-	BLACK	0.0	-	3	9511B/9 511D

Name	Terminal Part Number	V-Min	Name	Wire Part Number	Wire CSA	Wire Spec	Wire Material description	Wire Color Description	Wire Length	End2 Terminal Part Number	End2 Pin Name	End2 Connect or
49	-	-	PR94SDB	2643673 R1	0.79	18.0	Std. Wall XLPE Primary Cable	GREY	5120.0	-	4	9511/95 11A
49	-	-	YJ94SS	-	0.0	-	-	WHITE	0.0	-	4	9511B/9 511D

Connector Name	1701F
Part Number	3595622C1
Short Description	CONNECTOR TO DASH HARNESS
Instances	LoneStar - X15 - Antilock Brake System (ABS) - Wabco 4 Channel Implementation:Diagram1 LoneStar - X15 - Antilock Brake System (ABS) - Wabco 4 Channel Implementation:Diagram2 LoneStar - X15 - Antilock Brake System (ABS) - Wabco 4 Channel Implementation:Diagram3 LoneStar - X15 - Antilock Brake System (ABS) - Wabco 4 Channel Implementation:Diagram4 LoneStar - X15 - Antilock Brake System (ABS) [Bendix 6 Channel Implementation]:Diagram1 LoneStar - X15 - Antilock Brake System (ABS) [Bendix 6 Channel Implementation]:Diagram2 LoneStar - X15 - Antilock Brake System (ABS) [Bendix 6 Channel Implementation]:Diagram3 LoneStar - X15 - Antilock Brake System (ABS)-BENDIX 4 Channel Implemenation:Diagram1 LoneStar - X15 - Antilock Brake System (ABS)-BENDIX 4 Channel Implemenation:Diagram2 LoneStar - X15 - Antilock Brake System (ABS)-BENDIX 4 Channel Implemenation:Diagram3 LoneStar - X15 - Antilock Brake System (ABS)-BENDIX 4 Channel Implemenation:Diagram4 LoneStar - X15 - Antilock Brake System - Wabco ABS 6 Channel Implementation:Diagram1 LoneStar - X15 - Antilock Brake System - Wabco ABS 6 Channel Implementation:Diagram2 LoneStar - X15 - Antilock Brake System - Wabco ABS 6 Channel Implementation:Diagram3 LoneStar - X15 - Trailer Interface (ABS) - Center Pin Circuit:Diagram1 LoneStar - X15 - Trailer Interface (ABS) - Center Pin Circuit:Diagram2 LoneStar - X15 - Trailer Interface (ABS) - Center Pin Circuit:Diagram3 LoneStar - X15 - Trailer Interface (ABS) - Center Pin Circuit:Diagram4 LT/RH X15 - Backup Light (Dual Reverse Light) Allison-TC10:Diagram1 LT/RH X15 - Backup Light (Dual Reverse Light) Allison-TC10:Diagram2

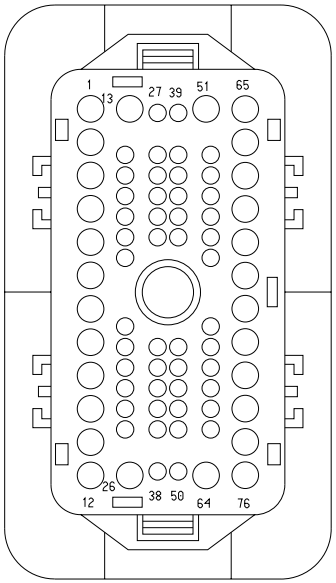

LT/RH X15 - Backup Light (Dual Reverse LT) Procosion/ Endurant:Diagram1
LT/RH X15 - Backup Light (Dual Reverse LT) Procosion/ Endurant:Diagram2
LT/RH X15 - Backup Light (Reverse Light) Allison TC10:Diagram1
LT/RH X15 - Backup Light (Reverse Light) Allison TC10:Diagram2
LT/RH X15 - Backup Light (Single Reverse Light) Allison TC10:Diagram1
LT/RH X15 - Backup Light (Single Reverse Light) Allison TC10:Diagram2
LT/RH X15 - Backup Light (Single Reverse Light) Endurant:Diagram1
LT/RH X15 - Backup Light (Single Reverse Light) Endurant:Diagram2
LT/RH X15 - Backup Lights (Dual Reverse Light) Eaton/Manual Trans:Diagram1
LT/RH X15 - Backup Lights (Dual Reverse Light) Eaton/Manual Trans:Diagram2
LT/RH X15 - Backup Lights (Reverse Light) Eaton/Manual Trans:Diagram1
LT/RH X15 - Backup Lights (Reverse Light) Eaton/Manual Trans:Diagram2
LT/RH X15 - Backup Lights (Reverse Lights) Eaton/Manual Trans:Diagram1
LT/RH X15 - Backup Lights (Reverse Lights) Eaton/Manual Trans:Diagram2
LT/RH X15 - Backup Lights (Single Reverse Light) Eaton/Manual Trans:Diagram1
LT/RH X15 - Backup Lights (Single Reverse Light) Eaton/Manual Trans:Diagram2
LT/RH - A26 - Work Lights (2 Blunt Cuts Only W/O Relay) W/ Backup W/Manual Trans Day Cab:Diagram1
LT/RH - A26 - Work Lights (2 Blunt Cuts Only W/O Relay) W/ Backup W/Manual Trans Day Cab:Diagram3
LT/RH - A26 - Work Lights - LED W/ Sw Pack - Customer Supplied - Sleeper W/ RKE W/MAN REV:Diagram1
LT/RH - A26 - Work Lights - LED W/ Sw Pack - Customer Supplied - Sleeper W/ RKE W/MAN REV:Diagram3
LT/RH - A26 - Work Lights - LED W/ Sw Pack - Customer Supplied - Sleeper W/O RKE W/MAN REV:Diagram1
LT/RH - A26 - Work Lights - LED W/ Sw Pack - Customer Supplied - Sleeper W/O RKE W/MAN REV:Diagram3

LT/RH - A26 - Work Lights LED W/ Sw Pack - Day Cab W/ RKE W/MAN REV:Diagram1
LT/RH - A26 - Work Lights LED W/ Sw Pack - Day Cab W/ RKE W/MAN REV:Diagram2
LT/RH - A26 - Work Lights LED W/ Sw Pack - Day Cab W/O RKE W/MAN REV:Diagram1
LT/RH - A26 - Work Lights LED W/ Sw Pack - Day Cab W/O RKE W/MAN REV:Diagram2
LT/RH - A26 - Work Lights W/ Sw Pack - Customer Supplied W/ RKE W/MAN REV:Diagram1
LT/RH - A26 - Work Lights W/ Sw Pack - Customer Supplied W/ RKE W/MAN REV:Diagram2
LT/RH - A26 - Work Lights W/ Sw Pack - Customer Supplied W/ RKE W/MAN REV:Diagram3
LT/RH - A26 - Work Lights W/ Sw Pack - Customer Supplied W/ RKE W/MAN REV:Diagram4
LT/RH - A26 - Work Lights W/ Sw Pack - Customer Supplied W/ O RKE W/MAN REV:Diagram1
LT/RH - A26 - Work Lights W/ Sw Pack - Customer Supplied W/ O RKE W/MAN REV:Diagram2
LT/RH - A26 - Work Lights W/ Sw Pack - Customer Supplied W/ O RKE W/MAN REV:Diagram3
LT/RH - A26 - Work Lights W/ Sw Pack - Customer Supplied W/ O RKE W/MAN REV:Diagram4
LT/RH - X15/A26 - Antilock Brake System (ABS) - Wabco 4 Channel Implementation:Diagram1
LT/RH - X15/A26 - Antilock Brake System (ABS) - Wabco 4 Channel Implementation:Diagram2
LT/RH - X15/A26 - Antilock Brake System (ABS) - Wabco 4 Channel Implementation:Diagram3
LT/RH - X15/A26 - Antilock Brake System (ABS) - Wabco 4 Channel Implementation:Diagram4
LT/RH - X15/A26 - Antilock Brake System (ABS) BENDIX 4 Channel Implemenation:Diagram1
LT/RH - X15/A26 - Antilock Brake System (ABS) BENDIX 4 Channel Implemenation:Diagram2
LT/RH - X15/A26 - Antilock Brake System (ABS) BENDIX 4 Channel Implemenation:Diagram3
LT/RH - X15/A26 - Antilock Brake System (ABS) BENDIX 4 Channel Implemenation:Diagram4
LT/RH - X15/A26 - Antilock Brake System (ABS) Bendix 6 Channel Implementation:Diagram1
LT/RH - X15/A26 - Antilock Brake System (ABS) Bendix 6 Channel Implementation:Diagram2

LT/RH - X15/A26 - Antilock Brake System (ABS) Bendix 6 Channel Implementation:Diagram3
LT/RH - X15/A26 - Antilock Brake System - Wabco ABS 6 Channel Implementation:Diagram1
LT/RH - X15/A26 - Antilock Brake System - Wabco ABS 6 Channel Implementation:Diagram2
LT/RH - X15/A26 - Antilock Brake System - Wabco ABS 6 Channel Implementation:Diagram3
LT/RH - X15/A26 - Bendix Stability Control For Tractor or Tractors with Trailer Tow:Diagram1
LT/RH - X15/A26 - Bendix Stability Control For Tractor or Tractors with Trailer Tow:Diagram2
LT/RH - X15/A26 - Bendix; Tractor or Towing Truck; W/ Air SUSP; J1939 Driven Lamp:Diagram1
LT/RH - X15/A26 - Bendix; Tractor or Towing Truck; W/ Air SUSP; J1939 Driven Lamp:Diagram2
LT/RH - X15/A26 - License Plate Light (Dual LED Lamp Tail Light) Option 1:Diagram1
LT/RH - X15/A26 - License Plate Light (Dual LED Lamp Tail Light) Option 1:Diagram2
LT/RH - X15/A26 - License Plate Light (Dual LED Lamp Tail Light) Option 2:Diagram1
LT/RH - X15/A26 - License Plate Light (Dual LED Lamp Tail Light) Option 2:Diagram2
LT/RH - X15/A26 - License Plate Light (Tail Light Single Assy.) Option 1:Diagram1
LT/RH - X15/A26 - License Plate Light (Tail Light Single Assy.) Option 1:Diagram2
LT/RH - X15/A26 - License Plate Light (Tail Light Single Assy.)Option 2:Diagram1
LT/RH - X15/A26 - License Plate Light (Tail Light Single Assy.)Option 2:Diagram2
LT/RH - X15/A26 - Trailer Interface (ABS) - Center Pin Circuit:Diagram1
LT/RH - X15/A26 - Trailer Interface (ABS) - Center Pin Circuit:Diagram2
LT/RH - X15/A26 - Trailer Interface (ABS) - Center Pin Circuit:Diagram3
LT/RH - X15/A26 - Trailer Interface (ABS) - Center Pin Circuit:Diagram4
LT/RH - X15/A26 - Wabco Full Stability Control:Diagram1
LT/RH - X15/A26 - Wabco Full Stability Control:Diagram2
LT/RH - X15/A26 - Work Lights W/ Sw Pack - Customer Supplied:Diagram1

LT/RH - X15/A26 - Work Lights W/ Sw Pack - Customer Supplied:Diagram2
LT/RH A26 - Back-Up Alarm (Manual) and UltraShift+:Diagram1
LT/RH A26 - Back-Up Alarm (Manual) and UltraShift+:Diagram2
LT/RH A26 - Back-Up Alarm (Manual) and UltraShift+:Diagram3
LT/RH A26 - Back-Up Alarm (Manual) and UltraShift+:Diagram4
LT/RH A26 - Back-Up Alarm (Manual) and UltraShift+:Diagram5
LT/RH A26 - Back-Up Alarm (Manual) and UltraShift+:Diagram6
LT/RH A26 - Back-Up Alarm (Manual) and UltraShift+:Diagram7
LT/RH A26 - Back-Up Alarm (Manual) and UltraShift+:Diagram8
LT/RH A26 - Back-Up Alarm (Manual) (W/ Tail Light Bar Assy):Diagram1
LT/RH A26 - Back-Up Alarm (Manual) (W/ Tail Light Bar Assy):Diagram2
LT/RH A26 - Back-Up Alarm (Manual) (W/ Tail Light Bar Assy):Diagram3
LT/RH A26 - Back-Up Alarm (Manual) (W/ Tail Light Bar Assy):Diagram4
LT/RH A26 - Backup Light (Dual Reverse Light):Diagram1
LT/RH A26 - Backup Light (Dual Reverse Light):Diagram2
LT/RH A26 - Backup Light (Dual Reverse Light) Allison-3K:Diagram1
LT/RH A26 - Backup Light (Dual Reverse Light) Allison-3K:Diagram2
LT/RH A26 - Backup Light (Dual Reverse Light) Allison-TC10:Diagram1
LT/RH A26 - Backup Light (Dual Reverse Light) Allison-TC10:Diagram2
LT/RH A26 - Backup Light (Reverse Light) Allison TC10:Diagram1
LT/RH A26 - Backup Light (Reverse Light) Allison TC10:Diagram2
LT/RH A26 - Backup Light (Reverse Light) Allison-3K:Diagram1
LT/RH A26 - Backup Light (Reverse Light) Allison-3K:Diagram2
LT/RH A26 - Backup Light (Single Reverse Light):Diagram1
LT/RH A26 - Backup Light (Single Reverse Light):Diagram2
LT/RH A26 - Backup Light (Single Reverse Light) Allison 3K:Diagram1
LT/RH A26 - Backup Light (Single Reverse Light) Allison 3K:Diagram2
LT/RH A26 - Backup Light (Single Reverse Light) Allison TC10:Diagram1
LT/RH A26 - Backup Light (Single Reverse Light) Allison TC10:Diagram2

LT/RH A26 - Backup Light (Single Reverse Light) Endurant:Diagram1
LT/RH A26 - Backup Light (Single Reverse Light) Endurant:Diagram2
LT/RH A26 - Backup Light (Single Reverse Light) W/Allison 3K:Diagram1
LT/RH A26 - Backup Light (Single Reverse Light) W/Allison 3K:Diagram2
LT/RH A26 - Backup Light (Single Reverse Light) W/Allison TC10:Diagram1
LT/RH A26 - Backup Light (Single Reverse Light) W/Allison TC10:Diagram2
LT/RH A26 - Backup Light Endurant Trans:Diagram1
LT/RH A26 - Backup Light Endurant Trans:Diagram2
LT/RH A26 - Backup Lights (Dual Reverse Light) Eaton/Manual Trans:Diagram1
LT/RH A26 - Backup Lights (Dual Reverse Light) Eaton/Manual Trans:Diagram2
LT/RH A26 - Backup Lights (Dual Reverse Light) Eaton/Manual Trans:Diagram3
LT/RH A26 - Backup Lights (Dual Reverse Light) Eaton/Manual Trans:Diagram4
LT/RH A26 - Backup Lights (Reverse Light) Eaton/Manual Trans:Diagram1
LT/RH A26 - Backup Lights (Reverse Light) Eaton/Manual Trans:Diagram2
LT/RH A26 - Backup Lights (Reverse Light) Eaton/Manual Trans:Diagram3
LT/RH A26 - Backup Lights (Reverse Light) Eaton/Manual Trans:Diagram4
LT/RH A26 - Backup Lights (Reverse Lights) Eaton/Manual Trans:Diagram1
LT/RH A26 - Backup Lights (Reverse Lights) Eaton/Manual Trans:Diagram2
LT/RH A26 - Backup Lights (Reverse Lights) Eaton/Manual Trans:Diagram3
LT/RH A26 - Backup Lights (Reverse Lights) Eaton/Manual Trans:Diagram4
LT/RH A26 - Backup Lights (Single Reverse Light) Eaton/Manual Trans:Diagram1
LT/RH A26 - Backup Lights (Single Reverse Light) Eaton/Manual Trans:Diagram2
LT/RH A26 - Backup Lights (Single Reverse Light) Eaton/Manual Trans:Diagram3

LT/RH A26 - Backup Lights (Single Reverse Light) Eaton/Manual Trans:Diagram4
LT/RH A26 - Backup Lights (Single Reverse Light) Eaton/Manual Trans/:Diagram1
LT/RH A26 - Backup Lights (Single Reverse Light) Eaton/Manual Trans/:Diagram2
LT/RH A26 - Backup Lights (Single Reverse Light) Eaton/Manual Trans/:Diagram3
LT/RH A26 - Backup Lights (Single Reverse Light) Eaton/Manual Trans/:Diagram4
LT/RH/LoneStar - X15 - Work Lights (2 Blunt Cuts Only W/O Relay) W/Backup W/Manual Trans:Diagram1
LT/RH/LoneStar - X15 - Work Lights - LED W/ Sw Pack - Customer Supplied - Sleeper W/ RKE W/MAN REV:Diagram1
LT/RH/LoneStar - X15 - Work Lights - LED W/ Sw Pack - Customer Supplied - Sleeper W/O RKE W/MAN REV:Diagram1
LT/RH/LoneStar - X15 - Work Lights W/ Sw Pack - Customer Supplied W/ RKE W/MAN REV:Diagram1
LT/RH/LoneStar - X15 - Work Lights W/ Sw Pack - Customer Supplied W/ RKE W/MAN REV:Diagram2
LT/RH/LoneStar - X15 - Work Lights W/ Sw Pack - Customer Supplied W/O RKE W/MAN REV:Diagram1
LT/RH/LoneStar - X15 - Work Lights W/ Sw Pack - Customer Supplied W/O RKE W/MAN REV:Diagram2
LT/RH/LoneStar - X15/A26 - 2 Driver Controlled Locking Differential - FR & RR Axle (DANA):Diagram1
LT/RH/LoneStar - X15/A26 - 2 Driver Controlled Locking Differential - FR & RR Axle (MERITOR):Diagram1
LT/RH/LoneStar - X15/A26 - Auxiliary Air Solenoids 4-pack (1 pack/4 solenoids):Diagram1
LT/RH/LoneStar - X15/A26 - Auxiliary Air Solenoids 4-pack (1 pack/4 solenoids):Diagram2
LT/RH/LoneStar - X15/A26 - Auxiliary Air Solenoids 4-pack (1 pack/4 solenoids):Diagram3
LT/RH/LoneStar - X15/A26 - Auxiliary Air Solenoids 4-pack (1 pack/4 solenoids):Diagram4
LT/RH/LoneStar - X15/A26 - Auxiliary Air Solenoids 4-pack (1 pack/4 solenoids):Diagram5
LT/RH/LoneStar - X15/A26 - Auxiliary Air Solenoids 4-pack (2 packs/8 solenoids):Diagram1
LT/RH/LoneStar - X15/A26 - Auxiliary Air Solenoids 4-pack (2 packs/8 solenoids):Diagram2
LT/RH/LoneStar - X15/A26 - Auxiliary Air Solenoids 4-pack (2 packs/8 solenoids):Diagram3

LT/RH/LoneStar - X15/A26 - Auxiliary Air Solenoids 4-pack (2 packs/8 solenoids):Diagram4
LT/RH/LoneStar - X15/A26 - Auxiliary Air Solenoids 4-pack (2 packs/8 solenoids):Diagram5
LT/RH/LoneStar - X15/A26 - Auxiliary Trailer Power CAV D:Diagram1
LT/RH/LoneStar - X15/A26 - Auxiliary Trailer Power CAV D:Diagram2
LT/RH/LoneStar - X15/A26 - Auxiliary Trailer Power W/ ISO Trailer Socket:Diagram1
LT/RH/LoneStar - X15/A26 - Axle Loading (Weight) Rear:Diagram1
LT/RH/LoneStar - X15/A26 - Axle Loading (Weight) Rear:Diagram2
LT/RH/LoneStar - X15/A26 - Back-Up Alarm (Automatic) (W/ Tail Light Bar Assy):Diagram1
LT/RH/LoneStar - X15/A26 - Back-Up Alarm (Automatic) (W/ Tail Light Bar Assy):Diagram2
LT/RH/LoneStar - X15/A26 - Back-Up Alarm (Automatic) TC10:Diagram1
LT/RH/LoneStar - X15/A26 - Back-Up Alarm (Automatic) TC10:Diagram2
LT/RH/LoneStar - X15/A26 - Back-Up Alarm (Automatic) TC10:Diagram3
LT/RH/LoneStar - X15/A26 - Back-Up Alarm (Automatic) TC10:Diagram4
LT/RH/LoneStar - X15/A26 - Body Builder Lighting - (Blunt Cut):Diagram1
LT/RH/LoneStar - X15/A26 - Body Builder Lighting - (Blunt Cut):Diagram2
LT/RH/LoneStar - X15/A26 - Collision Avoidance System (Warning):Diagram1
LT/RH/LoneStar - X15/A26 - Drain Valve Heater:Diagram1
LT/RH/LoneStar - X15/A26 - Driver Controlled Locking Differential - FR & RR Axle (DANA):Diagram1
LT/RH/LoneStar - X15/A26 - Driver Controlled Locking Differential - FR & RR Axle (MERITOR):Diagram1
LT/RH/LoneStar - X15/A26 - Driver Controlled Locking Differential - FR (MERITOR):Diagram1
LT/RH/LoneStar - X15/A26 - Driver Controlled Locking Differential - RR Axle (DANA):Diagram1
LT/RH/LoneStar - X15/A26 - Driver Controlled Locking Differential - RR Axle (DANA):Diagram2

LT/RH/LoneStar - X15/A26 - Driver Controlled Locking Differential - RR Axle (MERITOR):Diagram1
LT/RH/LoneStar - X15/A26 - Driver Controlled Locking Differential - RR Axle (MERITOR):Diagram2
LT/RH/LoneStar - X15/A26 - Dual Air Dryers:Diagram1
LT/RH/LoneStar - X15/A26 - Dual Air Dryers:Diagram2
LT/RH/LoneStar - X15/A26 - Fuel Level (Single Tank - Left Side):Diagram1
LT/RH/LoneStar - X15/A26 - Fuel Level (Single Tank - Left Side):Diagram2
LT/RH/LoneStar - X15/A26 - Fuel Level (Single Tank - Left Side):Diagram3
LT/RH/LoneStar - X15/A26 - Fuel Level (Single Tank - Left Side):Diagram4
LT/RH/LoneStar - X15/A26 - Fuel Level (Single Tank - Left Side):Diagram5
LT/RH/LoneStar - X15/A26 - Fuel Level (Single Tank - Left Side):Diagram6
LT/RH/LoneStar - X15/A26 - Hill Start Aid (Bendix):Diagram1
LT/RH/LoneStar - X15/A26 - Hill Start Aid (Bendix):Diagram2
LT/RH/LoneStar - X15/A26 - Hill Start Aid (Bendix):Diagram3
LT/RH/LoneStar - X15/A26 - Jaw Monitoring:Diagram1
LT/RH/LoneStar - X15/A26 - Left Side Air Dryer-Bendix:Diagram1
LT/RH/LoneStar - X15/A26 - Left Side Air Dryer-Bendix:Diagram2
LT/RH/LoneStar - X15/A26 - License Plate Light (Tail Light Single Assy.) Option 1:Diagram1
LT/RH/LoneStar - X15/A26 - License Plate Light (Tail Light Single Assy.) Option 1:Diagram2
LT/RH/LoneStar - X15/A26 - License Plate Light (Tail Light Single Assy.) Option 2:Diagram1-Combination1
LT/RH/LoneStar - X15/A26 - License Plate Light (Tail Light Single Assy.) Option 2:Diagram1-Combination2
LT/RH/LoneStar - X15/A26 - Rear Lights Stop - Dual Assembly:Diagram1
LT/RH/LoneStar - X15/A26 - Rear Lights Stop - Dual Assembly:Diagram2
LT/RH/LoneStar - X15/A26 - Rear Lights Stop - Single Assembly Option 1:Diagram1
LT/RH/LoneStar - X15/A26 - Rear Lights Stop - Single Assembly Option 1:Diagram2
LT/RH/LoneStar - X15/A26 - Rear Lights Stop - Single Assembly Option 2:Diagram1

LT/RH/LoneStar - X15/A26 - Rear Lights Stop - Single Assembly Option 2:Diagram2
LT/RH/LoneStar - X15/A26 - Single Axle Temperature Monitoring:Diagram1
LT/RH/LoneStar - X15/A26 - Single Axle Temperature Monitoring w/Aux Gauge:Diagram1
LT/RH/LoneStar - X15/A26 - Tandem Axle Temperature Monitoring:Diagram1
LT/RH/LoneStar - X15/A26 - Tandem Axle Temperature Monitoring:Diagram2
LT/RH/LoneStar - X15/A26 - Tandem Axle Temperature Monitoring w/ Single SNSR and AUX Gauge:Diagram1
LT/RH/LoneStar - X15/A26 - Tandem Axle Temperature Monitoring w/ Single SNSR and AUX Gauge:Diagram1
LT/RH/LoneStar - X15/A26 - Tandem Axle Temperature Monitoring w/Aux Gauge:Diagram1
LT/RH/LoneStar - X15/A26 - Tandem Axle Temperature Monitoring w/Aux Gauge:Diagram2
LT/RH/LoneStar - X15/A26 - Traction Control (Bendix Controller):Diagram1
LT/RH/LoneStar - X15/A26 - Traction Control (Bendix Controller):Diagram2
LT/RH/LoneStar - X15/A26 - Traction Control (Bendix Controller) Option 2:Diagram1
LT/RH/LoneStar - X15/A26 - Traction Control (Bendix Controller) Option 2:Diagram2
LT/RH/LoneStar - X15/A26 - Traction Control (Wabco Controller):Diagram1
LT/RH/LoneStar - X15/A26 - Traction Control (Wabco Controller):Diagram2
LT/RH/LoneStar - X15/A26 - Traction Control (Wabco Controller):Diagram3
LT/RH/LoneStar - X15/A26 - Trailer Interface (ABS) - BOC & EOF_NA:Diagram1
LT/RH/LoneStar - X15/A26 - Trailer Interface (ABS) - BOC & EOF_NA:Diagram2
LT/RH/LoneStar - X15/A26 - Trailer Interface (ABS) - BOC & EOF_NA:Diagram3
LT/RH/LoneStar - X15/A26 - Trailer Interface (ABS) - BOC & EOF_NA:Diagram4
LT/RH/LoneStar - X15/A26 - Trailer Interface (ABS) - BOC_NA:Diagram1
LT/RH/LoneStar - X15/A26 - Trailer Interface (ABS) - BOC_NA:Diagram2

LT/RH/LoneStar - X15/A26 - Trailer Interface (ABS) - TRAMEC_NA:Diagram1
LT/RH/LoneStar - X15/A26 - Trailer Interface (Lighting) – BOC & EOF_NA:Diagram1-Combination1
LT/RH/LoneStar - X15/A26 - Trailer Interface (Lighting) – BOC & EOF_NA:Diagram1-Combination2
LT/RH/LoneStar - X15/A26 - Trailer Interface (Lighting) – BOC & EOF_NA:Diagram1-Combination3
LT/RH/LoneStar - X15/A26 - Trailer Interface (Lighting) – BOC & EOF_NA:Diagram1-Combination4
LT/RH/LoneStar - X15/A26 - Trailer Interface (Lighting) – BOC NA:Diagram1
LT/RH/LoneStar - X15/A26 - Trailer Interface (Lighting) – BOC NA:Diagram2
LT/RH/LoneStar - X15/A26 - Trailer Interface (Lighting) – TRAMEC_NA:Diagram1
LT/RH/LoneStar - X15/A26 - Work Lights (2 Blunt Cuts Only W/O Relay):Diagram1
LT/RH/LoneStar - X15/A26 - Work Lights (2 Blunt Cuts Only W/O Relay) W/Backup W/Auto Trans (Allison and Endurant):Diagram1
LT/RH/LoneStar - X15/A26 - Work Lights - LED W/ Sw Pack - Customer Supplied - Sleeper:Diagram1
LT/RH/LoneStar - X15/A26 - Work Lights - LED W/ Sw Pack - Customer Supplied - Sleeper W/ RKE W/AUTO REV:Diagram1
LT/RH/LoneStar - X15/A26 - Work Lights - LED W/ Sw Pack - Customer Supplied - Sleeper W/O RKE:Diagram1
LT/RH/LoneStar - X15/A26 - Work Lights - LED W/ Sw Pack - Customer Supplied - Sleeper W/O RKE W/AUTO REV:Diagram1
LT/RH/LoneStar - X15/A26 - Work Lights LED W/ Sw Pack - Day Cab:Diagram1
LT/RH/LoneStar - X15/A26 - Work Lights LED W/ Sw Pack - Day Cab W/ RKE W/AUTO REV:Diagram1
LT/RH/LoneStar - X15/A26 - Work Lights LED W/ Sw Pack - Day Cab W/O RKE:Diagram1
LT/RH/LoneStar - X15/A26 - Work Lights LED W/ Sw Pack - Day Cab W/O RKE W/AUTO REV:Diagram1
LT/RH/LoneStar - X15/A26 - Work Lights W/ Sw Pack - Customer Supplied:Diagram1
LT/RH/LoneStar - X15/A26 - Work Lights W/ Sw Pack - Customer Supplied:Diagram2
LT/RH/LoneStar - X15/A26 - Work Lights W/ Sw Pack - Customer Supplied W/ RKE W/AUTO REV:Diagram1

LT/RH/LoneStar - X15/A26 - Work Lights W/ Sw Pack - Customer Supplied W/ RKE W/AUTO REV:Diagram2
LT/RH/LoneStar - X15/A26 - Work Lights W/ Sw Pack - Customer Supplied W/O RKE W/AUTO REV:Diagram1
LT/RH/LoneStar - X15/A26 - Work Lights W/ Sw Pack - Customer Supplied W/O RKE W/AUTO REV:Diagram2
LT/RH/LoneStar X15 - Back-Up Alarm (Manual) and UltraShift +:Diagram1
LT/RH/LoneStar X15 - Back-Up Alarm (Manual) and UltraShift +:Diagram2
LT/RH/LoneStar X15 - Back-Up Alarm (Manual) and UltraShift +:Diagram3
LT/RH/LoneStar X15 - Back-Up Alarm (Manual) and UltraShift +:Diagram4
LT/RH/LoneStar X15 - Back-Up Alarm (Manual) (W/ Tail Light Bar Assy):Diagram1
LT/RH/LoneStar X15 - Back-Up Alarm (Manual) (W/ Tail Light Bar Assy):Diagram2
LT/RH/LoneStar X15 - Backup Light (Single Reverse Light) Endurant:Diagram1
LT/RH/LoneStar X15 - Backup Light (Single Reverse Light) Endurant:Diagram2
LT/RH/LoneStar X15 - Backup Light (Single Reverse Light) W/ Allison TC10:Diagram1
LT/RH/LoneStar X15 - Backup Light (Single Reverse Light) W/ Allison TC10:Diagram2
LT/RH/LoneStar X15 - Backup Light Endurant:Diagram1
LT/RH/LoneStar X15 - Backup Light Endurant:Diagram2
LT/RH/LoneStar X15 - Backup Lights (Single Reverse Light) Eaton/Manual Trans:Diagram1
LT/RH/LoneStar X15 - Backup Lights (Single Reverse Light) Eaton/Manual Trans:Diagram2
LT/RH/LoneStar X15 - Work Lights LED W/ Sw Pack - Day Cab W/ RKE W/MAN REV:Diagram1
LT/RH/LoneStar X15 - Work Lights LED W/ Sw Pack - Day Cab W/O RKE W/MAN REV:Diagram1

Mates 1701

Name	Terminal Part Number	V-Min	Name	Wire Part Number	Wire CSA	Wire Spec	Wire Material description	Wire Color Description	Wire Length	End2 Terminal Part Number	End2 Pin Name	End2 Connector
1	-	-	NA71BA	2643690 R1	1.91	14.0	Std. Wall XLPE Primary Cable	ORANGE	3235.0	-	1	9800F
2	-	-	NA56A	2643690 R1	1.91	14.0	Std. Wall XLPE Primary Cable	ORANGE	3235.0	-	2	9800F
3	-	-	NA57A	2643690 R1	1.91	14.0	Std. Wall XLPE Primary Cable	ORANGE	3235.0	-	3	9800F
4	-	-	PB68A	2643688 R1	1.91	14.0	Std. Wall XLPE Primary Cable	BROWN	510.0	-	X	-
4	-	-	NA68A	2643688 R1	1.91	14.0	Std. Wall XLPE Primary Cable	BROWN	3235.0	-	4	9800F
5	-	-	RZ56T	2643802 R1	4.81	10.0	Std. Wall XLPE Primary Cable	YELLOW 2	800.0	-	B	N01-9779F1
5	-	-	NK56T	2643802 R1	4.81	10.0	Std. Wall XLPE Primary Cable	YELLOW 2	700.0	-	X	-
5	-	-	YT56T	2643802 R1	4.81	10.0	Std. Wall XLPE Primary Cable	YELLOW 2	3110.0	-	X	-

Name	Terminal Part Number	V-Min	Name	Wire Part Number	Wire CSA	Wire Spec	Wire Material description	Wire Color Description	Wire Length	End2 Terminal Part Number	End2 Pin Name	End2 Connector
5	-	-	NM56T	2643802 R1	4.81	10.0	Std. Wall XLPE Primary Cable	YELLOW 2	3235.0	-	B	9716F
5	-	-	NH56T	2643802 R1	4.81	10.0	Std. Wall XLPE Primary Cable	YELLOW 2	800.0	-	B	N01-9779F
5	-	-	RG56T	2643802 R1	4.81	10.0	Std. Wall XLPE Primary Cable	YELLOW 2	3910.0	-	B	N01-9781F
6	-	-	RZ57T	2643776 R1	4.81	10.0	Std. Wall XLPE Primary Cable	LIGHT GREEN	800.0	-	C	N01-9779F1
6	-	-	YT57T	2643776 R1	4.81	10.0	Std. Wall XLPE Primary Cable	LIGHT GREEN	3060.0	-	X	-
6	-	-	NM57T	2643776 R1	4.81	10.0	Std. Wall XLPE Primary Cable	LIGHT GREEN	3235.0	-	C	9716F
6	-	-	NK57T	2643776 R1	4.81	10.0	Std. Wall XLPE Primary Cable	LIGHT GREEN	800.0	-	X	-
6	-	-	NH57T	2643776 R1	4.81	10.0	Std. Wall XLPE Primary Cable	LIGHT GREEN	800.0	-	C	N01-9779F

Name	Terminal Part Number	V-Min	Name	Wire Part Number	Wire CSA	Wire Spec	Wire Material description	Wire Color Description	Wire Length	End2 Terminal Part Number	End2 Pin Name	End2 Connector
6	-	-	RG57T	2643776 R1	4.81	10.0	Std. Wall XLPE Primary Cable	LIGHT GREEN	3910.0	-	C	N01-9781F
7	-	-	RZ58T	2643773 R1	4.81	10.0	Std. Wall XLPE Primary Cable	BLACK	800.0	-	A	N01-9779F1
7	-	-	NK58T	2643773 R1	4.81	10.0	Std. Wall XLPE Primary Cable	BLACK	900.0	-	X	-
7	-	-	YT58T	2643773 R1	4.81	10.0	Std. Wall XLPE Primary Cable	BLACK	3010.0	-	X	-
7	-	-	NM58T	2643773 R1	4.81	10.0	Std. Wall XLPE Primary Cable	BLACK	3235.0	-	A	9716F
7	-	-	NH58T	2643773 R1	4.81	10.0	Std. Wall XLPE Primary Cable	BLACK	800.0	-	A	N01-9779F
7	-	-	SH58T	2643773 R1	4.81	10.0	Std. Wall XLPE Primary Cable	BLACK	3910.0	-	A	N01-9781F
8	-	-	RZ68T	3510309 R1	4.81	10.0	Thin Wall XLPE Primary Cable	BROWN	800.0	-	B	N01-9780M1

Name	Terminal Part Number	V-Min	Name	Wire Part Number	Wire CSA	Wire Spec	Wire Material description	Wire Color Description	Wire Length	End2 Terminal Part Number	End2 Pin Name	End2 Connector
8	-	-	NM68T	3510309 R1	4.81	10.0	Thin Wall XLPE Primary Cable	BROWN	3235.0	-	B	9715M
8	-	-	YT68T	2643779 R1	4.81	10.0	Std. Wall XLPE Primary Cable	BROWN	3110.0	-	X	-
8	-	-	NK68T	2643779 R1	4.81	10.0	Std. Wall XLPE Primary Cable	BROWN	950.0	-	X	-
8	-	-	SG68T	3510309 R1	4.81	10.0	Thin Wall XLPE Primary Cable	BROWN	800.0	-	B	N01-9780M
8	-	-	RG68T	3510309 R1	4.81	10.0	Thin Wall XLPE Primary Cable	BROWN	3910.0	-	B	N01-9782M
9	-	-	RZ70T	3510369 R1	4.81	10.0	Thin Wall XLPE Primary Cable	RED	800.0	-	C	N01-9780M1
9	-	-	YT70T	2643698 R1	4.81	10.0	Std. Wall XLPE Primary Cable	RED	3060.0	-	X	-
9	-	-	NK70T	2643698 R1	4.81	10.0	Std. Wall XLPE Primary Cable	RED	650.0	-	X	-

Name	Terminal Part Number	V-Min	Name	Wire Part Number	Wire CSA	Wire Spec	Wire Material description	Wire Color Description	Wire Length	End2 Terminal Part Number	End2 Pin Name	End2 Connector
9	-	-	NM70T	3510369 R1	4.81	10.0	Thin Wall XLPE Primary Cable	RED	3235.0	-	A	9715M
9	-	-	SG70T	3510369 R1	4.81	10.0	Thin Wall XLPE Primary Cable	RED	800.0	-	C	N01-9780M
9	-	-	SH70T	3510369 R1	4.81	10.0	Thin Wall XLPE Primary Cable	RED	3910.0	-	C	N01-9782M
10	-	-	RZ94T	3510315 R1	4.81	10.0	Thin Wall XLPE Primary Cable	GREY	800.0	-	A	N01-9780M1
10	-	-	NK94T	2643784 R1	4.81	10.0	Std. Wall XLPE Primary Cable	GREY	700.0	-	X	-
10	-	-	YT94T	2643784 R1	4.81	10.0	Std. Wall XLPE Primary Cable	GREY	3010.0	-	PIN1	-
10	-	-	NH94T	3510315 R1	4.81	10.0	Thin Wall XLPE Primary Cable	GREY	800.0	-	A	N01-9780M
10	-	-	RG94T	3510315 R1	4.81	10.0	Thin Wall XLPE Primary Cable	GREY	3910.0	-	A	N01-9782M

Name	Terminal Part Number	V-Min	Name	Wire Part Number	Wire CSA	Wire Spec	Wire Material description	Wire Color Description	Wire Length	End2 Terminal Part Number	End2 Pin Name	End2 Connector
10	-	-	MH94T	3510357 R1	4.81	10.0	Thin Wall XLPE Primary Cable	DARK BLUE	3910.0	-	A	N01-978 2M
10	-	-	ME94T	3510357 R1	4.81	10.0	Thin Wall XLPE Primary Cable	DARK BLUE	800.0	-	A	N01-978 0M
10	-	-	YT94T	2643784 R1	4.81	10.0	Std. Wall XLPE Primary Cable	GREY	3010.0	-	X	-
11	-	-	MG72V	3510321 R1	4.81	10.0	Thin Wall XLPE Primary Cable	ORANGE	3910.0	-	D	N01-978 2M
11	-	-	NJ72V	2643755 R1	3.01	12.0	Std. Wall XLPE Primary Cable	ORANGE	800.0	-	D	N01-978 0M
11	-	-	MD72V	3510321 R1	4.81	10.0	Thin Wall XLPE Primary Cable	ORANGE	800.0	-	D	N01-978 0M
11	-	-	RJ72V	2643755 R1	3.01	12.0	Std. Wall XLPE Primary Cable	ORANGE	3910.0	-	D	N01-978 2M
11	-	-	MH72V	3510321 R1	4.81	10.0	Thin Wall XLPE Primary Cable	ORANGE	800.0	-	A	N01-978 3M

Name	Terminal Part Number	V-Min	Name	Wire Part Number	Wire CSA	Wire Spec	Wire Material description	Wire Color Description	Wire Length	End2 Terminal Part Number	End2 Pin Name	End2 Connector
12	-	-	UB67TA	2643680 R1	1.16	16.0	Std. Wall XLPE Primary Cable	GREY	3515.0	-	1	N01-9769
13	-	-	[PP94SJ]	V-16-GXL	1.16	16.0	Std. Wall XLPE Primary Cable	Not Applicable	1500.0	-	2	N01-9514
13	-	-	PM94SJ	2643680 R1	1.16	16.0	Std. Wall XLPE Primary Cable	GREY	1655.0	-	1	N01-9512
14	-	-	NC94BM	2643680 R1	1.16	16.0	Std. Wall XLPE Primary Cable	GREY	3235.0	-	23	9800F
15	-	-	BC94BN	2643680 R1	1.16	16.0	Std. Wall XLPE Primary Cable	GREY	3235.0	-	24	9800F
16	-	-	BB94BE	2643680 R1	1.16	16.0	Std. Wall XLPE Primary Cable	GREY	3235.0	-	17	9800F
16	-	-	NB94BE	2643680 R1	1.16	16.0	Std. Wall XLPE Primary Cable	GREY	3235.0	-	17	9800F
17	-	-	BB94BD	2643680 R1	1.16	16.0	Std. Wall XLPE Primary Cable	GREY	3235.0	-	16	9800F

Name	Terminal Part Number	V-Min	Name	Wire Part Number	Wire CSA	Wire Spec	Wire Material description	Wire Color Description	Wire Length	End2 Terminal Part Number	End2 Pin Name	End2 Connector
17	-	-	NB94BD	2643680 R1	1.16	16.0	Std. Wall XLPE Primary Cable	GREY	3235.0	-	16	9800F
18	-	-	BB94BH	2643680 R1	1.16	16.0	Std. Wall XLPE Primary Cable	GREY	3235.0	-	19	9800F
18	-	-	NB94BH	2643680 R1	1.16	16.0	Std. Wall XLPE Primary Cable	GREY	3235.0	-	19	9800F
19	-	-	BB94BF	2643680 R1	1.16	16.0	Std. Wall XLPE Primary Cable	GREY	3235.0	-	18	9800F
19	-	-	NB94BF	2643680 R1	1.16	16.0	Std. Wall XLPE Primary Cable	GREY	3235.0	-	18	9800F
20	-	-	BB94BL	2643782 R1	1.91	14.0	Std. Wall XLPE Primary Cable	GREY	3235.0	-	22	9800F
20	-	-	NB94BL	2643782 R1	1.91	14.0	Std. Wall XLPE Primary Cable	GREY	3235.0	-	22	9800F
21	-	-	BB94BJ	2643782 R1	1.91	14.0	Std. Wall XLPE Primary Cable	GREY	3235.0	-	20	9800F

Name	Terminal Part Number	V-Min	Name	Wire Part Number	Wire CSA	Wire Spec	Wire Material description	Wire Color Description	Wire Length	End2 Terminal Part Number	End2 Pin Name	End2 Connector
21	-	-	NB94BJ	2643782 R1	1.91	14.0	Std. Wall XLPE Primary Cable	GREY	3235.0	-	20	9800F
22	-	-	BB94BK	2643680 R1	1.16	16.0	Std. Wall XLPE Primary Cable	GREY	3235.0	-	21	9800F
23	-	-	BB94BA	2643680 R1	1.16	16.0	Std. Wall XLPE Primary Cable	GREY	3235.0	-	13	9800F
23	-	-	NB94BA	2643680 R1	1.16	16.0	Std. Wall XLPE Primary Cable	GREY	3235.0	-	13	9800F
24	-	-	BB94BB	2643680 R1	1.16	16.0	Std. Wall XLPE Primary Cable	GREY	3235.0	-	14	9800F
25	-	-	BB94BC	2643680 R1	1.16	16.0	Std. Wall XLPE Primary Cable	GREY	3235.0	-	15	9800F
25	-	-	NB94BC	2643680 R1	1.16	16.0	Std. Wall XLPE Primary Cable	GREY	3235.0	-	15	9800F
26	-	-	YY116L	2643673 R1	0.79	18.0	Std. Wall XLPE Primary Cable	GREY	4810.0	-	C	N01-9989B

Name	Terminal Part Number	V-Min	Name	Wire Part Number	Wire CSA	Wire Spec	Wire Material description	Wire Color Description	Wire Length	End2 Terminal Part Number	End2 Pin Name	End2 Connector
27	-	-	FA36A	2643676 R1	0.79	18.0	Std. Wall XLPE Primary Cable	TAN	2685.0	-	A	N01-9100A
27	-	-	FB36A	2643676 R1	0.79	18.0	Std. Wall XLPE Primary Cable	TAN	3710.0	-	A	N01-9100B
27	-	-	FC36A	2643676 R1	0.79	18.0	Std. Wall XLPE Primary Cable	TAN	3785.0	-	A	N01-9100C
27	-	-	FD36A	2643676 R1	0.79	18.0	Std. Wall XLPE Primary Cable	TAN	2000.0	-	A	N01-9100D
27	-	-	FE36A	2643676 R1	0.79	18.0	Std. Wall XLPE Primary Cable	TAN	2585.0	-	A	N01-9100E
27	-	-	FF36A	2643676 R1	0.79	18.0	Std. Wall XLPE Primary Cable	TAN	3880.0	-	A	N01-9100F
28	-	-	PB9BC	2643673 R1	0.79	18.0	Std. Wall XLPE Primary Cable	GREY	2085.0	-	-	-
29	-	-	YY116M	3510311 R1	0.79	18.0	Thin Wall XLPE Primary Cable	GREY	4810.0	-	A	N01-9989B

Name	Terminal Part Number	V-Min	Name	Wire Part Number	Wire CSA	Wire Spec	Wire Material description	Wire Color Description	Wire Length	End2 Terminal Part Number	End2 Pin Name	End2 Connector
30	-	-	GF39A	2643680 R1	1.16	16.0	Std. Wall XLPE Primary Cable	GREY	4115.0	-	A	N01-9901B
30	-	-	GD39A	2643680 R1	1.16	16.0	Std. Wall XLPE Primary Cable	GREY	2585.0	-	A	N01-9902A
30	-	-	YY116U	2643673 R1	0.79	18.0	Std. Wall XLPE Primary Cable	GREY	4810.0	-	B	N01-9989B
30	-	-	RE39	2643673 R1	0.79	18.0	Std. Wall XLPE Primary Cable	GREY	350.0	-	X	-
31	-	-	GB39	2643680 R1	1.16	16.0	Std. Wall XLPE Primary Cable	GREY	2535.0	-	A	N01-9902
31	-	-	GA39	2643680 R1	1.16	16.0	Std. Wall XLPE Primary Cable	GREY	2410.0	-	A	N01-9901A
32	-	-	CB59A	2643680 R1	1.16	16.0	Std. Wall XLPE Primary Cable	GREY	4035.0	-	B	N01-9739
32	-	-	CD59A	2643673 R1	0.79	18.0	Std. Wall XLPE Primary Cable	GREY	2495.0	-	B	N01-9740

Name	Terminal Part Number	V-Min	Name	Wire Part Number	Wire CSA	Wire Spec	Wire Material description	Wire Color Description	Wire Length	End2 Terminal Part Number	End2 Pin Name	End2 Connector
32	-	-	CE59A	2643673 R1	0.79	18.0	Std. Wall XLPE Primary Cable	GREY	3310.0	-	B	N01-3741
32	-	-	CC59A	2643680 R1	1.16	16.0	Std. Wall XLPE Primary Cable	GREY	3360.0	-	B	N01-9738
32	-	-	CA59A	2643673 R1	0.79	18.0	Std. Wall XLPE Primary Cable	GREY	2735.0	-	B	N01-9736
33	-	-	CA59B	2643673 R1	0.79	18.0	Std. Wall XLPE Primary Cable	GREY	2735.0	-	C	N01-9736
33	-	-	CE59B	2643673 R1	0.79	18.0	Std. Wall XLPE Primary Cable	GREY	3310.0	-	C	N01-3741
33	-	-	CD59B	2643673 R1	0.79	18.0	Std. Wall XLPE Primary Cable	GREY	2495.0	-	C	N01-9740
33	-	-	CC59B	2643680 R1	1.16	16.0	Std. Wall XLPE Primary Cable	GREY	3360.0	-	C	N01-9738
33	-	-	CB59B	2643680 R1	1.16	16.0	Std. Wall XLPE Primary Cable	GREY	4035.0	-	C	N01-9739

Name	Terminal Part Number	V-Min	Name	Wire Part Number	Wire CSA	Wire Spec	Wire Material description	Wire Color Description	Wire Length	End2 Terminal Part Number	End2 Pin Name	End2 Connector
34	-	-	CA59C	2643673 R1	0.79	18.0	Std. Wall XLPE Primary Cable	GREY	2735.0	-	D	N01-9736
34	-	-	CD59C	2643673 R1	0.79	18.0	Std. Wall XLPE Primary Cable	GREY	2495.0	-	D	N01-9740
34	-	-	CE59C	2643673 R1	0.79	18.0	Std. Wall XLPE Primary Cable	GREY	3310.0	-	D	N01-3741
34	-	-	CB59C	2643680 R1	1.16	16.0	Std. Wall XLPE Primary Cable	GREY	4035.0	-	D	N01-9739
34	-	-	CC59C	2643680 R1	1.16	16.0	Std. Wall XLPE Primary Cable	GREY	3360.0	-	D	N01-9738
35	-	-	CA59D	2643673 R1	0.79	18.0	Std. Wall XLPE Primary Cable	GREY	2735.0	-	E	N01-9736
35	-	-	CD59D	2643673 R1	0.79	18.0	Std. Wall XLPE Primary Cable	GREY	2495.0	-	E	N01-9740
35	-	-	CE59D	2643673 R1	0.79	18.0	Std. Wall XLPE Primary Cable	GREY	3310.0	-	E	N01-3741

Name	Terminal Part Number	V-Min	Name	Wire Part Number	Wire CSA	Wire Spec	Wire Material description	Wire Color Description	Wire Length	End2 Terminal Part Number	End2 Pin Name	End2 Connector
35	-	-	CC59D	2643680 R1	1.16	16.0	Std. Wall XLPE Primary Cable	GREY	3360.0	-	E	N01-9738
35	-	-	CB59D	2643680 R1	1.16	16.0	Std. Wall XLPE Primary Cable	GREY	4035.0	-	E	N01-9739
36	-	-	SW59E	2643673 R1	0.79	18.0	Std. Wall XLPE Primary Cable	GREY	2985.0	-	B	9737
36	-	-	SV59E	2643673 R1	0.79	18.0	Std. Wall XLPE Primary Cable	GREY	3210.0	-	B	N01-3741A
36	-	-	SX59E	2643680 R1	1.16	16.0	Std. Wall XLPE Primary Cable	GREY	4035.0	-	B	N01-9739B
36	-	-	SY59E	2643680 R1	1.16	16.0	Std. Wall XLPE Primary Cable	GREY	3260.0	-	B	N01-9738B
36	-	-	SZ59E	2643673 R1	0.79	18.0	Std. Wall XLPE Primary Cable	GREY	2485.0	-	B	N01-9740A
37	-	-	SW59F	2643673 R1	0.79	18.0	Std. Wall XLPE Primary Cable	GREY	2985.0	-	C	9737

Name	Terminal Part Number	V-Min	Name	Wire Part Number	Wire CSA	Wire Spec	Wire Material description	Wire Color Description	Wire Length	End2 Terminal Part Number	End2 Pin Name	End2 Connector
37	-	-	SV59F	2643673 R1	0.79	18.0	Std. Wall XLPE Primary Cable	GREY	3210.0	-	C	N01-3741A
37	-	-	SX59F	2643680 R1	1.16	16.0	Std. Wall XLPE Primary Cable	GREY	4035.0	-	C	N01-9739B
37	-	-	SY59F	2643680 R1	1.16	16.0	Std. Wall XLPE Primary Cable	GREY	3260.0	-	C	N01-9738B
37	-	-	SZ59F	2643673 R1	0.79	18.0	Std. Wall XLPE Primary Cable	GREY	2485.0	-	C	N01-9740A
38	-	-	SW59H	2643673 R1	0.79	18.0	Std. Wall XLPE Primary Cable	GREY	2985.0	-	D	9737
38	-	-	SV59H	2643673 R1	0.79	18.0	Std. Wall XLPE Primary Cable	GREY	3210.0	-	D	N01-3741A
38	-	-	SX59H	2643680 R1	1.16	16.0	Std. Wall XLPE Primary Cable	GREY	4035.0	-	D	N01-9739B
38	-	-	SY59H	2643680 R1	1.16	16.0	Std. Wall XLPE Primary Cable	GREY	3260.0	-	D	N01-9738B

Name	Terminal Part Number	V-Min	Name	Wire Part Number	Wire CSA	Wire Spec	Wire Material description	Wire Color Description	Wire Length	End2 Terminal Part Number	End2 Pin Name	End2 Connector
38	-	-	SZ59H	2643673 R1	0.79	18.0	Std. Wall XLPE Primary Cable	GREY	2485.0	-	D	N01-9740A
39	-	-	SW59J	2643673 R1	0.79	18.0	Std. Wall XLPE Primary Cable	GREY	2985.0	-	E	9737
39	-	-	SV59J	2643673 R1	0.79	18.0	Std. Wall XLPE Primary Cable	GREY	3210.0	-	E	N01-3741A
39	-	-	SX59J	2643680 R1	1.16	16.0	Std. Wall XLPE Primary Cable	GREY	4035.0	-	E	N01-9739B
39	-	-	SY59J	2643680 R1	1.16	16.0	Std. Wall XLPE Primary Cable	GREY	3260.0	-	E	N01-9738B
39	-	-	SZ59J	2643673 R1	0.79	18.0	Std. Wall XLPE Primary Cable	GREY	2485.0	-	E	N01-9740A
40	-	-	NP61B	2643673 R1	0.79	18.0	Std. Wall XLPE Primary Cable	GREY	3235.0	-	C	9865F
41	-	-	NP106B	2643675 R1	0.79	18.0	Std. Wall XLPE Primary Cable	ORANGE	3235.0	-	B	9865F

Name	Terminal Part Number	V-Min	Name	Wire Part Number	Wire CSA	Wire Spec	Wire Material description	Wire Color Description	Wire Length	End2 Terminal Part Number	End2 Pin Name	End2 Connector
42	-	-	NP109B	2643673 R1	0.79	18.0	Std. Wall XLPE Primary Cable	GREY	3235.0	-	A	9865F
43	-	-	NR32A	2643676 R1	0.79	18.0	Std. Wall XLPE Primary Cable	TAN	3235.0	-	6	9800F
44	-	-	NS32	2643676 R1	0.79	18.0	Std. Wall XLPE Primary Cable	TAN	3235.0	-	8	9800F
45	-	-	NT49	2643673 R1	0.79	18.0	Std. Wall XLPE Primary Cable	GREY	3235.0	-	9	9800F
46	-	-	[YJ94SN]	V-18-GXL	0.79	18.0	Std. Wall XLPE Primary Cable	Not Applicable	3010.0	-	1	N01-9511B
46	-	-	[YK94SN]	V-18-GXL	0.79	18.0	Std. Wall XLPE Primary Cable	Not Applicable	5120.0	-	1	N01-9511D
46	-	-	PS94SAB	2643673 R1	0.79	18.0	Std. Wall XLPE Primary Cable	GREY	2980.0	-	1	N01-9511
46	-	-	PR94SAB	2643673 R1	0.79	18.0	Std. Wall XLPE Primary Cable	GREY	5120.0	-	1	N01-9511A

Name	Terminal Part Number	V-Min	Name	Wire Part Number	Wire CSA	Wire Spec	Wire Material description	Wire Color Description	Wire Length	End2 Terminal Part Number	End2 Pin Name	End2 Connector
47	-	-	[YK94SP]	V-18-GXL	0.79	18.0	Std. Wall XLPE Primary Cable	Not Applicable	5120.0	-	2	N01-9511D
47	-	-	[YJ94SP]	V-18-GXL	0.79	18.0	Std. Wall XLPE Primary Cable	Not Applicable	3010.0	-	2	N01-9511B
47	-	-	PS94SBB	2643673 R1	0.79	18.0	Std. Wall XLPE Primary Cable	GREY	2980.0	-	2	N01-9511
47	-	-	PR94SBB	2643673 R1	0.79	18.0	Std. Wall XLPE Primary Cable	GREY	5120.0	-	2	N01-9511A
50	-	-	NU49A	2643673 R1	0.79	18.0	Std. Wall XLPE Primary Cable	GREY	3235.0	-	11	9800F
51	-	-	NY65BC	2643690 R1	1.91	14.0	Std. Wall XLPE Primary Cable	ORANGE	750.0	-	X	-
51	-	-	NX65BC	2643690 R1	1.91	14.0	Std. Wall XLPE Primary Cable	ORANGE	2035.0	-	X	-
52	-	-	BA94BY	2643680 R1	1.16	16.0	Std. Wall XLPE Primary Cable	GREY	3370.0	-	1	9516M

Name	Terminal Part Number	V-Min	Name	Wire Part Number	Wire CSA	Wire Spec	Wire Material description	Wire Color Description	Wire Length	End2 Terminal Part Number	End2 Pin Name	End2 Connector
52	-	-	SA94BY	2643680 R1	1.16	16.0	Std. Wall XLPE Primary Cable	GREY	3370.0	-	1	9516M
53	-	-	BA94BZ	2643680 R1	1.16	16.0	Std. Wall XLPE Primary Cable	GREY	3370.0	-	2	9516M
53	-	-	SA94BZ	2643680 R1	1.16	16.0	Std. Wall XLPE Primary Cable	GREY	3370.0	-	2	9516M
54	-	-	BA94BP	2643680 R1	1.16	16.0	Std. Wall XLPE Primary Cable	GREY	3370.0	-	3	9516M
54	-	-	SA94BP	2643680 R1	1.16	16.0	Std. Wall XLPE Primary Cable	GREY	3370.0	-	3	9516M
55	-	-	BA94BQ	2643680 R1	1.16	16.0	Std. Wall XLPE Primary Cable	GREY	3370.0	-	4	9516M
55	-	-	SA94BQ	2643680 R1	1.16	16.0	Std. Wall XLPE Primary Cable	GREY	3370.0	-	4	9516M
56	-	-	BA94BR	2643680 R1	1.16	16.0	Std. Wall XLPE Primary Cable	GREY	3370.0	-	5	9516M

Name	Terminal Part Number	V-Min	Name	Wire Part Number	Wire CSA	Wire Spec	Wire Material description	Wire Color Description	Wire Length	End2 Terminal Part Number	End2 Pin Name	End2 Connector
56	-	-	SA94BR	2643680 R1	1.16	16.0	Std. Wall XLPE Primary Cable	GREY	3370.0	-	5	9516M
57	-	-	BA94BS	2643680 R1	1.16	16.0	Std. Wall XLPE Primary Cable	GREY	3370.0	-	6	9516M
57	-	-	SA94BS	2643680 R1	1.16	16.0	Std. Wall XLPE Primary Cable	GREY	3370.0	-	6	9516M
58	-	-	BA94BT	2643680 R1	1.16	16.0	Std. Wall XLPE Primary Cable	GREY	3370.0	-	7	9516M
58	-	-	SA94BT	2643680 R1	1.16	16.0	Std. Wall XLPE Primary Cable	GREY	3370.0	-	7	9516M
59	-	-	BA94BU	2643680 R1	1.16	16.0	Std. Wall XLPE Primary Cable	GREY	3370.0	-	8	9516M
59	-	-	SA94BU	2643680 R1	1.16	16.0	Std. Wall XLPE Primary Cable	GREY	3370.0	-	8	9516M
60	-	-	BA94BV	2643680 R1	1.16	16.0	Std. Wall XLPE Primary Cable	GREY	3370.0	-	9	9516M

Name	Terminal Part Number	V-Min	Name	Wire Part Number	Wire CSA	Wire Spec	Wire Material description	Wire Color Description	Wire Length	End2 Terminal Part Number	End2 Pin Name	End2 Connector
60	-	-	SA94BV	2643680 R1	1.16	16.0	Std. Wall XLPE Primary Cable	GREY	3370.0	-	9	9516M
61	-	-	PA152AA	3510312 R1	1.16	16.0	Thin Wall XLPE Primary Cable	GREY	3310.0	-	1	9540M
62	-	-	PA152AB	3510312 R1	1.16	16.0	Thin Wall XLPE Primary Cable	GREY	3310.0	-	2	9540M
63	-	-	[YH94SL]	V-16-GXL	1.16	16.0	Std. Wall XLPE Primary Cable	Not Applicable	1660.0	-	1	N01-9514A
63	-	-	PM94SZC	2643680 R1	1.16	16.0	Std. Wall XLPE Primary Cable	GREY	3235.0	-	A	9510F
64	-	-	BA94BW	2643680 R1	1.16	16.0	Std. Wall XLPE Primary Cable	GREY	3370.0	-	10	9516M
64	-	-	SA94BW	2643680 R1	1.16	16.0	Std. Wall XLPE Primary Cable	GREY	3370.0	-	10	9516M
65	-	-	HA94A	2643680 R1	1.16	16.0	Std. Wall XLPE Primary Cable	GREY	3785.0	-	1	N01-9515

Name	Terminal Part Number	V-Min	Name	Wire Part Number	Wire CSA	Wire Spec	Wire Material description	Wire Color Description	Wire Length	End2 Terminal Part Number	End2 Pin Name	End2 Connector
65	-	-	HB94A	2643680 R1	1.16	16.0	Std. Wall XLPE Primary Cable	GREY	4310.0	-	1	N01-9516
65	-	-	HC94A	2643680 R1	1.16	16.0	Std. Wall XLPE Primary Cable	GREY	4660.0	-	1	N01-9516B
66	-	-	HA94B	2643680 R1	1.16	16.0	Std. Wall XLPE Primary Cable	GREY	3785.0	-	2	N01-9515
66	-	-	HB94B	2643680 R1	1.16	16.0	Std. Wall XLPE Primary Cable	GREY	4310.0	-	2	N01-9516
66	-	-	HC94B	2643680 R1	1.16	16.0	Std. Wall XLPE Primary Cable	GREY	4660.0	-	2	N01-9516B
67	-	-	[PP94SK]	V-16-GXL	1.16	16.0	Std. Wall XLPE Primary Cable	Not Applicable	1500.0	-	1	N01-9514
67	-	-	PM94SK	2643680 R1	1.16	16.0	Std. Wall XLPE Primary Cable	GREY	1655.0	-	2	N01-9512
68	-	-	NV65	2643682 R1	1.16	16.0	Std. Wall XLPE Primary Cable	ORANGE	2490.0	-	A	9718

Name	Terminal Part Number	V-Min	Name	Wire Part Number	Wire CSA	Wire Spec	Wire Material description	Wire Color Description	Wire Length	End2 Terminal Part Number	End2 Pin Name	End2 Connector
69	-	-	UB67U	2643680 R1	1.16	16.0	Std. Wall XLPE Primary Cable	GREY	3515.0	-	3	N01-9769
70	-	-	UB67W	2643680 R1	1.16	16.0	Std. Wall XLPE Primary Cable	GREY	3515.0	-	5	N01-9769
71	-	-	UB67V	2643680 R1	1.16	16.0	Std. Wall XLPE Primary Cable	GREY	3515.0	-	4	N01-9769
72	-	-	PM94SM	2643680 R1	1.16	16.0	Std. Wall XLPE Primary Cable	GREY	1400.0	-	A	N01-9513
73	-	-	PM94SN	2643680 R1	1.16	16.0	Std. Wall XLPE Primary Cable	GREY	1400.0	-	B	N01-9513
74	-	-	PM94SL	2643680 R1	1.16	16.0	Std. Wall XLPE Primary Cable	GREY	1400.0	-	C	N01-9513
75	-	-	[YH94SM]	V-16-GXL	1.16	16.0	Std. Wall XLPE Primary Cable	Not Applicable	1660.0	-	2	N01-9514A
75	-	-	PM94SVC	2643680 R1	1.16	16.0	Std. Wall XLPE Primary Cable	GREY	3235.0	-	B	9510F
76	-	-	PM94SH	2643680 R1	1.16	16.0	Std. Wall XLPE Primary Cable	GREY	3235.0	-	C	9510F

Connector Name 1701M
Part Number 3595623C1
Instances ABS Private J1939:ABS Private J1939
Mates 1701F

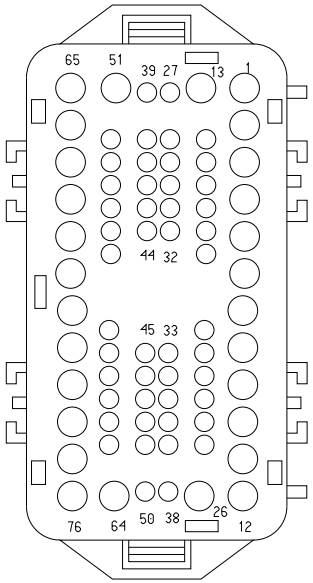

Name	Terminal Part Number	V-Min	Name	Wire Part Number	Wire CSA	Wire Spec	Wire Material description	Wire Color Description	Wire Length	End2 Terminal Part Number	End2 Pin Name	End2 Connect or
46	-	-	XD94SNA	3510311 R1	0.79	18.0	Thin Wall XLPE Primary Cable	GREY	1290.0	-	B	1410
46	-	-	XZ94SAB	3510311 R1	0.79	18.0	Thin Wall XLPE Primary Cable	GREY	1290.0	-	B	1410
47	-	-	XZ94SBB	3510311 R1	0.79	18.0	Thin Wall XLPE Primary Cable	GREY	1290.0	-	E	1410
47	-	-	XD94SPA	3510311 R1	0.79	18.0	Thin Wall XLPE Primary Cable	GREY	1290.0	-	E	1410

Name	Terminal Part Number	V-Min	Name	Wire Part Number	Wire CSA	Wire Spec	Wire Material description	Wire Color Description	Wire Length	End2 Terminal Part Number	End2 Pin Name	End2 Connect or
48	-	-	XZ94SCB	3510311 R1	0.79	18.0	Thin Wall XLPE Primary Cable	GREY	1290.0	-	H	1410
48	-	-	XD94SRA	3510311 R1	0.79	18.0	Thin Wall XLPE Primary Cable	GREY	1290.0	-	H	1410
49	-	-	XZ94SDB	3510311 R1	0.79	18.0	Thin Wall XLPE Primary Cable	GREY	1290.0	-	L	1410
49	-	-	XD94SSA	3510311 R1	0.79	18.0	Thin Wall XLPE Primary Cable	GREY	1290.0	-	L	1410

Connector Name	1701
Part Number	3595623C1
Short Description	CENTER CHASSIS
Instances	LoneStar - X15 - Antilock Brake System (ABS) - Wabco 4 Channel Implementation:Diagram1 LoneStar - X15 - Antilock Brake System (ABS) - Wabco 4 Channel Implementation:Diagram2 LoneStar - X15 - Antilock Brake System (ABS) - Wabco 4 Channel Implementation:Diagram3 LoneStar - X15 - Antilock Brake System (ABS) - Wabco 4 Channel Implementation:Diagram4 LoneStar - X15 - Antilock Brake System (ABS) [Bendix 6 Channel Implementation]:Diagram1 LoneStar - X15 - Antilock Brake System (ABS) [Bendix 6 Channel Implementation]:Diagram2 LoneStar - X15 - Antilock Brake System (ABS) [Bendix 6 Channel Implementation]:Diagram3 LoneStar - X15 - Antilock Brake System (ABS)-BENDIX 4 Channel Implemenation:Diagram1 LoneStar - X15 - Antilock Brake System (ABS)-BENDIX 4 Channel Implemenation:Diagram2 LoneStar - X15 - Antilock Brake System (ABS)-BENDIX 4 Channel Implemenation:Diagram3 LoneStar - X15 - Antilock Brake System (ABS)-BENDIX 4 Channel Implemenation:Diagram4 LoneStar - X15 - Antilock Brake System - Wabco ABS 6 Channel Implementation:Diagram1 LoneStar - X15 - Antilock Brake System - Wabco ABS 6 Channel Implementation:Diagram2 LoneStar - X15 - Antilock Brake System - Wabco ABS 6 Channel Implementation:Diagram3 LoneStar - X15 - Trailer Interface (ABS) - Center Pin Circuit:Diagram1 LoneStar - X15 - Trailer Interface (ABS) - Center Pin Circuit:Diagram2 LoneStar - X15 - Trailer Interface (ABS) - Center Pin Circuit:Diagram3 LoneStar - X15 - Trailer Interface (ABS) - Center Pin Circuit:Diagram4 LT/RH X15 - Backup Light (Dual Reverse Light) Allison-TC10:Diagram1 LT/RH X15 - Backup Light (Dual Reverse Light) Allison-TC10:Diagram2

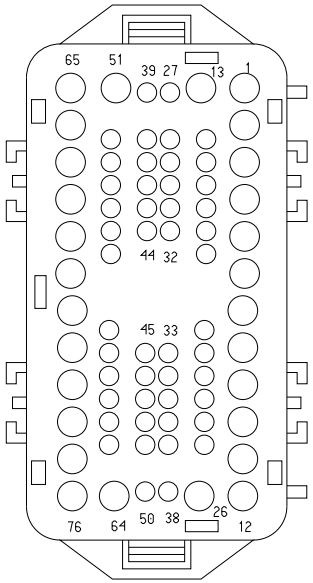

LT/RH X15 - Backup Light (Dual Reverse LT) Procosion/ Endurant:Diagram1
LT/RH X15 - Backup Light (Dual Reverse LT) Procosion/ Endurant:Diagram2
LT/RH X15 - Backup Light (Reverse Light) Allison TC10:Diagram1
LT/RH X15 - Backup Light (Reverse Light) Allison TC10:Diagram2
LT/RH X15 - Backup Light (Single Reverse Light) Allison TC10:Diagram1
LT/RH X15 - Backup Light (Single Reverse Light) Allison TC10:Diagram2
LT/RH X15 - Backup Light (Single Reverse Light) Endurant:Diagram1
LT/RH X15 - Backup Light (Single Reverse Light) Endurant:Diagram2
LT/RH X15 - Backup Lights (Dual Reverse Light) Eaton/Manual Trans:Diagram1
LT/RH X15 - Backup Lights (Dual Reverse Light) Eaton/Manual Trans:Diagram2
LT/RH X15 - Backup Lights (Reverse Light) Eaton/Manual Trans:Diagram1
LT/RH X15 - Backup Lights (Reverse Light) Eaton/Manual Trans:Diagram2
LT/RH X15 - Backup Lights (Reverse Lights) Eaton/Manual Trans:Diagram1
LT/RH X15 - Backup Lights (Reverse Lights) Eaton/Manual Trans:Diagram2
LT/RH X15 - Backup Lights (Single Reverse Light) Eaton/Manual Trans:Diagram1
LT/RH X15 - Backup Lights (Single Reverse Light) Eaton/Manual Trans:Diagram2
LT/RH - A26 - Work Lights (2 Blunt Cuts Only W/O Relay) W/ Backup W/Manual Trans Day Cab:Diagram1
LT/RH - A26 - Work Lights (2 Blunt Cuts Only W/O Relay) W/ Backup W/Manual Trans Day Cab:Diagram3
LT/RH - A26 - Work Lights - LED W/ Sw Pack - Customer Supplied - Sleeper W/ RKE W/MAN REV:Diagram1
LT/RH - A26 - Work Lights - LED W/ Sw Pack - Customer Supplied - Sleeper W/ RKE W/MAN REV:Diagram3
LT/RH - A26 - Work Lights - LED W/ Sw Pack - Customer Supplied - Sleeper W/O RKE W/MAN REV:Diagram1
LT/RH - A26 - Work Lights - LED W/ Sw Pack - Customer Supplied - Sleeper W/O RKE W/MAN REV:Diagram3

LT/RH - A26 - Work Lights LED W/ Sw Pack - Day Cab W/ RKE W/MAN REV:Diagram1
LT/RH - A26 - Work Lights LED W/ Sw Pack - Day Cab W/ RKE W/MAN REV:Diagram2
LT/RH - A26 - Work Lights LED W/ Sw Pack - Day Cab W/O RKE W/MAN REV:Diagram1
LT/RH - A26 - Work Lights LED W/ Sw Pack - Day Cab W/O RKE W/MAN REV:Diagram2
LT/RH - A26 - Work Lights W/ Sw Pack - Customer Supplied W/ RKE W/MAN REV:Diagram1
LT/RH - A26 - Work Lights W/ Sw Pack - Customer Supplied W/ RKE W/MAN REV:Diagram2
LT/RH - A26 - Work Lights W/ Sw Pack - Customer Supplied W/ RKE W/MAN REV:Diagram3
LT/RH - A26 - Work Lights W/ Sw Pack - Customer Supplied W/ RKE W/MAN REV:Diagram4
LT/RH - A26 - Work Lights W/ Sw Pack - Customer Supplied W/ O RKE W/MAN REV:Diagram1
LT/RH - A26 - Work Lights W/ Sw Pack - Customer Supplied W/ O RKE W/MAN REV:Diagram2
LT/RH - A26 - Work Lights W/ Sw Pack - Customer Supplied W/ O RKE W/MAN REV:Diagram3
LT/RH - A26 - Work Lights W/ Sw Pack - Customer Supplied W/ O RKE W/MAN REV:Diagram4
LT/RH - X15/A26 - Antilock Brake System (ABS) - Wabco 4 Channel Implementation:Diagram1
LT/RH - X15/A26 - Antilock Brake System (ABS) - Wabco 4 Channel Implementation:Diagram2
LT/RH - X15/A26 - Antilock Brake System (ABS) - Wabco 4 Channel Implementation:Diagram3
LT/RH - X15/A26 - Antilock Brake System (ABS) - Wabco 4 Channel Implementation:Diagram4
LT/RH - X15/A26 - Antilock Brake System (ABS) BENDIX 4 Channel Implemenation:Diagram1
LT/RH - X15/A26 - Antilock Brake System (ABS) BENDIX 4 Channel Implemenation:Diagram2
LT/RH - X15/A26 - Antilock Brake System (ABS) BENDIX 4 Channel Implemenation:Diagram3
LT/RH - X15/A26 - Antilock Brake System (ABS) BENDIX 4 Channel Implemenation:Diagram4
LT/RH - X15/A26 - Antilock Brake System (ABS) Bendix 6 Channel Implementation:Diagram1
LT/RH - X15/A26 - Antilock Brake System (ABS) Bendix 6 Channel Implementation:Diagram2

LT/RH - X15/A26 - Antilock Brake System (ABS) Bendix 6 Channel Implementation:Diagram3
LT/RH - X15/A26 - Antilock Brake System - Wabco ABS 6 Channel Implementation:Diagram1
LT/RH - X15/A26 - Antilock Brake System - Wabco ABS 6 Channel Implementation:Diagram2
LT/RH - X15/A26 - Antilock Brake System - Wabco ABS 6 Channel Implementation:Diagram3
LT/RH - X15/A26 - Bendix Stability Control For Tractor or Tractors with Trailer Tow:Diagram1
LT/RH - X15/A26 - Bendix Stability Control For Tractor or Tractors with Trailer Tow:Diagram2
LT/RH - X15/A26 - Bendix; Tractor or Towing Truck; W/ Air SUSP; J1939 Driven Lamp:Diagram1
LT/RH - X15/A26 - Bendix; Tractor or Towing Truck; W/ Air SUSP; J1939 Driven Lamp:Diagram2
LT/RH - X15/A26 - License Plate Light (Dual LED Lamp Tail Light) Option 1:Diagram1
LT/RH - X15/A26 - License Plate Light (Dual LED Lamp Tail Light) Option 1:Diagram2
LT/RH - X15/A26 - License Plate Light (Dual LED Lamp Tail Light) Option 2:Diagram1
LT/RH - X15/A26 - License Plate Light (Dual LED Lamp Tail Light) Option 2:Diagram2
LT/RH - X15/A26 - License Plate Light (Tail Light Single Assy.) Option 1:Diagram1
LT/RH - X15/A26 - License Plate Light (Tail Light Single Assy.) Option 1:Diagram2
LT/RH - X15/A26 - License Plate Light (Tail Light Single Assy.)Option 2:Diagram1
LT/RH - X15/A26 - License Plate Light (Tail Light Single Assy.)Option 2:Diagram2
LT/RH - X15/A26 - Trailer Interface (ABS) - Center Pin Circuit:Diagram1
LT/RH - X15/A26 - Trailer Interface (ABS) - Center Pin Circuit:Diagram2
LT/RH - X15/A26 - Trailer Interface (ABS) - Center Pin Circuit:Diagram3
LT/RH - X15/A26 - Trailer Interface (ABS) - Center Pin Circuit:Diagram4
LT/RH - X15/A26 - Wabco Full Stability Control:Diagram1
LT/RH - X15/A26 - Wabco Full Stability Control:Diagram2
LT/RH - X15/A26 - Work Lights W/ Sw Pack - Customer Supplied:Diagram1

LT/RH - X15/A26 - Work Lights W/ Sw Pack - Customer Supplied:Diagram2
LT/RH A26 - Back-Up Alarm (Manual) and UltraShift+:Diagram1
LT/RH A26 - Back-Up Alarm (Manual) and UltraShift+:Diagram2
LT/RH A26 - Back-Up Alarm (Manual) and UltraShift+:Diagram3
LT/RH A26 - Back-Up Alarm (Manual) and UltraShift+:Diagram4
LT/RH A26 - Back-Up Alarm (Manual) and UltraShift+:Diagram5
LT/RH A26 - Back-Up Alarm (Manual) and UltraShift+:Diagram6
LT/RH A26 - Back-Up Alarm (Manual) and UltraShift+:Diagram7
LT/RH A26 - Back-Up Alarm (Manual) and UltraShift+:Diagram8
LT/RH A26 - Back-Up Alarm (Manual) (W/ Tail Light Bar Assy):Diagram1
LT/RH A26 - Back-Up Alarm (Manual) (W/ Tail Light Bar Assy):Diagram2
LT/RH A26 - Back-Up Alarm (Manual) (W/ Tail Light Bar Assy):Diagram3
LT/RH A26 - Back-Up Alarm (Manual) (W/ Tail Light Bar Assy):Diagram4
LT/RH A26 - Backup Light (Dual Reverse Light):Diagram1
LT/RH A26 - Backup Light (Dual Reverse Light):Diagram2
LT/RH A26 - Backup Light (Dual Reverse Light) Allison-3K:Diagram1
LT/RH A26 - Backup Light (Dual Reverse Light) Allison-3K:Diagram2
LT/RH A26 - Backup Light (Dual Reverse Light) Allison-TC10:Diagram1
LT/RH A26 - Backup Light (Dual Reverse Light) Allison-TC10:Diagram2
LT/RH A26 - Backup Light (Reverse Light) Allison TC10:Diagram1
LT/RH A26 - Backup Light (Reverse Light) Allison TC10:Diagram2
LT/RH A26 - Backup Light (Reverse Light) Allison-3K:Diagram1
LT/RH A26 - Backup Light (Reverse Light) Allison-3K:Diagram2
LT/RH A26 - Backup Light (Single Reverse Light):Diagram1
LT/RH A26 - Backup Light (Single Reverse Light):Diagram2
LT/RH A26 - Backup Light (Single Reverse Light) Allison 3K:Diagram1
LT/RH A26 - Backup Light (Single Reverse Light) Allison 3K:Diagram2
LT/RH A26 - Backup Light (Single Reverse Light) Allison TC10:Diagram1
LT/RH A26 - Backup Light (Single Reverse Light) Allison TC10:Diagram2

LT/RH A26 - Backup Light (Single Reverse Light) Endurant:Diagram1
LT/RH A26 - Backup Light (Single Reverse Light) Endurant:Diagram2
LT/RH A26 - Backup Light (Single Reverse Light) W/Allison 3K:Diagram1
LT/RH A26 - Backup Light (Single Reverse Light) W/Allison 3K:Diagram2
LT/RH A26 - Backup Light (Single Reverse Light) W/Allison TC10:Diagram1
LT/RH A26 - Backup Light (Single Reverse Light) W/Allison TC10:Diagram2
LT/RH A26 - Backup Light Endurant Trans:Diagram1
LT/RH A26 - Backup Light Endurant Trans:Diagram2
LT/RH A26 - Backup Lights (Dual Reverse Light) Eaton/Manual Trans:Diagram1
LT/RH A26 - Backup Lights (Dual Reverse Light) Eaton/Manual Trans:Diagram2
LT/RH A26 - Backup Lights (Dual Reverse Light) Eaton/Manual Trans:Diagram3
LT/RH A26 - Backup Lights (Dual Reverse Light) Eaton/Manual Trans:Diagram4
LT/RH A26 - Backup Lights (Reverse Light) Eaton/Manual Trans:Diagram1
LT/RH A26 - Backup Lights (Reverse Light) Eaton/Manual Trans:Diagram2
LT/RH A26 - Backup Lights (Reverse Light) Eaton/Manual Trans:Diagram3
LT/RH A26 - Backup Lights (Reverse Light) Eaton/Manual Trans:Diagram4
LT/RH A26 - Backup Lights (Reverse Lights) Eaton/Manual Trans:Diagram1
LT/RH A26 - Backup Lights (Reverse Lights) Eaton/Manual Trans:Diagram2
LT/RH A26 - Backup Lights (Reverse Lights) Eaton/Manual Trans:Diagram3
LT/RH A26 - Backup Lights (Reverse Lights) Eaton/Manual Trans:Diagram4
LT/RH A26 - Backup Lights (Single Reverse Light) Eaton/Manual Trans:Diagram1
LT/RH A26 - Backup Lights (Single Reverse Light) Eaton/Manual Trans:Diagram2
LT/RH A26 - Backup Lights (Single Reverse Light) Eaton/Manual Trans:Diagram3

LT/RH A26 - Backup Lights (Single Reverse Light) Eaton/Manual Trans:Diagram4
LT/RH A26 - Backup Lights (Single Reverse Light) Eaton/Manual Trans/:Diagram1
LT/RH A26 - Backup Lights (Single Reverse Light) Eaton/Manual Trans/:Diagram2
LT/RH A26 - Backup Lights (Single Reverse Light) Eaton/Manual Trans/:Diagram3
LT/RH A26 - Backup Lights (Single Reverse Light) Eaton/Manual Trans/:Diagram4
LT/RH/LoneStar - X15 - Work Lights (2 Blunt Cuts Only W/O Relay) W/Backup W/Manual Trans:Diagram1
LT/RH/LoneStar - X15 - Work Lights - LED W/ Sw Pack - Customer Supplied - Sleeper W/ RKE W/MAN REV:Diagram1
LT/RH/LoneStar - X15 - Work Lights - LED W/ Sw Pack - Customer Supplied - Sleeper W/O RKE W/MAN REV:Diagram1
LT/RH/LoneStar - X15 - Work Lights W/ Sw Pack - Customer Supplied W/ RKE W/MAN REV:Diagram1
LT/RH/LoneStar - X15 - Work Lights W/ Sw Pack - Customer Supplied W/ RKE W/MAN REV:Diagram2
LT/RH/LoneStar - X15 - Work Lights W/ Sw Pack - Customer Supplied W/O RKE W/MAN REV:Diagram1
LT/RH/LoneStar - X15 - Work Lights W/ Sw Pack - Customer Supplied W/O RKE W/MAN REV:Diagram2
LT/RH/LoneStar - X15/A26 - 2 Driver Controlled Locking Differential - FR & RR Axle (DANA):Diagram1
LT/RH/LoneStar - X15/A26 - 2 Driver Controlled Locking Differential - FR & RR Axle (MERITOR):Diagram1
LT/RH/LoneStar - X15/A26 - Auxiliary Air Solenoids 4-pack (1 pack/4 solenoids):Diagram1
LT/RH/LoneStar - X15/A26 - Auxiliary Air Solenoids 4-pack (1 pack/4 solenoids):Diagram2
LT/RH/LoneStar - X15/A26 - Auxiliary Air Solenoids 4-pack (1 pack/4 solenoids):Diagram3
LT/RH/LoneStar - X15/A26 - Auxiliary Air Solenoids 4-pack (1 pack/4 solenoids):Diagram4
LT/RH/LoneStar - X15/A26 - Auxiliary Air Solenoids 4-pack (1 pack/4 solenoids):Diagram5
LT/RH/LoneStar - X15/A26 - Auxiliary Air Solenoids 4-pack (2 packs/8 solenoids):Diagram1
LT/RH/LoneStar - X15/A26 - Auxiliary Air Solenoids 4-pack (2 packs/8 solenoids):Diagram2
LT/RH/LoneStar - X15/A26 - Auxiliary Air Solenoids 4-pack (2 packs/8 solenoids):Diagram3

LT/RH/LoneStar - X15/A26 - Auxiliary Air Solenoids 4-pack (2 packs/8 solenoids):Diagram4
LT/RH/LoneStar - X15/A26 - Auxiliary Air Solenoids 4-pack (2 packs/8 solenoids):Diagram5
LT/RH/LoneStar - X15/A26 - Auxiliary Trailer Power CAV D:Diagram1
LT/RH/LoneStar - X15/A26 - Auxiliary Trailer Power CAV D:Diagram2
LT/RH/LoneStar - X15/A26 - Auxiliary Trailer Power W/ ISO Trailer Socket:Diagram1
LT/RH/LoneStar - X15/A26 - Axle Loading (Weight) Rear:Diagram1
LT/RH/LoneStar - X15/A26 - Axle Loading (Weight) Rear:Diagram2
LT/RH/LoneStar - X15/A26 - Back-Up Alarm (Automatic) (W/ Tail Light Bar Assy):Diagram1
LT/RH/LoneStar - X15/A26 - Back-Up Alarm (Automatic) (W/ Tail Light Bar Assy):Diagram2
LT/RH/LoneStar - X15/A26 - Back-Up Alarm (Automatic) TC10:Diagram1
LT/RH/LoneStar - X15/A26 - Back-Up Alarm (Automatic) TC10:Diagram2
LT/RH/LoneStar - X15/A26 - Back-Up Alarm (Automatic) TC10:Diagram3
LT/RH/LoneStar - X15/A26 - Back-Up Alarm (Automatic) TC10:Diagram4
LT/RH/LoneStar - X15/A26 - Body Builder Lighting - (Blunt Cut):Diagram1
LT/RH/LoneStar - X15/A26 - Body Builder Lighting - (Blunt Cut):Diagram2
LT/RH/LoneStar - X15/A26 - Collision Avoidance System (Warning):Diagram1
LT/RH/LoneStar - X15/A26 - Drain Valve Heater:Diagram1
LT/RH/LoneStar - X15/A26 - Driver Controlled Locking Differential - FR & RR Axle (DANA):Diagram1
LT/RH/LoneStar - X15/A26 - Driver Controlled Locking Differential - FR & RR Axle (MERITOR):Diagram1
LT/RH/LoneStar - X15/A26 - Driver Controlled Locking Differential - FR (MERITOR):Diagram1
LT/RH/LoneStar - X15/A26 - Driver Controlled Locking Differential - RR Axle (DANA):Diagram1
LT/RH/LoneStar - X15/A26 - Driver Controlled Locking Differential - RR Axle (DANA):Diagram2

LT/RH/LoneStar - X15/A26 - Driver Controlled Locking Differential - RR Axle (MERITOR):Diagram1
LT/RH/LoneStar - X15/A26 - Driver Controlled Locking Differential - RR Axle (MERITOR):Diagram2
LT/RH/LoneStar - X15/A26 - Dual Air Dryers:Diagram1
LT/RH/LoneStar - X15/A26 - Dual Air Dryers:Diagram2
LT/RH/LoneStar - X15/A26 - Fuel Level (Single Tank - Left Side):Diagram1
LT/RH/LoneStar - X15/A26 - Fuel Level (Single Tank - Left Side):Diagram2
LT/RH/LoneStar - X15/A26 - Fuel Level (Single Tank - Left Side):Diagram3
LT/RH/LoneStar - X15/A26 - Fuel Level (Single Tank - Left Side):Diagram4
LT/RH/LoneStar - X15/A26 - Fuel Level (Single Tank - Left Side):Diagram5
LT/RH/LoneStar - X15/A26 - Fuel Level (Single Tank - Left Side):Diagram6
LT/RH/LoneStar - X15/A26 - Hill Start Aid (Bendix):Diagram1
LT/RH/LoneStar - X15/A26 - Hill Start Aid (Bendix):Diagram2
LT/RH/LoneStar - X15/A26 - Hill Start Aid (Bendix):Diagram3
LT/RH/LoneStar - X15/A26 - Jaw Monitoring:Diagram1
LT/RH/LoneStar - X15/A26 - Left Side Air Dryer-Bendix:Diagram1
LT/RH/LoneStar - X15/A26 - Left Side Air Dryer-Bendix:Diagram2
LT/RH/LoneStar - X15/A26 - License Plate Light (Tail Light Single Assy.) Option 1:Diagram1
LT/RH/LoneStar - X15/A26 - License Plate Light (Tail Light Single Assy.) Option 1:Diagram2
LT/RH/LoneStar - X15/A26 - License Plate Light (Tail Light Single Assy.) Option 2:Diagram1-Combination1
LT/RH/LoneStar - X15/A26 - License Plate Light (Tail Light Single Assy.) Option 2:Diagram1-Combination2
LT/RH/LoneStar - X15/A26 - Rear Lights Stop - Dual Assembly:Diagram1
LT/RH/LoneStar - X15/A26 - Rear Lights Stop - Dual Assembly:Diagram2
LT/RH/LoneStar - X15/A26 - Rear Lights Stop - Single Assembly Option 1:Diagram1
LT/RH/LoneStar - X15/A26 - Rear Lights Stop - Single Assembly Option 1:Diagram2
LT/RH/LoneStar - X15/A26 - Rear Lights Stop - Single Assembly Option 2:Diagram1

LT/RH/LoneStar - X15/A26 - Rear Lights Stop - Single Assembly Option 2:Diagram2
LT/RH/LoneStar - X15/A26 - Single Axle Temperature Monitoring:Diagram1
LT/RH/LoneStar - X15/A26 - Single Axle Temperature Monitoring w/Aux Gauge:Diagram1
LT/RH/LoneStar - X15/A26 - Tandem Axle Temperature Monitoring:Diagram1
LT/RH/LoneStar - X15/A26 - Tandem Axle Temperature Monitoring:Diagram2
LT/RH/LoneStar - X15/A26 - Tandem Axle Temperature Monitoring w/ Single SNSR and AUX Gauge:Diagram1
LT/RH/LoneStar - X15/A26 - Tandem Axle Temperature Monitoring w/ Single SNSR and AUX Gauge:Diagram1
LT/RH/LoneStar - X15/A26 - Tandem Axle Temperature Monitoring w/Aux Gauge:Diagram1
LT/RH/LoneStar - X15/A26 - Tandem Axle Temperature Monitoring w/Aux Gauge:Diagram2
LT/RH/LoneStar - X15/A26 - Traction Control (Bendix Controller):Diagram1
LT/RH/LoneStar - X15/A26 - Traction Control (Bendix Controller):Diagram2
LT/RH/LoneStar - X15/A26 - Traction Control (Bendix Controller) Option 2:Diagram1
LT/RH/LoneStar - X15/A26 - Traction Control (Bendix Controller) Option 2:Diagram2
LT/RH/LoneStar - X15/A26 - Traction Control (Wabco Controller):Diagram1
LT/RH/LoneStar - X15/A26 - Traction Control (Wabco Controller):Diagram2
LT/RH/LoneStar - X15/A26 - Traction Control (Wabco Controller):Diagram3
LT/RH/LoneStar - X15/A26 - Trailer Interface (ABS) - BOC & EOF_NA:Diagram1
LT/RH/LoneStar - X15/A26 - Trailer Interface (ABS) - BOC & EOF_NA:Diagram2
LT/RH/LoneStar - X15/A26 - Trailer Interface (ABS) - BOC & EOF_NA:Diagram3
LT/RH/LoneStar - X15/A26 - Trailer Interface (ABS) - BOC & EOF_NA:Diagram4
LT/RH/LoneStar - X15/A26 - Trailer Interface (ABS) - BOC_NA:Diagram1
LT/RH/LoneStar - X15/A26 - Trailer Interface (ABS) - BOC_NA:Diagram2

LT/RH/LoneStar - X15/A26 - Trailer Interface (ABS) - TRAMEC_NA:Diagram1
LT/RH/LoneStar - X15/A26 - Trailer Interface (Lighting) – BOC & EOF_NA:Diagram1-Combination1
LT/RH/LoneStar - X15/A26 - Trailer Interface (Lighting) – BOC & EOF_NA:Diagram1-Combination2
LT/RH/LoneStar - X15/A26 - Trailer Interface (Lighting) – BOC & EOF_NA:Diagram1-Combination3
LT/RH/LoneStar - X15/A26 - Trailer Interface (Lighting) – BOC & EOF_NA:Diagram1-Combination4
LT/RH/LoneStar - X15/A26 - Trailer Interface (Lighting) – BOC NA:Diagram1
LT/RH/LoneStar - X15/A26 - Trailer Interface (Lighting) – BOC NA:Diagram2
LT/RH/LoneStar - X15/A26 - Trailer Interface (Lighting) – TRAMEC_NA:Diagram1
LT/RH/LoneStar - X15/A26 - Work Lights (2 Blunt Cuts Only W/O Relay):Diagram1
LT/RH/LoneStar - X15/A26 - Work Lights (2 Blunt Cuts Only W/O Relay) W/Backup W/Auto Trans (Allison and Endurant):Diagram1
LT/RH/LoneStar - X15/A26 - Work Lights - LED W/ Sw Pack - Customer Supplied - Sleeper:Diagram1
LT/RH/LoneStar - X15/A26 - Work Lights - LED W/ Sw Pack - Customer Supplied - Sleeper W/ RKE W/AUTO REV:Diagram1
LT/RH/LoneStar - X15/A26 - Work Lights - LED W/ Sw Pack - Customer Supplied - Sleeper W/O RKE:Diagram1
LT/RH/LoneStar - X15/A26 - Work Lights - LED W/ Sw Pack - Customer Supplied - Sleeper W/O RKE W/AUTO REV:Diagram1
LT/RH/LoneStar - X15/A26 - Work Lights LED W/ Sw Pack - Day Cab:Diagram1
LT/RH/LoneStar - X15/A26 - Work Lights LED W/ Sw Pack - Day Cab W/ RKE W/AUTO REV:Diagram1
LT/RH/LoneStar - X15/A26 - Work Lights LED W/ Sw Pack - Day Cab W/O RKE:Diagram1
LT/RH/LoneStar - X15/A26 - Work Lights LED W/ Sw Pack - Day Cab W/O RKE W/AUTO REV:Diagram1
LT/RH/LoneStar - X15/A26 - Work Lights W/ Sw Pack - Customer Supplied:Diagram1
LT/RH/LoneStar - X15/A26 - Work Lights W/ Sw Pack - Customer Supplied:Diagram2
LT/RH/LoneStar - X15/A26 - Work Lights W/ Sw Pack - Customer Supplied W/ RKE W/AUTO REV:Diagram1

LT/RH/LoneStar - X15/A26 - Work Lights W/ Sw Pack - Customer Supplied W/ RKE W/AUTO REV:Diagram2
LT/RH/LoneStar - X15/A26 - Work Lights W/ Sw Pack - Customer Supplied W/O RKE W/AUTO REV:Diagram1
LT/RH/LoneStar - X15/A26 - Work Lights W/ Sw Pack - Customer Supplied W/O RKE W/AUTO REV:Diagram2
LT/RH/LoneStar X15 - Back-Up Alarm (Manual) and UltraShift +:Diagram1
LT/RH/LoneStar X15 - Back-Up Alarm (Manual) and UltraShift +:Diagram2
LT/RH/LoneStar X15 - Back-Up Alarm (Manual) and UltraShift +:Diagram3
LT/RH/LoneStar X15 - Back-Up Alarm (Manual) and UltraShift +:Diagram4
LT/RH/LoneStar X15 - Back-Up Alarm (Manual) (W/ Tail Light Bar Assy):Diagram1
LT/RH/LoneStar X15 - Back-Up Alarm (Manual) (W/ Tail Light Bar Assy):Diagram2
LT/RH/LoneStar X15 - Backup Light (Single Reverse Light) Endurant:Diagram1
LT/RH/LoneStar X15 - Backup Light (Single Reverse Light) Endurant:Diagram2
LT/RH/LoneStar X15 - Backup Light (Single Reverse Light) W/ Allison TC10:Diagram1
LT/RH/LoneStar X15 - Backup Light (Single Reverse Light) W/ Allison TC10:Diagram2
LT/RH/LoneStar X15 - Backup Light Endurant:Diagram1
LT/RH/LoneStar X15 - Backup Light Endurant:Diagram2
LT/RH/LoneStar X15 - Backup Lights (Single Reverse Light) Eaton/Manual Trans:Diagram1
LT/RH/LoneStar X15 - Backup Lights (Single Reverse Light) Eaton/Manual Trans:Diagram2
LT/RH/LoneStar X15 - Work Lights LED W/ Sw Pack - Day Cab W/ RKE W/MAN REV:Diagram1
LT/RH/LoneStar X15 - Work Lights LED W/ Sw Pack - Day Cab W/O RKE W/MAN REV:Diagram1

Mates 1701F

Name	Terminal Part Number	V-Min	Name	Wire Part Number	Wire CSA	Wire Spec	Wire Material description	Wire Color Description	Wire Length	End2 Terminal Part Number	End2 Pin Name	End2 Connector
1	-	-	BJ71BC	3510318 R1	1.16	16.0	Thin Wall XLPE Primary Cable	ORANGE	655.0	-	-	-
1	-	-	3T71BC	3510318 R1	1.16	16.0	Thin Wall XLPE Primary Cable	ORANGE	655.0	-	-	-
1	-	-	BP71BA	3510318 R1	1.16	16.0	Thin Wall XLPE Primary Cable	ORANGE	655.0	-	-	-
1	-	-	GM71BE	3510318 R1	1.16	16.0	Thin Wall XLPE Primary Cable	ORANGE	655.0	-	-	-
1	-	-	EY71BE	3510318 R1	1.16	16.0	Thin Wall XLPE Primary Cable	ORANGE	655.0	-	-	-
1	-	-	BK71BA	3510318 R1	1.16	16.0	Thin Wall XLPE Primary Cable	ORANGE	655.0	-	-	-
2	-	-	AA56AB	3510318 R1	1.16	16.0	Thin Wall XLPE Primary Cable	ORANGE	619.0	-	-	-
3	-	-	AA57CA	3510318 R1	1.16	16.0	Thin Wall XLPE Primary Cable	ORANGE	624.0	-	-	-

Name	Terminal Part Number	V-Min	Name	Wire Part Number	Wire CSA	Wire Spec	Wire Material description	Wire Color Description	Wire Length	End2 Terminal Part Number	End2 Pin Name	End2 Connector
4	-	-	AA68A	3510305 R1	0.79	18.0	Thin Wall XLPE Primary Cable	BROWN	1325.0	-	-	-
5	-	-	BM56T	3510320 R1	3.01	12.0	Thin Wall XLPE Primary Cable	ORANGE	640.0	-	B	J1-1603
6	-	-	BM57T	3510320 R1	3.01	12.0	Thin Wall XLPE Primary Cable	ORANGE	640.0	-	A	J1-1603
7	-	-	BM58TC	3510308 R1	3.01	12.0	Thin Wall XLPE Primary Cable	BROWN	690.0	-	F	J2-1604
8	-	-	BM68T	3510308 R1	3.01	12.0	Thin Wall XLPE Primary Cable	BROWN	690.0	-	D	J2-1604
9	-	-	BM70T	3510320 R1	3.01	12.0	Thin Wall XLPE Primary Cable	ORANGE	1980.0	-	R1-87	1011
10	-	-	HG94T	3510314 R1	3.01	12.0	Thin Wall XLPE Primary Cable	GREY	1755.0	-	X	-
10	-	-	FR94T	3510314 R1	3.01	12.0	Thin Wall XLPE Primary Cable	GREY	1970.0	-	X	-

Name	Terminal Part Number	V-Min	Name	Wire Part Number	Wire CSA	Wire Spec	Wire Material description	Wire Color Description	Wire Length	End2 Terminal Part Number	End2 Pin Name	End2 Connector
10	-	-	ER94T	3510314 R1	3.01	12.0	Thin Wall XLPE Primary Cable	GREY	2070.0	-	R1-87	1012
10	-	-	FB94U	3510314 R1	3.01	12.0	Thin Wall XLPE Primary Cable	GREY	1745.0	-	X	-
11	-	-	CC72A	3510320 R1	3.01	12.0	Thin Wall XLPE Primary Cable	ORANGE	2070.0	-	R4-87	1012
12	-	-	YD67TA	3510323 R1	0.79	18.0	Thin Wall XLPE Primary Cable	PINK	2155.0	-	-	-
13	-	-	XG94SJ	3510311 R1	0.79	18.0	Thin Wall XLPE Primary Cable	GREY	2405.0	-	13	A01-1422
13	-	-	XZ94SJ	3510311 R1	0.79	18.0	Thin Wall XLPE Primary Cable	GREY	2345.0	-	5	A01-1402
14	-	-	XX94BM	3510311 R1	0.79	18.0	Thin Wall XLPE Primary Cable	GREY	2375.0	-	5	A01-1400
14	-	-	GT94BM	3510311 R1	0.79	18.0	Thin Wall XLPE Primary Cable	GREY	2445.0	-	16	A01-1421

Name	Terminal Part Number	V-Min	Name	Wire Part Number	Wire CSA	Wire Spec	Wire Material description	Wire Color Description	Wire Length	End2 Terminal Part Number	End2 Pin Name	End2 Connector
15	-	-	XX94BN	3510311 R1	0.79	18.0	Thin Wall XLPE Primary Cable	GREY	2375.0	-	4	A01-1400
15	-	-	GT94BN	3510311 R1	0.79	18.0	Thin Wall XLPE Primary Cable	GREY	2445.0	-	7	A01-1421
16	-	-	GS94BE	3510311 R1	0.79	18.0	Thin Wall XLPE Primary Cable	GREY	2445.0	-	14	A01-1421
16	-	-	XY94BE	3510312 R1	1.16	16.0	Thin Wall XLPE Primary Cable	GREY	2405.0	-	15	A01-1401
16	-	-	3A94BE	3510311 R1	0.79	18.0	Thin Wall XLPE Primary Cable	GREY	2445.0	-	11	A01-1421
17	-	-	GS94BD	3510311 R1	0.79	18.0	Thin Wall XLPE Primary Cable	GREY	2445.0	-	11	A01-1421
17	-	-	XY94BD	3510312 R1	1.16	16.0	Thin Wall XLPE Primary Cable	GREY	2405.0	-	18	A01-1401
17	-	-	3A94BD	3510311 R1	0.79	18.0	Thin Wall XLPE Primary Cable	GREY	2445.0	-	14	A01-1421

Name	Terminal Part Number	V-Min	Name	Wire Part Number	Wire CSA	Wire Spec	Wire Material description	Wire Color Description	Wire Length	End2 Terminal Part Number	End2 Pin Name	End2 Connector
18	-	-	GS94BH	3510311 R1	0.79	18.0	Thin Wall XLPE Primary Cable	GREY	2445.0	-	17	A01-1421
18	-	-	XY94BH	3510312 R1	1.16	16.0	Thin Wall XLPE Primary Cable	GREY	2375.0	-	10	A01-1400
18	-	-	3A94BH	3510311 R1	0.79	18.0	Thin Wall XLPE Primary Cable	GREY	2445.0	-	17	A01-1421
19	-	-	GS94BF	3510311 R1	0.79	18.0	Thin Wall XLPE Primary Cable	GREY	2445.0	-	18	A01-1421
19	-	-	XY94BF	3510312 R1	1.16	16.0	Thin Wall XLPE Primary Cable	GREY	2375.0	-	11	A01-1400
19	-	-	3A94BF	3510311 R1	0.79	18.0	Thin Wall XLPE Primary Cable	GREY	2445.0	-	18	A01-1421
20	-	-	GS94BL	3510313 R1	1.91	14.0	Thin Wall XLPE Primary Cable	GREY	2445.0	-	8	A01-1421
20	-	-	XY94BL	3510311 R1	0.79	18.0	Thin Wall XLPE Primary Cable	GREY	2405.0	-	10	A01-1401

Name	Terminal Part Number	V-Min	Name	Wire Part Number	Wire CSA	Wire Spec	Wire Material description	Wire Color Description	Wire Length	End2 Terminal Part Number	End2 Pin Name	End2 Connector
20	-	-	3A94BL	3510313 R1	1.91	14.0	Thin Wall XLPE Primary Cable	GREY	2445.0	-	8	A01-1421
21	-	-	GS94BJ	3510313 R1	1.91	14.0	Thin Wall XLPE Primary Cable	GREY	2445.0	-	9	A01-1421
21	-	-	XY94BJ	3510311 R1	0.79	18.0	Thin Wall XLPE Primary Cable	GREY	2405.0	-	13	A01-1401
21	-	-	3A94BJ	3510313 R1	1.91	14.0	Thin Wall XLPE Primary Cable	GREY	2445.0	-	9	A01-1421
22	-	-	GS94BK	3510311 R1	0.79	18.0	Thin Wall XLPE Primary Cable	GREY	1835.0	-	X	-
22	-	-	XY94BK	3510311 R1	0.79	18.0	Thin Wall XLPE Primary Cable	GREY	2405.0	-	9	A01-1401
22	-	-	3A94BK	3510311 R1	0.79	18.0	Thin Wall XLPE Primary Cable	GREY	1835.0	-	X	-
23	-	-	GS94BA	3510311 R1	0.79	18.0	Thin Wall XLPE Primary Cable	GREY	2445.0	-	5	A01-1421

Name	Terminal Part Number	V-Min	Name	Wire Part Number	Wire CSA	Wire Spec	Wire Material description	Wire Color Description	Wire Length	End2 Terminal Part Number	End2 Pin Name	End2 Connector
23	-	-	XY94BA	3510311 R1	0.79	18.0	Thin Wall XLPE Primary Cable	GREY	2405.0	-	17	A01-1401
23	-	-	3A94BA	3510311 R1	0.79	18.0	Thin Wall XLPE Primary Cable	GREY	2445.0	-	5	A01-1421
24	-	-	GS94BB	3510311 R1	0.79	18.0	Thin Wall XLPE Primary Cable	GREY	1835.0	-	X	-
24	-	-	XY94BB	3510311 R1	0.79	18.0	Thin Wall XLPE Primary Cable	GREY	2405.0	-	12	A01-1401
24	-	-	3A94BB	3510311 R1	0.79	18.0	Thin Wall XLPE Primary Cable	GREY	1835.0	-	X	-
25	-	-	GS94BC	3510311 R1	0.79	18.0	Thin Wall XLPE Primary Cable	GREY	2445.0	-	2	A01-1421
25	-	-	XY94BC	3510311 R1	0.79	18.0	Thin Wall XLPE Primary Cable	GREY	2405.0	-	16	A01-1401
25	-	-	3A94BC	3510311 R1	0.79	18.0	Thin Wall XLPE Primary Cable	GREY	2445.0	-	2	A01-1421

Name	Terminal Part Number	V-Min	Name	Wire Part Number	Wire CSA	Wire Spec	Wire Material description	Wire Color Description	Wire Length	End2 Terminal Part Number	End2 Pin Name	End2 Connector
26	-	-	JL116L	3510310 R1	0.53	20.0	Thin Wall XLPE Primary Cable	GREY	2070.0	-	R6-86	1012
27	-	-	AA36B	3510329 R1	0.79	18.0	Thin Wall XLPE Primary Cable	TAN	1035.0	-	B8	J3-1600
28	-	-	AA9BC	3510311 R1	0.79	18.0	Thin Wall XLPE Primary Cable	GREY	1020.0	-	X	-
29	-	-	JL116M	3510311 R1	0.79	18.0	Thin Wall XLPE Primary Cable	GREY	2155.0	-	-	-
30	-	-	RT39A	3510312 R1	1.16	16.0	Thin Wall XLPE Primary Cable	GREY	2155.0	-	-	-
30	-	-	JL116U	3510310 R1	0.53	20.0	Thin Wall XLPE Primary Cable	GREY	2070.0	-	R3-86	1012
31	-	-	RT39	3510312 R1	1.16	16.0	Thin Wall XLPE Primary Cable	GREY	2155.0	-	-	-
32	-	-	AA59A	3510311 R1	0.79	18.0	Thin Wall XLPE Primary Cable	GREY	1055.0	-	E12	J5-1602

Name	Terminal Part Number	V-Min	Name	Wire Part Number	Wire CSA	Wire Spec	Wire Material description	Wire Color Description	Wire Length	End2 Terminal Part Number	End2 Pin Name	End2 Connector
33	-	-	AA59B	3510311 R1	0.79	18.0	Thin Wall XLPE Primary Cable	GREY	680.0	-	F10	J4-1601
34	-	-	AA59C	3510311 R1	0.79	18.0	Thin Wall XLPE Primary Cable	GREY	680.0	-	E12	J4-1601
35	-	-	RL59D	3510311 R1	0.79	18.0	Thin Wall XLPE Primary Cable	GREY	680.0	-	F8	J4-1601
36	-	-	RL59E	3510311 R1	0.79	18.0	Thin Wall XLPE Primary Cable	GREY	680.0	-	E13	J4-1601
37	-	-	AA59F	3510311 R1	0.79	18.0	Thin Wall XLPE Primary Cable	GREY	680.0	-	F4	J4-1601
38	-	-	AA59H	3510311 R1	0.79	18.0	Thin Wall XLPE Primary Cable	GREY	680.0	-	E9	J4-1601
39	-	-	AA59J	3510311 R1	0.79	18.0	Thin Wall XLPE Primary Cable	GREY	680.0	-	F5	J4-1601
40	-	-	FF61B	3510311 R1	0.79	18.0	Thin Wall XLPE Primary Cable	GREY	1055.0	-	F7	J5-1602

Name	Terminal Part Number	V-Min	Name	Wire Part Number	Wire CSA	Wire Spec	Wire Material description	Wire Color Description	Wire Length	End2 Terminal Part Number	End2 Pin Name	End2 Connector
41	-	-	FF106	3510311 R1	0.79	18.0	Thin Wall XLPE Primary Cable	GREY	1055.0	-	E8	J5-1602
42	-	-	FF109	3510311 R1	0.79	18.0	Thin Wall XLPE Primary Cable	GREY	1265.0	-	-	-
43	-	-	DN32A	3510329 R1	0.79	18.0	Thin Wall XLPE Primary Cable	TAN	1035.0	-	B11	J3-1600
43	-	-	DP32A	3510317 R1	0.79	18.0	Thin Wall XLPE Primary Cable	ORANGE	1035.0	-	B11	J3-1600
44	-	-	DP32	3510317 R1	0.79	18.0	Thin Wall XLPE Primary Cable	ORANGE	1035.0	-	B10	J3-1600
45	-	-	CY49	3510311 R1	0.79	18.0	Thin Wall XLPE Primary Cable	GREY	740.0	-	A3	J7-1607
46	-	-	XD94SNA	3510311 R1	0.79	18.0	Thin Wall XLPE Primary Cable	GREY	1265.0	-	-	-
46	-	-	XZ94SAB	3510311 R1	0.79	18.0	Thin Wall XLPE Primary Cable	GREY	1265.0	-	-	-

Name	Terminal Part Number	V-Min	Name	Wire Part Number	Wire CSA	Wire Spec	Wire Material description	Wire Color Description	Wire Length	End2 Terminal Part Number	End2 Pin Name	End2 Connector
47	-	-	XD94SPA	3510311 R1	0.79	18.0	Thin Wall XLPE Primary Cable	GREY	1265.0	-	-	-
47	-	-	XZ94SBB	3510311 R1	0.79	18.0	Thin Wall XLPE Primary Cable	GREY	1265.0	-	-	-
50	-	-	CZ49A	3510311 R1	0.79	18.0	Thin Wall XLPE Primary Cable	GREY	740.0	-	A4	J7-1607
51	-	-	BU65AB	3510318 R1	1.16	16.0	Thin Wall XLPE Primary Cable	ORANGE	105.0	-	X	-
51	-	-	BW65AB	3510318 R1	1.16	16.0	Thin Wall XLPE Primary Cable	ORANGE	105.0	-	X	-
52	-	-	3A94BX	3510311 R1	0.79	18.0	Thin Wall XLPE Primary Cable	GREY	2405.0	-	6	A01-1422
52	-	-	PJ94BMM	3510312 R1	1.16	16.0	Thin Wall XLPE Primary Cable	GREY	2345.0	-	7	A01-1402
53	-	-	3A94BZ	3510311 R1	0.79	18.0	Thin Wall XLPE Primary Cable	GREY	505.0	-	X	-

Name	Terminal Part Number	V-Min	Name	Wire Part Number	Wire CSA	Wire Spec	Wire Material description	Wire Color Description	Wire Length	End2 Terminal Part Number	End2 Pin Name	End2 Connector
53	-	-	PJ94BNN	3510312 R1	1.16	16.0	Thin Wall XLPE Primary Cable	GREY	2345.0	-	6	A01-1402
54	-	-	3A94BP	3510311 R1	0.79	18.0	Thin Wall XLPE Primary Cable	GREY	2405.0	-	3	A01-1422
54	-	-	PJ94BP	3510312 R1	1.16	16.0	Thin Wall XLPE Primary Cable	GREY	2345.0	-	4	A01-1402
55	-	-	3A94BQ	3510311 R1	0.79	18.0	Thin Wall XLPE Primary Cable	GREY	2405.0	-	5	A01-1422
55	-	-	PJ94BQ	3510312 R1	1.16	16.0	Thin Wall XLPE Primary Cable	GREY	2345.0	-	14	A01-1402
56	-	-	3A94BR	3510311 R1	0.79	18.0	Thin Wall XLPE Primary Cable	GREY	2405.0	-	2	A01-1422
56	-	-	PJ94BR	3510312 R1	1.16	16.0	Thin Wall XLPE Primary Cable	GREY	2345.0	-	11	A01-1402
57	-	-	3A94BS	3510311 R1	0.79	18.0	Thin Wall XLPE Primary Cable	GREY	2405.0	-	15	A01-1422

Name	Terminal Part Number	V-Min	Name	Wire Part Number	Wire CSA	Wire Spec	Wire Material description	Wire Color Description	Wire Length	End2 Terminal Part Number	End2 Pin Name	End2 Connector
57	-	-	PJ94BS	2643680 R1	1.16	16.0	Std. Wall XLPE Primary Cable	GREY	2345.0	-	13	A01-1402
58	-	-	3A94BT	3510311 R1	0.79	18.0	Thin Wall XLPE Primary Cable	GREY	505.0	-	X	-
58	-	-	PJ94BT	2643680 R1	1.16	16.0	Std. Wall XLPE Primary Cable	GREY	2345.0	-	9	A01-1402
59	-	-	3A94BU	3510311 R1	0.79	18.0	Thin Wall XLPE Primary Cable	GREY	2405.0	-	12	A01-1422
59	-	-	PJ94BU	2643680 R1	1.16	16.0	Std. Wall XLPE Primary Cable	GREY	2345.0	-	10	A01-1402
60	-	-	3A94BV	3510311 R1	0.79	18.0	Thin Wall XLPE Primary Cable	GREY	2405.0	-	14	A01-1422
60	-	-	PJ94BV	3510312 R1	1.16	16.0	Thin Wall XLPE Primary Cable	GREY	2345.0	-	15	A01-1402
61	-	-	3F94AA	3510311 R1	0.79	18.0	Thin Wall XLPE Primary Cable	GREY	2375.0	-	2	A01-1400

Name	Terminal Part Number	V-Min	Name	Wire Part Number	Wire CSA	Wire Spec	Wire Material description	Wire Color Description	Wire Length	End2 Terminal Part Number	End2 Pin Name	End2 Connector
62	-	-	3F13AA	3510323 R1	0.79	18.0	Thin Wall XLPE Primary Cable	PINK	2175.0	-	-	-
63	-	-	XD94SL	3510311 R1	0.79	18.0	Thin Wall XLPE Primary Cable	GREY	2375.0	-	16	A01-1423
63	-	-	XZ94SZC	3510312 R1	1.16	16.0	Thin Wall XLPE Primary Cable	GREY	2290.0	-	X	-
64	-	-	3A94BW	3510311 R1	0.79	18.0	Thin Wall XLPE Primary Cable	GREY	2405.0	-	11	A01-1422
64	-	-	PJ94BW	3510312 R1	1.16	16.0	Thin Wall XLPE Primary Cable	GREY	2345.0	-	12	A01-1402
65	-	-	ZA94HA	3510311 R1	0.79	18.0	Thin Wall XLPE Primary Cable	GREY	2345.0	-	2	A01-1402
65	-	-	ZB94HA	3510311 R1	0.79	18.0	Thin Wall XLPE Primary Cable	GREY	2345.0	-	2	A01-1402
66	-	-	ZA94SKB	3510311 R1	0.79	18.0	Thin Wall XLPE Primary Cable	GREY	135.0	-	X	-

Name	Terminal Part Number	V-Min	Name	Wire Part Number	Wire CSA	Wire Spec	Wire Material description	Wire Color Description	Wire Length	End2 Terminal Part Number	End2 Pin Name	End2 Connector
66	-	-	ZB94SK	3510311 R1	0.79	18.0	Thin Wall XLPE Primary Cable	GREY	2345.0	-	3	A01-1402
67	-	-	XG94SK	3510311 R1	0.79	18.0	Thin Wall XLPE Primary Cable	GREY	2405.0	-	8	A01-1422
67	-	-	ZC94SK	3510311 R1	0.79	18.0	Thin Wall XLPE Primary Cable	GREY	2345.0	-	3	A01-1402
67	-	-	ZA94SKA	3510311 R1	0.79	18.0	Thin Wall XLPE Primary Cable	GREY	135.0	-	X	-
68	-	-	BW65AA	3510317 R1	0.79	18.0	Thin Wall XLPE Primary Cable	ORANGE	105.0	-	X	-
68	-	-	BX65AA	3510317 R1	0.79	18.0	Thin Wall XLPE Primary Cable	ORANGE	105.0	-	X	-
68	-	-	BS65	3510317 R1	0.79	18.0	Thin Wall XLPE Primary Cable	ORANGE	640.0	-	G	J1-1603
69	-	-	YD67U	2643673 R1	0.79	18.0	Std. Wall XLPE Primary Cable	GREY	2280.0	-	3	A01-1942

Name	Terminal Part Number	V-Min	Name	Wire Part Number	Wire CSA	Wire Spec	Wire Material description	Wire Color Description	Wire Length	End2 Terminal Part Number	End2 Pin Name	End2 Connector
70	-	-	YD67W	2643673 R1	0.79	18.0	Std. Wall XLPE Primary Cable	GREY	2280.0	-	2	A01-1942
71	-	-	YD67V	2643673 R1	0.79	18.0	Std. Wall XLPE Primary Cable	GREY	2280.0	-	1	A01-1942
72	-	-	XZ94SM	3510311 R1	0.79	18.0	Thin Wall XLPE Primary Cable	GREY	2480.0	-	9	A01-1403
73	-	-	XZ94SN	3510311 R1	0.79	18.0	Thin Wall XLPE Primary Cable	GREY	2480.0	-	12	A01-1403
74	-	-	XZ94SL	3510311 R1	0.79	18.0	Thin Wall XLPE Primary Cable	GREY	2480.0	-	6	A01-1403
75	-	-	XD94SM	3510311 R1	0.79	18.0	Thin Wall XLPE Primary Cable	GREY	2375.0	-	13	A01-1423
75	-	-	XZ94SVC	3510312 R1	1.16	16.0	Thin Wall XLPE Primary Cable	GREY	2260.0	-	X	-
76	-	-	XZ94SH	3510312 R1	1.16	16.0	Thin Wall XLPE Primary Cable	GREY	2480.0	-	3	A01-1403

Connector Name	1702
Part Number	3595620C1
Instances	Powertrain J1939 (500Kbps) Allison 3K Transmission A26:Powertrain J1939 (500Kbps) Allison 3K A26
Mates	1702

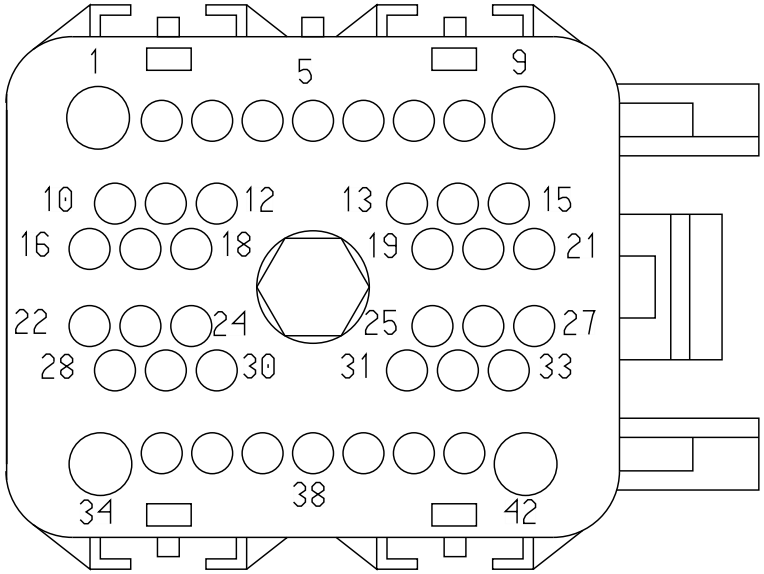

Name	Terminal Part Number	V-Min	Name	Wire Part Number	Wire CSA	Wire Spec	Wire Material description	Wire Color Description	Wire Length	End2 Terminal Part Number	End2 Pin Name	End2 Connect or
11	-	-	WIRE233863	-	0.0	-	-	-	0.0	-	PIN1	-
17	-	-	WIRE233865	-	0.0	-	-	-	0.0	-	PIN1	-

Connector Name	1702
Part Number	3595620C1
Instances	Powertrain J1939 (500Kbps) Eaton Ultrashift+ Transmission A26:Powertrain J1939 (500Kbps) Eaton Ultrashift+ Transmission A26
Mates	1702

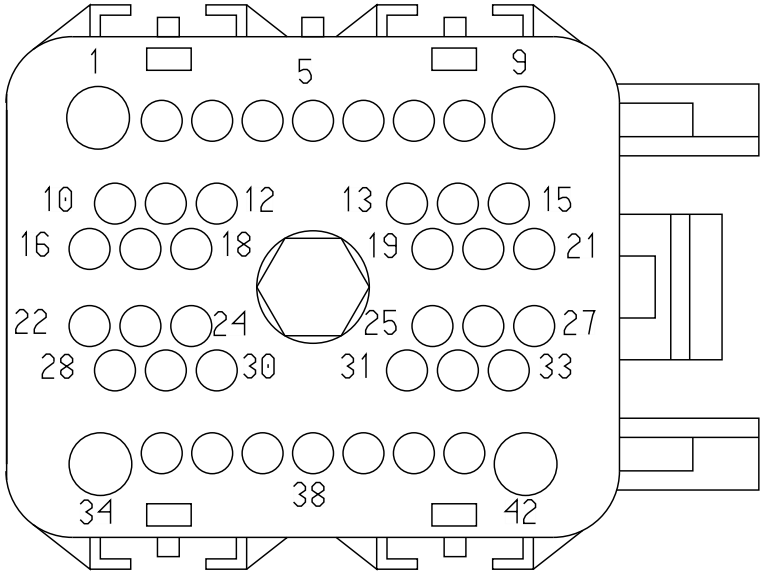

Name	Terminal Part Number	V-Min	Name	Wire Part Number	Wire CSA	Wire Spec	Wire Material description	Wire Color Description	Wire Length	End2 Terminal Part Number	End2 Pin Name	End2 Connect or
11	-	-	WIRE489200	-	0.0	-	-	-	0.0	-	PIN1	-
17	-	-	WIRE489201	-	0.0	-	-	-	0.0	-	PIN1	-

Connector Name	1702
Part Number	3595620C1
Instances	Powertrain J1939 (500Kbps) Edurant Transmission A26:Powertrain J1939 (500Kbps) Edurant Transmission A26
Mates	1702

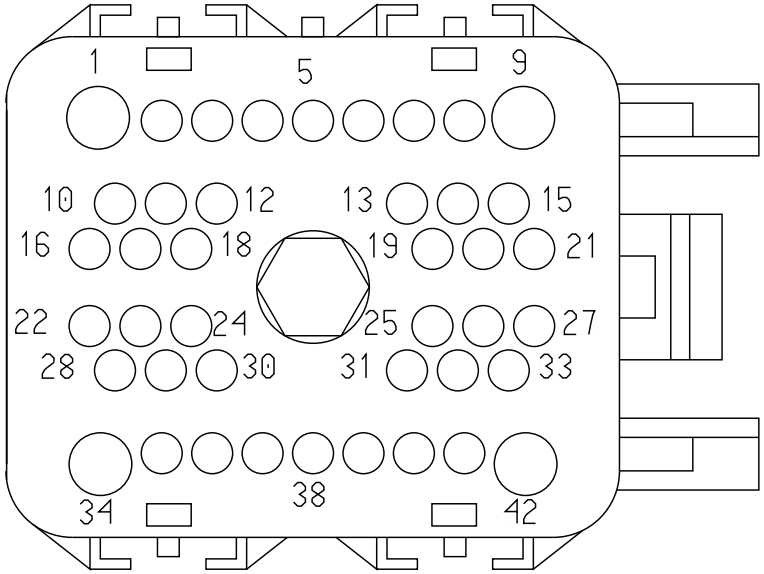

Name	Terminal Part Number	V-Min	Name	Wire Part Number	Wire CSA	Wire Spec	Wire Material description	Wire Color Description	Wire Length	End2 Terminal Part Number	End2 Pin Name	End2 Connect or
11	-	-	KG5AD (+)	-	0.0	-	-	-	0.0	-	PIN1	-
17	-	-	KG5AD (-)	-	0.0	-	-	-	0.0	-	PIN1	-

Connector Name 1702

Part Number 3595620C1

Instances Powertrain J1939 (500Kbps) Manual Transmission
A26:Powertrain Standard J1939 (500Kbps) A26 Engine

Mates 1702

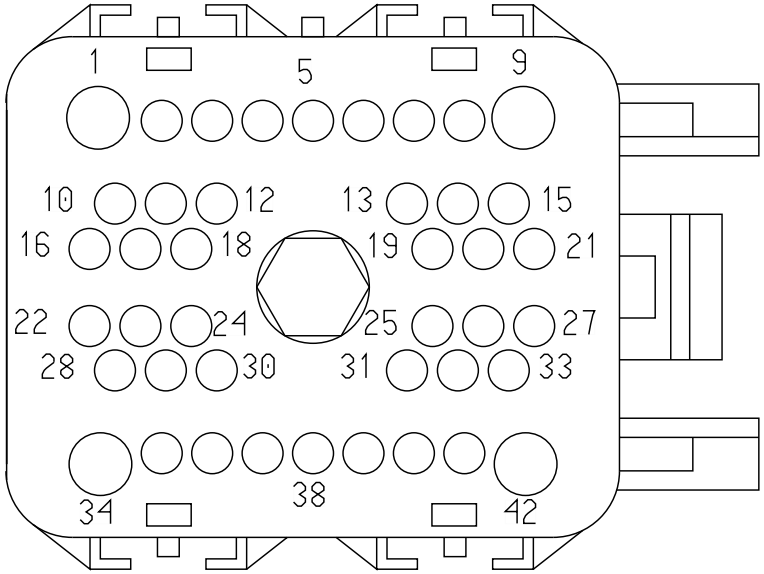

Name	Terminal Part Number	V-Min	Name	Wire Part Number	Wire CSA	Wire Spec	Wire Material description	Wire Color Description	Wire Length	End2 Terminal Part Number	End2 Pin Name	End2 Connect or
11	-	-	WIRE489702	-	0.0	-	-	-	0.0	-	PIN1	-
17	-	-	WIRE489703	-	0.0	-	-	-	0.0	-	PIN1	-

Connector Name	1702
Part Number	3595620C1
Instances	Powertrain J1939 (500Kbps) TC10 Transmission A26:Powertrain J1939 (500Kbps) TC10 Transmission A26
Mates	1702

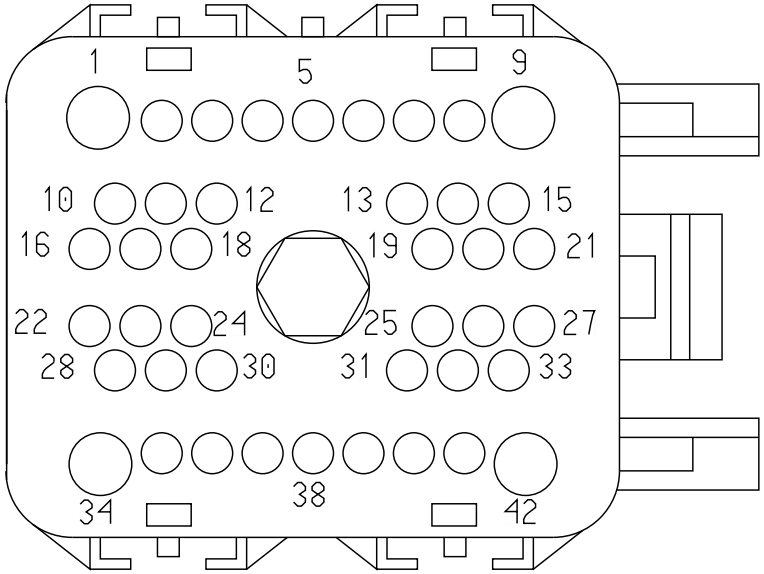

Name	Terminal Part Number	V-Min	Name	Wire Part Number	Wire CSA	Wire Spec	Wire Material description	Wire Color Description	Wire Length	End2 Terminal Part Number	End2 Pin Name	End2 Connect or
11	-	-	XZ5C106	-	0.0	-	-	-	0.0	-	PIN1	-
17	-	-	XZ5C117	-	0.0	-	-	-	0.0	-	PIN1	-

Connector Name	1702
Part Number	3595620C1
Instances	Powertrain J1939 (500Kbps) Eaton Ultrashift+ Transmission X15:Powertrain J1939 (500kbps) Eaton Ultrashift+ X15
Mates	1702

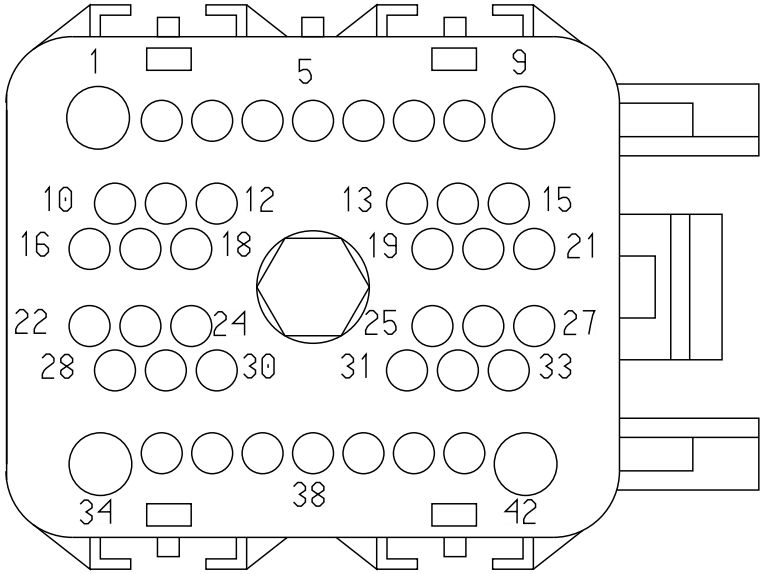

Name	Terminal Part Number	V-Min	Name	Wire Part Number	Wire CSA	Wire Spec	Wire Material description	Wire Color Description	Wire Length	End2 Terminal Part Number	End2 Pin Name	End2 Connect or
11	-	-	WIRE233823	-	0.0	-	-	-	0.0	-	PIN1	-
17	-	-	WIRE233824	-	0.0	-	-	-	0.0	-	PIN1	-

Connector Name	1702
Part Number	3595620C1
Instances	Powertrain J1939 (500Kbps) Edurant Transmission X15:Powertrain J1939 (500kbps) Endurant Transmission X15
Mates	1702

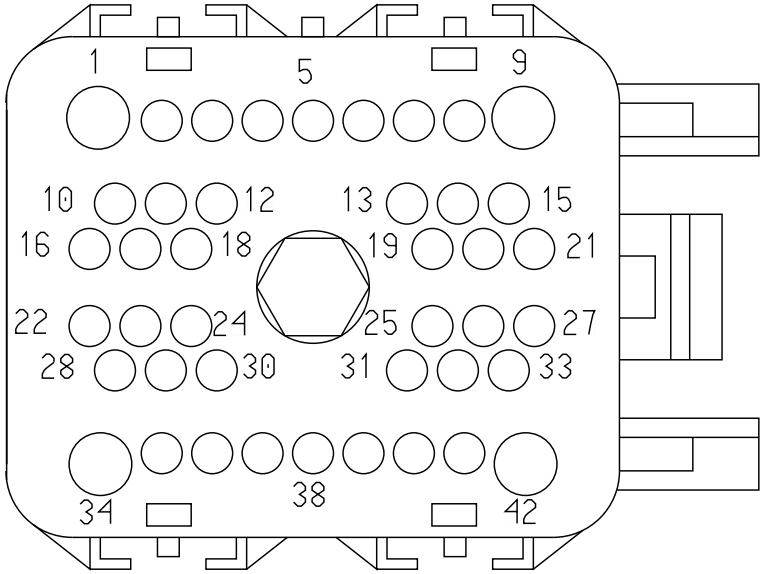

Name	Terminal Part Number	V-Min	Name	Wire Part Number	Wire CSA	Wire Spec	Wire Material description	Wire Color Description	Wire Length	End2 Terminal Part Number	End2 Pin Name	End2 Connect or
11	-	-	WIRE233848	-	0.0	-	-	-	0.0	-	PIN1	-
17	-	-	WIRE233849	-	0.0	-	-	-	0.0	-	PIN1	-

Connector Name	1702
Part Number	3595620C1
Instances	Powertrain J1939 (500Kbps) Manual Transmission X15:Powertrain Standard J1939 (500kbps) Manual Transmission X15
Mates	1702

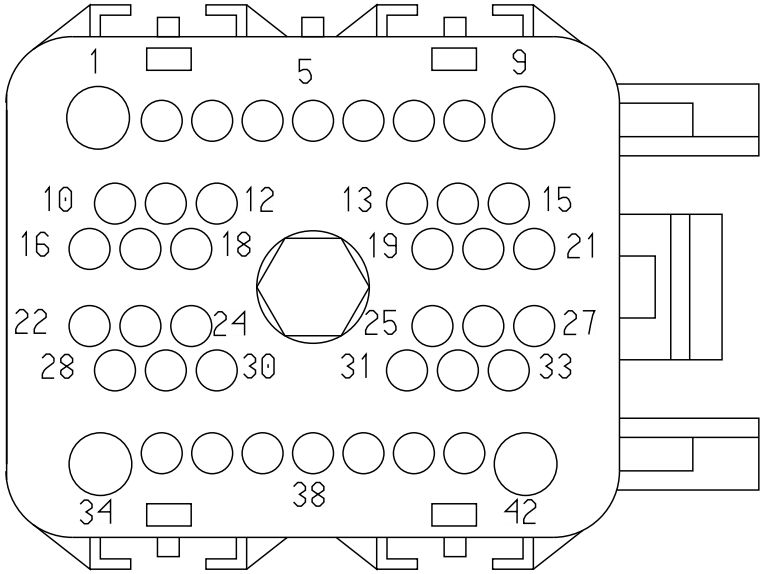

Name	Terminal Part Number	V-Min	Name	Wire Part Number	Wire CSA	Wire Spec	Wire Material description	Wire Color Description	Wire Length	End2 Terminal Part Number	End2 Pin Name	End2 Connect or
11	-	-	WIRE233842	-	0.0	-	-	-	0.0	-	PIN1	-
17	-	-	WIRE233840	-	0.0	-	-	-	0.0	-	PIN1	-

Connector Name 1702

Part Number 3595620C1

Instances Powertrain J1939 (500Kbps) TC10 Transmission X15:Powertrain J1939 (500kbps) TC10 Transmission X15

Mates 1702

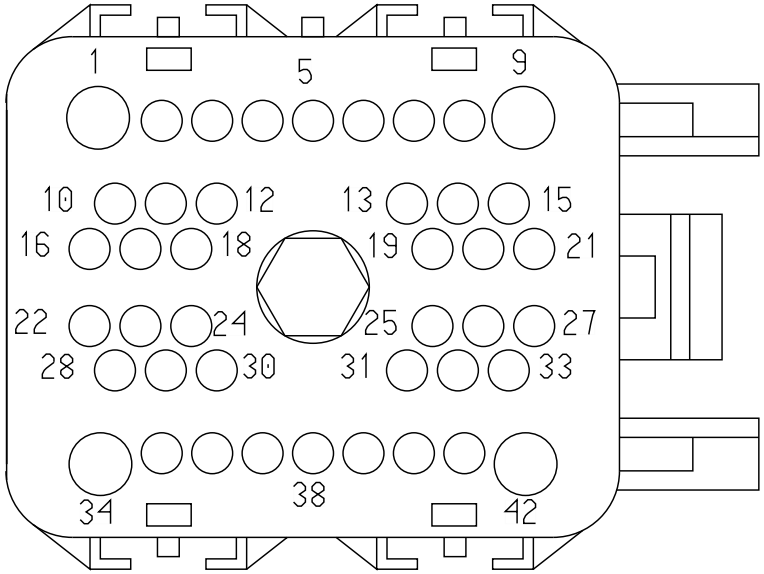

Name	Terminal Part Number	V-Min	Name	Wire Part Number	Wire CSA	Wire Spec	Wire Material description	Wire Color Description	Wire Length	End2 Terminal Part Number	End2 Pin Name	End2 Connect or
11	-	-	WIRE233885	-	0.0	-	-	-	0.0	-	PIN1	-
17	-	-	WIRE233887	-	0.0	-	-	-	0.0	-	PIN1	-

Connector Name	1702
Part Number	3595620C1
Short Description	IP HARNESS CONNECTOR
Instances	LoneStar - X15 - Body Builder Lighting - (BOC EOF In Cab) (8HAB 8HAE 8HAU) (Manual):Diagram1 LoneStar - X15 - Body Builder Lighting - (BOC EOF In Cab) (8HAB 8HAE 8HAU) (Manual):Diagram2 LT/RH X15 - Backup Light (Dual Reverse Light) Allison-TC10:Diagram1 LT/RH X15 - Backup Light (Dual Reverse Light) Allison-TC10:Diagram2 LT/RH X15 - Backup Light (Dual Reverse LT) Procosion/ Endurant:Diagram1 LT/RH X15 - Backup Light (Dual Reverse LT) Procosion/ Endurant:Diagram2 LT/RH X15 - Backup Light (Reverse Light) Allison TC10:Diagram1 LT/RH X15 - Backup Light (Reverse Light) Allison TC10:Diagram2 LT/RH X15 - Backup Light (Single Reverse Light) Allison TC10:Diagram1 LT/RH X15 - Backup Light (Single Reverse Light) Allison TC10:Diagram2 LT/RH X15 - Backup Light (Single Reverse Light) Endurant:Diagram1 LT/RH X15 - Backup Light (Single Reverse Light) Endurant:Diagram2 LT/RH X15 - Backup Lights (Dual Reverse Light) Eaton/Manual Trans:Diagram1 LT/RH X15 - Backup Lights (Dual Reverse Light) Eaton/Manual Trans:Diagram2 LT/RH X15 - Backup Lights (Reverse Light) Eaton/Manual Trans:Diagram1 LT/RH X15 - Backup Lights (Reverse Light) Eaton/Manual Trans:Diagram2 LT/RH X15 - Backup Lights (Reverse Lights) Eaton/Manual Trans:Diagram1 LT/RH X15 - Backup Lights (Reverse Lights) Eaton/Manual Trans:Diagram2 LT/RH X15 - Backup Lights (Single Reverse Light) Eaton/Manual Trans:Diagram1 LT/RH X15 - Backup Lights (Single Reverse Light) Eaton/Manual Trans:Diagram2

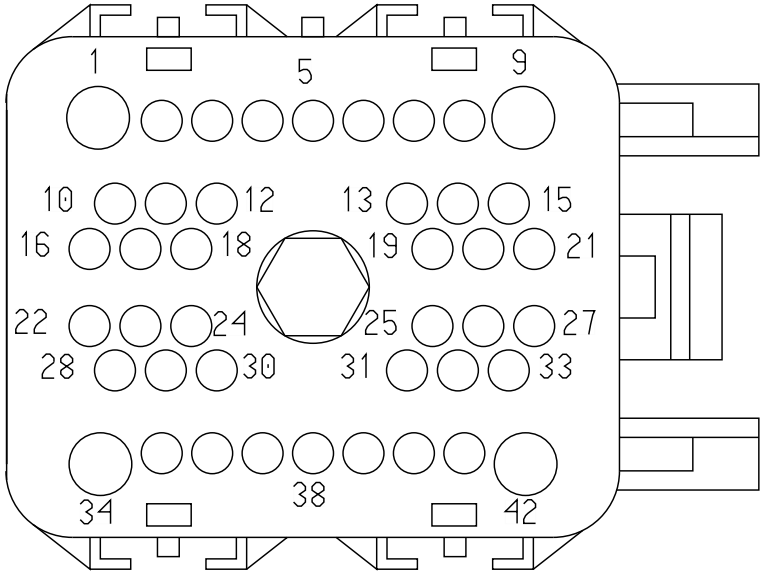

LT/RH - A26 - Air Flow Restriction Monitoring A26:Diagram1
LT/RH - A26 - Air Flow Restriction Monitoring A26:Diagram2
LT/RH - A26 - Auto Neutral (Allison with Multiplex Switch and Confirmation Telltale):Diagram1
LT/RH - A26 - Body Builder Lighting - (BOC EOF In Cab) (8HAB 8HAE 8HAU) (Manual):Diagram1
LT/RH - A26 - Body Builder Lighting - (BOC EOF In Cab) (8HAB 8HAE 8HAU) (Manual):Diagram2
LT/RH - A26 - Body Builder Lighting - (BOC EOF In Cab) (8HAB 8HAE 8HAU) (Manual):Diagram3
LT/RH - A26 - Body Builder Lighting - (BOC EOF In Cab) (8HAB 8HAE 8HAU) (Manual):Diagram4
LT/RH - A26 - Cranking (Starter) GEN4 BCM W/ Thermal Overcrank - External Switch:Diagram1
LT/RH - A26 - Cranking (Starter) GEN4 BCM W/O Thermal Overcrank Wiring:Diagram1
LT/RH - A26 - Starter Interlock (BCM HSD controlled W/ Clutch Switch W/ Auto Start Stop):Diagram1
LT/RH - A26 - Starter Interlock (BCM HSD controlled W/ Clutch Switch W/ Auto Start Stop):Diagram2
LT/RH - A26 - Starter Interlock (BCM LSD Controlled w/ Relay)_EATON XMSN:Diagram1
LT/RH - A26 - Starter Interlocks (Service Brake Interlock):Diagram1
LT/RH - A26 - Starter Interlocks A26 3K:Diagram1
LT/RH - A26 - Starter Interlocks A26 TC10:Diagram1
LT/RH - A26 - Transmission Oil Temperature-Manual Trans-Horizon Option 1:Diagram1
LT/RH - A26 - Transmission Oil Temperature-Manual Trans-Horizon Option 1:Diagram2
LT/RH - A26 - Transmission Oil Temperature-Manual Trans-Horizon Option 1:Diagram3
LT/RH - A26 - Transmission Oil Temperature-Manual Trans-Horizon Option 2:Diagram1
LT/RH - A26 - Transmission Oil Temperature-Manual Trans-Horizon Option 2:Diagram2
LT/RH - A26 - Transmission Oil Temperature-Manual Trans-Horizon Option 2:Diagram3
LT/RH - A26 - Transmission Power Take Off Dual PTO with Clutch Interlock:Diagram1
LT/RH - A26 - Transmission Power Take Off Dual Solenoid AUTO:Diagram1
LT/RH - A26 - Transmission Power Take Off Option 1:Diagram1
LT/RH - A26 - Transmission Power Take Off Option 2:Diagram1

LT/RH - A26 - Transmission Power Take Off W/ Clutch Interlock:Diagram1
LT/RH - A26 - Transmission Shifter (Eaton Endurant and Eaton Procision):Diagram1
LT/RH - A26 - Transmission Shifter (Universal Shifter - Ultrashift + & FAS):Diagram1
LT/RH - A26 - Work Lights (2 Blunt Cuts Only W/O Relay) W/ Backup W/Manual Trans Day Cab:Diagram1
LT/RH - A26 - Work Lights (2 Blunt Cuts Only W/O Relay) W/ Backup W/Manual Trans Day Cab:Diagram2
LT/RH - A26 - Work Lights (2 Blunt Cuts Only W/O Relay) W/ Backup W/Manual Trans Day Cab:Diagram3
LT/RH - A26 - Work Lights (2 Blunt Cuts Only W/O Relay) W/ Backup W/Manual Trans Day Cab:Diagram4
LT/RH - A26 - Work Lights - LED W/ Sw Pack - Customer Supplied - Sleeper W/ RKE W/MAN REV:Diagram1
LT/RH - A26 - Work Lights - LED W/ Sw Pack - Customer Supplied - Sleeper W/ RKE W/MAN REV:Diagram2
LT/RH - A26 - Work Lights - LED W/ Sw Pack - Customer Supplied - Sleeper W/ RKE W/MAN REV:Diagram3
LT/RH - A26 - Work Lights - LED W/ Sw Pack - Customer Supplied - Sleeper W/ RKE W/MAN REV:Diagram4
LT/RH - A26 - Work Lights - LED W/ Sw Pack - Customer Supplied - Sleeper W/O RKE W/MAN REV:Diagram1
LT/RH - A26 - Work Lights - LED W/ Sw Pack - Customer Supplied - Sleeper W/O RKE W/MAN REV:Diagram2
LT/RH - A26 - Work Lights - LED W/ Sw Pack - Customer Supplied - Sleeper W/O RKE W/MAN REV:Diagram3
LT/RH - A26 - Work Lights - LED W/ Sw Pack - Customer Supplied - Sleeper W/O RKE W/MAN REV:Diagram4
LT/RH - A26 - Work Lights -LED W/ Sw Pack - Sleeper W/ RKE W/MAN REV:Diagram1
LT/RH - A26 - Work Lights -LED W/ Sw Pack - Sleeper W/ RKE W/MAN REV:Diagram2
LT/RH - A26 - Work Lights -LED W/ Sw Pack - Sleeper W/O RKE W/MAN REV:Diagram1
LT/RH - A26 - Work Lights -LED W/ Sw Pack - Sleeper W/O RKE W/MAN REV:Diagram2
LT/RH - A26 - Work Lights LED W/ Sw Pack - Day Cab W/ RKE W/MAN REV:Diagram1
LT/RH - A26 - Work Lights LED W/ Sw Pack - Day Cab W/ RKE W/MAN REV:Diagram2
LT/RH - A26 - Work Lights LED W/ Sw Pack - Day Cab W/O RKE W/MAN REV:Diagram1

LT/RH - A26 - Work Lights LED W/ Sw Pack - Day Cab W/O RKE W/MAN REV:Diagram2
LT/RH - A26 - Work Lights W/ Sw Pack - Customer Supplied W/ RKE W/MAN REV:Diagram1
LT/RH - A26 - Work Lights W/ Sw Pack - Customer Supplied W/ RKE W/MAN REV:Diagram2
LT/RH - A26 - Work Lights W/ Sw Pack - Customer Supplied W/ RKE W/MAN REV:Diagram3
LT/RH - A26 - Work Lights W/ Sw Pack - Customer Supplied W/ RKE W/MAN REV:Diagram4
LT/RH - A26 - Work Lights W/ Sw Pack - Customer Supplied W/ O RKE W/MAN REV:Diagram1
LT/RH - A26 - Work Lights W/ Sw Pack - Customer Supplied W/ O RKE W/MAN REV:Diagram2
LT/RH - A26 - Work Lights W/ Sw Pack - Customer Supplied W/ O RKE W/MAN REV:Diagram3
LT/RH - A26 - Work Lights W/ Sw Pack - Customer Supplied W/ O RKE W/MAN REV:Diagram4
LT/RH - X15 - Body Builder Lighting - (BOC EOF In Cab) (8HAB 8HAE 8HAU) (Manual):Diagram1
LT/RH - X15 - Body Builder Lighting - (BOC EOF In Cab) (8HAB 8HAE 8HAU) (Manual):Diagram2
LT/RH A26 - A26 - Heating Ventilation & Air Conditioning (HVAC) Manual:Diagram1 - HVAC - Option1
LT/RH A26 - A26 - Heating Ventilation & Air Conditioning (HVAC) Manual:Diagram2 - HVAC - Option2
LT/RH A26 - Ambient Air Temperature Option 1:Diagram1
LT/RH A26 - Ambient Air Temperature Option 2:Diagram1
LT/RH A26 - Back-Up Alarm (Manual) and UltraShift+:Diagram1
LT/RH A26 - Back-Up Alarm (Manual) and UltraShift+:Diagram2
LT/RH A26 - Back-Up Alarm (Manual) and UltraShift+:Diagram3
LT/RH A26 - Back-Up Alarm (Manual) and UltraShift+:Diagram4
LT/RH A26 - Back-Up Alarm (Manual) and UltraShift+:Diagram5
LT/RH A26 - Back-Up Alarm (Manual) and UltraShift+:Diagram6
LT/RH A26 - Back-Up Alarm (Manual) and UltraShift+:Diagram7
LT/RH A26 - Back-Up Alarm (Manual) and UltraShift+:Diagram8
LT/RH A26 - Back-Up Alarm (Manual) (W/ Tail Light Bar Assy):Diagram1
LT/RH A26 - Back-Up Alarm (Manual) (W/ Tail Light Bar Assy):Diagram2
LT/RH A26 - Back-Up Alarm (Manual) (W/ Tail Light Bar Assy):Diagram3
LT/RH A26 - Back-Up Alarm (Manual) (W/ Tail Light Bar Assy):Diagram4

LT/RH A26 - Backup Light (Dual Reverse Light):Diagram1
LT/RH A26 - Backup Light (Dual Reverse Light):Diagram2
LT/RH A26 - Backup Light (Dual Reverse Light)
Allison-3K:Diagram1
LT/RH A26 - Backup Light (Dual Reverse Light)
Allison-3K:Diagram2
LT/RH A26 - Backup Light (Dual Reverse Light) Allison-
TC10:Diagram1
LT/RH A26 - Backup Light (Dual Reverse Light) Allison-
TC10:Diagram2
LT/RH A26 - Backup Light (Reverse Light) Allison
TC10:Diagram1
LT/RH A26 - Backup Light (Reverse Light) Allison
TC10:Diagram2
LT/RH A26 - Backup Light (Reverse Light) Allison-3K:Diagram1
LT/RH A26 - Backup Light (Reverse Light) Allison-3K:Diagram2
LT/RH A26 - Backup Light (Single Reverse Light):Diagram1
LT/RH A26 - Backup Light (Single Reverse Light):Diagram2
LT/RH A26 - Backup Light (Single Reverse Light) Allison
3K:Diagram1
LT/RH A26 - Backup Light (Single Reverse Light) Allison
3K:Diagram2
LT/RH A26 - Backup Light (Single Reverse Light) Allison
TC10:Diagram1
LT/RH A26 - Backup Light (Single Reverse Light) Allison
TC10:Diagram2
LT/RH A26 - Backup Light (Single Reverse Light)
Endurant:Diagram1
LT/RH A26 - Backup Light (Single Reverse Light)
Endurant:Diagram2
LT/RH A26 - Backup Light (Single Reverse Light) W/Allison
3K:Diagram1
LT/RH A26 - Backup Light (Single Reverse Light) W/Allison
3K:Diagram2
LT/RH A26 - Backup Light (Single Reverse Light) W/Allison
TC10:Diagram1
LT/RH A26 - Backup Light (Single Reverse Light) W/Allison
TC10:Diagram2
LT/RH A26 - Backup Light Endurant Trans:Diagram1
LT/RH A26 - Backup Light Endurant Trans:Diagram2
LT/RH A26 - Backup Lights (Dual Reverse Light) Eaton/Manual
Trans:Diagram1
LT/RH A26 - Backup Lights (Dual Reverse Light) Eaton/Manual
Trans:Diagram2

LT/RH A26 - Backup Lights (Dual Reverse Light) Eaton/Manual Trans:Diagram3
LT/RH A26 - Backup Lights (Dual Reverse Light) Eaton/Manual Trans:Diagram4
LT/RH A26 - Backup Lights (Reverse Light) Eaton/Manual Trans:Diagram1
LT/RH A26 - Backup Lights (Reverse Light) Eaton/Manual Trans:Diagram2
LT/RH A26 - Backup Lights (Reverse Light) Eaton/Manual Trans:Diagram3
LT/RH A26 - Backup Lights (Reverse Light) Eaton/Manual Trans:Diagram4
LT/RH A26 - Backup Lights (Reverse Lights) Eaton/Manual Trans:Diagram1
LT/RH A26 - Backup Lights (Reverse Lights) Eaton/Manual Trans:Diagram2
LT/RH A26 - Backup Lights (Reverse Lights) Eaton/Manual Trans:Diagram3
LT/RH A26 - Backup Lights (Reverse Lights) Eaton/Manual Trans:Diagram4
LT/RH A26 - Backup Lights (Single Reverse Light) Eaton/Manual Trans:Diagram1
LT/RH A26 - Backup Lights (Single Reverse Light) Eaton/Manual Trans:Diagram2
LT/RH A26 - Backup Lights (Single Reverse Light) Eaton/Manual Trans:Diagram3
LT/RH A26 - Backup Lights (Single Reverse Light) Eaton/Manual Trans:Diagram4
LT/RH A26 - Backup Lights (Single Reverse Light) Eaton/Manual Trans/:Diagram1
LT/RH A26 - Backup Lights (Single Reverse Light) Eaton/Manual Trans/:Diagram2
LT/RH A26 - Backup Lights (Single Reverse Light) Eaton/Manual Trans/:Diagram3
LT/RH A26 - Backup Lights (Single Reverse Light) Eaton/Manual Trans/:Diagram4
LT/RH A26 - ECM:ECM Connector 6018
LT/RH A26 - Endurant Transmission:Diagram1
LT/RH A26 - Heating Ventilation & Air Conditioning (HVAC) Auto Temp Control:Diagram1 - HVAC - Option1
LT/RH A26 - Heating Ventilation & Air Conditioning (HVAC) Auto Temp Control:Diagram2 - HVAC - Option2
LT/RH A26 - TC10 Series:Diagram1
LT/RH A26 - Transmission (Allison 3K/4K):Diagram1

LT/RH A26 - Ultrashift Plus:Diagram1
LT/RH/LoneStar - A26 - Vehicle Acceleration (w/ Two PWR Two GND & Two STS):Diagram1
LT/RH/LoneStar - X15 - Air Flow Restriction Monitoring:Diagram1
LT/RH/LoneStar - X15 - Cranking (Starter) GEN4 BCM W/ Thermal Overcrank - External Switch:Diagram1
LT/RH/LoneStar - X15 - Cranking (Starter) GEN4 BCM W/O Thermal Overcrank Wiring:Diagram1
LT/RH/LoneStar - X15 - Starter Interlock (BCM HSD controlled W/ Clutch Switch W/ Auto Start Stop):Diagram1
LT/RH/LoneStar - X15 - Starter Interlock (BCM LSD Controlled w/ Relay)_EATON XMSN:Diagram1
LT/RH/LoneStar - X15 - Starter Interlocks (Service Brake Interlock):Diagram1
LT/RH/LoneStar - X15 - Starter Interlocks ISX TC10:Diagram1
LT/RH/LoneStar - X15 - Transmission Oil Temperature-Manual Trans-Horizon Option 1:Diagram1
LT/RH/LoneStar - X15 - Transmission Oil Temperature-Manual Trans-Horizon Option 1:Diagram2
LT/RH/LoneStar - X15 - Transmission Oil Temperature-Manual Trans-Horizon Option 1:Diagram3
LT/RH/LoneStar - X15 - Transmission Oil Temperature-Manual Trans-Horizon Option 2:Diagram1
LT/RH/LoneStar - X15 - Transmission Oil Temperature-Manual Trans-Horizon Option 2:Diagram2
LT/RH/LoneStar - X15 - Transmission Oil Temperature-Manual Trans-Horizon Option 2:Diagram3
LT/RH/LoneStar - X15 - Transmission Power Take Off:Diagram1
LT/RH/LoneStar - X15 - Transmission Power Take Off Dual PTO with Clutch Interlock MANUAL:Diagram1
LT/RH/LoneStar - X15 - Transmission Power Take Off Dual Solenoid AUTO:Diagram1
LT/RH/LoneStar - X15 - Transmission Power Take Off W/ Clutch Interlock:Diagram1
LT/RH/LoneStar - X15 - Transmission Shifter (Eaton Endurant and Eaton Procision):Diagram1
LT/RH/LoneStar - X15 - Transmission Shifter (Universal Shifter - Ultrashift+ & FAS):Diagram1
LT/RH/LoneStar - X15 - Transmission SINGLE Power Take Off MANUAL:Diagram1
LT/RH/LoneStar - X15 - Vehicle Acceleration (w/ Two PWR Two GND & Two STS):Diagram1

LT/RH/LoneStar - X15 - Work Lights (2 Blunt Cuts Only W/O Relay) W/Backup W/Manual Trans:Diagram1
LT/RH/LoneStar - X15 - Work Lights (2 Blunt Cuts Only W/O Relay) W/Backup W/Manual Trans:Diagram2
LT/RH/LoneStar - X15 - Work Lights - LED W/ Sw Pack - Customer Supplied - Sleeper W/ RKE W/MAN REV:Diagram1
LT/RH/LoneStar - X15 - Work Lights - LED W/ Sw Pack - Customer Supplied - Sleeper W/ RKE W/MAN REV:Diagram2
LT/RH/LoneStar - X15 - Work Lights - LED W/ Sw Pack - Customer Supplied - Sleeper W/O RKE W/MAN REV:Diagram1
LT/RH/LoneStar - X15 - Work Lights - LED W/ Sw Pack - Customer Supplied - Sleeper W/O RKE W/MAN REV:Diagram2
LT/RH/LoneStar - X15 - Work Lights -LED W/ Sw Pack - Sleeper W/ RKE W/MAN REV:Diagram1
LT/RH/LoneStar - X15 - Work Lights -LED W/ Sw Pack - Sleeper W/O RKE W/MAN REV:Diagram1
LT/RH/LoneStar - X15 - Work Lights W/ Sw Pack - Customer Supplied W/ RKE W/MAN REV:Diagram1
LT/RH/LoneStar - X15 - Work Lights W/ Sw Pack - Customer Supplied W/ RKE W/MAN REV:Diagram2
LT/RH/LoneStar - X15 - Work Lights W/ Sw Pack - Customer Supplied W/O RKE W/MAN REV:Diagram1
LT/RH/LoneStar - X15 - Work Lights W/ Sw Pack - Customer Supplied W/O RKE W/MAN REV:Diagram2
LT/RH/LoneStar X15 - Ambient Air Temperature Option 1:Diagram1
LT/RH/LoneStar X15 - Ambient Air Temperature Option 2:Diagram1
LT/RH/LoneStar X15 - Auto Start Stop Oil Temp Sensor Auto Trans:Diagram1
LT/RH/LoneStar X15 - Auto Start Stop Oil Temp Sensor Manual Trans:Diagram1
LT/RH/LoneStar X15 - Auto Start Stop with Sleeper Auto Climate / Cab Temp with Oil Temp Sensor Auto Trans:Diagram1
LT/RH/LoneStar X15 - Auto Start Stop with Sleeper Auto Climate / Cab Temp with Oil Temp Sensor Manual Trans:Diagram1
LT/RH/LoneStar X15 - Back-Up Alarm (Manual) and UltraShift +:Diagram1
LT/RH/LoneStar X15 - Back-Up Alarm (Manual) and UltraShift +:Diagram2
LT/RH/LoneStar X15 - Back-Up Alarm (Manual) and UltraShift +:Diagram3

LT/RH/LoneStar X15 - Back-Up Alarm (Manual) and UltraShift +:Diagram4
LT/RH/LoneStar X15 - Back-Up Alarm (Manual) (W/ Tail Light Bar Assy):Diagram1
LT/RH/LoneStar X15 - Back-Up Alarm (Manual) (W/ Tail Light Bar Assy):Diagram2
LT/RH/LoneStar X15 - Backup Light (Single Reverse Light) Endurant:Diagram1
LT/RH/LoneStar X15 - Backup Light (Single Reverse Light) Endurant:Diagram2
LT/RH/LoneStar X15 - Backup Light (Single Reverse Light) W/ Allison TC10:Diagram1
LT/RH/LoneStar X15 - Backup Light (Single Reverse Light) W/ Allison TC10:Diagram2
LT/RH/LoneStar X15 - Backup Light Endurant:Diagram1
LT/RH/LoneStar X15 - Backup Light Endurant:Diagram2
LT/RH/LoneStar X15 - Backup Lights (Single Reverse Light) Eaton/Manual Trans:Diagram1
LT/RH/LoneStar X15 - Backup Lights (Single Reverse Light) Eaton/Manual Trans:Diagram2
LT/RH/LoneStar X15 - ECM:Diagram1
LT/RH/LoneStar X15 - Endurant Transmission:Diagram1
LT/RH/LoneStar X15 - Heating Ventilation & Air Conditioning (HVAC) Auto Temp Control:Diagram1 - HVAC
LT/RH/LoneStar X15 - Heating Ventilation & Air Conditioning (HVAC) Manual:Diagram1 - HVAC
LT/RH/LoneStar X15 - TC10 Series:Diagram1
LT/RH/LoneStar X15 - Ultrashift Plus:Diagram1
LT/RH/LoneStar X15 - Work Lights LED W/ Sw Pack - Day Cab W/ RKE W/MAN REV:Diagram1
LT/RH/LoneStar X15 - Work Lights LED W/ Sw Pack - Day Cab W/O RKE W/MAN REV:Diagram1

Mates 1702

Name	Terminal Part Number	V-Min	Name	Wire Part Number	Wire CSA	Wire Spec	Wire Material description	Wire Color Description	Wire Length	End2 Terminal Part Number	End2 Pin Name	End2 Connector
2	-	-	YK9AA	3510312 R1	1.16	16.0	Thin Wall XLPE Primary Cable	GREY	715.0	-	-	-

Name	Terminal Part Number	V-Min	Name	Wire Part Number	Wire CSA	Wire Spec	Wire Material description	Wire Color Description	Wire Length	End2 Terminal Part Number	End2 Pin Name	End2 Connector
2	-	-	YA9AA	3510312 R1	1.16	16.0	Thin Wall XLPE Primary Cable	GREY	1755.0	-	-	-
3	-	-	YN6DB	3510310 R1	0.53	20.0	Thin Wall XLPE Primary Cable	GREY	2485.0	-	4	K01-6201B
3	-	-	YL6DB	3510310 R1	0.53	20.0	Thin Wall XLPE Primary Cable	GREY	2665.0	-	4	K01-6201P
3	-	-	YB6DB	3510310 R1	0.53	20.0	Thin Wall XLPE Primary Cable	GREY	2870.0	-	4	K02-6201
4	-	-	YN77B	3510298 R1	0.53	20.0	Thin Wall XLPE Primary Cable	LIGHT GREEN	2485.0	-	2	K01-6201B
4	-	-	YL77B	3510298 R1	0.53	20.0	Thin Wall XLPE Primary Cable	LIGHT GREEN	2665.0	-	2	K01-6201P
4	-	-	YB77B	3510298 R1	0.53	20.0	Thin Wall XLPE Primary Cable	LIGHT GREEN	2870.0	-	2	K02-6201
5	-	-	KE28	3510329 R1	0.79	18.0	Thin Wall XLPE Primary Cable	TAN	2330.0	-	A	K02-7303

Name	Terminal Part Number	V-Min	Name	Wire Part Number	Wire CSA	Wire Spec	Wire Material description	Wire Color Description	Wire Length	End2 Terminal Part Number	End2 Pin Name	End2 Connector
5	-	-	KE28	3510329 R1	0.79	18.0	Thin Wall XLPE Primary Cable	TAN	2330.0	-	B	K01-6703B
5	-	-	JE28	2643676 R1	0.79	18.0	Std. Wall XLPE Primary Cable	TAN	1625.0	-	B	K01-6703A
6	-	-	KP71L	3510317 R1	0.79	18.0	Thin Wall XLPE Primary Cable	ORANGE	2350.0	-	5	K01-7107
6	-	-	KW71A	2643682 R1	1.16	16.0	Std. Wall XLPE Primary Cable	ORANGE	2850.0	-	A	K02-7500W
6	-	-	PF71A	2643676 R1	0.79	18.0	Std. Wall XLPE Primary Cable	TAN	2165.0	-	A	K01-7500T
6	-	-	KW71A	2643682 R1	1.16	16.0	Std. Wall XLPE Primary Cable	ORANGE	2850.0	-	A	K01-7500W
6	-	-	KP71L	3510317 R1	0.79	18.0	Thin Wall XLPE Primary Cable	ORANGE	2350.0	-	5	K02-7107-ISX
6	-	-	SD92#145	3510317 R1	0.79	18.0	Thin Wall XLPE Primary Cable	ORANGE	3555.0	-	45	K01-7150

Name	Terminal Part Number	V-Min	Name	Wire Part Number	Wire CSA	Wire Spec	Wire Material description	Wire Color Description	Wire Length	End2 Terminal Part Number	End2 Pin Name	End2 Connector
6	-	-	SC92#145	3510317 R1	0.79	18.0	Thin Wall XLPE Primary Cable	ORANGE	3555.0	-	45	K01-7150
7	-	-	KW71B	2643682 R1	1.16	16.0	Std. Wall XLPE Primary Cable	ORANGE	1510.0	-	B	K02-7500W
7	-	-	KG71K	3510341 R1	0.79	18.0	Thin Wall XLPE Primary Cable	LIGHT BLUE	2810.0	-	1	K01-7107
7	-	-	PF71B	2643682 R1	1.16	16.0	Std. Wall XLPE Primary Cable	ORANGE	2165.0	-	B	K01-7500T
7	-	-	KW71B	2643682 R1	1.16	16.0	Std. Wall XLPE Primary Cable	ORANGE	1510.0	-	B	K01-7500W
7	-	-	KW71B	2643682 R1	1.16	16.0	Std. Wall XLPE Primary Cable	ORANGE	2850.0	-	B	K02-7500W
7	-	-	KW71B	2643682 R1	1.16	16.0	Std. Wall XLPE Primary Cable	ORANGE	2850.0	-	B	K01-7500W
7	-	-	KL71K	3510341 R1	0.79	18.0	Thin Wall XLPE Primary Cable	LIGHT BLUE	2350.0	-	1	K02-7107-ISX

Name	Terminal Part Number	V-Min	Name	Wire Part Number	Wire CSA	Wire Spec	Wire Material description	Wire Color Description	Wire Length	End2 Terminal Part Number	End2 Pin Name	End2 Connector
7	-	-	XV92#165	3510329 R1	0.79	18.0	Thin Wall XLPE Primary Cable	TAN	3160.0	-	4	K01-7350
7	-	-	TD92#165	3510329 R1	0.79	18.0	Thin Wall XLPE Primary Cable	TAN	3555.0	-	65	K01-7150
7	-	-	KV92#165	3510329 R1	0.79	18.0	Thin Wall XLPE Primary Cable	TAN	2355.0	-	4	K02-7350
8	-	-	KL13A	3510324 R1	1.16	16.0	Thin Wall XLPE Primary Cable	PINK	2310.0	-	10	K02-7106-ISX
8	-	-	XV92#163	3510329 R1	0.79	18.0	Thin Wall XLPE Primary Cable	TAN	3160.0	-	16	K01-7350
8	-	-	KV92#163	3510329 R1	0.79	18.0	Thin Wall XLPE Primary Cable	TAN	2355.0	-	16	K02-7350
8	-	-	TD92#163	3510329 R1	0.79	18.0	Thin Wall XLPE Primary Cable	TAN	3555.0	-	63	K01-7150
8	-	-	KH13A	2643691 R1	1.91	14.0	Std. Wall XLPE Primary Cable	PINK	3385.0	-	35	K02-7105

Name	Terminal Part Number	V-Min	Name	Wire Part Number	Wire CSA	Wire Spec	Wire Material description	Wire Color Description	Wire Length	End2 Terminal Part Number	End2 Pin Name	End2 Connector
8	-	-	KG13A	3510323 R1	0.79	18.0	Thin Wall XLPE Primary Cable	PINK	2720.0	-	10	K01-7106
8	-	-	KH13A	2643691 R1	1.91	14.0	Std. Wall XLPE Primary Cable	PINK	3385.0	-	35	K01-7105A
10	-	-	KA77	3510300 R1	1.16	16.0	Thin Wall XLPE Primary Cable	LIGHT GREEN	2280.0	-	B	K01-6200
10	-	-	KA77	3510300 R1	1.16	16.0	Thin Wall XLPE Primary Cable	LIGHT GREEN	2280.0	-	B	K02-6200
12	-	-	TG92A	2643676 R1	0.79	18.0	Std. Wall XLPE Primary Cable	TAN	3385.0	-	16	K01-7105A
12	-	-	KH92A	2643676 R1	0.79	18.0	Std. Wall XLPE Primary Cable	TAN	2315.0	-	16	K02-7105
13	-	-	KK31	2643676 R1	0.79	18.0	Std. Wall XLPE Primary Cable	TAN	2990.0	-	1	K01-7700K
13	-	-	PC31	2643676 R1	0.79	18.0	Std. Wall XLPE Primary Cable	TAN	3455.0	-	1	K01-7700T

Name	Terminal Part Number	V-Min	Name	Wire Part Number	Wire CSA	Wire Spec	Wire Material description	Wire Color Description	Wire Length	End2 Terminal Part Number	End2 Pin Name	End2 Connector
13	-	-	WP31	2643676 R1	0.79	18.0	Std. Wall XLPE Primary Cable	TAN	3520.0	-	1	K01-7700L
13	-	-	KK31	2643676 R1	0.79	18.0	Std. Wall XLPE Primary Cable	TAN	2990.0	-	1	K02-7700K
13	-	-	TA31	2643676 R1	0.79	18.0	Std. Wall XLPE Primary Cable	TAN	2110.0	-	1	K02-7700T
13	-	-	XA31	2643676 R1	0.79	18.0	Std. Wall XLPE Primary Cable	TAN	2580.0	-	1	K02-7700M
14	-	-	KM88	2643678 R1	1.16	16.0	Std. Wall XLPE Primary Cable	LIGHT GREEN	3380.0	-	A	K01-7800
14	-	-	KM88	2643678 R1	1.16	16.0	Std. Wall XLPE Primary Cable	LIGHT GREEN	3380.0	-	A	K02-7800
15	-	-	KC41D	3510358 R1	0.53	20.0	Thin Wall XLPE Primary Cable	WHITE	665.0	-	-	-
15	-	-	VL41E	3510329 R1	0.79	18.0	Thin Wall XLPE Primary Cable	TAN	1375.0	-	9	K01-6018

Name	Terminal Part Number	V-Min	Name	Wire Part Number	Wire CSA	Wire Spec	Wire Material description	Wire Color Description	Wire Length	End2 Terminal Part Number	End2 Pin Name	End2 Connector
16	-	-	VT17	2643752 R1	1.16	16.0	Std. Wall XLPE Primary Cable	PINK	1310.0	-	A	K02-6305-MITS
16	-	-	KR17	2643752 R1	1.16	16.0	Std. Wall XLPE Primary Cable	PINK	3545.0	-	A	K01-6307/6306-MITS
16	-	-	VK17	2643752 R1	1.16	16.0	Std. Wall XLPE Primary Cable	PINK	1310.0	-	B	K02-6316M-DELCO
16	-	-	LB17	2643752 R1	1.16	16.0	Std. Wall XLPE Primary Cable	PINK	3440.0	-	B	K01-6316M-DEL
18	-	-	KC41EA	3510329 R1	0.79	18.0	Thin Wall XLPE Primary Cable	TAN	820.0	-	X	-
18	-	-	WC41D	3510359 R1	0.79	18.0	Thin Wall XLPE Primary Cable	WHITE	660.0	-	X	-
18	-	-	KD41D	3510359 R1	0.79	18.0	Thin Wall XLPE Primary Cable	WHITE	660.0	-	X	-
18	-	-	WA41D	3510359 R1	0.79	18.0	Thin Wall XLPE Primary Cable	WHITE	660.0	-	X	-

Name	Terminal Part Number	V-Min	Name	Wire Part Number	Wire CSA	Wire Spec	Wire Material description	Wire Color Description	Wire Length	End2 Terminal Part Number	End2 Pin Name	End2 Connector
19	-	-	KL17-GA	3510329 R1	0.79	18.0	Thin Wall XLPE Primary Cable	TAN	2310.0	-	4	7106
19	-	-	KH17-GC	2643794 R1	0.79	18.0	Std. Wall XLPE Primary Cable	PINK	3385.0	-	4	K01-7105A
19	-	-	KG17-GA	3510359 R1	0.79	18.0	Thin Wall XLPE Primary Cable	WHITE	2720.0	-	4	7106
19	-	-	KH17-GC	2643794 R1	0.79	18.0	Std. Wall XLPE Primary Cable	PINK	3385.0	-	4	K02-7105
20	-	-	KL17A	3510353 R1	0.79	18.0	Thin Wall XLPE Primary Cable	DARK BLUE	2310.0	-	14	7106
20	-	-	KH17B	2643794 R1	0.79	18.0	Std. Wall XLPE Primary Cable	PINK	3385.0	-	32	K01-7105A
20	-	-	TD92#141	3510329 R1	0.79	18.0	Thin Wall XLPE Primary Cable	TAN	3555.0	-	41	7150
20	-	-	KV92#141	3510329 R1	0.79	18.0	Thin Wall XLPE Primary Cable	TAN	2379.0	-	20	7350

Name	Terminal Part Number	V-Min	Name	Wire Part Number	Wire CSA	Wire Spec	Wire Material description	Wire Color Description	Wire Length	End2 Terminal Part Number	End2 Pin Name	End2 Connector
20	-	-	KG17A	3510323 R1	0.79	18.0	Thin Wall XLPE Primary Cable	PINK	2720.0	-	14	7106
20	-	-	KH17B	2643794 R1	0.79	18.0	Std. Wall XLPE Primary Cable	PINK	3385.0	-	32	K02-7105
20	-	-	XV92#141	3510329 R1	0.79	18.0	Thin Wall XLPE Primary Cable	TAN	3160.0	-	20	7350_
21	-	-	KL92A	3510329 R1	0.79	18.0	Thin Wall XLPE Primary Cable	TAN	2310.0	-	9	K02-7106-ISX
21	-	-	KG92A	3510329 R1	0.79	18.0	Thin Wall XLPE Primary Cable	TAN	2720.0	-	9	K01-7106
21	-	-	KH17C	3510324 R1	1.16	16.0	Thin Wall XLPE Primary Cable	PINK	3385.0	-	26	K01-7105A
21	-	-	TW92C103	3510335 R1	0.79	18.0	Thin Wall XLPE Primary Cable	YELLOW 2	780.0	-	X	-
21	-	-	KH17C	3510324 R1	1.16	16.0	Thin Wall XLPE Primary Cable	PINK	3385.0	-	26	K02-7105

Name	Terminal Part Number	V-Min	Name	Wire Part Number	Wire CSA	Wire Spec	Wire Material description	Wire Color Description	Wire Length	End2 Terminal Part Number	End2 Pin Name	End2 Connector
22	-	-	TK97C	3510346 R1	0.53	20.0	Thin Wall XLPE Primary Cable	VIOLET	1160.0	-	9	K02-6000
22	-	-	KA97C	3510347 R1	0.79	18.0	Thin Wall XLPE Primary Cable	VIOLET	1375.0	-	6	K01-6018
23	-	-	TK97B	3510346 R1	0.53	20.0	Thin Wall XLPE Primary Cable	VIOLET	1160.0	-	33	K02-6000
23	-	-	KA97B	3510347 R1	0.79	18.0	Thin Wall XLPE Primary Cable	VIOLET	1375.0	-	2	K01-6018
24	-	-	KA97M	3510346 R1	0.53	20.0	Thin Wall XLPE Primary Cable	VIOLET	1160.0	-	64	K02-6000
24	-	-	KA97M	3510346 R1	0.53	20.0	Thin Wall XLPE Primary Cable	VIOLET	1160.0	-	57	K01-6018
25	-	-	SD92#117	3510329 R1	0.79	18.0	Thin Wall XLPE Primary Cable	TAN	3555.0	-	17	K01-7150
25	-	-	SC92#117	3510329 R1	0.79	18.0	Thin Wall XLPE Primary Cable	TAN	3385.0	-	X	-

Name	Terminal Part Number	V-Min	Name	Wire Part Number	Wire CSA	Wire Spec	Wire Material description	Wire Color Description	Wire Length	End2 Terminal Part Number	End2 Pin Name	End2 Connector
28	-	-	TK99B	3510346 R1	0.53	20.0	Thin Wall XLPE Primary Cable	VIOLET	1160.0	-	10	K02-6000
28	-	-	KA99B	3510347 R1	0.79	18.0	Thin Wall XLPE Primary Cable	VIOLET	1375.0	-	33	K01-6018
29	-	-	KA97N	3510346 R1	0.53	20.0	Thin Wall XLPE Primary Cable	VIOLET	1160.0	-	61	K02-6000
29	-	-	KA97N	3510346 R1	0.53	20.0	Thin Wall XLPE Primary Cable	VIOLET	1160.0	-	29	K01-6018
30	-	-	GN99D	2643718 R1	0.79	18.0	Std. Wall XLPE Primary Cable	VIOLET	390.0	-	X	-
30	-	-	KA97P	3510329 R1	0.79	18.0	Thin Wall XLPE Primary Cable	TAN	1375.0	-	12	K01-6018
32	-	-	KY97S	2643718 R1	0.79	18.0	Std. Wall XLPE Primary Cable	VIOLET	2850.0	-	B	K01-7802
32	-	-	PY97S	2643718 R1	0.79	18.0	Std. Wall XLPE Primary Cable	VIOLET	2165.0	-	B	K01-7802T

Name	Terminal Part Number	V-Min	Name	Wire Part Number	Wire CSA	Wire Spec	Wire Material description	Wire Color Description	Wire Length	End2 Terminal Part Number	End2 Pin Name	End2 Connector
32	-	-	WV97S	2643718 R1	0.79	18.0	Std. Wall XLPE Primary Cable	VIOLET	1510.0	-	B	K02-7802
33	-	-	PY97J	2643718 R1	0.79	18.0	Std. Wall XLPE Primary Cable	VIOLET	2165.0	-	A	K01-7802T
33	-	-	KY97J	2643718 R1	0.79	18.0	Std. Wall XLPE Primary Cable	VIOLET	2850.0	-	A	K01-7802
33	-	-	WV97J	2643718 R1	0.79	18.0	Std. Wall XLPE Primary Cable	VIOLET	1510.0	-	A	K02-7802
34	-	-	WN30BC	2643683 R1	1.16	16.0	Std. Wall XLPE Primary Cable	TAN	3080.0	-	A	K02-2010
37	-	-	KA13B	3510323 R1	0.79	18.0	Thin Wall XLPE Primary Cable	PINK	1160.0	-	5	6000
37	-	-	KA13	3510323 R1	0.79	18.0	Thin Wall XLPE Primary Cable	PINK	1375.0	-	17	6018
40	-	-	TG92B	2643676 R1	0.79	18.0	Std. Wall XLPE Primary Cable	TAN	3385.0	-	17	K01-7105A

Name	Terminal Part Number	V-Min	Name	Wire Part Number	Wire CSA	Wire Spec	Wire Material description	Wire Color Description	Wire Length	End2 Terminal Part Number	End2 Pin Name	End2 Connector
40	-	-	KH92B	2643676 R1	0.79	18.0	Std. Wall XLPE Primary Cable	TAN	2315.0	-	17	K02-7105
41	-	-	KN88A	2643718 R1	0.79	18.0	Std. Wall XLPE Primary Cable	VIOLET	3380.0	-	A	K01-7801
41	-	-	KN88A	2643718 R1	0.79	18.0	Std. Wall XLPE Primary Cable	VIOLET	3380.0	-	A	K02-7801
42	-	-	YL77C	3510298 R1	0.53	20.0	Thin Wall XLPE Primary Cable	LIGHT GREEN	2665.0	-	3	K01-6201P
42	-	-	YN77C	3510298 R1	0.53	20.0	Thin Wall XLPE Primary Cable	LIGHT GREEN	2485.0	-	3	K01-6201B
42	-	-	YB77C	3510298 R1	0.53	20.0	Thin Wall XLPE Primary Cable	LIGHT GREEN	2870.0	-	3	K02-6201

Connector Name	1702
Part Number	3595621C1
Instances	Powertrain J1939 (500Kbps) Allison 3K Transmission A26:Powertrain J1939 (500Kbps) Allison 3K A26
Mates	1702

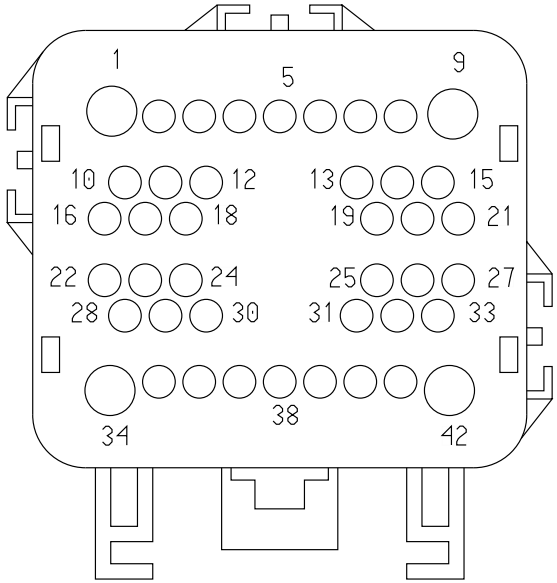

Name	Terminal Part Number	V-Min	Name	Wire Part Number	Wire CSA	Wire Spec	Wire Material description	Wire Color Description	Wire Length	End2 Terminal Part Number	End2 Pin Name	End2 Connect or
11	-	-	WIRE223752	-	0.0	-	-	-	0.0	-	53	1703F
17	-	-	WIRE223753	-	0.0	-	-	-	0.0	-	52	1703F

Connector Name	1702
Part Number	3595621C1
Instances	Powertrain J1939 (500Kbps) Eaton Ultrashift+ Transmission A26:Powertrain J1939 (500Kbps) Eaton Ultrashift+ Transmission A26
Mates	1702

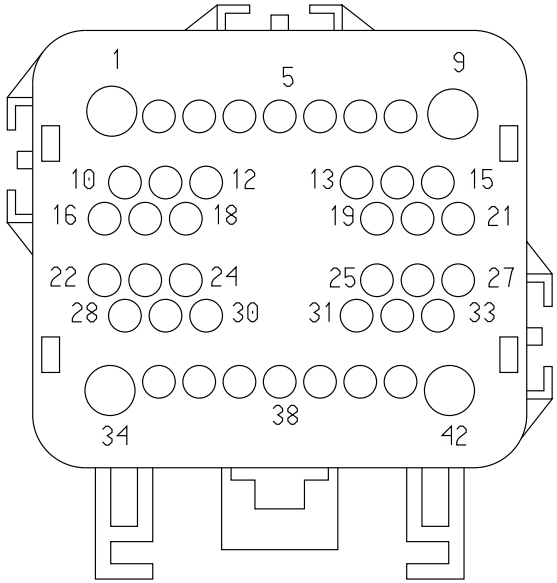

Name	Terminal Part Number	V-Min	Name	Wire Part Number	Wire CSA	Wire Spec	Wire Material description	Wire Color Description	Wire Length	End2 Terminal Part Number	End2 Pin Name	End2 Connect or
11	-	-	WIRE223752	-	0.0	-	-	-	0.0	-	53	1703F
17	-	-	WIRE223753	-	0.0	-	-	-	0.0	-	52	1703F

Connector Name	1702
Part Number	3595621C1
Instances	Powertrain J1939 (500Kbps) Edurant Transmission A26:Powertrain J1939 (500Kbps) Edurant Transmission A26
Mates	1702

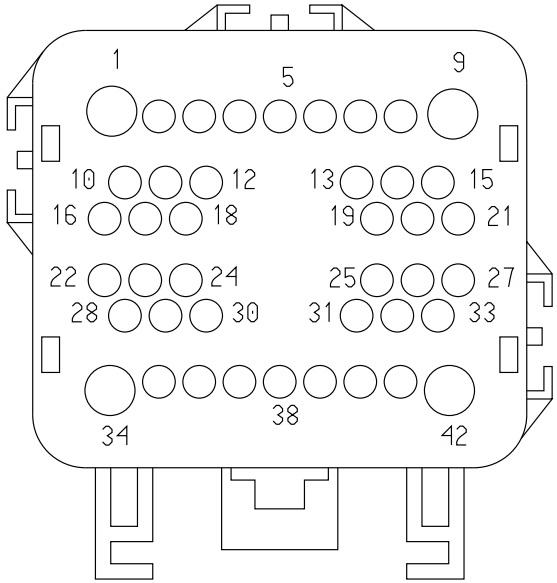

Name	Terminal Part Number	V-Min	Name	Wire Part Number	Wire CSA	Wire Spec	Wire Material description	Wire Color Description	Wire Length	End2 Terminal Part Number	End2 Pin Name	End2 Connect or
11	-	-	WIRE223752	-	0.0	-	-	-	0.0	-	53	1703F
17	-	-	WIRE223753	-	0.0	-	-	-	0.0	-	52	1703F

Connector Name 1702

Part Number 3595621C1

Instances Powertrain J1939 (500Kbps) Manual Transmission
A26:Powertrain Standard J1939 (500Kbps) A26 Engine

Mates 1702

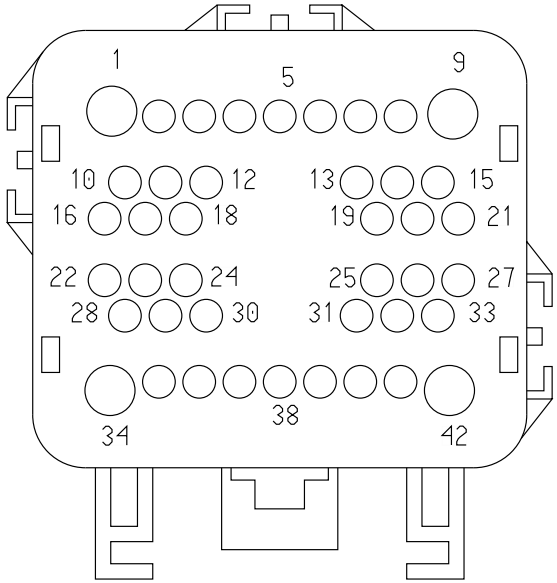

Name	Terminal Part Number	V-Min	Name	Wire Part Number	Wire CSA	Wire Spec	Wire Material description	Wire Color Description	Wire Length	End2 Terminal Part Number	End2 Pin Name	End2 Connect or
11	-	-	WIRE223752	-	0.0	-	-	-	0.0	-	53	1703F
17	-	-	WIRE223753	-	0.0	-	-	-	0.0	-	52	1703F

Connector Name	1702
Part Number	3595621C1
Instances	Powertrain J1939 (500Kbps) TC10 Transmission A26:Powertrain J1939 (500Kbps) TC10 Transmission A26
Mates	1702

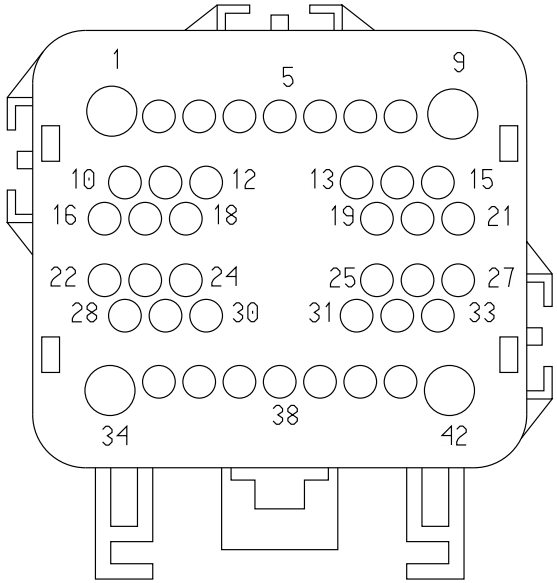

Name	Terminal Part Number	V-Min	Name	Wire Part Number	Wire CSA	Wire Spec	Wire Material description	Wire Color Description	Wire Length	End2 Terminal Part Number	End2 Pin Name	End2 Connect or
11	-	-	WIRE223752	-	0.0	-	-	-	0.0	-	53	1703F
17	-	-	WIRE223753	-	0.0	-	-	-	0.0	-	52	1703F

Connector Name	1702
Part Number	3595621C1
Instances	Powertrain J1939 (500Kbps) Eaton Ultrashift+ Transmission X15:Powertrain J1939 (500kbps) Eaton Ultrashift+ X15
Mates	1702

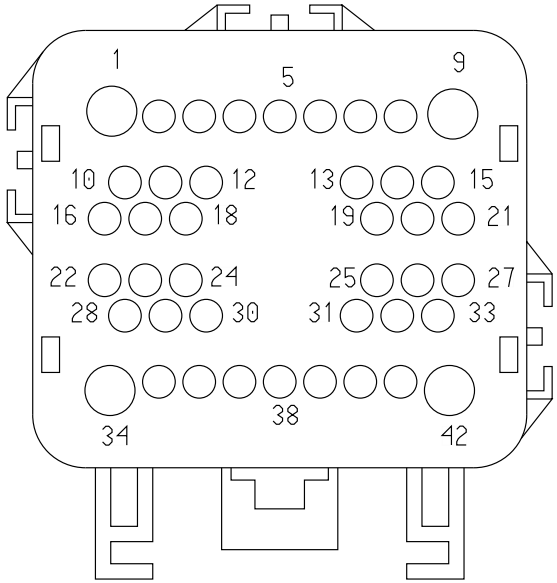

Name	Terminal Part Number	V-Min	Name	Wire Part Number	Wire CSA	Wire Spec	Wire Material description	Wire Color Description	Wire Length	End2 Terminal Part Number	End2 Pin Name	End2 Connect or
11	-	-	WIRE223752	-	0.0	-	-	-	0.0	-	53	1703F
17	-	-	WIRE223753	-	0.0	-	-	-	0.0	-	52	1703F

Connector Name 1702

Part Number 3595621C1

Instances Powertrain J1939 (500Kbps) Edurant Transmission
X15:Powertrain J1939 (500kbps) Endurant Transmission X15

Mates 1702

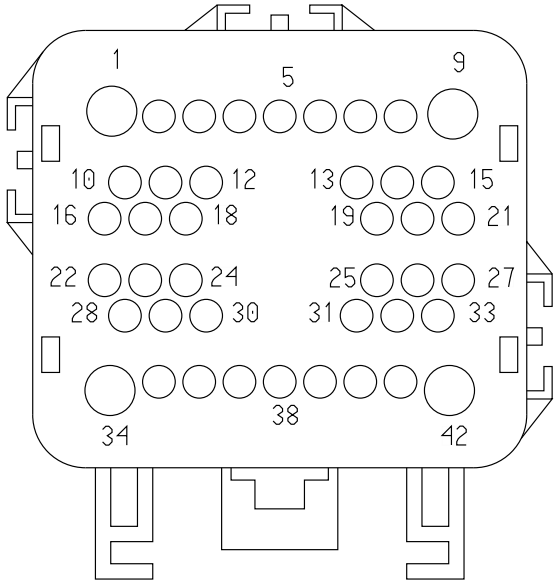

Name	Terminal Part Number	V-Min	Name	Wire Part Number	Wire CSA	Wire Spec	Wire Material description	Wire Color Description	Wire Length	End2 Terminal Part Number	End2 Pin Name	End2 Connect or
11	-	-	WIRE223752	-	0.0	-	-	-	0.0	-	53	1703F
17	-	-	WIRE223753	-	0.0	-	-	-	0.0	-	52	1703F

Connector Name	1702
Part Number	3595621C1
Instances	Powertrain J1939 (500Kbps) Manual Transmission X15:Powertrain Standard J1939 (500kbps) Manual Transmission X15
Mates	1702

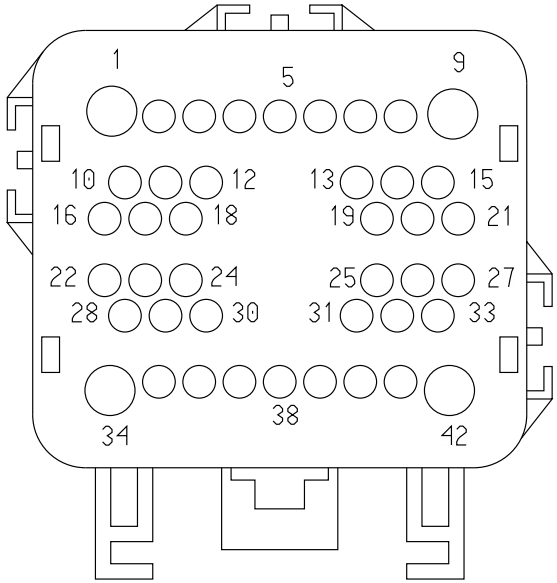

Name	Terminal Part Number	V-Min	Name	Wire Part Number	Wire CSA	Wire Spec	Wire Material description	Wire Color Description	Wire Length	End2 Terminal Part Number	End2 Pin Name	End2 Connect or
11	-	-	WIRE223752	-	0.0	-	-	-	0.0	-	53	1703F
17	-	-	WIRE223753	-	0.0	-	-	-	0.0	-	52	1703F

Connector Name	1702
Part Number	3595621C1
Instances	Powertrain J1939 (500Kbps) TC10 Transmission X15:Powertrain J1939 (500kbps) TC10 Transmission X15
Mates	1702

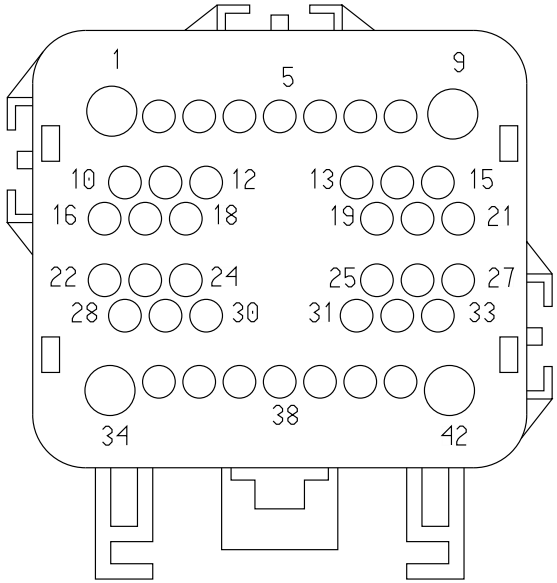

Name	Terminal Part Number	V-Min	Name	Wire Part Number	Wire CSA	Wire Spec	Wire Material description	Wire Color Description	Wire Length	End2 Terminal Part Number	End2 Pin Name	End2 Connect or
11	-	-	WIRE223752	-	0.0	-	-	-	0.0	-	53	1703F
17	-	-	WIRE223753	-	0.0	-	-	-	0.0	-	52	1703F

Connector Name	1702
Part Number	3595621C1
Short Description	IP/Engine
Instances	LoneStar - X15 - Body Builder Lighting - (BOC EOF In Cab) (8HAB 8HAE 8HAU) (Manual):Diagram1 LoneStar - X15 - Body Builder Lighting - (BOC EOF In Cab) (8HAB 8HAE 8HAU) (Manual):Diagram2 LT/RH X15 - Backup Light (Dual Reverse Light) Allison-TC10:Diagram1 LT/RH X15 - Backup Light (Dual Reverse Light) Allison-TC10:Diagram2 LT/RH X15 - Backup Light (Dual Reverse LT) Procosion/ Endurant:Diagram1 LT/RH X15 - Backup Light (Dual Reverse LT) Procosion/ Endurant:Diagram2 LT/RH X15 - Backup Light (Reverse Light) Allison TC10:Diagram1 LT/RH X15 - Backup Light (Reverse Light) Allison TC10:Diagram2 LT/RH X15 - Backup Light (Single Reverse Light) Allison TC10:Diagram1 LT/RH X15 - Backup Light (Single Reverse Light) Allison TC10:Diagram2 LT/RH X15 - Backup Light (Single Reverse Light) Endurant:Diagram1 LT/RH X15 - Backup Light (Single Reverse Light) Endurant:Diagram2 LT/RH X15 - Backup Lights (Dual Reverse Light) Eaton/Manual Trans:Diagram1 LT/RH X15 - Backup Lights (Dual Reverse Light) Eaton/Manual Trans:Diagram2 LT/RH X15 - Backup Lights (Reverse Light) Eaton/Manual Trans:Diagram1 LT/RH X15 - Backup Lights (Reverse Light) Eaton/Manual Trans:Diagram2 LT/RH X15 - Backup Lights (Reverse Lights) Eaton/Manual Trans:Diagram1 LT/RH X15 - Backup Lights (Reverse Lights) Eaton/Manual Trans:Diagram2 LT/RH X15 - Backup Lights (Single Reverse Light) Eaton/Manual Trans:Diagram1 LT/RH X15 - Backup Lights (Single Reverse Light) Eaton/Manual Trans:Diagram2

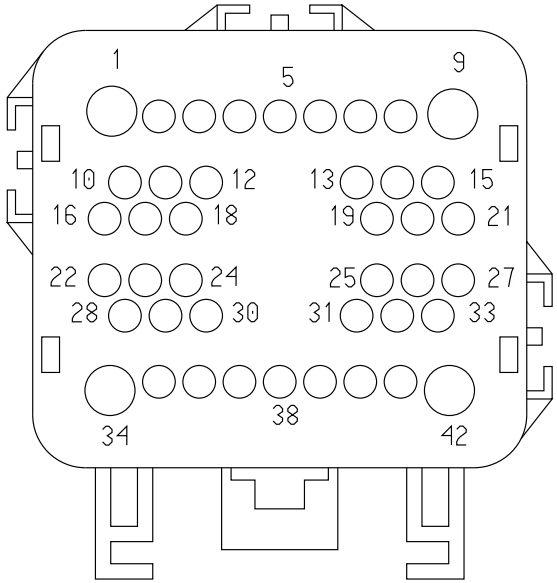

LT/RH - A26 - Air Flow Restriction Monitoring A26:Diagram1
LT/RH - A26 - Air Flow Restriction Monitoring A26:Diagram2
LT/RH - A26 - Auto Neutral (Allison with Multiplex Switch and Confirmation Telltale):Diagram1
LT/RH - A26 - Body Builder Lighting - (BOC EOF In Cab) (8HAB 8HAE 8HAU) (Manual):Diagram1
LT/RH - A26 - Body Builder Lighting - (BOC EOF In Cab) (8HAB 8HAE 8HAU) (Manual):Diagram2
LT/RH - A26 - Body Builder Lighting - (BOC EOF In Cab) (8HAB 8HAE 8HAU) (Manual):Diagram3
LT/RH - A26 - Body Builder Lighting - (BOC EOF In Cab) (8HAB 8HAE 8HAU) (Manual):Diagram4
LT/RH - A26 - Cranking (Starter) GEN4 BCM W/ Thermal Overcrank - External Switch:Diagram1
LT/RH - A26 - Cranking (Starter) GEN4 BCM W/O Thermal Overcrank Wiring:Diagram1
LT/RH - A26 - Starter Interlock (BCM HSD controlled W/ Clutch Switch W/ Auto Start Stop):Diagram1
LT/RH - A26 - Starter Interlock (BCM HSD controlled W/ Clutch Switch W/ Auto Start Stop):Diagram2
LT/RH - A26 - Starter Interlock (BCM LSD Controlled w/ Relay)_EATON XMSN:Diagram1
LT/RH - A26 - Starter Interlocks (Service Brake Interlock):Diagram1
LT/RH - A26 - Starter Interlocks A26 3K:Diagram1
LT/RH - A26 - Starter Interlocks A26 TC10:Diagram1
LT/RH - A26 - Transmission Oil Temperature-Manual Trans-Horizon Option 1:Diagram1
LT/RH - A26 - Transmission Oil Temperature-Manual Trans-Horizon Option 1:Diagram2
LT/RH - A26 - Transmission Oil Temperature-Manual Trans-Horizon Option 1:Diagram3
LT/RH - A26 - Transmission Oil Temperature-Manual Trans-Horizon Option 2:Diagram1
LT/RH - A26 - Transmission Oil Temperature-Manual Trans-Horizon Option 2:Diagram2
LT/RH - A26 - Transmission Oil Temperature-Manual Trans-Horizon Option 2:Diagram3
LT/RH - A26 - Transmission Power Take Off Dual PTO with Clutch Interlock:Diagram1
LT/RH - A26 - Transmission Power Take Off Dual Solenoid AUTO:Diagram1
LT/RH - A26 - Transmission Power Take Off Option 1:Diagram1
LT/RH - A26 - Transmission Power Take Off Option 2:Diagram1

LT/RH - A26 - Transmission Power Take Off W/ Clutch Interlock:Diagram1
LT/RH - A26 - Transmission Shifter (Eaton Endurant and Eaton Procision):Diagram1
LT/RH - A26 - Transmission Shifter (Universal Shifter - Ultrashift + & FAS):Diagram1
LT/RH - A26 - Work Lights (2 Blunt Cuts Only W/O Relay) W/ Backup W/Manual Trans Day Cab:Diagram1
LT/RH - A26 - Work Lights (2 Blunt Cuts Only W/O Relay) W/ Backup W/Manual Trans Day Cab:Diagram2
LT/RH - A26 - Work Lights (2 Blunt Cuts Only W/O Relay) W/ Backup W/Manual Trans Day Cab:Diagram3
LT/RH - A26 - Work Lights (2 Blunt Cuts Only W/O Relay) W/ Backup W/Manual Trans Day Cab:Diagram4
LT/RH - A26 - Work Lights - LED W/ Sw Pack - Customer Supplied - Sleeper W/ RKE W/MAN REV:Diagram1
LT/RH - A26 - Work Lights - LED W/ Sw Pack - Customer Supplied - Sleeper W/ RKE W/MAN REV:Diagram2
LT/RH - A26 - Work Lights - LED W/ Sw Pack - Customer Supplied - Sleeper W/ RKE W/MAN REV:Diagram3
LT/RH - A26 - Work Lights - LED W/ Sw Pack - Customer Supplied - Sleeper W/ RKE W/MAN REV:Diagram4
LT/RH - A26 - Work Lights - LED W/ Sw Pack - Customer Supplied - Sleeper W/O RKE W/MAN REV:Diagram1
LT/RH - A26 - Work Lights - LED W/ Sw Pack - Customer Supplied - Sleeper W/O RKE W/MAN REV:Diagram2
LT/RH - A26 - Work Lights - LED W/ Sw Pack - Customer Supplied - Sleeper W/O RKE W/MAN REV:Diagram3
LT/RH - A26 - Work Lights - LED W/ Sw Pack - Customer Supplied - Sleeper W/O RKE W/MAN REV:Diagram4
LT/RH - A26 - Work Lights -LED W/ Sw Pack - Sleeper W/ RKE W/MAN REV:Diagram1
LT/RH - A26 - Work Lights -LED W/ Sw Pack - Sleeper W/ RKE W/MAN REV:Diagram2
LT/RH - A26 - Work Lights -LED W/ Sw Pack - Sleeper W/O RKE W/MAN REV:Diagram1
LT/RH - A26 - Work Lights -LED W/ Sw Pack - Sleeper W/O RKE W/MAN REV:Diagram2
LT/RH - A26 - Work Lights LED W/ Sw Pack - Day Cab W/ RKE W/MAN REV:Diagram1
LT/RH - A26 - Work Lights LED W/ Sw Pack - Day Cab W/ RKE W/MAN REV:Diagram2
LT/RH - A26 - Work Lights LED W/ Sw Pack - Day Cab W/O RKE W/MAN REV:Diagram1

LT/RH - A26 - Work Lights LED W/ Sw Pack - Day Cab W/O RKE W/MAN REV:Diagram2
LT/RH - A26 - Work Lights W/ Sw Pack - Customer Supplied W/ RKE W/MAN REV:Diagram1
LT/RH - A26 - Work Lights W/ Sw Pack - Customer Supplied W/ RKE W/MAN REV:Diagram2
LT/RH - A26 - Work Lights W/ Sw Pack - Customer Supplied W/ RKE W/MAN REV:Diagram3
LT/RH - A26 - Work Lights W/ Sw Pack - Customer Supplied W/ RKE W/MAN REV:Diagram4
LT/RH - A26 - Work Lights W/ Sw Pack - Customer Supplied W/ O RKE W/MAN REV:Diagram1
LT/RH - A26 - Work Lights W/ Sw Pack - Customer Supplied W/ O RKE W/MAN REV:Diagram2
LT/RH - A26 - Work Lights W/ Sw Pack - Customer Supplied W/ O RKE W/MAN REV:Diagram3
LT/RH - A26 - Work Lights W/ Sw Pack - Customer Supplied W/ O RKE W/MAN REV:Diagram4
LT/RH - X15 - Body Builder Lighting - (BOC EOF In Cab) (8HAB 8HAE 8HAU) (Manual):Diagram1
LT/RH - X15 - Body Builder Lighting - (BOC EOF In Cab) (8HAB 8HAE 8HAU) (Manual):Diagram2
LT/RH A26 - A26 - Heating Ventilation & Air Conditioning (HVAC) Manual:Diagram1 - HVAC - Option1
LT/RH A26 - A26 - Heating Ventilation & Air Conditioning (HVAC) Manual:Diagram2 - HVAC - Option2
LT/RH A26 - Ambient Air Temperature Option 1:Diagram1
LT/RH A26 - Ambient Air Temperature Option 2:Diagram1
LT/RH A26 - Back-Up Alarm (Manual) and UltraShift+:Diagram1
LT/RH A26 - Back-Up Alarm (Manual) and UltraShift+:Diagram2
LT/RH A26 - Back-Up Alarm (Manual) and UltraShift+:Diagram3
LT/RH A26 - Back-Up Alarm (Manual) and UltraShift+:Diagram4
LT/RH A26 - Back-Up Alarm (Manual) and UltraShift+:Diagram5
LT/RH A26 - Back-Up Alarm (Manual) and UltraShift+:Diagram6
LT/RH A26 - Back-Up Alarm (Manual) and UltraShift+:Diagram7
LT/RH A26 - Back-Up Alarm (Manual) and UltraShift+:Diagram8
LT/RH A26 - Back-Up Alarm (Manual) (W/ Tail Light Bar Assy):Diagram1
LT/RH A26 - Back-Up Alarm (Manual) (W/ Tail Light Bar Assy):Diagram2
LT/RH A26 - Back-Up Alarm (Manual) (W/ Tail Light Bar Assy):Diagram3
LT/RH A26 - Back-Up Alarm (Manual) (W/ Tail Light Bar Assy):Diagram4

LT/RH A26 - Backup Light (Dual Reverse Light):Diagram1
LT/RH A26 - Backup Light (Dual Reverse Light):Diagram2
LT/RH A26 - Backup Light (Dual Reverse Light)
Allison-3K:Diagram1
LT/RH A26 - Backup Light (Dual Reverse Light)
Allison-3K:Diagram2
LT/RH A26 - Backup Light (Dual Reverse Light) Allison-
TC10:Diagram1
LT/RH A26 - Backup Light (Dual Reverse Light) Allison-
TC10:Diagram2
LT/RH A26 - Backup Light (Reverse Light) Allison
TC10:Diagram1
LT/RH A26 - Backup Light (Reverse Light) Allison
TC10:Diagram2
LT/RH A26 - Backup Light (Reverse Light) Allison-3K:Diagram1
LT/RH A26 - Backup Light (Reverse Light) Allison-3K:Diagram2
LT/RH A26 - Backup Light (Single Reverse Light):Diagram1
LT/RH A26 - Backup Light (Single Reverse Light):Diagram2
LT/RH A26 - Backup Light (Single Reverse Light) Allison
3K:Diagram1
LT/RH A26 - Backup Light (Single Reverse Light) Allison
3K:Diagram2
LT/RH A26 - Backup Light (Single Reverse Light) Allison
TC10:Diagram1
LT/RH A26 - Backup Light (Single Reverse Light) Allison
TC10:Diagram2
LT/RH A26 - Backup Light (Single Reverse Light)
Endurant:Diagram1
LT/RH A26 - Backup Light (Single Reverse Light)
Endurant:Diagram2
LT/RH A26 - Backup Light (Single Reverse Light) W/Allison
3K:Diagram1
LT/RH A26 - Backup Light (Single Reverse Light) W/Allison
3K:Diagram2
LT/RH A26 - Backup Light (Single Reverse Light) W/Allison
TC10:Diagram1
LT/RH A26 - Backup Light (Single Reverse Light) W/Allison
TC10:Diagram2
LT/RH A26 - Backup Light Endurant Trans:Diagram1
LT/RH A26 - Backup Light Endurant Trans:Diagram2
LT/RH A26 - Backup Lights (Dual Reverse Light) Eaton/Manual
Trans:Diagram1
LT/RH A26 - Backup Lights (Dual Reverse Light) Eaton/Manual
Trans:Diagram2

LT/RH A26 - Backup Lights (Dual Reverse Light) Eaton/Manual Trans:Diagram3
LT/RH A26 - Backup Lights (Dual Reverse Light) Eaton/Manual Trans:Diagram4
LT/RH A26 - Backup Lights (Reverse Light) Eaton/Manual Trans:Diagram1
LT/RH A26 - Backup Lights (Reverse Light) Eaton/Manual Trans:Diagram2
LT/RH A26 - Backup Lights (Reverse Light) Eaton/Manual Trans:Diagram3
LT/RH A26 - Backup Lights (Reverse Light) Eaton/Manual Trans:Diagram4
LT/RH A26 - Backup Lights (Reverse Lights) Eaton/Manual Trans:Diagram1
LT/RH A26 - Backup Lights (Reverse Lights) Eaton/Manual Trans:Diagram2
LT/RH A26 - Backup Lights (Reverse Lights) Eaton/Manual Trans:Diagram3
LT/RH A26 - Backup Lights (Reverse Lights) Eaton/Manual Trans:Diagram4
LT/RH A26 - Backup Lights (Single Reverse Light) Eaton/Manual Trans:Diagram1
LT/RH A26 - Backup Lights (Single Reverse Light) Eaton/Manual Trans:Diagram2
LT/RH A26 - Backup Lights (Single Reverse Light) Eaton/Manual Trans:Diagram3
LT/RH A26 - Backup Lights (Single Reverse Light) Eaton/Manual Trans:Diagram4
LT/RH A26 - Backup Lights (Single Reverse Light) Eaton/Manual Trans/:Diagram1
LT/RH A26 - Backup Lights (Single Reverse Light) Eaton/Manual Trans/:Diagram2
LT/RH A26 - Backup Lights (Single Reverse Light) Eaton/Manual Trans/:Diagram3
LT/RH A26 - Backup Lights (Single Reverse Light) Eaton/Manual Trans/:Diagram4
LT/RH A26 - ECM:ECM Connector 6018
LT/RH A26 - Endurant Transmission:Diagram1
LT/RH A26 - Heating Ventilation & Air Conditioning (HVAC) Auto Temp Control:Diagram1 - HVAC - Option1
LT/RH A26 - Heating Ventilation & Air Conditioning (HVAC) Auto Temp Control:Diagram2 - HVAC - Option2
LT/RH A26 - TC10 Series:Diagram1
LT/RH A26 - Transmission (Allison 3K/4K):Diagram1

LT/RH A26 - Ultrashift Plus:Diagram1
LT/RH/LoneStar - A26 - Vehicle Acceleration (w/ Two PWR Two GND & Two STS):Diagram1
LT/RH/LoneStar - X15 - Air Flow Restriction Monitoring:Diagram1
LT/RH/LoneStar - X15 - Cranking (Starter) GEN4 BCM W/ Thermal Overcrank - External Switch:Diagram1
LT/RH/LoneStar - X15 - Cranking (Starter) GEN4 BCM W/O Thermal Overcrank Wiring:Diagram1
LT/RH/LoneStar - X15 - Starter Interlock (BCM HSD controlled W/ Clutch Switch W/ Auto Start Stop):Diagram1
LT/RH/LoneStar - X15 - Starter Interlock (BCM LSD Controlled w/ Relay)_EATON XMSN:Diagram1
LT/RH/LoneStar - X15 - Starter Interlocks (Service Brake Interlock):Diagram1
LT/RH/LoneStar - X15 - Starter Interlocks ISX TC10:Diagram1
LT/RH/LoneStar - X15 - Transmission Oil Temperature-Manual Trans-Horizon Option 1:Diagram1
LT/RH/LoneStar - X15 - Transmission Oil Temperature-Manual Trans-Horizon Option 1:Diagram2
LT/RH/LoneStar - X15 - Transmission Oil Temperature-Manual Trans-Horizon Option 1:Diagram3
LT/RH/LoneStar - X15 - Transmission Oil Temperature-Manual Trans-Horizon Option 2:Diagram1
LT/RH/LoneStar - X15 - Transmission Oil Temperature-Manual Trans-Horizon Option 2:Diagram2
LT/RH/LoneStar - X15 - Transmission Oil Temperature-Manual Trans-Horizon Option 2:Diagram3
LT/RH/LoneStar - X15 - Transmission Power Take Off:Diagram1
LT/RH/LoneStar - X15 - Transmission Power Take Off Dual PTO with Clutch Interlock MANUAL:Diagram1
LT/RH/LoneStar - X15 - Transmission Power Take Off Dual Solenoid AUTO:Diagram1
LT/RH/LoneStar - X15 - Transmission Power Take Off W/ Clutch Interlock:Diagram1
LT/RH/LoneStar - X15 - Transmission Shifter (Eaton Endurant and Eaton Procision):Diagram1
LT/RH/LoneStar - X15 - Transmission Shifter (Universal Shifter - Ultrashift+ & FAS):Diagram1
LT/RH/LoneStar - X15 - Transmission SINGLE Power Take Off MANUAL:Diagram1
LT/RH/LoneStar - X15 - Vehicle Acceleration (w/ Two PWR Two GND & Two STS):Diagram1

LT/RH/LoneStar - X15 - Work Lights (2 Blunt Cuts Only W/O Relay) W/Backup W/Manual Trans:Diagram1
LT/RH/LoneStar - X15 - Work Lights (2 Blunt Cuts Only W/O Relay) W/Backup W/Manual Trans:Diagram2
LT/RH/LoneStar - X15 - Work Lights - LED W/ Sw Pack - Customer Supplied - Sleeper W/ RKE W/MAN REV:Diagram1
LT/RH/LoneStar - X15 - Work Lights - LED W/ Sw Pack - Customer Supplied - Sleeper W/ RKE W/MAN REV:Diagram2
LT/RH/LoneStar - X15 - Work Lights - LED W/ Sw Pack - Customer Supplied - Sleeper W/O RKE W/MAN REV:Diagram1
LT/RH/LoneStar - X15 - Work Lights - LED W/ Sw Pack - Customer Supplied - Sleeper W/O RKE W/MAN REV:Diagram2
LT/RH/LoneStar - X15 - Work Lights -LED W/ Sw Pack - Sleeper W/ RKE W/MAN REV:Diagram1
LT/RH/LoneStar - X15 - Work Lights -LED W/ Sw Pack - Sleeper W/O RKE W/MAN REV:Diagram1
LT/RH/LoneStar - X15 - Work Lights W/ Sw Pack - Customer Supplied W/ RKE W/MAN REV:Diagram1
LT/RH/LoneStar - X15 - Work Lights W/ Sw Pack - Customer Supplied W/ RKE W/MAN REV:Diagram2
LT/RH/LoneStar - X15 - Work Lights W/ Sw Pack - Customer Supplied W/O RKE W/MAN REV:Diagram1
LT/RH/LoneStar - X15 - Work Lights W/ Sw Pack - Customer Supplied W/O RKE W/MAN REV:Diagram2
LT/RH/LoneStar X15 - Ambient Air Temperature Option 1:Diagram1
LT/RH/LoneStar X15 - Ambient Air Temperature Option 2:Diagram1
LT/RH/LoneStar X15 - Auto Start Stop Oil Temp Sensor Auto Trans:Diagram1
LT/RH/LoneStar X15 - Auto Start Stop Oil Temp Sensor Manual Trans:Diagram1
LT/RH/LoneStar X15 - Auto Start Stop with Sleeper Auto Climate / Cab Temp with Oil Temp Sensor Auto Trans:Diagram1
LT/RH/LoneStar X15 - Auto Start Stop with Sleeper Auto Climate / Cab Temp with Oil Temp Sensor Manual Trans:Diagram1
LT/RH/LoneStar X15 - Back-Up Alarm (Manual) and UltraShift +:Diagram1
LT/RH/LoneStar X15 - Back-Up Alarm (Manual) and UltraShift +:Diagram2
LT/RH/LoneStar X15 - Back-Up Alarm (Manual) and UltraShift +:Diagram3

LT/RH/LoneStar X15 - Back-Up Alarm (Manual) and UltraShift +:Diagram4
LT/RH/LoneStar X15 - Back-Up Alarm (Manual) (W/ Tail Light Bar Assy):Diagram1
LT/RH/LoneStar X15 - Back-Up Alarm (Manual) (W/ Tail Light Bar Assy):Diagram2
LT/RH/LoneStar X15 - Backup Light (Single Reverse Light) Endurant:Diagram1
LT/RH/LoneStar X15 - Backup Light (Single Reverse Light) Endurant:Diagram2
LT/RH/LoneStar X15 - Backup Light (Single Reverse Light) W/ Allison TC10:Diagram1
LT/RH/LoneStar X15 - Backup Light (Single Reverse Light) W/ Allison TC10:Diagram2
LT/RH/LoneStar X15 - Backup Light Endurant:Diagram1
LT/RH/LoneStar X15 - Backup Light Endurant:Diagram2
LT/RH/LoneStar X15 - Backup Lights (Single Reverse Light) Eaton/Manual Trans:Diagram1
LT/RH/LoneStar X15 - Backup Lights (Single Reverse Light) Eaton/Manual Trans:Diagram2
LT/RH/LoneStar X15 - ECM:Diagram1
LT/RH/LoneStar X15 - Endurant Transmission:Diagram1
LT/RH/LoneStar X15 - Heating Ventilation & Air Conditioning (HVAC) Auto Temp Control:Diagram1 - HVAC
LT/RH/LoneStar X15 - Heating Ventilation & Air Conditioning (HVAC) Manual:Diagram1 - HVAC
LT/RH/LoneStar X15 - TC10 Series:Diagram1
LT/RH/LoneStar X15 - Ultrashift Plus:Diagram1
LT/RH/LoneStar X15 - Work Lights LED W/ Sw Pack - Day Cab W/ RKE W/MAN REV:Diagram1
LT/RH/LoneStar X15 - Work Lights LED W/ Sw Pack - Day Cab W/O RKE W/MAN REV:Diagram1

Mates 1702

Name	Terminal Part Number	V-Min	Name	Wire Part Number	Wire CSA	Wire Spec	Wire Material description	Wire Color Description	Wire Length	End2 Terminal Part Number	End2 Pin Name	End2 Connector
2	-	-	AA9E	3510311 R1	0.79	18.0	Thin Wall XLPE Primary Cable	GREY	1535.0	-	X	-

Name	Terminal Part Number	V-Min	Name	Wire Part Number	Wire CSA	Wire Spec	Wire Material description	Wire Color Description	Wire Length	End2 Terminal Part Number	End2 Pin Name	End2 Connector
3	-	-	3H6DBJ	3510310 R1	0.53	20.0	Thin Wall XLPE Primary Cable	GREY	1860.0	-	19	1703F
4	-	-	3H77BJ	3510298 R1	0.53	20.0	Thin Wall XLPE Primary Cable	LIGHT GREEN	1860.0	-	20	1703F
5	-	-	AU28B	3510329 R1	0.79	18.0	Thin Wall XLPE Primary Cable	TAN	1860.0	-	18	1703F
6	-	-	BJ92R2J	3510329 R1	0.79	18.0	Thin Wall XLPE Primary Cable	TAN	1860.0	-	66	1703F
6	-	-	BP71	3510318 R1	1.16	16.0	Thin Wall XLPE Primary Cable	ORANGE	1860.0	-	66	1703F
6	-	-	EY71BA	3510318 R1	1.16	16.0	Thin Wall XLPE Primary Cable	ORANGE	1860.0	-	66	1703F
7	-	-	EY71BJ	3510318 R1	1.16	16.0	Thin Wall XLPE Primary Cable	ORANGE	1860.0	-	44	1703F
7	-	-	BP71BJ	3510318 R1	1.16	16.0	Thin Wall XLPE Primary Cable	ORANGE	1860.0	-	44	1703F

Name	Terminal Part Number	V-Min	Name	Wire Part Number	Wire CSA	Wire Spec	Wire Material description	Wire Color Description	Wire Length	End2 Terminal Part Number	End2 Pin Name	End2 Connector
7	-	-	BJ92T1J	3510329 R1	0.79	18.0	Thin Wall XLPE Primary Cable	TAN	1860.0	-	45	1703F
7	-	-	3T92#165	3510329 R1	0.79	18.0	Thin Wall XLPE Primary Cable	TAN	1860.0	-	45	1703F
8	-	-	AZ13AJ	2643752 R1	1.16	16.0	Std. Wall XLPE Primary Cable	PINK	1860.0	-	42	1703F
8	-	-	GY92#163	3510324 R1	1.16	16.0	Thin Wall XLPE Primary Cable	PINK	1860.0	-	42	1703F
10	-	-	AA77J	2643678 R1	1.16	16.0	Std. Wall XLPE Primary Cable	LIGHT GREEN	1860.0	-	65	1703F
12	-	-	MN92J	3510329 R1	0.79	18.0	Thin Wall XLPE Primary Cable	TAN	1860.0	-	33	1703F
13	-	-	DS31	3510329 R1	0.79	18.0	Thin Wall XLPE Primary Cable	TAN	1860.0	-	61	1703F
14	-	-	FC88J	3510299 R1	0.79	18.0	Thin Wall XLPE Primary Cable	LIGHT GREEN	1860.0	-	60	1703F

Name	Terminal Part Number	V-Min	Name	Wire Part Number	Wire CSA	Wire Spec	Wire Material description	Wire Color Description	Wire Length	End2 Terminal Part Number	End2 Pin Name	End2 Connector
15	-	-	HZ41E	3510329 R1	0.79	18.0	Thin Wall XLPE Primary Cable	TAN	1860.0	-	24	1703F
16	-	-	GP17BA	3510324 R1	1.16	16.0	Thin Wall XLPE Primary Cable	PINK	1860.0	-	29	1703F
16	-	-	AF17B	2643752 R1	1.16	16.0	Std. Wall XLPE Primary Cable	PINK	200.0	-	X	-
18	-	-	HZ41D	3510329 R1	0.79	18.0	Thin Wall XLPE Primary Cable	TAN	1860.0	-	25	1703F
19	-	-	AZ92-GCJ	3510359 R1	0.79	18.0	Thin Wall XLPE Primary Cable	WHITE	1860.0	-	21	1703F
20	-	-	AZ92BJ	3510329 R1	0.79	18.0	Thin Wall XLPE Primary Cable	TAN	1860.0	-	28	1703F
20	-	-	GY92#141	3510329 R1	0.79	18.0	Thin Wall XLPE Primary Cable	TAN	1860.0	-	28	1703F
21	-	-	2T92ZBJ	3510329 R1	0.79	18.0	Thin Wall XLPE Primary Cable	TAN	1860.0	-	26	1703F

Name	Terminal Part Number	V-Min	Name	Wire Part Number	Wire CSA	Wire Spec	Wire Material description	Wire Color Description	Wire Length	End2 Terminal Part Number	End2 Pin Name	End2 Connector
21	-	-	AF17C	2643752 R1	1.16	16.0	Std. Wall XLPE Primary Cable	PINK	200.0	-	X	-
21	-	-	MD92#103J	3510329 R1	0.79	18.0	Thin Wall XLPE Primary Cable	TAN	1860.0	-	30	1703F
22	-	-	AA97CJ	3510347 R1	0.79	18.0	Thin Wall XLPE Primary Cable	VIOLET	1860.0	-	49	1703F
23	-	-	AA97BJ	3510347 R1	0.79	18.0	Thin Wall XLPE Primary Cable	VIOLET	1860.0	-	36	1703F
24	-	-	AA99D	3510347 R1	0.79	18.0	Thin Wall XLPE Primary Cable	VIOLET	1860.0	-	48	1703F
25	-	-	MD92#117J	3510329 R1	0.79	18.0	Thin Wall XLPE Primary Cable	TAN	1860.0	-	31	1703F
28	-	-	AA99BJ	3510347 R1	0.79	18.0	Thin Wall XLPE Primary Cable	VIOLET	1860.0	-	47	1703F
29	-	-	AA97N	3510347 R1	0.79	18.0	Thin Wall XLPE Primary Cable	VIOLET	1860.0	-	37	1703F

Name	Terminal Part Number	V-Min	Name	Wire Part Number	Wire CSA	Wire Spec	Wire Material description	Wire Color Description	Wire Length	End2 Terminal Part Number	End2 Pin Name	End2 Connector
30	-	-	AA97M	3510347 R1	0.79	18.0	Thin Wall XLPE Primary Cable	VIOLET	1860.0	-	38	1703F
32	-	-	DT104ALJ	3510354 R1	1.16	16.0	Thin Wall XLPE Primary Cable	DARK BLUE	1860.0	-	40	1703F
33	-	-	DT104-GAJ	3510360 R1	1.16	16.0	Thin Wall XLPE Primary Cable	WHITE	1860.0	-	22	1703F
34	-	-	HA30BJ	3510330 R1	1.16	16.0	Thin Wall XLPE Primary Cable	TAN	1860.0	-	16	1703F
37	-	-	EH97FA	3510348 R1	1.16	16.0	Thin Wall XLPE Primary Cable	VIOLET	1860.0	-	54	1703F
40	-	-	MN92AJ	3510311 R1	0.79	18.0	Thin Wall XLPE Primary Cable	GREY	1860.0	-	34	1703F
41	-	-	FE88AJ	3510299 R1	0.79	18.0	Thin Wall XLPE Primary Cable	LIGHT GREEN	1860.0	-	59	1703F
42	-	-	3H77BAJ	3510299 R1	0.79	18.0	Thin Wall XLPE Primary Cable	LIGHT GREEN	1860.0	-	23	1703F

Connector Name 1703F

Part Number 3595624C1

Instances Powertrain J1939 (500Kbps) Allison 3K Transmission
A26:Powertrain J1939 (500Kbps) Allison 3K A26

Mates 1703M

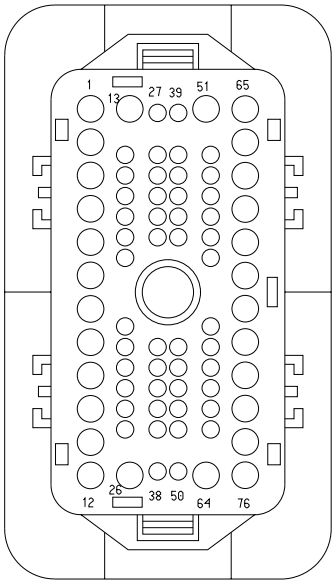

Name	Terminal Part Number	V-Min	Name	Wire Part Number	Wire CSA	Wire Spec	Wire Material description	Wire Color Description	Wire Length	End2 Terminal Part Number	End2 Pin Name	End2 Connect or
52	-	-	WIRE223753	-	0.0	-	-	-	0.0	-	17	1702
53	-	-	WIRE223752	-	0.0	-	-	-	0.0	-	11	1702

Connector Name	1703F
Part Number	3595624C1
Instances	Powertrain J1939 (500Kbps) Eaton Ultrashift+ Transmission A26:Powertrain J1939 (500Kbps) Eaton Ultrashift+ Transmission A26
Mates	1703M

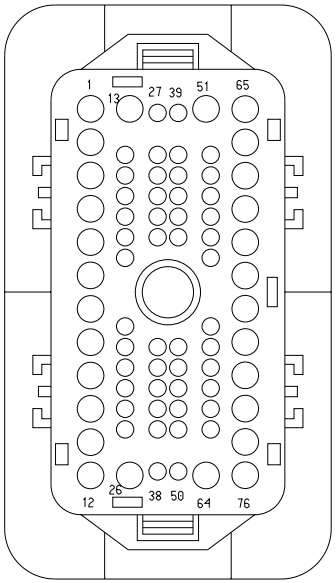

Name	Terminal Part Number	V-Min	Name	Wire Part Number	Wire CSA	Wire Spec	Wire Material description	Wire Color Description	Wire Length	End2 Terminal Part Number	End2 Pin Name	End2 Connect or
52	-	-	WIRE223753	-	0.0	-	-	-	0.0	-	17	1702
53	-	-	WIRE223752	-	0.0	-	-	-	0.0	-	11	1702

Connector Name 1703F

Part Number 3595624C1

Instances Powertrain J1939 (500Kbps) Edurant Transmission
A26:Powertrain J1939 (500Kbps) Edurant Transmission A26

Mates 1703M

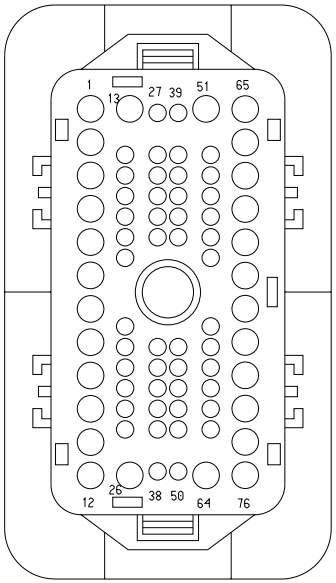

Name	Terminal Part Number	V-Min	Name	Wire Part Number	Wire CSA	Wire Spec	Wire Material description	Wire Color Description	Wire Length	End2 Terminal Part Number	End2 Pin Name	End2 Connect or
52	-	-	WIRE223753	-	0.0	-	-	-	0.0	-	17	1702
53	-	-	WIRE223752	-	0.0	-	-	-	0.0	-	11	1702

Connector Name 1703F

Part Number 3595624C1

Instances Powertrain J1939 (500Kbps) Manual Transmission
A26:Powertrain Standard J1939 (500Kbps) A26 Engine

Mates 1703M

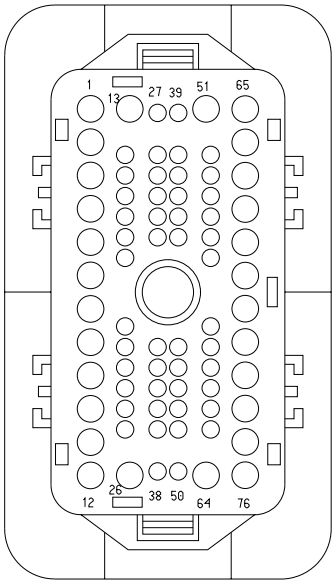

Name	Terminal Part Number	V-Min	Name	Wire Part Number	Wire CSA	Wire Spec	Wire Material description	Wire Color Description	Wire Length	End2 Terminal Part Number	End2 Pin Name	End2 Connect or
52	-	-	WIRE223753	-	0.0	-	-	-	0.0	-	17	1702
53	-	-	WIRE223752	-	0.0	-	-	-	0.0	-	11	1702

Connector Name	1703F
Part Number	3595624C1
Instances	Powertrain J1939 (500Kbps) TC10 Transmission A26:Powertrain J1939 (500Kbps) TC10 Transmission A26
Mates	1703M

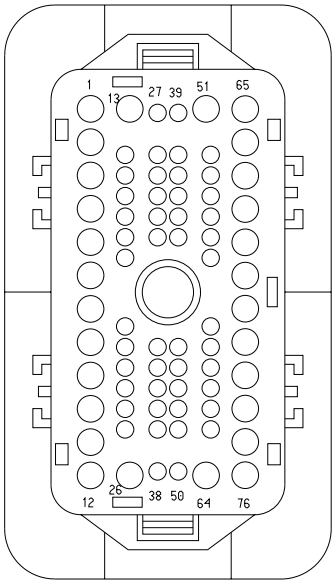

Name	Terminal Part Number	V-Min	Name	Wire Part Number	Wire CSA	Wire Spec	Wire Material description	Wire Color Description	Wire Length	End2 Terminal Part Number	End2 Pin Name	End2 Connect or
52	-	-	WIRE223753	-	0.0	-	-	-	0.0	-	17	1702
53	-	-	WIRE223752	-	0.0	-	-	-	0.0	-	11	1702

Connector Name 1703F

Part Number 3595624C1

Instances Powertrain J1939 (500Kbps) Eaton Ultrashift+ Transmission
X15:Powertrain J1939 (500kbps) Eaton Ultrashift+ X15

Mates 1703M

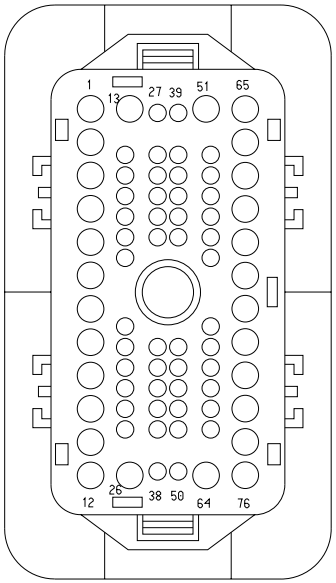

Name	Terminal Part Number	V-Min	Name	Wire Part Number	Wire CSA	Wire Spec	Wire Material description	Wire Color Description	Wire Length	End2 Terminal Part Number	End2 Pin Name	End2 Connect or
52	-	-	WIRE223753	-	0.0	-	-	-	0.0	-	17	1702
53	-	-	WIRE223752	-	0.0	-	-	-	0.0	-	11	1702

Connector Name 1703F

Part Number 3595624C1

Instances Powertrain J1939 (500Kbps) Edurant Transmission
X15:Powertrain J1939 (500kbps) Endurant Transmission X15

Mates 1703M

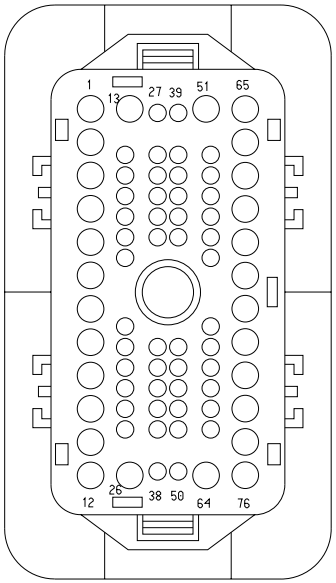

Name	Terminal Part Number	V-Min	Name	Wire Part Number	Wire CSA	Wire Spec	Wire Material description	Wire Color Description	Wire Length	End2 Terminal Part Number	End2 Pin Name	End2 Connect or
52	-	-	WIRE223753	-	0.0	-	-	-	0.0	-	17	1702
53	-	-	WIRE223752	-	0.0	-	-	-	0.0	-	11	1702

Connector Name	1703F
Part Number	3595624C1
Instances	Powertrain J1939 (500Kbps) Manual Transmission X15:Powertrain Standard J1939 (500kbps) Manual Transmission X15
Mates	1703M

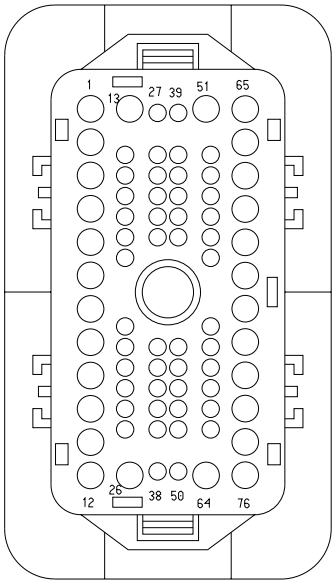

Name	Terminal Part Number	V-Min	Name	Wire Part Number	Wire CSA	Wire Spec	Wire Material description	Wire Color Description	Wire Length	End2 Terminal Part Number	End2 Pin Name	End2 Connect or
52	-	-	WIRE223753	-	0.0	-	-	-	0.0	-	17	1702
53	-	-	WIRE223752	-	0.0	-	-	-	0.0	-	11	1702

Connector Name 1703F

Part Number 3595624C1

Instances Powertrain J1939 (500Kbps) TC10 Transmission X15:Powertrain J1939 (500kbps) TC10 Transmission X15

Mates 1703M

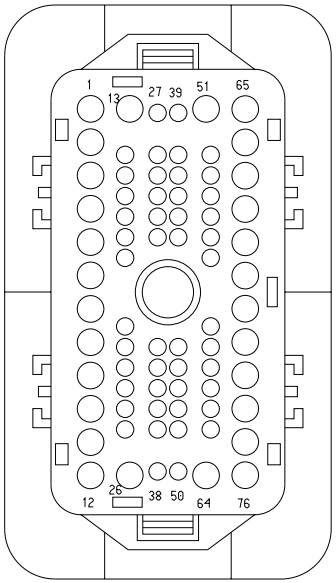

Name	Terminal Part Number	V-Min	Name	Wire Part Number	Wire CSA	Wire Spec	Wire Material description	Wire Color Description	Wire Length	End2 Terminal Part Number	End2 Pin Name	End2 Connect or
52	-	-	WIRE223753	-	0.0	-	-	-	0.0	-	17	1702
53	-	-	WIRE223752	-	0.0	-	-	-	0.0	-	11	1702

Connector Name	1703F
Part Number	3595624C1
Short Description	ENGINE/IP
Instances	LoneStar - X15 - Modesty Lighting W/ Day Cab W/ 2 Turn /0 Marker:Diagram1 LoneStar - X15 - Modesty Lighting W/ Sleeper W/ 4 Side Turns / 0 Marker:Diagram1 LT/RH - A26 - Air Flow Restriction Monitoring A26:Diagram1 LT/RH - A26 - Air Flow Restriction Monitoring A26:Diagram2 LT/RH - A26 - Auto Neutral (Allison with Multiplex Switch and Confirmation Telltale):Diagram1 LT/RH - A26 - Body Builder Lighting - (BOC EOF In Cab) (8HAB 8HAE 8HAU) (Manual):Diagram1 LT/RH - A26 - Body Builder Lighting - (BOC EOF In Cab) (8HAB 8HAE 8HAU) (Manual):Diagram2 LT/RH - A26 - Body Builder Lighting - (BOC EOF In Cab) (8HAB 8HAE 8HAU) (Manual):Diagram3 LT/RH - A26 - Body Builder Lighting - (BOC EOF In Cab) (8HAB 8HAE 8HAU) (Manual):Diagram4 LT/RH - A26 - Starter Interlock (BCM HSD controlled W/ Clutch Switch W/ Auto Start Stop):Diagram1 LT/RH - A26 - Starter Interlock (BCM HSD controlled W/ Clutch Switch W/ Auto Start Stop):Diagram2 LT/RH - A26 - Starter Interlock (BCM LSD Controlled w/ Relay)_EATON XMSN:Diagram1 LT/RH - A26 - Starter Interlocks (Service Brake Interlock):Diagram1 LT/RH - A26 - Starter Interlocks A26 3K:Diagram1 LT/RH - A26 - Starter Interlocks A26 TC10:Diagram1 LT/RH - X15/A26 - Modesty Lighting W/ Day Cab W/ 2 Turn /0 Marker:Diagram1 LT/RH - X15/A26 - Modesty Lighting W/ Sleeper W/ 4 Side Turns / 0 Marker:Diagram1 LT/RH - X15/A26 - Skirt Light Customer Supplied:Diagram1 LT/RH A26 - Back-Up Alarm (Manual) and UltraShift+:Diagram1 LT/RH A26 - Back-Up Alarm (Manual) and UltraShift+:Diagram2 LT/RH A26 - Back-Up Alarm (Manual) and UltraShift+:Diagram3 LT/RH A26 - Back-Up Alarm (Manual) and UltraShift+:Diagram4 LT/RH A26 - Back-Up Alarm (Manual) and UltraShift+:Diagram5 LT/RH A26 - Back-Up Alarm (Manual) and UltraShift+:Diagram6 LT/RH A26 - Back-Up Alarm (Manual) and UltraShift+:Diagram7 LT/RH A26 - Back-Up Alarm (Manual) and UltraShift+:Diagram8

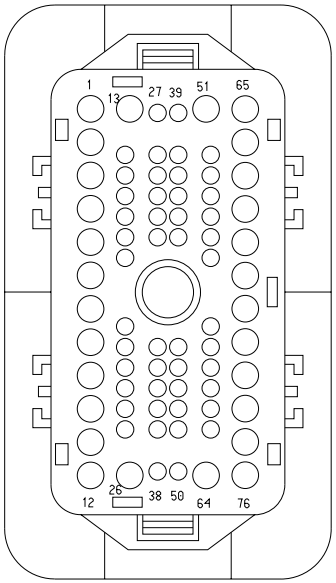

LT/RH A26 - Back-Up Alarm (Manual) (W/ Tail Light Bar Assy):Diagram1
LT/RH A26 - Back-Up Alarm (Manual) (W/ Tail Light Bar Assy):Diagram2
LT/RH A26 - Back-Up Alarm (Manual) (W/ Tail Light Bar Assy):Diagram3
LT/RH A26 - Back-Up Alarm (Manual) (W/ Tail Light Bar Assy):Diagram4
LT/RH A26 - ECM:ECM Connector 6018
LT/RH A26 - Endurant Transmission:Diagram1
LT/RH A26 - TC10 Series:Diagram1
LT/RH A26 - Transmission (Allison 3K/4K):Diagram1
LT/RH A26 - Ultrashift Plus:Diagram1
LT/RH/LoneStar - X15 - Air Flow Restriction Monitoring:Diagram1
LT/RH/LoneStar - X15 - Starter Interlock (BCM HSD controlled W/ Clutch Switch W/ Auto Start Stop):Diagram1
LT/RH/LoneStar - X15 - Starter Interlock (BCM LSD Controlled w/ Relay)_EATON XMSN:Diagram1
LT/RH/LoneStar - X15 - Starter Interlocks (Service Brake Interlock):Diagram1
LT/RH/LoneStar - X15 - Starter Interlocks ISX TC10:Diagram1
LT/RH/LoneStar X15 - Back-Up Alarm (Manual) and UltraShift +:Diagram1
LT/RH/LoneStar X15 - Back-Up Alarm (Manual) and UltraShift +:Diagram2
LT/RH/LoneStar X15 - Back-Up Alarm (Manual) and UltraShift +:Diagram3
LT/RH/LoneStar X15 - Back-Up Alarm (Manual) and UltraShift +:Diagram4
LT/RH/LoneStar X15 - Back-Up Alarm (Manual) (W/ Tail Light Bar Assy):Diagram1
LT/RH/LoneStar X15 - Back-Up Alarm (Manual) (W/ Tail Light Bar Assy):Diagram2
LT/RH/LoneStar X15 - Endurant Transmission:Diagram1
LT/RH/LoneStar X15 - TC10 Series:Diagram1
LT/RH/LoneStar X15 - Ultrashift Plus:Diagram1

Mates 1703M

Name	Terminal Part Number	V-Min	Name	Wire Part Number	Wire CSA	Wire Spec	Wire Material description	Wire Color Description	Wire Length	End2 Terminal Part Number	End2 Pin Name	End2 Connector
1	-	-	AA57AJ	3510318 R1	1.16	16.0	Thin Wall XLPE Primary Cable	ORANGE	1220.0	-	B	8054
10	-	-	AA54-GX EJ	3510360 R1	1.16	16.0	Thin Wall XLPE Primary Cable	WHITE	1220.0	-	A	8054
12	-	-	DY54-GX AJ	3510360 R1	1.16	16.0	Thin Wall XLPE Primary Cable	WHITE	325.0	-	B	A02-8051
15	-	-	AA54AJ	3510306 R1	1.16	16.0	Thin Wall XLPE Primary Cable	BROWN	1220.0	-	C	8054
18	-	-	AU28B	3510329 R1	0.79	18.0	Thin Wall XLPE Primary Cable	TAN	1860.0	-	5	1702
21	-	-	AZ92-GCJ	3510359 R1	0.79	18.0	Thin Wall XLPE Primary Cable	WHITE	1860.0	-	19	1702
22	-	-	DT104-G AJ	3510360 R1	1.16	16.0	Thin Wall XLPE Primary Cable	WHITE	1860.0	-	33	1702
28	-	-	AZ92BJ	3510329 R1	0.79	18.0	Thin Wall XLPE Primary Cable	TAN	1860.0	-	20	1702

Name	Terminal Part Number	V-Min	Name	Wire Part Number	Wire CSA	Wire Spec	Wire Material description	Wire Color Description	Wire Length	End2 Terminal Part Number	End2 Pin Name	End2 Connector
28	-	-	GY92#141	3510329 R1	0.79	18.0	Thin Wall XLPE Primary Cable	TAN	1860.0	-	20	1702
29	-	-	AF17A	2643752 R1	1.16	16.0	Std. Wall XLPE Primary Cable	PINK	1660.0	-	X	-
30	-	-	MD92#103J	3510329 R1	0.79	18.0	Thin Wall XLPE Primary Cable	TAN	1860.0	-	21	1702
31	-	-	MD92#117J	3510329 R1	0.79	18.0	Thin Wall XLPE Primary Cable	TAN	1860.0	-	25	1702
35	-	-	AA9AAJ	3510311 R1	0.79	18.0	Thin Wall XLPE Primary Cable	GREY	325.0	-	X	-
40	-	-	DT104ALJ	3510354 R1	1.16	16.0	Thin Wall XLPE Primary Cable	DARK BLUE	1860.0	-	32	1702
42	-	-	AZ13AJ	2643752 R1	1.16	16.0	Std. Wall XLPE Primary Cable	PINK	1860.0	-	8	1702
42	-	-	GY92#163	3510324 R1	1.16	16.0	Thin Wall XLPE Primary Cable	PINK	1860.0	-	8	1702

Name	Terminal Part Number	V-Min	Name	Wire Part Number	Wire CSA	Wire Spec	Wire Material description	Wire Color Description	Wire Length	End2 Terminal Part Number	End2 Pin Name	End2 Connect or
44	-	-	BP71BJ	3510318 R1	1.16	16.0	Thin Wall XLPE Primary Cable	ORANGE	1860.0	-	7	1702
44	-	-	EY71BJ	3510318 R1	1.16	16.0	Thin Wall XLPE Primary Cable	ORANGE	1860.0	-	7	1702
54	-	-	EH97FA	3510348 R1	1.16	16.0	Thin Wall XLPE Primary Cable	VIOLET	1860.0	-	37	1702
66	-	-	BJ92R2J	3510329 R1	0.79	18.0	Thin Wall XLPE Primary Cable	TAN	1860.0	-	6	1702
66	-	-	BP71	3510318 R1	1.16	16.0	Thin Wall XLPE Primary Cable	ORANGE	1860.0	-	6	1702
66	-	-	EY71BA	3510318 R1	1.16	16.0	Thin Wall XLPE Primary Cable	ORANGE	1860.0	-	6	1702
76	-	-	DY54XAJ	3510306 R1	1.16	16.0	Thin Wall XLPE Primary Cable	BROWN	325.0	-	A	A02-8051

Connector Name	1703F
Part Number	3595624C1
Instances	LoneStar - X15 - Body Builder Lighting - (BOC EOF In Cab) (8HAB 8HAE 8HAU) (Manual):Diagram1 LoneStar - X15 - Body Builder Lighting - (BOC EOF In Cab) (8HAB 8HAE 8HAU) (Manual):Diagram2 LT/RH X15 - Backup Light (Dual Reverse Light) Allison-TC10:Diagram1 LT/RH X15 - Backup Light (Dual Reverse Light) Allison-TC10:Diagram2 LT/RH X15 - Backup Light (Dual Reverse LT) Procosion/ Endurant:Diagram1 LT/RH X15 - Backup Light (Dual Reverse LT) Procosion/ Endurant:Diagram2 LT/RH X15 - Backup Light (Reverse Light) Allison TC10:Diagram1 LT/RH X15 - Backup Light (Reverse Light) Allison TC10:Diagram2 LT/RH X15 - Backup Light (Single Reverse Light) Allison TC10:Diagram1 LT/RH X15 - Backup Light (Single Reverse Light) Allison TC10:Diagram2 LT/RH X15 - Backup Light (Single Reverse Light) Endurant:Diagram1 LT/RH X15 - Backup Light (Single Reverse Light) Endurant:Diagram2 LT/RH X15 - Backup Lights (Dual Reverse Light) Eaton/Manual Trans:Diagram1 LT/RH X15 - Backup Lights (Dual Reverse Light) Eaton/Manual Trans:Diagram2 LT/RH X15 - Backup Lights (Reverse Light) Eaton/Manual Trans:Diagram1 LT/RH X15 - Backup Lights (Reverse Light) Eaton/Manual Trans:Diagram2 LT/RH X15 - Backup Lights (Reverse Lights) Eaton/Manual Trans:Diagram1 LT/RH X15 - Backup Lights (Reverse Lights) Eaton/Manual Trans:Diagram2 LT/RH X15 - Backup Lights (Single Reverse Light) Eaton/Manual Trans:Diagram1 LT/RH X15 - Backup Lights (Single Reverse Light) Eaton/Manual Trans:Diagram2

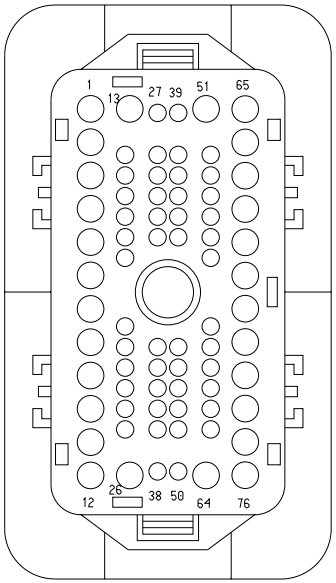

LT/RH - A26 - Cranking (Starter) GEN4 BCM W/ Thermal Overcrank - External Switch:Diagram1
LT/RH - A26 - Cranking (Starter) GEN4 BCM W/O Thermal Overcrank Wiring:Diagram1
LT/RH - A26 - Transmission Oil Temperature-Manual Trans-Horizon Option 1:Diagram1
LT/RH - A26 - Transmission Oil Temperature-Manual Trans-Horizon Option 1:Diagram2
LT/RH - A26 - Transmission Oil Temperature-Manual Trans-Horizon Option 1:Diagram3
LT/RH - A26 - Transmission Oil Temperature-Manual Trans-Horizon Option 2:Diagram1
LT/RH - A26 - Transmission Oil Temperature-Manual Trans-Horizon Option 2:Diagram2
LT/RH - A26 - Transmission Oil Temperature-Manual Trans-Horizon Option 2:Diagram3
LT/RH - A26 - Transmission Power Take Off Dual PTO with Clutch Interlock:Diagram1
LT/RH - A26 - Transmission Power Take Off Dual Solenoid AUTO:Diagram1
LT/RH - A26 - Transmission Power Take Off Option 1:Diagram1
LT/RH - A26 - Transmission Power Take Off Option 2:Diagram1
LT/RH - A26 - Transmission Power Take Off W/ Clutch Interlock:Diagram1
LT/RH - A26 - Transmission Shifter (Eaton Endurant and Eaton Procision):Diagram1
LT/RH - A26 - Transmission Shifter (Universal Shifter - Ultrashift + & FAS):Diagram1
LT/RH - A26 - Work Lights (2 Blunt Cuts Only W/O Relay) W/ Backup W/Manual Trans Day Cab:Diagram1
LT/RH - A26 - Work Lights (2 Blunt Cuts Only W/O Relay) W/ Backup W/Manual Trans Day Cab:Diagram2
LT/RH - A26 - Work Lights (2 Blunt Cuts Only W/O Relay) W/ Backup W/Manual Trans Day Cab:Diagram3
LT/RH - A26 - Work Lights (2 Blunt Cuts Only W/O Relay) W/ Backup W/Manual Trans Day Cab:Diagram4
LT/RH - A26 - Work Lights - LED W/ Sw Pack - Customer Supplied - Sleeper W/ RKE W/MAN REV:Diagram1
LT/RH - A26 - Work Lights - LED W/ Sw Pack - Customer Supplied - Sleeper W/ RKE W/MAN REV:Diagram2
LT/RH - A26 - Work Lights - LED W/ Sw Pack - Customer Supplied - Sleeper W/ RKE W/MAN REV:Diagram3
LT/RH - A26 - Work Lights - LED W/ Sw Pack - Customer Supplied - Sleeper W/ RKE W/MAN REV:Diagram4

LT/RH - A26 - Work Lights - LED W/ Sw Pack - Customer Supplied - Sleeper W/O RKE W/MAN REV:Diagram1
LT/RH - A26 - Work Lights - LED W/ Sw Pack - Customer Supplied - Sleeper W/O RKE W/MAN REV:Diagram2
LT/RH - A26 - Work Lights - LED W/ Sw Pack - Customer Supplied - Sleeper W/O RKE W/MAN REV:Diagram3
LT/RH - A26 - Work Lights - LED W/ Sw Pack - Customer Supplied - Sleeper W/O RKE W/MAN REV:Diagram4
LT/RH - A26 - Work Lights -LED W/ Sw Pack - Sleeper W/ RKE W/MAN REV:Diagram1
LT/RH - A26 - Work Lights -LED W/ Sw Pack - Sleeper W/ RKE W/MAN REV:Diagram2
LT/RH - A26 - Work Lights -LED W/ Sw Pack - Sleeper W/O RKE W/MAN REV:Diagram1
LT/RH - A26 - Work Lights -LED W/ Sw Pack - Sleeper W/O RKE W/MAN REV:Diagram2
LT/RH - A26 - Work Lights LED W/ Sw Pack - Day Cab W/ RKE W/MAN REV:Diagram1
LT/RH - A26 - Work Lights LED W/ Sw Pack - Day Cab W/ RKE W/MAN REV:Diagram2
LT/RH - A26 - Work Lights LED W/ Sw Pack - Day Cab W/O RKE W/MAN REV:Diagram1
LT/RH - A26 - Work Lights LED W/ Sw Pack - Day Cab W/O RKE W/MAN REV:Diagram2
LT/RH - A26 - Work Lights W/ Sw Pack - Customer Supplied W/ RKE W/MAN REV:Diagram1
LT/RH - A26 - Work Lights W/ Sw Pack - Customer Supplied W/ RKE W/MAN REV:Diagram2
LT/RH - A26 - Work Lights W/ Sw Pack - Customer Supplied W/ RKE W/MAN REV:Diagram3
LT/RH - A26 - Work Lights W/ Sw Pack - Customer Supplied W/ RKE W/MAN REV:Diagram4
LT/RH - A26 - Work Lights W/ Sw Pack - Customer Supplied W/ O RKE W/MAN REV:Diagram1
LT/RH - A26 - Work Lights W/ Sw Pack - Customer Supplied W/ O RKE W/MAN REV:Diagram2
LT/RH - A26 - Work Lights W/ Sw Pack - Customer Supplied W/ O RKE W/MAN REV:Diagram3
LT/RH - A26 - Work Lights W/ Sw Pack - Customer Supplied W/ O RKE W/MAN REV:Diagram4
LT/RH - X15 - Body Builder Lighting - (BOC EOF In Cab) (8HAB 8HAE 8HAU) (Manual):Diagram1
LT/RH - X15 - Body Builder Lighting - (BOC EOF In Cab) (8HAB 8HAE 8HAU) (Manual):Diagram2

LT/RH - X15/A26 - Windshield Wipers Cruise Disable & Park Brake W/Wipers ON:Diagram1
LT/RH - X15/A26 - Windshield Wipers Cruise Disable W/Wipers ON:Diagram1
LT/RH A26 - A26 - Heating Ventilation & Air Conditioning (HVAC) Manual:Diagram1 - HVAC - Option1
LT/RH A26 - A26 - Heating Ventilation & Air Conditioning (HVAC) Manual:Diagram2 - HVAC - Option2
LT/RH A26 - Ambient Air Temperature Option 1:Diagram1
LT/RH A26 - Ambient Air Temperature Option 2:Diagram1
LT/RH A26 - Backup Light (Dual Reverse Light):Diagram1
LT/RH A26 - Backup Light (Dual Reverse Light):Diagram2
LT/RH A26 - Backup Light (Dual Reverse Light) Allison-3K:Diagram1
LT/RH A26 - Backup Light (Dual Reverse Light) Allison-3K:Diagram2
LT/RH A26 - Backup Light (Dual Reverse Light) Allison-TC10:Diagram1
LT/RH A26 - Backup Light (Dual Reverse Light) Allison-TC10:Diagram2
LT/RH A26 - Backup Light (Reverse Light) Allison TC10:Diagram1
LT/RH A26 - Backup Light (Reverse Light) Allison TC10:Diagram2
LT/RH A26 - Backup Light (Reverse Light) Allison-3K:Diagram1
LT/RH A26 - Backup Light (Reverse Light) Allison-3K:Diagram2
LT/RH A26 - Backup Light (Single Reverse Light):Diagram1
LT/RH A26 - Backup Light (Single Reverse Light):Diagram2
LT/RH A26 - Backup Light (Single Reverse Light) Allison 3K:Diagram1
LT/RH A26 - Backup Light (Single Reverse Light) Allison 3K:Diagram2
LT/RH A26 - Backup Light (Single Reverse Light) Allison TC10:Diagram1
LT/RH A26 - Backup Light (Single Reverse Light) Allison TC10:Diagram2
LT/RH A26 - Backup Light (Single Reverse Light) Endurant:Diagram1
LT/RH A26 - Backup Light (Single Reverse Light) Endurant:Diagram2
LT/RH A26 - Backup Light (Single Reverse Light) W/Allison 3K:Diagram1
LT/RH A26 - Backup Light (Single Reverse Light) W/Allison 3K:Diagram2

LT/RH A26 - Backup Light (Single Reverse Light) W/Allison TC10:Diagram1
LT/RH A26 - Backup Light (Single Reverse Light) W/Allison TC10:Diagram2
LT/RH A26 - Backup Light Endurant Trans:Diagram1
LT/RH A26 - Backup Light Endurant Trans:Diagram2
LT/RH A26 - Backup Lights (Dual Reverse Light) Eaton/Manual Trans:Diagram1
LT/RH A26 - Backup Lights (Dual Reverse Light) Eaton/Manual Trans:Diagram2
LT/RH A26 - Backup Lights (Dual Reverse Light) Eaton/Manual Trans:Diagram3
LT/RH A26 - Backup Lights (Dual Reverse Light) Eaton/Manual Trans:Diagram4
LT/RH A26 - Backup Lights (Reverse Light) Eaton/Manual Trans:Diagram1
LT/RH A26 - Backup Lights (Reverse Light) Eaton/Manual Trans:Diagram2
LT/RH A26 - Backup Lights (Reverse Light) Eaton/Manual Trans:Diagram3
LT/RH A26 - Backup Lights (Reverse Light) Eaton/Manual Trans:Diagram4
LT/RH A26 - Backup Lights (Reverse Lights) Eaton/Manual Trans:Diagram1
LT/RH A26 - Backup Lights (Reverse Lights) Eaton/Manual Trans:Diagram2
LT/RH A26 - Backup Lights (Reverse Lights) Eaton/Manual Trans:Diagram3
LT/RH A26 - Backup Lights (Reverse Lights) Eaton/Manual Trans:Diagram4
LT/RH A26 - Backup Lights (Single Reverse Light) Eaton/Manual Trans:Diagram1
LT/RH A26 - Backup Lights (Single Reverse Light) Eaton/Manual Trans:Diagram2
LT/RH A26 - Backup Lights (Single Reverse Light) Eaton/Manual Trans:Diagram3
LT/RH A26 - Backup Lights (Single Reverse Light) Eaton/Manual Trans:Diagram4
LT/RH A26 - Backup Lights (Single Reverse Light) Eaton/Manual Trans/:Diagram1
LT/RH A26 - Backup Lights (Single Reverse Light) Eaton/Manual Trans/:Diagram2
LT/RH A26 - Backup Lights (Single Reverse Light) Eaton/Manual Trans/:Diagram3

LT/RH A26 - Backup Lights (Single Reverse Light) Eaton/Manual Trans/:Diagram4
LT/RH A26 - Heating Ventilation & Air Conditioning (HVAC) Auto Temp Control:Diagram1 - HVAC - Option1
LT/RH A26 - Heating Ventilation & Air Conditioning (HVAC) Auto Temp Control:Diagram2 - HVAC - Option2
LT/RH/LoneStar - A26 - Vehicle Acceleration (w/ Two PWR Two GND & Two STS):Diagram1
LT/RH/LoneStar - X15 - Cranking (Starter) GEN4 BCM W/ Thermal Overcrank - External Switch:Diagram1
LT/RH/LoneStar - X15 - Cranking (Starter) GEN4 BCM W/O Thermal Overcrank Wiring:Diagram1
LT/RH/LoneStar - X15 - Transmission Oil Temperature-Manual Trans-Horizon Option 1:Diagram1
LT/RH/LoneStar - X15 - Transmission Oil Temperature-Manual Trans-Horizon Option 1:Diagram2
LT/RH/LoneStar - X15 - Transmission Oil Temperature-Manual Trans-Horizon Option 1:Diagram3
LT/RH/LoneStar - X15 - Transmission Oil Temperature-Manual Trans-Horizon Option 2:Diagram1
LT/RH/LoneStar - X15 - Transmission Oil Temperature-Manual Trans-Horizon Option 2:Diagram2
LT/RH/LoneStar - X15 - Transmission Oil Temperature-Manual Trans-Horizon Option 2:Diagram3
LT/RH/LoneStar - X15 - Transmission Power Take Off:Diagram1
LT/RH/LoneStar - X15 - Transmission Power Take Off Dual PTO with Clutch Interlock MANUAL:Diagram1
LT/RH/LoneStar - X15 - Transmission Power Take Off Dual Solenoid AUTO:Diagram1
LT/RH/LoneStar - X15 - Transmission Power Take Off W/ Clutch Interlock:Diagram1
LT/RH/LoneStar - X15 - Transmission Shifter (Eaton Endurant and Eaton Procision):Diagram1
LT/RH/LoneStar - X15 - Transmission Shifter (Universal Shifter - Ultrashift+ & FAS):Diagram1
LT/RH/LoneStar - X15 - Transmission SINGLE Power Take Off MANUAL:Diagram1
LT/RH/LoneStar - X15 - Vehicle Acceleration (w/ Two PWR Two GND & Two STS):Diagram1
LT/RH/LoneStar - X15 - Work Lights (2 Blunt Cuts Only W/O Relay) W/Backup W/Manual Trans:Diagram1
LT/RH/LoneStar - X15 - Work Lights (2 Blunt Cuts Only W/O Relay) W/Backup W/Manual Trans:Diagram2

LT/RH/LoneStar - X15 - Work Lights - LED W/ Sw Pack - Customer Supplied - Sleeper W/ RKE W/MAN REV:Diagram1
LT/RH/LoneStar - X15 - Work Lights - LED W/ Sw Pack - Customer Supplied - Sleeper W/ RKE W/MAN REV:Diagram2
LT/RH/LoneStar - X15 - Work Lights - LED W/ Sw Pack - Customer Supplied - Sleeper W/O RKE W/MAN REV:Diagram1
LT/RH/LoneStar - X15 - Work Lights - LED W/ Sw Pack - Customer Supplied - Sleeper W/O RKE W/MAN REV:Diagram2
LT/RH/LoneStar - X15 - Work Lights -LED W/ Sw Pack - Sleeper W/ RKE W/MAN REV:Diagram1
LT/RH/LoneStar - X15 - Work Lights -LED W/ Sw Pack - Sleeper W/O RKE W/MAN REV:Diagram1
LT/RH/LoneStar - X15 - Work Lights W/ Sw Pack - Customer Supplied W/ RKE W/MAN REV:Diagram1
LT/RH/LoneStar - X15 - Work Lights W/ Sw Pack - Customer Supplied W/ RKE W/MAN REV:Diagram2
LT/RH/LoneStar - X15 - Work Lights W/ Sw Pack - Customer Supplied W/O RKE W/MAN REV:Diagram1
LT/RH/LoneStar - X15 - Work Lights W/ Sw Pack - Customer Supplied W/O RKE W/MAN REV:Diagram2
LT/RH/LoneStar - X15/A26 - Windshield Wipers Park Brake W/ Wipers ON:Diagram1
LT/RH/LoneStar - X15/A26 - Windshield Wipers Standard:Diagram1
LT/RH/LoneStar X15 - Ambient Air Temperature Option 1:Diagram1
LT/RH/LoneStar X15 - Ambient Air Temperature Option 2:Diagram1
LT/RH/LoneStar X15 - Auto Start Stop Oil Temp Sensor Auto Trans:Diagram1
LT/RH/LoneStar X15 - Auto Start Stop Oil Temp Sensor Manual Trans:Diagram1
LT/RH/LoneStar X15 - Auto Start Stop with Sleeper Auto Climate / Cab Temp with Oil Temp Sensor Auto Trans:Diagram1
LT/RH/LoneStar X15 - Auto Start Stop with Sleeper Auto Climate / Cab Temp with Oil Temp Sensor Manual Trans:Diagram1
LT/RH/LoneStar X15 - Backup Light (Single Reverse Light) Endurant:Diagram1
LT/RH/LoneStar X15 - Backup Light (Single Reverse Light) Endurant:Diagram2
LT/RH/LoneStar X15 - Backup Light (Single Reverse Light) W/ Allison TC10:Diagram1

LT/RH/LoneStar X15 - Backup Light (Single Reverse Light) W/ Allison TC10:Diagram2
LT/RH/LoneStar X15 - Backup Light Endurant:Diagram1
LT/RH/LoneStar X15 - Backup Light Endurant:Diagram2
LT/RH/LoneStar X15 - Backup Lights (Single Reverse Light) Eaton/Manual Trans:Diagram1
LT/RH/LoneStar X15 - Backup Lights (Single Reverse Light) Eaton/Manual Trans:Diagram2
LT/RH/LoneStar X15 - ECM:Diagram1
LT/RH/LoneStar X15 - Heating Ventilation & Air Conditioning (HVAC) Auto Temp Control:Diagram1 - HVAC
LT/RH/LoneStar X15 - Heating Ventilation & Air Conditioning (HVAC) Manual:Diagram1 - HVAC
LT/RH/LoneStar X15 - Work Lights LED W/ Sw Pack - Day Cab W/ RKE W/MAN REV:Diagram1
LT/RH/LoneStar X15 - Work Lights LED W/ Sw Pack - Day Cab W/O RKE W/MAN REV:Diagram1

Mates 1703M

Name	Terminal Part Number	V-Min	Name	Wire Part Number	Wire CSA	Wire Spec	Wire Material description	Wire Color Description	Wire Length	End2 Terminal Part Number	End2 Pin Name	End2 Connect or
8	-	-	AA82-GJ	3510360 R1	1.16	16.0	Thin Wall XLPE Primary Cable	WHITE	2080.0	-	C	A02-4500
16	-	-	HA30BJ	3510330 R1	1.16	16.0	Thin Wall XLPE Primary Cable	TAN	1860.0	-	34	1702
17	-	-	AA74J	3510299 R1	0.79	18.0	Thin Wall XLPE Primary Cable	LIGHT GREEN	1625.0	-	B	A02-6202
19	-	-	3H6DBJ	3510310 R1	0.53	20.0	Thin Wall XLPE Primary Cable	GREY	1860.0	-	3	1702

Name	Terminal Part Number	V-Min	Name	Wire Part Number	Wire CSA	Wire Spec	Wire Material description	Wire Color Description	Wire Length	End2 Terminal Part Number	End2 Pin Name	End2 Connector
20	-	-	3H77BJ	3510298 R1	0.53	20.0	Thin Wall XLPE Primary Cable	LIGHT GREEN	1860.0	-	4	1702
23	-	-	3H77BAJ	3510299 R1	0.79	18.0	Thin Wall XLPE Primary Cable	LIGHT GREEN	1860.0	-	42	1702
24	-	-	HZ41E	3510329 R1	0.79	18.0	Thin Wall XLPE Primary Cable	TAN	1860.0	-	15	1702
25	-	-	HZ41D	3510329 R1	0.79	18.0	Thin Wall XLPE Primary Cable	TAN	1860.0	-	18	1702
26	-	-	2T92ZBJ	3510329 R1	0.79	18.0	Thin Wall XLPE Primary Cable	TAN	1860.0	-	21	1702
29	-	-	GP17BA	3510324 R1	1.16	16.0	Thin Wall XLPE Primary Cable	PINK	1860.0	-	16	1702
29	-	-	AF17A	2643752 R1	1.16	16.0	Std. Wall XLPE Primary Cable	PINK	1660.0	-	X	-
33	-	-	MN92J	3510329 R1	0.79	18.0	Thin Wall XLPE Primary Cable	TAN	1860.0	-	12	1702

Name	Terminal Part Number	V-Min	Name	Wire Part Number	Wire CSA	Wire Spec	Wire Material description	Wire Color Description	Wire Length	End2 Terminal Part Number	End2 Pin Name	End2 Connector
34	-	-	MN92AJ	3510311 R1	0.79	18.0	Thin Wall XLPE Primary Cable	GREY	1860.0	-	40	1702
35	-	-	AA9AAJ	3510311 R1	0.79	18.0	Thin Wall XLPE Primary Cable	GREY	325.0	-	X	-
36	-	-	AA97BJ	3510347 R1	0.79	18.0	Thin Wall XLPE Primary Cable	VIOLET	1860.0	-	23	1702
37	-	-	AA97N	3510347 R1	0.79	18.0	Thin Wall XLPE Primary Cable	VIOLET	1860.0	-	29	1702
38	-	-	AA97M	3510347 R1	0.79	18.0	Thin Wall XLPE Primary Cable	VIOLET	1860.0	-	30	1702
44	-	-	EY71BJ	3510318 R1	1.16	16.0	Thin Wall XLPE Primary Cable	ORANGE	1860.0	-	7	1702
44	-	-	BP71BJ	3510318 R1	1.16	16.0	Thin Wall XLPE Primary Cable	ORANGE	1860.0	-	7	1702
45	-	-	BJ92T1J	3510329 R1	0.79	18.0	Thin Wall XLPE Primary Cable	TAN	1860.0	-	7	1702

Name	Terminal Part Number	V-Min	Name	Wire Part Number	Wire CSA	Wire Spec	Wire Material description	Wire Color Description	Wire Length	End2 Terminal Part Number	End2 Pin Name	End2 Connector
45	-	-	3T92#165	3510329 R1	0.79	18.0	Thin Wall XLPE Primary Cable	TAN	1860.0	-	7	1702
47	-	-	AA99BJ	3510347 R1	0.79	18.0	Thin Wall XLPE Primary Cable	VIOLET	1860.0	-	28	1702
48	-	-	AA99D	3510347 R1	0.79	18.0	Thin Wall XLPE Primary Cable	VIOLET	1860.0	-	24	1702
49	-	-	AA97CJ	3510347 R1	0.79	18.0	Thin Wall XLPE Primary Cable	VIOLET	1860.0	-	22	1702
54	-	-	EH97FA	3510348 R1	1.16	16.0	Thin Wall XLPE Primary Cable	VIOLET	1860.0	-	37	1702
59	-	-	FE88AJ	3510299 R1	0.79	18.0	Thin Wall XLPE Primary Cable	LIGHT GREEN	1860.0	-	41	1702
60	-	-	FC88J	3510299 R1	0.79	18.0	Thin Wall XLPE Primary Cable	LIGHT GREEN	1860.0	-	14	1702
61	-	-	DS31	3510329 R1	0.79	18.0	Thin Wall XLPE Primary Cable	TAN	1860.0	-	13	1702

Name	Terminal Part Number	V-Min	Name	Wire Part Number	Wire CSA	Wire Spec	Wire Material description	Wire Color Description	Wire Length	End2 Terminal Part Number	End2 Pin Name	End2 Connector
65	-	-	AA77J	2643678 R1	1.16	16.0	Std. Wall XLPE Primary Cable	LIGHT GREEN	1860.0	-	10	1702
66	-	-	BJ92R2J	3510329 R1	0.79	18.0	Thin Wall XLPE Primary Cable	TAN	1860.0	-	6	1702
66	-	-	BP71	3510318 R1	1.16	16.0	Thin Wall XLPE Primary Cable	ORANGE	1860.0	-	6	1702
69	-	-	YG82KJ	3510312 R1	1.16	16.0	Thin Wall XLPE Primary Cable	GREY	2080.0	-	D	A02-4500
70	-	-	AA82LJ	3510312 R1	1.16	16.0	Thin Wall XLPE Primary Cable	GREY	2080.0	-	E	A02-4500
72	-	-	AA82JJ	3510312 R1	1.16	16.0	Thin Wall XLPE Primary Cable	GREY	2080.0	-	B	A02-4500
74	-	-	AA82DJ	3510312 R1	1.16	16.0	Thin Wall XLPE Primary Cable	GREY	2080.0	-	A	A02-4500

Connector Name	1703M
Part Number	3595624C1
Instances	Powertrain J1939 (500Kbps) Allison 3K Transmission A26:Powertrain J1939 (500Kbps) Allison 3K A26
Mates	1703F

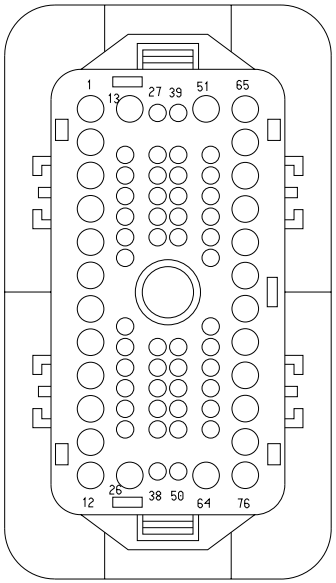

Name	Terminal Part Number	V-Min	Name	Wire Part Number	Wire CSA	Wire Spec	Wire Material description	Wire Color Description	Wire Length	End2 Terminal Part Number	End2 Pin Name	End2 Connect or
52	-	-	WIRE223755	-	0.0	-	-	-	0.0	-	PIN1	-
53	-	-	WIRE223754	-	0.0	-	-	-	0.0	-	PIN1	-

Connector Name	1703M
Part Number	3595624C1
Instances	Powertrain J1939 (500Kbps) Eaton Ultrashift+ Transmission A26:Powertrain J1939 (500Kbps) Eaton Ultrashift+ Transmission A26
Mates	1703F

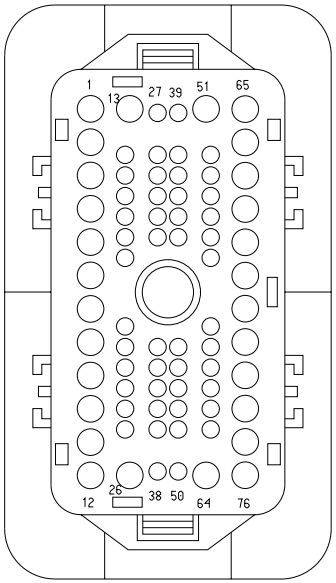

Name	Terminal Part Number	V-Min	Name	Wire Part Number	Wire CSA	Wire Spec	Wire Material description	Wire Color Description	Wire Length	End2 Terminal Part Number	End2 Pin Name	End2 Connect or
52	-	-	WIRE223755	-	0.0	-	-	-	0.0	-	PIN1	-
53	-	-	WIRE223754	-	0.0	-	-	-	0.0	-	PIN1	-

Connector Name	1703M
Part Number	3595624C1
Instances	Powertrain J1939 (500Kbps) Edurant Transmission A26:Powertrain J1939 (500Kbps) Edurant Transmission A26
Mates	1703F

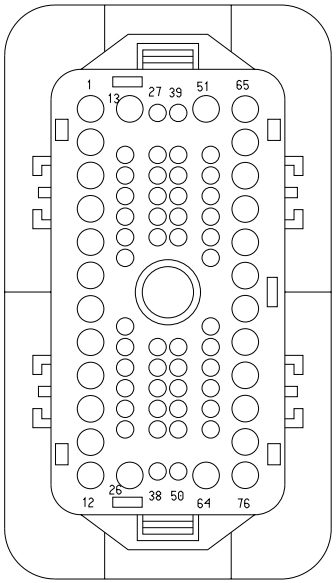

Name	Terminal Part Number	V-Min	Name	Wire Part Number	Wire CSA	Wire Spec	Wire Material description	Wire Color Description	Wire Length	End2 Terminal Part Number	End2 Pin Name	End2 Connect or
52	-	-	WIRE223755	-	0.0	-	-	-	0.0	-	PIN1	-
53	-	-	WIRE223754	-	0.0	-	-	-	0.0	-	PIN1	-

Connector Name	1703M
Part Number	3595624C1
Instances	Powertrain J1939 (500Kbps) Manual Transmission A26:Powertrain Standard J1939 (500Kbps) A26 Engine
Mates	1703F

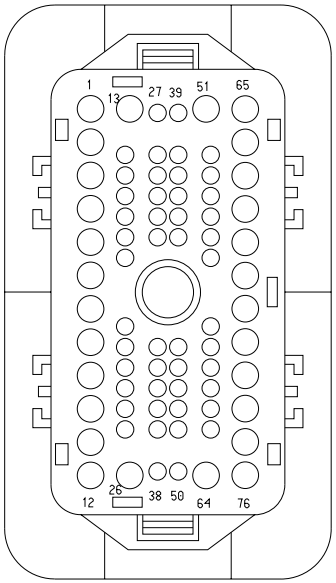

Name	Terminal Part Number	V-Min	Name	Wire Part Number	Wire CSA	Wire Spec	Wire Material description	Wire Color Description	Wire Length	End2 Terminal Part Number	End2 Pin Name	End2 Connect or
52	-	-	WIRE223755	-	0.0	-	-	-	0.0	-	PIN1	-
53	-	-	WIRE223754	-	0.0	-	-	-	0.0	-	PIN1	-

Connector Name 1703M

Part Number 3595624C1

Instances Powertrain J1939 (500Kbps) TC10 Transmission A26:Powertrain J1939 (500Kbps) TC10 Transmission A26

Mates 1703F

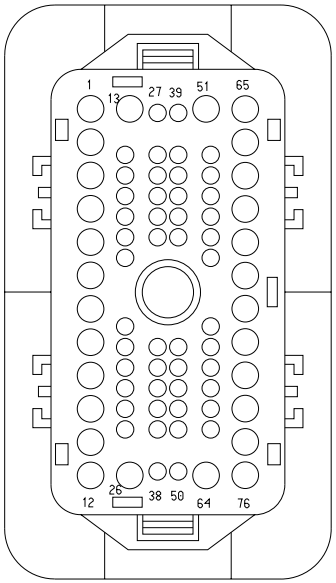

Name	Terminal Part Number	V-Min	Name	Wire Part Number	Wire CSA	Wire Spec	Wire Material description	Wire Color Description	Wire Length	End2 Terminal Part Number	End2 Pin Name	End2 Connect or
52	-	-	WIRE223755	-	0.0	-	-	-	0.0	-	PIN1	-
53	-	-	WIRE223754	-	0.0	-	-	-	0.0	-	PIN1	-

Connector Name 1703M

Part Number 3595624C1

Instances Powertrain J1939 (500Kbps) Eaton Ultrashift+ Transmission
X15:Powertrain J1939 (500kbps) Eaton Ultrashift+ X15

Mates 1703F

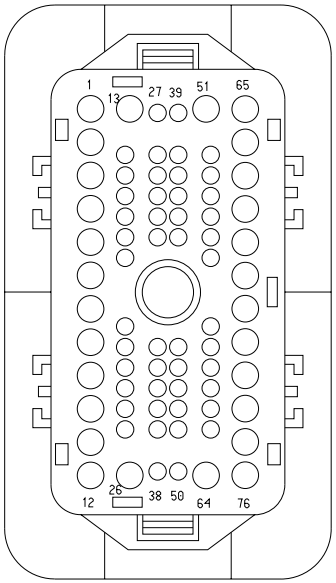

Name	Terminal Part Number	V-Min	Name	Wire Part Number	Wire CSA	Wire Spec	Wire Material description	Wire Color Description	Wire Length	End2 Terminal Part Number	End2 Pin Name	End2 Connect or
52	-	-	WIRE223755	-	0.0	-	-	-	0.0	-	PIN1	-
53	-	-	WIRE223754	-	0.0	-	-	-	0.0	-	PIN1	-

Connector Name 1703M

Part Number 3595624C1

Instances Powertrain J1939 (500Kbps) Edurant Transmission
X15:Powertrain J1939 (500kbps) Endurant Transmission X15

Mates 1703F

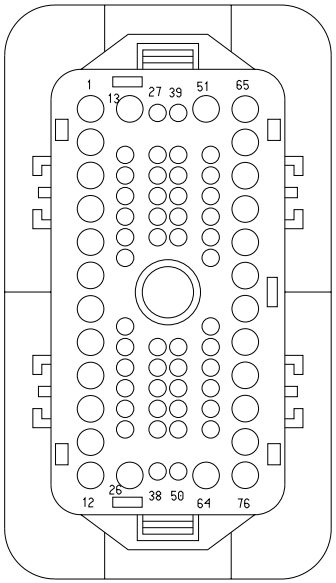

Name	Terminal Part Number	V-Min	Name	Wire Part Number	Wire CSA	Wire Spec	Wire Material description	Wire Color Description	Wire Length	End2 Terminal Part Number	End2 Pin Name	End2 Connect or
52	-	-	WIRE223755	-	0.0	-	-	-	0.0	-	PIN1	-
53	-	-	WIRE223754	-	0.0	-	-	-	0.0	-	PIN1	-

Connector Name	1703M
Part Number	3595624C1
Instances	Powertrain J1939 (500Kbps) Manual Transmission X15:Powertrain Standard J1939 (500kbps) Manual Transmission X15
Mates	1703F

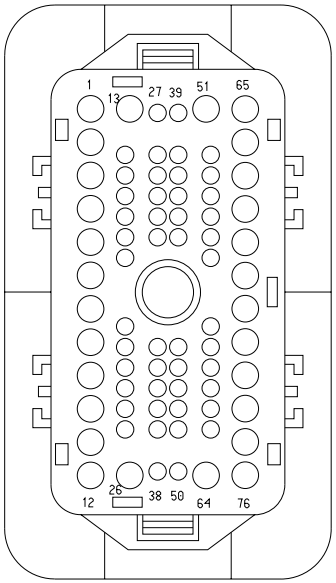

Name	Terminal Part Number	V-Min	Name	Wire Part Number	Wire CSA	Wire Spec	Wire Material description	Wire Color Description	Wire Length	End2 Terminal Part Number	End2 Pin Name	End2 Connect or
52	-	-	WIRE223755	-	0.0	-	-	-	0.0	-	PIN1	-
53	-	-	WIRE223754	-	0.0	-	-	-	0.0	-	PIN1	-

Connector Name 1703M

Part Number 3595624C1

Instances Powertrain J1939 (500Kbps) TC10 Transmission X15:Powertrain J1939 (500kbps) TC10 Transmission X15

Mates 1703F

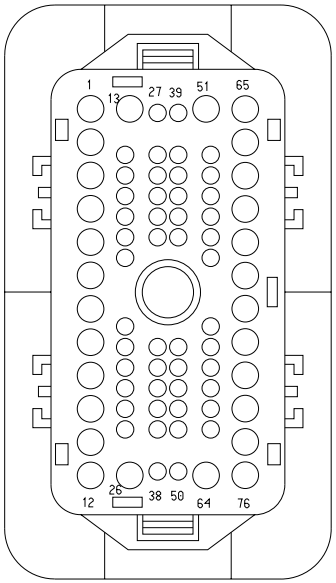

Name	Terminal Part Number	V-Min	Name	Wire Part Number	Wire CSA	Wire Spec	Wire Material description	Wire Color Description	Wire Length	End2 Terminal Part Number	End2 Pin Name	End2 Connect or
52	-	-	WIRE223755	-	0.0	-	-	-	0.0	-	PIN1	-
53	-	-	WIRE223754	-	0.0	-	-	-	0.0	-	PIN1	-

Connector Name	1703M
Part Number	3595625C1
Short Description	IP/Engine
Instances	LoneStar - X15 - Modesty Lighting W/ Day Cab W/ 2 Turn /0 Marker:Diagram1 LoneStar - X15 - Modesty Lighting W/ Sleeper W/ 4 Side Turns / 0 Marker:Diagram1 LT/RH - A26 - Air Flow Restriction Monitoring A26:Diagram1 LT/RH - A26 - Air Flow Restriction Monitoring A26:Diagram2 LT/RH - A26 - Auto Neutral (Allison with Multiplex Switch and Confirmation Telltale):Diagram1 LT/RH - A26 - Body Builder Lighting - (BOC EOF In Cab) (8HAB 8HAE 8HAU) (Manual):Diagram1 LT/RH - A26 - Body Builder Lighting - (BOC EOF In Cab) (8HAB 8HAE 8HAU) (Manual):Diagram2 LT/RH - A26 - Body Builder Lighting - (BOC EOF In Cab) (8HAB 8HAE 8HAU) (Manual):Diagram3 LT/RH - A26 - Body Builder Lighting - (BOC EOF In Cab) (8HAB 8HAE 8HAU) (Manual):Diagram4 LT/RH - A26 - Starter Interlock (BCM HSD controlled W/ Clutch Switch W/ Auto Start Stop):Diagram1 LT/RH - A26 - Starter Interlock (BCM HSD controlled W/ Clutch Switch W/ Auto Start Stop):Diagram2 LT/RH - A26 - Starter Interlock (BCM LSD Controlled w/ Relay)_EATON XMSN:Diagram1 LT/RH - A26 - Starter Interlocks (Service Brake Interlock):Diagram1 LT/RH - A26 - Starter Interlocks A26 3K:Diagram1 LT/RH - A26 - Starter Interlocks A26 TC10:Diagram1 LT/RH - X15/A26 - Modesty Lighting W/ Day Cab W/ 2 Turn /0 Marker:Diagram1 LT/RH - X15/A26 - Modesty Lighting W/ Sleeper W/ 4 Side Turns / 0 Marker:Diagram1 LT/RH - X15/A26 - Skirt Light Customer Supplied:Diagram1 LT/RH A26 - Back-Up Alarm (Manual) and UltraShift+:Diagram1 LT/RH A26 - Back-Up Alarm (Manual) and UltraShift+:Diagram2 LT/RH A26 - Back-Up Alarm (Manual) and UltraShift+:Diagram3 LT/RH A26 - Back-Up Alarm (Manual) and UltraShift+:Diagram4 LT/RH A26 - Back-Up Alarm (Manual) and UltraShift+:Diagram5 LT/RH A26 - Back-Up Alarm (Manual) and UltraShift+:Diagram6 LT/RH A26 - Back-Up Alarm (Manual) and UltraShift+:Diagram7 LT/RH A26 - Back-Up Alarm (Manual) and UltraShift+:Diagram8

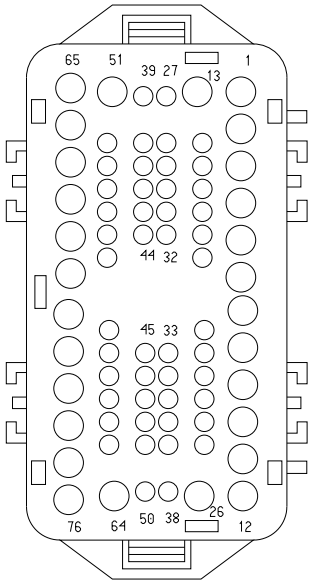

	LT/RH A26 - Back-Up Alarm (Manual) (W/ Tail Light Bar Assy):Diagram1 LT/RH A26 - Back-Up Alarm (Manual) (W/ Tail Light Bar Assy):Diagram2 LT/RH A26 - Back-Up Alarm (Manual) (W/ Tail Light Bar Assy):Diagram3 LT/RH A26 - Back-Up Alarm (Manual) (W/ Tail Light Bar Assy):Diagram4 LT/RH A26 - ECM:ECM Connector 6018 LT/RH A26 - Endurant Transmission:Diagram1 LT/RH A26 - TC10 Series:Diagram1 LT/RH A26 - Transmission (Allison 3K/4K):Diagram1 LT/RH A26 - Ultrashift Plus:Diagram1 LT/RH/LoneStar - X15 - Air Flow Restriction Monitoring:Diagram1 LT/RH/LoneStar - X15 - Starter Interlock (BCM HSD controlled W/ Clutch Switch W/ Auto Start Stop):Diagram1 LT/RH/LoneStar - X15 - Starter Interlock (BCM LSD Controlled w/ Relay)_EATON XMSN:Diagram1 LT/RH/LoneStar - X15 - Starter Interlocks (Service Brake Interlock):Diagram1 LT/RH/LoneStar - X15 - Starter Interlocks ISX TC10:Diagram1 LT/RH/LoneStar X15 - Back-Up Alarm (Manual) and UltraShift +:Diagram1 LT/RH/LoneStar X15 - Back-Up Alarm (Manual) and UltraShift +:Diagram2 LT/RH/LoneStar X15 - Back-Up Alarm (Manual) and UltraShift +:Diagram3 LT/RH/LoneStar X15 - Back-Up Alarm (Manual) and UltraShift +:Diagram4 LT/RH/LoneStar X15 - Back-Up Alarm (Manual) (W/ Tail Light Bar Assy):Diagram1 LT/RH/LoneStar X15 - Back-Up Alarm (Manual) (W/ Tail Light Bar Assy):Diagram2 LT/RH/LoneStar X15 - Endurant Transmission:Diagram1 LT/RH/LoneStar X15 - TC10 Series:Diagram1 LT/RH/LoneStar X15 - Ultrashift Plus:Diagram1
Mates	1703F

Name	Terminal Part Number	V-Min	Name	Wire Part Number	Wire CSA	Wire Spec	Wire Material description	Wire Color Description	Wire Length	End2 Terminal Part Number	End2 Pin Name	End2 Connector
1	-	-	AA57A	3510318 R1	1.16	16.0	Thin Wall XLPE Primary Cable	ORANGE	2375.0	-	-	-
10	-	-	AA54-GXE	3510360 R1	1.16	16.0	Thin Wall XLPE Primary Cable	WHITE	705.0	-	-	-
12	-	-	DY54-GXA	3510360 R1	1.16	16.0	Thin Wall XLPE Primary Cable	WHITE	585.0	-	X	-
15	-	-	AA54A	3510306 R1	1.16	16.0	Thin Wall XLPE Primary Cable	BROWN	1515.0	-	-	-
18	-	-	AU28BA	3510329 R1	0.79	18.0	Thin Wall XLPE Primary Cable	TAN	3075.0	-	F9	J5-1602
21	-	-	AZ92-GC	3510358 R1	0.53	20.0	Thin Wall XLPE Primary Cable	WHITE	3070.0	-	R2-86	1014
22	-	-	DT104-GA	3510360 R1	1.16	16.0	Thin Wall XLPE Primary Cable	WHITE	3215.0	-	M	J6-1606
28	-	-	GY92#14 1A	3510329 R1	0.79	18.0	Thin Wall XLPE Primary Cable	TAN	3215.0	-	M	J6-1606

Name	Terminal Part Number	V-Min	Name	Wire Part Number	Wire CSA	Wire Spec	Wire Material description	Wire Color Description	Wire Length	End2 Terminal Part Number	End2 Pin Name	End2 Connector
28	-	-	AZ92B	3510329 R1	0.79	18.0	Thin Wall XLPE Primary Cable	TAN	3070.0	-	R2-85	1014
29	-	-	3B17	3510324 R1	1.16	16.0	Thin Wall XLPE Primary Cable	PINK	3215.0	-	T	J6-1606
30	-	-	MD92#103	3510329 R1	0.79	18.0	Thin Wall XLPE Primary Cable	TAN	3070.0	-	R5-87	1014
31	-	-	MD92#117	3510329 R1	0.79	18.0	Thin Wall XLPE Primary Cable	TAN	3070.0	-	R5-30	1014
35	-	-	AA9AA	3510311 R1	0.79	18.0	Thin Wall XLPE Primary Cable	GREY	2895.0	-	X	-
40	-	-	DT104AL	3510354 R1	1.16	16.0	Thin Wall XLPE Primary Cable	DARK BLUE	2940.0	-	-	-
42	-	-	GY92#163A	3510324 R1	1.16	16.0	Thin Wall XLPE Primary Cable	PINK	3125.0	-	-	-
42	-	-	AZ13A	2643752 R1	1.16	16.0	Std. Wall XLPE Primary Cable	PINK	3125.0	-	-	-

Name	Terminal Part Number	V-Min	Name	Wire Part Number	Wire CSA	Wire Spec	Wire Material description	Wire Color Description	Wire Length	End2 Terminal Part Number	End2 Pin Name	End2 Connect or
44	-	-	EY71B	3510318 R1	1.16	16.0	Thin Wall XLPE Primary Cable	ORANGE	905.0	-	-	-
44	-	-	BP71B	3510318 R1	1.16	16.0	Thin Wall XLPE Primary Cable	ORANGE	2325.0	-	-	-
54	-	-	EH97F	3510348 R1	1.16	16.0	Thin Wall XLPE Primary Cable	VIOLET	3125.0	-	-	-
66	-	-	BP71AA	3510318 R1	1.16	16.0	Thin Wall XLPE Primary Cable	ORANGE	3125.0	-	-	-
76	-	-	DY54XA	3510306 R1	1.16	16.0	Thin Wall XLPE Primary Cable	BROWN	2955.0	-	X	-

Connector Name	1703M
Part Number	3595625C1
Instances	LoneStar - X15 - Body Builder Lighting - (BOC EOF In Cab) (8HAB 8HAE 8HAU) (Manual):Diagram1 LoneStar - X15 - Body Builder Lighting - (BOC EOF In Cab) (8HAB 8HAE 8HAU) (Manual):Diagram2 LT/RH X15 - Backup Light (Dual Reverse Light) Allison-TC10:Diagram1 LT/RH X15 - Backup Light (Dual Reverse Light) Allison-TC10:Diagram2 LT/RH X15 - Backup Light (Dual Reverse LT) Procosion/ Endurant:Diagram1 LT/RH X15 - Backup Light (Dual Reverse LT) Procosion/ Endurant:Diagram2 LT/RH X15 - Backup Light (Reverse Light) Allison TC10:Diagram1 LT/RH X15 - Backup Light (Reverse Light) Allison TC10:Diagram2 LT/RH X15 - Backup Light (Single Reverse Light) Allison TC10:Diagram1 LT/RH X15 - Backup Light (Single Reverse Light) Allison TC10:Diagram2 LT/RH X15 - Backup Light (Single Reverse Light) Endurant:Diagram1 LT/RH X15 - Backup Light (Single Reverse Light) Endurant:Diagram2 LT/RH X15 - Backup Lights (Dual Reverse Light) Eaton/Manual Trans:Diagram1 LT/RH X15 - Backup Lights (Dual Reverse Light) Eaton/Manual Trans:Diagram2 LT/RH X15 - Backup Lights (Reverse Light) Eaton/Manual Trans:Diagram1 LT/RH X15 - Backup Lights (Reverse Light) Eaton/Manual Trans:Diagram2 LT/RH X15 - Backup Lights (Reverse Lights) Eaton/Manual Trans:Diagram1 LT/RH X15 - Backup Lights (Reverse Lights) Eaton/Manual Trans:Diagram2 LT/RH X15 - Backup Lights (Single Reverse Light) Eaton/Manual Trans:Diagram1 LT/RH X15 - Backup Lights (Single Reverse Light) Eaton/Manual Trans:Diagram2

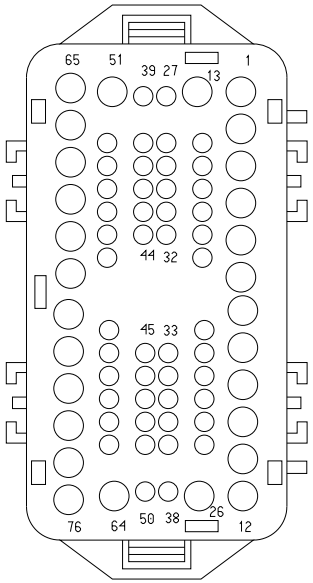

LT/RH - A26 - Cranking (Starter) GEN4 BCM W/ Thermal Overcrank - External Switch:Diagram1
LT/RH - A26 - Cranking (Starter) GEN4 BCM W/O Thermal Overcrank Wiring:Diagram1
LT/RH - A26 - Transmission Oil Temperature-Manual Trans-Horizon Option 1:Diagram1
LT/RH - A26 - Transmission Oil Temperature-Manual Trans-Horizon Option 1:Diagram2
LT/RH - A26 - Transmission Oil Temperature-Manual Trans-Horizon Option 1:Diagram3
LT/RH - A26 - Transmission Oil Temperature-Manual Trans-Horizon Option 2:Diagram1
LT/RH - A26 - Transmission Oil Temperature-Manual Trans-Horizon Option 2:Diagram2
LT/RH - A26 - Transmission Oil Temperature-Manual Trans-Horizon Option 2:Diagram3
LT/RH - A26 - Transmission Power Take Off Dual PTO with Clutch Interlock:Diagram1
LT/RH - A26 - Transmission Power Take Off Dual Solenoid AUTO:Diagram1
LT/RH - A26 - Transmission Power Take Off Option 1:Diagram1
LT/RH - A26 - Transmission Power Take Off Option 2:Diagram1
LT/RH - A26 - Transmission Power Take Off W/ Clutch Interlock:Diagram1
LT/RH - A26 - Transmission Shifter (Eaton Endurant and Eaton Procision):Diagram1
LT/RH - A26 - Transmission Shifter (Universal Shifter - Ultrashift + & FAS):Diagram1
LT/RH - A26 - Work Lights (2 Blunt Cuts Only W/O Relay) W/ Backup W/Manual Trans Day Cab:Diagram1
LT/RH - A26 - Work Lights (2 Blunt Cuts Only W/O Relay) W/ Backup W/Manual Trans Day Cab:Diagram2
LT/RH - A26 - Work Lights (2 Blunt Cuts Only W/O Relay) W/ Backup W/Manual Trans Day Cab:Diagram3
LT/RH - A26 - Work Lights (2 Blunt Cuts Only W/O Relay) W/ Backup W/Manual Trans Day Cab:Diagram4
LT/RH - A26 - Work Lights - LED W/ Sw Pack - Customer Supplied - Sleeper W/ RKE W/MAN REV:Diagram1
LT/RH - A26 - Work Lights - LED W/ Sw Pack - Customer Supplied - Sleeper W/ RKE W/MAN REV:Diagram2
LT/RH - A26 - Work Lights - LED W/ Sw Pack - Customer Supplied - Sleeper W/ RKE W/MAN REV:Diagram3
LT/RH - A26 - Work Lights - LED W/ Sw Pack - Customer Supplied - Sleeper W/ RKE W/MAN REV:Diagram4

LT/RH - A26 - Work Lights - LED W/ Sw Pack - Customer Supplied - Sleeper W/O RKE W/MAN REV:Diagram1
LT/RH - A26 - Work Lights - LED W/ Sw Pack - Customer Supplied - Sleeper W/O RKE W/MAN REV:Diagram2
LT/RH - A26 - Work Lights - LED W/ Sw Pack - Customer Supplied - Sleeper W/O RKE W/MAN REV:Diagram3
LT/RH - A26 - Work Lights - LED W/ Sw Pack - Customer Supplied - Sleeper W/O RKE W/MAN REV:Diagram4
LT/RH - A26 - Work Lights -LED W/ Sw Pack - Sleeper W/ RKE W/MAN REV:Diagram1
LT/RH - A26 - Work Lights -LED W/ Sw Pack - Sleeper W/ RKE W/MAN REV:Diagram2
LT/RH - A26 - Work Lights -LED W/ Sw Pack - Sleeper W/O RKE W/MAN REV:Diagram1
LT/RH - A26 - Work Lights -LED W/ Sw Pack - Sleeper W/O RKE W/MAN REV:Diagram2
LT/RH - A26 - Work Lights LED W/ Sw Pack - Day Cab W/ RKE W/MAN REV:Diagram1
LT/RH - A26 - Work Lights LED W/ Sw Pack - Day Cab W/ RKE W/MAN REV:Diagram2
LT/RH - A26 - Work Lights LED W/ Sw Pack - Day Cab W/O RKE W/MAN REV:Diagram1
LT/RH - A26 - Work Lights LED W/ Sw Pack - Day Cab W/O RKE W/MAN REV:Diagram2
LT/RH - A26 - Work Lights W/ Sw Pack - Customer Supplied W/ RKE W/MAN REV:Diagram1
LT/RH - A26 - Work Lights W/ Sw Pack - Customer Supplied W/ RKE W/MAN REV:Diagram2
LT/RH - A26 - Work Lights W/ Sw Pack - Customer Supplied W/ RKE W/MAN REV:Diagram3
LT/RH - A26 - Work Lights W/ Sw Pack - Customer Supplied W/ RKE W/MAN REV:Diagram4
LT/RH - A26 - Work Lights W/ Sw Pack - Customer Supplied W/ O RKE W/MAN REV:Diagram1
LT/RH - A26 - Work Lights W/ Sw Pack - Customer Supplied W/ O RKE W/MAN REV:Diagram2
LT/RH - A26 - Work Lights W/ Sw Pack - Customer Supplied W/ O RKE W/MAN REV:Diagram3
LT/RH - A26 - Work Lights W/ Sw Pack - Customer Supplied W/ O RKE W/MAN REV:Diagram4
LT/RH - X15 - Body Builder Lighting - (BOC EOF In Cab) (8HAB 8HAE 8HAU) (Manual):Diagram1
LT/RH - X15 - Body Builder Lighting - (BOC EOF In Cab) (8HAB 8HAE 8HAU) (Manual):Diagram2

LT/RH - X15/A26 - Windshield Wipers Cruise Disable & Park Brake W/Wipers ON:Diagram1
LT/RH - X15/A26 - Windshield Wipers Cruise Disable W/Wipers ON:Diagram1
LT/RH A26 - A26 - Heating Ventilation & Air Conditioning (HVAC) Manual:Diagram1 - HVAC - Option1
LT/RH A26 - A26 - Heating Ventilation & Air Conditioning (HVAC) Manual:Diagram2 - HVAC - Option2
LT/RH A26 - Ambient Air Temperature Option 1:Diagram1
LT/RH A26 - Ambient Air Temperature Option 2:Diagram1
LT/RH A26 - Backup Light (Dual Reverse Light):Diagram1
LT/RH A26 - Backup Light (Dual Reverse Light):Diagram2
LT/RH A26 - Backup Light (Dual Reverse Light) Allison-3K:Diagram1
LT/RH A26 - Backup Light (Dual Reverse Light) Allison-3K:Diagram2
LT/RH A26 - Backup Light (Dual Reverse Light) Allison-TC10:Diagram1
LT/RH A26 - Backup Light (Dual Reverse Light) Allison-TC10:Diagram2
LT/RH A26 - Backup Light (Reverse Light) Allison TC10:Diagram1
LT/RH A26 - Backup Light (Reverse Light) Allison TC10:Diagram2
LT/RH A26 - Backup Light (Reverse Light) Allison-3K:Diagram1
LT/RH A26 - Backup Light (Reverse Light) Allison-3K:Diagram2
LT/RH A26 - Backup Light (Single Reverse Light):Diagram1
LT/RH A26 - Backup Light (Single Reverse Light):Diagram2
LT/RH A26 - Backup Light (Single Reverse Light) Allison 3K:Diagram1
LT/RH A26 - Backup Light (Single Reverse Light) Allison 3K:Diagram2
LT/RH A26 - Backup Light (Single Reverse Light) Allison TC10:Diagram1
LT/RH A26 - Backup Light (Single Reverse Light) Allison TC10:Diagram2
LT/RH A26 - Backup Light (Single Reverse Light) Endurant:Diagram1
LT/RH A26 - Backup Light (Single Reverse Light) Endurant:Diagram2
LT/RH A26 - Backup Light (Single Reverse Light) W/Allison 3K:Diagram1
LT/RH A26 - Backup Light (Single Reverse Light) W/Allison 3K:Diagram2

LT/RH A26 - Backup Light (Single Reverse Light) W/Allison TC10:Diagram1
LT/RH A26 - Backup Light (Single Reverse Light) W/Allison TC10:Diagram2
LT/RH A26 - Backup Light Endurant Trans:Diagram1
LT/RH A26 - Backup Light Endurant Trans:Diagram2
LT/RH A26 - Backup Lights (Dual Reverse Light) Eaton/Manual Trans:Diagram1
LT/RH A26 - Backup Lights (Dual Reverse Light) Eaton/Manual Trans:Diagram2
LT/RH A26 - Backup Lights (Dual Reverse Light) Eaton/Manual Trans:Diagram3
LT/RH A26 - Backup Lights (Dual Reverse Light) Eaton/Manual Trans:Diagram4
LT/RH A26 - Backup Lights (Reverse Light) Eaton/Manual Trans:Diagram1
LT/RH A26 - Backup Lights (Reverse Light) Eaton/Manual Trans:Diagram2
LT/RH A26 - Backup Lights (Reverse Light) Eaton/Manual Trans:Diagram3
LT/RH A26 - Backup Lights (Reverse Light) Eaton/Manual Trans:Diagram4
LT/RH A26 - Backup Lights (Reverse Lights) Eaton/Manual Trans:Diagram1
LT/RH A26 - Backup Lights (Reverse Lights) Eaton/Manual Trans:Diagram2
LT/RH A26 - Backup Lights (Reverse Lights) Eaton/Manual Trans:Diagram3
LT/RH A26 - Backup Lights (Reverse Lights) Eaton/Manual Trans:Diagram4
LT/RH A26 - Backup Lights (Single Reverse Light) Eaton/Manual Trans:Diagram1
LT/RH A26 - Backup Lights (Single Reverse Light) Eaton/Manual Trans:Diagram2
LT/RH A26 - Backup Lights (Single Reverse Light) Eaton/Manual Trans:Diagram3
LT/RH A26 - Backup Lights (Single Reverse Light) Eaton/Manual Trans:Diagram4
LT/RH A26 - Backup Lights (Single Reverse Light) Eaton/Manual Trans/:Diagram1
LT/RH A26 - Backup Lights (Single Reverse Light) Eaton/Manual Trans/:Diagram2
LT/RH A26 - Backup Lights (Single Reverse Light) Eaton/Manual Trans/:Diagram3

LT/RH A26 - Backup Lights (Single Reverse Light) Eaton/Manual Trans/:Diagram4
LT/RH A26 - Heating Ventilation & Air Conditioning (HVAC) Auto Temp Control:Diagram1 - HVAC - Option1
LT/RH A26 - Heating Ventilation & Air Conditioning (HVAC) Auto Temp Control:Diagram2 - HVAC - Option2
LT/RH/LoneStar - A26 - Vehicle Acceleration (w/ Two PWR Two GND & Two STS):Diagram1
LT/RH/LoneStar - X15 - Cranking (Starter) GEN4 BCM W/ Thermal Overcrank - External Switch:Diagram1
LT/RH/LoneStar - X15 - Cranking (Starter) GEN4 BCM W/O Thermal Overcrank Wiring:Diagram1
LT/RH/LoneStar - X15 - Transmission Oil Temperature-Manual Trans-Horizon Option 1:Diagram1
LT/RH/LoneStar - X15 - Transmission Oil Temperature-Manual Trans-Horizon Option 1:Diagram2
LT/RH/LoneStar - X15 - Transmission Oil Temperature-Manual Trans-Horizon Option 1:Diagram3
LT/RH/LoneStar - X15 - Transmission Oil Temperature-Manual Trans-Horizon Option 2:Diagram1
LT/RH/LoneStar - X15 - Transmission Oil Temperature-Manual Trans-Horizon Option 2:Diagram2
LT/RH/LoneStar - X15 - Transmission Oil Temperature-Manual Trans-Horizon Option 2:Diagram3
LT/RH/LoneStar - X15 - Transmission Power Take Off:Diagram1
LT/RH/LoneStar - X15 - Transmission Power Take Off Dual PTO with Clutch Interlock MANUAL:Diagram1
LT/RH/LoneStar - X15 - Transmission Power Take Off Dual Solenoid AUTO:Diagram1
LT/RH/LoneStar - X15 - Transmission Power Take Off W/ Clutch Interlock:Diagram1
LT/RH/LoneStar - X15 - Transmission Shifter (Eaton Endurant and Eaton Procision):Diagram1
LT/RH/LoneStar - X15 - Transmission Shifter (Universal Shifter - Ultrashift+ & FAS):Diagram1
LT/RH/LoneStar - X15 - Transmission SINGLE Power Take Off MANUAL:Diagram1
LT/RH/LoneStar - X15 - Vehicle Acceleration (w/ Two PWR Two GND & Two STS):Diagram1
LT/RH/LoneStar - X15 - Work Lights (2 Blunt Cuts Only W/O Relay) W/Backup W/Manual Trans:Diagram1
LT/RH/LoneStar - X15 - Work Lights (2 Blunt Cuts Only W/O Relay) W/Backup W/Manual Trans:Diagram2

LT/RH/LoneStar - X15 - Work Lights - LED W/ Sw Pack - Customer Supplied - Sleeper W/ RKE W/MAN REV:Diagram1
LT/RH/LoneStar - X15 - Work Lights - LED W/ Sw Pack - Customer Supplied - Sleeper W/ RKE W/MAN REV:Diagram2
LT/RH/LoneStar - X15 - Work Lights - LED W/ Sw Pack - Customer Supplied - Sleeper W/O RKE W/MAN REV:Diagram1
LT/RH/LoneStar - X15 - Work Lights - LED W/ Sw Pack - Customer Supplied - Sleeper W/O RKE W/MAN REV:Diagram2
LT/RH/LoneStar - X15 - Work Lights -LED W/ Sw Pack - Sleeper W/ RKE W/MAN REV:Diagram1
LT/RH/LoneStar - X15 - Work Lights -LED W/ Sw Pack - Sleeper W/O RKE W/MAN REV:Diagram1
LT/RH/LoneStar - X15 - Work Lights W/ Sw Pack - Customer Supplied W/ RKE W/MAN REV:Diagram1
LT/RH/LoneStar - X15 - Work Lights W/ Sw Pack - Customer Supplied W/ RKE W/MAN REV:Diagram2
LT/RH/LoneStar - X15 - Work Lights W/ Sw Pack - Customer Supplied W/O RKE W/MAN REV:Diagram1
LT/RH/LoneStar - X15 - Work Lights W/ Sw Pack - Customer Supplied W/O RKE W/MAN REV:Diagram2
LT/RH/LoneStar - X15/A26 - Windshield Wipers Park Brake W/ Wipers ON:Diagram1
LT/RH/LoneStar - X15/A26 - Windshield Wipers Standard:Diagram1
LT/RH/LoneStar X15 - Ambient Air Temperature Option 1:Diagram1
LT/RH/LoneStar X15 - Ambient Air Temperature Option 2:Diagram1
LT/RH/LoneStar X15 - Auto Start Stop Oil Temp Sensor Auto Trans:Diagram1
LT/RH/LoneStar X15 - Auto Start Stop Oil Temp Sensor Manual Trans:Diagram1
LT/RH/LoneStar X15 - Auto Start Stop with Sleeper Auto Climate / Cab Temp with Oil Temp Sensor Auto Trans:Diagram1
LT/RH/LoneStar X15 - Auto Start Stop with Sleeper Auto Climate / Cab Temp with Oil Temp Sensor Manual Trans:Diagram1
LT/RH/LoneStar X15 - Backup Light (Single Reverse Light) Endurant:Diagram1
LT/RH/LoneStar X15 - Backup Light (Single Reverse Light) Endurant:Diagram2
LT/RH/LoneStar X15 - Backup Light (Single Reverse Light) W/ Allison TC10:Diagram1

LT/RH/LoneStar X15 - Backup Light (Single Reverse Light) W/ Allison TC10:Diagram2
LT/RH/LoneStar X15 - Backup Light Endurant:Diagram1
LT/RH/LoneStar X15 - Backup Light Endurant:Diagram2
LT/RH/LoneStar X15 - Backup Lights (Single Reverse Light) Eaton/Manual Trans:Diagram1
LT/RH/LoneStar X15 - Backup Lights (Single Reverse Light) Eaton/Manual Trans:Diagram2
LT/RH/LoneStar X15 - ECM:Diagram1
LT/RH/LoneStar X15 - Heating Ventilation & Air Conditioning (HVAC) Auto Temp Control:Diagram1 - HVAC
LT/RH/LoneStar X15 - Heating Ventilation & Air Conditioning (HVAC) Manual:Diagram1 - HVAC
LT/RH/LoneStar X15 - Work Lights LED W/ Sw Pack - Day Cab W/ RKE W/MAN REV:Diagram1
LT/RH/LoneStar X15 - Work Lights LED W/ Sw Pack - Day Cab W/O RKE W/MAN REV:Diagram1

Mates 1703F

Name	Terminal Part Number	V-Min	Name	Wire Part Number	Wire CSA	Wire Spec	Wire Material description	Wire Color Description	Wire Length	End2 Terminal Part Number	End2 Pin Name	End2 Connect or
8	-	-	AA82-G	3510360 R1	1.16	16.0	Thin Wall XLPE Primary Cable	WHITE	1875.0	-	-	-
16	-	-	HA30B	3510330 R1	1.16	16.0	Thin Wall XLPE Primary Cable	TAN	3055.0	-	B6	J3-1600
17	-	-	AA74	3510299 R1	0.79	18.0	Thin Wall XLPE Primary Cable	LIGHT GREEN	3055.0	-	B5	J3-1600
19	-	-	3H6DB	3510311 R1	0.79	18.0	Thin Wall XLPE Primary Cable	GREY	3075.0	-	E6	J5-1602

Name	Terminal Part Number	V-Min	Name	Wire Part Number	Wire CSA	Wire Spec	Wire Material description	Wire Color Description	Wire Length	End2 Terminal Part Number	End2 Pin Name	End2 Connector
20	-	-	3H77B	3510311 R1	0.79	18.0	Thin Wall XLPE Primary Cable	GREY	3055.0	-	B12	J3-1600
23	-	-	3H77BA	3510299 R1	0.79	18.0	Thin Wall XLPE Primary Cable	LIGHT GREEN	2760.0	-	A12	J7-1607
24	-	-	HZ41EJ	3510311 R1	0.79	18.0	Thin Wall XLPE Primary Cable	GREY	2635.0	-	F	3200M
25	-	-	HZ41DJ	3510329 R1	0.79	18.0	Thin Wall XLPE Primary Cable	TAN	2635.0	-	E	3200M
26	-	-	2T92ZB	3510329 R1	0.79	18.0	Thin Wall XLPE Primary Cable	TAN	2240.0	-	B	7900F
29	-	-	3B17	3510324 R1	1.16	16.0	Thin Wall XLPE Primary Cable	PINK	3215.0	-	T	J6-1606
33	-	-	MN92	3510329 R1	0.79	18.0	Thin Wall XLPE Primary Cable	TAN	2240.0	-	C	7900F
34	-	-	MN92AA	3510311 R1	0.79	18.0	Thin Wall XLPE Primary Cable	GREY	2240.0	-	D	7900F

Name	Terminal Part Number	V-Min	Name	Wire Part Number	Wire CSA	Wire Spec	Wire Material description	Wire Color Description	Wire Length	End2 Terminal Part Number	End2 Pin Name	End2 Connector
35	-	-	AA9AA	3510311 R1	0.79	18.0	Thin Wall XLPE Primary Cable	GREY	2895.0	-	X	-
36	-	-	AA97B	3510347 R1	0.79	18.0	Thin Wall XLPE Primary Cable	VIOLET	2115.0	-	B4	1800
37	-	-	AA97NA	3510347 R1	0.79	18.0	Thin Wall XLPE Primary Cable	VIOLET	2115.0	-	B6	1800
38	-	-	AA97MA	3510347 R1	0.79	18.0	Thin Wall XLPE Primary Cable	VIOLET	2115.0	-	B5	1800
44	-	-	EY71B	3510318 R1	1.16	16.0	Thin Wall XLPE Primary Cable	ORANGE	905.0	-	X	-
44	-	-	BP71B	3510318 R1	1.16	16.0	Thin Wall XLPE Primary Cable	ORANGE	2325.0	-	-	-
45	-	-	BJ92R1	3510329 R1	0.79	18.0	Thin Wall XLPE Primary Cable	TAN	3040.0	-	R2-86	1012
45	-	-	3T92#16 5A	3510329 R1	0.79	18.0	Thin Wall XLPE Primary Cable	TAN	3040.0	-	R2-86	1012

Name	Terminal Part Number	V-Min	Name	Wire Part Number	Wire CSA	Wire Spec	Wire Material description	Wire Color Description	Wire Length	End2 Terminal Part Number	End2 Pin Name	End2 Connector
47	-	-	AA99B	3510347 R1	0.79	18.0	Thin Wall XLPE Primary Cable	VIOLET	2115.0	-	C4	1800
48	-	-	AA99DA	3510347 R1	0.79	18.0	Thin Wall XLPE Primary Cable	VIOLET	2115.0	-	C6	1800
49	-	-	AA97C	3510347 R1	0.79	18.0	Thin Wall XLPE Primary Cable	VIOLET	2115.0	-	C5	1800
54	-	-	EH97F	3510348 R1	1.16	16.0	Thin Wall XLPE Primary Cable	VIOLET	3125.0	-	-	-
59	-	-	FE88A	3510299 R1	0.79	18.0	Thin Wall XLPE Primary Cable	LIGHT GREEN	3075.0	-	F15	J5-1602
60	-	-	FD88	3510299 R1	0.79	18.0	Thin Wall XLPE Primary Cable	LIGHT GREEN	3075.0	-	F14	J5-1602
61	-	-	DS31J	3510329 R1	0.79	18.0	Thin Wall XLPE Primary Cable	TAN	3055.0	-	B7	J3-1600
65	-	-	AA77	3510299 R1	0.79	18.0	Thin Wall XLPE Primary Cable	LIGHT GREEN	2660.0	-	C	J1-1603

Name	Terminal Part Number	V-Min	Name	Wire Part Number	Wire CSA	Wire Spec	Wire Material description	Wire Color Description	Wire Length	End2 Terminal Part Number	End2 Pin Name	End2 Connector
66	-	-	BJ92R2	3510329 R1	0.79	18.0	Thin Wall XLPE Primary Cable	TAN	3040.0	-	R2-85	1012
66	-	-	BP71AA	3510318 R1	1.16	16.0	Thin Wall XLPE Primary Cable	ORANGE	3125.0	-	-	-
69	-	-	YG82K	3510312 R1	1.16	16.0	Thin Wall XLPE Primary Cable	GREY	2950.0	-	R5-87	1011
70	-	-	AA82L	3510312 R1	1.16	16.0	Thin Wall XLPE Primary Cable	GREY	2950.0	-	R5-87A	1011
72	-	-	AA82J	3510312 R1	1.16	16.0	Thin Wall XLPE Primary Cable	GREY	2950.0	-	R2-87A	1011
74	-	-	AA82D	3510312 R1	1.16	16.0	Thin Wall XLPE Primary Cable	GREY	2545.0	-	X	-

Connector Name 1776

Part Number 4062806C1

Instances Powertrain J1939 (500Kbps) Edurant Transmission
A26:Powertrain J1939 (500Kbps) Edurant Transmission A26
Powertrain J1939 (500Kbps) Allison 3K Transmission
A26:Powertrain J1939 (500Kbps) Allison 3K A26
Powertrain J1939 (500Kbps) Eaton Ultrashift+ Transmission
A26:Powertrain J1939 (500Kbps) Eaton Ultrashift+ Transmission A26
Powertrain J1939 (500Kbps) Eaton Ultrashift+ Transmission X15:Powertrain J1939 (500kbps) Eaton Ultrashift+ X15
Powertrain J1939 (500Kbps) Edurant Transmission
X15:Powertrain J1939 (500kbps) Endurant Transmission X15
Powertrain J1939 (500Kbps) Manual Transmission
A26:Powertrain Standard J1939 (500Kbps) A26 Engine
Powertrain J1939 (500Kbps) Manual Transmission
X15:Powertrain Standard J1939 (500kbps) Manual Transmission X15
Powertrain J1939 (500Kbps) TC10 Transmission A26:Powertrain J1939 (500Kbps) TC10 Transmission A26
Powertrain J1939 (500Kbps) TC10 Transmission X15:Powertrain J1939 (500kbps) TC10 Transmission X15

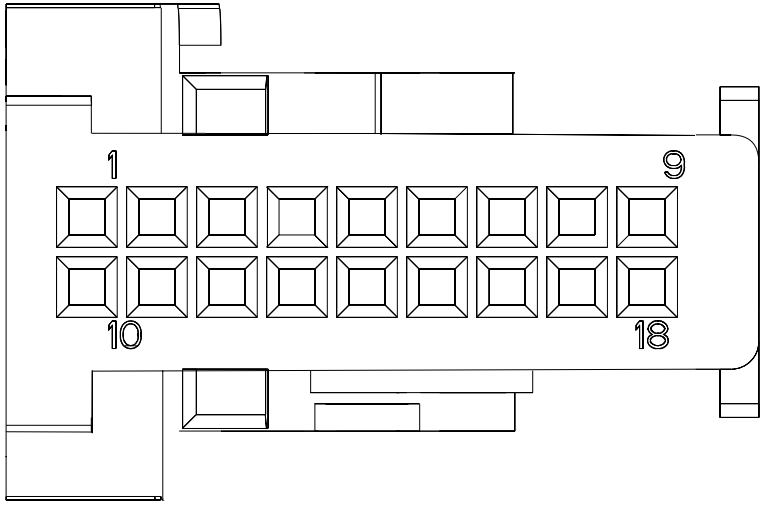

Mates DEV10130

Name	Terminal Part Number	V-Min	Name	Wire Part Number	Wire CSA	Wire Spec	Wire Material description	Wire Color Description	Wire Length	End2 Terminal Part Number	End2 Pin Name	End2 Connector
7	-	-	WIRE223742	-	0.0	-	-	-	0.0	-	PIN1	-
15	-	-	WIRE223762	-	0.0	-	-	-	0.0	-	PIN1	-

Connector Name	1800F
Part Number	3612512C1
Short Description	CAB HARNESS CONNECTOR
Instances	LoneStar - X15 - Headlights Halogen N/INT N/LOWW:Diagram1 LoneStar - X15 - Headlights Halogen N/INT W/LOWW:Diagram1 LoneStar - X15 - Headlights Halogen W/INT N/LOWW:Diagram1 LoneStar - X15 - Headlights Halogen W/INT W/ LOWW:Diagram1 LoneStar - X15 - Windshield Washer Pump:Diagram1 LoneStar - X15 - Windshield Washer Pump & Low Fluid Sensor:Diagram1 LT - X15/A26 - Headlights Halogen N/INT N/LOWW:Diagram1 LT - X15/A26 - Headlights Halogen N/INT W/LOWW:Diagram1 LT - X15/A26 - Headlights Halogen W/INT N/LOWW:Diagram1 LT - X15/A26 - Headlights Halogen W/INT W/LOWW:Diagram1 LT - X15/A26 - Headlights LED N/ INT N/LOWW:Diagram1 LT - X15/A26 - Headlights LED N/ INT W/LOWW:Diagram1 LT - X15/A26 - Headlights LED W/INT N/LOWW:Diagram1 LT - X15/A26 - Headlights LED W/INT W/LOWW:Diagram1 LT/RH - A26 - Starter Interlock (BCM HSD controlled W/ Clutch Switch W/ Auto Start Stop):Diagram1 LT/RH - A26 - Starter Interlock (BCM HSD controlled W/ Clutch Switch W/ Auto Start Stop):Diagram2 LT/RH - X15/A26 - 10 PIN ClockSpring:Diagram1 LT/RH - X15/A26 - Bendix Stability Control For Tractor or Tractors with Trailer Tow:Diagram1 LT/RH - X15/A26 - Bendix Stability Control For Tractor or Tractors with Trailer Tow:Diagram2 LT/RH - X15/A26 - Bendix; Tractor or Towing Truck; W/ Air SUSP; J1939 Driven Lamp:Diagram1 LT/RH - X15/A26 - Bendix; Tractor or Towing Truck; W/ Air SUSP; J1939 Driven Lamp:Diagram2 LT/RH - X15/A26 - Directional Signal (Turn) With HEADLIGHTS:Diagram1 LT/RH - X15/A26 - Directional Signal (Turn) With HEADLIGHTS (HAL-125):Diagram1 LT/RH - X15/A26 - Directional Signal (Turn) With HEADLIGHTS (LED-125):Diagram1 LT/RH - X15/A26 - Directional Signal (Turn) With HEADLIGHTS Option2:Diagram1 LT/RH - X15/A26 - Park Brake Control (Monitoring) (W/Vehicle Speed):Diagram1

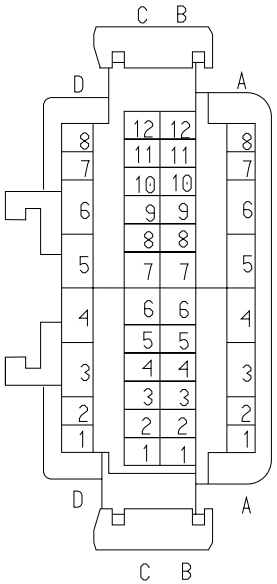

LT/RH - X15/A26 - Park Brake Control (Monitoring)(GEN IV BCM):Diagram1
LT/RH - X15/A26 - Radio W/Steering Wheel Pod N/ Remote:Diagram1
LT/RH - X15/A26 - Wabco Full Stability Control:Diagram1
LT/RH - X15/A26 - Wabco Full Stability Control:Diagram2
LT/RH - X15/A26 - Windshield Washer Pump:Diagram1
LT/RH - X15/A26 - Windshield Washer Pump & Low Fluid Sensor:Diagram1
LT/RH - X15/A26 - Windshield Wipers Cruise Disable & Park Brake W/Wipers ON:Diagram1
LT/RH - X15/A26 - Windshield Wipers Cruise Disable W/Wipers ON:Diagram1
LT/RH/LoneStar - A26 - Vehicle Acceleration (w/ Two PWR Two GND & Two STS):Diagram1
LT/RH/LoneStar - X15 - Starter Interlock (BCM HSD controlled W/ Clutch Switch W/ Auto Start Stop):Diagram1
LT/RH/LoneStar - X15 - Vehicle Acceleration (w/ Two PWR Two GND & Two STS):Diagram1
LT/RH/LoneStar - X15/A26 - Adjustable Engine Speed Control (PTO) 4-pin Clockspring:Diagram1
LT/RH/LoneStar - X15/A26 - Adjustable Engine Speed Control (PTO) 10-PIN ClockSpring:Diagram1
LT/RH/LoneStar - X15/A26 - Brake Pressure (Auxiliary Gauge):Diagram1
LT/RH/LoneStar - X15/A26 - Brake Pressure (Virtual Gauge):Diagram1
LT/RH/LoneStar - X15/A26 - Brake Switch:Diagram1
LT/RH/LoneStar - X15/A26 - Clutch Monitoring (High and Low Switch to BCM):Diagram1
LT/RH/LoneStar - X15/A26 - Compressed Air Supply (Primary and Secondary Gauge):Diagram1
LT/RH/LoneStar - X15/A26 - Engine Idle Increment/Decrement (Steering Wheel Switch - 4 Pin):Diagram1
LT/RH/LoneStar - X15/A26 - Engine Idle Increment/Decrement (Steering Wheel Switch - 10 Pin):Diagram1
LT/RH/LoneStar - X15/A26 - MARKER/PARK LIGHTS - W/ Marker Interrupt 10pin CLCKSPRING:Diagram1
LT/RH/LoneStar - X15/A26 - Park Brake Controls (Non Lever Park Brake):Diagram1
LT/RH/LoneStar - X15/A26 - Park Brake Controls (with Alarm IGN ON/OFF):Diagram1
LT/RH/LoneStar - X15/A26 - PARK LIGHTS - W/Marker Interrupt 4 pin clockspring:Diagram1

LT/RH/LoneStar - X15/A26 - Radio (Bluetooth) W/Steering Wheel Pod N/ Remote W/MIC:Diagram1
LT/RH/LoneStar - X15/A26 - Radio W/Steering Wheel Pod W/ Remote:Diagram1
LT/RH/LoneStar - X15/A26 - Radio(Bluetooth) W/Steering Wheel W/Remote W/MIC:Diagram1
LT/RH/LoneStar - X15/A26 - Starter Interlock (BCM HSD controlled W/ Clutch Switch N/ Auto Start Stop):Diagram1
LT/RH/LoneStar - X15/A26 - Telematics (TRIPMASTER DAYCAB):Diagram1
LT/RH/LoneStar - X15/A26 - Telematics (TRIPMASTER SLEEPER):Diagram1
LT/RH/LoneStar - X15/A26 - Vehicle Speed Control (Cruise Control) 4 - PIN:Diagram1
LT/RH/LoneStar - X15/A26 - Windshield Wipers Park Brake W/ Wipers ON:Diagram1
LT/RH/LoneStar - X15/A26 - Windshield Wipers Standard:Diagram1
RH - X15/A26 - Directional Signal (Turn) W/ HEADLIGHTS:Diagram1
RH - X15/A26 - Headlights Halogen N/INT N/LOWW:Diagram1
RH - X15/A26 - Headlights Halogen N/INT W/LOWW:Diagram1
RH - X15/A26 - Headlights Halogen W/INT N/LOWW:Diagram1
RH - X15/A26 - Headlights Halogen W/INT W/LOWW:Diagram1
RH - X15/A26 - Headlights LED N/INT N/LOWW LT:Diagram1
RH - X15/A26 - Headlights LED N/INT W/LOWW LT:Diagram1
RH - X15/A26 - Headlights LED W/INT N/LOWW LT:Diagram1
RH - X15/A26 - Headlights LED W/INT W/LOWW LT:Diagram1

Mates 1800

Name	Terminal Part Number	V-Min	Name	Wire Part Number	Wire CSA	Wire Spec	Wire Material description	Wire Color Description	Wire Length	End2 Terminal Part Number	End2 Pin Name	End2 Connect or
A1	-	-	BA56B	3510317 R1	0.79	18.0	Thin Wall XLPE Primary Cable	ORANGE	0.0	-	1	1801
A2	-	-	BA57B	3510317 R1	0.79	18.0	Thin Wall XLPE Primary Cable	ORANGE	0.0	-	2	1801

Name	Terminal Part Number	V-Min	Name	Wire Part Number	Wire CSA	Wire Spec	Wire Material description	Wire Color Description	Wire Length	End2 Terminal Part Number	End2 Pin Name	End2 Connector
A3	-	-	BH11-GA	2643674 R1	0.79	18.0	Std. Wall XLPE Primary Cable	WHITE	550.0	-	X	-
A3	-	-	BJ11-GA	2643674 R1	0.79	18.0	Std. Wall XLPE Primary Cable	WHITE	1065.0	-	6	1801
A4	-	-	BH9	2643673 R1	0.79	18.0	Std. Wall XLPE Primary Cable	GREY	450.0	-	X	-
A4	-	-	BP9	2643673 R1	0.79	18.0	Std. Wall XLPE Primary Cable	GREY	450.0	-	X	-
A4	-	-	BJ9	2643673 R1	0.79	18.0	Std. Wall XLPE Primary Cable	GREY	450.0	-	X	-
A5	-	-	BA87E	3510311 R1	0.79	18.0	Thin Wall XLPE Primary Cable	GREY	1065.0	-	12	1801
A6	-	-	[BF94MN]	V-14-TXL	1.91	14.0	Thin Wall XLPE Primary Cable	Not Applicable	750.0	-	3	B01-1824
A7	-	-	BA52B	3510335 R1	0.79	18.0	Thin Wall XLPE Primary Cable	YELLOW 2	1065.0	-	3	1801

Name	Terminal Part Number	V-Min	Name	Wire Part Number	Wire CSA	Wire Spec	Wire Material description	Wire Color Description	Wire Length	End2 Terminal Part Number	End2 Pin Name	End2 Connector
A8	-	-	BA102A	3510335 R1	0.79	18.0	Thin Wall XLPE Primary Cable	YELLOW 2	1065.0	-	4	1801
B1	-	-	BA82C	3510311 R1	0.79	18.0	Thin Wall XLPE Primary Cable	GREY	1065.0	-	5	1801
B2	-	-	BA40A	2643673 R1	0.79	18.0	Std. Wall XLPE Primary Cable	GREY	800.0	-	C	B01-1804
B3	-	-	BA6	2643673 R1	0.79	18.0	Std. Wall XLPE Primary Cable	GREY	550.0	-	X	-
B4	-	-	BD97B	2643718 R1	0.79	18.0	Std. Wall XLPE Primary Cable	VIOLET	600.0	-	B	B01-1809
B5	-	-	BD99D	4092319 R1	0.79	18.0	Std. Wall XLPE Primary Cable	VIOLET/ WHITE	600.0	-	D	B01-1809
B6	-	-	BD97N	2643718 R1	0.79	18.0	Std. Wall XLPE Primary Cable	VIOLET	600.0	-	E	B01-1809
B7	-	-	BA44	2643673 R1	0.79	18.0	Std. Wall XLPE Primary Cable	GREY	725.0	-	C	B01-1808

Name	Terminal Part Number	V-Min	Name	Wire Part Number	Wire CSA	Wire Spec	Wire Material description	Wire Color Description	Wire Length	End2 Terminal Part Number	End2 Pin Name	End2 Connector
B9	-	-	BA70	2643675 R1	0.79	18.0	Std. Wall XLPE Primary Cable	ORANGE	775.0	-	C	B01-1806
B11	-	-	BP100	3510310 R1	0.53	20.0	Thin Wall XLPE Primary Cable	GREY	1125.0	-	2	B01-1802
B11	-	-	BP100	3510310 R1	0.53	20.0	Thin Wall XLPE Primary Cable	GREY	1125.0	-	2	1802
B11	-	-	BH100	3510310 R1	0.53	20.0	Thin Wall XLPE Primary Cable	GREY	1125.0	-	2	B01-1802
B12	-	-	BR97	3510310 R1	0.53	20.0	Thin Wall XLPE Primary Cable	GREY	1125.0	-	A	B01-1807
B12	-	-	BN97	3510310 R1	0.53	20.0	Thin Wall XLPE Primary Cable	GREY	1125.0	-	1	B01-1802
C1	-	-	BA82B	3510311 R1	0.79	18.0	Thin Wall XLPE Primary Cable	GREY	1065.0	-	11	1801
C2	-	-	BA40B	2643673 R1	0.79	18.0	Std. Wall XLPE Primary Cable	GREY	775.0	-	C	B01-1805

Name	Terminal Part Number	V-Min	Name	Wire Part Number	Wire CSA	Wire Spec	Wire Material description	Wire Color Description	Wire Length	End2 Terminal Part Number	End2 Pin Name	End2 Connector
C3	-	-	BE94SV	2643673 R1	0.79	18.0	Std. Wall XLPE Primary Cable	GREY	425.0	-	X	-
C4	-	-	BD99B	4092319 R1	0.79	18.0	Std. Wall XLPE Primary Cable	VIOLET/ WHITE	600.0	-	A	B01-1809
C5	-	-	BD97C	4092323 R1	0.79	18.0	Std. Wall XLPE Primary Cable	VIOLET/ BLACK	600.0	-	C	B01-1809
C6	-	-	BD97M	4092323 R1	0.79	18.0	Std. Wall XLPE Primary Cable	VIOLET/ BLACK	600.0	-	F	B01-1809
C9	-	-	BA82A	3510311 R1	0.79	18.0	Thin Wall XLPE Primary Cable	GREY	1065.0	-	8	1801
C10	-	-	BE94SZ	2643673 R1	0.79	18.0	Std. Wall XLPE Primary Cable	GREY	475.0	-	X	-
C11	-	-	BP97A	2643718 R1	0.79	18.0	Std. Wall XLPE Primary Cable	VIOLET	550.0	-	C	B01-1811
C12	-	-	BA40	2643673 R1	0.79	18.0	Std. Wall XLPE Primary Cable	GREY	650.0	-	3	B01-1803

Name	Terminal Part Number	V-Min	Name	Wire Part Number	Wire CSA	Wire Spec	Wire Material description	Wire Color Description	Wire Length	End2 Terminal Part Number	End2 Pin Name	End2 Connector
D1	-	-	BB70E	2643675 R1	0.79	18.0	Std. Wall XLPE Primary Cable	ORANGE	775.0	-	C	B01-1812
D2	-	-	BB70D	2643673 R1	0.79	18.0	Std. Wall XLPE Primary Cable	GREY	775.0	-	D	B01-1812
D3	-	-	BP62DD	3510352 R1	0.53	20.0	Thin Wall XLPE Primary Cable	DARK BLUE	1125.0	-	5	B01-1802
D3	-	-	BR62DD	3510352 R1	0.53	20.0	Thin Wall XLPE Primary Cable	DARK BLUE	1125.0	-	C	B01-1807
D3	-	-	BP62DD	3510352 R1	0.53	20.0	Thin Wall XLPE Primary Cable	DARK BLUE	1125.0	-	5	1802
D5	-	-	[BF94-G]	V-14-TXL	1.91	14.0	Thin Wall XLPE Primary Cable	Not Applicable	750.0	-	2	B01-1824
D5	-	-	BE94SE	2643673 R1	0.79	18.0	Std. Wall XLPE Primary Cable	GREY	700.0	-	C	B01-1822
D6	-	-	[BF94BY]	V-14-TXL	1.91	14.0	Thin Wall XLPE Primary Cable	Not Applicable	750.0	-	1	B01-1824

Name	Terminal Part Number	V-Min	Name	Wire Part Number	Wire CSA	Wire Spec	Wire Material description	Wire Color Description	Wire Length	End2 Terminal Part Number	End2 Pin Name	End2 Connect or
D6	-	-	BE94SF	2643673 R1	0.79	18.0	Std. Wall XLPE Primary Cable	GREY	600.0	-	C	B01-1823
D7	-	-	BP17A	2643794 R1	0.79	18.0	Std. Wall XLPE Primary Cable	PINK	550.0	-	A	B01-1811
D8	-	-	BP17AA	2643794 R1	0.79	18.0	Std. Wall XLPE Primary Cable	PINK	550.0	-	B	B01-1811

Connector Name	1800F
Part Number	3612512C1
Short Description	CAB HARNESS CONNECTOR
Instances	LoneStar - X15 - City Horn W/ 4PIN CLK W/O RKA:Diagram1-Combination1 LoneStar - X15 - City Horn W/ 4PIN CLK W/RKA:Diagram1-Combination1 LoneStar - X15 - City Horn W/ 10PIN CLK W/RKA:Diagram1-Combination1 LoneStar - X15 - City Horn W/ 10PIN CLK W/O RKA:Diagram1-Combination1 LT/RH - X15/A26 - City Horn W/ 4PIN CLK W/O RKA:Diagram1-Combination1 LT/RH - X15/A26 - City Horn W/ 4PIN CLK W/RKA:Diagram1-Combination1 LT/RH - X15/A26 - City Horn W/ 10PIN CLK W/RKA:Diagram1-Combination1 LT/RH - X15/A26 - City Horn W/ 10PIN CLK W/O RKA:Diagram1-Combination1
Mates	1800

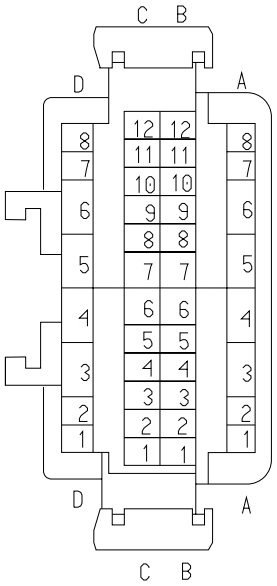

Name	Terminal Part Number	V-Min	Name	Wire Part Number	Wire CSA	Wire Spec	Wire Material description	Wire Color Description	Wire Length	End2 Terminal Part Number	End2 Pin Name	End2 Connector
A4	-	-	BP9	2643673 R1	0.79	18.0	Std. Wall XLPE Primary Cable	GREY	450.0	-	X	-
A4	-	-	BJ9	2643673 R1	0.79	18.0	Std. Wall XLPE Primary Cable	GREY	450.0	-	X	-
A4	-	-	BH9	2643673 R1	0.79	18.0	Std. Wall XLPE Primary Cable	GREY	450.0	-	X	-
B10	-	-	BP85A	3510310 R1	0.53	20.0	Thin Wall XLPE Primary Cable	GREY	1125.0	-	3	B01-1802

Name	Terminal Part Number	V-Min	Name	Wire Part Number	Wire CSA	Wire Spec	Wire Material description	Wire Color Description	Wire Length	End2 Terminal Part Number	End2 Pin Name	End2 Connect or
B10	-	-	BJ85A	3510310 R1	0.53	20.0	Thin Wall XLPE Primary Cable	GREY	1125.0	-	B	B01-1807

Connector Name	1800
Part Number	3553649C1
Short Description	DCM
Instances	LoneStar - X15 - Headlights Halogen N/INT N/LOWW:Diagram1 LoneStar - X15 - Headlights Halogen N/INT W/LOWW:Diagram1 LoneStar - X15 - Headlights Halogen W/INT N/LOWW:Diagram1 LoneStar - X15 - Headlights Halogen W/INT W/ LOWW:Diagram1 LoneStar - X15 - Windshield Washer Pump:Diagram1 LoneStar - X15 - Windshield Washer Pump & Low Fluid Sensor:Diagram1 LT - X15/A26 - Headlights Halogen N/INT N/LOWW:Diagram1 LT - X15/A26 - Headlights Halogen N/INT W/LOWW:Diagram1 LT - X15/A26 - Headlights Halogen W/INT N/LOWW:Diagram1 LT - X15/A26 - Headlights Halogen W/INT W/LOWW:Diagram1 LT - X15/A26 - Headlights LED N/ INT N/LOWW:Diagram1 LT - X15/A26 - Headlights LED N/ INT W/LOWW:Diagram1 LT - X15/A26 - Headlights LED W/INT N/LOWW:Diagram1 LT - X15/A26 - Headlights LED W/INT W/LOWW:Diagram1 LT/RH - A26 - Starter Interlock (BCM HSD controlled W/ Clutch Switch W/ Auto Start Stop):Diagram1 LT/RH - A26 - Starter Interlock (BCM HSD controlled W/ Clutch Switch W/ Auto Start Stop):Diagram2 LT/RH - X15/A26 - 10 PIN ClockSpring:Diagram1 LT/RH - X15/A26 - Bendix Stability Control For Tractor or Tractors with Trailer Tow:Diagram1 LT/RH - X15/A26 - Bendix Stability Control For Tractor or Tractors with Trailer Tow:Diagram2 LT/RH - X15/A26 - Bendix; Tractor or Towing Truck; W/ Air SUSP; J1939 Driven Lamp:Diagram1 LT/RH - X15/A26 - Bendix; Tractor or Towing Truck; W/ Air SUSP; J1939 Driven Lamp:Diagram2 LT/RH - X15/A26 - Directional Signal (Turn) With HEADLIGHTS:Diagram1 LT/RH - X15/A26 - Directional Signal (Turn) With HEADLIGHTS (HAL-125):Diagram1 LT/RH - X15/A26 - Directional Signal (Turn) With HEADLIGHTS (LED-125):Diagram1 LT/RH - X15/A26 - Directional Signal (Turn) With HEADLIGHTS Option2:Diagram1 LT/RH - X15/A26 - Park Brake Control (Monitoring) (W/Vehicle Speed):Diagram1

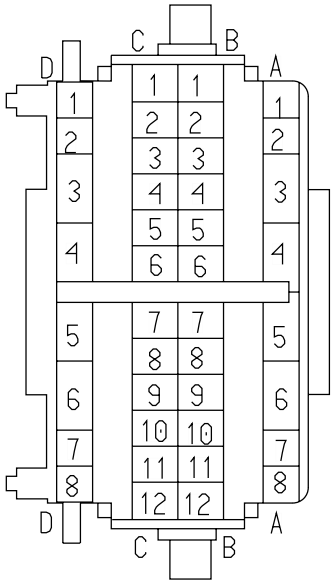

LT/RH - X15/A26 - Park Brake Control (Monitoring)(GEN IV BCM):Diagram1
LT/RH - X15/A26 - Radio W/Steering Wheel Pod N/ Remote:Diagram1
LT/RH - X15/A26 - Wabco Full Stability Control:Diagram1
LT/RH - X15/A26 - Wabco Full Stability Control:Diagram2
LT/RH - X15/A26 - Windshield Washer Pump:Diagram1
LT/RH - X15/A26 - Windshield Washer Pump & Low Fluid Sensor:Diagram1
LT/RH - X15/A26 - Windshield Wipers Cruise Disable & Park Brake W/Wipers ON:Diagram1
LT/RH - X15/A26 - Windshield Wipers Cruise Disable W/Wipers ON:Diagram1
LT/RH/LoneStar - A26 - Vehicle Acceleration (w/ Two PWR Two GND & Two STS):Diagram1
LT/RH/LoneStar - X15 - Starter Interlock (BCM HSD controlled W/ Clutch Switch W/ Auto Start Stop):Diagram1
LT/RH/LoneStar - X15 - Vehicle Acceleration (w/ Two PWR Two GND & Two STS):Diagram1
LT/RH/LoneStar - X15/A26 - Adjustable Engine Speed Control (PTO) 4-pin Clockspring:Diagram1
LT/RH/LoneStar - X15/A26 - Adjustable Engine Speed Control (PTO) 10-PIN ClockSpring:Diagram1
LT/RH/LoneStar - X15/A26 - Brake Pressure (Auxiliary Gauge):Diagram1
LT/RH/LoneStar - X15/A26 - Brake Pressure (Virtual Gauge):Diagram1
LT/RH/LoneStar - X15/A26 - Brake Switch:Diagram1
LT/RH/LoneStar - X15/A26 - Clutch Monitoring (High and Low Switch to BCM):Diagram1
LT/RH/LoneStar - X15/A26 - Compressed Air Supply (Primary and Secondary Gauge):Diagram1
LT/RH/LoneStar - X15/A26 - Engine Idle Increment/Decrement (Steering Wheel Switch - 4 Pin):Diagram1
LT/RH/LoneStar - X15/A26 - Engine Idle Increment/Decrement (Steering Wheel Switch - 10 Pin):Diagram1
LT/RH/LoneStar - X15/A26 - MARKER/PARK LIGHTS - W/ Marker Interrupt 10pin CLCKSPRING:Diagram1
LT/RH/LoneStar - X15/A26 - Park Brake Controls (Non Lever Park Brake):Diagram1
LT/RH/LoneStar - X15/A26 - Park Brake Controls (with Alarm IGN ON/OFF):Diagram1
LT/RH/LoneStar - X15/A26 - PARK LIGHTS - W/Marker Interrupt 4 pin clockspring:Diagram1

LT/RH/LoneStar - X15/A26 - Radio (Bluetooth) W/Steering Wheel Pod N/ Remote W/MIC:Diagram1
LT/RH/LoneStar - X15/A26 - Radio W/Steering Wheel Pod W/ Remote:Diagram1
LT/RH/LoneStar - X15/A26 - Radio(Bluetooth) W/Steering Wheel W/Remote W/MIC:Diagram1
LT/RH/LoneStar - X15/A26 - Starter Interlock (BCM HSD controlled W/ Clutch Switch N/ Auto Start Stop):Diagram1
LT/RH/LoneStar - X15/A26 - Telematics (TRIPMASTER DAYCAB):Diagram1
LT/RH/LoneStar - X15/A26 - Telematics (TRIPMASTER SLEEPER):Diagram1
LT/RH/LoneStar - X15/A26 - Vehicle Speed Control (Cruise Control) 4 - PIN:Diagram1
LT/RH/LoneStar - X15/A26 - Windshield Wipers Park Brake W/ Wipers ON:Diagram1
LT/RH/LoneStar - X15/A26 - Windshield Wipers Standard:Diagram1
RH - X15/A26 - Directional Signal (Turn) W/ HEADLIGHTS:Diagram1
RH - X15/A26 - Headlights Halogen N/INT N/LOWW:Diagram1
RH - X15/A26 - Headlights Halogen N/INT W/LOWW:Diagram1
RH - X15/A26 - Headlights Halogen W/INT N/LOWW:Diagram1
RH - X15/A26 - Headlights Halogen W/INT W/LOWW:Diagram1
RH - X15/A26 - Headlights LED N/INT N/LOWW LT:Diagram1
RH - X15/A26 - Headlights LED N/INT W/LOWW LT:Diagram1
RH - X15/A26 - Headlights LED W/INT N/LOWW LT:Diagram1
RH - X15/A26 - Headlights LED W/INT W/LOWW LT:Diagram1

Mates 1800F

Name	Terminal Part Number	V-Min	Name	Wire Part Number	Wire CSA	Wire Spec	Wire Material description	Wire Color Description	Wire Length	End2 Terminal Part Number	End2 Pin Name	End2 Connect or
A1	-	-	AA56B	3510316 R1	0.53	20.0	Thin Wall XLPE Primary Cable	ORANGE	1320.0	-	A7	J3-1600
A2	-	-	AA57B	3510316 R1	0.53	20.0	Thin Wall XLPE Primary Cable	ORANGE	1320.0	-	A6	J3-1600

Name	Terminal Part Number	V-Min	Name	Wire Part Number	Wire CSA	Wire Spec	Wire Material description	Wire Color Description	Wire Length	End2 Terminal Part Number	End2 Pin Name	End2 Connector
A3	-	-	AA87-GA	3510359 R1	0.79	18.0	Thin Wall XLPE Primary Cable	WHITE	240.0	-	-	-
A4	-	-	AA9	2643673 R1	0.79	18.0	Std. Wall XLPE Primary Cable	GREY	1160.0	-	X	-
A4	-	-	AA9	2643673 R1	0.79	18.0	Std. Wall XLPE Primary Cable	GREY	1160.0	-	-	-
A5	-	-	AA87E	3510311 R1	0.79	18.0	Thin Wall XLPE Primary Cable	GREY	100.0	-	X	-
A6	-	-	GX94MN	3510311 R1	0.79	18.0	Thin Wall XLPE Primary Cable	GREY	1810.0	-	14	A01-1423
A7	-	-	AA52D	3510334 R1	0.53	20.0	Thin Wall XLPE Primary Cable	YELLOW 2	1320.0	-	A4	J3-1600
A8	-	-	AA102A	3510334 R1	0.53	20.0	Thin Wall XLPE Primary Cable	YELLOW 2	1320.0	-	A14	J3-1600
B1	-	-	AA82C	3510310 R1	0.53	20.0	Thin Wall XLPE Primary Cable	GREY	1320.0	-	A11	J3-1600

Name	Terminal Part Number	V-Min	Name	Wire Part Number	Wire CSA	Wire Spec	Wire Material description	Wire Color Description	Wire Length	End2 Terminal Part Number	End2 Pin Name	End2 Connect or
B2	-	-	AA40A	3510310 R1	0.53	20.0	Thin Wall XLPE Primary Cable	GREY	1320.0	-	B3	J3-1600
B3	-	-	AA6	3510310 R1	0.53	20.0	Thin Wall XLPE Primary Cable	GREY	1340.0	-	E4	J5-1602
B4	-	-	AA97B	3510347 R1	0.79	18.0	Thin Wall XLPE Primary Cable	VIOLET	2115.0	-	36	1703M
B5	-	-	AA97MA	3510347 R1	0.79	18.0	Thin Wall XLPE Primary Cable	VIOLET	2115.0	-	38	1703M
B6	-	-	AA97NA	3510347 R1	0.79	18.0	Thin Wall XLPE Primary Cable	VIOLET	2115.0	-	37	1703M
B7	-	-	AA44	3510310 R1	0.53	20.0	Thin Wall XLPE Primary Cable	GREY	1320.0	-	A12	J3-1600
B9	-	-	AA70	3510316 R1	0.53	20.0	Thin Wall XLPE Primary Cable	ORANGE	1340.0	-	E14	J5-1602
B11	-	-	AA150	3510299 R1	0.79	18.0	Thin Wall XLPE Primary Cable	LIGHT GREEN	1320.0	-	B16	J3-1600

Name	Terminal Part Number	V-Min	Name	Wire Part Number	Wire CSA	Wire Spec	Wire Material description	Wire Color Description	Wire Length	End2 Terminal Part Number	End2 Pin Name	End2 Connector
B12	-	-	MS86A	3510310 R1	0.53	20.0	Thin Wall XLPE Primary Cable	GREY	1320.0	-	B1	J3-1600
C1	-	-	AA82B	3510310 R1	0.53	20.0	Thin Wall XLPE Primary Cable	GREY	1320.0	-	A10	J3-1600
C2	-	-	DV40B	3510311 R1	0.79	18.0	Thin Wall XLPE Primary Cable	GREY	1320.0	-	B14	J3-1600
C3	-	-	XZ94SV	3510312 R1	1.16	16.0	Thin Wall XLPE Primary Cable	GREY	1695.0	-	X	-
C4	-	-	AA99B	3510347 R1	0.79	18.0	Thin Wall XLPE Primary Cable	VIOLET	2115.0	-	47	1703M
C5	-	-	AA97C	3510347 R1	0.79	18.0	Thin Wall XLPE Primary Cable	VIOLET	2115.0	-	49	1703M
C6	-	-	AA99DA	3510347 R1	0.79	18.0	Thin Wall XLPE Primary Cable	VIOLET	2115.0	-	48	1703M
C9	-	-	AA82A	3510310 R1	0.53	20.0	Thin Wall XLPE Primary Cable	GREY	1320.0	-	A9	J3-1600

Name	Terminal Part Number	V-Min	Name	Wire Part Number	Wire CSA	Wire Spec	Wire Material description	Wire Color Description	Wire Length	End2 Terminal Part Number	End2 Pin Name	End2 Connector
C10	-	-	XZ94SZ	3510312 R1	1.16	16.0	Thin Wall XLPE Primary Cable	GREY	1725.0	-	X	-
C11	-	-	DT97A	3510347 R1	0.79	18.0	Thin Wall XLPE Primary Cable	VIOLET	1320.0	-	B4	J3-1600
C12	-	-	AA40	3510310 R1	0.53	20.0	Thin Wall XLPE Primary Cable	GREY	1320.0	-	B2	J3-1600
D1	-	-	CF70E	3510317 R1	0.79	18.0	Thin Wall XLPE Primary Cable	ORANGE	3650.0	-	A	A02-1TB2
D1	-	-	CG70E	3510317 R1	0.79	18.0	Thin Wall XLPE Primary Cable	ORANGE	3300.0	-	J	1970
D2	-	-	CF70D	3510311 R1	0.79	18.0	Thin Wall XLPE Primary Cable	GREY	1055.0	-	X	-
D2	-	-	CG70D	3510317 R1	0.79	18.0	Thin Wall XLPE Primary Cable	ORANGE	1055.0	-	X	-
D3	-	-	AA62DD	3510353 R1	0.79	18.0	Thin Wall XLPE Primary Cable	DARK BLUE	540.0	-	X	-

Name	Terminal Part Number	V-Min	Name	Wire Part Number	Wire CSA	Wire Spec	Wire Material description	Wire Color Description	Wire Length	End2 Terminal Part Number	End2 Pin Name	End2 Connect or
D5	-	-	GX94-GCC	3510359 R1	0.79	18.0	Thin Wall XLPE Primary Cable	WHITE	1810.0	-	11	A01-1423
D5	-	-	XZ94SE	3510311 R1	0.79	18.0	Thin Wall XLPE Primary Cable	GREY	1915.0	-	2	A01-1403
D6	-	-	GX94BY	3510311 R1	0.79	18.0	Thin Wall XLPE Primary Cable	GREY	1810.0	-	8	A01-1423
D6	-	-	XZ94SF	3510312 R1	1.16	16.0	Thin Wall XLPE Primary Cable	GREY	1915.0	-	5	A01-1403
D7	-	-	NE17AC	3510323 R1	0.79	18.0	Thin Wall XLPE Primary Cable	PINK	1405.0	-	-	-
D8	-	-	DT17B	3510323 R1	0.79	18.0	Thin Wall XLPE Primary Cable	PINK	1025.0	-	B2	J7-1607

Connector Name	1800
Part Number	3553649C1
Short Description	DCM
Instances	LoneStar - X15 - City Horn W/ 4PIN CLK W/O RKA:Diagram1-Combination1 LoneStar - X15 - City Horn W/ 4PIN CLK W/RKA:Diagram1-Combination1 LoneStar - X15 - City Horn W/ 10PIN CLK W/RKA:Diagram1-Combination1 LoneStar - X15 - City Horn W/ 10PIN CLK W/O RKA:Diagram1-Combination1 LT/RH - X15/A26 - City Horn W/ 4PIN CLK W/O RKA:Diagram1-Combination1 LT/RH - X15/A26 - City Horn W/ 4PIN CLK W/RKA:Diagram1-Combination1 LT/RH - X15/A26 - City Horn W/ 10PIN CLK W/RKA:Diagram1-Combination1 LT/RH - X15/A26 - City Horn W/ 10PIN CLK W/O RKA:Diagram1-Combination1
Mates	1800F

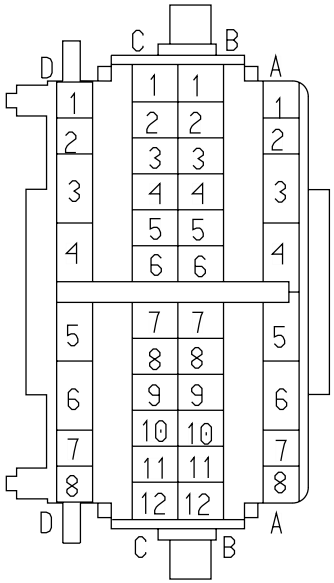

Name	Terminal Part Number	V-Min	Name	Wire Part Number	Wire CSA	Wire Spec	Wire Material description	Wire Color Description	Wire Length	End2 Terminal Part Number	End2 Pin Name	End2 Connector
A4	-	-	AA9	2643673 R1	0.79	18.0	Std. Wall XLPE Primary Cable	GREY	1160.0	-	X	-
B10	-	-	AA85A	3510310 R1	0.53	20.0	Thin Wall XLPE Primary Cable	GREY	1320.0	-	A5	J3-1600

Connector Name	1801
Part Number	3539212C1
Instances	LT/RH - X15/A26 - Directional Signal (Turn) With HEADLIGHTS:Diagram1
Mates	SW-MULTIFUNCTION-1016-01-0 4B

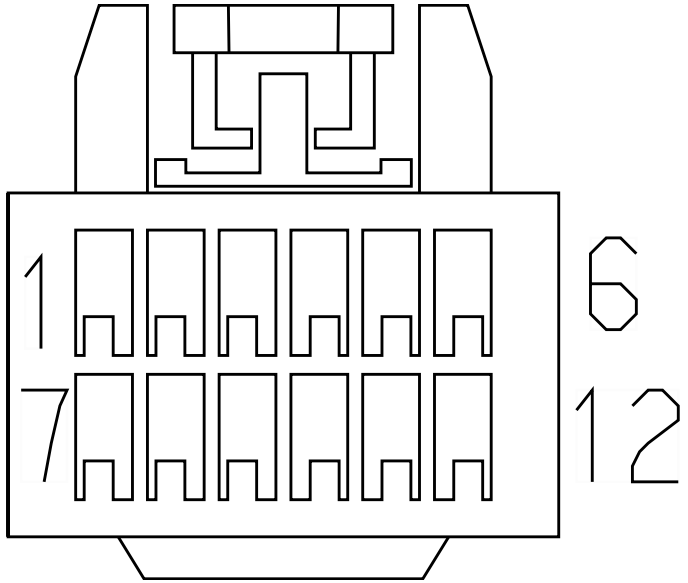

Name	Terminal Part Number	V-Min	Name	Wire Part Number	Wire CSA	Wire Spec	Wire Material description	Wire Color Description	Wire Length	End2 Terminal Part Number	End2 Pin Name	End2 Connect or
1	-	-	BA56B	3510317 R1	0.79	18.0	Thin Wall XLPE Primary Cable	ORANGE	0.0	-	A1	1800F
2	-	-	BA57B	3510317 R1	0.79	18.0	Thin Wall XLPE Primary Cable	ORANGE	0.0	-	A2	1800F
7	-	-	BH9D	3510311 R1	0.79	18.0	Thin Wall XLPE Primary Cable	GREY	815.0	-	X	-

Connector Name	1801
Part Number	3539212C1
Instances	LoneStar - X15 - Headlights Halogen N/INT N/LOWW:Diagram1 LoneStar - X15 - Headlights Halogen N/INT W/LOWW:Diagram1 LoneStar - X15 - Headlights Halogen W/INT N/LOWW:Diagram1 LoneStar - X15 - Headlights Halogen W/INT W/ LOWW:Diagram1 LoneStar - X15 - Windshield Washer Pump:Diagram1 LoneStar - X15 - Windshield Washer Pump & Low Fluid Sensor:Diagram1 LT - X15/A26 - Headlights Halogen N/INT N/LOWW:Diagram1 LT - X15/A26 - Headlights Halogen N/INT W/LOWW:Diagram1 LT - X15/A26 - Headlights Halogen W/INT N/LOWW:Diagram1 LT - X15/A26 - Headlights Halogen W/INT W/LOWW:Diagram1 LT - X15/A26 - Headlights LED N/ INT N/LOWW:Diagram1 LT - X15/A26 - Headlights LED N/ INT W/LOWW:Diagram1 LT - X15/A26 - Headlights LED W/INT N/LOWW:Diagram1 LT - X15/A26 - Headlights LED W/INT W/LOWW:Diagram1 LT/RH - X15/A26 - Directional Signal (Turn) With HEADLIGHTS (HAL-125):Diagram1 LT/RH - X15/A26 - Directional Signal (Turn) With HEADLIGHTS (LED-125):Diagram1 LT/RH - X15/A26 - Directional Signal (Turn) With HEADLIGHTS Option2:Diagram1 LT/RH - X15/A26 - Windshield Washer Pump:Diagram1 LT/RH - X15/A26 - Windshield Washer Pump & Low Fluid Sensor:Diagram1 LT/RH - X15/A26 - Windshield Wipers Cruise Disable & Park Brake W/Wipers ON:Diagram1 LT/RH - X15/A26 - Windshield Wipers Cruise Disable W/Wipers ON:Diagram1 LT/RH/LoneStar - X15/A26 - Windshield Wipers Park Brake W/ Wipers ON:Diagram1 LT/RH/LoneStar - X15/A26 - Windshield Wipers Standard:Diagram1 RH - X15/A26 - Directional Signal (Turn) W/ HEADLIGHTS:Diagram1 RH - X15/A26 - Headlights Halogen N/INT N/LOWW:Diagram1 RH - X15/A26 - Headlights Halogen N/INT W/LOWW:Diagram1 RH - X15/A26 - Headlights Halogen W/INT N/LOWW:Diagram1 RH - X15/A26 - Headlights Halogen W/INT W/LOWW:Diagram1 RH - X15/A26 - Headlights LED N/INT N/LOWW LT:Diagram1 RH - X15/A26 - Headlights LED N/INT W/LOWW LT:Diagram1

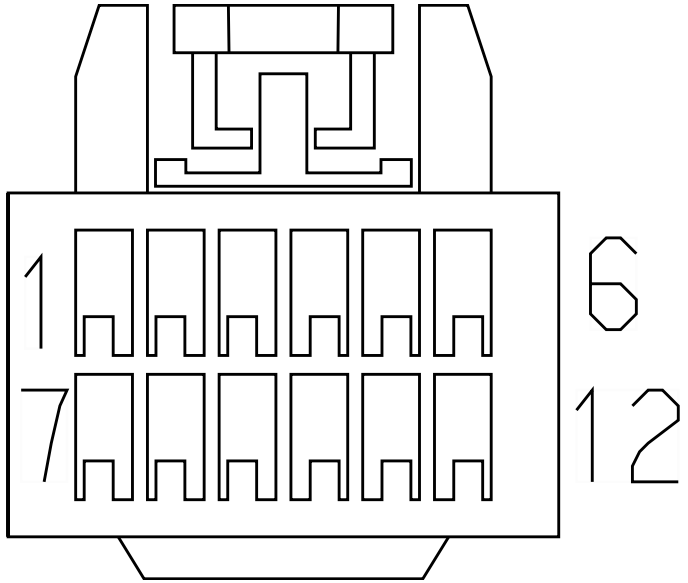

RH - X15/A26 - Headlights LED W/INT N/LOWW LT:Diagram1
RH - X15/A26 - Headlights LED W/INT W/LOWW LT:Diagram1

Mates SW-MULTIFUNCTION-1016-01-0 4B

Name	Terminal Part Number	V-Min	Name	Wire Part Number	Wire CSA	Wire Spec	Wire Material description	Wire Color Description	Wire Length	End2 Terminal Part Number	End2 Pin Name	End2 Connector
1	-	-	BA56B	3510317 R1	0.79	18.0	Thin Wall XLPE Primary Cable	ORANGE	0.0	-	A1	1800F
2	-	-	BA57B	3510317 R1	0.79	18.0	Thin Wall XLPE Primary Cable	ORANGE	0.0	-	A2	1800F
3	-	-	BA52B	3510335 R1	0.79	18.0	Thin Wall XLPE Primary Cable	YELLOW 2	1065.0	-	A7	1800F
4	-	-	BA102A	3510335 R1	0.79	18.0	Thin Wall XLPE Primary Cable	YELLOW 2	1065.0	-	A8	1800F
5	-	-	BA82C	3510311 R1	0.79	18.0	Thin Wall XLPE Primary Cable	GREY	1065.0	-	B1	1800F
6	-	-	BJ11-GA	2643674 R1	0.79	18.0	Std. Wall XLPE Primary Cable	WHITE	1065.0	-	A3	1800F
6	-	-	BP87-G	3510359 R1	0.79	18.0	Thin Wall XLPE Primary Cable	WHITE	515.0	-	X	-
7	-	-	BH9D	3510311 R1	0.79	18.0	Thin Wall XLPE Primary Cable	GREY	815.0	-	X	-

Name	Terminal Part Number	V-Min	Name	Wire Part Number	Wire CSA	Wire Spec	Wire Material description	Wire Color Description	Wire Length	End2 Terminal Part Number	End2 Pin Name	End2 Connector
7	-	-	BP9D	3510311 R1	0.79	18.0	Thin Wall XLPE Primary Cable	GREY	815.0	-	X	-
8	-	-	BA82A	3510311 R1	0.79	18.0	Thin Wall XLPE Primary Cable	GREY	1065.0	-	C9	1800F
11	-	-	BA82B	3510311 R1	0.79	18.0	Thin Wall XLPE Primary Cable	GREY	1065.0	-	C1	1800F
12	-	-	BA87E	3510311 R1	0.79	18.0	Thin Wall XLPE Primary Cable	GREY	1065.0	-	A5	1800F

Connector Name	1802
Part Number	3608496C1
Instances	LT - X15/A26 - Headlights Halogen W/INT N/LOWW:Diagram1 LT - X15/A26 - Headlights Halogen W/INT W/LOWW:Diagram1 LT - X15/A26 - Headlights LED W/INT N/LOWW:Diagram1 LT - X15/A26 - Headlights LED W/INT W/LOWW:Diagram1
Mates	DEV-10PIN_CLKSPRING-1005-0 1-03

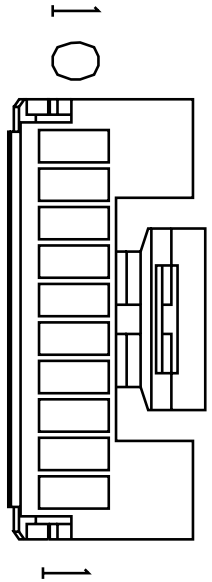

Name	Terminal Part Number	V-Min	Name	Wire Part Number	Wire CSA	Wire Spec	Wire Material description	Wire Color Description	Wire Length	End2 Terminal Part Number	End2 Pin Name	End2 Connect or
2	-	-	BP100	3510310 R1	0.53	20.0	Thin Wall XLPE Primary Cable	GREY	1125.0	-	B11	1800F
4	-	-	BH9C	3510311 R1	0.79	18.0	Thin Wall XLPE Primary Cable	GREY	875.0	-	X	-
4	-	-	BP9C	3510311 R1	0.79	18.0	Thin Wall XLPE Primary Cable	GREY	875.0	-	X	-
5	-	-	BP62DD	3510352 R1	0.53	20.0	Thin Wall XLPE Primary Cable	DARK BLUE	1125.0	-	D3	1800F

Name	Terminal Part Number	V-Min	Name	Wire Part Number	Wire CSA	Wire Spec	Wire Material description	Wire Color Description	Wire Length	End2 Terminal Part Number	End2 Pin Name	End2 Connect or
6	-	-	BH62-GDD	3510359 R1	0.79	18.0	Thin Wall XLPE Primary Cable	WHITE	575.0	-	X	-

Connector Name	1814
Part Number	1661777C1
Instances	LT/RH - X15 - Accelerator Interlock W/ Park Brake Controls:Diagram1
Mates	SW-PARK_BRAKE-5001-01-03A

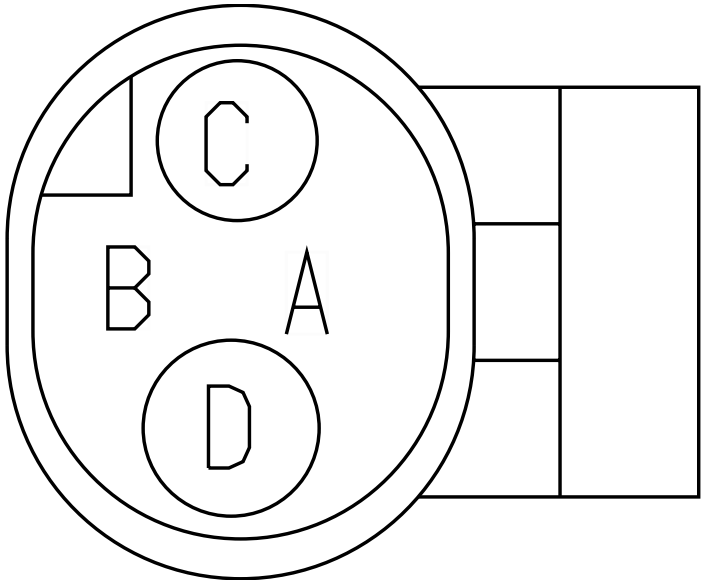

Name	Terminal Part Number	V-Min	Name	Wire Part Number	Wire CSA	Wire Spec	Wire Material description	Wire Color Description	Wire Length	End2 Terminal Part Number	End2 Pin Name	End2 Connect or
C	-	-	GE44A	3510310 R1	0.53	20.0	Thin Wall XLPE Primary Cable	GREY	1480.0	-	93	K02-6000
D	-	-	GE44G	3510311 R1	0.79	18.0	Thin Wall XLPE Primary Cable	GREY	985.0	-	-	-

Connector Name	1820F
Part Number	1667529C1
Instances	ABS Private J1939:ABS Private J1939
Mates	1820M

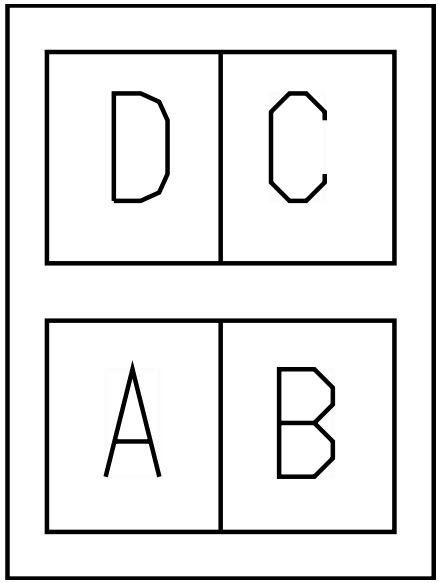

Name	Terminal Part Number	V-Min	Name	Wire Part Number	Wire CSA	Wire Spec	Wire Material description	Wire Color Description	Wire Length	End2 Terminal Part Number	End2 Pin Name	End2 Connect or
A	-	-	BE94SD	3510310 R1	0.53	20.0	Thin Wall XLPE Primary Cable	GREY	1195.0	-	2	1821
A	-	-	BE94SD	3510310 R1	0.53	20.0	Thin Wall XLPE Primary Cable	GREY	1195.0	-	5	1821A
B	-	-	BE94SB	3510310 R1	0.53	20.0	Thin Wall XLPE Primary Cable	GREY	1195.0	-	3	1821
B	-	-	BE94SB	3510310 R1	0.53	20.0	Thin Wall XLPE Primary Cable	GREY	1195.0	-	6	1821A

Name	Terminal Part Number	V-Min	Name	Wire Part Number	Wire CSA	Wire Spec	Wire Material description	Wire Color Description	Wire Length	End2 Terminal Part Number	End2 Pin Name	End2 Connect or
C	-	-	BE94SC	3510310 R1	0.53	20.0	Thin Wall XLPE Primary Cable	GREY	1195.0	-	1	1821
C	-	-	BE94SC	3510310 R1	0.53	20.0	Thin Wall XLPE Primary Cable	GREY	1195.0	-	4	1821A
D	-	-	BE94SA	3510310 R1	0.53	20.0	Thin Wall XLPE Primary Cable	GREY	1195.0	-	4	1821
D	-	-	BE94SA	3510310 R1	0.53	20.0	Thin Wall XLPE Primary Cable	GREY	1195.0	-	1	1821A

Connector Name	1820F
Part Number	1667529C1
Short Description	CAB HARNESS STEERING WHEEL SENSOR
Instances	LT/RH - X15/A26 - Bendix Stability Control For Tractor or Tractors with Trailer Tow:Diagram1 LT/RH - X15/A26 - Bendix Stability Control For Tractor or Tractors with Trailer Tow:Diagram2 LT/RH - X15/A26 - Bendix; Tractor or Towing Truck; W/ Air SUSP; J1939 Driven Lamp:Diagram1 LT/RH - X15/A26 - Bendix; Tractor or Towing Truck; W/ Air SUSP; J1939 Driven Lamp:Diagram2 LT/RH - X15/A26 - Wabco Full Stability Control:Diagram1 LT/RH - X15/A26 - Wabco Full Stability Control:Diagram2
Mates	1820M

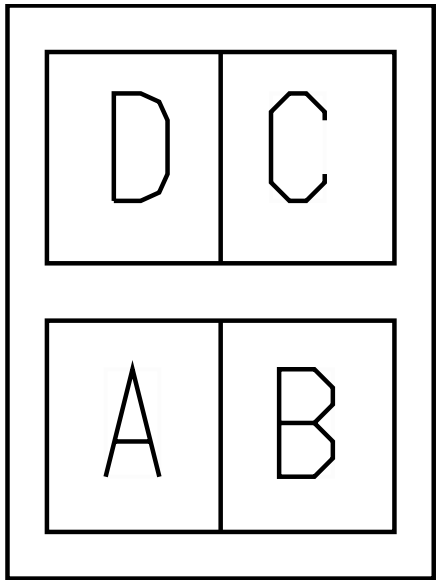

Name	Terminal Part Number	V-Min	Name	Wire Part Number	Wire CSA	Wire Spec	Wire Material description	Wire Color Description	Wire Length	End2 Terminal Part Number	End2 Pin Name	End2 Connector
A	-	-	BG94SN	3510310 R1	0.53	20.0	Thin Wall XLPE Primary Cable	GREY	1195.0	-	5	B01-1821A
A	-	-	BE94SA	3510310 R1	0.53	20.0	Thin Wall XLPE Primary Cable	GREY	1195.0	-	2	B01-1821
B	-	-	BG94SP	3510310 R1	0.53	20.0	Thin Wall XLPE Primary Cable	GREY	1195.0	-	6	B01-1821A
C	-	-	BE94SC	3510310 R1	0.53	20.0	Thin Wall XLPE Primary Cable	GREY	1195.0	-	1	B01-1821

Connector Name 1820M
Part Number 1667305C1
Instances ABS Private J1939:ABS Private J1939
Mates 1820F

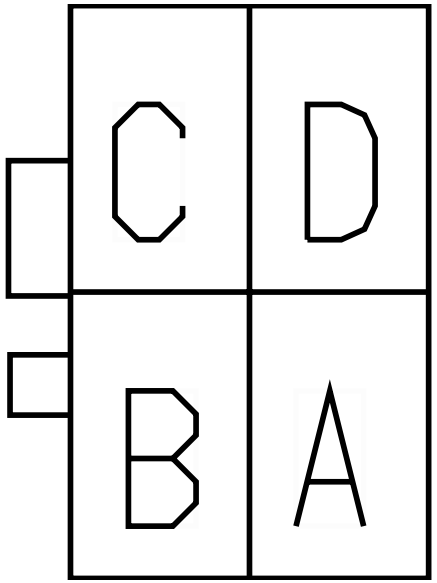

Name	Terminal Part Number	V-Min	Name	Wire Part Number	Wire CSA	Wire Spec	Wire Material description	Wire Color Description	Wire Length	End2 Terminal Part Number	End2 Pin Name	End2 Connect or
A	-	-	XZ94SA	3510311 R1	0.79	18.0	Thin Wall XLPE Primary Cable	GREY	750.0	-	C	1410
A	-	-	XD94SNB	3510311 R1	0.79	18.0	Thin Wall XLPE Primary Cable	GREY	750.0	-	C	1410
B	-	-	XZ94SB	3510311 R1	0.79	18.0	Thin Wall XLPE Primary Cable	GREY	750.0	-	J	1410
B	-	-	XD94SPB	3510311 R1	0.79	18.0	Thin Wall XLPE Primary Cable	GREY	750.0	-	F	1410

Name	Terminal Part Number	V-Min	Name	Wire Part Number	Wire CSA	Wire Spec	Wire Material description	Wire Color Description	Wire Length	End2 Terminal Part Number	End2 Pin Name	End2 Connector
C	-	-	XZ94SC	3510311 R1	0.79	18.0	Thin Wall XLPE Primary Cable	GREY	750.0	-	F	1410
C	-	-	XD94SRB	3510311 R1	0.79	18.0	Thin Wall XLPE Primary Cable	GREY	750.0	-	J	1410
D	-	-	XZ94SD	3510311 R1	0.79	18.0	Thin Wall XLPE Primary Cable	GREY	750.0	-	M	1410
D	-	-	XD94SSB	3510311 R1	0.79	18.0	Thin Wall XLPE Primary Cable	GREY	750.0	-	M	1410

Connector Name	1820M
Part Number	1667305C1
Short Description	ADVANCED ABS
Instances	LT/RH - X15/A26 - Bendix Stability Control For Tractor or Tractors with Trailer Tow:Diagram1 LT/RH - X15/A26 - Bendix Stability Control For Tractor or Tractors with Trailer Tow:Diagram2 LT/RH - X15/A26 - Bendix; Tractor or Towing Truck; W/ Air SUSP; J1939 Driven Lamp:Diagram1 LT/RH - X15/A26 - Bendix; Tractor or Towing Truck; W/ Air SUSP; J1939 Driven Lamp:Diagram2 LT/RH - X15/A26 - Wabco Full Stability Control:Diagram1 LT/RH - X15/A26 - Wabco Full Stability Control:Diagram2
Mates	1820F

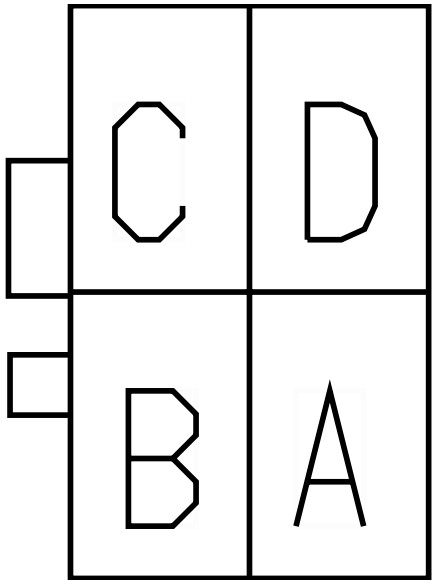

Name	Terminal Part Number	V-Min	Name	Wire Part Number	Wire CSA	Wire Spec	Wire Material description	Wire Color Description	Wire Length	End2 Terminal Part Number	End2 Pin Name	End2 Connector
A	-	-	XD94SNB	3510311 R1	0.79	18.0	Thin Wall XLPE Primary Cable	GREY	750.0	-	-	-
A	-	-	XZ94SA	3510311 R1	0.79	18.0	Thin Wall XLPE Primary Cable	GREY	750.0	-	-	-
B	-	-	XD94SPB	3510311 R1	0.79	18.0	Thin Wall XLPE Primary Cable	GREY	750.0	-	-	-
C	-	-	XZ94SC	3510311 R1	0.79	18.0	Thin Wall XLPE Primary Cable	GREY	750.0	-	-	-

Connector Name	1821A
Part Number	3889458C1
Instances	ABS Private J1939:ABS Private J1939
Mates	SNSR-STEERING_ANGLE-3026-0 2-03A

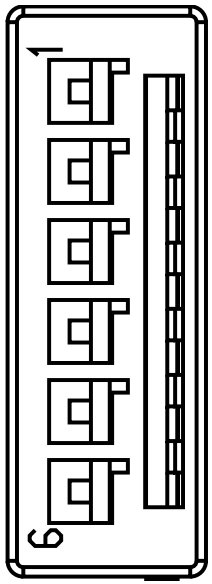

Name	Terminal Part Number	V-Min	Name	Wire Part Number	Wire CSA	Wire Spec	Wire Material description	Wire Color Description	Wire Length	End2 Terminal Part Number	End2 Pin Name	End2 Connect or
1	-	-	BE94SA	3510310 R1	0.53	20.0	Thin Wall XLPE Primary Cable	GREY	1195.0	-	D	1820F
4	-	-	BE94SC	3510310 R1	0.53	20.0	Thin Wall XLPE Primary Cable	GREY	1195.0	-	C	1820F
5	-	-	BE94SD	3510310 R1	0.53	20.0	Thin Wall XLPE Primary Cable	GREY	1195.0	-	A	1820F
6	-	-	BE94SB	3510310 R1	0.53	20.0	Thin Wall XLPE Primary Cable	GREY	1195.0	-	B	1820F

Connector Name	1821
Part Number	3601800C1
Instances	ABS Private J1939:ABS Private J1939
Mates	SNSR-STEERING_ANGLE-3026-0 1-01A

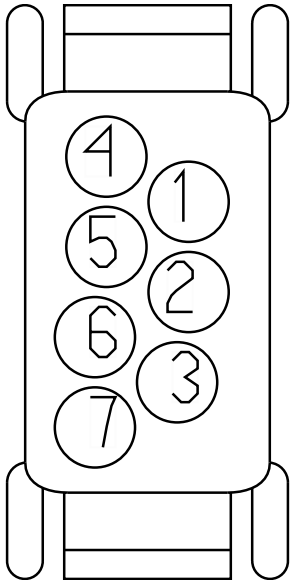

Name	Terminal Part Number	V-Min	Name	Wire Part Number	Wire CSA	Wire Spec	Wire Material description	Wire Color Description	Wire Length	End2 Terminal Part Number	End2 Pin Name	End2 Connect or
1	-	-	BE94SC	3510310 R1	0.53	20.0	Thin Wall XLPE Primary Cable	GREY	1195.0	-	C	1820F
2	-	-	BE94SD	3510310 R1	0.53	20.0	Thin Wall XLPE Primary Cable	GREY	1195.0	-	A	1820F
3	-	-	BE94SB	3510310 R1	0.53	20.0	Thin Wall XLPE Primary Cable	GREY	1195.0	-	B	1820F
4	-	-	BE94SA	3510310 R1	0.53	20.0	Thin Wall XLPE Primary Cable	GREY	1195.0	-	D	1820F

Connector Name 1825F

Part Number 4064551C1

Instances Powertrain J1939 (500Kbps) Edurant Transmission
A26:Powertrain J1939 (500Kbps) Edurant Transmission A26
Powertrain J1939 (500Kbps) Allison 3K Transmission
A26:Powertrain J1939 (500Kbps) Allison 3K A26
Powertrain J1939 (500Kbps) Eaton Ultrashift+ Transmission
A26:Powertrain J1939 (500Kbps) Eaton Ultrashift+ Transmission A26
Powertrain J1939 (500Kbps) Eaton Ultrashift+ Transmission X15:Powertrain J1939 (500kbps) Eaton Ultrashift+ X15
Powertrain J1939 (500Kbps) Edurant Transmission
X15:Powertrain J1939 (500kbps) Endurant Transmission X15
Powertrain J1939 (500Kbps) Manual Transmission
A26:Powertrain Standard J1939 (500Kbps) A26 Engine
Powertrain J1939 (500Kbps) Manual Transmission
X15:Powertrain Standard J1939 (500kbps) Manual Transmission X15
Powertrain J1939 (500Kbps) TC10 Transmission A26:Powertrain J1939 (500Kbps) TC10 Transmission A26
Powertrain J1939 (500Kbps) TC10 Transmission X15:Powertrain J1939 (500kbps) TC10 Transmission X15

Mates MODU-SHF-5040-04-01A

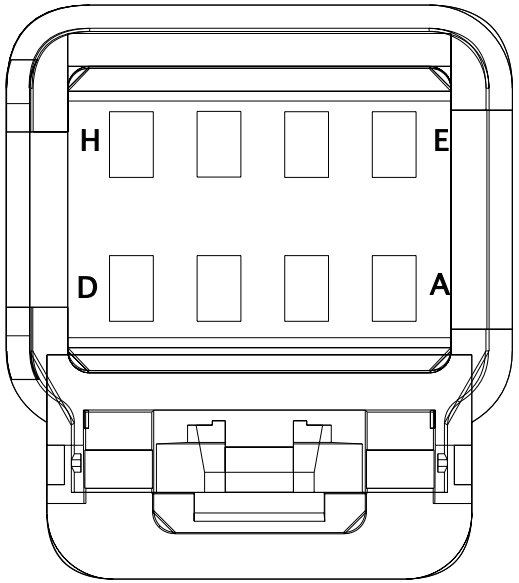

Name	Terminal Part Number	V-Min	Name	Wire Part Number	Wire CSA	Wire Spec	Wire Material description	Wire Color Description	Wire Length	End2 Terminal Part Number	End2 Pin Name	End2 Connector
E	-	-	WIRE223906	-	0.0	-	-	-	0.0	-	E	7900M
F	-	-	WIRE223907	-	0.0	-	-	-	0.0	-	F	7900M

Connector Name	1861
Part Number	3517473C1
Instances	LT/RH/LoneStar - X15/A26 - Banana Plugs Receptacle:Diagram1
Mates	DEV-Two_Post-2061-01-01A

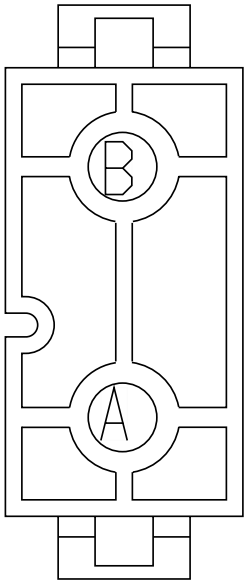

Name	Terminal Part Number	V-Min	Name	Wire Part Number	Wire CSA	Wire Spec	Wire Material description	Wire Color Description	Wire Length	End2 Terminal Part Number	End2 Pin Name	End2 Connect or
A	-	-	A86N	2643687 R1	1.91	14.0	Std. Wall XLPE Primary Cable	LIGHT GREEN	150.0	-	A	10F
B	-	-	A86-GB	2643689 R1	1.91	14.0	Std. Wall XLPE Primary Cable	WHITE	150.0	-	B	10F

Connector Name	1902
Part Number	1661196C1
Short Description	2-POST
Instances	LT/RH/LoneStar - X15/A26 - Banana Plugs Receptacle:Diagram1
Mates	10F

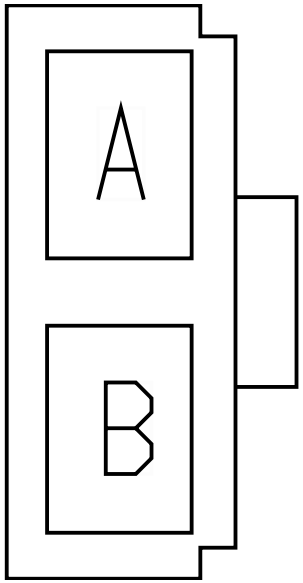

Name	Terminal Part Number	V-Min	Name	Wire Part Number	Wire CSA	Wire Spec	Wire Material description	Wire Color Description	Wire Length	End2 Terminal Part Number	End2 Pin Name	End2 Connect or
A	-	-	AD86C	3510301 R1	1.91	14.0	Thin Wall XLPE Primary Cable	LIGHT GREEN	1050.0	-	-	-
B	-	-	AD11-GCC	3510361 R1	1.91	14.0	Thin Wall XLPE Primary Cable	WHITE	1820.0	-	-	-

Connector Name	1906F
Part Number	1661891C1
Instances	LT/RH/LoneStar - X15/A26 - Air Shield Lighting w/ One Light:Diagram1 LT/RH/LoneStar - X15/A26 - Beacon/Strobe Light:Diagram1
Mates	5117

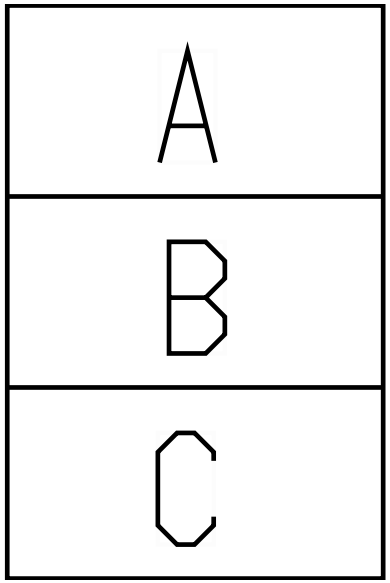

Name	Terminal Part Number	V-Min	Name	Wire Part Number	Wire CSA	Wire Spec	Wire Material description	Wire Color Description	Wire Length	End2 Terminal Part Number	End2 Pin Name	End2 Connect or
A	-	-	58C	3510306 R1	1.16	16.0	Thin Wall XLPE Primary Cable	BROWN	1500.0	-	A	1906M
B	-	-	58-GC	3510360 R1	1.16	16.0	Thin Wall XLPE Primary Cable	WHITE	1500.0	-	B	1906M

Connector Name	1906M
Part Number	1661889C1
Short Description	LIGHTED AIRSHIELD
Instances	LT/RH/LoneStar - X15/A26 - Air Shield Lighting w/ One Light:Diagram1
Mates	1906

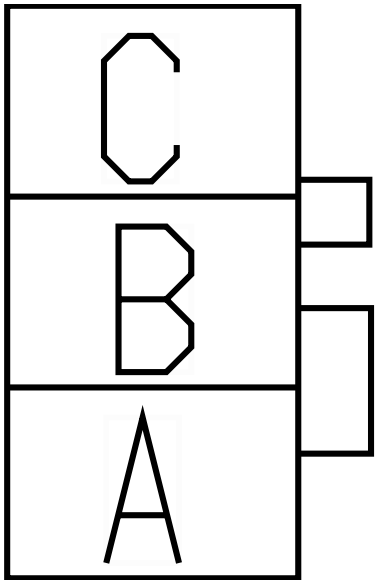

Name	Terminal Part Number	V-Min	Name	Wire Part Number	Wire CSA	Wire Spec	Wire Material description	Wire Color Description	Wire Length	End2 Terminal Part Number	End2 Pin Name	End2 Connect or
A	-	-	58C	3510306 R1	1.16	16.0	Thin Wall XLPE Primary Cable	BROWN	1500.0	-	A	1906F
B	-	-	58-GC	3510360 R1	1.16	16.0	Thin Wall XLPE Primary Cable	WHITE	1500.0	-	B	1906F

Connector Name	1906M
Part Number	1661889C1
Instances	LT/RH/LoneStar - X15/A26 - Beacon/Strobe Light:Diagram1
Mates	5118

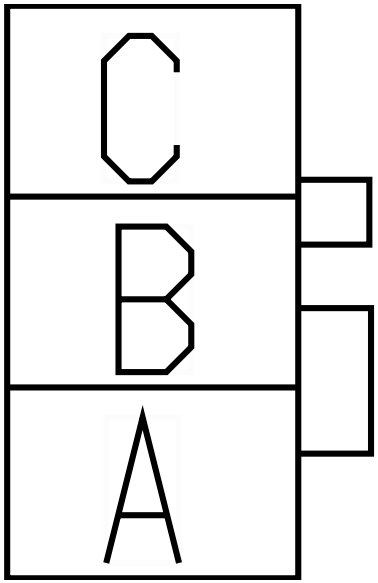

Name	Terminal Part Number	V-Min	Name	Wire Part Number	Wire CSA	Wire Spec	Wire Material description	Wire Color Description	Wire Length	End2 Terminal Part Number	End2 Pin Name	End2 Connect or
A	-	-	58C	3510306 R1	1.16	16.0	Thin Wall XLPE Primary Cable	BROWN	1500.0	-	A	1906F
B	-	-	58-GC	3510360 R1	1.16	16.0	Thin Wall XLPE Primary Cable	WHITE	1500.0	-	B	1906F

Connector Name	1906
Part Number	1661891C1
Short Description	LIGHTED AIR SHIELD
Instances	LT/RH/LoneStar - X15/A26 - Air Shield Lighting w/ One Light:Diagram1
Mates	1906M

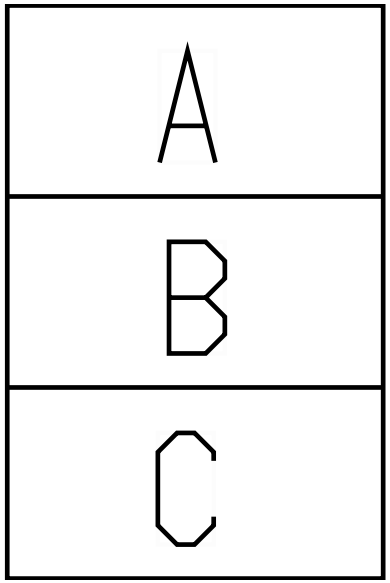

Name	Terminal Part Number	V-Min	Name	Wire Part Number	Wire CSA	Wire Spec	Wire Material description	Wire Color Description	Wire Length	End2 Terminal Part Number	End2 Pin Name	End2 Connect or
A	-	-	CW58C	3510306 R1	1.16	16.0	Thin Wall XLPE Primary Cable	BROWN	4190.0	-	R1 - 87	1013
B	-	-	CW58-GBG	3510360 R1	1.16	16.0	Thin Wall XLPE Primary Cable	WHITE	1840.0	-	-	-

Connector Name	1907
Part Number	1661259C1
Instances	LT/RH/LoneStar - X15/A26 - Floor/Search Lights DayCab:Diagram1 LT/RH/LoneStar - X15/A26 - Floor/Search Lights Sleeper:Diagram1 LT/RH/LoneStar - X15/A26 - Floor/Search Lights Sleeper (1 Light):Diagram1
Mates	LT-FT_FLOOR-2009-02-01A

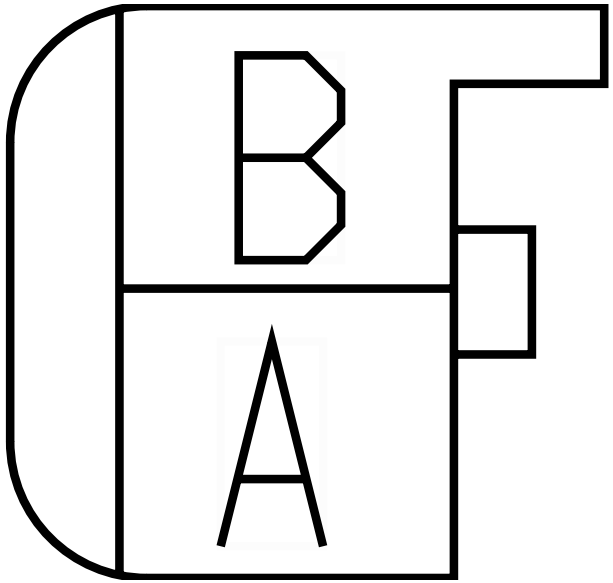

Name	Terminal Part Number	V-Min	Name	Wire Part Number	Wire CSA	Wire Spec	Wire Material description	Wire Color Description	Wire Length	End2 Terminal Part Number	End2 Pin Name	End2 Connect or
A	-	-	EL63JA	3510353 R1	0.79	18.0	Thin Wall XLPE Primary Cable	DARK BLUE	1345.0	-	R3-87	1011
A	-	-	MP63JA	3510353 R1	0.79	18.0	Thin Wall XLPE Primary Cable	DARK BLUE	1345.0	-	R3-87	1011
B	-	-	BC63-GAJ	3510359 R1	0.79	18.0	Thin Wall XLPE Primary Cable	WHITE	1005.0	-	-	-

Connector Name 1919A
Part Number 2005836C1
Instances Telematics J1708:Telematics J1708

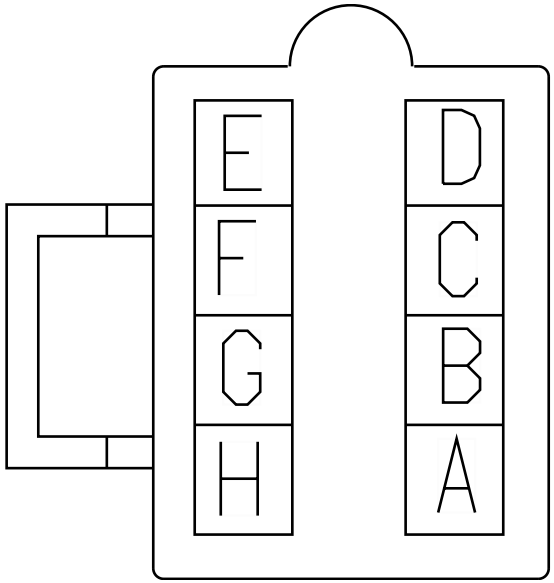

Name	Terminal Part Number	V-Min	Name	Wire Part Number	Wire CSA	Wire Spec	Wire Material description	Wire Color Description	Wire Length	End2 Terminal Part Number	End2 Pin Name	End2 Connect or
C	-	-	WIRE490304	-	0.0	-	-	-	0.0	-	E2	J5-1602
D	-	-	WIRE490311	-	0.0	-	-	-	0.0	-	E1	J5-1602

Connector Name	1919B
Part Number	2005836C1
Instances	LT/RH/LoneStar - X15/A26 - Telematics (QUALCOMM MCP50):Diagram1 Telematics J1708:Telematics J1708
Mates	MODU-QULCM_MCP50-2035-07-0 2A

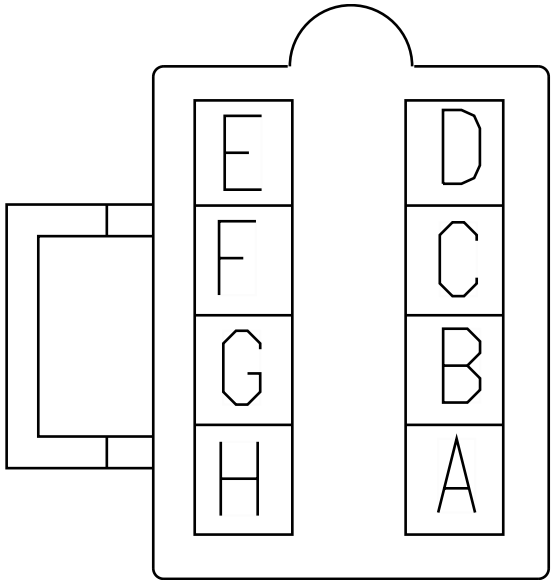

Name	Terminal Part Number	V-Min	Name	Wire Part Number	Wire CSA	Wire Spec	Wire Material description	Wire Color Description	Wire Length	End2 Terminal Part Number	End2 Pin Name	End2 Connect or
C	-	-	-	-	-	-	-	-	-	-	-	-
C	-	-	WIRE490306	-	0.0	-	-	-	0.0	-	E2	J5-1602
D	-	-	-	-	-	-	-	-	-	-	-	-
D	-	-	WIRE490313	-	0.0	-	-	-	0.0	-	E1	J5-1602

Connector Name	1919
Part Number	2005836C1
Instances	LT/RH/LoneStar - X15/A26 - Telematics (PEOPLE NET SLEEPER):Diagram1 Telematics J1708:Telematics J1708
Mates	MODU-OMNIVISION-2035-03-08A

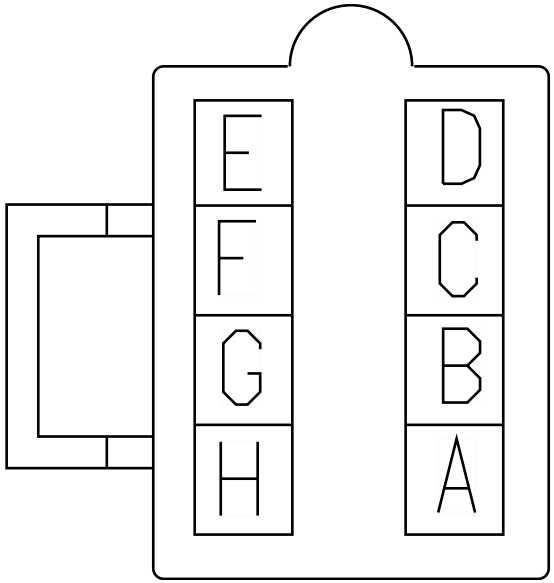

Name	Terminal Part Number	V-Min	Name	Wire Part Number	Wire CSA	Wire Spec	Wire Material description	Wire Color Description	Wire Length	End2 Terminal Part Number	End2 Pin Name	End2 Connect or
C	-	-	WIRE490305	-	0.0	-	-	-	0.0	-	E2	J5-1602
C	-	-	-	-	-	-	-	-	-	-	-	-
D	-	-	WIRE490312	-	0.0	-	-	-	0.0	-	E1	J5-1602
D	-	-	-	-	-	-	-	-	-	-	-	-

Connector Name 1920

Part Number 2011340C1

Instances LT/RH/LoneStar - X15/A26 - Telematics QUALCOMM IMCT DAYCAB With PANIC BUTTON:Diagram1
Telematics J1708:Telematics J1708

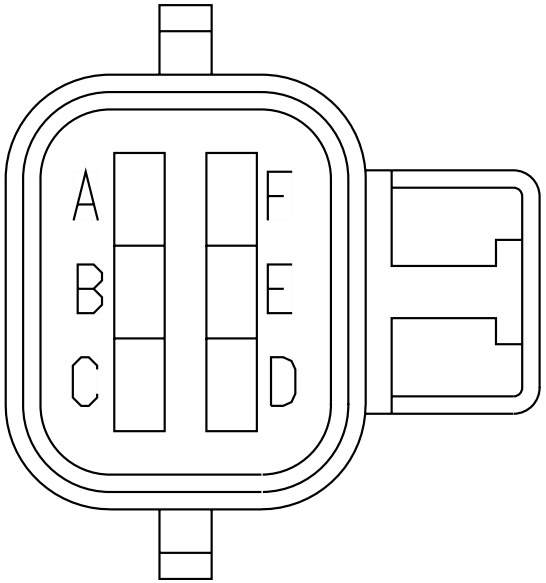

Name	Terminal Part Number	V-Min	Name	Wire Part Number	Wire CSA	Wire Spec	Wire Material description	Wire Color Description	Wire Length	End2 Terminal Part Number	End2 Pin Name	End2 Connect or
A	-	-	WIRE490307	-	0.0	-	-	-	0.0	-	E2	J5-1602
A	-	-	-	-	-	-	-	-	-	-	-	-
B	-	-	WIRE490314	-	0.0	-	-	-	0.0	-	E1	J5-1602
B	-	-	-	-	-	-	-	-	-	-	-	-
C	-	-	CK14ED	3510365 R1	0.79	18.0	Thin Wall XLPE Primary Cable	RED	3395.0	-	-	-
D	-	-	CK11-GBE	3510359 R1	0.79	18.0	Thin Wall XLPE Primary Cable	WHITE	2990.0	-	-	-
E	-	-	CK13EE	3510323 R1	0.79	18.0	Thin Wall XLPE Primary Cable	PINK	3580.0	-	-	-

Name	Terminal Part Number	V-Min	Name	Wire Part Number	Wire CSA	Wire Spec	Wire Material description	Wire Color Description	Wire Length	End2 Terminal Part Number	End2 Pin Name	End2 Connector
F	-	-	MJ11-GMW	2643764 R1	0.53	20.0	Std. Wall XLPE Primary Cable	WHITE	2420.0	-	B5	A02-1500A

Connector Name	1926
Part Number	3544677C1
Instances	Body J1939 (250Kbps) W/ 3 Splice Packs:Body J1939 (250Kbps)
Mates	DEV-DRIVER_SEAT_ROLTEK-01

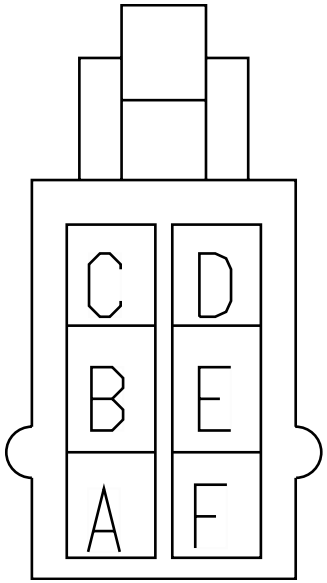

Name	Terminal Part Number	V-Min	Name	Wire Part Number	Wire CSA	Wire Spec	Wire Material description	Wire Color Description	Wire Length	End2 Terminal Part Number	End2 Pin Name	End2 Connect or
C	-	-	WIRE489820	-	0.0	-	-	-	0.0	-	L	1024
D	-	-	WIRE489819	-	0.0	-	-	-	0.0	-	B	1024

Connector Name 1931A

Part Number 4110679C1

Instances Powertrain J1939 (500Kbps) Edurant Transmission
A26:Powertrain J1939 (500Kbps) Edurant Transmission A26
Powertrain J1939 (500Kbps) Allison 3K Transmission
A26:Powertrain J1939 (500Kbps) Allison 3K A26
Powertrain J1939 (500Kbps) Eaton Ultrashift+ Transmission
A26:Powertrain J1939 (500Kbps) Eaton Ultrashift+ Transmission A26
Powertrain J1939 (500Kbps) Eaton Ultrashift+ Transmission
X15:Powertrain J1939 (500kbps) Eaton Ultrashift+ X15
Powertrain J1939 (500Kbps) Edurant Transmission
X15:Powertrain J1939 (500kbps) Endurant Transmission X15
Powertrain J1939 (500Kbps) Manual Transmission
A26:Powertrain Standard J1939 (500Kbps) A26 Engine
Powertrain J1939 (500Kbps) Manual Transmission
X15:Powertrain Standard J1939 (500kbps) Manual Transmission X15
Powertrain J1939 (500Kbps) TC10 Transmission A26:Powertrain J1939 (500Kbps) TC10 Transmission A26
Powertrain J1939 (500Kbps) TC10 Transmission X15:Powertrain J1939 (500kbps) TC10 Transmission X15

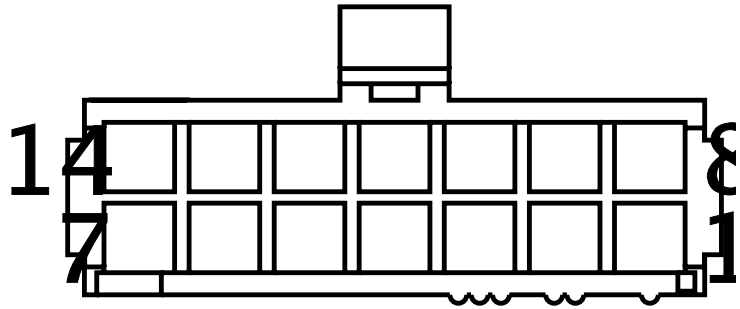

Mates MODU-XIRGO_BOX-2015-01-01A

Name	Terminal Part Number	V-Min	Name	Wire Part Number	Wire CSA	Wire Spec	Wire Material description	Wire Color Description	Wire Length	End2 Terminal Part Number	End2 Pin Name	End2 Connector
1	-	-	WIRE223760	-	0.0	-	-	-	0.0	-	PIN1	-
8	-	-	WIRE223744	-	0.0	-	-	-	0.0	-	PIN1	-

Connector Name 1935M

Part Number 3683465C1

Instances Body J1939 (250Kbps) Splice Pack 1024:Body J1939 (250Kbps)
Body J1939 (250Kbps) Splice Pack 1029:Body J1939 (250Kbps)

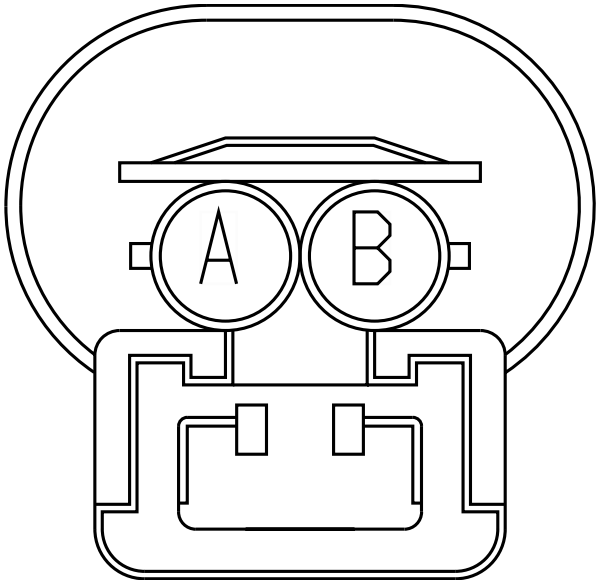

Name	Terminal Part Number	V-Min	Name	Wire Part Number	Wire CSA	Wire Spec	Wire Material description	Wire Color Description	Wire Length	End2 Terminal Part Number	End2 Pin Name	End2 Connect or
A	-	-	WIRE489912	-	0.0	-	-	-	0.0	-	PIN1	-
A	-	-	WIRE490110	-	0.0	-	-	-	0.0	-	G	1024
B	-	-	WIRE489913	-	0.0	-	-	-	0.0	-	PIN1	-
B	-	-	WIRE490111	-	0.0	-	-	-	0.0	-	F	1024

Connector Name	1935N
Part Number	3683465C1
Instances	Body J1939 (250Kbps) Splice Pack 1025:Body J1939 (250Kbps) Body J1939 (250Kbps) W/ 3 Splice Packs:Body J1939 (250Kbps)
Mates	TERMINATING RESISTOR

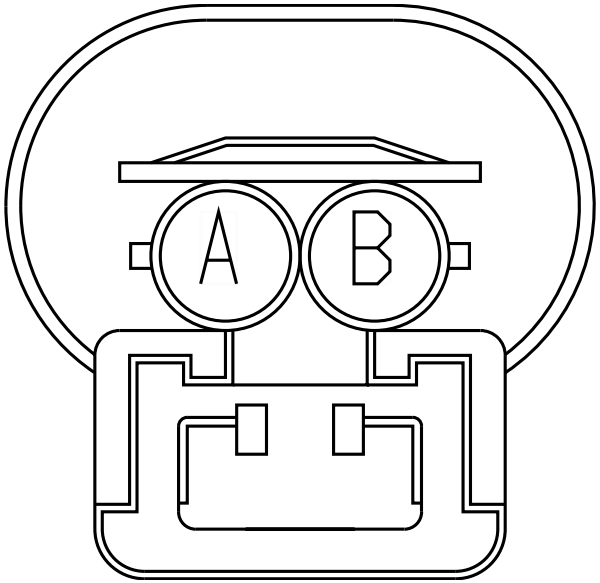

Name	Terminal Part Number	V-Min	Name	Wire Part Number	Wire CSA	Wire Spec	Wire Material description	Wire Color Description	Wire Length	End2 Terminal Part Number	End2 Pin Name	End2 Connect or
A	-	-	WIRE489806	-	0.0	-	-	-	0.0	-	G	1025
A	-	-	WIRE490022	-	0.0	-	-	-	0.0	-	G	1025
B	-	-	WIRE489807	-	0.0	-	-	-	0.0	-	F	1025
B	-	-	WIRE490023	-	0.0	-	-	-	0.0	-	F	1025

Connector Name	1937M
Part Number	1667741C1
Instances	Body J1939 (250Kbps) Splice Pack 1024:Body J1939 (250Kbps) LT/RH/LoneStar - X15/A26 - Telematics (OMNIVISION W/ J1939 & PANIC BUTTON):Diagram1 LT/RH/LoneStar - X15/A26 - Telematics (OMNIVISION W/ J1939 & PANIC BUTTON):Diagram2
Mates	MODU-OMNIVISION-2035-03-08A

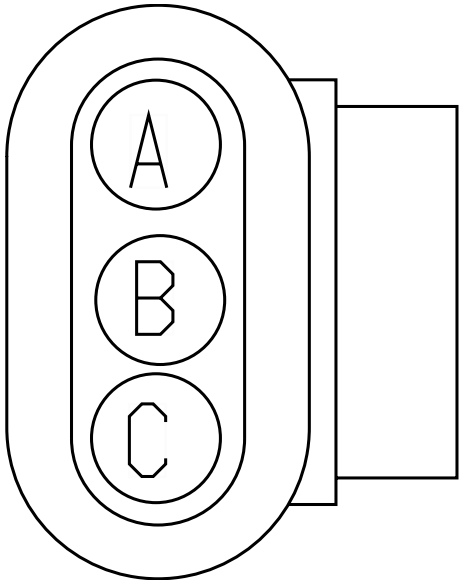

Name	Terminal Part Number	V-Min	Name	Wire Part Number	Wire CSA	Wire Spec	Wire Material description	Wire Color Description	Wire Length	End2 Terminal Part Number	End2 Pin Name	End2 Connect or
A	-	-	-	-	-	-	-	-	-	-	-	-
A	-	-	WIRE233646	-	0.0	-	-	-	0.0	-	H	1024
C	-	-	-	-	-	-	-	-	-	-	-	-
C	-	-	WIRE233647	-	0.0	-	-	-	0.0	-	E	1024

Connector Name	1937N
Part Number	1667741C1
Instances	Body J1939 (250Kbps) Splice Pack 1024:Body J1939 (250Kbps) Body J1939 (250Kbps) Splice Pack 1025:Body J1939 (250Kbps) Body J1939 (250Kbps) W/ 3 Splice Packs:Body J1939 (250Kbps)
Mates	MODU-OMNIVISION-2035-05-06A

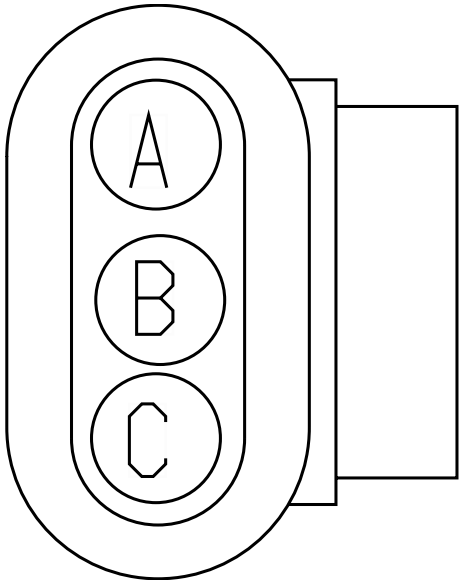

Name	Terminal Part Number	V-Min	Name	Wire Part Number	Wire CSA	Wire Spec	Wire Material description	Wire Color Description	Wire Length	End2 Terminal Part Number	End2 Pin Name	End2 Connect or
A	-	-	WIRE489835	-	0.0	-	-	-	0.0	-	H	1025
A	-	-	WIRE490016	-	0.0	-	-	-	0.0	-	H	1025
A	-	-	WIRE233644	-	0.0	-	-	-	0.0	-	H	1024
C	-	-	WIRE489836	-	0.0	-	-	-	0.0	-	E	1025
C	-	-	WIRE490019	-	0.0	-	-	-	0.0	-	E	1025
C	-	-	WIRE233645	-	0.0	-	-	-	0.0	-	E	1024

Connector Name	1937P
Part Number	1667741C1
Instances	Body J1939 (250Kbps) Splice Pack 1024:Body J1939 (250Kbps) Body J1939 (250Kbps) Splice Pack 1025:Body J1939 (250Kbps) Body J1939 (250Kbps) W/ 3 Splice Packs:Body J1939 (250Kbps)
Mates	MODU-QULCM_MCP50-2035-07-0 2A

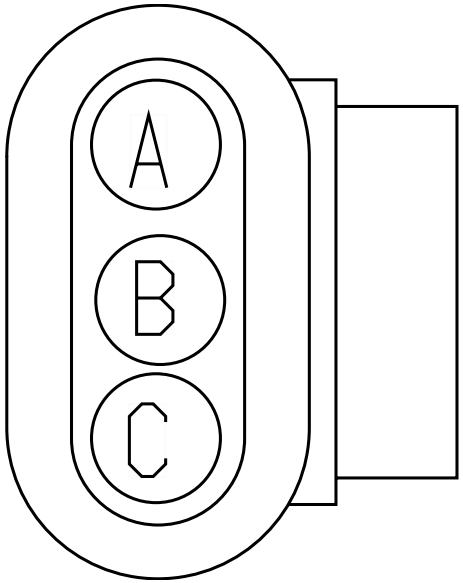

Name	Terminal Part Number	V-Min	Name	Wire Part Number	Wire CSA	Wire Spec	Wire Material description	Wire Color Description	Wire Length	End2 Terminal Part Number	End2 Pin Name	End2 Connect or
A	-	-	WIRE489829	-	0.0	-	-	-	0.0	-	H	1025
A	-	-	WIRE490017	-	0.0	-	-	-	0.0	-	H	1025
A	-	-	WIRE233648	-	0.0	-	-	-	0.0	-	H	1024
C	-	-	WIRE489830	-	0.0	-	-	-	0.0	-	E	1025
C	-	-	WIRE490020	-	0.0	-	-	-	0.0	-	E	1025
C	-	-	WIRE233651	-	0.0	-	-	-	0.0	-	E	1024

Connector Name	1939A
Part Number	3616085C1
Instances	Body J1939 (250Kbps) Splice Pack 1024:Body J1939 (250Kbps) Body J1939 (250Kbps) Splice Pack 1025:Body J1939 (250Kbps) Body J1939 (250Kbps) W/ 3 Splice Packs:Body J1939 (250Kbps) LT/RH/LoneStar - X15/A26 - Telematics (PEOPLE NET DAYCAB):Diagram1
Mates	DEV-PEOPLENET_PMG-2035-05- 07A

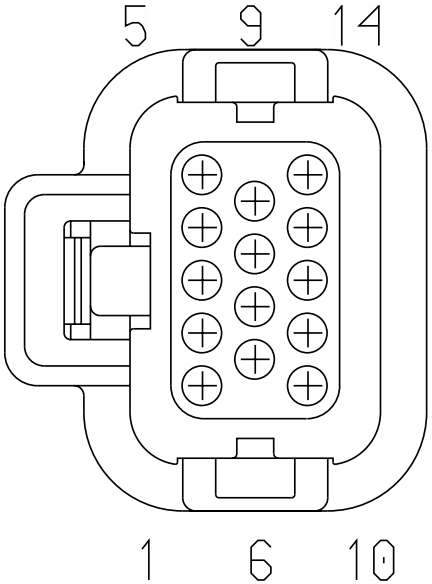

Name	Terminal Part Number	V-Min	Name	Wire Part Number	Wire CSA	Wire Spec	Wire Material description	Wire Color Description	Wire Length	End2 Terminal Part Number	End2 Pin Name	End2 Connect or
2	-	-	WIRE489832	-	0.0	-	-	-	0.0	-	E	1025
2	-	-	WIRE489839	-	0.0	-	-	-	0.0	-	39	5000
2	-	-	WIRE233641	-	0.0	-	-	-	0.0	-	E	1025
2	-	-	-	-	-	-	-	-	-	-	-	-
2	-	-	WIRE490121	-	0.0	-	-	-	0.0	-	39	5000
7	-	-	WIRE489831	-	0.0	-	-	-	0.0	-	H	1025
7	-	-	WIRE489840	-	0.0	-	-	-	0.0	-	38	5000
7	-	-	WIRE233640	-	0.0	-	-	-	0.0	-	H	1025
7	-	-	-	-	-	-	-	-	-	-	-	-

Name	Terminal Part Number	V-Min	Name	Wire Part Number	Wire CSA	Wire Spec	Wire Material description	Wire Color Description	Wire Length	End2 Terminal Part Number	End2 Pin Name	End2 Connect or
7	-	-	WIRE490120	-	0.0	-	-	-	0.0	-	38	5000

Connector Name 1939M

Part Number 3553404C1

Instances Body J1939 (250Kbps) Splice Pack 1025:Body J1939 (250Kbps)
Body J1939 (250Kbps) W/ 3 Splice Packs:Body J1939 (250Kbps)
Telematics J1708:Telematics J1708

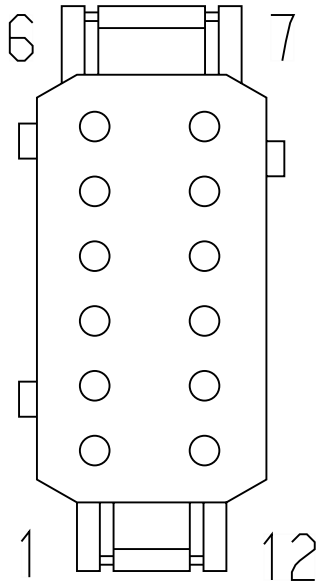

Name	Terminal Part Number	V-Min	Name	Wire Part Number	Wire CSA	Wire Spec	Wire Material description	Wire Color Description	Wire Length	End2 Terminal Part Number	End2 Pin Name	End2 Connect or
4	-	-	WIRE490308	-	0.0	-	-	-	0.0	-	E2	J5-1602
5	-	-	WIRE490315	-	0.0	-	-	-	0.0	-	E1	J5-1602
11	-	-	WIRE489834	-	0.0	-	-	-	0.0	-	E	1025
11	-	-	WIRE490021	-	0.0	-	-	-	0.0	-	E	1025
12	-	-	WIRE489833	-	0.0	-	-	-	0.0	-	H	1025
12	-	-	WIRE490018	-	0.0	-	-	-	0.0	-	H	1025

Connector Name 1939-125A
Part Number 3683465C1
Instances Low Speed J1939 (125Kbps):Low Speed J1939 (125Kbps)

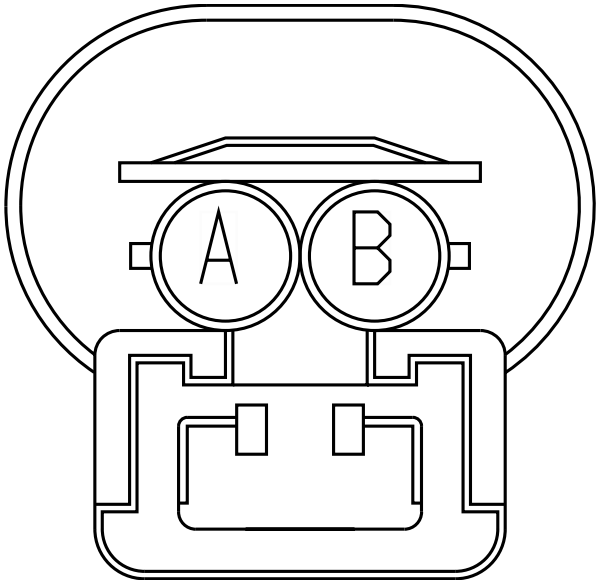

Name	Terminal Part Number	V-Min	Name	Wire Part Number	Wire CSA	Wire Spec	Wire Material description	Wire Color Description	Wire Length	End2 Terminal Part Number	End2 Pin Name	End2 Connect or
A	-	-	WIRE234460	-	0.0	-	-	-	0.0	-	PIN1	-
B	-	-	WIRE234461	-	0.0	-	-	-	0.0	-	PIN1	-

Connector Name 1939-125B
Part Number 3683465C1
Instances Low Speed J1939 (125Kbps):Low Speed J1939 (125Kbps)

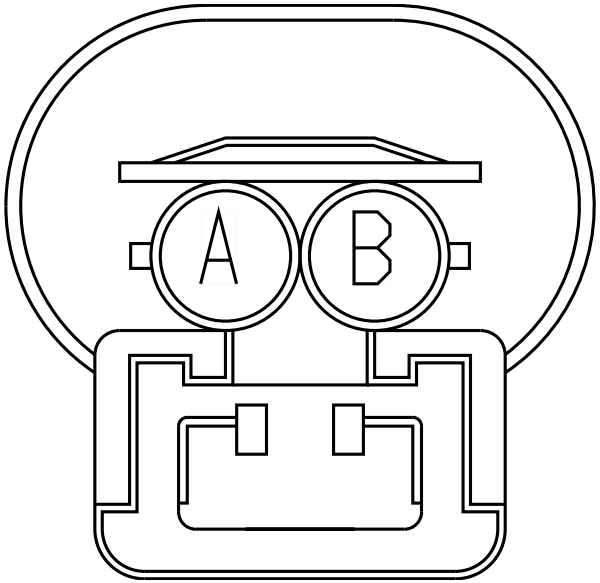

Name	Terminal Part Number	V-Min	Name	Wire Part Number	Wire CSA	Wire Spec	Wire Material description	Wire Color Description	Wire Length	End2 Terminal Part Number	End2 Pin Name	End2 Connect or
A	-	-	WIRE234480	-	0.0	-	-	-	0.0	-	PIN1	-
B	-	-	WIRE234481	-	0.0	-	-	-	0.0	-	PIN1	-

Connector Name 1939-250A
Part Number 3683465C1
Instances Cab J1939 (250Kbps):Cab J1939 (250Kbps)

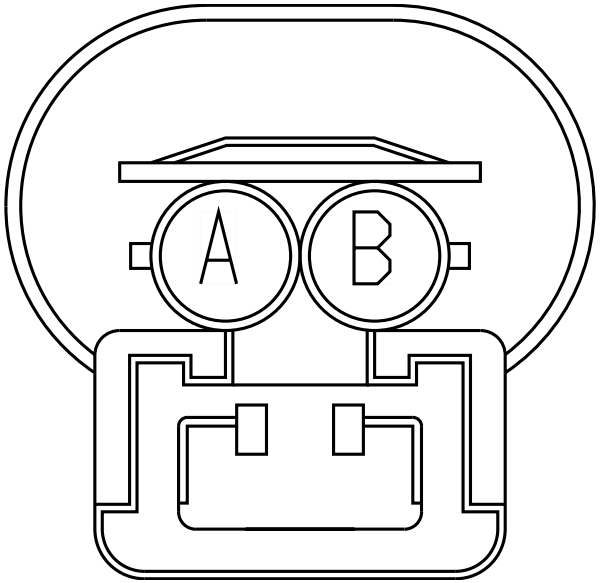

Name	Terminal Part Number	V-Min	Name	Wire Part Number	Wire CSA	Wire Spec	Wire Material description	Wire Color Description	Wire Length	End2 Terminal Part Number	End2 Pin Name	End2 Connect or
A	-	-	WIRE223936	-	0.0	-	-	-	0.0	-	PIN1	-
B	-	-	WIRE223937	-	0.0	-	-	-	0.0	-	PIN1	-

Connector Name 1939-250B
Part Number 3683465C1
Instances Cab J1939 (250Kbps):Cab J1939 (250Kbps)

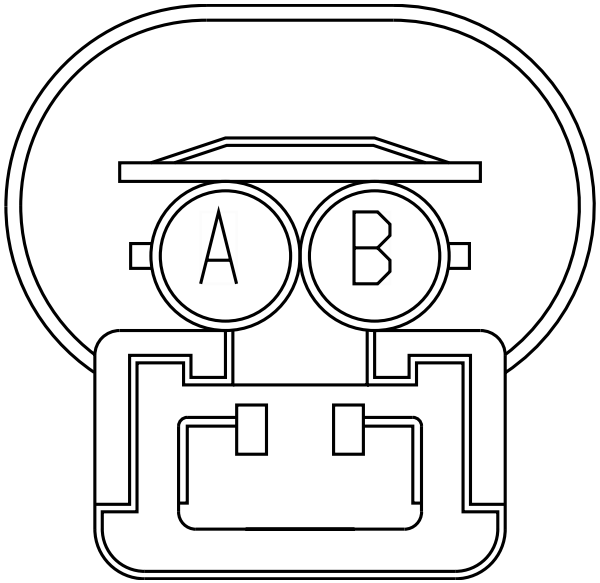

Name	Terminal Part Number	V-Min	Name	Wire Part Number	Wire CSA	Wire Spec	Wire Material description	Wire Color Description	Wire Length	End2 Terminal Part Number	End2 Pin Name	End2 Connect or
A	-	-	WIRE223927	-	0.0	-	-	-	0.0	-	PIN1	-
B	-	-	WIRE223928	-	0.0	-	-	-	0.0	-	PIN1	-

Connector Name	1944
Part Number	6114576C1
Short Description	OMNITRACS IVG
Instances	Body J1939 (250Kbps) Splice Pack 1029:Body J1939 (250Kbps) Body J1939 (250Kbps) W/ 3 Splice Packs:Body J1939 (250Kbps) Powertrain J1939 (500Kbps) Edurant Transmission A26:Powertrain J1939 (500Kbps) Edurant Transmission A26 Powertrain J1939 (500Kbps) Allison 3K Transmission A26:Powertrain J1939 (500Kbps) Allison 3K A26 Powertrain J1939 (500Kbps) Eaton Ultrashift+ Transmission A26:Powertrain J1939 (500Kbps) Eaton Ultrashift+ Transmission A26 Powertrain J1939 (500Kbps) Eaton Ultrashift+ Transmission X15:Powertrain J1939 (500kbps) Eaton Ultrashift+ X15 Powertrain J1939 (500Kbps) Edurant Transmission X15:Powertrain J1939 (500kbps) Endurant Transmission X15 Powertrain J1939 (500Kbps) Manual Transmission A26:Powertrain Standard J1939 (500Kbps) A26 Engine Powertrain J1939 (500Kbps) Manual Transmission X15:Powertrain Standard J1939 (500kbps) Manual Transmission X15 Powertrain J1939 (500Kbps) TC10 Transmission A26:Powertrain J1939 (500Kbps) TC10 Transmission A26 Powertrain J1939 (500Kbps) TC10 Transmission X15:Powertrain J1939 (500kbps) TC10 Transmission X15

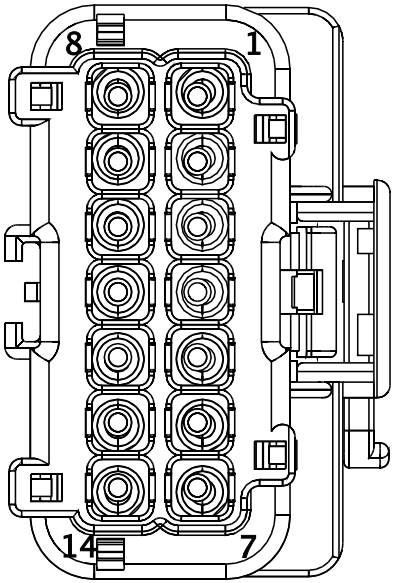

Name	Terminal Part Number	V-Min	Name	Wire Part Number	Wire CSA	Wire Spec	Wire Material description	Wire Color Description	Wire Length	End2 Terminal Part Number	End2 Pin Name	End2 Connector
2	-	-	WIRE223794	-	0.0	-	-	-	0.0	-	PIN1	-
2	-	-	WIRE489821	-	0.0	-	-	-	0.0	-	H	1029
2	-	-	WIRE489922	-	0.0	-	-	-	0.0	-	H	1029
9	-	-	WIRE223795	-	0.0	-	-	-	0.0	-	PIN1	-

Name	Terminal Part Number	V-Min	Name	Wire Part Number	Wire CSA	Wire Spec	Wire Material description	Wire Color Description	Wire Length	End2 Terminal Part Number	End2 Pin Name	End2 Connect or
9	-	-	WIRE489822	-	0.0	-	-	-	0.0	-	E	1029
9	-	-	WIRE489923	-	0.0	-	-	-	0.0	-	E	1029

Connector Name 1944_
Part Number 6114576C1
Instances Cab J1939 (250Kbps):Cab J1939 (250Kbps)

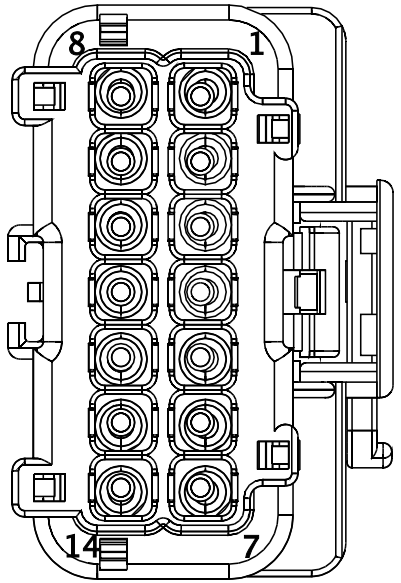

Name	Terminal Part Number	V-Min	Name	Wire Part Number	Wire CSA	Wire Spec	Wire Material description	Wire Color Description	Wire Length	End2 Terminal Part Number	End2 Pin Name	End2 Connect or
2	-	-	WIRE233663	-	0.0	-	-	-	0.0	-	H	1026
9	-	-	WIRE233664	-	0.0	-	-	-	0.0	-	E	1026

Connector Name	1946F
Part Number	3515763C1
Short Description	SLEEPER NO IDLE HEAT & COOL
Instances	LT/RH/LoneStar - X15/A26 - Rear HVAC (No Idle) W/ Pre-Heat (Bergstrom Heat and Cool w/ Condensation) 4 SWITCHES Option 1:Diagram2 - No Idle Switching LT/RH/LoneStar - X15/A26 - Rear HVAC (No Idle) W/ Pre-Heat (Bergstrom Heat and Cool w/ Condensation) 4 SWITCHES Option 2:Diagram2 - No Idle Switching
Mates	1946M

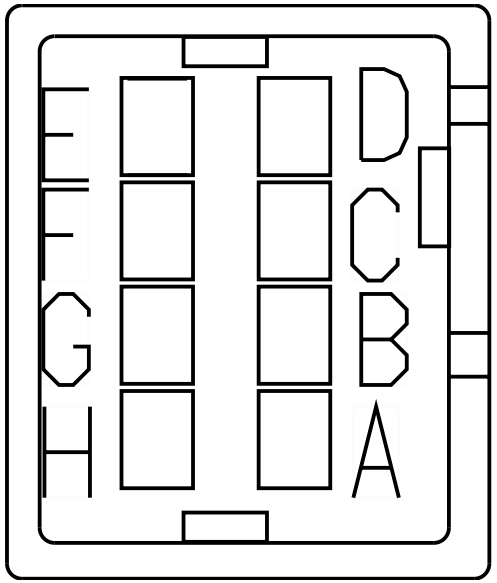

Name	Terminal Part Number	V-Min	Name	Wire Part Number	Wire CSA	Wire Spec	Wire Material description	Wire Color Description	Wire Length	End2 Terminal Part Number	End2 Pin Name	End2 Connect or
A	-	-	HN75AG	3510298 R1	0.53	20.0	Thin Wall XLPE Primary Cable	LIGHT GREEN	3380.0	-	9	1124M
B	-	-	HN75AF	3510298 R1	0.53	20.0	Thin Wall XLPE Primary Cable	LIGHT GREEN	3380.0	-	2	1124M
C	-	-	HN75AR	3510298 R1	0.53	20.0	Thin Wall XLPE Primary Cable	LIGHT GREEN	2740.0	-	X	-
D	-	-	HN75-GAS	3510358 R1	0.53	20.0	Thin Wall XLPE Primary Cable	WHITE	3380.0	-	11	1124M

Name	Terminal Part Number	V-Min	Name	Wire Part Number	Wire CSA	Wire Spec	Wire Material description	Wire Color Description	Wire Length	End2 Terminal Part Number	End2 Pin Name	End2 Connect or
E	-	-	HN77NE	3510298 R1	0.53	20.0	Thin Wall XLPE Primary Cable	LIGHT GREEN	3390.0	-	2	1125M
F	-	-	HN77NF	3510298 R1	0.53	20.0	Thin Wall XLPE Primary Cable	LIGHT GREEN	3390.0	-	9	1125M
G	-	-	HN62J	3510352 R1	0.53	20.0	Thin Wall XLPE Primary Cable	DARK BLUE	3380.0	-	12	1124M

Connector Name	1946M
Part Number	3515762C1
Short Description	SLEEPER NO IDLE HEAT & COOL
Instances	LT/RH/LoneStar - X15/A26 - Rear HVAC (No Idle) W/ Pre-Heat (Bergstrom Heat and Cool w/ Condensation) 4 SWITCHES Option 1:Diagram2 - No Idle Switching LT/RH/LoneStar - X15/A26 - Rear HVAC (No Idle) W/ Pre-Heat (Bergstrom Heat and Cool w/ Condensation) 4 SWITCHES Option 2:Diagram2 - No Idle Switching
Mates	1946F

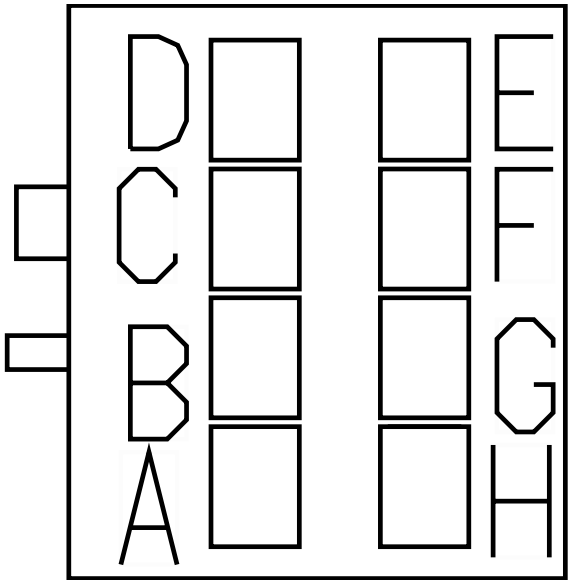

Name	Terminal Part Number	V-Min	Name	Wire Part Number	Wire CSA	Wire Spec	Wire Material description	Wire Color Description	Wire Length	End2 Terminal Part Number	End2 Pin Name	End2 Connect or
A	-	-	BD75AGA	3510299 R1	0.79	18.0	Thin Wall XLPE Primary Cable	LIGHT GREEN	1185.0	-	X	-
B	-	-	BD75AFA	3510299 R1	0.79	18.0	Thin Wall XLPE Primary Cable	LIGHT GREEN	1155.0	-	X	-
C	-	-	BD75ARA	3510299 R1	0.79	18.0	Thin Wall XLPE Primary Cable	LIGHT GREEN	1215.0	-	X	-
D	-	-	BD75-GASA	2643674 R1	0.79	18.0	Std. Wall XLPE Primary Cable	WHITE	985.0	-	X	-

Name	Terminal Part Number	V-Min	Name	Wire Part Number	Wire CSA	Wire Spec	Wire Material description	Wire Color Description	Wire Length	End2 Terminal Part Number	End2 Pin Name	End2 Connector
E	-	-	BD77NEA	3510299 R1	0.79	18.0	Thin Wall XLPE Primary Cable	LIGHT GREEN	1245.0	-	X	-
F	-	-	BD77NFA	3510299 R1	0.79	18.0	Thin Wall XLPE Primary Cable	LIGHT GREEN	1275.0	-	X	-
G	-	-	BD62J	2643720 R1	0.79	18.0	Std. Wall XLPE Primary Cable	DARK BLUE	640.0	-	X	-

Connector Name	1947
Part Number	6114576C1
Instances	LT/RH/LoneStar - Vehicle Accessory Connector - 0008XMB:Diagram1
Mates	Vehicle Accessory Connector

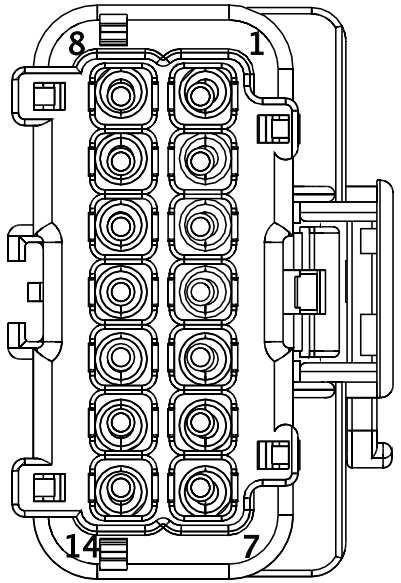

Name	Terminal Part Number	V-Min	Name	Wire Part Number	Wire CSA	Wire Spec	Wire Material description	Wire Color Description	Wire Length	End2 Terminal Part Number	End2 Pin Name	End2 Connect or
1	-	-	4Z12A	3510341 R1	0.79	18.0	Thin Wall XLPE Primary Cable	LIGHT BLUE	0.0	-	-	-
2	-	-	-	-	-	-	-	-	-	-	-	-
7	-	-	4Z13A	3510323 R1	0.79	18.0	Thin Wall XLPE Primary Cable	PINK	0.0	-	-	-
8	-	-	4Z11-G	3510358 R1	0.53	20.0	Thin Wall XLPE Primary Cable	WHITE	0.0	-	-	-
9	-	-	-	-	-	-	-	-	-	-	-	-
14	-	-	4Z14A	3510365 R1	0.79	18.0	Thin Wall XLPE Primary Cable	RED	0.0	-	-	-

Connector Name 1950

Part Number 3704182C1

Instances Body J1939 (250Kbps) Splice Pack 1024:Body J1939 (250Kbps)
Body J1939 (250Kbps) W/ 3 Splice Packs:Body J1939 (250Kbps)

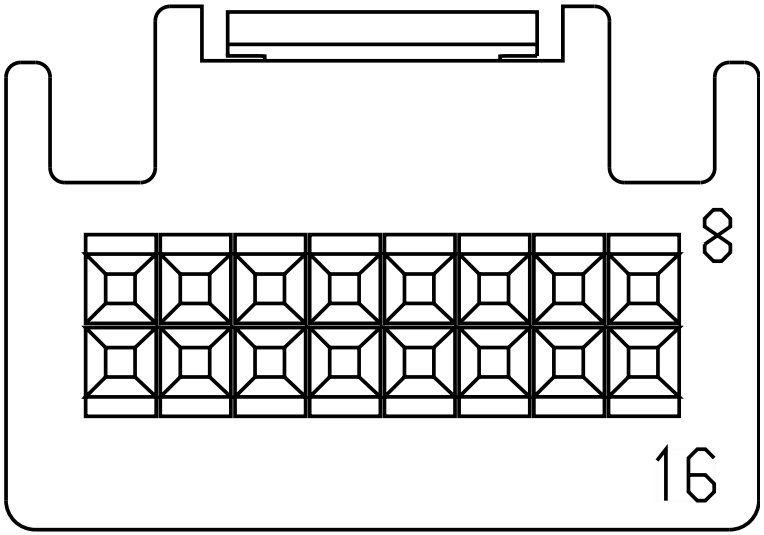

Name	Terminal Part Number	V-Min	Name	Wire Part Number	Wire CSA	Wire Spec	Wire Material description	Wire Color Description	Wire Length	End2 Terminal Part Number	End2 Pin Name	End2 Connector
8	-	-	WIRE489825	-	0.0	-	-	-	0.0	-	H	1029
8	-	-	WIRE490116	-	0.0	-	-	-	0.0	-	H	1024
9	-	-	WIRE489826	-	0.0	-	-	-	0.0	-	E	1029
9	-	-	WIRE490117	-	0.0	-	-	-	0.0	-	E	1024

Connector Name	1970
Part Number	3538635C1
Instances	Telematics J1708:Telematics J1708
Mates	5010

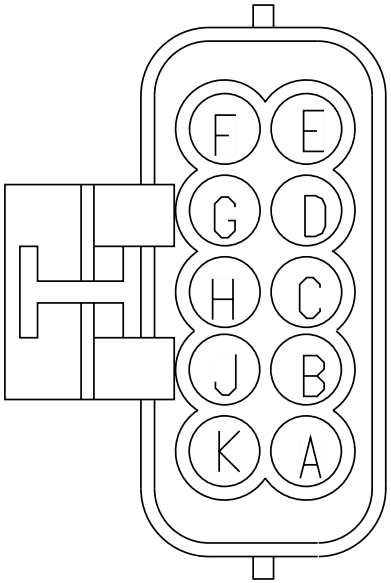

Name	Terminal Part Number	V-Min	Name	Wire Part Number	Wire CSA	Wire Spec	Wire Material description	Wire Color Description	Wire Length	End2 Terminal Part Number	End2 Pin Name	End2 Connect or
C	-	-	WIRE490301	-	0.0	-	-	-	0.0	-	E1	J5-1602
D	-	-	WIRE490300	-	0.0	-	-	-	0.0	-	E2	J5-1602

Connector Name	1970
Part Number	3538635C1
Short Description	SATELLITE COMMUNICATIONS
Instances	LT/RH/LoneStar - X15/A26 - Telematics (DRIVERTECH DAYCAB W/ J1939):Diagram1 LT/RH/LoneStar - X15/A26 - Telematics (DRIVERTECH SLEEPER W/ J1939):Diagram1 LT/RH/LoneStar - X15/A26 - Telematics (PEOPLE NET SLEEPER):Diagram1 LT/RH/LoneStar - X15/A26 - Telematics (QUALCOMM MCT w/ TRACS):Diagram1 LT/RH/LoneStar - X15/A26 - Telematics (QUALCOMM MCT w/o Tracs):Diagram1 LT/RH/LoneStar - X15/A26 - Telematics (TRIPMASTER SLEEPER):Diagram1 LT/RH/LoneStar - X15/A26 - Telematics QUALCOMM IMCT DAYCAB With MVPC:Diagram1 LT/RH/LoneStar - X15/A26 - Telematics QUALCOMM IMCT DAYCAB With MVPC & PANIC BUTTON:Diagram1 LT/RH/LoneStar - X15/A26 - Telematics QUALCOMM IMCT DAYCAB With PANIC BUTTON:Diagram2 LT/RH/LoneStar - X15/A26 - Telematics QUALCOMM IMCT MD:Diagram2 LT/RH/LoneStar - X15/A26 - Telematics QUALCOMM TMCT:Diagram1 LT/RH/LoneStar - X15/A26 - Telematics QUALCOMM TMCT With PANIC BUTTON:Diagram1
Mates	5010

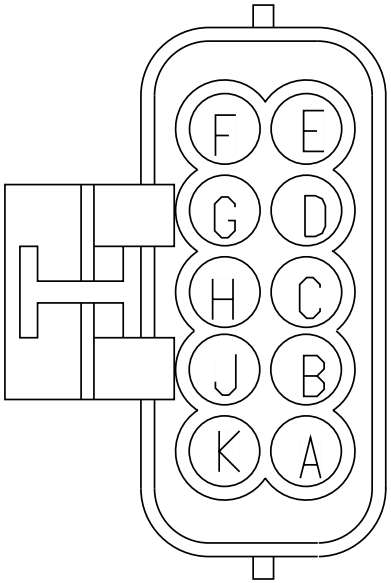

Name	Terminal Part Number	V-Min	Name	Wire Part Number	Wire CSA	Wire Spec	Wire Material description	Wire Color Description	Wire Length	End2 Terminal Part Number	End2 Pin Name	End2 Connector
A	-	-	CP14ED	3510365 R1	0.79	18.0	Thin Wall XLPE Primary Cable	RED	4125.0	-	-	-
A	-	-	KL14A	2643759 R1	0.79	18.0	Std. Wall XLPE Primary Cable	RED	4125.0	-	-	-

Name	Terminal Part Number	V-Min	Name	Wire Part Number	Wire CSA	Wire Spec	Wire Material description	Wire Color Description	Wire Length	End2 Terminal Part Number	End2 Pin Name	End2 Connector
A	-	-	PH14ED	3510365 R1	0.79	18.0	Thin Wall XLPE Primary Cable	RED	4125.0	-	-	-
A	-	-	CG14SD	3510365 R1	0.79	18.0	Thin Wall XLPE Primary Cable	RED	4125.0	-	-	-
B	-	-	CP13EE	3510323 R1	0.79	18.0	Thin Wall XLPE Primary Cable	PINK	4310.0	-	-	-
B	-	-	KL13B	3510323 R1	0.79	18.0	Thin Wall XLPE Primary Cable	PINK	4310.0	-	-	-
B	-	-	PH13EE	3510323 R1	0.79	18.0	Thin Wall XLPE Primary Cable	PINK	4310.0	-	-	-
B	-	-	CG13SD	3510323 R1	0.79	18.0	Thin Wall XLPE Primary Cable	PINK	3775.0	-	X	-
E	-	-	CP11-GMW	2643764 R1	0.53	20.0	Std. Wall XLPE Primary Cable	WHITE	3350.0	-	B5	A02-1500A
F	-	-	CR98J	3510293 R1	0.79	18.0	Thin Wall XLPE Primary Cable	BLACK	4120.0	-	4	A02-1111M

Name	Terminal Part Number	V-Min	Name	Wire Part Number	Wire CSA	Wire Spec	Wire Material description	Wire Color Description	Wire Length	End2 Terminal Part Number	End2 Pin Name	End2 Connect or
F	-	-	PH11-GBE	3510359 R1	0.79	18.0	Thin Wall XLPE Primary Cable	WHITE	2500.0	-	-	-
J	-	-	CG70E	3510317 R1	0.79	18.0	Thin Wall XLPE Primary Cable	ORANGE	3300.0	-	D1	1800
K	-	-	CG50S	3510335 R1	0.79	18.0	Thin Wall XLPE Primary Cable	YELLOW 2	4255.0	-	R1-30	1014

Connector Name 1978

Part Number 3540612C1

Instances Cab J1939 (250Kbps):Cab J1939 (250Kbps)
Fusion Private J1939:Fusion Private J1939
LoneStar - X15 - Adaptive Cruise Control (Bendix - Fusion W/O DIU & W/ Safety Direct & Reg Speakers) Option 1:Diagram1
LoneStar - X15 - Adaptive Cruise Control (Bendix - Fusion W/O DIU & W/ Safety Direct & Reg Speakers) Option 2:Diagram1
LoneStar - X15 - Lane Departure Warning - (Bendix Fusion W/ Safety Direct))(US & Canada):Diagram1
LoneStar - X15 - Lane Departure Warning - (Bendix Fusion W/ Safety Direct))(US & Canada)-:Diagram1
LT/RH - X15/A26 - Land Departure Warning - (Bendix - AutoVue W/ Qualcomm Safety Direct):Diagram1
LT/RH - X15/A26 - Adaptive Cruise Control (Bendix - Fusion W/ O DIU & N/ Safety Direct & Reg Speakers):Diagram1
LT/RH - X15/A26 - Adaptive Cruise Control (Bendix - Fusion W/ O DIU & W/ Safety Direct & Reg Speakers):Diagram1
LT/RH - X15/A26 - Lane Departure Warning - (Bendix - AutoVue N/ Qualcomm Safety Direct):Diagram1
LT/RH - X15/A26 - Lane Departure Warning - (Bendix Fusion W/ Safety Direct))(US & Canada):Diagram1
LT/RH - X15/A26 - Lane Departure Warning - (Wabco OnLane 2.0 w/ roof speakers):Diagram1
LT/RH - X15/A26 - Lane Departure Warning - (Wabco OnLane):Diagram1
LT/RH - X15/A26 - Lane Departure Warning - Bendix:Diagram1

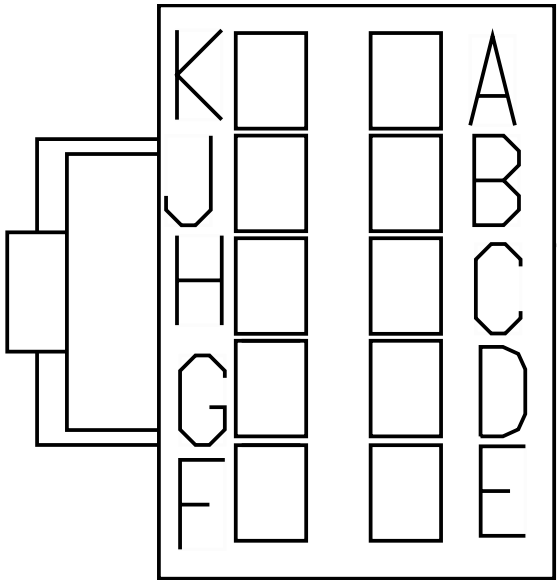

Mates 16B

Name	Terminal Part Number	V-Min	Name	Wire Part Number	Wire CSA	Wire Spec	Wire Material description	Wire Color Description	Wire Length	End2 Terminal Part Number	End2 Pin Name	End2 Connector
A	-	-	67EN	3510330 R1	1.16	16.0	Thin Wall XLPE Primary Cable	TAN	2163.0	-	B7	D51-1979
A	-	-	67EN	3510330 R1	1.16	16.0	Thin Wall XLPE Primary Cable	TAN	2163.0	-	B7	D25-1979

Name	Terminal Part Number	V-Min	Name	Wire Part Number	Wire CSA	Wire Spec	Wire Material description	Wire Color Description	Wire Length	End2 Terminal Part Number	End2 Pin Name	End2 Connector
B	-	-	67NA	3510330 R1	1.16	16.0	Thin Wall XLPE Primary Cable	TAN	2163.0	-	A7	D51-1979
B	-	-	67NA	3510330 R1	1.16	16.0	Thin Wall XLPE Primary Cable	TAN	2163.0	-	A7	D25-1979
C	-	-	13COG	3510324 R1	1.16	16.0	Thin Wall XLPE Primary Cable	PINK	1735.0	-	X	-
C	-	-	13COG	3510324 R1	1.16	16.0	Thin Wall XLPE Primary Cable	PINK	1735.0	-	A9	D51-1979
C	-	-	13COG	3510324 R1	1.16	16.0	Thin Wall XLPE Primary Cable	PINK	1735.0	-	PIN1	-
C	-	-	13COG	3510324 R1	1.16	16.0	Thin Wall XLPE Primary Cable	PINK	1735.0	-	A9	D25-1979
D	-	-	11COG	3510359 R1	0.79	18.0	Thin Wall XLPE Primary Cable	WHITE	2283.0	-	X	-
D	-	-	11COG	3510359 R1	0.79	18.0	Thin Wall XLPE Primary Cable	WHITE	2283.0	-	B9	D25-1979
E	-	-	WIRE234451	-	0.0	-	-	-	0.0	-	PIN1	-

Name	Terminal Part Number	V-Min	Name	Wire Part Number	Wire CSA	Wire Spec	Wire Material description	Wire Color Description	Wire Length	End2 Terminal Part Number	End2 Pin Name	End2 Connector
E	-	-	56A2	3510318 R1	1.16	16.0	Thin Wall XLPE Primary Cable	ORANGE	2483.0	-	A4	D51-1979
F	-	-	WIRE234 450	-	0.0	-	-	-	0.0	-	X	-
F	-	-	57A4	3510318 R1	1.16	16.0	Thin Wall XLPE Primary Cable	ORANGE	2483.0	-	B4	D51-1979
G	-	-	67COG	3510310 R1	0.53	20.0	Thin Wall XLPE Primary Cable	GREY	2433.0	-	7	D48-1979
G	-	-	67COG	3510310 R1	0.53	20.0	Thin Wall XLPE Primary Cable	GREY	2433.0	-	B8	D51-1979
G	-	-	67COG	3510310 R1	0.53	20.0	Thin Wall XLPE Primary Cable	GREY	2433.0	-	B8	D25-1979
H	-	-	14CSB	3510366 R1	1.16	16.0	Thin Wall XLPE Primary Cable	RED	1705.0	-	X	-
H	-	-	14CSB	3510366 R1	1.16	16.0	Thin Wall XLPE Primary Cable	RED	1705.0	-	A11	D51-1979
J	-	-	WIRE223 975	-	0.0	-	-	-	0.0	-	X	-
K	-	-	WIRE223 974	-	0.0	-	-	-	0.0	-	X	-

Connector Name	1978
Part Number	3540612C1
Instances	LoneStar - X15 - Adaptive Cruise Control (Bendix - Fusion W/O DIU & N/ Safety Direct & Tweeters):Diagram1 LoneStar - X15 - Adaptive Cruise Control (Bendix - Fusion W/O DIU & W/ Safety Direct & W/ Tweeters):Diagram1 LT/RH - X15/A26 - Adaptive Cruise Control (Bendix - Fusion W/O DIU & N/ Safety Direct & Tweeters):Diagram1 LT/RH - X15/A26 - Adaptive Cruise Control (Bendix - Fusion W/O DIU & W/ Safety Direct & W/ Tweeters):Diagram1 Powertrain J1939 (500Kbps) Edurant Transmission A26:Powertrain J1939 (500Kbps) Edurant Transmission A26 Powertrain J1939 (500Kbps) Allison 3K Transmission A26:Powertrain J1939 (500Kbps) Allison 3K A26 Powertrain J1939 (500Kbps) Eaton Ultrashift+ Transmission A26:Powertrain J1939 (500Kbps) Eaton Ultrashift+ Transmission A26 Powertrain J1939 (500Kbps) Eaton Ultrashift+ Transmission X15:Powertrain J1939 (500kbps) Eaton Ultrashift+ X15 Powertrain J1939 (500Kbps) Edurant Transmission X15:Powertrain J1939 (500kbps) Endurant Transmission X15 Powertrain J1939 (500Kbps) Manual Transmission A26:Powertrain Standard J1939 (500Kbps) A26 Engine Powertrain J1939 (500Kbps) Manual Transmission X15:Powertrain Standard J1939 (500kbps) Manual Transmission X15 Powertrain J1939 (500Kbps) TC10 Transmission A26:Powertrain J1939 (500Kbps) TC10 Transmission A26 Powertrain J1939 (500Kbps) TC10 Transmission X15:Powertrain J1939 (500kbps) TC10 Transmission X15
Mates	16B

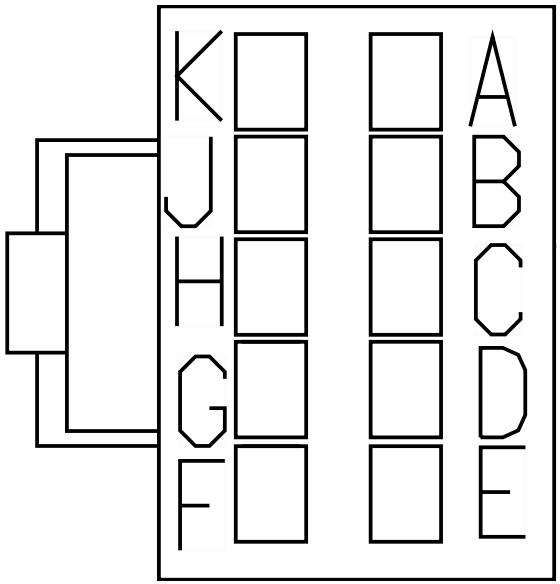

Name	Terminal Part Number	V-Min	Name	Wire Part Number	Wire CSA	Wire Spec	Wire Material description	Wire Color Description	Wire Length	End2 Terminal Part Number	End2 Pin Name	End2 Connector
C	-	-	13COG	3510324 R1	1.16	16.0	Thin Wall XLPE Primary Cable	PINK	1735.0	-	X	-

Name	Terminal Part Number	V-Min	Name	Wire Part Number	Wire CSA	Wire Spec	Wire Material description	Wire Color Description	Wire Length	End2 Terminal Part Number	End2 Pin Name	End2 Connector
D	-	-	11COG	3510359 R1	0.79	18.0	Thin Wall XLPE Primary Cable	WHITE	2283.0	-	X	-
G	-	-	67COG	3510310 R1	0.53	20.0	Thin Wall XLPE Primary Cable	GREY	2433.0	-	7	D1N-1979
H	-	-	14CSB	3510366 R1	1.16	16.0	Thin Wall XLPE Primary Cable	RED	1705.0	-	X	-
J	-	-	WIRE223924	-	0.0	-	-	-	0.0	-	X	-
K	-	-	WIRE223925	-	0.0	-	-	-	0.0	-	X	-

Connector Name 1979A

Part Number 4061584C1

Instances Fusion Private J1939:Fusion Private J1939
Powertrain J1939 (500Kbps) Edurant Transmission
A26:Powertrain J1939 (500Kbps) Edurant Transmission A26
Powertrain J1939 (500Kbps) Allison 3K Transmission
A26:Powertrain J1939 (500Kbps) Allison 3K A26
Powertrain J1939 (500Kbps) Eaton Ultrashift+ Transmission
A26:Powertrain J1939 (500Kbps) Eaton Ultrashift+ Transmission A26
Powertrain J1939 (500Kbps) Eaton Ultrashift+ Transmission
X15:Powertrain J1939 (500kbps) Eaton Ultrashift+ X15
Powertrain J1939 (500Kbps) Edurant Transmission
X15:Powertrain J1939 (500kbps) Endurant Transmission X15
Powertrain J1939 (500Kbps) Manual Transmission
A26:Powertrain Standard J1939 (500Kbps) A26 Engine
Powertrain J1939 (500Kbps) Manual Transmission
X15:Powertrain Standard J1939 (500kbps) Manual Transmission X15
Powertrain J1939 (500Kbps) TC10 Transmission A26:Powertrain J1939 (500Kbps) TC10 Transmission A26
Powertrain J1939 (500Kbps) TC10 Transmission X15:Powertrain J1939 (500kbps) TC10 Transmission X15

Mates DEV-BENDIX_FUSION_FLC_20-3 020-02-01A

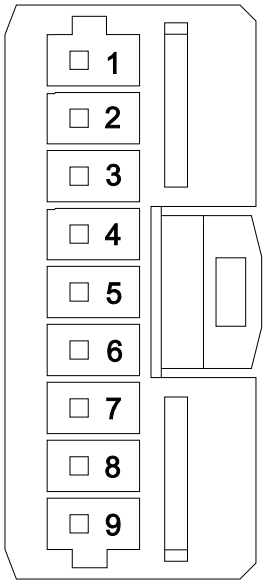

Name	Terminal Part Number	V-Min	Name	Wire Part Number	Wire CSA	Wire Spec	Wire Material description	Wire Color Description	Wire Length	End2 Terminal Part Number	End2 Pin Name	End2 Connector
3	-	-	WIRE223917	-	0.0	-	-	-	0.0	-	X	-
4	-	-	WIRE223918	-	0.0	-	-	-	0.0	-	X	-
6	-	-	WIRE234457	-	0.0	-	-	-	0.0	-	PIN1	-
7	-	-	WIRE234456	-	0.0	-	-	-	0.0	-	X	-

Connector Name 1979_BENDIX

Part Number 3831401C1

Instances Fusion Private J1939:Fusion Private J1939
Powertrain J1939 (500Kbps) Edurant Transmission
A26:Powertrain J1939 (500Kbps) Edurant Transmission A26
Powertrain J1939 (500Kbps) Allison 3K Transmission
A26:Powertrain J1939 (500Kbps) Allison 3K A26
Powertrain J1939 (500Kbps) Eaton Ultrashift+ Transmission
A26:Powertrain J1939 (500Kbps) Eaton Ultrashift+ Transmission A26
Powertrain J1939 (500Kbps) Eaton Ultrashift+ Transmission
X15:Powertrain J1939 (500kbps) Eaton Ultrashift+ X15
Powertrain J1939 (500Kbps) Edurant Transmission
X15:Powertrain J1939 (500kbps) Endurant Transmission X15
Powertrain J1939 (500Kbps) Manual Transmission
A26:Powertrain Standard J1939 (500Kbps) A26 Engine
Powertrain J1939 (500Kbps) Manual Transmission
X15:Powertrain Standard J1939 (500kbps) Manual Transmission X15
Powertrain J1939 (500Kbps) TC10 Transmission A26:Powertrain J1939 (500Kbps) TC10 Transmission A26
Powertrain J1939 (500Kbps) TC10 Transmission X15:Powertrain J1939 (500kbps) TC10 Transmission X15

Mates MODU-BENDIX_FUSION_SAFETY_ DIRECT-3020-02-01A

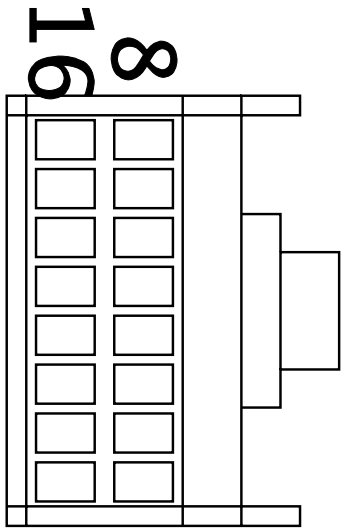

Name	Terminal Part Number	V-Min	Name	Wire Part Number	Wire CSA	Wire Spec	Wire Material description	Wire Color Description	Wire Length	End2 Terminal Part Number	End2 Pin Name	End2 Connector
5	-	-	WIRE223920	-	0.0	-	-	-	0.0	-	X	-
6	-	-	WIRE223922	-	0.0	-	-	-	0.0	-	X	-
12	-	-	WIRE234458	-	0.0	-	-	-	0.0	-	X	-
13	-	-	WIRE234459	-	0.0	-	-	-	0.0	-	PIN1	-

Connector Name 1979_WABCO

Part Number 3710061C1

Instances Powertrain J1939 (500Kbps) Edurant Transmission
A26:Powertrain J1939 (500Kbps) Edurant Transmission A26
Powertrain J1939 (500Kbps) Allison 3K Transmission
A26:Powertrain J1939 (500Kbps) Allison 3K A26
Powertrain J1939 (500Kbps) Eaton Ultrashift+ Transmission
A26:Powertrain J1939 (500Kbps) Eaton Ultrashift+ Transmission A26
Powertrain J1939 (500Kbps) Eaton Ultrashift+ Transmission
X15:Powertrain J1939 (500kbps) Eaton Ultrashift+ X15
Powertrain J1939 (500Kbps) Edurant Transmission
X15:Powertrain J1939 (500kbps) Endurant Transmission X15
Powertrain J1939 (500Kbps) Manual Transmission
A26:Powertrain Standard J1939 (500Kbps) A26 Engine
Powertrain J1939 (500Kbps) Manual Transmission
X15:Powertrain Standard J1939 (500kbps) Manual Transmission X15
Powertrain J1939 (500Kbps) TC10 Transmission A26:Powertrain J1939 (500Kbps) TC10 Transmission A26
Powertrain J1939 (500Kbps) TC10 Transmission X15:Powertrain J1939 (500kbps) TC10 Transmission X15

Mates MODU-ECU_Lane_Departure_Wa bco-3020-01-01A

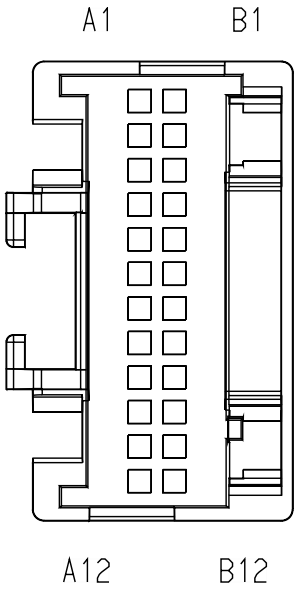

Name	Terminal Part Number	V-Min	Name	Wire Part Number	Wire CSA	Wire Spec	Wire Material description	Wire Color Description	Wire Length	End2 Terminal Part Number	End2 Pin Name	End2 Connector
A12	-	-	WIRE233701	-	0.0	-	-	-	0.0	-	X	-
B12	-	-	WIRE233702	-	0.0	-	-	-	0.0	-	X	-

Connector Name	1979_1
Part Number	3710061C1
Instances	Cab J1939 (250Kbps):Cab J1939 (250Kbps)
Mates	MODU-ECU_Lane_Departure_Wa bco-3020-01-01A

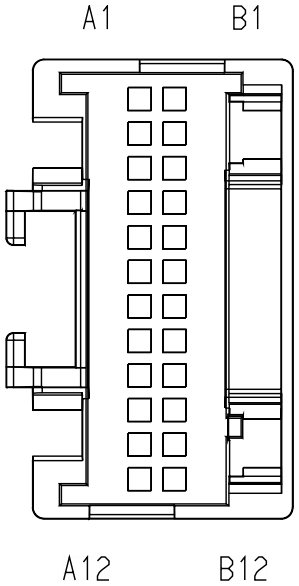

Name	Terminal Part Number	V-Min	Name	Wire Part Number	Wire CSA	Wire Spec	Wire Material description	Wire Color Description	Wire Length	End2 Terminal Part Number	End2 Pin Name	End2 Connect or
A12	-	-	WIRE223979	-	0.0	-	-	-	0.0	-	X	-
B12	-	-	WIRE223976	-	0.0	-	-	-	0.0	-	X	-

Connector Name	1979_2
Part Number	3710061C1
Instances	Cab J1939 (250Kbps):Cab J1939 (250Kbps)
Mates	MODU-ECU_Lane_Departure_Be ndix_AutoVue-3020-01-02A

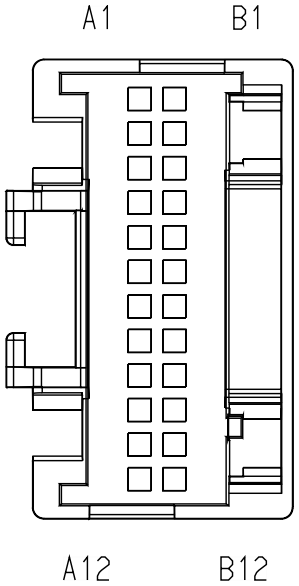

Name	Terminal Part Number	V-Min	Name	Wire Part Number	Wire CSA	Wire Spec	Wire Material description	Wire Color Description	Wire Length	End2 Terminal Part Number	End2 Pin Name	End2 Connect or
A12	-	-	WIRE223978	-	0.0	-	-	-	0.0	-	X	-
B12	-	-	WIRE223977	-	0.0	-	-	-	0.0	-	X	-

Connector Name 2000F

Part Number 3544687C1

Instances Powertrain J1939 (500Kbps) Edurant Transmission
A26:Powertrain J1939 (500Kbps) Edurant Transmission A26
Powertrain J1939 (500Kbps) Allison 3K Transmission
A26:Powertrain J1939 (500Kbps) Allison 3K A26
Powertrain J1939 (500Kbps) Eaton Ultrashift+ Transmission
A26:Powertrain J1939 (500Kbps) Eaton Ultrashift+ Transmission A26
Powertrain J1939 (500Kbps) Eaton Ultrashift+ Transmission
X15:Powertrain J1939 (500kbps) Eaton Ultrashift+ X15
Powertrain J1939 (500Kbps) Edurant Transmission
X15:Powertrain J1939 (500kbps) Endurant Transmission X15
Powertrain J1939 (500Kbps) Manual Transmission
A26:Powertrain Standard J1939 (500Kbps) A26 Engine
Powertrain J1939 (500Kbps) Manual Transmission
X15:Powertrain Standard J1939 (500kbps) Manual Transmission X15
Powertrain J1939 (500Kbps) TC10 Transmission A26:Powertrain J1939 (500Kbps) TC10 Transmission A26
Powertrain J1939 (500Kbps) TC10 Transmission X15:Powertrain J1939 (500kbps) TC10 Transmission X15

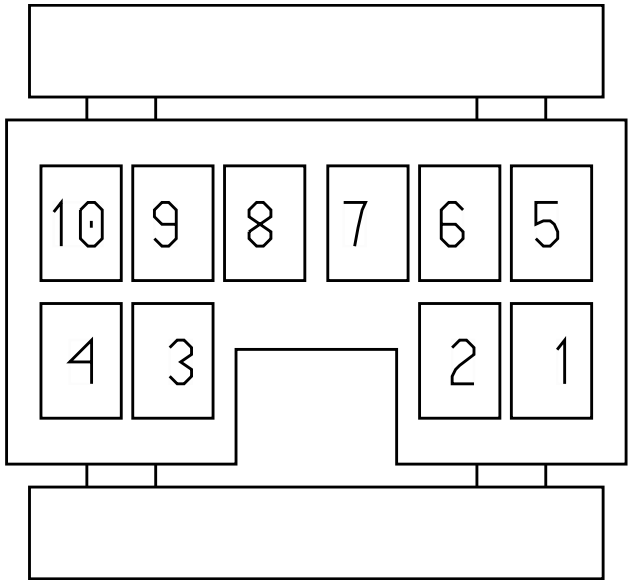

Mates 2000

Name	Terminal Part Number	V-Min	Name	Wire Part Number	Wire CSA	Wire Spec	Wire Material description	Wire Color Description	Wire Length	End2 Terminal Part Number	End2 Pin Name	End2 Connector
9	-	-	WIRE223916	-	0.0	-	-	-	0.0	-	X	-
10	-	-	WIRE223919	-	0.0	-	-	-	0.0	-	X	-

Connector Name	2000F
Part Number	3544687C1
Short Description	ROOF/IP CONNECTOR
Instances	LoneStar - X15 - Adaptive Cruise Control (Bendix - Fusion W/O DIU & N/ Safety Direct & Tweeters):Diagram1 LoneStar - X15 - Adaptive Cruise Control (Bendix - Fusion W/O DIU & W/ Safety Direct & W/ Tweeters):Diagram1 LT/RH - X15/A26 - Adaptive Cruise Control (Bendix - Fusion W/O DIU & N/ Safety Direct & Tweeters):Diagram1 LT/RH - X15/A26 - Adaptive Cruise Control (Bendix - Fusion W/O DIU & W/ Safety Direct & W/ Tweeters):Diagram1 LT/RH/LoneStar - X15/A26 - Antenna (Film Antenna Sleeper Cab OTAPM and Radio):Diagram1 LT/RH/LoneStar - X15/A26 - Antenna (Shark Fin Day Cab OTAPM and Radio):Diagram1 LT/RH/LoneStar - X15/A26 - Cab Dome Light (Day Cab):Diagram1 LT/RH/LoneStar - X15/A26 - Cab Dome Light - (Sleeper Cab):Diagram1 LT/RH/LoneStar - X15/A26 - CB Radio Power Only:Diagram1 LT/RH/LoneStar - X15/A26 - Cigar Lighter Aux APO Overhead APO:Diagram1 LT/RH/LoneStar - X15/A26 - Cigar Lighter Aux APO Overhead APO:Diagram2 LT/RH/LoneStar - X15/A26 - Cigar Lighter Aux APO Rear Std APO Rear APO w/Cover 12V Panel Overhead APO:Diagram1 LT/RH/LoneStar - X15/A26 - Cigar Lighter Aux APO Rear Std APO Rear APO w/Cover 12V Panel Overhead APO:Diagram2 LT/RH/LoneStar - X15/A26 - Cigar Lighter Aux APO Rear Std APO Rear APO w/Cover 12V Panel Overhead APO:Diagram3 LT/RH/LoneStar - X15/A26 - Cigar Lighter Aux APO Rear Std APO Rear APO w/Cover 12V Panel Overhead APO:Diagram4 LT/RH/LoneStar - X15/A26 - Cigar Lighter Aux APO Rear Std APO Rear APO w/Cover 12V Panel Upr Bnk APO Rear Overhead APO:Diagram1-Combination1 LT/RH/LoneStar - X15/A26 - Cigar Lighter Aux APO Rear Std APO Rear APO w/Cover 12V Panel Upr Bnk APO Rear Overhead APO:Diagram1-Combination2 LT/RH/LoneStar - X15/A26 - Cigar Lighter Aux APO Rear Std APO Rear APO w/Cover 12V Panel Upr Bnk APO Rear Overhead APO:Diagram1-Combination3

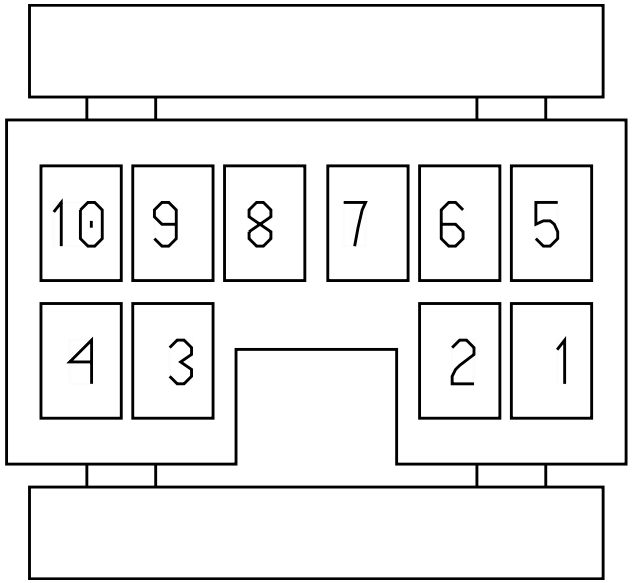

LT/RH/LoneStar - X15/A26 - Cigar Lighter Aux APO Rear Std APO Rear APO w/Cover 12V Panel Upr Bnk APO Rear Overhead APO:Diagram1-Combination4
LT/RH/LoneStar - X15/A26 - Cigar Lighter Overhead APO:Diagram1
LT/RH/LoneStar - X15/A26 - Cigar Lighter Rear Std APO Rear APO W/Cover 12V Panel Overhead APO:Diagram1
LT/RH/LoneStar - X15/A26 - Cigar Lighter Rear Std APO Rear APO W/Cover 12V Panel Overhead APO:Diagram2
LT/RH/LoneStar - X15/A26 - Cigar Lighter Rear Std APO Rear APO w/Cover 12V Panel Upr Bnk APO Rear Overhead APO:Diagram1
LT/RH/LoneStar - X15/A26 - Cigar Lighter Rear Std APO Rear APO w/Cover 12V Panel Upr Bnk APO Rear Overhead APO:Diagram2
LT/RH/LoneStar - X15/A26 - Clearance and Identification Lights (W/ Sunshade):Diagram1
LT/RH/LoneStar - X15/A26 - Interior Task Lights (Map Light-Separate map light from cab dome) - Sleeper Cab:Diagram1
LT/RH/LoneStar - X15/A26 - Interior Task Lights (Map) (Cab Dome / Map Combo) - DayCab:Diagram1
LT/RH/LoneStar - X15/A26 - Navistar Telematics Module - Wiring:Diagram1
LT/RH/LoneStar - X15/A26 - Standard APO Aux APO Overhead APO:Diagram1
LT/RH/LoneStar - X15/A26 - Standard APO Aux APO Overhead APO:Diagram2
LT/RH/LoneStar - X15/A26 - Standard APO Overhead APO:Diagram1
LT/RH/LoneStar - X15/A26 - Std APO Aux APO Rear Std APO Rear APO W/Cover 12V Panel Overhead APO:Diagram1
LT/RH/LoneStar - X15/A26 - Std APO Aux APO Rear Std APO Rear APO W/Cover 12V Panel Overhead APO:Diagram2
LT/RH/LoneStar - X15/A26 - Std APO Aux APO Rear Std APO Rear APO W/Cover 12V Panel Overhead APO:Diagram3
LT/RH/LoneStar - X15/A26 - Std APO Aux APO Rear Std APO Rear APO W/Cover 12V Panel Overhead APO:Diagram4
LT/RH/LoneStar - X15/A26 - Std APO Aux APO Rear Std APO Rear APO w/Cover 12V Panel Upr Bnk APO Rear Overhead APO:Diagram1
LT/RH/LoneStar - X15/A26 - Std APO Aux APO Rear Std APO Rear APO w/Cover 12V Panel Upr Bnk APO Rear Overhead APO:Diagram2

LT/RH/LoneStar - X15/A26 - Std APO Aux APO Rear Std APO Rear APO w/Cover 12V Panel Upr Bnk APO Rear Overhead APO:Diagram3
LT/RH/LoneStar - X15/A26 - Std APO Aux APO Rear Std APO Rear APO w/Cover 12V Panel Upr Bnk APO Rear Overhead APO:Diagram4
LT/RH/LoneStar - X15/A26 - Std APO Rear Std APO Rear APO W/Cover 12V Panel Rear Overhead APO:Diagram1
LT/RH/LoneStar - X15/A26 - Std APO Rear Std APO Rear APO W/Cover 12V Panel Rear Overhead APO:Diagram2
LT/RH/LoneStar - X15/A26 - Std APO Rear Std APO Rear APO w/Cover 12V Panel Upr Bnk APO Rear Overhead APO:Diagram1
LT/RH/LoneStar - X15/A26 - Std APO Rear Std APO Rear APO w/Cover 12V Panel Upr Bnk APO Rear Overhead APO:Diagram2

Mates 2000

Name	Terminal Part Number	V-Min	Name	Wire Part Number	Wire CSA	Wire Spec	Wire Material description	Wire Color Description	Wire Length	End2 Terminal Part Number	End2 Pin Name	End2 Connect or
1	-	-	D58T	2643672 R1	0.79	18.0	Std. Wall XLPE Primary Cable	BROWN	1380.0	-	X	-
2	-	-	D86F	2643678 R1	1.16	16.0	Std. Wall XLPE Primary Cable	LIGHT GREEN	0.0	-	A	2303M
3	-	-	D63-GA	2643681 R1	1.16	16.0	Std. Wall XLPE Primary Cable	WHITE	1330.0	-	X	-
4	-	-	D63D	2643720 R1	0.79	18.0	Std. Wall XLPE Primary Cable	DARK BLUE	2120.0	-	C	2500F

Name	Terminal Part Number	V-Min	Name	Wire Part Number	Wire CSA	Wire Spec	Wire Material description	Wire Color Description	Wire Length	End2 Terminal Part Number	End2 Pin Name	End2 Connect or
4	-	-	D63D	2643720 R1	0.79	18.0	Std. Wall XLPE Primary Cable	DARK BLUE	2120.0	-	A	2101M
5	-	-	D63E	2643720 R1	0.79	18.0	Std. Wall XLPE Primary Cable	DARK BLUE	0.0	-	D	2500F
5	-	-	D63E	2643720 R1	0.79	18.0	Std. Wall XLPE Primary Cable	DARK BLUE	0.0	-	X	-
6	-	-	YELLOWLR	3510334 R1	0.53	20.0	Thin Wall XLPE Primary Cable	YELLOW 2	2568.0	-	2	D1N-1979
7	-	-	GREENL	3510298 R1	0.53	20.0	Thin Wall XLPE Primary Cable	LIGHT GREEN	3145.0	-	10	D1N-1979
8	-	-	GREENR	3510298 R1	0.53	20.0	Thin Wall XLPE Primary Cable	LIGHT GREEN	2864.0	-	11	D1N-1979

Connector Name 2000

Part Number 3544688C1

Instances Powertrain J1939 (500Kbps) Edurant Transmission
A26:Powertrain J1939 (500Kbps) Edurant Transmission A26
Powertrain J1939 (500Kbps) Allison 3K Transmission
A26:Powertrain J1939 (500Kbps) Allison 3K A26
Powertrain J1939 (500Kbps) Eaton Ultrashift+ Transmission
A26:Powertrain J1939 (500Kbps) Eaton Ultrashift+ Transmission A26
Powertrain J1939 (500Kbps) Eaton Ultrashift+ Transmission
X15:Powertrain J1939 (500kbps) Eaton Ultrashift+ X15
Powertrain J1939 (500Kbps) Edurant Transmission
X15:Powertrain J1939 (500kbps) Endurant Transmission X15
Powertrain J1939 (500Kbps) Manual Transmission
A26:Powertrain Standard J1939 (500Kbps) A26 Engine
Powertrain J1939 (500Kbps) Manual Transmission
X15:Powertrain Standard J1939 (500kbps) Manual Transmission X15
Powertrain J1939 (500Kbps) TC10 Transmission A26:Powertrain J1939 (500Kbps) TC10 Transmission A26
Powertrain J1939 (500Kbps) TC10 Transmission X15:Powertrain J1939 (500kbps) TC10 Transmission X15

Mates 2000F

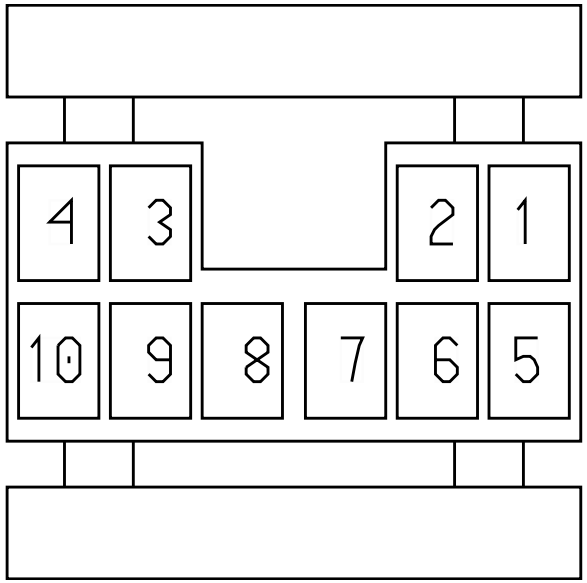

Name	Terminal Part Number	V-Min	Name	Wire Part Number	Wire CSA	Wire Spec	Wire Material description	Wire Color Description	Wire Length	End2 Terminal Part Number	End2 Pin Name	End2 Connector
9	-	-	WIRE223766	-	0.0	-	-	-	0.0	-	PIN1	-
10	-	-	WIRE223765	-	0.0	-	-	-	0.0	-	PIN1	-

Connector Name	2000
Part Number	3544688C1
Short Description	IP/ROOF CONNECTION
Instances	LoneStar - X15 - Adaptive Cruise Control (Bendix - Fusion W/O DIU & N/ Safety Direct & Tweeters):Diagram1 LoneStar - X15 - Adaptive Cruise Control (Bendix - Fusion W/O DIU & W/ Safety Direct & W/ Tweeters):Diagram1 LT/RH - X15/A26 - Adaptive Cruise Control (Bendix - Fusion W/O DIU & N/ Safety Direct & Tweeters):Diagram1 LT/RH - X15/A26 - Adaptive Cruise Control (Bendix - Fusion W/O DIU & W/ Safety Direct & W/ Tweeters):Diagram1 LT/RH/LoneStar - X15/A26 - Antenna (Film Antenna Sleeper Cab OTAPM and Radio):Diagram1 LT/RH/LoneStar - X15/A26 - Antenna (Shark Fin Day Cab OTAPM and Radio):Diagram1 LT/RH/LoneStar - X15/A26 - Cab Dome Light (Day Cab):Diagram1 LT/RH/LoneStar - X15/A26 - Cab Dome Light - (Sleeper Cab):Diagram1 LT/RH/LoneStar - X15/A26 - CB Radio Power Only:Diagram1 LT/RH/LoneStar - X15/A26 - Cigar Lighter Aux APO Overhead APO:Diagram1 LT/RH/LoneStar - X15/A26 - Cigar Lighter Aux APO Overhead APO:Diagram2 LT/RH/LoneStar - X15/A26 - Cigar Lighter Aux APO Rear Std APO Rear APO w/Cover 12V Panel Overhead APO:Diagram1 LT/RH/LoneStar - X15/A26 - Cigar Lighter Aux APO Rear Std APO Rear APO w/Cover 12V Panel Overhead APO:Diagram2 LT/RH/LoneStar - X15/A26 - Cigar Lighter Aux APO Rear Std APO Rear APO w/Cover 12V Panel Overhead APO:Diagram3 LT/RH/LoneStar - X15/A26 - Cigar Lighter Aux APO Rear Std APO Rear APO w/Cover 12V Panel Overhead APO:Diagram4 LT/RH/LoneStar - X15/A26 - Cigar Lighter Aux APO Rear Std APO Rear APO w/Cover 12V Panel Upr Bnk APO Rear Overhead APO:Diagram1-Combination1 LT/RH/LoneStar - X15/A26 - Cigar Lighter Aux APO Rear Std APO Rear APO w/Cover 12V Panel Upr Bnk APO Rear Overhead APO:Diagram1-Combination2 LT/RH/LoneStar - X15/A26 - Cigar Lighter Aux APO Rear Std APO Rear APO w/Cover 12V Panel Upr Bnk APO Rear Overhead APO:Diagram1-Combination3

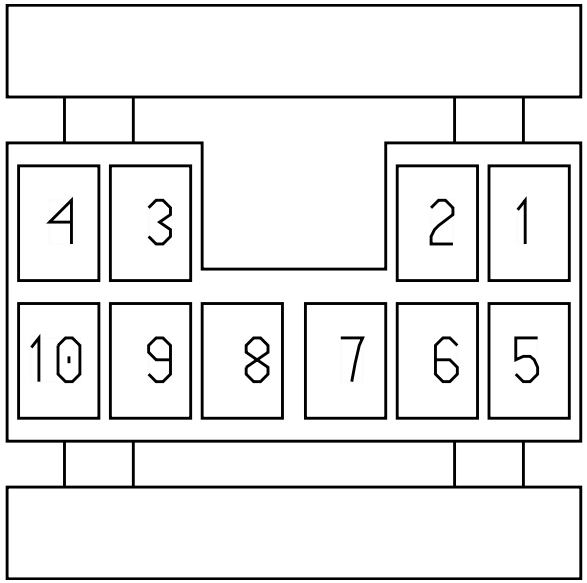

LT/RH/LoneStar - X15/A26 - Cigar Lighter Aux APO Rear Std APO Rear APO w/Cover 12V Panel Upr Bnk APO Rear Overhead APO:Diagram1-Combination4
LT/RH/LoneStar - X15/A26 - Cigar Lighter Overhead APO:Diagram1
LT/RH/LoneStar - X15/A26 - Cigar Lighter Rear Std APO Rear APO W/Cover 12V Panel Overhead APO:Diagram1
LT/RH/LoneStar - X15/A26 - Cigar Lighter Rear Std APO Rear APO W/Cover 12V Panel Overhead APO:Diagram2
LT/RH/LoneStar - X15/A26 - Cigar Lighter Rear Std APO Rear APO w/Cover 12V Panel Upr Bnk APO Rear Overhead APO:Diagram1
LT/RH/LoneStar - X15/A26 - Cigar Lighter Rear Std APO Rear APO w/Cover 12V Panel Upr Bnk APO Rear Overhead APO:Diagram2
LT/RH/LoneStar - X15/A26 - Clearance and Identification Lights (W/ Sunshade):Diagram1
LT/RH/LoneStar - X15/A26 - Interior Task Lights (Map Light-Separate map light from cab dome) - Sleeper Cab:Diagram1
LT/RH/LoneStar - X15/A26 - Interior Task Lights (Map) (Cab Dome / Map Combo) - DayCab:Diagram1
LT/RH/LoneStar - X15/A26 - Navistar Telematics Module - Wiring:Diagram1
LT/RH/LoneStar - X15/A26 - Standard APO Aux APO Overhead APO:Diagram1
LT/RH/LoneStar - X15/A26 - Standard APO Aux APO Overhead APO:Diagram2
LT/RH/LoneStar - X15/A26 - Standard APO Overhead APO:Diagram1
LT/RH/LoneStar - X15/A26 - Std APO Aux APO Rear Std APO Rear APO W/Cover 12V Panel Overhead APO:Diagram1
LT/RH/LoneStar - X15/A26 - Std APO Aux APO Rear Std APO Rear APO W/Cover 12V Panel Overhead APO:Diagram2
LT/RH/LoneStar - X15/A26 - Std APO Aux APO Rear Std APO Rear APO W/Cover 12V Panel Overhead APO:Diagram3
LT/RH/LoneStar - X15/A26 - Std APO Aux APO Rear Std APO Rear APO W/Cover 12V Panel Overhead APO:Diagram4
LT/RH/LoneStar - X15/A26 - Std APO Aux APO Rear Std APO Rear APO w/Cover 12V Panel Upr Bnk APO Rear Overhead APO:Diagram1
LT/RH/LoneStar - X15/A26 - Std APO Aux APO Rear Std APO Rear APO w/Cover 12V Panel Upr Bnk APO Rear Overhead APO:Diagram2

LT/RH/LoneStar - X15/A26 - Std APO Aux APO Rear Std APO Rear APO w/Cover 12V Panel Upr Bnk APO Rear Overhead APO:Diagram3
LT/RH/LoneStar - X15/A26 - Std APO Aux APO Rear Std APO Rear APO w/Cover 12V Panel Upr Bnk APO Rear Overhead APO:Diagram4
LT/RH/LoneStar - X15/A26 - Std APO Rear Std APO Rear APO W/Cover 12V Panel Rear Overhead APO:Diagram1
LT/RH/LoneStar - X15/A26 - Std APO Rear Std APO Rear APO W/Cover 12V Panel Rear Overhead APO:Diagram2
LT/RH/LoneStar - X15/A26 - Std APO Rear Std APO Rear APO w/Cover 12V Panel Upr Bnk APO Rear Overhead APO:Diagram1
LT/RH/LoneStar - X15/A26 - Std APO Rear Std APO Rear APO w/Cover 12V Panel Upr Bnk APO Rear Overhead APO:Diagram2

Mates 2000F

Name	Terminal Part Number	V-Min	Name	Wire Part Number	Wire CSA	Wire Spec	Wire Material description	Wire Color Description	Wire Length	End2 Terminal Part Number	End2 Pin Name	End2 Connect or
1	-	-	AA58TB	3510305 R1	0.79	18.0	Thin Wall XLPE Primary Cable	BROWN	1275.0	-	-	-
2	-	-	MR86F	3510299 R1	0.79	18.0	Thin Wall XLPE Primary Cable	LIGHT GREEN	1965.0	-	-	-
3	-	-	AA63-GA	3510360 R1	1.16	16.0	Thin Wall XLPE Primary Cable	WHITE	755.0	-	-	-
4	-	-	AA63D	3510353 R1	0.79	18.0	Thin Wall XLPE Primary Cable	DARK BLUE	540.0	-	X	-

Name	Terminal Part Number	V-Min	Name	Wire Part Number	Wire CSA	Wire Spec	Wire Material description	Wire Color Description	Wire Length	End2 Terminal Part Number	End2 Pin Name	End2 Connect or
5	-	-	AA63BD	3510311 R1	0.79	18.0	Thin Wall XLPE Primary Cable	GREY	1965.0	-	-	-
6	-	-	LR86YL	3510299 R1	0.79	18.0	Thin Wall XLPE Primary Cable	LIGHT GREEN	505.0	-	X	-
7	-	-	LR86AR	3510299 R1	0.79	18.0	Thin Wall XLPE Primary Cable	LIGHT GREEN	865.0	-	A	A02-1051
7	-	-	LR86AR	3510299 R1	0.79	18.0	Thin Wall XLPE Primary Cable	LIGHT GREEN	865.0	-	A	1051
8	-	-	LR86AT	3510299 R1	0.79	18.0	Thin Wall XLPE Primary Cable	LIGHT GREEN	2005.0	-	A	A02-1050

Connector Name	2002M
Part Number	1661259C1
Instances	LT/RH/LoneStar - X15/A26 - Clearance and Identification Lights (W/ Sunshade):Diagram1
Mates	LT-LEFT_CLEAR-1006-01-02A

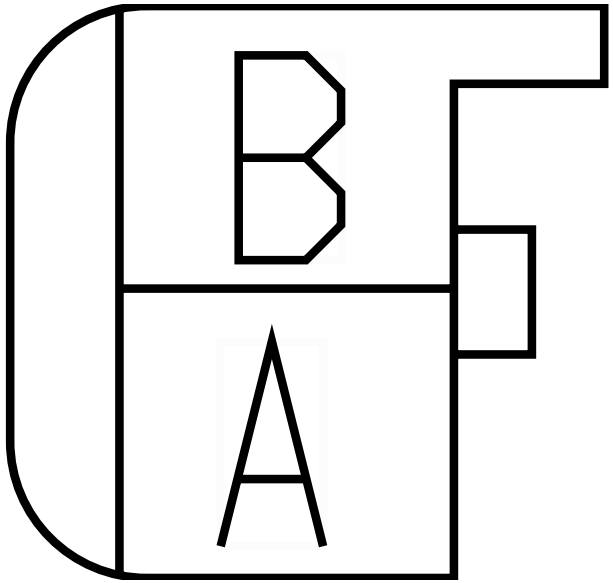

Name	Terminal Part Number	V-Min	Name	Wire Part Number	Wire CSA	Wire Spec	Wire Material description	Wire Color Description	Wire Length	End2 Terminal Part Number	End2 Pin Name	End2 Connect or
A	-	-	D58Z	2643672 R1	0.79	18.0	Std. Wall XLPE Primary Cable	BROWN	380.0	-	X	-
B	-	-	D58-GD	2643674 R1	0.79	18.0	Std. Wall XLPE Primary Cable	WHITE	330.0	-	X	-

Connector Name	2003M
Part Number	1661259C1
Instances	LT/RH/LoneStar - X15/A26 - Clearance and Identification Lights (W/ Sunshade):Diagram1
Mates	LT-LEFT_ID-1006-01-02A

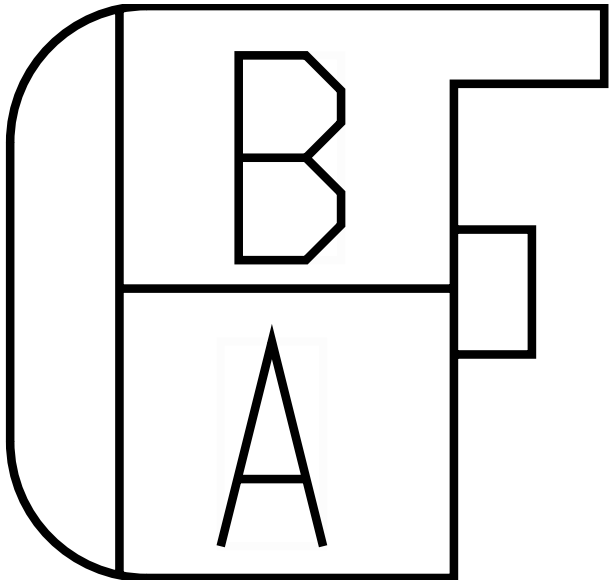

Name	Terminal Part Number	V-Min	Name	Wire Part Number	Wire CSA	Wire Spec	Wire Material description	Wire Color Description	Wire Length	End2 Terminal Part Number	End2 Pin Name	End2 Connect or
A	-	-	D58M	2643672 R1	0.79	18.0	Std. Wall XLPE Primary Cable	BROWN	595.0	-	X	-
B	-	-	D58-GE	2643674 R1	0.79	18.0	Std. Wall XLPE Primary Cable	WHITE	645.0	-	X	-

Connector Name	2004M
Part Number	1661259C1
Instances	LT/RH/LoneStar - X15/A26 - Clearance and Identification Lights (W/ Sunshade):Diagram1
Mates	LT-MID_IDENT-1006-01-02A

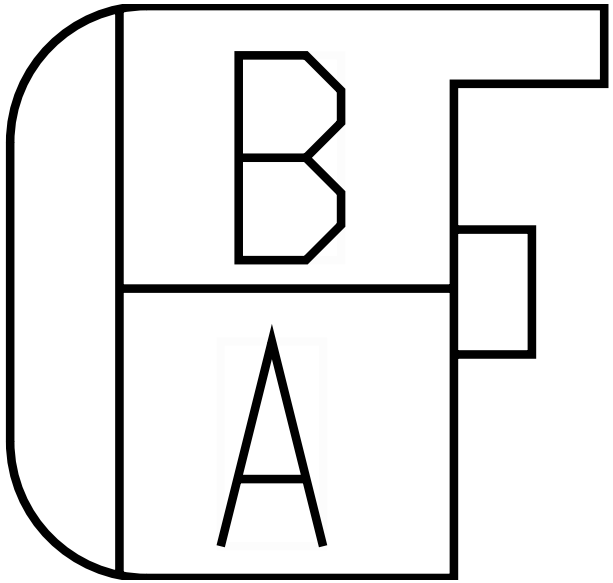

Name	Terminal Part Number	V-Min	Name	Wire Part Number	Wire CSA	Wire Spec	Wire Material description	Wire Color Description	Wire Length	End2 Terminal Part Number	End2 Pin Name	End2 Connect or
A	-	-	D58N	2643672 R1	0.79	18.0	Std. Wall XLPE Primary Cable	BROWN	840.0	-	X	-
B	-	-	D58-GF	2643674 R1	0.79	18.0	Std. Wall XLPE Primary Cable	WHITE	890.0	-	X	-

Connector Name	2005M
Part Number	1661259C1
Instances	LT/RH/LoneStar - X15/A26 - Clearance and Identification Lights (W/ Sunshade):Diagram1
Mates	LT-RIGHT_IDENT-1006-01-02A

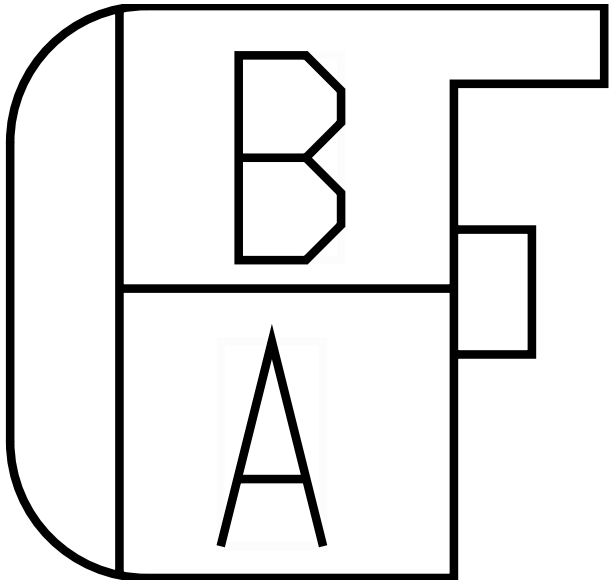

Name	Terminal Part Number	V-Min	Name	Wire Part Number	Wire CSA	Wire Spec	Wire Material description	Wire Color Description	Wire Length	End2 Terminal Part Number	End2 Pin Name	End2 Connect or
A	-	-	D58P	2643672 R1	0.79	18.0	Std. Wall XLPE Primary Cable	BROWN	1075.0	-	X	-
B	-	-	D58-GH	2643674 R1	0.79	18.0	Std. Wall XLPE Primary Cable	WHITE	1125.0	-	X	-

Connector Name	2006M
Part Number	1661259C1
Instances	LT/RH/LoneStar - X15/A26 - Clearance and Identification Lights (W/ Sunshade):Diagram1
Mates	LT-RIGHT_CLEAR-1006-01-02A

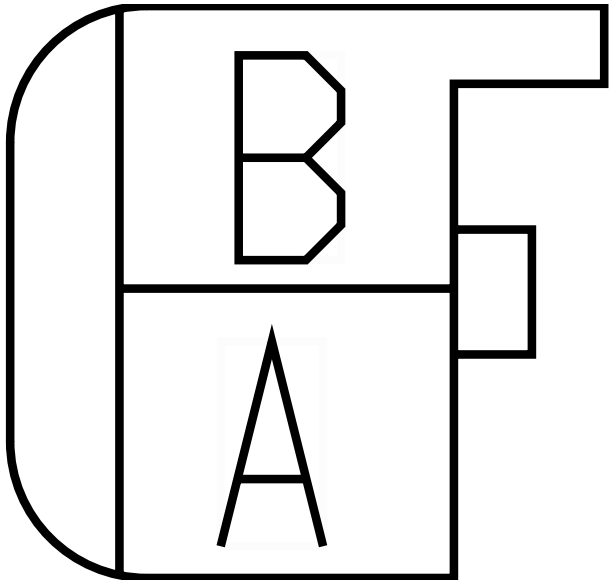

Name	Terminal Part Number	V-Min	Name	Wire Part Number	Wire CSA	Wire Spec	Wire Material description	Wire Color Description	Wire Length	End2 Terminal Part Number	End2 Pin Name	End2 Connect or
A	-	-	D58R	2643672 R1	0.79	18.0	Std. Wall XLPE Primary Cable	BROWN	1595.0	-	X	-
B	-	-	D58-GJ	2643672 R1	0.79	18.0	Std. Wall XLPE Primary Cable	BROWN	1645.0	-	X	-

Connector Name	2100M
Part Number	1661198C1
Instances	LT/RH/LoneStar - X15/A26 - Cab Dome Light - (Sleeper Cab):Diagram1
Mates	LT-Cab_Dome_Sleeper-2003-0 2-04A

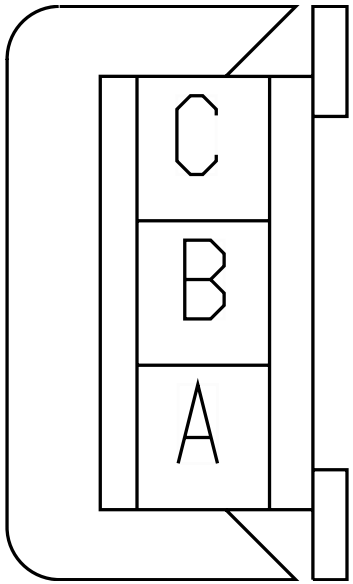

Name	Terminal Part Number	V-Min	Name	Wire Part Number	Wire CSA	Wire Spec	Wire Material description	Wire Color Description	Wire Length	End2 Terminal Part Number	End2 Pin Name	End2 Connect or
A	-	-	63-GM	-	0.79	18.0	Std. Wall XLPE Primary Cable	WHITE	1700.0	-	B	2101F
B	-	-	63L	-	0.79	18.0	Std. Wall XLPE Primary Cable	ORANGE	1700.0	-	A	2101F
C	-	-	63D	-	0.79	18.0	Std. Wall XLPE Primary Cable	BLUE	1700.0	-	A	2101F

Connector Name 2101F

Part Number 1669973C1

Instances LT/RH/LoneStar - X15/A26 - Cab Dome Light - (Sleeper Cab):Diagram1

Mates 2101M

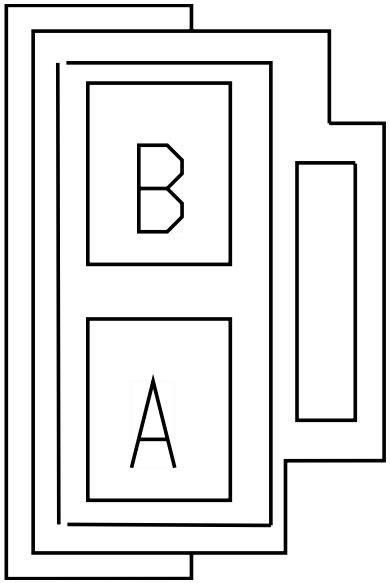

Name	Terminal Part Number	V-Min	Name	Wire Part Number	Wire CSA	Wire Spec	Wire Material description	Wire Color Description	Wire Length	End2 Terminal Part Number	End2 Pin Name	End2 Connect or
A	-	-	63D	-	0.79	18.0	Std. Wall XLPE Primary Cable	BLUE	1700.0	-	C	2100M
A	-	-	63L	-	0.79	18.0	Std. Wall XLPE Primary Cable	ORANGE	1700.0	-	B	2100M
B	-	-	63-GM	-	0.79	18.0	Std. Wall XLPE Primary Cable	WHITE	1700.0	-	A	2100M

Connector Name	2101M
Part Number	1669972C1
Short Description	ROOF TO HEADLINER HARNESS CONNECTION
Instances	LT/RH/LoneStar - X15/A26 - Cab Dome Light - (Sleeper Cab):Diagram1
Mates	2101F

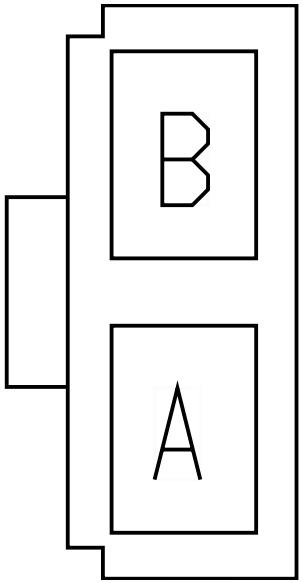

Name	Terminal Part Number	V-Min	Name	Wire Part Number	Wire CSA	Wire Spec	Wire Material description	Wire Color Description	Wire Length	End2 Terminal Part Number	End2 Pin Name	End2 Connect or
A	-	-	D63D	2643720 R1	0.79	18.0	Std. Wall XLPE Primary Cable	DARK BLUE	2120.0	-	4	2000F
B	-	-	D63-GM	2643674 R1	0.79	18.0	Std. Wall XLPE Primary Cable	WHITE	790.0	-	X	-

Connector Name	2102M
Part Number	1669972C1
Short Description	MAP LIGHT
Instances	LT/RH/LoneStar - X15/A26 - Interior Task Lights (Map Light-Separate map light from cab dome) - Sleeper Cab:Diagram1
Mates	2103M

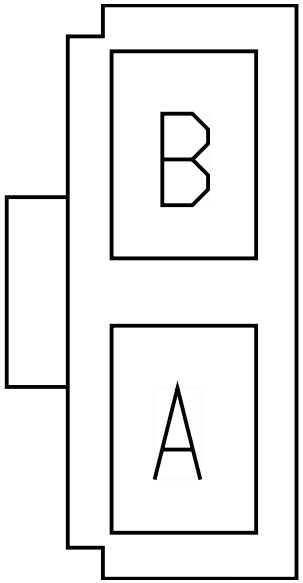

Name	Terminal Part Number	V-Min	Name	Wire Part Number	Wire CSA	Wire Spec	Wire Material description	Wire Color Description	Wire Length	End2 Terminal Part Number	End2 Pin Name	End2 Connect or
A	-	-	D63M	2643720 R1	0.79	18.0	Std. Wall XLPE Primary Cable	DARK BLUE	400.0	-	A	D81-210 2F
B	-	-	D63-GE	2643674 R1	0.79	18.0	Std. Wall XLPE Primary Cable	WHITE	400.0	-	B	D81-210 2F

Connector Name	2103M
Part Number	1669972C1
Short Description	MAP/READING LIGHT
Instances	LT/RH/LoneStar - X15/A26 - Interior Task Lights (Map Light-Separate map light from cab dome) - Sleeper Cab:Diagram1
Mates	2102M

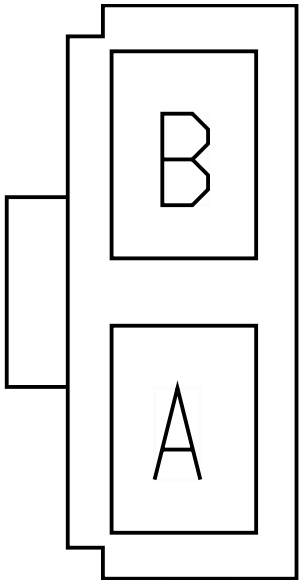

Name	Terminal Part Number	V-Min	Name	Wire Part Number	Wire CSA	Wire Spec	Wire Material description	Wire Color Description	Wire Length	End2 Terminal Part Number	End2 Pin Name	End2 Connect or
A	-	-	D63M	2643720 R1	0.79	18.0	Std. Wall XLPE Primary Cable	DARK BLUE	400.0	-	-	-
A	-	-	D63C	2643720 R1	0.79	18.0	Std. Wall XLPE Primary Cable	DARK BLUE	2077.0	-	X	-
B	-	-	D63-GE	2643674 R1	0.79	18.0	Std. Wall XLPE Primary Cable	WHITE	400.0	-	-	-
B	-	-	D63-GF	2643674 R1	0.79	18.0	Std. Wall XLPE Primary Cable	WHITE	762.0	-	X	-

Connector Name	220XF
Part Number	1661260C1
Instances	LT/RH - A26 - Work Lights (2 Blunt Cuts Only W/O Relay) W/ Backup W/Manual Trans Day Cab:Diagram2 LT/RH - A26 - Work Lights (2 Blunt Cuts Only W/O Relay) W/ Backup W/Manual Trans Day Cab:Diagram4 LT/RH - A26 - Work Lights W/ Sw Pack - Customer Supplied W/ RKE W/MAN REV:Diagram2 LT/RH - A26 - Work Lights W/ Sw Pack - Customer Supplied W/ RKE W/MAN REV:Diagram4 LT/RH - A26 - Work Lights W/ Sw Pack - Customer Supplied W/ O RKE W/MAN REV:Diagram2 LT/RH - A26 - Work Lights W/ Sw Pack - Customer Supplied W/ O RKE W/MAN REV:Diagram4 LT/RH - X15/A26 - Work Lights W/ Sw Pack - Customer Supplied:Diagram2 LT/RH/LoneStar - X15 - Work Lights (2 Blunt Cuts Only W/O Relay) W/Backup W/Manual Trans:Diagram2 LT/RH/LoneStar - X15 - Work Lights W/ Sw Pack - Customer Supplied W/ RKE W/MAN REV:Diagram2 LT/RH/LoneStar - X15 - Work Lights W/ Sw Pack - Customer Supplied W/O RKE W/MAN REV:Diagram2 LT/RH/LoneStar - X15/A26 - Work Lights (2 Blunt Cuts Only W/ O Relay):Diagram2 LT/RH/LoneStar - X15/A26 - Work Lights (2 Blunt Cuts Only W/O Relay) W/Backup W/Auto Trans (Allison and Endurant):Diagram2 LT/RH/LoneStar - X15/A26 - Work Lights W/ Sw Pack - Customer Supplied:Diagram2 LT/RH/LoneStar - X15/A26 - Work Lights W/ Sw Pack - Customer Supplied W/ RKE W/AUTO REV:Diagram2 LT/RH/LoneStar - X15/A26 - Work Lights W/ Sw Pack - Customer Supplied W/O RKE W/AUTO REV:Diagram2
Mates	2200

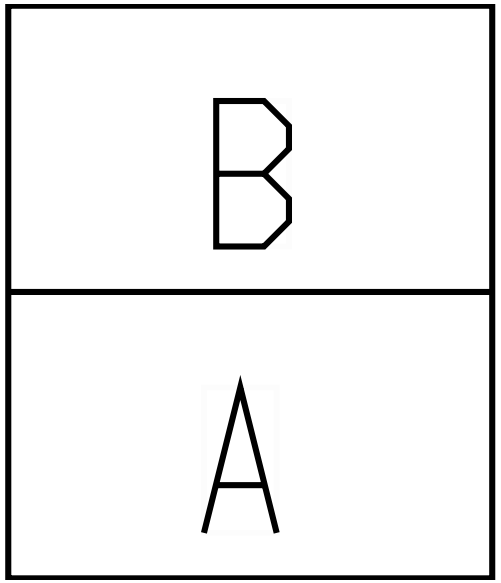

Name	Terminal Part Number	V-Min	Name	Wire Part Number	Wire CSA	Wire Spec	Wire Material description	Wire Color Description	Wire Length	End2 Terminal Part Number	End2 Pin Name	End2 Connector
A	-	-	65F	3510317 R1	0.79	18.0	Thin Wall XLPE Primary Cable	ORANGE	1500.0	-	-	-
A	-	-	65F	3510317 R1	0.79	18.0	Thin Wall XLPE Primary Cable	ORANGE	1500.0	-	A	220XM
A	-	-	65F	3510317 R1	0.79	18.0	Thin Wall XLPE Primary Cable	ORANGE	1500.0	-	A	220XF
A	-	-	65F	3510317 R1	0.79	18.0	Thin Wall XLPE Primary Cable	ORANGE	1500.0	-	A	5118
B	-	-	65-GF	3510359 R1	0.79	18.0	Thin Wall XLPE Primary Cable	WHITE	1500.0	-	-	-
B	-	-	65-GF	3510359 R1	0.79	18.0	Thin Wall XLPE Primary Cable	WHITE	1500.0	-	B	220XM
B	-	-	65-GF	3510359 R1	0.79	18.0	Thin Wall XLPE Primary Cable	WHITE	1500.0	-	B	5118

Connector Name 220XF

Part Number 1661260C1

Instances LT/RH - A26 - Work Lights W/ Sw Pack - Customer Supplied W/ RKE W/MAN REV:Diagram2
LT/RH - A26 - Work Lights W/ Sw Pack - Customer Supplied W/ RKE W/MAN REV:Diagram4
LT/RH - A26 - Work Lights W/ Sw Pack - Customer Supplied W/ O RKE W/MAN REV:Diagram2
LT/RH - A26 - Work Lights W/ Sw Pack - Customer Supplied W/ O RKE W/MAN REV:Diagram4
LT/RH - X15/A26 - Work Lights W/ Sw Pack - Customer Supplied:Diagram2
LT/RH/LoneStar - X15 - Work Lights W/ Sw Pack - Customer Supplied W/ RKE W/MAN REV:Diagram2
LT/RH/LoneStar - X15 - Work Lights W/ Sw Pack - Customer Supplied W/O RKE W/MAN REV:Diagram2
LT/RH/LoneStar - X15/A26 - Work Lights W/ Sw Pack - Customer Supplied:Diagram2
LT/RH/LoneStar - X15/A26 - Work Lights W/ Sw Pack - Customer Supplied W/ RKE W/AUTO REV:Diagram2
LT/RH/LoneStar - X15/A26 - Work Lights W/ Sw Pack - Customer Supplied W/O RKE W/AUTO REV:Diagram2

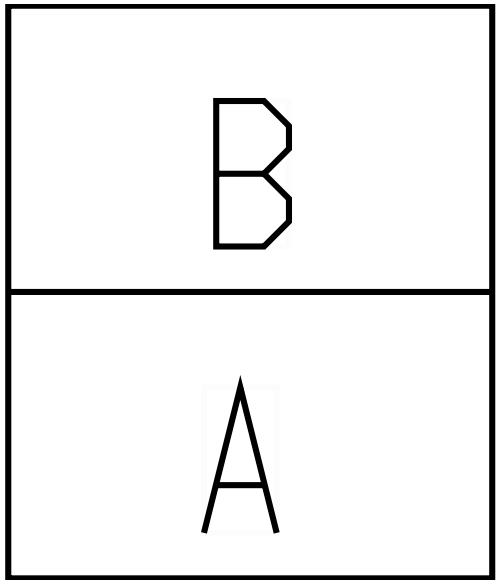

Mates 2201

Name	Terminal Part Number	V-Min	Name	Wire Part Number	Wire CSA	Wire Spec	Wire Material description	Wire Color Description	Wire Length	End2 Terminal Part Number	End2 Pin Name	End2 Connector
A	-	-	65F	3510317 R1	0.79	18.0	Thin Wall XLPE Primary Cable	ORANGE	1500.0	-	A	220XM
A	-	-	65F	3510317 R1	0.79	18.0	Thin Wall XLPE Primary Cable	ORANGE	1500.0	-	-	-
A	-	-	65F	3510317 R1	0.79	18.0	Thin Wall XLPE Primary Cable	ORANGE	1500.0	-	A	220XF

Name	Terminal Part Number	V-Min	Name	Wire Part Number	Wire CSA	Wire Spec	Wire Material description	Wire Color Description	Wire Length	End2 Terminal Part Number	End2 Pin Name	End2 Connect or
B	-	-	65-GF	3510359 R1	0.79	18.0	Thin Wall XLPE Primary Cable	WHITE	1500.0	-	B	220XM
B	-	-	65-GF	3510359 R1	0.79	18.0	Thin Wall XLPE Primary Cable	WHITE	1500.0	-	-	-

Connector Name	220XM
Part Number	1661259C1
Instances	LT/RH - A26 - Work Lights W/ Sw Pack - Customer Supplied W/ RKE W/MAN REV:Diagram2 LT/RH - A26 - Work Lights W/ Sw Pack - Customer Supplied W/ RKE W/MAN REV:Diagram4 LT/RH - A26 - Work Lights W/ Sw Pack - Customer Supplied W/ O RKE W/MAN REV:Diagram2 LT/RH - A26 - Work Lights W/ Sw Pack - Customer Supplied W/ O RKE W/MAN REV:Diagram4 LT/RH - X15/A26 - Work Lights W/ Sw Pack - Customer Supplied:Diagram2 LT/RH/LoneStar - X15 - Work Lights W/ Sw Pack - Customer Supplied W/ RKE W/MAN REV:Diagram2 LT/RH/LoneStar - X15 - Work Lights W/ Sw Pack - Customer Supplied W/O RKE W/MAN REV:Diagram2 LT/RH/LoneStar - X15/A26 - Work Lights - LED W/ Sw Pack - Customer Supplied - Sleeper:Diagram2 LT/RH/LoneStar - X15/A26 - Work Lights W/ Sw Pack - Customer Supplied:Diagram2 LT/RH/LoneStar - X15/A26 - Work Lights W/ Sw Pack - Customer Supplied W/ RKE W/AUTO REV:Diagram2 LT/RH/LoneStar - X15/A26 - Work Lights W/ Sw Pack - Customer Supplied W/O RKE W/AUTO REV:Diagram2
Mates	5117

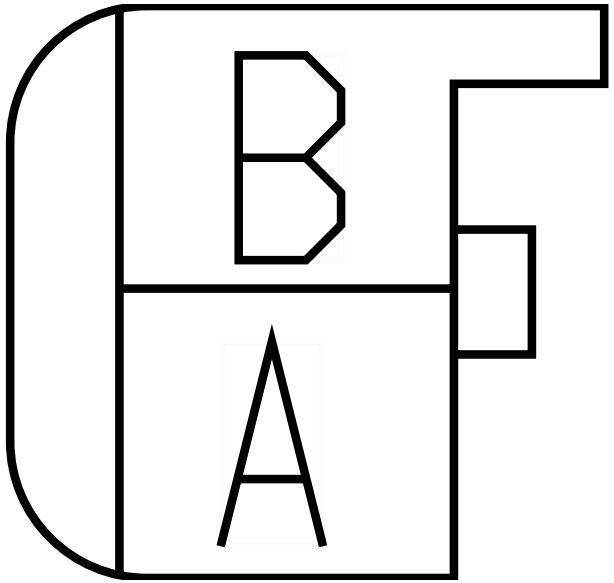

Name	Terminal Part Number	V-Min	Name	Wire Part Number	Wire CSA	Wire Spec	Wire Material description	Wire Color Description	Wire Length	End2 Terminal Part Number	End2 Pin Name	End2 Connect or
A	-	-	65F	3510317 R1	0.79	18.0	Thin Wall XLPE Primary Cable	ORANGE	1500.0	-	A	220XF
A	-	-	HE65BB	2643682 R1	1.16	16.0	Std. Wall XLPE Primary Cable	ORANGE	150.0	-	X	-

Name	Terminal Part Number	V-Min	Name	Wire Part Number	Wire CSA	Wire Spec	Wire Material description	Wire Color Description	Wire Length	End2 Terminal Part Number	End2 Pin Name	End2 Connector
A	-	-	65F	3510317 R1	0.79	18.0	Thin Wall XLPE Primary Cable	ORANGE	1500.0	-	-	-
B	-	-	65-GF	3510359 R1	0.79	18.0	Thin Wall XLPE Primary Cable	WHITE	1500.0	-	B	220XF
B	-	-	HE65-GD	2643681 R1	1.16	16.0	Std. Wall XLPE Primary Cable	WHITE	230.0	-	X	-

Connector Name	2200
Part Number	1661259C1
Short Description	CUSTOMER SUPPLIED WORK LIGHT
Instances	LT/RH - A26 - Work Lights (2 Blunt Cuts Only W/O Relay) W/ Backup W/Manual Trans Day Cab:Diagram2 LT/RH - A26 - Work Lights (2 Blunt Cuts Only W/O Relay) W/ Backup W/Manual Trans Day Cab:Diagram4 LT/RH - A26 - Work Lights W/ Sw Pack - Customer Supplied W/ RKE W/MAN REV:Diagram2 LT/RH - A26 - Work Lights W/ Sw Pack - Customer Supplied W/ RKE W/MAN REV:Diagram4 LT/RH - A26 - Work Lights W/ Sw Pack - Customer Supplied W/ O RKE W/MAN REV:Diagram2 LT/RH - A26 - Work Lights W/ Sw Pack - Customer Supplied W/ O RKE W/MAN REV:Diagram4 LT/RH - X15/A26 - Work Lights W/ Sw Pack - Customer Supplied:Diagram2 LT/RH/LoneStar - X15 - Work Lights (2 Blunt Cuts Only W/O Relay) W/Backup W/Manual Trans:Diagram2 LT/RH/LoneStar - X15 - Work Lights W/ Sw Pack - Customer Supplied W/ RKE W/MAN REV:Diagram2 LT/RH/LoneStar - X15 - Work Lights W/ Sw Pack - Customer Supplied W/O RKE W/MAN REV:Diagram2 LT/RH/LoneStar - X15/A26 - Work Lights (2 Blunt Cuts Only W/ O Relay):Diagram2 LT/RH/LoneStar - X15/A26 - Work Lights (2 Blunt Cuts Only W/O Relay) W/Backup W/Auto Trans (Allison and Endurant):Diagram2 LT/RH/LoneStar - X15/A26 - Work Lights W/ Sw Pack - Customer Supplied:Diagram2 LT/RH/LoneStar - X15/A26 - Work Lights W/ Sw Pack - Customer Supplied W/ RKE W/AUTO REV:Diagram2 LT/RH/LoneStar - X15/A26 - Work Lights W/ Sw Pack - Customer Supplied W/O RKE W/AUTO REV:Diagram2
Mates	220XF

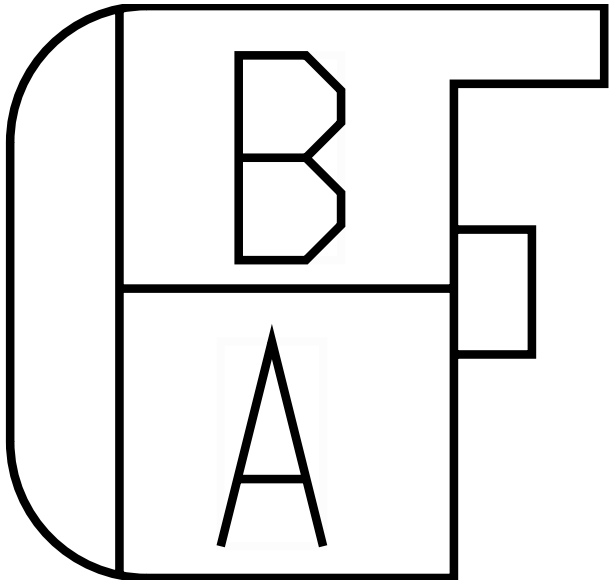

Name	Terminal Part Number	V-Min	Name	Wire Part Number	Wire CSA	Wire Spec	Wire Material description	Wire Color Description	Wire Length	End2 Terminal Part Number	End2 Pin Name	End2 Connector
A	-	-	BX65AB	3510317 R1	0.79	18.0	Thin Wall XLPE Primary Cable	ORANGE	1980.0	-	X	-
A	-	-	BX65AC	3510317 R1	0.79	18.0	Thin Wall XLPE Primary Cable	ORANGE	3710.0	-	X	-
B	-	-	BX65-GFA	3510359 R1	0.79	18.0	Thin Wall XLPE Primary Cable	WHITE	2715.0	-	-	-
B	-	-	BX65-GFB	3510359 R1	0.79	18.0	Thin Wall XLPE Primary Cable	WHITE	3395.0	-	-	-

Connector Name	2201
Part Number	1661259C1
Short Description	CUSTOMER SUPPLIED WORK LIGHT
Instances	LT/RH - A26 - Work Lights W/ Sw Pack - Customer Supplied W/ RKE W/MAN REV:Diagram2 LT/RH - A26 - Work Lights W/ Sw Pack - Customer Supplied W/ RKE W/MAN REV:Diagram4 LT/RH - A26 - Work Lights W/ Sw Pack - Customer Supplied W/ O RKE W/MAN REV:Diagram2 LT/RH - A26 - Work Lights W/ Sw Pack - Customer Supplied W/ O RKE W/MAN REV:Diagram4 LT/RH - X15/A26 - Work Lights W/ Sw Pack - Customer Supplied:Diagram2 LT/RH/LoneStar - X15 - Work Lights W/ Sw Pack - Customer Supplied W/ RKE W/MAN REV:Diagram2 LT/RH/LoneStar - X15 - Work Lights W/ Sw Pack - Customer Supplied W/O RKE W/MAN REV:Diagram2 LT/RH/LoneStar - X15/A26 - Work Lights W/ Sw Pack - Customer Supplied:Diagram2 LT/RH/LoneStar - X15/A26 - Work Lights W/ Sw Pack - Customer Supplied W/ RKE W/AUTO REV:Diagram2 LT/RH/LoneStar - X15/A26 - Work Lights W/ Sw Pack - Customer Supplied W/O RKE W/AUTO REV:Diagram2
Mates	220XF

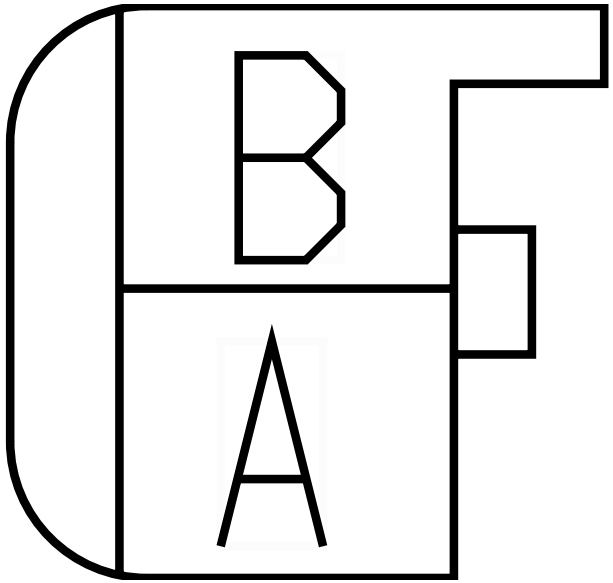

Name	Terminal Part Number	V-Min	Name	Wire Part Number	Wire CSA	Wire Spec	Wire Material description	Wire Color Description	Wire Length	End2 Terminal Part Number	End2 Pin Name	End2 Connect or
A	-	-	BX65AC	3510317 R1	0.79	18.0	Thin Wall XLPE Primary Cable	ORANGE	3710.0	-	X	-
B	-	-	BX65-GFB	3510359 R1	0.79	18.0	Thin Wall XLPE Primary Cable	WHITE	3395.0	-	-	-

Connector Name	2225
Part Number	3834322C1
Instances	Cab J1939 (250Kbps):Cab J1939 (250Kbps)
Mates	MODU-VID-2025-01-01A

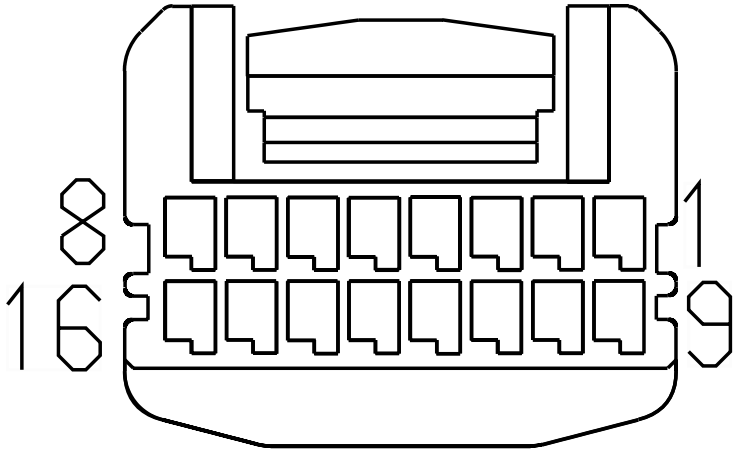

Name	Terminal Part Number	V-Min	Name	Wire Part Number	Wire CSA	Wire Spec	Wire Material description	Wire Color Description	Wire Length	End2 Terminal Part Number	End2 Pin Name	End2 Connect or
8	-	-	WIRE223950	-	0.0	-	-	-	0.0	-	H	1026
16	-	-	WIRE223951	-	0.0	-	-	-	0.0	-	E	1026

Connector Name	23XX
Part Number	3534156C1
Short Description	DOOR SW/SPEAKER JUMPER
Instances	LT/RH LoneStar - X15/A26 - Speakers:Four Speakers N/BT N/ QC:Diagram1-Day Cab LT/RH LoneStar - X15/A26 - Speakers:Four Speakers N/BT W/ QC:Diagram1-Day Cab LT/RH LoneStar - X15/A26 - Speakers:Four Speakers W/BT N/ QC:Diagram1-Day Cab LT/RH LoneStar - X15/A26 - Speakers:Four Speakers W/BT W/ QC:Diagram1-Day Cab LT/RH/LoneStar - X15/A26 - Door Ajar Reminder (Entry/ Exit):Diagram1
Mates	2313

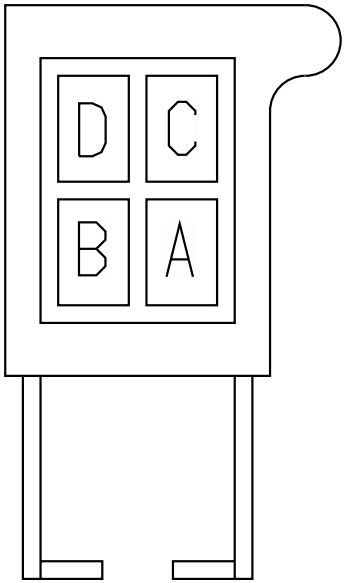

Name	Terminal Part Number	V-Min	Name	Wire Part Number	Wire CSA	Wire Spec	Wire Material description	Wire Color Description	Wire Length	End2 Terminal Part Number	End2 Pin Name	End2 Connect or
A	-	-	63	2643721 R1	1.16	16.0	Std. Wall XLPE Primary Cable	DARK BLUE	1150.0	-	A	W24-3500
B	-	-	9	2643680 R1	1.16	16.0	Std. Wall XLPE Primary Cable	GREY	1150.0	-	A	W24-3501
C	-	-	86BDA	3510299 R1	0.79	18.0	Thin Wall XLPE Primary Cable	LIGHT GREEN	1050.0	-	A	W24-2300
C	-	-	86BDA	3510299 R1	0.79	18.0	Thin Wall XLPE Primary Cable	LIGHT GREEN	1050.0	-	-	-

Name	Terminal Part Number	V-Min	Name	Wire Part Number	Wire CSA	Wire Spec	Wire Material description	Wire Color Description	Wire Length	End2 Terminal Part Number	End2 Pin Name	End2 Connect or
D	-	-	86CEA	3510299 R1	0.79	18.0	Thin Wall XLPE Primary Cable	LIGHT GREEN	1050.0	-	-	-
D	-	-	86CEA	3510299 R1	0.79	18.0	Thin Wall XLPE Primary Cable	LIGHT GREEN	1050.0	-	B	W24-2300

Connector Name	23XX
Part Number	3534156C1
Short Description	DOOR SW/SPEAKER JUMPER
Instances	LT/RH LoneStar - X15/A26 - Speakers:Four Speakers N/BT N/ QC:Diagram1-Day Cab LT/RH LoneStar - X15/A26 - Speakers:Four Speakers N/BT W/ QC:Diagram1-Day Cab LT/RH LoneStar - X15/A26 - Speakers:Four Speakers W/BT N/ QC:Diagram1-Day Cab LT/RH LoneStar - X15/A26 - Speakers:Four Speakers W/BT W/ QC:Diagram1-Day Cab LT/RH/LoneStar - X15/A26 - Door Ajar Reminder (Entry/ Exit):Diagram1
Mates	2312

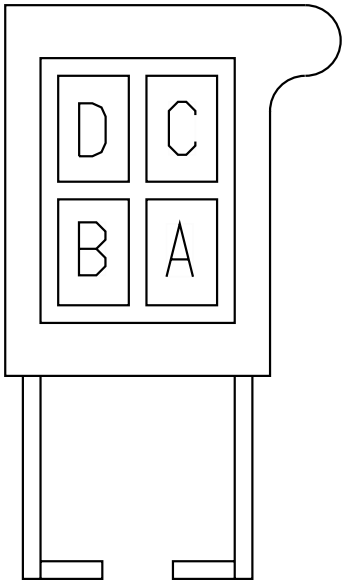

Name	Terminal Part Number	V-Min	Name	Wire Part Number	Wire CSA	Wire Spec	Wire Material description	Wire Color Description	Wire Length	End2 Terminal Part Number	End2 Pin Name	End2 Connect or
A	-	-	63	2643721 R1	1.16	16.0	Std. Wall XLPE Primary Cable	DARK BLUE	1150.0	-	-	-
B	-	-	9	2643680 R1	1.16	16.0	Std. Wall XLPE Primary Cable	GREY	1150.0	-	-	-
C	-	-	86BDA	3510299 R1	0.79	18.0	Thin Wall XLPE Primary Cable	LIGHT GREEN	1050.0	-	-	-
C	-	-	86BDA	3510299 R1	0.79	18.0	Thin Wall XLPE Primary Cable	LIGHT GREEN	1050.0	-	A	W08-2300

Name	Terminal Part Number	V-Min	Name	Wire Part Number	Wire CSA	Wire Spec	Wire Material description	Wire Color Description	Wire Length	End2 Terminal Part Number	End2 Pin Name	End2 Connect or
D	-	-	86CEA	3510299 R1	0.79	18.0	Thin Wall XLPE Primary Cable	LIGHT GREEN	1050.0	-	B	W08-2300
D	-	-	86CEA	3510299 R1	0.79	18.0	Thin Wall XLPE Primary Cable	LIGHT GREEN	1050.0	-	-	-

Connector Name	2303F
Part Number	1661196C1
Short Description	CB RADIO POWER
Instances	LT/RH/LoneStar - X15/A26 - CB Radio Power Only:Diagram1
Mates	2303M

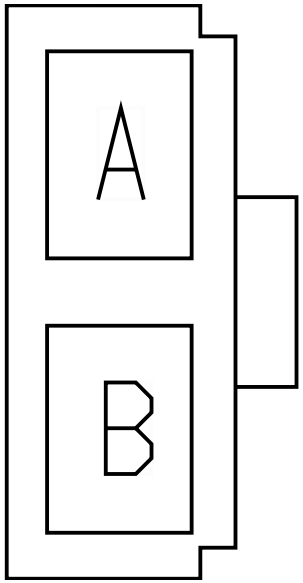

Name	Terminal Part Number	V-Min	Name	Wire Part Number	Wire CSA	Wire Spec	Wire Material description	Wire Color Description	Wire Length	End2 Terminal Part Number	End2 Pin Name	End2 Connect or
A	-	-	D86M	2643678 R1	1.16	16.0	Std. Wall XLPE Primary Cable	LIGHT GREEN	160.0	-	A	D48-2310
B	-	-	D86-GG	2643681 R1	1.16	16.0	Std. Wall XLPE Primary Cable	WHITE	160.0	-	A	D48-2311

Connector Name	2303F
Part Number	1661196C1
Short Description	CB CONNECTOR
Instances	LT/RH/LoneStar - X15/A26 - Cigar Lighter Aux APO Overhead APO:Diagram1 LT/RH/LoneStar - X15/A26 - Cigar Lighter Aux APO Overhead APO:Diagram2 LT/RH/LoneStar - X15/A26 - Cigar Lighter Aux APO Rear Std APO Rear APO w/Cover 12V Panel Overhead APO:Diagram1 LT/RH/LoneStar - X15/A26 - Cigar Lighter Aux APO Rear Std APO Rear APO w/Cover 12V Panel Overhead APO:Diagram2 LT/RH/LoneStar - X15/A26 - Cigar Lighter Aux APO Rear Std APO Rear APO w/Cover 12V Panel Overhead APO:Diagram3 LT/RH/LoneStar - X15/A26 - Cigar Lighter Aux APO Rear Std APO Rear APO w/Cover 12V Panel Overhead APO:Diagram4 LT/RH/LoneStar - X15/A26 - Cigar Lighter Aux APO Rear Std APO Rear APO w/Cover 12V Panel Upr Bnk APO Rear Overhead APO:Diagram1-Combination1 LT/RH/LoneStar - X15/A26 - Cigar Lighter Aux APO Rear Std APO Rear APO w/Cover 12V Panel Upr Bnk APO Rear Overhead APO:Diagram1-Combination2 LT/RH/LoneStar - X15/A26 - Cigar Lighter Aux APO Rear Std APO Rear APO w/Cover 12V Panel Upr Bnk APO Rear Overhead APO:Diagram1-Combination3 LT/RH/LoneStar - X15/A26 - Cigar Lighter Aux APO Rear Std APO Rear APO w/Cover 12V Panel Upr Bnk APO Rear Overhead APO:Diagram1-Combination4 LT/RH/LoneStar - X15/A26 - Cigar Lighter Overhead APO:Diagram1 LT/RH/LoneStar - X15/A26 - Cigar Lighter Rear Std APO Rear APO W/Cover 12V Panel Overhead APO:Diagram1 LT/RH/LoneStar - X15/A26 - Cigar Lighter Rear Std APO Rear APO W/Cover 12V Panel Overhead APO:Diagram2 LT/RH/LoneStar - X15/A26 - Cigar Lighter Rear Std APO Rear APO w/Cover 12V Panel Upr Bnk APO Rear Overhead APO:Diagram1 LT/RH/LoneStar - X15/A26 - Cigar Lighter Rear Std APO Rear APO w/Cover 12V Panel Upr Bnk APO Rear Overhead APO:Diagram2 LT/RH/LoneStar - X15/A26 - Standard APO Aux APO Overhead APO:Diagram1 LT/RH/LoneStar - X15/A26 - Standard APO Aux APO Overhead APO:Diagram2

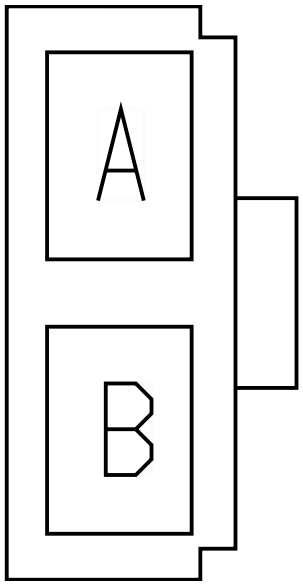

LT/RH/LoneStar - X15/A26 - Standard APO Overhead APO:Diagram1
LT/RH/LoneStar - X15/A26 - Std APO Aux APO Rear Std APO Rear APO W/Cover 12V Panel Overhead APO:Diagram1
LT/RH/LoneStar - X15/A26 - Std APO Aux APO Rear Std APO Rear APO W/Cover 12V Panel Overhead APO:Diagram2
LT/RH/LoneStar - X15/A26 - Std APO Aux APO Rear Std APO Rear APO W/Cover 12V Panel Overhead APO:Diagram3
LT/RH/LoneStar - X15/A26 - Std APO Aux APO Rear Std APO Rear APO W/Cover 12V Panel Overhead APO:Diagram4
LT/RH/LoneStar - X15/A26 - Std APO Aux APO Rear Std APO Rear APO w/Cover 12V Panel Upr Bnk APO Rear Overhead APO:Diagram1
LT/RH/LoneStar - X15/A26 - Std APO Aux APO Rear Std APO Rear APO w/Cover 12V Panel Upr Bnk APO Rear Overhead APO:Diagram2
LT/RH/LoneStar - X15/A26 - Std APO Aux APO Rear Std APO Rear APO w/Cover 12V Panel Upr Bnk APO Rear Overhead APO:Diagram3
LT/RH/LoneStar - X15/A26 - Std APO Aux APO Rear Std APO Rear APO w/Cover 12V Panel Upr Bnk APO Rear Overhead APO:Diagram4
LT/RH/LoneStar - X15/A26 - Std APO Rear Std APO Rear APO W/Cover 12V Panel Rear Overhead APO:Diagram1
LT/RH/LoneStar - X15/A26 - Std APO Rear Std APO Rear APO W/Cover 12V Panel Rear Overhead APO:Diagram2
LT/RH/LoneStar - X15/A26 - Std APO Rear Std APO Rear APO w/Cover 12V Panel Upr Bnk APO Rear Overhead APO:Diagram1
LT/RH/LoneStar - X15/A26 - Std APO Rear Std APO Rear APO w/Cover 12V Panel Upr Bnk APO Rear Overhead APO:Diagram2

Mates 2303M

Name	Terminal Part Number	V-Min	Name	Wire Part Number	Wire CSA	Wire Spec	Wire Material description	Wire Color Description	Wire Length	End2 Terminal Part Number	End2 Pin Name	End2 Connect or
A	-	-	1A	2643678 R1	1.16	16.0	Std. Wall XLPE Primary Cable	LIGHT GREEN	90.0	-	X	-

Name	Terminal Part Number	V-Min	Name	Wire Part Number	Wire CSA	Wire Spec	Wire Material description	Wire Color Description	Wire Length	End2 Terminal Part Number	End2 Pin Name	End2 Connect or
B	-	-	1G	2643681 R1	1.16	16.0	Std. Wall XLPE Primary Cable	WHITE	130.0	-	X	-

Connector Name	2303M
Part Number	1661197C1
Short Description	CB RADIO POWER
Instances	LT/RH/LoneStar - X15/A26 - CB Radio Power Only:Diagram1
Mates	2303F

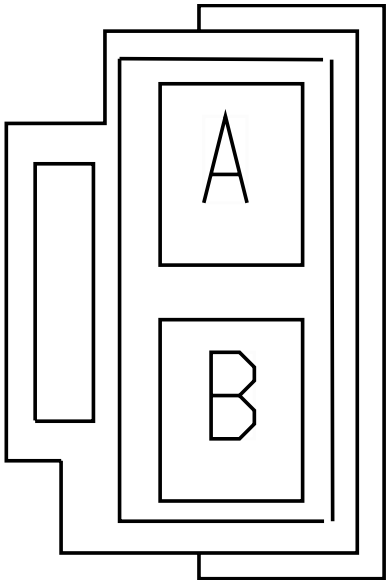

Name	Terminal Part Number	V-Min	Name	Wire Part Number	Wire CSA	Wire Spec	Wire Material description	Wire Color Description	Wire Length	End2 Terminal Part Number	End2 Pin Name	End2 Connect or
A	-	-	D86F	2643678 R1	1.16	16.0	Std. Wall XLPE Primary Cable	LIGHT GREEN	0.0	-	2	2000F
B	-	-	D86-GF	2643681 R1	1.16	16.0	Std. Wall XLPE Primary Cable	WHITE	1200.0	-	X	-

Connector Name	2303M
Part Number	1661197C1
Short Description	CB RADIO POWER
Instances	LT/RH/LoneStar - X15/A26 - Cigar Lighter Aux APO Overhead APO:Diagram1 LT/RH/LoneStar - X15/A26 - Cigar Lighter Aux APO Overhead APO:Diagram2 LT/RH/LoneStar - X15/A26 - Cigar Lighter Aux APO Rear Std APO Rear APO w/Cover 12V Panel Overhead APO:Diagram1 LT/RH/LoneStar - X15/A26 - Cigar Lighter Aux APO Rear Std APO Rear APO w/Cover 12V Panel Overhead APO:Diagram2 LT/RH/LoneStar - X15/A26 - Cigar Lighter Aux APO Rear Std APO Rear APO w/Cover 12V Panel Overhead APO:Diagram3 LT/RH/LoneStar - X15/A26 - Cigar Lighter Aux APO Rear Std APO Rear APO w/Cover 12V Panel Overhead APO:Diagram4 LT/RH/LoneStar - X15/A26 - Cigar Lighter Aux APO Rear Std APO Rear APO w/Cover 12V Panel Upr Bnk APO Rear Overhead APO:Diagram1-Combination1 LT/RH/LoneStar - X15/A26 - Cigar Lighter Aux APO Rear Std APO Rear APO w/Cover 12V Panel Upr Bnk APO Rear Overhead APO:Diagram1-Combination2 LT/RH/LoneStar - X15/A26 - Cigar Lighter Aux APO Rear Std APO Rear APO w/Cover 12V Panel Upr Bnk APO Rear Overhead APO:Diagram1-Combination3 LT/RH/LoneStar - X15/A26 - Cigar Lighter Aux APO Rear Std APO Rear APO w/Cover 12V Panel Upr Bnk APO Rear Overhead APO:Diagram1-Combination4 LT/RH/LoneStar - X15/A26 - Cigar Lighter Overhead APO:Diagram1 LT/RH/LoneStar - X15/A26 - Cigar Lighter Rear Std APO Rear APO W/Cover 12V Panel Overhead APO:Diagram1 LT/RH/LoneStar - X15/A26 - Cigar Lighter Rear Std APO Rear APO W/Cover 12V Panel Overhead APO:Diagram2 LT/RH/LoneStar - X15/A26 - Cigar Lighter Rear Std APO Rear APO w/Cover 12V Panel Upr Bnk APO Rear Overhead APO:Diagram1 LT/RH/LoneStar - X15/A26 - Cigar Lighter Rear Std APO Rear APO w/Cover 12V Panel Upr Bnk APO Rear Overhead APO:Diagram2 LT/RH/LoneStar - X15/A26 - Standard APO Aux APO Overhead APO:Diagram1 LT/RH/LoneStar - X15/A26 - Standard APO Aux APO Overhead APO:Diagram2

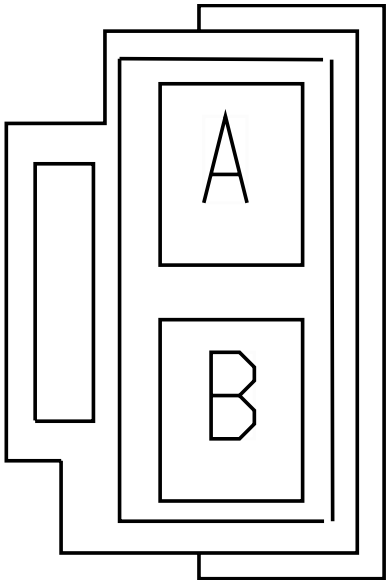

LT/RH/LoneStar - X15/A26 - Standard APO Overhead APO:Diagram1
LT/RH/LoneStar - X15/A26 - Std APO Aux APO Rear Std APO Rear APO W/Cover 12V Panel Overhead APO:Diagram1
LT/RH/LoneStar - X15/A26 - Std APO Aux APO Rear Std APO Rear APO W/Cover 12V Panel Overhead APO:Diagram2
LT/RH/LoneStar - X15/A26 - Std APO Aux APO Rear Std APO Rear APO W/Cover 12V Panel Overhead APO:Diagram3
LT/RH/LoneStar - X15/A26 - Std APO Aux APO Rear Std APO Rear APO W/Cover 12V Panel Overhead APO:Diagram4
LT/RH/LoneStar - X15/A26 - Std APO Aux APO Rear Std APO Rear APO w/Cover 12V Panel Upr Bnk APO Rear Overhead APO:Diagram1
LT/RH/LoneStar - X15/A26 - Std APO Aux APO Rear Std APO Rear APO w/Cover 12V Panel Upr Bnk APO Rear Overhead APO:Diagram2
LT/RH/LoneStar - X15/A26 - Std APO Aux APO Rear Std APO Rear APO w/Cover 12V Panel Upr Bnk APO Rear Overhead APO:Diagram3
LT/RH/LoneStar - X15/A26 - Std APO Aux APO Rear Std APO Rear APO w/Cover 12V Panel Upr Bnk APO Rear Overhead APO:Diagram4
LT/RH/LoneStar - X15/A26 - Std APO Rear Std APO Rear APO W/Cover 12V Panel Rear Overhead APO:Diagram1
LT/RH/LoneStar - X15/A26 - Std APO Rear Std APO Rear APO W/Cover 12V Panel Rear Overhead APO:Diagram2
LT/RH/LoneStar - X15/A26 - Std APO Rear Std APO Rear APO w/Cover 12V Panel Upr Bnk APO Rear Overhead APO:Diagram1
LT/RH/LoneStar - X15/A26 - Std APO Rear Std APO Rear APO w/Cover 12V Panel Upr Bnk APO Rear Overhead APO:Diagram2

Mates 2303F

Name	Terminal Part Number	V-Min	Name	Wire Part Number	Wire CSA	Wire Spec	Wire Material description	Wire Color Description	Wire Length	End2 Terminal Part Number	End2 Pin Name	End2 Connect or
A	-	-	D86F	2643678 R1	1.16	16.0	Std. Wall XLPE Primary Cable	LIGHT GREEN	0.0	-	2	2000F

Name	Terminal Part Number	V-Min	Name	Wire Part Number	Wire CSA	Wire Spec	Wire Material description	Wire Color Description	Wire Length	End2 Terminal Part Number	End2 Pin Name	End2 Connect or
B	-	-	D86-GF	2643681 R1	1.16	16.0	Std. Wall XLPE Primary Cable	WHITE	1200.0	-	X	-

Connector Name	2312
Part Number	3533975C1
Short Description	DOOR SWITCH/SPEAKER JUMPER
Instances	LT/RH LoneStar - X15/A26 - Speakers:Four Speakers N/BT N/ QC:Diagram1-Day Cab LT/RH LoneStar - X15/A26 - Speakers:Four Speakers N/BT W/ QC:Diagram1-Day Cab LT/RH LoneStar - X15/A26 - Speakers:Four Speakers W/BT N/ QC:Diagram1-Day Cab LT/RH LoneStar - X15/A26 - Speakers:Four Speakers W/BT W/ QC:Diagram1-Day Cab LT/RH/LoneStar - X15/A26 - Door Ajar Reminder (Entry/ Exit):Diagram1
Mates	23XX

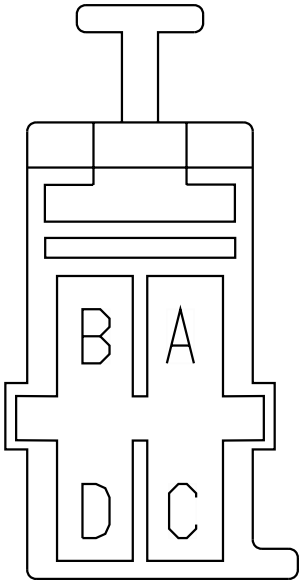

Name	Terminal Part Number	V-Min	Name	Wire Part Number	Wire CSA	Wire Spec	Wire Material description	Wire Color Description	Wire Length	End2 Terminal Part Number	End2 Pin Name	End2 Connector
A	-	-	AA63B	3510354 R1	1.16	16.0	Thin Wall XLPE Primary Cable	DARK BLUE	1055.0	-	X	-
B	-	-	AA9BAA	3510312 R1	1.16	16.0	Thin Wall XLPE Primary Cable	GREY	1085.0	-	X	-
C	-	-	MU86BA	3510299 R1	0.79	18.0	Thin Wall XLPE Primary Cable	LIGHT GREEN	2890.0	-	15	A02-1300
D	-	-	MU86CA	3510299 R1	0.79	18.0	Thin Wall XLPE Primary Cable	LIGHT GREEN	2890.0	-	16	A02-1300

Connector Name	2313
Part Number	3533975C1
Short Description	DOOR SWITCH/SPEAKER JUMPER
Instances	LT/RH LoneStar - X15/A26 - Speakers:Four Speakers N/BT N/ QC:Diagram1-Day Cab LT/RH LoneStar - X15/A26 - Speakers:Four Speakers N/BT W/ QC:Diagram1-Day Cab LT/RH LoneStar - X15/A26 - Speakers:Four Speakers W/BT N/ QC:Diagram1-Day Cab LT/RH LoneStar - X15/A26 - Speakers:Four Speakers W/BT W/ QC:Diagram1-Day Cab LT/RH/LoneStar - X15/A26 - Door Ajar Reminder (Entry/ Exit):Diagram1
Mates	23XX

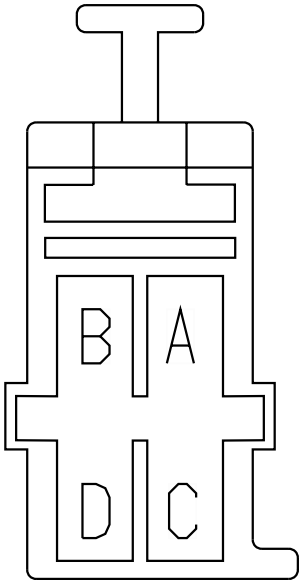

Name	Terminal Part Number	V-Min	Name	Wire Part Number	Wire CSA	Wire Spec	Wire Material description	Wire Color Description	Wire Length	End2 Terminal Part Number	End2 Pin Name	End2 Connector
A	-	-	AA63C	3510354 R1	1.16	16.0	Thin Wall XLPE Primary Cable	DARK BLUE	4225.0	-	X	-
B	-	-	AA9BAB	3510312 R1	1.16	16.0	Thin Wall XLPE Primary Cable	GREY	4195.0	-	X	-
C	-	-	MU86DA	3510299 R1	0.79	18.0	Thin Wall XLPE Primary Cable	LIGHT GREEN	3110.0	-	9	A02-1300
D	-	-	MU86EA	3510299 R1	0.79	18.0	Thin Wall XLPE Primary Cable	LIGHT GREEN	3110.0	-	10	A02-1300

Connector Name	240
Part Number	3709924C1
Instances	Body J1939 (250Kbps) Splice Pack 1024:Body J1939 (250Kbps) Body J1939 (250Kbps) Splice Pack 1025:Body J1939 (250Kbps) Body J1939 (250Kbps) Splice Pack 1029:Body J1939 (250Kbps) Body J1939 (250Kbps) W/ 3 Splice Packs:Body J1939 (250Kbps) LT/RH/LoneStar - X15/A26 - Navistar Telematics Module - Programming:Diagram1
Mates	DEV-ONCOMMAND_LINK_N2-01

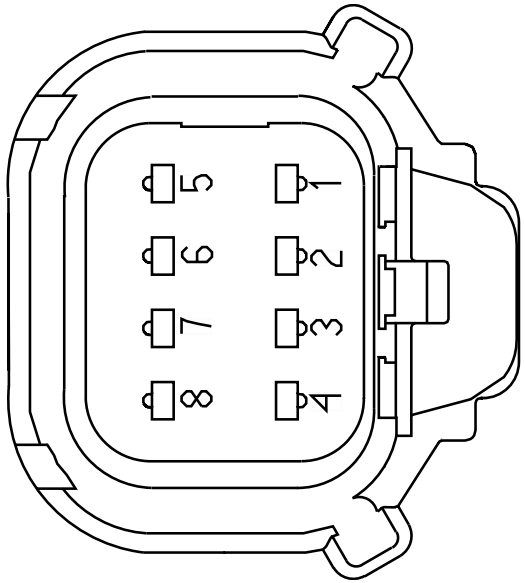

Name	Terminal Part Number	V-Min	Name	Wire Part Number	Wire CSA	Wire Spec	Wire Material description	Wire Color Description	Wire Length	End2 Terminal Part Number	End2 Pin Name	End2 Connect or
2	-	-	WIRE233620	-	0.0	-	-	-	0.0	-	PIN1	-
2	-	-	-	-	-	-	-	-	-	-	-	-
6	-	-	WIRE233619	-	0.0	-	-	-	0.0	-	PIN1	-
6	-	-	-	-	-	-	-	-	-	-	-	-

Connector Name	250F
Part Number	4064552C1
Short Description	N2 MODULE/IP CONNECTION
Instances	Body J1939 (250Kbps) Splice Pack 1024:Body J1939 (250Kbps) Body J1939 (250Kbps) Splice Pack 1025:Body J1939 (250Kbps) Body J1939 (250Kbps) Splice Pack 1029:Body J1939 (250Kbps) Body J1939 (250Kbps) W/ 3 Splice Packs:Body J1939 (250Kbps) LT/RH/LoneStar - X15/A26 - Antenna (Film Antenna Sleeper Cab OTAPM and Radio):Diagram1 LT/RH/LoneStar - X15/A26 - Antenna (Shark Fin Day Cab OTAPM and Radio):Diagram1 LT/RH/LoneStar - X15/A26 - Navistar Telematics Module - Wiring:Diagram1
Mates	250M

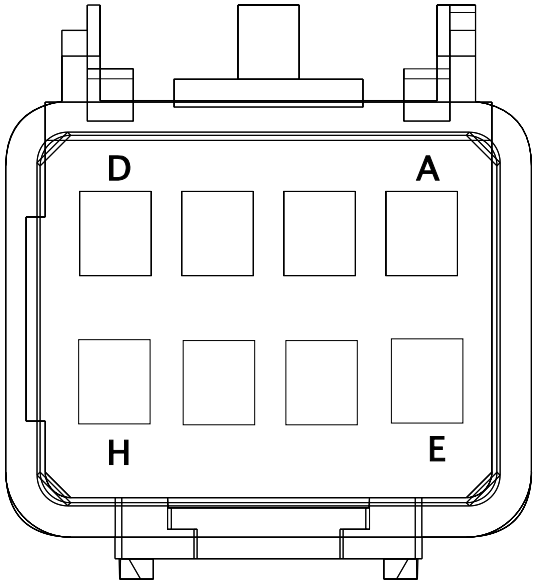

Name	Terminal Part Number	V-Min	Name	Wire Part Number	Wire CSA	Wire Spec	Wire Material description	Wire Color Description	Wire Length	End2 Terminal Part Number	End2 Pin Name	End2 Connector
A	-	-	WIRE233618	-	0.0	-	-	-	0.0	-	PIN1	-
B	-	-	WIRE233615	-	0.0	-	-	-	0.0	-	PIN1	-
C	-	-	D14KBB	3510365 R1	0.79	18.0	Thin Wall XLPE Primary Cable	RED	3847.0	-	5	D2E_240
D	-	-	D86AK	3510341 R1	0.79	18.0	Thin Wall XLPE Primary Cable	LIGHT BLUE	2715.0	-	A	D2E-241
E	-	-	WIRE233617	-	0.0	-	-	-	0.0	-	PIN1	-
F	-	-	WIRE233616	-	0.0	-	-	-	0.0	-	PIN1	-

Connector Name	250M
Part Number	4064551C1
Short Description	IP/ROOF MODULE CONNECTION
Instances	Body J1939 (250Kbps) Splice Pack 1024:Body J1939 (250Kbps) Body J1939 (250Kbps) Splice Pack 1025:Body J1939 (250Kbps) Body J1939 (250Kbps) Splice Pack 1029:Body J1939 (250Kbps) Body J1939 (250Kbps) W/ 3 Splice Packs:Body J1939 (250Kbps) LT/RH/LoneStar - X15/A26 - Antenna (Film Antenna Sleeper Cab OTAPM and Radio):Diagram1 LT/RH/LoneStar - X15/A26 - Antenna (Shark Fin Day Cab OTAPM and Radio):Diagram1 LT/RH/LoneStar - X15/A26 - Navistar Telematics Module - Wiring:Diagram1
Mates	250F

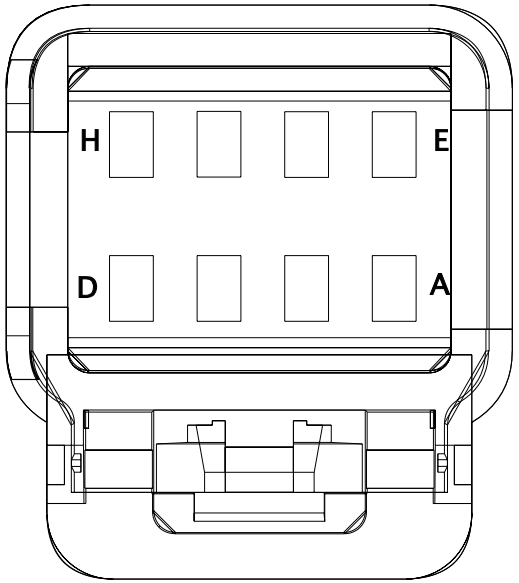

Name	Terminal Part Number	V-Min	Name	Wire Part Number	Wire CSA	Wire Spec	Wire Material description	Wire Color Description	Wire Length	End2 Terminal Part Number	End2 Pin Name	End2 Connect or
A	-	-	WIRE489815	-	0.0	-	-	-	0.0	-	F	1029
A	-	-	WIRE489907	-	0.0	-	-	-	0.0	-	62	1700
A	-	-	WIRE233608	-	0.0	-	-	-	0.0	-	PIN1	-
A	-	-	WIRE490107	-	0.0	-	-	-	0.0	-	62	1700
B	-	-	WIRE489814	-	0.0	-	-	-	0.0	-	G	1029
B	-	-	WIRE489906	-	0.0	-	-	-	0.0	-	61	1700
B	-	-	WIRE233607	-	0.0	-	-	-	0.0	-	PIN1	-
B	-	-	WIRE490106	-	0.0	-	-	-	0.0	-	61	1700

Name	Terminal Part Number	V-Min	Name	Wire Part Number	Wire CSA	Wire Spec	Wire Material description	Wire Color Description	Wire Length	End2 Terminal Part Number	End2 Pin Name	End2 Connector
C	-	-	NJ14KBB	3510365 R1	0.79	18.0	Thin Wall XLPE Primary Cable	RED	2780.0	-	-	-
D	-	-	NP86AK	3510299 R1	0.79	18.0	Thin Wall XLPE Primary Cable	LIGHT GREEN	1490.0	-	X	-
E	-	-	WIRE489818	-	0.0	-	-	-	0.0	-	A	1025
E	-	-	WIRE489908	-	0.0	-	-	-	0.0	-	F	1029
E	-	-	WIRE233610	-	0.0	-	-	-	0.0	-	A	1025
E	-	-	WIRE490113	-	0.0	-	-	-	0.0	-	PIN1	-
F	-	-	WIRE489817	-	0.0	-	-	-	0.0	-	M	1025
F	-	-	WIRE489909	-	0.0	-	-	-	0.0	-	G	1029
F	-	-	WIRE233609	-	0.0	-	-	-	0.0	-	M	1025
F	-	-	WIRE490112	-	0.0	-	-	-	0.0	-	PIN1	-

Connector Name	2500F
Part Number	3515763C1
Short Description	ROOF/CONSOLE CONNECTION
Instances	LT/RH/LoneStar - X15/A26 - Cab Dome Light (Day Cab):Diagram1 LT/RH/LoneStar - X15/A26 - Interior Task Lights (Map) (Cab Dome / Map Combo) - DayCab:Diagram1
Mates	2500M

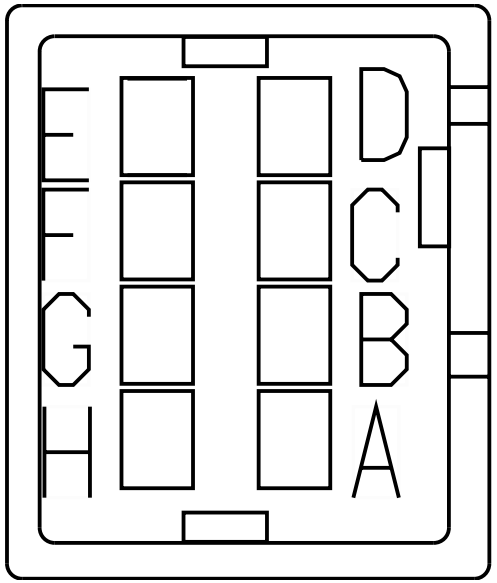

Name	Terminal Part Number	V-Min	Name	Wire Part Number	Wire CSA	Wire Spec	Wire Material description	Wire Color Description	Wire Length	End2 Terminal Part Number	End2 Pin Name	End2 Connect or
B	-	-	D63-GL	3510360 R1	1.16	16.0	Thin Wall XLPE Primary Cable	WHITE	397.0	-	X	-
C	-	-	D63D	2643720 R1	0.79	18.0	Std. Wall XLPE Primary Cable	DARK BLUE	2120.0	-	4	2000F
D	-	-	D63E	2643720 R1	0.79	18.0	Std. Wall XLPE Primary Cable	DARK BLUE	0.0	-	5	2000F

Connector Name	2500M
Part Number	3515762C1
Short Description	CONSOLE/ROOF STANDARD
Instances	LT/RH/LoneStar - X15/A26 - Cab Dome Light (Day Cab):Diagram1 LT/RH/LoneStar - X15/A26 - Interior Task Lights (Map) (Cab Dome / Map Combo) - DayCab:Diagram1
Mates	2500F

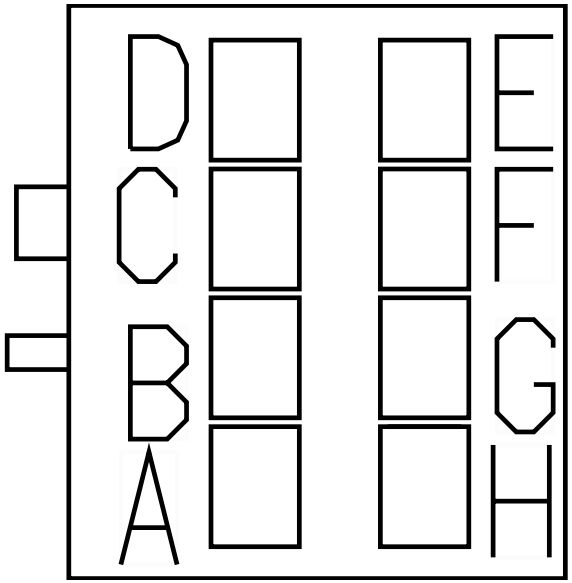

Name	Terminal Part Number	V-Min	Name	Wire Part Number	Wire CSA	Wire Spec	Wire Material description	Wire Color Description	Wire Length	End2 Terminal Part Number	End2 Pin Name	End2 Connect or
B	-	-	C63-GL	2643681 R1	1.16	16.0	Std. Wall XLPE Primary Cable	WHITE	170.0	-	X	-
C	-	-	C63D	2643720 R1	0.79	18.0	Std. Wall XLPE Primary Cable	DARK BLUE	1150.0	-	C	D99-2100M
D	-	-	C63E	2643720 R1	0.79	18.0	Std. Wall XLPE Primary Cable	DARK BLUE	1150.0	-	A	D99-2100M

Connector Name	2505M
Part Number	3811181C1
Instances	LT/RH/LoneStar - X15/A26 - Radio (Bluetooth) W/Steering Wheel Pod N/ Remote W/MIC:Diagram1 LT/RH/LoneStar - X15/A26 - Radio(Bluetooth) W/Steering Wheel W/Remote W/MIC:Diagram1
Mates	2505

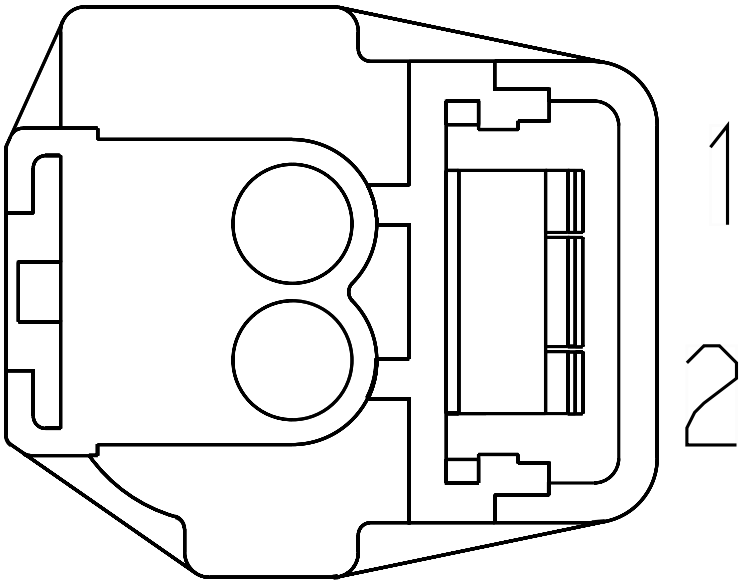

Name	Terminal Part Number	V-Min	Name	Wire Part Number	Wire CSA	Wire Spec	Wire Material description	Wire Color Description	Wire Length	End2 Terminal Part Number	End2 Pin Name	End2 Connect or
1	-	-	86A(-)	3510298 R1	0.53	20.0	Thin Wall XLPE Primary Cable	LIGHT GREEN	1200.0	-	1	100
2	-	-	86A(+)	3510298 R1	0.53	20.0	Thin Wall XLPE Primary Cable	LIGHT GREEN	1200.0	-	2	100

Connector Name	2505
Part Number	3811207C1
Short Description	BLUETOOTH MIC IP/ROOF CONNECTOR
Instances	LT/RH/LoneStar - X15/A26 - Radio (Bluetooth) W/Steering Wheel Pod N/ Remote W/MIC:Diagram1 LT/RH/LoneStar - X15/A26 - Radio(Bluetooth) W/Steering Wheel W/Remote W/MIC:Diagram1
Mates	2505M

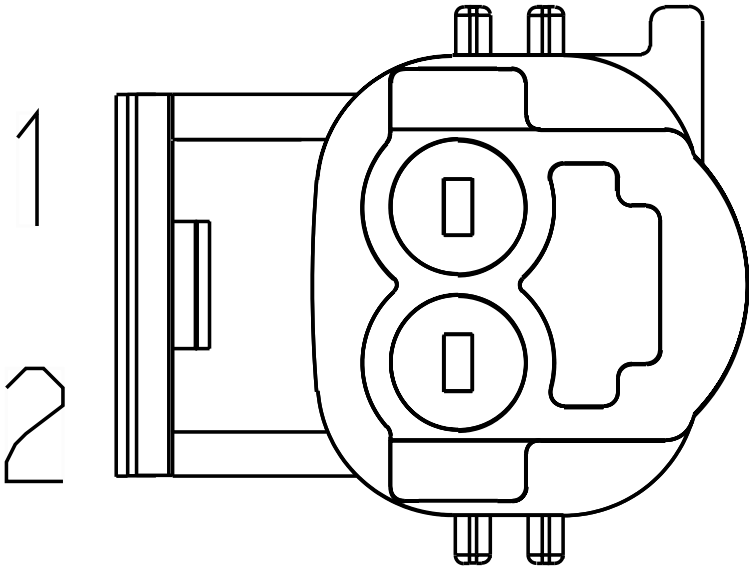

Name	Terminal Part Number	V-Min	Name	Wire Part Number	Wire CSA	Wire Spec	Wire Material description	Wire Color Description	Wire Length	End2 Terminal Part Number	End2 Pin Name	End2 Connect or
1	-	-	YW86A(-)	3510298 R1	0.53	20.0	Thin Wall XLPE Primary Cable	LIGHT GREEN	1425.0	-	16	A02-130 1-MIC
2	-	-	YW86A(+)	3510298 R1	0.53	20.0	Thin Wall XLPE Primary Cable	LIGHT GREEN	1425.0	-	15	A02-130 1-MIC

Connector Name	3000M
Part Number	1661200C1
Short Description	DOOR/IP INTERCONNECT
Instances	Low Speed J1939 (125Kbps):Low Speed J1939 (125Kbps) LT/RH - X15/A26 - Mirrors (Heat) [Switch Pack Actuated Relay Driven]:Diagram1
Mates	3200F

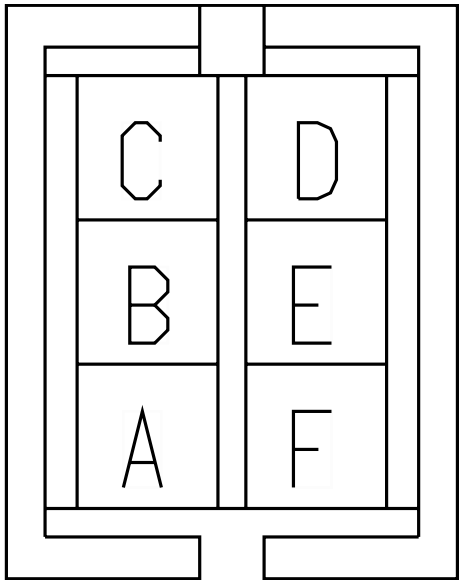

Name	Terminal Part Number	V-Min	Name	Wire Part Number	Wire CSA	Wire Spec	Wire Material description	Wire Color Description	Wire Length	End2 Terminal Part Number	End2 Pin Name	End2 Connect or
A	-	-	WIRE234475	-	0.0	-	-	-	0.0	-	3	3202M
B	-	-	WIRE234474	-	0.0	-	-	-	0.0	-	2	3202M
B	-	-	E05-EH78A	2643671 R1	0.79	18.0	Std. Wall XLPE Primary Cable	LIGHT GREEN	980.0	-	G	E05-3000

Connector Name	3000M
Part Number	1661200C1
Short Description	DOOR/IP INTERCONNECT
Instances	LT/RH - X15/A26 - Mirrors (Heat) [Switch Pack Actuated Relay Driven]:Diagram1
Mates	3204F

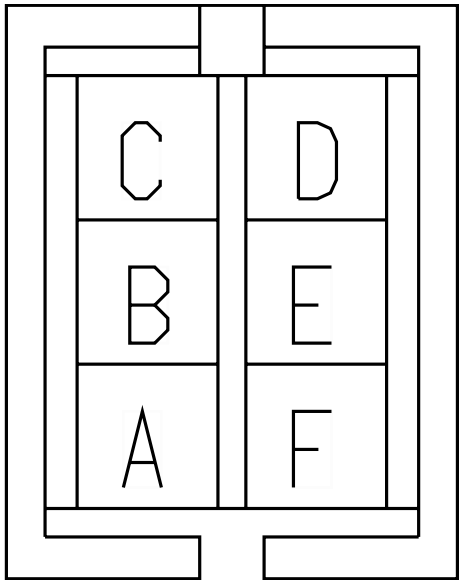

Name	Terminal Part Number	V-Min	Name	Wire Part Number	Wire CSA	Wire Spec	Wire Material description	Wire Color Description	Wire Length	End2 Terminal Part Number	End2 Pin Name	End2 Connect or
B	-	-	F05-EH78A	2643671R1	0.79	18.0	Std. Wall XLPE Primary Cable	LIGHT GREEN	980.0	-	G	F05-3000

Connector Name	3000M
Part Number	1661200C1
Short Description	DOOR/IP INTERCONNECT
Instances	LT/RH/LoneStar - X15/A26 - Mirror Lighting (Turns without Door Pods):Diagram1
Mates	3200F

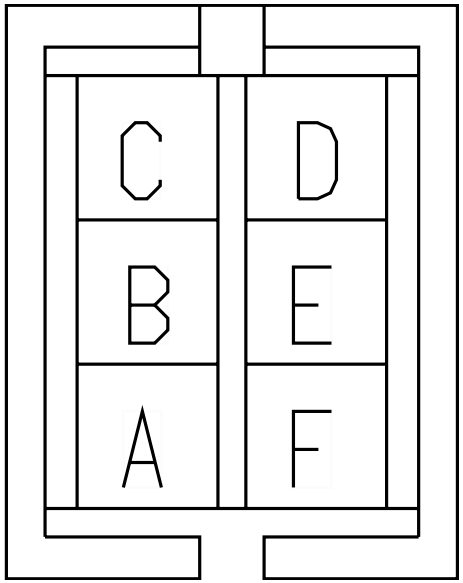

Name	Terminal Part Number	V-Min	Name	Wire Part Number	Wire CSA	Wire Spec	Wire Material description	Wire Color Description	Wire Length	End2 Terminal Part Number	End2 Pin Name	End2 Connect or
A	-	-	E05-EL56D	2643675R1	0.79	18.0	Std. Wall XLPE Primary Cable	ORANGE	980.0	-	E	E05-3000

Connector Name	3000M
Part Number	1661200C1
Instances	LT/RH/LoneStar - X15/A26 - Mirror Lighting (Turns without Door Pods):Diagram1
Mates	3204F

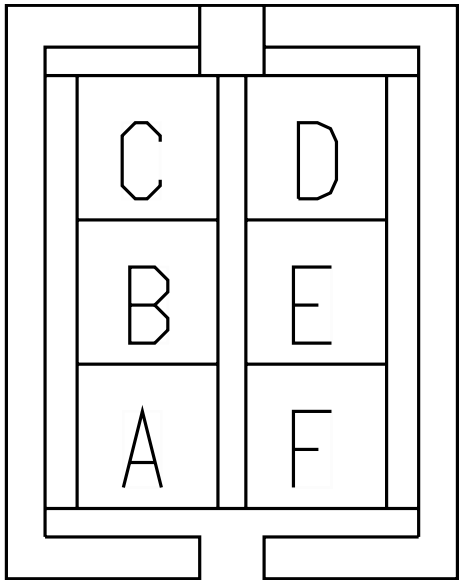

Name	Terminal Part Number	V-Min	Name	Wire Part Number	Wire CSA	Wire Spec	Wire Material description	Wire Color Description	Wire Length	End2 Terminal Part Number	End2 Pin Name	End2 Connect or
A	-	-	F05-EL56D	2643675R1	0.79	18.0	Std. Wall XLPE Primary Cable	ORANGE	980.0	-	E	F05-3000

Connector Name	3000M
Part Number	1661200C1
Short Description	DOOR/IP INTERCONNECT
Instances	LT/RH/LoneStar - X15/A26 - Mirror Lighting (Turns with Door Pods):Diagram1
Mates	3200F

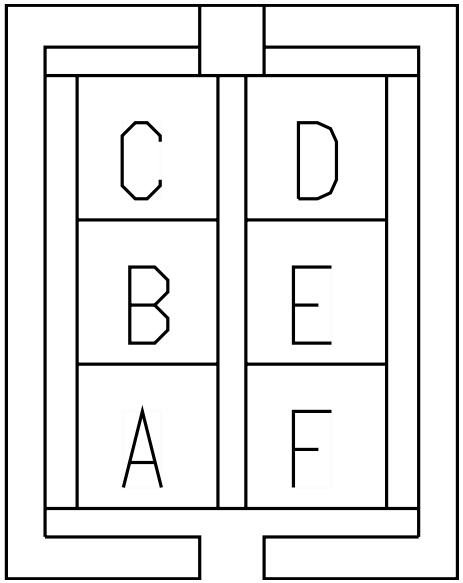

Name	Terminal Part Number	V-Min	Name	Wire Part Number	Wire CSA	Wire Spec	Wire Material description	Wire Color Description	Wire Length	End2 Terminal Part Number	End2 Pin Name	End2 Connect or
A	-	-	E05-EL56D	2643675R1	0.79	18.0	Std. Wall XLPE Primary Cable	ORANGE	980.0	-	E	E05-3000

Connector Name	3000M
Part Number	1661200C1
Short Description	DOOR/IP INTERCONNECT
Instances	LT/RH/LoneStar - X15/A26 - Mirror Lighting (Turns with Door Pods):Diagram1
Mates	3204F

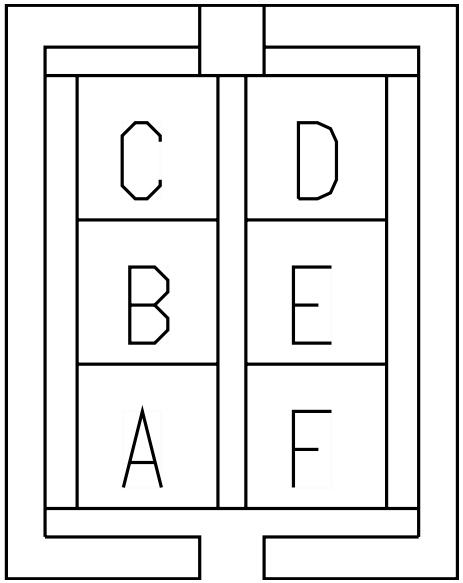

Name	Terminal Part Number	V-Min	Name	Wire Part Number	Wire CSA	Wire Spec	Wire Material description	Wire Color Description	Wire Length	End2 Terminal Part Number	End2 Pin Name	End2 Connect or
A	-	-	F05-EL56D	2643675R1	0.79	18.0	Std. Wall XLPE Primary Cable	ORANGE	980.0	-	E	F05-3000

Connector Name	3200F
Part Number	1661201C1
Short Description	DOOR IP/INTERCONNECT 1
Instances	Low Speed J1939 (125Kbps):Low Speed J1939 (125Kbps) LT/RH - X15/A26 - Mirrors (Heat) [Switch Pack Actuated Relay Driven]:Diagram1
Mates	3000M

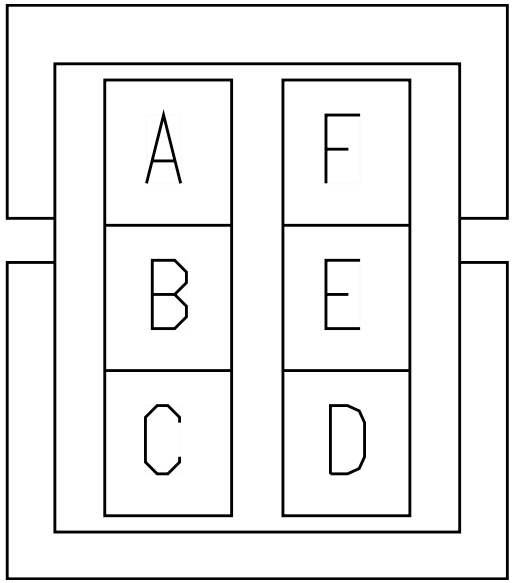

Name	Terminal Part Number	V-Min	Name	Wire Part Number	Wire CSA	Wire Spec	Wire Material description	Wire Color Description	Wire Length	End2 Terminal Part Number	End2 Pin Name	End2 Connect or
A	-	-	WIRE234467	-	0.0	-	-	-	0.0	-	PIN1	-
B	-	-	WIRE234466	-	0.0	-	-	-	0.0	-	PIN1	-
B	-	-	DD78A	3510300R1	1.16	16.0	Thin Wall XLPE Primary Cable	LIGHT GREEN	965.0	-	X	-

Connector Name	3200F
Part Number	1661201C1
Short Description	DOOR/IP INTERCONNECT
Instances	LT/RH A26 - Ambient Air Temperature Option 1:Diagram1 LT/RH A26 - Ambient Air Temperature Option 2:Diagram1 LT/RH/LoneStar - X15/A26 - Power Door Locks:Diagram1 LT/RH/LoneStar X15 - Ambient Air Temperature Option 1:Diagram1 LT/RH/LoneStar X15 - Ambient Air Temperature Option 2:Diagram1
Mates	3200M

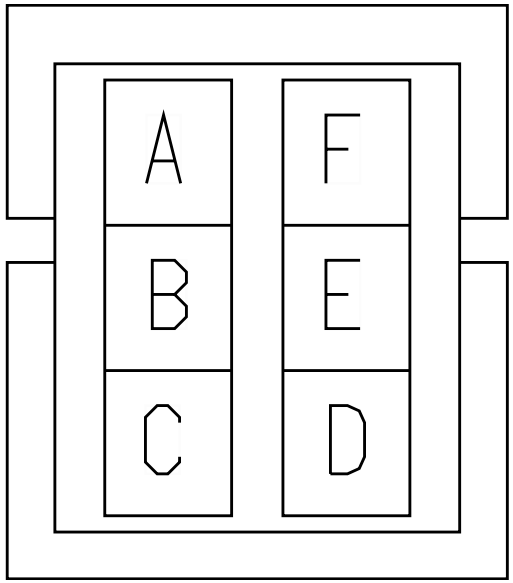

Name	Terminal Part Number	V-Min	Name	Wire Part Number	Wire CSA	Wire Spec	Wire Material description	Wire Color Description	Wire Length	End2 Terminal Part Number	End2 Pin Name	End2 Connect or
C	-	-	E05-EC81B	3510302 R1	3.01	12.0	Thin Wall XLPE Primary Cable	LIGHT GREEN	1245.0	-	1	E05-3202M
D	-	-	E05-EC81-GA	3510362 R1	3.01	12.0	Thin Wall XLPE Primary Cable	WHITE	1245.0	-	4	E05-3202M
E	-	-	E05-ET41D	3510329 R1	0.79	18.0	Thin Wall XLPE Primary Cable	TAN	1025.0	-	C	E05-3000
F	-	-	E05-ET41E	3510329 R1	0.79	18.0	Thin Wall XLPE Primary Cable	TAN	1025.0	-	D	E05-3000

Connector Name	3200F
Part Number	1661201C1
Short Description	DOOR/IP INTERCONNECT
Instances	LT/RH/LoneStar - X15/A26 - Power Door Locks:Diagram1 LT/RH/LoneStar - X15/A26 - Remote Keyless Access:Diagram1
Mates	3204M

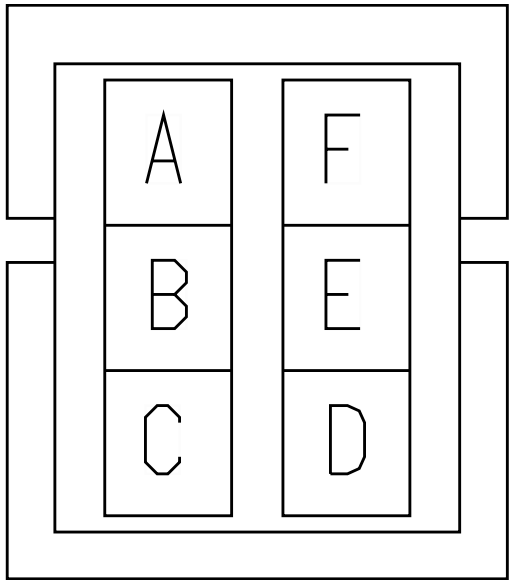

Name	Terminal Part Number	V-Min	Name	Wire Part Number	Wire CSA	Wire Spec	Wire Material description	Wire Color Description	Wire Length	End2 Terminal Part Number	End2 Pin Name	End2 Connect or
C	-	-	F05-EC81B	3510302R1	3.01	12.0	Thin Wall XLPE Primary Cable	LIGHT GREEN	1245.0	-	1	F05-3202M
D	-	-	F05-EC81-GA	3510362R1	3.01	12.0	Thin Wall XLPE Primary Cable	WHITE	1245.0	-	4	F05-3202M

Connector Name	3200F
Part Number	1661201C1
Short Description	DOOR/IP INTERCONNECT
Instances	LT/RH/LoneStar - X15/A26 - Mirror Lighting (Turns without Door Pods):Diagram1
Mates	3200M

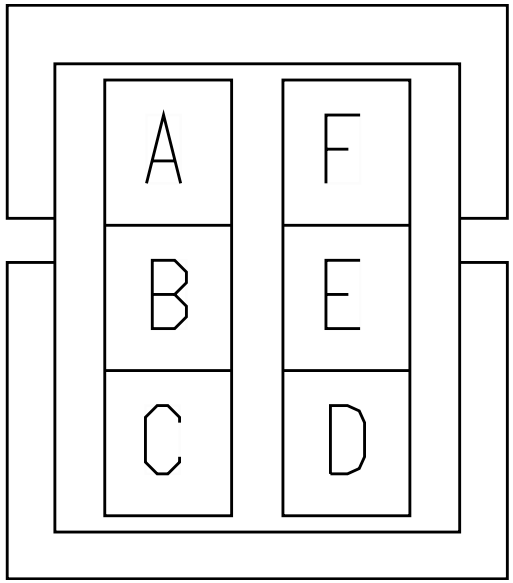

Name	Terminal Part Number	V-Min	Name	Wire Part Number	Wire CSA	Wire Spec	Wire Material description	Wire Color Description	Wire Length	End2 Terminal Part Number	End2 Pin Name	End2 Connect or
D	-	-	E05-EH78-GE	3510360R1	1.16	16.0	Thin Wall XLPE Primary Cable	WHITE	1025.0	-	H	E05-3000

Connector Name	3200F
Part Number	1661201C1
Instances	LT/RH/LoneStar - X15/A26 - Mirror Lighting (Turns without Door Pods):Diagram1
Mates	3204M

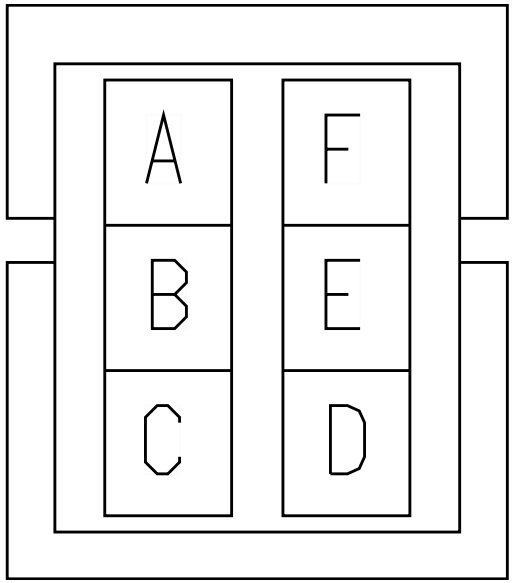

Name	Terminal Part Number	V-Min	Name	Wire Part Number	Wire CSA	Wire Spec	Wire Material description	Wire Color Description	Wire Length	End2 Terminal Part Number	End2 Pin Name	End2 Connect or
D	-	-	F05-EH78-GE	3510360R1	1.16	16.0	Thin Wall XLPE Primary Cable	WHITE	1025.0	-	H	F05-3000

Connector Name	3200F
Part Number	1661201C1
Short Description	DOOR IP/INTERCONNECT 1
Instances	LT/RH/LoneStar - X15/A26 - Mirror Lighting (Turns without Door Pods):Diagram1
Mates	3000M

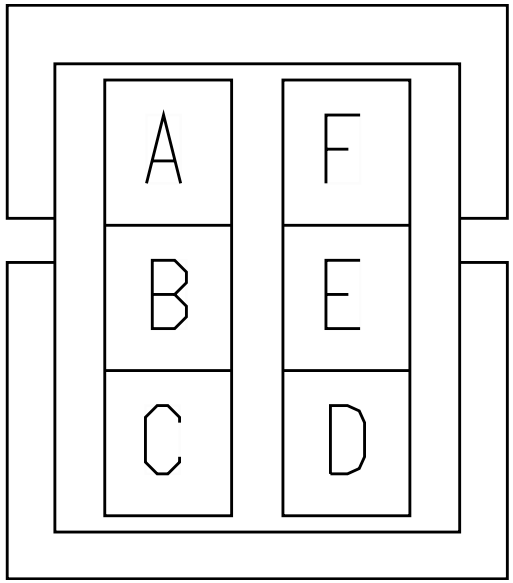

Name	Terminal Part Number	V-Min	Name	Wire Part Number	Wire CSA	Wire Spec	Wire Material description	Wire Color Description	Wire Length	End2 Terminal Part Number	End2 Pin Name	End2 Connect or
A	-	-	2C56D	3510317 R1	0.79	18.0	Thin Wall XLPE Primary Cable	ORANGE	685.0	-	-	-

Connector Name	3200F
Part Number	1661201C1
Short Description	DOOR IP/INTERCONNECT 1
Instances	LT/RH/LoneStar - X15/A26 - Mirror Lighting (Turns with Door Pods):Diagram1
Mates	3000M

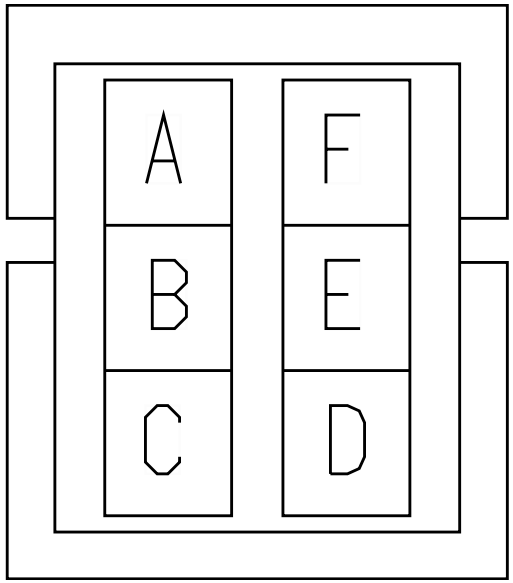

Name	Terminal Part Number	V-Min	Name	Wire Part Number	Wire CSA	Wire Spec	Wire Material description	Wire Color Description	Wire Length	End2 Terminal Part Number	End2 Pin Name	End2 Connect or
A	-	-	2C56D	3510317 R1	0.79	18.0	Thin Wall XLPE Primary Cable	ORANGE	685.0	-	-	-

Connector Name	3200M
Part Number	1661200C1
Short Description	IP/DOOR INTERCONNECT 2
Instances	LT/RH A26 - Ambient Air Temperature Option 1:Diagram1 LT/RH A26 - Ambient Air Temperature Option 2:Diagram1 LT/RH/LoneStar - X15/A26 - Power Door Locks:Diagram1 LT/RH/LoneStar X15 - Ambient Air Temperature Option 1:Diagram1 LT/RH/LoneStar X15 - Ambient Air Temperature Option 2:Diagram1
Mates	3200F

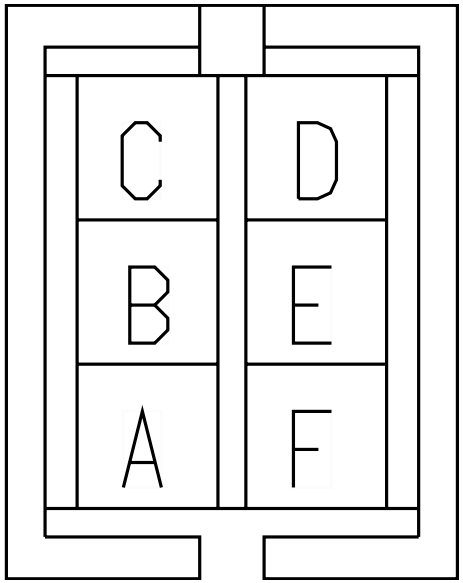

Name	Terminal Part Number	V-Min	Name	Wire Part Number	Wire CSA	Wire Spec	Wire Material description	Wire Color Description	Wire Length	End2 Terminal Part Number	End2 Pin Name	End2 Connect or
C	-	-	CV81B	3510368 R1	3.01	12.0	Thin Wall XLPE Primary Cable	RED	1925.0	-	-	-
D	-	-	CV81-GA	3510362 R1	3.01	12.0	Thin Wall XLPE Primary Cable	WHITE	460.0	-	X	-
E	-	-	HZ41DJ	3510329 R1	0.79	18.0	Thin Wall XLPE Primary Cable	TAN	2635.0	-	25	1703M
F	-	-	HZ41EJ	3510311 R1	0.79	18.0	Thin Wall XLPE Primary Cable	GREY	2635.0	-	24	1703M

Connector Name	3200M
Part Number	1661200C1
Short Description	IP/DOOR INTERCONNECT 2
Instances	LT/RH/LoneStar - X15/A26 - Mirror Lighting (Turns without Door Pods):Diagram1
Mates	3200F

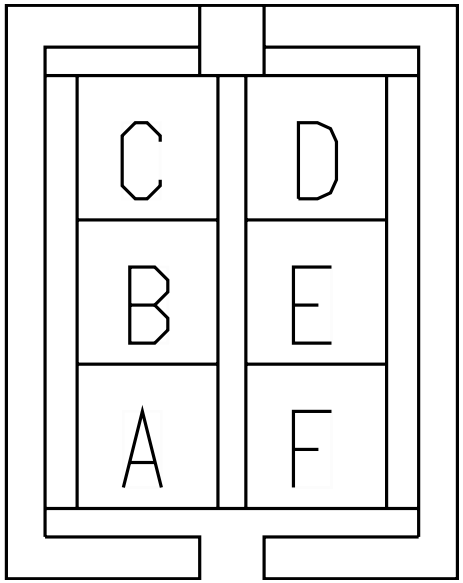

Name	Terminal Part Number	V-Min	Name	Wire Part Number	Wire CSA	Wire Spec	Wire Material description	Wire Color Description	Wire Length	End2 Terminal Part Number	End2 Pin Name	End2 Connect or
D	-	-	DD78-GA	3510360 R1	1.16	16.0	Thin Wall XLPE Primary Cable	WHITE	810.0	-	-	-

Connector Name	3202M
Part Number	3820176C1
Instances	LoneStar - X15 - City Horn W/ 4PIN CLK W/RKA:Diagram1-Combination1 LoneStar - X15 - City Horn W/ 10PIN CLK W/RKA:Diagram1-Combination1 Low Speed J1939 (125Kbps):Low Speed J1939 (125Kbps) LT/RH - X15/A26 - City Horn W/ 4PIN CLK W/RKA:Diagram1-Combination1 LT/RH - X15/A26 - City Horn W/ 10PIN CLK W/RKA:Diagram1-Combination1 LT/RH/LoneStar - X15/A26 - Heated Mirrors (Door Pod Actuated Cab and Hood Mounted):Diagram1 LT/RH/LoneStar - X15/A26 - Heated Mirrors (Door Pod Actuated Cab Mounted):Diagram1 LT/RH/LoneStar - X15/A26 - Mirrors (Power) [Door Pod Actuated]:Diagram1 LT/RH/LoneStar - X15/A26 - Power Windows:Diagram1
Mates	MODU-DS_DOOR_POD-2016-01-0 2A

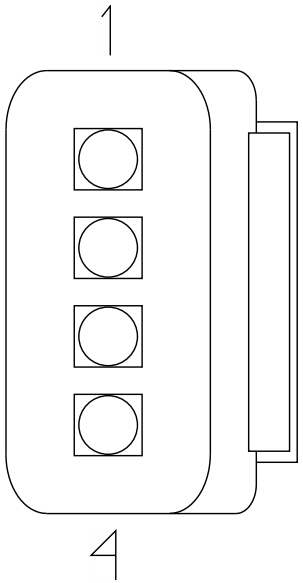

Name	Terminal Part Number	V-Min	Name	Wire Part Number	Wire CSA	Wire Spec	Wire Material description	Wire Color Description	Wire Length	End2 Terminal Part Number	End2 Pin Name	End2 Connect or
2	-	-	-	-	-	-	-	-	-	-	-	-
2	-	-	WIRE234474	-	0.0	-	-	-	0.0	-	B	3000M
3	-	-	-	-	-	-	-	-	-	-	-	-
3	-	-	WIRE234475	-	0.0	-	-	-	0.0	-	A	3000M

Connector Name	3202M_1
Part Number	3820176C1
Instances	Low Speed J1939 (125Kbps):Low Speed J1939 (125Kbps) LT/RH - A26 - Work Lights - LED W/ Sw Pack - Customer Supplied - Sleeper W/ RKE W/MAN REV:Diagram1 LT/RH - A26 - Work Lights - LED W/ Sw Pack - Customer Supplied - Sleeper W/ RKE W/MAN REV:Diagram2 LT/RH - A26 - Work Lights - LED W/ Sw Pack - Customer Supplied - Sleeper W/ RKE W/MAN REV:Diagram3 LT/RH - A26 - Work Lights - LED W/ Sw Pack - Customer Supplied - Sleeper W/ RKE W/MAN REV:Diagram4 LT/RH - A26 - Work Lights -LED W/ Sw Pack - Sleeper W/ RKE W/MAN REV:Diagram1 LT/RH - A26 - Work Lights -LED W/ Sw Pack - Sleeper W/ RKE W/MAN REV:Diagram2 LT/RH - A26 - Work Lights LED W/ Sw Pack - Day Cab W/ RKE W/MAN REV:Diagram1 LT/RH - A26 - Work Lights LED W/ Sw Pack - Day Cab W/ RKE W/MAN REV:Diagram2 LT/RH - A26 - Work Lights W/ Sw Pack - Customer Supplied W/ RKE W/MAN REV:Diagram1 LT/RH - A26 - Work Lights W/ Sw Pack - Customer Supplied W/ RKE W/MAN REV:Diagram2 LT/RH - A26 - Work Lights W/ Sw Pack - Customer Supplied W/ RKE W/MAN REV:Diagram3 LT/RH - A26 - Work Lights W/ Sw Pack - Customer Supplied W/ RKE W/MAN REV:Diagram4 LT/RH - X15/A26 - Work Lights W/ Sw Pack - Customer Supplied:Diagram1 LT/RH - X15/A26 - Work Lights W/ Sw Pack - Customer Supplied:Diagram2 LT/RH/LoneStar - X15 - Work Lights -LED W/ Sw Pack - Sleeper W/ RKE W/MAN REV:Diagram1 LT/RH/LoneStar - X15 - Work Lights W/ Sw Pack - Customer Supplied W/ RKE W/MAN REV:Diagram1 LT/RH/LoneStar - X15 - Work Lights W/ Sw Pack - Customer Supplied W/ RKE W/MAN REV:Diagram2 LT/RH/LoneStar - X15/A26 - Heated Mirrors (Door Pod Actuated Cab and Hood Mounted):Diagram1 LT/RH/LoneStar - X15/A26 - Heated Mirrors (Door Pod Actuated Cab Mounted):Diagram1 LT/RH/LoneStar - X15/A26 - Mirrors (Power) [Door Pod Actuated]:Diagram1

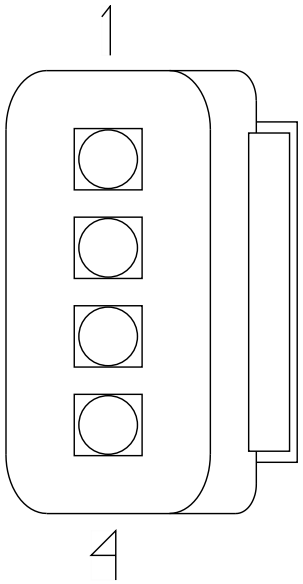

LT/RH/LoneStar - X15/A26 - Work Lights - LED W/ Sw Pack - Customer Supplied - Sleeper:Diagram1
LT/RH/LoneStar - X15/A26 - Work Lights - LED W/ Sw Pack - Customer Supplied - Sleeper:Diagram2
LT/RH/LoneStar - X15/A26 - Work Lights - LED W/ Sw Pack - Customer Supplied - Sleeper W/ RKE W/AUTO REV:Diagram1
LT/RH/LoneStar - X15/A26 - Work Lights - LED W/ Sw Pack - Customer Supplied - Sleeper W/ RKE W/AUTO REV:Diagram2
LT/RH/LoneStar - X15/A26 - Work Lights -LED W/ Sw Pack - Sleeper:Diagram1
LT/RH/LoneStar - X15/A26 - Work Lights -LED W/ Sw Pack - Sleeper W/ RKE W/AUTO REV:Diagram1
LT/RH/LoneStar - X15/A26 - Work Lights LED W/ Sw Pack - Day Cab:Diagram1
LT/RH/LoneStar - X15/A26 - Work Lights LED W/ Sw Pack - Day Cab W/ RKE W/AUTO REV:Diagram1
LT/RH/LoneStar - X15/A26 - Work Lights W/ Sw Pack - Customer Supplied W/ RKE W/AUTO REV:Diagram1
LT/RH/LoneStar - X15/A26 - Work Lights W/ Sw Pack - Customer Supplied W/ RKE W/AUTO REV:Diagram2
LT/RH/LoneStar X15 - Work Lights LED W/ Sw Pack - Day Cab W/ RKE W/MAN REV:Diagram1

Mates MODU-PS_DOOR_POD-2016-01-0 2A

Name	Terminal Part Number	V-Min	Name	Wire Part Number	Wire CSA	Wire Spec	Wire Material description	Wire Color Description	Wire Length	End2 Terminal Part Number	End2 Pin Name	End2 Connect or
2	-	-	-	-	-	-	-	-	-	-	-	-
2	-	-	WIRE234482	-	0.0	-	-	-	0.0	-	B	3204M
3	-	-	-	-	-	-	-	-	-	-	-	-
3	-	-	WIRE234483	-	0.0	-	-	-	0.0	-	A	3204M

Connector Name	3204F
Part Number	1661201C1
Short Description	DOOR/IP INTERCONNECT
Instances	Low Speed J1939 (125Kbps):Low Speed J1939 (125Kbps)
Mates	3204M

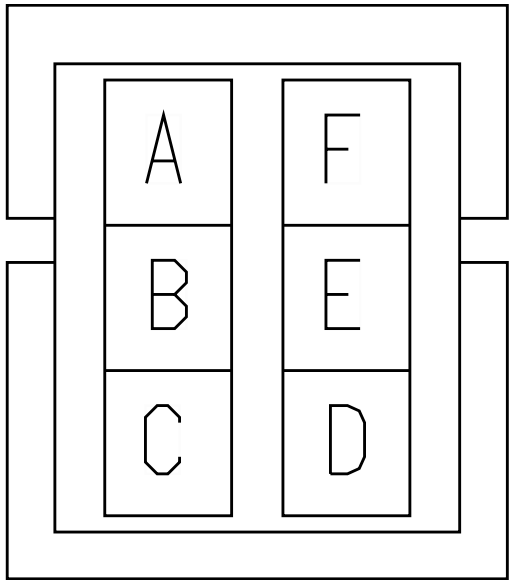

Name	Terminal Part Number	V-Min	Name	Wire Part Number	Wire CSA	Wire Spec	Wire Material description	Wire Color Description	Wire Length	End2 Terminal Part Number	End2 Pin Name	End2 Connect or
A	-	-	WIRE234479	-	0.0	-	-	-	0.0	-	PIN1	-
B	-	-	WIRE234478	-	0.0	-	-	-	0.0	-	PIN1	-

Connector Name	3204F
Part Number	1661201C1
Short Description	IP/DOOR INTERCONNECT 2
Instances	LT/RH - X15/A26 - Mirrors (Heat) [Switch Pack Actuated Relay Driven]:Diagram1
Mates	3000M

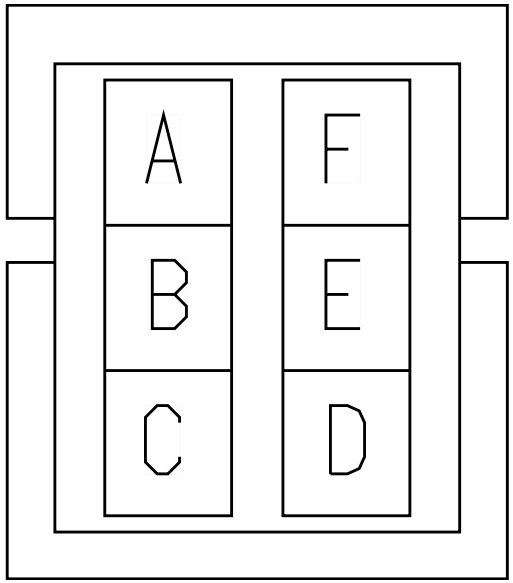

Name	Terminal Part Number	V-Min	Name	Wire Part Number	Wire CSA	Wire Spec	Wire Material description	Wire Color Description	Wire Length	End2 Terminal Part Number	End2 Pin Name	End2 Connect or
B	-	-	DD78B	3510300 R1	1.16	16.0	Thin Wall XLPE Primary Cable	LIGHT GREEN	1625.0	-	X	-

Connector Name	3204F
Part Number	1661201C1
Instances	LT/RH/LoneStar - X15/A26 - Mirror Lighting (Turns without Door Pods):Diagram1
Mates	3000M

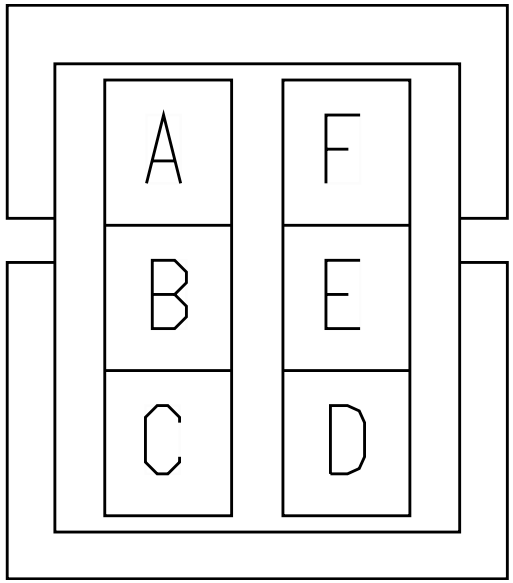

Name	Terminal Part Number	V-Min	Name	Wire Part Number	Wire CSA	Wire Spec	Wire Material description	Wire Color Description	Wire Length	End2 Terminal Part Number	End2 Pin Name	End2 Connect or
A	-	-	2C57B	3510317 R1	0.79	18.0	Thin Wall XLPE Primary Cable	ORANGE	2045.0	-	-	-

Connector Name	3204F
Part Number	1661201C1
Short Description	IP/DOOR INTERCONNECT 2
Instances	LT/RH/LoneStar - X15/A26 - Mirror Lighting (Turns with Door Pods):Diagram1
Mates	3000M

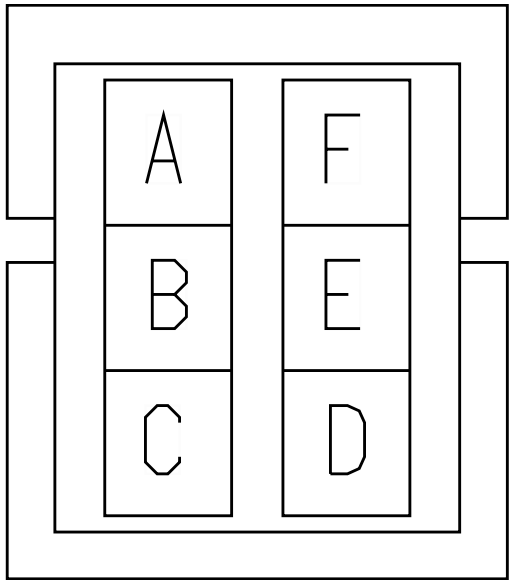

Name	Terminal Part Number	V-Min	Name	Wire Part Number	Wire CSA	Wire Spec	Wire Material description	Wire Color Description	Wire Length	End2 Terminal Part Number	End2 Pin Name	End2 Connect or
A	-	-	2C57B	3510317 R1	0.79	18.0	Thin Wall XLPE Primary Cable	ORANGE	2045.0	-	-	-

Connector Name	3204M
Part Number	1661200C1
Instances	Low Speed J1939 (125Kbps):Low Speed J1939 (125Kbps)
Mates	3204F

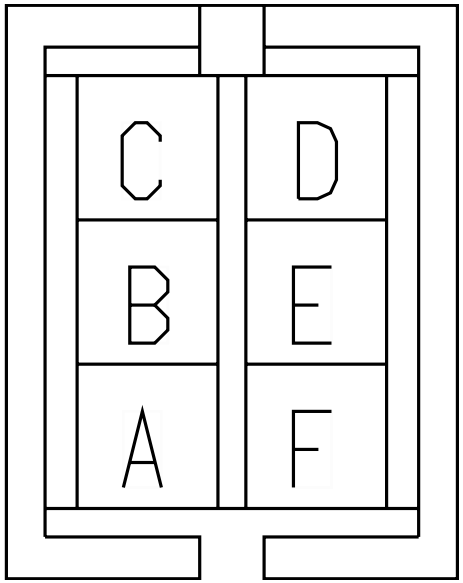

Name	Terminal Part Number	V-Min	Name	Wire Part Number	Wire CSA	Wire Spec	Wire Material description	Wire Color Description	Wire Length	End2 Terminal Part Number	End2 Pin Name	End2 Connect or
A	-	-	WIRE234483	-	0.0	-	-	-	0.0	-	3	3202M_1
B	-	-	WIRE234482	-	0.0	-	-	-	0.0	-	2	3202M_1

Connector Name	3204M
Part Number	1661200C1
Short Description	IP/DOOR INTERCONNECT 1
Instances	LT/RH/LoneStar - X15/A26 - Power Door Locks:Diagram1 LT/RH/LoneStar - X15/A26 - Remote Keyless Access:Diagram1
Mates	3200F

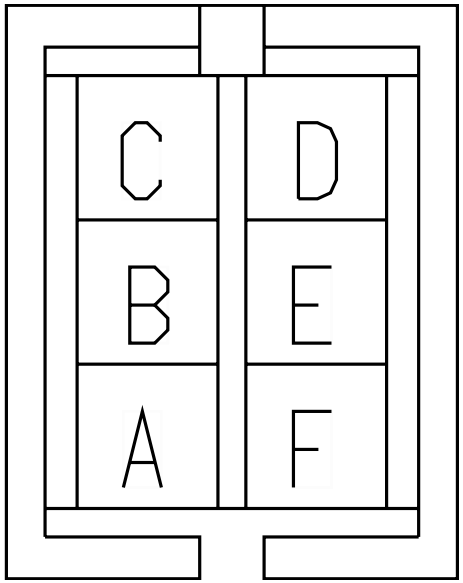

Name	Terminal Part Number	V-Min	Name	Wire Part Number	Wire CSA	Wire Spec	Wire Material description	Wire Color Description	Wire Length	End2 Terminal Part Number	End2 Pin Name	End2 Connect or
C	-	-	CV81C	3510368 R1	3.01	12.0	Thin Wall XLPE Primary Cable	RED	2585.0	-	-	-
D	-	-	CV81-GB	3510362 R1	3.01	12.0	Thin Wall XLPE Primary Cable	WHITE	1920.0	-	X	-
D	-	-	CV81-GB	3510362 R1	3.01	12.0	Thin Wall XLPE Primary Cable	WHITE	1920.0	-	-	-

Connector Name	3204M
Part Number	1661200C1
Short Description	IP/DOOR INTERCONNECT 1
Instances	LT/RH/LoneStar - X15/A26 - Mirror Lighting (Turns without Door Pods):Diagram1
Mates	3200F

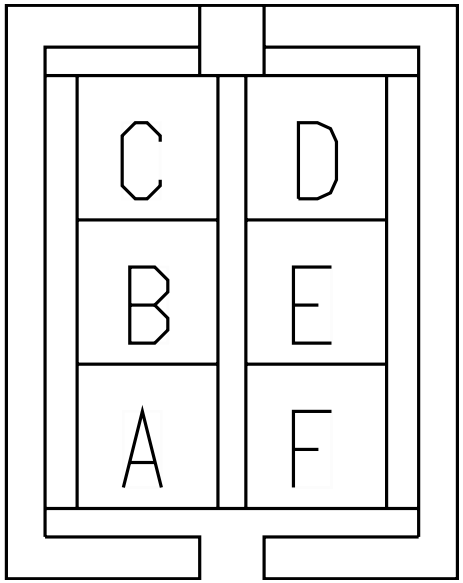

Name	Terminal Part Number	V-Min	Name	Wire Part Number	Wire CSA	Wire Spec	Wire Material description	Wire Color Description	Wire Length	End2 Terminal Part Number	End2 Pin Name	End2 Connect or
D	-	-	DD78-GB	3510360 R1	1.16	16.0	Thin Wall XLPE Primary Cable	WHITE	350.0	-	-	-

Connector Name	3205F
Part Number	1667529C1
Short Description	DOOR/ IP COURTESY LIGHT AND SPEAKER
Instances	LT/RH LoneStar - X15/A26 - Speakers:Four Speakers N/BT N/ QC:Diagram1-Day Cab LT/RH LoneStar - X15/A26 - Speakers:Four Speakers N/BT N/ QC:Diagram2-Sleeper LT/RH LoneStar - X15/A26 - Speakers:Four Speakers N/BT W/ QC:Diagram1-Day Cab LT/RH LoneStar - X15/A26 - Speakers:Four Speakers N/BT W/ QC:Diagram2-Sleeper LT/RH LoneStar - X15/A26 - Speakers:Four Speakers W/BT N/ QC:Diagram1-Day Cab LT/RH LoneStar - X15/A26 - Speakers:Four Speakers W/BT N/ QC:Diagram2-Sleeper LT/RH LoneStar - X15/A26 - Speakers:Four Speakers W/BT W/ QC:Diagram1-Day Cab LT/RH LoneStar - X15/A26 - Speakers:Four Speakers W/BT W/ QC:Diagram2-Sleeper LT/RH LoneStar - X15/A26 - Speakers:Speakers N/BT W/AMP N/QC:Diagram1 LT/RH LoneStar - X15/A26 - Speakers:Speakers W/BT W/AMP N/QC:Diagram1
Mates	3206M

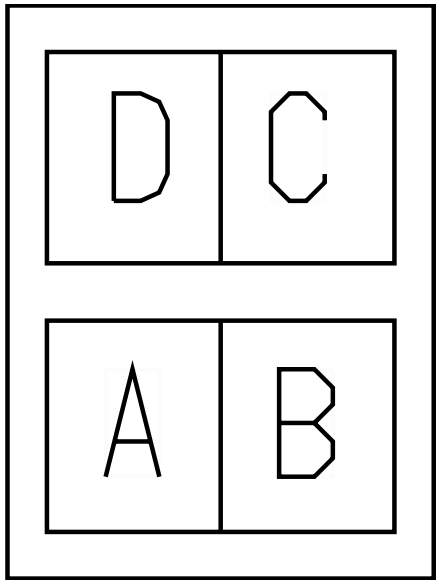

Name	Terminal Part Number	V-Min	Name	Wire Part Number	Wire CSA	Wire Spec	Wire Material description	Wire Color Description	Wire Length	End2 Terminal Part Number	End2 Pin Name	End2 Connector
C	-	-	F05-ES86H	2643671R1	0.79	18.0	Std. Wall XLPE Primary Cable	LIGHT GREEN	1050.0	-	A	F05-3300M
D	-	-	F05-ES86J	2643671R1	0.79	18.0	Std. Wall XLPE Primary Cable	LIGHT GREEN	1050.0	-	B	F05-3300M

Connector Name 3205F

Part Number 1667529C1

Instances LT/RH LoneStar - X15/A26 - Speakers:Four Speakers N/BT N/QC:Diagram1-Day Cab
LT/RH LoneStar - X15/A26 - Speakers:Four Speakers N/BT N/QC:Diagram2-Sleeper
LT/RH LoneStar - X15/A26 - Speakers:Four Speakers N/BT W/QC:Diagram1-Day Cab
LT/RH LoneStar - X15/A26 - Speakers:Four Speakers N/BT W/QC:Diagram2-Sleeper
LT/RH LoneStar - X15/A26 - Speakers:Four Speakers W/BT N/QC:Diagram1-Day Cab
LT/RH LoneStar - X15/A26 - Speakers:Four Speakers W/BT N/QC:Diagram2-Sleeper
LT/RH LoneStar - X15/A26 - Speakers:Four Speakers W/BT W/QC:Diagram1-Day Cab
LT/RH LoneStar - X15/A26 - Speakers:Four Speakers W/BT W/QC:Diagram2-Sleeper
LT/RH LoneStar - X15/A26 - Speakers:Speakers N/BT W/AMP N/QC:Diagram1
LT/RH LoneStar - X15/A26 - Speakers:Speakers W/BT W/AMP N/QC:Diagram1
LT/RH/LoneStar - X15/A26 - Courtesy Light Cab:Diagram1

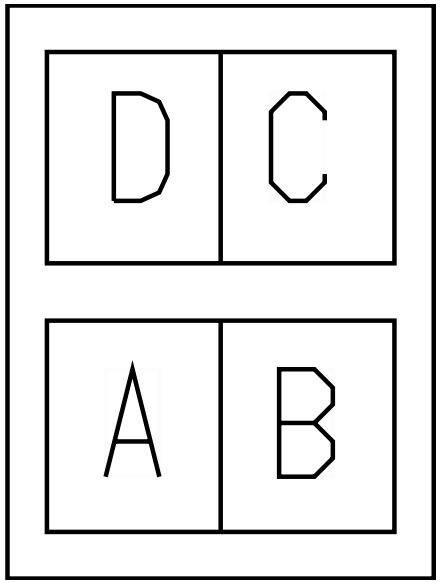

Mates 3205M

Name	Terminal Part Number	V-Min	Name	Wire Part Number	Wire CSA	Wire Spec	Wire Material description	Wire Color Description	Wire Length	End2 Terminal Part Number	End2 Pin Name	End2 Connector
A	-	-	E05-ED63BB	3510353 R1	0.79	18.0	Thin Wall XLPE Primary Cable	DARK BLUE	1200.0	-	A	E05-3400
B	-	-	E05-ED63-G	3510359 R1	0.79	18.0	Thin Wall XLPE Primary Cable	WHITE	1200.0	-	B	E05-3400
C	-	-	E05-ES86H	2643671 R1	0.79	18.0	Std. Wall XLPE Primary Cable	LIGHT GREEN	1050.0	-	A	E05-3300M

Name	Terminal Part Number	V-Min	Name	Wire Part Number	Wire CSA	Wire Spec	Wire Material description	Wire Color Description	Wire Length	End2 Terminal Part Number	End2 Pin Name	End2 Connect or
D	-	-	E05-ES86J	2643671R1	0.79	18.0	Std. Wall XLPE Primary Cable	LIGHT GREEN	1050.0	-	B	E05-3300M

Connector Name	3205F
Part Number	1667529C1
Short Description	DOOR/ IP COURTESY LIGHT AND SPEAKER
Instances	LT/RH/LoneStar - X15/A26 - Courtesy Light Cab:Diagram1
Mates	3206M

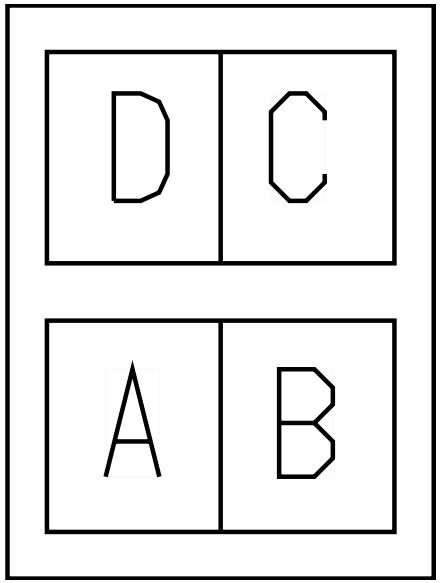

Name	Terminal Part Number	V-Min	Name	Wire Part Number	Wire CSA	Wire Spec	Wire Material description	Wire Color Description	Wire Length	End2 Terminal Part Number	End2 Pin Name	End2 Connect or
A	-	-	F05-ED63BB	3510353 R1	0.79	18.0	Thin Wall XLPE Primary Cable	DARK BLUE	1200.0	-	A	F05-3400
B	-	-	F05-ED63-G	3510359 R1	0.79	18.0	Thin Wall XLPE Primary Cable	WHITE	1200.0	-	B	F05-3400

Connector Name	3205M
Part Number	1667305C1
Short Description	IP/DOOR COURTESY LIGHT & SPEAKER
Instances	LT/RH LoneStar - X15/A26 - Speakers:Four Speakers N/BT N/QC:Diagram1-Day Cab LT/RH LoneStar - X15/A26 - Speakers:Four Speakers N/BT N/QC:Diagram2-Sleeper LT/RH LoneStar - X15/A26 - Speakers:Four Speakers N/BT W/QC:Diagram1-Day Cab LT/RH LoneStar - X15/A26 - Speakers:Four Speakers N/BT W/QC:Diagram2-Sleeper LT/RH LoneStar - X15/A26 - Speakers:Four Speakers W/BT N/QC:Diagram1-Day Cab LT/RH LoneStar - X15/A26 - Speakers:Four Speakers W/BT N/QC:Diagram2-Sleeper LT/RH LoneStar - X15/A26 - Speakers:Four Speakers W/BT W/QC:Diagram1-Day Cab LT/RH LoneStar - X15/A26 - Speakers:Four Speakers W/BT W/QC:Diagram2-Sleeper LT/RH LoneStar - X15/A26 - Speakers:Speakers N/BT W/AMP N/QC:Diagram1 LT/RH LoneStar - X15/A26 - Speakers:Speakers W/BT W/AMP N/QC:Diagram1 LT/RH/LoneStar - X15/A26 - Courtesy Light Cab:Diagram1
Mates	3205F

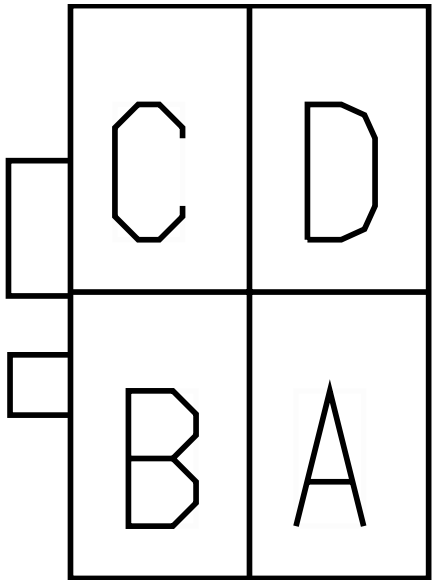

Name	Terminal Part Number	V-Min	Name	Wire Part Number	Wire CSA	Wire Spec	Wire Material description	Wire Color Description	Wire Length	End2 Terminal Part Number	End2 Pin Name	End2 Connect or
A	-	-	AA63BB	3510353 R1	0.79	18.0	Thin Wall XLPE Primary Cable	DARK BLUE	545.0	-	X	-
B	-	-	AA11-G	3510359 R1	0.79	18.0	Thin Wall XLPE Primary Cable	WHITE	760.0	-	X	-

Name	Terminal Part Number	V-Min	Name	Wire Part Number	Wire CSA	Wire Spec	Wire Material description	Wire Color Description	Wire Length	End2 Terminal Part Number	End2 Pin Name	End2 Connect or
C	-	-	MV86H	3510299 R1	0.79	18.0	Thin Wall XLPE Primary Cable	LIGHT GREEN	1400.0	-	13	A02-1300
C	-	-	MX86AH	3510299 R1	0.79	18.0	Thin Wall XLPE Primary Cable	LIGHT GREEN	2090.0	-	15	5000A
C	-	-	MB86HB	3510299 R1	0.79	18.0	Thin Wall XLPE Primary Cable	LIGHT GREEN	275.0	-	F	A02-1916
D	-	-	MV86J	3510299 R1	0.79	18.0	Thin Wall XLPE Primary Cable	LIGHT GREEN	1400.0	-	14	A02-1300
D	-	-	MX86AJ	3510299 R1	0.79	18.0	Thin Wall XLPE Primary Cable	LIGHT GREEN	2090.0	-	16	5000A
D	-	-	MB86JB	3510299 R1	0.79	18.0	Thin Wall XLPE Primary Cable	LIGHT GREEN	275.0	-	G	A02-1916

Connector Name	3206M
Part Number	1667305C1
Short Description	IP/DOOR COURTESY LIGHT & SPEAKER
Instances	LT/RH LoneStar - X15/A26 - Speakers:Four Speakers N/BT N/ QC:Diagram1-Day Cab LT/RH LoneStar - X15/A26 - Speakers:Four Speakers N/BT N/ QC:Diagram2-Sleeper LT/RH LoneStar - X15/A26 - Speakers:Four Speakers N/BT W/ QC:Diagram1-Day Cab LT/RH LoneStar - X15/A26 - Speakers:Four Speakers N/BT W/ QC:Diagram2-Sleeper LT/RH LoneStar - X15/A26 - Speakers:Four Speakers W/BT N/ QC:Diagram1-Day Cab LT/RH LoneStar - X15/A26 - Speakers:Four Speakers W/BT N/ QC:Diagram2-Sleeper LT/RH LoneStar - X15/A26 - Speakers:Four Speakers W/BT W/ QC:Diagram1-Day Cab LT/RH LoneStar - X15/A26 - Speakers:Four Speakers W/BT W/ QC:Diagram2-Sleeper LT/RH LoneStar - X15/A26 - Speakers:Speakers N/BT W/AMP N/QC:Diagram1 LT/RH LoneStar - X15/A26 - Speakers:Speakers W/BT W/AMP N/QC:Diagram1
Mates	3205F

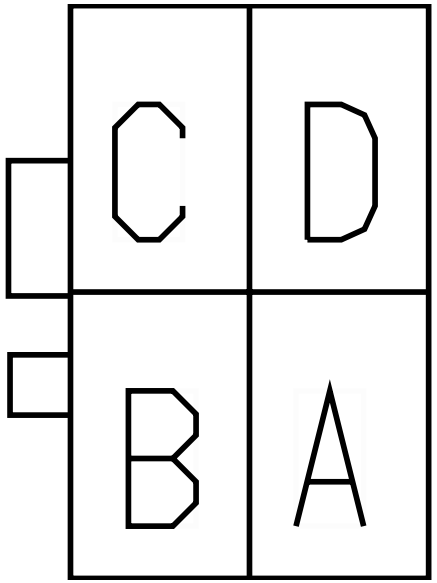

Name	Terminal Part Number	V-Min	Name	Wire Part Number	Wire CSA	Wire Spec	Wire Material description	Wire Color Description	Wire Length	End2 Terminal Part Number	End2 Pin Name	End2 Connect or
C	-	-	MV86K	3510299 R1	0.79	18.0	Thin Wall XLPE Primary Cable	LIGHT GREEN	1600.0	-	11	A02-1300
C	-	-	MX86AK	3510299 R1	0.79	18.0	Thin Wall XLPE Primary Cable	LIGHT GREEN	3800.0	-	13	5000A
C	-	-	MB86K	3510299 R1	0.79	18.0	Thin Wall XLPE Primary Cable	LIGHT GREEN	1600.0	-	11	A02-1300

Name	Terminal Part Number	V-Min	Name	Wire Part Number	Wire CSA	Wire Spec	Wire Material description	Wire Color Description	Wire Length	End2 Terminal Part Number	End2 Pin Name	End2 Connect or
D	-	-	MV86L	3510299 R1	0.79	18.0	Thin Wall XLPE Primary Cable	LIGHT GREEN	1600.0	-	12	A02-1300
D	-	-	MX86AL	3510299 R1	0.79	18.0	Thin Wall XLPE Primary Cable	LIGHT GREEN	3800.0	-	14	5000A
D	-	-	MB86L	3510299 R1	0.79	18.0	Thin Wall XLPE Primary Cable	LIGHT GREEN	1600.0	-	12	A02-1300

Connector Name	3206M
Part Number	1667305C1
Short Description	IP/DOOR COURTESY LIGHT & SPEAKER
Instances	LT/RH/LoneStar - X15/A26 - Courtesy Light Cab:Diagram1
Mates	3205F

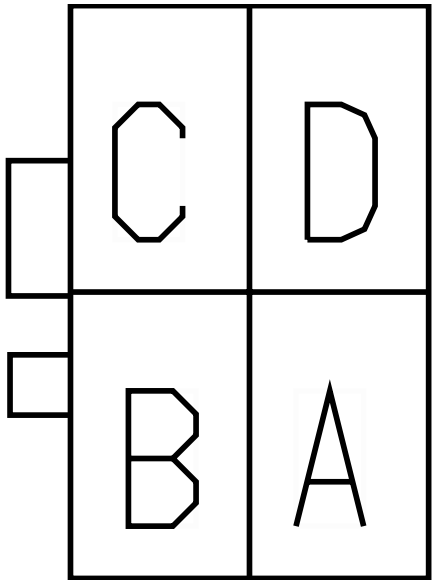

Name	Terminal Part Number	V-Min	Name	Wire Part Number	Wire CSA	Wire Spec	Wire Material description	Wire Color Description	Wire Length	End2 Terminal Part Number	End2 Pin Name	End2 Connect or
A	-	-	AA63BC	3510353 R1	0.79	18.0	Thin Wall XLPE Primary Cable	DARK BLUE	2255.0	-	X	-
B	-	-	AA11-GK	3510359 R1	0.79	18.0	Thin Wall XLPE Primary Cable	WHITE	1520.0	-	X	-

Connector Name	380
Part Number	BLUNT_SL_VC
Instances	Cab J1939 (250Kbps):Cab J1939 (250Kbps)
Mates	BLNT-J1939-3020-03-01A

Name	Terminal Part Number	V-Min	Name	Wire Part Number	Wire CSA	Wire Spec	Wire Material description	Wire Color Description	Wire Length	End2 Terminal Part Number	End2 Pin Name	End2 Connect or
A	-	-	WIRE223970	-	0.0	-	-	-	0.0	-	L	1026
B	-	-	WIRE223971	-	0.0	-	-	-	0.0	-	B	1026

Connector Name	4005B
Part Number	3866817C1
Instances	LT/RH A26 - Cooling Fan Control With Switch:Diagram1 LT/RH A26 - Cooling Fan Control Without Switch:Diagram1
Mates	Radiator Frame Ground

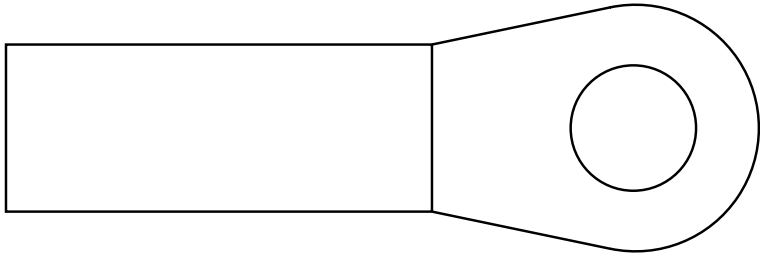

Name	Terminal Part Number	V-Min	Name	Wire Part Number	Wire CSA	Wire Spec	Wire Material description	Wire Color Description	Wire Length	End2 Terminal Part Number	End2 Pin Name	End2 Connect or
A	-	-	MA11-GC	2643787 R1	3.01	12.0	Std. Wall XLPE Primary Cable	WHITE	1960.0	-	A	M01-8600

Connector Name	4005B
Part Number	3866817C1
Instances	LoneStar - X15 - Cooling Fan Control With Switch:Diagram1 LoneStar - X15 - Cooling Fan Control Without Switch:Diagram1 LT/RH X15 - Cooling Fan Control With Switch:Diagram1 LT/RH X15 - Cooling Fan Control Without Switch:Diagram1
Mates	Radiator Frame Ground

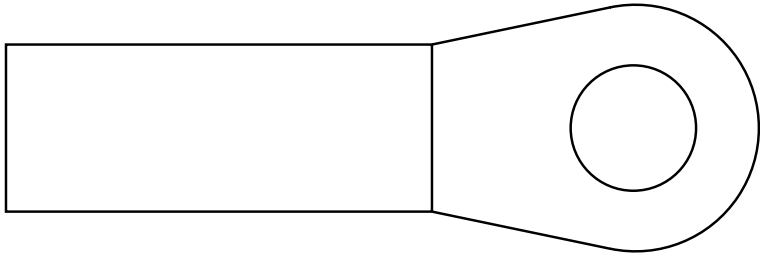

Name	Terminal Part Number	V-Min	Name	Wire Part Number	Wire CSA	Wire Spec	Wire Material description	Wire Color Description	Wire Length	End2 Terminal Part Number	End2 Pin Name	End2 Connect or
A	-	-	MA11-GC	2643787 R1	3.01	12.0	Std. Wall XLPE Primary Cable	WHITE	1960.0	-	A	M02-8600
A	-	-	MA11-GC	2643787 R1	3.01	12.0	Std. Wall XLPE Primary Cable	WHITE	1960.0	-	A	M01-8600

Connector Name	4028C
Part Number	338892C2
Instances	LT/RH/LoneStar - X15/A26 - DLB - Remote Power Module (2 RPM w/ Switch Packs):Diagram1
Mates	MOT-STARTER

Name	Terminal Part Number	V-Min	Name	Wire Part Number	Wire CSA	Wire Spec	Wire Material description	Wire Color Description	Wire Length	End2 Terminal Part Number	End2 Pin Name	End2 Connect or
A	-	-	M14A-FL	2643473 R1	4.81	10.0	FUSEABLE LINK	RUST	150.0	-	X	-
A	-	-	N14X-FL	2643473 R1	4.81	10.0	FUSEABLE LINK	RUST	150.0	-	X	-

Connector Name	4320M
Part Number	3517760C1
Short Description	FWD REMOTE POSITIVE FEED
Instances	LT/RH/LoneStar - X15/A26 - DLB - Remote Power Module (2 RPM w/ Switch Packs):Diagram1
Mates	4411F

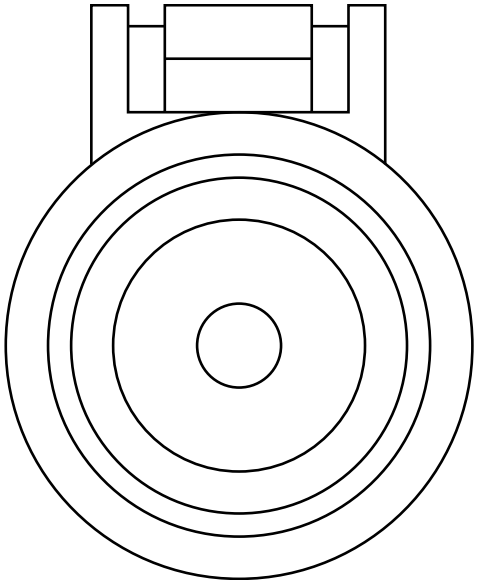

Name	Terminal Part Number	V-Min	Name	Wire Part Number	Wire CSA	Wire Spec	Wire Material description	Wire Color Description	Wire Length	End2 Terminal Part Number	End2 Pin Name	End2 Connect or
A	-	-	M14	2645255 R1	18.94	4.0	SGX FLEX 125C	RED	300.0	-	X	-

Connector Name	4328
Part Number	3602454C1
Instances	LT/RH - A26 - Interface Connector:Diagram1
Mates	DEV-ENGINE_DIAG_CONN-01

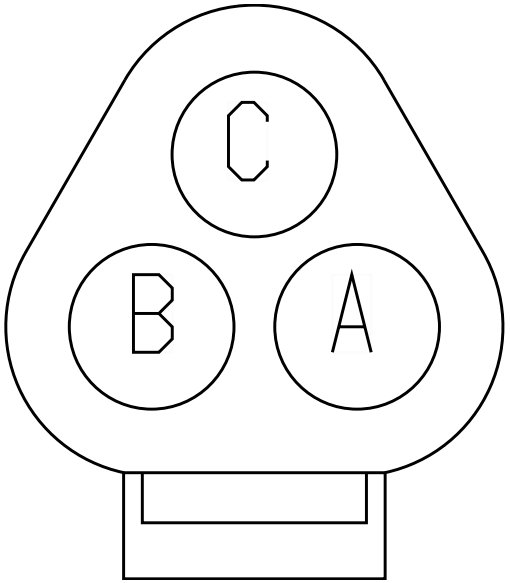

Name	Terminal Part Number	V-Min	Name	Wire Part Number	Wire CSA	Wire Spec	Wire Material description	Wire Color Description	Wire Length	End2 Terminal Part Number	End2 Pin Name	End2 Connect or
A	-	-	-	-	-	-	-	-	-	-	-	-
B	-	-	-	-	-	-	-	-	-	-	-	-

Connector Name	4411F
Part Number	3517759C1
Short Description	RPM 1 POSITIVE FEED-OUTSIDE CAB
Instances	LT/RH/LoneStar - X15/A26 - DLB - Remote Power Module (2 RPM w/ Switch Packs):Diagram1
Mates	4320M

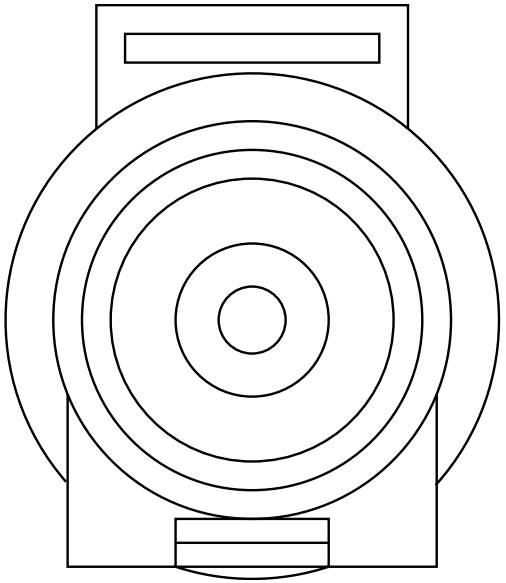

Name	Terminal Part Number	V-Min	Name	Wire Part Number	Wire CSA	Wire Spec	Wire Material description	Wire Color Description	Wire Length	End2 Terminal Part Number	End2 Pin Name	End2 Connect or
A	-	-	14	2645962 R1	49.99	0.0	SGX NFLEX 125	RED	700.0	-	A	W11-4411M

Connector Name	4412F
Part Number	3517759C1
Short Description	RPM 2 POSITIVE FEED-OUTSIDE CAB
Instances	LT/RH/LoneStar - X15/A26 - DLB - Remote Power Module (2 RPM w/ Switch Packs):Diagram1
Mates	4412M

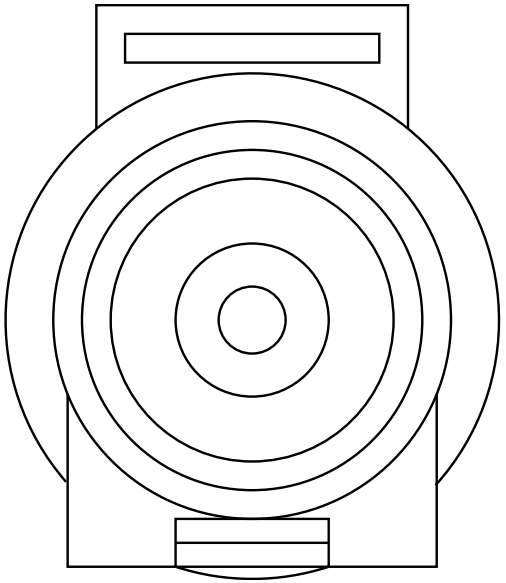

Name	Terminal Part Number	V-Min	Name	Wire Part Number	Wire CSA	Wire Spec	Wire Material description	Wire Color Description	Wire Length	End2 Terminal Part Number	End2 Pin Name	End2 Connect or
A	-	-	14D	2645255 R1	18.94	4.0	SGX FLEX 125C	RED	800.0	-	A	W11-4412M

Connector Name	4412M
Part Number	3517760C1
Short Description	REMOTE POWER MODULE POSITIVE FEED
Instances	LT/RH/LoneStar - X15/A26 - DLB - Remote Power Module (2 RPM w/ Switch Packs):Diagram1
Mates	4412F

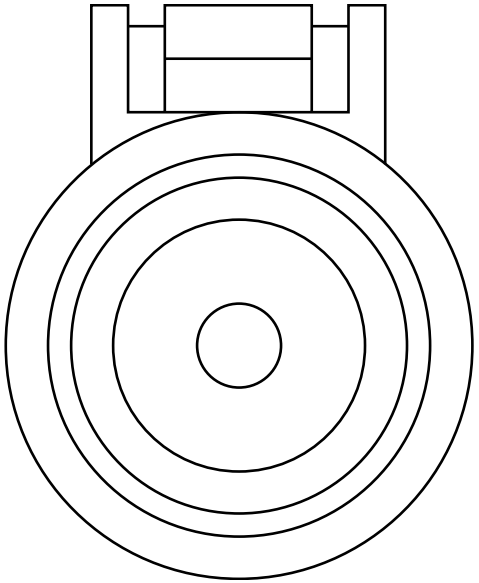

Name	Terminal Part Number	V-Min	Name	Wire Part Number	Wire CSA	Wire Spec	Wire Material description	Wire Color Description	Wire Length	End2 Terminal Part Number	End2 Pin Name	End2 Connect or
A	-	-	N14Z	2645255 R1	18.94	4.0	SGX FLEX 125C	RED	300.0	-	X	-

Connector Name 4450BM

Part Number 2039311C91

Instances LoneStar - X15 - Body Builder Lighting - (BOC EOF In Cab) (8HAB 8HAE 8HAU) (Automatic):Diagram2
LoneStar - X15 - Body Builder Lighting - (BOC EOF In Cab) (8HAB 8HAE 8HAU) (Manual):Diagram2
LT/RH - A26 - Body Builder Lighting - (BOC EOF In Cab) (8HAB 8HAE 8HAU) (Manual):Diagram2
LT/RH - A26 - Body Builder Lighting - (BOC EOF In Cab) (8HAB 8HAE 8HAU) (Manual):Diagram4
LT/RH - X15 - Body Builder Lighting - (BOC EOF In Cab) (8HAB 8HAE 8HAU) (Manual):Diagram2
LT/RH - X15/A26 - Body Builder Lighting - (BOC EOF In Cab) (8HAB 8HAE 8HAU) (Automatic):Diagram2

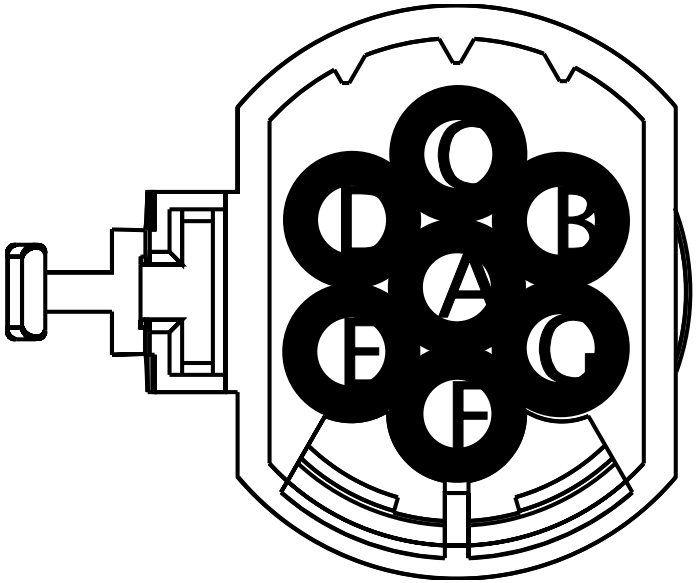

Name	Terminal Part Number	V-Min	Name	Wire Part Number	Wire CSA	Wire Spec	Wire Material description	Wire Color Description	Wire Length	End2 Terminal Part Number	End2 Pin Name	End2 Connect or
A	-	-	RX68BB	3510307 R1	1.91	14.0	Thin Wall XLPE Primary Cable	BROWN	3595.0	-	A	4450F
B	-	-	RX56BB	3510336 R1	1.16	16.0	Thin Wall XLPE Primary Cable	YELLOW 2	3595.0	-	B	4450F
C	-	-	RX57BB	3510300 R1	1.16	16.0	Thin Wall XLPE Primary Cable	LIGHT GREEN	3595.0	-	C	4450F
D	-	-	RX54BB	3510307 R1	1.91	14.0	Thin Wall XLPE Primary Cable	BROWN	3595.0	-	D	4450F

Name	Terminal Part Number	V-Min	Name	Wire Part Number	Wire CSA	Wire Spec	Wire Material description	Wire Color Description	Wire Length	End2 Terminal Part Number	End2 Pin Name	End2 Connector
E	-	-	RX71BB	3510342 R1	1.16	16.0	Thin Wall XLPE Primary Cable	LIGHT BLUE	3595.0	-	E	4450F
G	-	-	RX11-GBB	3510362 R1	3.01	12.0	Thin Wall XLPE Primary Cable	WHITE	3595.0	-	-	-
G	-	-	RX11-GBB	3510362 R1	3.01	12.0	Thin Wall XLPE Primary Cable	WHITE	3595.0	-	G	4450F

Connector Name 4450FM

Part Number 2039311C91

Short Description BODY BUILDER CONNECTION

Instances LoneStar - X15 - Body Builder Lighting - (BOC EOF In Cab) (8HAB 8HAE 8HAU) (Automatic):Diagram1
LoneStar - X15 - Body Builder Lighting - (BOC EOF In Cab) (8HAB 8HAE 8HAU) (Automatic):Diagram2
LoneStar - X15 - Body Builder Lighting - (BOC EOF In Cab) (8HAB 8HAE 8HAU) (Manual):Diagram1
LoneStar - X15 - Body Builder Lighting - (BOC EOF In Cab) (8HAB 8HAE 8HAU) (Manual):Diagram2
LT/RH - A26 - Body Builder Lighting - (BOC EOF In Cab) (8HAB 8HAE 8HAU) (Manual):Diagram1
LT/RH - A26 - Body Builder Lighting - (BOC EOF In Cab) (8HAB 8HAE 8HAU) (Manual):Diagram2
LT/RH - A26 - Body Builder Lighting - (BOC EOF In Cab) (8HAB 8HAE 8HAU) (Manual):Diagram3
LT/RH - A26 - Body Builder Lighting - (BOC EOF In Cab) (8HAB 8HAE 8HAU) (Manual):Diagram4
LT/RH - X15 - Body Builder Lighting - (BOC EOF In Cab) (8HAB 8HAE 8HAU) (Manual):Diagram1
LT/RH - X15 - Body Builder Lighting - (BOC EOF In Cab) (8HAB 8HAE 8HAU) (Manual):Diagram2
LT/RH - X15/A26 - Body Builder Lighting - (BOC EOF In Cab) (8HAB 8HAE 8HAU) (Automatic):Diagram1
LT/RH - X15/A26 - Body Builder Lighting - (BOC EOF In Cab) (8HAB 8HAE 8HAU) (Automatic):Diagram2

Mates 4450F

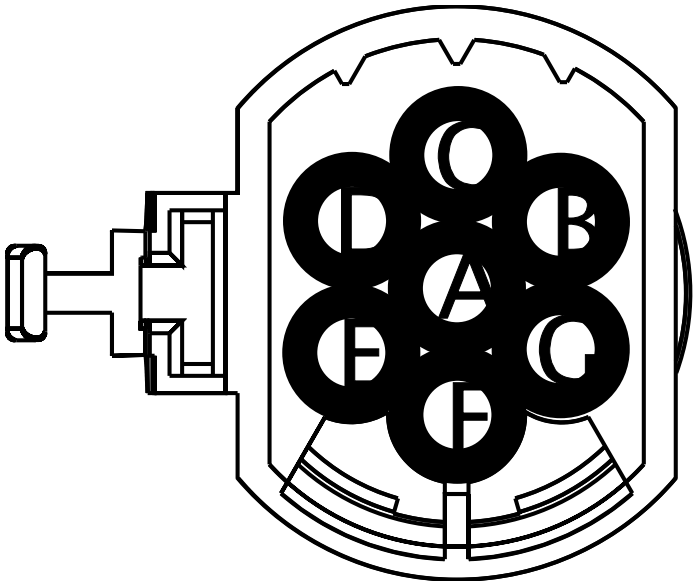

Name	Terminal Part Number	V-Min	Name	Wire Part Number	Wire CSA	Wire Spec	Wire Material description	Wire Color Description	Wire Length	End2 Terminal Part Number	End2 Pin Name	End2 Connector
A	-	-	PV68BB	3510307 R1	1.91	14.0	Thin Wall XLPE Primary Cable	BROWN	3235.0	-	-	-
A	-	-	PU68BB	3510307 R1	1.91	14.0	Thin Wall XLPE Primary Cable	BROWN	2510.0	-	A	4450M

Name	Terminal Part Number	V-Min	Name	Wire Part Number	Wire CSA	Wire Spec	Wire Material description	Wire Color Description	Wire Length	End2 Terminal Part Number	End2 Pin Name	End2 Connector
B	-	-	PU56BB	3510336 R1	1.16	16.0	Thin Wall XLPE Primary Cable	YELLOW 2	2510.0	-	B	4450M
B	-	-	PV56BB	3510336 R1	1.16	16.0	Thin Wall XLPE Primary Cable	YELLOW 2	3235.0	-	-	-
C	-	-	PV57BB	3510300 R1	1.16	16.0	Thin Wall XLPE Primary Cable	LIGHT GREEN	3235.0	-	-	-
C	-	-	PU57BB	3510300 R1	1.16	16.0	Thin Wall XLPE Primary Cable	LIGHT GREEN	2510.0	-	C	4450M
D	-	-	PU54BB	3510307 R1	1.91	14.0	Thin Wall XLPE Primary Cable	BROWN	2510.0	-	D	4450M
D	-	-	PV54BB	3510307 R1	1.91	14.0	Thin Wall XLPE Primary Cable	BROWN	3235.0	-	-	-
E	-	-	PV71BB	3510342 R1	1.16	16.0	Thin Wall XLPE Primary Cable	LIGHT BLUE	3235.0	-	-	-
E	-	-	PU71BB	3510342 R1	1.16	16.0	Thin Wall XLPE Primary Cable	LIGHT BLUE	2537.0	-	E	4450M
G	-	-	PV11-GBB	3510362 R1	3.01	12.0	Thin Wall XLPE Primary Cable	WHITE	2185.0	-	-	-

Connector Name 4450F

Part Number 2039312C91

Short Description BODY BUILDER CONNECTION

Instances LoneStar - X15 - Body Builder Lighting - (BOC EOF In Cab) (8HAB 8HAE 8HAU) (Automatic):Diagram1
LoneStar - X15 - Body Builder Lighting - (BOC EOF In Cab) (8HAB 8HAE 8HAU) (Automatic):Diagram2
LoneStar - X15 - Body Builder Lighting - (BOC EOF In Cab) (8HAB 8HAE 8HAU) (Manual):Diagram1
LoneStar - X15 - Body Builder Lighting - (BOC EOF In Cab) (8HAB 8HAE 8HAU) (Manual):Diagram2
LT/RH - A26 - Body Builder Lighting - (BOC EOF In Cab) (8HAB 8HAE 8HAU) (Manual):Diagram1
LT/RH - A26 - Body Builder Lighting - (BOC EOF In Cab) (8HAB 8HAE 8HAU) (Manual):Diagram2
LT/RH - A26 - Body Builder Lighting - (BOC EOF In Cab) (8HAB 8HAE 8HAU) (Manual):Diagram3
LT/RH - A26 - Body Builder Lighting - (BOC EOF In Cab) (8HAB 8HAE 8HAU) (Manual):Diagram4
LT/RH - X15 - Body Builder Lighting - (BOC EOF In Cab) (8HAB 8HAE 8HAU) (Manual):Diagram1
LT/RH - X15 - Body Builder Lighting - (BOC EOF In Cab) (8HAB 8HAE 8HAU) (Manual):Diagram2
LT/RH - X15/A26 - Body Builder Lighting - (BOC EOF In Cab) (8HAB 8HAE 8HAU) (Automatic):Diagram1
LT/RH - X15/A26 - Body Builder Lighting - (BOC EOF In Cab) (8HAB 8HAE 8HAU) (Automatic):Diagram2

Mates 4450FM

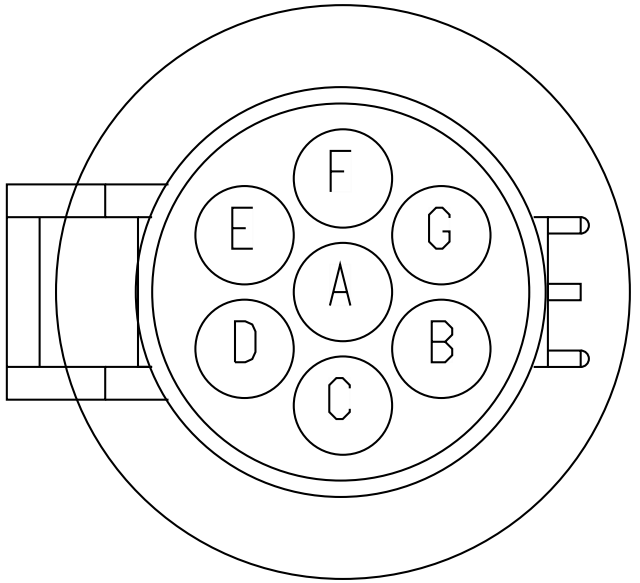

Name	Terminal Part Number	V-Min	Name	Wire Part Number	Wire CSA	Wire Spec	Wire Material description	Wire Color Description	Wire Length	End2 Terminal Part Number	End2 Pin Name	End2 Connector
A	-	-	RX68BB	3510307 R1	1.91	14.0	Thin Wall XLPE Primary Cable	BROWN	3595.0	-	A	4450BM
A	-	-	BB68	3510307 R1	1.91	14.0	Thin Wall XLPE Primary Cable	BROWN	600.0	-	74	1700F

Name	Terminal Part Number	V-Min	Name	Wire Part Number	Wire CSA	Wire Spec	Wire Material description	Wire Color Description	Wire Length	End2 Terminal Part Number	End2 Pin Name	End2 Connector
B	-	-	RX56BB	3510336 R1	1.16	16.0	Thin Wall XLPE Primary Cable	YELLOW 2	3595.0	-	B	4450BM
B	-	-	BB56AA	3510336 R1	1.16	16.0	Thin Wall XLPE Primary Cable	YELLOW 2	600.0	-	69	1700F
B	-	-	BB56A	3510336 R1	1.16	16.0	Thin Wall XLPE Primary Cable	YELLOW 2	600.0	-	69	1700F
C	-	-	RX57BB	3510300 R1	1.16	16.0	Thin Wall XLPE Primary Cable	LIGHT GREEN	3595.0	-	C	4450BM
C	-	-	BB57A	3510300 R1	1.16	16.0	Thin Wall XLPE Primary Cable	LIGHT GREEN	600.0	-	71	1700F
D	-	-	RX54BB	3510307 R1	1.91	14.0	Thin Wall XLPE Primary Cable	BROWN	3595.0	-	D	4450BM
D	-	-	BB54	3510307 R1	1.91	14.0	Thin Wall XLPE Primary Cable	BROWN	600.0	-	73	1700F
E	-	-	RX71BB	3510342 R1	1.16	16.0	Thin Wall XLPE Primary Cable	LIGHT BLUE	3595.0	-	E	4450BM

Name	Terminal Part Number	V-Min	Name	Wire Part Number	Wire CSA	Wire Spec	Wire Material description	Wire Color Description	Wire Length	End2 Terminal Part Number	End2 Pin Name	End2 Connect or
E	-	-	BB71	3510342 R1	1.16	16.0	Thin Wall XLPE Primary Cable	LIGHT BLUE	609.0	-	76	1700F
G	-	-	RX11-GBB	3510362 R1	3.01	12.0	Thin Wall XLPE Primary Cable	WHITE	3595.0	-	G	4450BM

Connector Name	4450M
Part Number	2039311C91
Instances	LoneStar - X15 - Body Builder Lighting - (BOC EOF In Cab) (8HAB 8HAE 8HAU) (Automatic):Diagram1 LoneStar - X15 - Body Builder Lighting - (BOC EOF In Cab) (8HAB 8HAE 8HAU) (Manual):Diagram1 LT/RH - A26 - Body Builder Lighting - (BOC EOF In Cab) (8HAB 8HAE 8HAU) (Manual):Diagram1 LT/RH - A26 - Body Builder Lighting - (BOC EOF In Cab) (8HAB 8HAE 8HAU) (Manual):Diagram3 LT/RH - X15 - Body Builder Lighting - (BOC EOF In Cab) (8HAB 8HAE 8HAU) (Manual):Diagram1 LT/RH - X15/A26 - Body Builder Lighting - (BOC EOF In Cab) (8HAB 8HAE 8HAU) (Automatic):Diagram1
Mates	BODY_BUILDER-1036-05-01

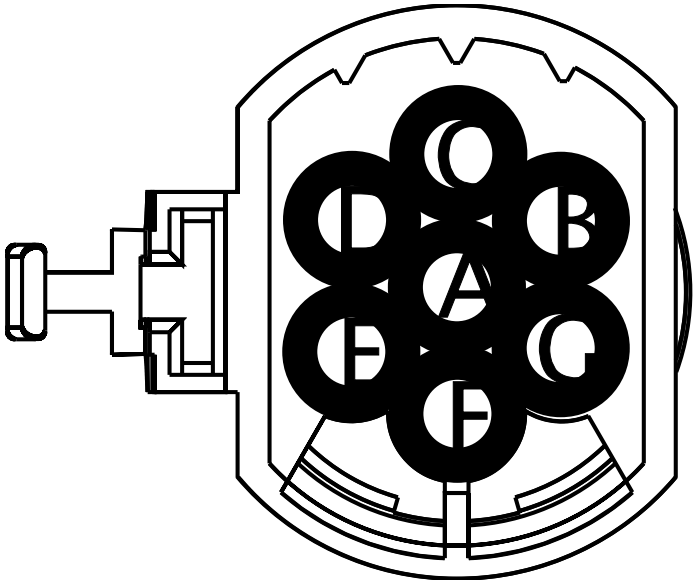

Name	Terminal Part Number	V-Min	Name	Wire Part Number	Wire CSA	Wire Spec	Wire Material description	Wire Color Description	Wire Length	End2 Terminal Part Number	End2 Pin Name	End2 Connect or
A	-	-	PU68BB	3510307 R1	1.91	14.0	Thin Wall XLPE Primary Cable	BROWN	2510.0	-	A	4450FM
B	-	-	PU56BB	3510336 R1	1.16	16.0	Thin Wall XLPE Primary Cable	YELLOW 2	2510.0	-	B	4450FM
C	-	-	PU57BB	3510300 R1	1.16	16.0	Thin Wall XLPE Primary Cable	LIGHT GREEN	2510.0	-	C	4450FM
D	-	-	PU54BB	3510307 R1	1.91	14.0	Thin Wall XLPE Primary Cable	BROWN	2510.0	-	D	4450FM

Name	Terminal Part Number	V-Min	Name	Wire Part Number	Wire CSA	Wire Spec	Wire Material description	Wire Color Description	Wire Length	End2 Terminal Part Number	End2 Pin Name	End2 Connect or
E	-	-	PU71BB	3510342 R1	1.16	16.0	Thin Wall XLPE Primary Cable	LIGHT BLUE	2537.0	-	E	4450FM
G	-	-	PU11-GBB	3510362 R1	3.01	12.0	Thin Wall XLPE Primary Cable	WHITE	1460.0	-	-	-

Connector Name 4460BM

Part Number 1686834C1

Instances LoneStar - X15 - Body Builder Lighting - (BOC EOF In Cab) (8HAB 8HAE 8HAU) (Automatic):Diagram2
LoneStar - X15 - Body Builder Lighting - (BOC EOF In Cab) (8HAB 8HAE 8HAU) (Manual):Diagram2
LT/RH - A26 - Body Builder Lighting - (BOC EOF In Cab) (8HAB 8HAE 8HAU) (Manual):Diagram2
LT/RH - A26 - Body Builder Lighting - (BOC EOF In Cab) (8HAB 8HAE 8HAU) (Manual):Diagram4
LT/RH - X15 - Body Builder Lighting - (BOC EOF In Cab) (8HAB 8HAE 8HAU) (Manual):Diagram2
LT/RH - X15/A26 - Body Builder Lighting - (BOC EOF In Cab) (8HAB 8HAE 8HAU) (Automatic):Diagram2

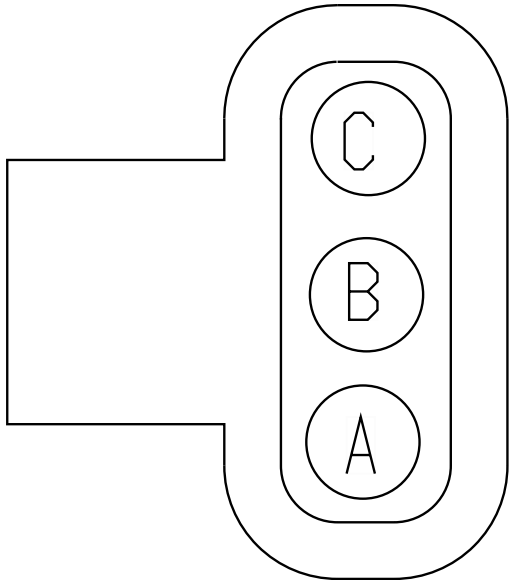

Name	Terminal Part Number	V-Min	Name	Wire Part Number	Wire CSA	Wire Spec	Wire Material description	Wire Color Description	Wire Length	End2 Terminal Part Number	End2 Pin Name	End2 Connector
A	-	-	RX56BC	3510336 R1	1.16	16.0	Thin Wall XLPE Primary Cable	YELLOW 2	3595.0	-	A	4460F
B	-	-	RX57BC	3510300 R1	1.16	16.0	Thin Wall XLPE Primary Cable	LIGHT GREEN	3595.0	-	B	4460F
C	-	-	RX70BB	3510368 R1	3.01	12.0	Thin Wall XLPE Primary Cable	RED	3595.0	-	C	4460F

Connector Name	4460FM
Part Number	1686834C1
Short Description	BODY BUILDER TURN/STOP
Instances	LoneStar - X15 - Body Builder Lighting - (BOC EOF In Cab) (8HAB 8HAE 8HAU) (Automatic):Diagram1 LoneStar - X15 - Body Builder Lighting - (BOC EOF In Cab) (8HAB 8HAE 8HAU) (Automatic):Diagram2 LoneStar - X15 - Body Builder Lighting - (BOC EOF In Cab) (8HAB 8HAE 8HAU) (Manual):Diagram1 LoneStar - X15 - Body Builder Lighting - (BOC EOF In Cab) (8HAB 8HAE 8HAU) (Manual):Diagram2 LT/RH - A26 - Body Builder Lighting - (BOC EOF In Cab) (8HAB 8HAE 8HAU) (Manual):Diagram1 LT/RH - A26 - Body Builder Lighting - (BOC EOF In Cab) (8HAB 8HAE 8HAU) (Manual):Diagram2 LT/RH - A26 - Body Builder Lighting - (BOC EOF In Cab) (8HAB 8HAE 8HAU) (Manual):Diagram3 LT/RH - A26 - Body Builder Lighting - (BOC EOF In Cab) (8HAB 8HAE 8HAU) (Manual):Diagram4 LT/RH - X15 - Body Builder Lighting - (BOC EOF In Cab) (8HAB 8HAE 8HAU) (Manual):Diagram1 LT/RH - X15 - Body Builder Lighting - (BOC EOF In Cab) (8HAB 8HAE 8HAU) (Manual):Diagram2 LT/RH - X15/A26 - Body Builder Lighting - (BOC EOF In Cab) (8HAB 8HAE 8HAU) (Automatic):Diagram1 LT/RH - X15/A26 - Body Builder Lighting - (BOC EOF In Cab) (8HAB 8HAE 8HAU) (Automatic):Diagram2
Mates	4460F

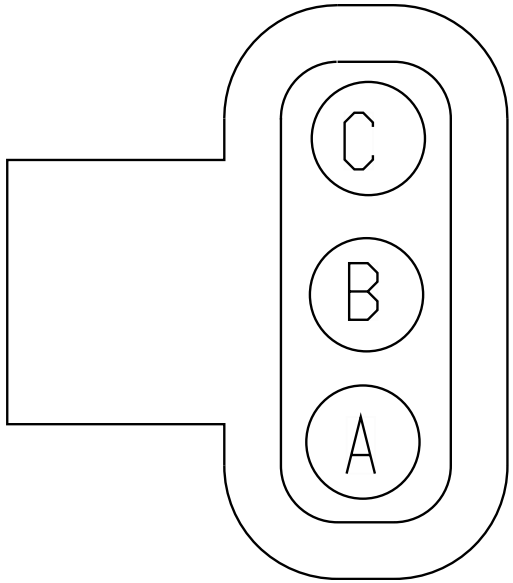

Name	Terminal Part Number	V-Min	Name	Wire Part Number	Wire CSA	Wire Spec	Wire Material description	Wire Color Description	Wire Length	End2 Terminal Part Number	End2 Pin Name	End2 Connector
A	-	-	PU56BC	3510336 R1	1.16	16.0	Thin Wall XLPE Primary Cable	YELLOW 2	2510.0	-	A	4460M
A	-	-	PV56BC	3510336 R1	1.16	16.0	Thin Wall XLPE Primary Cable	YELLOW 2	3235.0	-	A	4460RM

Name	Terminal Part Number	V-Min	Name	Wire Part Number	Wire CSA	Wire Spec	Wire Material description	Wire Color Description	Wire Length	End2 Terminal Part Number	End2 Pin Name	End2 Connector
B	-	-	PV57BC	3510300 R1	1.16	16.0	Thin Wall XLPE Primary Cable	LIGHT GREEN	3235.0	-	B	4460RM
B	-	-	PU57BC	3510300 R1	1.16	16.0	Thin Wall XLPE Primary Cable	LIGHT GREEN	2510.0	-	B	4460M
C	-	-	PU70BB	3510368 R1	3.01	12.0	Thin Wall XLPE Primary Cable	RED	2510.0	-	C	4460M
C	-	-	PV70BB	3510368 R1	3.01	12.0	Thin Wall XLPE Primary Cable	RED	3235.0	-	C	4460RM

Connector Name 4460F

Part Number 3553961C1

Short Description BODY BUILDER TURN/STOP

Instances LoneStar - X15 - Body Builder Lighting - (BOC EOF In Cab) (8HAB 8HAE 8HAU) (Automatic):Diagram1
LoneStar - X15 - Body Builder Lighting - (BOC EOF In Cab) (8HAB 8HAE 8HAU) (Automatic):Diagram2
LoneStar - X15 - Body Builder Lighting - (BOC EOF In Cab) (8HAB 8HAE 8HAU) (Manual):Diagram1
LoneStar - X15 - Body Builder Lighting - (BOC EOF In Cab) (8HAB 8HAE 8HAU) (Manual):Diagram2
LT/RH - A26 - Body Builder Lighting - (BOC EOF In Cab) (8HAB 8HAE 8HAU) (Manual):Diagram1
LT/RH - A26 - Body Builder Lighting - (BOC EOF In Cab) (8HAB 8HAE 8HAU) (Manual):Diagram2
LT/RH - A26 - Body Builder Lighting - (BOC EOF In Cab) (8HAB 8HAE 8HAU) (Manual):Diagram3
LT/RH - A26 - Body Builder Lighting - (BOC EOF In Cab) (8HAB 8HAE 8HAU) (Manual):Diagram4
LT/RH - X15 - Body Builder Lighting - (BOC EOF In Cab) (8HAB 8HAE 8HAU) (Manual):Diagram1
LT/RH - X15 - Body Builder Lighting - (BOC EOF In Cab) (8HAB 8HAE 8HAU) (Manual):Diagram2
LT/RH - X15/A26 - Body Builder Lighting - (BOC EOF In Cab) (8HAB 8HAE 8HAU) (Automatic):Diagram1
LT/RH - X15/A26 - Body Builder Lighting - (BOC EOF In Cab) (8HAB 8HAE 8HAU) (Automatic):Diagram2

Mates 4460FM

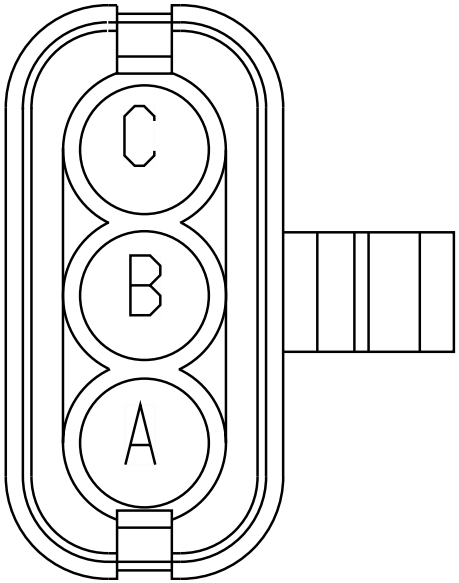

Name	Terminal Part Number	V-Min	Name	Wire Part Number	Wire CSA	Wire Spec	Wire Material description	Wire Color Description	Wire Length	End2 Terminal Part Number	End2 Pin Name	End2 Connector
A	-	-	BB56B	3510336 R1	1.16	16.0	Thin Wall XLPE Primary Cable	YELLOW 2	600.0	-	70	1700F
B	-	-	BB57B	3510300 R1	1.16	16.0	Thin Wall XLPE Primary Cable	LIGHT GREEN	600.0	-	72	1700F

Name	Terminal Part Number	V-Min	Name	Wire Part Number	Wire CSA	Wire Spec	Wire Material description	Wire Color Description	Wire Length	End2 Terminal Part Number	End2 Pin Name	End2 Connect or
C	-	-	BB70	3510368 R1	3.01	12.0	Thin Wall XLPE Primary Cable	RED	600.0	-	75	1700F

Connector Name	4460F
Part Number	3553961C1
Short Description	BODY BUILDER TURN/STOP
Instances	LoneStar - X15 - Body Builder Lighting - (BOC EOF In Cab) (8HAB 8HAE 8HAU) (Automatic):Diagram2 LoneStar - X15 - Body Builder Lighting - (BOC EOF In Cab) (8HAB 8HAE 8HAU) (Manual):Diagram2 LT/RH - A26 - Body Builder Lighting - (BOC EOF In Cab) (8HAB 8HAE 8HAU) (Manual):Diagram2 LT/RH - A26 - Body Builder Lighting - (BOC EOF In Cab) (8HAB 8HAE 8HAU) (Manual):Diagram4 LT/RH - X15 - Body Builder Lighting - (BOC EOF In Cab) (8HAB 8HAE 8HAU) (Manual):Diagram2 LT/RH - X15/A26 - Body Builder Lighting - (BOC EOF In Cab) (8HAB 8HAE 8HAU) (Automatic):Diagram2
Mates	4460RM

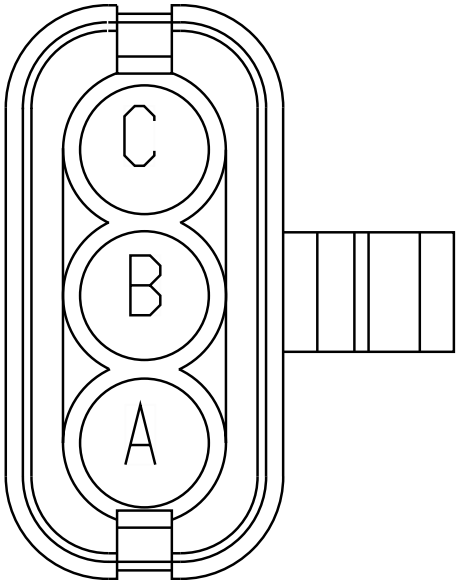

Name	Terminal Part Number	V-Min	Name	Wire Part Number	Wire CSA	Wire Spec	Wire Material description	Wire Color Description	Wire Length	End2 Terminal Part Number	End2 Pin Name	End2 Connect or
A	-	-	RX56BC	3510336 R1	1.16	16.0	Thin Wall XLPE Primary Cable	YELLOW 2	3595.0	-	A	4460BM
B	-	-	RX57BC	3510300 R1	1.16	16.0	Thin Wall XLPE Primary Cable	LIGHT GREEN	3595.0	-	B	4460BM
C	-	-	RX70BB	3510368 R1	3.01	12.0	Thin Wall XLPE Primary Cable	RED	3595.0	-	C	4460BM

Connector Name	4460M
Part Number	1686834C1
Instances	LoneStar - X15 - Body Builder Lighting - (BOC EOF In Cab) (8HAB 8HAE 8HAU) (Automatic):Diagram1 LoneStar - X15 - Body Builder Lighting - (BOC EOF In Cab) (8HAB 8HAE 8HAU) (Manual):Diagram1 LT/RH - A26 - Body Builder Lighting - (BOC EOF In Cab) (8HAB 8HAE 8HAU) (Manual):Diagram1 LT/RH - A26 - Body Builder Lighting - (BOC EOF In Cab) (8HAB 8HAE 8HAU) (Manual):Diagram3 LT/RH - X15 - Body Builder Lighting - (BOC EOF In Cab) (8HAB 8HAE 8HAU) (Manual):Diagram1 LT/RH - X15/A26 - Body Builder Lighting - (BOC EOF In Cab) (8HAB 8HAE 8HAU) (Automatic):Diagram1
Mates	BODY_BUILDER_TURN_STOP-103 6-05-01

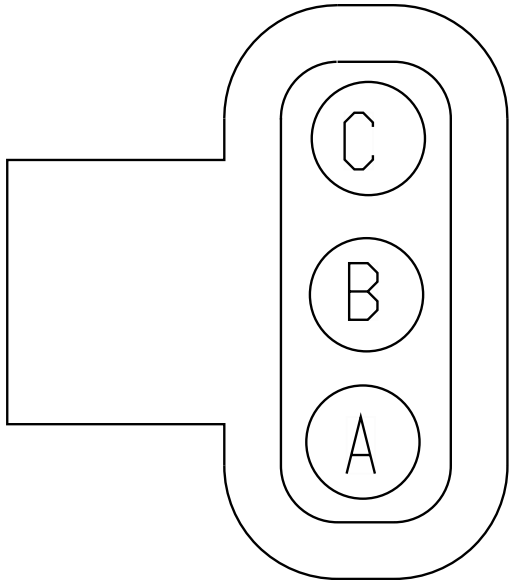

Name	Terminal Part Number	V-Min	Name	Wire Part Number	Wire CSA	Wire Spec	Wire Material description	Wire Color Description	Wire Length	End2 Terminal Part Number	End2 Pin Name	End2 Connector
A	-	-	PU56BC	3510336 R1	1.16	16.0	Thin Wall XLPE Primary Cable	YELLOW 2	2510.0	-	A	4460FM
B	-	-	PU57BC	3510300 R1	1.16	16.0	Thin Wall XLPE Primary Cable	LIGHT GREEN	2510.0	-	B	4460FM
C	-	-	PU70BB	3510368 R1	3.01	12.0	Thin Wall XLPE Primary Cable	RED	2510.0	-	C	4460FM

Connector Name	4460RM
Part Number	1686834C1
Short Description	BODY BUILDER TURN/STOP
Instances	LoneStar - X15 - Body Builder Lighting - (BOC EOF In Cab) (8HAB 8HAE 8HAU) (Automatic):Diagram2 LoneStar - X15 - Body Builder Lighting - (BOC EOF In Cab) (8HAB 8HAE 8HAU) (Manual):Diagram2 LT/RH - A26 - Body Builder Lighting - (BOC EOF In Cab) (8HAB 8HAE 8HAU) (Manual):Diagram2 LT/RH - A26 - Body Builder Lighting - (BOC EOF In Cab) (8HAB 8HAE 8HAU) (Manual):Diagram4 LT/RH - X15 - Body Builder Lighting - (BOC EOF In Cab) (8HAB 8HAE 8HAU) (Manual):Diagram2 LT/RH - X15/A26 - Body Builder Lighting - (BOC EOF In Cab) (8HAB 8HAE 8HAU) (Automatic):Diagram2
Mates	4460F

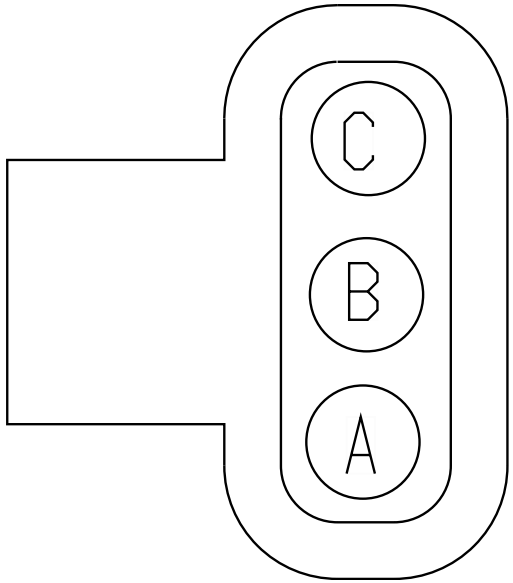

Name	Terminal Part Number	V-Min	Name	Wire Part Number	Wire CSA	Wire Spec	Wire Material description	Wire Color Description	Wire Length	End2 Terminal Part Number	End2 Pin Name	End2 Connector
A	-	-	PV56BC	3510336 R1	1.16	16.0	Thin Wall XLPE Primary Cable	YELLOW 2	3235.0	-	A	4460FM
B	-	-	PV57BC	3510300 R1	1.16	16.0	Thin Wall XLPE Primary Cable	LIGHT GREEN	3235.0	-	B	4460FM
C	-	-	PV70BB	3510368 R1	3.01	12.0	Thin Wall XLPE Primary Cable	RED	3235.0	-	C	4460FM

Connector Name	4705
Part Number	3538634C1
Instances	LT/RH A26 - Body Builder - Powertrain_MX1:Diagram1
Mates	CONN-BODY_BUILDER_1-4009-0 1-01A

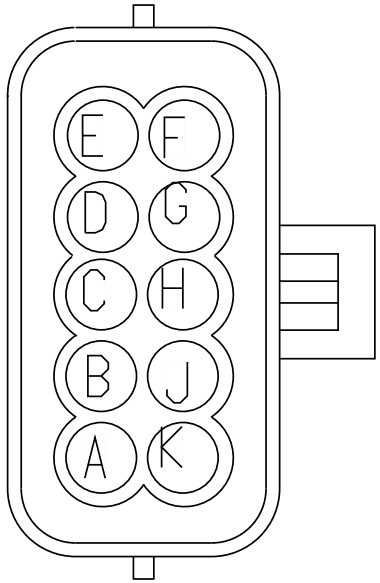

Name	Terminal Part Number	V-Min	Name	Wire Part Number	Wire CSA	Wire Spec	Wire Material description	Wire Color Description	Wire Length	End2 Terminal Part Number	End2 Pin Name	End2 Connector
A	-	-	ZC92A15	2643676 R1	0.79	18.0	Std. Wall XLPE Primary Cable	TAN	260.0	-	X	-
B	-	-	SG92A11	3510329 R1	0.79	18.0	Thin Wall XLPE Primary Cable	TAN	1025.0	-	66	K01-6018
C	-	-	KJ92A12	3510329 R1	0.79	18.0	Thin Wall XLPE Primary Cable	TAN	1025.0	-	90	K01-6018
D	-	-	KJ92A13	3510329 R1	0.79	18.0	Thin Wall XLPE Primary Cable	TAN	1025.0	-	16	K01-6018

Name	Terminal Part Number	V-Min	Name	Wire Part Number	Wire CSA	Wire Spec	Wire Material description	Wire Color Description	Wire Length	End2 Terminal Part Number	End2 Pin Name	End2 Connect or
E	-	-	KJ92A9	3510329 R1	0.79	18.0	Thin Wall XLPE Primary Cable	TAN	1025.0	-	40	K01-6018
F	-	-	KJ92A10	3510329 R1	0.79	18.0	Thin Wall XLPE Primary Cable	TAN	1025.0	-	78	K01-6018
G	-	-	KJ92A8	3510329 R1	0.79	18.0	Thin Wall XLPE Primary Cable	TAN	1025.0	-	77	K01-6018
H	-	-	KJ92A16	3510329 R1	0.79	18.0	Thin Wall XLPE Primary Cable	TAN	1025.0	-	46	K01-6018
J	-	-	KJ92A17	3510329 R1	0.79	18.0	Thin Wall XLPE Primary Cable	TAN	1025.0	-	21	K01-6018

Connector Name	4706
Part Number	3538635C1
Instances	LT/RH A26 - Body Builder - Powertrain_MX1:Diagram1
Mates	CONN-BODY_BUILDER_2-4009-0 1-01A

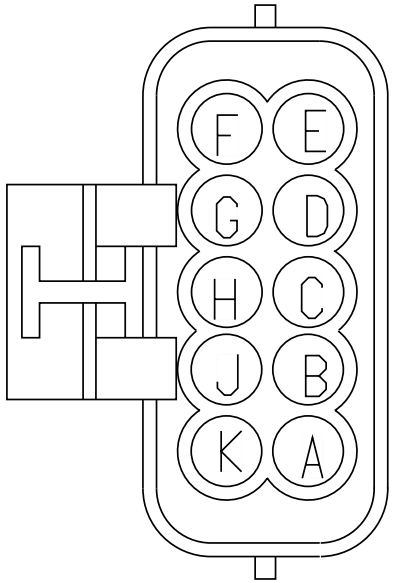

Name	Terminal Part Number	V-Min	Name	Wire Part Number	Wire CSA	Wire Spec	Wire Material description	Wire Color Description	Wire Length	End2 Terminal Part Number	End2 Pin Name	End2 Connector
A	-	-	KJ92A5	3510329 R1	0.79	18.0	Thin Wall XLPE Primary Cable	TAN	1025.0	-	56	K01-6018
B	-	-	ZE92A4	3510329 R1	0.79	18.0	Thin Wall XLPE Primary Cable	TAN	210.0	-	X	-
B	-	-	ZG92A4	3510329 R1	0.79	18.0	Thin Wall XLPE Primary Cable	TAN	210.0	-	X	-
C	-	-	SG92A3	3510329 R1	0.79	18.0	Thin Wall XLPE Primary Cable	TAN	595.0	-	-	-

Name	Terminal Part Number	V-Min	Name	Wire Part Number	Wire CSA	Wire Spec	Wire Material description	Wire Color Description	Wire Length	End2 Terminal Part Number	End2 Pin Name	End2 Connect or
D	-	-	KJ92A14	3510329 R1	0.79	18.0	Thin Wall XLPE Primary Cable	TAN	1025.0	-	22	K01-6018
E	-	-	KJ92A2	3510329 R1	0.79	18.0	Thin Wall XLPE Primary Cable	TAN	1025.0	-	20	K01-6018
F	-	-	KJ92A6	3510329 R1	0.79	18.0	Thin Wall XLPE Primary Cable	TAN	1025.0	-	23	K01-6018
G	-	-	KJ92A7	3510329 R1	0.79	18.0	Thin Wall XLPE Primary Cable	TAN	1025.0	-	65	K01-6018
H	-	-	KJ92A1	3510329 R1	0.79	18.0	Thin Wall XLPE Primary Cable	TAN	1025.0	-	39	K01-6018
J	-	-	KJ92A19	3510329 R1	0.79	18.0	Thin Wall XLPE Primary Cable	TAN	1025.0	-	14	K01-6018

Connector Name	5000A
Part Number	3595620C1
Instances	Cab J1939 (250Kbps):Cab J1939 (250Kbps)
Mates	5000

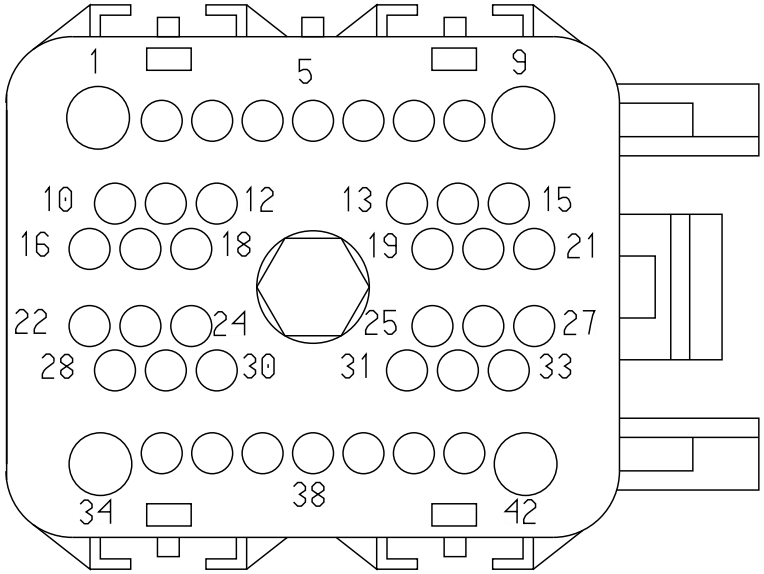

Name	Terminal Part Number	V-Min	Name	Wire Part Number	Wire CSA	Wire Spec	Wire Material description	Wire Color Description	Wire Length	End2 Terminal Part Number	End2 Pin Name	End2 Connect or
35	-	-	WIRE223954	-	0.0	-	-	-	0.0	-	PIN1	-
36	-	-	WIRE223955	-	0.0	-	-	-	0.0	-	PIN1	-

Connector Name	5000A
Part Number	3595621C1
Short Description	IP/SLEEPER CONNECTION
Instances	Body J1939 (250Kbps) Splice Pack 1024:Body J1939 (250Kbps) Body J1939 (250Kbps) W/ 3 Splice Packs:Body J1939 (250Kbps) LT/RH - A26 - Work Lights - LED W/ Sw Pack - Customer Supplied - Sleeper W/ RKE W/MAN REV:Diagram1 LT/RH - A26 - Work Lights - LED W/ Sw Pack - Customer Supplied - Sleeper W/ RKE W/MAN REV:Diagram2 LT/RH - A26 - Work Lights - LED W/ Sw Pack - Customer Supplied - Sleeper W/ RKE W/MAN REV:Diagram3 LT/RH - A26 - Work Lights - LED W/ Sw Pack - Customer Supplied - Sleeper W/ RKE W/MAN REV:Diagram4 LT/RH - A26 - Work Lights - LED W/ Sw Pack - Customer Supplied - Sleeper W/O RKE W/MAN REV:Diagram1 LT/RH - A26 - Work Lights - LED W/ Sw Pack - Customer Supplied - Sleeper W/O RKE W/MAN REV:Diagram2 LT/RH - A26 - Work Lights - LED W/ Sw Pack - Customer Supplied - Sleeper W/O RKE W/MAN REV:Diagram3 LT/RH - A26 - Work Lights - LED W/ Sw Pack - Customer Supplied - Sleeper W/O RKE W/MAN REV:Diagram4 LT/RH - A26 - Work Lights -LED W/ Sw Pack - Sleeper W/ RKE W/MAN REV:Diagram1 LT/RH - A26 - Work Lights -LED W/ Sw Pack - Sleeper W/ RKE W/MAN REV:Diagram2 LT/RH - A26 - Work Lights -LED W/ Sw Pack - Sleeper W/O RKE W/MAN REV:Diagram1 LT/RH - A26 - Work Lights -LED W/ Sw Pack - Sleeper W/O RKE W/MAN REV:Diagram2 LT/RH A26 - Auto Start Stop and Sleeper Auto Climate / Cab Temp / Oil Mapping Manual Trans:Diagram1 LT/RH A26 - Auto Start Stop with Sleeper Auto Climate / Cab Temp / Oil Mapping Auto Trans:Diagram1 LT/RH/LoneStar - X15 - Work Lights - LED W/ Sw Pack - Customer Supplied - Sleeper W/ RKE W/MAN REV:Diagram1 LT/RH/LoneStar - X15 - Work Lights - LED W/ Sw Pack - Customer Supplied - Sleeper W/ RKE W/MAN REV:Diagram2 LT/RH/LoneStar - X15 - Work Lights - LED W/ Sw Pack - Customer Supplied - Sleeper W/O RKE W/MAN REV:Diagram1 LT/RH/LoneStar - X15 - Work Lights - LED W/ Sw Pack - Customer Supplied - Sleeper W/O RKE W/MAN REV:Diagram2

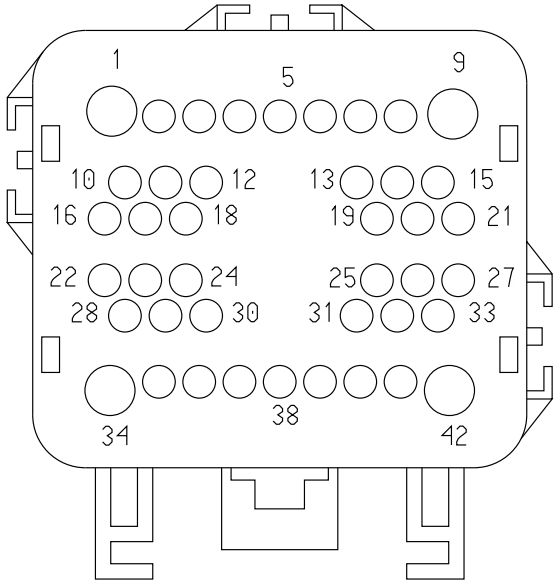

LT/RH/LoneStar - X15 - Work Lights -LED W/ Sw Pack - Sleeper W/ RKE W/MAN REV:Diagram1
LT/RH/LoneStar - X15 - Work Lights -LED W/ Sw Pack - Sleeper W/O RKE W/MAN REV:Diagram1
LT/RH/LoneStar - X15/A26 - Floor/Search Lights Sleeper:Diagram1
LT/RH/LoneStar - X15/A26 - Floor/Search Lights Sleeper (1 Light):Diagram1
LT/RH/LoneStar - X15/A26 - Rear AUTO HVAC (No Idle) W/ Pre-Heat (Bergstrom Heat and Cool w/ Condensation) 2 SWITCHES:Diagram2 - No Idle Switching
LT/RH/LoneStar - X15/A26 - Rear AUTO HVAC (No Idle) W/ Pre-Heat (Bergstrom Heat and Cool w/ Condensation) 2 SWITCHES:Diagram3 - Espar Circuit
LT/RH/LoneStar - X15/A26 - Rear HVAC (No Idle Heater) (Espar) Option 1:Diagram1
LT/RH/LoneStar - X15/A26 - Rear HVAC (No Idle Heater) (Espar) Option 2:Diagram1
LT/RH/LoneStar - X15/A26 - Rear HVAC (No Idle Heater) (Webasto Smartemp):Diagram1
LT/RH/LoneStar - X15/A26 - Rear HVAC (No Idle Heater) (Webasto Std N/Swift) N/ Heat Swtich:Diagram1
LT/RH/LoneStar - X15/A26 - Rear HVAC (No Idle Heater) (Webasto Std W/Swift) N/ Heat Switch:Diagram1
LT/RH/LoneStar - X15/A26 - Rear HVAC (No Idle) W/ Pre-Heat (Bergstrom Heat and Cool w/ Condensation) 2 SWITCHES Option 1:Diagram1 - Powers, Grounds & Controls
LT/RH/LoneStar - X15/A26 - Rear HVAC (No Idle) W/ Pre-Heat (Bergstrom Heat and Cool w/ Condensation) 2 SWITCHES Option 1:Diagram2 - No Idle Switching
LT/RH/LoneStar - X15/A26 - Rear HVAC (No Idle) W/ Pre-Heat (Bergstrom Heat and Cool w/ Condensation) 2 SWITCHES Option 2:Diagram1 - Powers, Grounds & Controls
LT/RH/LoneStar - X15/A26 - Rear HVAC (No Idle) W/ Pre-Heat (Bergstrom Heat and Cool w/ Condensation) 2 SWITCHES Option 2:Diagram2 - No Idle Switching
LT/RH/LoneStar - X15/A26 - Rear HVAC (No Idle) W/ Pre-Heat (Bergstrom Heat and Cool w/ Condensation) 4 SWITCHES Option 1:Diagram1 - Powers, Grounds & Controls
LT/RH/LoneStar - X15/A26 - Rear HVAC (No Idle) W/ Pre-Heat (Bergstrom Heat and Cool w/ Condensation) 4 SWITCHES Option 1:Diagram2 - No Idle Switching

LT/RH/LoneStar - X15/A26 - Rear HVAC (No Idle) W/ Pre-Heat (Bergstrom Heat and Cool w/ Condensation) 4 SWITCHES Option 2:Diagram1 - Powers, Grounds & Controls
LT/RH/LoneStar - X15/A26 - Rear HVAC (No Idle) W/ Pre-Heat (Bergstrom Heat and Cool w/ Condensation) 4 SWITCHES Option 2:Diagram2 - No Idle Switching
LT/RH/LoneStar - X15/A26 - Rear Manual HVAC (No Idle) W/ Pre-Heat (Bergstrom Heat and Cool w/ Condensation) 2 SWITCHES:Diagram2 - No Idle Switching
LT/RH/LoneStar - X15/A26 - Rear Manual HVAC (No Idle) W/ Pre-Heat (Bergstrom Heat and Cool w/ Condensation) 2 SWITCHES:Diagram3 - Espar Circuit
LT/RH/LoneStar - X15/A26 - Work Lights - LED W/ Sw Pack - Customer Supplied - Sleeper:Diagram1
LT/RH/LoneStar - X15/A26 - Work Lights - LED W/ Sw Pack - Customer Supplied - Sleeper:Diagram2
LT/RH/LoneStar - X15/A26 - Work Lights - LED W/ Sw Pack - Customer Supplied - Sleeper W/ RKE W/AUTO REV:Diagram1
LT/RH/LoneStar - X15/A26 - Work Lights - LED W/ Sw Pack - Customer Supplied - Sleeper W/ RKE W/AUTO REV:Diagram2
LT/RH/LoneStar - X15/A26 - Work Lights - LED W/ Sw Pack - Customer Supplied - Sleeper W/O RKE:Diagram1
LT/RH/LoneStar - X15/A26 - Work Lights - LED W/ Sw Pack - Customer Supplied - Sleeper W/O RKE:Diagram2
LT/RH/LoneStar - X15/A26 - Work Lights - LED W/ Sw Pack - Customer Supplied - Sleeper W/O RKE W/AUTO REV:Diagram1
LT/RH/LoneStar - X15/A26 - Work Lights - LED W/ Sw Pack - Customer Supplied - Sleeper W/O RKE W/AUTO REV:Diagram2
LT/RH/LoneStar - X15/A26 - Work Lights -LED W/ Sw Pack - Sleeper:Diagram1
LT/RH/LoneStar - X15/A26 - Work Lights -LED W/ Sw Pack - Sleeper W/ RKE W/AUTO REV:Diagram1
LT/RH/LoneStar - X15/A26 - Work Lights -LED W/ Sw Pack - Sleeper W/O RKE:Diagram1
LT/RH/LoneStar - X15/A26 - Work Lights -LED W/ Sw Pack - Sleeper W/O RKE W/AUTO REV:Diagram1
LT/RH/LoneStar X15 - Auto Start Stop with Sleeper Auto Climate / Cab Temp with Oil Temp Sensor Auto Trans:Diagram1
LT/RH/LoneStar X15 - Auto Start Stop with Sleeper Auto Climate / Cab Temp with Oil Temp Sensor Manual Trans:Diagram1
Relays - Grid Management (W/Load Shed Sleeper Cab):Diagram1

Mates 5000

Name	Terminal Part Number	V-Min	Name	Wire Part Number	Wire CSA	Wire Spec	Wire Material description	Wire Color Description	Wire Length	End2 Terminal Part Number	End2 Pin Name	End2 Connect or
2	-	-	AW12B	3510340 R1	0.53	20.0	Thin Wall XLPE Primary Cable	LIGHT BLUE	1670.0	-	X	-
7	-	-	EL63JB	3510353 R1	0.79	18.0	Thin Wall XLPE Primary Cable	DARK BLUE	3455.0	-	R3-87	1011
20	-	-	BU65AA	3510317 R1	0.79	18.0	Thin Wall XLPE Primary Cable	ORANGE	2030.0	-	X	-
20	-	-	BY65AA	3510318 R1	1.16	16.0	Thin Wall XLPE Primary Cable	ORANGE	1175.0	-	X	-
20	-	-	BT65	3510317 R1	0.79	18.0	Thin Wall XLPE Primary Cable	ORANGE	1975.0	-	G	J1-1603
21	-	-	BY65AB	3510318 R1	1.16	16.0	Thin Wall XLPE Primary Cable	ORANGE	1175.0	-	X	-
22	-	-	DX109S	3510310 R1	0.53	20.0	Thin Wall XLPE Primary Cable	GREY	2740.0	-	-	-
26	-	-	YE75WP	3510299 R1	0.79	18.0	Thin Wall XLPE Primary Cable	LIGHT GREEN	2015.0	-	F11	J4-1601

Name	Terminal Part Number	V-Min	Name	Wire Part Number	Wire CSA	Wire Spec	Wire Material description	Wire Color Description	Wire Length	End2 Terminal Part Number	End2 Pin Name	End2 Connector
27	-	-	AP75WC	3510299 R1	0.79	18.0	Thin Wall XLPE Primary Cable	LIGHT GREEN	1500.0	-	L	J6-1606
28	-	-	3G77A	3510298 R1	0.53	20.0	Thin Wall XLPE Primary Cable	LIGHT GREEN	2075.0	-	B1	J7-1607
29	-	-	3G77B	3510298 R1	0.53	20.0	Thin Wall XLPE Primary Cable	LIGHT GREEN	2075.0	-	B9	J7-1607
31	-	-	DX62A	3510353 R1	0.79	18.0	Thin Wall XLPE Primary Cable	DARK BLUE	2380.0	-	N	A02-0009
33	-	-	EL63F	3510353 R1	0.79	18.0	Thin Wall XLPE Primary Cable	DARK BLUE	2075.0	-	B4	J7-1607
38	-	-	WIRE489838	-	0.0	-	-	-	0.0	-	H	1024
38	-	-	WIRE490118	-	0.0	-	-	-	0.0	-	H	1024
39	-	-	WIRE489837	-	0.0	-	-	-	0.0	-	E	1024
39	-	-	WIRE490119	-	0.0	-	-	-	0.0	-	E	1024
40	-	-	AG166BBA	3510298 R1	0.53	20.0	Thin Wall XLPE Primary Cable	LIGHT GREEN	1485.0	-	X	-

Name	Terminal Part Number	V-Min	Name	Wire Part Number	Wire CSA	Wire Spec	Wire Material description	Wire Color Description	Wire Length	End2 Terminal Part Number	End2 Pin Name	End2 Connector
41	-	-	AG166AB	3510298 R1	0.53	20.0	Thin Wall XLPE Primary Cable	LIGHT GREEN	1070.0	-	X	-

Connector Name	5000A
Part Number	3595621C1
Short Description	IP/SLEEPER CONNECTION
Instances	LT/RH LoneStar - X15/A26 - Speakers:Four Speakers N/BT N/QC:Diagram2-Sleeper LT/RH LoneStar - X15/A26 - Speakers:Four Speakers N/BT W/QC:Diagram2-Sleeper LT/RH LoneStar - X15/A26 - Speakers:Four Speakers W/BT N/QC:Diagram2-Sleeper LT/RH LoneStar - X15/A26 - Speakers:Four Speakers W/BT W/QC:Diagram2-Sleeper LT/RH LoneStar - X15/A26 - Speakers:Speakers N/BT W/AMP N/QC:Diagram1 LT/RH LoneStar - X15/A26 - Speakers:Speakers W/BT W/AMP N/QC:Diagram1 LT/RH/LoneStar - X15/A26 - Air Shield Lighting w/ One Light:Diagram2 LT/RH/LoneStar - X15/A26 - Beacon/Strobe Light:Diagram2 LT/RH/LoneStar - X15/A26 - Cabinet Refrigerator W/ Relay:Diagram1 LT/RH/LoneStar - X15/A26 - DC/AC Inverter (1200W W/switch control):Diagram1 LT/RH/LoneStar - X15/A26 - Lighting Sleeper Dome:Diagram1 LT/RH/LoneStar - X15/A26 - Luggage Compartment Lights - W/ No Idle HVAC:Diagram1 LT/RH/LoneStar - X15/A26 - Luggage Compartment Lights - W/O No Idle HVAC:Diagram1 LT/RH/LoneStar - X15/A26 - Rear HVAC (Sleeper W/ Deluxe):Diagram1 LT/RH/LoneStar - X15/A26 - Rear HVAC (Sleeper W/ Premium):Diagram1 LT/RH/LoneStar - X15/A26 - Rear Interior Dimming (Accent Light):Diagram1
Mates	5000

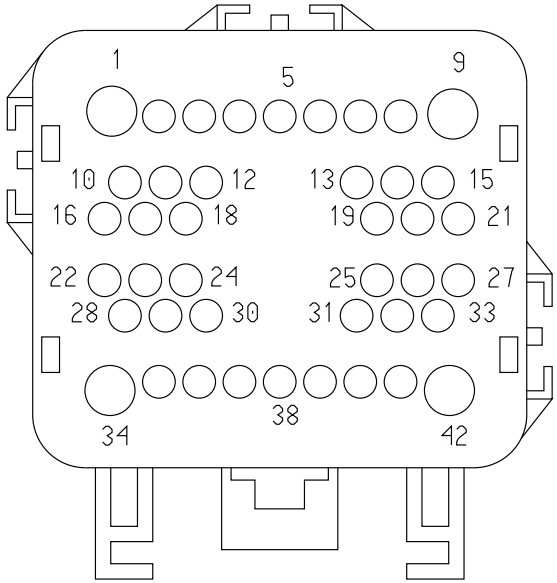

Name	Terminal Part Number	V-Min	Name	Wire Part Number	Wire CSA	Wire Spec	Wire Material description	Wire Color Description	Wire Length	End2 Terminal Part Number	End2 Pin Name	End2 Connector
3	-	-	MW86BB	3510299 R1	0.79	18.0	Thin Wall XLPE Primary Cable	LIGHT GREEN	2920.0	-	15	A02-1300
4	-	-	MW86CB	3510299 R1	0.79	18.0	Thin Wall XLPE Primary Cable	LIGHT GREEN	2920.0	-	16	A02-1300
5	-	-	MW86DB	3510299 R1	0.79	18.0	Thin Wall XLPE Primary Cable	LIGHT GREEN	2920.0	-	9	A02-1300
6	-	-	MW86EB	3510299 R1	0.79	18.0	Thin Wall XLPE Primary Cable	LIGHT GREEN	2920.0	-	10	A02-1300
8	-	-	MY66AA	3510299 R1	0.79	18.0	Thin Wall XLPE Primary Cable	LIGHT GREEN	2920.0	-	5	A02-1300
9	-	-	4G62DC	3510354 R1	1.16	16.0	Thin Wall XLPE Primary Cable	DARK BLUE	2050.0	-	X	-
10	-	-	MY86AC	3510299 R1	0.79	18.0	Thin Wall XLPE Primary Cable	LIGHT GREEN	2920.0	-	2	A02-1301-MIC
11	-	-	MX86K	3510299 R1	0.79	18.0	Thin Wall XLPE Primary Cable	LIGHT GREEN	2920.0	-	11	A02-1300

Name	Terminal Part Number	V-Min	Name	Wire Part Number	Wire CSA	Wire Spec	Wire Material description	Wire Color Description	Wire Length	End2 Terminal Part Number	End2 Pin Name	End2 Connector
12	-	-	MX86L	3510299 R1	0.79	18.0	Thin Wall XLPE Primary Cable	LIGHT GREEN	2920.0	-	12	A02-1300
13	-	-	MX86AK	3510299 R1	0.79	18.0	Thin Wall XLPE Primary Cable	LIGHT GREEN	3800.0	-	C	3206M
14	-	-	MX86AL	3510299 R1	0.79	18.0	Thin Wall XLPE Primary Cable	LIGHT GREEN	3800.0	-	D	3206M
15	-	-	MX86AH	3510299 R1	0.79	18.0	Thin Wall XLPE Primary Cable	LIGHT GREEN	2090.0	-	C	3205M
16	-	-	MX86AJ	3510299 R1	0.79	18.0	Thin Wall XLPE Primary Cable	LIGHT GREEN	2090.0	-	D	3205M
18	-	-	DX63AW	3510352 R1	0.53	20.0	Thin Wall XLPE Primary Cable	DARK BLUE	2470.0	-	B6	A02-1500A
19	-	-	CX58C	3510306 R1	1.16	16.0	Thin Wall XLPE Primary Cable	BROWN	3560.0	-	R1 - 87	1013
19	-	-	EM58BLT	3510307 R1	1.91	14.0	Thin Wall XLPE Primary Cable	BROWN	3560.0	-	R1 - 87	1013

Name	Terminal Part Number	V-Min	Name	Wire Part Number	Wire CSA	Wire Spec	Wire Material description	Wire Color Description	Wire Length	End2 Terminal Part Number	End2 Pin Name	End2 Connector
22	-	-	DX109S	3510310 R1	0.53	20.0	Thin Wall XLPE Primary Cable	GREY	2740.0	-	-	-
23	-	-	MX86H	3510299 R1	0.79	18.0	Thin Wall XLPE Primary Cable	LIGHT GREEN	2920.0	-	13	A02-1300
24	-	-	MX86J	3510299 R1	0.79	18.0	Thin Wall XLPE Primary Cable	LIGHT GREEN	2920.0	-	14	A02-1300
30	-	-	GH14SAF	3510343 R1	1.91	14.0	Thin Wall XLPE Primary Cable	LIGHT BLUE	3560.0	-	R2-87	1013
30	-	-	GD14SAH	3510343 R1	1.91	14.0	Thin Wall XLPE Primary Cable	LIGHT BLUE	3560.0	-	R2-87	1013
31	-	-	DX62A	3510353 R1	0.79	18.0	Thin Wall XLPE Primary Cable	DARK BLUE	2380.0	-	N	A02-0009
32	-	-	DX63E	3510352 R1	0.53	20.0	Thin Wall XLPE Primary Cable	DARK BLUE	2075.0	-	B6	J7-1607
37	-	-	DX63C	3510352 R1	0.53	20.0	Thin Wall XLPE Primary Cable	DARK BLUE	2015.0	-	F2	J4-1601

Connector Name	5000
Part Number	3595620C1
Short Description	CAB / SLEEPER
Instances	Body J1939 (250Kbps) Splice Pack 1024:Body J1939 (250Kbps) Body J1939 (250Kbps) W/ 3 Splice Packs:Body J1939 (250Kbps) LT/RH - A26 - Work Lights - LED W/ Sw Pack - Customer Supplied - Sleeper W/ RKE W/MAN REV:Diagram1 LT/RH - A26 - Work Lights - LED W/ Sw Pack - Customer Supplied - Sleeper W/ RKE W/MAN REV:Diagram2 LT/RH - A26 - Work Lights - LED W/ Sw Pack - Customer Supplied - Sleeper W/ RKE W/MAN REV:Diagram3 LT/RH - A26 - Work Lights - LED W/ Sw Pack - Customer Supplied - Sleeper W/ RKE W/MAN REV:Diagram4 LT/RH - A26 - Work Lights - LED W/ Sw Pack - Customer Supplied - Sleeper W/O RKE W/MAN REV:Diagram1 LT/RH - A26 - Work Lights - LED W/ Sw Pack - Customer Supplied - Sleeper W/O RKE W/MAN REV:Diagram2 LT/RH - A26 - Work Lights - LED W/ Sw Pack - Customer Supplied - Sleeper W/O RKE W/MAN REV:Diagram3 LT/RH - A26 - Work Lights - LED W/ Sw Pack - Customer Supplied - Sleeper W/O RKE W/MAN REV:Diagram4 LT/RH - A26 - Work Lights -LED W/ Sw Pack - Sleeper W/ RKE W/MAN REV:Diagram1 LT/RH - A26 - Work Lights -LED W/ Sw Pack - Sleeper W/ RKE W/MAN REV:Diagram2 LT/RH - A26 - Work Lights -LED W/ Sw Pack - Sleeper W/O RKE W/MAN REV:Diagram1 LT/RH - A26 - Work Lights -LED W/ Sw Pack - Sleeper W/O RKE W/MAN REV:Diagram2 LT/RH A26 - Auto Start Stop and Sleeper Auto Climate / Cab Temp / Oil Mapping Manual Trans:Diagram1 LT/RH A26 - Auto Start Stop with Sleeper Auto Climate / Cab Temp / Oil Mapping Auto Trans:Diagram1 LT/RH/LoneStar - X15 - Work Lights - LED W/ Sw Pack - Customer Supplied - Sleeper W/ RKE W/MAN REV:Diagram1 LT/RH/LoneStar - X15 - Work Lights - LED W/ Sw Pack - Customer Supplied - Sleeper W/ RKE W/MAN REV:Diagram2 LT/RH/LoneStar - X15 - Work Lights - LED W/ Sw Pack - Customer Supplied - Sleeper W/O RKE W/MAN REV:Diagram1 LT/RH/LoneStar - X15 - Work Lights - LED W/ Sw Pack - Customer Supplied - Sleeper W/O RKE W/MAN REV:Diagram2

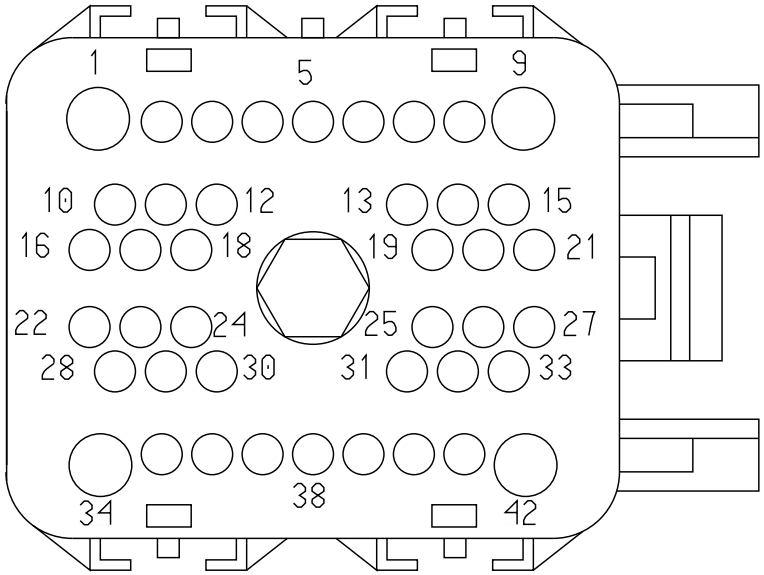

LT/RH/LoneStar - X15 - Work Lights -LED W/ Sw Pack - Sleeper W/ RKE W/MAN REV:Diagram1
LT/RH/LoneStar - X15 - Work Lights -LED W/ Sw Pack - Sleeper W/O RKE W/MAN REV:Diagram1
LT/RH/LoneStar - X15/A26 - Floor/Search Lights Sleeper:Diagram1
LT/RH/LoneStar - X15/A26 - Floor/Search Lights Sleeper (1 Light):Diagram1
LT/RH/LoneStar - X15/A26 - Rear AUTO HVAC (No Idle) W/ Pre-Heat (Bergstrom Heat and Cool w/ Condensation) 2 SWITCHES:Diagram2 - No Idle Switching
LT/RH/LoneStar - X15/A26 - Rear AUTO HVAC (No Idle) W/ Pre-Heat (Bergstrom Heat and Cool w/ Condensation) 2 SWITCHES:Diagram3 - Espar Circuit
LT/RH/LoneStar - X15/A26 - Rear HVAC (No Idle Heater) (Espar) Option 1:Diagram1
LT/RH/LoneStar - X15/A26 - Rear HVAC (No Idle Heater) (Espar) Option 2:Diagram1
LT/RH/LoneStar - X15/A26 - Rear HVAC (No Idle Heater) (Webasto Smartemp):Diagram1
LT/RH/LoneStar - X15/A26 - Rear HVAC (No Idle Heater) (Webasto Std N/Swift) N/ Heat Swtich:Diagram1
LT/RH/LoneStar - X15/A26 - Rear HVAC (No Idle Heater) (Webasto Std W/Swift) N/ Heat Switch:Diagram1
LT/RH/LoneStar - X15/A26 - Rear HVAC (No Idle) W/ Pre-Heat (Bergstrom Heat and Cool w/ Condensation) 2 SWITCHES Option 1:Diagram1 - Powers, Grounds & Controls
LT/RH/LoneStar - X15/A26 - Rear HVAC (No Idle) W/ Pre-Heat (Bergstrom Heat and Cool w/ Condensation) 2 SWITCHES Option 1:Diagram2 - No Idle Switching
LT/RH/LoneStar - X15/A26 - Rear HVAC (No Idle) W/ Pre-Heat (Bergstrom Heat and Cool w/ Condensation) 2 SWITCHES Option 2:Diagram1 - Powers, Grounds & Controls
LT/RH/LoneStar - X15/A26 - Rear HVAC (No Idle) W/ Pre-Heat (Bergstrom Heat and Cool w/ Condensation) 2 SWITCHES Option 2:Diagram2 - No Idle Switching
LT/RH/LoneStar - X15/A26 - Rear HVAC (No Idle) W/ Pre-Heat (Bergstrom Heat and Cool w/ Condensation) 4 SWITCHES Option 1:Diagram1 - Powers, Grounds & Controls
LT/RH/LoneStar - X15/A26 - Rear HVAC (No Idle) W/ Pre-Heat (Bergstrom Heat and Cool w/ Condensation) 4 SWITCHES Option 1:Diagram2 - No Idle Switching

LT/RH/LoneStar - X15/A26 - Rear HVAC (No Idle) W/ Pre-Heat (Bergstrom Heat and Cool w/ Condensation) 4 SWITCHES Option 2:Diagram1 - Powers, Grounds & Controls
LT/RH/LoneStar - X15/A26 - Rear HVAC (No Idle) W/ Pre-Heat (Bergstrom Heat and Cool w/ Condensation) 4 SWITCHES Option 2:Diagram2 - No Idle Switching
LT/RH/LoneStar - X15/A26 - Rear Manual HVAC (No Idle) W/ Pre-Heat (Bergstrom Heat and Cool w/ Condensation) 2 SWITCHES:Diagram2 - No Idle Switching
LT/RH/LoneStar - X15/A26 - Rear Manual HVAC (No Idle) W/ Pre-Heat (Bergstrom Heat and Cool w/ Condensation) 2 SWITCHES:Diagram3 - Espar Circuit
LT/RH/LoneStar - X15/A26 - Work Lights - LED W/ Sw Pack - Customer Supplied - Sleeper:Diagram1
LT/RH/LoneStar - X15/A26 - Work Lights - LED W/ Sw Pack - Customer Supplied - Sleeper:Diagram2
LT/RH/LoneStar - X15/A26 - Work Lights - LED W/ Sw Pack - Customer Supplied - Sleeper W/ RKE W/AUTO REV:Diagram1
LT/RH/LoneStar - X15/A26 - Work Lights - LED W/ Sw Pack - Customer Supplied - Sleeper W/ RKE W/AUTO REV:Diagram2
LT/RH/LoneStar - X15/A26 - Work Lights - LED W/ Sw Pack - Customer Supplied - Sleeper W/O RKE:Diagram1
LT/RH/LoneStar - X15/A26 - Work Lights - LED W/ Sw Pack - Customer Supplied - Sleeper W/O RKE:Diagram2
LT/RH/LoneStar - X15/A26 - Work Lights - LED W/ Sw Pack - Customer Supplied - Sleeper W/O RKE W/AUTO REV:Diagram1
LT/RH/LoneStar - X15/A26 - Work Lights - LED W/ Sw Pack - Customer Supplied - Sleeper W/O RKE W/AUTO REV:Diagram2
LT/RH/LoneStar - X15/A26 - Work Lights -LED W/ Sw Pack - Sleeper:Diagram1
LT/RH/LoneStar - X15/A26 - Work Lights -LED W/ Sw Pack - Sleeper W/ RKE W/AUTO REV:Diagram1
LT/RH/LoneStar - X15/A26 - Work Lights -LED W/ Sw Pack - Sleeper W/O RKE:Diagram1
LT/RH/LoneStar - X15/A26 - Work Lights -LED W/ Sw Pack - Sleeper W/O RKE W/AUTO REV:Diagram1
LT/RH/LoneStar X15 - Auto Start Stop with Sleeper Auto Climate / Cab Temp with Oil Temp Sensor Auto Trans:Diagram1
LT/RH/LoneStar X15 - Auto Start Stop with Sleeper Auto Climate / Cab Temp with Oil Temp Sensor Manual Trans:Diagram1
Relays - Grid Management (W/Load Shed Sleeper Cab):Diagram1

Mates 5000A

Name	Terminal Part Number	V-Min	Name	Wire Part Number	Wire CSA	Wire Spec	Wire Material description	Wire Color Description	Wire Length	End2 Terminal Part Number	End2 Pin Name	End2 Connect or
2	-	-	HA12A	3510341 R1	0.79	18.0	Thin Wall XLPE Primary Cable	LIGHT BLUE	1310.0	-	-	-
7	-	-	ZA63JB	2643720 R1	0.79	18.0	Std. Wall XLPE Primary Cable	DARK BLUE	1620.0	-	X	-
20	-	-	HA65	2643682 R1	1.16	16.0	Std. Wall XLPE Primary Cable	ORANGE	2550.0	-	E	5300
21	-	-	HE65B	3510318 R1	1.16	16.0	Thin Wall XLPE Primary Cable	ORANGE	1030.0	-	-	-
21	-	-	HE65B	3510318 R1	1.16	16.0	Thin Wall XLPE Primary Cable	ORANGE	1030.0	-	C	1001
22	-	-	HA109S	2643673 R1	0.79	18.0	Std. Wall XLPE Primary Cable	GREY	2835.0	-	X	-
26	-	-	GV75WP	3510299 R1	0.79	18.0	Thin Wall XLPE Primary Cable	LIGHT GREEN	2125.0	-	D	H01-5238
26	-	-	ZE75WP	3510299 R1	0.79	18.0	Thin Wall XLPE Primary Cable	LIGHT GREEN	2125.0	-	D	H01-5238

Name	Terminal Part Number	V-Min	Name	Wire Part Number	Wire CSA	Wire Spec	Wire Material description	Wire Color Description	Wire Length	End2 Terminal Part Number	End2 Pin Name	End2 Connector
26	-	-	GS75WP	2643671 R1	0.79	18.0	Std. Wall XLPE Primary Cable	LIGHT GREEN	2125.0	-	D	H01-5236
26	-	-	ZC75WP	2643671 R1	0.79	18.0	Std. Wall XLPE Primary Cable	LIGHT GREEN	2125.0	-	D	H01-5237
27	-	-	GV75WDB	3510299 R1	0.79	18.0	Thin Wall XLPE Primary Cable	LIGHT GREEN	815.0	-	X	-
27	-	-	ZG75AJD	2643678 R1	1.16	16.0	Std. Wall XLPE Primary Cable	LIGHT GREEN	1230.0	-	X	-
27	-	-	BA75AJB	2643671 R1	0.79	18.0	Std. Wall XLPE Primary Cable	LIGHT GREEN	3922.0	-	X	-
27	-	-	ZE75AJD	2643678 R1	1.16	16.0	Std. Wall XLPE Primary Cable	LIGHT GREEN	1230.0	-	X	-
27	-	-	ZC75WDB	3510299 R1	0.79	18.0	Thin Wall XLPE Primary Cable	LIGHT GREEN	815.0	-	X	-
28	-	-	ZF77A	3510298 R1	0.53	20.0	Thin Wall XLPE Primary Cable	LIGHT GREEN	3952.0	-	1	H01-5218A

Name	Terminal Part Number	V-Min	Name	Wire Part Number	Wire CSA	Wire Spec	Wire Material description	Wire Color Description	Wire Length	End2 Terminal Part Number	End2 Pin Name	End2 Connector
29	-	-	BA75X	2643671 R1	0.79	18.0	Std. Wall XLPE Primary Cable	LIGHT GREEN	4422.0	-	A4	5205
29	-	-	ZF77B	3510298 R1	0.53	20.0	Thin Wall XLPE Primary Cable	LIGHT GREEN	3952.0	-	2	H01-5218A
29	-	-	ZE75X	2643671 R1	0.79	18.0	Std. Wall XLPE Primary Cable	LIGHT GREEN	4422.0	-	A4	H01-5205
31	-	-	BD62A	2643720 R1	0.79	18.0	Std. Wall XLPE Primary Cable	DARK BLUE	565.0	-	X	-
31	-	-	HG62A	2643720 R1	0.79	18.0	Std. Wall XLPE Primary Cable	DARK BLUE	3772.0	-	X	-
31	-	-	BF62A	2643720 R1	0.79	18.0	Std. Wall XLPE Primary Cable	DARK BLUE	2540.0	-	D	5125
33	-	-	HA63F	2643720 R1	0.79	18.0	Std. Wall XLPE Primary Cable	DARK BLUE	2540.0	-	F	5125
38	-	-	WIRE489840	-	0.0	-	-	-	0.0	-	7	1939A
38	-	-	WIRE490120	-	0.0	-	-	-	0.0	-	7	1939A
39	-	-	WIRE489839	-	0.0	-	-	-	0.0	-	2	1939A

Name	Terminal Part Number	V-Min	Name	Wire Part Number	Wire CSA	Wire Spec	Wire Material description	Wire Color Description	Wire Length	End2 Terminal Part Number	End2 Pin Name	End2 Connector
39	-	-	WIRE490121	-	0.0	-	-	-	0.0	-	2	1939A
40	-	-	HA166BB	3510311R1	0.79	18.0	Thin Wall XLPE Primary Cable	GREY	1310.0	-	R1 - 85	5001A
41	-	-	HA166BC	3510311R1	0.79	18.0	Thin Wall XLPE Primary Cable	GREY	1310.0	-	R1 - 86	5001A

Connector Name	5000
Part Number	3595620C1
Short Description	CAB / SLEEPER
Instances	LT/RH LoneStar - X15/A26 - Speakers:Four Speakers N/BT N/QC:Diagram2-Sleeper LT/RH LoneStar - X15/A26 - Speakers:Four Speakers N/BT W/QC:Diagram2-Sleeper LT/RH LoneStar - X15/A26 - Speakers:Four Speakers W/BT N/QC:Diagram2-Sleeper LT/RH LoneStar - X15/A26 - Speakers:Four Speakers W/BT W/QC:Diagram2-Sleeper LT/RH LoneStar - X15/A26 - Speakers:Speakers N/BT W/AMP N/QC:Diagram1 LT/RH LoneStar - X15/A26 - Speakers:Speakers W/BT W/AMP N/QC:Diagram1 LT/RH/LoneStar - X15/A26 - Air Shield Lighting w/ One Light:Diagram2 LT/RH/LoneStar - X15/A26 - Beacon/Strobe Light:Diagram2 LT/RH/LoneStar - X15/A26 - Cabinet Refrigerator W/ Relay:Diagram1 LT/RH/LoneStar - X15/A26 - DC/AC Inverter (1200W W/switch control):Diagram1 LT/RH/LoneStar - X15/A26 - Lighting Sleeper Dome:Diagram1 LT/RH/LoneStar - X15/A26 - Luggage Compartment Lights - W/ No Idle HVAC:Diagram1 LT/RH/LoneStar - X15/A26 - Luggage Compartment Lights - W/O No Idle HVAC:Diagram1 LT/RH/LoneStar - X15/A26 - Rear HVAC (Sleeper W/ Deluxe):Diagram1 LT/RH/LoneStar - X15/A26 - Rear HVAC (Sleeper W/ Premium):Diagram1 LT/RH/LoneStar - X15/A26 - Rear Interior Dimming (Accent Light):Diagram1
Mates	5000A

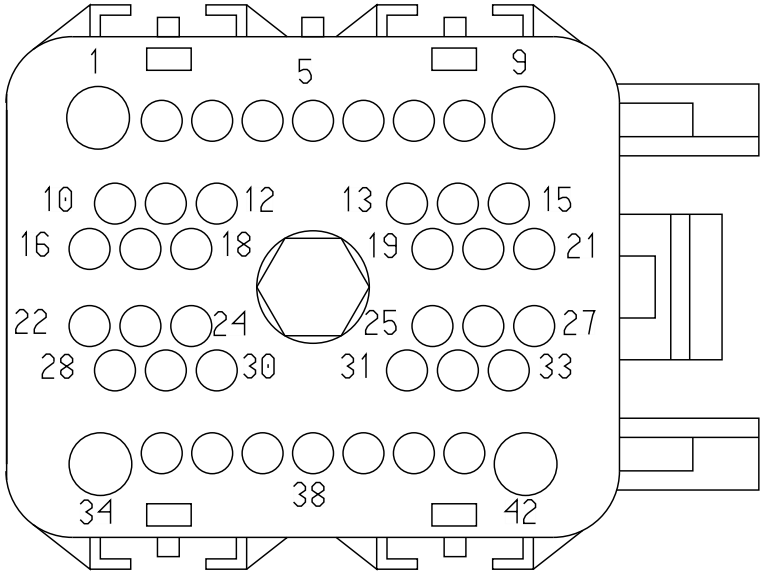

Name	Terminal Part Number	V-Min	Name	Wire Part Number	Wire CSA	Wire Spec	Wire Material description	Wire Color Description	Wire Length	End2 Terminal Part Number	End2 Pin Name	End2 Connector
3	-	-	HF86BB	2643671 R1	0.79	18.0	Std. Wall XLPE Primary Cable	LIGHT GREEN	2550.0	-	A	5300
3	-	-	HH86BB	2643671 R1	0.79	18.0	Std. Wall XLPE Primary Cable	LIGHT GREEN	1520.0	-	8	H01-5313
4	-	-	HF86CB	2643671 R1	0.79	18.0	Std. Wall XLPE Primary Cable	LIGHT GREEN	2550.0	-	B	5300
4	-	-	HH86CB	2643671 R1	0.79	18.0	Std. Wall XLPE Primary Cable	LIGHT GREEN	1520.0	-	21	H01-5313
5	-	-	HF86DB	2643671 R1	0.79	18.0	Std. Wall XLPE Primary Cable	LIGHT GREEN	2550.0	-	C	5300
5	-	-	HH86DB	2643671 R1	0.79	18.0	Std. Wall XLPE Primary Cable	LIGHT GREEN	1520.0	-	7	H01-5313
6	-	-	HF86EB	2643671 R1	0.79	18.0	Std. Wall XLPE Primary Cable	LIGHT GREEN	2550.0	-	D	5300
6	-	-	HH86EB	2643671 R1	0.79	18.0	Std. Wall XLPE Primary Cable	LIGHT GREEN	1520.0	-	20	H01-5313

Name	Terminal Part Number	V-Min	Name	Wire Part Number	Wire CSA	Wire Spec	Wire Material description	Wire Color Description	Wire Length	End2 Terminal Part Number	End2 Pin Name	End2 Connector
8	-	-	HH86AA	2643671 R1	0.79	18.0	Std. Wall XLPE Primary Cable	LIGHT GREEN	1520.0	-	6	H01-5313
9	-	-	RH62D	2643720 R1	0.79	18.0	Std. Wall XLPE Primary Cable	DARK BLUE	2565.0	-	8	H01-5929A
10	-	-	HH86AC	2643671 R1	0.79	18.0	Std. Wall XLPE Primary Cable	LIGHT GREEN	1520.0	-	4	H01-5312
11	-	-	HH86K	2643671 R1	0.79	18.0	Std. Wall XLPE Primary Cable	LIGHT GREEN	1520.0	-	9	H01-5313
12	-	-	HH86L	2643671 R1	0.79	18.0	Std. Wall XLPE Primary Cable	LIGHT GREEN	1520.0	-	22	H01-5313
13	-	-	HH86AK	2643671 R1	0.79	18.0	Std. Wall XLPE Primary Cable	LIGHT GREEN	1520.0	-	2	H01-5312
14	-	-	HH86AL	2643671 R1	0.79	18.0	Std. Wall XLPE Primary Cable	LIGHT GREEN	1520.0	-	10	H01-5312
15	-	-	HH86AH	2643671 R1	0.79	18.0	Std. Wall XLPE Primary Cable	LIGHT GREEN	1520.0	-	1	H01-5312

Name	Terminal Part Number	V-Min	Name	Wire Part Number	Wire CSA	Wire Spec	Wire Material description	Wire Color Description	Wire Length	End2 Terminal Part Number	End2 Pin Name	End2 Connector
16	-	-	HH86AJ	2643671 R1	0.79	18.0	Std. Wall XLPE Primary Cable	LIGHT GREEN	1520.0	-	9	H01-5312
18	-	-	LD63AW	2643720 R1	0.79	18.0	Std. Wall XLPE Primary Cable	DARK BLUE	645.0	-	X	-
18	-	-	LE63AW	2643720 R1	0.79	18.0	Std. Wall XLPE Primary Cable	DARK BLUE	695.0	-	X	-
19	-	-	HM58C	3510294 R1	1.16	16.0	Thin Wall XLPE Primary Cable	BLACK	2835.0	-	G	1001
19	-	-	HM58C	3510294 R1	1.16	16.0	Thin Wall XLPE Primary Cable	BLACK	2835.0	-	-	-
22	-	-	HA109S	2643673 R1	0.79	18.0	Std. Wall XLPE Primary Cable	GREY	2835.0	-	-	-
23	-	-	HH86H	2643671 R1	0.79	18.0	Std. Wall XLPE Primary Cable	LIGHT GREEN	1520.0	-	10	H01-5313
24	-	-	HH86J	2643671 R1	0.79	18.0	Std. Wall XLPE Primary Cable	LIGHT GREEN	1520.0	-	23	H01-5313

Name	Terminal Part Number	V-Min	Name	Wire Part Number	Wire CSA	Wire Spec	Wire Material description	Wire Color Description	Wire Length	End2 Terminal Part Number	End2 Pin Name	End2 Connector
30	-	-	LG86AG	2643687 R1	1.91	14.0	Std. Wall XLPE Primary Cable	LIGHT GREEN	5027.0	-	B	H01-5500
31	-	-	BF62A	2643720 R1	0.79	18.0	Std. Wall XLPE Primary Cable	DARK BLUE	2540.0	-	D	5125
31	-	-	HG62A	2643720 R1	0.79	18.0	Std. Wall XLPE Primary Cable	DARK BLUE	3772.0	-	X	-
32	-	-	HA63E	2643720 R1	0.79	18.0	Std. Wall XLPE Primary Cable	DARK BLUE	650.0	-	-	-
37	-	-	HA63C	2643720 R1	0.79	18.0	Std. Wall XLPE Primary Cable	DARK BLUE	1340.0	-	R4-86	H01-5001B

Connector Name 5000
Part Number 3595621C1
Instances Cab J1939 (250Kbps):Cab J1939 (250Kbps)
Mates 5000A

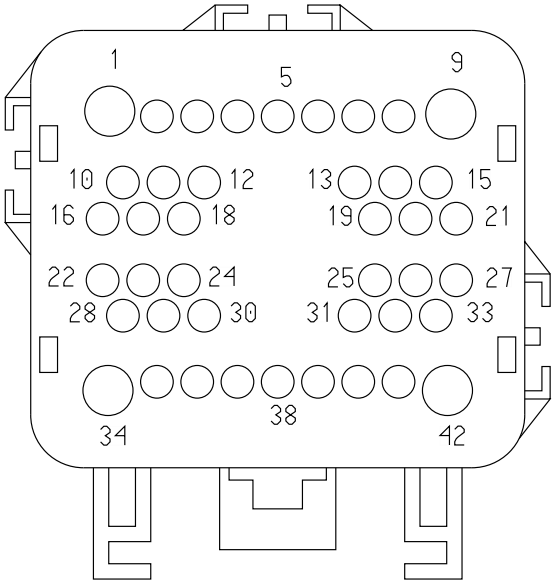

Name	Terminal Part Number	V-Min	Name	Wire Part Number	Wire CSA	Wire Spec	Wire Material description	Wire Color Description	Wire Length	End2 Terminal Part Number	End2 Pin Name	End2 Connect or
35	-	-	WIRE223956	-	0.0	-	-	-	0.0	-	PIN1	-
35	-	-	WIRE233665	-	0.0	-	-	-	0.0	-	G	5600
36	-	-	WIRE223957	-	0.0	-	-	-	0.0	-	PIN1	-
36	-	-	WIRE233666	-	0.0	-	-	-	0.0	-	F	5600

Connector Name	5001A
Part Number	4100324C1
Instances	LT/RH/LoneStar - X15/A26 - Sleeper PDM:Diagram1 Relays - Grid Management (W/Load Shed Sleeper Cab):Diagram1
Mates	Sleeper PDM - Relay Accessory

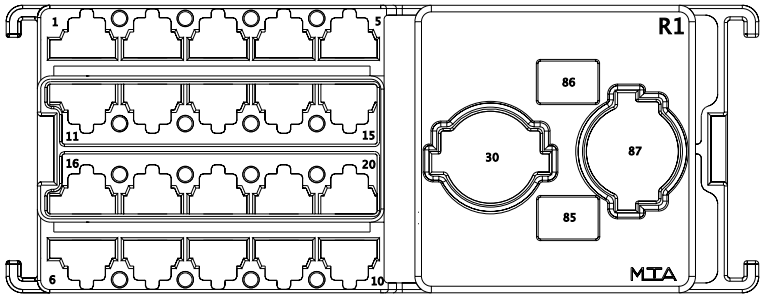

Name	Terminal Part Number	V-Min	Name	Wire Part Number	Wire CSA	Wire Spec	Wire Material description	Wire Color Description	Wire Length	End2 Terminal Part Number	End2 Pin Name	End2 Connector
1	-	-	HA12A	3510341 R1	0.79	18.0	Thin Wall XLPE Primary Cable	LIGHT BLUE	1310.0	-	-	-
2	-	-	HA14AE	2643686 R1	1.91	14.0	Std. Wall XLPE Primary Cable	RED	310.0	-	X	-
3	-	-	HA14AM	2643759 R1	0.79	18.0	Std. Wall XLPE Primary Cable	RED	310.0	-	X	-
5	-	-	HA14AH	2643695 R1	3.01	12.0	Std. Wall XLPE Primary Cable	RED	310.0	-	X	-

Name	Terminal Part Number	V-Min	Name	Wire Part Number	Wire CSA	Wire Spec	Wire Material description	Wire Color Description	Wire Length	End2 Terminal Part Number	End2 Pin Name	End2 Connector
6	-	-	BA75AL	3510302 R1	3.01	12.0	Thin Wall XLPE Primary Cable	LIGHT GREEN	3717.0	-	-	-
6	-	-	ZE75AL	3510302 R1	3.01	12.0	Thin Wall XLPE Primary Cable	LIGHT GREEN	3717.0	-	-	-
7	-	-	GV75WA	2643760 R1	1.16	16.0	Std. Wall XLPE Primary Cable	RED	1335.0	-	-	-
7	-	-	ZE75WA	2643760 R1	1.16	16.0	Std. Wall XLPE Primary Cable	RED	1335.0	-	-	-
7	-	-	ZC75WA	2643760 R1	1.16	16.0	Std. Wall XLPE Primary Cable	RED	1335.0	-	-	-
7	-	-	GS75WA	2643760 R1	1.16	16.0	Std. Wall XLPE Primary Cable	RED	1335.0	-	-	-
9	-	-	HH86AP	2643678 R1	1.16	16.0	Std. Wall XLPE Primary Cable	LIGHT GREEN	585.0	-	-	-
10	-	-	JL86SBB	2643678 R1	1.16	16.0	Std. Wall XLPE Primary Cable	LIGHT GREEN	5862.0	-	-	-

Name	Terminal Part Number	V-Min	Name	Wire Part Number	Wire CSA	Wire Spec	Wire Material description	Wire Color Description	Wire Length	End2 Terminal Part Number	End2 Pin Name	End2 Connector
10	-	-	ZL86M	2643678 R1	1.16	16.0	Std. Wall XLPE Primary Cable	LIGHT GREEN	505.0	-	-	-
10	-	-	JN86SBB	2643678 R1	1.16	16.0	Std. Wall XLPE Primary Cable	LIGHT GREEN	5677.0	-	-	-
11	-	-	HG12B	3510347 R1	0.79	18.0	Thin Wall XLPE Primary Cable	VIOLET	3257.0	-	-	-
12	-	-	HA86SB	2643687 R1	1.91	14.0	Std. Wall XLPE Primary Cable	LIGHT GREEN	600.0	-	-	-
13	-	-	RH182A	2643759 R1	0.79	18.0	Std. Wall XLPE Primary Cable	RED	2115.0	-	-	-
15	-	-	HG75C	2643753 R1	3.01	12.0	Std. Wall XLPE Primary Cable	LIGHT GREEN	3542.0	-	-	-
16	-	-	HA14AC	2643695 R1	3.01	12.0	Std. Wall XLPE Primary Cable	RED	470.0	-	X	-
17	-	-	HA14AD	2643686 R1	1.91	14.0	Std. Wall XLPE Primary Cable	RED	470.0	-	X	-

Name	Terminal Part Number	V-Min	Name	Wire Part Number	Wire CSA	Wire Spec	Wire Material description	Wire Color Description	Wire Length	End2 Terminal Part Number	End2 Pin Name	End2 Connector
19	-	-	HA14AG	2643760 R1	1.16	16.0	Std. Wall XLPE Primary Cable	RED	310.0	-	X	-
20	-	-	HA14AF	2643760 R1	1.16	16.0	Std. Wall XLPE Primary Cable	RED	310.0	-	X	-
R1 - 30	-	-	HA14AB	2643701 R1	7.48	8.0	Std. Wall XLPE Primary Cable	RED	470.0	-	-	-
R1 - 85	-	-	HA166BB	3510311 R1	0.79	18.0	Thin Wall XLPE Primary Cable	GREY	1310.0	-	40	5000
R1 - 86	-	-	HA166BC	3510311 R1	0.79	18.0	Thin Wall XLPE Primary Cable	GREY	1310.0	-	41	5000
R1 - 87	-	-	HA14AK	2643701 R1	7.48	8.0	Std. Wall XLPE Primary Cable	RED	316.0	-	-	-

Connector Name 5001B
Part Number 4100325C1
Instances LT/RH/LoneStar - X15/A26 - Sleeper PDM:Diagram1
Mates SLEEPER PDM

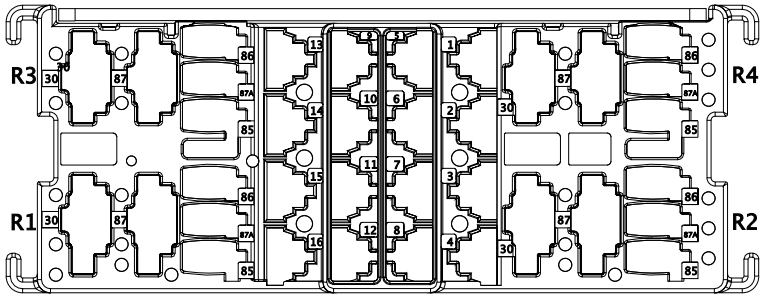

Name	Terminal Part Number	V-Min	Name	Wire Part Number	Wire CSA	Wire Spec	Wire Material description	Wire Color Description	Wire Length	End2 Terminal Part Number	End2 Pin Name	End2 Connect or
2	-	-	HA14AJ	2643695 R1	3.01	12.0	Std. Wall XLPE Primary Cable	RED	340.0	-	X	-
5	-	-	HA63DV	2643720 R1	0.79	18.0	Std. Wall XLPE Primary Cable	DARK BLUE	0.0	-	-	-
6	-	-	ZM63K	2643720 R1	0.79	18.0	Std. Wall XLPE Primary Cable	DARK BLUE	5857.0	-	-	-
7	-	-	HB86AG	2643753 R1	3.01	12.0	Std. Wall XLPE Primary Cable	LIGHT GREEN	4267.0	-	-	-

Name	Terminal Part Number	V-Min	Name	Wire Part Number	Wire CSA	Wire Spec	Wire Material description	Wire Color Description	Wire Length	End2 Terminal Part Number	End2 Pin Name	End2 Connector
7	-	-	LF86AG	2643753 R1	3.01	12.0	Std. Wall XLPE Primary Cable	LIGHT GREEN	2332.0	-	-	-
8	-	-	GV75WB	3510365 R1	0.79	18.0	Thin Wall XLPE Primary Cable	RED	1365.0	-	-	-
8	-	-	ZE75WB	3510365 R1	0.79	18.0	Thin Wall XLPE Primary Cable	RED	1365.0	-	-	-
8	-	-	GX75WB	3510365 R1	0.79	18.0	Thin Wall XLPE Primary Cable	RED	1365.0	-	-	-
10	-	-	HA14AL	2643695 R1	3.01	12.0	Std. Wall XLPE Primary Cable	RED	340.0	-	X	-
13	-	-	JH76	2643671 R1	0.79	18.0	Std. Wall XLPE Primary Cable	LIGHT GREEN	6417.0	-	-	-
14	-	-	ZM63V	2643720 R1	0.79	18.0	Std. Wall XLPE Primary Cable	DARK BLUE	1840.0	-	-	-
15	-	-	LE14VAF	2643760 R1	1.16	16.0	Std. Wall XLPE Primary Cable	RED	895.0	-	-	-

Name	Terminal Part Number	V-Min	Name	Wire Part Number	Wire CSA	Wire Spec	Wire Material description	Wire Color Description	Wire Length	End2 Terminal Part Number	End2 Pin Name	End2 Connector
15	-	-	LD14VAF	2643760 R1	1.16	16.0	Std. Wall XLPE Primary Cable	RED	945.0	-	-	-
16	-	-	ZK63U	2643720 R1	0.79	18.0	Std. Wall XLPE Primary Cable	DARK BLUE	565.0	-	-	-
16	-	-	ZW63SB	2643720 R1	0.79	18.0	Std. Wall XLPE Primary Cable	DARK BLUE	1540.0	-	-	-

Connector Name	5002A
Part Number	4108438C1
Instances	LT/RH/LoneStar - X15/A26 - Sleeper Ground Splice Packs - 5007:Diagram1 LT/RH/LoneStar - X15/A26 - Sleeper PDM:Diagram1
Mates	5002

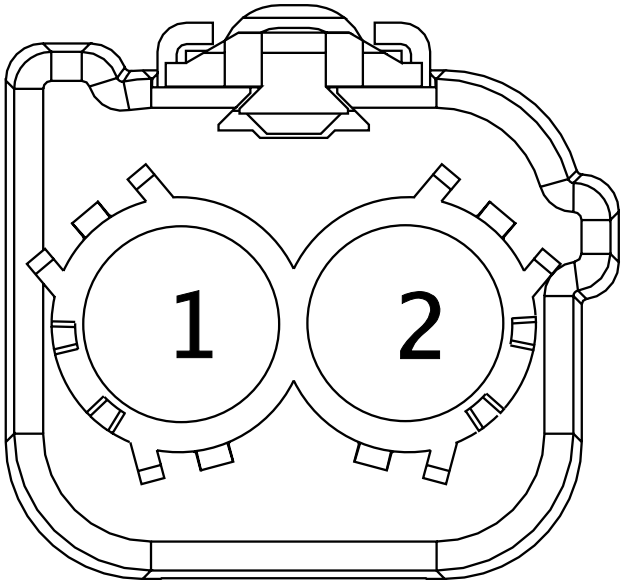

Name	Terminal Part Number	V-Min	Name	Wire Part Number	Wire CSA	Wire Spec	Wire Material description	Wire Color Description	Wire Length	End2 Terminal Part Number	End2 Pin Name	End2 Connect or
1	-	-	HA11-G	2643790 R1	12.52	6.0	Std. Wall XLPE Battery Cable	WHITE	1025.0	-	1	5004
2	-	-	HA14AA	2643702 R1	12.52	6.0	Std. Wall XLPE Battery Cable	RED	845.0	-	X	-

Connector Name	5002
Part Number	4108436C1
Instances	LT/RH/LoneStar - X15/A26 - Sleeper Ground Splice Packs - 5007:Diagram1 LT/RH/LoneStar - X15/A26 - Sleeper PDM:Diagram1
Mates	5002A

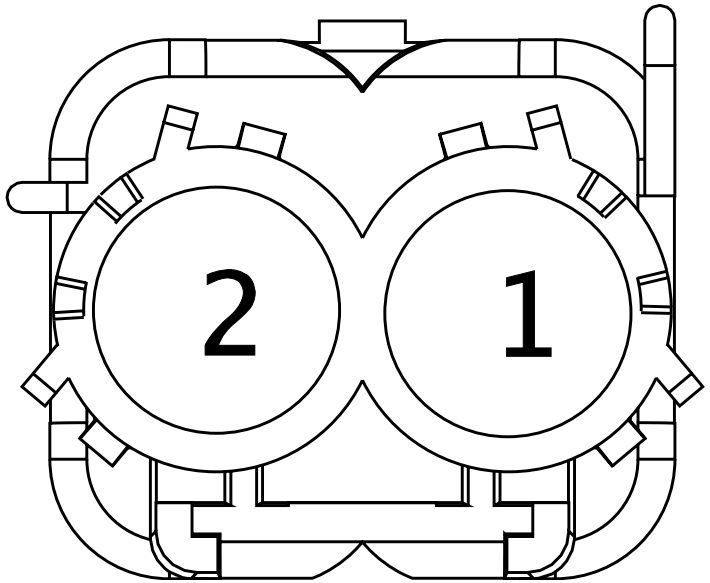

Name	Terminal Part Number	V-Min	Name	Wire Part Number	Wire CSA	Wire Spec	Wire Material description	Wire Color Description	Wire Length	End2 Terminal Part Number	End2 Pin Name	End2 Connect or
1	-	-	RP11-G	2643789 R1	7.48	8.0	Std. Wall XLPE Primary Cable	WHITE	2230.0	-	-	-
2	-	-	RP14W	2643701 R1	7.48	8.0	Std. Wall XLPE Primary Cable	RED	2817.0	-	-	-

Connector Name	5006
Part Number	1661197C1
Instances	LT/RH/LoneStar - X15/A26 - DC/AC Inverter:Diagram1
Mates	VD_POWER_PANEL_GND_2042-01 -01

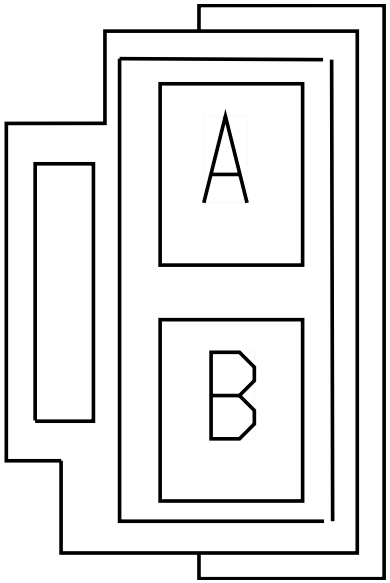

Name	Terminal Part Number	V-Min	Name	Wire Part Number	Wire CSA	Wire Spec	Wire Material description	Wire Color Description	Wire Length	End2 Terminal Part Number	End2 Pin Name	End2 Connect or
B	-	-	JD11-GSP	2643689 R1	1.91	14.0	Std. Wall XLPE Primary Cable	WHITE	1900.0	-	-	-

Connector Name	5007A
Part Number	3613769C1
Instances	LT/RH/LoneStar - X15/A26 - Sleeper Ground Splice Packs - 5007:Diagram1
Mates	SP-GROUND_1-0003-00-10-H0A

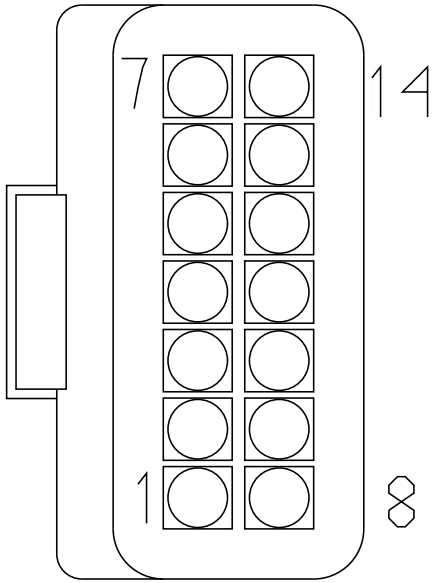

Name	Terminal Part Number	V-Min	Name	Wire Part Number	Wire CSA	Wire Spec	Wire Material description	Wire Color Description	Wire Length	End2 Terminal Part Number	End2 Pin Name	End2 Connect or
1	-	-	ZT11-GM1	3510363 R1	4.81	10.0	Thin Wall XLPE Primary Cable	WHITE	155.0	-	X	-
1	-	-	ZS11-GM1	3510363 R1	4.81	10.0	Thin Wall XLPE Primary Cable	WHITE	215.0	-	X	-
1	-	-	ZP11-GM1	3510363 R1	4.81	10.0	Thin Wall XLPE Primary Cable	WHITE	175.0	-	X	-
2	-	-	HM58-G	3510360 R1	1.16	16.0	Thin Wall XLPE Primary Cable	WHITE	2145.0	-	-	-

Name	Terminal Part Number	V-Min	Name	Wire Part Number	Wire CSA	Wire Spec	Wire Material description	Wire Color Description	Wire Length	End2 Terminal Part Number	End2 Pin Name	End2 Connector
3	-	-	HH86-GH	2643678 R1	1.16	16.0	Std. Wall XLPE Primary Cable	LIGHT GREEN	540.0	-	-	-
4	-	-	HE65-GE	2643681 R1	1.16	16.0	Std. Wall XLPE Primary Cable	WHITE	2145.0	-	-	-
5	-	-	HW86-GHW	2643671 R1	0.79	18.0	Std. Wall XLPE Primary Cable	LIGHT GREEN	1845.0	-	-	-
6	-	-	HB86-GK	3510363 R1	4.81	10.0	Thin Wall XLPE Primary Cable	WHITE	4217.0	-	-	-
6	-	-	LG86-GK	3510363 R1	4.81	10.0	Thin Wall XLPE Primary Cable	WHITE	4217.0	-	-	-
6	-	-	LF86-GK	3510363 R1	4.81	10.0	Thin Wall XLPE Primary Cable	WHITE	2282.0	-	-	-
7	-	-	JD11-GSP	2643689 R1	1.91	14.0	Std. Wall XLPE Primary Cable	WHITE	1900.0	-	-	-
8	-	-	ZK63-GU	2643674 R1	0.79	18.0	Std. Wall XLPE Primary Cable	WHITE	2145.0	-	-	-

Name	Terminal Part Number	V-Min	Name	Wire Part Number	Wire CSA	Wire Spec	Wire Material description	Wire Color Description	Wire Length	End2 Terminal Part Number	End2 Pin Name	End2 Connector
10	-	-	JP11-GT	2643689 R1	1.91	14.0	Std. Wall XLPE Primary Cable	WHITE	105.0	-	-	-
11	-	-	HZ11-GMB	2643674 R1	0.79	18.0	Std. Wall XLPE Primary Cable	WHITE	2450.0	-	-	-
11	-	-	HT11-GSD	2643674 R1	0.79	18.0	Std. Wall XLPE Primary Cable	WHITE	2450.0	-	-	-
11	-	-	RF11-GMB	2643674 R1	0.79	18.0	Std. Wall XLPE Primary Cable	WHITE	1455.0	-	-	-
11	-	-	JZ11-GMB	2643674 R1	0.79	18.0	Std. Wall XLPE Primary Cable	WHITE	1555.0	-	-	-
11	-	-	JB11-GMB	2643674 R1	0.79	18.0	Std. Wall XLPE Primary Cable	WHITE	1455.0	-	-	-
11	-	-	JA11-GME	2643674 R1	0.79	18.0	Std. Wall XLPE Primary Cable	WHITE	685.0	-	-	-
12	-	-	JK76-G	2643674 R1	0.79	18.0	Std. Wall XLPE Primary Cable	WHITE	2145.0	-	-	-

Name	Terminal Part Number	V-Min	Name	Wire Part Number	Wire CSA	Wire Spec	Wire Material description	Wire Color Description	Wire Length	End2 Terminal Part Number	End2 Pin Name	End2 Connector
12	-	-	JM76-G	2643674 R1	0.79	18.0	Std. Wall XLPE Primary Cable	WHITE	2145.0	-	-	-
12	-	-	JH76-G	2643674 R1	0.79	18.0	Std. Wall XLPE Primary Cable	WHITE	6367.0	-	-	-
13	-	-	ZC75-GA	2643681 R1	1.16	16.0	Std. Wall XLPE Primary Cable	WHITE	1315.0	-	-	-
13	-	-	MK75WG	2643674 R1	0.79	18.0	Std. Wall XLPE Primary Cable	WHITE	1315.0	-	-	-
13	-	-	MJ75WK	2643681 R1	1.16	16.0	Std. Wall XLPE Primary Cable	WHITE	515.0	-	-	-
13	-	-	ZE75-GSX	2643689 R1	1.91	14.0	Std. Wall XLPE Primary Cable	WHITE	160.0	-	-	-
13	-	-	BD75-GSX	2643689 R1	1.91	14.0	Std. Wall XLPE Primary Cable	WHITE	160.0	-	-	-
13	-	-	BF75-GSX	2643689 R1	1.91	14.0	Std. Wall XLPE Primary Cable	WHITE	160.0	-	-	-

Name	Terminal Part Number	V-Min	Name	Wire Part Number	Wire CSA	Wire Spec	Wire Material description	Wire Color Description	Wire Length	End2 Terminal Part Number	End2 Pin Name	End2 Connector
14	-	-	JN86-GSB	2643681 R1	1.16	16.0	Std. Wall XLPE Primary Cable	WHITE	5657.0	-	-	-
14	-	-	ZL86-GSB	2643681 R1	1.16	16.0	Std. Wall XLPE Primary Cable	WHITE	5657.0	-	-	-
14	-	-	JL86-GSB	2643681 R1	1.16	16.0	Std. Wall XLPE Primary Cable	WHITE	5842.0	-	-	-

Connector Name	5007B
Part Number	3613769C1
Instances	LT/RH/LoneStar - X15/A26 - Sleeper Ground Splice Packs - 5007:Diagram1
Mates	SP-GROUND_2-0003-00-10-H0A

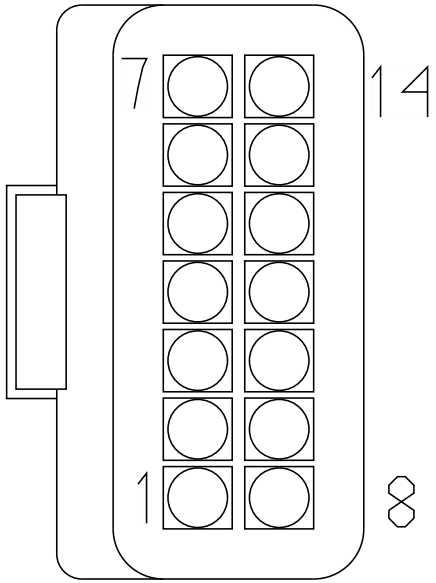

Name	Terminal Part Number	V-Min	Name	Wire Part Number	Wire CSA	Wire Spec	Wire Material description	Wire Color Description	Wire Length	End2 Terminal Part Number	End2 Pin Name	End2 Connect or
1	-	-	ZT11-GM2	3510363 R1	4.81	10.0	Thin Wall XLPE Primary Cable	WHITE	105.0	-	X	-
1	-	-	ZS11-GM2	3510363 R1	4.81	10.0	Thin Wall XLPE Primary Cable	WHITE	45.0	-	X	-
1	-	-	ZP11-GM2	3510363 R1	4.81	10.0	Thin Wall XLPE Primary Cable	WHITE	85.0	-	X	-
2	-	-	LD63-GSE	2643720 R1	0.79	18.0	Std. Wall XLPE Primary Cable	DARK BLUE	1265.0	-	X	-

Name	Terminal Part Number	V-Min	Name	Wire Part Number	Wire CSA	Wire Spec	Wire Material description	Wire Color Description	Wire Length	End2 Terminal Part Number	End2 Pin Name	End2 Connector
2	-	-	LE63-GSE	2643720 R1	0.79	18.0	Std. Wall XLPE Primary Cable	DARK BLUE	1305.0	-	X	-
3	-	-	HG75-GBB	3510299 R1	0.79	18.0	Thin Wall XLPE Primary Cable	LIGHT GREEN	3237.0	-	-	-
4	-	-	AE11-GB	3510360 R1	1.16	16.0	Thin Wall XLPE Primary Cable	WHITE	1410.0	-	-	-
5	-	-	RH11-GA	2643674 R1	0.79	18.0	Std. Wall XLPE Primary Cable	WHITE	1875.0	-	-	-

Connector Name 5010
Part Number 3538634C1
Instances Telematics J1708:Telematics J1708
Mates 1970

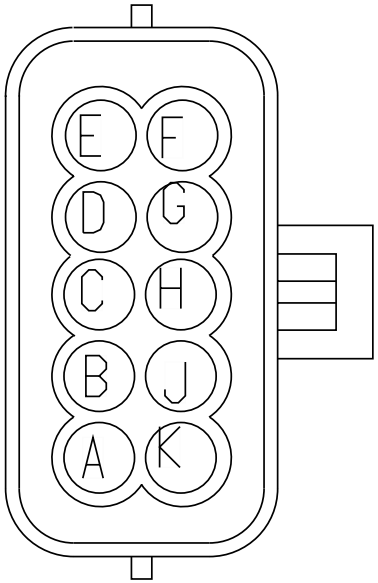

Name	Terminal Part Number	V-Min	Name	Wire Part Number	Wire CSA	Wire Spec	Wire Material description	Wire Color Description	Wire Length	End2 Terminal Part Number	End2 Pin Name	End2 Connect or
C	-	-	WIRE490322	-	0.0	-	-	-	0.0	-	5	5020
C	-	-	WIRE490323	-	0.0	-	-	-	0.0	-	B	5900
C	-	-	WIRE490324	-	0.0	-	-	-	0.0	-	F	5902
C	-	-	WIRE490325	-	0.0	-	-	-	0.0	-	5	5906
C	-	-	WIRE490326	-	0.0	-	-	-	0.0	-	G	5909
C	-	-	WIRE490327	-	0.0	-	-	-	0.0	-	B	5927
D	-	-	WIRE490316	-	0.0	-	-	-	0.0	-	4	5020
D	-	-	WIRE490317	-	0.0	-	-	-	0.0	-	A	5900

Name	Terminal Part Number	V-Min	Name	Wire Part Number	Wire CSA	Wire Spec	Wire Material description	Wire Color Description	Wire Length	End2 Terminal Part Number	End2 Pin Name	End2 Connect or
D	-	-	WIRE490318	-	0.0	-	-	-	0.0	-	E	5902
D	-	-	WIRE490319	-	0.0	-	-	-	0.0	-	6	5906
D	-	-	WIRE490320	-	0.0	-	-	-	0.0	-	F	5909
D	-	-	WIRE490321	-	0.0	-	-	-	0.0	-	A	5927

Connector Name	5010
Part Number	3538634C1
Short Description	SATELLITE COMMUNICATION
Instances	LT/RH/LoneStar - X15/A26 - Telematics (DRIVERTECH DAYCAB W/ J1939):Diagram1 LT/RH/LoneStar - X15/A26 - Telematics (DRIVERTECH SLEEPER W/ J1939):Diagram1 LT/RH/LoneStar - X15/A26 - Telematics (PEOPLE NET SLEEPER):Diagram1 LT/RH/LoneStar - X15/A26 - Telematics (QUALCOMM MCT w/ TRACS):Diagram1 LT/RH/LoneStar - X15/A26 - Telematics (QUALCOMM MCT w/o Tracs):Diagram1 LT/RH/LoneStar - X15/A26 - Telematics (TRIPMASTER SLEEPER):Diagram1 LT/RH/LoneStar - X15/A26 - Telematics QUALCOMM IMCT DAYCAB With MVPC:Diagram1 LT/RH/LoneStar - X15/A26 - Telematics QUALCOMM IMCT DAYCAB With MVPC & PANIC BUTTON:Diagram1 LT/RH/LoneStar - X15/A26 - Telematics QUALCOMM IMCT DAYCAB With PANIC BUTTON:Diagram2 LT/RH/LoneStar - X15/A26 - Telematics QUALCOMM IMCT MD:Diagram2 LT/RH/LoneStar - X15/A26 - Telematics QUALCOMM TMCT:Diagram1 LT/RH/LoneStar - X15/A26 - Telematics QUALCOMM TMCT With PANIC BUTTON:Diagram1
Mates	1970

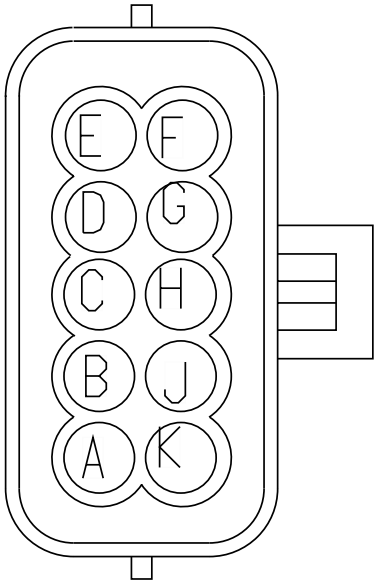

Name	Terminal Part Number	V-Min	Name	Wire Part Number	Wire CSA	Wire Spec	Wire Material description	Wire Color Description	Wire Length	End2 Terminal Part Number	End2 Pin Name	End2 Connector
A	-	-	JZ14ED	2643759 R1	0.79	18.0	Std. Wall XLPE Primary Cable	RED	3077.0	-	X	-
A	-	-	HL14ED	2643759 R1	0.79	18.0	Std. Wall XLPE Primary Cable	RED	3177.0	-	C	5900

Name	Terminal Part Number	V-Min	Name	Wire Part Number	Wire CSA	Wire Spec	Wire Material description	Wire Color Description	Wire Length	End2 Terminal Part Number	End2 Pin Name	End2 Connector
A	-	-	RF14ED	2643759 R1	0.79	18.0	Std. Wall XLPE Primary Cable	RED	3177.0	-	C	H01-5530
A	-	-	HZ14ED	2643759 R1	0.79	18.0	Std. Wall XLPE Primary Cable	RED	3382.0	-	B	5902
A	-	-	14ED	2643759 R1	0.79	18.0	Std. Wall XLPE Primary Cable	RED	2245.0	-	A	W01-5909
A	-	-	GD14ED	2643759 R1	0.79	18.0	Std. Wall XLPE Primary Cable	RED	5632.0	-	A	H01-5909
A	-	-	HT14SD	2643759 R1	0.79	18.0	Std. Wall XLPE Primary Cable	RED	3382.0	-	E	H01-5927
B	-	-	JZ13EE	2643794 R1	0.79	18.0	Std. Wall XLPE Primary Cable	PINK	3577.0	-	E	H01-5907
B	-	-	JA13EE	2643794 R1	0.79	18.0	Std. Wall XLPE Primary Cable	PINK	630.0	-	X	-
B	-	-	RF13EE	2643794 R1	0.79	18.0	Std. Wall XLPE Primary Cable	PINK	3177.0	-	E	H01-5530

Name	Terminal Part Number	V-Min	Name	Wire Part Number	Wire CSA	Wire Spec	Wire Material description	Wire Color Description	Wire Length	End2 Terminal Part Number	End2 Pin Name	End2 Connector
B	-	-	HZ13EE	2643794 R1	0.79	18.0	Std. Wall XLPE Primary Cable	PINK	3382.0	-	A	5902
B	-	-	JB13EE	2643794 R1	0.79	18.0	Std. Wall XLPE Primary Cable	PINK	3177.0	-	E	5900
B	-	-	13EE	2643794 R1	0.79	18.0	Std. Wall XLPE Primary Cable	PINK	2245.0	-	E	W01-5909
B	-	-	GD13EE	2643794 R1	0.79	18.0	Std. Wall XLPE Primary Cable	PINK	5632.0	-	E	H01-5909
B	-	-	HT13SD	2643794 R1	0.79	18.0	Std. Wall XLPE Primary Cable	PINK	3382.0	-	C	H01-5927
E	-	-	JZ98F	2643670 R1	0.79	18.0	Std. Wall XLPE Primary Cable	BLACK	3577.0	-	F	H01-5907
E	-	-	HL98F	2643670 R1	0.79	18.0	Std. Wall XLPE Primary Cable	BLACK	3177.0	-	F	5900
E	-	-	HZ98F	2643670 R1	0.79	18.0	Std. Wall XLPE Primary Cable	BLACK	3382.0	-	C	5902

Name	Terminal Part Number	V-Min	Name	Wire Part Number	Wire CSA	Wire Spec	Wire Material description	Wire Color Description	Wire Length	End2 Terminal Part Number	End2 Pin Name	End2 Connector
F	-	-	HY11-GSC	2643674 R1	0.79	18.0	Std. Wall XLPE Primary Cable	WHITE	3177.0	-	A	H01-5901
F	-	-	11-GMB	2643674 R1	0.79	18.0	Std. Wall XLPE Primary Cable	WHITE	2245.0	-	C	W01-5909
F	-	-	GD11-GMB	2643674 R1	0.79	18.0	Std. Wall XLPE Primary Cable	WHITE	5632.0	-	C	H01-5909
J	-	-	HT70E	2643675 R1	0.79	18.0	Std. Wall XLPE Primary Cable	ORANGE	3382.0	-	G	H01-5927
K	-	-	HT50S	2643801 R1	0.79	18.0	Std. Wall XLPE Primary Cable	YELLOW 2	3382.0	-	F	H01-5927

Connector Name	5011F
Part Number	3540613C1
Short Description	REMOTE RADIO AND TWEETER
Instances	LT/RH/LoneStar - X15/A26 - Radio N/ Steering Wheel Pod W/ Remote:Diagram1 LT/RH/LoneStar - X15/A26 - Radio W/Steering Wheel Pod W/ Remote:Diagram1 LT/RH/LoneStar - X15/A26 - Radio(Bluetooth) W/Steering Wheel W/Remote W/MIC:Diagram1
Mates	5011M

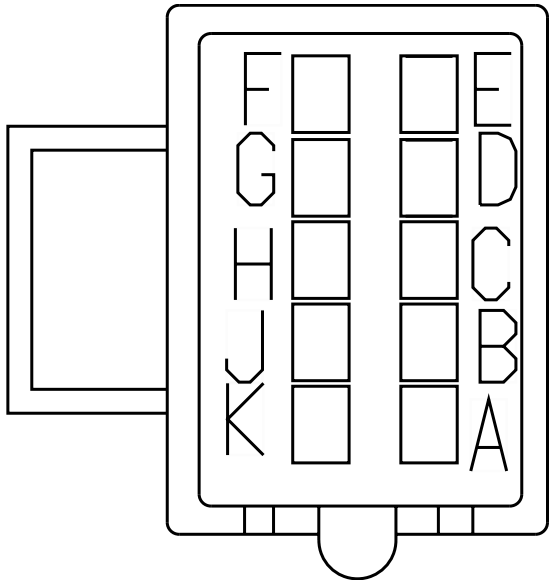

Name	Terminal Part Number	V-Min	Name	Wire Part Number	Wire CSA	Wire Spec	Wire Material description	Wire Color Description	Wire Length	End2 Terminal Part Number	End2 Pin Name	End2 Connect or
A	-	-	HW86R	2643671 R1	0.79	18.0	Std. Wall XLPE Primary Cable	LIGHT GREEN	2610.0	-	B	5303
B	-	-	HW86AE	2643671 R1	0.79	18.0	Std. Wall XLPE Primary Cable	LIGHT GREEN	2610.0	-	F	5303
E	-	-	HW86F	2643671 R1	0.79	18.0	Std. Wall XLPE Primary Cable	LIGHT GREEN	2610.0	-	A	5303

Connector Name	5011F
Part Number	3540613C1
Short Description	REMOTE RADIO AND TWEETER
Instances	LT/RH LoneStar - X15/A26 - Speakers:Speakers N/BT W/AMP N/QC:Diagram1 LT/RH LoneStar - X15/A26 - Speakers:Speakers W/BT W/AMP N/QC:Diagram1
Mates	5011M

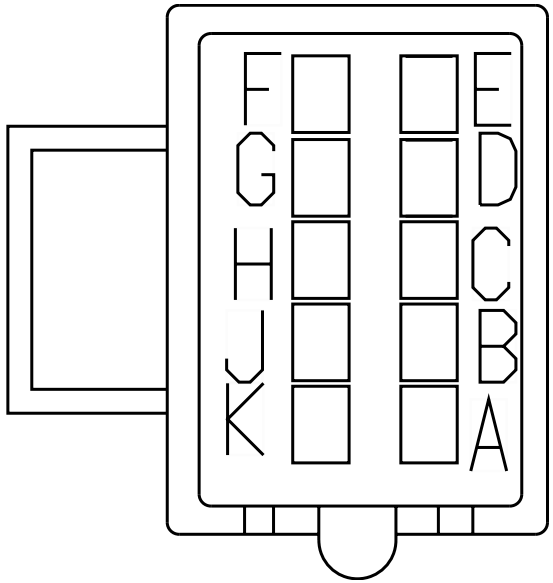

Name	Terminal Part Number	V-Min	Name	Wire Part Number	Wire CSA	Wire Spec	Wire Material description	Wire Color Description	Wire Length	End2 Terminal Part Number	End2 Pin Name	End2 Connect or
F	-	-	JT86AR	2643671 R1	0.79	18.0	Std. Wall XLPE Primary Cable	LIGHT GREEN	1595.0	-	3	H01-5313
G	-	-	JT86AS	2643671 R1	0.79	18.0	Std. Wall XLPE Primary Cable	LIGHT GREEN	1595.0	-	16	H01-5313
H	-	-	JT86AT	2643671 R1	0.79	18.0	Std. Wall XLPE Primary Cable	LIGHT GREEN	1595.0	-	4	H01-5313
J	-	-	JT86AU	2643671 R1	0.79	18.0	Std. Wall XLPE Primary Cable	LIGHT GREEN	1595.0	-	17	H01-5313

Connector Name	5011M
Part Number	3540612C1
Short Description	SLEEPER REMOTE/AMP
Instances	LT/RH/LoneStar - X15/A26 - Radio N/ Steering Wheel Pod W/ Remote:Diagram1 LT/RH/LoneStar - X15/A26 - Radio W/Steering Wheel Pod W/ Remote:Diagram1 LT/RH/LoneStar - X15/A26 - Radio(Bluetooth) W/Steering Wheel W/Remote W/MIC:Diagram1
Mates	5011F

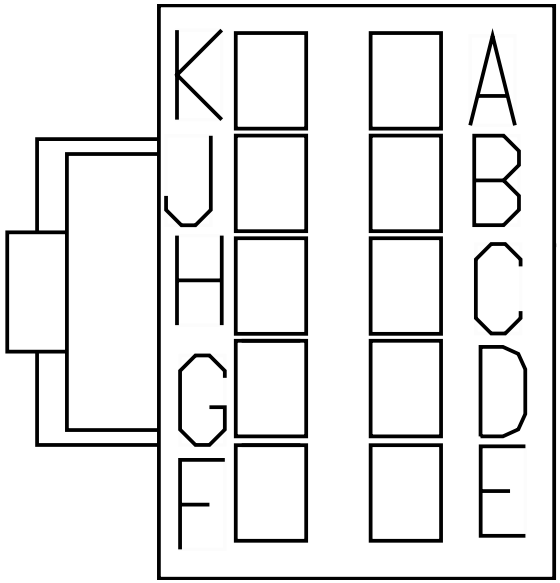

Name	Terminal Part Number	V-Min	Name	Wire Part Number	Wire CSA	Wire Spec	Wire Material description	Wire Color Description	Wire Length	End2 Terminal Part Number	End2 Pin Name	End2 Connect or
A	-	-	MZ86R	3510298 R1	0.53	20.0	Thin Wall XLPE Primary Cable	LIGHT GREEN	3440.0	-	-	-
B	-	-	MZ86AE	3510299 R1	0.79	18.0	Thin Wall XLPE Primary Cable	LIGHT GREEN	2870.0	-	4	A02-1300
E	-	-	MZ86F	3510335 R1	0.79	18.0	Thin Wall XLPE Primary Cable	YELLOW 2	2590.0	-	X	-

Connector Name	5011M
Part Number	3540612C1
Short Description	SLEEPER REMOTE/AMP
Instances	LT/RH LoneStar - X15/A26 - Speakers:Speakers N/BT W/AMP N/QC:Diagram1 LT/RH LoneStar - X15/A26 - Speakers:Speakers W/BT W/AMP N/QC:Diagram1
Mates	5011F

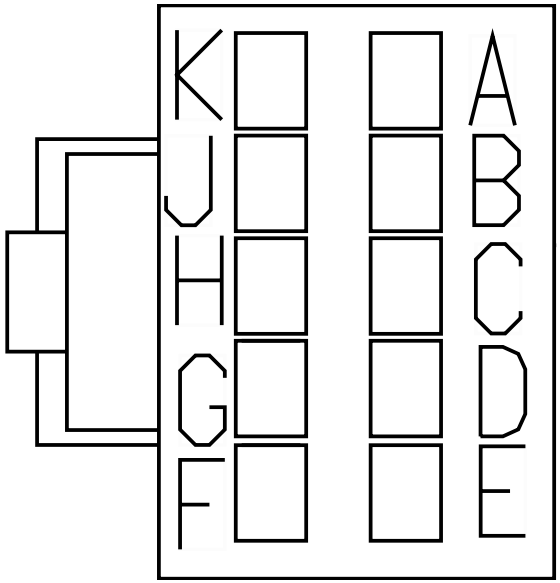

Name	Terminal Part Number	V-Min	Name	Wire Part Number	Wire CSA	Wire Spec	Wire Material description	Wire Color Description	Wire Length	End2 Terminal Part Number	End2 Pin Name	End2 Connect or
F	-	-	MX86AR	3510299 R1	0.79	18.0	Thin Wall XLPE Primary Cable	LIGHT GREEN	2340.0	-	A	A02-1051
G	-	-	MX86AS	3510299 R1	0.79	18.0	Thin Wall XLPE Primary Cable	LIGHT GREEN	2340.0	-	B	A02-1051
H	-	-	MX86AT	3510299 R1	0.79	18.0	Thin Wall XLPE Primary Cable	LIGHT GREEN	3480.0	-	A	A02-1050
J	-	-	MX86AU	3510299 R1	0.79	18.0	Thin Wall XLPE Primary Cable	LIGHT GREEN	3480.0	-	B	A02-1050

Connector Name	5020
Part Number	3553404C1
Instances	LT/RH/LoneStar - X15/A26 - Telematics (PEOPLE NET DAYCAB):Diagram1 LT/RH/LoneStar - X15/A26 - Telematics (PEOPLE NET SLEEPER):Diagram1 Telematics J1708:Telematics J1708
Mates	MODU-PEOPLENET_VID-2035-05 -05A

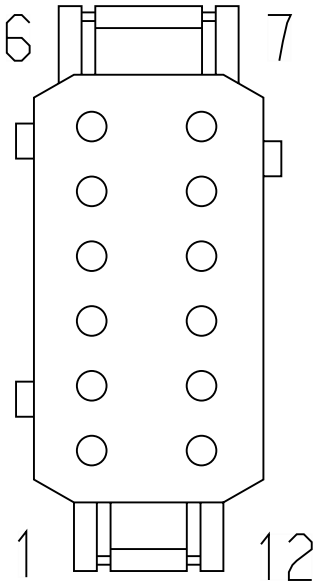

Name	Terminal Part Number	V-Min	Name	Wire Part Number	Wire CSA	Wire Spec	Wire Material description	Wire Color Description	Wire Length	End2 Terminal Part Number	End2 Pin Name	End2 Connect or
4	-	-	WIRE490316	-	0.0	-	-	-	0.0	-	D	5010
4	-	-	-	-	-	-	-	-	-	-	-	-
5	-	-	WIRE490322	-	0.0	-	-	-	0.0	-	C	5010
5	-	-	-	-	-	-	-	-	-	-	-	-

Connector Name	5102
Part Number	2031871C1
Short Description	ROOF HARNESS
Instances	LT/RH/LoneStar - X15/A26 - Lighting Sleeper Dome:Diagram1 LT/RH/LoneStar - X15/A26 - Rear Interior Dimming (Accent Light):Diagram1 LT/RH/LoneStar - X15/A26 - Rear Interior Dimming (Accent/ Mood):Diagram1
Mates	5102

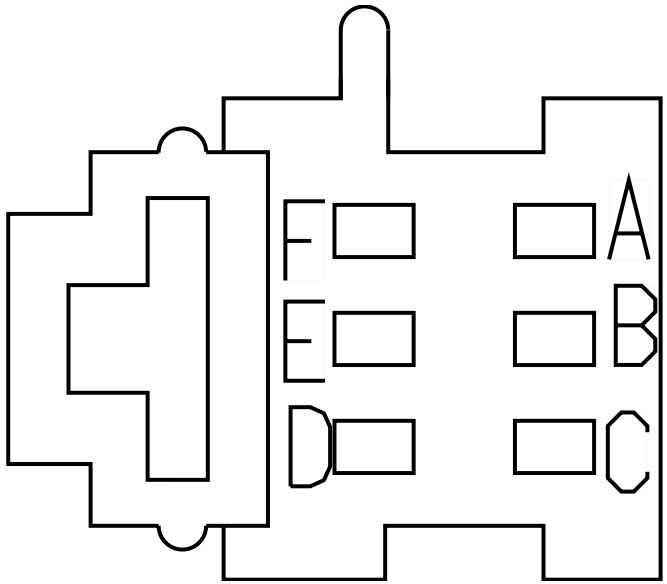

Name	Terminal Part Number	V-Min	Name	Wire Part Number	Wire CSA	Wire Spec	Wire Material description	Wire Color Description	Wire Length	End2 Terminal Part Number	End2 Pin Name	End2 Connect or
A	-	-	HA63HB	2643721 R1	1.16	16.0	Std. Wall XLPE Primary Cable	DARK BLUE	805.0	-	1	1000
A	-	-	HA63HB	2643721 R1	1.16	16.0	Std. Wall XLPE Primary Cable	DARK BLUE	805.0	-	G	5125
B	-	-	HA63-GB	2643681 R1	1.16	16.0	Std. Wall XLPE Primary Cable	WHITE	730.0	-	-	-
B	-	-	HA63-GB	2643681 R1	1.16	16.0	Std. Wall XLPE Primary Cable	WHITE	730.0	-	X	-

Name	Terminal Part Number	V-Min	Name	Wire Part Number	Wire CSA	Wire Spec	Wire Material description	Wire Color Description	Wire Length	End2 Terminal Part Number	End2 Pin Name	End2 Connect or
C	-	-	HA63D	2643720 R1	0.79	18.0	Std. Wall XLPE Primary Cable	DARK BLUE	2415.0	-	3	1000
E	-	-	HA109SB	2643673 R1	0.79	18.0	Std. Wall XLPE Primary Cable	GREY	1130.0	-	X	-
F	-	-	HA63EB	2643720 R1	0.79	18.0	Std. Wall XLPE Primary Cable	DARK BLUE	1030.0	-	X	-

Connector Name	5102
Part Number	2031872C1
Short Description	SLEEPER ROOF PANEL
Instances	LT/RH/LoneStar - X15/A26 - Lighting Sleeper Dome:Diagram1 LT/RH/LoneStar - X15/A26 - Rear Interior Dimming (Accent Light):Diagram1 LT/RH/LoneStar - X15/A26 - Rear Interior Dimming (Accent/ Mood):Diagram1
Mates	5102

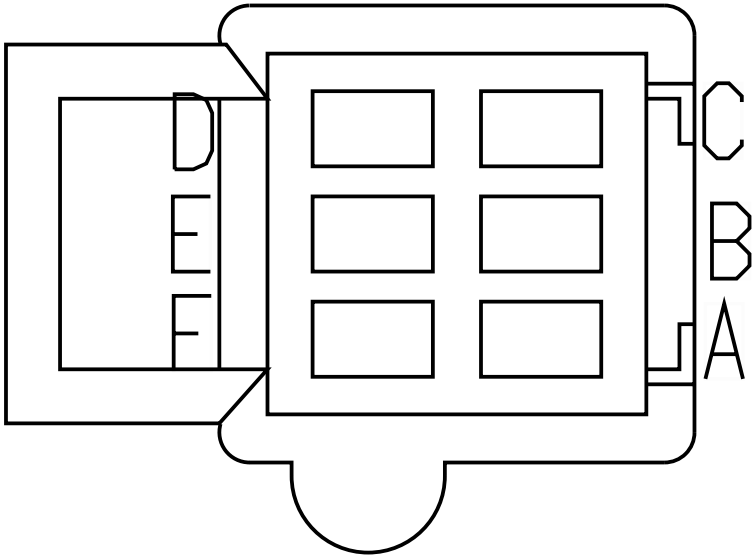

Name	Terminal Part Number	V-Min	Name	Wire Part Number	Wire CSA	Wire Spec	Wire Material description	Wire Color Description	Wire Length	End2 Terminal Part Number	End2 Pin Name	End2 Connect or
A	-	-	V63HB	2643720 R1	0.79	18.0	Std. Wall XLPE Primary Cable	DARK BLUE	1120.0	-	X	-
B	-	-	V63-GB	2643674 R1	0.79	18.0	Std. Wall XLPE Primary Cable	WHITE	1020.0	-	X	-
C	-	-	V63D	2643720 R1	0.79	18.0	Std. Wall XLPE Primary Cable	DARK BLUE	1695.0	-	A	5107
E	-	-	V9NCB	2643673 R1	0.79	18.0	Std. Wall XLPE Primary Cable	GREY	1695.0	-	D	5107

Name	Terminal Part Number	V-Min	Name	Wire Part Number	Wire CSA	Wire Spec	Wire Material description	Wire Color Description	Wire Length	End2 Terminal Part Number	End2 Pin Name	End2 Connect or
F	-	-	V63EB	2643720 R1	0.79	18.0	Std. Wall XLPE Primary Cable	DARK BLUE	1695.0	-	C	5107

Connector Name	5107
Part Number	3541785C1
Instances	LT/RH/LoneStar - X15/A26 - Lighting Sleeper Dome:Diagram1
Mates	LT-DOME_SLPR-2003-02-02

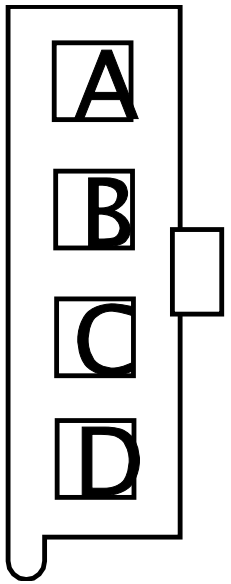

Name	Terminal Part Number	V-Min	Name	Wire Part Number	Wire CSA	Wire Spec	Wire Material description	Wire Color Description	Wire Length	End2 Terminal Part Number	End2 Pin Name	End2 Connect or
A	-	-	V63D	2643720 R1	0.79	18.0	Std. Wall XLPE Primary Cable	DARK BLUE	1695.0	-	C	5102
B	-	-	V63-GA	2643674 R1	0.79	18.0	Std. Wall XLPE Primary Cable	WHITE	675.0	-	X	-
C	-	-	V63EB	2643720 R1	0.79	18.0	Std. Wall XLPE Primary Cable	DARK BLUE	1695.0	-	F	5102
D	-	-	V9NCB	2643673 R1	0.79	18.0	Std. Wall XLPE Primary Cable	GREY	1695.0	-	E	5102

Connector Name	5117
Part Number	1661889C1
Instances	LT/RH/LoneStar - X15/A26 - Air Shield Lighting w/ One Light:Diagram2 LT/RH/LoneStar - X15/A26 - Beacon/Strobe Light:Diagram2
Mates	5117

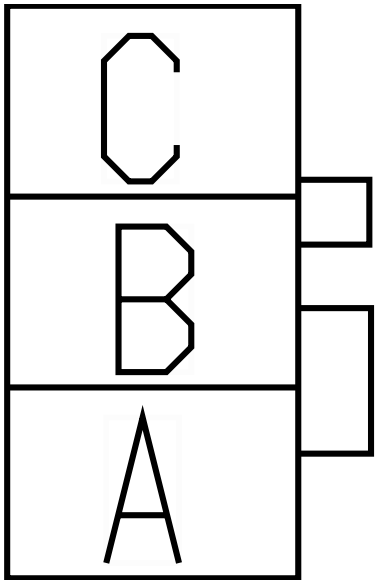

Name	Terminal Part Number	V-Min	Name	Wire Part Number	Wire CSA	Wire Spec	Wire Material description	Wire Color Description	Wire Length	End2 Terminal Part Number	End2 Pin Name	End2 Connect or
A	-	-	BLACK	-	0.0	-	-	-	1730.0	-	-	-
B	-	-	WHITE	-	0.0	-	-	-	1730.0	-	-	-

Connector Name	5117
Part Number	1661889C1
Short Description	AIR SHIELD LIGHT CONN
Instances	LT/RH/LoneStar - X15/A26 - Air Shield Lighting w/ One Light:Diagram1 LT/RH/LoneStar - X15/A26 - Beacon/Strobe Light:Diagram1
Mates	1906F

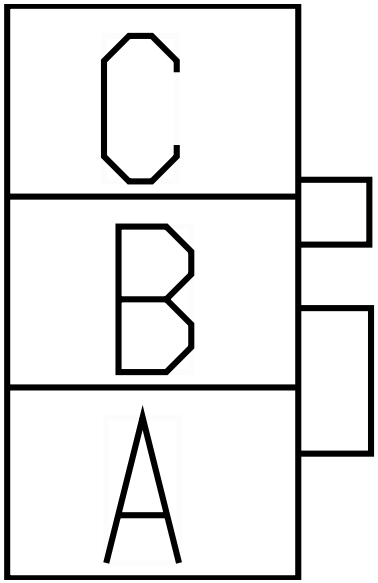

Name	Terminal Part Number	V-Min	Name	Wire Part Number	Wire CSA	Wire Spec	Wire Material description	Wire Color Description	Wire Length	End2 Terminal Part Number	End2 Pin Name	End2 Connect or
A	-	-	BLACK	-	0.0	-	-	-	1730.0	-	A	W09-5121
A	-	-	BLACK	-	0.0	-	-	-	1730.0	-	A	W22-5120-5121-SHIELD BEACON
B	-	-	WHITE	-	0.0	-	-	-	1730.0	-	A	W09-5120
B	-	-	WHITE	-	0.0	-	-	-	1730.0	-	B	W22-5120-5121-SHIELD BEACON

Connector Name	5117
Part Number	1661889C1
Short Description	AIR SHIELD LIGHT CONN
Instances	LT/RH - A26 - Work Lights W/ Sw Pack - Customer Supplied W/ RKE W/MAN REV:Diagram2 LT/RH - A26 - Work Lights W/ Sw Pack - Customer Supplied W/ RKE W/MAN REV:Diagram4 LT/RH - A26 - Work Lights W/ Sw Pack - Customer Supplied W/ O RKE W/MAN REV:Diagram2 LT/RH - A26 - Work Lights W/ Sw Pack - Customer Supplied W/ O RKE W/MAN REV:Diagram4 LT/RH - X15/A26 - Work Lights W/ Sw Pack - Customer Supplied:Diagram2 LT/RH/LoneStar - X15 - Work Lights W/ Sw Pack - Customer Supplied W/ RKE W/MAN REV:Diagram2 LT/RH/LoneStar - X15 - Work Lights W/ Sw Pack - Customer Supplied W/O RKE W/MAN REV:Diagram2 LT/RH/LoneStar - X15/A26 - Work Lights - LED W/ Sw Pack - Customer Supplied - Sleeper:Diagram2 LT/RH/LoneStar - X15/A26 - Work Lights W/ Sw Pack - Customer Supplied:Diagram2 LT/RH/LoneStar - X15/A26 - Work Lights W/ Sw Pack - Customer Supplied W/ RKE W/AUTO REV:Diagram2 LT/RH/LoneStar - X15/A26 - Work Lights W/ Sw Pack - Customer Supplied W/O RKE W/AUTO REV:Diagram2
Mates	220XM

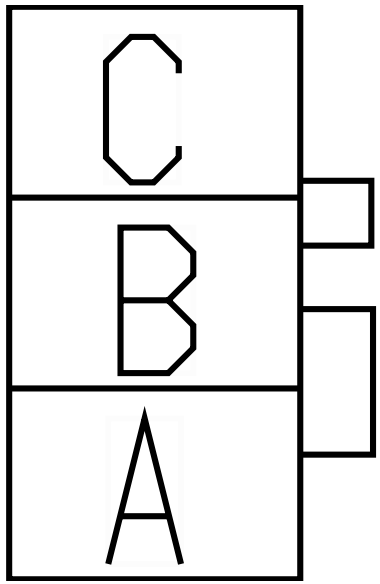

Name	Terminal Part Number	V-Min	Name	Wire Part Number	Wire CSA	Wire Spec	Wire Material description	Wire Color Description	Wire Length	End2 Terminal Part Number	End2 Pin Name	End2 Connector
A	-	-	BLACK	-	1.16	16.0	Std. Wall XLPE Primary Cable	BLACK	1730.0	-	A	W29-5122/5123
A	-	-	BLACK	-	1.16	16.0	Std. Wall XLPE Primary Cable	BLACK	1730.0	-	A	W28-5122/5123
A	-	-	-	-	-	-	-	-	-	-	-	-

Name	Terminal Part Number	V-Min	Name	Wire Part Number	Wire CSA	Wire Spec	Wire Material description	Wire Color Description	Wire Length	End2 Terminal Part Number	End2 Pin Name	End2 Connect or
B	-	-	WHITE	-	1.16	16.0	Std. Wall XLPE Primary Cable	WHITE	1730.0	-	B	W28-5122/5123
B	-	-	WHITE	-	1.16	16.0	Std. Wall XLPE Primary Cable	WHITE	1730.0	-	B	W29-5122/5123
B	-	-	-	-	-	-	-	-	-	-	-	-

Connector Name 5117

Part Number 1661889C1

Instances LT/RH - A26 - Work Lights (2 Blunt Cuts Only W/O Relay) W/ Backup W/Manual Trans Day Cab:Diagram2
LT/RH - A26 - Work Lights (2 Blunt Cuts Only W/O Relay) W/ Backup W/Manual Trans Day Cab:Diagram4
LT/RH - A26 - Work Lights - LED W/ Sw Pack - Customer Supplied - Sleeper W/ RKE W/MAN REV:Diagram2
LT/RH - A26 - Work Lights - LED W/ Sw Pack - Customer Supplied - Sleeper W/ RKE W/MAN REV:Diagram4
LT/RH - A26 - Work Lights - LED W/ Sw Pack - Customer Supplied - Sleeper W/O RKE W/MAN REV:Diagram2
LT/RH - A26 - Work Lights - LED W/ Sw Pack - Customer Supplied - Sleeper W/O RKE W/MAN REV:Diagram4
LT/RH/LoneStar - X15 - Work Lights (2 Blunt Cuts Only W/O Relay) W/Backup W/Manual Trans:Diagram2
LT/RH/LoneStar - X15 - Work Lights - LED W/ Sw Pack - Customer Supplied - Sleeper W/ RKE W/MAN REV:Diagram2
LT/RH/LoneStar - X15 - Work Lights - LED W/ Sw Pack - Customer Supplied - Sleeper W/O RKE W/MAN REV:Diagram2
LT/RH/LoneStar - X15/A26 - Work Lights (2 Blunt Cuts Only W/O Relay):Diagram2
LT/RH/LoneStar - X15/A26 - Work Lights (2 Blunt Cuts Only W/O Relay) W/Backup W/Auto Trans (Allison and Endurant):Diagram2
LT/RH/LoneStar - X15/A26 - Work Lights - LED W/ Sw Pack - Customer Supplied - Sleeper W/ RKE W/AUTO REV:Diagram2
LT/RH/LoneStar - X15/A26 - Work Lights - LED W/ Sw Pack - Customer Supplied - Sleeper W/O RKE:Diagram2
LT/RH/LoneStar - X15/A26 - Work Lights - LED W/ Sw Pack - Customer Supplied - Sleeper W/O RKE W/AUTO REV:Diagram2

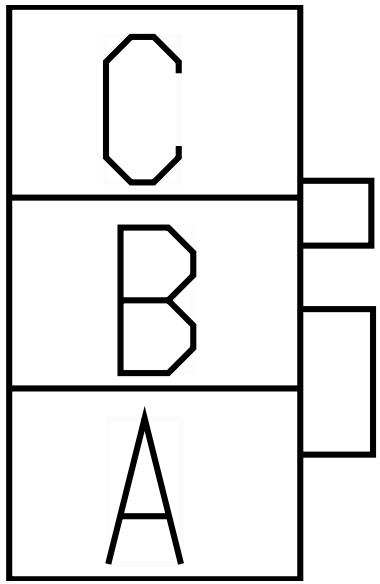

Mates 5118

Name	Terminal Part Number	V-Min	Name	Wire Part Number	Wire CSA	Wire Spec	Wire Material description	Wire Color Description	Wire Length	End2 Terminal Part Number	End2 Pin Name	End2 Connect or
A	-	-	BLACK	-	1.16	16.0	Std. Wall XLPE Primary Cable	BLACK	1730.0	-	A	W25-5122/5123

Name	Terminal Part Number	V-Min	Name	Wire Part Number	Wire CSA	Wire Spec	Wire Material description	Wire Color Description	Wire Length	End2 Terminal Part Number	End2 Pin Name	End2 Connect or
A	-	-	BLACK	-	1.16	16.0	Std. Wall XLPE Primary Cable	BLACK	1730.0	-	A	W29-512 2/5123
A	-	-	BLACK	-	1.16	16.0	Std. Wall XLPE Primary Cable	BLACK	1730.0	-	A	W28-512 2/5123
B	-	-	WHITE	-	1.16	16.0	Std. Wall XLPE Primary Cable	WHITE	1730.0	-	B	W25-512 2/5123
B	-	-	WHITE	-	1.16	16.0	Std. Wall XLPE Primary Cable	WHITE	1730.0	-	B	W29-512 2/5123
B	-	-	WHITE	-	1.16	16.0	Std. Wall XLPE Primary Cable	WHITE	1730.0	-	B	W28-512 2/5123

Connector Name 5117

Part Number 1661889C1

Instances LT/RH - A26 - Work Lights - LED W/ Sw Pack - Customer Supplied - Sleeper W/ RKE W/MAN REV:Diagram2
LT/RH - A26 - Work Lights - LED W/ Sw Pack - Customer Supplied - Sleeper W/ RKE W/MAN REV:Diagram4
LT/RH - A26 - Work Lights - LED W/ Sw Pack - Customer Supplied - Sleeper W/O RKE W/MAN REV:Diagram2
LT/RH - A26 - Work Lights - LED W/ Sw Pack - Customer Supplied - Sleeper W/O RKE W/MAN REV:Diagram4
LT/RH/LoneStar - X15 - Work Lights - LED W/ Sw Pack - Customer Supplied - Sleeper W/ RKE W/MAN REV:Diagram2
LT/RH/LoneStar - X15 - Work Lights - LED W/ Sw Pack - Customer Supplied - Sleeper W/O RKE W/MAN REV:Diagram2
LT/RH/LoneStar - X15/A26 - Work Lights - LED W/ Sw Pack - Customer Supplied - Sleeper:Diagram2
LT/RH/LoneStar - X15/A26 - Work Lights - LED W/ Sw Pack - Customer Supplied - Sleeper W/ RKE W/AUTO REV:Diagram2
LT/RH/LoneStar - X15/A26 - Work Lights - LED W/ Sw Pack - Customer Supplied - Sleeper W/O RKE:Diagram2
LT/RH/LoneStar - X15/A26 - Work Lights - LED W/ Sw Pack - Customer Supplied - Sleeper W/O RKE W/AUTO REV:Diagram2

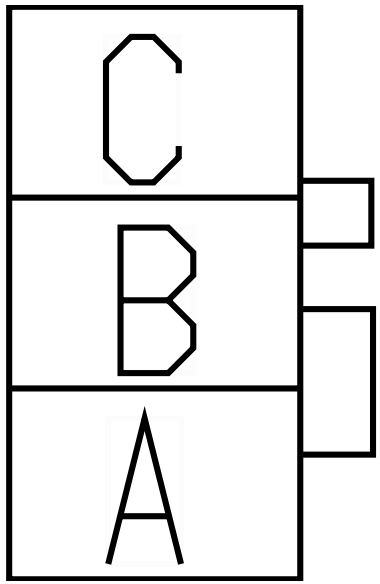

Mates 5119

Name	Terminal Part Number	V-Min	Name	Wire Part Number	Wire CSA	Wire Spec	Wire Material description	Wire Color Description	Wire Length	End2 Terminal Part Number	End2 Pin Name	End2 Connector
A	-	-	BLACK	-	1.16	16.0	Std. Wall XLPE Primary Cable	BLACK	1730.0	-	A	W26-5122/5123
A	-	-	-	-	-	-	-	-	-	-	-	-
B	-	-	WHITE	-	1.16	16.0	Std. Wall XLPE Primary Cable	WHITE	1730.0	-	B	W26-5122/5123
B	-	-	-	-	-	-	-	-	-	-	-	-

Connector Name	5117
Part Number	1661891C1
Instances	LT/RH/LoneStar - X15/A26 - Air Shield Lighting w/ One Light:Diagram2 LT/RH/LoneStar - X15/A26 - Beacon/Strobe Light:Diagram2
Mates	5117

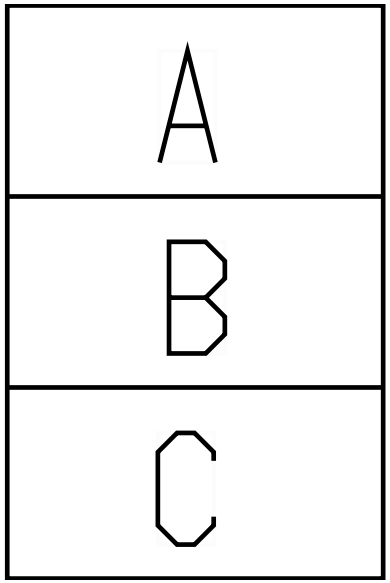

Name	Terminal Part Number	V-Min	Name	Wire Part Number	Wire CSA	Wire Spec	Wire Material description	Wire Color Description	Wire Length	End2 Terminal Part Number	End2 Pin Name	End2 Connect or
A	-	-	HM58C	3510294 R1	1.16	16.0	Thin Wall XLPE Primary Cable	BLACK	2835.0	-	-	-
B	-	-	HM58-G	3510360 R1	1.16	16.0	Thin Wall XLPE Primary Cable	WHITE	2145.0	-	-	-
B	-	-	HM58-G	3510360 R1	1.16	16.0	Thin Wall XLPE Primary Cable	WHITE	2075.0	-	-	-

Connector Name 5118

Part Number 1661259C1

Instances LT/RH - A26 - Work Lights (2 Blunt Cuts Only W/O Relay) W/ Backup W/Manual Trans Day Cab:Diagram2
LT/RH - A26 - Work Lights (2 Blunt Cuts Only W/O Relay) W/ Backup W/Manual Trans Day Cab:Diagram4
LT/RH - A26 - Work Lights - LED W/ Sw Pack - Customer Supplied - Sleeper W/ RKE W/MAN REV:Diagram2
LT/RH - A26 - Work Lights - LED W/ Sw Pack - Customer Supplied - Sleeper W/ RKE W/MAN REV:Diagram4
LT/RH - A26 - Work Lights - LED W/ Sw Pack - Customer Supplied - Sleeper W/O RKE W/MAN REV:Diagram2
LT/RH - A26 - Work Lights - LED W/ Sw Pack - Customer Supplied - Sleeper W/O RKE W/MAN REV:Diagram4
LT/RH/LoneStar - X15 - Work Lights (2 Blunt Cuts Only W/O Relay) W/Backup W/Manual Trans:Diagram2
LT/RH/LoneStar - X15 - Work Lights - LED W/ Sw Pack - Customer Supplied - Sleeper W/ RKE W/MAN REV:Diagram2
LT/RH/LoneStar - X15 - Work Lights - LED W/ Sw Pack - Customer Supplied - Sleeper W/O RKE W/MAN REV:Diagram2
LT/RH/LoneStar - X15/A26 - Work Lights (2 Blunt Cuts Only W/O Relay):Diagram2
LT/RH/LoneStar - X15/A26 - Work Lights (2 Blunt Cuts Only W/O Relay) W/Backup W/Auto Trans (Allison and Endurant):Diagram2
LT/RH/LoneStar - X15/A26 - Work Lights - LED W/ Sw Pack - Customer Supplied - Sleeper W/ RKE W/AUTO REV:Diagram2
LT/RH/LoneStar - X15/A26 - Work Lights - LED W/ Sw Pack - Customer Supplied - Sleeper W/O RKE:Diagram2
LT/RH/LoneStar - X15/A26 - Work Lights - LED W/ Sw Pack - Customer Supplied - Sleeper W/O RKE W/AUTO REV:Diagram2

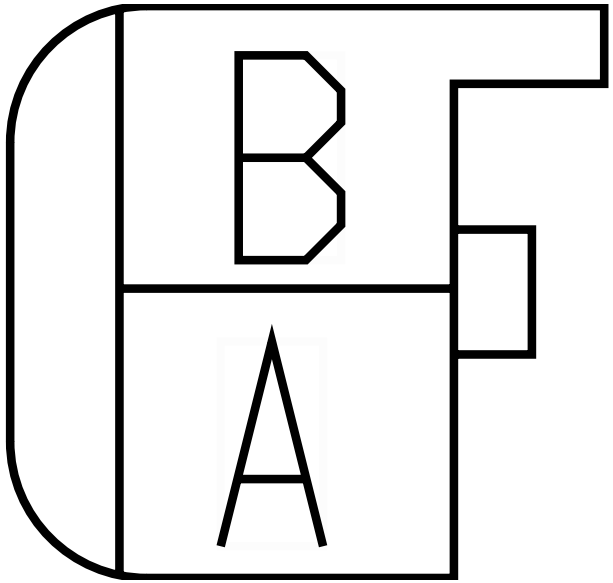

Mates 5117

Name	Terminal Part Number	V-Min	Name	Wire Part Number	Wire CSA	Wire Spec	Wire Material description	Wire Color Description	Wire Length	End2 Terminal Part Number	End2 Pin Name	End2 Connect or
A	-	-	HE65BB	2643682 R1	1.16	16.0	Std. Wall XLPE Primary Cable	ORANGE	150.0	-	X	-

Name	Terminal Part Number	V-Min	Name	Wire Part Number	Wire CSA	Wire Spec	Wire Material description	Wire Color Description	Wire Length	End2 Terminal Part Number	End2 Pin Name	End2 Connector
A	-	-	65F	3510317 R1	0.79	18.0	Thin Wall XLPE Primary Cable	ORANGE	1500.0	-	A	220XF
B	-	-	HE65-GD	2643681 R1	1.16	16.0	Std. Wall XLPE Primary Cable	WHITE	230.0	-	X	-
B	-	-	65-GF	3510359 R1	0.79	18.0	Thin Wall XLPE Primary Cable	WHITE	1500.0	-	B	220XF

Connector Name	5118
Part Number	1661891C1
Short Description	BEACON LIGHT DAYCAB
Instances	LT/RH/LoneStar - X15/A26 - Beacon/Strobe Light:Diagram1
Mates	1906M

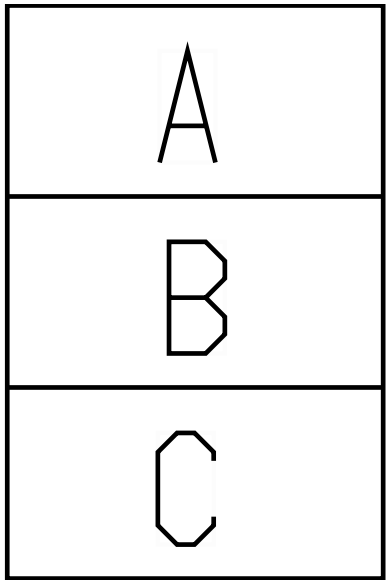

Name	Terminal Part Number	V-Min	Name	Wire Part Number	Wire CSA	Wire Spec	Wire Material description	Wire Color Description	Wire Length	End2 Terminal Part Number	End2 Pin Name	End2 Connect or
A	-	-	GN58BLT	3510306 R1	1.16	16.0	Thin Wall XLPE Primary Cable	BROWN	4190.0	-	R1 - 87	1013
B	-	-	GN13-GBR	3510360 R1	1.16	16.0	Thin Wall XLPE Primary Cable	WHITE	2860.0	-	X	-

Connector Name 5119

Part Number 1661259C1

Instances LT/RH - A26 - Work Lights - LED W/ Sw Pack - Customer Supplied - Sleeper W/ RKE W/MAN REV:Diagram2
LT/RH - A26 - Work Lights - LED W/ Sw Pack - Customer Supplied - Sleeper W/ RKE W/MAN REV:Diagram4
LT/RH - A26 - Work Lights - LED W/ Sw Pack - Customer Supplied - Sleeper W/O RKE W/MAN REV:Diagram2
LT/RH - A26 - Work Lights - LED W/ Sw Pack - Customer Supplied - Sleeper W/O RKE W/MAN REV:Diagram4
LT/RH/LoneStar - X15 - Work Lights - LED W/ Sw Pack - Customer Supplied - Sleeper W/ RKE W/MAN REV:Diagram2
LT/RH/LoneStar - X15 - Work Lights - LED W/ Sw Pack - Customer Supplied - Sleeper W/O RKE W/MAN REV:Diagram2
LT/RH/LoneStar - X15/A26 - Work Lights - LED W/ Sw Pack - Customer Supplied - Sleeper:Diagram2
LT/RH/LoneStar - X15/A26 - Work Lights - LED W/ Sw Pack - Customer Supplied - Sleeper W/ RKE W/AUTO REV:Diagram2
LT/RH/LoneStar - X15/A26 - Work Lights - LED W/ Sw Pack - Customer Supplied - Sleeper W/O RKE:Diagram2
LT/RH/LoneStar - X15/A26 - Work Lights - LED W/ Sw Pack - Customer Supplied - Sleeper W/O RKE W/AUTO REV:Diagram2

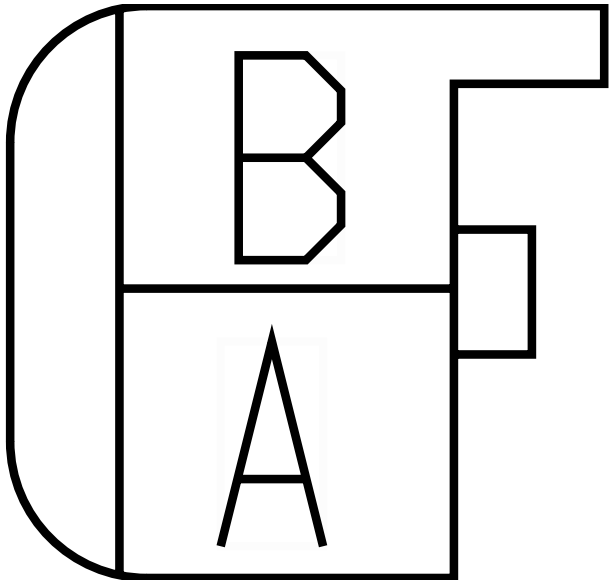

Mates 5117

Name	Terminal Part Number	V-Min	Name	Wire Part Number	Wire CSA	Wire Spec	Wire Material description	Wire Color Description	Wire Length	End2 Terminal Part Number	End2 Pin Name	End2 Connector
A	-	-	HE65BA	2643682 R1	1.16	16.0	Std. Wall XLPE Primary Cable	ORANGE	1075.0	-	X	-
B	-	-	HE65-GC	2643681 R1	1.16	16.0	Std. Wall XLPE Primary Cable	WHITE	1255.0	-	X	-

Connector Name	5124
Part Number	3520850C1
Instances	LT/RH/LoneStar - X15/A26 - Rear Interior Dimming (Accent Light):Diagram1 LT/RH/LoneStar - X15/A26 - Rear Interior Dimming (Accent/ Mood):Diagram1
Mates	SW-SLPRDOME/FLOOR-2003-02- 01A

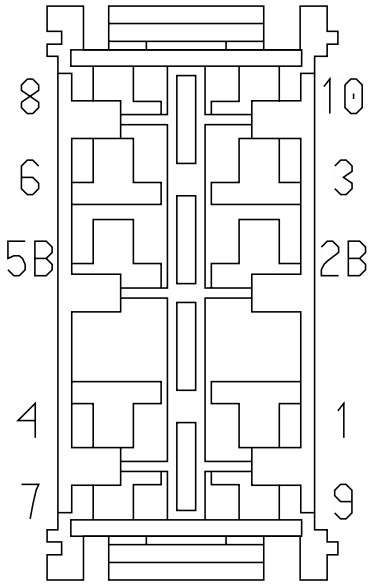

Name	Terminal Part Number	V-Min	Name	Wire Part Number	Wire CSA	Wire Spec	Wire Material description	Wire Color Description	Wire Length	End2 Terminal Part Number	End2 Pin Name	End2 Connect or
7	-	-	AD62D	2643720 R1	0.79	18.0	Std. Wall XLPE Primary Cable	DARK BLUE	225.0	-	X	-
9	-	-	AA62-GSA	2643720 R1	0.79	18.0	Std. Wall XLPE Primary Cable	DARK BLUE	150.0	-	F	512
9	-	-	AA62-GSD	2643720 R1	0.79	18.0	Std. Wall XLPE Primary Cable	DARK BLUE	405.0	-	C	5125

Connector Name	5125
Part Number	2005835C1
Short Description	SCP SWITCH PACK
Instances	LT/RH/LoneStar - X15/A26 - Floor/Search Lights Sleeper:Diagram1 LT/RH/LoneStar - X15/A26 - Floor/Search Lights Sleeper (1 Light):Diagram1 LT/RH/LoneStar - X15/A26 - Lighting Sleeper Dome:Diagram1 LT/RH/LoneStar - X15/A26 - Rear AUTO HVAC (No Idle) W/ Pre-Heat (Bergstrom Heat and Cool w/ Condensation) 2 SWITCHES:Diagram2 - No Idle Switching LT/RH/LoneStar - X15/A26 - Rear HVAC (No Idle) W/ Pre-Heat (Bergstrom Heat and Cool w/ Condensation) 2 SWITCHES Option 1:Diagram2 - No Idle Switching LT/RH/LoneStar - X15/A26 - Rear HVAC (No Idle) W/ Pre-Heat (Bergstrom Heat and Cool w/ Condensation) 2 SWITCHES Option 2:Diagram2 - No Idle Switching LT/RH/LoneStar - X15/A26 - Rear HVAC (No Idle) W/ Pre-Heat (Bergstrom Heat and Cool w/ Condensation) 4 SWITCHES Option 1:Diagram2 - No Idle Switching LT/RH/LoneStar - X15/A26 - Rear HVAC (No Idle) W/ Pre-Heat (Bergstrom Heat and Cool w/ Condensation) 4 SWITCHES Option 2:Diagram2 - No Idle Switching LT/RH/LoneStar - X15/A26 - Rear Interior Dimming (Accent Light):Diagram1 LT/RH/LoneStar - X15/A26 - Rear Interior Dimming (Accent/ Mood):Diagram1 LT/RH/LoneStar - X15/A26 - Rear Manual HVAC (No Idle) W/ Pre-Heat (Bergstrom Heat and Cool w/ Condensation) 2 SWITCHES:Diagram2 - No Idle Switching
Mates	5125

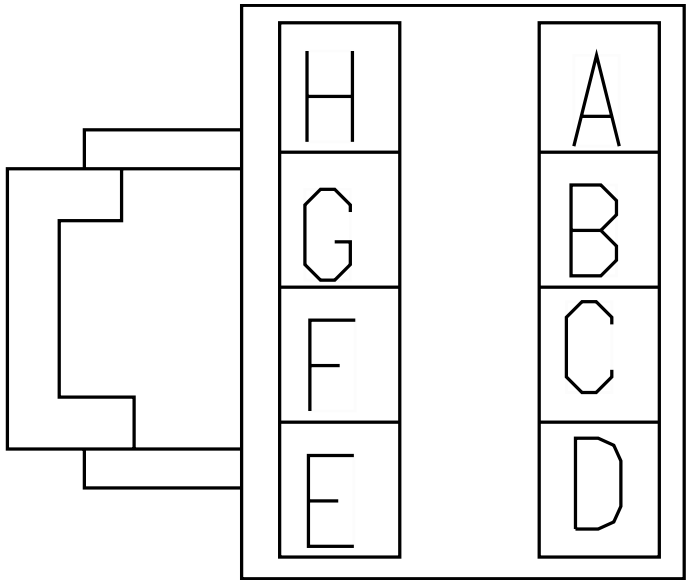

Name	Terminal Part Number	V-Min	Name	Wire Part Number	Wire CSA	Wire Spec	Wire Material description	Wire Color Description	Wire Length	End2 Terminal Part Number	End2 Pin Name	End2 Connect or
A	-	-	ZM63SA	2643721 R1	1.16	16.0	Std. Wall XLPE Primary Cable	DARK BLUE	280.0	-	X	-

Name	Terminal Part Number	V-Min	Name	Wire Part Number	Wire CSA	Wire Spec	Wire Material description	Wire Color Description	Wire Length	End2 Terminal Part Number	End2 Pin Name	End2 Connector
B	-	-	HA63EA	2643720 R1	0.79	18.0	Std. Wall XLPE Primary Cable	DARK BLUE	650.0	-	-	-
C	-	-	HA62-GSD	2643674 R1	0.79	18.0	Std. Wall XLPE Primary Cable	WHITE	75.0	-	-	-
C	-	-	HA62-GSD	2643674 R1	0.79	18.0	Std. Wall XLPE Primary Cable	WHITE	75.0	-	X	-
D	-	-	BD62AS	2643720 R1	0.79	18.0	Std. Wall XLPE Primary Cable	DARK BLUE	1975.0	-	X	-
D	-	-	HG62AS	2643720 R1	0.79	18.0	Std. Wall XLPE Primary Cable	DARK BLUE	4552.0	-	X	-
D	-	-	BF62A	2643720 R1	0.79	18.0	Std. Wall XLPE Primary Cable	DARK BLUE	2540.0	-	31	5000
E	-	-	HA109SA	2643673 R1	0.79	18.0	Std. Wall XLPE Primary Cable	GREY	550.0	-	-	-
E	-	-	HA109SA	2643673 R1	0.79	18.0	Std. Wall XLPE Primary Cable	GREY	550.0	-	X	-

Name	Terminal Part Number	V-Min	Name	Wire Part Number	Wire CSA	Wire Spec	Wire Material description	Wire Color Description	Wire Length	End2 Terminal Part Number	End2 Pin Name	End2 Connector
F	-	-	HA63F	2643720 R1	0.79	18.0	Std. Wall XLPE Primary Cable	DARK BLUE	2540.0	-	33	5000
G	-	-	HA63HB	2643721 R1	1.16	16.0	Std. Wall XLPE Primary Cable	DARK BLUE	805.0	-	-	-
G	-	-	HA63HB	2643721 R1	1.16	16.0	Std. Wall XLPE Primary Cable	DARK BLUE	805.0	-	A	5102
H	-	-	HA63-GSF	2643674 R1	0.79	18.0	Std. Wall XLPE Primary Cable	WHITE	75.0	-	X	-

Connector Name	5125
Part Number	2005836C1
Short Description	SLPR CTRL PNL SW INTERCONNECT
Instances	LT/RH/LoneStar - X15/A26 - Floor/Search Lights Sleeper:Diagram1 LT/RH/LoneStar - X15/A26 - Floor/Search Lights Sleeper (1 Light):Diagram1 LT/RH/LoneStar - X15/A26 - Lighting Sleeper Dome:Diagram1 LT/RH/LoneStar - X15/A26 - Rear AUTO HVAC (No Idle) W/ Pre-Heat (Bergstrom Heat and Cool w/ Condensation) 2 SWITCHES:Diagram2 - No Idle Switching LT/RH/LoneStar - X15/A26 - Rear HVAC (No Idle) W/ Pre-Heat (Bergstrom Heat and Cool w/ Condensation) 2 SWITCHES Option 1:Diagram2 - No Idle Switching LT/RH/LoneStar - X15/A26 - Rear HVAC (No Idle) W/ Pre-Heat (Bergstrom Heat and Cool w/ Condensation) 2 SWITCHES Option 2:Diagram2 - No Idle Switching LT/RH/LoneStar - X15/A26 - Rear HVAC (No Idle) W/ Pre-Heat (Bergstrom Heat and Cool w/ Condensation) 4 SWITCHES Option 1:Diagram2 - No Idle Switching LT/RH/LoneStar - X15/A26 - Rear HVAC (No Idle) W/ Pre-Heat (Bergstrom Heat and Cool w/ Condensation) 4 SWITCHES Option 2:Diagram2 - No Idle Switching LT/RH/LoneStar - X15/A26 - Rear Interior Dimming (Accent Light):Diagram1 LT/RH/LoneStar - X15/A26 - Rear Interior Dimming (Accent/ Mood):Diagram1 LT/RH/LoneStar - X15/A26 - Rear Manual HVAC (No Idle) W/ Pre-Heat (Bergstrom Heat and Cool w/ Condensation) 2 SWITCHES:Diagram2 - No Idle Switching
Mates	5125

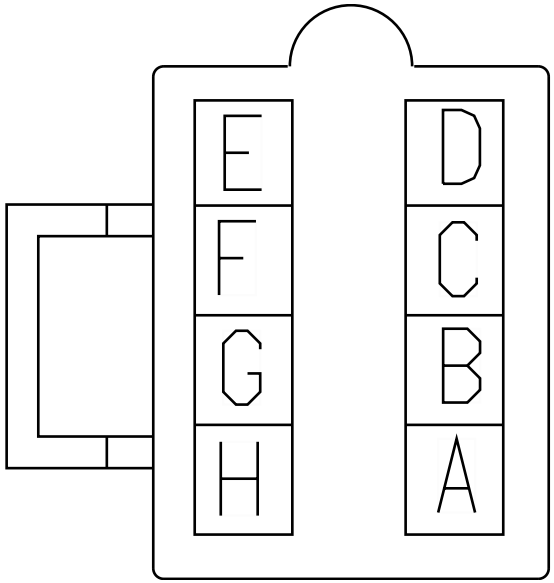

Name	Terminal Part Number	V-Min	Name	Wire Part Number	Wire CSA	Wire Spec	Wire Material description	Wire Color Description	Wire Length	End2 Terminal Part Number	End2 Pin Name	End2 Connect or
A	-	-	AA63	3510353 R1	0.79	18.0	Thin Wall XLPE Primary Cable	DARK BLUE	100.0	-	A	512

Name	Terminal Part Number	V-Min	Name	Wire Part Number	Wire CSA	Wire Spec	Wire Material description	Wire Color Description	Wire Length	End2 Terminal Part Number	End2 Pin Name	End2 Connector
B	-	-	AA63EA	2643720 R1	0.79	18.0	Std. Wall XLPE Primary Cable	DARK BLUE	405.0	-	3	H02-5124
C	-	-	AA62-GSD	2643720 R1	0.79	18.0	Std. Wall XLPE Primary Cable	DARK BLUE	405.0	-	9	H02-5124
C	-	-	AA62-GSD	2643720 R1	0.79	18.0	Std. Wall XLPE Primary Cable	DARK BLUE	405.0	-	9	5124
D	-	-	AF62AS	2643721 R1	1.16	16.0	Std. Wall XLPE Primary Cable	DARK BLUE	80.0	-	X	-
D	-	-	AP62AS	2643720 R1	0.79	18.0	Std. Wall XLPE Primary Cable	DARK BLUE	180.0	-	X	-
D	-	-	AD62AS	2643721 R1	1.16	16.0	Std. Wall XLPE Primary Cable	DARK BLUE	180.0	-	X	-
D	-	-	AE62AS	2643721 R1	1.16	16.0	Std. Wall XLPE Primary Cable	DARK BLUE	80.0	-	X	-
E	-	-	AA109SA	2643673 R1	0.79	18.0	Std. Wall XLPE Primary Cable	GREY	405.0	-	2B	H02-5124

Name	Terminal Part Number	V-Min	Name	Wire Part Number	Wire CSA	Wire Spec	Wire Material description	Wire Color Description	Wire Length	End2 Terminal Part Number	End2 Pin Name	End2 Connector
F	-	-	AA63F	2643720 R1	0.79	18.0	Std. Wall XLPE Primary Cable	DARK BLUE	405.0	-	1	H02-5124
G	-	-	AA63HB	2643720 R1	0.79	18.0	Std. Wall XLPE Primary Cable	DARK BLUE	455.0	-	C	512
H	-	-	AA63-GSF	2643720 R1	0.79	18.0	Std. Wall XLPE Primary Cable	DARK BLUE	455.0	-	B	512

Connector Name	512
Part Number	1661200C1
Instances	LT/RH/LoneStar - X15/A26 - Rear Interior Dimming (Accent Light):Diagram1 LT/RH/LoneStar - X15/A26 - Rear Interior Dimming (Accent/ Mood):Diagram1
Mates	SW-ACCENT_LT-2000-02-01A

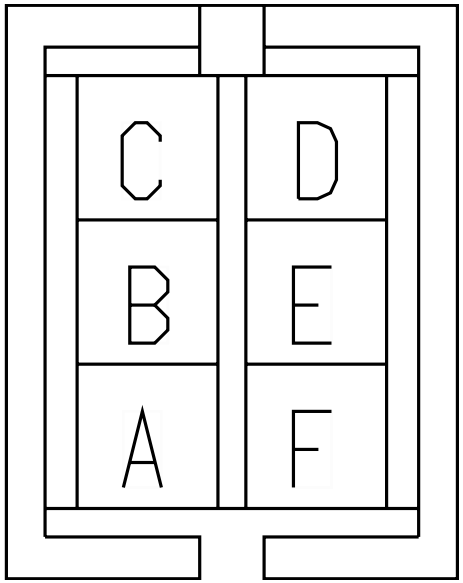

Name	Terminal Part Number	V-Min	Name	Wire Part Number	Wire CSA	Wire Spec	Wire Material description	Wire Color Description	Wire Length	End2 Terminal Part Number	End2 Pin Name	End2 Connect or
A	-	-	AA63	3510353 R1	0.79	18.0	Thin Wall XLPE Primary Cable	DARK BLUE	100.0	-	A	5125
B	-	-	AA63-GSF	2643720 R1	0.79	18.0	Std. Wall XLPE Primary Cable	DARK BLUE	455.0	-	H	5125
C	-	-	AA63HB	2643720 R1	0.79	18.0	Std. Wall XLPE Primary Cable	DARK BLUE	455.0	-	G	5125
D	-	-	AD62B	2643720 R1	0.79	18.0	Std. Wall XLPE Primary Cable	DARK BLUE	275.0	-	X	-

Name	Terminal Part Number	V-Min	Name	Wire Part Number	Wire CSA	Wire Spec	Wire Material description	Wire Color Description	Wire Length	End2 Terminal Part Number	End2 Pin Name	End2 Connect or
F	-	-	AA62-GSA	2643720 R1	0.79	18.0	Std. Wall XLPE Primary Cable	DARK BLUE	150.0	-	9	5124

Connector Name	5131
Part Number	1661197C1
Instances	LT/RH/LoneStar - X15/A26 - Lighting - Cabinet Lights:Diagram1
Mates	5134

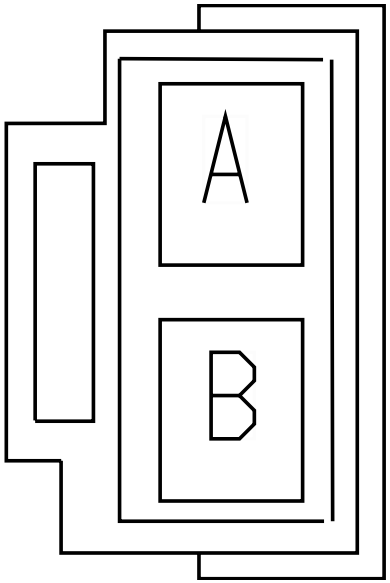

Name	Terminal Part Number	V-Min	Name	Wire Part Number	Wire CSA	Wire Spec	Wire Material description	Wire Color Description	Wire Length	End2 Terminal Part Number	End2 Pin Name	End2 Connect or
A	-	-	WHITE	-	0.0	-	-	-	1730.0	-	A	5219
B	-	-	BLUE	2643720 R1	0.79	18.0	Std. Wall XLPE Primary Cable	DARK BLUE	700.0	-	B	5219

Connector Name	5134
Part Number	1661196C1
Short Description	SKYRISE CABINET LIGHT
Instances	LT/RH/LoneStar - X15/A26 - Lighting - Cabinet Lights:Diagram1
Mates	5131

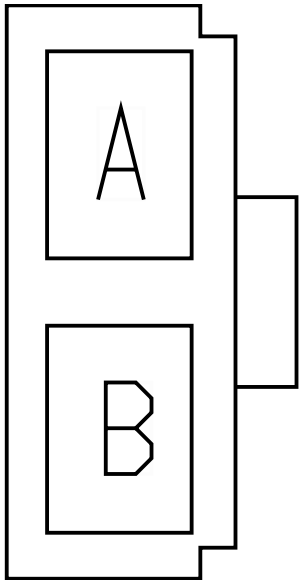

Name	Terminal Part Number	V-Min	Name	Wire Part Number	Wire CSA	Wire Spec	Wire Material description	Wire Color Description	Wire Length	End2 Terminal Part Number	End2 Pin Name	End2 Connect or
A	-	-	JP63-GK	2643674 R1	0.79	18.0	Std. Wall XLPE Primary Cable	WHITE	5702.0	-	X	-
B	-	-	ZM63K	2643720 R1	0.79	18.0	Std. Wall XLPE Primary Cable	DARK BLUE	5857.0	-	-	-

Connector Name	5135A
Part Number	1661198C1
Instances	LT/RH/LoneStar - X15/A26 - Rear Interior Dimming (Accent/ Mood):Diagram1
Mates	LT-LS_SKYRISE_ACCENT-2000- 03-01A

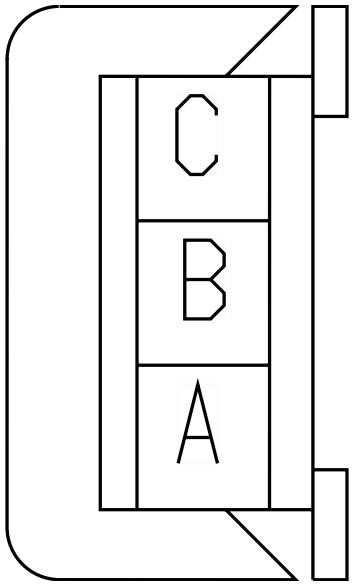

Name	Terminal Part Number	V-Min	Name	Wire Part Number	Wire CSA	Wire Spec	Wire Material description	Wire Color Description	Wire Length	End2 Terminal Part Number	End2 Pin Name	End2 Connect or
A	-	-	J63-GSDA	2643674 R1	0.79	18.0	Std. Wall XLPE Primary Cable	WHITE	250.0	-	X	-
B	-	-	J63SBA	2643720 R1	0.79	18.0	Std. Wall XLPE Primary Cable	DARK BLUE	300.0	-	X	-

Connector Name	5135B
Part Number	1661198C1
Instances	LT/RH/LoneStar - X15/A26 - Rear Interior Dimming (Accent/ Mood):Diagram1
Mates	LT-RS_SKYRISE_ACCENT-2000- 03-01A

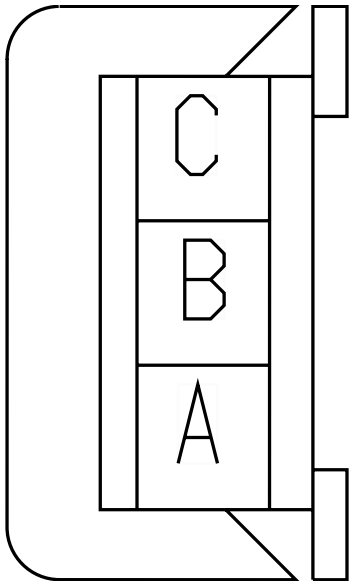

Name	Terminal Part Number	V-Min	Name	Wire Part Number	Wire CSA	Wire Spec	Wire Material description	Wire Color Description	Wire Length	End2 Terminal Part Number	End2 Pin Name	End2 Connect or
A	-	-	J63-GSDB	2643674 R1	0.79	18.0	Std. Wall XLPE Primary Cable	WHITE	620.0	-	X	-
B	-	-	J63SBB	2643720 R1	0.79	18.0	Std. Wall XLPE Primary Cable	DARK BLUE	670.0	-	X	-

Connector Name	5135F
Part Number	1661197C1
Short Description	T-RAIL CONNECTION
Instances	LT/RH/LoneStar - X15/A26 - Rear Interior Dimming (Accent/ Mood):Diagram1
Mates	5135M

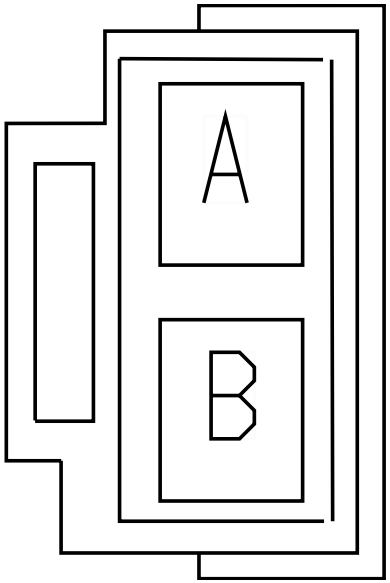

Name	Terminal Part Number	V-Min	Name	Wire Part Number	Wire CSA	Wire Spec	Wire Material description	Wire Color Description	Wire Length	End2 Terminal Part Number	End2 Pin Name	End2 Connect or
A	-	-	J63SB	2643720 R1	0.79	18.0	Std. Wall XLPE Primary Cable	DARK BLUE	410.0	-	X	-
B	-	-	J63-GSD	2643674 R1	0.79	18.0	Std. Wall XLPE Primary Cable	WHITE	460.0	-	X	-

Connector Name	5135M
Part Number	1661196C1
Short Description	SKYRISE LOWER BUNK LIGHTS
Instances	LT/RH/LoneStar - X15/A26 - Rear Interior Dimming (Accent/ Mood):Diagram1
Mates	5135F

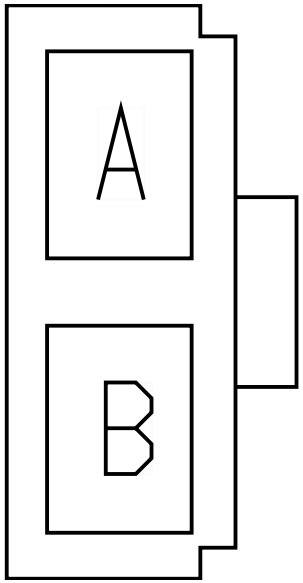

Name	Terminal Part Number	V-Min	Name	Wire Part Number	Wire CSA	Wire Spec	Wire Material description	Wire Color Description	Wire Length	End2 Terminal Part Number	End2 Pin Name	End2 Connect or
A	-	-	JP63SB	2643720 R1	0.79	18.0	Std. Wall XLPE Primary Cable	DARK BLUE	1235.0	-	E	1001
B	-	-	JP63-GSD	2643674 R1	0.79	18.0	Std. Wall XLPE Primary Cable	WHITE	2040.0	-	-	-

Connector Name	5205
Part Number	3544870C1
Instances	Cab J1939 (250Kbps):Cab J1939 (250Kbps) LT/RH A26 - Auto Start Stop and Sleeper Auto Climate / Cab Temp / Oil Mapping Manual Trans:Diagram1 LT/RH A26 - Auto Start Stop with Sleeper Auto Climate / Cab Temp / Oil Mapping Auto Trans:Diagram1 LT/RH/LoneStar - X15/A26 - Rear HVAC (No Idle) W/ Pre-Heat (Bergstrom Heat and Cool w/ Condensation) 2 SWITCHES Option 1:Diagram1 - Powers, Grounds & Controls LT/RH/LoneStar - X15/A26 - Rear HVAC (No Idle) W/ Pre-Heat (Bergstrom Heat and Cool w/ Condensation) 2 SWITCHES Option 1:Diagram2 - No Idle Switching LT/RH/LoneStar - X15/A26 - Rear HVAC (No Idle) W/ Pre-Heat (Bergstrom Heat and Cool w/ Condensation) 2 SWITCHES Option 2:Diagram1 - Powers, Grounds & Controls LT/RH/LoneStar - X15/A26 - Rear HVAC (No Idle) W/ Pre-Heat (Bergstrom Heat and Cool w/ Condensation) 2 SWITCHES Option 2:Diagram2 - No Idle Switching LT/RH/LoneStar - X15/A26 - Rear HVAC (No Idle) W/ Pre-Heat (Bergstrom Heat and Cool w/ Condensation) 4 SWITCHES Option 1:Diagram1 - Powers, Grounds & Controls LT/RH/LoneStar - X15/A26 - Rear HVAC (No Idle) W/ Pre-Heat (Bergstrom Heat and Cool w/ Condensation) 4 SWITCHES Option 1:Diagram2 - No Idle Switching LT/RH/LoneStar - X15/A26 - Rear HVAC (No Idle) W/ Pre-Heat (Bergstrom Heat and Cool w/ Condensation) 4 SWITCHES Option 2:Diagram1 - Powers, Grounds & Controls LT/RH/LoneStar - X15/A26 - Rear HVAC (No Idle) W/ Pre-Heat (Bergstrom Heat and Cool w/ Condensation) 4 SWITCHES Option 2:Diagram2 - No Idle Switching LT/RH/LoneStar X15 - Auto Start Stop with Sleeper Auto Climate / Cab Temp with Oil Temp Sensor Auto Trans:Diagram1 LT/RH/LoneStar X15 - Auto Start Stop with Sleeper Auto Climate / Cab Temp with Oil Temp Sensor Manual Trans:Diagram1
Mates	MODU-BERG_NO-IDLE-6002-01- 02 Bergstrom Aux HVAC

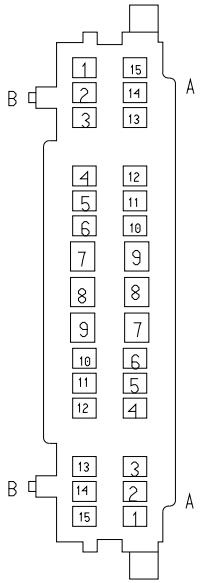

Name	Terminal Part Number	V-Min	Name	Wire Part Number	Wire CSA	Wire Spec	Wire Material description	Wire Color Description	Wire Length	End2 Terminal Part Number	End2 Pin Name	End2 Connector
A1	-	-	BD75ARB	2643671 R1	0.79	18.0	Std. Wall XLPE Primary Cable	LIGHT GREEN	3802.0	-	X	-
A1	-	-	BF75AR	2643671 R1	0.79	18.0	Std. Wall XLPE Primary Cable	LIGHT GREEN	5202.0	-	C	5220
A2	-	-	BA75-GA	2643674 R1	0.79	18.0	Std. Wall XLPE Primary Cable	WHITE	5302.0	-	8	H01-5200-SPLR_HVAC_PANEL
A2	-	-	ZE75-GA	2643674 R1	0.79	18.0	Std. Wall XLPE Primary Cable	WHITE	5302.0	-	8	H01-5200-SPLR_HVAC_PANEL
A3	-	-	BA75AJ	2643671 R1	0.79	18.0	Std. Wall XLPE Primary Cable	LIGHT GREEN	500.0	-	X	-
A4	-	-	BA75X	2643671 R1	0.79	18.0	Std. Wall XLPE Primary Cable	LIGHT GREEN	4422.0	-	29	5000
A5	-	-	-	-	-	-	-	-	-	-	-	-
A5	-	-	WIRE223960	-	0.0	-	-	-	0.0	-	L	5600
A6	-	-	-	-	-	-	-	-	-	-	-	-
A6	-	-	WIRE223967	-	0.0	-	-	-	0.0	-	B	5600
A7	-	-	BA14HA	2643695 R1	3.01	12.0	Std. Wall XLPE Primary Cable	RED	600.0	-	C	100A

Name	Terminal Part Number	V-Min	Name	Wire Part Number	Wire CSA	Wire Spec	Wire Material description	Wire Color Description	Wire Length	End2 Terminal Part Number	End2 Pin Name	End2 Connector
A7	-	-	ZE14HA	2643695 R1	3.01	12.0	Std. Wall XLPE Primary Cable	RED	600.0	-	C	100A
A8	-	-	BA14HB	2643695 R1	3.01	12.0	Std. Wall XLPE Primary Cable	RED	600.0	-	D	100A
A9	-	-	MF104	2643695 R1	3.01	12.0	Std. Wall XLPE Primary Cable	RED	600.0	-	A	100B
A11	-	-	BA75F	2643671 R1	0.79	18.0	Std. Wall XLPE Primary Cable	LIGHT GREEN	5302.0	-	7	H01-5200-SPLR_HVAC_PANEL
A11	-	-	ZE75F	2643671 R1	0.79	18.0	Std. Wall XLPE Primary Cable	LIGHT GREEN	5302.0	-	7	H01-5200-SPLR_HVAC_PANEL
A12	-	-	BA75N	2643720 R1	0.79	18.0	Std. Wall XLPE Primary Cable	DARK BLUE	5302.0	-	15	H01-5200-SPLR_HVAC_PANEL
A12	-	-	ZE75N	2643720 R1	0.79	18.0	Std. Wall XLPE Primary Cable	DARK BLUE	5302.0	-	15	H01-5200-SPLR_HVAC_PANEL
B1	-	-	BA75AB	3510299 R1	0.79	18.0	Thin Wall XLPE Primary Cable	LIGHT GREEN	5302.0	-	9	H01-5200-SPLR_HVAC_PANEL

Name	Terminal Part Number	V-Min	Name	Wire Part Number	Wire CSA	Wire Spec	Wire Material description	Wire Color Description	Wire Length	End2 Terminal Part Number	End2 Pin Name	End2 Connector
B1	-	-	ZE75AB	3510299 R1	0.79	18.0	Thin Wall XLPE Primary Cable	LIGHT GREEN	5302.0	-	9	H01-5200-SPLR_HVAC_PANEL
B2	-	-	BA75AA	3510299 R1	0.79	18.0	Thin Wall XLPE Primary Cable	LIGHT GREEN	5302.0	-	10	H01-5200-SPLR_HVAC_PANEL
B2	-	-	ZE75AA	3510299 R1	0.79	18.0	Thin Wall XLPE Primary Cable	LIGHT GREEN	5302.0	-	10	H01-5200-SPLR_HVAC_PANEL
B3	-	-	BA75J	3510299 R1	0.79	18.0	Thin Wall XLPE Primary Cable	LIGHT GREEN	5302.0	-	11	H01-5200-SPLR_HVAC_PANEL
B3	-	-	ZE75J	3510299 R1	0.79	18.0	Thin Wall XLPE Primary Cable	LIGHT GREEN	5302.0	-	11	H01-5200-SPLR_HVAC_PANEL
B4	-	-	BA75K	3510299 R1	0.79	18.0	Thin Wall XLPE Primary Cable	LIGHT GREEN	5302.0	-	12	H01-5200-SPLR_HVAC_PANEL
B4	-	-	ZE75K	3510299 R1	0.79	18.0	Thin Wall XLPE Primary Cable	LIGHT GREEN	5302.0	-	12	H01-5200-SPLR_HVAC_PANEL
B5	-	-	BA75L	3510299 R1	0.79	18.0	Thin Wall XLPE Primary Cable	LIGHT GREEN	5302.0	-	13	H01-5200-SPLR_HVAC_PANEL

Name	Terminal Part Number	V-Min	Name	Wire Part Number	Wire CSA	Wire Spec	Wire Material description	Wire Color Description	Wire Length	End2 Terminal Part Number	End2 Pin Name	End2 Connector
B5	-	-	ZE75L	3510299 R1	0.79	18.0	Thin Wall XLPE Primary Cable	LIGHT GREEN	5302.0	-	13	H01-5200-SPLR_HVAC_PANEL
B6	-	-	BA75M	3510299 R1	0.79	18.0	Thin Wall XLPE Primary Cable	LIGHT GREEN	5302.0	-	14	H01-5200-SPLR_HVAC_PANEL
B6	-	-	ZE75M	3510299 R1	0.79	18.0	Thin Wall XLPE Primary Cable	LIGHT GREEN	5302.0	-	14	H01-5200-SPLR_HVAC_PANEL
B7	-	-	BA75-GBA	2643787 R1	3.01	12.0	Std. Wall XLPE Primary Cable	WHITE	600.0	-	A	100A
B7	-	-	ZE75-GBA	2643787 R1	3.01	12.0	Std. Wall XLPE Primary Cable	WHITE	600.0	-	A	100A
B8	-	-	BA75-GBB	2643787 R1	3.01	12.0	Std. Wall XLPE Primary Cable	WHITE	600.0	-	B	100A
B9	-	-	MF104-G	2643787 R1	3.01	12.0	Std. Wall XLPE Primary Cable	WHITE	600.0	-	B	100B
B12	-	-	BD77NFB	3510299 R1	0.79	18.0	Thin Wall XLPE Primary Cable	LIGHT GREEN	3862.0	-	X	-

Name	Terminal Part Number	V-Min	Name	Wire Part Number	Wire CSA	Wire Spec	Wire Material description	Wire Color Description	Wire Length	End2 Terminal Part Number	End2 Pin Name	End2 Connector
B12	-	-	BF77NF	3510299 R1	0.79	18.0	Thin Wall XLPE Primary Cable	LIGHT GREEN	5177.0	-	B	5230
B12	-	-	ZE77NF	3510299 R1	0.79	18.0	Thin Wall XLPE Primary Cable	LIGHT GREEN	5227.0	-	B	5230A
B13	-	-	BD77NEB	3510299 R1	0.79	18.0	Thin Wall XLPE Primary Cable	LIGHT GREEN	3832.0	-	X	-
B13	-	-	ZE77NE	3510299 R1	0.79	18.0	Thin Wall XLPE Primary Cable	LIGHT GREEN	5227.0	-	A	5230A
B13	-	-	BF77NE	3510299 R1	0.79	18.0	Thin Wall XLPE Primary Cable	LIGHT GREEN	5177.0	-	A	5230
B14	-	-	BD75AGB	3510299 R1	0.79	18.0	Thin Wall XLPE Primary Cable	LIGHT GREEN	3772.0	-	X	-
B14	-	-	ZE75AG	3510299 R1	0.79	18.0	Thin Wall XLPE Primary Cable	LIGHT GREEN	5202.0	-	A	5220
B15	-	-	BD75AFB	3510299 R1	0.79	18.0	Thin Wall XLPE Primary Cable	LIGHT GREEN	3742.0	-	X	-
B15	-	-	BF75AF	3510299 R1	0.79	18.0	Thin Wall XLPE Primary Cable	LIGHT GREEN	5202.0	-	B	5220

Connector Name 5210
Part Number 3548957C91
Instances Cab J1939 (250Kbps):Cab J1939 (250Kbps)
Mates MODU-HVAC_BEHR_STD-6002-05 -01A

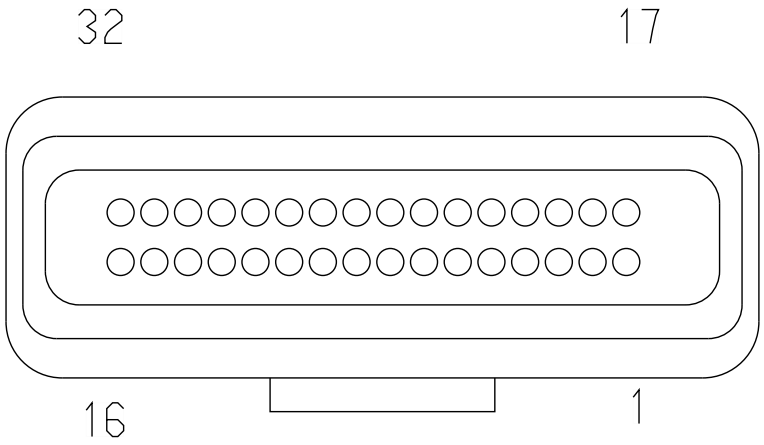

Name	Terminal Part Number	V-Min	Name	Wire Part Number	Wire CSA	Wire Spec	Wire Material description	Wire Color Description	Wire Length	End2 Terminal Part Number	End2 Pin Name	End2 Connect or
15	-	-	WIRE223969	-	0.0	-	-	-	0.0	-	PIN1	-
16	-	-	WIRE223968	-	0.0	-	-	-	0.0	-	PIN1	-

Connector Name 5219
Part Number 1661198C1
Instances LT/RH/LoneStar - X15/A26 - Lighting - Cabinet Lights:Diagram1
Mates LT-WARDROBE-2052-01-01A

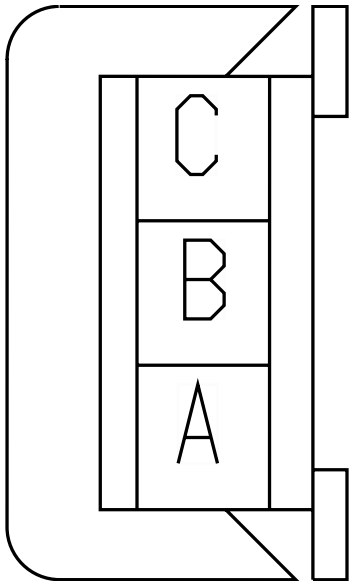

Name	Terminal Part Number	V-Min	Name	Wire Part Number	Wire CSA	Wire Spec	Wire Material description	Wire Color Description	Wire Length	End2 Terminal Part Number	End2 Pin Name	End2 Connect or
A	-	-	WHITE	-	0.0	-	-	-	1730.0	-	A	5131
B	-	-	BLUE	2643720 R1	0.79	18.0	Std. Wall XLPE Primary Cable	DARK BLUE	700.0	-	B	5131

Connector Name 5219_1

Part Number 1661198C1

Instances LT/RH/LoneStar - X15/A26 - Rear AUTO HVAC (No Idle) W/ Pre-Heat (Bergstrom Heat and Cool w/ Condensation) 2 SWITCHES:Diagram1 - Powers, Grounds & Controls
LT/RH/LoneStar - X15/A26 - Rear AUTO HVAC (No Idle) W/ Pre-Heat (Bergstrom Heat and Cool w/ Condensation) 2 SWITCHES:Diagram3 - Espar Circuit
LT/RH/LoneStar - X15/A26 - Rear HVAC (No Idle) W/ Pre-Heat (Bergstrom Heat and Cool w/ Condensation) 2 SWITCHES Option 1:Diagram1 - Powers, Grounds & Controls
LT/RH/LoneStar - X15/A26 - Rear HVAC (No Idle) W/ Pre-Heat (Bergstrom Heat and Cool w/ Condensation) 2 SWITCHES Option 2:Diagram1 - Powers, Grounds & Controls
LT/RH/LoneStar - X15/A26 - Rear HVAC (No Idle) W/ Pre-Heat (Bergstrom Heat and Cool w/ Condensation) 4 SWITCHES Option 1:Diagram1 - Powers, Grounds & Controls
LT/RH/LoneStar - X15/A26 - Rear HVAC (No Idle) W/ Pre-Heat (Bergstrom Heat and Cool w/ Condensation) 4 SWITCHES Option 2:Diagram1 - Powers, Grounds & Controls
LT/RH/LoneStar - X15/A26 - Rear Manual HVAC (No Idle) W/ Pre-Heat (Bergstrom Heat and Cool w/ Condensation) 2 SWITCHES:Diagram1 - Powers, Grounds & Controls
LT/RH/LoneStar - X15/A26 - Rear Manual HVAC (No Idle) W/ Pre-Heat (Bergstrom Heat and Cool w/ Condensation) 2 SWITCHES:Diagram3 - Espar Circuit

Mates DEV-HYDRONIC_HEATER-01

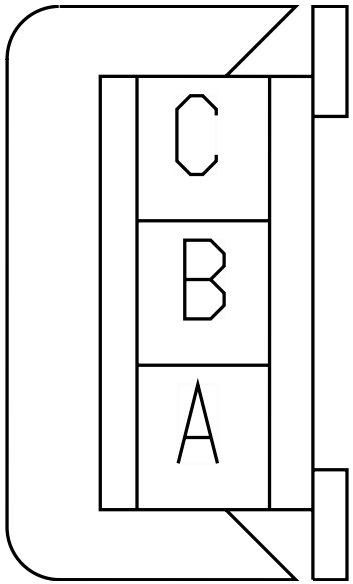

Name	Terminal Part Number	V-Min	Name	Wire Part Number	Wire CSA	Wire Spec	Wire Material description	Wire Color Description	Wire Length	End2 Terminal Part Number	End2 Pin Name	End2 Connect or
A	-	-	BD75-GAK	2643674 R1	0.79	18.0	Std. Wall XLPE Primary Cable	WHITE	3597.0	-	X	-
A	-	-	ZE75-GAK	2643674 R1	0.79	18.0	Std. Wall XLPE Primary Cable	WHITE	3597.0	-	X	-

Name	Terminal Part Number	V-Min	Name	Wire Part Number	Wire CSA	Wire Spec	Wire Material description	Wire Color Description	Wire Length	End2 Terminal Part Number	End2 Pin Name	End2 Connector
A	-	-	BF75-GAK	2643674 R1	0.79	18.0	Std. Wall XLPE Primary Cable	WHITE	3597.0	-	X	-
B	-	-	BA75AL	3510302 R1	3.01	12.0	Thin Wall XLPE Primary Cable	LIGHT GREEN	3717.0	-	-	-
B	-	-	ZE75AL	3510302 R1	3.01	12.0	Thin Wall XLPE Primary Cable	LIGHT GREEN	3717.0	-	-	-
C	-	-	BA75AJA	2643671 R1	0.79	18.0	Std. Wall XLPE Primary Cable	LIGHT GREEN	585.0	-	X	-
C	-	-	ZE75AJA	2643671 R1	0.79	18.0	Std. Wall XLPE Primary Cable	LIGHT GREEN	435.0	-	X	-

Connector Name	5220
Part Number	1667305C1
Short Description	NO IDLE ENGINE HEAT
Instances	LT/RH/LoneStar - X15/A26 - Rear AUTO HVAC (No Idle) W/ Pre-Heat (Bergstrom Heat and Cool w/ Condensation) 2 SWITCHES:Diagram2 - No Idle Switching LT/RH/LoneStar - X15/A26 - Rear HVAC (No Idle) W/ Pre-Heat (Bergstrom Heat and Cool w/ Condensation) 2 SWITCHES Option 1:Diagram2 - No Idle Switching LT/RH/LoneStar - X15/A26 - Rear HVAC (No Idle) W/ Pre-Heat (Bergstrom Heat and Cool w/ Condensation) 2 SWITCHES Option 2:Diagram2 - No Idle Switching LT/RH/LoneStar - X15/A26 - Rear HVAC (No Idle) W/ Pre-Heat (Bergstrom Heat and Cool w/ Condensation) 4 SWITCHES Option 1:Diagram2 - No Idle Switching LT/RH/LoneStar - X15/A26 - Rear HVAC (No Idle) W/ Pre-Heat (Bergstrom Heat and Cool w/ Condensation) 4 SWITCHES Option 2:Diagram2 - No Idle Switching LT/RH/LoneStar - X15/A26 - Rear Manual HVAC (No Idle) W/ Pre-Heat (Bergstrom Heat and Cool w/ Condensation) 2 SWITCHES:Diagram2 - No Idle Switching
Mates	5220

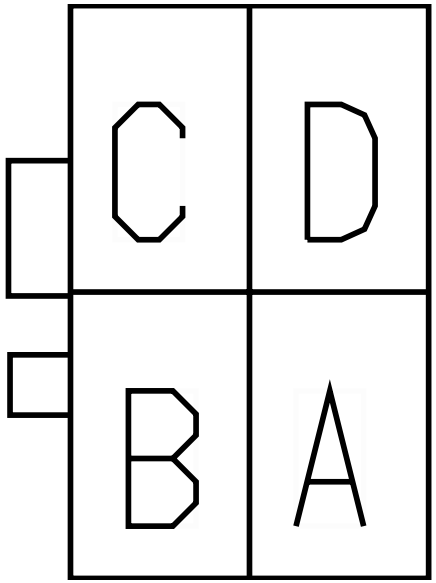

Name	Terminal Part Number	V-Min	Name	Wire Part Number	Wire CSA	Wire Spec	Wire Material description	Wire Color Description	Wire Length	End2 Terminal Part Number	End2 Pin Name	End2 Connect or
A	-	-	AK75AG	2643671 R1	0.79	18.0	Std. Wall XLPE Primary Cable	LIGHT GREEN	355.0	-	9	5222
A	-	-	AK75AG	2643671 R1	0.79	18.0	Std. Wall XLPE Primary Cable	LIGHT GREEN	355.0	-	9	H02-5222
B	-	-	AK75AF	2643671 R1	0.79	18.0	Std. Wall XLPE Primary Cable	LIGHT GREEN	355.0	-	2B	5222

Name	Terminal Part Number	V-Min	Name	Wire Part Number	Wire CSA	Wire Spec	Wire Material description	Wire Color Description	Wire Length	End2 Terminal Part Number	End2 Pin Name	End2 Connector
B	-	-	AK75AF	2643671 R1	0.79	18.0	Std. Wall XLPE Primary Cable	LIGHT GREEN	355.0	-	2B	H02-5222
C	-	-	AH75AR	2643671 R1	0.79	18.0	Std. Wall XLPE Primary Cable	LIGHT GREEN	355.0	-	7	5222
C	-	-	BC75AR	2643671 R1	0.79	18.0	Std. Wall XLPE Primary Cable	LIGHT GREEN	305.0	-	7	H02-5233
C	-	-	AH75AR	2643671 R1	0.79	18.0	Std. Wall XLPE Primary Cable	LIGHT GREEN	355.0	-	7	H02-5222
D	-	-	AR75-GAS	2643671 R1	0.79	18.0	Std. Wall XLPE Primary Cable	LIGHT GREEN	355.0	-	10	5222
D	-	-	AR75-GAS	2643671 R1	0.79	18.0	Std. Wall XLPE Primary Cable	LIGHT GREEN	355.0	-	10	H02-5222
D	-	-	BC75-GAS	2643671 R1	0.79	18.0	Std. Wall XLPE Primary Cable	LIGHT GREEN	305.0	-	10	H02-5233

Connector Name	5220
Part Number	1667529C1
Short Description	NO IDLE ENGINE HEAT
Instances	LT/RH/LoneStar - X15/A26 - Rear AUTO HVAC (No Idle) W/ Pre-Heat (Bergstrom Heat and Cool w/ Condensation) 2 SWITCHES:Diagram2 - No Idle Switching LT/RH/LoneStar - X15/A26 - Rear HVAC (No Idle) W/ Pre-Heat (Bergstrom Heat and Cool w/ Condensation) 2 SWITCHES Option 1:Diagram2 - No Idle Switching LT/RH/LoneStar - X15/A26 - Rear HVAC (No Idle) W/ Pre-Heat (Bergstrom Heat and Cool w/ Condensation) 2 SWITCHES Option 2:Diagram2 - No Idle Switching LT/RH/LoneStar - X15/A26 - Rear HVAC (No Idle) W/ Pre-Heat (Bergstrom Heat and Cool w/ Condensation) 4 SWITCHES Option 1:Diagram2 - No Idle Switching LT/RH/LoneStar - X15/A26 - Rear HVAC (No Idle) W/ Pre-Heat (Bergstrom Heat and Cool w/ Condensation) 4 SWITCHES Option 2:Diagram2 - No Idle Switching LT/RH/LoneStar - X15/A26 - Rear Manual HVAC (No Idle) W/ Pre-Heat (Bergstrom Heat and Cool w/ Condensation) 2 SWITCHES:Diagram2 - No Idle Switching
Mates	5220

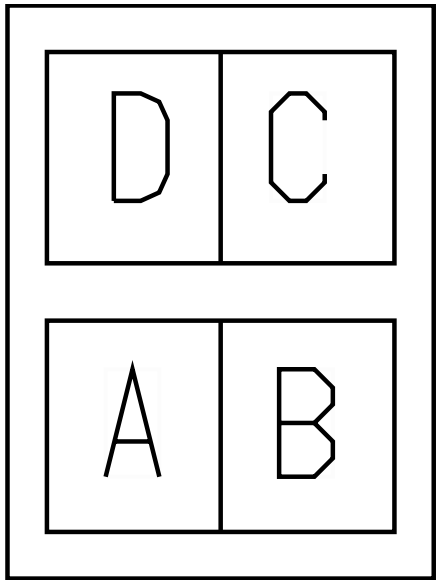

Name	Terminal Part Number	V-Min	Name	Wire Part Number	Wire CSA	Wire Spec	Wire Material description	Wire Color Description	Wire Length	End2 Terminal Part Number	End2 Pin Name	End2 Connect or
A	-	-	BD75AG	3510299 R1	0.79	18.0	Thin Wall XLPE Primary Cable	LIGHT GREEN	1430.0	-	X	-
A	-	-	ZE75AG	3510299 R1	0.79	18.0	Thin Wall XLPE Primary Cable	LIGHT GREEN	5202.0	-	B14	H01-5205
A	-	-	ZE75AG	3510299 R1	0.79	18.0	Thin Wall XLPE Primary Cable	LIGHT GREEN	5202.0	-	B14	5205

Name	Terminal Part Number	V-Min	Name	Wire Part Number	Wire CSA	Wire Spec	Wire Material description	Wire Color Description	Wire Length	End2 Terminal Part Number	End2 Pin Name	End2 Connector
B	-	-	BD75AF	3510299 R1	0.79	18.0	Thin Wall XLPE Primary Cable	LIGHT GREEN	1460.0	-	X	-
B	-	-	BF75AF	3510299 R1	0.79	18.0	Thin Wall XLPE Primary Cable	LIGHT GREEN	5202.0	-	B15	H01-5205
B	-	-	BF75AF	3510299 R1	0.79	18.0	Thin Wall XLPE Primary Cable	LIGHT GREEN	5202.0	-	B15	5205
C	-	-	BD75AR	2643671 R1	0.79	18.0	Std. Wall XLPE Primary Cable	LIGHT GREEN	1400.0	-	X	-
C	-	-	BF75AR	2643671 R1	0.79	18.0	Std. Wall XLPE Primary Cable	LIGHT GREEN	5202.0	-	A1	H01-5205
C	-	-	BF75AR	2643671 R1	0.79	18.0	Std. Wall XLPE Primary Cable	LIGHT GREEN	5202.0	-	A1	5205
D	-	-	BD75-GAS	3510359 R1	0.79	18.0	Thin Wall XLPE Primary Cable	WHITE	1690.0	-	X	-
D	-	-	ZE75-GAS	2643674 R1	0.79	18.0	Std. Wall XLPE Primary Cable	WHITE	1690.0	-	X	-
D	-	-	BF75-GAS	2643674 R1	0.79	18.0	Std. Wall XLPE Primary Cable	WHITE	1690.0	-	X	-

Connector Name	5222
Part Number	3520850C1
Instances	LT/RH/LoneStar - X15/A26 - Rear HVAC (No Idle) W/ Pre-Heat (Bergstrom Heat and Cool w/ Condensation) 2 SWITCHES Option 1:Diagram2 - No Idle Switching LT/RH/LoneStar - X15/A26 - Rear HVAC (No Idle) W/ Pre-Heat (Bergstrom Heat and Cool w/ Condensation) 2 SWITCHES Option 2:Diagram2 - No Idle Switching LT/RH/LoneStar - X15/A26 - Rear HVAC (No Idle) W/ Pre-Heat (Bergstrom Heat and Cool w/ Condensation) 4 SWITCHES Option 1:Diagram2 - No Idle Switching LT/RH/LoneStar - X15/A26 - Rear HVAC (No Idle) W/ Pre-Heat (Bergstrom Heat and Cool w/ Condensation) 4 SWITCHES Option 2:Diagram2 - No Idle Switching
Mates	SW-Rear_Engine_Heat-6002-0 3-02A

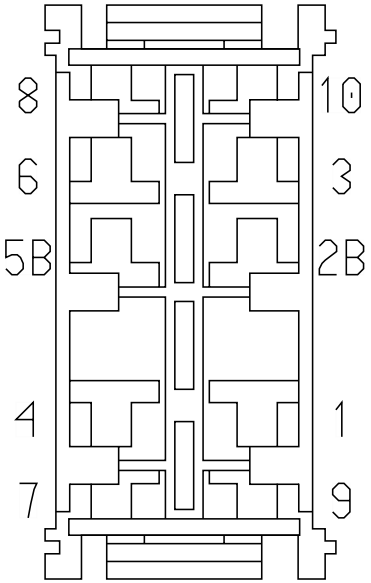

Name	Terminal Part Number	V-Min	Name	Wire Part Number	Wire CSA	Wire Spec	Wire Material description	Wire Color Description	Wire Length	End2 Terminal Part Number	End2 Pin Name	End2 Connect or
2B	-	-	AK75AF	2643671 R1	0.79	18.0	Std. Wall XLPE Primary Cable	LIGHT GREEN	355.0	-	B	5220
3	-	-	AH75AT	2643671 R1	0.79	18.0	Std. Wall XLPE Primary Cable	LIGHT GREEN	0.0	-	7	5222
3	-	-	AR75HB	2643671 R1	0.79	18.0	Std. Wall XLPE Primary Cable	LIGHT GREEN	150.0	-	7	5233
7	-	-	AH75AT	2643671 R1	0.79	18.0	Std. Wall XLPE Primary Cable	LIGHT GREEN	0.0	-	3	5222

Name	Terminal Part Number	V-Min	Name	Wire Part Number	Wire CSA	Wire Spec	Wire Material description	Wire Color Description	Wire Length	End2 Terminal Part Number	End2 Pin Name	End2 Connector
7	-	-	AR75AT	2643671 R1	0.79	18.0	Std. Wall XLPE Primary Cable	LIGHT GREEN	150.0	-	7	5233
7	-	-	AH75AR	2643671 R1	0.79	18.0	Std. Wall XLPE Primary Cable	LIGHT GREEN	355.0	-	C	5220
8	-	-	AP62AA	2643720 R1	0.79	18.0	Std. Wall XLPE Primary Cable	DARK BLUE	150.0	-	8	5233
8	-	-	AP62J	2643720 R1	0.79	18.0	Std. Wall XLPE Primary Cable	DARK BLUE	225.0	-	X	-
8	-	-	AE62J	2643720 R1	0.79	18.0	Std. Wall XLPE Primary Cable	DARK BLUE	325.0	-	X	-
9	-	-	AK75AG	2643671 R1	0.79	18.0	Std. Wall XLPE Primary Cable	LIGHT GREEN	355.0	-	A	5220
10	-	-	AR75-GAS	2643671 R1	0.79	18.0	Std. Wall XLPE Primary Cable	LIGHT GREEN	355.0	-	D	5220
10	-	-	AR75HA	2643671 R1	0.79	18.0	Std. Wall XLPE Primary Cable	LIGHT GREEN	150.0	-	10	5233
10	-	-	BA75HA	2643671 R1	0.79	18.0	Std. Wall XLPE Primary Cable	LIGHT GREEN	150.0	-	10	5233

Connector Name	5230A
Part Number	1661200C1
Short Description	NO IDLE CONTROLS 2
Instances	LT/RH/LoneStar - X15/A26 - Rear AUTO HVAC (No Idle) W/ Pre-Heat (Bergstrom Heat and Cool w/ Condensation) 2 SWITCHES:Diagram2 - No Idle Switching LT/RH/LoneStar - X15/A26 - Rear HVAC (No Idle) W/ Pre-Heat (Bergstrom Heat and Cool w/ Condensation) 2 SWITCHES Option 1:Diagram2 - No Idle Switching LT/RH/LoneStar - X15/A26 - Rear HVAC (No Idle) W/ Pre-Heat (Bergstrom Heat and Cool w/ Condensation) 2 SWITCHES Option 2:Diagram2 - No Idle Switching LT/RH/LoneStar - X15/A26 - Rear Manual HVAC (No Idle) W/ Pre-Heat (Bergstrom Heat and Cool w/ Condensation) 2 SWITCHES:Diagram2 - No Idle Switching
Mates	5230A

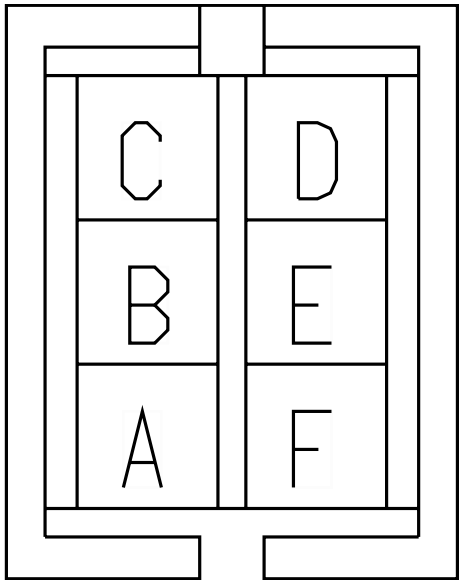

Name	Terminal Part Number	V-Min	Name	Wire Part Number	Wire CSA	Wire Spec	Wire Material description	Wire Color Description	Wire Length	End2 Terminal Part Number	End2 Pin Name	End2 Connect or
A	-	-	ZE77NE	3510299 R1	0.79	18.0	Thin Wall XLPE Primary Cable	LIGHT GREEN	5227.0	-	B13	H01-5205
A	-	-	ZE77NE	3510299 R1	0.79	18.0	Thin Wall XLPE Primary Cable	LIGHT GREEN	5227.0	-	B13	5205
B	-	-	ZE77NF	3510299 R1	0.79	18.0	Thin Wall XLPE Primary Cable	LIGHT GREEN	5227.0	-	B12	H01-5205
B	-	-	ZE77NF	3510299 R1	0.79	18.0	Thin Wall XLPE Primary Cable	LIGHT GREEN	5227.0	-	B12	5205

Connector Name	5230A
Part Number	1661201C1
Short Description	NO IDLE CONTROLS 2
Instances	LT/RH/LoneStar - X15/A26 - Rear AUTO HVAC (No Idle) W/ Pre-Heat (Bergstrom Heat and Cool w/ Condensation) 2 SWITCHES:Diagram2 - No Idle Switching LT/RH/LoneStar - X15/A26 - Rear HVAC (No Idle) W/ Pre-Heat (Bergstrom Heat and Cool w/ Condensation) 2 SWITCHES Option 1:Diagram2 - No Idle Switching LT/RH/LoneStar - X15/A26 - Rear HVAC (No Idle) W/ Pre-Heat (Bergstrom Heat and Cool w/ Condensation) 2 SWITCHES Option 2:Diagram2 - No Idle Switching LT/RH/LoneStar - X15/A26 - Rear Manual HVAC (No Idle) W/ Pre-Heat (Bergstrom Heat and Cool w/ Condensation) 2 SWITCHES:Diagram2 - No Idle Switching
Mates	5230A

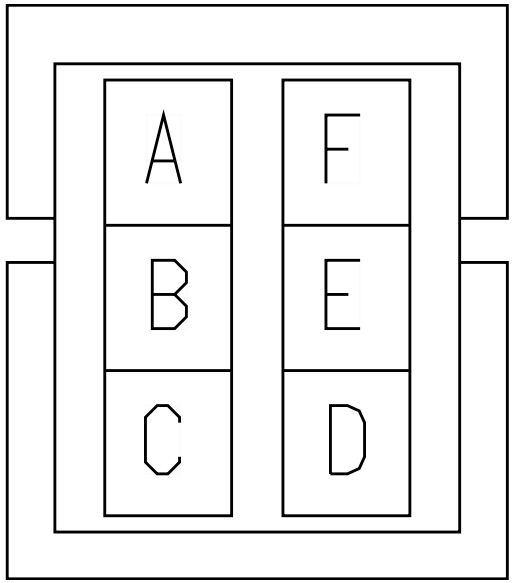

Name	Terminal Part Number	V-Min	Name	Wire Part Number	Wire CSA	Wire Spec	Wire Material description	Wire Color Description	Wire Length	End2 Terminal Part Number	End2 Pin Name	End2 Connect or
A	-	-	BA77NE	2643671 R1	0.79	18.0	Std. Wall XLPE Primary Cable	LIGHT GREEN	325.0	-	2B	H02-5233
A	-	-	BA77NE	2643671 R1	0.79	18.0	Std. Wall XLPE Primary Cable	LIGHT GREEN	325.0	-	2B	5233
B	-	-	BA77NF	2643671 R1	0.79	18.0	Std. Wall XLPE Primary Cable	LIGHT GREEN	325.0	-	9	H02-5233
B	-	-	BA77NF	2643671 R1	0.79	18.0	Std. Wall XLPE Primary Cable	LIGHT GREEN	325.0	-	9	5233

Connector Name	5230
Part Number	1661200C1
Short Description	NO IDLE CONTROLS
Instances	LT/RH/LoneStar - X15/A26 - Rear AUTO HVAC (No Idle) W/ Pre-Heat (Bergstrom Heat and Cool w/ Condensation) 2 SWITCHES:Diagram2 - No Idle Switching LT/RH/LoneStar - X15/A26 - Rear AUTO HVAC (No Idle) W/ Pre-Heat (Bergstrom Heat and Cool w/ Condensation) 2 SWITCHES:Diagram3 - Espar Circuit LT/RH/LoneStar - X15/A26 - Rear HVAC (No Idle Heater) (Espar) Option 1:Diagram1 LT/RH/LoneStar - X15/A26 - Rear HVAC (No Idle Heater) (Espar) Option 2:Diagram1 LT/RH/LoneStar - X15/A26 - Rear HVAC (No Idle Heater) (Webasto Std N/Swift) N/ Heat Swtich:Diagram1 LT/RH/LoneStar - X15/A26 - Rear HVAC (No Idle Heater) (Webasto Std W/Swift) N/ Heat Switch:Diagram1 LT/RH/LoneStar - X15/A26 - Rear HVAC (No Idle) W/ Pre-Heat (Bergstrom Heat and Cool w/ Condensation) 2 SWITCHES Option 1:Diagram2 - No Idle Switching LT/RH/LoneStar - X15/A26 - Rear HVAC (No Idle) W/ Pre-Heat (Bergstrom Heat and Cool w/ Condensation) 2 SWITCHES Option 2:Diagram2 - No Idle Switching LT/RH/LoneStar - X15/A26 - Rear HVAC (No Idle) W/ Pre-Heat (Bergstrom Heat and Cool w/ Condensation) 4 SWITCHES Option 1:Diagram2 - No Idle Switching LT/RH/LoneStar - X15/A26 - Rear HVAC (No Idle) W/ Pre-Heat (Bergstrom Heat and Cool w/ Condensation) 4 SWITCHES Option 2:Diagram2 - No Idle Switching LT/RH/LoneStar - X15/A26 - Rear Manual HVAC (No Idle) W/ Pre-Heat (Bergstrom Heat and Cool w/ Condensation) 2 SWITCHES:Diagram2 - No Idle Switching LT/RH/LoneStar - X15/A26 - Rear Manual HVAC (No Idle) W/ Pre-Heat (Bergstrom Heat and Cool w/ Condensation) 2 SWITCHES:Diagram3 - Espar Circuit
Mates	5230

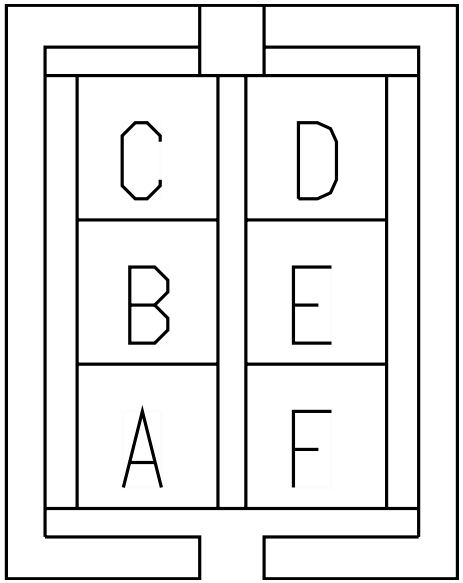

Name	Terminal Part Number	V-Min	Name	Wire Part Number	Wire CSA	Wire Spec	Wire Material description	Wire Color Description	Wire Length	End2 Terminal Part Number	End2 Pin Name	End2 Connector
A	-	-	ZG75WC	3510299 R1	0.79	18.0	Thin Wall XLPE Primary Cable	LIGHT GREEN	2880.0	-	E	H01-5238
A	-	-	BD77NE	3510299 R1	0.79	18.0	Thin Wall XLPE Primary Cable	LIGHT GREEN	1345.0	-	X	-
A	-	-	ZE75WC	3510299 R1	0.79	18.0	Thin Wall XLPE Primary Cable	LIGHT GREEN	2880.0	-	E	H01-5238
A	-	-	GS75WC	3510299 R1	0.79	18.0	Thin Wall XLPE Primary Cable	LIGHT GREEN	2880.0	-	E	H01-5236
A	-	-	BF77NE	3510299 R1	0.79	18.0	Thin Wall XLPE Primary Cable	LIGHT GREEN	5177.0	-	B13	5205
B	-	-	ZG75WD	2643671 R1	0.79	18.0	Std. Wall XLPE Primary Cable	LIGHT GREEN	1285.0	-	X	-
B	-	-	GV75WD	3510299 R1	0.79	18.0	Thin Wall XLPE Primary Cable	LIGHT GREEN	1700.0	-	X	-
B	-	-	BD77NF	3510299 R1	0.79	18.0	Thin Wall XLPE Primary Cable	LIGHT GREEN	1315.0	-	X	-

Name	Terminal Part Number	V-Min	Name	Wire Part Number	Wire CSA	Wire Spec	Wire Material description	Wire Color Description	Wire Length	End2 Terminal Part Number	End2 Pin Name	End2 Connector
B	-	-	ZE75WD	3510299 R1	0.79	18.0	Thin Wall XLPE Primary Cable	LIGHT GREEN	2290.0	-	X	-
B	-	-	BF77NF	3510299 R1	0.79	18.0	Thin Wall XLPE Primary Cable	LIGHT GREEN	5177.0	-	B12	H01-5205
B	-	-	BF77NF	3510299 R1	0.79	18.0	Thin Wall XLPE Primary Cable	LIGHT GREEN	5177.0	-	B12	5205
C	-	-	ZG75WE	3510299 R1	0.79	18.0	Thin Wall XLPE Primary Cable	LIGHT GREEN	2880.0	-	G	H01-5238
C	-	-	ZE75WE	3510299 R1	0.79	18.0	Thin Wall XLPE Primary Cable	LIGHT GREEN	2880.0	-	G	H01-5238
C	-	-	GS75WE	3510299 R1	0.79	18.0	Thin Wall XLPE Primary Cable	LIGHT GREEN	2880.0	-	G	H01-5236
D	-	-	GV75WF	3510299 R1	0.79	18.0	Thin Wall XLPE Primary Cable	LIGHT GREEN	2880.0	-	H	H01-5238
D	-	-	ZE75WF	3510299 R1	0.79	18.0	Thin Wall XLPE Primary Cable	LIGHT GREEN	2880.0	-	H	H01-5238

Name	Terminal Part Number	V-Min	Name	Wire Part Number	Wire CSA	Wire Spec	Wire Material description	Wire Color Description	Wire Length	End2 Terminal Part Number	End2 Pin Name	End2 Connector
D	-	-	GS75WF	3510299 R1	0.79	18.0	Thin Wall XLPE Primary Cable	LIGHT GREEN	2880.0	-	H	H01-5236
E	-	-	MK75WJ	3510359 R1	0.79	18.0	Thin Wall XLPE Primary Cable	WHITE	2880.0	-	J	H01-5238
E	-	-	ZE75WJ	3510359 R1	0.79	18.0	Thin Wall XLPE Primary Cable	WHITE	2880.0	-	J	H01-5238
F	-	-	GV75WK	3510299 R1	0.79	18.0	Thin Wall XLPE Primary Cable	LIGHT GREEN	2880.0	-	K	H01-5238
F	-	-	ZE75WK	3510299 R1	0.79	18.0	Thin Wall XLPE Primary Cable	LIGHT GREEN	2880.0	-	K	H01-5238

Connector Name	5230
Part Number	1661201C1
Instances	LT/RH/LoneStar - X15/A26 - Rear AUTO HVAC (No Idle) W/ Pre-Heat (Bergstrom Heat and Cool w/ Condensation) 2 SWITCHES:Diagram2 - No Idle Switching LT/RH/LoneStar - X15/A26 - Rear AUTO HVAC (No Idle) W/ Pre-Heat (Bergstrom Heat and Cool w/ Condensation) 2 SWITCHES:Diagram3 - Espar Circuit LT/RH/LoneStar - X15/A26 - Rear HVAC (No Idle Heater) (Espar) Option 1:Diagram1 LT/RH/LoneStar - X15/A26 - Rear HVAC (No Idle Heater) (Espar) Option 2:Diagram1 LT/RH/LoneStar - X15/A26 - Rear HVAC (No Idle Heater) (Webasto Std N/Swift) N/ Heat Swtich:Diagram1 LT/RH/LoneStar - X15/A26 - Rear HVAC (No Idle Heater) (Webasto Std W/Swift) N/ Heat Switch:Diagram1 LT/RH/LoneStar - X15/A26 - Rear HVAC (No Idle) W/ Pre-Heat (Bergstrom Heat and Cool w/ Condensation) 2 SWITCHES Option 1:Diagram2 - No Idle Switching LT/RH/LoneStar - X15/A26 - Rear HVAC (No Idle) W/ Pre-Heat (Bergstrom Heat and Cool w/ Condensation) 2 SWITCHES Option 2:Diagram2 - No Idle Switching LT/RH/LoneStar - X15/A26 - Rear HVAC (No Idle) W/ Pre-Heat (Bergstrom Heat and Cool w/ Condensation) 4 SWITCHES Option 1:Diagram2 - No Idle Switching LT/RH/LoneStar - X15/A26 - Rear HVAC (No Idle) W/ Pre-Heat (Bergstrom Heat and Cool w/ Condensation) 4 SWITCHES Option 2:Diagram2 - No Idle Switching LT/RH/LoneStar - X15/A26 - Rear Manual HVAC (No Idle) W/ Pre-Heat (Bergstrom Heat and Cool w/ Condensation) 2 SWITCHES:Diagram2 - No Idle Switching LT/RH/LoneStar - X15/A26 - Rear Manual HVAC (No Idle) W/ Pre-Heat (Bergstrom Heat and Cool w/ Condensation) 2 SWITCHES:Diagram3 - Espar Circuit
Mates	5230

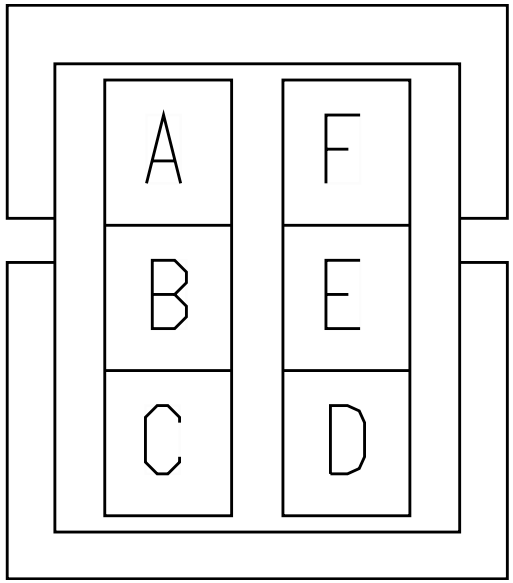

Name	Terminal Part Number	V-Min	Name	Wire Part Number	Wire CSA	Wire Spec	Wire Material description	Wire Color Description	Wire Length	End2 Terminal Part Number	End2 Pin Name	End2 Connector
A	-	-	AT75WC	2643671 R1	0.79	18.0	Std. Wall XLPE Primary Cable	LIGHT GREEN	200.0	-	A	H02-5237
A	-	-	AR77NE	2643671 R1	0.79	18.0	Std. Wall XLPE Primary Cable	LIGHT GREEN	325.0	-	2B	5233
A	-	-	AM75WC	2643671 R1	0.79	18.0	Std. Wall XLPE Primary Cable	LIGHT GREEN	150.0	-	C	H02-5235
B	-	-	BE75WD	2643671 R1	0.79	18.0	Std. Wall XLPE Primary Cable	LIGHT GREEN	200.0	-	B	H02-5237
B	-	-	AR77NF	2643671 R1	0.79	18.0	Std. Wall XLPE Primary Cable	LIGHT GREEN	325.0	-	9	5233
B	-	-	AR77NF	2643671 R1	0.79	18.0	Std. Wall XLPE Primary Cable	LIGHT GREEN	325.0	-	9	H02-5233
B	-	-	AM75WD	2643671 R1	0.79	18.0	Std. Wall XLPE Primary Cable	LIGHT GREEN	150.0	-	D	H02-5235
C	-	-	BE75WE	2643671 R1	0.79	18.0	Std. Wall XLPE Primary Cable	LIGHT GREEN	200.0	-	C	H02-5237

Name	Terminal Part Number	V-Min	Name	Wire Part Number	Wire CSA	Wire Spec	Wire Material description	Wire Color Description	Wire Length	End2 Terminal Part Number	End2 Pin Name	End2 Connect or
C	-	-	AM75WE	2643671 R1	0.79	18.0	Std. Wall XLPE Primary Cable	LIGHT GREEN	150.0	-	B	H02-5235
D	-	-	AT75WF	2643671 R1	0.79	18.0	Std. Wall XLPE Primary Cable	LIGHT GREEN	200.0	-	D	H02-5237
D	-	-	AM75WF	2643671 R1	0.79	18.0	Std. Wall XLPE Primary Cable	LIGHT GREEN	150.0	-	A	H02-5235
E	-	-	AT75WJ	2643671 R1	0.79	18.0	Std. Wall XLPE Primary Cable	LIGHT GREEN	200.0	-	E	H02-5237
F	-	-	BE75WK	2643671 R1	0.79	18.0	Std. Wall XLPE Primary Cable	LIGHT GREEN	200.0	-	F	H02-5237

Connector Name	5231
Part Number	3540612C1
Short Description	NO IDLE CONTROLS WEBASTO
Instances	LT/RH/LoneStar - X15/A26 - Rear HVAC (No Idle Heater) (Webasto Smartemp):Diagram1
Mates	5231

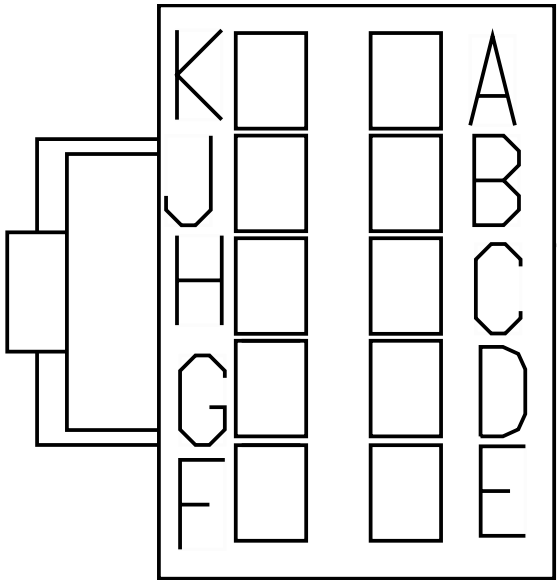

Name	Terminal Part Number	V-Min	Name	Wire Part Number	Wire CSA	Wire Spec	Wire Material description	Wire Color Description	Wire Length	End2 Terminal Part Number	End2 Pin Name	End2 Connect or
A	-	-	ZC75WFA	2643761 R1	0.53	20.0	Std. Wall XLPE Primary Cable	LIGHT GREEN	2880.0	-	E	H01-5237
B	-	-	ZC75WDA	3510299 R1	0.79	18.0	Thin Wall XLPE Primary Cable	LIGHT GREEN	1700.0	-	X	-
C	-	-	ZC75WC	2643762 R1	0.53	20.0	Std. Wall XLPE Primary Cable	BROWN	2880.0	-	G	H01-5237
D	-	-	ZC75WJ	2643758 R1	0.53	20.0	Std. Wall XLPE Primary Cable	RED	2880.0	-	K	H01-5237

Name	Terminal Part Number	V-Min	Name	Wire Part Number	Wire CSA	Wire Spec	Wire Material description	Wire Color Description	Wire Length	End2 Terminal Part Number	End2 Pin Name	End2 Connector
E	-	-	ZC75WE	2643771 R1	0.53	20.0	Std. Wall XLPE Primary Cable	DARK BLUE	2880.0	-	H	H01-5237
F	-	-	ZC75WK	3510299 R1	0.79	18.0	Thin Wall XLPE Primary Cable	LIGHT GREEN	2880.0	-	C	H01-5237
G	-	-	ZC75WG	2643763 R1	0.53	20.0	Std. Wall XLPE Primary Cable	GREY	2880.0	-	J	H01-5237
H	-	-	ZC75WF	2643768 R1	0.53	20.0	Std. Wall XLPE Primary Cable	YELLOW 2	2880.0	-	L	H01-5237

Connector Name	5231
Part Number	3540613C1
Short Description	NO IDLE CONTROLS WEBASTO
Instances	LT/RH/LoneStar - X15/A26 - Rear HVAC (No Idle Heater) (Webasto Smartemp):Diagram1
Mates	5231

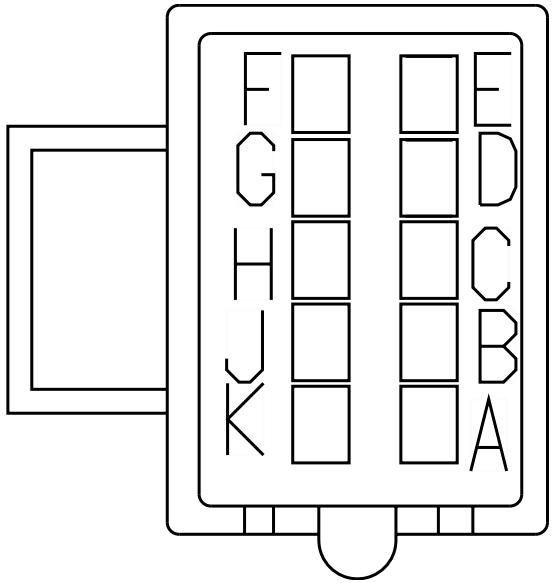

Name	Terminal Part Number	V-Min	Name	Wire Part Number	Wire CSA	Wire Spec	Wire Material description	Wire Color Description	Wire Length	End2 Terminal Part Number	End2 Pin Name	End2 Connect or
A	-	-	AV75WA	2643765 R1	0.53	20.0	Std. Wall XLPE Primary Cable	ORANGE	150.0	-	A	H02-5236
B	-	-	AV75WB	2643757 R1	0.53	20.0	Std. Wall XLPE Primary Cable	BLACK	150.0	-	B	H02-5236
C	-	-	AV75WC	2643762 R1	0.53	20.0	Std. Wall XLPE Primary Cable	BROWN	150.0	-	C	H02-5236
D	-	-	AV75WD	2643758 R1	0.53	20.0	Std. Wall XLPE Primary Cable	RED	150.0	-	D	H02-5236

Name	Terminal Part Number	V-Min	Name	Wire Part Number	Wire CSA	Wire Spec	Wire Material description	Wire Color Description	Wire Length	End2 Terminal Part Number	End2 Pin Name	End2 Connector
E	-	-	AV75WE	2643771 R1	0.53	20.0	Std. Wall XLPE Primary Cable	DARK BLUE	150.0	-	E	H02-5236
F	-	-	AV75WF	2643768 R1	0.53	20.0	Std. Wall XLPE Primary Cable	YELLOW 2	150.0	-	F	H02-5236
G	-	-	AV75WG	2643763 R1	0.53	20.0	Std. Wall XLPE Primary Cable	GREY	150.0	-	G	H02-5236
H	-	-	AV75WH	2643761 R1	0.53	20.0	Std. Wall XLPE Primary Cable	LIGHT GREEN	150.0	-	H	H02-5236

Connector Name	5233
Part Number	3520850C1
Instances	LT/RH/LoneStar - X15/A26 - Rear HVAC (No Idle) W/ Pre-Heat (Bergstrom Heat and Cool w/ Condensation) 2 SWITCHES Option 1:Diagram2 - No Idle Switching LT/RH/LoneStar - X15/A26 - Rear HVAC (No Idle) W/ Pre-Heat (Bergstrom Heat and Cool w/ Condensation) 2 SWITCHES Option 2:Diagram2 - No Idle Switching LT/RH/LoneStar - X15/A26 - Rear HVAC (No Idle) W/ Pre-Heat (Bergstrom Heat and Cool w/ Condensation) 4 SWITCHES Option 1:Diagram2 - No Idle Switching LT/RH/LoneStar - X15/A26 - Rear HVAC (No Idle) W/ Pre-Heat (Bergstrom Heat and Cool w/ Condensation) 4 SWITCHES Option 2:Diagram2 - No Idle Switching
Mates	SW-Rear_Engine_Cool-6002-0 3-02A

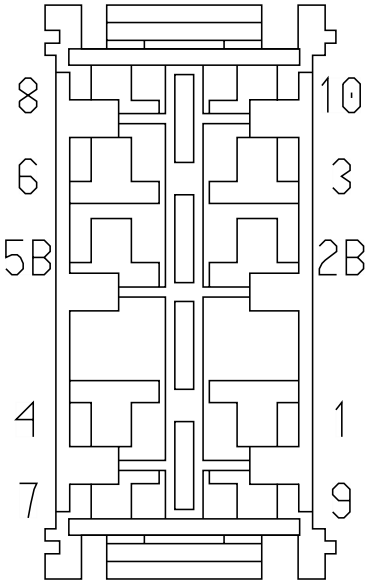

Name	Terminal Part Number	V-Min	Name	Wire Part Number	Wire CSA	Wire Spec	Wire Material description	Wire Color Description	Wire Length	End2 Terminal Part Number	End2 Pin Name	End2 Connect or
2B	-	-	AR77NE	2643671 R1	0.79	18.0	Std. Wall XLPE Primary Cable	LIGHT GREEN	325.0	-	A	5230
2B	-	-	BA77NE	2643671 R1	0.79	18.0	Std. Wall XLPE Primary Cable	LIGHT GREEN	325.0	-	A	5230A
7	-	-	AR75AT	2643671 R1	0.79	18.0	Std. Wall XLPE Primary Cable	LIGHT GREEN	150.0	-	7	5222
7	-	-	AR75HB	2643671 R1	0.79	18.0	Std. Wall XLPE Primary Cable	LIGHT GREEN	150.0	-	3	5222

Name	Terminal Part Number	V-Min	Name	Wire Part Number	Wire CSA	Wire Spec	Wire Material description	Wire Color Description	Wire Length	End2 Terminal Part Number	End2 Pin Name	End2 Connect or
8	-	-	AF62J	2643720 R1	0.79	18.0	Std. Wall XLPE Primary Cable	DARK BLUE	275.0	-	X	-
8	-	-	AP62AA	2643720 R1	0.79	18.0	Std. Wall XLPE Primary Cable	DARK BLUE	150.0	-	8	5222
9	-	-	AR77NF	2643671 R1	0.79	18.0	Std. Wall XLPE Primary Cable	LIGHT GREEN	325.0	-	B	5230
9	-	-	BA77NF	2643671 R1	0.79	18.0	Std. Wall XLPE Primary Cable	LIGHT GREEN	325.0	-	B	5230A
10	-	-	AR75HA	2643671 R1	0.79	18.0	Std. Wall XLPE Primary Cable	LIGHT GREEN	150.0	-	10	5222
10	-	-	BA75HA	2643671 R1	0.79	18.0	Std. Wall XLPE Primary Cable	LIGHT GREEN	150.0	-	10	5222

Connector Name	5300
Part Number	2031871C1
Instances	LT/RH - A26 - Work Lights - LED W/ Sw Pack - Customer Supplied - Sleeper W/ RKE W/MAN REV:Diagram1 LT/RH - A26 - Work Lights - LED W/ Sw Pack - Customer Supplied - Sleeper W/ RKE W/MAN REV:Diagram2 LT/RH - A26 - Work Lights - LED W/ Sw Pack - Customer Supplied - Sleeper W/ RKE W/MAN REV:Diagram3 LT/RH - A26 - Work Lights - LED W/ Sw Pack - Customer Supplied - Sleeper W/ RKE W/MAN REV:Diagram4 LT/RH - A26 - Work Lights - LED W/ Sw Pack - Customer Supplied - Sleeper W/O RKE W/MAN REV:Diagram1 LT/RH - A26 - Work Lights - LED W/ Sw Pack - Customer Supplied - Sleeper W/O RKE W/MAN REV:Diagram2 LT/RH - A26 - Work Lights - LED W/ Sw Pack - Customer Supplied - Sleeper W/O RKE W/MAN REV:Diagram3 LT/RH - A26 - Work Lights - LED W/ Sw Pack - Customer Supplied - Sleeper W/O RKE W/MAN REV:Diagram4 LT/RH - A26 - Work Lights -LED W/ Sw Pack - Sleeper W/ RKE W/MAN REV:Diagram1 LT/RH - A26 - Work Lights -LED W/ Sw Pack - Sleeper W/ RKE W/MAN REV:Diagram2 LT/RH - A26 - Work Lights -LED W/ Sw Pack - Sleeper W/O RKE W/MAN REV:Diagram1 LT/RH - A26 - Work Lights -LED W/ Sw Pack - Sleeper W/O RKE W/MAN REV:Diagram2 LT/RH LoneStar - X15/A26 - Speakers:Four Speakers N/BT N/QC:Diagram2-Sleeper LT/RH LoneStar - X15/A26 - Speakers:Four Speakers N/BT W/QC:Diagram2-Sleeper LT/RH LoneStar - X15/A26 - Speakers:Four Speakers W/BT N/QC:Diagram2-Sleeper LT/RH LoneStar - X15/A26 - Speakers:Four Speakers W/BT W/QC:Diagram2-Sleeper LT/RH LoneStar - X15/A26 - Speakers:Speakers N/BT W/AMP N/QC:Diagram1 LT/RH LoneStar - X15/A26 - Speakers:Speakers W/BT W/AMP N/QC:Diagram1 LT/RH/LoneStar - X15 - Work Lights - LED W/ Sw Pack - Customer Supplied - Sleeper W/ RKE W/MAN REV:Diagram1 LT/RH/LoneStar - X15 - Work Lights - LED W/ Sw Pack - Customer Supplied - Sleeper W/ RKE W/MAN REV:Diagram2

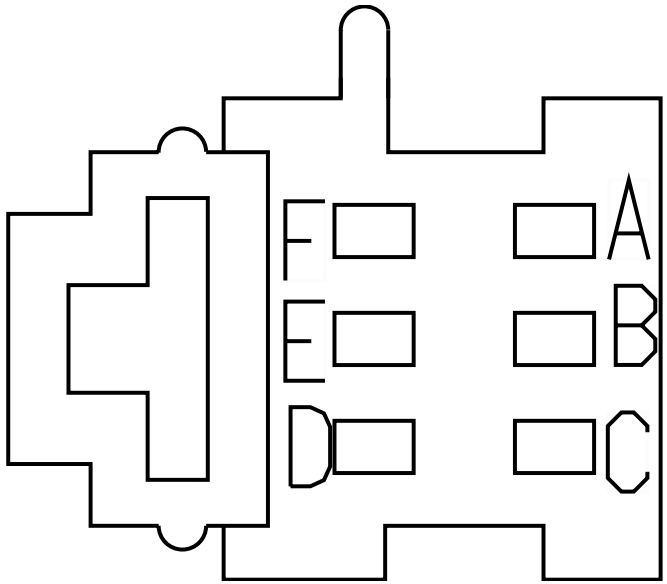

LT/RH/LoneStar - X15 - Work Lights - LED W/ Sw Pack - Customer Supplied - Sleeper W/O RKE W/MAN REV:Diagram1
LT/RH/LoneStar - X15 - Work Lights - LED W/ Sw Pack - Customer Supplied - Sleeper W/O RKE W/MAN REV:Diagram2
LT/RH/LoneStar - X15 - Work Lights -LED W/ Sw Pack - Sleeper W/ RKE W/MAN REV:Diagram1
LT/RH/LoneStar - X15 - Work Lights -LED W/ Sw Pack - Sleeper W/O RKE W/MAN REV:Diagram1
LT/RH/LoneStar - X15/A26 - Work Lights - LED W/ Sw Pack - Customer Supplied - Sleeper:Diagram1
LT/RH/LoneStar - X15/A26 - Work Lights - LED W/ Sw Pack - Customer Supplied - Sleeper:Diagram2
LT/RH/LoneStar - X15/A26 - Work Lights - LED W/ Sw Pack - Customer Supplied - Sleeper W/ RKE W/AUTO REV:Diagram1
LT/RH/LoneStar - X15/A26 - Work Lights - LED W/ Sw Pack - Customer Supplied - Sleeper W/ RKE W/AUTO REV:Diagram2
LT/RH/LoneStar - X15/A26 - Work Lights - LED W/ Sw Pack - Customer Supplied - Sleeper W/O RKE:Diagram1
LT/RH/LoneStar - X15/A26 - Work Lights - LED W/ Sw Pack - Customer Supplied - Sleeper W/O RKE:Diagram2
LT/RH/LoneStar - X15/A26 - Work Lights - LED W/ Sw Pack - Customer Supplied - Sleeper W/O RKE W/AUTO REV:Diagram1
LT/RH/LoneStar - X15/A26 - Work Lights - LED W/ Sw Pack - Customer Supplied - Sleeper W/O RKE W/AUTO REV:Diagram2
LT/RH/LoneStar - X15/A26 - Work Lights -LED W/ Sw Pack - Sleeper:Diagram1
LT/RH/LoneStar - X15/A26 - Work Lights -LED W/ Sw Pack - Sleeper W/ RKE W/AUTO REV:Diagram1
LT/RH/LoneStar - X15/A26 - Work Lights -LED W/ Sw Pack - Sleeper W/O RKE:Diagram1
LT/RH/LoneStar - X15/A26 - Work Lights -LED W/ Sw Pack - Sleeper W/O RKE W/AUTO REV:Diagram1

Mates 5300

Name	Terminal Part Number	V-Min	Name	Wire Part Number	Wire CSA	Wire Spec	Wire Material description	Wire Color Description	Wire Length	End2 Terminal Part Number	End2 Pin Name	End2 Connect or
A	-	-	HF86BB	2643671 R1	0.79	18.0	Std. Wall XLPE Primary Cable	LIGHT GREEN	2550.0	-	3	5000

Name	Terminal Part Number	V-Min	Name	Wire Part Number	Wire CSA	Wire Spec	Wire Material description	Wire Color Description	Wire Length	End2 Terminal Part Number	End2 Pin Name	End2 Connector
A	-	-	V86BB	2643671 R1	0.79	18.0	Std. Wall XLPE Primary Cable	LIGHT GREEN	720.0	-	A	H03-5301
B	-	-	HF86CB	2643671 R1	0.79	18.0	Std. Wall XLPE Primary Cable	LIGHT GREEN	2550.0	-	4	5000
B	-	-	V86CB	2643671 R1	0.79	18.0	Std. Wall XLPE Primary Cable	LIGHT GREEN	720.0	-	B	H03-5301
C	-	-	HF86DB	2643671 R1	0.79	18.0	Std. Wall XLPE Primary Cable	LIGHT GREEN	2550.0	-	5	5000
C	-	-	V86DB	2643671 R1	0.79	18.0	Std. Wall XLPE Primary Cable	LIGHT GREEN	1435.0	-	A	H03-5302
D	-	-	HF86EB	2643671 R1	0.79	18.0	Std. Wall XLPE Primary Cable	LIGHT GREEN	2550.0	-	6	5000
D	-	-	V86EB	2643671 R1	0.79	18.0	Std. Wall XLPE Primary Cable	LIGHT GREEN	1435.0	-	B	H03-5302
E	-	-	HA65	2643682 R1	1.16	16.0	Std. Wall XLPE Primary Cable	ORANGE	2550.0	-	20	5000
F	-	-	HA65-G	2643681 R1	1.16	16.0	Std. Wall XLPE Primary Cable	WHITE	445.0	-	-	-

Connector Name	5300
Part Number	2031872C1
Instances	LT/RH - A26 - Work Lights - LED W/ Sw Pack - Customer Supplied - Sleeper W/ RKE W/MAN REV:Diagram1 LT/RH - A26 - Work Lights - LED W/ Sw Pack - Customer Supplied - Sleeper W/ RKE W/MAN REV:Diagram2 LT/RH - A26 - Work Lights - LED W/ Sw Pack - Customer Supplied - Sleeper W/ RKE W/MAN REV:Diagram3 LT/RH - A26 - Work Lights - LED W/ Sw Pack - Customer Supplied - Sleeper W/ RKE W/MAN REV:Diagram4 LT/RH - A26 - Work Lights - LED W/ Sw Pack - Customer Supplied - Sleeper W/O RKE W/MAN REV:Diagram1 LT/RH - A26 - Work Lights - LED W/ Sw Pack - Customer Supplied - Sleeper W/O RKE W/MAN REV:Diagram2 LT/RH - A26 - Work Lights - LED W/ Sw Pack - Customer Supplied - Sleeper W/O RKE W/MAN REV:Diagram3 LT/RH - A26 - Work Lights - LED W/ Sw Pack - Customer Supplied - Sleeper W/O RKE W/MAN REV:Diagram4 LT/RH - A26 - Work Lights -LED W/ Sw Pack - Sleeper W/ RKE W/MAN REV:Diagram1 LT/RH - A26 - Work Lights -LED W/ Sw Pack - Sleeper W/ RKE W/MAN REV:Diagram2 LT/RH - A26 - Work Lights -LED W/ Sw Pack - Sleeper W/O RKE W/MAN REV:Diagram1 LT/RH - A26 - Work Lights -LED W/ Sw Pack - Sleeper W/O RKE W/MAN REV:Diagram2 LT/RH LoneStar - X15/A26 - Speakers:Four Speakers N/BT N/QC:Diagram2-Sleeper LT/RH LoneStar - X15/A26 - Speakers:Four Speakers N/BT W/QC:Diagram2-Sleeper LT/RH LoneStar - X15/A26 - Speakers:Four Speakers W/BT N/QC:Diagram2-Sleeper LT/RH LoneStar - X15/A26 - Speakers:Four Speakers W/BT W/QC:Diagram2-Sleeper LT/RH LoneStar - X15/A26 - Speakers:Speakers N/BT W/AMP N/QC:Diagram1 LT/RH LoneStar - X15/A26 - Speakers:Speakers W/BT W/AMP N/QC:Diagram1 LT/RH/LoneStar - X15 - Work Lights - LED W/ Sw Pack - Customer Supplied - Sleeper W/ RKE W/MAN REV:Diagram1 LT/RH/LoneStar - X15 - Work Lights - LED W/ Sw Pack - Customer Supplied - Sleeper W/ RKE W/MAN REV:Diagram2

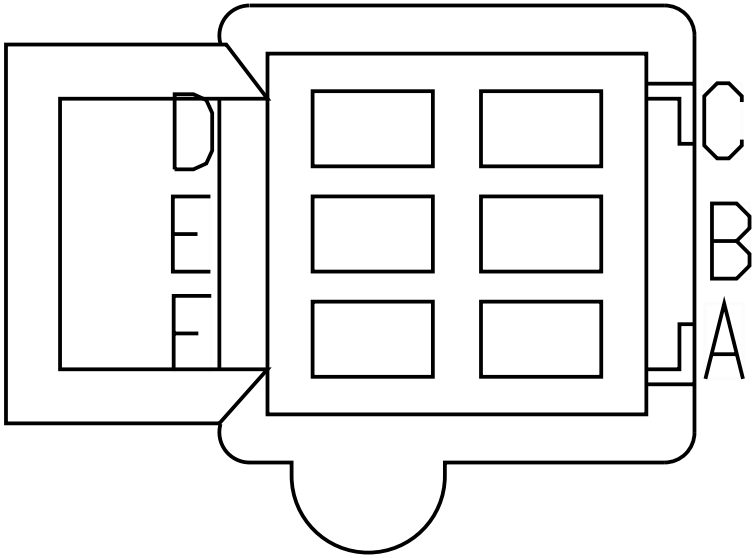

LT/RH/LoneStar - X15 - Work Lights - LED W/ Sw Pack - Customer Supplied - Sleeper W/O RKE W/MAN REV:Diagram1
LT/RH/LoneStar - X15 - Work Lights - LED W/ Sw Pack - Customer Supplied - Sleeper W/O RKE W/MAN REV:Diagram2
LT/RH/LoneStar - X15 - Work Lights -LED W/ Sw Pack - Sleeper W/ RKE W/MAN REV:Diagram1
LT/RH/LoneStar - X15 - Work Lights -LED W/ Sw Pack - Sleeper W/O RKE W/MAN REV:Diagram1
LT/RH/LoneStar - X15/A26 - Work Lights - LED W/ Sw Pack - Customer Supplied - Sleeper:Diagram1
LT/RH/LoneStar - X15/A26 - Work Lights - LED W/ Sw Pack - Customer Supplied - Sleeper:Diagram2
LT/RH/LoneStar - X15/A26 - Work Lights - LED W/ Sw Pack - Customer Supplied - Sleeper W/ RKE W/AUTO REV:Diagram1
LT/RH/LoneStar - X15/A26 - Work Lights - LED W/ Sw Pack - Customer Supplied - Sleeper W/ RKE W/AUTO REV:Diagram2
LT/RH/LoneStar - X15/A26 - Work Lights - LED W/ Sw Pack - Customer Supplied - Sleeper W/O RKE:Diagram1
LT/RH/LoneStar - X15/A26 - Work Lights - LED W/ Sw Pack - Customer Supplied - Sleeper W/O RKE:Diagram2
LT/RH/LoneStar - X15/A26 - Work Lights - LED W/ Sw Pack - Customer Supplied - Sleeper W/O RKE W/AUTO REV:Diagram1
LT/RH/LoneStar - X15/A26 - Work Lights - LED W/ Sw Pack - Customer Supplied - Sleeper W/O RKE W/AUTO REV:Diagram2
LT/RH/LoneStar - X15/A26 - Work Lights -LED W/ Sw Pack - Sleeper:Diagram1
LT/RH/LoneStar - X15/A26 - Work Lights -LED W/ Sw Pack - Sleeper W/ RKE W/AUTO REV:Diagram1
LT/RH/LoneStar - X15/A26 - Work Lights -LED W/ Sw Pack - Sleeper W/O RKE:Diagram1
LT/RH/LoneStar - X15/A26 - Work Lights -LED W/ Sw Pack - Sleeper W/O RKE W/AUTO REV:Diagram1

Mates 5300

Name	Terminal Part Number	V-Min	Name	Wire Part Number	Wire CSA	Wire Spec	Wire Material description	Wire Color Description	Wire Length	End2 Terminal Part Number	End2 Pin Name	End2 Connect or
A	-	-	V86BB	2643671 R1	0.79	18.0	Std. Wall XLPE Primary Cable	LIGHT GREEN	720.0	-	A	H03-5301

Name	Terminal Part Number	V-Min	Name	Wire Part Number	Wire CSA	Wire Spec	Wire Material description	Wire Color Description	Wire Length	End2 Terminal Part Number	End2 Pin Name	End2 Connector
A	-	-	HH86BBP	2643671 R1	0.79	18.0	Std. Wall XLPE Primary Cable	LIGHT GREEN	2310.0	-	5	H01-5312
B	-	-	V86CB	2643671 R1	0.79	18.0	Std. Wall XLPE Primary Cable	LIGHT GREEN	720.0	-	B	H03-5301
B	-	-	HH86CBP	2643671 R1	0.79	18.0	Std. Wall XLPE Primary Cable	LIGHT GREEN	2310.0	-	13	H01-5312
C	-	-	V86DB	2643671 R1	0.79	18.0	Std. Wall XLPE Primary Cable	LIGHT GREEN	1435.0	-	A	H03-5302
C	-	-	HH86DBP	2643671 R1	0.79	18.0	Std. Wall XLPE Primary Cable	LIGHT GREEN	2310.0	-	6	H01-5312
D	-	-	V86EB	2643671 R1	0.79	18.0	Std. Wall XLPE Primary Cable	LIGHT GREEN	1435.0	-	B	H03-5302
D	-	-	HH86EBP	2643671 R1	0.79	18.0	Std. Wall XLPE Primary Cable	LIGHT GREEN	2310.0	-	14	H01-5312
E	-	-	V65	2643675 R1	0.79	18.0	Std. Wall XLPE Primary Cable	ORANGE	670.0	-	X	-
F	-	-	V65-G	2643674 R1	0.79	18.0	Std. Wall XLPE Primary Cable	WHITE	870.0	-	X	-

Connector Name	5303
Part Number	3515763C1
Instances	Cab J1939 (250Kbps):Cab J1939 (250Kbps) LT/RH - X15/A26 - Lane Departure Warning - (Wabco OnLane 2.0 w/ roof speakers):Diagram1 LT/RH/LoneStar - X15/A26 - Radio N/ Steering Wheel Pod W/ Remote:Diagram1 LT/RH/LoneStar - X15/A26 - Radio W/Steering Wheel Pod W/ Remote:Diagram1 LT/RH/LoneStar - X15/A26 - Radio(Bluetooth) W/Steering Wheel W/Remote W/MIC:Diagram1
Mates	MODU-RADIO_RMT-2008-01-02A

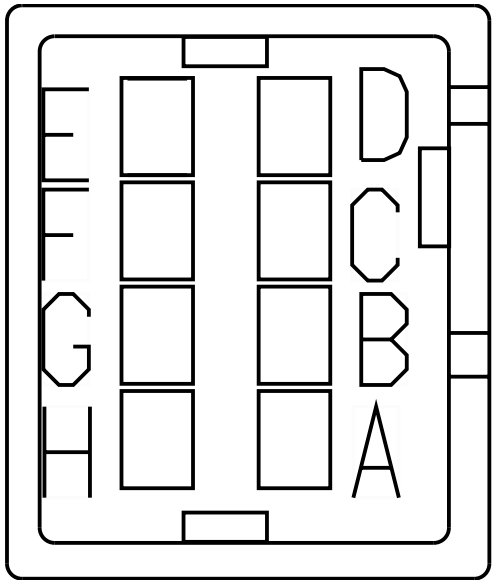

Name	Terminal Part Number	V-Min	Name	Wire Part Number	Wire CSA	Wire Spec	Wire Material description	Wire Color Description	Wire Length	End2 Terminal Part Number	End2 Pin Name	End2 Connect or
A	-	-	HW86F	2643671 R1	0.79	18.0	Std. Wall XLPE Primary Cable	LIGHT GREEN	2610.0	-	E	5011F
B	-	-	HW86R	2643671 R1	0.79	18.0	Std. Wall XLPE Primary Cable	LIGHT GREEN	2610.0	-	A	5011F
C	-	-	HW86-GHW	2643671 R1	0.79	18.0	Std. Wall XLPE Primary Cable	LIGHT GREEN	1845.0	-	-	-
D	-	-	-	-	-	-	-	-	-	-	-	-
D	-	-	WIRE223966	-	0.0	-	-	-	0.0	-	H	5600
E	-	-	-	-	-	-	-	-	-	-	-	-
E	-	-	WIRE223961	-	0.0	-	-	-	0.0	-	E	5600

Name	Terminal Part Number	V-Min	Name	Wire Part Number	Wire CSA	Wire Spec	Wire Material description	Wire Color Description	Wire Length	End2 Terminal Part Number	End2 Pin Name	End2 Connect or
F	-	-	HW86AE	2643671 R1	0.79	18.0	Std. Wall XLPE Primary Cable	LIGHT GREEN	2610.0	-	B	5011F

Connector Name 5600
Part Number 3601838C1
Instances Cab J1939 (250Kbps):Cab J1939 (250Kbps)
Mates SP-IP-B001-00-10-H1-5600

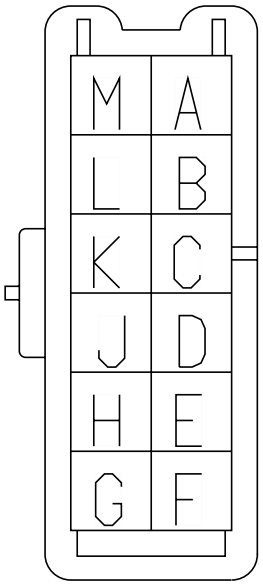

Name	Terminal Part Number	V-Min	Name	Wire Part Number	Wire CSA	Wire Spec	Wire Material description	Wire Color Description	Wire Length	End2 Terminal Part Number	End2 Pin Name	End2 Connect or
A	-	-	COND1820	-	0.0	-	-	-	-	,	B:C	5600:5600
A	-	-	WIRE223965	-	0.0	-	-	-	0.0	-	B	5930M
B	-	-	COND1820	-	0.0	-	-	-	-	,	A:C	5600:5600
B	-	-	WIRE223967	-	0.0	-	-	-	0.0	-	A6	5205
C	-	-	COND1820	-	0.0	-	-	-	-	,	A:B	5600:5600
C	-	-	WIRE223963	-	0.0	-	-	-	0.0	-	D	5600
D	-	-	COND1817	-	0.0	-	-	-	-	,	E:F	5600:5600
D	-	-	WIRE223963	-	0.0	-	-	-	0.0	-	C	5600

Name	Terminal Part Number	V-Min	Name	Wire Part Number	Wire CSA	Wire Spec	Wire Material description	Wire Color Description	Wire Length	End2 Terminal Part Number	End2 Pin Name	End2 Connector
E	-	-	COND1817	-	0.0	-	-	-	-	,	D:F	5600:5600
E	-	-	WIRE223961	-	0.0	-	-	-	0.0	-	E	5303
F	-	-	COND1817	-	0.0	-	-	-	-	,	D:E	5600:5600
F	-	-	WIRE223959	-	0.0	-	-	-	0.0	-	PIN1	-
F	-	-	WIRE233666	-	0.0	-	-	-	0.0	-	36	5000
G	-	-	COND1818	-	0.0	-	-	-	-	,	H:J	5600:5600
G	-	-	WIRE223958	-	0.0	-	-	-	0.0	-	PIN1	-
G	-	-	WIRE233665	-	0.0	-	-	-	0.0	-	35	5000
H	-	-	COND1818	-	0.0	-	-	-	-	,	G:J	5600:5600
H	-	-	WIRE223966	-	0.0	-	-	-	0.0	-	D	5303
J	-	-	COND1818	-	0.0	-	-	-	-	,	G:H	5600:5600
J	-	-	WIRE223962	-	0.0	-	-	-	0.0	-	K	5600
K	-	-	COND1819	-	0.0	-	-	-	-	,	L:M	5600:5600
K	-	-	WIRE223962	-	0.0	-	-	-	0.0	-	J	5600
L	-	-	COND1819	-	0.0	-	-	-	-	,	K:M	5600:5600
L	-	-	WIRE223960	-	0.0	-	-	-	0.0	-	A5	5205

Name	Terminal Part Number	V-Min	Name	Wire Part Number	Wire CSA	Wire Spec	Wire Material description	Wire Color Description	Wire Length	End2 Terminal Part Number	End2 Pin Name	End2 Connector
M	-	-	COND1819	-	0.0	-	-	-	-	,	K:L	5600:5600
M	-	-	WIRE223964	-	0.0	-	-	-	0.0	-	A	5930M

Connector Name	5754
Part Number	1661196C1
Short Description	TRI-PAC CONN
Instances	LT/RH/LoneStar - X15/A26 - No Idle HVAC - TRI-PAC Prewire:Diagram1
Mates	5754

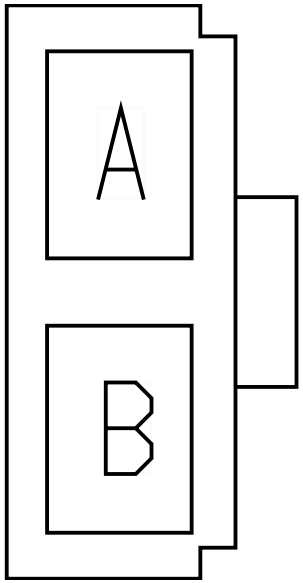

Name	Terminal Part Number	V-Min	Name	Wire Part Number	Wire CSA	Wire Spec	Wire Material description	Wire Color Description	Wire Length	End2 Terminal Part Number	End2 Pin Name	End2 Connect or
A	-	-	JY14TRI	2643760 R1	1.16	16.0	Std. Wall XLPE Primary Cable	RED	4770.0	-	A	5755
B	-	-	JY77SBY	2643678 R1	1.16	16.0	Std. Wall XLPE Primary Cable	LIGHT GREEN	4770.0	-	A	H01-5756

Connector Name	5754
Part Number	1661197C1
Short Description	TRI-PAC
Instances	LT/RH/LoneStar - X15/A26 - No Idle HVAC - TRI-PAC Prewire:Diagram1
Mates	5754

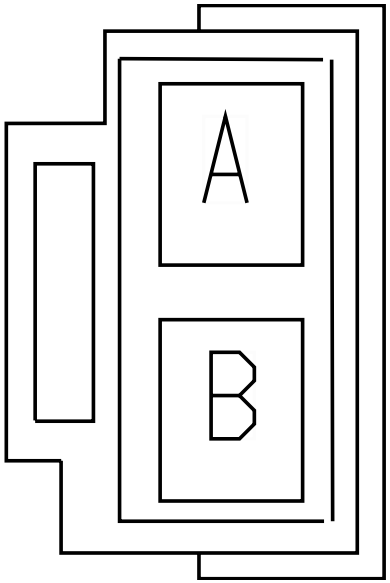

Name	Terminal Part Number	V-Min	Name	Wire Part Number	Wire CSA	Wire Spec	Wire Material description	Wire Color Description	Wire Length	End2 Terminal Part Number	End2 Pin Name	End2 Connect or
A	-	-	DK14TRI	2643760 R1	1.16	16.0	Std. Wall XLPE Primary Cable	RED	3485.0	-	8	1017
B	-	-	DK77SBY	2643678 R1	1.16	16.0	Std. Wall XLPE Primary Cable	LIGHT GREEN	3390.0	-	2	A02-111 6M

Connector Name	5755
Part Number	3616095C1
Instances	LT/RH/LoneStar - X15/A26 - No Idle HVAC - TRI-PAC Prewire:Diagram1
Mates	TRI-PAC POWER

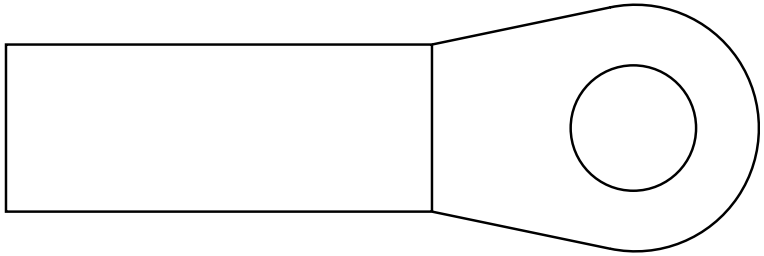

Name	Terminal Part Number	V-Min	Name	Wire Part Number	Wire CSA	Wire Spec	Wire Material description	Wire Color Description	Wire Length	End2 Terminal Part Number	End2 Pin Name	End2 Connect or
A	-	-	JY14TRI	2643760 R1	1.16	16.0	Std. Wall XLPE Primary Cable	RED	4770.0	-	A	5754

Connector Name	5757
Part Number	872291R1
Instances	LT/RH/LoneStar - X15/A26 - No Idle HVAC - TRI-PAC Prewire:Diagram1
Mates	RECTIFIER-TRI_PAC-2055-03- 01A

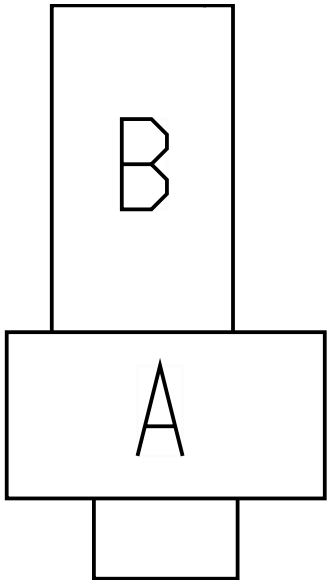

Name	Terminal Part Number	V-Min	Name	Wire Part Number	Wire CSA	Wire Spec	Wire Material description	Wire Color Description	Wire Length	End2 Terminal Part Number	End2 Pin Name	End2 Connect or
A	-	-	DK13TRIB	2643752 R1	1.16	16.0	Std. Wall XLPE Primary Cable	PINK	1085.0	-	-	-
B	-	-	DK13TRIA	2643752 R1	1.16	16.0	Std. Wall XLPE Primary Cable	PINK	275.0	-	4	A02-111 6M

Connector Name	5758F
Part Number	587567C91
Instances	LT/RH/LoneStar - X15/A26 - Telematics (QUALCOMM MCT w/ TRACS):Diagram1
Mates	5758M

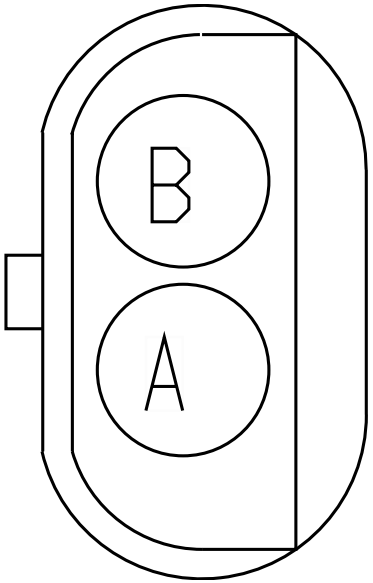

Name	Terminal Part Number	V-Min	Name	Wire Part Number	Wire CSA	Wire Spec	Wire Material description	Wire Color Description	Wire Length	End2 Terminal Part Number	End2 Pin Name	End2 Connect or
A	-	-	HF94TT	3510311 R1	0.79	18.0	Thin Wall XLPE Primary Cable	GREY	3420.0	-	-	-

Connector Name	5758F
Part Number	587567C91
Short Description	TRAILER TRACS
Instances	LT/RH/LoneStar - X15/A26 - Mobile Communications Sensor Wiring Effects for Trailer TRAC:Diagram2
Mates	5758M

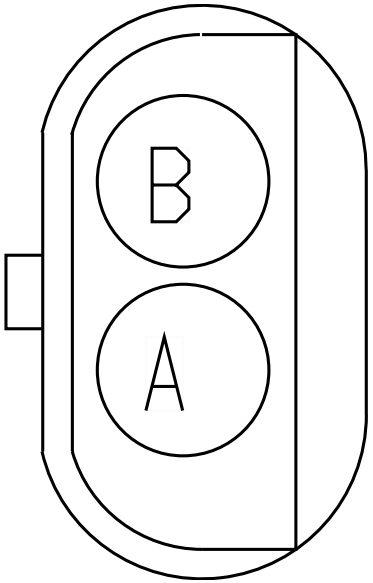

Name	Terminal Part Number	V-Min	Name	Wire Part Number	Wire CSA	Wire Spec	Wire Material description	Wire Color Description	Wire Length	End2 Terminal Part Number	End2 Pin Name	End2 Connect or
A	-	-	HF94TT	3510311 R1	0.79	18.0	Thin Wall XLPE Primary Cable	GREY	3420.0	-	7	1017

Connector Name	5758M
Part Number	587568C91
Instances	LT/RH/LoneStar - X15/A26 - Telematics (QUALCOMM MCT w/ TRACS):Diagram1
Mates	5758F

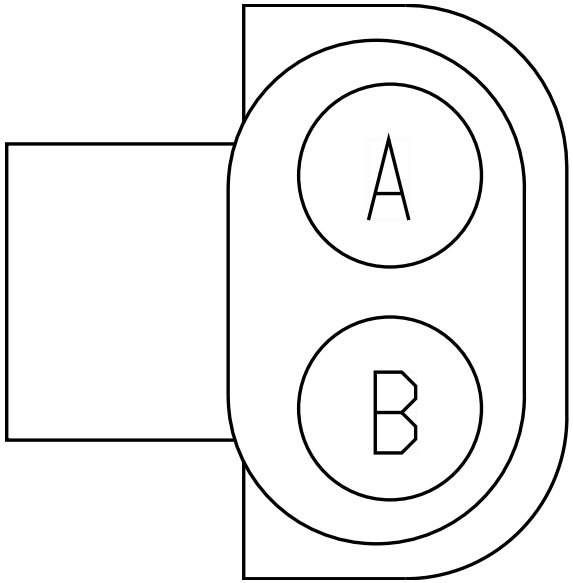

Name	Terminal Part Number	V-Min	Name	Wire Part Number	Wire CSA	Wire Spec	Wire Material description	Wire Color Description	Wire Length	End2 Terminal Part Number	End2 Pin Name	End2 Connect or
A	-	-	GP94TT	2643763 R1	0.53	20.0	Std. Wall XLPE Primary Cable	GREY	2740.0	-	37	H01-5906

Connector Name	5758M
Part Number	587568C91
Short Description	TRAILER TRACS.
Instances	LT/RH/LoneStar - X15/A26 - Mobile Communications Sensor Wiring Effects for Trailer TRAC:Diagram2
Mates	5758F

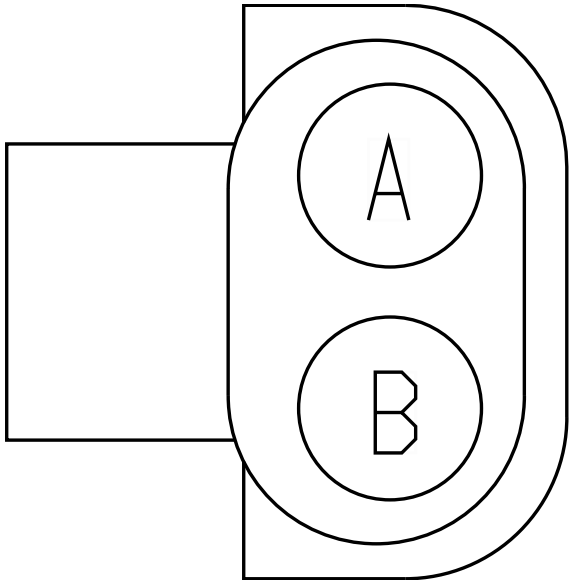

Name	Terminal Part Number	V-Min	Name	Wire Part Number	Wire CSA	Wire Spec	Wire Material description	Wire Color Description	Wire Length	End2 Terminal Part Number	End2 Pin Name	End2 Connect or
A	-	-	GT94TT	2643782 R1	1.91	14.0	Std. Wall XLPE Primary Cable	GREY	3335.0	-	A	H01-5759F

Connector Name	5900
Part Number	2011340C1
Instances	LT/RH/LoneStar - X15/A26 - Telematics QUALCOMM IMCT DAYCAB With MVPC:Diagram1 LT/RH/LoneStar - X15/A26 - Telematics QUALCOMM IMCT DAYCAB With MVPC & PANIC BUTTON:Diagram1 LT/RH/LoneStar - X15/A26 - Telematics QUALCOMM IMCT DAYCAB With PANIC BUTTON:Diagram2 LT/RH/LoneStar - X15/A26 - Telematics QUALCOMM IMCT MD:Diagram1 LT/RH/LoneStar - X15/A26 - Telematics QUALCOMM IMCT MD:Diagram2 Telematics J1708:Telematics J1708
Mates	MODU-QUAL_IMCT-2035-02-09A

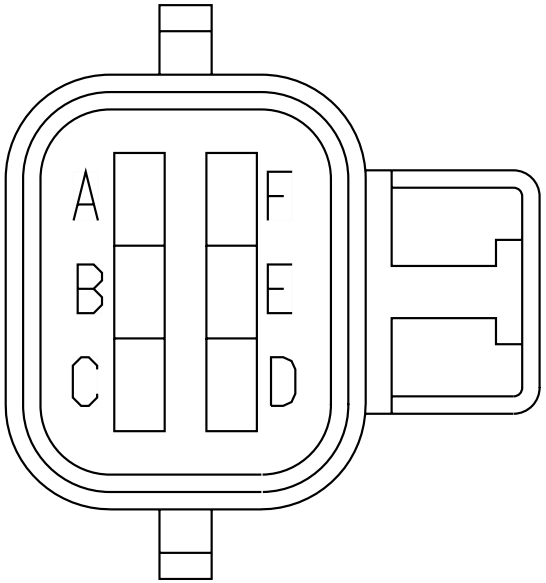

Name	Terminal Part Number	V-Min	Name	Wire Part Number	Wire CSA	Wire Spec	Wire Material description	Wire Color Description	Wire Length	End2 Terminal Part Number	End2 Pin Name	End2 Connect or
A	-	-	-	-	-	-	-	-	-	-	-	-
A	-	-	WIRE490317	-	0.0	-	-	-	0.0	-	D	5010
B	-	-	-	-	-	-	-	-	-	-	-	-
B	-	-	WIRE490323	-	0.0	-	-	-	0.0	-	C	5010
C	-	-	HL14ED	2643759 R1	0.79	18.0	Std. Wall XLPE Primary Cable	RED	3177.0	-	A	5010
C	-	-	CK14ED	3510365 R1	0.79	18.0	Thin Wall XLPE Primary Cable	RED	3395.0	-	-	-
D	-	-	JA11-GMB	2643674 R1	0.79	18.0	Std. Wall XLPE Primary Cable	WHITE	770.0	-	X	-

Name	Terminal Part Number	V-Min	Name	Wire Part Number	Wire CSA	Wire Spec	Wire Material description	Wire Color Description	Wire Length	End2 Terminal Part Number	End2 Pin Name	End2 Connector
D	-	-	CK11-GBE	3510359 R1	0.79	18.0	Thin Wall XLPE Primary Cable	WHITE	2990.0	-	-	-
D	-	-	JB11-GMB	2643674 R1	0.79	18.0	Std. Wall XLPE Primary Cable	WHITE	1455.0	-	-	-
E	-	-	JA13EH	2643794 R1	0.79	18.0	Std. Wall XLPE Primary Cable	PINK	2547.0	-	X	-
E	-	-	JB13EE	2643794 R1	0.79	18.0	Std. Wall XLPE Primary Cable	PINK	3177.0	-	B	5010
E	-	-	CK13EE	3510323 R1	0.79	18.0	Thin Wall XLPE Primary Cable	PINK	3580.0	-	-	-
F	-	-	HL98F	2643670 R1	0.79	18.0	Std. Wall XLPE Primary Cable	BLACK	3177.0	-	E	5010
F	-	-	MJ11-GMW	2643764 R1	0.53	20.0	Std. Wall XLPE Primary Cable	WHITE	2420.0	-	B5	A02-1500A

Connector Name	5902
Part Number	1661201C1
Instances	LT/RH/LoneStar - X15/A26 - Telematics QUALCOMM TMCT:Diagram1 LT/RH/LoneStar - X15/A26 - Telematics QUALCOMM TMCT With PANIC BUTTON:Diagram1 Telematics J1708:Telematics J1708
Mates	MODU-QUAL_TMCT-2035-01-04A

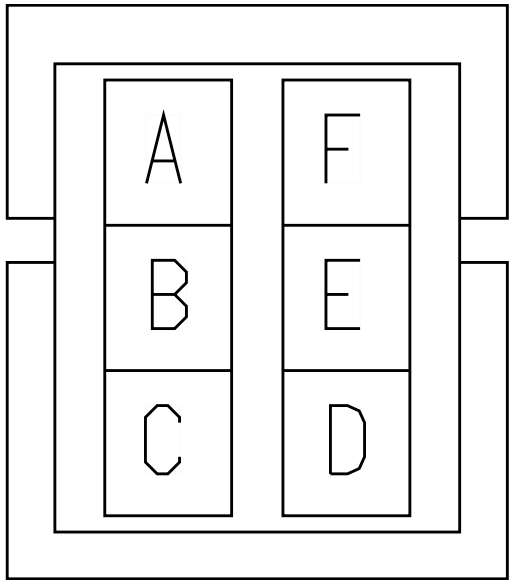

Name	Terminal Part Number	V-Min	Name	Wire Part Number	Wire CSA	Wire Spec	Wire Material description	Wire Color Description	Wire Length	End2 Terminal Part Number	End2 Pin Name	End2 Connect or
A	-	-	HZ13EE	2643794 R1	0.79	18.0	Std. Wall XLPE Primary Cable	PINK	3382.0	-	B	5010
B	-	-	HZ14ED	2643759 R1	0.79	18.0	Std. Wall XLPE Primary Cable	RED	3382.0	-	A	5010
C	-	-	HZ98F	2643670 R1	0.79	18.0	Std. Wall XLPE Primary Cable	BLACK	3382.0	-	E	5010
D	-	-	HZ11-GMB	2643674 R1	0.79	18.0	Std. Wall XLPE Primary Cable	WHITE	2450.0	-	-	-
E	-	-	WIRE490318	-	0.0	-	-	-	0.0	-	D	5010

Name	Terminal Part Number	V-Min	Name	Wire Part Number	Wire CSA	Wire Spec	Wire Material description	Wire Color Description	Wire Length	End2 Terminal Part Number	End2 Pin Name	End2 Connect or
E	-	-	-	-	-	-	-	-	-	-	-	-
F	-	-	WIRE490324	-	0.0	-	-	-	0.0	-	C	5010
F	-	-	-	-	-	-	-	-	-	-	-	-

Connector Name	5903
Part Number	1669973C1
Instances	LT/RH/LoneStar - X15/A26 - Telematics QUALCOMM IMCT DAYCAB With MVPC:Diagram1 LT/RH/LoneStar - X15/A26 - Telematics QUALCOMM IMCT DAYCAB With MVPC & PANIC BUTTON:Diagram1
Mates	MODU-MVPC-2035-02-10A

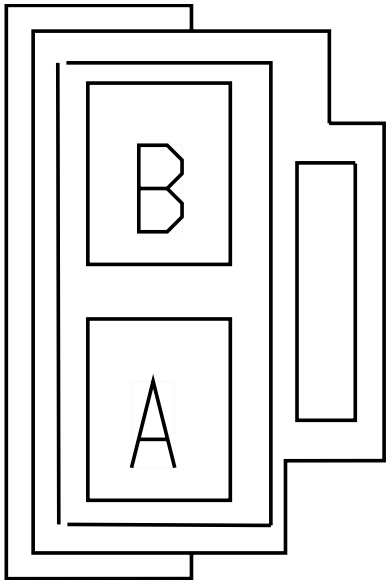

Name	Terminal Part Number	V-Min	Name	Wire Part Number	Wire CSA	Wire Spec	Wire Material description	Wire Color Description	Wire Length	End2 Terminal Part Number	End2 Pin Name	End2 Connect or
A	-	-	JA13EF	2643670 R1	0.79	18.0	Std. Wall XLPE Primary Cable	BLACK	700.0	-	X	-
B	-	-	JA11-GMC	2643674 R1	0.79	18.0	Std. Wall XLPE Primary Cable	WHITE	3617.0	-	X	-

Connector Name	5906
Part Number	2028493C1
Instances	Telematics J1708:Telematics J1708
Mates	MODU-QUALCOMM_MCT-2035-08- 02B

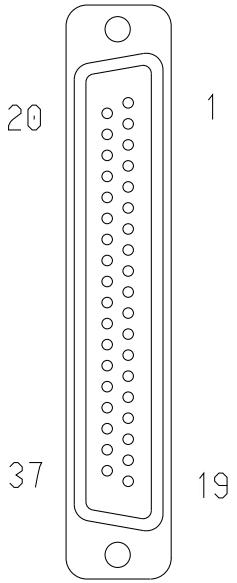

Name	Terminal Part Number	V-Min	Name	Wire Part Number	Wire CSA	Wire Spec	Wire Material description	Wire Color Description	Wire Length	End2 Terminal Part Number	End2 Pin Name	End2 Connect or
5	-	-	WIRE490325	-	0.0	-	-	-	0.0	-	C	5010
6	-	-	WIRE490319	-	0.0	-	-	-	0.0	-	D	5010

Connector Name	5909
Part Number	2005835C1
Instances	Telematics J1708:Telematics J1708
Mates	MODU-DRIVERTECH-2035-12-05

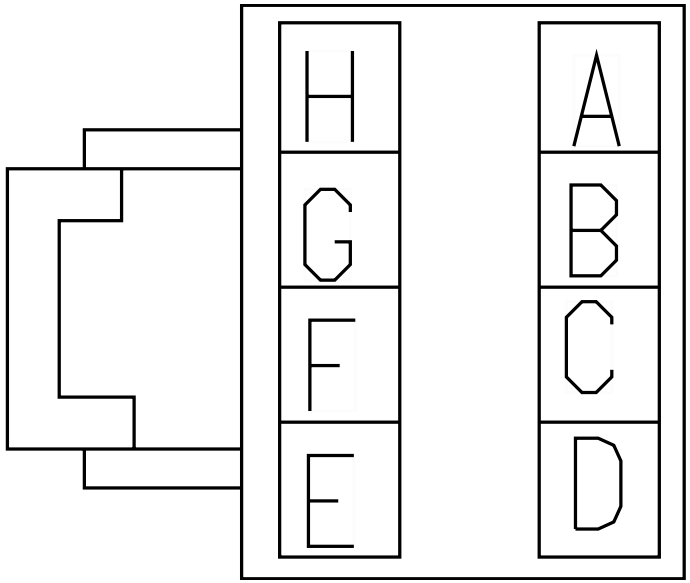

Name	Terminal Part Number	V-Min	Name	Wire Part Number	Wire CSA	Wire Spec	Wire Material description	Wire Color Description	Wire Length	End2 Terminal Part Number	End2 Pin Name	End2 Connect or
F	-	-	WIRE490320	-	0.0	-	-	-	0.0	-	D	5010
G	-	-	WIRE490326	-	0.0	-	-	-	0.0	-	C	5010

Connector Name	5927
Part Number	2005836C1
Instances	Telematics J1708:Telematics J1708
Mates	MODU-TRIPMASTER-2035-10-05A

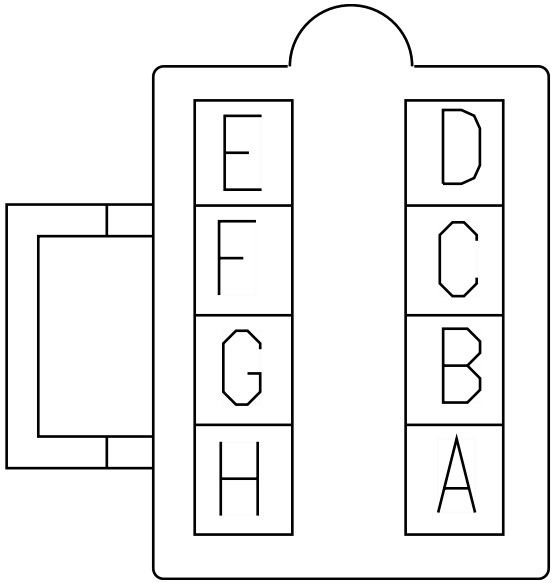

Name	Terminal Part Number	V-Min	Name	Wire Part Number	Wire CSA	Wire Spec	Wire Material description	Wire Color Description	Wire Length	End2 Terminal Part Number	End2 Pin Name	End2 Connect or
A	-	-	WIRE490321	-	0.0	-	-	-	0.0	-	D	5010
B	-	-	WIRE490327	-	0.0	-	-	-	0.0	-	C	5010

Connector Name 5930M
Part Number 3683465C1
Instances Cab J1939 (250Kbps):Cab J1939 (250Kbps)

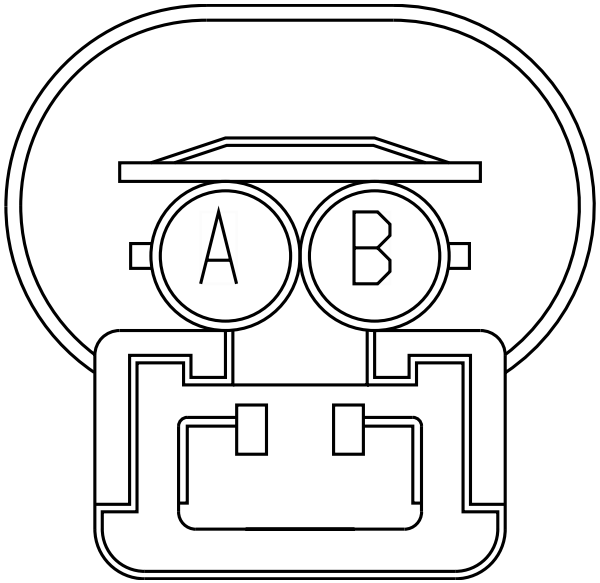

Name	Terminal Part Number	V-Min	Name	Wire Part Number	Wire CSA	Wire Spec	Wire Material description	Wire Color Description	Wire Length	End2 Terminal Part Number	End2 Pin Name	End2 Connect or
A	-	-	WIRE223964	-	0.0	-	-	-	0.0	-	M	5600
B	-	-	WIRE223965	-	0.0	-	-	-	0.0	-	A	5600

Connector Name	6TB1
Part Number	3722128C1
Instances	LT/RH/LoneStar - X15/A26 - Telematics (TRIPMASTER DAYCAB):Diagram1 Telematics J1708:Telematics J1708
Mates	MODU-TRIPMASTER-2035-10-04A

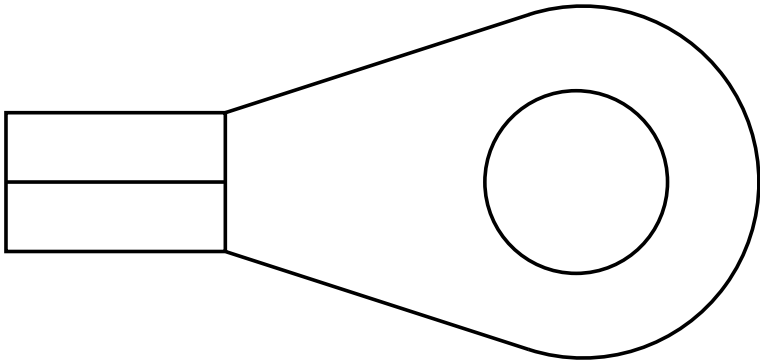

Name	Terminal Part Number	V-Min	Name	Wire Part Number	Wire CSA	Wire Spec	Wire Material description	Wire Color Description	Wire Length	End2 Terminal Part Number	End2 Pin Name	End2 Connect or
1	-	-	-	-	-	-	-	-	-	-	-	-
1	-	-	WIRE490302	-	0.0	-	-	-	0.0	-	E2	J5-1602

Connector Name	6000
Part Number	3945694C1
Instances	LoneStar - X15 - Adaptive Cruise Control w/o Display (Bendix):Diagram1 LoneStar - X15 - Adaptive Cruise Control w/o Display (Wabco):Diagram1 LoneStar - X15 - Crank Inhibit with Hood Switch - with new BCM Pin:Diagram1 LoneStar - X15 - Crank Inhibit with Hood Switch - with new BCM Pin:Diagram2 LT/RH - A26 - DEF Economy Monitor (Cluster):Diagram1 LT/RH - A26 - Transmission Power Take Off Dual PTO with Clutch Interlock:Diagram1 LT/RH - A26 - Transmission Power Take Off Dual Solenoid AUTO:Diagram1 LT/RH - A26 - Transmission Power Take Off Option 1:Diagram1 LT/RH - A26 - Transmission Power Take Off W/ Clutch Interlock:Diagram1 LT/RH - X15/A26 - 10 PIN ClockSpring:Diagram1 LT/RH - X15/A26 - Adaptive Cruise Control w/o Display (Bendix):Diagram1 LT/RH - X15/A26 - Adaptive Cruise Control w/o Display (Wabco):Diagram1 LT/RH - X15/A26 - Engine Oil Level Monitoring (CA2.0):Diagram1 LT/RH - X15/A26 - Intake Manifold Pressure AUX gauge:Diagram1 LT/RH - X15/A26 - Lane Departure Warning - (Wabco OnLane 2.0 w/ roof speakers):Diagram1 LT/RH - X15/A26 - Park Brake Control (Monitoring) (W/Vehicle Speed):Diagram1 LT/RH - X15/A26 - Windshield Wipers Cruise Disable & Park Brake W/Wipers ON:Diagram1 LT/RH - X15/A26 - Windshield Wipers Cruise Disable W/Wipers ON:Diagram1 LT/RH - X15/A26 - with Hood Switch - with new BCM Pin:Diagram1 LT/RH A26 - Transmission I/O (Endurant Pressure Sensor):Diagram1 LT/RH A26 - X15/A26 - Up Shift Indicator (CA 2.0):Diagram1 LT/RH/LoneStar - X15 - DEF Economy Monitor (GEN IV Cluster w/ Cummins ENG):Diagram1

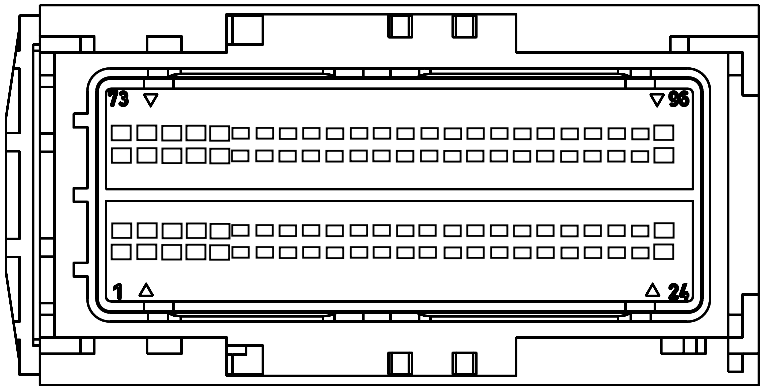

LT/RH/LoneStar - X15 - Transmission Power Take Off Dual PTO with Clutch Interlock MANUAL:Diagram1
LT/RH/LoneStar - X15 - Transmission Power Take Off Dual Solenoid AUTO:Diagram1
LT/RH/LoneStar - X15 - Transmission Power Take Off W/ Clutch Interlock:Diagram1
LT/RH/LoneStar - X15 - Transmission SINGLE Power Take Off MANUAL:Diagram1
LT/RH/LoneStar - X15/A26 - 2 Driver Controlled Locking Differential - FR & RR Axle (DANA):Diagram1
LT/RH/LoneStar - X15/A26 - 2 Driver Controlled Locking Differential - FR & RR Axle (MERITOR):Diagram1
LT/RH/LoneStar - X15/A26 - Adjustable Engine Speed Control (PTO) 4-pin Clockspring:Diagram1
LT/RH/LoneStar - X15/A26 - Adjustable Engine Speed Control (PTO) 10-PIN ClockSpring:Diagram1
LT/RH/LoneStar - X15/A26 - Analytic Cruise Control:Diagram1
LT/RH/LoneStar - X15/A26 - Brake Switch:Diagram1
LT/RH/LoneStar - X15/A26 - Coolant Temperature Monitoring (J1939 Comm):Diagram1
LT/RH/LoneStar - X15/A26 - DPF Regen Switch Only:Diagram1
LT/RH/LoneStar - X15/A26 - DPF With Monostable Inhibit Switch:Diagram1
LT/RH/LoneStar - X15/A26 - DPF With/ Bi-Stable Inhibit Switch:Diagram1
LT/RH/LoneStar - X15/A26 - Driver Controlled Locking Differential - FR & RR Axle (DANA):Diagram1
LT/RH/LoneStar - X15/A26 - Driver Controlled Locking Differential - FR & RR Axle (MERITOR):Diagram1
LT/RH/LoneStar - X15/A26 - Driver Controlled Locking Differential - FR (MERITOR):Diagram1
LT/RH/LoneStar - X15/A26 - Driver Controlled Locking Differential - RR Axle (DANA):Diagram1
LT/RH/LoneStar - X15/A26 - Driver Controlled Locking Differential - RR Axle (DANA):Diagram2
LT/RH/LoneStar - X15/A26 - Driver Controlled Locking Differential - RR Axle (MERITOR):Diagram1
LT/RH/LoneStar - X15/A26 - Driver Controlled Locking Differential - RR Axle (MERITOR):Diagram2
LT/RH/LoneStar - X15/A26 - Engine Brake (CA2.0; Mux Switch):Diagram1
LT/RH/LoneStar - X15/A26 - Engine Brake (CA2.0; Stalk Shifter):Diagram1

LT/RH/LoneStar - X15/A26 - Engine Idle Increment/Decrement (Steering Wheel Switch - 4 Pin):Diagram1
LT/RH/LoneStar - X15/A26 - Engine Idle Increment/Decrement (Steering Wheel Switch - 10 Pin):Diagram1
LT/RH/LoneStar - X15/A26 - Engine Oil Pressure:Diagram1
LT/RH/LoneStar - X15/A26 - Engine Oil Temperature (NA MUX_AUX Gauge):Diagram1
LT/RH/LoneStar - X15/A26 - Engine Oil Temperature (NA-Mux):Diagram1
LT/RH/LoneStar - X15/A26 - Engine Speed (Tachometer_J1939):Diagram1
LT/RH/LoneStar - X15/A26 - Engine Speed Inhibit Only:Diagram1
LT/RH/LoneStar - X15/A26 - Engine Usage Monitoring (Base):Diagram1
LT/RH/LoneStar - X15/A26 - Engine Usage Monitoring (VID Option):Diagram1
LT/RH/LoneStar - X15/A26 - Engine/Exhaust Brake:Diagram1
LT/RH/LoneStar - X15/A26 - Fifth Wheel Slide:Diagram1
LT/RH/LoneStar - X15/A26 - Fuel Economy Monitor:Diagram1
LT/RH/LoneStar - X15/A26 - Fuel Level (Single Tank - Left Side):Diagram1
LT/RH/LoneStar - X15/A26 - Fuel Level (Single Tank - Left Side):Diagram2
LT/RH/LoneStar - X15/A26 - Fuel Level (Single Tank - Left Side):Diagram3
LT/RH/LoneStar - X15/A26 - Fuel Level (Single Tank - Left Side):Diagram4
LT/RH/LoneStar - X15/A26 - Fuel Level (Single Tank - Left Side):Diagram5
LT/RH/LoneStar - X15/A26 - Fuel Level (Single Tank - Left Side):Diagram6
LT/RH/LoneStar - X15/A26 - Height Control:Diagram1
LT/RH/LoneStar - X15/A26 - High Exhaust System Temperature (HEST) Monitoring:Diagram1
LT/RH/LoneStar - X15/A26 - Intake Manifold Pressure:Diagram1
LT/RH/LoneStar - X15/A26 - Jaw Monitoring:Diagram1
LT/RH/LoneStar - X15/A26 - Jaw Unlock Control (Standard):Diagram1
LT/RH/LoneStar - X15/A26 - Jaw Unlock Control W/ SOLENOIDS W/SWITCH PACKS:Diagram1
LT/RH/LoneStar - X15/A26 - Odometer (Cluster):Diagram1
LT/RH/LoneStar - X15/A26 - Park Brake Controls (with Alarm IGN ON/OFF):Diagram1

LT/RH/LoneStar - X15/A26 - Park Brake Reminder (Non-Stationary) (CA2.0):Diagram1
LT/RH/LoneStar - X15/A26 - Power Divider Lock Control and Monitoring:Diagram1
LT/RH/LoneStar - X15/A26 - Rear Lights Stop - Dual Assembly:Diagram1
LT/RH/LoneStar - X15/A26 - Rear Lights Stop - Dual Assembly:Diagram2
LT/RH/LoneStar - X15/A26 - Rear Lights Stop - Single Assembly Option 1:Diagram1
LT/RH/LoneStar - X15/A26 - Rear Lights Stop - Single Assembly Option 1:Diagram2
LT/RH/LoneStar - X15/A26 - Rear Lights Stop - Single Assembly Option 2:Diagram1
LT/RH/LoneStar - X15/A26 - Rear Lights Stop - Single Assembly Option 2:Diagram2
LT/RH/LoneStar - X15/A26 - Seats (RollTek) Driver and Passenger (Hard Wired):Diagram1
LT/RH/LoneStar - X15/A26 - Seats (RolTek) Drivers Seat Only (Hard Wired) - Leather:Diagram1
LT/RH/LoneStar - X15/A26 - Seats (RolTek) Drivers Seat Only (Hard Wired) - Mordura:Diagram1
LT/RH/LoneStar - X15/A26 - Seats (RolTek) Drivers Seat Only (Hard Wired) - Vinyl:Diagram1
LT/RH/LoneStar - X15/A26 - Theft Deterrent (Standard J1939 Mux SW):Diagram1
LT/RH/LoneStar - X15/A26 - Traction Control (Bendix Controller):Diagram1
LT/RH/LoneStar - X15/A26 - Traction Control (Bendix Controller):Diagram2
LT/RH/LoneStar - X15/A26 - Traction Control (Bendix Controller) Option 2:Diagram1
LT/RH/LoneStar - X15/A26 - Traction Control (Bendix Controller) Option 2:Diagram2
LT/RH/LoneStar - X15/A26 - Traction Control (Wabco Controller):Diagram1
LT/RH/LoneStar - X15/A26 - Traction Control (Wabco Controller):Diagram2
LT/RH/LoneStar - X15/A26 - Traction Control (Wabco Controller):Diagram3
LT/RH/LoneStar - X15/A26 - Trip Odometer (Cluster):Diagram1
LT/RH/LoneStar - X15/A26 - Vehicle Speed Control (Cruise Control) 4 - PIN:Diagram1

LT/RH/LoneStar - X15/A26 - Vehicle Speed Limit Override:Diagram1
LT/RH/LoneStar - X15/A26 - Vehicle Speedometer System (W/ AMT/AUTO TRANS):Diagram1
LT/RH/LoneStar - X15/A26 - Voltage Monitoring (Voltmeter) Option 1:Diagram1
LT/RH/LoneStar X15 - Auto Start Stop Oil Temp Sensor Auto Trans:Diagram1
LT/RH/LoneStar X15 - Auto Start Stop Oil Temp Sensor Manual Trans:Diagram1
LT/RH/LoneStar X15 - Auto Start Stop with Sleeper Auto Climate / Cab Temp with Oil Temp Sensor Auto Trans:Diagram1
LT/RH/LoneStar X15 - Auto Start Stop with Sleeper Auto Climate / Cab Temp with Oil Temp Sensor Manual Trans:Diagram1
LT/RH/LoneStar X15 - ECM:Diagram1
LT/RH/LoneStar X15 - Transmission I/O (Endurant Pressure Sensor):Diagram1
Powertrain J1939 (500Kbps) Eaton Ultrashift+ Transmission X15:Powertrain J1939 (500kbps) Eaton Ultrashift+ X15
Powertrain J1939 (500Kbps) Edurant Transmission X15:Powertrain J1939 (500kbps) Endurant Transmission X15
Powertrain J1939 (500Kbps) Manual Transmission X15:Powertrain Standard J1939 (500kbps) Manual Transmission X15
Powertrain J1939 (500Kbps) TC10 Transmission X15:Powertrain J1939 (500kbps) TC10 Transmission X15

Mates MODU-ECM-A001-10-01A X15

Name	Terminal Part Number	V-Min	Name	Wire Part Number	Wire CSA	Wire Spec	Wire Material description	Wire Color Description	Wire Length	End2 Terminal Part Number	End2 Pin Name	End2 Connector
1	-	-	KA14A6	3510366 R1	1.16	16.0	Thin Wall XLPE Primary Cable	RED	80.0	-	X	-
3	-	-	KA95GBE	3510330 R1	1.16	16.0	Thin Wall XLPE Primary Cable	TAN	1480.0	-	-	-

Name	Terminal Part Number	V-Min	Name	Wire Part Number	Wire CSA	Wire Spec	Wire Material description	Wire Color Description	Wire Length	End2 Terminal Part Number	End2 Pin Name	End2 Connector
5	-	-	KA13B	3510323 R1	0.79	18.0	Thin Wall XLPE Primary Cable	PINK	1160.0	-	37	1702
6	-	-	TJ95F	3510328 R1	0.53	20.0	Thin Wall XLPE Primary Cable	TAN	1870.0	-	-	-
6	-	-	TK95F	3510328 R1	0.53	20.0	Thin Wall XLPE Primary Cable	TAN	1150.0	-	-	-
8	-	-	GM6A	3510346 R1	0.53	20.0	Thin Wall XLPE Primary Cable	VIOLET	770.0	-	-	-
8	-	-	GN6A	3510346 R1	0.53	20.0	Thin Wall XLPE Primary Cable	VIOLET	770.0	-	-	-
9	-	-	TK97C	3510346 R1	0.53	20.0	Thin Wall XLPE Primary Cable	VIOLET	1160.0	-	-	-
10	-	-	TK99B	3510346 R1	0.53	20.0	Thin Wall XLPE Primary Cable	VIOLET	1160.0	-	-	-
13	-	-	GA95WA	3510328 R1	0.53	20.0	Thin Wall XLPE Primary Cable	TAN	500.0	-	-	-

Name	Terminal Part Number	V-Min	Name	Wire Part Number	Wire CSA	Wire Spec	Wire Material description	Wire Color Description	Wire Length	End2 Terminal Part Number	End2 Pin Name	End2 Connector
13	-	-	KJ95WA	3510328 R1	0.53	20.0	Thin Wall XLPE Primary Cable	TAN	500.0	-	-	-
13	-	-	KY95WA	3510328 R1	0.53	20.0	Thin Wall XLPE Primary Cable	TAN	500.0	-	-	-
16	-	-	TP95K	4073403 R1	0.53	20.0	TXL 150C	TAN	2305.0	-	-	-
16	-	-	TY95K	4073403 R1	0.53	20.0	TXL 150C	TAN	4030.0	-	-	-
21	-	-	WIRE233 869	-	0.0	-	-	-	0.0	-	PIN1	-
22	-	-	-	-	-	-	-	-	-	-	-	-
22	-	-	WIRE489 502	-	0.0	-	-	-	0.0	-	PIN1	-
22	-	-	WIRE233 853	-	0.0	-	-	-	0.0	-	PIN1	-
22	-	-	WIRE233 835	-	0.0	-	-	-	0.0	-	PIN1	-
22	-	-	WIRE233 883	-	0.0	-	-	-	0.0	-	PIN1	-
25	-	-	KA14A5	3510366 R1	1.16	16.0	Thin Wall XLPE Primary Cable	RED	80.0	-	X	-
26	-	-	KA14A4	3510366 R1	1.16	16.0	Thin Wall XLPE Primary Cable	RED	80.0	-	X	-

Name	Terminal Part Number	V-Min	Name	Wire Part Number	Wire CSA	Wire Spec	Wire Material description	Wire Color Description	Wire Length	End2 Terminal Part Number	End2 Pin Name	End2 Connector
27	-	-	KA14A2	3510366 R1	1.16	16.0	Thin Wall XLPE Primary Cable	RED	140.0	-	X	-
28	-	-	KA14A1	3510366 R1	1.16	16.0	Thin Wall XLPE Primary Cable	RED	140.0	-	X	-
32	-	-	GM9A	3510328 R1	0.53	20.0	Thin Wall XLPE Primary Cable	TAN	720.0	-	-	-
32	-	-	GN9A	3510328 R1	0.53	20.0	Thin Wall XLPE Primary Cable	TAN	720.0	-	-	-
33	-	-	TK97B	3510346 R1	0.53	20.0	Thin Wall XLPE Primary Cable	VIOLET	1160.0	-	-	-
35	-	-	GK34	3510328 R1	0.53	20.0	Thin Wall XLPE Primary Cable	TAN	2810.0	-	-	-
35	-	-	KD34E	3510328 R1	0.53	20.0	Thin Wall XLPE Primary Cable	TAN	2335.0	-	-	-
38	-	-	TJ95AT2	3510328 R1	0.53	20.0	Thin Wall XLPE Primary Cable	TAN	820.0	-	-	-

Name	Terminal Part Number	V-Min	Name	Wire Part Number	Wire CSA	Wire Spec	Wire Material description	Wire Color Description	Wire Length	End2 Terminal Part Number	End2 Pin Name	End2 Connector
38	-	-	TK95AT2	3510328 R1	0.53	20.0	Thin Wall XLPE Primary Cable	TAN	820.0	-	-	-
39	-	-	TJ95AS2	3510328 R1	0.53	20.0	Thin Wall XLPE Primary Cable	TAN	910.0	-	-	-
39	-	-	TK95AS2	3510328 R1	0.53	20.0	Thin Wall XLPE Primary Cable	TAN	910.0	-	-	-
40	-	-	TJ95AU2	3510328 R1	0.53	20.0	Thin Wall XLPE Primary Cable	TAN	790.0	-	-	-
40	-	-	TK95AU2	3510328 R1	0.53	20.0	Thin Wall XLPE Primary Cable	TAN	790.0	-	-	-
41	-	-	TP95BA	4073403 R1	0.53	20.0	TXL 150C	TAN	2305.0	-	-	-
41	-	-	TY95BA	4073403 R1	0.53	20.0	TXL 150C	TAN	4030.0	-	-	-
42	-	-	TP95BC	4073403 R1	0.53	20.0	TXL 150C	TAN	2305.0	-	-	-
42	-	-	TY95BC	4073403 R1	0.53	20.0	TXL 150C	TAN	4030.0	-	-	-
45	-	-	WIRE233871	-	0.0	-	-	-	0.0	-	PIN1	-
46	-	-	-	-	-	-	-	-	-	-	-	-
46	-	-	WIRE489503	-	0.0	-	-	-	0.0	-	PIN1	-

Name	Terminal Part Number	V-Min	Name	Wire Part Number	Wire CSA	Wire Spec	Wire Material description	Wire Color Description	Wire Length	End2 Terminal Part Number	End2 Pin Name	End2 Connector
46	-	-	WIRE233855	-	0.0	-	-	-	0.0	-	PIN1	-
46	-	-	WIRE233836	-	0.0	-	-	-	0.0	-	PIN1	-
46	-	-	WIRE233881	-	0.0	-	-	-	0.0	-	PIN1	-
49	-	-	KA10-GH	3510360 R1	1.16	16.0	Thin Wall XLPE Primary Cable	WHITE	110.0	-	X	-
50	-	-	KA10-GG	3510360 R1	1.16	16.0	Thin Wall XLPE Primary Cable	WHITE	110.0	-	X	-
51	-	-	KA10-GF	3510360 R1	1.16	16.0	Thin Wall XLPE Primary Cable	WHITE	110.0	-	X	-
52	-	-	KA10-GE	3510360 R1	1.16	16.0	Thin Wall XLPE Primary Cable	WHITE	170.0	-	X	-
53	-	-	TY95DVL	4073403 R1	0.53	20.0	TXL 150C	TAN	4030.0	-	-	-
53	-	-	TP95DVL	4073403 R1	0.53	20.0	TXL 150C	TAN	2305.0	-	-	-
54	-	-	TK95E	3510328 R1	0.53	20.0	Thin Wall XLPE Primary Cable	TAN	1150.0	-	-	-
54	-	-	TJ95E	3510328 R1	0.53	20.0	Thin Wall XLPE Primary Cable	TAN	1870.0	-	-	-

Name	Terminal Part Number	V-Min	Name	Wire Part Number	Wire CSA	Wire Spec	Wire Material description	Wire Color Description	Wire Length	End2 Terminal Part Number	End2 Pin Name	End2 Connector
57	-	-	TJ95AA	3510328 R1	0.53	20.0	Thin Wall XLPE Primary Cable	TAN	430.0	-	-	-
57	-	-	TK95AA	3510328 R1	0.53	20.0	Thin Wall XLPE Primary Cable	TAN	430.0	-	-	-
59	-	-	KF47AA	3510310 R1	0.53	20.0	Thin Wall XLPE Primary Cable	GREY	1190.0	-	-	-
60	-	-	KF47	3510310 R1	0.53	20.0	Thin Wall XLPE Primary Cable	GREY	1225.0	-	-	-
61	-	-	KA97N	3510346 R1	0.53	20.0	Thin Wall XLPE Primary Cable	VIOLET	1160.0	-	-	-
62	-	-	KA95G	3510358 R1	0.53	20.0	Thin Wall XLPE Primary Cable	WHITE	645.0	-	-	-
64	-	-	KA97M	3510346 R1	0.53	20.0	Thin Wall XLPE Primary Cable	VIOLET	1160.0	-	-	-
73	-	-	KA10-GB	3510360 R1	1.16	16.0	Thin Wall XLPE Primary Cable	WHITE	170.0	-	X	-

Name	Terminal Part Number	V-Min	Name	Wire Part Number	Wire CSA	Wire Spec	Wire Material description	Wire Color Description	Wire Length	End2 Terminal Part Number	End2 Pin Name	End2 Connector
75	-	-	KU21	3510330 R1	1.16	16.0	Thin Wall XLPE Primary Cable	TAN	1300.0	-	-	-
76	-	-	KU21A	3510330 R1	1.16	16.0	Thin Wall XLPE Primary Cable	TAN	1300.0	-	-	-
77	-	-	TY95DVH	4073403 R1	0.53	20.0	TXL 150C	TAN	4030.0	-	-	-
77	-	-	TP95DVH	4073403 R1	0.53	20.0	TXL 150C	TAN	2305.0	-	-	-
78	-	-	TK23	3510328 R1	0.53	20.0	Thin Wall XLPE Primary Cable	TAN	1180.0	-	-	-
79	-	-	KA95SB	3510328 R1	0.53	20.0	Thin Wall XLPE Primary Cable	TAN	1880.0	-	-	-
82	-	-	TK95AC	3510328 R1	0.53	20.0	Thin Wall XLPE Primary Cable	TAN	1150.0	-	-	-
82	-	-	TJ95AC	3510328 R1	0.53	20.0	Thin Wall XLPE Primary Cable	TAN	1870.0	-	-	-
93	-	-	GE44A	3510310 R1	0.53	20.0	Thin Wall XLPE Primary Cable	GREY	1480.0	-	-	-

Connector Name	6018
Part Number	3952655C1
Instances	Engine Private J1939 A26:Engine Private J1939 A26 LT/RH - A26 - DEF Economy Monitor (Cluster):Diagram1 LT/RH - A26 - Transmission Power Take Off Dual PTO with Clutch Interlock:Diagram1 LT/RH - A26 - Transmission Power Take Off Dual Solenoid AUTO:Diagram1 LT/RH - A26 - Transmission Power Take Off Option 1:Diagram1 LT/RH - A26 - Transmission Power Take Off W/ Clutch Interlock:Diagram1 LT/RH - X15/A26 - 10 PIN ClockSpring:Diagram1 LT/RH - X15/A26 - Adaptive Cruise Control w/o Display (Bendix):Diagram1 LT/RH - X15/A26 - Adaptive Cruise Control w/o Display (Wabco):Diagram1 LT/RH - X15/A26 - Engine Oil Level Monitoring (CA2.0):Diagram1 LT/RH - X15/A26 - Intake Manifold Pressure AUX gauge:Diagram1 LT/RH - X15/A26 - Lane Departure Warning - (Wabco OnLane 2.0 w/ roof speakers):Diagram1 LT/RH - X15/A26 - Park Brake Control (Monitoring) (W/Vehicle Speed):Diagram1 LT/RH - X15/A26 - Windshield Wipers Cruise Disable & Park Brake W/Wipers ON:Diagram1 LT/RH - X15/A26 - Windshield Wipers Cruise Disable W/Wipers ON:Diagram1 LT/RH - X15/A26 - with Hood Switch - with new BCM Pin:Diagram1 LT/RH A26 - Auto Start Stop and Sleeper Auto Climate / Cab Temp / Oil Mapping Manual Trans:Diagram1 LT/RH A26 - Auto Start Stop Battery & Oil Temp Mapping Auto Trans:Diagram1 LT/RH A26 - Auto Start Stop Battery & Oil Temp Mapping Manual Trans:Diagram1 LT/RH A26 - Auto Start Stop with Sleeper Auto Climate / Cab Temp / Oil Mapping Auto Trans:Diagram1 LT/RH A26 - ECM:ECM Connector 6018 LT/RH A26 - Starting Aid (Flame Start):Diagram1 LT/RH A26 - Transmission I/O (Endurant Pressure Sensor):Diagram1

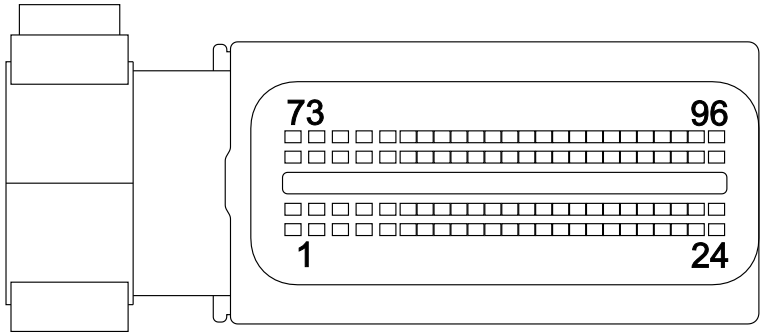

LT/RH/LoneStar - X15 - DEF Economy Monitor (GEN IV Cluster w/ Cummins ENG):Diagram1
LT/RH/LoneStar - X15 - Transmission Power Take Off Dual PTO with Clutch Interlock MANUAL:Diagram1
LT/RH/LoneStar - X15 - Transmission Power Take Off Dual Solenoid AUTO:Diagram1
LT/RH/LoneStar - X15 - Transmission Power Take Off W/ Clutch Interlock:Diagram1
LT/RH/LoneStar - X15 - Transmission SINGLE Power Take Off MANUAL:Diagram1
LT/RH/LoneStar - X15/A26 - 2 Driver Controlled Locking Differential - FR & RR Axle (DANA):Diagram1
LT/RH/LoneStar - X15/A26 - 2 Driver Controlled Locking Differential - FR & RR Axle (MERITOR):Diagram1
LT/RH/LoneStar - X15/A26 - Adjustable Engine Speed Control (PTO) 4-pin Clockspring:Diagram1
LT/RH/LoneStar - X15/A26 - Adjustable Engine Speed Control (PTO) 10-PIN ClockSpring:Diagram1
LT/RH/LoneStar - X15/A26 - Analytic Cruise Control:Diagram1
LT/RH/LoneStar - X15/A26 - Brake Switch:Diagram1
LT/RH/LoneStar - X15/A26 - Coolant Temperature Monitoring (J1939 Comm):Diagram1
LT/RH/LoneStar - X15/A26 - DPF Regen Switch Only:Diagram1
LT/RH/LoneStar - X15/A26 - DPF With Monostable Inhibit Switch:Diagram1
LT/RH/LoneStar - X15/A26 - DPF With/ Bi-Stable Inhibit Switch:Diagram1
LT/RH/LoneStar - X15/A26 - Driver Controlled Locking Differential - FR & RR Axle (DANA):Diagram1
LT/RH/LoneStar - X15/A26 - Driver Controlled Locking Differential - FR & RR Axle (MERITOR):Diagram1
LT/RH/LoneStar - X15/A26 - Driver Controlled Locking Differential - FR (MERITOR):Diagram1
LT/RH/LoneStar - X15/A26 - Driver Controlled Locking Differential - RR Axle (DANA):Diagram1
LT/RH/LoneStar - X15/A26 - Driver Controlled Locking Differential - RR Axle (DANA):Diagram2
LT/RH/LoneStar - X15/A26 - Driver Controlled Locking Differential - RR Axle (MERITOR):Diagram1
LT/RH/LoneStar - X15/A26 - Driver Controlled Locking Differential - RR Axle (MERITOR):Diagram2
LT/RH/LoneStar - X15/A26 - Engine Brake (CA2.0; Mux Switch):Diagram1

LT/RH/LoneStar - X15/A26 - Engine Brake (CA2.0; Stalk Shifter):Diagram1
LT/RH/LoneStar - X15/A26 - Engine Idle Increment/Decrement (Steering Wheel Switch - 4 Pin):Diagram1
LT/RH/LoneStar - X15/A26 - Engine Idle Increment/Decrement (Steering Wheel Switch - 10 Pin):Diagram1
LT/RH/LoneStar - X15/A26 - Engine Oil Pressure:Diagram1
LT/RH/LoneStar - X15/A26 - Engine Oil Temperature (NA MUX_AUX Gauge):Diagram1
LT/RH/LoneStar - X15/A26 - Engine Oil Temperature (NA-Mux):Diagram1
LT/RH/LoneStar - X15/A26 - Engine Speed (Tachometer_J1939):Diagram1
LT/RH/LoneStar - X15/A26 - Engine Speed Inhibit Only:Diagram1
LT/RH/LoneStar - X15/A26 - Engine Usage Monitoring (Base):Diagram1
LT/RH/LoneStar - X15/A26 - Engine Usage Monitoring (VID Option):Diagram1
LT/RH/LoneStar - X15/A26 - Engine/Exhaust Brake:Diagram1
LT/RH/LoneStar - X15/A26 - Fifth Wheel Slide:Diagram1
LT/RH/LoneStar - X15/A26 - Fuel Economy Monitor:Diagram1
LT/RH/LoneStar - X15/A26 - Fuel Level (Single Tank - Left Side):Diagram1
LT/RH/LoneStar - X15/A26 - Fuel Level (Single Tank - Left Side):Diagram2
LT/RH/LoneStar - X15/A26 - Fuel Level (Single Tank - Left Side):Diagram3
LT/RH/LoneStar - X15/A26 - Fuel Level (Single Tank - Left Side):Diagram4
LT/RH/LoneStar - X15/A26 - Fuel Level (Single Tank - Left Side):Diagram5
LT/RH/LoneStar - X15/A26 - Fuel Level (Single Tank - Left Side):Diagram6
LT/RH/LoneStar - X15/A26 - Height Control:Diagram1
LT/RH/LoneStar - X15/A26 - High Exhaust System Temperature (HEST) Monitoring:Diagram1
LT/RH/LoneStar - X15/A26 - Intake Manifold Pressure:Diagram1
LT/RH/LoneStar - X15/A26 - Jaw Monitoring:Diagram1
LT/RH/LoneStar - X15/A26 - Jaw Unlock Control (Standard):Diagram1
LT/RH/LoneStar - X15/A26 - Jaw Unlock Control W/ SOLENOIDS W/SWITCH PACKS:Diagram1
LT/RH/LoneStar - X15/A26 - Odometer (Cluster):Diagram1

LT/RH/LoneStar - X15/A26 - Park Brake Controls (with Alarm IGN ON/OFF):Diagram1
LT/RH/LoneStar - X15/A26 - Park Brake Reminder (Non-Stationary) (CA2.0):Diagram1
LT/RH/LoneStar - X15/A26 - Power Divider Lock Control and Monitoring:Diagram1
LT/RH/LoneStar - X15/A26 - Rear Lights Stop - Dual Assembly:Diagram1
LT/RH/LoneStar - X15/A26 - Rear Lights Stop - Dual Assembly:Diagram2
LT/RH/LoneStar - X15/A26 - Rear Lights Stop - Single Assembly Option 1:Diagram1
LT/RH/LoneStar - X15/A26 - Rear Lights Stop - Single Assembly Option 1:Diagram2
LT/RH/LoneStar - X15/A26 - Rear Lights Stop - Single Assembly Option 2:Diagram1
LT/RH/LoneStar - X15/A26 - Rear Lights Stop - Single Assembly Option 2:Diagram2
LT/RH/LoneStar - X15/A26 - Seats (RollTek) Driver and Passenger (Hard Wired):Diagram1
LT/RH/LoneStar - X15/A26 - Seats (RolTek) Drivers Seat Only (Hard Wired) - Leather:Diagram1
LT/RH/LoneStar - X15/A26 - Seats (RolTek) Drivers Seat Only (Hard Wired) - Mordura:Diagram1
LT/RH/LoneStar - X15/A26 - Seats (RolTek) Drivers Seat Only (Hard Wired) - Vinyl:Diagram1
LT/RH/LoneStar - X15/A26 - Theft Deterrent (Standard J1939 Mux SW):Diagram1
LT/RH/LoneStar - X15/A26 - Traction Control (Bendix Controller):Diagram1
LT/RH/LoneStar - X15/A26 - Traction Control (Bendix Controller):Diagram2
LT/RH/LoneStar - X15/A26 - Traction Control (Bendix Controller) Option 2:Diagram1
LT/RH/LoneStar - X15/A26 - Traction Control (Bendix Controller) Option 2:Diagram2
LT/RH/LoneStar - X15/A26 - Traction Control (Wabco Controller):Diagram1
LT/RH/LoneStar - X15/A26 - Traction Control (Wabco Controller):Diagram2
LT/RH/LoneStar - X15/A26 - Traction Control (Wabco Controller):Diagram3
LT/RH/LoneStar - X15/A26 - Trip Odometer (Cluster):Diagram1

LT/RH/LoneStar - X15/A26 - Vehicle Speed Control (Cruise Control) 4 - PIN:Diagram1
LT/RH/LoneStar - X15/A26 - Vehicle Speed Limit Override:Diagram1
LT/RH/LoneStar - X15/A26 - Vehicle Speedometer System (W/ AMT/AUTO TRANS):Diagram1
LT/RH/LoneStar - X15/A26 - Voltage Monitoring (Voltmeter) Option 1:Diagram1
LT/RH/LoneStar X15 - Transmission I/O (Endurant Pressure Sensor):Diagram1
Powertrain J1939 (500Kbps) Edurant Transmission A26:Powertrain J1939 (500Kbps) Edurant Transmission A26
Powertrain J1939 (500Kbps) Allison 3K Transmission A26:Powertrain J1939 (500Kbps) Allison 3K A26
Powertrain J1939 (500Kbps) Eaton Ultrashift+ Transmission A26:Powertrain J1939 (500Kbps) Eaton Ultrashift+ Transmission A26
Powertrain J1939 (500Kbps) Manual Transmission A26:Powertrain Standard J1939 (500Kbps) A26 Engine
Powertrain J1939 (500Kbps) TC10 Transmission A26:Powertrain J1939 (500Kbps) TC10 Transmission A26

Mates MODU-ECM-A001-10-00A A26

Name	Terminal Part Number	V-Min	Name	Wire Part Number	Wire CSA	Wire Spec	Wire Material description	Wire Color Description	Wire Length	End2 Terminal Part Number	End2 Pin Name	End2 Connect or
1	-	-	CC95GE	3510329 R1	0.79	18.0	Thin Wall XLPE Primary Cable	TAN	210.0	-	-	-
1	-	-	CA95GE	3510329 R1	0.79	18.0	Thin Wall XLPE Primary Cable	TAN	2040.0	-	-	-
1	-	-	CB95GE	3510329 R1	0.79	18.0	Thin Wall XLPE Primary Cable	TAN	1460.0	-	-	-

Name	Terminal Part Number	V-Min	Name	Wire Part Number	Wire CSA	Wire Spec	Wire Material description	Wire Color Description	Wire Length	End2 Terminal Part Number	End2 Pin Name	End2 Connector
1	-	-	CD95GE	3510329 R1	0.79	18.0	Thin Wall XLPE Primary Cable	TAN	210.0	-	-	-
2	-	-	KA97B	3510347 R1	0.79	18.0	Thin Wall XLPE Primary Cable	VIOLET	1375.0	-	-	-
4	-	-	AJ95F	3510329 R1	0.79	18.0	Thin Wall XLPE Primary Cable	TAN	2040.0	-	-	-
4	-	-	AK95F	3510329 R1	0.79	18.0	Thin Wall XLPE Primary Cable	TAN	1460.0	-	-	-
5	-	-	KA95-GC	3510293 R1	0.79	18.0	Thin Wall XLPE Primary Cable	BLACK	1195.0	-	-	-
6	-	-	KA97C	3510347 R1	0.79	18.0	Thin Wall XLPE Primary Cable	VIOLET	1375.0	-	-	-
7	-	-	LF95BC	2645915 R1	0.79	18.0	TXL 150C	TAN	2520.0	-	-	-
7	-	-	LE95BC	2645915 R1	0.79	18.0	TXL 150C	TAN	2645.0	-	-	-
8	-	-	KB34D	3510329 R1	0.79	18.0	Thin Wall XLPE Primary Cable	TAN	2605.0	-	-	-

Name	Terminal Part Number	V-Min	Name	Wire Part Number	Wire CSA	Wire Spec	Wire Material description	Wire Color Description	Wire Length	End2 Terminal Part Number	End2 Pin Name	End2 Connector
9	-	-	VL41E	3510329 R1	0.79	18.0	Thin Wall XLPE Primary Cable	TAN	1375.0	-	-	-
10	-	-	LF95BA	2645915 R1	0.79	18.0	TXL 150C	TAN	2520.0	-	-	-
10	-	-	LE95BA	2645915 R1	0.79	18.0	TXL 150C	TAN	2645.0	-	-	-
11	-	-	KA41-GA	3510359 R1	0.79	18.0	Thin Wall XLPE Primary Cable	WHITE	1490.0	-	-	-
12	-	-	KA97P	3510329 R1	0.79	18.0	Thin Wall XLPE Primary Cable	TAN	1375.0	-	-	-
14	-	-	KJ92A19	3510329 R1	0.79	18.0	Thin Wall XLPE Primary Cable	TAN	1025.0	-	-	-
16	-	-	KJ92A13	3510329 R1	0.79	18.0	Thin Wall XLPE Primary Cable	TAN	1025.0	-	-	-
17	-	-	KA13	3510323 R1	0.79	18.0	Thin Wall XLPE Primary Cable	PINK	1375.0	-	37	1702
20	-	-	KJ92A2	3510329 R1	0.79	18.0	Thin Wall XLPE Primary Cable	TAN	1025.0	-	-	-

Name	Terminal Part Number	V-Min	Name	Wire Part Number	Wire CSA	Wire Spec	Wire Material description	Wire Color Description	Wire Length	End2 Terminal Part Number	End2 Pin Name	End2 Connector
21	-	-	KJ92A17	3510329 R1	0.79	18.0	Thin Wall XLPE Primary Cable	TAN	1025.0	-	-	-
22	-	-	KJ92A14	3510329 R1	0.79	18.0	Thin Wall XLPE Primary Cable	TAN	1025.0	-	-	-
23	-	-	KJ92A6	3510329 R1	0.79	18.0	Thin Wall XLPE Primary Cable	TAN	1025.0	-	-	-
24	-	-	KA95GBE	3510330 R1	1.16	16.0	Thin Wall XLPE Primary Cable	TAN	1480.0	-	-	-
25	-	-	ZC23A	3510329 R1	0.79	18.0	Thin Wall XLPE Primary Cable	TAN	765.0	-	-	-
25	-	-	ZB23A	3510329 R1	0.79	18.0	Thin Wall XLPE Primary Cable	TAN	1325.0	-	-	-
28	-	-	AJ95AB	3510329 R1	0.79	18.0	Thin Wall XLPE Primary Cable	TAN	2040.0	-	-	-
28	-	-	AK95AB	3510329 R1	0.79	18.0	Thin Wall XLPE Primary Cable	TAN	1460.0	-	-	-

Name	Terminal Part Number	V-Min	Name	Wire Part Number	Wire CSA	Wire Spec	Wire Material description	Wire Color Description	Wire Length	End2 Terminal Part Number	End2 Pin Name	End2 Connector
29	-	-	KA97N	3510346 R1	0.53	20.0	Thin Wall XLPE Primary Cable	VIOLET	1160.0	-	-	-
31	-	-	KA41A	3510329 R1	0.79	18.0	Thin Wall XLPE Primary Cable	TAN	1490.0	-	-	-
33	-	-	KA99B	3510347 R1	0.79	18.0	Thin Wall XLPE Primary Cable	VIOLET	1375.0	-	-	-
34	-	-	LE95K	2645915 R1	0.79	18.0	TXL 150C	TAN	2645.0	-	-	-
34	-	-	LF95K	2645915 R1	0.79	18.0	TXL 150C	TAN	2520.0	-	-	-
36	-	-	ZE95DA	3510329 R1	0.79	18.0	Thin Wall XLPE Primary Cable	TAN	815.0	-	-	-
36	-	-	ZD95DA	2645915 R1	0.79	18.0	TXL 150C	TAN	2645.0	-	-	-
36	-	-	ZF95DA	2645915 R1	0.79	18.0	TXL 150C	TAN	2520.0	-	-	-
36	-	-	ZG95DA	3510329 R1	0.79	18.0	Thin Wall XLPE Primary Cable	TAN	815.0	-	-	-
39	-	-	KJ92A1	3510329 R1	0.79	18.0	Thin Wall XLPE Primary Cable	TAN	1025.0	-	-	-

Name	Terminal Part Number	V-Min	Name	Wire Part Number	Wire CSA	Wire Spec	Wire Material description	Wire Color Description	Wire Length	End2 Terminal Part Number	End2 Pin Name	End2 Connector
40	-	-	KJ92A9	3510329 R1	0.79	18.0	Thin Wall XLPE Primary Cable	TAN	1025.0	-	-	-
46	-	-	KJ92A16	3510329 R1	0.79	18.0	Thin Wall XLPE Primary Cable	TAN	1025.0	-	-	-
50	-	-	CC99D	3510347 R1	0.79	18.0	Thin Wall XLPE Primary Cable	VIOLET	1640.0	-	-	-
50	-	-	CD99D	3510347 R1	0.79	18.0	Thin Wall XLPE Primary Cable	VIOLET	1640.0	-	-	-
55	-	-	VE95-GF	3510359 R1	0.79	18.0	Thin Wall XLPE Primary Cable	WHITE	2100.0	-	-	-
55	-	-	VA95-GF	3510359 R1	0.79	18.0	Thin Wall XLPE Primary Cable	WHITE	1750.0	-	-	-
56	-	-	KJ92A5	3510329 R1	0.79	18.0	Thin Wall XLPE Primary Cable	TAN	1025.0	-	-	-
57	-	-	KA97M	3510346 R1	0.53	20.0	Thin Wall XLPE Primary Cable	VIOLET	1160.0	-	-	-

Name	Terminal Part Number	V-Min	Name	Wire Part Number	Wire CSA	Wire Spec	Wire Material description	Wire Color Description	Wire Length	End2 Terminal Part Number	End2 Pin Name	End2 Connector
58	-	-	AK95H	3510329 R1	0.79	18.0	Thin Wall XLPE Primary Cable	TAN	1460.0	-	-	-
58	-	-	AJ95H	3510329 R1	0.79	18.0	Thin Wall XLPE Primary Cable	TAN	2040.0	-	-	-
59	-	-	KH5S (-)	-	0.0	-	-	-	0.0	-	PIN1	-
59	-	-	-	-	-	-	-	-	-	-	-	-
59	-	-	KF5S(-)	-	0.0	-	-	-	0.0	-	PIN1	-
59	-	-	KG5AE (-)	-	0.0	-	-	-	0.0	-	PIN1	-
59	-	-	WIRE233 859	-	0.0	-	-	-	0.0	-	PIN1	-
59	-	-	XZ5R117	-	0.0	-	-	-	0.0	-	PIN1	-
60	-	-	WIRE234 426	-	0.0	-	-	-	0.0	-	PIN1	-
63	-	-	LE9A	2645915 R1	0.79	18.0	TXL 150C	TAN	160.0	-	-	-
63	-	-	LF9A	2645915 R1	0.79	18.0	TXL 150C	TAN	160.0	-	-	-
63	-	-	AY9A	3510329 R1	0.79	18.0	Thin Wall XLPE Primary Cable	TAN	160.0	-	-	-
64	-	-	AJ95AT2	3510329 R1	0.79	18.0	Thin Wall XLPE Primary Cable	TAN	1130.0	-	-	-
64	-	-	AK95AT2	3510329 R1	0.79	18.0	Thin Wall XLPE Primary Cable	TAN	1130.0	-	-	-

Name	Terminal Part Number	V-Min	Name	Wire Part Number	Wire CSA	Wire Spec	Wire Material description	Wire Color Description	Wire Length	End2 Terminal Part Number	End2 Pin Name	End2 Connector
65	-	-	KJ92A7	3510329 R1	0.79	18.0	Thin Wall XLPE Primary Cable	TAN	1025.0	-	-	-
66	-	-	SJ92A18	3510329 R1	0.79	18.0	Thin Wall XLPE Primary Cable	TAN	1225.0	-	X	-
66	-	-	SG92A11	3510329 R1	0.79	18.0	Thin Wall XLPE Primary Cable	TAN	1025.0	-	-	-
67	-	-	AK95AR2	3510365 R1	0.79	18.0	Thin Wall XLPE Primary Cable	RED	1250.0	-	-	-
67	-	-	AJ95AR2	3510365 R1	0.79	18.0	Thin Wall XLPE Primary Cable	RED	1250.0	-	-	-
69	-	-	AK95AU2	3510329 R1	0.79	18.0	Thin Wall XLPE Primary Cable	TAN	1100.0	-	-	-
69	-	-	AJ95AU2	3510329 R1	0.79	18.0	Thin Wall XLPE Primary Cable	TAN	1100.0	-	-	-
72	-	-	KA95TB	3510311 R1	0.79	18.0	Thin Wall XLPE Primary Cable	GREY	2270.0	-	-	-

Name	Terminal Part Number	V-Min	Name	Wire Part Number	Wire CSA	Wire Spec	Wire Material description	Wire Color Description	Wire Length	End2 Terminal Part Number	End2 Pin Name	End2 Connector
76	-	-	ZA23-G	3510359 R1	0.79	18.0	Thin Wall XLPE Primary Cable	WHITE	1325.0	-	-	-
77	-	-	KJ92A8	3510329 R1	0.79	18.0	Thin Wall XLPE Primary Cable	TAN	1025.0	-	-	-
78	-	-	KJ92A10	3510329 R1	0.79	18.0	Thin Wall XLPE Primary Cable	TAN	1025.0	-	-	-
78	-	-	KL47T	3510311 R1	0.79	18.0	Thin Wall XLPE Primary Cable	GREY	1375.0	-	-	-
83	-	-	KH5S (+)	-	0.0	-	-	-	0.0	-	PIN1	-
83	-	-	-	-	-	-	-	-	-	-	-	-
83	-	-	KF5S (+)	-	0.0	-	-	-	0.0	-	PIN1	-
83	-	-	KG5AE (+)	-	0.0	-	-	-	0.0	-	PIN1	-
83	-	-	WIRE233861	-	0.0	-	-	-	0.0	-	PIN1	-
83	-	-	XZ5R106	-	0.0	-	-	-	0.0	-	PIN1	-
84	-	-	WIRE234425	-	0.0	-	-	-	0.0	-	PIN1	-
87	-	-	AJ95AS2	3510329 R1	0.79	18.0	Thin Wall XLPE Primary Cable	TAN	1220.0	-	-	-
87	-	-	AK95AS2	3510329 R1	0.79	18.0	Thin Wall XLPE Primary Cable	TAN	1220.0	-	-	-

Name	Terminal Part Number	V-Min	Name	Wire Part Number	Wire CSA	Wire Spec	Wire Material description	Wire Color Description	Wire Length	End2 Terminal Part Number	End2 Pin Name	End2 Connector
90	-	-	KJ92A12	3510329 R1	0.79	18.0	Thin Wall XLPE Primary Cable	TAN	1025.0	-	-	-
91	-	-	PL47	3510311 R1	0.79	18.0	Thin Wall XLPE Primary Cable	GREY	2830.0	-	-	-
91	-	-	XY47A125	3510329 R1	0.79	18.0	Thin Wall XLPE Primary Cable	TAN	2805.0	-	-	-
91	-	-	XN47	3510311 R1	0.79	18.0	Thin Wall XLPE Primary Cable	GREY	2695.0	-	-	-
92	-	-	PL47A	3510311 R1	0.79	18.0	Thin Wall XLPE Primary Cable	GREY	2830.0	-	-	-
92	-	-	XN47A	3510311 R1	0.79	18.0	Thin Wall XLPE Primary Cable	GREY	2695.0	-	-	-

Connector Name 6019
Part Number 3952656C1
Instances LT/RH A26 - ECM:ECM Connector 6019
Mates MODU-ECM-A001-10-00A A26

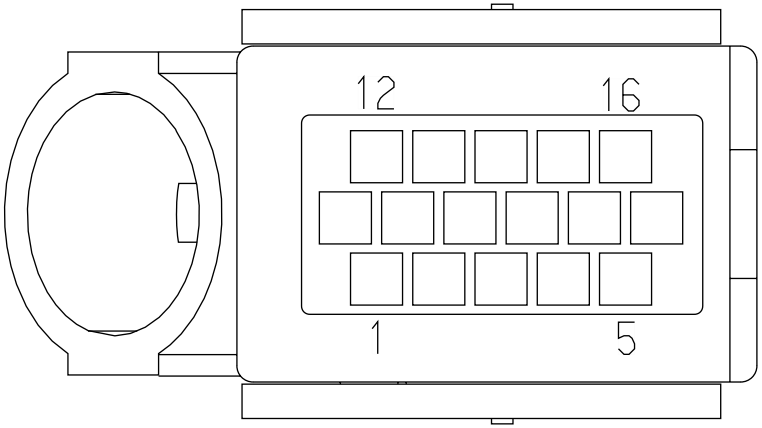

Name	Terminal Part Number	V-Min	Name	Wire Part Number	Wire CSA	Wire Spec	Wire Material description	Wire Color Description	Wire Length	End2 Terminal Part Number	End2 Pin Name	End2 Connect or
1	-	-	LE95DVH	4073403 R1	0.53	20.0	TXL 150C	TAN	2795.0	-	-	-
1	-	-	LF95DVH	4073403 R1	0.53	20.0	TXL 150C	TAN	2670.0	-	-	-
2	-	-	AJ95E	3510328 R1	0.53	20.0	Thin Wall XLPE Primary Cable	TAN	2190.0	-	-	-
2	-	-	AK95E	3510328 R1	0.53	20.0	Thin Wall XLPE Primary Cable	TAN	1610.0	-	-	-
3	-	-	KA14G	3510367 R1	1.91	14.0	Thin Wall XLPE Primary Cable	RED	550.0	-	X	-

Name	Terminal Part Number	V-Min	Name	Wire Part Number	Wire CSA	Wire Spec	Wire Material description	Wire Color Description	Wire Length	End2 Terminal Part Number	End2 Pin Name	End2 Connector
4	-	-	KA92D16	3510361 R1	1.91	14.0	Thin Wall XLPE Primary Cable	WHITE	230.0	-	X	-
6	-	-	LE95DVL	4073403 R1	0.53	20.0	TXL 150C	TAN	2795.0	-	-	-
6	-	-	LF95DVL	4073403 R1	0.53	20.0	TXL 150C	TAN	2670.0	-	-	-
7	-	-	KA92BA16	3510361 R1	1.91	14.0	Thin Wall XLPE Primary Cable	WHITE	230.0	-	X	-
8	-	-	KA14HC	3510367 R1	1.91	14.0	Thin Wall XLPE Primary Cable	RED	550.0	-	X	-
9	-	-	KA14K	3510367 R1	1.91	14.0	Thin Wall XLPE Primary Cable	RED	550.0	-	X	-
10	-	-	KA92C16	3510361 R1	1.91	14.0	Thin Wall XLPE Primary Cable	WHITE	230.0	-	X	-
11	-	-	KA95SB	3510328 R1	0.53	20.0	Thin Wall XLPE Primary Cable	TAN	1880.0	-	-	-
13	-	-	KA92BB16	3510361 R1	1.91	14.0	Thin Wall XLPE Primary Cable	WHITE	310.0	-	X	-

Name	Terminal Part Number	V-Min	Name	Wire Part Number	Wire CSA	Wire Spec	Wire Material description	Wire Color Description	Wire Length	End2 Terminal Part Number	End2 Pin Name	End2 Connect or
14	-	-	KA14KAA	3510367 R1	1.91	14.0	Thin Wall XLPE Primary Cable	RED	500.0	-	X	-
15	-	-	KA14H	3510367 R1	1.91	14.0	Thin Wall XLPE Primary Cable	RED	500.0	-	X	-
16	-	-	KA92E16	3510361 R1	1.91	14.0	Thin Wall XLPE Primary Cable	WHITE	310.0	-	X	-

Connector Name 6049_A

Part Number 3866817C1

Instances LT/RH - A26 - Battery International (8) 12V:Diagram1
LT/RH - A26 - Cranking (Starter) GEN4 BCM W/ Thermal Overcrank - External Switch:Diagram1
LT/RH - A26 - Cranking (Starter) GEN4 BCM W/O Thermal Overcrank Wiring:Diagram1
LT/RH/LoneStar - X15 - Cranking (Starter) GEN4 BCM W/ Thermal Overcrank - External Switch:Diagram1
LT/RH/LoneStar - X15 - Cranking (Starter) GEN4 BCM W/O Thermal Overcrank Wiring:Diagram1
LT/RH/LoneStar - X15/A26 - DC/AC Inverter (1200W W/switch control):Diagram1
LT/RH/LoneStar - X15/A26 - DC/AC Inverter (1800W):Diagram1
LT/RH/LoneStar - X15/A26 - JUMP START STUD (DUAL):Diagram1
LT/RH/LoneStar X15 - Battery International (3) 12V:Diagram1
LT/RH/LoneStar X15 - Battery International (4) 12V:Diagram1

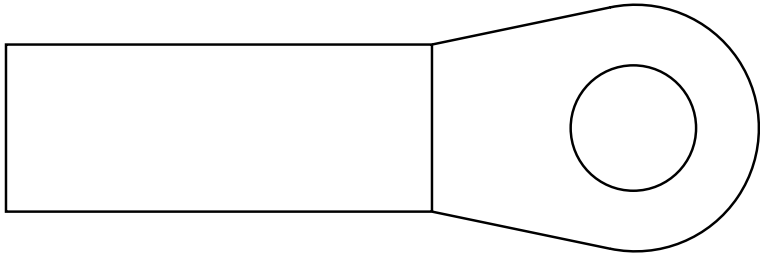

Mates BTRY-INTL_925CCA-BTRY-00-0 3A

Name	Terminal Part Number	V-Min	Name	Wire Part Number	Wire CSA	Wire Spec	Wire Material description	Wire Color Description	Wire Length	End2 Terminal Part Number	End2 Pin Name	End2 Connector
A	-	-	14-G	2645943 R1	80.32	0.0	SGR 125	BLACK	1140.0	-	A	K02-J1-MITS
A	-	-	N14G	2645938 R1	49.99	0.0	SGX NFLEX 125	BLACK	2850.0	-	1	100C
A	-	-	14-G	2645943 R1	80.32	0.0	SGR 125	BLACK	1140.0	-	A	NEG_1
A	-	-	14-G	2645943 R1	80.32	0.0	SGR 125	BLACK	1140.0	-	-	-
A	-	-	14-G	2645943 R1	80.32	0.0	SGR 125	BLACK	1140.0	-	A	K01-J1-MITS
A	-	-	14-G	2645938 R1	49.99	0.0	SGX NFLEX 125	BLACK	210.0	-	A	6049_B

Name	Terminal Part Number	V-Min	Name	Wire Part Number	Wire CSA	Wire Spec	Wire Material description	Wire Color Description	Wire Length	End2 Terminal Part Number	End2 Pin Name	End2 Connector
A	-	-	KA10-H	2644025 R1	18.94	4.0	Std. Wall XLPE Battery Cable	WHITE	1530.0	-	X	-
A	-	-	14-G	2645938 R1	49.99	0.0	SGX NFLEX 125	BLACK	210.0	-	-	-
A	-	-	14-G	2645943 R1	80.32	0.0	SGR 125	BLACK	1140.0	-	A	K02-J1-DELCO
A	-	-	14-G	2645943 R1	80.32	0.0	SGR 125	BLACK	1140.0	-	A	K01-J1-DEL

Connector Name 6049_A

Part Number 3866817C1

Instances LT/RH - A26/X15 - Maxwell 12V Ultracapacitor Engine Start Module (ESM):Diagram1

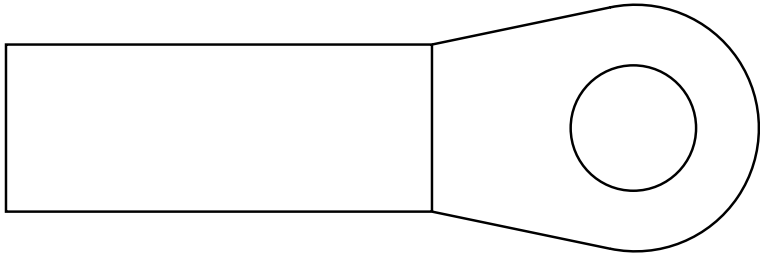

Name	Terminal Part Number	V-Min	Name	Wire Part Number	Wire CSA	Wire Spec	Wire Material description	Wire Color Description	Wire Length	End2 Terminal Part Number	End2 Pin Name	End2 Connect or
A	-	-	WIRE416311	-	0.0	-	-	-	0.0	-	A	6049_B

Connector Name	6049_A
Part Number	3866817C1
Instances	LT/RH A26 - Battery International (3) 12V:Diagram1 LT/RH A26 - Battery International (4) 12V:Diagram1 LT/RH/LoneStar X15 - Battery International (8) 12V:Diagram1
Mates	BTRY-INTL_925CCA-BTRY-00-0 3A

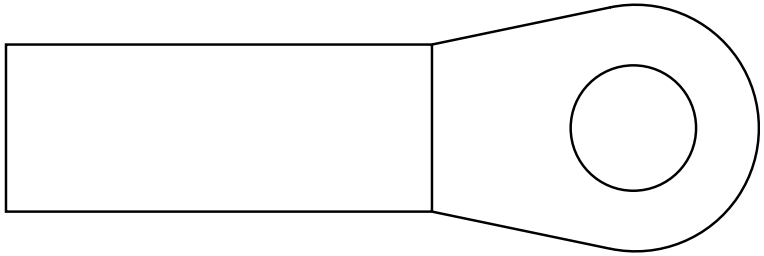

Name	Terminal Part Number	V-Min	Name	Wire Part Number	Wire CSA	Wire Spec	Wire Material description	Wire Color Description	Wire Length	End2 Terminal Part Number	End2 Pin Name	End2 Connect or
A	-	-	14-G	2645938 R1	49.99	0.0	SGX NFLEX 125	BLACK	210.0	-	A	6049_B
A	-	-	14-G	2645943 R1	80.32	0.0	SGR 125	BLACK	1140.0	-	-	-
A	-	-	KA10-H	2644025 R1	18.94	4.0	Std. Wall XLPE Battery Cable	WHITE	1530.0	-	X	-

Connector Name 6049_B

Part Number 3866817C1

Instances LT/RH - A26/X15 - Maxwell 12V Ultracapacitor Engine Start Module (ESM):Diagram1

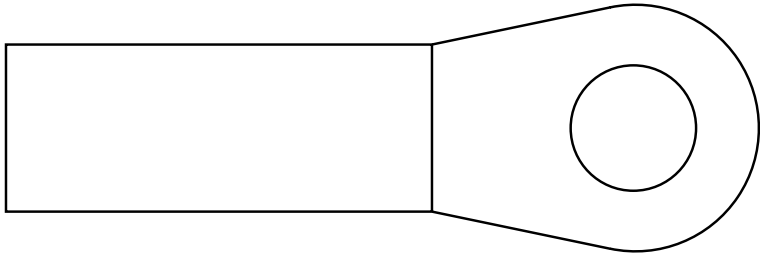

Name	Terminal Part Number	V-Min	Name	Wire Part Number	Wire CSA	Wire Spec	Wire Material description	Wire Color Description	Wire Length	End2 Terminal Part Number	End2 Pin Name	End2 Connect or
A	-	-	WIRE416311	-	0.0	-	-	-	0.0	-	A	6049_A
A	-	-	WIRE416313	-	0.0	-	-	-	0.0	-	A	6049_C

Connector Name	6049_B
Part Number	3866817C1
Instances	LT/RH A26 - Battery International (3) 12V:Diagram1 LT/RH A26 - Battery International (4) 12V:Diagram1 LT/RH/LoneStar X15 - Battery International (8) 12V:Diagram1
Mates	BTRY-INTL_925CCA-BTRY-00-0 3B

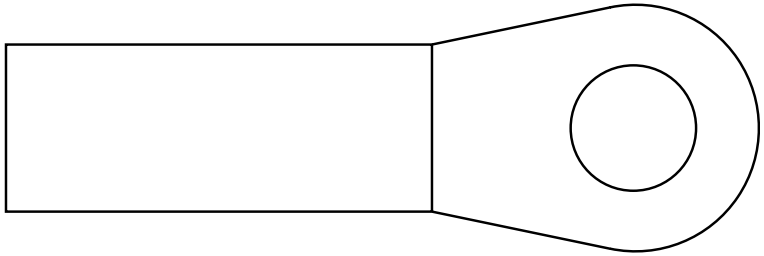

Name	Terminal Part Number	V-Min	Name	Wire Part Number	Wire CSA	Wire Spec	Wire Material description	Wire Color Description	Wire Length	End2 Terminal Part Number	End2 Pin Name	End2 Connect or
A	-	-	14-G	2645938 R1	49.99	0.0	SGX NFLEX 125	BLACK	210.0	-	A	6049_A
A	-	-	KA41-GH	2644025 R1	18.94	4.0	Std. Wall XLPE Battery Cable	WHITE	1495.0	-	-	-
A	-	-	14-G	2645943 R1	80.32	0.0	SGR 125	BLACK	1140.0	-	A	6049_C

Connector Name	6049_B
Part Number	3866817C1
Instances	LT/RH - A26 - Battery International (8) 12V:Diagram1 LT/RH/LoneStar X15 - Battery International (3) 12V:Diagram1 LT/RH/LoneStar X15 - Battery International (4) 12V:Diagram1
Mates	BTRY-INTL_925CCA-BTRY-00-0 3B

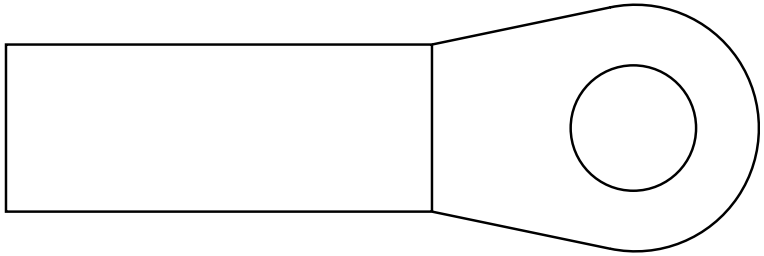

Name	Terminal Part Number	V-Min	Name	Wire Part Number	Wire CSA	Wire Spec	Wire Material description	Wire Color Description	Wire Length	End2 Terminal Part Number	End2 Pin Name	End2 Connect or
A	-	-	14-G	2645943 R1	80.32	0.0	SGR 125	BLACK	1140.0	-	A	6049_C
A	-	-	KA41-GH	2644025 R1	18.94	4.0	Std. Wall XLPE Battery Cable	WHITE	1504.0	-	-	-
A	-	-	14-G	2645938 R1	49.99	0.0	SGX NFLEX 125	BLACK	210.0	-	A	6049_A
A	-	-	14-G	2645938 R1	49.99	0.0	SGX NFLEX 125	BLACK	210.0	-	A	6049_C

Connector Name 6049_C

Part Number 3866817C1

Instances LT/RH - A26/X15 - Maxwell 12V Ultracapacitor Engine Start Module (ESM):Diagram1

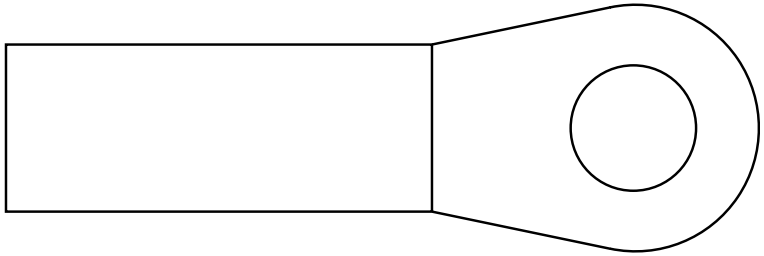

Name	Terminal Part Number	V-Min	Name	Wire Part Number	Wire CSA	Wire Spec	Wire Material description	Wire Color Description	Wire Length	End2 Terminal Part Number	End2 Pin Name	End2 Connect or
A	-	-	WIRE416313	-	0.0	-	-	-	0.0	-	A	6049_B
A	-	-	WIRE416319	-	0.0	-	-	-	0.0	-	1	Terminal Block if Required
A	-	-	WIRE416321	-	0.0	-	-	-	0.0	-	A	6051_B
A	-	-	WIRE416323	-	0.0	-	-	-	0.0	-	A	J1

Connector Name	6049_C
Part Number	3866817C1
Instances	LT/RH - A26/X15 - Maxwell 12V Ultracapacitor Engine Start Module (ESM):Diagram1
Mates	DEV180305

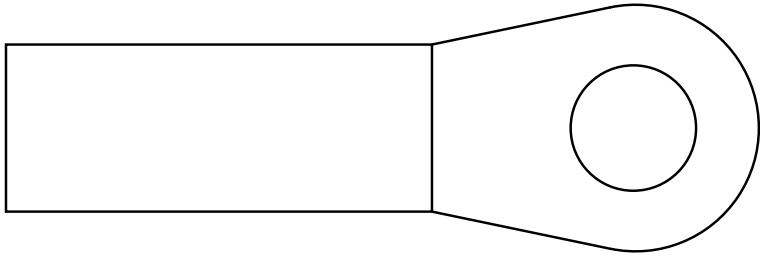

Name	Terminal Part Number	V-Min	Name	Wire Part Number	Wire CSA	Wire Spec	Wire Material description	Wire Color Description	Wire Length	End2 Terminal Part Number	End2 Pin Name	End2 Connect or
A	-	-	WIRE416320	-	0.0	-	-	-	0.0	-	A	6051_C

Connector Name	6049_C
Part Number	3866817C1
Instances	LT/RH A26 - Battery International (3) 12V:Diagram1 LT/RH A26 - Battery International (4) 12V:Diagram1 LT/RH/LoneStar X15 - Battery International (8) 12V:Diagram1
Mates	BTRY-INTL_925CCA-BTRY-00-0 3C

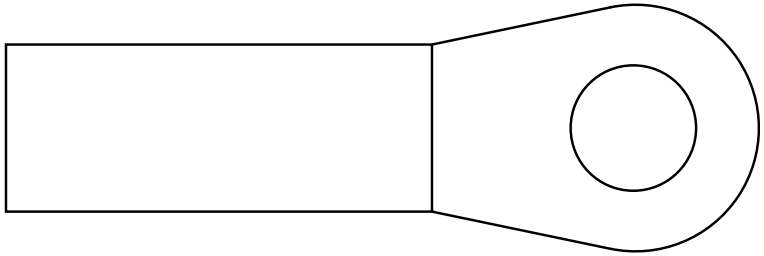

Name	Terminal Part Number	V-Min	Name	Wire Part Number	Wire CSA	Wire Spec	Wire Material description	Wire Color Description	Wire Length	End2 Terminal Part Number	End2 Pin Name	End2 Connect or
A	-	-	14-G	2645938 R1	49.99	0.0	SGX NFLEX 125	BLACK	210.0	-	-	-
A	-	-	14-G	2645943 R1	80.32	0.0	SGR 125	BLACK	1140.0	-	A	6049_B

Connector Name	6049_C
Part Number	3866817C1
Instances	LT/RH - A26 - Battery International (8) 12V:Diagram1 LT/RH/LoneStar X15 - Battery International (3) 12V:Diagram1 LT/RH/LoneStar X15 - Battery International (4) 12V:Diagram1
Mates	BTRY-INTL_925CCA-BTRY-00-0 3C

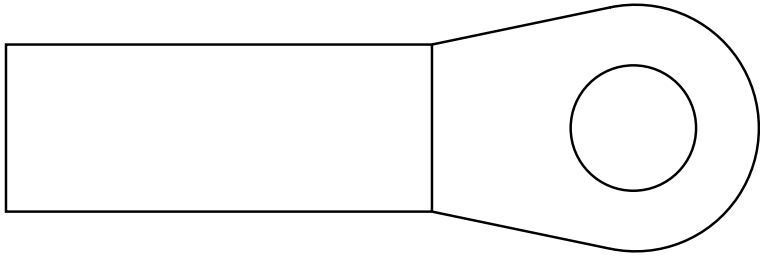

Name	Terminal Part Number	V-Min	Name	Wire Part Number	Wire CSA	Wire Spec	Wire Material description	Wire Color Description	Wire Length	End2 Terminal Part Number	End2 Pin Name	End2 Connect or
A	-	-	14-G	2645943 R1	80.32	0.0	SGR 125	BLACK	1140.0	-	A	6049_B
A	-	-	14-G	2645938 R1	49.99	0.0	SGX NFLEX 125	BLACK	210.0	-	-	-
A	-	-	14-G	2645938 R1	49.99	0.0	SGX NFLEX 125	BLACK	210.0	-	A	6049_B

Connector Name	6049_D
Part Number	3866817C1
Instances	LT/RH A26 - Battery International (4) 12V:Diagram1 LT/RH/LoneStar X15 - Battery International (8) 12V:Diagram1
Mates	BTRY-INTL_925CCA-BTRY-00-0 3D

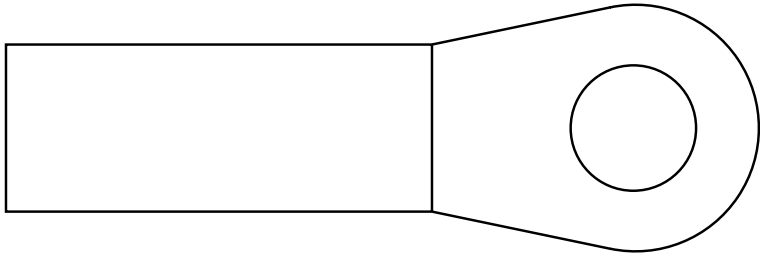

Name	Terminal Part Number	V-Min	Name	Wire Part Number	Wire CSA	Wire Spec	Wire Material description	Wire Color Description	Wire Length	End2 Terminal Part Number	End2 Pin Name	End2 Connect or
A	-	-	14-G	2645938 R1	49.99	0.0	SGX NFLEX 125	BLACK	210.0	-	-	-
A	-	-	14-G	2645943 R1	80.32	0.0	SGR 125	BLACK	1140.0	-	-	-
A	-	-	14	2645962 R1	49.99	0.0	SGX NFLEX 125	RED	700.0	-	A	6051_A

Connector Name	6049_D
Part Number	3866817C1
Instances	LT/RH - A26 - Battery International (8) 12V:Diagram1 LT/RH/LoneStar X15 - Battery International (4) 12V:Diagram1
Mates	BTRY-INTL_925CCA-BTRY-00-0 3D

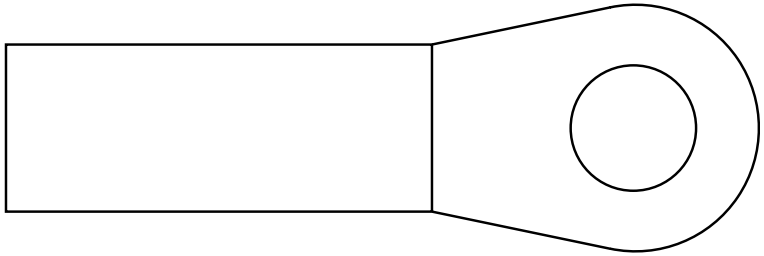

Name	Terminal Part Number	V-Min	Name	Wire Part Number	Wire CSA	Wire Spec	Wire Material description	Wire Color Description	Wire Length	End2 Terminal Part Number	End2 Pin Name	End2 Connect or
A	-	-	14-G	2645943 R1	80.32	0.0	SGR 125	BLACK	1140.0	-	-	-
A	-	-	14	2645962 R1	49.99	0.0	SGX NFLEX 125	RED	700.0	-	-	-
A	-	-	14-G	2645938 R1	49.99	0.0	SGX NFLEX 125	BLACK	210.0	-	-	-

Connector Name	6049_E
Part Number	3866817C1
Instances	LT/RH - A26 - Battery International (8) 12V:Diagram1 LT/RH/LoneStar X15 - Battery International (8) 12V:Diagram1
Mates	BTRY-INTL_925CCA-BTRY-00-0 3E

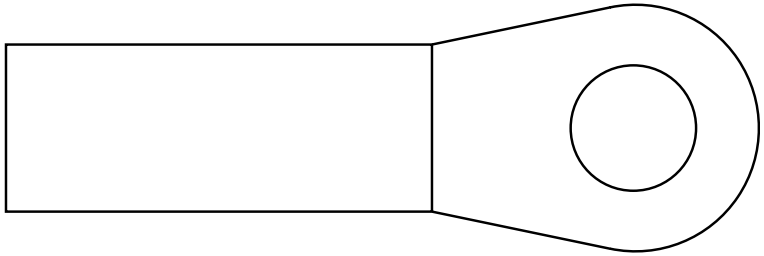

Name	Terminal Part Number	V-Min	Name	Wire Part Number	Wire CSA	Wire Spec	Wire Material description	Wire Color Description	Wire Length	End2 Terminal Part Number	End2 Pin Name	End2 Connect or
A	-	-	14	2645962 R1	49.99	0.0	SGX NFLEX 125	RED	700.0	-	-	-

Connector Name	6049_F
Part Number	3866817C1
Instances	LT/RH - A26 - Battery International (8) 12V:Diagram1 LT/RH/LoneStar X15 - Battery International (8) 12V:Diagram1
Mates	BTRY-INTL_925CCA-BTRY-00-0 3F

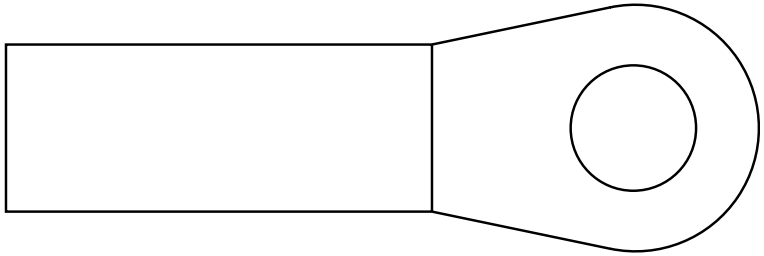

Name	Terminal Part Number	V-Min	Name	Wire Part Number	Wire CSA	Wire Spec	Wire Material description	Wire Color Description	Wire Length	End2 Terminal Part Number	End2 Pin Name	End2 Connect or
A	-	-	14	2645962 R1	49.99	0.0	SGX NFLEX 125	RED	700.0	-	-	-

Connector Name	6049_G
Part Number	3866817C1
Instances	LT/RH - A26 - Battery International (8) 12V:Diagram1 LT/RH/LoneStar X15 - Battery International (8) 12V:Diagram1
Mates	BTRY-INTL_925CCA-BTRY-00-0 3G

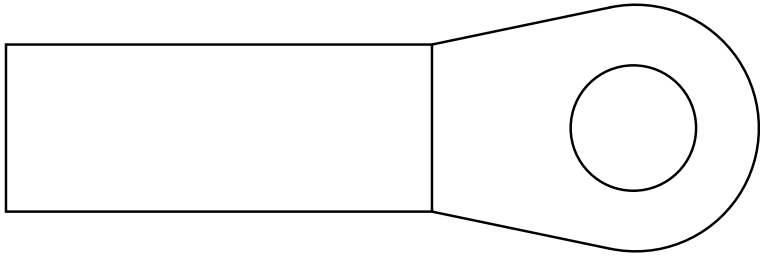

Name	Terminal Part Number	V-Min	Name	Wire Part Number	Wire CSA	Wire Spec	Wire Material description	Wire Color Description	Wire Length	End2 Terminal Part Number	End2 Pin Name	End2 Connect or
A	-	-	14	2645962 R1	49.99	0.0	SGX NFLEX 125	RED	700.0	-	-	-

Connector Name	6049_H
Part Number	3866817C1
Instances	LT/RH - A26 - Battery International (8) 12V:Diagram1 LT/RH/LoneStar X15 - Battery International (8) 12V:Diagram1
Mates	BTRY-INTL_925CCA-BTRY-00-0 3DH

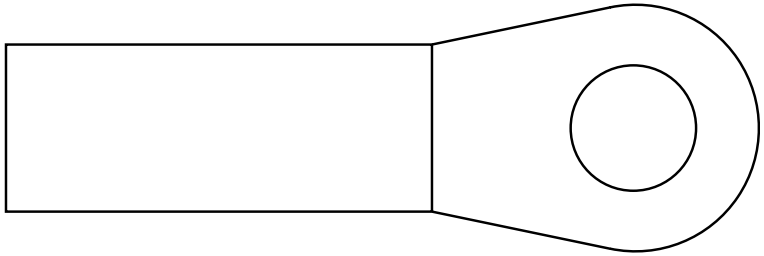

Name	Terminal Part Number	V-Min	Name	Wire Part Number	Wire CSA	Wire Spec	Wire Material description	Wire Color Description	Wire Length	End2 Terminal Part Number	End2 Pin Name	End2 Connect or
A	-	-	14	2645962 R1	49.99	0.0	SGX NFLEX 125	RED	700.0	-	-	-

Connector Name 6051_A

Part Number 3866817C1

Instances LT/RH - A26 - Battery International (8) 12V:Diagram1
LT/RH - A26 - Cranking (Starter) GEN4 BCM W/ Thermal Overcrank - External Switch:Diagram1
LT/RH - A26 - Cranking (Starter) GEN4 BCM W/O Thermal Overcrank Wiring:Diagram1
LT/RH - X15/A26 - Battery Disconnect:Diagram1
LT/RH/LoneStar - X15 - Cranking (Starter) GEN4 BCM W/ Thermal Overcrank - External Switch:Diagram1
LT/RH/LoneStar - X15 - Cranking (Starter) GEN4 BCM W/O Thermal Overcrank Wiring:Diagram1
LT/RH/LoneStar - X15/A26 - DC/AC Inverter (1200W W/switch control):Diagram1
LT/RH/LoneStar - X15/A26 - DC/AC Inverter (1800W):Diagram1
LT/RH/LoneStar - X15/A26 - JUMP START STUD (DUAL):Diagram1
LT/RH/LoneStar - X15/A26 - JUMP START STUD (SINGLE):Diagram1
LT/RH/LoneStar X15 - Battery International (3) 12V:Diagram1
LT/RH/LoneStar X15 - Battery International (4) 12V:Diagram1

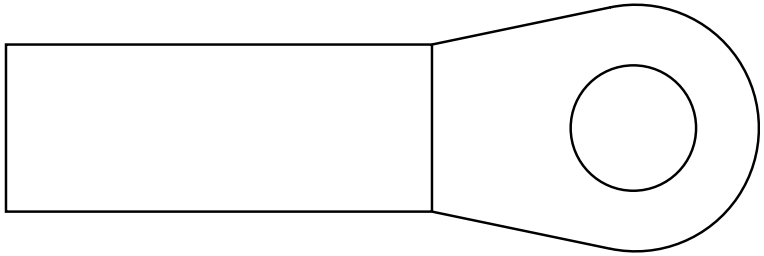

Mates BTRY-INTL_925CCA-BTRY-00-0 3A

Name	Terminal Part Number	V-Min	Name	Wire Part Number	Wire CSA	Wire Spec	Wire Material description	Wire Color Description	Wire Length	End2 Terminal Part Number	End2 Pin Name	End2 Connector
A	-	-	14	2645962 R1	49.99	0.0	SGX NFLEX 125	RED	700.0	-	A	K02-6301-MITS
A	-	-	N14A	2645961 R1	49.99	0.0	SGR 125	RED	625.0	-	-	-
A	-	-	14	2645962 R1	49.99	0.0	SGX NFLEX 125	RED	700.0	-	-	-
A	-	-	14	2645962 R1	49.99	0.0	SGX NFLEX 125	RED	700.0	-	A	POS_1

Name	Terminal Part Number	V-Min	Name	Wire Part Number	Wire CSA	Wire Spec	Wire Material description	Wire Color Description	Wire Length	End2 Terminal Part Number	End2 Pin Name	End2 Connector
A	-	-	14	2645962 R1	49.99	0.0	SGX NFLEX 125	RED	700.0	-	A	6051_B
A	-	-	1/0	2645962 R1	49.99	0.0	SGX NFLEX 125	RED	210.0	-	A	6051_B
A	-	-	14	2645962 R1	49.99	0.0	SGX NFLEX 125	RED	700.0	-	A	K01-6301-MITS
A	-	-	1/0	2645962 R1	49.99	0.0	SGX NFLEX 125	RED	210.0	-	-	-
A	-	-	14	2645962 R1	49.99	0.0	SGX NFLEX 125	RED	700.0	-	A	K02-6301-DELCO
A	-	-	14	2645962 R1	49.99	0.0	SGX NFLEX 125	RED	700.0	-	A	K01-6301-DEL

Connector Name	6051_A
Part Number	3866817C1
Instances	LT/RH A26 - Battery International (3) 12V:Diagram1 LT/RH A26 - Battery International (4) 12V:Diagram1 LT/RH/LoneStar X15 - Battery International (8) 12V:Diagram1
Mates	BTRY-INTL_925CCA-BTRY-00-0 3A

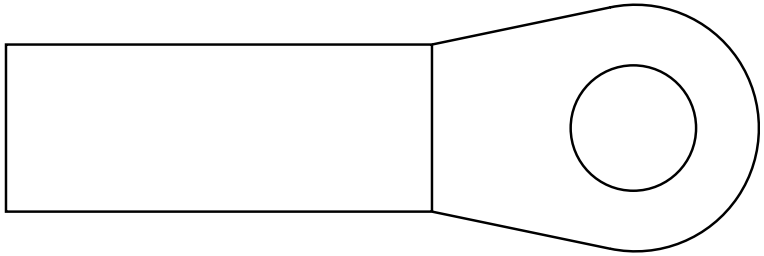

Name	Terminal Part Number	V-Min	Name	Wire Part Number	Wire CSA	Wire Spec	Wire Material description	Wire Color Description	Wire Length	End2 Terminal Part Number	End2 Pin Name	End2 Connect or
A	-	-	1/0	2645962 R1	49.99	0.0	SGX NFLEX 125	RED	210.0	-	A	6051_B
A	-	-	14	2645962 R1	49.99	0.0	SGX NFLEX 125	RED	700.0	-	A	6051_B
A	-	-	1/0	2645962 R1	49.99	0.0	SGX NFLEX 125	RED	210.0	-	-	-
A	-	-	14	2645962 R1	49.99	0.0	SGX NFLEX 125	RED	700.0	-	A	6049_D

Connector Name	6051_B
Part Number	3866817C1
Instances	LT/RH - A26/X15 - Maxwell 12V Ultracapacitor Engine Start Module (ESM):Diagram1
Mates	DEV180305

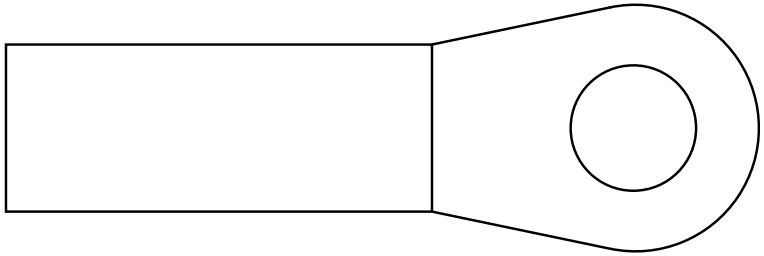

Name	Terminal Part Number	V-Min	Name	Wire Part Number	Wire CSA	Wire Spec	Wire Material description	Wire Color Description	Wire Length	End2 Terminal Part Number	End2 Pin Name	End2 Connect or
A	-	-	WIRE416321	-	0.0	-	-	-	0.0	-	A	6049_C

Connector Name	6051_B
Part Number	3866817C1
Instances	LT/RH - A26/X15 - Maxwell 12V Ultracapacitor Engine Start Module (ESM):Diagram1
Mates	DEV180297

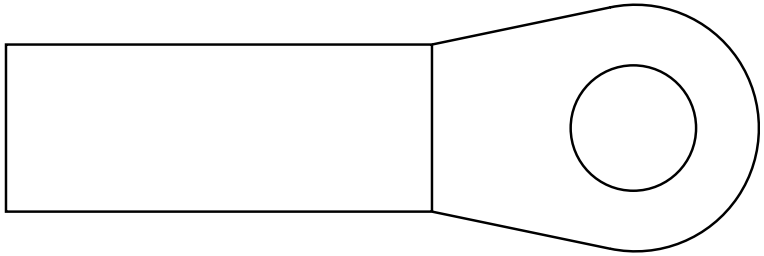

Name	Terminal Part Number	V-Min	Name	Wire Part Number	Wire CSA	Wire Spec	Wire Material description	Wire Color Description	Wire Length	End2 Terminal Part Number	End2 Pin Name	End2 Connect or
A	-	-	WIRE416312	-	0.0	-	-	-	0.0	-	A	6051_C

Connector Name	6051_B
Part Number	3866817C1
Instances	LT/RH A26 - Battery International (3) 12V:Diagram1 LT/RH A26 - Battery International (4) 12V:Diagram1 LT/RH/LoneStar X15 - Battery International (8) 12V:Diagram1
Mates	BTRY-INTL_925CCA-BTRY-00-0 3B

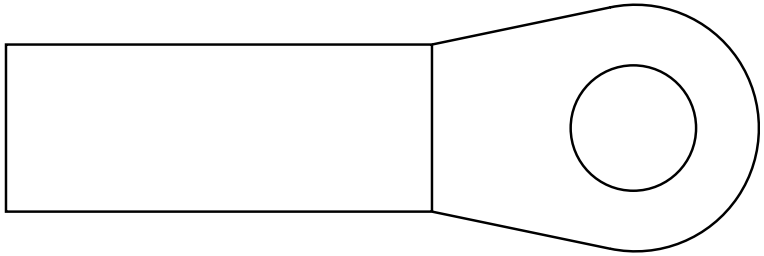

Name	Terminal Part Number	V-Min	Name	Wire Part Number	Wire CSA	Wire Spec	Wire Material description	Wire Color Description	Wire Length	End2 Terminal Part Number	End2 Pin Name	End2 Connect or
A	-	-	1/0	2645962 R1	49.99	0.0	SGX NFLEX 125	RED	210.0	-	A	6051_A
A	-	-	14	2645962 R1	49.99	0.0	SGX NFLEX 125	RED	700.0	-	A	6051_A
A	-	-	1/0	2645962 R1	49.99	0.0	SGX NFLEX 125	RED	210.0	-	-	-
A	-	-	14	2645962 R1	49.99	0.0	SGX NFLEX 125	RED	700.0	-	-	-

Connector Name	6051_B
Part Number	3866817C1
Instances	LT/RH - A26 - Battery International (8) 12V:Diagram1 LT/RH/LoneStar X15 - Battery International (3) 12V:Diagram1 LT/RH/LoneStar X15 - Battery International (4) 12V:Diagram1
Mates	BTRY-INTL_925CCA-BTRY-00-0 3B

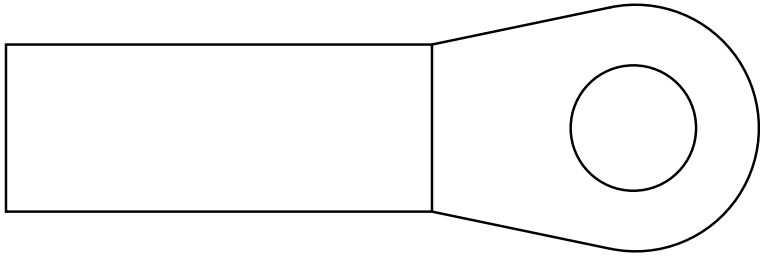

Name	Terminal Part Number	V-Min	Name	Wire Part Number	Wire CSA	Wire Spec	Wire Material description	Wire Color Description	Wire Length	End2 Terminal Part Number	End2 Pin Name	End2 Connect or
A	-	-	14	2645962 R1	49.99	0.0	SGX NFLEX 125	RED	700.0	-	A	6051_A
A	-	-	1/0	2645962 R1	49.99	0.0	SGX NFLEX 125	RED	210.0	-	A	6051_A
A	-	-	14	2645962 R1	49.99	0.0	SGX NFLEX 125	RED	700.0	-	A	6051_C
A	-	-	1/0	2645962 R1	49.99	0.0	SGX NFLEX 125	RED	210.0	-	-	-

Connector Name	6051_C
Part Number	3866817C1
Instances	LT/RH - A26/X15 - Maxwell 12V Ultracapacitor Engine Start Module (ESM):Diagram1
Mates	DEV180299

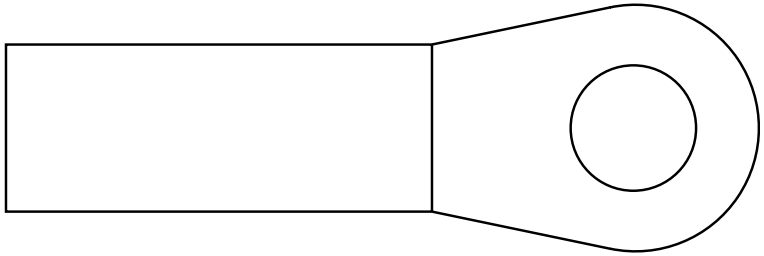

Name	Terminal Part Number	V-Min	Name	Wire Part Number	Wire CSA	Wire Spec	Wire Material description	Wire Color Description	Wire Length	End2 Terminal Part Number	End2 Pin Name	End2 Connect or
A	-	-	WIRE416312	-	0.0	-	-	-	0.0	-	A	6051_B
A	-	-	WIRE416320	-	0.0	-	-	-	0.0	-	A	6049_C

Connector Name	6051_C
Part Number	3866817C1
Instances	LT/RH A26 - Battery International (3) 12V:Diagram1 LT/RH A26 - Battery International (4) 12V:Diagram1 LT/RH/LoneStar X15 - Battery International (8) 12V:Diagram1
Mates	BTRY-INTL_925CCA-BTRY-00-0 3C

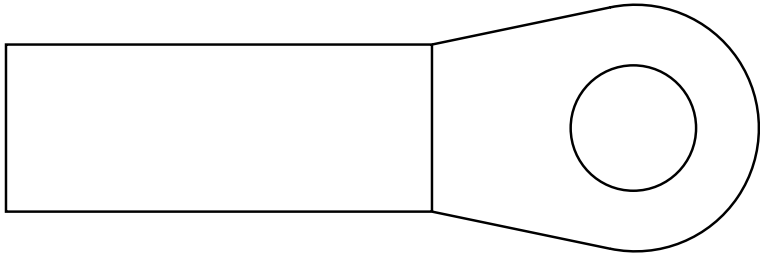

Name	Terminal Part Number	V-Min	Name	Wire Part Number	Wire CSA	Wire Spec	Wire Material description	Wire Color Description	Wire Length	End2 Terminal Part Number	End2 Pin Name	End2 Connect or
A	-	-	14	2645962 R1	49.99	0.0	SGX NFLEX 125	RED	700.0	-	-	-
A	-	-	1/0	2645962 R1	49.99	0.0	SGX NFLEX 125	RED	210.0	-	A	6051_D
A	-	-	1/0	2645962 R1	49.99	0.0	SGX NFLEX 125	RED	210.0	-	-	-

Connector Name	6051_C
Part Number	3866817C1
Instances	LT/RH - A26 - Battery International (8) 12V:Diagram1 LT/RH/LoneStar X15 - Battery International (3) 12V:Diagram1 LT/RH/LoneStar X15 - Battery International (4) 12V:Diagram1
Mates	BTRY-INTL_925CCA-BTRY-00-0 3C

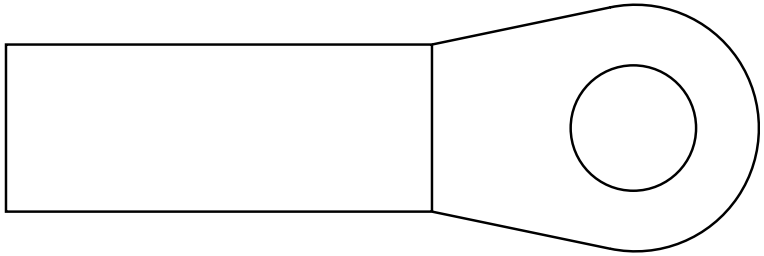

Name	Terminal Part Number	V-Min	Name	Wire Part Number	Wire CSA	Wire Spec	Wire Material description	Wire Color Description	Wire Length	End2 Terminal Part Number	End2 Pin Name	End2 Connect or
A	-	-	14	2645962 R1	49.99	0.0	SGX NFLEX 125	RED	700.0	-	-	-
A	-	-	1/0	2645962 R1	49.99	0.0	SGX NFLEX 125	RED	210.0	-	-	-
A	-	-	14	2645962 R1	49.99	0.0	SGX NFLEX 125	RED	700.0	-	A	6051_B
A	-	-	1/0	2645962 R1	49.99	0.0	SGX NFLEX 125	RED	210.0	-	A	6051_D

Connector Name	6051_D
Part Number	3866817C1
Instances	LT/RH A26 - Battery International (4) 12V:Diagram1 LT/RH/LoneStar X15 - Battery International (8) 12V:Diagram1
Mates	BTRY-INTL_925CCA-BTRY-00-0 3D

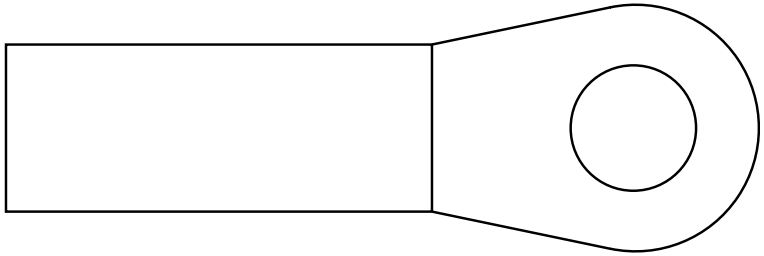

Name	Terminal Part Number	V-Min	Name	Wire Part Number	Wire CSA	Wire Spec	Wire Material description	Wire Color Description	Wire Length	End2 Terminal Part Number	End2 Pin Name	End2 Connect or
A	-	-	1/0	2645962 R1	49.99	0.0	SGX NFLEX 125	RED	210.0	-	A	6051_C
A	-	-	1/0	2645962 R1	49.99	0.0	SGX NFLEX 125	RED	210.0	-	-	-

Connector Name	6051_D
Part Number	3866817C1
Instances	LT/RH - A26 - Battery International (8) 12V:Diagram1 LT/RH/LoneStar X15 - Battery International (4) 12V:Diagram1
Mates	BTRY-INTL_925CCA-BTRY-00-0 3D

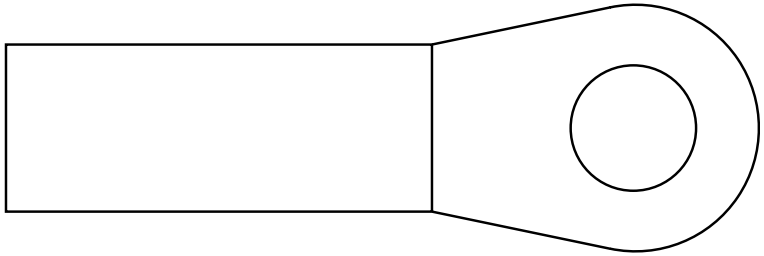

Name	Terminal Part Number	V-Min	Name	Wire Part Number	Wire CSA	Wire Spec	Wire Material description	Wire Color Description	Wire Length	End2 Terminal Part Number	End2 Pin Name	End2 Connect or
A	-	-	1/0	2645962 R1	49.99	0.0	SGX NFLEX 125	RED	210.0	-	-	-
A	-	-	1/0	2645962 R1	49.99	0.0	SGX NFLEX 125	RED	210.0	-	A	6051_C

Connector Name	6051_E
Part Number	3866817C1
Instances	LT/RH - A26 - Battery International (8) 12V:Diagram1 LT/RH/LoneStar X15 - Battery International (8) 12V:Diagram1
Mates	BTRY-INTL_925CCA-BTRY-00-0 3E

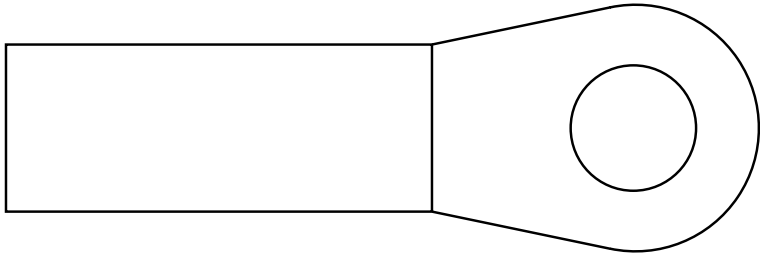

Name	Terminal Part Number	V-Min	Name	Wire Part Number	Wire CSA	Wire Spec	Wire Material description	Wire Color Description	Wire Length	End2 Terminal Part Number	End2 Pin Name	End2 Connect or
A	-	-	1/0	2645962 R1	49.99	0.0	SGX NFLEX 125	RED	210.0	-	-	-

Connector Name	6051_F
Part Number	3866817C1
Instances	LT/RH - A26 - Battery International (8) 12V:Diagram1 LT/RH/LoneStar X15 - Battery International (8) 12V:Diagram1
Mates	BTRY-INTL_925CCA-BTRY-00-0 3F

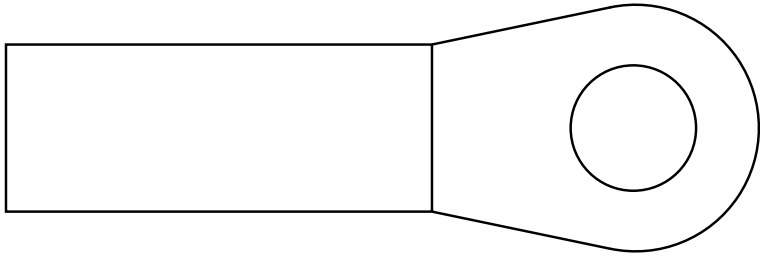

Name	Terminal Part Number	V-Min	Name	Wire Part Number	Wire CSA	Wire Spec	Wire Material description	Wire Color Description	Wire Length	End2 Terminal Part Number	End2 Pin Name	End2 Connect or
A	-	-	1/0	2645962 R1	49.99	0.0	SGX NFLEX 125	RED	210.0	-	-	-

Connector Name	6051_G
Part Number	3866817C1
Instances	LT/RH - A26 - Battery International (8) 12V:Diagram1 LT/RH/LoneStar X15 - Battery International (8) 12V:Diagram1
Mates	BTRY-INTL_925CCA-BTRY-00-0 3G

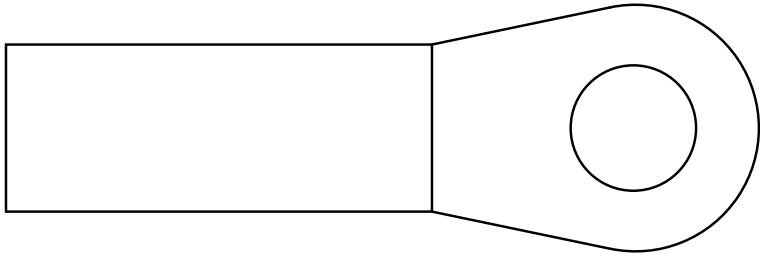

Name	Terminal Part Number	V-Min	Name	Wire Part Number	Wire CSA	Wire Spec	Wire Material description	Wire Color Description	Wire Length	End2 Terminal Part Number	End2 Pin Name	End2 Connect or
A	-	-	1/0	2645962 R1	49.99	0.0	SGX NFLEX 125	RED	210.0	-	-	-

Connector Name	6051_H
Part Number	3866817C1
Instances	LT/RH - A26 - Battery International (8) 12V:Diagram1 LT/RH/LoneStar X15 - Battery International (8) 12V:Diagram1
Mates	BTRY-INTL_925CCA-BTRY-00-0 3DH

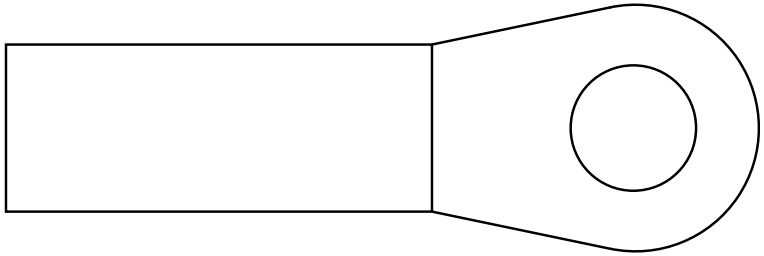

Name	Terminal Part Number	V-Min	Name	Wire Part Number	Wire CSA	Wire Spec	Wire Material description	Wire Color Description	Wire Length	End2 Terminal Part Number	End2 Pin Name	End2 Connect or
A	-	-	1/0	2645962 R1	49.99	0.0	SGX NFLEX 125	RED	210.0	-	-	-

Connector Name	6100D
Part Number	RING-M-8_0
Instances	LT/RH - A26 - Leece-Neville 320PAH Alternator:Diagram1 LT/RH - A26 - Leece-Neville 320PAH Alternator W/ Mitsubishi Starter:Diagram1
Mates	DEV-Leece_Neville_320PAH_A lternator-4004-01-03B

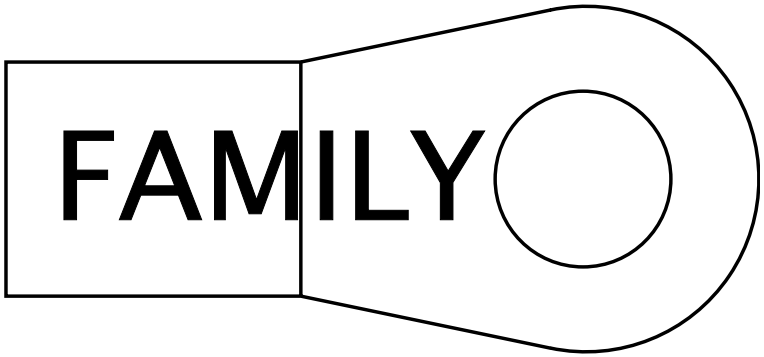

Name	Terminal Part Number	V-Min	Name	Wire Part Number	Wire CSA	Wire Spec	Wire Material description	Wire Color Description	Wire Length	End2 Terminal Part Number	End2 Pin Name	End2 Connect or
A	-	-	K2	2645964 R1	61.89	0.0	SGR 125	RED	2930.0	-	X	-

Connector Name	6100D
Part Number	RING-M-8_0
Instances	LT/RH - A26/X15 - Maxwell 12V Ultracapacitor Engine Start Module (ESM):Diagram1
Mates	DEV180305

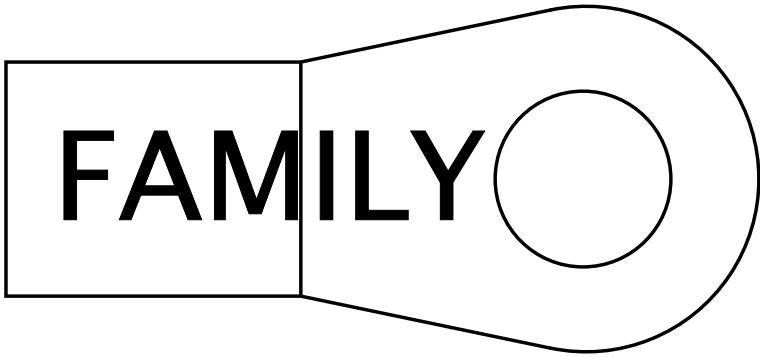

Name	Terminal Part Number	V-Min	Name	Wire Part Number	Wire CSA	Wire Spec	Wire Material description	Wire Color Description	Wire Length	End2 Terminal Part Number	End2 Pin Name	End2 Connect or
A	-	-	WIRE416322	-	0.0	-	-	-	0.0	-	A	6301

Connector Name	6100G
Part Number	RING-M-8_0
Instances	LT/RH - A26 - Bosch LH160_LH200 Alternator:Diagram1 LT/RH - A26 - Bosch LH160_LH200 Alternator W/ Mitsubishi Starter:Diagram1
Mates	DEV-Bosch_LH160_LG200_Alte rnator- 4004-01-01B

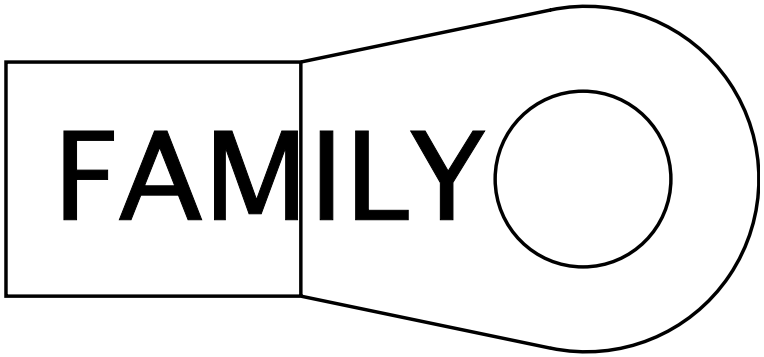

Name	Terminal Part Number	V-Min	Name	Wire Part Number	Wire CSA	Wire Spec	Wire Material description	Wire Color Description	Wire Length	End2 Terminal Part Number	End2 Pin Name	End2 Connect or
A	-	-	VM2	2645955 R1	32.19	2.0	SGR 125	RED	2955.0	-	X	-

Connector Name	6100H
Part Number	RING-M-8_0
Instances	LT/RH - A26/X15 - Maxwell 12V Ultracapacitor Engine Start Module (ESM):Diagram1
Mates	DEV-Delco_Remy_28SI_Altern ator-4004-01-05B

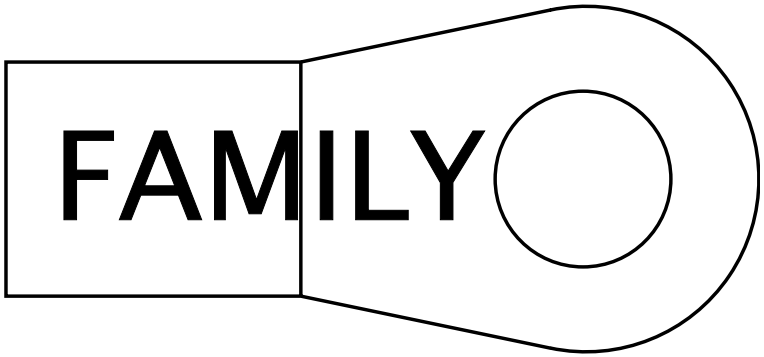

Name	Terminal Part Number	V-Min	Name	Wire Part Number	Wire CSA	Wire Spec	Wire Material description	Wire Color Description	Wire Length	End2 Terminal Part Number	End2 Pin Name	End2 Connect or
A	-	-	WIRE416314	-	0.0	-	-	-	0.0	-	1	Terminal Block if Required

Connector Name	6101D
Part Number	RING-M-10_0
Instances	LT/RH - A26 - Leece-Neville 320PAH Alternator:Diagram1 LT/RH - A26 - Leece-Neville 320PAH Alternator W/ Mitsubishi Starter:Diagram1
Mates	DEV-Leece_Neville_320PAH_A lternator-4004-01-03B

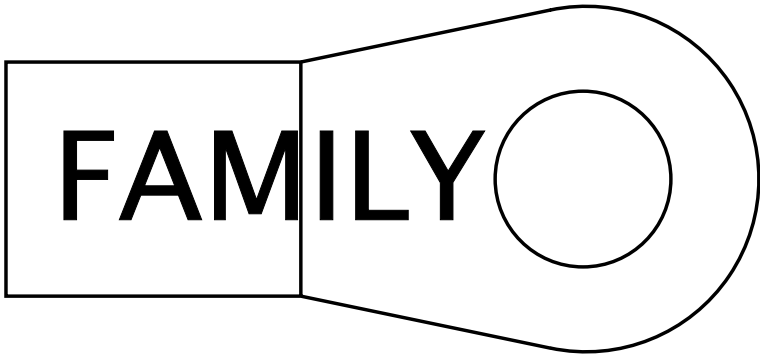

Name	Terminal Part Number	V-Min	Name	Wire Part Number	Wire CSA	Wire Spec	Wire Material description	Wire Color Description	Wire Length	End2 Terminal Part Number	End2 Pin Name	End2 Connect or
A	-	-	K2-G	2645940 R1	61.89	0.0	SGR 125	BLACK	2740.0	-	1	K01-6314

Connector Name	6101D_5
Part Number	RING-E-5-16_0
Instances	LT/RH - A26 - Delco Remy 40SI Alternator W/ Remote Sense Combination 1 W/ Mitsubishi Starter:Diagram1 LT/RH - A26 - Delco Remy 40SI Alternator W/ Remote Sense Combination 1:Diagram1
Mates	DEV-Delco_Remy_40SI_Altern ator-01-A26

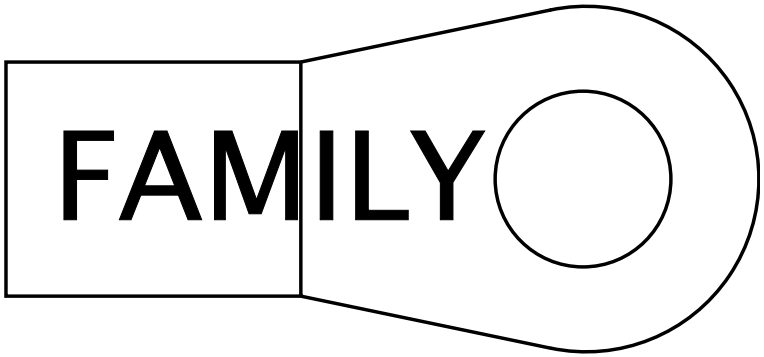

Name	Terminal Part Number	V-Min	Name	Wire Part Number	Wire CSA	Wire Spec	Wire Material description	Wire Color Description	Wire Length	End2 Terminal Part Number	End2 Pin Name	End2 Connect or
A	-	-	LC2	2645958 R1	39.43	1.0	SGR 125	RED	2960.0	-	X	-

Connector Name	6101D_6
Part Number	RING-E-5-16_0
Instances	LT/RH - A26 - Delco Remy 40SI Alternator W/ Remote Sense Combination 2:Diagram1 LT/RH - A26 - Delco Remy 40SI Alternator W/ Remote Sense Combination 2 W/ Mitsubishi Starter:Diagram1
Mates	DEV-Delco_Remy_40SI_Altern ator-01-A26

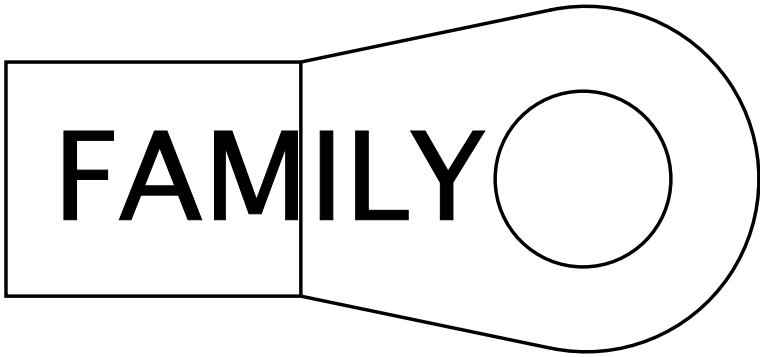

Name	Terminal Part Number	V-Min	Name	Wire Part Number	Wire CSA	Wire Spec	Wire Material description	Wire Color Description	Wire Length	End2 Terminal Part Number	End2 Pin Name	End2 Connect or
A	-	-	DL2	2645964 R1	61.89	0.0	SGR 125	RED	2960.0	-	X	-

Connector Name	6101D_7
Part Number	RING-M-8_0
Instances	LT/RH - A26 - Leece-Neville AVI160 Alternator N/ Remote Sense:Diagram1 LT/RH - A26 - Leece-Neville AVI160 Alternator N/ Remote Sense W/ Mitsubishi Starter:Diagram1
Mates	DEV-Leece_Neville_AVI_160_ Alternator-4004-01-02B

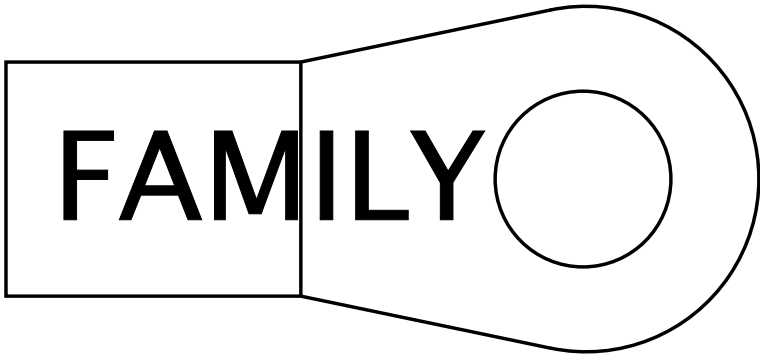

Name	Terminal Part Number	V-Min	Name	Wire Part Number	Wire CSA	Wire Spec	Wire Material description	Wire Color Description	Wire Length	End2 Terminal Part Number	End2 Pin Name	End2 Connect or
A	-	-	VG2	2645955 R1	32.19	2.0	SGR 125	RED	2925.0	-	X	-

Connector Name	6101G
Part Number	RING-M-6_0
Instances	LT/RH - A26 - Bosch LH160_LH200 Alternator:Diagram1 LT/RH - A26 - Bosch LH160_LH200 Alternator W/ Mitsubishi Starter:Diagram1
Mates	DEV-Bosch_LH160_LG200_Alte rnator- 4004-01-01B

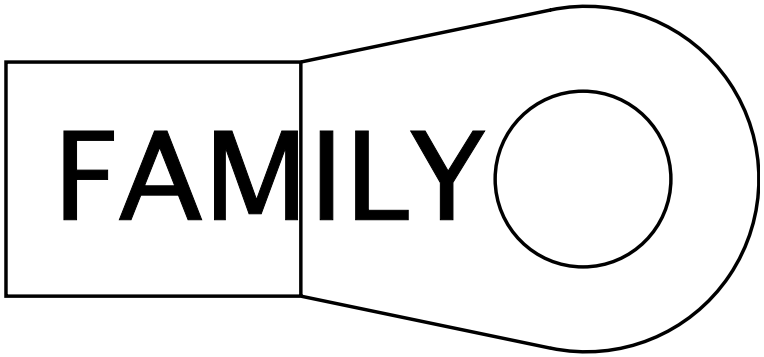

Name	Terminal Part Number	V-Min	Name	Wire Part Number	Wire CSA	Wire Spec	Wire Material description	Wire Color Description	Wire Length	End2 Terminal Part Number	End2 Pin Name	End2 Connect or
A	-	-	VM2-G	2645931 R1	32.19	2.0	SGR 125	BLACK	2900.0	-	1	K01-6314

Connector Name	6101H
Part Number	RING-M-6_0
Instances	LT/RH - A26/X15 - Maxwell 12V Ultracapacitor Engine Start Module (ESM):Diagram1
Mates	DEV-Delco_Remy_28SI_Altern ator-4004-01-05B

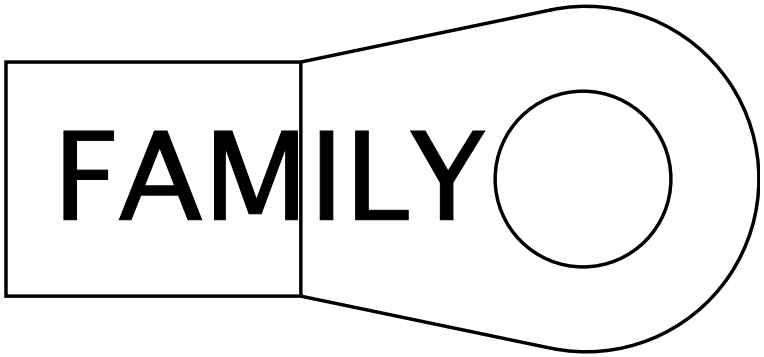

Name	Terminal Part Number	V-Min	Name	Wire Part Number	Wire CSA	Wire Spec	Wire Material description	Wire Color Description	Wire Length	End2 Terminal Part Number	End2 Pin Name	End2 Connect or
A	-	-	WIRE416318	-	0.0	-	-	-	0.0	-	1	Terminal Block if Required

Connector Name	6101_5
Part Number	RING-E-5-16_0
Instances	LT/RH - A26 - Delco Remy 40SI Alternator W/ Remote Sense Combination 1 W/ Mitsubishi Starter:Diagram1 LT/RH - A26 - Delco Remy 40SI Alternator W/ Remote Sense Combination 1:Diagram1
Mates	DEV-Delco_Remy_40SI_Altern ator-01-A26

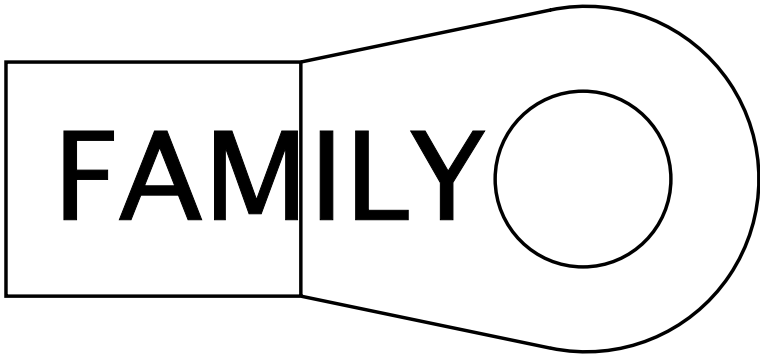

Name	Terminal Part Number	V-Min	Name	Wire Part Number	Wire CSA	Wire Spec	Wire Material description	Wire Color Description	Wire Length	End2 Terminal Part Number	End2 Pin Name	End2 Connect or
A	-	-	LC2-G	2645934 R1	39.43	1.0	SGR 125	BLACK	2880.0	-	1	K01-6314

Connector Name	6101_6
Part Number	RING-E-5-16_0
Instances	LT/RH - A26 - Delco Remy 40SI Alternator W/ Remote Sense Combination 2:Diagram1 LT/RH - A26 - Delco Remy 40SI Alternator W/ Remote Sense Combination 2 W/ Mitsubishi Starter:Diagram1
Mates	DEV-Delco_Remy_40SI_Altern ator-01-A26

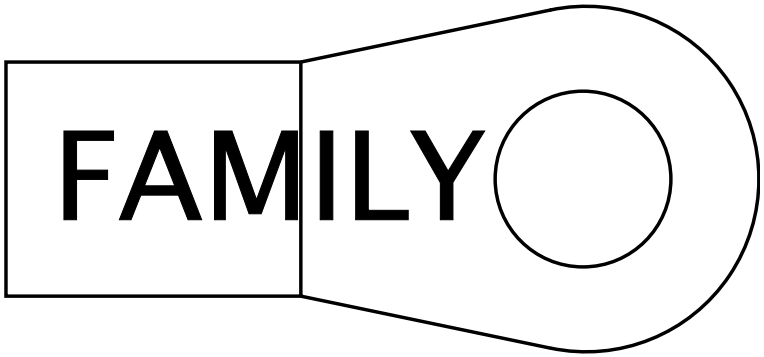

Name	Terminal Part Number	V-Min	Name	Wire Part Number	Wire CSA	Wire Spec	Wire Material description	Wire Color Description	Wire Length	End2 Terminal Part Number	End2 Pin Name	End2 Connect or
A	-	-	DL2-G	2645940 R1	61.89	0.0	SGR 125	BLACK	2880.0	-	1	K01-6314

Connector Name	6101_7
Part Number	RING-M-8_0
Instances	LT/RH - A26 - Leece-Neville AVI160 Alternator N/ Remote Sense:Diagram1 LT/RH - A26 - Leece-Neville AVI160 Alternator N/ Remote Sense W/ Mitsubishi Starter:Diagram1
Mates	DEV-Leece_Neville_AVI_160_ Alternator-4004-01-02B

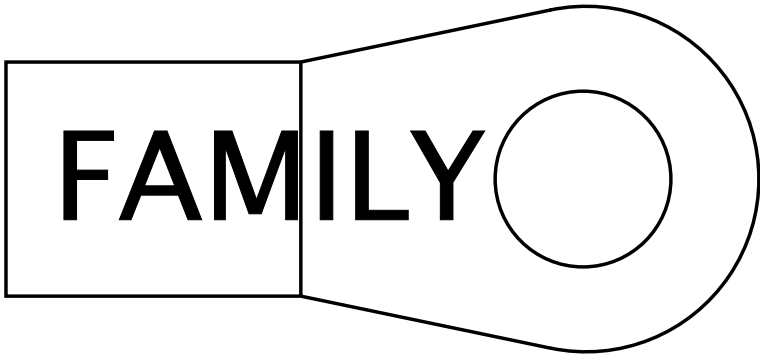

Name	Terminal Part Number	V-Min	Name	Wire Part Number	Wire CSA	Wire Spec	Wire Material description	Wire Color Description	Wire Length	End2 Terminal Part Number	End2 Pin Name	End2 Connect or
A	-	-	VG2-G	2645931 R1	32.19	2.0	SGR 125	BLACK	2880.0	-	1	K01-6314

Connector Name	6301
Part Number	RING-E-1-2_0
Instances	LT/RH - A26/X15 - Maxwell 12V Ultracapacitor Engine Start Module (ESM):Diagram1
Mates	MOT-STARTER-5024-01-03A

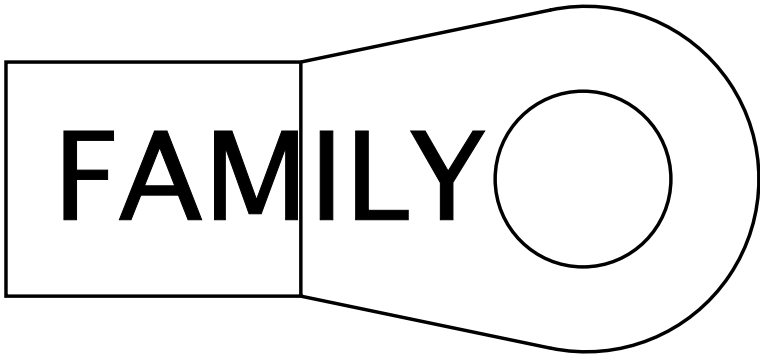

Name	Terminal Part Number	V-Min	Name	Wire Part Number	Wire CSA	Wire Spec	Wire Material description	Wire Color Description	Wire Length	End2 Terminal Part Number	End2 Pin Name	End2 Connect or
A	-	-	WIRE416322	-	0.0	-	-	-	0.0	-	A	6100D

Connector Name	6566
Part Number	6113338C1
Instances	LT/RH A26 - IP Underhood PDM:Diagram1 LT/RH/LoneStar X15 - IP Underhood PDM:Diagram1
Mates	MODU-PDM_UNDERHOOD-0003-00 -04

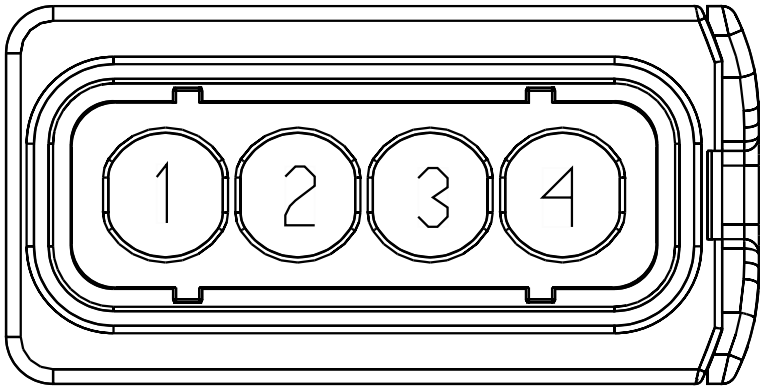

Name	Terminal Part Number	V-Min	Name	Wire Part Number	Wire CSA	Wire Spec	Wire Material description	Wire Color Description	Wire Length	End2 Terminal Part Number	End2 Pin Name	End2 Connect or
1	-	-	KA14AF	3510369 R1	4.81	10.0	Thin Wall XLPE Primary Cable	RED	170.0	-	-	-
1	-	-	KA14J2	2643698 R1	4.81	10.0	Std. Wall XLPE Primary Cable	RED	1590.0	-	-	-
3	-	-	KH14K	3510369 R1	4.81	10.0	Thin Wall XLPE Primary Cable	RED	2770.0	-	-	-
3	-	-	VV14N	2643698 R1	4.81	10.0	Std. Wall XLPE Primary Cable	RED	4495.0	-	-	-

Connector Name	6567
Part Number	6113341C1
Instances	LT/RH A26 - IP Underhood PDM:Diagram1 LT/RH/LoneStar X15 - IP Underhood PDM:Diagram1
Mates	MODU-PDM_UNDERHOOD-0003-00 -04

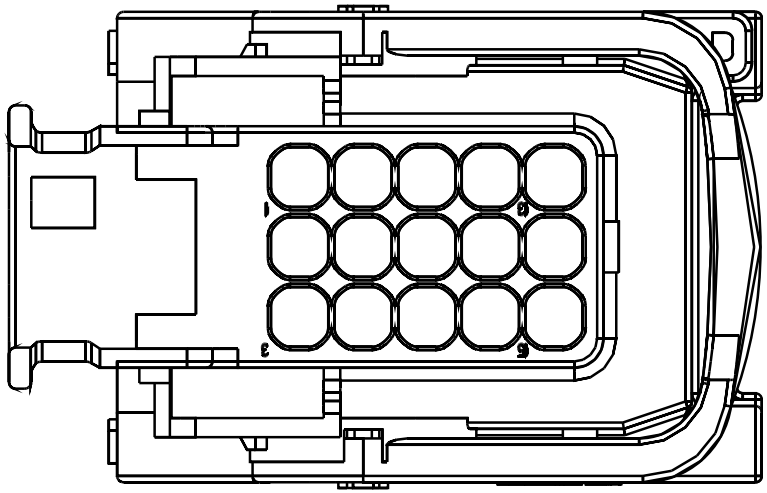

Name	Terminal Part Number	V-Min	Name	Wire Part Number	Wire CSA	Wire Spec	Wire Material description	Wire Color Description	Wire Length	End2 Terminal Part Number	End2 Pin Name	End2 Connect or
1	-	-	KA14B	3510366 R1	1.16	16.0	Thin Wall XLPE Primary Cable	RED	3130.0	-	-	-
4	-	-	KL14B	3510366 R1	1.16	16.0	Thin Wall XLPE Primary Cable	RED	2460.0	-	-	-
4	-	-	KG14B	3510366 R1	1.16	16.0	Thin Wall XLPE Primary Cable	RED	3225.0	-	-	-
7	-	-	KL14A	2643759 R1	0.79	18.0	Std. Wall XLPE Primary Cable	RED	4125.0	-	-	-

Name	Terminal Part Number	V-Min	Name	Wire Part Number	Wire CSA	Wire Spec	Wire Material description	Wire Color Description	Wire Length	End2 Terminal Part Number	End2 Pin Name	End2 Connector
7	-	-	KH14A	3510368 R1	3.01	12.0	Thin Wall XLPE Primary Cable	RED	2465.0	-	-	-
7	-	-	XV92#110	3510368 R1	3.01	12.0	Thin Wall XLPE Primary Cable	RED	3665.0	-	-	-
7	-	-	KG14A	3510366 R1	1.16	16.0	Thin Wall XLPE Primary Cable	RED	3225.0	-	-	-
7	-	-	LJ14A	3510368 R1	3.01	12.0	Thin Wall XLPE Primary Cable	RED	3890.0	-	-	-
7	-	-	TD92A170	2643686 R1	1.91	14.0	Std. Wall XLPE Primary Cable	RED	3915.0	-	-	-
13	-	-	KA14D	3510368 R1	3.01	12.0	Thin Wall XLPE Primary Cable	RED	2700.0	-	-	-

Connector Name 670A/670B

Part Number 3573078C1

Instances Engine Private J1939 A26:Engine Private J1939 A26
Engine Private J1939 X15:Engine Private J1939 X15

Mates 670A/670B

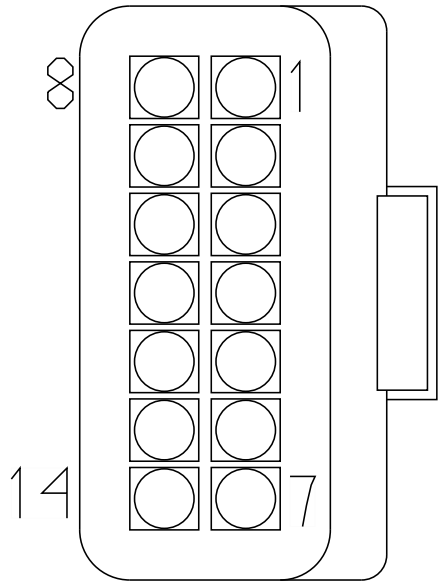

Name	Terminal Part Number	V-Min	Name	Wire Part Number	Wire CSA	Wire Spec	Wire Material description	Wire Color Description	Wire Length	End2 Terminal Part Number	End2 Pin Name	End2 Connect or
9	-	-	WIRE234429	-	0.0	-	-	-	0.0	-	PIN1	-
9	-	-	WIRE234439	-	0.0	-	-	-	0.0	-	2	8500
10	-	-	WIRE234430	-	0.0	-	-	-	0.0	-	PIN1	-
10	-	-	WIRE234441	-	0.0	-	-	-	0.0	-	9	8500
13	-	-	WIRE234431	-	0.0	-	-	-	0.0	-	13	674B
13	-	-	WIRE234442	-	0.0	-	-	-	0.0	-	13	674B
14	-	-	WIRE234432	-	0.0	-	-	-	0.0	-	14	674B
14	-	-	WIRE234443	-	0.0	-	-	-	0.0	-	14	674B

Connector Name	6704
Part Number	3551896C1
Instances	LT/RH A26 - Powertrain Ground Splice Packs - 6704:Diagram1 LT/RH/LoneStar X15 - Powertrain Ground Splice Packs - 6704:Diagram1
Mates	SP-N13-0003-00-10-K0A

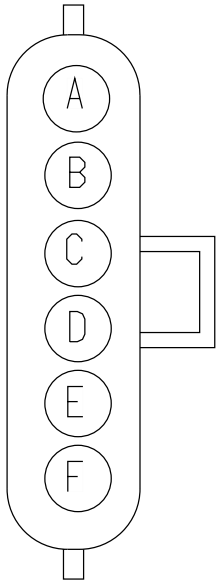

Name	Terminal Part Number	V-Min	Name	Wire Part Number	Wire CSA	Wire Spec	Wire Material description	Wire Color Description	Wire Length	End2 Terminal Part Number	End2 Pin Name	End2 Connect or
A	-	-	KA10H2	3510363 R1	4.81	10.0	Thin Wall XLPE Primary Cable	WHITE	225.0	-	-	-
A	-	-	KA92F16	3510361 R1	1.91	14.0	Thin Wall XLPE Primary Cable	WHITE	1235.0	-	-	-
B	-	-	TJ95-GB	3510294 R1	1.16	16.0	Thin Wall XLPE Primary Cable	BLACK	1185.0	-	-	-
B	-	-	TK95-GB	3510294 R1	1.16	16.0	Thin Wall XLPE Primary Cable	BLACK	465.0	-	-	-

Name	Terminal Part Number	V-Min	Name	Wire Part Number	Wire CSA	Wire Spec	Wire Material description	Wire Color Description	Wire Length	End2 Terminal Part Number	End2 Pin Name	End2 Connector
B	-	-	AS10-H	3510363 R1	4.81	10.0	Thin Wall XLPE Primary Cable	WHITE	375.0	-	-	-
B	-	-	AL10-H	3510363 R1	4.81	10.0	Thin Wall XLPE Primary Cable	WHITE	375.0	-	-	-
B	-	-	AM10-H	3510363 R1	4.81	10.0	Thin Wall XLPE Primary Cable	WHITE	375.0	-	-	-
C	-	-	KA95-GC	3510293 R1	0.79	18.0	Thin Wall XLPE Primary Cable	BLACK	1195.0	-	-	-
C	-	-	KA41-GD	2643787 R1	3.01	12.0	Std. Wall XLPE Primary Cable	WHITE	160.0	-	-	-
D	-	-	TM10-G	3510363 R1	4.81	10.0	Thin Wall XLPE Primary Cable	WHITE	125.0	-	-	-
D	-	-	TL10-G	3510363 R1	4.81	10.0	Thin Wall XLPE Primary Cable	WHITE	125.0	-	-	-
D	-	-	TS10-G	3510363 R1	4.81	10.0	Thin Wall XLPE Primary Cable	WHITE	125.0	-	-	-

Name	Terminal Part Number	V-Min	Name	Wire Part Number	Wire CSA	Wire Spec	Wire Material description	Wire Color Description	Wire Length	End2 Terminal Part Number	End2 Pin Name	End2 Connector
D	-	-	TD92-G	2643689 R1	1.91	14.0	Std. Wall XLPE Primary Cable	WHITE	1925.0	-	-	-
D	-	-	XV92-G	3510362 R1	3.01	12.0	Thin Wall XLPE Primary Cable	WHITE	1650.0	-	-	-
E	-	-	KA10H3	3510363 R1	4.81	10.0	Thin Wall XLPE Primary Cable	WHITE	225.0	-	-	-
E	-	-	KA41-GE	3510363 R1	4.81	10.0	Thin Wall XLPE Primary Cable	WHITE	235.0	-	X	-
F	-	-	KV92-G	3510362 R1	3.01	12.0	Thin Wall XLPE Primary Cable	WHITE	1430.0	-	-	-
F	-	-	KA41-GF	3510363 R1	4.81	10.0	Thin Wall XLPE Primary Cable	WHITE	235.0	-	X	-

Connector Name 674B

Part Number 6114577C1

Instances Engine Private J1939 A26:Engine Private J1939 A26
Engine Private J1939 X15:Engine Private J1939 X15
LT/RH - A26 - Selective Catalytic Reduction (SCR):Diagram1 - Heater & Supply Module Relays-Combination1
LT/RH - A26 - Selective Catalytic Reduction (SCR):Diagram2 - Supply Module, Sensor Table, Quality Sensor, DEF Tank Valve-Combination1
LT/RH/LoneStar - X15 - Selective Catalytic Reduction (SCR):Diagram1 - Heater & Supply Module Relays-Combination1
LT/RH/LoneStar - X15 - Selective Catalytic Reduction (SCR):Diagram2 - Supply Module, Sensor Table, Quality Sensor, DEF Tank Valve-Combination1

Mates 674

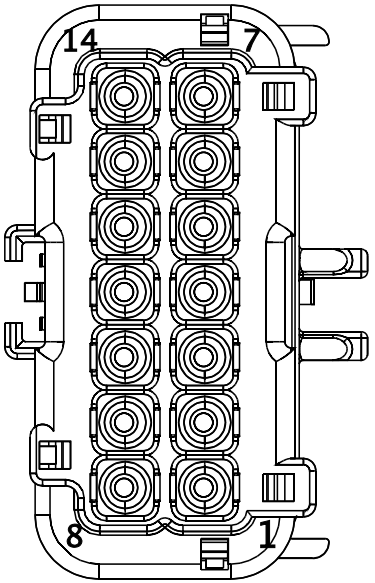

Name	Terminal Part Number	V-Min	Name	Wire Part Number	Wire CSA	Wire Spec	Wire Material description	Wire Color Description	Wire Length	End2 Terminal Part Number	End2 Pin Name	End2 Connect or
1	-	-	TK95E	3510328 R1	0.53	20.0	Thin Wall XLPE Primary Cable	TAN	1150.0	-	54	K02-6000
1	-	-	AK95E	3510328 R1	0.53	20.0	Thin Wall XLPE Primary Cable	TAN	1610.0	-	2	K01-6019
2	-	-	TK95F	3510328 R1	0.53	20.0	Thin Wall XLPE Primary Cable	TAN	1150.0	-	6	K02-6000
2	-	-	AK95F	3510329 R1	0.79	18.0	Thin Wall XLPE Primary Cable	TAN	1460.0	-	4	K01-6018

Name	Terminal Part Number	V-Min	Name	Wire Part Number	Wire CSA	Wire Spec	Wire Material description	Wire Color Description	Wire Length	End2 Terminal Part Number	End2 Pin Name	End2 Connector
3	-	-	TK95H	3510329 R1	0.79	18.0	Thin Wall XLPE Primary Cable	TAN	1170.0	-	1	K02-8500
3	-	-	AK95H	3510329 R1	0.79	18.0	Thin Wall XLPE Primary Cable	TAN	1460.0	-	58	K01-6018
4	-	-	TK95AR1	3510329 R1	0.79	18.0	Thin Wall XLPE Primary Cable	TAN	210.0	-	X	-
4	-	-	AK95AR1	3510329 R1	0.79	18.0	Thin Wall XLPE Primary Cable	TAN	210.0	-	PIN1	-
5	-	-	TK95AC	3510328 R1	0.53	20.0	Thin Wall XLPE Primary Cable	TAN	1150.0	-	82	K02-6000
5	-	-	CD95AC	3510328 R1	0.53	20.0	Thin Wall XLPE Primary Cable	TAN	1250.0	-	X	-
5	-	-	CB95GE	3510329 R1	0.79	18.0	Thin Wall XLPE Primary Cable	TAN	1460.0	-	1	K01-6018
6	-	-	TK95AB	3510329 R1	0.79	18.0	Thin Wall XLPE Primary Cable	TAN	720.0	-	X	-

Name	Terminal Part Number	V-Min	Name	Wire Part Number	Wire CSA	Wire Spec	Wire Material description	Wire Color Description	Wire Length	End2 Terminal Part Number	End2 Pin Name	End2 Connector
6	-	-	AK95AB	3510329 R1	0.79	18.0	Thin Wall XLPE Primary Cable	TAN	1460.0	-	28	K01-6018
7	-	-	TK95AS1	3510329 R1	0.79	18.0	Thin Wall XLPE Primary Cable	TAN	240.0	-	X	-
7	-	-	AK95AS1	3510329 R1	0.79	18.0	Thin Wall XLPE Primary Cable	TAN	240.0	-	X	-
8	-	-	TK95AT1	3510329 R1	0.79	18.0	Thin Wall XLPE Primary Cable	TAN	330.0	-	X	-
8	-	-	AK95AT1	3510329 R1	0.79	18.0	Thin Wall XLPE Primary Cable	TAN	330.0	-	PIN1	-
9	-	-	TK95AU1	3510329 R1	0.79	18.0	Thin Wall XLPE Primary Cable	TAN	360.0	-	X	-
9	-	-	AK95AU1	3510329 R1	0.79	18.0	Thin Wall XLPE Primary Cable	TAN	360.0	-	X	-
10	-	-	TK95-GB	3510294 R1	1.16	16.0	Thin Wall XLPE Primary Cable	BLACK	465.0	-	-	-

Name	Terminal Part Number	V-Min	Name	Wire Part Number	Wire CSA	Wire Spec	Wire Material description	Wire Color Description	Wire Length	End2 Terminal Part Number	End2 Pin Name	End2 Connector
10	-	-	AM95-GB	3510294 R1	1.16	16.0	Thin Wall XLPE Primary Cable	BLACK	300.0	-	X	-
11	-	-	TM10-GL	3510359 R1	0.79	18.0	Thin Wall XLPE Primary Cable	WHITE	440.0	-	X	-
11	-	-	AM95-GL	3510294 R1	1.16	16.0	Thin Wall XLPE Primary Cable	BLACK	300.0	-	X	-
12	-	-	TM13AA	3510323 R1	0.79	18.0	Thin Wall XLPE Primary Cable	PINK	270.0	-	X	-
12	-	-	AM13AA	3510365 R1	0.79	18.0	Thin Wall XLPE Primary Cable	RED	270.0	-	X	-
13	-	-	WIRE234431	-	0.0	-	-	-	0.0	-	13	670A/670B
13	-	-	WIRE234442	-	0.0	-	-	-	0.0	-	13	670A/670B
14	-	-	WIRE234432	-	0.0	-	-	-	0.0	-	14	670A/670B
14	-	-	WIRE234443	-	0.0	-	-	-	0.0	-	14	670A/670B

Connector Name	6748
Part Number	3602454C1
Instances	Engine Private J1939 A26:Engine Private J1939 A26
Mates	CONN-EGNR_DIAGNOSTIC-0008- 01-02A

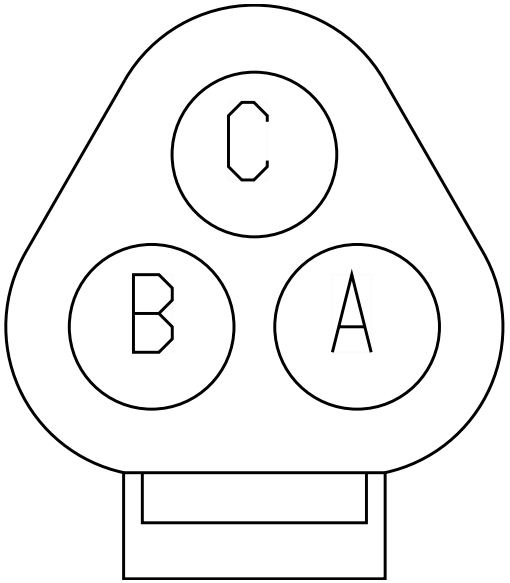

Name	Terminal Part Number	V-Min	Name	Wire Part Number	Wire CSA	Wire Spec	Wire Material description	Wire Color Description	Wire Length	End2 Terminal Part Number	End2 Pin Name	End2 Connect or
A	-	-	WIRE234428	-	0.0	-	-	-	0.0	-	PIN1	-
B	-	-	WIRE234427	-	0.0	-	-	-	0.0	-	PIN1	-

Connector Name	6748
Part Number	3602454C1
Instances	LT/RH - A26 - Interface Connector:Diagram1
Mates	DEV-AFT_TREATMENT_CONN-01

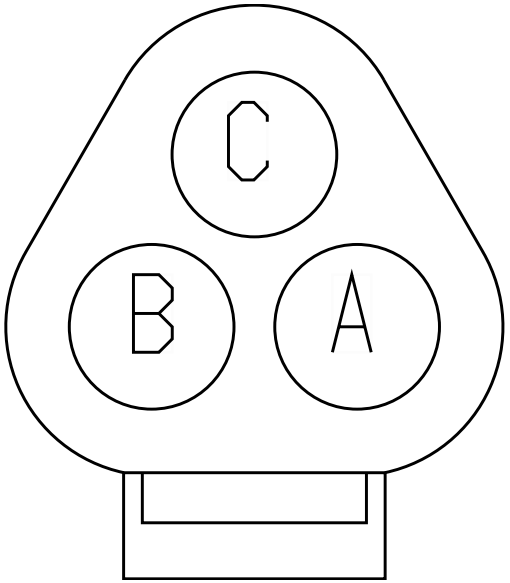

Name	Terminal Part Number	V-Min	Name	Wire Part Number	Wire CSA	Wire Spec	Wire Material description	Wire Color Description	Wire Length	End2 Terminal Part Number	End2 Pin Name	End2 Connect or
A	-	-	-	-	-	-	-	-	-	-	-	-
B	-	-	-	-	-	-	-	-	-	-	-	-

Connector Name	674
Part Number	6114576C1
Instances	Engine Private J1939 A26:Engine Private J1939 A26 Engine Private J1939 X15:Engine Private J1939 X15 LT/RH - A26 - Selective Catalytic Reduction (SCR):Diagram1 - Heater & Supply Module Relays-Combination1 LT/RH - A26 - Selective Catalytic Reduction (SCR):Diagram2 - Supply Module, Sensor Table, Quality Sensor, DEF Tank Valve-Combination1 LT/RH/LoneStar - X15 - Selective Catalytic Reduction (SCR):Diagram1 - Heater & Supply Module Relays-Combination1 LT/RH/LoneStar - X15 - Selective Catalytic Reduction (SCR):Diagram2 - Supply Module, Sensor Table, Quality Sensor, DEF Tank Valve-Combination1
Mates	674B

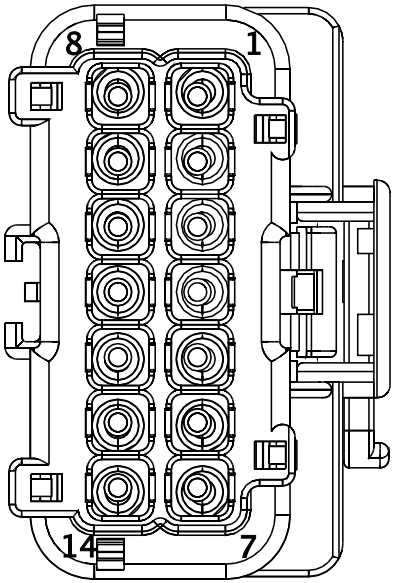

Name	Terminal Part Number	V-Min	Name	Wire Part Number	Wire CSA	Wire Spec	Wire Material description	Wire Color Description	Wire Length	End2 Terminal Part Number	End2 Pin Name	End2 Connector
1	-	-	95E	3510329 R1	0.79	18.0	Thin Wall XLPE Primary Cable	TAN	1090.0	-	-	-
2	-	-	95F	3510329 R1	0.79	18.0	Thin Wall XLPE Primary Cable	TAN	1090.0	-	-	-
3	-	-	95H	3510329 R1	0.79	18.0	Thin Wall XLPE Primary Cable	TAN	1090.0	-	-	-
4	-	-	95AR	3510329 R1	0.79	18.0	Thin Wall XLPE Primary Cable	TAN	1090.0	-	2	L01-680

Name	Terminal Part Number	V-Min	Name	Wire Part Number	Wire CSA	Wire Spec	Wire Material description	Wire Color Description	Wire Length	End2 Terminal Part Number	End2 Pin Name	End2 Connector
4	-	-	95AR	3510329 R1	0.79	18.0	Thin Wall XLPE Primary Cable	TAN	1090.0	-	2	L04-680
5	-	-	95AC	3510329 R1	0.79	18.0	Thin Wall XLPE Primary Cable	TAN	670.0	-	-	-
6	-	-	95AB	3510347 R1	0.79	18.0	Thin Wall XLPE Primary Cable	PURPLE	670.0	-	-	-
7	-	-	95AS	3510329 R1	0.79	18.0	Thin Wall XLPE Primary Cable	TAN	510.0	-	1	L01-675
7	-	-	95AS	3510329 R1	0.79	18.0	Thin Wall XLPE Primary Cable	TAN	510.0	-	1	L04-675
8	-	-	95AT	3510329 R1	0.79	18.0	Thin Wall XLPE Primary Cable	TAN	680.0	-	1	L01-676
8	-	-	95AT	3510329 R1	0.79	18.0	Thin Wall XLPE Primary Cable	TAN	680.0	-	1	L04-676
9	-	-	95AU	3510329 R1	0.79	18.0	Thin Wall XLPE Primary Cable	TAN	680.0	-	1	L01-677

Name	Terminal Part Number	V-Min	Name	Wire Part Number	Wire CSA	Wire Spec	Wire Material description	Wire Color Description	Wire Length	End2 Terminal Part Number	End2 Pin Name	End2 Connector
9	-	-	95AU	3510329 R1	0.79	18.0	Thin Wall XLPE Primary Cable	TAN	680.0	-	1	L04-677
10	-	-	95-G	3510330 R1	1.16	16.0	Thin Wall XLPE Primary Cable	TAN	330.0	-	10	674
10	-	-	95-G	3510330 R1	1.16	16.0	Thin Wall XLPE Primary Cable	TAN	330.0	-	X	-
11	-	-	10-GL	3510359 R1	0.79	18.0	Thin Wall XLPE Primary Cable	WHITE	530.0	-	-	-
12	-	-	13A	3510323 R1	0.79	18.0	Thin Wall XLPE Primary Cable	PINK	530.0	-	-	-
13	-	-	WIRE234433	-	0.0	-	-	-	0.0	-	PIN1	-
13	-	-	WIRE234444	-	0.0	-	-	-	0.0	-	PIN1	-
14	-	-	WIRE234434	-	0.0	-	-	-	0.0	-	PIN1	-
14	-	-	WIRE234445	-	0.0	-	-	-	0.0	-	PIN1	-

Connector Name 674

Part Number 6114576C1

Instances LT/RH - A26 - Selective Catalytic Reduction (SCR):Diagram1 - Heater & Supply Module Relays-Combination2
LT/RH - A26 - Selective Catalytic Reduction (SCR):Diagram1 - Heater & Supply Module Relays-Combination3
LT/RH - A26 - Selective Catalytic Reduction (SCR):Diagram2 - Supply Module, Sensor Table, Quality Sensor, DEF Tank Valve-Combination2
LT/RH - A26 - Selective Catalytic Reduction (SCR):Diagram2 - Supply Module, Sensor Table, Quality Sensor, DEF Tank Valve-Combination3
LT/RH/LoneStar - X15 - Selective Catalytic Reduction (SCR):Diagram1 - Heater & Supply Module Relays-Combination2
LT/RH/LoneStar - X15 - Selective Catalytic Reduction (SCR):Diagram1 - Heater & Supply Module Relays-Combination3
LT/RH/LoneStar - X15 - Selective Catalytic Reduction (SCR):Diagram2 - Supply Module, Sensor Table, Quality Sensor, DEF Tank Valve-Combination2
LT/RH/LoneStar - X15 - Selective Catalytic Reduction (SCR):Diagram2 - Supply Module, Sensor Table, Quality Sensor, DEF Tank Valve-Combination3

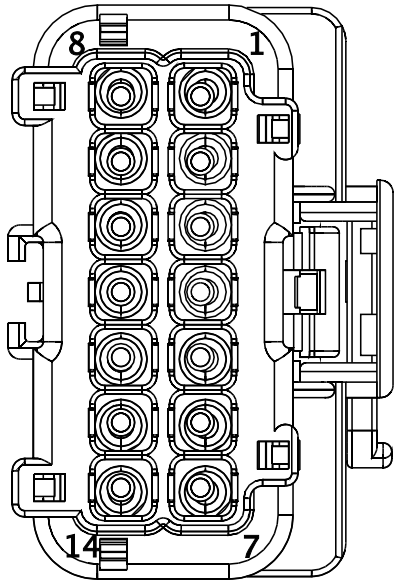

Mates 674

Name	Terminal Part Number	V-Min	Name	Wire Part Number	Wire CSA	Wire Spec	Wire Material description	Wire Color Description	Wire Length	End2 Terminal Part Number	End2 Pin Name	End2 Connect or
1	-	-	95E	3510329 R1	0.79	18.0	Thin Wall XLPE Primary Cable	TAN	1090.0	-	4	L03-680
1	-	-	95E	3510329 R1	0.79	18.0	Thin Wall XLPE Primary Cable	TAN	1090.0	-	4	L05-680

Name	Terminal Part Number	V-Min	Name	Wire Part Number	Wire CSA	Wire Spec	Wire Material description	Wire Color Description	Wire Length	End2 Terminal Part Number	End2 Pin Name	End2 Connector
2	-	-	95F	3510329 R1	0.79	18.0	Thin Wall XLPE Primary Cable	TAN	1090.0	-	3	L03-680
2	-	-	95F	3510329 R1	0.79	18.0	Thin Wall XLPE Primary Cable	TAN	1090.0	-	3	L05-680
3	-	-	95H	3510329 R1	0.79	18.0	Thin Wall XLPE Primary Cable	TAN	1090.0	-	1	L03-680
3	-	-	95H	3510329 R1	0.79	18.0	Thin Wall XLPE Primary Cable	TAN	1090.0	-	1	L05-680
4	-	-	95AR	3510329 R1	0.79	18.0	Thin Wall XLPE Primary Cable	TAN	1090.0	-	-	-
5	-	-	95AC	3510329 R1	0.79	18.0	Thin Wall XLPE Primary Cable	TAN	670.0	-	1	L03-691
5	-	-	95AC	3510329 R1	0.79	18.0	Thin Wall XLPE Primary Cable	TAN	670.0	-	1	L05-691
6	-	-	95AB	3510347 R1	0.79	18.0	Thin Wall XLPE Primary Cable	PURPLE	670.0	-	4	L03-691

Name	Terminal Part Number	V-Min	Name	Wire Part Number	Wire CSA	Wire Spec	Wire Material description	Wire Color Description	Wire Length	End2 Terminal Part Number	End2 Pin Name	End2 Connector
6	-	-	95AB	3510347 R1	0.79	18.0	Thin Wall XLPE Primary Cable	PURPLE	670.0	-	4	L05-691
7	-	-	95AS	3510329 R1	0.79	18.0	Thin Wall XLPE Primary Cable	TAN	510.0	-	-	-
8	-	-	95AT	3510329 R1	0.79	18.0	Thin Wall XLPE Primary Cable	TAN	680.0	-	-	-
9	-	-	95AU	3510329 R1	0.79	18.0	Thin Wall XLPE Primary Cable	TAN	680.0	-	-	-
10	-	-	95-G	3510330 R1	1.16	16.0	Thin Wall XLPE Primary Cable	TAN	330.0	-	10	674
10	-	-	95-G	3510330 R1	1.16	16.0	Thin Wall XLPE Primary Cable	TAN	330.0	-	-	-
11	-	-	10-GL	3510359 R1	0.79	18.0	Thin Wall XLPE Primary Cable	WHITE	530.0	-	3	L03-678
11	-	-	10-GL	3510359 R1	0.79	18.0	Thin Wall XLPE Primary Cable	WHITE	530.0	-	3	L05-678

Name	Terminal Part Number	V-Min	Name	Wire Part Number	Wire CSA	Wire Spec	Wire Material description	Wire Color Description	Wire Length	End2 Terminal Part Number	End2 Pin Name	End2 Connector
12	-	-	13A	3510323 R1	0.79	18.0	Thin Wall XLPE Primary Cable	PINK	530.0	-	4	L03-678
12	-	-	13A	3510323 R1	0.79	18.0	Thin Wall XLPE Primary Cable	PINK	530.0	-	4	L05-678

Connector Name 674

Part Number 6114577C1

Instances LT/RH - A26 - Selective Catalytic Reduction (SCR):Diagram1 - Heater & Supply Module Relays-Combination2
LT/RH - A26 - Selective Catalytic Reduction (SCR):Diagram1 - Heater & Supply Module Relays-Combination3
LT/RH - A26 - Selective Catalytic Reduction (SCR):Diagram2 - Supply Module, Sensor Table, Quality Sensor, DEF Tank Valve-Combination2
LT/RH - A26 - Selective Catalytic Reduction (SCR):Diagram2 - Supply Module, Sensor Table, Quality Sensor, DEF Tank Valve-Combination3
LT/RH/LoneStar - X15 - Selective Catalytic Reduction (SCR):Diagram1 - Heater & Supply Module Relays-Combination2
LT/RH/LoneStar - X15 - Selective Catalytic Reduction (SCR):Diagram1 - Heater & Supply Module Relays-Combination3
LT/RH/LoneStar - X15 - Selective Catalytic Reduction (SCR):Diagram2 - Supply Module, Sensor Table, Quality Sensor, DEF Tank Valve-Combination2
LT/RH/LoneStar - X15 - Selective Catalytic Reduction (SCR):Diagram2 - Supply Module, Sensor Table, Quality Sensor, DEF Tank Valve-Combination3

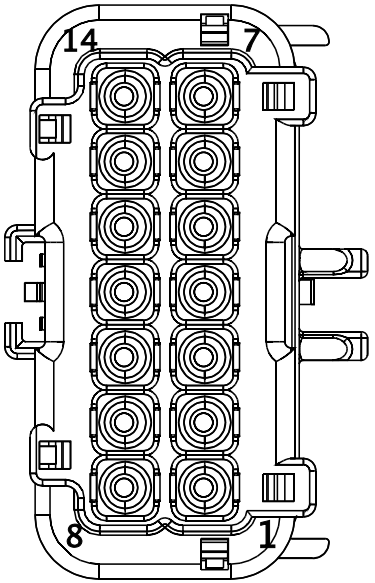

Mates 674

Name	Terminal Part Number	V-Min	Name	Wire Part Number	Wire CSA	Wire Spec	Wire Material description	Wire Color Description	Wire Length	End2 Terminal Part Number	End2 Pin Name	End2 Connect or
1	-	-	TJ95E	3510328 R1	0.53	20.0	Thin Wall XLPE Primary Cable	TAN	1870.0	-	54	K02-6000
1	-	-	AJ95E	3510328 R1	0.53	20.0	Thin Wall XLPE Primary Cable	TAN	2190.0	-	2	K01-6019

Name	Terminal Part Number	V-Min	Name	Wire Part Number	Wire CSA	Wire Spec	Wire Material description	Wire Color Description	Wire Length	End2 Terminal Part Number	End2 Pin Name	End2 Connector
2	-	-	TJ95F	3510328 R1	0.53	20.0	Thin Wall XLPE Primary Cable	TAN	1870.0	-	6	K02-6000
2	-	-	AJ95F	3510329 R1	0.79	18.0	Thin Wall XLPE Primary Cable	TAN	2040.0	-	4	K01-6018
3	-	-	TJ95H	3510329 R1	0.79	18.0	Thin Wall XLPE Primary Cable	TAN	1890.0	-	1	K02-8500
3	-	-	AJ95H	3510329 R1	0.79	18.0	Thin Wall XLPE Primary Cable	TAN	2040.0	-	58	K01-6018
4	-	-	TJ95AR1	3510329 R1	0.79	18.0	Thin Wall XLPE Primary Cable	TAN	930.0	-	X	-
4	-	-	AJ95AR1	3510329 R1	0.79	18.0	Thin Wall XLPE Primary Cable	TAN	790.0	-	X	-
5	-	-	TJ95AC	3510328 R1	0.53	20.0	Thin Wall XLPE Primary Cable	TAN	1870.0	-	82	K02-6000
5	-	-	CA95GE	3510329 R1	0.79	18.0	Thin Wall XLPE Primary Cable	TAN	2040.0	-	1	K01-6018

Name	Terminal Part Number	V-Min	Name	Wire Part Number	Wire CSA	Wire Spec	Wire Material description	Wire Color Description	Wire Length	End2 Terminal Part Number	End2 Pin Name	End2 Connector
6	-	-	TJ95AB	3510329 R1	0.79	18.0	Thin Wall XLPE Primary Cable	TAN	1440.0	-	X	-
6	-	-	AJ95AB	3510329 R1	0.79	18.0	Thin Wall XLPE Primary Cable	TAN	2040.0	-	28	K01-6018
7	-	-	TJ95AS1	3510329 R1	0.79	18.0	Thin Wall XLPE Primary Cable	TAN	960.0	-	X	-
7	-	-	AJ95AS1	3510329 R1	0.79	18.0	Thin Wall XLPE Primary Cable	TAN	820.0	-	X	-
8	-	-	TJ95AT1	3510329 R1	0.79	18.0	Thin Wall XLPE Primary Cable	TAN	1050.0	-	X	-
8	-	-	AJ95AT1	3510329 R1	0.79	18.0	Thin Wall XLPE Primary Cable	TAN	910.0	-	X	-
9	-	-	TJ95AU1	3510329 R1	0.79	18.0	Thin Wall XLPE Primary Cable	TAN	1080.0	-	X	-
9	-	-	AJ95AU1	3510329 R1	0.79	18.0	Thin Wall XLPE Primary Cable	TAN	940.0	-	X	-

Name	Terminal Part Number	V-Min	Name	Wire Part Number	Wire CSA	Wire Spec	Wire Material description	Wire Color Description	Wire Length	End2 Terminal Part Number	End2 Pin Name	End2 Connector
10	-	-	TJ95-GB	3510294 R1	1.16	16.0	Thin Wall XLPE Primary Cable	BLACK	1185.0	-	-	-
10	-	-	AS95-GB	3510294 R1	1.16	16.0	Thin Wall XLPE Primary Cable	BLACK	880.0	-	X	-
10	-	-	AL95-GB	3510294 R1	1.16	16.0	Thin Wall XLPE Primary Cable	BLACK	880.0	-	X	-
11	-	-	TL10-GL	3510359 R1	0.79	18.0	Thin Wall XLPE Primary Cable	WHITE	1160.0	-	X	-
11	-	-	TS10-GL	3510359 R1	0.79	18.0	Thin Wall XLPE Primary Cable	WHITE	1160.0	-	X	-
11	-	-	AL95-GL	3510294 R1	1.16	16.0	Thin Wall XLPE Primary Cable	BLACK	880.0	-	X	-
11	-	-	AS95-GL	3510293 R1	0.79	18.0	Thin Wall XLPE Primary Cable	BLACK	880.0	-	X	-
12	-	-	TL13AA	3510323 R1	0.79	18.0	Thin Wall XLPE Primary Cable	PINK	990.0	-	X	-

Name	Terminal Part Number	V-Min	Name	Wire Part Number	Wire CSA	Wire Spec	Wire Material description	Wire Color Description	Wire Length	End2 Terminal Part Number	End2 Pin Name	End2 Connector
12	-	-	TS13AA	3510323 R1	0.79	18.0	Thin Wall XLPE Primary Cable	PINK	240.0	-	X	-
12	-	-	AL13AA	3510365 R1	0.79	18.0	Thin Wall XLPE Primary Cable	RED	850.0	-	X	-
12	-	-	AS13AA	3510365 R1	0.79	18.0	Thin Wall XLPE Primary Cable	RED	850.0	-	X	-

Connector Name 678

Part Number 3991593C1

Instances Engine Private J1939 A26:Engine Private J1939 A26
Engine Private J1939 X15:Engine Private J1939 X15

Mates SNSR-DEF_TANK_QUAL-5041-01 -01A

Name	Terminal Part Number	V-Min	Name	Wire Part Number	Wire CSA	Wire Spec	Wire Material description	Wire Color Description	Wire Length	End2 Terminal Part Number	End2 Pin Name	End2 Connect or
1	-	-	WIRE234436	-	0.0	-	-	-	0.0	-	PIN1	-
1	-	-	WIRE234447	-	0.0	-	-	-	0.0	-	PIN1	-
2	-	-	WIRE234435	-	0.0	-	-	-	0.0	-	PIN1	-
2	-	-	WIRE234446	-	0.0	-	-	-	0.0	-	PIN1	-

Connector Name 681

Part Number 3683465C1

Instances Engine Private J1939 A26:Engine Private J1939 A26
Engine Private J1939 X15:Engine Private J1939 X15

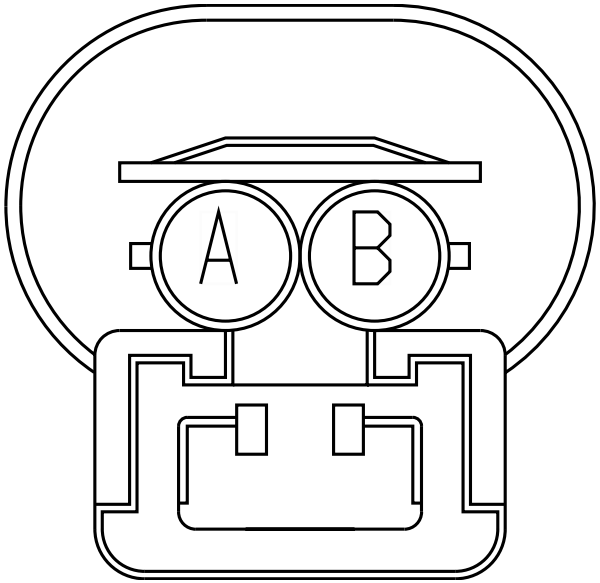

Name	Terminal Part Number	V-Min	Name	Wire Part Number	Wire CSA	Wire Spec	Wire Material description	Wire Color Description	Wire Length	End2 Terminal Part Number	End2 Pin Name	End2 Connect or
A	-	-	WIRE234438	-	0.0	-	-	-	0.0	-	PIN1	-
A	-	-	WIRE234449	-	0.0	-	-	-	0.0	-	PIN1	-
B	-	-	WIRE234437	-	0.0	-	-	-	0.0	-	PIN1	-
B	-	-	WIRE234448	-	0.0	-	-	-	0.0	-	PIN1	-

Connector Name	690
Part Number	3765646C92
Instances	LT/RH - A26 - Selective Catalytic Reduction (SCR):Diagram1 - Heater & Supply Module Relays-Combination1 LT/RH - A26 - Selective Catalytic Reduction (SCR):Diagram1 - Heater & Supply Module Relays-Combination2 LT/RH - A26 - Selective Catalytic Reduction (SCR):Diagram1 - Heater & Supply Module Relays-Combination3 LT/RH - A26 - Selective Catalytic Reduction (SCR):Diagram2 - Supply Module, Sensor Table, Quality Sensor, DEF Tank Valve-Combination1 LT/RH - A26 - Selective Catalytic Reduction (SCR):Diagram2 - Supply Module, Sensor Table, Quality Sensor, DEF Tank Valve-Combination2 LT/RH - A26 - Selective Catalytic Reduction (SCR):Diagram2 - Supply Module, Sensor Table, Quality Sensor, DEF Tank Valve-Combination3 LT/RH A26 - Powertrain Aftertreatment PDM:Diagram1 LT/RH/LoneStar - X15 - Selective Catalytic Reduction (SCR):Diagram1 - Heater & Supply Module Relays-Combination1 LT/RH/LoneStar - X15 - Selective Catalytic Reduction (SCR):Diagram1 - Heater & Supply Module Relays-Combination2 LT/RH/LoneStar - X15 - Selective Catalytic Reduction (SCR):Diagram1 - Heater & Supply Module Relays-Combination3 LT/RH/LoneStar - X15 - Selective Catalytic Reduction (SCR):Diagram2 - Supply Module, Sensor Table, Quality Sensor, DEF Tank Valve-Combination1 LT/RH/LoneStar - X15 - Selective Catalytic Reduction (SCR):Diagram2 - Supply Module, Sensor Table, Quality Sensor, DEF Tank Valve-Combination2 LT/RH/LoneStar - X15 - Selective Catalytic Reduction (SCR):Diagram2 - Supply Module, Sensor Table, Quality Sensor, DEF Tank Valve-Combination3 LT/RH/LoneStar X15 - Powertrain Aftertreatment PDM:Diagram1
Mates	DEF PDM

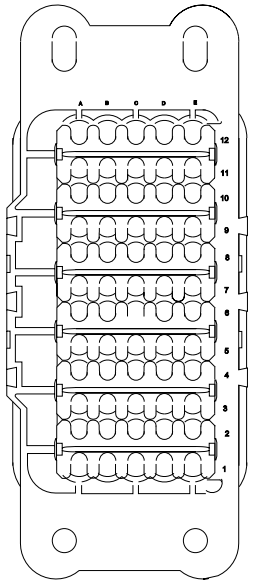

Name	Terminal Part Number	V-Min	Name	Wire Part Number	Wire CSA	Wire Spec	Wire Material description	Wire Color Description	Wire Length	End2 Terminal Part Number	End2 Pin Name	End2 Connector
A1	-	-	KA95H1	3510323 R1	0.79	18.0	Thin Wall XLPE Primary Cable	PINK	480.0	-	X	-
A3	-	-	KA95H2	3510323 R1	0.79	18.0	Thin Wall XLPE Primary Cable	PINK	480.0	-	X	-
A4	-	-	KA95H3	3510323 R1	0.79	18.0	Thin Wall XLPE Primary Cable	PINK	480.0	-	X	-
A6	-	-	KA95H4	3510323 R1	0.79	18.0	Thin Wall XLPE Primary Cable	PINK	480.0	-	X	-
A7	-	-	KA95H5	3510323 R1	0.79	18.0	Thin Wall XLPE Primary Cable	PINK	480.0	-	X	-
A9	-	-	KA95H6	3510323 R1	0.79	18.0	Thin Wall XLPE Primary Cable	PINK	480.0	-	X	-
A10	-	-	KA95P	3510365 R1	0.79	18.0	Thin Wall XLPE Primary Cable	RED	0.0	-	-	-
A12	-	-	KA95SB	3510328 R1	0.53	20.0	Thin Wall XLPE Primary Cable	TAN	1880.0	-	79	K02-6000

Name	Terminal Part Number	V-Min	Name	Wire Part Number	Wire CSA	Wire Spec	Wire Material description	Wire Color Description	Wire Length	End2 Terminal Part Number	End2 Pin Name	End2 Connector
A12	-	-	KA95SB	3510328 R1	0.53	20.0	Thin Wall XLPE Primary Cable	TAN	1880.0	-	11	K01-6019
B1	-	-	KA95GBA	3510293 R1	0.79	18.0	Thin Wall XLPE Primary Cable	BLACK	330.0	-	X	-
B3	-	-	TK95AS3	3510329 R1	0.79	18.0	Thin Wall XLPE Primary Cable	TAN	970.0	-	X	-
B3	-	-	TJ95AS3	3510329 R1	0.79	18.0	Thin Wall XLPE Primary Cable	TAN	970.0	-	X	-
B3	-	-	AK95AS3	3510329 R1	0.79	18.0	Thin Wall XLPE Primary Cable	TAN	1050.0	-	X	-
B3	-	-	AJ95AS3	3510329 R1	0.79	18.0	Thin Wall XLPE Primary Cable	TAN	1050.0	-	X	-
B4	-	-	KA95GBB	3510293 R1	0.79	18.0	Thin Wall XLPE Primary Cable	BLACK	330.0	-	X	-
B6	-	-	TK95AT3	3510329 R1	0.79	18.0	Thin Wall XLPE Primary Cable	TAN	1060.0	-	X	-

Name	Terminal Part Number	V-Min	Name	Wire Part Number	Wire CSA	Wire Spec	Wire Material description	Wire Color Description	Wire Length	End2 Terminal Part Number	End2 Pin Name	End2 Connector
B6	-	-	TJ95AT3	3510329 R1	0.79	18.0	Thin Wall XLPE Primary Cable	TAN	1060.0	-	X	-
B6	-	-	AK95AT3	3510329 R1	0.79	18.0	Thin Wall XLPE Primary Cable	TAN	1140.0	-	PIN1	-
B6	-	-	AJ95AT3	3510329 R1	0.79	18.0	Thin Wall XLPE Primary Cable	TAN	1140.0	-	X	-
B7	-	-	KA95GBD	3510293 R1	0.79	18.0	Thin Wall XLPE Primary Cable	BLACK	530.0	-	X	-
B9	-	-	TK95AU3	3510329 R1	0.79	18.0	Thin Wall XLPE Primary Cable	TAN	1090.0	-	X	-
B9	-	-	TJ95AU3	3510329 R1	0.79	18.0	Thin Wall XLPE Primary Cable	TAN	1090.0	-	X	-
B9	-	-	AK95AU3	3510329 R1	0.79	18.0	Thin Wall XLPE Primary Cable	TAN	1170.0	-	X	-
B9	-	-	AJ95AU3	3510329 R1	0.79	18.0	Thin Wall XLPE Primary Cable	TAN	1170.0	-	X	-

Name	Terminal Part Number	V-Min	Name	Wire Part Number	Wire CSA	Wire Spec	Wire Material description	Wire Color Description	Wire Length	End2 Terminal Part Number	End2 Pin Name	End2 Connector
B10	-	-	KA95-GC	3510293 R1	0.79	18.0	Thin Wall XLPE Primary Cable	BLACK	1195.0	-	-	-
B10	-	-	KA95-GC	3510293 R1	0.79	18.0	Thin Wall XLPE Primary Cable	BLACK	1195.0	-	5	K01-6018
B12	-	-	TK95AR3	3510329 R1	0.79	18.0	Thin Wall XLPE Primary Cable	TAN	940.0	-	X	-
B12	-	-	TJ95AR3	3510329 R1	0.79	18.0	Thin Wall XLPE Primary Cable	TAN	940.0	-	X	-
B12	-	-	AK95AR3	3510293 R1	0.79	18.0	Thin Wall XLPE Primary Cable	BLACK	1020.0	-	PIN1	-
B12	-	-	AJ95AR3	3510329 R1	0.79	18.0	Thin Wall XLPE Primary Cable	TAN	1020.0	-	X	-
D10	-	-	KA95PA	3510327 R1	4.81	10.0	Thin Wall XLPE Primary Cable	PINK	380.0	-	X	-
D12	-	-	KA95PC	3510323 R1	0.79	18.0	Thin Wall XLPE Primary Cable	PINK	380.0	-	X	-

Name	Terminal Part Number	V-Min	Name	Wire Part Number	Wire CSA	Wire Spec	Wire Material description	Wire Color Description	Wire Length	End2 Terminal Part Number	End2 Pin Name	End2 Connector
E1	-	-	KA95H7	3510323 R1	0.79	18.0	Thin Wall XLPE Primary Cable	PINK	480.0	-	-	-
E2	-	-	KA14A	3510365 R1	0.79	18.0	Thin Wall XLPE Primary Cable	RED	430.0	-	X	-
E3	-	-	KA95P	3510365 R1	0.79	18.0	Thin Wall XLPE Primary Cable	RED	0.0	-	-	-
E4	-	-	KA14B	3510366 R1	1.16	16.0	Thin Wall XLPE Primary Cable	RED	3130.0	-	-	-
E5	-	-	KA95PB	3510327 R1	4.81	10.0	Thin Wall XLPE Primary Cable	PINK	380.0	-	-	-
E6	-	-	KA14C	3510369 R1	4.81	10.0	Thin Wall XLPE Primary Cable	RED	430.0	-	X	-
E10	-	-	KA95TB	3510311 R1	0.79	18.0	Thin Wall XLPE Primary Cable	GREY	2270.0	-	5	K02-8500
E10	-	-	KA95TB	3510311 R1	0.79	18.0	Thin Wall XLPE Primary Cable	GREY	2270.0	-	72	K01-6018

Name	Terminal Part Number	V-Min	Name	Wire Part Number	Wire CSA	Wire Spec	Wire Material description	Wire Color Description	Wire Length	End2 Terminal Part Number	End2 Pin Name	End2 Connector
E12	-	-	TM95KD	3510369 R1	4.81	10.0	Thin Wall XLPE Primary Cable	RED	1000.0	-	X	-
E12	-	-	TL95KD	3510369 R1	4.81	10.0	Thin Wall XLPE Primary Cable	RED	1000.0	-	X	-
E12	-	-	TS95KD	3510369 R1	4.81	10.0	Thin Wall XLPE Primary Cable	RED	750.0	-	X	-
E12	-	-	AM95KD	3510369 R1	4.81	10.0	Thin Wall XLPE Primary Cable	RED	1080.0	-	X	-
E12	-	-	AS95KD	3510369 R1	4.81	10.0	Thin Wall XLPE Primary Cable	RED	1080.0	-	X	-
E12	-	-	AL95KD	3510333 R1	4.81	10.0	Thin Wall XLPE Primary Cable	TAN	1080.0	-	X	-

Connector Name	7TB1
Part Number	3722128C1
Instances	LT/RH/LoneStar - X15/A26 - Telematics (TRIPMASTER DAYCAB):Diagram1 Telematics J1708:Telematics J1708
Mates	MODU-TRIPMASTER-2035-10-04A

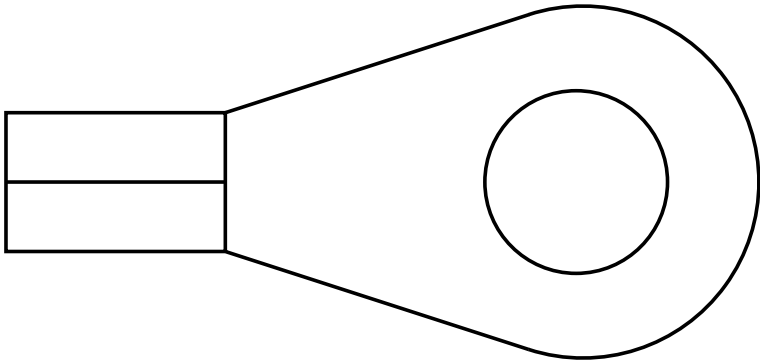

Name	Terminal Part Number	V-Min	Name	Wire Part Number	Wire CSA	Wire Spec	Wire Material description	Wire Color Description	Wire Length	End2 Terminal Part Number	End2 Pin Name	End2 Connect or
1	-	-	-	-	-	-	-	-	-	-	-	-
1	-	-	WIRE490309	-	0.0	-	-	-	0.0	-	E1	J5-1602

Connector Name 7105A

Part Number 3599542C1

Instances LT/RH - A26 - Transmission Power Take Off Dual Solenoid AUTO:Diagram1
LT/RH - A26 - Transmission Power Take Off Option 1:Diagram1
LT/RH A26 - Auto Start Stop and Sleeper Auto Climate / Cab Temp / Oil Mapping Manual Trans:Diagram1
LT/RH A26 - Auto Start Stop Battery & Oil Temp Mapping Auto Trans:Diagram1
LT/RH A26 - Auto Start Stop Battery & Oil Temp Mapping Manual Trans:Diagram1
LT/RH A26 - Auto Start Stop with Sleeper Auto Climate / Cab Temp / Oil Mapping Auto Trans:Diagram1
LT/RH/LoneStar - X15/A26 - Hill Start Aid (Bendix):Diagram1
LT/RH/LoneStar - X15/A26 - Hill Start Aid (Bendix):Diagram2
LT/RH/LoneStar - X15/A26 - Hill Start Aid (Bendix):Diagram3
LT/RH/LoneStar - X15/A26 - Hill Start Aid (Wabco):Diagram1
LT/RH/LoneStar - X15/A26 - Transmission - MODE Selection:Diagram1
LT/RH/LoneStar - X15/A26 - Transmission Oil Temperature (Automatic Trans W/ Aux Gauge):Diagram1
LT/RH/LoneStar - X15/A26 - Transmission Oil Temperature (Automatic Trans):Diagram1
LT/RH/LoneStar - X15/A26 - Transmission Range Inhibit (J1939 Comm):Diagram1
LT/RH/LoneStar - X15/A26 - Vehicle Speedometer System (W/ AMT/AUTO TRANS):Diagram1
Powertrain J1939 (500Kbps) Eaton Ultrashift+ Transmission A26:Powertrain J1939 (500Kbps) Eaton Ultrashift+ Transmission A26

Mates MODU-TCM-A002-10-01B Ultrashift A26

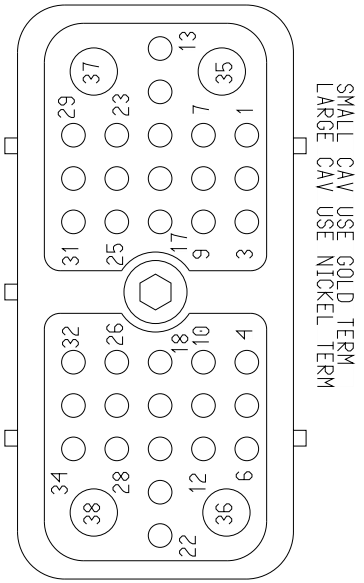

Name	Terminal Part Number	V-Min	Name	Wire Part Number	Wire CSA	Wire Spec	Wire Material description	Wire Color Description	Wire Length	End2 Terminal Part Number	End2 Pin Name	End2 Connect or
2	-	-	WIRE489205	-	0.0	-	-	-	0.0	-	PIN1	-
2	-	-	-	-	-	-	-	-	-	-	-	-
3	-	-	WIRE489204	-	0.0	-	-	-	0.0	-	PIN1	-

Name	Terminal Part Number	V-Min	Name	Wire Part Number	Wire CSA	Wire Spec	Wire Material description	Wire Color Description	Wire Length	End2 Terminal Part Number	End2 Pin Name	End2 Connect or
3	-	-	-	-	-	-	-	-	-	-	-	-

Connector Name	7105
Part Number	3599542C1
Instances	LT/RH/LoneStar - X15 - Transmission Power Take Off Dual Solenoid AUTO:Diagram1 LT/RH/LoneStar - X15 - Transmission Power Take Off W/ Clutch Interlock:Diagram1 LT/RH/LoneStar - X15/A26 - Auto Neutral (J1939 Comms TC10 and Ultrashift):Diagram1 LT/RH/LoneStar - X15/A26 - Hill Start Aid (Bendix):Diagram1 LT/RH/LoneStar - X15/A26 - Hill Start Aid (Bendix):Diagram2 LT/RH/LoneStar - X15/A26 - Hill Start Aid (Bendix):Diagram3 LT/RH/LoneStar - X15/A26 - Hill Start Aid (Wabco):Diagram1 LT/RH/LoneStar - X15/A26 - Rear Lights Stop - Dual Assembly:Diagram1 LT/RH/LoneStar - X15/A26 - Rear Lights Stop - Dual Assembly:Diagram2 LT/RH/LoneStar - X15/A26 - Rear Lights Stop - Single Assembly Option 1:Diagram1 LT/RH/LoneStar - X15/A26 - Rear Lights Stop - Single Assembly Option 1:Diagram2 LT/RH/LoneStar - X15/A26 - Transmission - MODE Selection:Diagram1 LT/RH/LoneStar - X15/A26 - Transmission Oil Level (Low Level Warning):Diagram1 LT/RH/LoneStar - X15/A26 - Transmission Oil Temperature (Automatic Trans W/ Aux Gauge):Diagram1 LT/RH/LoneStar - X15/A26 - Transmission Oil Temperature (Automatic Trans):Diagram1 LT/RH/LoneStar - X15/A26 - Transmission Range Inhibit (J1939 Comm):Diagram1 LT/RH/LoneStar - X15/A26 - Vehicle Speedometer System (W/ AMT/AUTO TRANS):Diagram1 LT/RH/LoneStar X15 - Auto Start Stop Oil Temp Sensor Auto Trans:Diagram1 LT/RH/LoneStar X15 - Auto Start Stop Oil Temp Sensor Manual Trans:Diagram1 LT/RH/LoneStar X15 - Auto Start Stop with Sleeper Auto Climate / Cab Temp with Oil Temp Sensor Auto Trans:Diagram1 LT/RH/LoneStar X15 - Auto Start Stop with Sleeper Auto Climate / Cab Temp with Oil Temp Sensor Manual Trans:Diagram1 Powertrain J1939 (500Kbps) Eaton Ultrashift+ Transmission X15:Powertrain J1939 (500kbps) Eaton Ultrashift+ X15

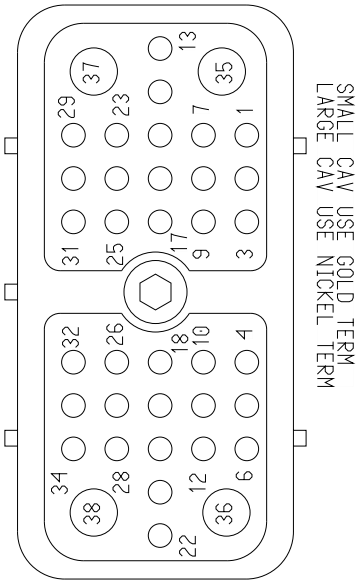

Mates MODU-TCM-A002-11-01A Ultrashift X15

Name	Terminal Part Number	V-Min	Name	Wire Part Number	Wire CSA	Wire Spec	Wire Material description	Wire Color Description	Wire Length	End2 Terminal Part Number	End2 Pin Name	End2 Connect or
2	-	-	-	-	-	-	-	-	-	-	-	-
2	-	-	WIRE489505	-	0.0	-	-	-	0.0	-	PIN1	-
3	-	-	-	-	-	-	-	-	-	-	-	-
3	-	-	WIRE489504	-	0.0	-	-	-	0.0	-	PIN1	-

Connector Name	7106
Part Number	3765544C1
Instances	LT/RH - A26 - Starter Interlocks (Service Brake Interlock):Diagram1 LT/RH/LoneStar - X15 - Starter Interlocks (Service Brake Interlock):Diagram1 LT/RH/LoneStar - X15 - Transmission Power Take Off Dual Solenoid AUTO:Diagram1 LT/RH/LoneStar - X15 - Transmission Power Take Off W/ Clutch Interlock:Diagram1 LT/RH/LoneStar - X15 - Transmission Shifter (Eaton Endurant and Eaton Procision):Diagram1 LT/RH/LoneStar - X15/A26 - Hill Start Aid (Bendix):Diagram1 LT/RH/LoneStar - X15/A26 - Hill Start Aid (Bendix):Diagram2 LT/RH/LoneStar - X15/A26 - Hill Start Aid (Bendix):Diagram3 LT/RH/LoneStar - X15/A26 - Hill Start Aid (Wabco):Diagram1 LT/RH/LoneStar - X15/A26 - Transmission - MODE Selection:Diagram1 LT/RH/LoneStar - X15/A26 - Transmission Oil Temperature (Automatic Trans W/ Aux Gauge):Diagram1 LT/RH/LoneStar - X15/A26 - Transmission Oil Temperature (Automatic Trans):Diagram1 LT/RH/LoneStar - X15/A26 - Transmission Range Inhibit (J1939 Comm):Diagram1 LT/RH/LoneStar - X15/A26 - Vehicle Speedometer System (W/ AMT/AUTO TRANS):Diagram1 LT/RH/LoneStar X15 - Auto Start Stop Oil Temp Sensor Auto Trans:Diagram1 LT/RH/LoneStar X15 - Auto Start Stop Oil Temp Sensor Manual Trans:Diagram1 LT/RH/LoneStar X15 - Auto Start Stop with Sleeper Auto Climate / Cab Temp with Oil Temp Sensor Auto Trans:Diagram1 LT/RH/LoneStar X15 - Auto Start Stop with Sleeper Auto Climate / Cab Temp with Oil Temp Sensor Manual Trans:Diagram1 Powertrain J1939 (500Kbps) Edurant Transmission X15:Powertrain J1939 (500kbps) Endurant Transmission X15
Mates	MODU-TCM-A002-10-02B Endurant X15

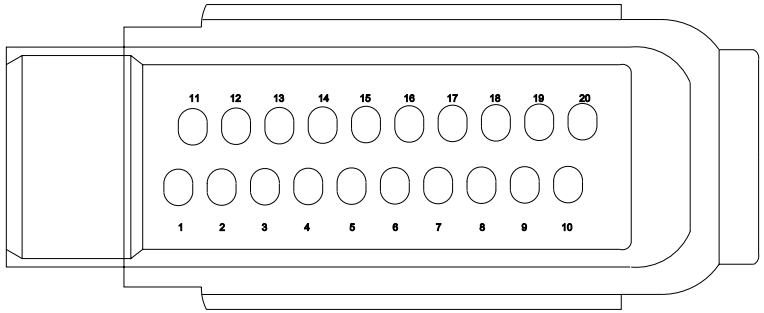

Name	Terminal Part Number	V-Min	Name	Wire Part Number	Wire CSA	Wire Spec	Wire Material description	Wire Color Description	Wire Length	End2 Terminal Part Number	End2 Pin Name	End2 Connector
4	-	-	KL17-GA	3510329 R1	0.79	18.0	Thin Wall XLPE Primary Cable	TAN	2310.0	-	19	1702
4	-	-	KG17-GA	3510359 R1	0.79	18.0	Thin Wall XLPE Primary Cable	WHITE	2720.0	-	19	1702
11	-	-	-	-	-	-	-	-	-	-	-	-
11	-	-	WIRE233 846	-	0.0	-	-	-	0.0	-	PIN1	-
12	-	-	-	-	-	-	-	-	-	-	-	-
12	-	-	WIRE233 850	-	0.0	-	-	-	0.0	-	PIN1	-
14	-	-	KL17A	3510353 R1	0.79	18.0	Thin Wall XLPE Primary Cable	DARK BLUE	2310.0	-	20	1702
14	-	-	KG17A	3510323 R1	0.79	18.0	Thin Wall XLPE Primary Cable	PINK	2720.0	-	20	1702

Connector Name 7107

Part Number 3765545C1

Instances LT/RH/LoneStar - X15 - Transmission Power Take Off Dual Solenoid AUTO:Diagram1
LT/RH/LoneStar - X15 - Transmission Power Take Off W/ Clutch Interlock:Diagram1
LT/RH/LoneStar - X15 - Transmission Shifter (Eaton Endurant and Eaton Procision):Diagram1
LT/RH/LoneStar - X15/A26 - Hill Start Aid (Bendix):Diagram1
LT/RH/LoneStar - X15/A26 - Hill Start Aid (Bendix):Diagram2
LT/RH/LoneStar - X15/A26 - Hill Start Aid (Bendix):Diagram3
LT/RH/LoneStar - X15/A26 - Hill Start Aid (Wabco):Diagram1
LT/RH/LoneStar - X15/A26 - Transmission - MODE Selection:Diagram1
LT/RH/LoneStar - X15/A26 - Transmission Oil Temperature (Automatic Trans W/ Aux Gauge):Diagram1
LT/RH/LoneStar - X15/A26 - Transmission Oil Temperature (Automatic Trans):Diagram1
LT/RH/LoneStar - X15/A26 - Transmission Range Inhibit (J1939 Comm):Diagram1
LT/RH/LoneStar - X15/A26 - Vehicle Speedometer System (W/ AMT/AUTO TRANS):Diagram1
LT/RH/LoneStar X15 - Auto Start Stop Oil Temp Sensor Auto Trans:Diagram1
LT/RH/LoneStar X15 - Auto Start Stop Oil Temp Sensor Manual Trans:Diagram1
LT/RH/LoneStar X15 - Auto Start Stop with Sleeper Auto Climate / Cab Temp with Oil Temp Sensor Auto Trans:Diagram1
LT/RH/LoneStar X15 - Auto Start Stop with Sleeper Auto Climate / Cab Temp with Oil Temp Sensor Manual Trans:Diagram1
Powertrain J1939 (500Kbps) Edurant Transmission X15:Powertrain J1939 (500kbps) Endurant Transmission X15

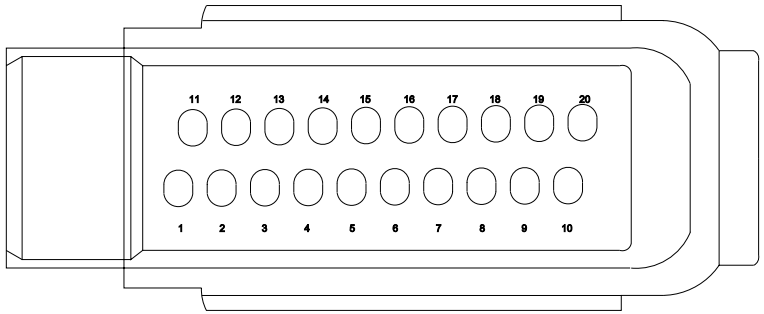

Mates MODU-TCM-A002-10-02B Endurant X15

Name	Terminal Part Number	V-Min	Name	Wire Part Number	Wire CSA	Wire Spec	Wire Material description	Wire Color Description	Wire Length	End2 Terminal Part Number	End2 Pin Name	End2 Connector
7	-	-	-	-	-	-	-	-	-	-	-	-
7	-	-	WIRE233870	-	0.0	-	-	-	0.0	-	PIN1	-

Name	Terminal Part Number	V-Min	Name	Wire Part Number	Wire CSA	Wire Spec	Wire Material description	Wire Color Description	Wire Length	End2 Terminal Part Number	End2 Pin Name	End2 Connect or
8	-	-	-	-	-	-	-	-	-	-	-	-
8	-	-	WIRE233872	-	0.0	-	-	-	0.0	-	PIN1	-

Connector Name	7110B
Part Number	3683465C1
Instances	Powertrain J1939 (500Kbps) Edurant Transmission X15:Powertrain J1939 (500kbps) Endurant Transmission X15
Mates	RES-TERMINATING-POWERTRAIN -500K-0002-00-02B-7110B

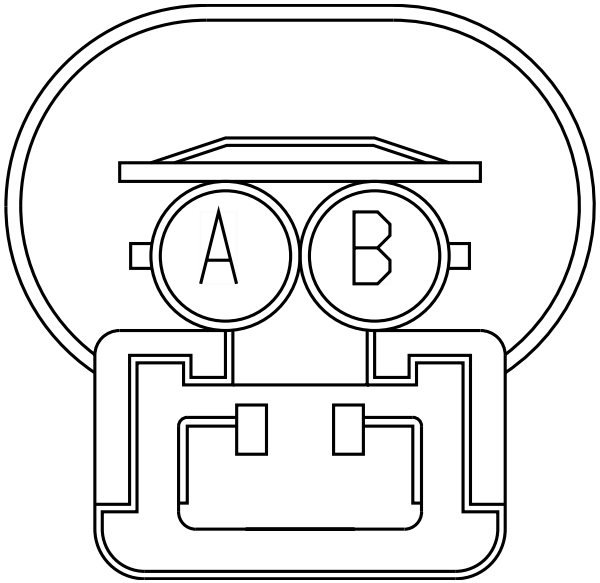

Name	Terminal Part Number	V-Min	Name	Wire Part Number	Wire CSA	Wire Spec	Wire Material description	Wire Color Description	Wire Length	End2 Terminal Part Number	End2 Pin Name	End2 Connect or
A	-	-	WIRE233873	-	0.0	-	-	-	0.0	-	PIN1	-
B	-	-	WIRE233875	-	0.0	-	-	-	0.0	-	PIN1	-

Connector Name	7110X
Part Number	3683465C1
Instances	Powertrain J1939 (500Kbps) Edurant Transmission X15:Powertrain J1939 (500kbps) Endurant Transmission X15
Mates	RES-TERMINATING-POWERTRAIN -500K-0002-00-02B-7110X

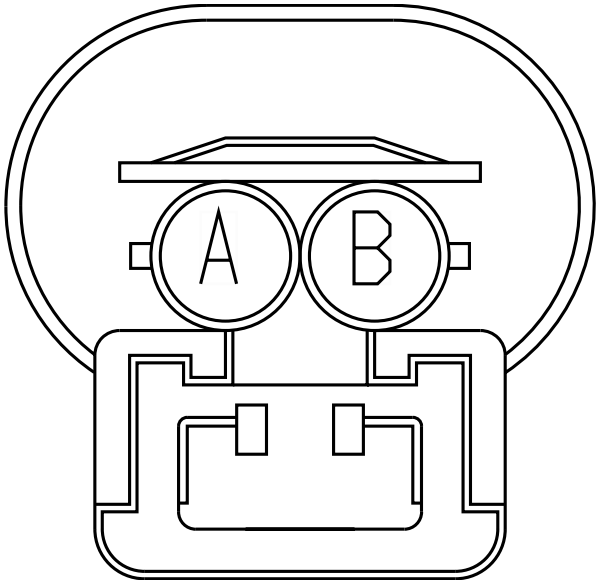

Name	Terminal Part Number	V-Min	Name	Wire Part Number	Wire CSA	Wire Spec	Wire Material description	Wire Color Description	Wire Length	End2 Terminal Part Number	End2 Pin Name	End2 Connect or
A	-	-	WIRE233845	-	0.0	-	-	-	0.0	-	PIN1	-
B	-	-	WIRE233843	-	0.0	-	-	-	0.0	-	PIN1	-

Connector Name	7110Z
Part Number	3683465C1
Instances	Powertrain J1939 (500Kbps) Edurant Transmission X15:Powertrain J1939 (500kbps) Endurant Transmission X15
Mates	RES-TERMINATING-POWERTRAIN -500K-0002-00-02B-7110Z

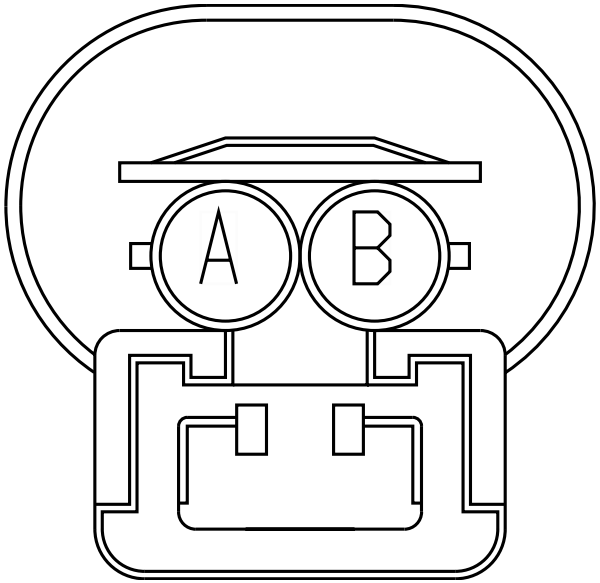

Name	Terminal Part Number	V-Min	Name	Wire Part Number	Wire CSA	Wire Spec	Wire Material description	Wire Color Description	Wire Length	End2 Terminal Part Number	End2 Pin Name	End2 Connect or
A	-	-	WIRE233867	-	0.0	-	-	-	0.0	-	PIN1	-
B	-	-	WIRE233868	-	0.0	-	-	-	0.0	-	PIN1	-

Connector Name	7110
Part Number	3683465C1
Instances	Powertrain J1939 (500Kbps) Allison 3K Transmission A26:Powertrain J1939 (500Kbps) Allison 3K A26 Powertrain J1939 (500Kbps) Eaton Ultrashift+ Transmission A26:Powertrain J1939 (500Kbps) Eaton Ultrashift+ Transmission A26 Powertrain J1939 (500Kbps) Manual Transmission A26:Powertrain Standard J1939 (500Kbps) A26 Engine Powertrain J1939 (500Kbps) TC10 Transmission A26:Powertrain J1939 (500Kbps) TC10 Transmission A26
Mates	TERMINATING RESISTOR

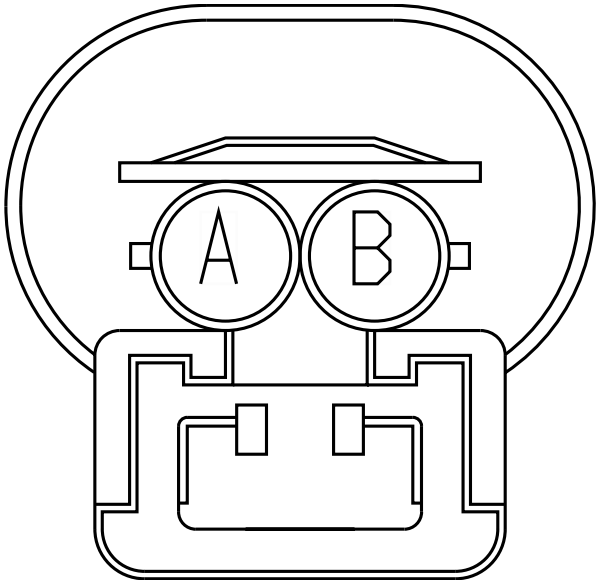

Name	Terminal Part Number	V-Min	Name	Wire Part Number	Wire CSA	Wire Spec	Wire Material description	Wire Color Description	Wire Length	End2 Terminal Part Number	End2 Pin Name	End2 Connect or
A	-	-	WIRE489207	-	0.0	-	-	-	0.0	-	PIN1	-
A	-	-	WIRE489701	-	0.0	-	-	-	0.0	-	PIN1	-
A	-	-	WIRE233858	-	0.0	-	-	-	0.0	-	PIN1	-
A	-	-	XZ5A117	-	0.0	-	-	-	0.0	-	PIN1	-
B	-	-	WIRE489206	-	0.0	-	-	-	0.0	-	PIN1	-
B	-	-	WIRE489700	-	0.0	-	-	-	0.0	-	PIN1	-
B	-	-	WIRE233857	-	0.0	-	-	-	0.0	-	PIN1	-
B	-	-	XZ5A106	-	0.0	-	-	-	0.0	-	PIN1	-

Connector Name	7110_
Part Number	3683465C1
Instances	Powertrain J1939 (500Kbps) Eaton Ultrashift+ Transmission X15:Powertrain J1939 (500kbps) Eaton Ultrashift+ X15 Powertrain J1939 (500Kbps) Manual Transmission X15:Powertrain Standard J1939 (500kbps) Manual Transmission X15 Powertrain J1939 (500Kbps) TC10 Transmission X15:Powertrain J1939 (500kbps) TC10 Transmission X15
Mates	TERMINATING RESISTOR

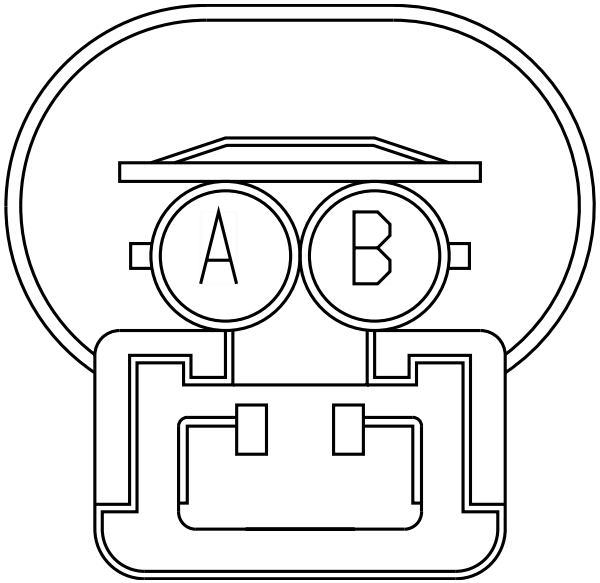

Name	Terminal Part Number	V-Min	Name	Wire Part Number	Wire CSA	Wire Spec	Wire Material description	Wire Color Description	Wire Length	End2 Terminal Part Number	End2 Pin Name	End2 Connector
A	-	-	WIRE489506	-	0.0	-	-	-	0.0	-	PIN1	-
A	-	-	WIRE233841	-	0.0	-	-	-	0.0	-	PIN1	-
A	-	-	WIRE233884	-	0.0	-	-	-	0.0	-	PIN1	-
B	-	-	WIRE489507	-	0.0	-	-	-	0.0	-	PIN1	-
B	-	-	WIRE233839	-	0.0	-	-	-	0.0	-	PIN1	-
B	-	-	WIRE233882	-	0.0	-	-	-	0.0	-	PIN1	-

Connector Name	7111
Part Number	3683465C1
Instances	Powertrain J1939 (500Kbps) Edurant Transmission A26:Powertrain J1939 (500Kbps) Edurant Transmission A26
Mates	TERMINATING RESISTOR

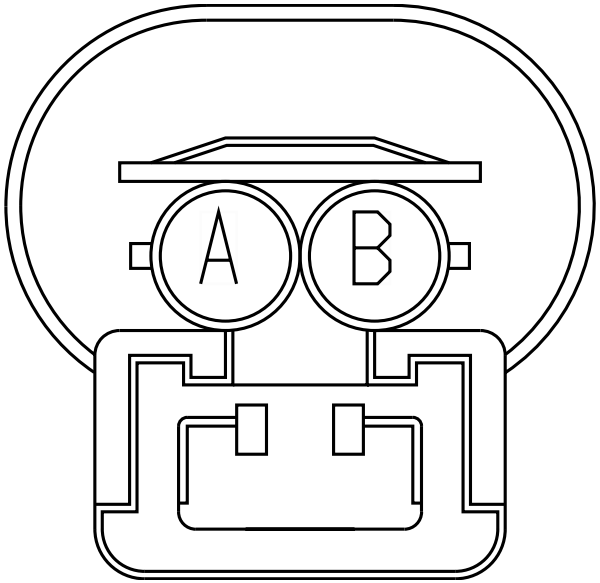

Name	Terminal Part Number	V-Min	Name	Wire Part Number	Wire CSA	Wire Spec	Wire Material description	Wire Color Description	Wire Length	End2 Terminal Part Number	End2 Pin Name	End2 Connect or
A	-	-	KG5AB (-)	-	0.0	-	-	-	0.0	-	PIN1	-
B	-	-	KG5AB (+)	-	0.0	-	-	-	0.0	-	PIN1	-

Connector Name 7150

Part Number 3605713C1

Instances LT/RH - A26 - Starter Interlocks A26 3K:Diagram1
LT/RH - A26 - Transmission Power Take Off Dual Solenoid AUTO:Diagram1
LT/RH - A26 - Transmission Power Take Off Option 1:Diagram1
LT/RH A26 - Auto Start Stop and Sleeper Auto Climate / Cab Temp / Oil Mapping Manual Trans:Diagram1
LT/RH A26 - Auto Start Stop Battery & Oil Temp Mapping Auto Trans:Diagram1
LT/RH A26 - Auto Start Stop Battery & Oil Temp Mapping Manual Trans:Diagram1
LT/RH A26 - Auto Start Stop with Sleeper Auto Climate / Cab Temp / Oil Mapping Auto Trans:Diagram1
LT/RH/LoneStar - X15/A26 - Hill Start Aid (Bendix):Diagram1
LT/RH/LoneStar - X15/A26 - Hill Start Aid (Bendix):Diagram2
LT/RH/LoneStar - X15/A26 - Hill Start Aid (Bendix):Diagram3
LT/RH/LoneStar - X15/A26 - Hill Start Aid (Wabco):Diagram1
LT/RH/LoneStar - X15/A26 - Transmission - MODE Selection:Diagram1
LT/RH/LoneStar - X15/A26 - Transmission Oil Temperature (Automatic Trans W/ Aux Gauge):Diagram1
LT/RH/LoneStar - X15/A26 - Transmission Oil Temperature (Automatic Trans):Diagram1
LT/RH/LoneStar - X15/A26 - Transmission Range Inhibit (J1939 Comm):Diagram1
LT/RH/LoneStar - X15/A26 - Vehicle Speedometer System (W/ AMT/AUTO TRANS):Diagram1
Powertrain J1939 (500Kbps) Allison 3K Transmission A26:Powertrain J1939 (500Kbps) Allison 3K A26

Mates MODU-TCM-A002-10-03 Allison 3K A26

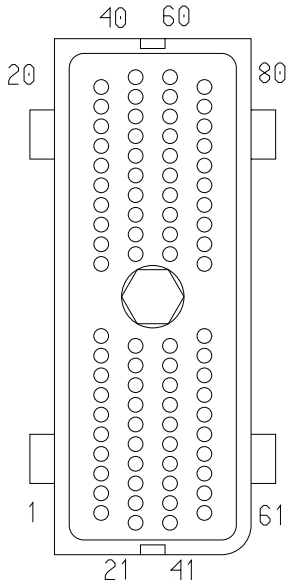

Name	Terminal Part Number	V-Min	Name	Wire Part Number	Wire CSA	Wire Spec	Wire Material description	Wire Color Description	Wire Length	End2 Terminal Part Number	End2 Pin Name	End2 Connector
6	-	-	-	-	-	-	-	-	-	-	-	-
6	-	-	WIRE233862	-	0.0	-	-	-	0.0	-	PIN1	-
27	-	-	-	-	-	-	-	-	-	-	-	-

Name	Terminal Part Number	V-Min	Name	Wire Part Number	Wire CSA	Wire Spec	Wire Material description	Wire Color Description	Wire Length	End2 Terminal Part Number	End2 Pin Name	End2 Connect or
27	-	-	WIRE233860	-	0.0	-	-	-	0.0	-	PIN1	-
41	-	-	TD92#141	3510329 R1	0.79	18.0	Thin Wall XLPE Primary Cable	TAN	3555.0	-	20	1702

Connector Name 7350

Part Number 3755755C1

Instances LT/RH/LoneStar - X15 - Starter Interlocks ISX TC10:Diagram1
LT/RH/LoneStar - X15 - Transmission Power Take Off Dual Solenoid AUTO:Diagram1
LT/RH/LoneStar - X15 - Transmission Power Take Off W/ Clutch Interlock:Diagram1
LT/RH/LoneStar - X15/A26 - Hill Start Aid (Bendix):Diagram1
LT/RH/LoneStar - X15/A26 - Hill Start Aid (Bendix):Diagram2
LT/RH/LoneStar - X15/A26 - Hill Start Aid (Bendix):Diagram3
LT/RH/LoneStar - X15/A26 - Hill Start Aid (Wabco):Diagram1
LT/RH/LoneStar - X15/A26 - Transmission - MODE Selection:Diagram1
LT/RH/LoneStar - X15/A26 - Transmission Oil Temperature (Automatic Trans W/ Aux Gauge):Diagram1
LT/RH/LoneStar - X15/A26 - Transmission Oil Temperature (Automatic Trans):Diagram1
LT/RH/LoneStar - X15/A26 - Transmission Range Inhibit (J1939 Comm):Diagram1
LT/RH/LoneStar - X15/A26 - Vehicle Speedometer System (W/ AMT/AUTO TRANS):Diagram1
LT/RH/LoneStar X15 - Auto Start Stop Oil Temp Sensor Auto Trans:Diagram1
LT/RH/LoneStar X15 - Auto Start Stop Oil Temp Sensor Manual Trans:Diagram1
LT/RH/LoneStar X15 - Auto Start Stop with Sleeper Auto Climate / Cab Temp with Oil Temp Sensor Auto Trans:Diagram1
LT/RH/LoneStar X15 - Auto Start Stop with Sleeper Auto Climate / Cab Temp with Oil Temp Sensor Manual Trans:Diagram1
Powertrain J1939 (500Kbps) TC10 Transmission X15:Powertrain J1939 (500kbps) TC10 Transmission X15

Mates MODU-TCM-A002-10-00B Allison TC10 X15

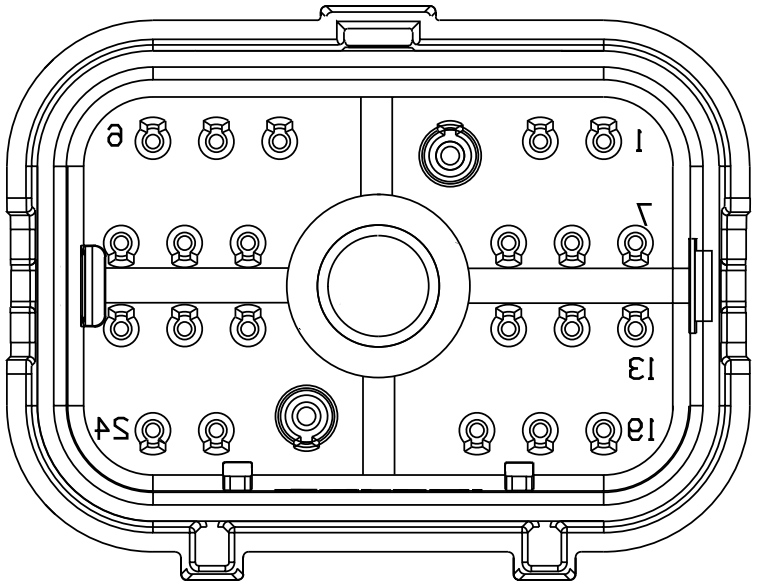

Name	Terminal Part Number	V-Min	Name	Wire Part Number	Wire CSA	Wire Spec	Wire Material description	Wire Color Description	Wire Length	End2 Terminal Part Number	End2 Pin Name	End2 Connect or
6	-	-	-	-	-	-	-	-	-	-	-	-
6	-	-	WIRE233877	-	0.0	-	-	-	0.0	-	PIN1	-

Name	Terminal Part Number	V-Min	Name	Wire Part Number	Wire CSA	Wire Spec	Wire Material description	Wire Color Description	Wire Length	End2 Terminal Part Number	End2 Pin Name	End2 Connect or
7	-	-	-	-	-	-	-	-	-	-	-	-
17	-	-	-	-	-	-	-	-	-	-	-	-
17	-	-	WIRE233879	-	0.0	-	-	-	0.0	-	PIN1	-
20	-	-	KV92#141	3510329 R1	0.79	18.0	Thin Wall XLPE Primary Cable	TAN	2379.0	-	20	1702

Connector Name 7350_

Part Number 3755755C1

Instances LT/RH - A26 - Starter Interlocks A26 TC10:Diagram1
LT/RH - A26 - Transmission Power Take Off Dual Solenoid AUTO:Diagram1
LT/RH - A26 - Transmission Power Take Off Option 1:Diagram1
LT/RH A26 - Auto Start Stop and Sleeper Auto Climate / Cab Temp / Oil Mapping Manual Trans:Diagram1
LT/RH A26 - Auto Start Stop Battery & Oil Temp Mapping Auto Trans:Diagram1
LT/RH A26 - Auto Start Stop Battery & Oil Temp Mapping Manual Trans:Diagram1
LT/RH A26 - Auto Start Stop with Sleeper Auto Climate / Cab Temp / Oil Mapping Auto Trans:Diagram1
LT/RH/LoneStar - X15/A26 - Hill Start Aid (Bendix):Diagram1
LT/RH/LoneStar - X15/A26 - Hill Start Aid (Bendix):Diagram2
LT/RH/LoneStar - X15/A26 - Hill Start Aid (Bendix):Diagram3
LT/RH/LoneStar - X15/A26 - Hill Start Aid (Wabco):Diagram1
LT/RH/LoneStar - X15/A26 - Transmission - MODE Selection:Diagram1
LT/RH/LoneStar - X15/A26 - Transmission Oil Temperature (Automatic Trans W/ Aux Gauge):Diagram1
LT/RH/LoneStar - X15/A26 - Transmission Oil Temperature (Automatic Trans):Diagram1
LT/RH/LoneStar - X15/A26 - Transmission Range Inhibit (J1939 Comm):Diagram1
LT/RH/LoneStar - X15/A26 - Vehicle Speedometer System (W/ AMT/AUTO TRANS):Diagram1
Powertrain J1939 (500Kbps) TC10 Transmission A26:Powertrain J1939 (500Kbps) TC10 Transmission A26

Mates MODU-TCM-A002-10-00A TC10 A26

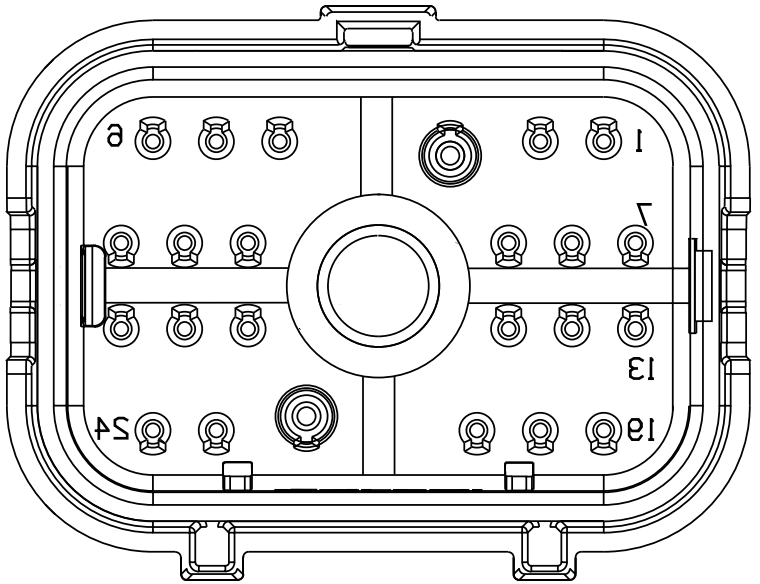

Name	Terminal Part Number	V-Min	Name	Wire Part Number	Wire CSA	Wire Spec	Wire Material description	Wire Color Description	Wire Length	End2 Terminal Part Number	End2 Pin Name	End2 Connect or
6	-	-	-	-	-	-	-	-	-	-	-	-
6	-	-	XZ5B106	-	0.0	-	-	-	0.0	-	PIN1	-
7	-	-	-	-	-	-	-	-	-	-	-	-
17	-	-	XZ5B117	-	0.0	-	-	-	0.0	-	PIN1	-

Name	Terminal Part Number	V-Min	Name	Wire Part Number	Wire CSA	Wire Spec	Wire Material description	Wire Color Description	Wire Length	End2 Terminal Part Number	End2 Pin Name	End2 Connect or
17	-	-	-	-	-	-	-	-	-	-	-	-
20	-	-	XV92#141	3510329 R1	0.79	18.0	Thin Wall XLPE Primary Cable	TAN	3160.0	-	20	1702

Connector Name 7900F

Part Number 4064551C1

Instances Powertrain J1939 (500Kbps) Edurant Transmission
A26:Powertrain J1939 (500Kbps) Edurant Transmission A26
Powertrain J1939 (500Kbps) Allison 3K Transmission
A26:Powertrain J1939 (500Kbps) Allison 3K A26
Powertrain J1939 (500Kbps) Eaton Ultrashift+ Transmission
A26:Powertrain J1939 (500Kbps) Eaton Ultrashift+ Transmission A26
Powertrain J1939 (500Kbps) Eaton Ultrashift+ Transmission
X15:Powertrain J1939 (500kbps) Eaton Ultrashift+ X15
Powertrain J1939 (500Kbps) Edurant Transmission
X15:Powertrain J1939 (500kbps) Endurant Transmission X15
Powertrain J1939 (500Kbps) Manual Transmission
A26:Powertrain Standard J1939 (500Kbps) A26 Engine
Powertrain J1939 (500Kbps) Manual Transmission
X15:Powertrain Standard J1939 (500kbps) Manual Transmission X15
Powertrain J1939 (500Kbps) TC10 Transmission A26:Powertrain J1939 (500Kbps) TC10 Transmission A26
Powertrain J1939 (500Kbps) TC10 Transmission X15:Powertrain J1939 (500kbps) TC10 Transmission X15

Mates 7900M

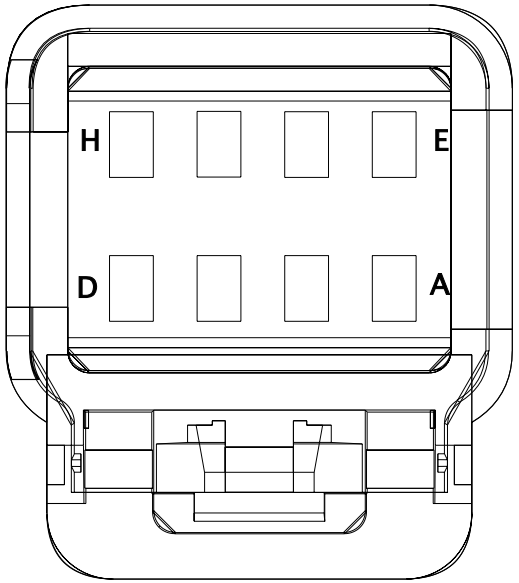

Name	Terminal Part Number	V-Min	Name	Wire Part Number	Wire CSA	Wire Spec	Wire Material description	Wire Color Description	Wire Length	End2 Terminal Part Number	End2 Pin Name	End2 Connector
E	-	-	WIRE223761	-	0.0	-	-	-	0.0	-	PIN1	-
F	-	-	WIRE223743	-	0.0	-	-	-	0.0	-	PIN1	-

Connector Name	7900F
Part Number	4064551C1
Short Description	DCM SHIFTER CONN
Instances	LT/RH - A26 - Transmission Shifter (Eaton Endurant and Eaton Procision):Diagram1 LT/RH - A26 - Transmission Shifter (Universal Shifter - Ultrashift + & FAS):Diagram1 LT/RH/LoneStar - X15 - Transmission Shifter (Eaton Endurant and Eaton Procision):Diagram1 LT/RH/LoneStar - X15 - Transmission Shifter (Universal Shifter - Ultrashift+ & FAS):Diagram1
Mates	7900M

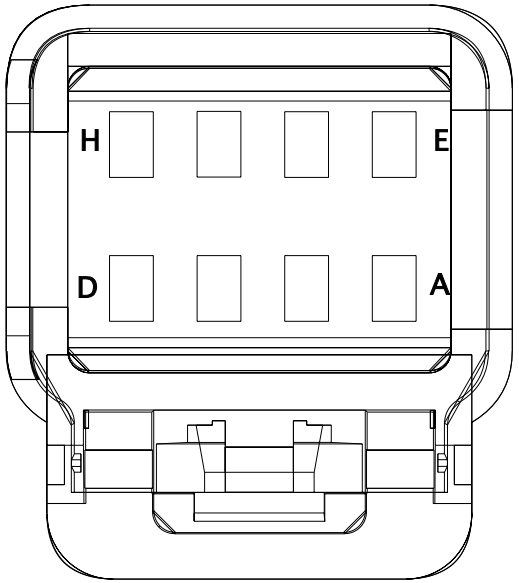

Name	Terminal Part Number	V-Min	Name	Wire Part Number	Wire CSA	Wire Spec	Wire Material description	Wire Color Description	Wire Length	End2 Terminal Part Number	End2 Pin Name	End2 Connect or
B	-	-	2T92ZB	3510329 R1	0.79	18.0	Thin Wall XLPE Primary Cable	TAN	2240.0	-	26	1703M
C	-	-	MN92	3510329 R1	0.79	18.0	Thin Wall XLPE Primary Cable	TAN	2240.0	-	33	1703M
D	-	-	MN92AA	3510311 R1	0.79	18.0	Thin Wall XLPE Primary Cable	GREY	2240.0	-	34	1703M
G	-	-	MM92DC	3510329 R1	0.79	18.0	Thin Wall XLPE Primary Cable	TAN	1530.0	-	-	-

Name	Terminal Part Number	V-Min	Name	Wire Part Number	Wire CSA	Wire Spec	Wire Material description	Wire Color Description	Wire Length	End2 Terminal Part Number	End2 Pin Name	End2 Connector
H	-	-	MM92-GAH	3510359 R1	0.79	18.0	Thin Wall XLPE Primary Cable	WHITE	1125.0	-	-	-

Connector Name	7900M
Part Number	4064552C1
Short Description	STALK SHIFTER CONN
Instances	Powertrain J1939 (500Kbps) Edurant Transmission A26:Powertrain J1939 (500Kbps) Edurant Transmission A26 Powertrain J1939 (500Kbps) Allison 3K Transmission A26:Powertrain J1939 (500Kbps) Allison 3K A26 Powertrain J1939 (500Kbps) Eaton Ultrashift+ Transmission A26:Powertrain J1939 (500Kbps) Eaton Ultrashift+ Transmission A26 Powertrain J1939 (500Kbps) Eaton Ultrashift+ Transmission X15:Powertrain J1939 (500kbps) Eaton Ultrashift+ X15 Powertrain J1939 (500Kbps) Edurant Transmission X15:Powertrain J1939 (500kbps) Endurant Transmission X15 Powertrain J1939 (500Kbps) Manual Transmission A26:Powertrain Standard J1939 (500Kbps) A26 Engine Powertrain J1939 (500Kbps) Manual Transmission X15:Powertrain Standard J1939 (500kbps) Manual Transmission X15 Powertrain J1939 (500Kbps) TC10 Transmission A26:Powertrain J1939 (500Kbps) TC10 Transmission A26 Powertrain J1939 (500Kbps) TC10 Transmission X15:Powertrain J1939 (500kbps) TC10 Transmission X15
Mates	7900F

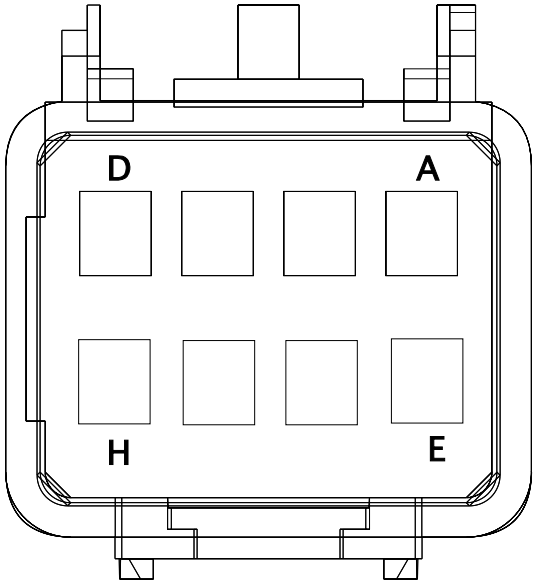

Name	Terminal Part Number	V-Min	Name	Wire Part Number	Wire CSA	Wire Spec	Wire Material description	Wire Color Description	Wire Length	End2 Terminal Part Number	End2 Pin Name	End2 Connect or
E	-	-	WIRE223906	-	0.0	-	-	-	0.0	-	E	1825F
F	-	-	WIRE223907	-	0.0	-	-	-	0.0	-	F	1825F

Connector Name	7900M
Part Number	4064552C1
Short Description	STALK SHIFTER CONN
Instances	LT/RH - A26 - Transmission Shifter (Eaton Endurant and Eaton Procision):Diagram1 LT/RH - A26 - Transmission Shifter (Universal Shifter - Ultrashift + & FAS):Diagram1 LT/RH/LoneStar - X15 - Transmission Shifter (Eaton Endurant and Eaton Procision):Diagram1 LT/RH/LoneStar - X15 - Transmission Shifter (Universal Shifter - Ultrashift+ & FAS):Diagram1
Mates	7900F

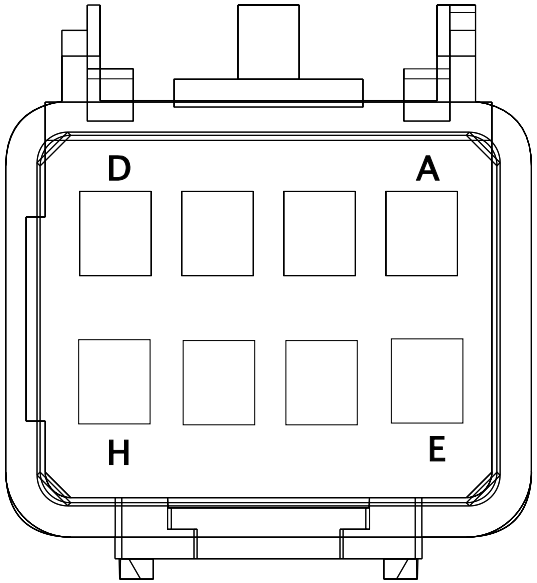

Name	Terminal Part Number	V-Min	Name	Wire Part Number	Wire CSA	Wire Spec	Wire Material description	Wire Color Description	Wire Length	End2 Terminal Part Number	End2 Pin Name	End2 Connector
B	-	-	BK92#134	3510329 R1	0.79	18.0	Thin Wall XLPE Primary Cable	TAN	1365.0	-	B	B01-1825F
C	-	-	XX92	3510329 R1	0.79	18.0	Thin Wall XLPE Primary Cable	TAN	1365.0	-	C	B01-1825F
D	-	-	XX9ZA	3510311 R1	0.79	18.0	Thin Wall XLPE Primary Cable	GREY	1365.0	-	D	B01-1825F
G	-	-	BK62DC	3510353 R1	0.79	18.0	Thin Wall XLPE Primary Cable	DARK BLUE	1365.0	-	G	B01-1825F

Name	Terminal Part Number	V-Min	Name	Wire Part Number	Wire CSA	Wire Spec	Wire Material description	Wire Color Description	Wire Length	End2 Terminal Part Number	End2 Pin Name	End2 Connector
H	-	-	BK92-GAH	3510359 R1	0.79	18.0	Thin Wall XLPE Primary Cable	WHITE	1365.0	-	H	B01-1825F

Connector Name	8000F
Part Number	1677851C1
Short Description	HEADLIGHT T/S HARNESS CONNECTOR
Instances	LT/RH - X15/A26 - Directional Signal (Turn) With HEADLIGHTS:Diagram1 LT/RH - X15/A26 - Directional Signal (Turn) With HEADLIGHTS (HAL-125):Diagram1
Mates	8000_

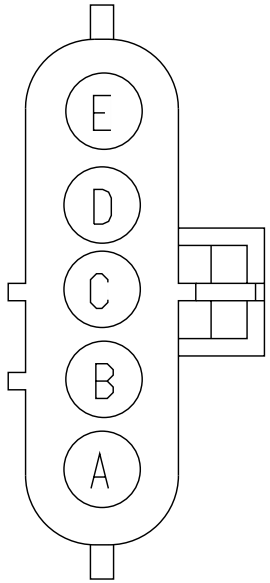

Name	Terminal Part Number	V-Min	Name	Wire Part Number	Wire CSA	Wire Spec	Wire Material description	Wire Color Description	Wire Length	End2 Terminal Part Number	End2 Pin Name	End2 Connect or
B	-	-	U11-GA	2643689 R1	1.91	14.0	Std. Wall XLPE Primary Cable	WHITE	1485.0	-	X	-
B	-	-	U11-GA	2643689 R1	1.91	14.0	Std. Wall XLPE Primary Cable	WHITE	1485.0	-	-	-
D	-	-	U56	3510318 R1	1.16	16.0	Thin Wall XLPE Primary Cable	ORANGE	2080.0	-	-	-
D	-	-	U56	3510318 R1	1.16	16.0	Thin Wall XLPE Primary Cable	ORANGE	2080.0	-	3	113_

Connector Name	8000
Part Number	1661375C2
Instances	LT/RH - X15/A26 - Directional Signal (Turn) With HEADLIGHTS Option2:Diagram1 LT/RH - X15/A26 - Marker Lights (With113 LED):Diagram1
Mates	LT-RIGHT_HEADLIGHT_LED-101 6-08-03

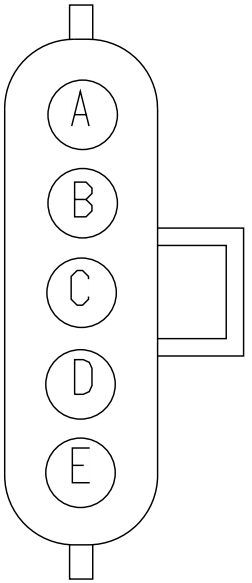

Name	Terminal Part Number	V-Min	Name	Wire Part Number	Wire CSA	Wire Spec	Wire Material description	Wire Color Description	Wire Length	End2 Terminal Part Number	End2 Pin Name	End2 Connect or
B	-	-	MA11-GB	2643689 R1	1.91	14.0	Std. Wall XLPE Primary Cable	WHITE	1795.0	-	-	-
D	-	-	MA57	2643682 R1	1.16	16.0	Std. Wall XLPE Primary Cable	ORANGE	4215.0	-	15	1700F
E	-	-	MA58B	2643679 R1	1.16	16.0	Std. Wall XLPE Primary Cable	BROWN	1290.0	-	X	-

Connector Name	8000
Part Number	1661375C2
Short Description	RIGHT HEADLIGHT T/S HARNESS CONNECTOR
Instances	LoneStar - X15 - Headlights Halogen N/INT N/LOWW:Diagram1 LoneStar - X15 - Headlights Halogen N/INT W/LOWW:Diagram1 LoneStar - X15 - Headlights Halogen W/INT N/LOWW:Diagram1 LoneStar - X15 - Headlights Halogen W/INT W/ LOWW:Diagram1 LT - X15/A26 - Headlights Halogen N/INT N/LOWW:Diagram1 LT - X15/A26 - Headlights Halogen N/INT W/LOWW:Diagram1 LT - X15/A26 - Headlights Halogen W/INT N/LOWW:Diagram1 LT - X15/A26 - Headlights Halogen W/INT W/LOWW:Diagram1 LT - X15/A26 - Headlights LED N/ INT N/LOWW:Diagram1 LT - X15/A26 - Headlights LED N/ INT W/LOWW:Diagram1 LT - X15/A26 - Headlights LED W/INT N/LOWW:Diagram1 LT - X15/A26 - Headlights LED W/INT W/LOWW:Diagram1 LT/RH - X15/A26 - Directional Signal (Turn) With HEADLIGHTS (LED-125):Diagram1 LT/RH - X15/A26 - Marker Lights (With 113 Halogen):Diagram1 LT/RH - X15/A26 - Marker Lights (With 125 Halogen):Diagram1 LT/RH - X15/A26 - Marker Lights (With 125 LED):Diagram1
Mates	8001F

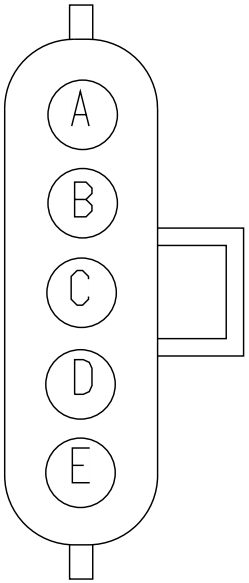

Name	Terminal Part Number	V-Min	Name	Wire Part Number	Wire CSA	Wire Spec	Wire Material description	Wire Color Description	Wire Length	End2 Terminal Part Number	End2 Pin Name	End2 Connect or
A	-	-	MA52B	2643693 R1	1.91	14.0	Std. Wall XLPE Primary Cable	YELLOW 2	4215.0	-	3	1700F
B	-	-	MA11-GB	2643689 R1	1.91	14.0	Std. Wall XLPE Primary Cable	WHITE	1795.0	-	-	-
C	-	-	MA53B	2643693 R1	1.91	14.0	Std. Wall XLPE Primary Cable	YELLOW 2	4215.0	-	4	1700F

Name	Terminal Part Number	V-Min	Name	Wire Part Number	Wire CSA	Wire Spec	Wire Material description	Wire Color Description	Wire Length	End2 Terminal Part Number	End2 Pin Name	End2 Connect or
D	-	-	MA57	2643682 R1	1.16	16.0	Std. Wall XLPE Primary Cable	ORANGE	4215.0	-	15	1700F
E	-	-	MA58B	2643679 R1	1.16	16.0	Std. Wall XLPE Primary Cable	BROWN	1290.0	-	X	-

Connector Name	8000_
Part Number	1661375C2
Instances	LT/RH - X15/A26 - Directional Signal (Turn) With HEADLIGHTS:Diagram1 LT/RH - X15/A26 - Directional Signal (Turn) With HEADLIGHTS (HAL-125):Diagram1
Mates	8000F

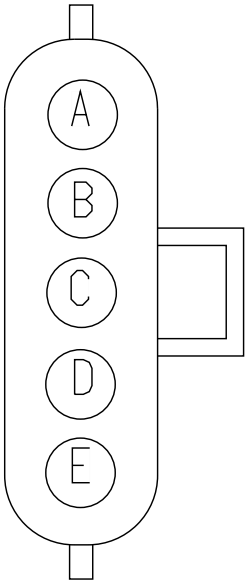

Name	Terminal Part Number	V-Min	Name	Wire Part Number	Wire CSA	Wire Spec	Wire Material description	Wire Color Description	Wire Length	End2 Terminal Part Number	End2 Pin Name	End2 Connect or
B	-	-	MA11-GB	2643689 R1	1.91	14.0	Std. Wall XLPE Primary Cable	WHITE	1795.0	-	-	-
D	-	-	MA57	2643682 R1	1.16	16.0	Std. Wall XLPE Primary Cable	ORANGE	4215.0	-	15	1700F

Connector Name	8001F
Part Number	1677851C1
Short Description	HEADLIGHT T/S HARNESS CONNECTOR
Instances	LoneStar - X15 - Headlights Halogen N/INT N/LOWW:Diagram1 LoneStar - X15 - Headlights Halogen N/INT W/LOWW:Diagram1 LoneStar - X15 - Headlights Halogen W/INT N/LOWW:Diagram1 LoneStar - X15 - Headlights Halogen W/INT W/ LOWW:Diagram1 LT - X15/A26 - Headlights Halogen N/INT N/LOWW:Diagram1 LT - X15/A26 - Headlights Halogen N/INT W/LOWW:Diagram1 LT - X15/A26 - Headlights Halogen W/INT N/LOWW:Diagram1 LT - X15/A26 - Headlights Halogen W/INT W/LOWW:Diagram1 LT - X15/A26 - Headlights LED N/ INT N/LOWW:Diagram1 LT - X15/A26 - Headlights LED N/ INT W/LOWW:Diagram1 LT - X15/A26 - Headlights LED W/INT N/LOWW:Diagram1 LT - X15/A26 - Headlights LED W/INT W/LOWW:Diagram1 LT/RH - X15/A26 - Directional Signal (Turn) With HEADLIGHTS:Diagram1 LT/RH - X15/A26 - Directional Signal (Turn) With HEADLIGHTS (HAL-125):Diagram1 LT/RH - X15/A26 - Directional Signal (Turn) With HEADLIGHTS (LED-125):Diagram1 LT/RH - X15/A26 - Marker Lights (With 113 Halogen):Diagram1 LT/RH - X15/A26 - Marker Lights (With 125 Halogen):Diagram1 LT/RH - X15/A26 - Marker Lights (With 125 LED):Diagram1
Mates	8001

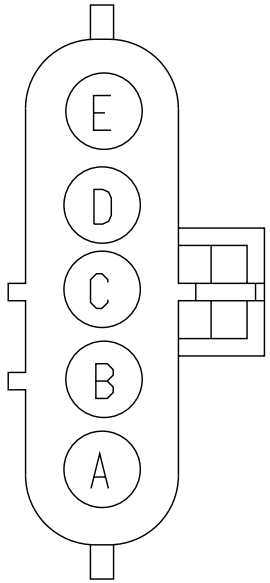

Name	Terminal Part Number	V-Min	Name	Wire Part Number	Wire CSA	Wire Spec	Wire Material description	Wire Color Description	Wire Length	End2 Terminal Part Number	End2 Pin Name	End2 Connector
A	-	-	U03-U52A	3510337 R1	1.91	14.0	Thin Wall XLPE Primary Cable	YELLOW 2	800.0	-	A	8016L
A	-	-	U52A	2643693 R1	1.91	14.0	Std. Wall XLPE Primary Cable	YELLOW 2	1835.0	-	-	-

Name	Terminal Part Number	V-Min	Name	Wire Part Number	Wire CSA	Wire Spec	Wire Material description	Wire Color Description	Wire Length	End2 Terminal Part Number	End2 Pin Name	End2 Connector
A	-	-	U52A	2643693 R1	1.91	14.0	Std. Wall XLPE Primary Cable	YELLOW 2	1835.0	-	1	8003L
A	-	-	U52A	2643693 R1	1.91	14.0	Std. Wall XLPE Primary Cable	YELLOW 2	1835.0	-	A	8012L
A	-	-	U52A	2643693 R1	1.91	14.0	Std. Wall XLPE Primary Cable	YELLOW 2	1835.0	-	A	8016L
B	-	-	U11-GA	2643689 R1	1.91	14.0	Std. Wall XLPE Primary Cable	WHITE	1485.0	-	B	8001F
B	-	-	U11-GA	2643689 R1	1.91	14.0	Std. Wall XLPE Primary Cable	WHITE	1485.0	-	-	-
B	-	-	U11-GA	2643689 R1	1.91	14.0	Std. Wall XLPE Primary Cable	WHITE	1485.0	-	X	-
C	-	-	U53A	2643693 R1	1.91	14.0	Std. Wall XLPE Primary Cable	YELLOW 2	1835.0	-	-	-
C	-	-	U53A	2643693 R1	1.91	14.0	Std. Wall XLPE Primary Cable	YELLOW 2	1835.0	-	A	8015L

Name	Terminal Part Number	V-Min	Name	Wire Part Number	Wire CSA	Wire Spec	Wire Material description	Wire Color Description	Wire Length	End2 Terminal Part Number	End2 Pin Name	End2 Connect or
C	-	-	U53A	2643693 R1	1.91	14.0	Std. Wall XLPE Primary Cable	YELLOW 2	1835.0	-	A	8011L
C	-	-	U53A	2643693 R1	1.91	14.0	Std. Wall XLPE Primary Cable	YELLOW 2	1835.0	-	1	8002L
D	-	-	U56	3510318 R1	1.16	16.0	Thin Wall XLPE Primary Cable	ORANGE	2080.0	-	3	125
D	-	-	U56	3510318 R1	1.16	16.0	Thin Wall XLPE Primary Cable	ORANGE	2080.0	-	-	-
E	-	-	U58A	2643679 R1	1.16	16.0	Std. Wall XLPE Primary Cable	BROWN	1435.0	-	-	-
E	-	-	U58A	2643679 R1	1.16	16.0	Std. Wall XLPE Primary Cable	BROWN	1435.0	-	X	-

Connector Name	8001F
Part Number	1677851C1
Short Description	HEADLIGHT T/S HARNESS CONNECTOR
Instances	LoneStar - X15 - Headlights Halogen N/INT N/LOWW:Diagram1 LoneStar - X15 - Headlights Halogen N/INT W/LOWW:Diagram1 LoneStar - X15 - Headlights Halogen W/INT N/LOWW:Diagram1 LoneStar - X15 - Headlights Halogen W/INT W/ LOWW:Diagram1 LT - X15/A26 - Headlights Halogen N/INT N/LOWW:Diagram1 LT - X15/A26 - Headlights Halogen N/INT W/LOWW:Diagram1 LT - X15/A26 - Headlights Halogen W/INT N/LOWW:Diagram1 LT - X15/A26 - Headlights Halogen W/INT W/LOWW:Diagram1 LT - X15/A26 - Headlights LED N/ INT N/LOWW:Diagram1 LT - X15/A26 - Headlights LED N/ INT W/LOWW:Diagram1 LT - X15/A26 - Headlights LED W/INT N/LOWW:Diagram1 LT - X15/A26 - Headlights LED W/INT W/LOWW:Diagram1 LT/RH - X15/A26 - Directional Signal (Turn) With HEADLIGHTS (LED-125):Diagram1 LT/RH - X15/A26 - Marker Lights (With 113 Halogen):Diagram1 LT/RH - X15/A26 - Marker Lights (With 125 Halogen):Diagram1 LT/RH - X15/A26 - Marker Lights (With 125 LED):Diagram1
Mates	8000

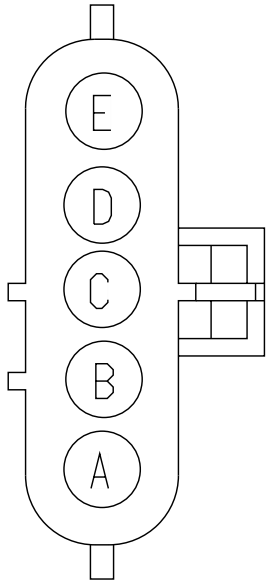

Name	Terminal Part Number	V-Min	Name	Wire Part Number	Wire CSA	Wire Spec	Wire Material description	Wire Color Description	Wire Length	End2 Terminal Part Number	End2 Pin Name	End2 Connect or
A	-	-	U04-U52A	3510337 R1	1.91	14.0	Thin Wall XLPE Primary Cable	YELLOW 2	800.0	-	A	8016R
A	-	-	U52A	2643693 R1	1.91	14.0	Std. Wall XLPE Primary Cable	YELLOW 2	1835.0	-	A	8016R
A	-	-	U52A	2643693 R1	1.91	14.0	Std. Wall XLPE Primary Cable	YELLOW 2	1835.0	-	A	8012R

Name	Terminal Part Number	V-Min	Name	Wire Part Number	Wire CSA	Wire Spec	Wire Material description	Wire Color Description	Wire Length	End2 Terminal Part Number	End2 Pin Name	End2 Connect or
A	-	-	U52A	2643693 R1	1.91	14.0	Std. Wall XLPE Primary Cable	YELLOW 2	1835.0	-	-	-
A	-	-	U52A	2643693 R1	1.91	14.0	Std. Wall XLPE Primary Cable	YELLOW 2	1835.0	-	1	8003R
B	-	-	U11-GA	2643689 R1	1.91	14.0	Std. Wall XLPE Primary Cable	WHITE	1485.0	-	B	8001F
B	-	-	U11-GA	2643689 R1	1.91	14.0	Std. Wall XLPE Primary Cable	WHITE	1485.0	-	X	-
B	-	-	U11-GA	2643689 R1	1.91	14.0	Std. Wall XLPE Primary Cable	WHITE	1485.0	-	-	-
C	-	-	U53A	2643693 R1	1.91	14.0	Std. Wall XLPE Primary Cable	YELLOW 2	1835.0	-	A	8015R
C	-	-	U53A	2643693 R1	1.91	14.0	Std. Wall XLPE Primary Cable	YELLOW 2	1835.0	-	-	-
C	-	-	U53A	2643693 R1	1.91	14.0	Std. Wall XLPE Primary Cable	YELLOW 2	1835.0	-	1	8002R

Name	Terminal Part Number	V-Min	Name	Wire Part Number	Wire CSA	Wire Spec	Wire Material description	Wire Color Description	Wire Length	End2 Terminal Part Number	End2 Pin Name	End2 Connector
C	-	-	U53A	2643693 R1	1.91	14.0	Std. Wall XLPE Primary Cable	YELLOW 2	1835.0	-	A	8011R
D	-	-	U56	3510318 R1	1.16	16.0	Thin Wall XLPE Primary Cable	ORANGE	2080.0	-	-	-
E	-	-	U58A	2643679 R1	1.16	16.0	Std. Wall XLPE Primary Cable	BROWN	1435.0	-	X	-
E	-	-	U58A	2643679 R1	1.16	16.0	Std. Wall XLPE Primary Cable	BROWN	1435.0	-	-	-

Connector Name	8001
Part Number	1661375C2
Short Description	LEFT HEADLIGHT T/S HARNESS CONNECTOR
Instances	LoneStar - X15 - Headlights Halogen N/INT N/LOWW:Diagram1 LoneStar - X15 - Headlights Halogen N/INT W/LOWW:Diagram1 LoneStar - X15 - Headlights Halogen W/INT N/LOWW:Diagram1 LoneStar - X15 - Headlights Halogen W/INT W/ LOWW:Diagram1 LT - X15/A26 - Headlights Halogen N/INT N/LOWW:Diagram1 LT - X15/A26 - Headlights Halogen N/INT W/LOWW:Diagram1 LT - X15/A26 - Headlights Halogen W/INT N/LOWW:Diagram1 LT - X15/A26 - Headlights Halogen W/INT W/LOWW:Diagram1 LT - X15/A26 - Headlights LED N/ INT N/LOWW:Diagram1 LT - X15/A26 - Headlights LED N/ INT W/LOWW:Diagram1 LT - X15/A26 - Headlights LED W/INT N/LOWW:Diagram1 LT - X15/A26 - Headlights LED W/INT W/LOWW:Diagram1 LT/RH - X15/A26 - Directional Signal (Turn) With HEADLIGHTS:Diagram1 LT/RH - X15/A26 - Directional Signal (Turn) With HEADLIGHTS (HAL-125):Diagram1 LT/RH - X15/A26 - Directional Signal (Turn) With HEADLIGHTS (LED-125):Diagram1 LT/RH - X15/A26 - Marker Lights (With 113 Halogen):Diagram1 LT/RH - X15/A26 - Marker Lights (With 125 Halogen):Diagram1 LT/RH - X15/A26 - Marker Lights (With 125 LED):Diagram1
Mates	8001F

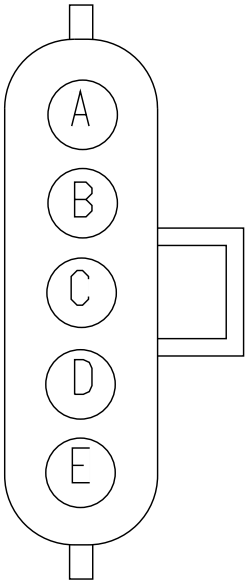

Name	Terminal Part Number	V-Min	Name	Wire Part Number	Wire CSA	Wire Spec	Wire Material description	Wire Color Description	Wire Length	End2 Terminal Part Number	End2 Pin Name	End2 Connector
A	-	-	MA52A	2643693 R1	1.91	14.0	Std. Wall XLPE Primary Cable	YELLOW 2	3290.0	-	1	1700F
B	-	-	MA11-GA	2643689 R1	1.91	14.0	Std. Wall XLPE Primary Cable	WHITE	870.0	-	-	-

Name	Terminal Part Number	V-Min	Name	Wire Part Number	Wire CSA	Wire Spec	Wire Material description	Wire Color Description	Wire Length	End2 Terminal Part Number	End2 Pin Name	End2 Connector
C	-	-	MA53A	2643693 R1	1.91	14.0	Std. Wall XLPE Primary Cable	YELLOW 2	3290.0	-	2	1700F
D	-	-	MA56	2643682 R1	1.16	16.0	Std. Wall XLPE Primary Cable	ORANGE	3290.0	-	14	1700F
E	-	-	MA58A	2643679 R1	1.16	16.0	Std. Wall XLPE Primary Cable	BROWN	365.0	-	X	-

Connector Name	8001
Part Number	1661375C2
Instances	LT/RH - X15/A26 - Directional Signal (Turn) With HEADLIGHTS Option2:Diagram1 LT/RH - X15/A26 - Marker Lights (With113 LED):Diagram1
Mates	LT-LEFT_HEADLIGHT_LED-1016 -08-03

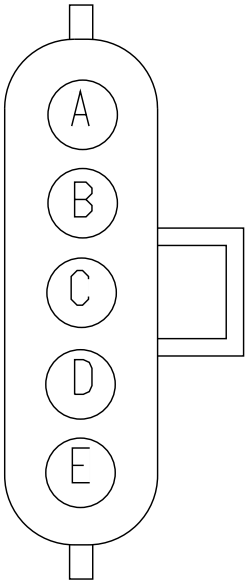

Name	Terminal Part Number	V-Min	Name	Wire Part Number	Wire CSA	Wire Spec	Wire Material description	Wire Color Description	Wire Length	End2 Terminal Part Number	End2 Pin Name	End2 Connect or
B	-	-	MA11-GA	2643689 R1	1.91	14.0	Std. Wall XLPE Primary Cable	WHITE	870.0	-	-	-
D	-	-	MA56	2643682 R1	1.16	16.0	Std. Wall XLPE Primary Cable	ORANGE	3290.0	-	14	1700F
E	-	-	MA58A	2643679 R1	1.16	16.0	Std. Wall XLPE Primary Cable	BROWN	365.0	-	X	-

Connector Name	8002L
Part Number	6113477C1
Instances	LoneStar - X15 - Headlights Halogen N/INT N/LOWW:Diagram1 LoneStar - X15 - Headlights Halogen N/INT W/LOWW:Diagram1 LoneStar - X15 - Headlights Halogen W/INT N/LOWW:Diagram1 LoneStar - X15 - Headlights Halogen W/INT W/ LOWW:Diagram1 RH - X15/A26 - Headlights Halogen N/INT N/LOWW:Diagram1 RH - X15/A26 - Headlights Halogen N/INT W/LOWW:Diagram1 RH - X15/A26 - Headlights Halogen W/INT N/LOWW:Diagram1 RH - X15/A26 - Headlights Halogen W/INT W/LOWW:Diagram1
Mates	LS-LEFT_HEADLIGHT_HALOGEN- 1016-08-01A

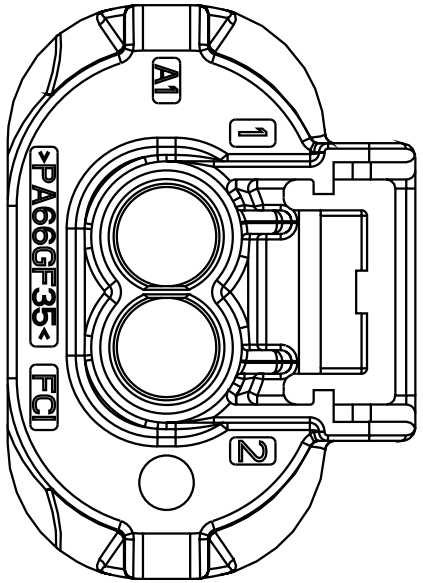

Name	Terminal Part Number	V-Min	Name	Wire Part Number	Wire CSA	Wire Spec	Wire Material description	Wire Color Description	Wire Length	End2 Terminal Part Number	End2 Pin Name	End2 Connect or
1	-	-	U53A	2643693 R1	1.91	14.0	Std. Wall XLPE Primary Cable	YELLOW 2	1835.0	-	3	LF 5162
1	-	-	U53A	2643693 R1	1.91	14.0	Std. Wall XLPE Primary Cable	YELLOW 2	1835.0	-	-	-
1	-	-	U53A	2643693 R1	1.91	14.0	Std. Wall XLPE Primary Cable	YELLOW 2	1835.0	-	C	8001F
2	-	-	U11-GAB	2643689 R1	1.91	14.0	Std. Wall XLPE Primary Cable	WHITE	350.0	-	2	8002R

Name	Terminal Part Number	V-Min	Name	Wire Part Number	Wire CSA	Wire Spec	Wire Material description	Wire Color Description	Wire Length	End2 Terminal Part Number	End2 Pin Name	End2 Connector
2	-	-	U11-GAB	2643689 R1	1.91	14.0	Std. Wall XLPE Primary Cable	WHITE	350.0	-	-	-

Connector Name	8002R
Part Number	6113477C1
Instances	LoneStar - X15 - Headlights Halogen N/INT N/LOWW:Diagram1 LoneStar - X15 - Headlights Halogen N/INT W/LOWW:Diagram1 LoneStar - X15 - Headlights Halogen W/INT N/LOWW:Diagram1 LoneStar - X15 - Headlights Halogen W/INT W/ LOWW:Diagram1 RH - X15/A26 - Headlights Halogen N/INT N/LOWW:Diagram1 RH - X15/A26 - Headlights Halogen N/INT W/LOWW:Diagram1 RH - X15/A26 - Headlights Halogen W/INT N/LOWW:Diagram1 RH - X15/A26 - Headlights Halogen W/INT W/LOWW:Diagram1
Mates	LS-RIGHT_HEADLIGHT_HALOGEN -1016-08-01A

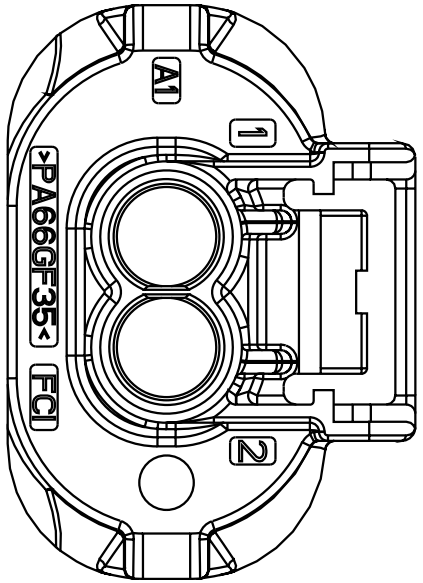

Name	Terminal Part Number	V-Min	Name	Wire Part Number	Wire CSA	Wire Spec	Wire Material description	Wire Color Description	Wire Length	End2 Terminal Part Number	End2 Pin Name	End2 Connect or
1	-	-	U53A	2643693 R1	1.91	14.0	Std. Wall XLPE Primary Cable	YELLOW 2	1835.0	-	-	-
1	-	-	U53A	2643693 R1	1.91	14.0	Std. Wall XLPE Primary Cable	YELLOW 2	1835.0	-	C	8001F
1	-	-	U53A	2643693 R1	1.91	14.0	Std. Wall XLPE Primary Cable	YELLOW 2	1835.0	-	3	RS 5162
2	-	-	U11-GAB	2643689 R1	1.91	14.0	Std. Wall XLPE Primary Cable	WHITE	350.0	-	2	8002L

Name	Terminal Part Number	V-Min	Name	Wire Part Number	Wire CSA	Wire Spec	Wire Material description	Wire Color Description	Wire Length	End2 Terminal Part Number	End2 Pin Name	End2 Connect or
2	-	-	U11-GAB	2643689 R1	1.91	14.0	Std. Wall XLPE Primary Cable	WHITE	350.0	-	X	-

Connector Name	8002
Part Number	3612306C1
Short Description	LEFT HEADLIGHTS T/S HARNESS CONN
Instances	LoneStar - X15/A26 - Marker Lights (Halogen):Diagram1 RH - X15/A26 - Directional Signal (Turn) W/ HEADLIGHTS:Diagram1 RH - X15/A26 - Headlights Halogen N/INT N/LOWW:Diagram1 RH - X15/A26 - Headlights Halogen N/INT W/LOWW:Diagram1 RH - X15/A26 - Headlights Halogen W/INT N/LOWW:Diagram1 RH - X15/A26 - Headlights Halogen W/INT W/LOWW:Diagram1
Mates	LF 5162

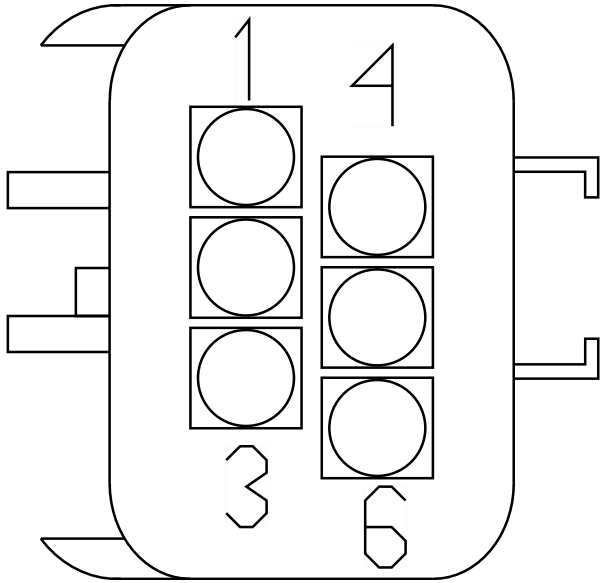

Name	Terminal Part Number	V-Min	Name	Wire Part Number	Wire CSA	Wire Spec	Wire Material description	Wire Color Description	Wire Length	End2 Terminal Part Number	End2 Pin Name	End2 Connect or
1	-	-	MA52A	2643693 R1	1.91	14.0	Std. Wall XLPE Primary Cable	YELLOW 2	3290.0	-	1	1700F
2	-	-	MA11-GA	2643689 R1	1.91	14.0	Std. Wall XLPE Primary Cable	WHITE	870.0	-	-	-
3	-	-	MA53A	2643693 R1	1.91	14.0	Std. Wall XLPE Primary Cable	YELLOW 2	3290.0	-	2	1700F
4	-	-	MA56	2643682 R1	1.16	16.0	Std. Wall XLPE Primary Cable	ORANGE	3290.0	-	14	1700F

Name	Terminal Part Number	V-Min	Name	Wire Part Number	Wire CSA	Wire Spec	Wire Material description	Wire Color Description	Wire Length	End2 Terminal Part Number	End2 Pin Name	End2 Connect or
5	-	-	MA58A	2643679 R1	1.16	16.0	Std. Wall XLPE Primary Cable	BROWN	365.0	-	X	-

Connector Name	8003L
Part Number	6116207C1
Instances	LoneStar - X15 - Headlights Halogen N/INT N/LOWW:Diagram1 LoneStar - X15 - Headlights Halogen N/INT W/LOWW:Diagram1 LoneStar - X15 - Headlights Halogen W/INT N/LOWW:Diagram1 LoneStar - X15 - Headlights Halogen W/INT W/ LOWW:Diagram1 RH - X15/A26 - Headlights Halogen N/INT N/LOWW:Diagram1 RH - X15/A26 - Headlights Halogen N/INT W/LOWW:Diagram1 RH - X15/A26 - Headlights Halogen W/INT N/LOWW:Diagram1 RH - X15/A26 - Headlights Halogen W/INT W/LOWW:Diagram1
Mates	LS-LEFT_HEADLIGHT_HALOGEN- 1016-08-01A

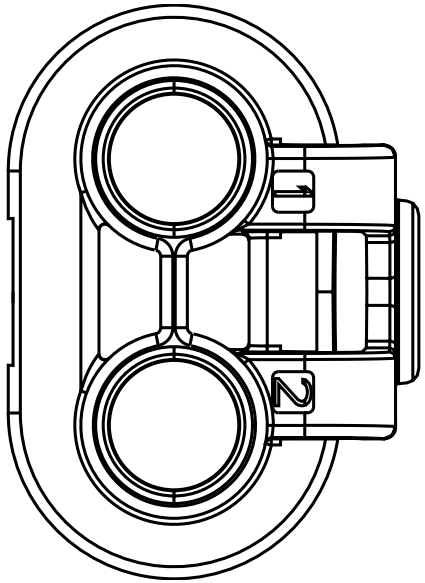

Name	Terminal Part Number	V-Min	Name	Wire Part Number	Wire CSA	Wire Spec	Wire Material description	Wire Color Description	Wire Length	End2 Terminal Part Number	End2 Pin Name	End2 Connect or
1	-	-	U52A	2643693 R1	1.91	14.0	Std. Wall XLPE Primary Cable	YELLOW 2	1835.0	-	1	LF 5162
1	-	-	U52A	2643693 R1	1.91	14.0	Std. Wall XLPE Primary Cable	YELLOW 2	1835.0	-	A	8001F
1	-	-	U52A	2643693 R1	1.91	14.0	Std. Wall XLPE Primary Cable	YELLOW 2	1835.0	-	-	-
2	-	-	U11-GAA	2643689 R1	1.91	14.0	Std. Wall XLPE Primary Cable	WHITE	350.0	-	2	8003R

Name	Terminal Part Number	V-Min	Name	Wire Part Number	Wire CSA	Wire Spec	Wire Material description	Wire Color Description	Wire Length	End2 Terminal Part Number	End2 Pin Name	End2 Connect or
2	-	-	U11-GAA	2643689 R1	1.91	14.0	Std. Wall XLPE Primary Cable	WHITE	350.0	-	-	-

Connector Name	8003R
Part Number	6116207C1
Instances	LoneStar - X15 - Headlights Halogen N/INT N/LOWW:Diagram1 LoneStar - X15 - Headlights Halogen N/INT W/LOWW:Diagram1 LoneStar - X15 - Headlights Halogen W/INT N/LOWW:Diagram1 LoneStar - X15 - Headlights Halogen W/INT W/ LOWW:Diagram1 RH - X15/A26 - Headlights Halogen N/INT N/LOWW:Diagram1 RH - X15/A26 - Headlights Halogen N/INT W/LOWW:Diagram1 RH - X15/A26 - Headlights Halogen W/INT N/LOWW:Diagram1 RH - X15/A26 - Headlights Halogen W/INT W/LOWW:Diagram1
Mates	LS-RIGHT_HEADLIGHT_HALOGEN -1016-08-01A

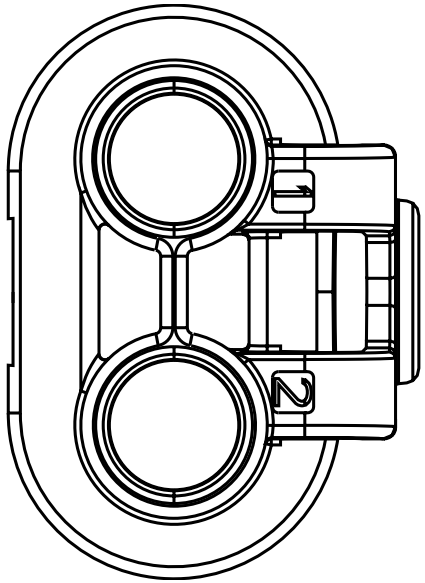

Name	Terminal Part Number	V-Min	Name	Wire Part Number	Wire CSA	Wire Spec	Wire Material description	Wire Color Description	Wire Length	End2 Terminal Part Number	End2 Pin Name	End2 Connect or
1	-	-	U52A	2643693 R1	1.91	14.0	Std. Wall XLPE Primary Cable	YELLOW 2	1835.0	-	-	-
1	-	-	U52A	2643693 R1	1.91	14.0	Std. Wall XLPE Primary Cable	YELLOW 2	1835.0	-	A	8001F
2	-	-	U11-GAA	2643689 R1	1.91	14.0	Std. Wall XLPE Primary Cable	WHITE	350.0	-	2	8003L
2	-	-	U11-GAA	2643689 R1	1.91	14.0	Std. Wall XLPE Primary Cable	WHITE	350.0	-	X	-

Connector Name	8003
Part Number	3612306C1
Short Description	RIGHT HEADLIGHTS T/S HARNESS CONN
Instances	LoneStar - X15/A26 - Marker Lights (Halogen):Diagram1 RH - X15/A26 - Directional Signal (Turn) W/ HEADLIGHTS:Diagram1 RH - X15/A26 - Headlights Halogen N/INT N/LOWW:Diagram1 RH - X15/A26 - Headlights Halogen N/INT W/LOWW:Diagram1 RH - X15/A26 - Headlights Halogen W/INT N/LOWW:Diagram1 RH - X15/A26 - Headlights Halogen W/INT W/LOWW:Diagram1
Mates	RS 5162

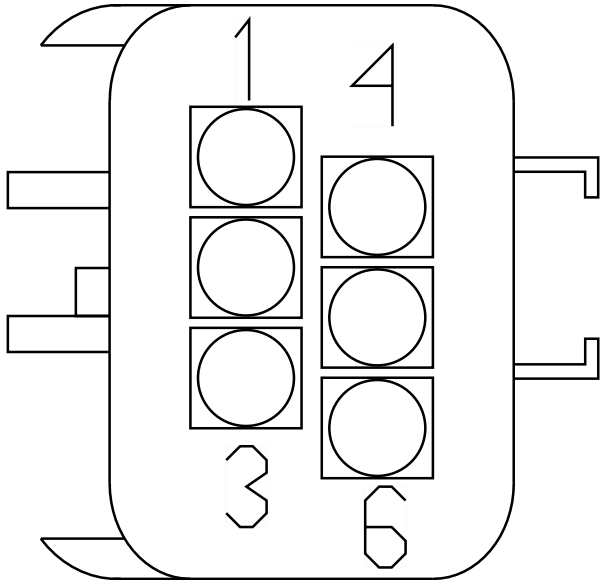

Name	Terminal Part Number	V-Min	Name	Wire Part Number	Wire CSA	Wire Spec	Wire Material description	Wire Color Description	Wire Length	End2 Terminal Part Number	End2 Pin Name	End2 Connect or
1	-	-	MA52B	2643693 R1	1.91	14.0	Std. Wall XLPE Primary Cable	YELLOW 2	4215.0	-	3	1700F
2	-	-	MA11-GB	2643689 R1	1.91	14.0	Std. Wall XLPE Primary Cable	WHITE	1795.0	-	-	-
3	-	-	MA53B	2643693 R1	1.91	14.0	Std. Wall XLPE Primary Cable	YELLOW 2	4215.0	-	4	1700F
4	-	-	MA57	2643682 R1	1.16	16.0	Std. Wall XLPE Primary Cable	ORANGE	4215.0	-	15	1700F

Name	Terminal Part Number	V-Min	Name	Wire Part Number	Wire CSA	Wire Spec	Wire Material description	Wire Color Description	Wire Length	End2 Terminal Part Number	End2 Pin Name	End2 Connect or
5	-	-	MA58B	2643679 R1	1.16	16.0	Std. Wall XLPE Primary Cable	BROWN	1290.0	-	X	-

Connector Name	8004L
Part Number	3600049C1
Instances	LoneStar - X15/A26 - Marker Lights (Halogen):Diagram1
Mates	RH-LEFT_HEADLIGHT_HALOGEN- 1016-08-01A

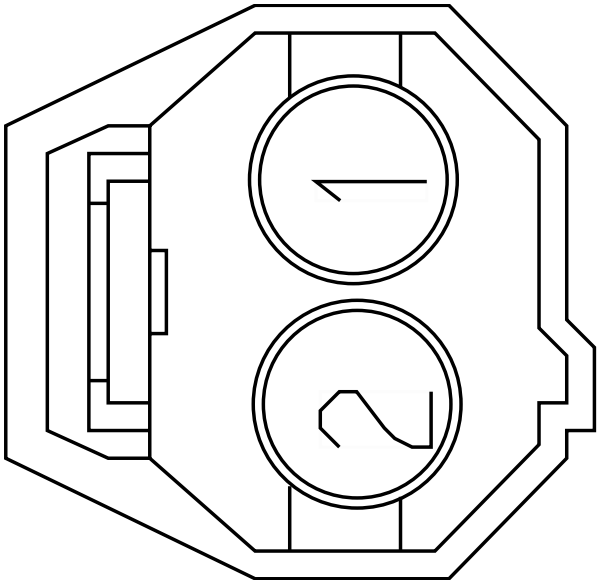

Name	Terminal Part Number	V-Min	Name	Wire Part Number	Wire CSA	Wire Spec	Wire Material description	Wire Color Description	Wire Length	End2 Terminal Part Number	End2 Pin Name	End2 Connect or
1	-	-	U58AA	3510306 R1	1.16	16.0	Thin Wall XLPE Primary Cable	BROWN	470.0	-	-	-
2	-	-	U11-GAD	3510360 R1	1.16	16.0	Thin Wall XLPE Primary Cable	WHITE	420.0	-	2	8004R

Connector Name 8004R
Part Number 3600049C1
Instances LoneStar - X15/A26 - Marker Lights (Halogen):Diagram1
Mates RH-RIGHT_HEADLIGHT_HALOGEN -1016-08-01A

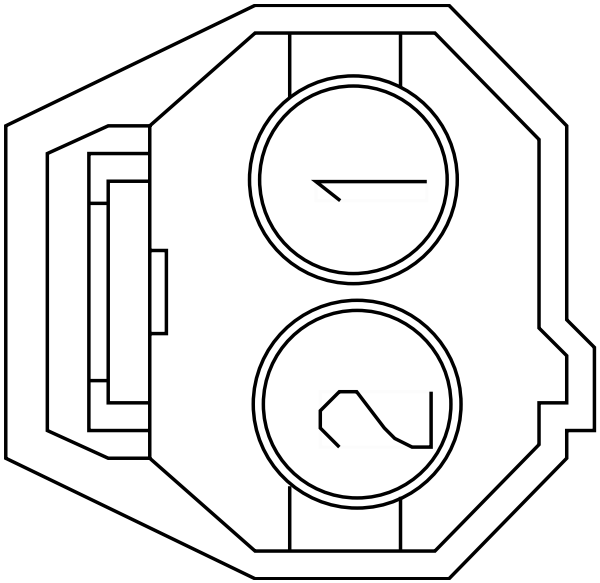

Name	Terminal Part Number	V-Min	Name	Wire Part Number	Wire CSA	Wire Spec	Wire Material description	Wire Color Description	Wire Length	End2 Terminal Part Number	End2 Pin Name	End2 Connect or
1	-	-	U58AA	3510306 R1	1.16	16.0	Thin Wall XLPE Primary Cable	BROWN	470.0	-	X	-
2	-	-	U11-GAD	3510360 R1	1.16	16.0	Thin Wall XLPE Primary Cable	WHITE	420.0	-	2	8004L

Connector Name	8005L
Part Number	3625557C1
Instances	LoneStar - X15/A26 - Marker Lights (Halogen):Diagram1 RH - X15/A26 - Directional Signal (Turn) W/ HEADLIGHTS:Diagram1
Mates	RH-LEFT_HEADLIGHT_HALOGEN- 1016-08-01A

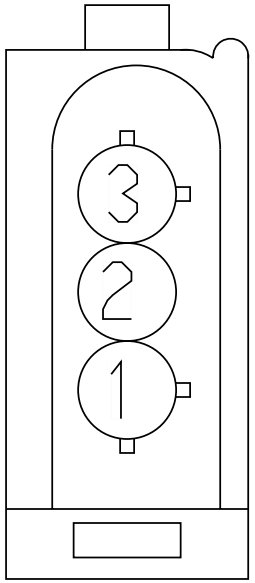

Name	Terminal Part Number	V-Min	Name	Wire Part Number	Wire CSA	Wire Spec	Wire Material description	Wire Color Description	Wire Length	End2 Terminal Part Number	End2 Pin Name	End2 Connect or
1	-	-	U11-GAC	3510360 R1	1.16	16.0	Thin Wall XLPE Primary Cable	WHITE	595.0	-	1	8005R
2	-	-	U58AB	3510306 R1	1.16	16.0	Thin Wall XLPE Primary Cable	BROWN	645.0	-	2	8005R
3	-	-	U56	3510318 R1	1.16	16.0	Thin Wall XLPE Primary Cable	ORANGE	2080.0	-	4	LF 5162

Connector Name	8005R
Part Number	3625557C1
Instances	LoneStar - X15/A26 - Marker Lights (Halogen):Diagram1 RH - X15/A26 - Directional Signal (Turn) W/ HEADLIGHTS:Diagram1
Mates	RH-RIGHT_HEADLIGHT_HALOGEN -1016-08-01A

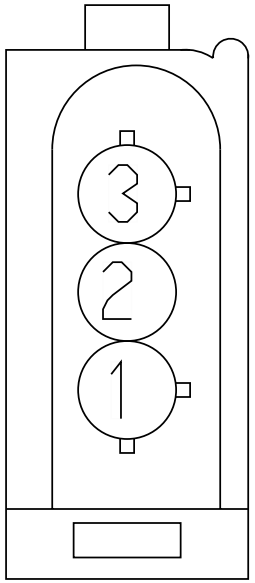

Name	Terminal Part Number	V-Min	Name	Wire Part Number	Wire CSA	Wire Spec	Wire Material description	Wire Color Description	Wire Length	End2 Terminal Part Number	End2 Pin Name	End2 Connect or
1	-	-	U11-GAC	3510360 R1	1.16	16.0	Thin Wall XLPE Primary Cable	WHITE	595.0	-	1	8005L
2	-	-	U58AB	3510306 R1	1.16	16.0	Thin Wall XLPE Primary Cable	BROWN	645.0	-	2	8005L
3	-	-	U56	3510318 R1	1.16	16.0	Thin Wall XLPE Primary Cable	ORANGE	2080.0	-	-	-

Connector Name	8011L
Part Number	3668886C1
Instances	LT - X15/A26 - Headlights Halogen N/INT N/LOWW:Diagram1 LT - X15/A26 - Headlights Halogen N/INT W/LOWW:Diagram1 LT - X15/A26 - Headlights Halogen W/INT N/LOWW:Diagram1 LT - X15/A26 - Headlights Halogen W/INT W/LOWW:Diagram1
Mates	LT-LS_HEADLIGHT_HAL-1016-0 1-03

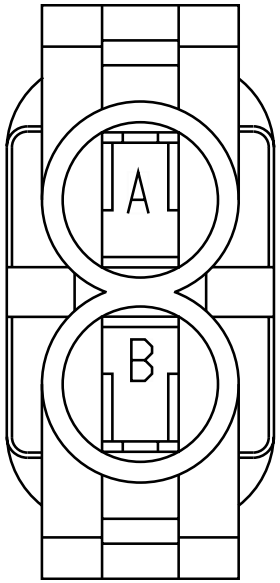

Name	Terminal Part Number	V-Min	Name	Wire Part Number	Wire CSA	Wire Spec	Wire Material description	Wire Color Description	Wire Length	End2 Terminal Part Number	End2 Pin Name	End2 Connect or
A	-	-	U53A	2643693 R1	1.91	14.0	Std. Wall XLPE Primary Cable	YELLOW 2	1835.0	-	C	8001F
A	-	-	U53A	2643693 R1	1.91	14.0	Std. Wall XLPE Primary Cable	YELLOW 2	1835.0	-	-	-
B	-	-	U11-GAB	2643689 R1	1.91	14.0	Std. Wall XLPE Primary Cable	WHITE	350.0	-	B	8011R

Connector Name	8011R
Part Number	3668886C1
Instances	LT - X15/A26 - Headlights Halogen N/INT N/LOWW:Diagram1 LT - X15/A26 - Headlights Halogen N/INT W/LOWW:Diagram1 LT - X15/A26 - Headlights Halogen W/INT N/LOWW:Diagram1 LT - X15/A26 - Headlights Halogen W/INT W/LOWW:Diagram1
Mates	LT-RS_HEADLIGHT_HAL-1016-0 1-03

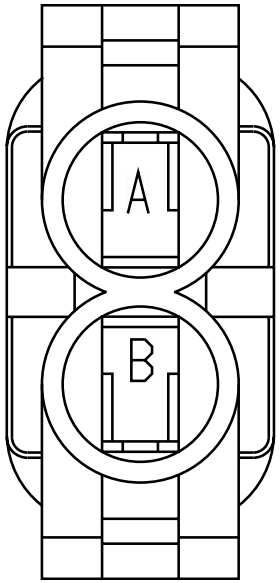

Name	Terminal Part Number	V-Min	Name	Wire Part Number	Wire CSA	Wire Spec	Wire Material description	Wire Color Description	Wire Length	End2 Terminal Part Number	End2 Pin Name	End2 Connect or
A	-	-	U53A	2643693 R1	1.91	14.0	Std. Wall XLPE Primary Cable	YELLOW 2	1835.0	-	-	-
A	-	-	U53A	2643693 R1	1.91	14.0	Std. Wall XLPE Primary Cable	YELLOW 2	1835.0	-	C	8001F
B	-	-	U11-GAB	2643689 R1	1.91	14.0	Std. Wall XLPE Primary Cable	WHITE	350.0	-	B	8011L

Connector Name	8012L
Part Number	3668886C1
Instances	LT - X15/A26 - Headlights Halogen N/INT N/LOWW:Diagram1 LT - X15/A26 - Headlights Halogen N/INT W/LOWW:Diagram1 LT - X15/A26 - Headlights Halogen W/INT N/LOWW:Diagram1 LT - X15/A26 - Headlights Halogen W/INT W/LOWW:Diagram1
Mates	LT-LS_HEADLIGHT_HAL-1016-0 1-03

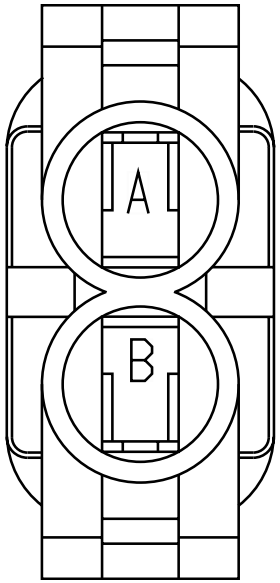

Name	Terminal Part Number	V-Min	Name	Wire Part Number	Wire CSA	Wire Spec	Wire Material description	Wire Color Description	Wire Length	End2 Terminal Part Number	End2 Pin Name	End2 Connect or
A	-	-	U52A	2643693 R1	1.91	14.0	Std. Wall XLPE Primary Cable	YELLOW 2	1835.0	-	-	-
A	-	-	U52A	2643693 R1	1.91	14.0	Std. Wall XLPE Primary Cable	YELLOW 2	1835.0	-	A	8001F
B	-	-	U11-GAA	2643689 R1	1.91	14.0	Std. Wall XLPE Primary Cable	WHITE	350.0	-	B	8012R

Connector Name	8012R
Part Number	3668886C1
Instances	LT - X15/A26 - Headlights Halogen N/INT N/LOWW:Diagram1 LT - X15/A26 - Headlights Halogen N/INT W/LOWW:Diagram1 LT - X15/A26 - Headlights Halogen W/INT N/LOWW:Diagram1 LT - X15/A26 - Headlights Halogen W/INT W/LOWW:Diagram1
Mates	LT-RS_HEADLIGHT_HAL-1016-0 1-03

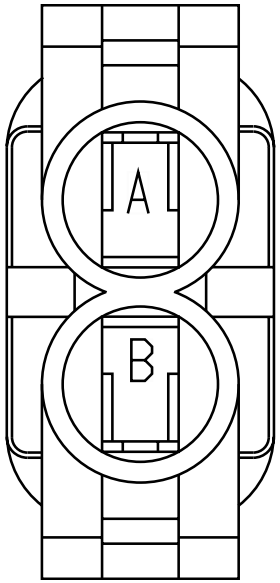

Name	Terminal Part Number	V-Min	Name	Wire Part Number	Wire CSA	Wire Spec	Wire Material description	Wire Color Description	Wire Length	End2 Terminal Part Number	End2 Pin Name	End2 Connect or
A	-	-	U52A	2643693 R1	1.91	14.0	Std. Wall XLPE Primary Cable	YELLOW 2	1835.0	-	A	8001F
A	-	-	U52A	2643693 R1	1.91	14.0	Std. Wall XLPE Primary Cable	YELLOW 2	1835.0	-	-	-
B	-	-	U11-GAA	2643689 R1	1.91	14.0	Std. Wall XLPE Primary Cable	WHITE	350.0	-	B	8012L

Connector Name	8015L
Part Number	3668886C1
Instances	LT - X15/A26 - Headlights LED N/ INT N/LOWW:Diagram1 LT - X15/A26 - Headlights LED N/ INT W/LOWW:Diagram1 LT - X15/A26 - Headlights LED W/INT N/LOWW:Diagram1 LT - X15/A26 - Headlights LED W/INT W/LOWW:Diagram1
Mates	LT-LS_HEADLIGHT_LED-1016-0 1-03

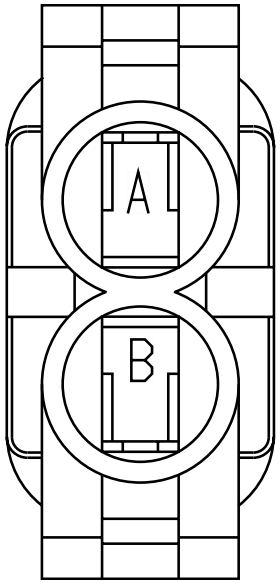

Name	Terminal Part Number	V-Min	Name	Wire Part Number	Wire CSA	Wire Spec	Wire Material description	Wire Color Description	Wire Length	End2 Terminal Part Number	End2 Pin Name	End2 Connect or
A	-	-	U53A	2643693 R1	1.91	14.0	Std. Wall XLPE Primary Cable	YELLOW 2	1835.0	-	-	-
A	-	-	U53A	2643693 R1	1.91	14.0	Std. Wall XLPE Primary Cable	YELLOW 2	1835.0	-	C	8001F
B	-	-	U11-GAB	2643689 R1	1.91	14.0	Std. Wall XLPE Primary Cable	WHITE	350.0	-	B	8015R

Connector Name	8015R
Part Number	3668886C1
Instances	LT - X15/A26 - Headlights LED N/ INT N/LOWW:Diagram1 LT - X15/A26 - Headlights LED N/ INT W/LOWW:Diagram1 LT - X15/A26 - Headlights LED W/INT N/LOWW:Diagram1 LT - X15/A26 - Headlights LED W/INT W/LOWW:Diagram1
Mates	LT-RS_HEADLIGHT_LED-1016-0 1-03

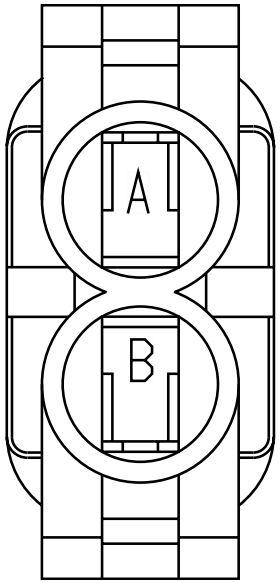

Name	Terminal Part Number	V-Min	Name	Wire Part Number	Wire CSA	Wire Spec	Wire Material description	Wire Color Description	Wire Length	End2 Terminal Part Number	End2 Pin Name	End2 Connect or
A	-	-	U53A	2643693 R1	1.91	14.0	Std. Wall XLPE Primary Cable	YELLOW 2	1835.0	-	C	8001F
A	-	-	U53A	2643693 R1	1.91	14.0	Std. Wall XLPE Primary Cable	YELLOW 2	1835.0	-	-	-
B	-	-	U11-GAB	2643689 R1	1.91	14.0	Std. Wall XLPE Primary Cable	WHITE	350.0	-	B	8015L

Connector Name	8016L
Part Number	3668886C1
Instances	LT - X15/A26 - Headlights LED N/ INT N/LOWW:Diagram1 LT - X15/A26 - Headlights LED N/ INT W/LOWW:Diagram1 LT - X15/A26 - Headlights LED W/INT N/LOWW:Diagram1 LT - X15/A26 - Headlights LED W/INT W/LOWW:Diagram1
Mates	LT-LS_HEADLIGHT_LED-1016-0 1-03

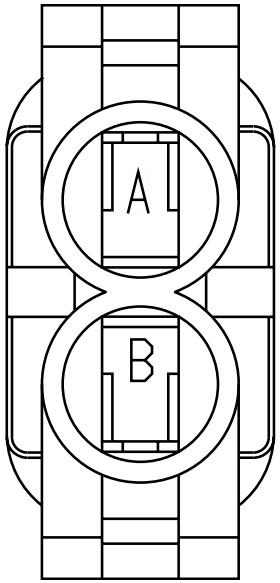

Name	Terminal Part Number	V-Min	Name	Wire Part Number	Wire CSA	Wire Spec	Wire Material description	Wire Color Description	Wire Length	End2 Terminal Part Number	End2 Pin Name	End2 Connect or
A	-	-	U03-U52A	3510337 R1	1.91	14.0	Thin Wall XLPE Primary Cable	YELLOW 2	800.0	-	A	8001F
A	-	-	U52A	2643693 R1	1.91	14.0	Std. Wall XLPE Primary Cable	YELLOW 2	1835.0	-	-	-
A	-	-	U52A	2643693 R1	1.91	14.0	Std. Wall XLPE Primary Cable	YELLOW 2	1835.0	-	A	8001F
B	-	-	U11-GAA	2643689 R1	1.91	14.0	Std. Wall XLPE Primary Cable	WHITE	350.0	-	B	8016R

Connector Name	8016R
Part Number	3668886C1
Instances	LT - X15/A26 - Headlights LED N/ INT N/LOWW:Diagram1 LT - X15/A26 - Headlights LED N/ INT W/LOWW:Diagram1 LT - X15/A26 - Headlights LED W/INT N/LOWW:Diagram1 LT - X15/A26 - Headlights LED W/INT W/LOWW:Diagram1
Mates	LT-RS_HEADLIGHT_LED-1016-0 1-03

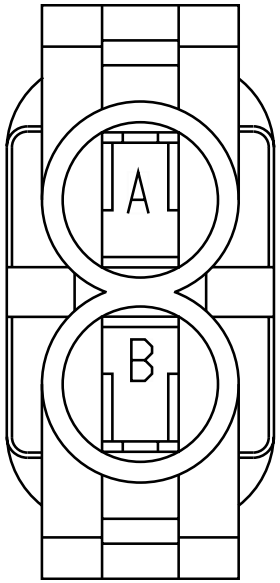

Name	Terminal Part Number	V-Min	Name	Wire Part Number	Wire CSA	Wire Spec	Wire Material description	Wire Color Description	Wire Length	End2 Terminal Part Number	End2 Pin Name	End2 Connect or
A	-	-	U04-U52A	3510337 R1	1.91	14.0	Thin Wall XLPE Primary Cable	YELLOW 2	800.0	-	A	8001F
A	-	-	U52A	2643693 R1	1.91	14.0	Std. Wall XLPE Primary Cable	YELLOW 2	1835.0	-	A	8001F
A	-	-	U52A	2643693 R1	1.91	14.0	Std. Wall XLPE Primary Cable	YELLOW 2	1835.0	-	-	-
B	-	-	U11-GAA	2643689 R1	1.91	14.0	Std. Wall XLPE Primary Cable	WHITE	350.0	-	B	8016L

Connector Name	8054
Part Number	1667741C1
Instances	LoneStar - X15 - Modesty Lighting W/ Day Cab W/ 2 Turn /0 Marker:Diagram1 LoneStar - X15 - Modesty Lighting W/ Sleeper W/ 4 Side Turns / 0 Marker:Diagram1
Mates	LS 8053F

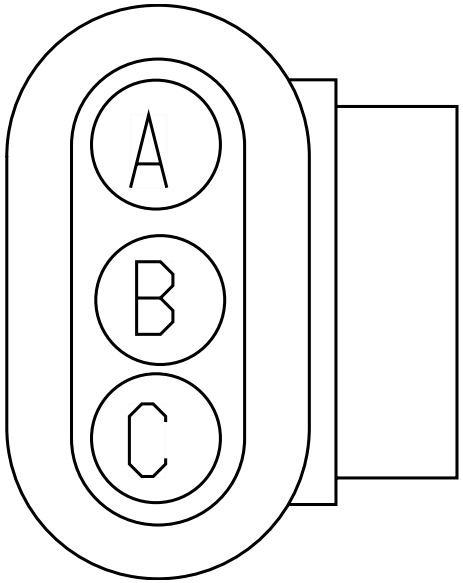

Name	Terminal Part Number	V-Min	Name	Wire Part Number	Wire CSA	Wire Spec	Wire Material description	Wire Color Description	Wire Length	End2 Terminal Part Number	End2 Pin Name	End2 Connect or
A	-	-	AA54-GXEJ	3510360R1	1.16	16.0	Thin Wall XLPE Primary Cable	WHITE	1220.0	-	10	1703F
B	-	-	AA57AJ	3510318R1	1.16	16.0	Thin Wall XLPE Primary Cable	ORANGE	1220.0	-	1	1703F
C	-	-	AA54AJ	3510306R1	1.16	16.0	Thin Wall XLPE Primary Cable	BROWN	1220.0	-	15	1703F

Connector Name	8054
Part Number	1667741C1
Short Description	RIGHT TURN SIGNAL
Instances	LT/RH - X15/A26 - Modesty Lighting W/ Day Cab W/ 2 Turn /0 Marker:Diagram1 LT/RH - X15/A26 - Modesty Lighting W/ Sleeper W/ 4 Side Turns / 0 Marker:Diagram1
Mates	LT 8054F

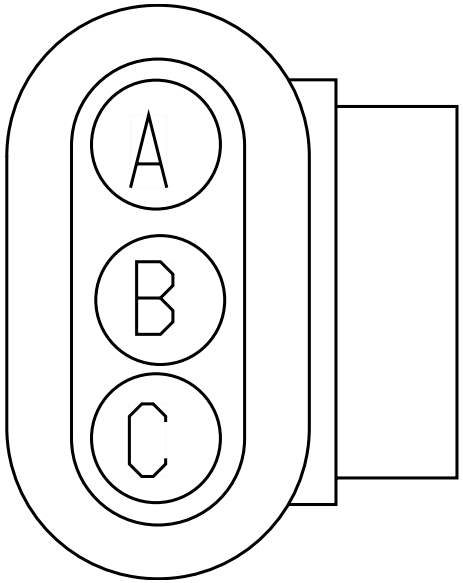

Name	Terminal Part Number	V-Min	Name	Wire Part Number	Wire CSA	Wire Spec	Wire Material description	Wire Color Description	Wire Length	End2 Terminal Part Number	End2 Pin Name	End2 Connect or
A	-	-	AA54-GXEJ	3510360R1	1.16	16.0	Thin Wall XLPE Primary Cable	WHITE	1220.0	-	10	1703F
B	-	-	AA57AJ	3510318R1	1.16	16.0	Thin Wall XLPE Primary Cable	ORANGE	1220.0	-	1	1703F
C	-	-	AA54AJ	3510306R1	1.16	16.0	Thin Wall XLPE Primary Cable	BROWN	1220.0	-	15	1703F

Connector Name	8100F
Part Number	1667740C1
Short Description	MODESTY TURN LAMP HARNESS CONNECTION
Instances	LT/RH - X15/A26 - Modesty Lighting W/ Day Cab W/ 2 Turn /0 Marker:Diagram1 LT/RH - X15/A26 - Modesty Lighting W/ Sleeper W/ 4 Side Turns / 0 Marker:Diagram1
Mates	8100

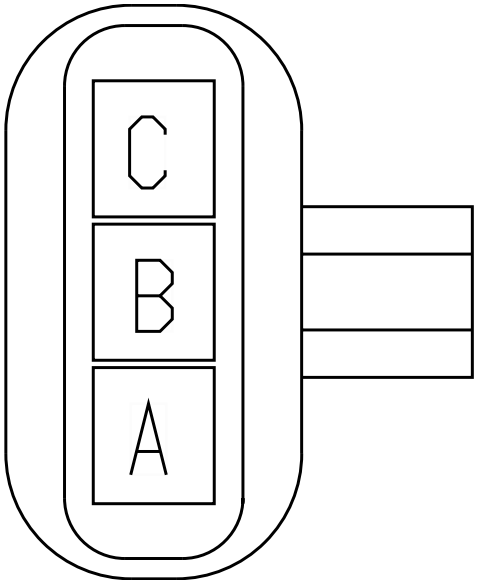

Name	Terminal Part Number	V-Min	Name	Wire Part Number	Wire CSA	Wire Spec	Wire Material description	Wire Color Description	Wire Length	End2 Terminal Part Number	End2 Pin Name	End2 Connect or
A	-	-	J11GB	2643681 R1	1.16	16.0	Std. Wall XLPE Primary Cable	WHITE	100.0	-	A	LT 8054F
B	-	-	J56A	2643682 R1	1.16	16.0	Std. Wall XLPE Primary Cable	ORANGE	150.0	-	B	LT 8054F
B	-	-	J56A	2643682 R1	1.16	16.0	Std. Wall XLPE Primary Cable	ORANGE	150.0	-	X	-
C	-	-	J58A	2643679 R1	1.16	16.0	Std. Wall XLPE Primary Cable	BROWN	200.0	-	-	-

Name	Terminal Part Number	V-Min	Name	Wire Part Number	Wire CSA	Wire Spec	Wire Material description	Wire Color Description	Wire Length	End2 Terminal Part Number	End2 Pin Name	End2 Connector
C	-	-	J58A	2643679 R1	1.16	16.0	Std. Wall XLPE Primary Cable	BROWN	200.0	-	X	-

Connector Name	8100
Part Number	1667741C1
Short Description	LEFT MODESTY TURN LAMP
Instances	LoneStar - X15 - Modesty Lighting W/ Day Cab W/ 2 Turn /0 Marker:Diagram1 LoneStar - X15 - Modesty Lighting W/ Sleeper W/ 4 Side Turns / 0 Marker:Diagram1
Mates	LS 8100F

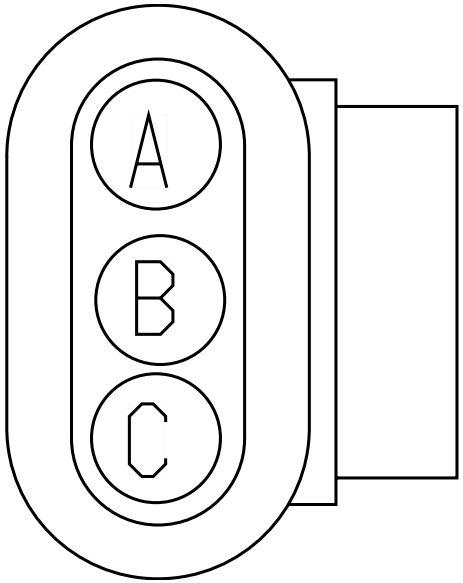

Name	Terminal Part Number	V-Min	Name	Wire Part Number	Wire CSA	Wire Spec	Wire Material description	Wire Color Description	Wire Length	End2 Terminal Part Number	End2 Pin Name	End2 Connect or
A	-	-	MA11-GBB	2643681 R1	1.16	16.0	Std. Wall XLPE Primary Cable	WHITE	430.0	-	-	-
B	-	-	MA56AB	2643682 R1	1.16	16.0	Std. Wall XLPE Primary Cable	ORANGE	250.0	-	X	-
C	-	-	MA58CA	2643679 R1	1.16	16.0	Std. Wall XLPE Primary Cable	BROWN	200.0	-	X	-

Connector Name	8100
Part Number	1667741C1
Short Description	LEFT MODESTY TURN LAMP
Instances	LT/RH - X15/A26 - Modesty Lighting W/ Day Cab W/ 2 Turn /0 Marker:Diagram1 LT/RH - X15/A26 - Modesty Lighting W/ Sleeper W/ 4 Side Turns / 0 Marker:Diagram1
Mates	8100F

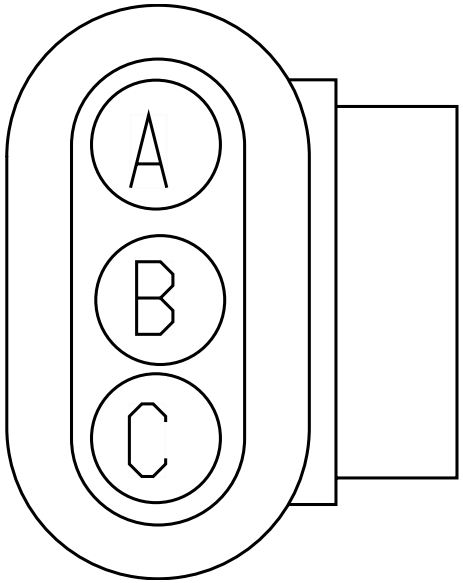

Name	Terminal Part Number	V-Min	Name	Wire Part Number	Wire CSA	Wire Spec	Wire Material description	Wire Color Description	Wire Length	End2 Terminal Part Number	End2 Pin Name	End2 Connect or
A	-	-	MA11-GBB	2643681 R1	1.16	16.0	Std. Wall XLPE Primary Cable	WHITE	430.0	-	-	-
B	-	-	MA56A	2643682 R1	1.16	16.0	Std. Wall XLPE Primary Cable	ORANGE	1300.0	-	16	1700F
C	-	-	MA58C	2643679 R1	1.16	16.0	Std. Wall XLPE Primary Cable	BROWN	1300.0	-	7	1700F

Connector Name	8202
Part Number	6131286C1
Instances	LT/RH - X15/A26 - Fog Lights Lamps:Diagram1
Mates	LT-RS_FOG_FRT-1012-03-03A

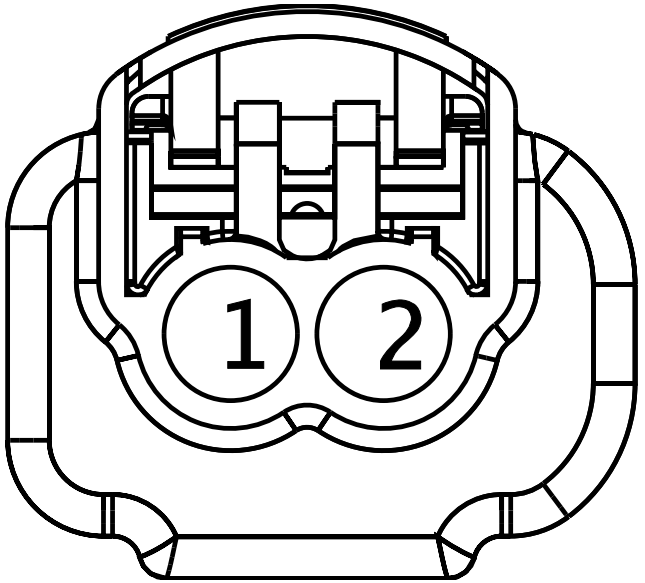

Name	Terminal Part Number	V-Min	Name	Wire Part Number	Wire CSA	Wire Spec	Wire Material description	Wire Color Description	Wire Length	End2 Terminal Part Number	End2 Pin Name	End2 Connect or
1	-	-	MD64B	3510336 R1	1.16	16.0	Thin Wall XLPE Primary Cable	YELLOW 2	3125.0	-	23	1700F
2	-	-	MD64-GB	3510360 R1	1.16	16.0	Thin Wall XLPE Primary Cable	WHITE	1280.0	-	-	-

Connector Name	8203
Part Number	3824986C1
Short Description	FOG LIGHT
Instances	LoneStar - X15/A26 - Front Fog Lamps:Diagram1
Mates	8203

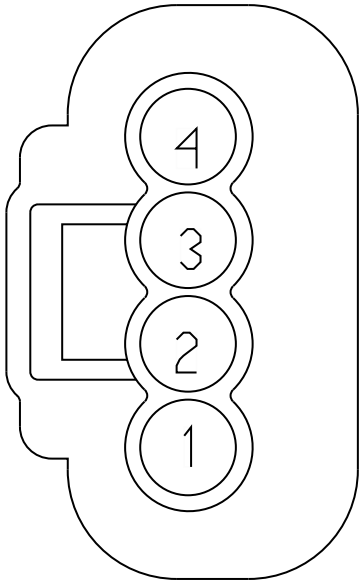

Name	Terminal Part Number	V-Min	Name	Wire Part Number	Wire CSA	Wire Spec	Wire Material description	Wire Color Description	Wire Length	End2 Terminal Part Number	End2 Pin Name	End2 Connect or
1	-	-	ME64A	2643684 R1	1.16	16.0	Std. Wall XLPE Primary Cable	YELLOW 2	3490.0	-	22	1700F
2	-	-	ME64-GA	2643681 R1	1.16	16.0	Std. Wall XLPE Primary Cable	WHITE	1015.0	-	-	-
3	-	-	ME64B	2643684 R1	1.16	16.0	Std. Wall XLPE Primary Cable	YELLOW 2	3490.0	-	23	1700F
4	-	-	ME64-GB	2643681 R1	1.16	16.0	Std. Wall XLPE Primary Cable	WHITE	1015.0	-	-	-

Connector Name	8203
Part Number	3825517C91
Short Description	FOG LIGHT
Instances	LoneStar - X15/A26 - Front Fog Lamps:Diagram1
Mates	8203

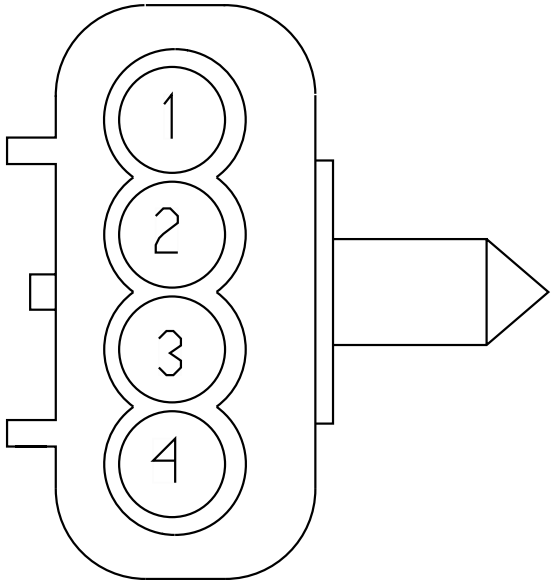

Name	Terminal Part Number	V-Min	Name	Wire Part Number	Wire CSA	Wire Spec	Wire Material description	Wire Color Description	Wire Length	End2 Terminal Part Number	End2 Pin Name	End2 Connect or
1	-	-	S64A	2643684 R1	1.16	16.0	Std. Wall XLPE Primary Cable	YELLOW 2	1081.0	-	A	P30-LS 5157
2	-	-	S64-GA	2643681 R1	1.16	16.0	Std. Wall XLPE Primary Cable	WHITE	1081.0	-	B	P30-LS 5157
3	-	-	S64B	2643684 R1	1.16	16.0	Std. Wall XLPE Primary Cable	YELLOW 2	2043.0	-	A	P30-LS-5156
4	-	-	S64-GB	2643681 R1	1.16	16.0	Std. Wall XLPE Primary Cable	WHITE	2043.0	-	B	P30-LS-5156

Connector Name	8203
Part Number	6131286C1
Instances	LT/RH - X15/A26 - Fog Lights Lamps:Diagram1
Mates	LT-LS_FOG_FRT-1012-03-03A

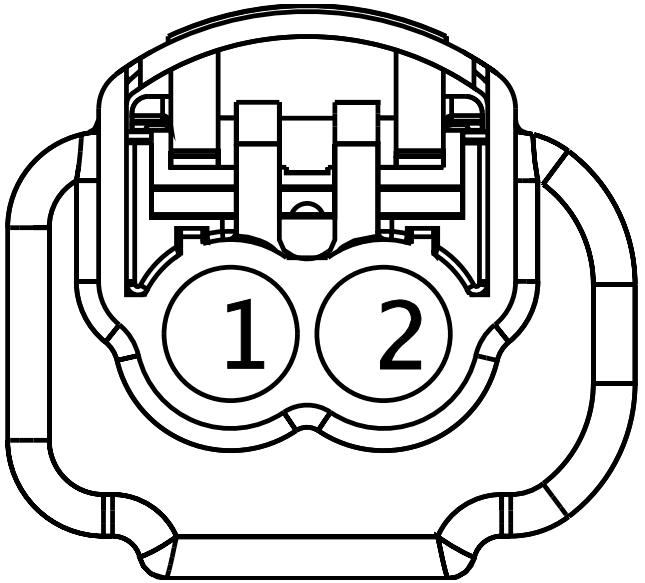

Name	Terminal Part Number	V-Min	Name	Wire Part Number	Wire CSA	Wire Spec	Wire Material description	Wire Color Description	Wire Length	End2 Terminal Part Number	End2 Pin Name	End2 Connect or
1	-	-	MD64A	3510336 R1	1.16	16.0	Thin Wall XLPE Primary Cable	YELLOW 2	2550.0	-	22	1700F
2	-	-	MD64-GA	3510360 R1	1.16	16.0	Thin Wall XLPE Primary Cable	WHITE	705.0	-	-	-

Connector Name	8303
Part Number	1661778C1
Short Description	ELECTRIC HORN
Instances	LoneStar - X15 - City Horn W/ 4PIN CLK W/O RKA:Diagram1-Combination1 LoneStar - X15 - City Horn W/ 4PIN CLK W/RKA:Diagram1-Combination1 LoneStar - X15 - City Horn W/ 10PIN CLK W/RKA:Diagram1-Combination1 LoneStar - X15 - City Horn W/ 10PIN CLK W/O RKA:Diagram1-Combination1 LT/RH - X15/A26 - City Horn W/ 4PIN CLK W/O RKA:Diagram1-Combination1 LT/RH - X15/A26 - City Horn W/ 4PIN CLK W/RKA:Diagram1-Combination1 LT/RH - X15/A26 - City Horn W/ 10PIN CLK W/RKA:Diagram1-Combination1 LT/RH - X15/A26 - City Horn W/ 10PIN CLK W/O RKA:Diagram1-Combination1
Mates	8310

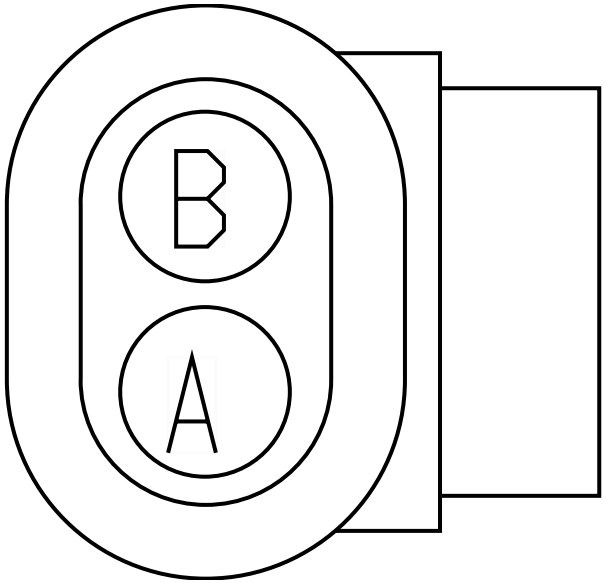

Name	Terminal Part Number	V-Min	Name	Wire Part Number	Wire CSA	Wire Spec	Wire Material description	Wire Color Description	Wire Length	End2 Terminal Part Number	End2 Pin Name	End2 Connector
A	-	-	MA85	2643680 R1	1.16	16.0	Std. Wall XLPE Primary Cable	GREY	2020.0	-	21	1700F
B	-	-	MA85-GA	2643681 R1	1.16	16.0	Std. Wall XLPE Primary Cable	WHITE	395.0	-	-	-

Connector Name	830
Part Number	1661201C1
Instances	Telematics J1708:Telematics J1708
Mates	MODU-CADEC_GPS-2035-09-02A

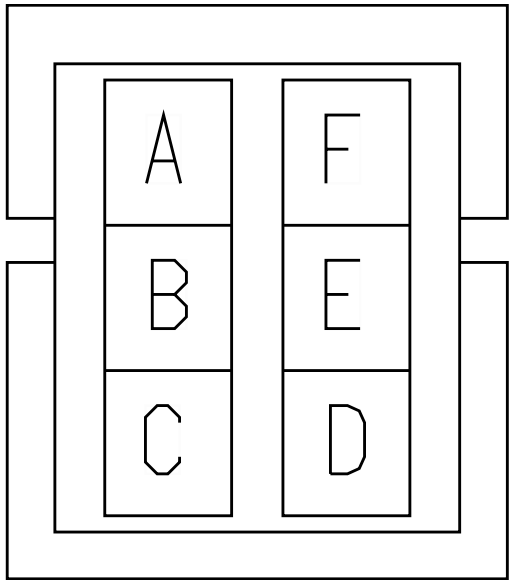

Name	Terminal Part Number	V-Min	Name	Wire Part Number	Wire CSA	Wire Spec	Wire Material description	Wire Color Description	Wire Length	End2 Terminal Part Number	End2 Pin Name	End2 Connect or
D	-	-	WIRE490303	-	0.0	-	-	-	0.0	-	E2	J5-1602
E	-	-	WIRE490310	-	0.0	-	-	-	0.0	-	E1	J5-1602

Connector Name	8310
Part Number	3543888C1
Short Description	SINGLE ELECTRIC HORN
Instances	LoneStar - X15 - City Horn W/ 4PIN CLK W/O RKA:Diagram1-Combination1 LoneStar - X15 - City Horn W/ 4PIN CLK W/RKA:Diagram1-Combination1 LoneStar - X15 - City Horn W/ 10PIN CLK W/RKA:Diagram1-Combination1 LoneStar - X15 - City Horn W/ 10PIN CLK W/O RKA:Diagram1-Combination1 LT/RH - X15/A26 - City Horn W/ 4PIN CLK W/O RKA:Diagram1-Combination1 LT/RH - X15/A26 - City Horn W/ 4PIN CLK W/RKA:Diagram1-Combination1 LT/RH - X15/A26 - City Horn W/ 10PIN CLK W/RKA:Diagram1-Combination1 LT/RH - X15/A26 - City Horn W/ 10PIN CLK W/O RKA:Diagram1-Combination1
Mates	8303

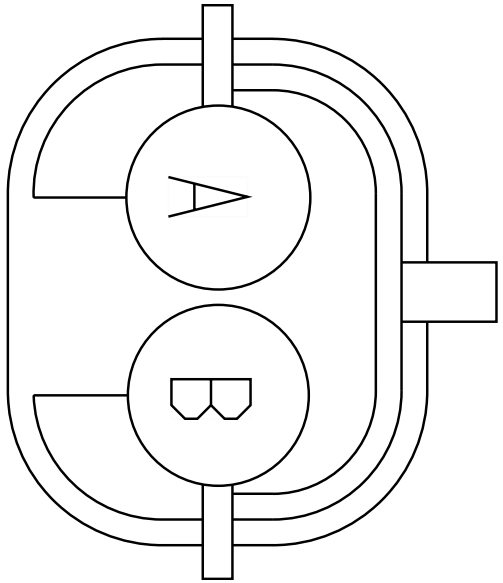

Name	Terminal Part Number	V-Min	Name	Wire Part Number	Wire CSA	Wire Spec	Wire Material description	Wire Color Description	Wire Length	End2 Terminal Part Number	End2 Pin Name	End2 Connector
A	-	-	M85J	2643680 R1	1.16	16.0	Std. Wall XLPE Primary Cable	GREY	800.0	-	A	P02-8311
A	-	-	M85J	2643680 R1	1.16	16.0	Std. Wall XLPE Primary Cable	GREY	800.0	-	A	P06-8311
B	-	-	M85-GC	2643681 R1	1.16	16.0	Std. Wall XLPE Primary Cable	WHITE	800.0	-	B	P02-8311
B	-	-	M85-GC	2643681 R1	1.16	16.0	Std. Wall XLPE Primary Cable	WHITE	800.0	-	B	P06-8311

Connector Name	8450A
Part Number	587567C91
Short Description	INTERCONNECT TO FORWARD CHASSIS HARNESS
Instances	LoneStar - X15 - Crank Inhibit with Hood Switch - with new BCM Pin:Diagram2 LoneStar - X15 - Hood Switch:Diagram1 LT/RH - X15/A26 - Hood Switch:Diagram1 LT/RH - X15/A26 - with Hood Switch - with new BCM Pin:Diagram1
Mates	8450A

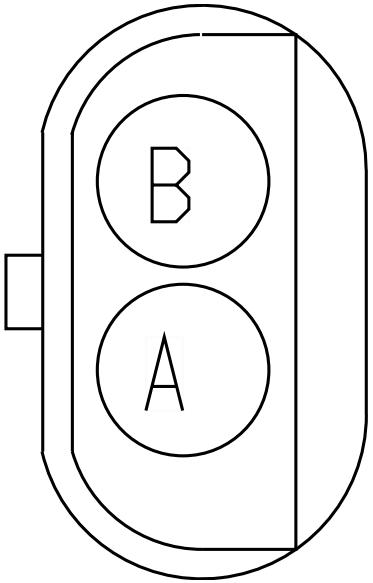

Name	Terminal Part Number	V-Min	Name	Wire Part Number	Wire CSA	Wire Spec	Wire Material description	Wire Color Description	Wire Length	End2 Terminal Part Number	End2 Pin Name	End2 Connect or
A	-	-	U97H	2643718 R1	0.79	18.0	Std. Wall XLPE Primary Cable	VIOLET	1040.0	-	A	P05-8450B
A	-	-	U97H	2643718 R1	0.79	18.0	Std. Wall XLPE Primary Cable	VIOLET	1040.0	-	A	P01-8450B
B	-	-	U97J	2643718 R1	0.79	18.0	Std. Wall XLPE Primary Cable	VIOLET	1040.0	-	B	P05-8450B
B	-	-	U97J	2643718 R1	0.79	18.0	Std. Wall XLPE Primary Cable	VIOLET	1040.0	-	B	P01-8450B

Connector Name	8450A
Part Number	587568C91
Short Description	START/STOP HOOD SWITCH
Instances	LoneStar - X15 - Crank Inhibit with Hood Switch - with new BCM Pin:Diagram2 LoneStar - X15 - Hood Switch:Diagram1 LT/RH - X15/A26 - Hood Switch:Diagram1 LT/RH - X15/A26 - with Hood Switch - with new BCM Pin:Diagram1
Mates	8450A

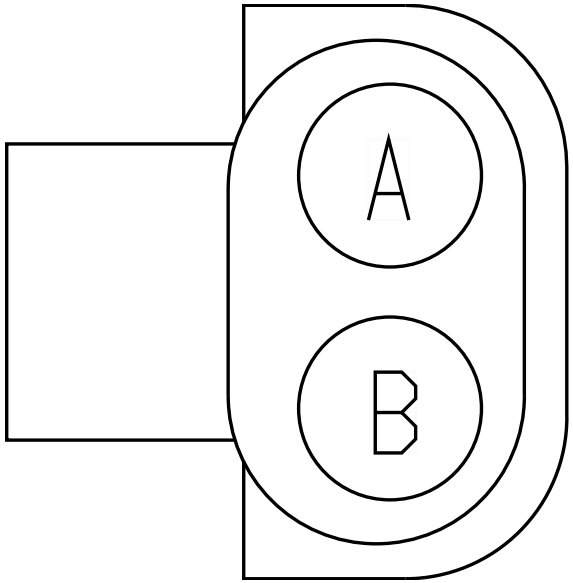

Name	Terminal Part Number	V-Min	Name	Wire Part Number	Wire CSA	Wire Spec	Wire Material description	Wire Color Description	Wire Length	End2 Terminal Part Number	End2 Pin Name	End2 Connect or
A	-	-	PV97H	2643718 R1	0.79	18.0	Std. Wall XLPE Primary Cable	VIOLET	3050.0	-	43	1700F
B	-	-	PV97J	2643718 R1	0.79	18.0	Std. Wall XLPE Primary Cable	VIOLET	3050.0	-	44	1700F

Connector Name	8800
Part Number	3551896C1
Instances	LT/RH/LoneStar - X15/A26 - Forward Chassis Ground Splice Packs - 8800:Diagram1 LT/RH/LoneStar - X15/A26 - Forward Chassis Ground Splice Packs - 8800:Diagram2
Mates	SP-0003-00-10-M0A

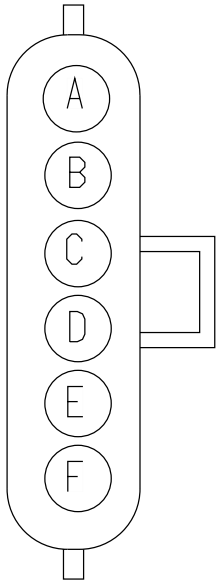

Name	Terminal Part Number	V-Min	Name	Wire Part Number	Wire CSA	Wire Spec	Wire Material description	Wire Color Description	Wire Length	End2 Terminal Part Number	End2 Pin Name	End2 Connect or
A	-	-	MA11-GD	2643787 R1	3.01	12.0	Std. Wall XLPE Primary Cable	WHITE	205.0	-	X	-
B	-	-	MD64-GA	3510360 R1	1.16	16.0	Thin Wall XLPE Primary Cable	WHITE	705.0	-	-	-
B	-	-	ME64-GA	2643681 R1	1.16	16.0	Std. Wall XLPE Primary Cable	WHITE	1015.0	-	-	-
C	-	-	MD64-GB	3510360 R1	1.16	16.0	Thin Wall XLPE Primary Cable	WHITE	1280.0	-	-	-

Name	Terminal Part Number	V-Min	Name	Wire Part Number	Wire CSA	Wire Spec	Wire Material description	Wire Color Description	Wire Length	End2 Terminal Part Number	End2 Pin Name	End2 Connector
C	-	-	ME64-GB	2643681 R1	1.16	16.0	Std. Wall XLPE Primary Cable	WHITE	1015.0	-	-	-
D	-	-	MK19-GA	2643689 R1	1.91	14.0	Std. Wall XLPE Primary Cable	WHITE	1140.0	-	-	-
D	-	-	MH19-GA	2643689 R1	1.91	14.0	Std. Wall XLPE Primary Cable	WHITE	2425.0	-	-	-
E	-	-	MJ54-GA	2643681 R1	1.16	16.0	Std. Wall XLPE Primary Cable	WHITE	1970.0	-	-	-
E	-	-	PN78-G	2643681 R1	1.16	16.0	Std. Wall XLPE Primary Cable	WHITE	180.0	-	-	-
F	-	-	MA85-GA	2643681 R1	1.16	16.0	Std. Wall XLPE Primary Cable	WHITE	395.0	-	-	-

Connector Name	8803
Part Number	3551896C1
Instances	LT/RH/LoneStar - X15/A26 - Center Chassis Ground Splice Packs - 8803 & 8804:Diagram1
Mates	SP-0003-00-10-N0A

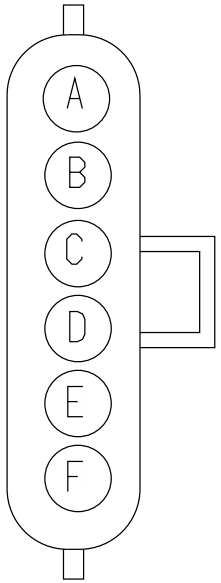

Name	Terminal Part Number	V-Min	Name	Wire Part Number	Wire CSA	Wire Spec	Wire Material description	Wire Color Description	Wire Length	End2 Terminal Part Number	End2 Pin Name	End2 Connect or
A	-	-	NA11-GA	3510363 R1	4.81	10.0	Thin Wall XLPE Primary Cable	WHITE	1550.0	-	1	4006
A	-	-	PB11-GA	3510363 R1	4.81	10.0	Thin Wall XLPE Primary Cable	WHITE	1550.0	-	1	4006
B	-	-	NA10-G	3510362 R1	3.01	12.0	Thin Wall XLPE Primary Cable	WHITE	2335.0	-	-	-
C	-	-	PB68D	3510360 R1	1.16	16.0	Thin Wall XLPE Primary Cable	WHITE	800.0	-	-	-

Name	Terminal Part Number	V-Min	Name	Wire Part Number	Wire CSA	Wire Spec	Wire Material description	Wire Color Description	Wire Length	End2 Terminal Part Number	End2 Pin Name	End2 Connector
D	-	-	GD39-GA	2643681 R1	1.16	16.0	Std. Wall XLPE Primary Cable	WHITE	1685.0	-	-	-
D	-	-	LG112-GD	3510360 R1	1.16	16.0	Thin Wall XLPE Primary Cable	WHITE	1510.0	-	-	-
D	-	-	GF39-GA	2643681 R1	1.16	16.0	Std. Wall XLPE Primary Cable	WHITE	3215.0	-	-	-
E	-	-	GA39-G	2643681 R1	1.16	16.0	Std. Wall XLPE Primary Cable	WHITE	1510.0	-	-	-
E	-	-	GB39-G	2643681 R1	1.16	16.0	Std. Wall XLPE Primary Cable	WHITE	1635.0	-	-	-
F	-	-	RE39-G	2643674 R1	0.79	18.0	Std. Wall XLPE Primary Cable	WHITE	200.0	-	-	-

Connector Name	8804
Part Number	3551896C1
Instances	LT/RH/LoneStar - X15/A26 - Center Chassis Ground Splice Packs - 8803 & 8804:Diagram1
Mates	SP-0003-00-10-N0B

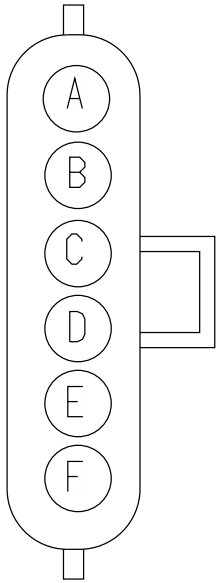

Name	Terminal Part Number	V-Min	Name	Wire Part Number	Wire CSA	Wire Spec	Wire Material description	Wire Color Description	Wire Length	End2 Terminal Part Number	End2 Pin Name	End2 Connect or
A	-	-	NA11-GB	3510363 R1	4.81	10.0	Thin Wall XLPE Primary Cable	WHITE	1700.0	-	1	4006
A	-	-	PB11-GB	3510363 R1	4.81	10.0	Thin Wall XLPE Primary Cable	WHITE	1700.0	-	1	4006
B	-	-	CC59-G	2643689 R1	1.91	14.0	Std. Wall XLPE Primary Cable	WHITE	2310.0	-	-	-
B	-	-	CE59-G	2643689 R1	1.91	14.0	Std. Wall XLPE Primary Cable	WHITE	2260.0	-	-	-

Name	Terminal Part Number	V-Min	Name	Wire Part Number	Wire CSA	Wire Spec	Wire Material description	Wire Color Description	Wire Length	End2 Terminal Part Number	End2 Pin Name	End2 Connector
B	-	-	CA59-G	2643689 R1	1.91	14.0	Std. Wall XLPE Primary Cable	WHITE	1685.0	-	-	-
B	-	-	CB59-G	2643689 R1	1.91	14.0	Std. Wall XLPE Primary Cable	WHITE	2985.0	-	-	-
B	-	-	CD59-G	2643689 R1	1.91	14.0	Std. Wall XLPE Primary Cable	WHITE	1445.0	-	-	-
C	-	-	SZ59-GA	2643689 R1	1.91	14.0	Std. Wall XLPE Primary Cable	WHITE	1435.0	-	-	-
C	-	-	SW59-GA	2643689 R1	1.91	14.0	Std. Wall XLPE Primary Cable	WHITE	1935.0	-	-	-
C	-	-	SX59-GA	2643680 R1	1.16	16.0	Std. Wall XLPE Primary Cable	GREY	2985.0	-	-	-
C	-	-	SV59-GA	2643689 R1	1.91	14.0	Std. Wall XLPE Primary Cable	WHITE	2160.0	-	-	-
C	-	-	SY59-GA	2643689 R1	1.91	14.0	Std. Wall XLPE Primary Cable	WHITE	2210.0	-	-	-

Name	Terminal Part Number	V-Min	Name	Wire Part Number	Wire CSA	Wire Spec	Wire Material description	Wire Color Description	Wire Length	End2 Terminal Part Number	End2 Pin Name	End2 Connector
D	-	-	NT49-G	2643674 R1	0.79	18.0	Std. Wall XLPE Primary Cable	WHITE	2185.0	-	-	-
E	-	-	NV65-G	2643681 R1	1.16	16.0	Std. Wall XLPE Primary Cable	WHITE	1440.0	-	-	-
F	-	-	NX65-GA	2643689 R1	1.91	14.0	Std. Wall XLPE Primary Cable	WHITE	1985.0	-	-	-
F	-	-	PV11-GBB	3510362 R1	3.01	12.0	Thin Wall XLPE Primary Cable	WHITE	2185.0	-	-	-
F	-	-	PU11-GBB	3510362 R1	3.01	12.0	Thin Wall XLPE Primary Cable	WHITE	1460.0	-	-	-
F	-	-	NY65-GA	2643689 R1	1.91	14.0	Std. Wall XLPE Primary Cable	WHITE	100.0	-	-	-

Connector Name 8903

Part Number 6111813C1

Instances Fusion Private J1939:Fusion Private J1939
Powertrain J1939 (500Kbps) Edurant Transmission
A26:Powertrain J1939 (500Kbps) Edurant Transmission A26
Powertrain J1939 (500Kbps) Allison 3K Transmission
A26:Powertrain J1939 (500Kbps) Allison 3K A26
Powertrain J1939 (500Kbps) Eaton Ultrashift+ Transmission
A26:Powertrain J1939 (500Kbps) Eaton Ultrashift+ Transmission A26
Powertrain J1939 (500Kbps) Eaton Ultrashift+ Transmission X15:Powertrain J1939 (500kbps) Eaton Ultrashift+ X15
Powertrain J1939 (500Kbps) Edurant Transmission
X15:Powertrain J1939 (500kbps) Endurant Transmission X15
Powertrain J1939 (500Kbps) Manual Transmission
A26:Powertrain Standard J1939 (500Kbps) A26 Engine
Powertrain J1939 (500Kbps) Manual Transmission
X15:Powertrain Standard J1939 (500kbps) Manual Transmission X15
Powertrain J1939 (500Kbps) TC10 Transmission A26:Powertrain J1939 (500Kbps) TC10 Transmission A26
Powertrain J1939 (500Kbps) TC10 Transmission X15:Powertrain J1939 (500kbps) TC10 Transmission X15

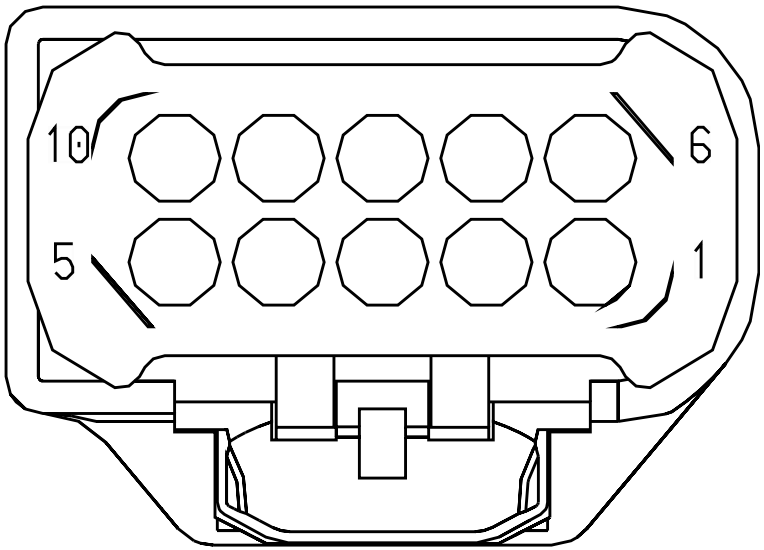

Mates SNSR-BENDIX_FUSION_FLR_21- 3020-02-01A

Name	Terminal Part Number	V-Min	Name	Wire Part Number	Wire CSA	Wire Spec	Wire Material description	Wire Color Description	Wire Length	End2 Terminal Part Number	End2 Pin Name	End2 Connector
1	-	-	WIRE223914	-	0.0	-	-	-	0.0	-	PIN1	-
2	-	-	WIRE234452	-	0.0	-	-	-	0.0	-	45	1700F
6	-	-	WIRE223915	-	0.0	-	-	-	0.0	-	PIN1	-
7	-	-	WIRE234453	-	0.0	-	-	-	0.0	-	46	1700F

Connector Name 8904

Part Number 3852527C1

Instances Powertrain J1939 (500Kbps) Edurant Transmission
A26:Powertrain J1939 (500Kbps) Edurant Transmission A26
Powertrain J1939 (500Kbps) Allison 3K Transmission
A26:Powertrain J1939 (500Kbps) Allison 3K A26
Powertrain J1939 (500Kbps) Eaton Ultrashift+ Transmission
A26:Powertrain J1939 (500Kbps) Eaton Ultrashift+ Transmission A26
Powertrain J1939 (500Kbps) Eaton Ultrashift+ Transmission
X15:Powertrain J1939 (500kbps) Eaton Ultrashift+ X15
Powertrain J1939 (500Kbps) Edurant Transmission
X15:Powertrain J1939 (500kbps) Endurant Transmission X15
Powertrain J1939 (500Kbps) Manual Transmission
A26:Powertrain Standard J1939 (500Kbps) A26 Engine
Powertrain J1939 (500Kbps) Manual Transmission
X15:Powertrain Standard J1939 (500kbps) Manual Transmission X15
Powertrain J1939 (500Kbps) TC10 Transmission A26:Powertrain J1939 (500Kbps) TC10 Transmission A26
Powertrain J1939 (500Kbps) TC10 Transmission X15:Powertrain J1939 (500kbps) TC10 Transmission X15

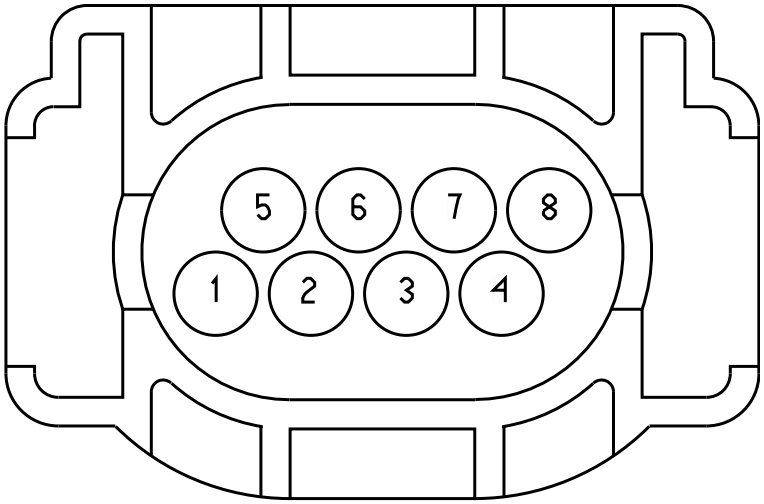

Mates SNSR-WABCO-RADR-3000-04-01 A-M01-8904

Name	Terminal Part Number	V-Min	Name	Wire Part Number	Wire CSA	Wire Spec	Wire Material description	Wire Color Description	Wire Length	End2 Terminal Part Number	End2 Pin Name	End2 Connector
3	-	-	WIRE223908	-	0.0	-	-	-	0.0	-	PIN1	-
6	-	-	WIRE223909	-	0.0	-	-	-	0.0	-	PIN1	-

Connector Name 8956

Part Number 3683465C1

Instances Powertrain J1939 (500Kbps) Edurant Transmission
A26:Powertrain J1939 (500Kbps) Edurant Transmission A26
Powertrain J1939 (500Kbps) Allison 3K Transmission
A26:Powertrain J1939 (500Kbps) Allison 3K A26
Powertrain J1939 (500Kbps) Eaton Ultrashift+ Transmission
A26:Powertrain J1939 (500Kbps) Eaton Ultrashift+ Transmission A26
Powertrain J1939 (500Kbps) Eaton Ultrashift+ Transmission
X15:Powertrain J1939 (500kbps) Eaton Ultrashift+ X15
Powertrain J1939 (500Kbps) Edurant Transmission
X15:Powertrain J1939 (500kbps) Endurant Transmission X15
Powertrain J1939 (500Kbps) Manual Transmission
A26:Powertrain Standard J1939 (500Kbps) A26 Engine
Powertrain J1939 (500Kbps) Manual Transmission
X15:Powertrain Standard J1939 (500kbps) Manual Transmission X15
Powertrain J1939 (500Kbps) TC10 Transmission A26:Powertrain J1939 (500Kbps) TC10 Transmission A26
Powertrain J1939 (500Kbps) TC10 Transmission X15:Powertrain J1939 (500kbps) TC10 Transmission X15

Mates RES-TERMINATING-POWERTRAIN -500K-0002-00-02A

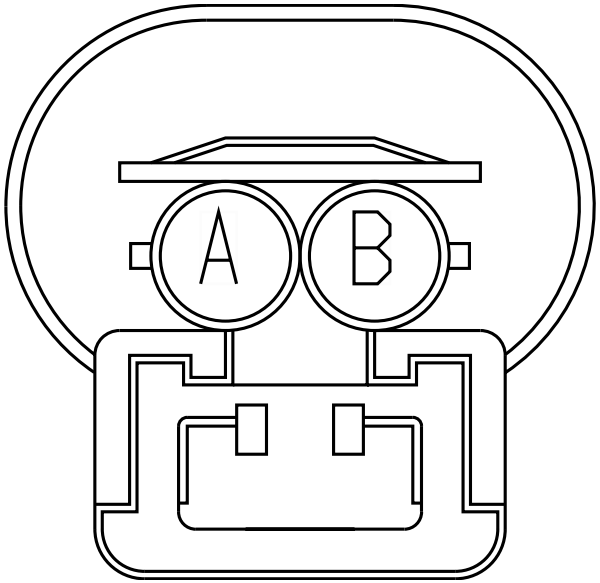

Name	Terminal Part Number	V-Min	Name	Wire Part Number	Wire CSA	Wire Spec	Wire Material description	Wire Color Description	Wire Length	End2 Terminal Part Number	End2 Pin Name	End2 Connector
A	-	-	WIRE223910	-	0.0	-	-	-	0.0	-	PIN1	-
B	-	-	WIRE223911	-	0.0	-	-	-	0.0	-	PIN1	-

Connector Name	8958
Part Number	3683465C1
Instances	Body J1939 (250Kbps) Splice Pack 1024:Body J1939 (250Kbps) Body J1939 (250Kbps) Splice Pack 1025:Body J1939 (250Kbps) Body J1939 (250Kbps) Splice Pack 1029:Body J1939 (250Kbps) Body J1939 (250Kbps) W/ 3 Splice Packs:Body J1939 (250Kbps)
Mates	TERMINATING RESISTOR

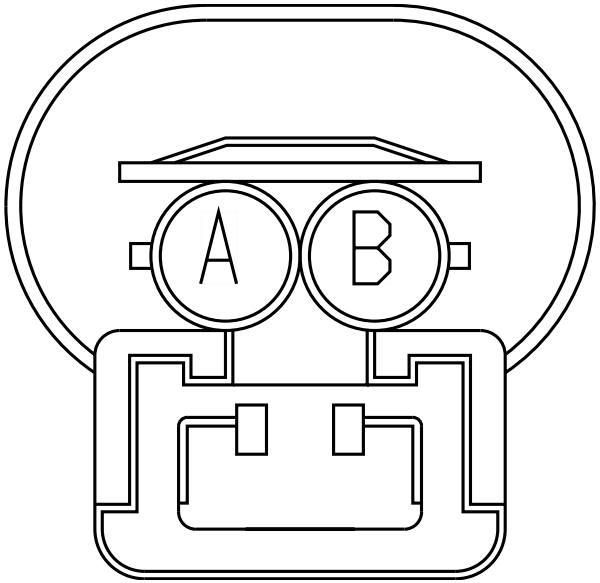

Name	Terminal Part Number	V-Min	Name	Wire Part Number	Wire CSA	Wire Spec	Wire Material description	Wire Color Description	Wire Length	End2 Terminal Part Number	End2 Pin Name	End2 Connect or
A	-	-	WIRE489845	-	0.0	-	-	-	0.0	-	X	-
A	-	-	WIRE489904	-	0.0	-	-	-	0.0	-	X	-
A	-	-	WIRE490012	-	0.0	-	-	-	0.0	-	X	-
A	-	-	WIRE490100	-	0.0	-	-	-	0.0	-	X	-
B	-	-	WIRE489846	-	0.0	-	-	-	0.0	-	PIN1	-
B	-	-	WIRE489905	-	0.0	-	-	-	0.0	-	PIN1	-
B	-	-	WIRE490013	-	0.0	-	-	-	0.0	-	PIN1	-
B	-	-	WIRE490101	-	0.0	-	-	-	0.0	-	PIN1	-

Connector Name	8993F
Part Number	3823761C1
Instances	Body J1939 (250Kbps) Splice Pack 1024:Body J1939 (250Kbps) Body J1939 (250Kbps) Splice Pack 1025:Body J1939 (250Kbps) Body J1939 (250Kbps) Splice Pack 1029:Body J1939 (250Kbps) Body J1939 (250Kbps) W/ 3 Splice Packs:Body J1939 (250Kbps)
Mates	MODU-TPMS-3032-01-10A

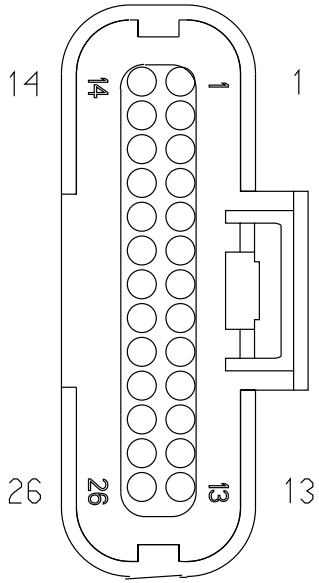

Name	Terminal Part Number	V-Min	Name	Wire Part Number	Wire CSA	Wire Spec	Wire Material description	Wire Color Description	Wire Length	End2 Terminal Part Number	End2 Pin Name	End2 Connect or
11	-	-	WIRE489843	-	0.0	-	-	-	0.0	-	X	-
11	-	-	WIRE489921	-	0.0	-	-	-	0.0	-	PIN1	-
11	-	-	WIRE490015	-	0.0	-	-	-	0.0	-	PIN1	-
11	-	-	WIRE490103	-	0.0	-	-	-	0.0	-	PIN1	-
12	-	-	WIRE489844	-	0.0	-	-	-	0.0	-	PIN1	-
12	-	-	WIRE489920	-	0.0	-	-	-	0.0	-	X	-
12	-	-	WIRE490014	-	0.0	-	-	-	0.0	-	X	-
12	-	-	WIRE490102	-	0.0	-	-	-	0.0	-	X	-

Connector Name	9255
Part Number	1667639C1
Instances	LT/RH/LoneStar - X15/A26 - Rear HVAC (No Idle) W/ Pre-Heat (Bergstrom Heat and Cool w/ Condensation) 2 SWITCHES Option 1:Diagram1 - Powers, Grounds & Controls LT/RH/LoneStar - X15/A26 - Rear HVAC (No Idle) W/ Pre-Heat (Bergstrom Heat and Cool w/ Condensation) 2 SWITCHES Option 2:Diagram1 - Powers, Grounds & Controls LT/RH/LoneStar - X15/A26 - Rear HVAC (No Idle) W/ Pre-Heat (Bergstrom Heat and Cool w/ Condensation) 4 SWITCHES Option 1:Diagram1 - Powers, Grounds & Controls LT/RH/LoneStar - X15/A26 - Rear HVAC (No Idle) W/ Pre-Heat (Bergstrom Heat and Cool w/ Condensation) 4 SWITCHES Option 2:Diagram1 - Powers, Grounds & Controls
Mates	DEV-10A_INLINE_FUSE_HOLDER -6002-11-01A

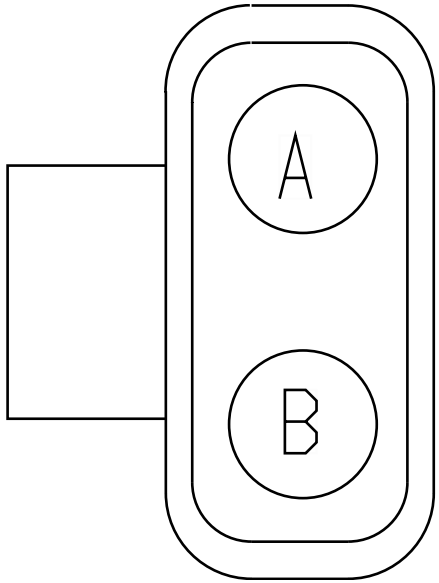

Name	Terminal Part Number	V-Min	Name	Wire Part Number	Wire CSA	Wire Spec	Wire Material description	Wire Color Description	Wire Length	End2 Terminal Part Number	End2 Pin Name	End2 Connector
A	-	-	N104AZ	2643695 R1	3.01	12.0	Std. Wall XLPE Primary Cable	RED	210.0	-	A	J4-REMO TE SENSE
B	-	-	N104BB	2643695 R1	3.01	12.0	Std. Wall XLPE Primary Cable	RED	200.0	-	A	100PB1

Connector Name	9303
Part Number	3612305C1
Short Description	4X2 STOP TAIL AND TURN
Instances	LT/RH A26 - Back-Up Alarm (Manual) and UltraShift+:Diagram3 LT/RH A26 - Back-Up Alarm (Manual) and UltraShift+:Diagram4 LT/RH A26 - Back-Up Alarm (Manual) and UltraShift+:Diagram7 LT/RH A26 - Back-Up Alarm (Manual) and UltraShift+:Diagram8 LT/RH/LoneStar - X15/A26 - Back-Up Alarm (Automatic) TC10:Diagram3 LT/RH/LoneStar - X15/A26 - Back-Up Alarm (Automatic) TC10:Diagram4 LT/RH/LoneStar X15 - Back-Up Alarm (Manual) and UltraShift +:Diagram3 LT/RH/LoneStar X15 - Back-Up Alarm (Manual) and UltraShift +:Diagram4
Mates	9303

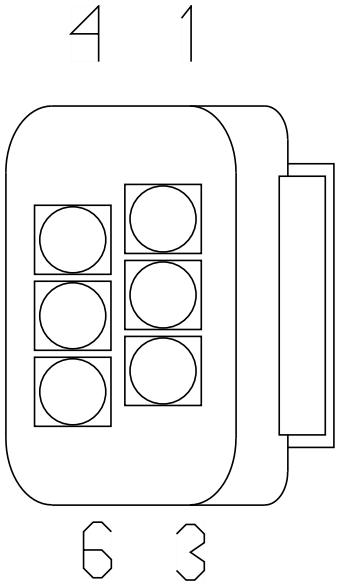

Name	Terminal Part Number	V-Min	Name	Wire Part Number	Wire CSA	Wire Spec	Wire Material description	Wire Color Description	Wire Length	End2 Terminal Part Number	End2 Pin Name	End2 Connect or
1	-	-	RA71BA	3510320 R1	3.01	12.0	Thin Wall XLPE Primary Cable	ORANGE	3120.0	-	1	9800M
1	-	-	SA71BA	3510320 R1	3.01	12.0	Thin Wall XLPE Primary Cable	ORANGE	3820.0	-	1	9800M
5	-	-	RA10-G	3510362 R1	3.01	12.0	Thin Wall XLPE Primary Cable	WHITE	3120.0	-	5	9800M
5	-	-	SA10-G	3510362 R1	3.01	12.0	Thin Wall XLPE Primary Cable	WHITE	3820.0	-	5	9800M

Connector Name	9303
Part Number	3612306C1
Short Description	STOP, TAIL AND TURN
Instances	LT/RH A26 - Back-Up Alarm (Manual) and UltraShift+:Diagram3 LT/RH A26 - Back-Up Alarm (Manual) and UltraShift+:Diagram4 LT/RH A26 - Back-Up Alarm (Manual) and UltraShift+:Diagram7 LT/RH A26 - Back-Up Alarm (Manual) and UltraShift+:Diagram8 LT/RH/LoneStar - X15/A26 - Back-Up Alarm (Automatic) TC10:Diagram3 LT/RH/LoneStar - X15/A26 - Back-Up Alarm (Automatic) TC10:Diagram4 LT/RH/LoneStar X15 - Back-Up Alarm (Manual) and UltraShift +:Diagram3 LT/RH/LoneStar X15 - Back-Up Alarm (Manual) and UltraShift +:Diagram4
Mates	9303

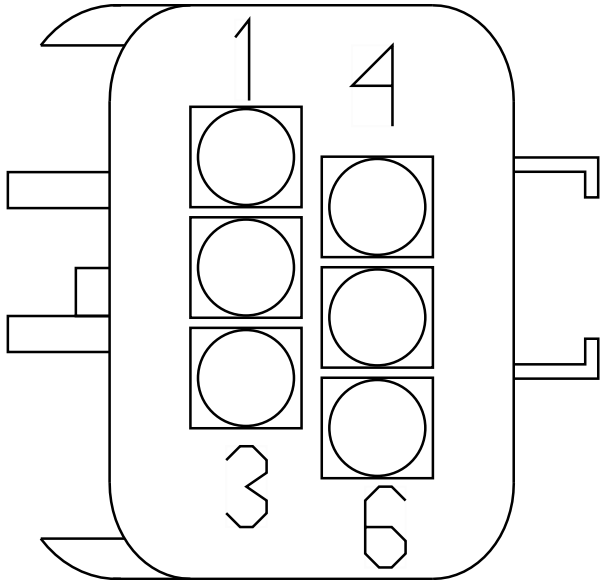

Name	Terminal Part Number	V-Min	Name	Wire Part Number	Wire CSA	Wire Spec	Wire Material description	Wire Color Description	Wire Length	End2 Terminal Part Number	End2 Pin Name	End2 Connect or
1	-	-	71BA	2643690 R1	1.91	14.0	Std. Wall XLPE Primary Cable	ORANGE	100.0	-	X	-
5	-	-	10-G	2643787 R1	3.01	12.0	Std. Wall XLPE Primary Cable	WHITE	200.0	-	X	-

Connector Name	9510F
Part Number	1667741C1
Short Description	ABS-6 PRESSURE SENSOR
Instances	LT/RH - X15/A26 - Bendix; Tractor or Towing Truck; W/ Air SUSP; J1939 Driven Lamp:Diagram1 LT/RH - X15/A26 - Bendix; Tractor or Towing Truck; W/ Air SUSP; J1939 Driven Lamp:Diagram2
Mates	9510M

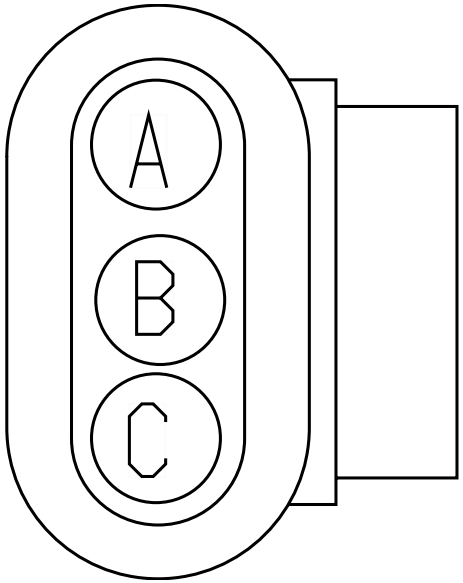

Name	Terminal Part Number	V-Min	Name	Wire Part Number	Wire CSA	Wire Spec	Wire Material description	Wire Color Description	Wire Length	End2 Terminal Part Number	End2 Pin Name	End2 Connect or
A	-	-	PM94SZC	2643680 R1	1.16	16.0	Std. Wall XLPE Primary Cable	GREY	3235.0	-	63	1701F
B	-	-	PM94SVC	2643680 R1	1.16	16.0	Std. Wall XLPE Primary Cable	GREY	3235.0	-	75	1701F
C	-	-	PM94SH	2643680 R1	1.16	16.0	Std. Wall XLPE Primary Cable	GREY	3235.0	-	76	1701F

Connector Name	9510M
Part Number	1667740C1
Short Description	ABS-6 PRESSURE SENSOR
Instances	LT/RH - X15/A26 - Bendix; Tractor or Towing Truck; W/ Air SUSP; J1939 Driven Lamp:Diagram1 LT/RH - X15/A26 - Bendix; Tractor or Towing Truck; W/ Air SUSP; J1939 Driven Lamp:Diagram2
Mates	9510F

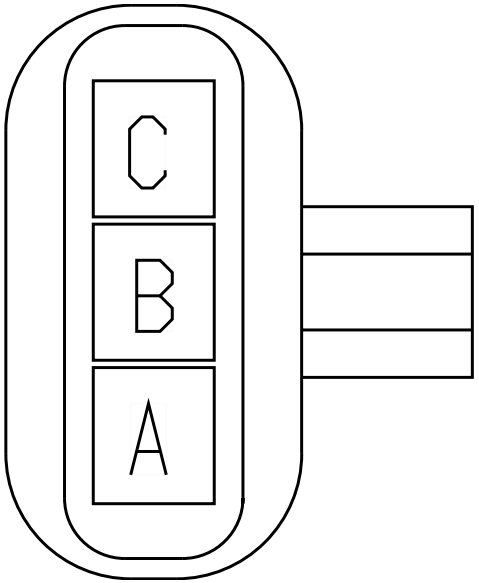

Name	Terminal Part Number	V-Min	Name	Wire Part Number	Wire CSA	Wire Spec	Wire Material description	Wire Color Description	Wire Length	End2 Terminal Part Number	End2 Pin Name	End2 Connect or
A	-	-	SJ94SZC	2643673 R1	0.79	18.0	Std. Wall XLPE Primary Cable	GREY	3345.0	-	A	R01-951 0A
B	-	-	SJ94SVC	2643673 R1	0.79	18.0	Std. Wall XLPE Primary Cable	GREY	3345.0	-	B	R01-951 0A
C	-	-	SJ94SH	2643673 R1	0.79	18.0	Std. Wall XLPE Primary Cable	GREY	3345.0	-	C	R01-951 0A

Connector Name	9511B/9511D
Part Number	3601685C1
Instances	ABS Private J1939:ABS Private J1939
Mates	SNSR-YAW_RATE-3026-02-03A

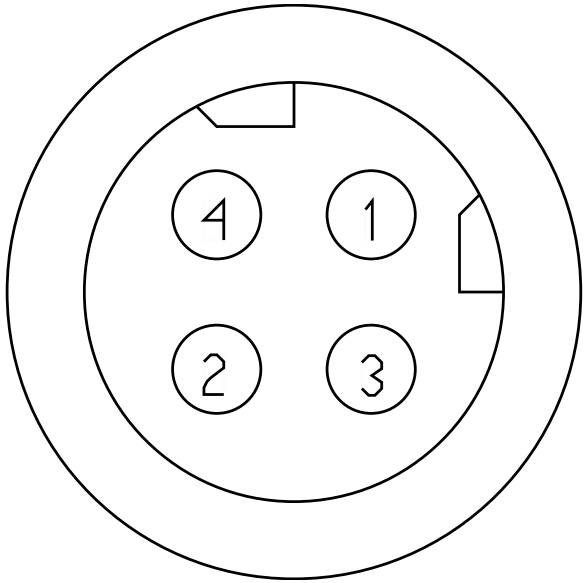

Name	Terminal Part Number	V-Min	Name	Wire Part Number	Wire CSA	Wire Spec	Wire Material description	Wire Color Description	Wire Length	End2 Terminal Part Number	End2 Pin Name	End2 Connect or
1	-	-	YJ94SN	-	0.0	-	-	RED	0.0	-	46	1701F
2	-	-	YJ94SP	-	0.0	-	-	BROWN	0.0	-	47	1701F
3	-	-	YJ94SR	-	0.0	-	-	BLACK	0.0	-	48	1701F
4	-	-	YJ94SS	-	0.0	-	-	WHITE	0.0	-	49	1701F

Connector Name	9511/9511A
Part Number	3601685C1
Instances	ABS Private J1939:ABS Private J1939
Mates	SNSR-YAW_RATE-3026-01-01A

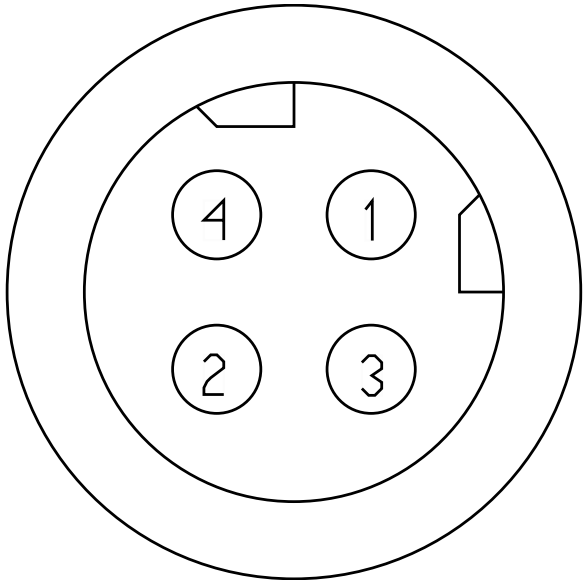

Name	Terminal Part Number	V-Min	Name	Wire Part Number	Wire CSA	Wire Spec	Wire Material description	Wire Color Description	Wire Length	End2 Terminal Part Number	End2 Pin Name	End2 Connect or
1	-	-	PR94SAB	2643673 R1	0.79	18.0	Std. Wall XLPE Primary Cable	GREY	5120.0	-	46	1701F
2	-	-	PR94SCB	2643673 R1	0.79	18.0	Std. Wall XLPE Primary Cable	GREY	5120.0	-	48	1701F
3	-	-	PR94SBB	2643673 R1	0.79	18.0	Std. Wall XLPE Primary Cable	GREY	5120.0	-	47	1701F
4	-	-	PR94SDB	2643673 R1	0.79	18.0	Std. Wall XLPE Primary Cable	GREY	5120.0	-	49	1701F

Connector Name 9515A

Part Number PAS2(1,2)

Instances LT/RH/LoneStar - X15/A26 - Traction Control (Wabco Controller):Diagram2

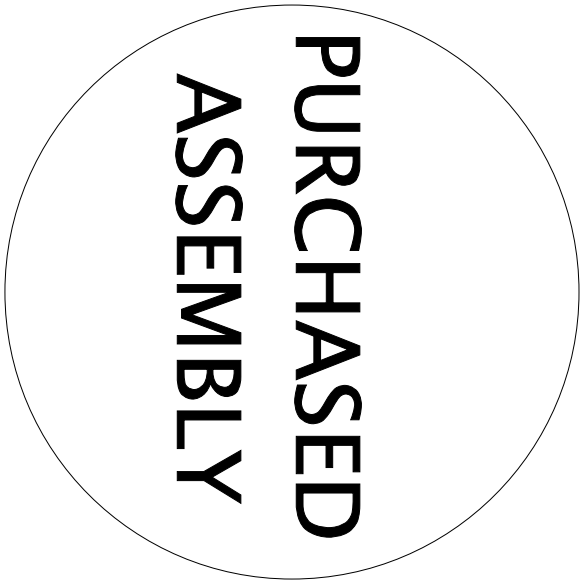

Name	Terminal Part Number	V-Min	Name	Wire Part Number	Wire CSA	Wire Spec	Wire Material description	Wire Color Description	Wire Length	End2 Terminal Part Number	End2 Pin Name	End2 Connect or
1	-	-	[SV94MN]	V-16-GXL	1.16	16.0	Std. Wall XLPE Primary Cable	Not Applica ble	1950.0	-	24	9800M
2	-	-	[SV94MM]	V-16-GXL	1.16	16.0	Std. Wall XLPE Primary Cable	Not Applica ble	1950.0	-	23	9800M

Connector Name	9516M
Part Number	3690369C1
Short Description	6 CHANNEL ABS IN LINE CONNECTOR
Instances	LoneStar - X15 - Antilock Brake System (ABS) [Bendix 6 Channel Implementation]:Diagram1 LoneStar - X15 - Antilock Brake System (ABS) [Bendix 6 Channel Implementation]:Diagram2 LoneStar - X15 - Antilock Brake System (ABS) [Bendix 6 Channel Implementation]:Diagram3 LoneStar - X15 - Antilock Brake System - Wabco ABS 6 Channel Implementation:Diagram1 LoneStar - X15 - Antilock Brake System - Wabco ABS 6 Channel Implementation:Diagram2 LoneStar - X15 - Antilock Brake System - Wabco ABS 6 Channel Implementation:Diagram3 LT/RH - X15/A26 - Antilock Brake System (ABS) Bendix 6 Channel Implementation:Diagram1 LT/RH - X15/A26 - Antilock Brake System (ABS) Bendix 6 Channel Implementation:Diagram2 LT/RH - X15/A26 - Antilock Brake System (ABS) Bendix 6 Channel Implementation:Diagram3 LT/RH - X15/A26 - Antilock Brake System - Wabco ABS 6 Channel Implementation:Diagram1 LT/RH - X15/A26 - Antilock Brake System - Wabco ABS 6 Channel Implementation:Diagram2 LT/RH - X15/A26 - Antilock Brake System - Wabco ABS 6 Channel Implementation:Diagram3
Mates	9516M

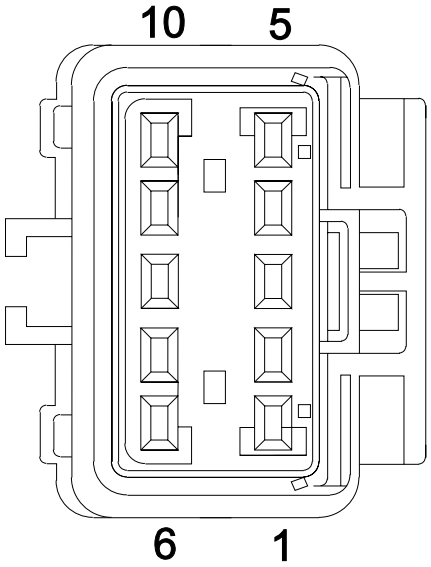

Name	Terminal Part Number	V-Min	Name	Wire Part Number	Wire CSA	Wire Spec	Wire Material description	Wire Color Description	Wire Length	End2 Terminal Part Number	End2 Pin Name	End2 Connector
1	-	-	BA94BY	2643680 R1	1.16	16.0	Std. Wall XLPE Primary Cable	GREY	3370.0	-	52	1701F
1	-	-	SA94BY	2643680 R1	1.16	16.0	Std. Wall XLPE Primary Cable	GREY	3370.0	-	52	1701F

Name	Terminal Part Number	V-Min	Name	Wire Part Number	Wire CSA	Wire Spec	Wire Material description	Wire Color Description	Wire Length	End2 Terminal Part Number	End2 Pin Name	End2 Connector
2	-	-	BA94BZ	2643680 R1	1.16	16.0	Std. Wall XLPE Primary Cable	GREY	3370.0	-	53	1701F
2	-	-	SA94BZ	2643680 R1	1.16	16.0	Std. Wall XLPE Primary Cable	GREY	3370.0	-	53	1701F
3	-	-	BA94BP	2643680 R1	1.16	16.0	Std. Wall XLPE Primary Cable	GREY	3370.0	-	54	1701F
3	-	-	SA94BP	2643680 R1	1.16	16.0	Std. Wall XLPE Primary Cable	GREY	3370.0	-	54	1701F
4	-	-	BA94BQ	2643680 R1	1.16	16.0	Std. Wall XLPE Primary Cable	GREY	3370.0	-	55	1701F
4	-	-	SA94BQ	2643680 R1	1.16	16.0	Std. Wall XLPE Primary Cable	GREY	3370.0	-	55	1701F
5	-	-	BA94BR	2643680 R1	1.16	16.0	Std. Wall XLPE Primary Cable	GREY	3370.0	-	56	1701F
5	-	-	SA94BR	2643680 R1	1.16	16.0	Std. Wall XLPE Primary Cable	GREY	3370.0	-	56	1701F

Name	Terminal Part Number	V-Min	Name	Wire Part Number	Wire CSA	Wire Spec	Wire Material description	Wire Color Description	Wire Length	End2 Terminal Part Number	End2 Pin Name	End2 Connector
6	-	-	BA94BS	2643680 R1	1.16	16.0	Std. Wall XLPE Primary Cable	GREY	3370.0	-	57	1701F
6	-	-	SA94BS	2643680 R1	1.16	16.0	Std. Wall XLPE Primary Cable	GREY	3370.0	-	57	1701F
7	-	-	BA94BT	2643680 R1	1.16	16.0	Std. Wall XLPE Primary Cable	GREY	3370.0	-	58	1701F
7	-	-	SA94BT	2643680 R1	1.16	16.0	Std. Wall XLPE Primary Cable	GREY	3370.0	-	58	1701F
8	-	-	BA94BU	2643680 R1	1.16	16.0	Std. Wall XLPE Primary Cable	GREY	3370.0	-	59	1701F
8	-	-	SA94BU	2643680 R1	1.16	16.0	Std. Wall XLPE Primary Cable	GREY	3370.0	-	59	1701F
9	-	-	BA94BV	2643680 R1	1.16	16.0	Std. Wall XLPE Primary Cable	GREY	3370.0	-	60	1701F
9	-	-	SA94BV	2643680 R1	1.16	16.0	Std. Wall XLPE Primary Cable	GREY	3370.0	-	60	1701F

Name	Terminal Part Number	V-Min	Name	Wire Part Number	Wire CSA	Wire Spec	Wire Material description	Wire Color Description	Wire Length	End2 Terminal Part Number	End2 Pin Name	End2 Connect or
10	-	-	BA94BW	2643680 R1	1.16	16.0	Std. Wall XLPE Primary Cable	GREY	3370.0	-	64	1701F
10	-	-	SA94BW	2643680 R1	1.16	16.0	Std. Wall XLPE Primary Cable	GREY	3370.0	-	64	1701F

Connector Name	9516M
Part Number	6112506C1
Short Description	BENDIX 6-CHANNEL ABS INLINE CONNECTOR
Instances	LoneStar - X15 - Antilock Brake System (ABS) [Bendix 6 Channel Implementation]:Diagram1 LoneStar - X15 - Antilock Brake System (ABS) [Bendix 6 Channel Implementation]:Diagram2 LoneStar - X15 - Antilock Brake System (ABS) [Bendix 6 Channel Implementation]:Diagram3 LoneStar - X15 - Antilock Brake System - Wabco ABS 6 Channel Implementation:Diagram1 LoneStar - X15 - Antilock Brake System - Wabco ABS 6 Channel Implementation:Diagram2 LoneStar - X15 - Antilock Brake System - Wabco ABS 6 Channel Implementation:Diagram3 LT/RH - X15/A26 - Antilock Brake System (ABS) Bendix 6 Channel Implementation:Diagram1 LT/RH - X15/A26 - Antilock Brake System (ABS) Bendix 6 Channel Implementation:Diagram2 LT/RH - X15/A26 - Antilock Brake System (ABS) Bendix 6 Channel Implementation:Diagram3 LT/RH - X15/A26 - Antilock Brake System - Wabco ABS 6 Channel Implementation:Diagram1 LT/RH - X15/A26 - Antilock Brake System - Wabco ABS 6 Channel Implementation:Diagram2 LT/RH - X15/A26 - Antilock Brake System - Wabco ABS 6 Channel Implementation:Diagram3
Mates	9516M

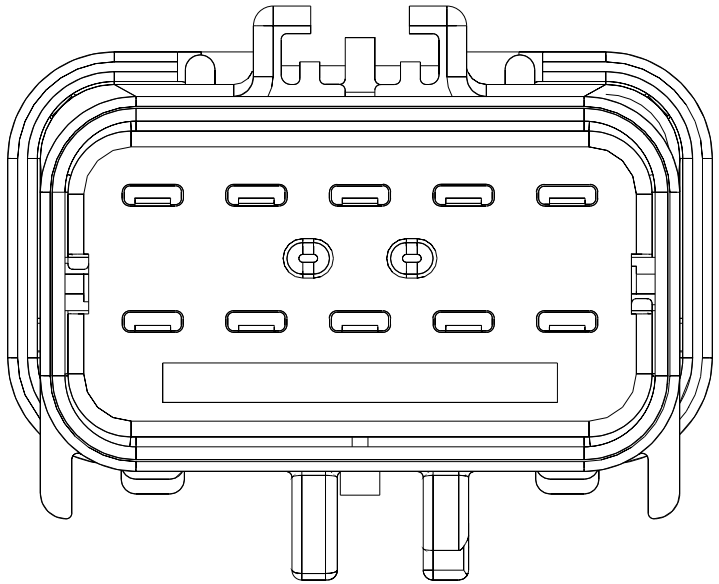

Name	Terminal Part Number	V-Min	Name	Wire Part Number	Wire CSA	Wire Spec	Wire Material description	Wire Color Description	Wire Length	End2 Terminal Part Number	End2 Pin Name	End2 Connector
1	-	-	UJ94BY	2643673 R1	0.79	18.0	Std. Wall XLPE Primary Cable	GREY	1710.0	-	X	-
1	-	-	US94BY	2643673 R1	0.79	18.0	Std. Wall XLPE Primary Cable	GREY	1710.0	-	X	-

Name	Terminal Part Number	V-Min	Name	Wire Part Number	Wire CSA	Wire Spec	Wire Material description	Wire Color Description	Wire Length	End2 Terminal Part Number	End2 Pin Name	End2 Connector
1	-	-	VB94BY	2643673 R1	0.79	18.0	Std. Wall XLPE Primary Cable	GREY	1710.0	-	X	-
1	-	-	UP94BY	2643680 R1	1.16	16.0	Std. Wall XLPE Primary Cable	GREY	2800.0	-	A	R01-950 2B DA/AA
1	-	-	TF94BY	2643680 R1	1.16	16.0	Std. Wall XLPE Primary Cable	GREY	2800.0	-	A	R01-950 2B DA/AA
1	-	-	VA94BY	2643680 R1	1.16	16.0	Std. Wall XLPE Primary Cable	GREY	2370.0	-	A	R01-9522 AA
2	-	-	VB94BZ	2643673 R1	0.79	18.0	Std. Wall XLPE Primary Cable	GREY	1870.0	-	X	-
2	-	-	UJ94BZ	2643673 R1	0.79	18.0	Std. Wall XLPE Primary Cable	GREY	1870.0	-	X	-
2	-	-	US94BZ	2643673 R1	0.79	18.0	Std. Wall XLPE Primary Cable	GREY	1870.0	-	X	-
2	-	-	VA94BZ	2643680 R1	1.16	16.0	Std. Wall XLPE Primary Cable	GREY	2370.0	-	B	R01-9522 AA

Name	Terminal Part Number	V-Min	Name	Wire Part Number	Wire CSA	Wire Spec	Wire Material description	Wire Color Description	Wire Length	End2 Terminal Part Number	End2 Pin Name	End2 Connector
2	-	-	TF94BZ	2643680 R1	1.16	16.0	Std. Wall XLPE Primary Cable	GREY	2800.0	-	B	R01-950 2B DA/AA
2	-	-	UP94BZ	2643680 R1	1.16	16.0	Std. Wall XLPE Primary Cable	GREY	2800.0	-	B	R01-950 2B DA/AA
3	-	-	US94BP	2643673 R1	0.79	18.0	Std. Wall XLPE Primary Cable	GREY	325.0	-	X	-
3	-	-	UJ94BP	2643673 R1	0.79	18.0	Std. Wall XLPE Primary Cable	GREY	325.0	-	PIN1	-
3	-	-	VB94BP	2643673 R1	0.79	18.0	Std. Wall XLPE Primary Cable	GREY	325.0	-	X	-
3	-	-	UP94BP	2643680 R1	1.16	16.0	Std. Wall XLPE Primary Cable	GREY	2800.0	-	C	R01-950 2B DA/AA
3	-	-	TF94BP	2643680 R1	1.16	16.0	Std. Wall XLPE Primary Cable	GREY	2800.0	-	C	R01-950 2B DA/AA
3	-	-	VA94BP	2643680 R1	1.16	16.0	Std. Wall XLPE Primary Cable	GREY	2370.0	-	C	R01-9522 AA

Name	Terminal Part Number	V-Min	Name	Wire Part Number	Wire CSA	Wire Spec	Wire Material description	Wire Color Description	Wire Length	End2 Terminal Part Number	End2 Pin Name	End2 Connector
4	-	-	UJ94BQ	2643673 R1	0.79	18.0	Std. Wall XLPE Primary Cable	GREY	580.0	-	X	-
4	-	-	US94BQ	2643673 R1	0.79	18.0	Std. Wall XLPE Primary Cable	GREY	580.0	-	PIN1	-
4	-	-	VB94BQ	2643673 R1	0.79	18.0	Std. Wall XLPE Primary Cable	GREY	580.0	-	X	-
4	-	-	VA94BQ	2643680 R1	1.16	16.0	Std. Wall XLPE Primary Cable	GREY	2420.0	-	2	R01-9523 AA
4	-	-	TF94BQ	2643680 R1	1.16	16.0	Std. Wall XLPE Primary Cable	GREY	2670.0	-	2	R01-950 1D DA/AA
4	-	-	UP94BQ	2643680 R1	1.16	16.0	Std. Wall XLPE Primary Cable	GREY	2670.0	-	2	R01-950 1D DA/AA
4	-	-	VA94BQ	2643680 R1	1.16	16.0	Std. Wall XLPE Primary Cable	GREY	2420.0	-	1	R01-9523 AA
5	-	-	UJ94BR	2643673 R1	0.79	18.0	Std. Wall XLPE Primary Cable	GREY	960.0	-	X	-

Name	Terminal Part Number	V-Min	Name	Wire Part Number	Wire CSA	Wire Spec	Wire Material description	Wire Color Description	Wire Length	End2 Terminal Part Number	End2 Pin Name	End2 Connector
5	-	-	US94BR	2643673 R1	0.79	18.0	Std. Wall XLPE Primary Cable	GREY	960.0	-	X	-
5	-	-	VB94BR	2643673 R1	0.79	18.0	Std. Wall XLPE Primary Cable	GREY	960.0	-	X	-
5	-	-	VA94BR	2643680 R1	1.16	16.0	Std. Wall XLPE Primary Cable	GREY	2420.0	-	1	R01-9523 AA
5	-	-	TF94BR	2643680 R1	1.16	16.0	Std. Wall XLPE Primary Cable	GREY	2670.0	-	1	R01-950 1D DA/AA
5	-	-	UP94BR	2643680 R1	1.16	16.0	Std. Wall XLPE Primary Cable	GREY	2670.0	-	1	R01-950 1D DA/AA
5	-	-	VA94BR	2643680 R1	1.16	16.0	Std. Wall XLPE Primary Cable	GREY	2420.0	-	2	R01-9523 AA
6	-	-	UJ94BS	2643673 R1	0.79	18.0	Std. Wall XLPE Primary Cable	GREY	1020.0	-	PIN1	-
6	-	-	US94BS	2643673 R1	0.79	18.0	Std. Wall XLPE Primary Cable	GREY	1020.0	-	X	-

Name	Terminal Part Number	V-Min	Name	Wire Part Number	Wire CSA	Wire Spec	Wire Material description	Wire Color Description	Wire Length	End2 Terminal Part Number	End2 Pin Name	End2 Connector
6	-	-	VB94BS	2643673 R1	0.79	18.0	Std. Wall XLPE Primary Cable	GREY	1020.0	-	X	-
6	-	-	TF94BS	2643680 R1	1.16	16.0	Std. Wall XLPE Primary Cable	GREY	3420.0	-	A	R01-950 4A DA/AA
6	-	-	UP94BS	2643680 R1	1.16	16.0	Std. Wall XLPE Primary Cable	GREY	3420.0	-	A	R01-950 4A DA/AA
6	-	-	VA94BS	2643680 R1	1.16	16.0	Std. Wall XLPE Primary Cable	GREY	3095.0	-	A	R01-9524 AA
7	-	-	UJ94BT	2643673 R1	0.79	18.0	Std. Wall XLPE Primary Cable	GREY	1100.0	-	X	-
7	-	-	US94BT	2643673 R1	0.79	18.0	Std. Wall XLPE Primary Cable	GREY	1100.0	-	X	-
7	-	-	VB94BT	2643673 R1	0.79	18.0	Std. Wall XLPE Primary Cable	GREY	1100.0	-	X	-
7	-	-	VA94BT	2643680 R1	1.16	16.0	Std. Wall XLPE Primary Cable	GREY	3095.0	-	B	R01-9524 AA

Name	Terminal Part Number	V-Min	Name	Wire Part Number	Wire CSA	Wire Spec	Wire Material description	Wire Color Description	Wire Length	End2 Terminal Part Number	End2 Pin Name	End2 Connector
7	-	-	TF94BT	2643680 R1	1.16	16.0	Std. Wall XLPE Primary Cable	GREY	3420.0	-	B	R01-950 4A DA/AA
7	-	-	UP94BT	2643680 R1	1.16	16.0	Std. Wall XLPE Primary Cable	GREY	3420.0	-	B	R01-950 4A DA/AA
8	-	-	US94BU	2643673 R1	0.79	18.0	Std. Wall XLPE Primary Cable	GREY	1360.0	-	X	-
8	-	-	UJ94BU	2643673 R1	0.79	18.0	Std. Wall XLPE Primary Cable	GREY	1360.0	-	X	-
8	-	-	VB94BU	2643673 R1	0.79	18.0	Std. Wall XLPE Primary Cable	GREY	1360.0	-	X	-
8	-	-	UP94BU	2643680 R1	1.16	16.0	Std. Wall XLPE Primary Cable	GREY	3420.0	-	C	R01-950 4A DA/AA
8	-	-	TF94BU	2643680 R1	1.16	16.0	Std. Wall XLPE Primary Cable	GREY	3420.0	-	C	R01-950 4A DA/AA
8	-	-	VA94BU	2643680 R1	1.16	16.0	Std. Wall XLPE Primary Cable	GREY	3095.0	-	C	R01-9524 AA

Name	Terminal Part Number	V-Min	Name	Wire Part Number	Wire CSA	Wire Spec	Wire Material description	Wire Color Description	Wire Length	End2 Terminal Part Number	End2 Pin Name	End2 Connector
9	-	-	UJ94BV	2643673 R1	0.79	18.0	Std. Wall XLPE Primary Cable	GREY	1460.0	-	X	-
9	-	-	VB94BV	2643673 R1	0.79	18.0	Std. Wall XLPE Primary Cable	GREY	1460.0	-	X	-
9	-	-	US94BV	2643673 R1	0.79	18.0	Std. Wall XLPE Primary Cable	GREY	1460.0	-	X	-
9	-	-	TF94BV	2643680 R1	1.16	16.0	Std. Wall XLPE Primary Cable	GREY	3245.0	-	2	R01-950 3D DA/AA
9	-	-	UP94BV	2643680 R1	1.16	16.0	Std. Wall XLPE Primary Cable	GREY	3245.0	-	2	R01-950 3D DA/AA
9	-	-	VA94BV	2643680 R1	1.16	16.0	Std. Wall XLPE Primary Cable	GREY	3095.0	-	2	R01-9525 AA
10	-	-	UJ94BW	2643673 R1	0.79	18.0	Std. Wall XLPE Primary Cable	GREY	1535.0	-	X	-
10	-	-	VB94BW	2643673 R1	0.79	18.0	Std. Wall XLPE Primary Cable	GREY	1535.0	-	X	-

Name	Terminal Part Number	V-Min	Name	Wire Part Number	Wire CSA	Wire Spec	Wire Material description	Wire Color Description	Wire Length	End2 Terminal Part Number	End2 Pin Name	End2 Connector
10	-	-	US94BW	2643673 R1	0.79	18.0	Std. Wall XLPE Primary Cable	GREY	1535.0	-	X	-
10	-	-	UP94BW	2643680 R1	1.16	16.0	Std. Wall XLPE Primary Cable	GREY	3245.0	-	1	R01-950 3D DA/AA
10	-	-	TF94BW	2643680 R1	1.16	16.0	Std. Wall XLPE Primary Cable	GREY	3245.0	-	1	R01-950 3D DA/AA
10	-	-	VA94BW	2643680 R1	1.16	16.0	Std. Wall XLPE Primary Cable	GREY	3095.0	-	1	R01-9525 AA

Connector Name	9532
Part Number	3919376C1
Instances	LoneStar - X15 - Antilock Brake System - Wabco ABS 6 Channel Implementation:Diagram3 LT/RH - X15/A26 - Antilock Brake System - Wabco ABS 6 Channel Implementation:Diagram3
Mates	MDL-ABS_AA_RIGHT-01

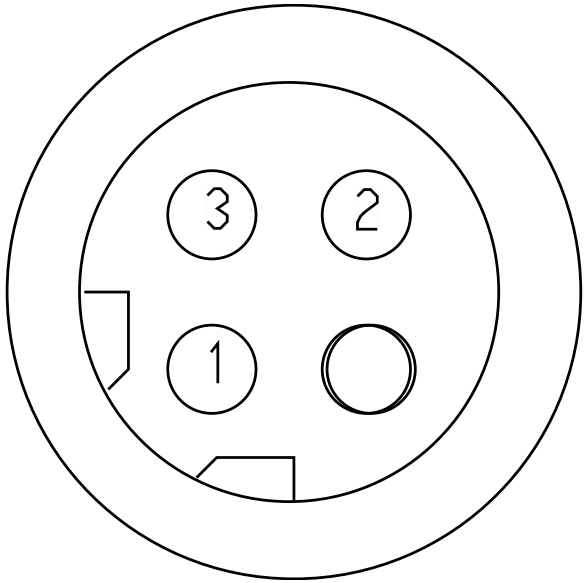

Name	Terminal Part Number	V-Min	Name	Wire Part Number	Wire CSA	Wire Spec	Wire Material description	Wire Color Description	Wire Length	End2 Terminal Part Number	End2 Pin Name	End2 Connect or
1	-	-	VB94BSA	3510311 R1	0.79	18.0	Thin Wall XLPE Primary Cable	GREY	2105.0	-	X	-
2	-	-	VB94BTA	3510311 R1	0.79	18.0	Thin Wall XLPE Primary Cable	GREY	2025.0	-	X	-
3	-	-	VB94BUA	3510311 R1	0.79	18.0	Thin Wall XLPE Primary Cable	GREY	1765.0	-	X	-

Connector Name	9536
Part Number	3919376C1
Instances	LoneStar - X15 - Antilock Brake System - Wabco ABS 6 Channel Implementation:Diagram3 LT/RH - X15/A26 - Antilock Brake System - Wabco ABS 6 Channel Implementation:Diagram3
Mates	MDL-ABS_AA_LEFT-01

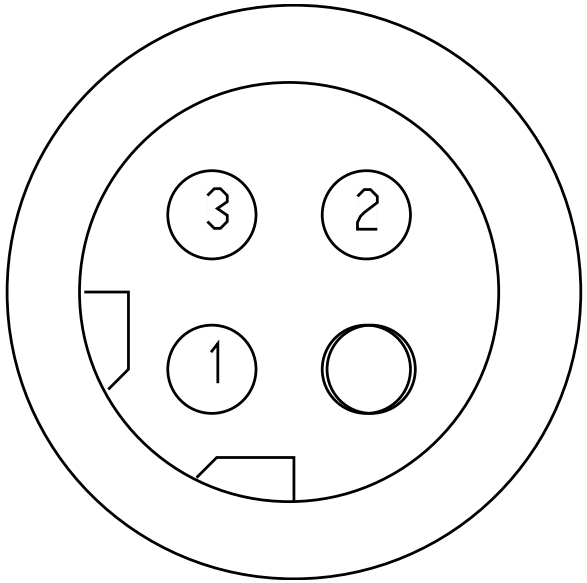

Name	Terminal Part Number	V-Min	Name	Wire Part Number	Wire CSA	Wire Spec	Wire Material description	Wire Color Description	Wire Length	End2 Terminal Part Number	End2 Pin Name	End2 Connect or
1	-	-	VB94BYA	3510311 R1	0.79	18.0	Thin Wall XLPE Primary Cable	GREY	660.0	-	X	-
2	-	-	VB94BZA	3510311 R1	0.79	18.0	Thin Wall XLPE Primary Cable	GREY	500.0	-	X	-
3	-	-	VB94BPA	3510311 R1	0.79	18.0	Thin Wall XLPE Primary Cable	GREY	2045.0	-	X	-

Connector Name	9540F
Part Number	3924162C1
Short Description	LOAD BIAS INTERCONNECT
Instances	LT/RH/LoneStar - X15/A26 - Traction Control (Bendix Controller) Option 2:Diagram1 LT/RH/LoneStar - X15/A26 - Traction Control (Bendix Controller) Option 2:Diagram2
Mates	9540M

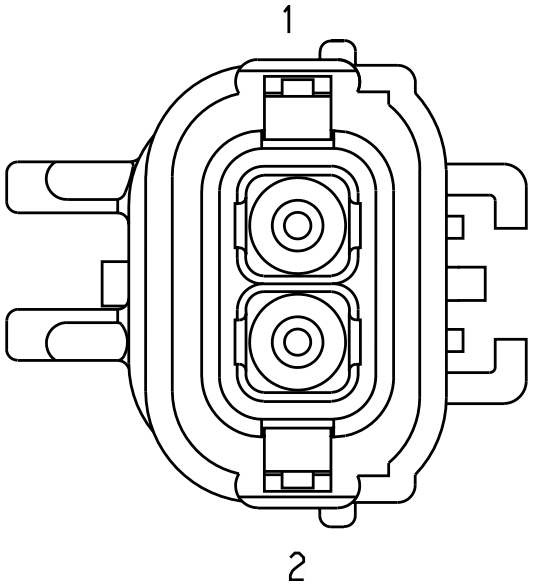

Name	Terminal Part Number	V-Min	Name	Wire Part Number	Wire CSA	Wire Spec	Wire Material description	Wire Color Description	Wire Length	End2 Terminal Part Number	End2 Pin Name	End2 Connect or
1	-	-	MA152AA	3510312 R1	1.16	16.0	Thin Wall XLPE Primary Cable	GREY	960.0	-	B	R01-9545
2	-	-	MA152AB	3510312 R1	1.16	16.0	Thin Wall XLPE Primary Cable	GREY	960.0	-	A	R01-9545

Connector Name	9540M
Part Number	3626435C1
Short Description	LOAD BIAS INTERCONNECT
Instances	LT/RH/LoneStar - X15/A26 - Traction Control (Bendix Controller) Option 2:Diagram1 LT/RH/LoneStar - X15/A26 - Traction Control (Bendix Controller) Option 2:Diagram2
Mates	9540F

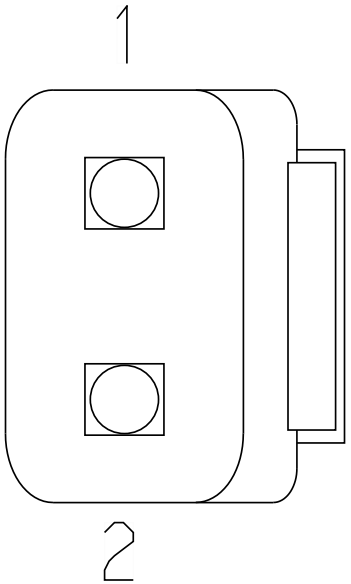

Name	Terminal Part Number	V-Min	Name	Wire Part Number	Wire CSA	Wire Spec	Wire Material description	Wire Color Description	Wire Length	End2 Terminal Part Number	End2 Pin Name	End2 Connect or
1	-	-	PA152AA	3510312 R1	1.16	16.0	Thin Wall XLPE Primary Cable	GREY	3310.0	-	61	1701F
2	-	-	PA152AB	3510312 R1	1.16	16.0	Thin Wall XLPE Primary Cable	GREY	3310.0	-	62	1701F

Connector Name	9715F
Part Number	1667732C1
Short Description	TRAILER SOCKET 1
Instances	LoneStar - X15 - Trailer Interface (ABS) - Center Pin Circuit:Diagram1 LoneStar - X15 - Trailer Interface (ABS) - Center Pin Circuit:Diagram2 LoneStar - X15 - Trailer Interface (ABS) - Center Pin Circuit:Diagram3 LoneStar - X15 - Trailer Interface (ABS) - Center Pin Circuit:Diagram4 LT/RH - X15/A26 - Trailer Interface (ABS) - Center Pin Circuit:Diagram1 LT/RH - X15/A26 - Trailer Interface (ABS) - Center Pin Circuit:Diagram2 LT/RH - X15/A26 - Trailer Interface (ABS) - Center Pin Circuit:Diagram3 LT/RH - X15/A26 - Trailer Interface (ABS) - Center Pin Circuit:Diagram4 LT/RH/LoneStar - X15/A26 - Body Builder Lighting - (Blunt Cut):Diagram1 LT/RH/LoneStar - X15/A26 - Body Builder Lighting - (Blunt Cut):Diagram2 LT/RH/LoneStar - X15/A26 - Trailer Interface (ABS) - BOC & EOF_NA:Diagram1 LT/RH/LoneStar - X15/A26 - Trailer Interface (ABS) - BOC & EOF_NA:Diagram2 LT/RH/LoneStar - X15/A26 - Trailer Interface (ABS) - BOC & EOF_NA:Diagram3 LT/RH/LoneStar - X15/A26 - Trailer Interface (ABS) - BOC & EOF_NA:Diagram4 LT/RH/LoneStar - X15/A26 - Trailer Interface (Lighting) – BOC & EOF_NA:Diagram1-Combination1 LT/RH/LoneStar - X15/A26 - Trailer Interface (Lighting) – BOC & EOF_NA:Diagram1-Combination2 LT/RH/LoneStar - X15/A26 - Trailer Interface (Lighting) – BOC & EOF_NA:Diagram1-Combination3 LT/RH/LoneStar - X15/A26 - Trailer Interface (Lighting) – BOC & EOF_NA:Diagram1-Combination4
Mates	9715M

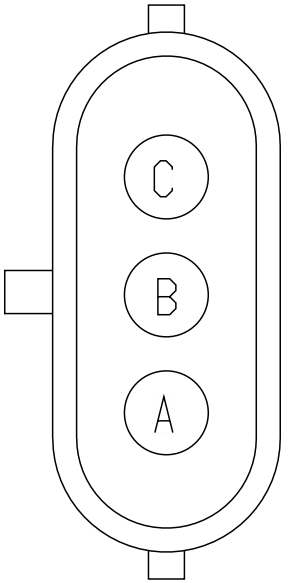

Name	Terminal Part Number	V-Min	Name	Wire Part Number	Wire CSA	Wire Spec	Wire Material description	Wire Color Description	Wire Length	End2 Terminal Part Number	End2 Pin Name	End2 Connector
A	-	-	RR70W	2643698 R1	4.81	10.0	Std. Wall XLPE Primary Cable	RED	2545.0	-	A	R01-9790M
A	-	-	RS70W	2643698 R1	4.81	10.0	Std. Wall XLPE Primary Cable	RED	3020.0	-	A	R01-9790MA
A	-	-	VX70BB	2643698 R1	4.81	10.0	Std. Wall XLPE Primary Cable	RED	4595.0	-	B	R01-9724
A	-	-	VY70BB	2643698 R1	4.81	10.0	Std. Wall XLPE Primary Cable	RED	4895.0	-	F	R01-9724A
B	-	-	RR68W	2643779 R1	4.81	10.0	Std. Wall XLPE Primary Cable	BROWN	2545.0	-	B	R01-9790M
B	-	-	RS68W	2643779 R1	4.81	10.0	Std. Wall XLPE Primary Cable	BROWN	3020.0	-	B	R01-9790MA
B	-	-	VY68BB	2643779 R1	4.81	10.0	Std. Wall XLPE Primary Cable	BROWN	4895.0	-	E	R01-9724A
B	-	-	VX68BB	2643779 R1	4.81	10.0	Std. Wall XLPE Primary Cable	BROWN	4595.0	-	C	R01-9724

Name	Terminal Part Number	V-Min	Name	Wire Part Number	Wire CSA	Wire Spec	Wire Material description	Wire Color Description	Wire Length	End2 Terminal Part Number	End2 Pin Name	End2 Connect or
C	-	-	RR94W	2643816 R1	4.81	10.0	Std. Wall XLPE Primary Cable	DARK BLUE	2545.0	-	C	R01-979 0M
C	-	-	RS94W	2643816 R1	4.81	10.0	Std. Wall XLPE Primary Cable	DARK BLUE	3020.0	-	C	R01-979 0MA

Connector Name	9715M
Part Number	1667733C1
Short Description	TRAILER SOCKET #1
Instances	LoneStar - X15 - Trailer Interface (ABS) - Center Pin Circuit:Diagram1 LoneStar - X15 - Trailer Interface (ABS) - Center Pin Circuit:Diagram2 LoneStar - X15 - Trailer Interface (ABS) - Center Pin Circuit:Diagram3 LoneStar - X15 - Trailer Interface (ABS) - Center Pin Circuit:Diagram4 LT/RH - X15/A26 - Trailer Interface (ABS) - Center Pin Circuit:Diagram1 LT/RH - X15/A26 - Trailer Interface (ABS) - Center Pin Circuit:Diagram2 LT/RH - X15/A26 - Trailer Interface (ABS) - Center Pin Circuit:Diagram3 LT/RH - X15/A26 - Trailer Interface (ABS) - Center Pin Circuit:Diagram4 LT/RH/LoneStar - X15/A26 - Body Builder Lighting - (Blunt Cut):Diagram1 LT/RH/LoneStar - X15/A26 - Body Builder Lighting - (Blunt Cut):Diagram2 LT/RH/LoneStar - X15/A26 - Trailer Interface (ABS) - BOC & EOF_NA:Diagram1 LT/RH/LoneStar - X15/A26 - Trailer Interface (ABS) - BOC & EOF_NA:Diagram2 LT/RH/LoneStar - X15/A26 - Trailer Interface (ABS) - BOC & EOF_NA:Diagram3 LT/RH/LoneStar - X15/A26 - Trailer Interface (ABS) - BOC & EOF_NA:Diagram4 LT/RH/LoneStar - X15/A26 - Trailer Interface (Lighting) – BOC & EOF_NA:Diagram1-Combination1 LT/RH/LoneStar - X15/A26 - Trailer Interface (Lighting) – BOC & EOF_NA:Diagram1-Combination2 LT/RH/LoneStar - X15/A26 - Trailer Interface (Lighting) – BOC & EOF_NA:Diagram1-Combination3 LT/RH/LoneStar - X15/A26 - Trailer Interface (Lighting) – BOC & EOF_NA:Diagram1-Combination4
Mates	9715F

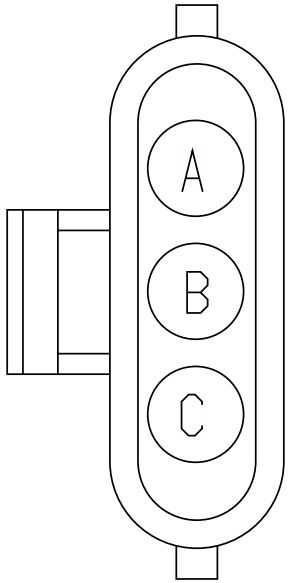

Name	Terminal Part Number	V-Min	Name	Wire Part Number	Wire CSA	Wire Spec	Wire Material description	Wire Color Description	Wire Length	End2 Terminal Part Number	End2 Pin Name	End2 Connector
A	-	-	NK70W	2643698 R1	4.81	10.0	Std. Wall XLPE Primary Cable	RED	2685.0	-	X	-
A	-	-	YT70W	2643698 R1	4.81	10.0	Std. Wall XLPE Primary Cable	RED	375.0	-	X	-
A	-	-	NM70T	3510369 R1	4.81	10.0	Thin Wall XLPE Primary Cable	RED	3235.0	-	9	1701F
B	-	-	YT68W	2643779 R1	4.81	10.0	Std. Wall XLPE Primary Cable	BROWN	425.0	-	X	-
B	-	-	NM68T	3510309 R1	4.81	10.0	Thin Wall XLPE Primary Cable	BROWN	3235.0	-	8	1701F
B	-	-	NK68W	2643779 R1	4.81	10.0	Std. Wall XLPE Primary Cable	BROWN	2285.0	-	X	-
C	-	-	NK94W	2643784 R1	4.81	10.0	Std. Wall XLPE Primary Cable	GREY	2735.0	-	X	-
C	-	-	YT94W	2643784 R1	4.81	10.0	Std. Wall XLPE Primary Cable	GREY	325.0	-	PIN1	-
C	-	-	YT94W	2643784 R1	4.81	10.0	Std. Wall XLPE Primary Cable	GREY	325.0	-	X	-

Connector Name	9716F
Part Number	1667732C1
Short Description	TRAILER SOCKET #2
Instances	LT/RH/LoneStar - X15/A26 - Body Builder Lighting - (Blunt Cut):Diagram1 LT/RH/LoneStar - X15/A26 - Body Builder Lighting - (Blunt Cut):Diagram2 LT/RH/LoneStar - X15/A26 - Trailer Interface (Lighting) – BOC & EOF_NA:Diagram1-Combination1 LT/RH/LoneStar - X15/A26 - Trailer Interface (Lighting) – BOC & EOF_NA:Diagram1-Combination2 LT/RH/LoneStar - X15/A26 - Trailer Interface (Lighting) – BOC & EOF_NA:Diagram1-Combination3 LT/RH/LoneStar - X15/A26 - Trailer Interface (Lighting) – BOC & EOF_NA:Diagram1-Combination4
Mates	9716M

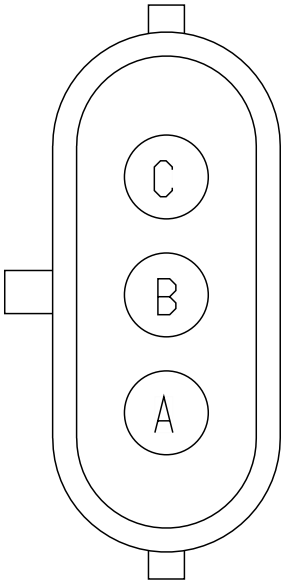

Name	Terminal Part Number	V-Min	Name	Wire Part Number	Wire CSA	Wire Spec	Wire Material description	Wire Color Description	Wire Length	End2 Terminal Part Number	End2 Pin Name	End2 Connect or
A	-	-	NK58W	2643773 R1	4.81	10.0	Std. Wall XLPE Primary Cable	BLACK	2335.0	-	X	-
A	-	-	YT58W	2643773 R1	4.81	10.0	Std. Wall XLPE Primary Cable	BLACK	325.0	-	X	-
A	-	-	NM58T	2643773 R1	4.81	10.0	Std. Wall XLPE Primary Cable	BLACK	3235.0	-	7	1701F
B	-	-	NK56W	2643802 R1	4.81	10.0	Std. Wall XLPE Primary Cable	YELLOW 2	2735.0	-	X	-

Name	Terminal Part Number	V-Min	Name	Wire Part Number	Wire CSA	Wire Spec	Wire Material description	Wire Color Description	Wire Length	End2 Terminal Part Number	End2 Pin Name	End2 Connect or
B	-	-	NM56T	2643802 R1	4.81	10.0	Std. Wall XLPE Primary Cable	YELLOW 2	3235.0	-	5	1701F
B	-	-	YT56W	2643802 R1	4.81	10.0	Std. Wall XLPE Primary Cable	YELLOW 2	425.0	-	X	-
C	-	-	YT57W	2643776 R1	4.81	10.0	Std. Wall XLPE Primary Cable	LIGHT GREEN	375.0	-	X	-
C	-	-	NM57T	2643776 R1	4.81	10.0	Std. Wall XLPE Primary Cable	LIGHT GREEN	3235.0	-	6	1701F
C	-	-	NK57W	2643776 R1	4.81	10.0	Std. Wall XLPE Primary Cable	LIGHT GREEN	2435.0	-	X	-

Connector Name	9716M
Part Number	1667733C1
Short Description	TRAILER SOCKET 2
Instances	LT/RH/LoneStar - X15/A26 - Body Builder Lighting - (Blunt Cut):Diagram1 LT/RH/LoneStar - X15/A26 - Body Builder Lighting - (Blunt Cut):Diagram2 LT/RH/LoneStar - X15/A26 - Trailer Interface (Lighting) – BOC & EOF_NA:Diagram1-Combination1 LT/RH/LoneStar - X15/A26 - Trailer Interface (Lighting) – BOC & EOF_NA:Diagram1-Combination2 LT/RH/LoneStar - X15/A26 - Trailer Interface (Lighting) – BOC & EOF_NA:Diagram1-Combination3 LT/RH/LoneStar - X15/A26 - Trailer Interface (Lighting) – BOC & EOF_NA:Diagram1-Combination4
Mates	9716F

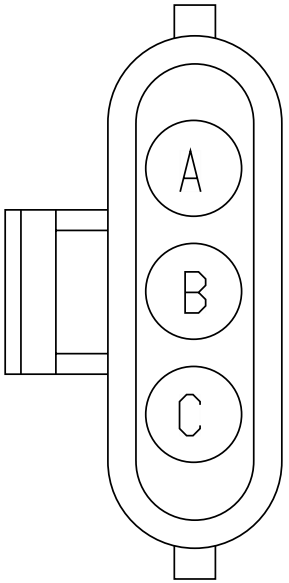

Name	Terminal Part Number	V-Min	Name	Wire Part Number	Wire CSA	Wire Spec	Wire Material description	Wire Color Description	Wire Length	End2 Terminal Part Number	End2 Pin Name	End2 Connect or
A	-	-	RR58W	2643773 R1	4.81	10.0	Std. Wall XLPE Primary Cable	BLACK	2545.0	-	A	R01-978 9F
A	-	-	RS58W	2643773 R1	4.81	10.0	Std. Wall XLPE Primary Cable	BLACK	3020.0	-	A	R01-978 9FA
A	-	-	VY58BB	2643773 R1	4.81	10.0	Std. Wall XLPE Primary Cable	BLACK	4895.0	-	D	R01-972 4A
A	-	-	VX58BB	2643773 R1	4.81	10.0	Std. Wall XLPE Primary Cable	BLACK	4595.0	-	E	R01-9724

Name	Terminal Part Number	V-Min	Name	Wire Part Number	Wire CSA	Wire Spec	Wire Material description	Wire Color Description	Wire Length	End2 Terminal Part Number	End2 Pin Name	End2 Connector
B	-	-	RS56W	2643802 R1	4.81	10.0	Std. Wall XLPE Primary Cable	YELLOW 2	3020.0	-	B	R01-978 9FA
B	-	-	RR56W	2643802 R1	4.81	10.0	Std. Wall XLPE Primary Cable	YELLOW 2	2545.0	-	B	R01-978 9F
B	-	-	VX56BB	2643802 R1	4.81	10.0	Std. Wall XLPE Primary Cable	YELLOW 2	4595.0	-	F	R01-9724
B	-	-	VY56BB	2643802 R1	4.81	10.0	Std. Wall XLPE Primary Cable	YELLOW 2	4895.0	-	B	R01-972 4A
C	-	-	RS57W	2643776 R1	4.81	10.0	Std. Wall XLPE Primary Cable	LIGHT GREEN	3020.0	-	C	R01-978 9FA
C	-	-	RR57W	2643776 R1	4.81	10.0	Std. Wall XLPE Primary Cable	LIGHT GREEN	2545.0	-	C	R01-978 9F
C	-	-	VY57BB	2643776 R1	4.81	10.0	Std. Wall XLPE Primary Cable	LIGHT GREEN	4895.0	-	C	R01-972 4A
C	-	-	VX57BB	2643776 R1	4.81	10.0	Std. Wall XLPE Primary Cable	LIGHT GREEN	4595.0	-	G	R01-9724

Connector Name	9717F
Part Number	3517817C1
Short Description	TRAILER GROUND
Instances	LT/RH/LoneStar - X15/A26 - Body Builder Lighting - (Blunt Cut):Diagram1 LT/RH/LoneStar - X15/A26 - Body Builder Lighting - (Blunt Cut):Diagram2
Mates	9717

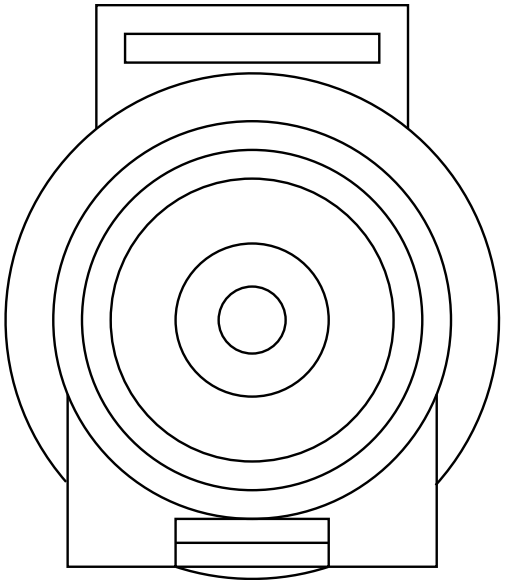

Name	Terminal Part Number	V-Min	Name	Wire Part Number	Wire CSA	Wire Spec	Wire Material description	Wire Color Description	Wire Length	End2 Terminal Part Number	End2 Pin Name	End2 Connect or
A	-	-	VZ10-GBB	2643789 R1	7.48	8.0	Std. Wall XLPE Primary Cable	WHITE	4595.0	-	A	R01-9724
A	-	-	WA10-GBB	2643789 R1	7.48	8.0	Std. Wall XLPE Primary Cable	WHITE	4895.0	-	A	R01-9724A

Connector Name	9717
Part Number	3517441C1
Short Description	TRAILER GROUND
Instances	LT/RH/LoneStar - X15/A26 - Body Builder Lighting - (Blunt Cut):Diagram1 LT/RH/LoneStar - X15/A26 - Body Builder Lighting - (Blunt Cut):Diagram2
Mates	9717F

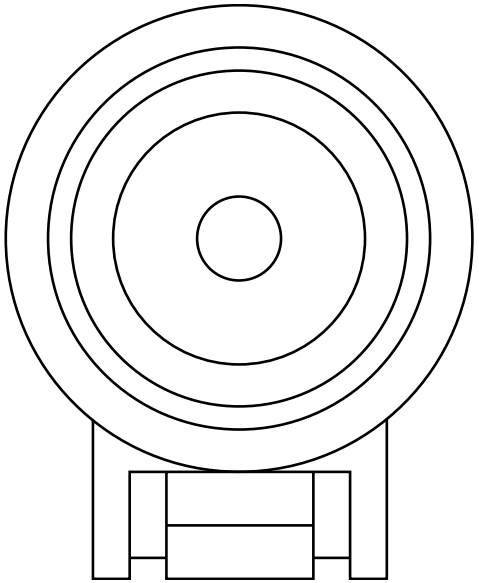

Name	Terminal Part Number	V-Min	Name	Wire Part Number	Wire CSA	Wire Spec	Wire Material description	Wire Color Description	Wire Length	End2 Terminal Part Number	End2 Pin Name	End2 Connect or
A	-	-	UC10-GBB	2643789 R1	7.48	8.0	Std. Wall XLPE Primary Cable	WHITE	3585.0	-	-	-

Connector Name	9718
Part Number	1661778C1
Short Description	DAYCAB WORK LIGHT
Instances	LT/RH - A26 - Work Lights LED W/ Sw Pack - Day Cab W/ RKE W/MAN REV:Diagram1 LT/RH - A26 - Work Lights LED W/ Sw Pack - Day Cab W/ RKE W/MAN REV:Diagram2 LT/RH - A26 - Work Lights LED W/ Sw Pack - Day Cab W/O RKE W/MAN REV:Diagram1 LT/RH - A26 - Work Lights LED W/ Sw Pack - Day Cab W/O RKE W/MAN REV:Diagram2 LT/RH - A26 - Work Lights W/ Sw Pack - Customer Supplied W/ RKE W/MAN REV:Diagram1 LT/RH - A26 - Work Lights W/ Sw Pack - Customer Supplied W/ RKE W/MAN REV:Diagram2 LT/RH - A26 - Work Lights W/ Sw Pack - Customer Supplied W/ RKE W/MAN REV:Diagram3 LT/RH - A26 - Work Lights W/ Sw Pack - Customer Supplied W/ RKE W/MAN REV:Diagram4 LT/RH - A26 - Work Lights W/ Sw Pack - Customer Supplied W/ O RKE W/MAN REV:Diagram1 LT/RH - A26 - Work Lights W/ Sw Pack - Customer Supplied W/ O RKE W/MAN REV:Diagram2 LT/RH - A26 - Work Lights W/ Sw Pack - Customer Supplied W/ O RKE W/MAN REV:Diagram3 LT/RH - A26 - Work Lights W/ Sw Pack - Customer Supplied W/ O RKE W/MAN REV:Diagram4 LT/RH - X15/A26 - Work Lights W/ Sw Pack - Customer Supplied:Diagram1 LT/RH - X15/A26 - Work Lights W/ Sw Pack - Customer Supplied:Diagram2 LT/RH/LoneStar - X15 - Work Lights W/ Sw Pack - Customer Supplied W/ RKE W/MAN REV:Diagram1 LT/RH/LoneStar - X15 - Work Lights W/ Sw Pack - Customer Supplied W/ RKE W/MAN REV:Diagram2 LT/RH/LoneStar - X15 - Work Lights W/ Sw Pack - Customer Supplied W/O RKE W/MAN REV:Diagram1 LT/RH/LoneStar - X15 - Work Lights W/ Sw Pack - Customer Supplied W/O RKE W/MAN REV:Diagram2 LT/RH/LoneStar - X15/A26 - Work Lights LED W/ Sw Pack - Day Cab:Diagram1 LT/RH/LoneStar - X15/A26 - Work Lights LED W/ Sw Pack - Day Cab W/ RKE W/AUTO REV:Diagram1

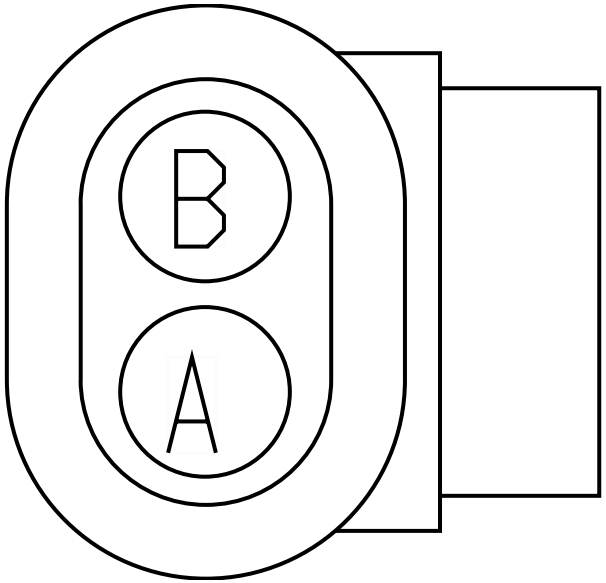

LT/RH/LoneStar - X15/A26 - Work Lights LED W/ Sw Pack - Day Cab W/O RKE:Diagram1
LT/RH/LoneStar - X15/A26 - Work Lights LED W/ Sw Pack - Day Cab W/O RKE W/AUTO REV:Diagram1
LT/RH/LoneStar - X15/A26 - Work Lights W/ Sw Pack - Customer Supplied:Diagram1
LT/RH/LoneStar - X15/A26 - Work Lights W/ Sw Pack - Customer Supplied:Diagram2
LT/RH/LoneStar - X15/A26 - Work Lights W/ Sw Pack - Customer Supplied W/ RKE W/AUTO REV:Diagram1
LT/RH/LoneStar - X15/A26 - Work Lights W/ Sw Pack - Customer Supplied W/ RKE W/AUTO REV:Diagram2
LT/RH/LoneStar - X15/A26 - Work Lights W/ Sw Pack - Customer Supplied W/O RKE W/AUTO REV:Diagram1
LT/RH/LoneStar - X15/A26 - Work Lights W/ Sw Pack - Customer Supplied W/O RKE W/AUTO REV:Diagram2
LT/RH/LoneStar X15 - Work Lights LED W/ Sw Pack - Day Cab W/ RKE W/MAN REV:Diagram1
LT/RH/LoneStar X15 - Work Lights LED W/ Sw Pack - Day Cab W/O RKE W/MAN REV:Diagram1

Mates 9719

Name	Terminal Part Number	V-Min	Name	Wire Part Number	Wire CSA	Wire Spec	Wire Material description	Wire Color Description	Wire Length	End2 Terminal Part Number	End2 Pin Name	End2 Connect or
A	-	-	NV65	2643682 R1	1.16	16.0	Std. Wall XLPE Primary Cable	ORANGE	2490.0	-	68	1701F
B	-	-	NV65-G	2643681 R1	1.16	16.0	Std. Wall XLPE Primary Cable	WHITE	1440.0	-	-	-

Connector Name	9719
Part Number	3543888C1
Short Description	WORK LIGHT
Instances	LT/RH - A26 - Work Lights LED W/ Sw Pack - Day Cab W/ RKE W/MAN REV:Diagram1 LT/RH - A26 - Work Lights LED W/ Sw Pack - Day Cab W/ RKE W/MAN REV:Diagram2 LT/RH - A26 - Work Lights LED W/ Sw Pack - Day Cab W/O RKE W/MAN REV:Diagram1 LT/RH - A26 - Work Lights LED W/ Sw Pack - Day Cab W/O RKE W/MAN REV:Diagram2 LT/RH - A26 - Work Lights W/ Sw Pack - Customer Supplied W/ RKE W/MAN REV:Diagram1 LT/RH - A26 - Work Lights W/ Sw Pack - Customer Supplied W/ RKE W/MAN REV:Diagram2 LT/RH - A26 - Work Lights W/ Sw Pack - Customer Supplied W/ RKE W/MAN REV:Diagram3 LT/RH - A26 - Work Lights W/ Sw Pack - Customer Supplied W/ RKE W/MAN REV:Diagram4 LT/RH - A26 - Work Lights W/ Sw Pack - Customer Supplied W/ O RKE W/MAN REV:Diagram1 LT/RH - A26 - Work Lights W/ Sw Pack - Customer Supplied W/ O RKE W/MAN REV:Diagram2 LT/RH - A26 - Work Lights W/ Sw Pack - Customer Supplied W/ O RKE W/MAN REV:Diagram3 LT/RH - A26 - Work Lights W/ Sw Pack - Customer Supplied W/ O RKE W/MAN REV:Diagram4 LT/RH - X15/A26 - Work Lights W/ Sw Pack - Customer Supplied:Diagram1 LT/RH - X15/A26 - Work Lights W/ Sw Pack - Customer Supplied:Diagram2 LT/RH/LoneStar - X15 - Work Lights W/ Sw Pack - Customer Supplied W/ RKE W/MAN REV:Diagram1 LT/RH/LoneStar - X15 - Work Lights W/ Sw Pack - Customer Supplied W/ RKE W/MAN REV:Diagram2 LT/RH/LoneStar - X15 - Work Lights W/ Sw Pack - Customer Supplied W/O RKE W/MAN REV:Diagram1 LT/RH/LoneStar - X15 - Work Lights W/ Sw Pack - Customer Supplied W/O RKE W/MAN REV:Diagram2 LT/RH/LoneStar - X15/A26 - Work Lights LED W/ Sw Pack - Day Cab:Diagram1 LT/RH/LoneStar - X15/A26 - Work Lights LED W/ Sw Pack - Day Cab W/ RKE W/AUTO REV:Diagram1

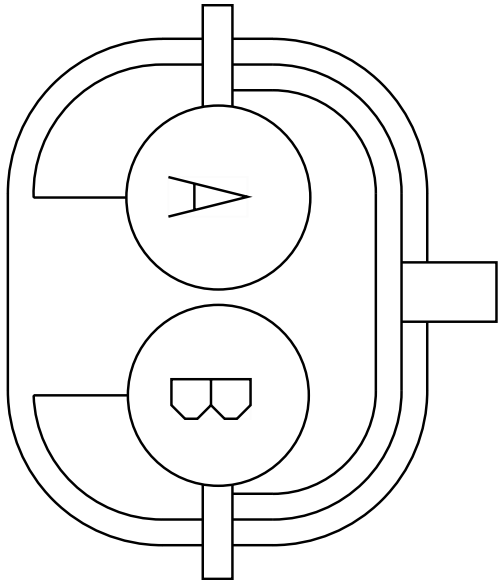

LT/RH/LoneStar - X15/A26 - Work Lights LED W/ Sw Pack - Day Cab W/O RKE:Diagram1
LT/RH/LoneStar - X15/A26 - Work Lights LED W/ Sw Pack - Day Cab W/O RKE W/AUTO REV:Diagram1
LT/RH/LoneStar - X15/A26 - Work Lights W/ Sw Pack - Customer Supplied:Diagram1
LT/RH/LoneStar - X15/A26 - Work Lights W/ Sw Pack - Customer Supplied:Diagram2
LT/RH/LoneStar - X15/A26 - Work Lights W/ Sw Pack - Customer Supplied W/ RKE W/AUTO REV:Diagram1
LT/RH/LoneStar - X15/A26 - Work Lights W/ Sw Pack - Customer Supplied W/ RKE W/AUTO REV:Diagram2
LT/RH/LoneStar - X15/A26 - Work Lights W/ Sw Pack - Customer Supplied W/O RKE W/AUTO REV:Diagram1
LT/RH/LoneStar - X15/A26 - Work Lights W/ Sw Pack - Customer Supplied W/O RKE W/AUTO REV:Diagram2
LT/RH/LoneStar X15 - Work Lights LED W/ Sw Pack - Day Cab W/ RKE W/MAN REV:Diagram1
LT/RH/LoneStar X15 - Work Lights LED W/ Sw Pack - Day Cab W/O RKE W/MAN REV:Diagram1

Mates 9718

Name	Terminal Part Number	V-Min	Name	Wire Part Number	Wire CSA	Wire Spec	Wire Material description	Wire Color Description	Wire Length	End2 Terminal Part Number	End2 Pin Name	End2 Connect or
A	-	-	J65	-	1.16	16.0	Std. Wall XLPE Primary Cable	BLACK	1300.0	-	A	W27-1032
B	-	-	J11-GK	-	1.16	16.0	Std. Wall XLPE Primary Cable	WHITE	1300.0	-	B	W27-1032

Connector Name 9737

Part Number 1661375C2

Instances LT/RH/LoneStar - X15/A26 - Auxiliary Air Solenoids 4-pack (2 packs/8 solenoids):Diagram1

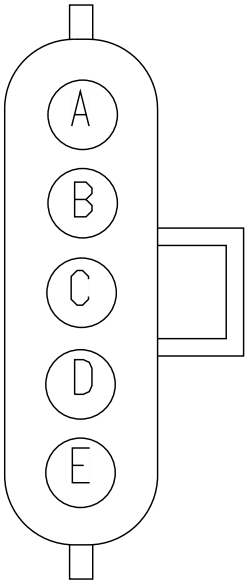

Name	Terminal Part Number	V-Min	Name	Wire Part Number	Wire CSA	Wire Spec	Wire Material description	Wire Color Description	Wire Length	End2 Terminal Part Number	End2 Pin Name	End2 Connect or
A	-	-	SW59-GA	2643689 R1	1.91	14.0	Std. Wall XLPE Primary Cable	WHITE	1935.0	-	-	-
B	-	-	SW59E	2643673 R1	0.79	18.0	Std. Wall XLPE Primary Cable	GREY	2985.0	-	36	1701F
C	-	-	SW59F	2643673 R1	0.79	18.0	Std. Wall XLPE Primary Cable	GREY	2985.0	-	37	1701F
D	-	-	SW59H	2643673 R1	0.79	18.0	Std. Wall XLPE Primary Cable	GREY	2985.0	-	38	1701F

Name	Terminal Part Number	V-Min	Name	Wire Part Number	Wire CSA	Wire Spec	Wire Material description	Wire Color Description	Wire Length	End2 Terminal Part Number	End2 Pin Name	End2 Connect or
E	-	-	SW59J	2643673 R1	0.79	18.0	Std. Wall XLPE Primary Cable	GREY	2985.0	-	39	1701F

Connector Name	9800F
Part Number	3558026C1
Short Description	CONNECTION TO REAR CHASSIS HARNESS
Instances	LoneStar - X15 - Antilock Brake System (ABS) - Wabco 4 Channel Implementation:Diagram1 LoneStar - X15 - Antilock Brake System (ABS) - Wabco 4 Channel Implementation:Diagram2 LoneStar - X15 - Antilock Brake System (ABS) - Wabco 4 Channel Implementation:Diagram3 LoneStar - X15 - Antilock Brake System (ABS) - Wabco 4 Channel Implementation:Diagram4 LoneStar - X15 - Antilock Brake System (ABS) [Bendix 6 Channel Implementation]:Diagram1 LoneStar - X15 - Antilock Brake System (ABS) [Bendix 6 Channel Implementation]:Diagram2 LoneStar - X15 - Antilock Brake System (ABS) [Bendix 6 Channel Implementation]:Diagram3 LoneStar - X15 - Antilock Brake System (ABS)-BENDIX 4 Channel Implemenation:Diagram1 LoneStar - X15 - Antilock Brake System (ABS)-BENDIX 4 Channel Implemenation:Diagram2 LoneStar - X15 - Antilock Brake System (ABS)-BENDIX 4 Channel Implemenation:Diagram3 LoneStar - X15 - Antilock Brake System (ABS)-BENDIX 4 Channel Implemenation:Diagram4 LoneStar - X15 - Antilock Brake System - Wabco ABS 6 Channel Implementation:Diagram1 LoneStar - X15 - Antilock Brake System - Wabco ABS 6 Channel Implementation:Diagram2 LoneStar - X15 - Antilock Brake System - Wabco ABS 6 Channel Implementation:Diagram3 LT/RH X15 - Backup Light (Dual Reverse Light) Allison-TC10:Diagram1 LT/RH X15 - Backup Light (Dual Reverse Light) Allison-TC10:Diagram2 LT/RH X15 - Backup Light (Dual Reverse LT) Procosion/ Endurant:Diagram1 LT/RH X15 - Backup Light (Dual Reverse LT) Procosion/ Endurant:Diagram2 LT/RH X15 - Backup Light (Reverse Light) Allison TC10:Diagram1 LT/RH X15 - Backup Light (Reverse Light) Allison TC10:Diagram2

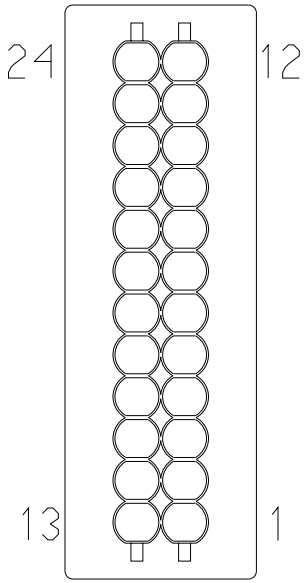

LT/RH X15 - Backup Light (Single Reverse Light) Allison TC10:Diagram1
LT/RH X15 - Backup Light (Single Reverse Light) Allison TC10:Diagram2
LT/RH X15 - Backup Light (Single Reverse Light) Endurant:Diagram1
LT/RH X15 - Backup Light (Single Reverse Light) Endurant:Diagram2
LT/RH X15 - Backup Lights (Dual Reverse Light) Eaton/Manual Trans:Diagram1
LT/RH X15 - Backup Lights (Dual Reverse Light) Eaton/Manual Trans:Diagram2
LT/RH X15 - Backup Lights (Reverse Light) Eaton/Manual Trans:Diagram1
LT/RH X15 - Backup Lights (Reverse Light) Eaton/Manual Trans:Diagram2
LT/RH X15 - Backup Lights (Reverse Lights) Eaton/Manual Trans:Diagram1
LT/RH X15 - Backup Lights (Reverse Lights) Eaton/Manual Trans:Diagram2
LT/RH X15 - Backup Lights (Single Reverse Light) Eaton/Manual Trans:Diagram1
LT/RH X15 - Backup Lights (Single Reverse Light) Eaton/Manual Trans:Diagram2
LT/RH - X15/A26 - Antilock Brake System (ABS) - Wabco 4 Channel Implementation:Diagram1
LT/RH - X15/A26 - Antilock Brake System (ABS) - Wabco 4 Channel Implementation:Diagram2
LT/RH - X15/A26 - Antilock Brake System (ABS) - Wabco 4 Channel Implementation:Diagram3
LT/RH - X15/A26 - Antilock Brake System (ABS) - Wabco 4 Channel Implementation:Diagram4
LT/RH - X15/A26 - Antilock Brake System (ABS) BENDIX 4 Channel Implemenation:Diagram1
LT/RH - X15/A26 - Antilock Brake System (ABS) BENDIX 4 Channel Implemenation:Diagram2
LT/RH - X15/A26 - Antilock Brake System (ABS) BENDIX 4 Channel Implemenation:Diagram3
LT/RH - X15/A26 - Antilock Brake System (ABS) BENDIX 4 Channel Implemenation:Diagram4
LT/RH - X15/A26 - Antilock Brake System (ABS) Bendix 6 Channel Implementation:Diagram1
LT/RH - X15/A26 - Antilock Brake System (ABS) Bendix 6 Channel Implementation:Diagram2

LT/RH - X15/A26 - Antilock Brake System (ABS) Bendix 6 Channel Implementation:Diagram3
LT/RH - X15/A26 - Antilock Brake System - Wabco ABS 6 Channel Implementation:Diagram1
LT/RH - X15/A26 - Antilock Brake System - Wabco ABS 6 Channel Implementation:Diagram2
LT/RH - X15/A26 - Antilock Brake System - Wabco ABS 6 Channel Implementation:Diagram3
LT/RH - X15/A26 - License Plate Light (Dual LED Lamp Tail Light) Option 1:Diagram1
LT/RH - X15/A26 - License Plate Light (Dual LED Lamp Tail Light) Option 1:Diagram2
LT/RH - X15/A26 - License Plate Light (Dual LED Lamp Tail Light) Option 2:Diagram1
LT/RH - X15/A26 - License Plate Light (Dual LED Lamp Tail Light) Option 2:Diagram2
LT/RH - X15/A26 - License Plate Light (Tail Light Single Assy.) Option 1:Diagram1
LT/RH - X15/A26 - License Plate Light (Tail Light Single Assy.) Option 1:Diagram2
LT/RH - X15/A26 - License Plate Light (Tail Light Single Assy.)Option 2:Diagram1
LT/RH - X15/A26 - License Plate Light (Tail Light Single Assy.)Option 2:Diagram2
LT/RH A26 - Back-Up Alarm (Manual) and UltraShift+:Diagram1
LT/RH A26 - Back-Up Alarm (Manual) and UltraShift+:Diagram2
LT/RH A26 - Back-Up Alarm (Manual) and UltraShift+:Diagram3
LT/RH A26 - Back-Up Alarm (Manual) and UltraShift+:Diagram4
LT/RH A26 - Back-Up Alarm (Manual) and UltraShift+:Diagram5
LT/RH A26 - Back-Up Alarm (Manual) and UltraShift+:Diagram6
LT/RH A26 - Back-Up Alarm (Manual) and UltraShift+:Diagram7
LT/RH A26 - Back-Up Alarm (Manual) and UltraShift+:Diagram8
LT/RH A26 - Back-Up Alarm (Manual) (W/ Tail Light Bar Assy):Diagram1
LT/RH A26 - Back-Up Alarm (Manual) (W/ Tail Light Bar Assy):Diagram2
LT/RH A26 - Back-Up Alarm (Manual) (W/ Tail Light Bar Assy):Diagram3
LT/RH A26 - Back-Up Alarm (Manual) (W/ Tail Light Bar Assy):Diagram4
LT/RH A26 - Backup Light (Dual Reverse Light):Diagram1
LT/RH A26 - Backup Light (Dual Reverse Light):Diagram2
LT/RH A26 - Backup Light (Dual Reverse Light) Allison-3K:Diagram1

LT/RH A26 - Backup Light (Dual Reverse Light)
Allison-3K:Diagram2
LT/RH A26 - Backup Light (Dual Reverse Light) Allison-
TC10:Diagram1
LT/RH A26 - Backup Light (Dual Reverse Light) Allison-
TC10:Diagram2
LT/RH A26 - Backup Light (Reverse Light) Allison
TC10:Diagram1
LT/RH A26 - Backup Light (Reverse Light) Allison
TC10:Diagram2
LT/RH A26 - Backup Light (Reverse Light) Allison-3K:Diagram1
LT/RH A26 - Backup Light (Reverse Light) Allison-3K:Diagram2
LT/RH A26 - Backup Light (Single Reverse Light):Diagram1
LT/RH A26 - Backup Light (Single Reverse Light):Diagram2
LT/RH A26 - Backup Light (Single Reverse Light) Allison
3K:Diagram1
LT/RH A26 - Backup Light (Single Reverse Light) Allison
3K:Diagram2
LT/RH A26 - Backup Light (Single Reverse Light) Allison
TC10:Diagram1
LT/RH A26 - Backup Light (Single Reverse Light) Allison
TC10:Diagram2
LT/RH A26 - Backup Light (Single Reverse Light)
Endurant:Diagram1
LT/RH A26 - Backup Light (Single Reverse Light)
Endurant:Diagram2
LT/RH A26 - Backup Light (Single Reverse Light) W/Allison
3K:Diagram1
LT/RH A26 - Backup Light (Single Reverse Light) W/Allison
3K:Diagram2
LT/RH A26 - Backup Light (Single Reverse Light) W/Allison
TC10:Diagram1
LT/RH A26 - Backup Light (Single Reverse Light) W/Allison
TC10:Diagram2
LT/RH A26 - Backup Light Endurant Trans:Diagram1
LT/RH A26 - Backup Light Endurant Trans:Diagram2
LT/RH A26 - Backup Lights (Dual Reverse Light) Eaton/Manual
Trans:Diagram1
LT/RH A26 - Backup Lights (Dual Reverse Light) Eaton/Manual
Trans:Diagram2
LT/RH A26 - Backup Lights (Dual Reverse Light) Eaton/Manual
Trans:Diagram3
LT/RH A26 - Backup Lights (Dual Reverse Light) Eaton/Manual
Trans:Diagram4

LT/RH A26 - Backup Lights (Reverse Light) Eaton/Manual Trans:Diagram1
LT/RH A26 - Backup Lights (Reverse Light) Eaton/Manual Trans:Diagram2
LT/RH A26 - Backup Lights (Reverse Light) Eaton/Manual Trans:Diagram3
LT/RH A26 - Backup Lights (Reverse Light) Eaton/Manual Trans:Diagram4
LT/RH A26 - Backup Lights (Reverse Lights) Eaton/Manual Trans:Diagram1
LT/RH A26 - Backup Lights (Reverse Lights) Eaton/Manual Trans:Diagram2
LT/RH A26 - Backup Lights (Reverse Lights) Eaton/Manual Trans:Diagram3
LT/RH A26 - Backup Lights (Reverse Lights) Eaton/Manual Trans:Diagram4
LT/RH A26 - Backup Lights (Single Reverse Light) Eaton/Manual Trans:Diagram1
LT/RH A26 - Backup Lights (Single Reverse Light) Eaton/Manual Trans:Diagram2
LT/RH A26 - Backup Lights (Single Reverse Light) Eaton/Manual Trans:Diagram3
LT/RH A26 - Backup Lights (Single Reverse Light) Eaton/Manual Trans:Diagram4
LT/RH A26 - Backup Lights (Single Reverse Light) Eaton/Manual Trans/:Diagram1
LT/RH A26 - Backup Lights (Single Reverse Light) Eaton/Manual Trans/:Diagram2
LT/RH A26 - Backup Lights (Single Reverse Light) Eaton/Manual Trans/:Diagram3
LT/RH A26 - Backup Lights (Single Reverse Light) Eaton/Manual Trans/:Diagram4
LT/RH/LoneStar - X15/A26 - 2 Driver Controlled Locking Differential - FR & RR Axle (DANA):Diagram1
LT/RH/LoneStar - X15/A26 - 2 Driver Controlled Locking Differential - FR & RR Axle (MERITOR):Diagram1
LT/RH/LoneStar - X15/A26 - Back-Up Alarm (Automatic) (W/ Tail Light Bar Assy):Diagram1
LT/RH/LoneStar - X15/A26 - Back-Up Alarm (Automatic) (W/ Tail Light Bar Assy):Diagram2
LT/RH/LoneStar - X15/A26 - Back-Up Alarm (Automatic) TC10:Diagram1
LT/RH/LoneStar - X15/A26 - Back-Up Alarm (Automatic) TC10:Diagram2

LT/RH/LoneStar - X15/A26 - Back-Up Alarm (Automatic) TC10:Diagram3
LT/RH/LoneStar - X15/A26 - Back-Up Alarm (Automatic) TC10:Diagram4
LT/RH/LoneStar - X15/A26 - Driver Controlled Locking Differential - FR & RR Axle (DANA):Diagram1
LT/RH/LoneStar - X15/A26 - Driver Controlled Locking Differential - FR & RR Axle (MERITOR):Diagram1
LT/RH/LoneStar - X15/A26 - Driver Controlled Locking Differential - FR (MERITOR):Diagram1
LT/RH/LoneStar - X15/A26 - Driver Controlled Locking Differential - RR Axle (DANA):Diagram1
LT/RH/LoneStar - X15/A26 - Driver Controlled Locking Differential - RR Axle (DANA):Diagram2
LT/RH/LoneStar - X15/A26 - Driver Controlled Locking Differential - RR Axle (MERITOR):Diagram1
LT/RH/LoneStar - X15/A26 - Driver Controlled Locking Differential - RR Axle (MERITOR):Diagram2
LT/RH/LoneStar - X15/A26 - License Plate Light (Tail Light Single Assy.) Option 1:Diagram1
LT/RH/LoneStar - X15/A26 - License Plate Light (Tail Light Single Assy.) Option 1:Diagram2
LT/RH/LoneStar - X15/A26 - License Plate Light (Tail Light Single Assy.) Option 2:Diagram1-Combination1
LT/RH/LoneStar - X15/A26 - License Plate Light (Tail Light Single Assy.) Option 2:Diagram1-Combination2
LT/RH/LoneStar - X15/A26 - Rear Lights Stop - Dual Assembly:Diagram1
LT/RH/LoneStar - X15/A26 - Rear Lights Stop - Dual Assembly:Diagram2
LT/RH/LoneStar - X15/A26 - Rear Lights Stop - Single Assembly Option 1:Diagram1
LT/RH/LoneStar - X15/A26 - Rear Lights Stop - Single Assembly Option 1:Diagram2
LT/RH/LoneStar - X15/A26 - Rear Lights Stop - Single Assembly Option 2:Diagram1
LT/RH/LoneStar - X15/A26 - Rear Lights Stop - Single Assembly Option 2:Diagram2
LT/RH/LoneStar - X15/A26 - Single Axle Temperature Monitoring:Diagram1
LT/RH/LoneStar - X15/A26 - Single Axle Temperature Monitoring w/Aux Gauge:Diagram1
LT/RH/LoneStar - X15/A26 - Tandem Axle Temperature Monitoring:Diagram1

LT/RH/LoneStar - X15/A26 - Tandem Axle Temperature Monitoring:Diagram2
LT/RH/LoneStar - X15/A26 - Tandem Axle Temperature Monitoring w/ Single SNSR and AUX Gauge:Diagram1
LT/RH/LoneStar - X15/A26 - Tandem Axle Temperature Monitoring w/ Single SNSR and AUX Gauge:Diagram1
LT/RH/LoneStar - X15/A26 - Tandem Axle Temperature Monitoring w/Aux Gauge:Diagram1
LT/RH/LoneStar - X15/A26 - Tandem Axle Temperature Monitoring w/Aux Gauge:Diagram2
LT/RH/LoneStar - X15/A26 - Traction Control (Bendix Controller):Diagram1
LT/RH/LoneStar - X15/A26 - Traction Control (Bendix Controller):Diagram2
LT/RH/LoneStar - X15/A26 - Traction Control (Bendix Controller) Option 2:Diagram1
LT/RH/LoneStar - X15/A26 - Traction Control (Bendix Controller) Option 2:Diagram2
LT/RH/LoneStar - X15/A26 - Traction Control (Wabco Controller):Diagram1
LT/RH/LoneStar - X15/A26 - Traction Control (Wabco Controller):Diagram2
LT/RH/LoneStar - X15/A26 - Traction Control (Wabco Controller):Diagram3
LT/RH/LoneStar X15 - Back-Up Alarm (Manual) and UltraShift +:Diagram1
LT/RH/LoneStar X15 - Back-Up Alarm (Manual) and UltraShift +:Diagram2
LT/RH/LoneStar X15 - Back-Up Alarm (Manual) and UltraShift +:Diagram3
LT/RH/LoneStar X15 - Back-Up Alarm (Manual) and UltraShift +:Diagram4
LT/RH/LoneStar X15 - Back-Up Alarm (Manual) (W/ Tail Light Bar Assy):Diagram1
LT/RH/LoneStar X15 - Back-Up Alarm (Manual) (W/ Tail Light Bar Assy):Diagram2
LT/RH/LoneStar X15 - Backup Light (Single Reverse Light) Endurant:Diagram1
LT/RH/LoneStar X15 - Backup Light (Single Reverse Light) Endurant:Diagram2
LT/RH/LoneStar X15 - Backup Light (Single Reverse Light) W/ Allison TC10:Diagram1
LT/RH/LoneStar X15 - Backup Light (Single Reverse Light) W/ Allison TC10:Diagram2

LT/RH/LoneStar X15 - Backup Light Endurant:Diagram1
LT/RH/LoneStar X15 - Backup Light Endurant:Diagram2
LT/RH/LoneStar X15 - Backup Lights (Single Reverse Light)
Eaton/Manual Trans:Diagram1
LT/RH/LoneStar X15 - Backup Lights (Single Reverse Light)
Eaton/Manual Trans:Diagram2

Mates 9800M

Name	Terminal Part Number	V-Min	Name	Wire Part Number	Wire CSA	Wire Spec	Wire Material description	Wire Color Description	Wire Length	End2 Terminal Part Number	End2 Pin Name	End2 Connector
1	-	-	NA71BA	2643690 R1	1.91	14.0	Std. Wall XLPE Primary Cable	ORANGE	3235.0	-	1	1701F
2	-	-	NA56A	2643690 R1	1.91	14.0	Std. Wall XLPE Primary Cable	ORANGE	3235.0	-	2	1701F
2	-	-	NA10-G	3510362 R1	3.01	12.0	Thin Wall XLPE Primary Cable	WHITE	2335.0	-	5	9800F
3	-	-	NA57A	2643690 R1	1.91	14.0	Std. Wall XLPE Primary Cable	ORANGE	3235.0	-	3	1701F
4	-	-	PB68B	2643688 R1	1.91	14.0	Std. Wall XLPE Primary Cable	BROWN	2725.0	-	X	-
4	-	-	NA68A	2643688 R1	1.91	14.0	Std. Wall XLPE Primary Cable	BROWN	3235.0	-	4	1701F
5	-	-	NA10-G	3510362 R1	3.01	12.0	Thin Wall XLPE Primary Cable	WHITE	2335.0	-	-	-

Name	Terminal Part Number	V-Min	Name	Wire Part Number	Wire CSA	Wire Spec	Wire Material description	Wire Color Description	Wire Length	End2 Terminal Part Number	End2 Pin Name	End2 Connector
5	-	-	NA10-G	3510362 R1	3.01	12.0	Thin Wall XLPE Primary Cable	WHITE	2335.0	-	2	9800F
6	-	-	NR32A	2643676 R1	0.79	18.0	Std. Wall XLPE Primary Cable	TAN	3235.0	-	43	1701F
7	-	-	NR9BF	2643673 R1	0.79	18.0	Std. Wall XLPE Primary Cable	GREY	1400.0	-	-	-
8	-	-	NS32	2643676 R1	0.79	18.0	Std. Wall XLPE Primary Cable	TAN	3235.0	-	44	1701F
9	-	-	NT49	2643673 R1	0.79	18.0	Std. Wall XLPE Primary Cable	GREY	3235.0	-	45	1701F
10	-	-	NT49-G	2643674 R1	0.79	18.0	Std. Wall XLPE Primary Cable	WHITE	2185.0	-	-	-
11	-	-	NU49A	2643673 R1	0.79	18.0	Std. Wall XLPE Primary Cable	GREY	3235.0	-	50	1701F
13	-	-	BB94BA	2643680 R1	1.16	16.0	Std. Wall XLPE Primary Cable	GREY	3235.0	-	23	1701F

Name	Terminal Part Number	V-Min	Name	Wire Part Number	Wire CSA	Wire Spec	Wire Material description	Wire Color Description	Wire Length	End2 Terminal Part Number	End2 Pin Name	End2 Connector
13	-	-	NB94BA	2643680 R1	1.16	16.0	Std. Wall XLPE Primary Cable	GREY	3235.0	-	23	1701F
14	-	-	BB94BB	2643680 R1	1.16	16.0	Std. Wall XLPE Primary Cable	GREY	3235.0	-	24	1701F
15	-	-	BB94BC	2643680 R1	1.16	16.0	Std. Wall XLPE Primary Cable	GREY	3235.0	-	25	1701F
15	-	-	NB94BC	2643680 R1	1.16	16.0	Std. Wall XLPE Primary Cable	GREY	3235.0	-	25	1701F
16	-	-	BB94BD	2643680 R1	1.16	16.0	Std. Wall XLPE Primary Cable	GREY	3235.0	-	17	1701F
16	-	-	NB94BD	2643680 R1	1.16	16.0	Std. Wall XLPE Primary Cable	GREY	3235.0	-	17	1701F
17	-	-	BB94BE	2643680 R1	1.16	16.0	Std. Wall XLPE Primary Cable	GREY	3235.0	-	16	1701F
17	-	-	NB94BE	2643680 R1	1.16	16.0	Std. Wall XLPE Primary Cable	GREY	3235.0	-	16	1701F

Name	Terminal Part Number	V-Min	Name	Wire Part Number	Wire CSA	Wire Spec	Wire Material description	Wire Color Description	Wire Length	End2 Terminal Part Number	End2 Pin Name	End2 Connector
18	-	-	BB94BF	2643680 R1	1.16	16.0	Std. Wall XLPE Primary Cable	GREY	3235.0	-	19	1701F
18	-	-	NB94BF	2643680 R1	1.16	16.0	Std. Wall XLPE Primary Cable	GREY	3235.0	-	19	1701F
19	-	-	BB94BH	2643680 R1	1.16	16.0	Std. Wall XLPE Primary Cable	GREY	3235.0	-	18	1701F
19	-	-	NB94BH	2643680 R1	1.16	16.0	Std. Wall XLPE Primary Cable	GREY	3235.0	-	18	1701F
20	-	-	BB94BJ	2643782 R1	1.91	14.0	Std. Wall XLPE Primary Cable	GREY	3235.0	-	21	1701F
20	-	-	NB94BJ	2643782 R1	1.91	14.0	Std. Wall XLPE Primary Cable	GREY	3235.0	-	21	1701F
21	-	-	BB94BK	2643680 R1	1.16	16.0	Std. Wall XLPE Primary Cable	GREY	3235.0	-	22	1701F
22	-	-	BB94BL	2643782 R1	1.91	14.0	Std. Wall XLPE Primary Cable	GREY	3235.0	-	20	1701F

Name	Terminal Part Number	V-Min	Name	Wire Part Number	Wire CSA	Wire Spec	Wire Material description	Wire Color Description	Wire Length	End2 Terminal Part Number	End2 Pin Name	End2 Connect or
22	-	-	NB94BL	2643782 R1	1.91	14.0	Std. Wall XLPE Primary Cable	GREY	3235.0	-	20	1701F
23	-	-	NC94BM	2643680 R1	1.16	16.0	Std. Wall XLPE Primary Cable	GREY	3235.0	-	14	1701F
24	-	-	BC94BN	2643680 R1	1.16	16.0	Std. Wall XLPE Primary Cable	GREY	3235.0	-	15	1701F

Connector Name	9800M
Part Number	3558022C1
Short Description	CONNECTION TO CENTER HARNESS
Instances	LoneStar - X15 - Antilock Brake System (ABS) - Wabco 4 Channel Implementation:Diagram1 LoneStar - X15 - Antilock Brake System (ABS) - Wabco 4 Channel Implementation:Diagram2 LoneStar - X15 - Antilock Brake System (ABS) - Wabco 4 Channel Implementation:Diagram3 LoneStar - X15 - Antilock Brake System (ABS) - Wabco 4 Channel Implementation:Diagram4 LoneStar - X15 - Antilock Brake System (ABS) [Bendix 6 Channel Implementation]:Diagram1 LoneStar - X15 - Antilock Brake System (ABS) [Bendix 6 Channel Implementation]:Diagram2 LoneStar - X15 - Antilock Brake System (ABS) [Bendix 6 Channel Implementation]:Diagram3 LoneStar - X15 - Antilock Brake System (ABS)-BENDIX 4 Channel Implemenation:Diagram1 LoneStar - X15 - Antilock Brake System (ABS)-BENDIX 4 Channel Implemenation:Diagram2 LoneStar - X15 - Antilock Brake System (ABS)-BENDIX 4 Channel Implemenation:Diagram3 LoneStar - X15 - Antilock Brake System (ABS)-BENDIX 4 Channel Implemenation:Diagram4 LoneStar - X15 - Antilock Brake System - Wabco ABS 6 Channel Implementation:Diagram1 LoneStar - X15 - Antilock Brake System - Wabco ABS 6 Channel Implementation:Diagram2 LoneStar - X15 - Antilock Brake System - Wabco ABS 6 Channel Implementation:Diagram3 LT/RH X15 - Backup Light (Dual Reverse Light) Allison-TC10:Diagram1 LT/RH X15 - Backup Light (Dual Reverse Light) Allison-TC10:Diagram2 LT/RH X15 - Backup Light (Dual Reverse LT) Procosion/ Endurant:Diagram1 LT/RH X15 - Backup Light (Dual Reverse LT) Procosion/ Endurant:Diagram2 LT/RH X15 - Backup Light (Reverse Light) Allison TC10:Diagram1 LT/RH X15 - Backup Light (Reverse Light) Allison TC10:Diagram2

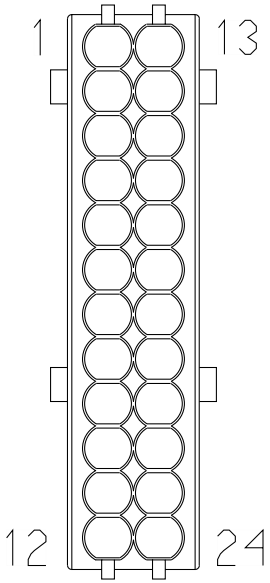

LT/RH X15 - Backup Light (Single Reverse Light) Allison TC10:Diagram1
LT/RH X15 - Backup Light (Single Reverse Light) Allison TC10:Diagram2
LT/RH X15 - Backup Light (Single Reverse Light) Endurant:Diagram1
LT/RH X15 - Backup Light (Single Reverse Light) Endurant:Diagram2
LT/RH X15 - Backup Lights (Dual Reverse Light) Eaton/Manual Trans:Diagram1
LT/RH X15 - Backup Lights (Dual Reverse Light) Eaton/Manual Trans:Diagram2
LT/RH X15 - Backup Lights (Reverse Light) Eaton/Manual Trans:Diagram1
LT/RH X15 - Backup Lights (Reverse Light) Eaton/Manual Trans:Diagram2
LT/RH X15 - Backup Lights (Reverse Lights) Eaton/Manual Trans:Diagram1
LT/RH X15 - Backup Lights (Reverse Lights) Eaton/Manual Trans:Diagram2
LT/RH X15 - Backup Lights (Single Reverse Light) Eaton/Manual Trans:Diagram1
LT/RH X15 - Backup Lights (Single Reverse Light) Eaton/Manual Trans:Diagram2
LT/RH - X15/A26 - Antilock Brake System (ABS) - Wabco 4 Channel Implementation:Diagram1
LT/RH - X15/A26 - Antilock Brake System (ABS) - Wabco 4 Channel Implementation:Diagram2
LT/RH - X15/A26 - Antilock Brake System (ABS) - Wabco 4 Channel Implementation:Diagram3
LT/RH - X15/A26 - Antilock Brake System (ABS) - Wabco 4 Channel Implementation:Diagram4
LT/RH - X15/A26 - Antilock Brake System (ABS) BENDIX 4 Channel Implemenation:Diagram1
LT/RH - X15/A26 - Antilock Brake System (ABS) BENDIX 4 Channel Implemenation:Diagram2
LT/RH - X15/A26 - Antilock Brake System (ABS) BENDIX 4 Channel Implemenation:Diagram3
LT/RH - X15/A26 - Antilock Brake System (ABS) BENDIX 4 Channel Implemenation:Diagram4
LT/RH - X15/A26 - Antilock Brake System (ABS) Bendix 6 Channel Implementation:Diagram1
LT/RH - X15/A26 - Antilock Brake System (ABS) Bendix 6 Channel Implementation:Diagram2

LT/RH - X15/A26 - Antilock Brake System (ABS) Bendix 6 Channel Implementation:Diagram3
LT/RH - X15/A26 - Antilock Brake System - Wabco ABS 6 Channel Implementation:Diagram1
LT/RH - X15/A26 - Antilock Brake System - Wabco ABS 6 Channel Implementation:Diagram2
LT/RH - X15/A26 - Antilock Brake System - Wabco ABS 6 Channel Implementation:Diagram3
LT/RH - X15/A26 - License Plate Light (Dual LED Lamp Tail Light) Option 1:Diagram1
LT/RH - X15/A26 - License Plate Light (Dual LED Lamp Tail Light) Option 1:Diagram2
LT/RH - X15/A26 - License Plate Light (Dual LED Lamp Tail Light) Option 2:Diagram1
LT/RH - X15/A26 - License Plate Light (Dual LED Lamp Tail Light) Option 2:Diagram2
LT/RH - X15/A26 - License Plate Light (Tail Light Single Assy.) Option 1:Diagram1
LT/RH - X15/A26 - License Plate Light (Tail Light Single Assy.) Option 1:Diagram2
LT/RH - X15/A26 - License Plate Light (Tail Light Single Assy.)Option 2:Diagram1
LT/RH - X15/A26 - License Plate Light (Tail Light Single Assy.)Option 2:Diagram2
LT/RH A26 - Back-Up Alarm (Manual) and UltraShift+:Diagram1
LT/RH A26 - Back-Up Alarm (Manual) and UltraShift+:Diagram2
LT/RH A26 - Back-Up Alarm (Manual) and UltraShift+:Diagram3
LT/RH A26 - Back-Up Alarm (Manual) and UltraShift+:Diagram4
LT/RH A26 - Back-Up Alarm (Manual) and UltraShift+:Diagram5
LT/RH A26 - Back-Up Alarm (Manual) and UltraShift+:Diagram6
LT/RH A26 - Back-Up Alarm (Manual) and UltraShift+:Diagram7
LT/RH A26 - Back-Up Alarm (Manual) and UltraShift+:Diagram8
LT/RH A26 - Back-Up Alarm (Manual) (W/ Tail Light Bar Assy):Diagram1
LT/RH A26 - Back-Up Alarm (Manual) (W/ Tail Light Bar Assy):Diagram2
LT/RH A26 - Back-Up Alarm (Manual) (W/ Tail Light Bar Assy):Diagram3
LT/RH A26 - Back-Up Alarm (Manual) (W/ Tail Light Bar Assy):Diagram4
LT/RH A26 - Backup Light (Dual Reverse Light):Diagram1
LT/RH A26 - Backup Light (Dual Reverse Light):Diagram2
LT/RH A26 - Backup Light (Dual Reverse Light) Allison-3K:Diagram1

LT/RH A26 - Backup Light (Dual Reverse Light)
Allison-3K:Diagram2
LT/RH A26 - Backup Light (Dual Reverse Light) Allison-
TC10:Diagram1
LT/RH A26 - Backup Light (Dual Reverse Light) Allison-
TC10:Diagram2
LT/RH A26 - Backup Light (Reverse Light) Allison
TC10:Diagram1
LT/RH A26 - Backup Light (Reverse Light) Allison
TC10:Diagram2
LT/RH A26 - Backup Light (Reverse Light) Allison-3K:Diagram1
LT/RH A26 - Backup Light (Reverse Light) Allison-3K:Diagram2
LT/RH A26 - Backup Light (Single Reverse Light):Diagram1
LT/RH A26 - Backup Light (Single Reverse Light):Diagram2
LT/RH A26 - Backup Light (Single Reverse Light) Allison
3K:Diagram1
LT/RH A26 - Backup Light (Single Reverse Light) Allison
3K:Diagram2
LT/RH A26 - Backup Light (Single Reverse Light) Allison
TC10:Diagram1
LT/RH A26 - Backup Light (Single Reverse Light) Allison
TC10:Diagram2
LT/RH A26 - Backup Light (Single Reverse Light)
Endurant:Diagram1
LT/RH A26 - Backup Light (Single Reverse Light)
Endurant:Diagram2
LT/RH A26 - Backup Light (Single Reverse Light) W/Allison
3K:Diagram1
LT/RH A26 - Backup Light (Single Reverse Light) W/Allison
3K:Diagram2
LT/RH A26 - Backup Light (Single Reverse Light) W/Allison
TC10:Diagram1
LT/RH A26 - Backup Light (Single Reverse Light) W/Allison
TC10:Diagram2
LT/RH A26 - Backup Light Endurant Trans:Diagram1
LT/RH A26 - Backup Light Endurant Trans:Diagram2
LT/RH A26 - Backup Lights (Dual Reverse Light) Eaton/Manual
Trans:Diagram1
LT/RH A26 - Backup Lights (Dual Reverse Light) Eaton/Manual
Trans:Diagram2
LT/RH A26 - Backup Lights (Dual Reverse Light) Eaton/Manual
Trans:Diagram3
LT/RH A26 - Backup Lights (Dual Reverse Light) Eaton/Manual
Trans:Diagram4

LT/RH A26 - Backup Lights (Reverse Light) Eaton/Manual Trans:Diagram1
LT/RH A26 - Backup Lights (Reverse Light) Eaton/Manual Trans:Diagram2
LT/RH A26 - Backup Lights (Reverse Light) Eaton/Manual Trans:Diagram3
LT/RH A26 - Backup Lights (Reverse Light) Eaton/Manual Trans:Diagram4
LT/RH A26 - Backup Lights (Reverse Lights) Eaton/Manual Trans:Diagram1
LT/RH A26 - Backup Lights (Reverse Lights) Eaton/Manual Trans:Diagram2
LT/RH A26 - Backup Lights (Reverse Lights) Eaton/Manual Trans:Diagram3
LT/RH A26 - Backup Lights (Reverse Lights) Eaton/Manual Trans:Diagram4
LT/RH A26 - Backup Lights (Single Reverse Light) Eaton/Manual Trans:Diagram1
LT/RH A26 - Backup Lights (Single Reverse Light) Eaton/Manual Trans:Diagram2
LT/RH A26 - Backup Lights (Single Reverse Light) Eaton/Manual Trans:Diagram3
LT/RH A26 - Backup Lights (Single Reverse Light) Eaton/Manual Trans:Diagram4
LT/RH A26 - Backup Lights (Single Reverse Light) Eaton/Manual Trans/:Diagram1
LT/RH A26 - Backup Lights (Single Reverse Light) Eaton/Manual Trans/:Diagram2
LT/RH A26 - Backup Lights (Single Reverse Light) Eaton/Manual Trans/:Diagram3
LT/RH A26 - Backup Lights (Single Reverse Light) Eaton/Manual Trans/:Diagram4
LT/RH/LoneStar - X15/A26 - 2 Driver Controlled Locking Differential - FR & RR Axle (DANA):Diagram1
LT/RH/LoneStar - X15/A26 - 2 Driver Controlled Locking Differential - FR & RR Axle (MERITOR):Diagram1
LT/RH/LoneStar - X15/A26 - Back-Up Alarm (Automatic) (W/ Tail Light Bar Assy):Diagram1
LT/RH/LoneStar - X15/A26 - Back-Up Alarm (Automatic) (W/ Tail Light Bar Assy):Diagram2
LT/RH/LoneStar - X15/A26 - Back-Up Alarm (Automatic) TC10:Diagram1
LT/RH/LoneStar - X15/A26 - Back-Up Alarm (Automatic) TC10:Diagram2

LT/RH/LoneStar - X15/A26 - Back-Up Alarm (Automatic) TC10:Diagram3
LT/RH/LoneStar - X15/A26 - Back-Up Alarm (Automatic) TC10:Diagram4
LT/RH/LoneStar - X15/A26 - Driver Controlled Locking Differential - FR & RR Axle (DANA):Diagram1
LT/RH/LoneStar - X15/A26 - Driver Controlled Locking Differential - FR & RR Axle (MERITOR):Diagram1
LT/RH/LoneStar - X15/A26 - Driver Controlled Locking Differential - FR (MERITOR):Diagram1
LT/RH/LoneStar - X15/A26 - Driver Controlled Locking Differential - RR Axle (DANA):Diagram1
LT/RH/LoneStar - X15/A26 - Driver Controlled Locking Differential - RR Axle (DANA):Diagram2
LT/RH/LoneStar - X15/A26 - Driver Controlled Locking Differential - RR Axle (MERITOR):Diagram1
LT/RH/LoneStar - X15/A26 - Driver Controlled Locking Differential - RR Axle (MERITOR):Diagram2
LT/RH/LoneStar - X15/A26 - License Plate Light (Tail Light Single Assy.) Option 1:Diagram1
LT/RH/LoneStar - X15/A26 - License Plate Light (Tail Light Single Assy.) Option 1:Diagram2
LT/RH/LoneStar - X15/A26 - License Plate Light (Tail Light Single Assy.) Option 2:Diagram1-Combination1
LT/RH/LoneStar - X15/A26 - License Plate Light (Tail Light Single Assy.) Option 2:Diagram1-Combination2
LT/RH/LoneStar - X15/A26 - Rear Lights Stop - Dual Assembly:Diagram1
LT/RH/LoneStar - X15/A26 - Rear Lights Stop - Dual Assembly:Diagram2
LT/RH/LoneStar - X15/A26 - Rear Lights Stop - Single Assembly Option 1:Diagram1
LT/RH/LoneStar - X15/A26 - Rear Lights Stop - Single Assembly Option 1:Diagram2
LT/RH/LoneStar - X15/A26 - Rear Lights Stop - Single Assembly Option 2:Diagram1
LT/RH/LoneStar - X15/A26 - Rear Lights Stop - Single Assembly Option 2:Diagram2
LT/RH/LoneStar - X15/A26 - Single Axle Temperature Monitoring:Diagram1
LT/RH/LoneStar - X15/A26 - Single Axle Temperature Monitoring w/Aux Gauge:Diagram1
LT/RH/LoneStar - X15/A26 - Tandem Axle Temperature Monitoring:Diagram1

LT/RH/LoneStar - X15/A26 - Tandem Axle Temperature Monitoring:Diagram2
LT/RH/LoneStar - X15/A26 - Tandem Axle Temperature Monitoring w/ Single SNSR and AUX Gauge:Diagram1
LT/RH/LoneStar - X15/A26 - Tandem Axle Temperature Monitoring w/ Single SNSR and AUX Gauge:Diagram1
LT/RH/LoneStar - X15/A26 - Tandem Axle Temperature Monitoring w/Aux Gauge:Diagram1
LT/RH/LoneStar - X15/A26 - Tandem Axle Temperature Monitoring w/Aux Gauge:Diagram2
LT/RH/LoneStar - X15/A26 - Traction Control (Bendix Controller):Diagram1
LT/RH/LoneStar - X15/A26 - Traction Control (Bendix Controller):Diagram2
LT/RH/LoneStar - X15/A26 - Traction Control (Bendix Controller) Option 2:Diagram1
LT/RH/LoneStar - X15/A26 - Traction Control (Bendix Controller) Option 2:Diagram2
LT/RH/LoneStar - X15/A26 - Traction Control (Wabco Controller):Diagram1
LT/RH/LoneStar - X15/A26 - Traction Control (Wabco Controller):Diagram2
LT/RH/LoneStar - X15/A26 - Traction Control (Wabco Controller):Diagram3
LT/RH/LoneStar X15 - Back-Up Alarm (Manual) and UltraShift +:Diagram1
LT/RH/LoneStar X15 - Back-Up Alarm (Manual) and UltraShift +:Diagram2
LT/RH/LoneStar X15 - Back-Up Alarm (Manual) and UltraShift +:Diagram3
LT/RH/LoneStar X15 - Back-Up Alarm (Manual) and UltraShift +:Diagram4
LT/RH/LoneStar X15 - Back-Up Alarm (Manual) (W/ Tail Light Bar Assy):Diagram1
LT/RH/LoneStar X15 - Back-Up Alarm (Manual) (W/ Tail Light Bar Assy):Diagram2
LT/RH/LoneStar X15 - Backup Light (Single Reverse Light) Endurant:Diagram1
LT/RH/LoneStar X15 - Backup Light (Single Reverse Light) Endurant:Diagram2
LT/RH/LoneStar X15 - Backup Light (Single Reverse Light) W/ Allison TC10:Diagram1
LT/RH/LoneStar X15 - Backup Light (Single Reverse Light) W/ Allison TC10:Diagram2

LT/RH/LoneStar X15 - Backup Light Endurant:Diagram1
LT/RH/LoneStar X15 - Backup Light Endurant:Diagram2
LT/RH/LoneStar X15 - Backup Lights (Single Reverse Light)
Eaton/Manual Trans:Diagram1
LT/RH/LoneStar X15 - Backup Lights (Single Reverse Light)
Eaton/Manual Trans:Diagram2

Mates 9800F

Name	Terminal Part Number	V-Min	Name	Wire Part Number	Wire CSA	Wire Spec	Wire Material description	Wire Color Description	Wire Length	End2 Terminal Part Number	End2 Pin Name	End2 Connector
1	-	-	VF71BA	3510320 R1	3.01	12.0	Thin Wall XLPE Primary Cable	ORANGE	3170.0	-	X	-
1	-	-	VH71BA	3510320 R1	3.01	12.0	Thin Wall XLPE Primary Cable	ORANGE	3895.0	-	X	-
1	-	-	RA71BA	3510320 R1	3.01	12.0	Thin Wall XLPE Primary Cable	ORANGE	3120.0	-	1	9303
1	-	-	SA71BA	3510320 R1	3.01	12.0	Thin Wall XLPE Primary Cable	ORANGE	3820.0	-	1	9303
1	-	-	RA71BA	3510320 R1	3.01	12.0	Thin Wall XLPE Primary Cable	ORANGE	3120.0	-	1	R01-9303
1	-	-	SA71BA	3510320 R1	3.01	12.0	Thin Wall XLPE Primary Cable	ORANGE	3820.0	-	1	R01-9303A
1	-	-	VJ71BA	3510320 R1	3.01	12.0	Thin Wall XLPE Primary Cable	ORANGE	3870.0	-	X	-

Name	Terminal Part Number	V-Min	Name	Wire Part Number	Wire CSA	Wire Spec	Wire Material description	Wire Color Description	Wire Length	End2 Terminal Part Number	End2 Pin Name	End2 Connector
1	-	-	VK71BA	3510320 R1	3.01	12.0	Thin Wall XLPE Primary Cable	ORANGE	3170.0	-	X	-
1	-	-	SA71BA	3510320 R1	3.01	12.0	Thin Wall XLPE Primary Cable	ORANGE	3820.0	-	1	R01-9303A-RL04 /05/06
1	-	-	RA71BA	3510320 R1	3.01	12.0	Thin Wall XLPE Primary Cable	ORANGE	3120.0	-	1	R01-9303-RL04/ 05/06
2	-	-	RA56A	2643690 R1	1.91	14.0	Std. Wall XLPE Primary Cable	ORANGE	3120.0	-	2	R01-9303
2	-	-	SA56A	2643690 R1	1.91	14.0	Std. Wall XLPE Primary Cable	ORANGE	3820.0	-	2	R01-9303A
2	-	-	VE56A	2643690 R1	1.91	14.0	Std. Wall XLPE Primary Cable	ORANGE	3520.0	-	2	R01-9303M
2	-	-	VG56A	2643690 R1	1.91	14.0	Std. Wall XLPE Primary Cable	ORANGE	4220.0	-	2	R01-9303K
2	-	-	VL56AA	2643690 R1	1.91	14.0	Std. Wall XLPE Primary Cable	ORANGE	4220.0	-	2	R01-9303K

Name	Terminal Part Number	V-Min	Name	Wire Part Number	Wire CSA	Wire Spec	Wire Material description	Wire Color Description	Wire Length	End2 Terminal Part Number	End2 Pin Name	End2 Connector
2	-	-	SA10-G	3510362 R1	3.01	12.0	Thin Wall XLPE Primary Cable	WHITE	3820.0	-	5	R01-9303A
3	-	-	RA57A	2643690 R1	1.91	14.0	Std. Wall XLPE Primary Cable	ORANGE	3120.0	-	3	R01-9303
3	-	-	SA57A	2643690 R1	1.91	14.0	Std. Wall XLPE Primary Cable	ORANGE	3820.0	-	3	R01-9303A
3	-	-	VE57A	2643690 R1	1.91	14.0	Std. Wall XLPE Primary Cable	ORANGE	3870.0	-	3	R01-9303N
3	-	-	VG57A	2643690 R1	1.91	14.0	Std. Wall XLPE Primary Cable	ORANGE	4570.0	-	3	R01-9303L
3	-	-	VL57AA	2643690 R1	1.91	14.0	Std. Wall XLPE Primary Cable	ORANGE	4570.0	-	3	R01-9303L
4	-	-	VE68A	2643688 R1	1.91	14.0	Std. Wall XLPE Primary Cable	BROWN	3220.0	-	X	-
4	-	-	VL68AA	2643688 R1	1.91	14.0	Std. Wall XLPE Primary Cable	BROWN	3920.0	-	X	-

Name	Terminal Part Number	V-Min	Name	Wire Part Number	Wire CSA	Wire Spec	Wire Material description	Wire Color Description	Wire Length	End2 Terminal Part Number	End2 Pin Name	End2 Connector
4	-	-	VG68A	2643688 R1	1.91	14.0	Std. Wall XLPE Primary Cable	BROWN	3920.0	-	X	-
4	-	-	RA68A	2643688 R1	1.91	14.0	Std. Wall XLPE Primary Cable	BROWN	3120.0	-	4	R01-9303-RL04/05/06
4	-	-	SA68A	2643688 R1	1.91	14.0	Std. Wall XLPE Primary Cable	BROWN	3820.0	-	4	R01-9303A-RL04 /05/06
5	-	-	VH10-G	3510362 R1	3.01	12.0	Thin Wall XLPE Primary Cable	WHITE	3970.0	-	X	-
5	-	-	VF10-G	3510362 R1	3.01	12.0	Thin Wall XLPE Primary Cable	WHITE	3270.0	-	X	-
5	-	-	RA10-G	3510362 R1	3.01	12.0	Thin Wall XLPE Primary Cable	WHITE	3120.0	-	5	9303
5	-	-	SA10-G	3510362 R1	3.01	12.0	Thin Wall XLPE Primary Cable	WHITE	3820.0	-	5	9303
5	-	-	RA10-G	3510362 R1	3.01	12.0	Thin Wall XLPE Primary Cable	WHITE	3120.0	-	5	R01-9303

Name	Terminal Part Number	V-Min	Name	Wire Part Number	Wire CSA	Wire Spec	Wire Material description	Wire Color Description	Wire Length	End2 Terminal Part Number	End2 Pin Name	End2 Connector
5	-	-	SA10-G	3510362 R1	3.01	12.0	Thin Wall XLPE Primary Cable	WHITE	3820.0	-	5	R01-9303A
5	-	-	VK10-G	3510362 R1	3.01	12.0	Thin Wall XLPE Primary Cable	WHITE	3270.0	-	X	-
5	-	-	VJ10-G	3510362 R1	3.01	12.0	Thin Wall XLPE Primary Cable	WHITE	3970.0	-	X	-
5	-	-	RA10-G	3510362 R1	3.01	12.0	Thin Wall XLPE Primary Cable	WHITE	3120.0	-	5	R01-9303-RL04/05/06
5	-	-	SA10-G	3510362 R1	3.01	12.0	Thin Wall XLPE Primary Cable	WHITE	3820.0	-	5	R01-9303A-RL04 /05/06
6	-	-	TA32	2643676 R1	0.79	18.0	Std. Wall XLPE Primary Cable	TAN	2860.0	-	1	R01-9811
6	-	-	UC32A	2643676 R1	0.79	18.0	Std. Wall XLPE Primary Cable	TAN	3535.0	-	1	R01-9912
6	-	-	RH32A	2643676 R1	0.79	18.0	Std. Wall XLPE Primary Cable	TAN	3385.0	-	1	R01-9812

Name	Terminal Part Number	V-Min	Name	Wire Part Number	Wire CSA	Wire Spec	Wire Material description	Wire Color Description	Wire Length	End2 Terminal Part Number	End2 Pin Name	End2 Connector
6	-	-	RJ32A	2643676 R1	0.79	18.0	Std. Wall XLPE Primary Cable	TAN	3385.0	-	1	R01-9813
7	-	-	TA9C	2643673 R1	0.79	18.0	Std. Wall XLPE Primary Cable	GREY	2860.0	-	2	R01-9811
7	-	-	RH9A	2643673 R1	0.79	18.0	Std. Wall XLPE Primary Cable	GREY	910.0	-	X	-
7	-	-	UC9A	2643673 R1	0.79	18.0	Std. Wall XLPE Primary Cable	GREY	910.0	-	X	-
7	-	-	RJ9	2643673 R1	0.79	18.0	Std. Wall XLPE Primary Cable	GREY	3385.0	-	2	R01-9813
8	-	-	UC32	2643676 R1	0.79	18.0	Std. Wall XLPE Primary Cable	TAN	1670.0	-	1	R01-9911
8	-	-	RH32	2643676 R1	0.79	18.0	Std. Wall XLPE Primary Cable	TAN	2860.0	-	1	R01-9811
9	-	-	RM49	2643673 R1	0.79	18.0	Std. Wall XLPE Primary Cable	GREY	3075.0	-	A	R01-9815

Name	Terminal Part Number	V-Min	Name	Wire Part Number	Wire CSA	Wire Spec	Wire Material description	Wire Color Description	Wire Length	End2 Terminal Part Number	End2 Pin Name	End2 Connector
9	-	-	RL49	2643673 R1	0.79	18.0	Std. Wall XLPE Primary Cable	GREY	2760.0	-	A	R01-9816
9	-	-	UW49	2643673 R1	0.79	18.0	Std. Wall XLPE Primary Cable	GREY	3425.0	-	A	R01-9533
9	-	-	UV49	2643673 R1	0.79	18.0	Std. Wall XLPE Primary Cable	GREY	2860.0	-	A	R01-9531
10	-	-	RN49-GC	2643674 R1	0.79	18.0	Std. Wall XLPE Primary Cable	WHITE	475.0	-	X	-
10	-	-	RP49-G	2643674 R1	0.79	18.0	Std. Wall XLPE Primary Cable	WHITE	3075.0	-	B	R01-9815
10	-	-	RL49-G	2643674 R1	0.79	18.0	Std. Wall XLPE Primary Cable	WHITE	2760.0	-	B	R01-9816
10	-	-	UY49-GC	2643674 R1	0.79	18.0	Std. Wall XLPE Primary Cable	WHITE	515.0	-	X	-
10	-	-	UV49-G	2643674 R1	0.79	18.0	Std. Wall XLPE Primary Cable	WHITE	2860.0	-	B	R01-9531

Name	Terminal Part Number	V-Min	Name	Wire Part Number	Wire CSA	Wire Spec	Wire Material description	Wire Color Description	Wire Length	End2 Terminal Part Number	End2 Pin Name	End2 Connector
10	-	-	UX49-G	2643674 R1	0.79	18.0	Std. Wall XLPE Primary Cable	WHITE	3425.0	-	B	R01-9533
10	-	-	TB49-G	2643674 R1	0.79	18.0	Std. Wall XLPE Primary Cable	WHITE	2330.0	-	B	R01-9530
11	-	-	RN49A	2643673 R1	0.79	18.0	Std. Wall XLPE Primary Cable	GREY	2130.0	-	A	R01-9814
11	-	-	UY49A	2643673 R1	0.79	18.0	Std. Wall XLPE Primary Cable	GREY	2330.0	-	A	R01-9530
13	-	-	VT94MA	3510311 R1	0.79	18.0	Thin Wall XLPE Primary Cable	GREY	2420.0	-	1	R01-9507B
13	-	-	SS94MA	3510311 R1	0.79	18.0	Thin Wall XLPE Primary Cable	GREY	2420.0	-	1	R01-9507B
13	-	-	SR94MA	3510311 R1	0.79	18.0	Thin Wall XLPE Primary Cable	GREY	1585.0	-	1	R01-9507A
13	-	-	ST94MA	3510311 R1	0.79	18.0	Thin Wall XLPE Primary Cable	GREY	1510.0	-	1	R01-9507

Name	Terminal Part Number	V-Min	Name	Wire Part Number	Wire CSA	Wire Spec	Wire Material description	Wire Color Description	Wire Length	End2 Terminal Part Number	End2 Pin Name	End2 Connector
13	-	-	RB94BA	2643680 R1	1.16	16.0	Std. Wall XLPE Primary Cable	GREY	1510.0	-	A	R01-9502 DA
13	-	-	SB94BA	2643680 R1	1.16	16.0	Std. Wall XLPE Primary Cable	GREY	1585.0	-	A	R01-950 2A DA
13	-	-	SZ94BA	2643680 R1	1.16	16.0	Std. Wall XLPE Primary Cable	GREY	2850.0	-	A	R01-950 2B DA/AA
13	-	-	UP94BA	2643680 R1	1.16	16.0	Std. Wall XLPE Primary Cable	GREY	1585.0	-	A	R01-950 2A DA
13	-	-	US94MA	3510311 R1	0.79	18.0	Thin Wall XLPE Primary Cable	GREY	1585.0	-	1	R01-950 7A
13	-	-	VB94MA	3510311 R1	0.79	18.0	Thin Wall XLPE Primary Cable	GREY	1910.0	-	1	R01-9528
13	-	-	UJ94MA	3510311 R1	0.79	18.0	Thin Wall XLPE Primary Cable	GREY	1100.0	-	1	R01-9519
13	-	-	SD94BA	2643680 R1	1.16	16.0	Std. Wall XLPE Primary Cable	GREY	2850.0	-	A	R01-950 2B DA/AA

Name	Terminal Part Number	V-Min	Name	Wire Part Number	Wire CSA	Wire Spec	Wire Material description	Wire Color Description	Wire Length	End2 Terminal Part Number	End2 Pin Name	End2 Connector
13	-	-	TF94BA	2643680 R1	1.16	16.0	Std. Wall XLPE Primary Cable	GREY	1100.0	-	A	R01-9513 DA
13	-	-	VA94BA	2643680 R1	1.16	16.0	Std. Wall XLPE Primary Cable	GREY	1910.0	-	A	R01-9520 DA
14	-	-	SR94MB	3510311 R1	0.79	18.0	Thin Wall XLPE Primary Cable	GREY	1585.0	-	2	R01-950 7A
14	-	-	SS94MB	3510311 R1	0.79	18.0	Thin Wall XLPE Primary Cable	GREY	2420.0	-	2	R01-950 7B
14	-	-	ST94MB	3510311 R1	0.79	18.0	Thin Wall XLPE Primary Cable	GREY	1510.0	-	2	R01-9507
14	-	-	VT94MB	3510311 R1	0.79	18.0	Thin Wall XLPE Primary Cable	GREY	2420.0	-	2	R01-950 7B
14	-	-	UP94BB	2643680 R1	1.16	16.0	Std. Wall XLPE Primary Cable	GREY	1585.0	-	B	R01-950 2A DA
14	-	-	SD94BB	2643680 R1	1.16	16.0	Std. Wall XLPE Primary Cable	GREY	2850.0	-	B	R01-950 2B DA/AA

Name	Terminal Part Number	V-Min	Name	Wire Part Number	Wire CSA	Wire Spec	Wire Material description	Wire Color Description	Wire Length	End2 Terminal Part Number	End2 Pin Name	End2 Connector
14	-	-	SB94BB	2643680 R1	1.16	16.0	Std. Wall XLPE Primary Cable	GREY	1585.0	-	B	R01-950 2A DA
14	-	-	RB94BB	2643680 R1	1.16	16.0	Std. Wall XLPE Primary Cable	GREY	1510.0	-	B	R01-9502 DA
14	-	-	US94MB	3510311 R1	0.79	18.0	Thin Wall XLPE Primary Cable	GREY	1585.0	-	2	R01-950 7A
14	-	-	VB94MB	3510311 R1	0.79	18.0	Thin Wall XLPE Primary Cable	GREY	1910.0	-	2	R01-9528
14	-	-	UJ94MB	3510311 R1	0.79	18.0	Thin Wall XLPE Primary Cable	GREY	1100.0	-	2	R01-9519
14	-	-	SZ94BB	2643680 R1	1.16	16.0	Std. Wall XLPE Primary Cable	GREY	2850.0	-	B	R01-950 2B DA/AA
14	-	-	TF94BB	2643680 R1	1.16	16.0	Std. Wall XLPE Primary Cable	GREY	1100.0	-	B	R01-9513 DA
14	-	-	VA94BB	2643680 R1	1.16	16.0	Std. Wall XLPE Primary Cable	GREY	1910.0	-	B	R01-9520 DA

Name	Terminal Part Number	V-Min	Name	Wire Part Number	Wire CSA	Wire Spec	Wire Material description	Wire Color Description	Wire Length	End2 Terminal Part Number	End2 Pin Name	End2 Connector
15	-	-	SR94MC	3510311 R1	0.79	18.0	Thin Wall XLPE Primary Cable	GREY	1585.0	-	3	R01-9507A
15	-	-	ST94MC	3510311 R1	0.79	18.0	Thin Wall XLPE Primary Cable	GREY	1510.0	-	3	R01-9507
15	-	-	SS94MC	3510311 R1	0.79	18.0	Thin Wall XLPE Primary Cable	GREY	2420.0	-	3	R01-9507B
15	-	-	VT94MC	3510311 R1	0.79	18.0	Thin Wall XLPE Primary Cable	GREY	2420.0	-	3	R01-9507B
15	-	-	RB94BC	2643680 R1	1.16	16.0	Std. Wall XLPE Primary Cable	GREY	1510.0	-	C	R01-9502DA
15	-	-	SB94BC	2643680 R1	1.16	16.0	Std. Wall XLPE Primary Cable	GREY	1585.0	-	C	R01-952A DA
15	-	-	SZ94BC	2643680 R1	1.16	16.0	Std. Wall XLPE Primary Cable	GREY	2850.0	-	C	R01-952B DA/AA
15	-	-	UP94BC	2643680 R1	1.16	16.0	Std. Wall XLPE Primary Cable	GREY	1585.0	-	C	R01-952A DA

Name	Terminal Part Number	V-Min	Name	Wire Part Number	Wire CSA	Wire Spec	Wire Material description	Wire Color Description	Wire Length	End2 Terminal Part Number	End2 Pin Name	End2 Connector
15	-	-	US94MC	3510311 R1	0.79	18.0	Thin Wall XLPE Primary Cable	GREY	1585.0	-	3	R01-950 7A
15	-	-	VB94MC	3510311 R1	0.79	18.0	Thin Wall XLPE Primary Cable	GREY	1910.0	-	3	R01-9528
15	-	-	UJ94MC	3510311 R1	0.79	18.0	Thin Wall XLPE Primary Cable	GREY	1100.0	-	3	R01-9519
15	-	-	SD94BC	2643680 R1	1.16	16.0	Std. Wall XLPE Primary Cable	GREY	2850.0	-	C	R01-950 2B DA/AA
15	-	-	TF94BC	2643680 R1	1.16	16.0	Std. Wall XLPE Primary Cable	GREY	1100.0	-	C	R01-9513 DA
15	-	-	VA94BC	2643680 R1	1.16	16.0	Std. Wall XLPE Primary Cable	GREY	1910.0	-	C	R01-9520 DA
16	-	-	SS94MD	3510311 R1	0.79	18.0	Thin Wall XLPE Primary Cable	GREY	2520.0	-	1	R01-590 6E
16	-	-	ST94MD	3510311 R1	0.79	18.0	Thin Wall XLPE Primary Cable	GREY	1535.0	-	1	R01-9506

Name	Terminal Part Number	V-Min	Name	Wire Part Number	Wire CSA	Wire Spec	Wire Material description	Wire Color Description	Wire Length	End2 Terminal Part Number	End2 Pin Name	End2 Connector
16	-	-	SR94MD	3510311 R1	0.79	18.0	Thin Wall XLPE Primary Cable	GREY	2520.0	-	1	R01-950 6D
16	-	-	VT94MD	3510311 R1	0.79	18.0	Thin Wall XLPE Primary Cable	GREY	2520.0	-	1	R01-950 6D
16	-	-	RB94BD	2643680 R1	1.16	16.0	Std. Wall XLPE Primary Cable	GREY	1535.0	-	2	R01-9501 DA
16	-	-	SD94BD	2643680 R1	1.16	16.0	Std. Wall XLPE Primary Cable	GREY	2720.0	-	2	R01-950 1D DA/AA
16	-	-	SZ94BD	2643680 R1	1.16	16.0	Std. Wall XLPE Primary Cable	GREY	1000.0	-	2	R01-9512 DA
16	-	-	TF94BD	2643680 R1	1.16	16.0	Std. Wall XLPE Primary Cable	GREY	1000.0	-	2	R01-9512 DA
16	-	-	UP94BD	2643680 R1	1.16	16.0	Std. Wall XLPE Primary Cable	GREY	1000.0	-	2	R01-9512 DA
16	-	-	VB94MD	3510311 R1	0.79	18.0	Thin Wall XLPE Primary Cable	GREY	2060.0	-	2	R01-9529

Name	Terminal Part Number	V-Min	Name	Wire Part Number	Wire CSA	Wire Spec	Wire Material description	Wire Color Description	Wire Length	End2 Terminal Part Number	End2 Pin Name	End2 Connector
16	-	-	UJ94MD	3510311 R1	0.79	18.0	Thin Wall XLPE Primary Cable	GREY	1000.0	-	2	R01-9518
16	-	-	US94MD	3510311 R1	0.79	18.0	Thin Wall XLPE Primary Cable	GREY	1000.0	-	2	R01-9518
16	-	-	SB94BD	2643680 R1	1.16	16.0	Std. Wall XLPE Primary Cable	GREY	2720.0	-	2	R01-950 1D DA/AA
16	-	-	VA94BD	2643680 R1	1.16	16.0	Std. Wall XLPE Primary Cable	GREY	2060.0	-	2	R01-9521 DA
17	-	-	VT94ME	3510311 R1	0.79	18.0	Thin Wall XLPE Primary Cable	GREY	2520.0	-	2	R01-950 6D
17	-	-	ST94ME	3510311 R1	0.79	18.0	Thin Wall XLPE Primary Cable	GREY	1535.0	-	2	R01-9506
17	-	-	SS94ME	3510311 R1	0.79	18.0	Thin Wall XLPE Primary Cable	GREY	2520.0	-	2	R01-590 6E
17	-	-	SR94ME	3510311 R1	0.79	18.0	Thin Wall XLPE Primary Cable	GREY	2520.0	-	2	R01-950 6D

Name	Terminal Part Number	V-Min	Name	Wire Part Number	Wire CSA	Wire Spec	Wire Material description	Wire Color Description	Wire Length	End2 Terminal Part Number	End2 Pin Name	End2 Connector
17	-	-	RB94BE	2643680 R1	1.16	16.0	Std. Wall XLPE Primary Cable	GREY	1535.0	-	1	R01-9501 DA
17	-	-	SB94BE	2643680 R1	1.16	16.0	Std. Wall XLPE Primary Cable	GREY	2720.0	-	1	R01-950 1D DA/AA
17	-	-	SZ94BE	2643680 R1	1.16	16.0	Std. Wall XLPE Primary Cable	GREY	1000.0	-	1	R01-9512 DA
17	-	-	TF94BE	2643680 R1	1.16	16.0	Std. Wall XLPE Primary Cable	GREY	1000.0	-	1	R01-9512 DA
17	-	-	UP94BE	2643680 R1	1.16	16.0	Std. Wall XLPE Primary Cable	GREY	1000.0	-	1	R01-9512 DA
17	-	-	VB94ME	3510311 R1	0.79	18.0	Thin Wall XLPE Primary Cable	GREY	2060.0	-	1	R01-9529
17	-	-	UJ94ME	3510311 R1	0.79	18.0	Thin Wall XLPE Primary Cable	GREY	1000.0	-	1	R01-9518
17	-	-	US94ME	3510311 R1	0.79	18.0	Thin Wall XLPE Primary Cable	GREY	1000.0	-	1	R01-9518

Name	Terminal Part Number	V-Min	Name	Wire Part Number	Wire CSA	Wire Spec	Wire Material description	Wire Color Description	Wire Length	End2 Terminal Part Number	End2 Pin Name	End2 Connector
17	-	-	SD94BE	2643680 R1	1.16	16.0	Std. Wall XLPE Primary Cable	GREY	2720.0	-	1	R01-950 1D DA/AA
17	-	-	VA94BE	2643680 R1	1.16	16.0	Std. Wall XLPE Primary Cable	GREY	2060.0	-	1	R01-9521 DA
18	-	-	SS94MF	3510311 R1	0.79	18.0	Thin Wall XLPE Primary Cable	GREY	3095.0	-	2	R01-950 8E
18	-	-	VT94MF	3510311 R1	0.79	18.0	Thin Wall XLPE Primary Cable	GREY	3095.0	-	2	R01-950 8D
18	-	-	ST94MH	3510311 R1	0.79	18.0	Thin Wall XLPE Primary Cable	GREY	2060.0	-	2	R01-9508
18	-	-	SR94MF	3510311 R1	0.79	18.0	Thin Wall XLPE Primary Cable	GREY	3095.0	-	2	R01-950 8D
18	-	-	RB94BF	2643680 R1	1.16	16.0	Std. Wall XLPE Primary Cable	GREY	2060.0	-	2	R01-9503 DA
18	-	-	SD94BF	2643680 R1	1.16	16.0	Std. Wall XLPE Primary Cable	GREY	3295.0	-	2	R01-950 3D DA/AA

Name	Terminal Part Number	V-Min	Name	Wire Part Number	Wire CSA	Wire Spec	Wire Material description	Wire Color Description	Wire Length	End2 Terminal Part Number	End2 Pin Name	End2 Connector
18	-	-	SZ94BF	2643680 R1	1.16	16.0	Std. Wall XLPE Primary Cable	GREY	1480.0	-	2	R01-9511 DA
18	-	-	TF94BF	2643680 R1	1.16	16.0	Std. Wall XLPE Primary Cable	GREY	1480.0	-	2	R01-9511 DA
18	-	-	UP94BF	2643680 R1	1.16	16.0	Std. Wall XLPE Primary Cable	GREY	1480.0	-	2	R01-9511 DA
18	-	-	UJ94MF	3510311 R1	0.79	18.0	Thin Wall XLPE Primary Cable	GREY	1480.0	-	2	R01-9517
18	-	-	US94MF	3510311 R1	0.79	18.0	Thin Wall XLPE Primary Cable	GREY	1480.0	-	2	R01-9517
18	-	-	VB94MF	3510311 R1	0.79	18.0	Thin Wall XLPE Primary Cable	GREY	3645.0	-	2	R01-9535
18	-	-	SB94BF	2643680 R1	1.16	16.0	Std. Wall XLPE Primary Cable	GREY	3295.0	-	2	R01-950 3D DA/AA
18	-	-	VA94BF	2643680 R1	1.16	16.0	Std. Wall XLPE Primary Cable	GREY	3645.0	-	2	R01-9527 DA

Name	Terminal Part Number	V-Min	Name	Wire Part Number	Wire CSA	Wire Spec	Wire Material description	Wire Color Description	Wire Length	End2 Terminal Part Number	End2 Pin Name	End2 Connector
19	-	-	SS94MH	3510311 R1	0.79	18.0	Thin Wall XLPE Primary Cable	GREY	3095.0	-	1	R01-950 8E
19	-	-	SR94MH	3510311 R1	0.79	18.0	Thin Wall XLPE Primary Cable	GREY	3095.0	-	1	R01-950 8D
19	-	-	VT94MH	3510311 R1	0.79	18.0	Thin Wall XLPE Primary Cable	GREY	3095.0	-	1	R01-950 8D
19	-	-	ST94MF	3510311 R1	0.79	18.0	Thin Wall XLPE Primary Cable	GREY	2060.0	-	1	R01-9508
19	-	-	RB94BH	2643680 R1	1.16	16.0	Std. Wall XLPE Primary Cable	GREY	2060.0	-	1	R01-9503 DA
19	-	-	SB94BH	2643680 R1	1.16	16.0	Std. Wall XLPE Primary Cable	GREY	3295.0	-	1	R01-950 3D DA/AA
19	-	-	SZ94BH	2643680 R1	1.16	16.0	Std. Wall XLPE Primary Cable	GREY	1480.0	-	1	R01-9511 DA
19	-	-	TF94BH	2643680 R1	1.16	16.0	Std. Wall XLPE Primary Cable	GREY	1480.0	-	1	R01-9511 DA

Name	Terminal Part Number	V-Min	Name	Wire Part Number	Wire CSA	Wire Spec	Wire Material description	Wire Color Description	Wire Length	End2 Terminal Part Number	End2 Pin Name	End2 Connector
19	-	-	UP94BH	2643680 R1	1.16	16.0	Std. Wall XLPE Primary Cable	GREY	1480.0	-	1	R01-9511 DA
19	-	-	UJ94MH	3510311 R1	0.79	18.0	Thin Wall XLPE Primary Cable	GREY	1480.0	-	1	R01-9517
19	-	-	US94MH	3510311 R1	0.79	18.0	Thin Wall XLPE Primary Cable	GREY	1480.0	-	1	R01-9517
19	-	-	VB94MH	3510311 R1	0.79	18.0	Thin Wall XLPE Primary Cable	GREY	3645.0	-	1	R01-9535
19	-	-	SD94BH	2643680 R1	1.16	16.0	Std. Wall XLPE Primary Cable	GREY	3295.0	-	1	R01-950 3D DA/AA
19	-	-	VA94BH	2643680 R1	1.16	16.0	Std. Wall XLPE Primary Cable	GREY	3645.0	-	1	R01-9527 DA
20	-	-	VT94MJ	3510311 R1	0.79	18.0	Thin Wall XLPE Primary Cable	GREY	3270.0	-	1	R01-950 9A
20	-	-	SS94MJ	3510311 R1	0.79	18.0	Thin Wall XLPE Primary Cable	GREY	3270.0	-	1	R01-950 9A

Name	Terminal Part Number	V-Min	Name	Wire Part Number	Wire CSA	Wire Spec	Wire Material description	Wire Color Description	Wire Length	End2 Terminal Part Number	End2 Pin Name	End2 Connector
20	-	-	SR94MJ	3510311 R1	0.79	18.0	Thin Wall XLPE Primary Cable	GREY	4045.0	-	1	R01-9509B
20	-	-	ST94MJ	3510311 R1	0.79	18.0	Thin Wall XLPE Primary Cable	GREY	2260.0	-	1	R01-9509
20	-	-	RB94BJ	2643680 R1	1.16	16.0	Std. Wall XLPE Primary Cable	GREY	2260.0	-	A	R01-9504DA
20	-	-	SB94BJ	2643680 R1	1.16	16.0	Std. Wall XLPE Primary Cable	GREY	4045.0	-	A	R01-9504B DA
20	-	-	SZ94BJ	2643680 R1	1.16	16.0	Std. Wall XLPE Primary Cable	GREY	3470.0	-	A	R01-9504A DA/AA
20	-	-	UP94BJ	2643680 R1	1.16	16.0	Std. Wall XLPE Primary Cable	GREY	4045.0	-	A	R01-9504B DA
20	-	-	VB94MJ	3510311 R1	0.79	18.0	Thin Wall XLPE Primary Cable	GREY	3395.0	-	1	R01-9534
20	-	-	UJ94MJ	3510311 R1	0.79	18.0	Thin Wall XLPE Primary Cable	GREY	1880.0	-	1	R01-9516

Name	Terminal Part Number	V-Min	Name	Wire Part Number	Wire CSA	Wire Spec	Wire Material description	Wire Color Description	Wire Length	End2 Terminal Part Number	End2 Pin Name	End2 Connector
20	-	-	US94MJ	3510311 R1	0.79	18.0	Thin Wall XLPE Primary Cable	GREY	4045.0	-	1	R01-950 9B
20	-	-	SD94BJ	2643680 R1	1.16	16.0	Std. Wall XLPE Primary Cable	GREY	3470.0	-	A	R01-950 4A DA/AA
20	-	-	TF94BJ	2643680 R1	1.16	16.0	Std. Wall XLPE Primary Cable	GREY	1880.0	-	A	R01-9514 DA
20	-	-	VA94BJ	2643680 R1	1.16	16.0	Std. Wall XLPE Primary Cable	GREY	3395.0	-	A	R01-9526 DA
21	-	-	SS94MK	3510311 R1	0.79	18.0	Thin Wall XLPE Primary Cable	GREY	3270.0	-	2	R01-950 9A
21	-	-	ST94MK	3510311 R1	0.79	18.0	Thin Wall XLPE Primary Cable	GREY	2260.0	-	2	R01-9509
21	-	-	VT94MK	3510311 R1	0.79	18.0	Thin Wall XLPE Primary Cable	GREY	3270.0	-	2	R01-950 9A
21	-	-	SR94MK	3510311 R1	0.79	18.0	Thin Wall XLPE Primary Cable	GREY	4045.0	-	2	R01-950 9B

Name	Terminal Part Number	V-Min	Name	Wire Part Number	Wire CSA	Wire Spec	Wire Material description	Wire Color Description	Wire Length	End2 Terminal Part Number	End2 Pin Name	End2 Connector
21	-	-	SB94BK	2643680 R1	1.16	16.0	Std. Wall XLPE Primary Cable	GREY	4045.0	-	B	R01-9504B DA
21	-	-	UP94BK	2643680 R1	1.16	16.0	Std. Wall XLPE Primary Cable	GREY	4045.0	-	B	R01-9504B DA
21	-	-	SD94BK	2643680 R1	1.16	16.0	Std. Wall XLPE Primary Cable	GREY	3470.0	-	B	R01-9504A DA/AA
21	-	-	RB94BK	2643680 R1	1.16	16.0	Std. Wall XLPE Primary Cable	GREY	2260.0	-	B	R01-9504 DA
21	-	-	VB94MK	3510311 R1	0.79	18.0	Thin Wall XLPE Primary Cable	GREY	3395.0	-	2	R01-9534
21	-	-	UJ94MK	3510311 R1	0.79	18.0	Thin Wall XLPE Primary Cable	GREY	1880.0	-	2	R01-9516
21	-	-	US94MK	3510311 R1	0.79	18.0	Thin Wall XLPE Primary Cable	GREY	4045.0	-	2	R01-9509B
21	-	-	SZ94BK	2643680 R1	1.16	16.0	Std. Wall XLPE Primary Cable	GREY	3470.0	-	B	R01-9504A DA/AA

Name	Terminal Part Number	V-Min	Name	Wire Part Number	Wire CSA	Wire Spec	Wire Material description	Wire Color Description	Wire Length	End2 Terminal Part Number	End2 Pin Name	End2 Connector
21	-	-	TF94BK	2643680 R1	1.16	16.0	Std. Wall XLPE Primary Cable	GREY	1880.0	-	B	R01-9514 DA
21	-	-	VA94BK	2643680 R1	1.16	16.0	Std. Wall XLPE Primary Cable	GREY	3395.0	-	B	R01-9526 DA
22	-	-	VT94ML	3510311 R1	0.79	18.0	Thin Wall XLPE Primary Cable	GREY	3270.0	-	3	R01-950 9A
22	-	-	ST94ML	3510311 R1	0.79	18.0	Thin Wall XLPE Primary Cable	GREY	2260.0	-	3	R01-9509
22	-	-	SS94ML	3510311 R1	0.79	18.0	Thin Wall XLPE Primary Cable	GREY	3270.0	-	3	R01-950 9A
22	-	-	SR94ML	3510311 R1	0.79	18.0	Thin Wall XLPE Primary Cable	GREY	4045.0	-	3	R01-950 9B
22	-	-	RB94BL	2643680 R1	1.16	16.0	Std. Wall XLPE Primary Cable	GREY	2260.0	-	C	R01-9504 DA
22	-	-	SB94BL	2643680 R1	1.16	16.0	Std. Wall XLPE Primary Cable	GREY	4045.0	-	C	R01-950 4B DA

Name	Terminal Part Number	V-Min	Name	Wire Part Number	Wire CSA	Wire Spec	Wire Material description	Wire Color Description	Wire Length	End2 Terminal Part Number	End2 Pin Name	End2 Connector
22	-	-	SZ94BL	2643680 R1	1.16	16.0	Std. Wall XLPE Primary Cable	GREY	3470.0	-	C	R01-950 4A DA/AA
22	-	-	UP94BL	2643680 R1	1.16	16.0	Std. Wall XLPE Primary Cable	GREY	4045.0	-	C	R01-950 4B DA
22	-	-	VB94ML	3510311 R1	0.79	18.0	Thin Wall XLPE Primary Cable	GREY	3395.0	-	3	R01-9534
22	-	-	UJ94ML	3510311 R1	0.79	18.0	Thin Wall XLPE Primary Cable	GREY	1880.0	-	3	R01-9516
22	-	-	US94ML	3510311 R1	0.79	18.0	Thin Wall XLPE Primary Cable	GREY	4045.0	-	3	R01-950 9B
22	-	-	SD94BL	2643680 R1	1.16	16.0	Std. Wall XLPE Primary Cable	GREY	3470.0	-	C	R01-950 4A DA/AA
22	-	-	TF94BL	2643680 R1	1.16	16.0	Std. Wall XLPE Primary Cable	GREY	1880.0	-	C	R01-9514 DA
22	-	-	VA94BL	2643680 R1	1.16	16.0	Std. Wall XLPE Primary Cable	GREY	3395.0	-	C	R01-9526 DA

Name	Terminal Part Number	V-Min	Name	Wire Part Number	Wire CSA	Wire Spec	Wire Material description	Wire Color Description	Wire Length	End2 Terminal Part Number	End2 Pin Name	End2 Connector
23	-	-	RC94BM	2643680 R1	1.16	16.0	Std. Wall XLPE Primary Cable	GREY	1515.0	-	1	R01-9505
23	-	-	SC94BM	2643680 R1	1.16	16.0	Std. Wall XLPE Primary Cable	GREY	2205.0	-	1	R01-9505A
23	-	-	[SV94MM]	V-16-GXL	1.16	16.0	Std. Wall XLPE Primary Cable	Not Applicable	1950.0	-	2	9515A
23	-	-	[SU94MM]	V-16-GXL	1.16	16.0	Std. Wall XLPE Primary Cable	Not Applicable	1210.0	-	2	R01-9515
23	-	-	[SW94MM]	V-16-GXL	1.16	16.0	Std. Wall XLPE Primary Cable	Not Applicable	1760.0	-	2	R01-9515B
24	-	-	RC94BN	2643680 R1	1.16	16.0	Std. Wall XLPE Primary Cable	GREY	1515.0	-	2	R01-9505
24	-	-	SE94BN	2643680 R1	1.16	16.0	Std. Wall XLPE Primary Cable	GREY	2205.0	-	2	R01-9505A
24	-	-	[SU94MN]	V-16-GXL	1.16	16.0	Std. Wall XLPE Primary Cable	Not Applicable	1210.0	-	1	R01-9515

Name	Terminal Part Number	V-Min	Name	Wire Part Number	Wire CSA	Wire Spec	Wire Material description	Wire Color Description	Wire Length	End2 Terminal Part Number	End2 Pin Name	End2 Connector
24	-	-	[SW94MN]	V-16-GXL	1.16	16.0	Std. Wall XLPE Primary Cable	Not Applicable	1760.0	-	1	R01-9515B
24	-	-	[SV94MN]	V-16-GXL	1.16	16.0	Std. Wall XLPE Primary Cable	Not Applicable	1950.0	-	1	9515A

Connector Name	9865F
Part Number	1667740C1
Short Description	LOAD INDICATOR
Instances	LT/RH/LoneStar - X15/A26 - Axle Loading (Weight) Rear:Diagram1 LT/RH/LoneStar - X15/A26 - Axle Loading (Weight) Rear:Diagram2
Mates	9865M

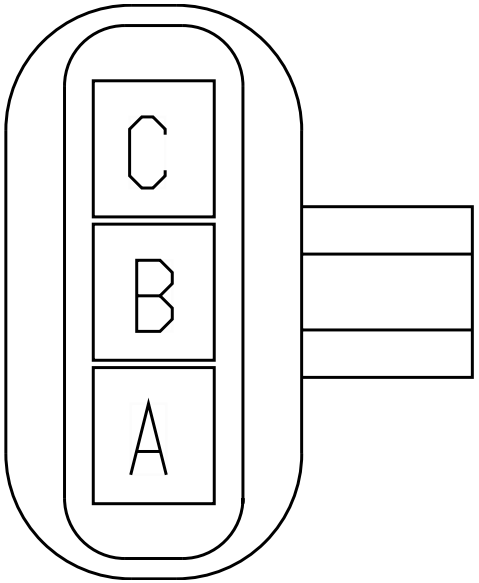

Name	Terminal Part Number	V-Min	Name	Wire Part Number	Wire CSA	Wire Spec	Wire Material description	Wire Color Description	Wire Length	End2 Terminal Part Number	End2 Pin Name	End2 Connect or
A	-	-	NP109B	2643673 R1	0.79	18.0	Std. Wall XLPE Primary Cable	GREY	3235.0	-	42	1701F
B	-	-	NP106B	2643675 R1	0.79	18.0	Std. Wall XLPE Primary Cable	ORANGE	3235.0	-	41	1701F
C	-	-	NP61B	2643673 R1	0.79	18.0	Std. Wall XLPE Primary Cable	GREY	3235.0	-	40	1701F

Connector Name	9865M
Part Number	1667741C1
Short Description	LOAD INDICATOR TO CENTER CHASSIS
Instances	LT/RH/LoneStar - X15/A26 - Axle Loading (Weight) Rear:Diagram1 LT/RH/LoneStar - X15/A26 - Axle Loading (Weight) Rear:Diagram2
Mates	9865F

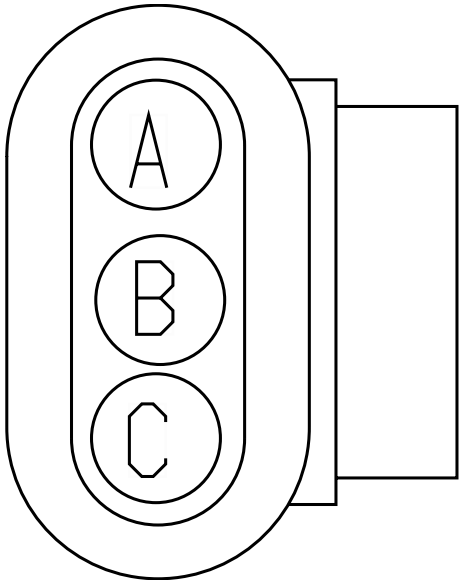

Name	Terminal Part Number	V-Min	Name	Wire Part Number	Wire CSA	Wire Spec	Wire Material description	Wire Color Description	Wire Length	End2 Terminal Part Number	End2 Pin Name	End2 Connect or
A	-	-	RD109B	2643673 R1	0.79	18.0	Std. Wall XLPE Primary Cable	GREY	3845.0	-	A	R01-9830
A	-	-	RE109B	2643673 R1	0.79	18.0	Std. Wall XLPE Primary Cable	GREY	3345.0	-	A	R01-9832
B	-	-	RD106B	2643673 R1	0.79	18.0	Std. Wall XLPE Primary Cable	GREY	3845.0	-	B	R01-9830
B	-	-	RE106B	2643673 R1	0.79	18.0	Std. Wall XLPE Primary Cable	GREY	3345.0	-	B	R01-9832

Name	Terminal Part Number	V-Min	Name	Wire Part Number	Wire CSA	Wire Spec	Wire Material description	Wire Color Description	Wire Length	End2 Terminal Part Number	End2 Pin Name	End2 Connect or
C	-	-	RD61B	2643673 R1	0.79	18.0	Std. Wall XLPE Primary Cable	GREY	3845.0	-	C	R01-9830
C	-	-	RE61B	2643673 R1	0.79	18.0	Std. Wall XLPE Primary Cable	GREY	3345.0	-	C	R01-9832

Circuit Number	Gauge	Color	Insulation	Terminal / Splice Number	Connector Part number	Connector Number	Cavity	Seal/Sleeve	Lock 1	Lock 2
AA13D	18	PK	TXL	3544876C1	4063156C1	9	A	N/A		
AA13D	18	PK	TXL	3544876C1	4063156C1	9	A	N/A		
JM5BF(+)	18	YL	TXL	3544884C1	4063156C1	9	B	N/A		
JN5BF(+)	18	YL	TXL	3544884C1	4063156C1	9	B	N/A		
JP5BF(+)	18	YL	TXL	3544884C1	4063156C1	9	B	N/A		
JR5BF(+)	18	YL	TXL	3544884C1	4063156C1	9	B	N/A		
JM5BF(+)	18	YL	TXL	3544884C1	4063156C1	9	B	N/A		
JN5BF(+)	18	YL	TXL	3544884C1	4063156C1	9	B	N/A		
JP5BF(+)	18	YL	TXL	3544884C1	4063156C1	9	B	N/A		
JR5BF(+)	18	YL	TXL	3544884C1	4063156C1	9	B	N/A		
JM5BF(-)	18	LTGN	TXL	3544884C1	4063156C1	9	C	N/A		
JN5BF(-)	18	LTGN	TXL	3544884C1	4063156C1	9	C	N/A		
JP5BF(-)	18	LTGN	TXL	3544884C1	4063156C1	9	C	N/A		
JR5BF(-)	18	LTGN	TXL	3544884C1	4063156C1	9	C	N/A		
JM5BF(-)	18	LTGN	TXL	3544884C1	4063156C1	9	C	N/A		
JN5BF(-)	18	LTGN	TXL	3544884C1	4063156C1	9	C	N/A		
JP5BF(-)	18	LTGN	TXL	3544884C1	4063156C1	9	C	N/A		
JR5BF(-)	18	LTGN	TXL	3544884C1	4063156C1	9	C	N/A		
ZV50B	18	YL	TXL	3544884C1	4063156C1	9	E	N/A		
ZW50B	22	RD	TXL	3544883C1	4063156C1	9	E	N/A		
ZX50B	18	YL	TXL	3544884C1	4063156C1	9	E	N/A		
ZZ50B	22	RD	TXL	3544883C1	4063156C1	9	E	N/A		
ZV50A	18	YL	TXL	3544876C1	4063156C1	9	H	N/A		
ZX50A	18	YL	TXL	3544876C1	4063156C1	9	H	N/A		
AA11-GN	18	WH	TXL	3544876C1	4063156C1	9	J	N/A		
AA11-GN	18	WH	TXL	3544876C1	4063156C1	9	J	N/A		
AA62	18	DKBL	TXL	3544884C1	4063156C1	9	L	N/A		
AA62	18	DKBL	TXL	3544884C1	4063156C1	9	L	N/A		
DA62DB	16	DKBL	TXL	3544884C1	4063156C1	9	M	N/A		
4G62DB	16	DKBL	TXL	3544884C1	4063156C1	9	M	N/A		
DA62DA	16	DKBL	TXL	3544884C1	4063156C1	9	M	N/A		
2J62A	18	DKBL	TXL	3544884C1	4063156C1	9	N	N/A		
DX62A	18	DKBL	TXL	3544884C1	4063156C1	9	N	N/A		
AA50	18	YL	TXL	3544884C1	4063156C1	9	P	N/A		
AA50	18	YL	TXL	3544884C1	4063156C1	9	P	N/A		
AA9ZA	18	GY	TXL	3544884C1	4063156C1	9	R	N/A		
AA9ZA	18	GY	TXL	3544884C1	4063156C1	9	R	N/A		
ZV14D	18	RD	TXL	3544876C1	4063156C1	9	S	N/A		
ZW14D	18	RD	TXL	3544876C1	4063156C1	9	S	N/A		
2F14LCM	18	RD	TXL	3544876C1	4063156C1	9	S	N/A		
2G14LCM	18	RD	TXL	3544876C1	4063156C1	9	S	N/A		
YH5A(+)	18	YL	TXL	N/A	BLUNT_SL_V	380	A	N/A		
YH5A(+)	18	YL	TXL	N/A	BLUNT_SL_V	380	A	N/A		
YH5A(-)	18	GN	TXL	N/A	BLUNT_SL_V	380	B	N/A		
YH5A(-)	18	GN	TXL	N/A	BLUNT_SL_V	380	B	N/A		
YH11-GC	14	WH	TXL	N/A	BLUNT_SL_V	381	A	N/A		
YH11-GC	14	WH	TXL	N/A	BLUNT_SL_V	381	A	N/A		
YH82KB	16	GY	TXL	N/A	BLUNT_SL_V	381	B	N/A		
YH82KB	16	GY	TXL	N/A	BLUNT_SL_V	381	B	N/A		
YH13A	16	PK	TXL	N/A	BLUNT_SL_V	382	A	N/A		
YH13AC	16	PK	TXL	N/A	BLUNT_SL_V	382	A	N/A		
YH14A	18	RD	TXL	N/A	BLUNT_SL_V	382	B	N/A		

Circuit Number	Gauge	Color	Insulation	Terminal / Splice Number	Connector Part number	Connector Number	Cavity	Seal/Sleeve	Lock 1	Lock 2
YH14AZ	18	RD	TXL	N/A	BLUNT_SL_V	382	B	N/A		
TJ95E	20	TN	TXL	3626441C1	6114577C1	674	1	N/A		
AJ95E	20	TN	TXL	3626441C1	6114577C1	674	1	N/A		
TJ95F	20	TN	TXL	3626441C1	6114577C1	674	2	N/A		
AJ95F	18	TN	TXL	3626441C1	6114577C1	674	2	N/A		
TJ95H	18	TN	TXL	3626441C1	6114577C1	674	3	N/A		
AJ95H	18	TN	TXL	3626441C1	6114577C1	674	3	N/A		
TJ95AR1	18	TN	TXL	3626441C1	6114577C1	674	4	N/A		
AJ95AR1	18	TN	TXL	3626441C1	6114577C1	674	4	N/A		
TJ95AC	20	TN	TXL	3626441C1	6114577C1	674	5	N/A		
CA95GE	18	TN	TXL	3626441C1	6114577C1	674	5	N/A		
CC95AC	20	TN	TXL	3626441C1	6114577C1	674	5	N/A		
TJ95AB	18	TN	TXL	3626441C1	6114577C1	674	6	N/A		
AJ95AB	18	TN	TXL	3626441C1	6114577C1	674	6	N/A		
TJ95AS1	18	TN	TXL	3626441C1	6114577C1	674	7	N/A		
AJ95AS1	18	TN	TXL	3626441C1	6114577C1	674	7	N/A		
TJ95AT1	18	TN	TXL	3626441C1	6114577C1	674	8	N/A		
AJ95AT1	18	TN	TXL	3626441C1	6114577C1	674	8	N/A		
TJ95AU1	18	TN	TXL	3626441C1	6114577C1	674	9	N/A		
AJ95AU1	18	TN	TXL	3626441C1	6114577C1	674	9	N/A		
TJ95-GB	16	BK	TXL	3627568C1	6114577C1	674	10	N/A		
AL95-GB	16	BK	TXL	3627568C1	6114577C1	674	10	N/A		
AS95-GB	16	BK	TXL	3627568C1	6114577C1	674	10	N/A		
TL10-GL	18	WH	TXL	3626441C1	6114577C1	674	11	N/A		
TS10-GL	18	WH	TXL	3626441C1	6114577C1	674	11	N/A		
AL95-GL	16	BK	TXL	3627568C1	6114577C1	674	11	N/A		
AS95-GL	18	BK	TXL	3626441C1	6114577C1	674	11	N/A		
TL13AA	18	PK	TXL	3626441C1	6114577C1	674	12	N/A		
TS13AA	18	PK	TXL	3626441C1	6114577C1	674	12	N/A		
AL13AA	18	RD	TXL	3626441C1	6114577C1	674	12	N/A		
AS13AA	18	RD	TXL	3626441C1	6114577C1	674	12	N/A		
TL5(+)	18	YL	193	3626441C1	6114577C1	674	13	N/A		
TS5(+)	18	YL	193	3626441C1	6114577C1	674	13	N/A		
AL5(+)	18	YL	193	3626441C1	6114577C1	674	13	N/A		
AS5(+)	18	YL	193	3626441C1	6114577C1	674	13	N/A		
TL5(-)	18	GN	193	3626441C1	6114577C1	674	14	N/A		
TS5(-)	18	GN	193	3626441C1	6114577C1	674	14	N/A		
AL5(-)	18	GN	193	3626441C1	6114577C1	674	14	N/A		
AS5(-)	18	GN	193	3626441C1	6114577C1	674	14	N/A		
KA95H1	18	PK	TXL	2033819C1	3765646C92	690	A1	3517771C1		
KA95H1	18	PK	TXL	2033819C1	3765646C92	690	A1	3517771C1		
KA95P	18	RD	TXL	2033819C1	3765646C92	690	A10	3517771C1		
KA95P	18	RD	TXL	2033819C1	3765646C92	690	A10	3517771C1		
KA95SB	20	TN	TXL	2033819C1	3765646C92	690	A12	3517771C1		
KA95SB	20	TN	TXL	2033819C1	3765646C92	690	A12	3517771C1		
KA95H2	18	PK	TXL	2033819C1	3765646C92	690	A3	3517771C1		
KA95H2	18	PK	TXL	2033819C1	3765646C92	690	A3	3517771C1		
KA95H3	18	PK	TXL	2033819C1	3765646C92	690	A4	3517771C1		
KA95H3	18	PK	TXL	2033819C1	3765646C92	690	A4	3517771C1		
KA95H4	18	PK	TXL	2033819C1	3765646C92	690	A6	3517771C1		
KA95H4	18	PK	TXL	2033819C1	3765646C92	690	A6	3517771C1		
KA95H5	18	PK	TXL	2033819C1	3765646C92	690	A7	3517771C1		

Circuit Number	Gauge	Color	Insulation	Terminal / Splice Number	Connector Part number	Connector Number	Cavity	Seal/Sleeve	Lock 1	Lock 2
KA95H5	18	PK	TXL	2033819C1	3765646C92	690	A7	3517771C1		
KA95H6	18	PK	TXL	2033819C1	3765646C92	690	A9	3517771C1		
KA95H6	18	PK	TXL	2033819C1	3765646C92	690	A9	3517771C1		
KA95GBA	18	BK	TXL	2033819C1	3765646C92	690	B1	3517771C1		
KA95GBA	18	BK	TXL	2033819C1	3765646C92	690	B1	3517771C1		
KA95-GC	18	BK	TXL	2033819C1	3765646C92	690	B10	3517771C1		
KA95-GC	18	BK	TXL	2033819C1	3765646C92	690	B10	3517771C1		
TJ95AR3	18	TN	TXL	2033819C1	3765646C92	690	B12	3517771C1		
TK95AR3	18	TN	TXL	2033819C1	3765646C92	690	B12	3517771C1		
AJ95AR3	18	TN	TXL	2033819C1	3765646C92	690	B12	3517771C1		
AK95AR3	18	BK	TXL	2033819C1	3765646C92	690	B12	3517771C1		
TJ95AS3	18	TN	TXL	2033819C1	3765646C92	690	B3	3517771C1		
TK95AS3	18	TN	TXL	2033819C1	3765646C92	690	B3	3517771C1		
AJ95AS3	18	TN	TXL	2033819C1	3765646C92	690	B3	3517771C1		
AK95AS3	18	TN	TXL	2033819C1	3765646C92	690	B3	3517771C1		
KA95GBB	18	BK	TXL	2033819C1	3765646C92	690	B4	3517771C1		
KA95GBB	18	BK	TXL	2033819C1	3765646C92	690	B4	3517771C1		
TJ95AT3	18	TN	TXL	2033819C1	3765646C92	690	B6	3517771C1		
TK95AT3	18	TN	TXL	2033819C1	3765646C92	690	B6	3517771C1		
AJ95AT3	18	TN	TXL	2033819C1	3765646C92	690	B6	3517771C1		
AK95AT3	18	TN	TXL	2033819C1	3765646C92	690	B6	3517771C1		
KA95GBD	18	BK	TXL	2033819C1	3765646C92	690	B7	3517771C1		
KA95GBD	18	BK	TXL	2033819C1	3765646C92	690	B7	3517771C1		
TJ95AU3	18	TN	TXL	2033819C1	3765646C92	690	B9	3517771C1		
TK95AU3	18	TN	TXL	2033819C1	3765646C92	690	B9	3517771C1		
AJ95AU3	18	TN	TXL	2033819C1	3765646C92	690	B9	3517771C1		
AK95AU3	18	TN	TXL	2033819C1	3765646C92	690	B9	3517771C1		
KA95PA	10	PK	TXL	1687847C1	3765646C92	690	D10	589390C1		
KA95PA	10	PK	TXL	1687847C1	3765646C92	690	D10	589390C1		
KA95PC	18	PK	TXL	2033819C1	3765646C92	690	D12	3517771C1		
KA95PC	18	PK	TXL	2033819C1	3765646C92	690	D12	3517771C1		
KA95H7	18	PK	TXL	2033819C1	3765646C92	690	E1	3517771C1		
KA95H7	18	PK	TXL	2033819C1	3765646C92	690	E1	3517771C1		
KA95TB	18	GY	TXL	2033819C1	3765646C92	690	E10	3517771C1		
KA95TB	18	GY	TXL	2033819C1	3765646C92	690	E10	3517771C1		
TL95KD	10	RD	TXL	1687847C1	3765646C92	690	E12	589390C1		
TM95KD	10	RD	TXL	1687847C1	3765646C92	690	E12	589390C1		
TS95KD	10	RD	TXL	1687847C1	3765646C92	690	E12	589390C1		
AL95KD	10	TN	TXL	1687847C1	3765646C92	690	E12	589390C1		
AM95KD	10	RD	TXL	1687847C1	3765646C92	690	E12	589390C1		
AS95KD	10	RD	TXL	1687847C1	3765646C92	690	E12	589390C1		
KA14A	16	RD	TXL	2033819C1	3765646C92	690	E2	1652325C1		
KA14A	18	RD	TXL	2033819C1	3765646C92	690	E2	3517771C1		
KA95P	18	RD	TXL	2033819C1	3765646C92	690	E3	3517771C1		
KA95P	18	RD	TXL	2033819C1	3765646C92	690	E3	3517771C1		
KA14B	16	RD	TXL	2033819C1	3765646C92	690	E4	1652325C1		
KA14B	16	RD	TXL	2033819C1	3765646C92	690	E4	1652325C1		
KA95PB	10	PK	TXL	1687847C1	3765646C92	690	E5	589390C1		
KA95PB	10	PK	TXL	1687847C1	3765646C92	690	E5	589390C1		
KA14C	10	RD	TXL	1687847C1	3765646C92	690	E6	589390C1		
KA14C	10	RD	TXL	1687847C1	3765646C92	690	E6	589390C1		
SJ14CE	16	RD	TXL	1661212C1	1661201C1	830	A	N/A		

Circuit Number	Gauge	Color	Insulation	Terminal / Splice Number	Connector Part number	Connector Number	Cavity	Seal/Sleeve	Lock 1	Lock 2
SJ14CE	16	RD	TXL	1661212C1	1661201C1	830	A	N/A		
SJ13CE	16	PK	TXL	1661212C1	1661201C1	830	B	N/A		
SJ13CE	16	PK	TXL	1661212C1	1661201C1	830	B	N/A		
SJ11-GBE	16	WH	TXL	1661212C1	1661201C1	830	C	N/A		
SJ11-GBE	16	WH	TXL	1661212C1	1661201C1	830	C	N/A		
SJ3CE(+)	18	DKBL	TXL	1661212C1	1661201C1	830	D	N/A		
SJ3CE(+)	18	DKBL	TXL	1661212C1	1661201C1	830	D	N/A		
SJ3CE(-)	18	GY	TXL	1661212C1	1661201C1	830	E	N/A		
SJ3CE(-)	18	GY	TXL	1661212C1	1661201C1	830	E	N/A		
AG14	6	RD	SGX	3752569C1		1002	1	2644005R1		
AL14	6	RD	SGX	3752569C1		1002	1	2644005R1		
AL14	4	RD	SGX	2015884C1		1002	1	2644002R1		
NJ14	4	RD	SGX	2015884C1		1002	1	2644002R1		
AG14W	6	RD	SGX	3752569C1		1003	1	2644005R1		
AL14W	6	RD	SGX	3752569C1		1003	1	2644005R1		
RP14W	8	RD	GXL	3752570C1		1003	1	2644054R1		
DB11-GAA	14	WH	TXL	3581768C1		1004	1	2644038R1		
DB11-GAA	14	WH	TXL	3581768C1		1004	1	2644038R1		
XA11-G	8	WH	GXL	3710088C1		1005	1	2644005R1		
ZP11-G	8	WH	GXL	3710088C1		1005	1	2644005R1		
AG14AJ	12	RD	TXL	3768157C1	3768015C1	1010	1	N/A		
AL14AJ	12	RD	TXL	3768157C1	3768015C1	1010	1	N/A		
AL14AJ	12	RD	TXL	3768157C1	3768015C1	1010	2	N/A		
NJ14AJ	12	RD	TXL	3768157C1	3768015C1	1010	2	N/A		
AA14EE	16	RD	TXL	3768013C1	3768015C1	1010	5	N/A		
AZ14A	18	RD	TXL	3768012C1	3768015C1	1010	5	N/A		
BF70J	12	OR	TXL	3768014C	3768015C1	1010	6	N/A		
BM70J	12	OR	TXL	3768014C	3768015C1	1010	6	N/A		
BG70J	12	OR	TXL	3768014C	3768015C1	1010	6	N/A		
BM70J	12	OR	TXL	3768014C	3768015C1	1010	6	N/A		
ZV14D	18	RD	TXL	3768012C1	3768015C1	1010	7	N/A		
ZW14DB	18	RD	TXL	3768012C1	3768015C1	1010	7	N/A		
ZK98H	18	RD	TXL	3768012C1	3768015C1	1010	7	N/A		
ZM98H	18	RD	TXL	3768012C1	3768015C1	1010	7	N/A		
ZM98H	18	RD	TXL	3768012C1	3768015C1	1010	8	N/A		
ZR98H	18	RD	TXL	3768012C1	3768015C1	1010	8	N/A		
ZZ14SUN	22	RD	TXL	3768012C1	3768015C1	1010	8	N/A		
AG14AK	12	RD	TXL	3768157C1	3768015C1	1010	9	N/A		
AL14AK	12	RD	TXL	3768157C1	3768015C1	1010	9	N/A		
AL14AK	12	RD	TXL	3768157C1	3768015C1	1010	10	N/A		
NJ14AK	12	RD	TXL	3768157C1	3768015C1	1010	10	N/A		
AA14MUX	18	RD	TXL	3768012C1	3768015C1	1010	13	N/A		
AA14EE	16	RD	TXL	3768013C1	3768015C1	1010	13	N/A		
BN94T	12	GY	TXL	3768014C1	3768015C1	1010	14	N/A		
ER94TV	12	GY	TXL	3768014C	3768015C1	1010	14	N/A		
FB94TW	12	GY	TXL	3768014C1	3768015C1	1010	14	N/A		
FR94TV	12	GY	TXL	3768014C1	3768015C1	1010	14	N/A		
HF94TV	12	GY	TXL	3768014C1	3768015C1	1010	14	N/A		
HG94TV	12	GY	TXL	3768014C1	3768015C1	1010	14	N/A		
DH75	12	RD	TXL	3768014C1	3768015C1	1010	14	N/A		
MR86P	18	LTGN	TXL	3768012C1	3768015C1	1010	15	N/A		
MZ86AA	18	LTGN	TXL	3768012C1	3768015C1	1010	15	N/A		

Circuit Number	Gauge	Color	Insulation	Terminal / Splice Number	Connector Part number	Connector Number	Cavity	Seal/Sleeve	Lock 1	Lock 2
AA15	18	RD	TXL	3768012C1	3768015C1	1010	15	N/A		
DH75	12	RD	TXL	3768014C1	3768015C1	1010	16	N/A		
2V14CSB	16	RD	TXL	3768013C1	3768015C1	1010	16	N/A		
CS14CSB	16	RD	TXL	3768013C1	3768015C1	1010	16	N/A		
JY14C	18	RD	TXL	3768012C1	3768015C1	1010	16	N/A		
YH14AZ	18	RD	TXL	3768012C1	3768015C1	1010	16	N/A		
AG14AL	12	RD	TXL	3768157C1	3768015C1	1010	17	N/A		
AL14AL	12	RD	TXL	3768157C1	3768015C1	1010	17	N/A		
AL14AP	12	RD	TXL	3768157C1	3768015C1	1010	18	N/A		
NJ14AP	12	RD	TXL	3768157C1	3768015C1	1010	18	N/A		
MM92DC	18	TN	TXL	3768012C1	3768015C1	1010	21	N/A		
NE17AC	18	PK	TXL	3768012C1	3768015C1	1010	21	N/A		
MM92DC	18	TN	TXL	3768012C1	3768015C1	1010	21	N/A		
NE17AC	18	PK	TXL	3768012C1	3768015C1	1010	21	N/A		
2V14CSB	16	RD	TXL	3768013C1	3768015C1	1010	22	N/A		
CS14CSB	16	RD	TXL	3768013C1	3768015C1	1010	22	N/A		
YH14A	18	RD	TXL	3768012C1	3768015C1	1010	22	N/A		
YK14CSB	16	RD	TXL	3768013C1	3768015C1	1010	22	N/A		
BN94T	12	GY	TXL	3768014C1	3768015C1	1010	22	N/A		
ER94TV	12	GY	TXL	3768014C	3768015C1	1010	22	N/A		
FB94TW	12	GY	TXL	3768014C1	3768015C1	1010	22	N/A		
FR94TV	12	GY	TXL	3768014C1	3768015C1	1010	22	N/A		
HF94TV	12	GY	TXL	3768014C1	3768015C1	1010	22	N/A		
HG94TV	12	GY	TXL	3768014C1	3768015C1	1010	22	N/A		
YK14CSB	16	RD	TXL	3768013C1	3768015C1	1010	22	N/A		
LM97B	20	RD	TXL	3768012C1	3768015C1	1010	23	N/A		
LM97B	20	RD	TXL	3768012C1	3768015C1	1010	23	N/A		
DL14EA	14	RD	TXL	3768014C1	3768015C1	1010	24	N/A		
JV14C	14	RD	GXL	3768014C1	3768015C1	1010	24	N/A		
KL14C	14	RD	GXL	3768014C1	3768015C1	1010	24	N/A		
RH14EA	14	RD	TXL	3768014C1	3768015C1	1010	24	N/A		
DL14EA	14	RD	TXL	3768014C1	3768015C1	1010	24	N/A		
JV14C	18	RD	TXL	3768012C1	3768015C1	1010	24	N/A		
KL14C	18	RD	TXL	3768012C1	3768015C1	1010	24	N/A		
RH14EA	14	RD	TXL	3768014C1	3768015C1	1010	24	N/A		
AG14AT	12	RD	TXL	3768157C1	3768015C1	1010	25	N/A		
AL14AT	12	RD	TXL	3768157C1	3768015C1	1010	25	N/A		
AL14AT	12	RD	TXL	3768157C1	3768015C1	1010	26	N/A		
NJ14AT	12	RD	TXL	3768157C1	3768015C1	1010	26	N/A		
AA73C	20	LTGN	TXL	3768012C1	3768015C1	1010	29	N/A		
MR86P	18	LTGN	TXL	3768012C1	3768015C1	1010	29	N/A		
MZ86AA	18	LTGN	TXL	3768012C1	3768015C1	1010	29	N/A		
NL86AA	18	LTGN	TXL	3768012C1	3768015C1	1010	29	N/A		
NP86P	18	LTGN	TXL	3768012C1	3768015C1	1010	29	N/A		
9S74RA	12	RD	GXL	3768014C1	3768015C1	1010	30	N/A		
YE75WA	14	RD	TXL	3768014C1	3768015C1	1010	30	N/A		
CV81B	12	RD	TXL	3768014C1	3768015C1	1010	30	N/A		
DF78V	12	LTGN	TXL	3768014C1	3768015C1	1010	30	N/A		
YE75WB	18	RD	TXL	3768012C1	3768015C1	1010	31	N/A		
2F14LCM	18	RD	TXL	3768012C1	3768015C1	1010	31	N/A		
2G14D	18	RD	TXL	3768012C1	3768015C1	1010	31	N/A		
EW20	16	LTGN	GXL	3768013C1	3768015C1	1010	32	N/A		

Circuit Number	Gauge	Color	Insulation	Terminal / Splice Number	Connector Part number	Connector Number	Cavity	Seal/Sleeve	Lock 1	Lock 2
XF14L	20	RD	TXL	3768012C1	3768015C1	1010	32	N/A		
EW20	16	LTGN	GXL	3768013C1	3768015C1	1010	32	N/A		
XF14L	20	RD	TXL	3768012C1	3768015C1	1010	32	N/A		
AG14AM	12	RD	TXL	3768157C1	3768015C1	1010	33	N/A		
AL14AM	12	RD	TXL	3768157C1	3768015C1	1010	33	N/A		
AL14AM	12	RD	TXL	3768157C1	3768015C1	1010	34	N/A		
NJ14AM	12	RD	TXL	3768157C1	3768015C1	1010	34	N/A		
3A94AY	14	GY	GXL	3768014C1	3768015C1	1010	37	N/A		
GS94AY	14	GY	GXL	3768014C1	3768015C1	1010	37	N/A		
XY94AY	12	GY	TXL	3768014C1	3768015C1	1010	37	N/A		
CF14SD	18	RD	TXL	3768012C1	3768015C1	1010	37	N/A		
CG14SD	18	RD	TXL	3768012C1	3768015C1	1010	37	N/A		
CK14ED	18	RD	TXL	3768012C1	3768015C1	1010	37	N/A		
CP14ED	18	RD	TXL	3768012C1	3768015C1	1010	37	N/A		
CT14ED	18	RD	TXL	3768012C1	3768015C1	1010	37	N/A		
DL14ED	18	RD	GXL	3768012C1	3768015C1	1010	37	N/A		
FA14EG	16	RD	TXL	3768013C1	3768015C1	1010	37	N/A		
JV14A	18	RD	TXL	3768012C1	3768015C1	1010	37	N/A		
KC14ED	16	RD	TXL	3768013C1	3768015C1	1010	37	N/A		
KL14A	18	RD	GXL	3768012C1	3768015C1	1010	37	N/A		
MB14ED	16	RD	TXL	3768013C1	3768015C1	1010	37	N/A		
PH14ED	18	RD	TXL	3768012C1	3768015C1	1010	37	N/A		
RH14ED	18	RD	GXL	3768012C1	3768015C1	1010	37	N/A		
SJ14CE	16	RD	TXL	3768013C1	3768015C1	1010	37	N/A		
CF14SD	18	RD	TXL	3768012C1	3768015C1	1010	38	N/A		
CG14SD	18	RD	TXL	3768012C1	3768015C1	1010	38	N/A		
CK14ED	18	RD	TXL	3768012C1	3768015C1	1010	38	N/A		
CP14ED	18	RD	TXL	3768012C1	3768015C1	1010	38	N/A		
CT14ED	18	RD	TXL	3768012C1	3768015C1	1010	38	N/A		
DL14ED	18	RD	GXL	3768012C1	3768015C1	1010	38	N/A		
FA14EG	16	RD	TXL	3768013C1	3768015C1	1010	38	N/A		
JV14A	18	RD	TXL	3768012C1	3768015C1	1010	38	N/A		
KC14ED	16	RD	TXL	3768013C1	3768015C1	1010	38	N/A		
KL14A	18	RD	GXL	3768012C1	3768015C1	1010	38	N/A		
MB14ED	16	RD	TXL	3768013C1	3768015C1	1010	38	N/A		
PH14ED	18	RD	TXL	3768012C1	3768015C1	1010	38	N/A		
RH14ED	18	RD	GXL	3768012C1	3768015C1	1010	38	N/A		
SJ14CE	16	RD	TXL	3768013C1	3768015C1	1010	38	N/A		
XA14EA	16	RD	TXL	3768013C1	3768015C1	1010	38	N/A		
ZJ98P	18	RD	TXL	3768012C1	3768015C1	1010	38	N/A		
ZP14EA	16	RD	TXL	3768013C1	3768015C1	1010	38	N/A		
CV81C	12	RD	TXL	3768014C1	3768015C1	1010	38	N/A		
CV81C	12	RD	TXL	3768014C1	3768015C1	1010	39	N/A		
3A94AY	14	GY	GXL	3768014C1	3768015C1	1010	39	N/A		
GS94AY	14	GY	GXL	3768014C1	3768015C1	1010	39	N/A		
XY94AY	12	GY	TXL	3768014C1	3768015C1	1010	39	N/A		
CV81B	12	RD	TXL	3768014C1	3768015C1	1010	40	N/A		
DF78V	12	LTGN	TXL	3768014C1	3768015C1	1010	40	N/A		
DT104AL	16	DKBL	TXL	3768013C1	3768015C1	1010	40	N/A		
AA82P	16	GY	TXL	3768007C	3768010C1	1011	R2 -	30 N/A		
AA82P	16	GY	TXL	3768007C	3768010C1	1011	R2 -	30 N/A		
BF70-GT	18	WH	TXL	3768003C1	3768010C1	1011	R1 -	5 N/A		

Circuit Number	Gauge	Color	Insulation	Terminal / Splice Number	Connector Part number	Connector Number	Cavity	Seal/Sleeve	Lock 1	Lock 2
BF70BB	14	OR	TXL	3768008C1	3768010C1	1011	R1 -	7 N/A		
BF70C	18	OR	TXL	3768003C1	3768010C1	1011	R1 -	6 N/A		
BF70J	12	OR	TXL	3768009C1	3768010C1	1011	R1 -	0 N/A		
BM70-GT	18	WH	TXL	3768003C1	3768010C1	1011	R1 -	5 N/A		
BM70C	18	OR	TXL	3768003C1	3768010C1	1011	R1 -	6 N/A		
BM70J	12	OR	TXL	3768009C1	3768010C1	1011	R1 -	0 N/A		
BM70T	12	OR	TXL	3768009C1	3768010C1	1011	R1 -	7 N/A		
BG70-GT	18	WH	TXL	3768003C1	3768010C1	1011	R1 -	5 N/A		
BG70BB	12	OR	TXL	3768009C1	3768010C1	1011	R1 -	7 N/A		
BG70CA	18	OR	TXL	3768003C1	3768010C1	1011	R1 -	6 N/A		
BG70J	12	OR	TXL	3768009C1	3768010C1	1011	R1 -	0 N/A		
BM70-GT	20	WH	TXL	3768003C1	3768010C1	1011	R1 -	5 N/A		
BM70C	20	OR	TXL	3768003C1	3768010C1	1011	R1 -	6 N/A		
BM70J	12	OR	TXL	3768009C1	3768010C1	1011	R1 -	0 N/A		
BM70T	12	OR	TXL	3768009C1	3768010C1	1011	R1 -	7 N/A		
AA82E	16	GY	TXL	3768007C1	3768010C1	1011	R2 -	7 N/A		
AA82F	18	GY	TXL	3768003C1	3768010C1	1011	R2 -	6 N/A		
AA82J	16	GY	TXL	3768004C1	3768010C1	1011	R2 -	7A N/A		
AA82M	18	GY	TXL	3768003C1	3768010C1	1011	R2 -	5 N/A		
AA82E	16	GY	TXL	3768007C1	3768010C1	1011	R2 -	7 N/A		
AA82F	20	GY	TXL	3768003C1	3768010C1	1011	R2 -	6 N/A		
AA82J	16	GY	TXL	3768004C1	3768010C1	1011	R2 -	7A N/A		
AA82M	20	GY	TXL	3768003C1	3768010C1	1011	R2 -	5 N/A		
AG14AB	10	RD	TXL	3768009C1	3768010C1	1011	R3 -	0 N/A		
AG14AS	18	RD	TXL	3768003C1	3768010C1	1011	R3 -	5 N/A		
AG14N	10	RD	TXL	3768009C1	3768010C1	1011	R3 -	7 N/A		
AL14AB	10	RD	TXL	3768009C1	3768010C1	1011	R3 -	0 N/A		
AL14AS	18	RD	TXL	3768003C1	3768010C1	1011	R3 -	5 N/A		
AL14N	10	RD	TXL	3768009C1	3768010C1	1011	R3 -	7 N/A		
EE11-GDB	18	WH	TXL	3768003C1	3768010C1	1011	R3 -	6 N/A		
GJ11-GDB	18	WH	TXL	3768003C1	3768010C1	1011	R3 -	6 N/A		
BC63J	20	DKBL	TXL	3768003C1	3768010C1	1011	R3 -	5 N/A		
BC63JJ	20	GY	TXL	3768003C1	3768010C1	1011	R3 -	6 N/A		
BC63JV	18	GY	GXL	3768007C1	3768010C1	1011	R3 -	0 N/A		
EL63JA	18	DKBL	TXL	3768007C1	3768010C1	1011	R3 -	7 N/A		
EL63JB	18	DKBL	TXL	3768007C1	3768010C1	1011	R3 -	7 N/A		
MP63JA	18	DKBL	TXL	3768007C1	3768010C1	1011	R3 -	7 N/A		
DR19	14	GY	TXL	3768008C1	3768010C1	1011	R4 -	0 N/A		
DR19-GB	18	WH	TXL	3768003C1	3768010C1	1011	R4 -	6 N/A		
DR19A	18	GY	TXL	3768003C1	3768010C1	1011	R4 -	5 N/A		
DR19V	14	GY	TXL	3768008C1	3768010C1	1011	R4 -	7 N/A		
3Y12A	20	LTBL	TXL	3768003C1	3768010C1	1011	R4 -	5 N/A		
6K9LCA	20	GY	TXL	3768003C1	3768010C1	1011	R4 -	6 N/A		
AB12M	10	LTBL	GXL	3768009C1	3768010C1	1011	R4 -	7 N/A		
AL14BB	10	RD	TXL	3768009C1	3768010C1	1011	R4 -	0 N/A		
AV12	20	LTBL	TXL	3768003C1	3768010C1	1011	R4 -	5 N/A		
AW12A	20	LTBL	TXL	3768003C1	3768010C1	1011	R4 -	5 N/A		
AY12A	18	LTBL	TXL	3768003C1	3768010C1	1011	R4 -	5 N/A		
NJ14BB	10	RD	TXL	3768009C1	3768010C1	1011	R4 -	0 N/A		
AA82H	18	GY	TXL	3768003C1	3768010C1	1011	R5 -	6 N/A		
AA82L	16	GY	TXL	3768004C1	3768010C1	1011	R5 -	7A N/A		
AA82N	18	GY	TXL	3768003C1	3768010C1	1011	R5 -	5 N/A		

Circuit Number	Gauge	Color	Insulation	Terminal / Splice Number	Connector Part number	Connector Number	Cavity	Seal/Sleeve	Lock 1	Lock 2
AA82P	16	GY	TXL	3768007C1	3768010C1	1011	R5 -	0 N/A		
YG82K	16	GY	TXL	3768007C1	3768010C1	1011	R5 -	7 N/A		
YH82K	16	GY	TXL	3768007C1	3768010C1	1011	R5 -	7 N/A		
AA82H	20	GY	TXL	3768003C1	3768010C1	1011	R5 -	6 N/A		
AA82L	16	GY	TXL	3768004C1	3768010C1	1011	R5 -	7A N/A		
AA82N	20	GY	TXL	3768003C1	3768010C1	1011	R5 -	5 N/A		
AA82P	16	GY	TXL	3768007C1	3768010C1	1011	R5 -	0 N/A		
YG82K	16	GY	TXL	3768007C1	3768010C1	1011	R5 -	7 N/A		
YH82K	16	GY	TXL	3768007C1	3768010C1	1011	R5 -	7 N/A		
AB12M	12	LTBL	TXL	3768009C1	3768010C1	1011	R6 -	7 N/A		
AG14AH	12	RD	TXL	3768009C1	3768010C1	1011	R6 -	0 N/A		
AH12L	18	LTBL	TXL	3768003C1	3768010C1	1011	R6 -	5 N/A		
AL14AH	12	RD	TXL	3768009C1	3768010C1	1011	R6 -	0 N/A		
AM12L	18	LTBL	TXL	3768003C1	3768010C1	1011	R6 -	5 N/A		
EE11-GDD	18	WH	TXL	3768003C1	3768010C1	1011	R6 -	6 N/A		
GJ11-GDD	18	WH	TXL	3768003C1	3768010C1	1011	R6 -	6 N/A		
DR19	14	GY	TXL	3768008C1	3768010C1	1011	R6 -	7 N/A		
DR19-GB	20	WH	TXL	3768003C1	3768010C1	1011	R6 -	6 N/A		
DR19A	20	GY	TXL	3768003C1	3768010C1	1011	R6 -	5 N/A		
DR19V	14	GY	TXL	3768008C1	3768010C1	1011	R6 -	0 N/A		
AM12BB	18	LTBL	TXL	3768003C1	3768010C1	1012	R1 -	6 N/A		
ER94T	12	GY	TXL	3768009C1	3768010C1	1012	R1 -	7 N/A		
ER94TV	12	GY	TXL	3768009C1	3768010C1	1012	R1 -	0 N/A		
FB94TT3	12	GY	TXL	3768009C1	3768010C1	1012	R1 -	7 N/A		
FB94TW	12	GY	TXL	3768009C1	3768010C1	1012	R1 -	0 N/A		
FR94TB	12	GY	TXL	3768009C1	3768010C1	1012	R1 -	7 N/A		
FR94TV1	16	GY	TXL	3768007C1	3768010C1	1012	R1 -	0 N/A		
HF94TT1	12	GY	TXL	3768009C1	3768010C1	1012	R1 -	7 N/A		
HF94TV	12	GY	TXL	3768009C1	3768010C1	1012	R1 -	0 N/A		
HG94TT1	12	GY	TXL	3768009C1	3768010C1	1012	R1 -	7 N/A		
HG94TV	12	GY	TXL	3768009C1	3768010C1	1012	R1 -	0 N/A		
YV13-GFF	18	WH	TXL	3768003C1	3768010C1	1012	R1 -	5 N/A		
YY13-GFF	18	WH	TXL	3768003C1	3768010C1	1012	R1 -	5 N/A		
YY13FF	18	PK	TXL	3768003C1	3768010C1	1012	R1 -	6 N/A		
ER94T	12	GY	TXL	3768009C1	3768010C1	1012	R1 -	7 N/A		
ER94TV	12	GY	TXL	3768009C1	3768010C1	1012	R1 -	0 N/A		
FB94TT3	12	GY	TXL	3768009C1	3768010C1	1012	R1 -	7 N/A		
FB94TW	12	GY	TXL	3768009C1	3768010C1	1012	R1 -	0 N/A		
FR94TB	12	GY	TXL	3768009C1	3768010C1	1012	R1 -	7 N/A		
FR94TV1	16	GY	TXL	3768007C1	3768010C1	1012	R1 -	0 N/A		
HF94TT1	12	GY	TXL	3768009C1	3768010C1	1012	R1 -	7 N/A		
HF94TV	12	GY	TXL	3768009C1	3768010C1	1012	R1 -	0 N/A		
HG94TT1	12	GY	TXL	3768009C1	3768010C1	1012	R1 -	7 N/A		
HG94TV	12	GY	TXL	3768009C1	3768010C1	1012	R1 -	0 N/A		
YY13-GFF	20	WH	TXL	3768003C1	3768010C1	1012	R1 -	5 N/A		
YY13FF	18	PK	TXL	3768003C1	3768010C1	1012	R1 -	6 N/A		
3T71A	16	OR	TXL	3768007C1	3768010C1	1012	R2 -	0 N/A		
3T71B	18	OR	TXL	3768003C1	3768010C1	1012	R2 -	5 N/A		
3T71BA	16	OR	TXL	3768007C1	3768010C1	1012	R2 -	7 N/A		
3T92#165	18	OR	TXL	3768003C1	3768010C1	1012	R2 -	6 N/A		
BJ71	16	OR	TXL	3768007C1	3768010C1	1012	R2 -	0 N/A		
BJ71BA	16	OR	TXL	3768007C1	3768010C1	1012	R2 -	7 N/A		

Circuit Number	Gauge	Color	Insulation	Terminal / Splice Number	Connector Part number	Connector Number	Cavity	Seal/Sleeve	Lock 1	Lock 2
BJ92R1	20	TN	GXL	3768003C1	3768010C1	1012	R2 -	6 N/A		
BJ92R2	20	TN	GXL	3768003C1	3768010C1	1012	R2 -	5 N/A		
BK71	16	OR	TXL	3768007C1	3768010C1	1012	R2 -	0 N/A		
BK71A	16	OR	TXL	3768007C1	3768010C1	1012	R2 -	7 N/A		
BK92R1	20	TN	GXL	3768003C1	3768010C1	1012	R2 -	6 N/A		
BK92R2	20	TN	GXL	3768003C1	3768010C1	1012	R2 -	5 N/A		
GM71A	16	OR	TXL	3768007C1	3768010C1	1012	R2 -	0 N/A		
GM71B	18	OR	TXL	3768003C1	3768010C1	1012	R2 -	5 N/A		
GM71BD	16	OR	TXL	3768007C1	3768010C1	1012	R2 -	7 N/A		
GM92#165	18	OR	TXL	3768003C1	3768010C1	1012	R2 -	6 N/A		
3T71A	16	OR	TXL	3768007C1	3768010C1	1012	R2 -	0 N/A		
3T71B	20	OR	TXL	3768003C1	3768010C1	1012	R2 -	5 N/A		
3T71BA	16	OR	TXL	3768007C1	3768010C1	1012	R2 -	7 N/A		
3T92#165A	18	TN	TXL	3768003C1	3768010C1	1012	R2 -	6 N/A		
BJ71	16	OR	TXL	3768007C1	3768010C1	1012	R2 -	0 N/A		
BJ71BA	16	OR	TXL	3768007C1	3768010C1	1012	R2 -	7 N/A		
BJ92R1	18	TN	TXL	3768003C1	3768010C1	1012	R2 -	6 N/A		
BJ92R2	18	TN	TXL	3768003C1	3768010C1	1012	R2 -	5 N/A		
BK71	16	OR	TXL	3768007C1	3768010C1	1012	R2 -	0 N/A		
BK71A	16	OR	TXL	3768007C1	3768010C1	1012	R2 -	7 N/A		
BK92R1	18	TN	TXL	3768003C1	3768010C1	1012	R2 -	6 N/A		
BK92R2	18	TN	TXL	3768003C1	3768010C1	1012	R2 -	5 N/A		
GM71A	16	OR	TXL	3768007C1	3768010C1	1012	R2 -	0 N/A		
GM71B	20	OR	TXL	3768003C1	3768010C1	1012	R2 -	5 N/A		
GM71BD	16	OR	TXL	3768007C1	3768010C1	1012	R2 -	7 N/A		
GM92#165A	18	TN	TXL	3768003C1	3768010C1	1012	R2 -	6 N/A		
AA11-GV	18	WH	TXL	3768003C1	3768010C1	1012	R3 -	6 N/A		
AG14AD	12	RD	TXL	3768009C1	3768010C1	1012	R3 -	0 N/A		
AH13K	18	PK	TXL	3768003C1	3768010C1	1012	R3 -	5 N/A		
AL14AD	12	RD	TXL	3768009C1	3768010C1	1012	R3 -	0 N/A		
AM13K	18	PK	TXL	3768003C1	3768010C1	1012	R3 -	5 N/A		
YV13R	12	PK	TXL	3768009C1	3768010C1	1012	R3 -	7 N/A		
YY13R	12	PK	TXL	3768009C1	3768010C1	1012	R3 -	7 N/A		
JA78	16	LTGN	TXL	3768007C1	3768010C1	1012	R3 -	7 N/A		
JA78RC	20	LTGN	TXL	3768003C1	3768010C1	1012	R3 -	5 N/A		
JA78RP	16	LTGN	TXL	3768007C1	3768010C1	1012	R3 -	0 N/A		
JA79-G	20	WH	TXL	3768003C1	3768010C1	1012	R3 -	6 N/A		
JL116U	20	GY	TXL	3768003C1	3768010C1	1012	R3 -	6 N/A		
JL116U-G	20	WH	TXL	3768003C1	3768010C1	1012	R3 -	5 N/A		
JL116UB	18	GY	TXL	3768007C1	3768010C1	1012	R3 -	0 N/A		
JL116UZ	18	GY	TXL	3768007C1	3768010C1	1012	R3 -	7 N/A		
CC14SC	12	RD	TXL	3768009C1	3768010C1	1012	R4 -	0 N/A		
CC72	18	OR	TXL	3768003C1	3768010C1	1012	R4 -	5 N/A		
CC72-GA	18	WH	TXL	3768003C1	3768010C1	1012	R4 -	6 N/A		
CC72A	12	OR	TXL	3768009C1	3768010C1	1012	R4 -	7 N/A		
FR72-GB3	18	WH	TXL	3768003C1	3768010C1	1012	R4 -	5 N/A		
FR72EE	18	OR	TXL	3768003C1	3768010C1	1012	R4 -	6 N/A		
FR94TA	12	GY	TXL	3768009C1	3768010C1	1012	R4 -	7 N/A		
FR94TV2	16	GY	TXL	3768007C1	3768010C1	1012	R4 -	0 N/A		
3Y12BB	20	LTBL	TXL	3768003C1	3768010C1	1012	R4 -	6 N/A		
AY12BB	18	LTBL	TXL	3768003C1	3768010C1	1012	R4 -	6 N/A		
BG12-GCL	20	WH	TXL	3768003C1	3768010C1	1012	R4 -	5 N/A		

Circuit Number	Gauge	Color	Insulation	Terminal / Splice Number	Connector Part number	Connector Number	Cavity	Seal/Sleeve	Lock 1	Lock 2
BG12BB	16	LTBL	TXL	3768007C1	3768010C1	1012	R4 -	7 N/A		
BG14BA	16	RD	TXL	3768007C1	3768010C1	1012	R4 -	0 N/A		
BL12-GCL	20	WH	TXL	3768003C1	3768010C1	1012	R4 -	5 N/A		
BL12BB	16	LTBL	TXL	3768007C1	3768010C1	1012	R4 -	7 N/A		
BL14BA	16	RD	TXL	3768007C1	3768010C1	1012	R4 -	0 N/A		
CC14SC	12	RD	TXL	3768009C1	3768010C1	1012	R4 -	0 N/A		
CC72	20	OR	TXL	3768003C1	3768010C1	1012	R4 -	5 N/A		
CC72-GA	20	WH	TXL	3768003C1	3768010C1	1012	R4 -	6 N/A		
CC72A	12	OR	TXL	3768009C1	3768010C1	1012	R4 -	7 N/A		
FR72-GB3	20	WH	TXL	3768003C1	3768010C1	1012	R4 -	5 N/A		
FR72EE	20	OR	TXL	3768003C1	3768010C1	1012	R4 -	6 N/A		
FR94TA	12	GY	TXL	3768009C1	3768010C1	1012	R4 -	7 N/A		
FR94TV2	16	GY	TXL	3768007C1	3768010C1	1012	R4 -	0 N/A		
EE11-GDA	18	GY	TXL	3768007C1	3768010C1	1012	R5 -	7 N/A		
EE11-GDE	18	WH	TXL	3768007C1	3768010C1	1012	R5 -	0 N/A		
EE11-GDF	18	WH	TXL	3768003C1	3768010C1	1012	R5 -	6 N/A		
EE14DA	18	RD	TXL	3768003C1	3768010C1	1012	R5 -	5 N/A		
BG70-GTA	18	WH	TXL	3768003C1	3768010C1	1012	R5 -	5 N/A		
BG70BBA	12	RD	TXL	3768009C1	3768010C1	1012	R5 -	7 N/A		
BG70CB	18	RD	TXL	3768003C1	3768010C1	1012	R5 -	6 N/A		
BG70JA	12	RD	TXL	3768009C1	3768010C1	1012	R5 -	0 N/A		
BL70-GT	18	WH	TXL	3768003C1	3768010C1	1012	R5 -	5 N/A		
BL70BB	12	RD	TXL	3768009C1	3768010C1	1012	R5 -	7 N/A		
BL70C	18	RD	TXL	3768003C1	3768010C1	1012	R5 -	6 N/A		
BL70J	12	RD	TXL	3768009C1	3768010C1	1012	R5 -	0 N/A		
DD78	16	LTGN	TXL	3768007C1	3768010C1	1012	R5 -	7 N/A		
DD78-RG	20	WH	TXL	3768003C1	3768010C1	1012	R5 -	6 N/A		
DD78RC	20	LTGN	TXL	3768003C1	3768010C1	1012	R5 -	5 N/A		
DD78RP	16	LTGN	TXL	3768007C1	3768010C1	1012	R5 -	0 N/A		
AA11-GU	18	WH	TXL	3768003C1	3768010C1	1012	R6 -	6 N/A		
AG14AC	12	RD	TXL	3768009C1	3768010C1	1012	R6 -	0 N/A		
AH13M	18	PK	TXL	3768003C1	3768010C1	1012	R6 -	5 N/A		
AL14AC	12	RD	TXL	3768009C1	3768010C1	1012	R6 -	0 N/A		
AM13M	18	PK	TXL	3768003C1	3768010C1	1012	R6 -	5 N/A		
YV13U	12	PK	TXL	3768009C1	3768010C1	1012	R6 -	7 N/A		
YY13U	12	PK	TXL	3768009C1	3768010C1	1012	R6 -	7 N/A		
JL116L	20	GY	TXL	3768003C1	3768010C1	1012	R6 -	6 N/A		
JL116L-G	20	WH	TXL	3768003C1	3768010C1	1012	R6 -	5 N/A		
JL116LB	18	GY	TXL	3768007C1	3768010C1	1012	R6 -	0 N/A		
JL116LZ	18	GY	TXL	3768007C1	3768010C1	1012	R6 -	7 N/A		
YV13R	12	PK	TXL	3768014C	3768015C1	1013	1	N/A		
YY13R	12	PK	TXL	3768157C	3768015C1	1013	1	N/A		
YV13S	12	PK	TXL	3768014C1	3768015C1	1013	4	N/A		
YY13S	12	PK	TXL	3768014C1	3768015C1	1013	4	N/A		
AA87C	18	GY	TXL	3768012C1	3768015C1	1013	5	N/A		
6F13E	16	PK	TXL	3768013C1	3768015C1	1013	6	N/A		
YY13FF	18	PK	TXL	3768012C1	3768015C1	1013	7	N/A		
CP98F	20	TN	TXL	3768012C1	3768015C1	1013	8	N/A		
CT98F	20	TN	TXL	3768012C1	3768015C1	1013	8	N/A		
MB98F	20	TN	TXL	3768012C1	3768015C1	1013	8	N/A		
MJ98F	20	TN	TXL	3768012C1	3768015C1	1013	8	N/A		
YV13T	12	PK	TXL	3768014C1	3768015C1	1013	9	N/A		

Circuit Number	Gauge	Color	Insulation	Terminal / Splice Number	Connector Part number	Connector Number	Cavity	Seal/Sleeve	Lock 1	Lock 2
YY13T	12	PK	TXL	3768157C1	3768015C1	1013	9	N/A		
YV13S	12	PK	TXL	3768014C1	3768015C1	1013	12	N/A		
YY13S	12	PK	TXL	3768014C1	3768015C1	1013	12	N/A		
LM971G	20	PK	TXL	3768012C1	3768015C1	1013	13	N/A		
AA13D	18	PK	TXL	3768012C1	3768015C1	1013	14	N/A		
3T71	16	OR	TXL	3768013C1	3768015C1	1013	15	N/A		
BJ71	16	OR	TXL	3768013C1	3768015C1	1013	15	N/A		
BK71	16	OR	TXL	3768013C1	3768015C1	1013	15	N/A		
BL71A	16	OR	TXL	3768013C1	3768015C1	1013	15	N/A		
BP71A	16	OR	TXL	3768013C1	3768015C1	1013	15	N/A		
EY71A	18	OR	TXL	3768012C1	3768015C1	1013	15	N/A		
GM71	16	OR	TXL	3768013C1	3768015C1	1013	15	N/A		
HC105	18	LTGN	TXL	3768012C1	3768015C1	1013	16	N/A		
YV13T	12	PK	TXL	3768014C1	3768015C1	1013	17	N/A		
YY13T	12	PK	TXL	3768157C1	3768015C1	1013	17	N/A		
YJ13A	16	PK	TXL	3768013C1	3768015C1	1013	21	N/A		
AA13EA	18	PK	TXL	3768012C1	3768015C1	1013	22	N/A		
DD78RP	16	LTGN	TXL	3768013C	3768015C1	1013	23	N/A		
JA78RP	16	LTGN	TXL	3768013C	3768015C1	1013	23	N/A		
5E13AB	18	PK	TXL	3768012C1	3768015C1	1013	24	N/A		
YV13V	12	PK	TXL	3768014C1	3768015C1	1013	25	N/A		
YY13V	12	PK	TXL	3768157C1	3768015C1	1013	25	N/A		
YV13X	12	PK	TXL	3768014C1	3768015C1	1013	28	N/A		
YY13X	12	PK	TXL	3768014C1	3768015C1	1013	28	N/A		
ZK13A	18	PK	TXL	3768012C1	3768015C1	1013	29	N/A		
JL116M	18	GY	TXL	3768012C1	3768015C1	1013	31	N/A		
KN116M	18	GY	TXL	3768012C1	3768015C1	1013	31	N/A		
YV13X	12	PK	TXL	3768014C1	3768015C1	1013	36	N/A		
YY13X	12	PK	TXL	3768014C1	3768015C1	1013	36	N/A		
3A94V	14	GY	GXL	3768014C1	3768015C1	1013	37	N/A		
GS94V	14	GY	GXL	3768014C1	3768015C1	1013	37	N/A		
XY94V	18	GY	TXL	3768012C1	3768015C1	1013	37	N/A		
3F13AA	16	PK	TXL	3768013C1	3768015C1	1013	38	N/A		
YD67TA	18	PK	TXL	3768012C1	3768015C1	1013	39	N/A		
2V13COG2	16	PK	TXL	3768013C1	3768015C1	1013	40	N/A		
CS67A	16	PK	TXL	3768013C1	3768015C1	1013	40	N/A		
RV13COG2	16	PK	TXL	3768013C1	3768015C1	1013	40	N/A		
YH13A	16	PK	TXL	3768013C1	3768015C1	1013	40	N/A		
YK67A	16	PK	TXL	3768013C1	3768015C1	1013	40	N/A		
CW11-GFU	20	WH	TXL	3768003C1	3768010C1	1013	R1 -	6 N/A		
CW14FU	16	RD	TXL	3768007C1	3768010C1	1013	R1 -	0 N/A		
CW58B	20	BN	TXL	3768003C1	3768010C1	1013	R1 -	5 N/A		
CW58C	16	BN	TXL	3768007C1	3768010C1	1013	R1 -	7 N/A		
CX11-GFU	20	WH	TXL	3768003C1	3768010C1	1013	R1 -	6 N/A		
CX14FU	16	RD	TXL	3768007C1	3768010C1	1013	R1 -	0 N/A		
CX58B	20	BN	TXL	3768003C1	3768010C1	1013	R1 -	5 N/A		
CX58C	16	BN	TXL	3768007C1	3768010C1	1013	R1 -	7 N/A		
EM13-GBM	20	WH	TXL	3768003C1	3768010C1	1013	R1 -	6 N/A		
EM13BLT	18	PK	TXL	3768003C1	3768010C1	1013	R1 -	5 N/A		
EM14BLT	14	RD	TXL	3768008C1	3768010C1	1013	R1 -	0 N/A		
EM58BLT	14	BN	TXL	3768008C1	3768010C1	1013	R1 -	7 N/A		
GN13-GBM	20	WH	TXL	3768003C1	3768010C1	1013	R1 -	6 N/A		

Circuit Number	Gauge	Color	Insulation	Terminal / Splice Number	Connector Part number	Connector Number	Cavity	Seal/Sleeve	Lock 1	Lock 2
GN13BLT	18	PK	TXL	3768003C1	3768010C1	1013	R1 -	5 N/A		
GN14BLT	14	RD	TXL	3768008C1	3768010C1	1013	R1 -	0 N/A		
GN58BLT	16	BN	TXL	3768007C1	3768010C1	1013	R1 -	7 N/A		
CD14-GSB	20	WH	TXL	3768003C1	3768010C1	1013	R2 -	6 N/A		
CD14SAB	18	RD	TXL	3768003C1	3768010C1	1013	R2 -	5 N/A		
CD14SAC	12	RD	TXL	3768009C1	3768010C1	1013	R2 -	0 N/A		
CE14-GSB	20	WH	TXL	3768003C1	3768010C1	1013	R2 -	6 N/A		
CE14SAB	18	RD	TXL	3768003C1	3768010C1	1013	R2 -	5 N/A		
CE14SAC	12	RD	TXL	3768009C1	3768010C1	1013	R2 -	0 N/A		
GB14SAG	12	LTGN	TXL	3768009C1	3768010C1	1013	R2 -	7 N/A		
GD14SAH	14	LTBL	TXL	3768008C1	3768010C1	1013	R2 -	7 N/A		
GF14SAD	12	LTGN	TXL	3768009C1	3768010C1	1013	R2 -	7 N/A		
GH14SAF	14	LTBL	TXL	3768008C1	3768010C1	1013	R2 -	7 N/A		
DY54-GXB	20	WH	TXL	3768003C1	3768010C1	1013	R4 -	5 N/A		
DY54XB	16	BN	TXL	3768007C1	3768010C1	1013	R4 -	7 N/A		
DY54XD	20	BN	TXL	3768003C1	3768010C1	1013	R4 -	6 N/A		
DY54XV	16	BN	TXL	3768007C1	3768010C1	1013	R4 -	0 N/A		
PA54-GXB	20	WH	TXL	3768003C1	3768010C1	1013	R4 -	5 N/A		
PA54XB	16	BN	TXL	3768007C1	3768010C1	1013	R4 -	7 N/A		
PA54XD	20	BN	TXL	3768003C1	3768010C1	1013	R4 -	6 N/A		
PA54XV	16	BN	TXL	3768007C1	3768010C1	1013	R4 -	0 N/A		
CE14-GSD	20	WH	TXL	3768003C1	3768010C1	1013	R5 -	6 N/A		
CE14SBB	18	RD	TXL	3768003C1	3768010C1	1013	R5 -	5 N/A		
CE14SBC	12	RD	TXL	3768009C1	3768010C1	1013	R5 -	0 N/A		
CE14SBD	12	LTGN	TXL	3768009C1	3768010C1	1013	R5 -	7 N/A		
AG14AU	12	RD	TXL	3768014C1	3768015C1	1014	1	N/A		
AL14AU	12	RD	TXL	3768014C1	3768015C1	1014	1	N/A		
AH12J	18	LTBL	TXL	3768012C1	3768015C1	1014	2	N/A		
AM12J	18	LTBL	TXL	3768012C1	3768015C1	1014	2	N/A		
AH13J	18	PK	TXL	3768012C1	3768015C1	1014	3	N/A		
AM13J	18	PK	TXL	3768012C1	3768015C1	1014	3	N/A		
EE11-GDH	18	WH	TXL	3768012C1	3768015C1	1014	4	N/A		
GJ11-GDE	18	WH	TXL	3768012C1	3768015C1	1014	4	N/A		
AG14AV	12	RD	TXL	3768014C1	3768015C1	1014	5	N/A		
AL14AV	12	RD	TXL	3768014C1	3768015C1	1014	5	N/A		
AH12L	18	LTBL	TXL	3768012C1	3768015C1	1014	6	N/A		
AM12L	18	LTBL	TXL	3768012C1	3768015C1	1014	6	N/A		
AH13L	18	PK	TXL	3768012C1	3768015C1	1014	7	N/A		
AM13L	18	PK	TXL	3768012C1	3768015C1	1014	7	N/A		
EE11-GDJ	18	WH	TXL	3768012C1	3768015C1	1014	8	N/A		
GJ11-GDA	18	WH	TXL	3768012C1	3768015C1	1014	8	N/A		
YV13P	12	PK	TXL	3768014C1	3768015C1	1014	9	N/A		
YY13P	12	PK	TXL	3768157C1	3768015C1	1014	9	N/A		
YV13N	12	PK	TXL	3768014C	3768015C1	1014	12	N/A		
YY13N	12	PK	TXL	3768014C	3768015C1	1014	12	N/A		
DK13TRIB	16	PK	GXL	3768013C1	3768015C1	1014	13	N/A		
3S13UC	20	PK	TXL	3768012C1	3768015C1	1014	14	N/A		
JY13	18	PK	TXL	3768012C1	3768015C1	1014	14	N/A		
RW22AA	16	PK	TXL	3768013C1	3768015C1	1014	15	N/A		
CA13UA	20	PK	TXL	3768012C1	3768015C1	1014	16	N/A		
CB13U	18	PK	TXL	3768012C1	3768015C1	1014	16	N/A		
CL13U	18	PK	TXL	3768012C1	3768015C1	1014	16	N/A		

Circuit Number	Gauge	Color	Insulation	Terminal / Splice Number	Connector Part number	Connector Number	Cavity	Seal/Sleeve	Lock 1	Lock 2
YV13P	12	PK	TXL	3768014C1	3768015C1	1014	17	N/A		
YY13P	12	PK	TXL	3768157C1	3768015C1	1014	17	N/A		
YV13W	12	PK	TXL	3768014C1	3768015C1	1014	25	N/A		
YY13W	12	PK	TXL	3768157C1	3768015C1	1014	25	N/A		
YV13Y	12	PK	TXL	3768014C1	3768015C1	1014	28	N/A		
YY13Y	12	PK	TXL	3768014C1	3768015C1	1014	28	N/A		
BZ39	16	GY	TXL	3768013C1	3768015C1	1014	29	N/A		
RT39	16	GY	TXL	3768013C1	3768015C1	1014	29	N/A		
RT39A	16	GY	TXL	3768013C1	3768015C1	1014	30	N/A		
YC67A	18	PK	TXL	3768012C1	3768015C1	1014	31	N/A		
CF13SD1	18	PK	TXL	3768012C1	3768015C1	1014	32	N/A		
CG13SD1	18	PK	TXL	3768012C1	3768015C1	1014	32	N/A		
CK13EE	18	PK	TXL	3768012C1	3768015C1	1014	32	N/A		
CP13EE	18	PK	TXL	3768012C1	3768015C1	1014	32	N/A		
CT13EE	18	PK	TXL	3768012C1	3768015C1	1014	32	N/A		
DL13EE	18	PK	TXL	3768012C1	3768015C1	1014	32	N/A		
JV13B	18	PK	TXL	3768012C1	3768015C1	1014	32	N/A		
KC13EE	16	PK	TXL	3768013C1	3768015C1	1014	32	N/A		
KL13B	18	PK	TXL	3768012C1	3768015C1	1014	32	N/A		
MB13EE	16	PK	TXL	3768013C1	3768015C1	1014	32	N/A		
PH13EE	18	PK	TXL	3768012C1	3768015C1	1014	32	N/A		
RH13EE	18	PK	TXL	3768012C1	3768015C1	1014	32	N/A		
SJ13CE	16	PK	TXL	3768013C1	3768015C1	1014	32	N/A		
YV13Y	12	PK	TXL	3768014C1	3768015C1	1014	36	N/A		
YY13Y	12	PK	TXL	3768014C1	3768015C1	1014	36	N/A		
AZ13A	16	PK	GXL	3768013C1	3768015C1	1014	37	N/A		
GY92#163	16	PK	TXL	3768013C1	3768015C1	1014	37	N/A		
DW13Z	16	PK	TXL	3768013C1	3768015C1	1014	38	N/A		
EH97F	16	VT	TXL	3768013C1	3768015C1	1014	40	N/A		
BB52AB	18	YL	TXL	3768003C1	3768010C1	1014	R1 -	7A N/A		
BB53AB	20	YL	TXL	3768003C1	3768010C1	1014	R1 -	5 N/A		
BB53AC	18	YL	TXL	3768007C1	3768010C1	1014	R1 -	7 N/A		
CF50S	18	YL	TXL	3768007C1	3768010C1	1014	R1 -	0 N/A		
CF53-G	20	WH	TXL	3768003C1	3768010C1	1014	R1 -	6 N/A		
CG50S	18	YL	TXL	3768007C1	3768010C1	1014	R1 -	0 N/A		
CG53-G	20	WH	TXL	3768003C1	3768010C1	1014	R1 -	6 N/A		
AZ14A	18	RD	TXL	3768007C1	3768010C1	1014	R2 -	0 N/A		
AZ17B	18	PK	TXL	3768007C1	3768010C1	1014	R2 -	7 N/A		
AZ92-GC	20	WH	TXL	3768003C1	3768010C1	1014	R2 -	6 N/A		
AZ92B	18	TN	TXL	3768003C1	3768010C1	1014	R2 -	5 N/A		
6K166BB	20	LTGN	TXL	3768003C1	3768010C1	1014	R4 -	5 N/A		
6K9LCC	20	GY	TXL	3768003C1	3768010C1	1014	R4 -	6 N/A		
AL14AS	10	RD	TXL	3768009C1	3768010C1	1014	R4 -	0 N/A		
NJ14AS	10	RD	TXL	3768009C1	3768010C1	1014	R4 -	0 N/A		
YY13N	12	PK	TXL	3768009C1	3768010C1	1014	R4 -	7 N/A		
MD92#103	18	TN	TXL	3768007C1	3768010C1	1014	R5 -	7 N/A		
MD92#117	18	TN	TXL	3768007C1	3768010C1	1014	R5 -	0 N/A		
MD92-GD	18	WH	TXL	3768003C1	3768010C1	1014	R5 -	5 N/A		
MD92A	18	TN	TXL	3768003C1	3768010C1	1014	R5 -	6 N/A		
YY13PA	12	PK	TXL	3768157C1	3768015C1	1015	2	N/A		
CF13SD1	18	PK	TXL	3768012C1	3768015C1	1015	5	N/A		
CG13SD1	18	PK	TXL	3768012C1	3768015C1	1015	5	N/A		

Circuit Number	Gauge	Color	Insulation	Terminal / Splice Number	Connector Part number	Connector Number	Cavity	Seal/Sleeve	Lock 1	Lock 2
CK13EE	18	PK	TXL	3768012C1	3768015C1	1015	5	N/A		
CP13EE	18	PK	TXL	3768012C1	3768015C1	1015	5	N/A		
CT13EE	18	PK	TXL	3768012C1	3768015C1	1015	5	N/A		
DL13EE	18	PK	TXL	3768012C1	3768015C1	1015	5	N/A		
JV13B	18	PK	TXL	3768012C1	3768015C1	1015	5	N/A		
KC13EE	16	PK	TXL	3768013C1	3768015C1	1015	5	N/A		
KL13B	18	PK	TXL	3768012C1	3768015C1	1015	5	N/A		
MB13EE	16	PK	TXL	3768013C1	3768015C1	1015	5	N/A		
PH13EE	18	PK	TXL	3768012C1	3768015C1	1015	5	N/A		
RH13EE	18	PK	TXL	3768012C1	3768015C1	1015	5	N/A		
SJ13CE	16	PK	TXL	3768013C1	3768015C1	1015	5	N/A		
AA87C	18	GY	TXL	3768012C1	3768015C1	1015	6	N/A		
YY13FF	18	PK	TXL	3768012C1	3768015C1	1015	7	N/A		
CP98F	20	TN	TXL	3768012C1	3768015C1	1015	8	N/A		
CT98F	20	TN	TXL	3768012C1	3768015C1	1015	8	N/A		
MB98F	20	TN	TXL	3768012C1	3768015C1	1015	8	N/A		
MJ98F	20	TN	TXL	3768012C1	3768015C1	1015	8	N/A		
YY13PB	12	PK	TXL	3768157C1	3768015C1	1015	10	N/A		
LM971G	20	PK	TXL	3768012C1	3768015C1	1015	13	N/A		
HC105	18	LTGN	TXL	3768012C1	3768015C1	1015	14	N/A		
3T71	16	OR	TXL	3768013C1	3768015C1	1015	15	N/A		
BJ71	16	OR	TXL	3768013C1	3768015C1	1015	15	N/A		
BK71	16	OR	TXL	3768013C1	3768015C1	1015	15	N/A		
BP71AA	16	OR	TXL	3768013C1	3768015C1	1015	15	N/A		
EY71BB	16	OR	TXL	3768013C1	3768015C1	1015	15	N/A		
GM71	16	OR	TXL	3768013C1	3768015C1	1015	15	N/A		
AA13D	18	PK	TXL	3768012C1	3768015C1	1015	16	N/A		
YY13PC	12	PK	TXL	3768157C1	3768015C1	1015	18	N/A		
RW22AA	16	PK	TXL	3768013C1	3768015C1	1015	21	N/A		
DD78RP	16	LTGN	TXL	3768013C	3768015C1	1015	22	N/A		
JA78RP	16	LTGN	TXL	3768013C	3768015C1	1015	22	N/A		
AA13EA	18	PK	TXL	3768012C1	3768015C1	1015	23	N/A		
AZ13A	16	PK	GXL	3768013C1	3768015C1	1015	24	N/A		
GY92#163A	16	PK	TXL	3768013C1	3768015C1	1015	24	N/A		
YY13PD	12	PK	TXL	3768157C1	3768015C1	1015	26	N/A		
YC67A	18	PK	TXL	3768012C1	3768015C1	1015	29	N/A		
RT39A	16	GY	TXL	3768013C1	3768015C1	1015	30	N/A		
JL116M	18	GY	TXL	3768012C1	3768015C1	1015	31	N/A		
KN116M	18	GY	TXL	3768012C1	3768015C1	1015	31	N/A		
EH97F	16	VT	TXL	3768013C1	3768015C1	1015	32	N/A		
YY13PE	12	PK	TXL	3768157C1	3768015C1	1015	34	N/A		
3A94V	14	GY	GXL	3768014C1	3768015C1	1015	37	N/A		
GS94V	14	GY	GXL	3768014C1	3768015C1	1015	37	N/A		
XY94V	18	GY	TXL	3768012C1	3768015C1	1015	37	N/A		
BZ39	16	GY	TXL	3768013C1	3768015C1	1015	38	N/A		
RT39	16	GY	TXL	3768013C1	3768015C1	1015	38	N/A		
YD67TA	18	PK	TXL	3768012C1	3768015C1	1015	39	N/A		
2V13COG2	16	PK	TXL	3768013C1	3768015C1	1015	40	N/A		
CS67A	16	PK	TXL	3768013C1	3768015C1	1015	40	N/A		
JY13	18	PK	TXL	3768012C1	3768015C1	1015	40	N/A		
RV13COG2	16	PK	TXL	3768013C1	3768015C1	1015	40	N/A		
SG13COG	16	PK	TXL	3768013C1	3768015C1	1015	40	N/A		

Circuit Number	Gauge	Color	Insulation	Terminal / Splice Number	Connector Part number	Connector Number	Cavity	Seal/Sleeve	Lock 1	Lock 2
YH13AC	16	PK	TXL	3768013C1	3768015C1	1015	40	N/A		
YK67A	16	PK	TXL	3768013C1	3768015C1	1015	40	N/A		
CW11-GFU	18	WH	TXL	3768003C1	3768010C1	1015	R1 -	6 N/A		
CW14FU	16	RD	TXL	3768007C1	3768010C1	1015	R1 -	0 N/A		
CW58B	18	BN	TXL	3768003C1	3768010C1	1015	R1 -	5 N/A		
CW58C	16	BN	TXL	3768007C1	3768010C1	1015	R1 -	7 N/A		
CX11-GFU	18	WH	TXL	3768003C1	3768010C1	1015	R1 -	6 N/A		
CX14FU	16	RD	TXL	3768007C1	3768010C1	1015	R1 -	0 N/A		
CX58B	18	BN	TXL	3768003C1	3768010C1	1015	R1 -	5 N/A		
CX58C	16	BN	TXL	3768007C1	3768010C1	1015	R1 -	7 N/A		
EM13-GBM	18	WH	TXL	3768003C1	3768010C1	1015	R1 -	6 N/A		
EM13BLT	18	PK	TXL	3768003C1	3768010C1	1015	R1 -	5 N/A		
EM14BLT	14	RD	TXL	3768008C1	3768010C1	1015	R1 -	0 N/A		
EM58BLT	14	BN	TXL	3768008C1	3768010C1	1015	R1 -	7 N/A		
GN13-GBM	18	WH	TXL	3768003C1	3768010C1	1015	R1 -	6 N/A		
GN13BLT	18	PK	TXL	3768003C1	3768010C1	1015	R1 -	5 N/A		
GN14BLT	14	RD	TXL	3768008C1	3768010C1	1015	R1 -	0 N/A		
GN58BLT	18	BN	TXL	3768007C1	3768010C1	1015	R1 -	7 N/A		
AZ14A	18	RD	TXL	3768007C1	3768010C1	1015	R2 -	0 N/A		
AZ17B	18	PK	TXL	3768007C1	3768010C1	1015	R2 -	7 N/A		
AZ92-GC	18	WH	TXL	3768003C1	3768010C1	1015	R2 -	6 N/A		
AZ92B	18	TN	TXL	3768003C1	3768010C1	1015	R2 -	5 N/A		
AG14AE	12	RD	TXL	3768009C1	3768010C1	1015	R3 -	0 N/A		
AH13L	18	PK	TXL	3768003C1	3768010C1	1015	R3 -	5 N/A		
AL14AE	12	RD	TXL	3768009C1	3768010C1	1015	R3 -	0 N/A		
AM13L	18	PK	TXL	3768003C1	3768010C1	1015	R3 -	5 N/A		
EE11-GDC	18	WH	TXL	3768003C1	3768010C1	1015	R3 -	6 N/A		
GJ11-GDC	18	WH	TXL	3768003C1	3768010C1	1015	R3 -	6 N/A		
YV13N	12	PK	TXL	3768009C1	3768010C1	1015	R3 -	7 N/A		
YY13N	12	PK	TXL	3768009C1	3768010C1	1015	R3 -	7 N/A		
DY54-GXB	18	WH	TXL	3768003C1	3768010C1	1015	R4 -	5 N/A		
DY54XB	16	BN	TXL	3768007C1	3768010C1	1015	R4 -	7 N/A		
DY54XD	16	BN	TXL	3768004C1	3768010C1	1015	R4 -	6 N/A		
DY54XV	16	BN	TXL	3768007C1	3768010C1	1015	R4 -	0 N/A		
MD92#117	18	TN	TXL	3768007C1	3768010C1	1015	R4 -	0 N/A		
MD92#145	18	TN	TXL	3768007C1	3768010C1	1015	R4 -	7 N/A		
MD92-GD	18	WH	TXL	3768003C1	3768010C1	1015	R4 -	5 N/A		
MD92A	18	TN	TXL	3768003C1	3768010C1	1015	R4 -	6 N/A		
PA54-GXB	18	WH	TXL	3768003C1	3768010C1	1015	R4 -	5 N/A		
PA54XB	16	BN	TXL	3768007C1	3768010C1	1015	R4 -	7 N/A		
PA54XD	16	BN	TXL	3768004C1	3768010C1	1015	R4 -	6 N/A		
PA54XV	16	BN	TXL	3768007C1	3768010C1	1015	R4 -	0 N/A		
CD14-GSB	18	WH	TXL	3768003C1	3768010C1	1015	R5 -	6 N/A		
CD14SAB	18	RD	TXL	3768003C1	3768010C1	1015	R5 -	5 N/A		
CD14SAC	12	RD	TXL	3768009C1	3768010C1	1015	R5 -	0 N/A		
CE14-GSB	18	WH	TXL	3768003C1	3768010C1	1015	R5 -	6 N/A		
CE14SAB	18	RD	TXL	3768003C1	3768010C1	1015	R5 -	5 N/A		
CE14SAC	12	RD	TXL	3768009C1	3768010C1	1015	R5 -	0 N/A		
GB14SAG	12	LTGN	TXL	3768009C1	3768010C1	1015	R5 -	7 N/A		
GD14SAH	14	LTBL	TXL	3768008C1	3768010C1	1015	R5 -	7 N/A		
GF14SAD	12	LTGN	TXL	3768009C1	3768010C1	1015	R5 -	7 N/A		
GH14SAF	14	LTBL	TXL	3768008C1	3768010C1	1015	R5 -	7 N/A		

Circuit Number	Gauge	Color	Insulation	Terminal / Splice Number	Connector Part number	Connector Number	Cavity	Seal/Sleeve	Lock 1	Lock 2
AA11-GW	18	WH	TXL	3768003C1	3768010C1	1015	R6 -	6 N/A		
AB12P	12	LTBL	TXL	3768009C1	3768010C1	1015	R6 -	7 N/A		
AG14AF	12	RD	TXL	3768009C1	3768010C1	1015	R6 -	0 N/A		
AH12K	18	LTBL	TXL	3768003C1	3768010C1	1015	R6 -	5 N/A		
AL14AF	12	RD	TXL	3768009C1	3768010C1	1015	R6 -	0 N/A		
AM12K	18	LTBL	TXL	3768003C1	3768010C1	1015	R6 -	5 N/A		
AG14AR	18	RD	TXL	3768012C1	3768015C1	1016	1	N/A		
AL14AR	18	RD	TXL	3768012C1	3768015C1	1016	1	N/A		
9S74RB	16	RD	GXL	3768013C1	3768015C1	1016	2	N/A		
FB94TT4	14	GY	TXL	3768014C1	3768015C1	1016	3	N/A		
HF94TT2	14	GY	TXL	3768014C1	3768015C1	1016	3	N/A		
HG94TT2	14	GY	TXL	3768014C1	3768015C1	1016	3	N/A		
DK14TRIA	16	RD	TXL	3768013C1	3768015C1	1016	4	N/A		
DT104AL	16	DKBL	TXL	3768013C1	3768015C1	1016	5	N/A		
9S74RB2	16	RD	GXL	3768013C1	3768015C1	1016	6	N/A		
FA13EF	16	RD	TXL	3768013C1	3768015C1	1016	7	N/A		
HF94TT	14	GY	TXL	3768014C1	3768015C1	1016	7	N/A		
HG94TT	14	GY	TXL	3768014C1	3768015C1	1016	7	N/A		
DK14TRI	16	RD	GXL	3768013C1	3768015C1	1016	8	N/A		
AG14AN	12	RD	TXL	3768157C1	3768015C1	1016	9	N/A		
AL14AN	12	RD	TXL	3768157C1	3768015C1	1016	9	N/A		
RP14XX	12	RD	TXL	3768014C1	3768015C1	1016	13	N/A		
DW14Z	16	RD	TXL	3768013C1	3768015C1	1016	14	N/A		
LA98P	18	RD	TXL	3768012C1	3768015C1	1016	14	N/A		
YJ14A	16	RD	TXL	3768013C1	3768015C1	1016	14	N/A		
FR72E	18	OR	TXL	3768012C1	3768015C1	1016	15	N/A		
AZ14A	18	RD	TXL	3768012C1	3768015C1	1016	16	N/A		
AG14AP	12	RD	TXL	3768157C1	3768015C1	1016	17	N/A		
AL14AP	12	RD	TXL	3768157C1	3768015C1	1016	17	N/A		
AA15	18	RD	TXL	3768012C1	3768015C1	1016	21	N/A		
CE14SBC	12	RD	TXL	3768014C	3768015C1	1016	22	N/A		
CD14SAC	12	RD	TXL	3768014C	3768015C1	1016	23	N/A		
CE14SAC	12	RD	TXL	3768014C	3768015C1	1016	23	N/A		
CD14SA	18	RD	TXL	3768012C1	3768015C1	1016	24	N/A		
CE14S	18	RD	TXL	3768012C1	3768015C1	1016	24	N/A		
AB12R	12	LTBL	TXL	3768157C1	3768015C1	1016	25	N/A		
AB12P	12	LTBL	TXL	3768014C	3768015C1	1016	28	N/A		
MR86AE	18	LTGN	TXL	3768012C1	3768015C1	1016	29	N/A		
MZ86FE	18	LTGN	TXL	3768012C1	3768015C1	1016	29	N/A		
AB12R	12	LTBL	TXL	3768157C1	3768015C1	1016	33	N/A		
AC12B	18	LTBL	TXL	3768012C1	3768015C1	1016	39	N/A		
AL14K	8	RD	TXL	4100163C1	4100070C1	1016	R1-30	N/A		
NJ14K	8	RD	TXL	4100163C1	4100070C1	1016	R1-30	N/A		
AG166BAA	20	LTGN	TXL	3768006C1	4100070C1	1016	R1-85	N/A		
AH166AA	20	LTGN	TXL	3768006C1	4100070C1	1016	R1-85	N/A		
AG166AA	20	LTGN	TXL	3768006C1	4100070C1	1016	R1-86	N/A		
AH166A	20	LTGN	TXL	3768006C1	4100070C1	1016	R1-86	N/A		
AL14KA	8	RD	TXL	4100163C1	4100070C1	1016	R1-87	N/A		
NJ14KA	8	RD	TXL	4100163C1	4100070C1	1016	R1-87	N/A		
AL14G	8	RD	TXL	4100163C1	4100070C1	1016	R2-30	N/A		
NJ14G	8	RD	TXL	4100163C1	4100070C1	1016	R2-30	N/A		
6K166BA	20	LTGN	TXL	3768006C1	4100070C1	1016	R2-85	N/A		

Circuit Number	Gauge	Color	Insulation	Terminal / Splice Number	Connector Part number	Connector Number	Cavity	Seal/Sleeve	Lock 1	Lock 2
AA166-G	20	GY	TXL	3768006C1	4100070C1	1016	R2-86	N/A		
YY13P	8	PK	GXL	4100163C1	4100070C1	1016	R2-87	N/A		
AG14R	12	RD	TXL	3768157C1	3768015C1	1017	1	N/A		
AL14R	12	RD	TXL	3768157C1	3768015C1	1017	1	N/A		
4A74RB	16	LTGN	TXL	3768013C1	3768015C1	1017	1	N/A		
NJ14S	18	RD	TXL	3768012C1	3768015C1	1017	2	N/A		
FB94TT4	16	GY	TXL	3768013C1	3768015C1	1017	3	N/A		
HF94TT2	18	GY	TXL	3768012C1	3768015C1	1017	3	N/A		
HG94TT2	18	GY	TXL	3768012C1	3768015C1	1017	3	N/A		
DX14VA	12	RD	TXL	3768014C1	3768015C1	1017	5	N/A		
4A74RB2	16	LTGN	TXL	3768013C1	3768015C1	1017	5	N/A		
RF14A	20	PK	TXL	3768012C1	3768015C1	1017	6	N/A		
ZK14A	18	RD	TXL	3768012C1	3768015C1	1017	6	N/A		
NJ14KBB	18	RD	TXL	3768012C1	3768015C1	1017	6	N/A		
AA63BD	18	GY	TXL	3768012C1	3768015C1	1017	7	N/A		
FA13EF	16	RD	TXL	3768013C1	3768015C1	1017	7	N/A		
HF94TT	18	GY	TXL	3768012C1	3768015C1	1017	7	N/A		
HG94TT	18	GY	TXL	3768012C1	3768015C1	1017	7	N/A		
BC63JK	18	DKBL	TXL	3768012C1	3768015C1	1017	8	N/A		
AG14X	12	RD	TXL	3768157C1	3768015C1	1017	9	N/A		
AL14X	12	RD	TXL	3768157C1	3768015C1	1017	9	N/A		
AL14KAA	12	RD	TXL	3768157C1	3768015C1	1017	10	N/A		
NJ14KAA	12	RD	TXL	3768157C1	3768015C1	1017	10	N/A		
DR19V	14	GY	TXL	3768014C	3768015C1	1017	13	N/A		
RF14AA	20	PK	TXL	3768012C1	3768015C1	1017	13	N/A		
YJ14A	16	RD	TXL	3768013C1	3768015C1	1017	13	N/A		
ZR14A	18	RD	TXL	3768012C1	3768015C1	1017	13	N/A		
5H182AC	18	LTGN	GXL	3768012C1	3768015C1	1017	14	N/A		
JY14C	18	RD	TXL	3768012C1	3768015C1	1017	14	N/A		
3N86CC	14	LTGN	TXL	3768014C1	3768015C1	1017	14	N/A		
AD86C	14	LTGN	TXL	3768014C1	3768015C1	1017	14	N/A		
AE86C	14	LTGN	TXL	3768014C1	3768015C1	1017	14	N/A		
DX14VB	12	RD	TXL	3768014C1	3768015C1	1017	15	N/A		
AA63BD	18	GY	TXL	3768012C1	3768015C1	1017	15	N/A		
CC14SC	12	RD	TXL	3768014C	3768015C1	1017	16	N/A		
BC63JK	18	DKBL	TXL	3768012C1	3768015C1	1017	16	N/A		
AG14Y	12	RD	TXL	3768157C1	3768015C1	1017	17	N/A		
AL14Y	12	RD	TXL	3768157C1	3768015C1	1017	17	N/A		
AL14KAB	12	RD	TXL	3768014C1	3768015C1	1017	17	N/A		
NJ14KAB	12	RD	TXL	3768014C1	3768015C1	1017	17	N/A		
AL14KAC	12	RD	TXL	3768014C1	3768015C1	1017	18	N/A		
NJ14KAC	12	RD	TXL	3768157C1	3768015C1	1017	18	N/A		
AL14KAD	12	RD	TXL	3768014C1	3768015C1	1017	19	N/A		
NJ14KAD	12	RD	TXL	3768014C1	3768015C1	1017	19	N/A		
AL14KAE	12	RD	TXL	3768014C1	3768015C1	1017	20	N/A		
NJ14KAE	12	RD	TXL	3768014C1	3768015C1	1017	20	N/A		
CA84	14	LTGN	TXL	3768014C1	3768015C1	1017	21	N/A		
CB84B	14	LTGN	TXL	3768014C1	3768015C1	1017	21	N/A		
CL84	14	LTGN	TXL	3768014C1	3768015C1	1017	21	N/A		
DR19V	14	GY	TXL	3768014C	3768015C1	1017	21	N/A		
3N86CC	14	LTGN	TXL	3768014C1	3768015C1	1017	22	N/A		
AD86C	14	LTGN	TXL	3768014C1	3768015C1	1017	22	N/A		

Circuit Number	Gauge	Color	Insulation	Terminal / Splice Number	Connector Part number	Connector Number	Cavity	Seal/Sleeve	Lock 1	Lock 2
AE86C	14	LTGN	TXL	3768014C1	3768015C1	1017	22	N/A		
BG14BA	16	RD	TXL	3768013C	3768015C1	1017	22	N/A		
BL14BA	16	RD	TXL	3768013C	3768015C1	1017	22	N/A		
CC14SC	12	RD	TXL	3768014C	3768015C1	1017	22	N/A		
KN116L	18	GY	TXL	3768012C1	3768015C1	1017	23	N/A		
ZE75C	12	LTGN	TXL	3768014C1	3768015C1	1017	23	N/A		
CA84	14	LTGN	TXL	3768014C1	3768015C1	1017	23	N/A		
CB84B	14	LTGN	TXL	3768014C1	3768015C1	1017	23	N/A		
CL84	14	LTGN	TXL	3768014C1	3768015C1	1017	23	N/A		
CW14FU	16	RD	TXL	3768013C1	3768015C1	1017	24	N/A		
CX14FU	16	RD	TXL	3768013C1	3768015C1	1017	24	N/A		
EM14BLT	14	RD	TXL	3768014C	3768015C1	1017	24	N/A		
GN14BLT	14	RD	TXL	3768014C	3768015C1	1017	24	N/A		
CW14FU	16	RD	TXL	3768013C1	3768015C1	1017	24	N/A		
CX14FU	16	RD	TXL	3768013C1	3768015C1	1017	24	N/A		
EM14BLT	14	RD	TXL	3768014C	3768015C1	1017	24	N/A		
GN14BLT	14	RD	TXL	3768014C	3768015C1	1017	24	N/A		
AB12N	12	LTBL	TXL	3768157C1	3768015C1	1017	25	N/A		
AB12MA	12	LTBL	TXL	3768157C1	3768015C1	1017	26	N/A		
AB12M	12	LTBL	TXL	3768014C	3768015C1	1017	28	N/A		
MR86AE	18	LTGN	TXL	3768012C1	3768015C1	1017	30	N/A		
DY54XV	16	BN	TXL	3768013C	3768015C1	1017	31	N/A		
PA54XV	16	BN	TXL	3768013C	3768015C1	1017	31	N/A		
DY54XV	16	BN	TXL	3768013C	3768015C1	1017	31	N/A		
PA54XV	16	BN	TXL	3768013C	3768015C1	1017	31	N/A		
EM13BL1	18	PK	TXL	3768012C1	3768015C1	1017	32	N/A		
GN13BL1	18	PK	TXL	3768012C1	3768015C1	1017	32	N/A		
EM13BL1	20	PK	TXL	3768012C1	3768015C1	1017	32	N/A		
GN13BL1	20	PK	TXL	3768012C1	3768015C1	1017	32	N/A		
AB12N	12	LTBL	TXL	3768157C1	3768015C1	1017	33	N/A		
AB12MB	12	LTBL	TXL	3768157C1	3768015C1	1017	34	N/A		
MR86F	18	LTGN	TXL	3768012C1	3768015C1	1017	38	N/A		
MZ86P	18	LTGN	TXL	3768012C1	3768015C1	1017	38	N/A		
MR86F	18	LTGN	TXL	3768012C1	3768015C1	1017	38	N/A		
MZ86P	18	LTGN	TXL	3768012C1	3768015C1	1017	38	N/A		
NL86P	18	LTGN	TXL	3768012C1	3768015C1	1017	38	N/A		
NP86F	18	LTGN	TXL	3768012C1	3768015C1	1017	38	N/A		
BH12A	18	LTBL	TXL	3768012C1	3768015C1	1017	39	N/A		
RC12B	20	LTBL	TXL	3768012C1	3768015C1	1017	39	N/A		
BH12A	18	LTBL	TXL	3768012C1	3768015C1	1017	39	N/A		
RC12B	20	LTBL	TXL	3768012C1	3768015C1	1017	39	N/A		
MZ86R	18	LTGN	TXL	3768012C1	3768015C1	1017	40	N/A		
MZ86R	20	LTGN	TXL	3768012C1	3768015C1	1017	40	N/A		
NL86AH	18	LTGN	TXL	3768012C1	3768015C1	1017	40	N/A		
NP86AH	18	LTGN	TXL	3768012C1	3768015C1	1017	40	N/A		
DK13TRIB	16	PK	GXL	3768013C1	3768015C1	1018	1	N/A		
AL14AC	12	RD	TXL	3768014C1	3768015C1	1018	3	N/A		
NJ14AC	12	RD	TXL	3768014C1	3768015C1	1018	3	N/A		
AL14AD	12	RD	TXL	3768014C1	3768015C1	1018	4	N/A		
NJ14AD	12	RD	TXL	3768014C1	3768015C1	1018	4	N/A		
ZJ98P	18	RD	TXL	3768012C1	3768015C1	1018	7	N/A		
4A74RA	12	LTGN	TXL	3768014C1	3768015C1	1018	8	N/A		

Circuit Number	Gauge	Color	Insulation	Terminal / Splice Number	Connector Part number	Connector Number	Cavity	Seal/Sleeve	Lock 1	Lock 2
AL14AE	12	RD	TXL	3768014C1	3768015C1	1018	11	N/A		
NJ14AE	12	RD	TXL	3768014C1	3768015C1	1018	11	N/A		
AL14AF	12	RD	TXL	3768014C1	3768015C1	1018	12	N/A		
NJ14AF	12	RD	TXL	3768014C1	3768015C1	1018	12	N/A		
CD14SAC	12	RD	TXL	3768014C	3768015C1	1018	15	N/A		
CE14SAC	12	RD	TXL	3768014C	3768015C1	1018	15	N/A		
CE14SBC	12	RD	TXL	3768014C	3768015C1	1018	16	N/A		
AL14AB	12	RD	TXL	3768157C1	3768015C1	1018	18	N/A		
NJ14AB	12	RD	TXL	3768157C1	3768015C1	1018	18	N/A		
AA73C	20	LTGN	TXL	3768012C1	3768015C1	1018	21	N/A		
BG70JA	12	RD	TXL	3768014C	3768015C1	1018	22	N/A		
BL70J	12	RD	TXL	3768014C	3768015C1	1018	22	N/A		
CD14SA	20	RD	TXL	3768012C1	3768015C1	1018	22	N/A		
CE14S	18	RD	TXL	3768012C1	3768015C1	1018	22	N/A		
FR72E	18	OR	TXL	3768012C1	3768015C1	1018	23	N/A		
DW14Z	16	RD	TXL	3768013C1	3768015C1	1018	24	N/A		
KN116L	18	GY	TXL	3768012C1	3768015C1	1018	24	N/A		
YY13PF	12	PK	TXL	3768157C1	3768015C1	1018	26	N/A		
5E13AB	18	PK	TXL	3768012C1	3768015C1	1018	29	N/A		
3F13AA	18	PK	TXL	3768012C1	3768015C1	1018	30	N/A		
6D13E	16	PK	TXL	3768013C1	3768015C1	1018	31	N/A		
YJ13A	16	PK	TXL	3768013C1	3768015C1	1018	32	N/A		
ZR13A	18	PK	TXL	3768012C1	3768015C1	1018	32	N/A		
YY13N	12	PK	TXL	3768157C	3768015C1	1018	34	N/A		
DW13Z	16	PK	TXL	3768013C1	3768015C1	1018	37	N/A		
CA13UA	20	PK	TXL	3768012C1	3768015C1	1018	38	N/A		
CB13U	18	PK	TXL	3768012C1	3768015C1	1018	38	N/A		
CL13U	18	PK	TXL	3768012C1	3768015C1	1018	38	N/A		
3S13UC	20	PK	TXL	3768012C1	3768015C1	1018	40	N/A		
DD78	16	LTGN	TXL	3768007C1	3768010C1	1018	R1 -	7 N/A		
DD78-RG	18	WH	TXL	3768003C1	3768010C1	1018	R1 -	6 N/A		
DD78RC	18	LTGN	TXL	3768003C1	3768010C1	1018	R1 -	5 N/A		
DD78RP	16	LTGN	TXL	3768007C1	3768010C1	1018	R1 -	0 N/A		
JA78	16	LTGN	TXL	3768007C1	3768010C1	1018	R1 -	7 N/A		
JA78RC	18	LTGN	TXL	3768003C1	3768010C1	1018	R1 -	5 N/A		
JA78RP	16	LTGN	TXL	3768007C1	3768010C1	1018	R1 -	0 N/A		
JA79-G	18	WH	TXL	3768003C1	3768010C1	1018	R1 -	6 N/A		
JL116U	18	GY	TXL	3768003C1	3768010C1	1018	R1 -	6 N/A		
JL116U-G	18	WH	TXL	3768003C1	3768010C1	1018	R1 -	5 N/A		
JL116UB	18	GY	TXL	3768007C1	3768010C1	1018	R1 -	0 N/A		
JL116UZ	18	GY	TXL	3768007C1	3768010C1	1018	R1 -	7 N/A		
JL116L	18	GY	TXL	3768003C1	3768010C1	1018	R2 -	6 N/A		
JL116L-G	18	WH	TXL	3768003C1	3768010C1	1018	R2 -	5 N/A		
JL116LB	18	GY	GXL	3768007C1	3768010C1	1018	R2 -	0 N/A		
JL116LZ	18	GY	TXL	3768007C1	3768010C1	1018	R2 -	7 N/A		
BB52AB	18	YL	TXL	3768003C1	3768010C1	1018	R3 -	7A N/A		
BB53AB	18	YL	TXL	3768003C1	3768010C1	1018	R3 -	5 N/A		
BB53AC	18	YL	TXL	3768007C1	3768010C1	1018	R3 -	7 N/A		
CF50S	18	YL	TXL	3768007C1	3768010C1	1018	R3 -	0 N/A		
CF53-G	18	WH	TXL	3768003C1	3768010C1	1018	R3 -	6 N/A		
CG50S	18	YL	TXL	3768007C1	3768010C1	1018	R3 -	0 N/A		
CG53-G	18	WH	TXL	3768003C1	3768010C1	1018	R3 -	6 N/A		

Circuit Number	Gauge	Color	Insulation	Terminal / Splice Number	Connector Part number	Connector Number	Cavity	Seal/Sleeve	Lock 1	Lock 2
BC63J	18	DKBL	TXL	3768003C1	3768010C1	1018	R5 -	5 N/A		
BC63JJ	18	GY	GXL	3768003C1	3768010C1	1018	R5 -	6 N/A		
BC63JV	18	GY	GXL	3768007C1	3768010C1	1018	R5 -	0 N/A		
EL63JA	18	DKBL	TXL	3768007C1	3768010C1	1018	R5 -	7 N/A		
EL63JB	18	DKBL	TXL	3768007C1	3768010C1	1018	R5 -	7 N/A		
MP63JA	18	DKBL	TXL	3768007C1	3768010C1	1018	R5 -	7 N/A		
CE14-GSD	18	WH	TXL	3768003C1	3768010C1	1018	R6 -	6 N/A		
CE14SBB	18	RD	TXL	3768003C1	3768010C1	1018	R6 -	5 N/A		
CE14SBC	12	RD	TXL	3768009C1	3768010C1	1018	R6 -	0 N/A		
CE14SBD	12	LTGN	TXL	3768009C1	3768010C1	1018	R6 -	7 N/A		
AK28A	20	TN	TXL	4062808C1	4063041C1	1020	1	N/A		
AK28A	20	TN	TXL	4062808C1	4063041C1	1020	1	N/A		
AK9CDC	20	GY	TXL	4062808C1	4063041C1	1020	2	N/A		
AK9CDC	20	GY	TXL	4062808C1	4063041C1	1020	2	N/A		
AK62F	20	DKBL	TXL	4062808C1	4063041C1	1020	3	N/A		
AK62F	20	DKBL	TXL	4062808C1	4063041C1	1020	3	N/A		
AK11-GKF	20	WH	TXL	4062808C1	4063041C1	1020	4	N/A		
AK11-GKF	20	WH	TXL	4062808C1	4063041C1	1020	4	N/A		
DA62DA	16	DKBL	TXL	3613770C1	3613769C1	1021	1	N/A		
4G62DA	16	DKBL	TXL	3613770C1	3613769C1	1021	1	N/A		
DA62DA	16	DKBL	TXL	3613770C1	3613769C1	1021	1	N/A		
CD62DJ	18	DKBL	TXL	3613771C1	3613769C1	1021	3	N/A		
CE62DJ	18	DKBL	TXL	3613771C1	3613769C1	1021	3	N/A		
CD62DJ	20	DKBL	TXL	3613771C1	3613769C1	1021	3	N/A		
CE62DJ	20	DKBL	TXL	3613771C1	3613769C1	1021	3	N/A		
CS62A	18	DKBL	TXL	3613771C1	3613769C1	1021	4	N/A		
YK62A	18	DKBL	TXL	3613771C1	3613769C1	1021	4	N/A		
CS62A	20	DKBL	TXL	3613771C1	3613769C1	1021	4	N/A		
YK62A	18	DKBL	TXL	3613771C1	3613769C1	1021	4	N/A		
CE62DK	18	DKBL	TXL	3613771C1	3613769C1	1021	5	N/A		
CE62DK	20	DKBL	TXL	3613771C1	3613769C1	1021	5	N/A		
HA62DF	18	DKBL	TXL	3613771C1	3613769C1	1021	6	N/A		
HA62DF	20	DKBL	TXL	3613771C1	3613769C1	1021	6	N/A		
XW62DG	18	DKBL	TXL	3613771C1	3613769C1	1021	7	N/A		
XW62DG	20	DKBL	TXL	3613771C1	3613769C1	1021	7	N/A		
CN62DH	18	DKBL	TXL	3613771C1	3613769C1	1021	8	N/A		
CR62DH	18	DKBL	TXL	3613771C1	3613769C1	1021	8	N/A		
ZY62DH	18	DKBL	TXL	3613771C1	3613769C1	1021	8	N/A		
CN62DH	20	DKBL	TXL	3613771C1	3613769C1	1021	8	N/A		
CR62DH	20	DKBL	TXL	3613771C1	3613769C1	1021	8	N/A		
ZY62DH	20	DKBL	TXL	3613771C1	3613769C1	1021	8	N/A		
EM62DL	18	DKBL	TXL	3613771C1	3613769C1	1021	9	N/A		
GN62DL	18	DKBL	TXL	3613771C1	3613769C1	1021	9	N/A		
EM62DL	20	DKBL	TXL	3613771C1	3613769C1	1021	9	N/A		
GN62DL	20	DKBL	TXL	3613771C1	3613769C1	1021	9	N/A		
DF62DD	18	DKBL	TXL	3613771C1	3613769C1	1021	10	N/A		
DF62DD	18	DKBL	TXL	3613771C1	3613769C1	1021	10	N/A		
DK62DF	18	DKBL	TXL	3613771C1	3613769C1	1021	11	N/A		
DK62DF	20	DKBL	TXL	3613771C1	3613769C1	1021	11	N/A		
YJ62DA	20	DKBL	TXL	3613771C1	3613769C1	1021	12	N/A		
YJ62DA	20	DKBL	TXL	3613771C1	3613769C1	1021	12	N/A		
YJ62DB	20	DKBL	TXL	3613771C1	3613769C1	1021	13	N/A		

Circuit Number	Gauge	Color	Insulation	Terminal / Splice Number	Connector Part number	Connector Number	Cavity	Seal/Sleeve	Lock 1	Lock 2
YJ62DB	20	DKBL	TXL	3613771C1	3613769C1	1021	13	N/A		
AK62F	20	DKBL	TXL	3613771C1	3613769C1	1021	14	N/A		
AK62F	20	DKBL	TXL	3613771C1	3613769C1	1021	14	N/A		
RA11-GBA	14	WH	TXL	3613770C1	3613769C1	1022	1	N/A		
RB11-GBA	14	WH	TXL	3613770C1	3613769C1	1022	1	N/A		
RA11-GBA	14	WH	TXL	3613770C1	3613769C1	1022	1	N/A		
RB11-GBA	14	WH	TXL	3613770C1	3613769C1	1022	1	N/A		
YH11-GC	14	WH	TXL	3613770C1	3613769C1	1022	2	N/A		
YH11-GC	14	WH	TXL	3613770C1	3613769C1	1022	2	N/A		
YC67-G	18	WH	TXL	3613771C1	3613769C1	1022	3	N/A		
YC67-G	18	WH	TXL	3613771C1	3613769C1	1022	3	N/A		
DD78-GA	16	WH	TXL	3613770C1	3613769C1	1022	4	N/A		
DD78-GA	16	WH	TXL	3613770C1	3613769C1	1022	4	N/A		
DD78-RG	18	WH	TXL	3613771C	3613769C1	1022	5	N/A		
JA79-G	18	WH	TXL	3613771C	3613769C1	1022	5	N/A		
BG70-GTA	18	WH	TXL	3613771C1	3613769C1	1022	5	N/A		
BL70-GT	18	WH	TXL	3613771C1	3613769C1	1022	5	N/A		
DD78-RG	20	WH	TXL	3613771C	3613769C1	1022	5	N/A		
JA79-G	20	WH	TXL	3613771C	3613769C1	1022	5	N/A		
CS67-G	18	WH	TXL	3613771C1	3613769C1	1022	6	N/A		
YK67-G	18	WH	TXL	3613771C1	3613769C1	1022	6	N/A		
CS67-G	18	WH	TXL	3613771C1	3613769C1	1022	6	N/A		
YK67-G	18	WH	TXL	3613771C1	3613769C1	1022	6	N/A		
CC72-GA	18	WH	TXL	3613771C	3613769C1	1022	7	N/A		
BG12-GCL	20	WH	TXL	3613771C	3613769C1	1022	7	N/A		
BL12-GCL	20	WH	TXL	3613771C	3613769C1	1022	7	N/A		
CC72-GA	20	WH	TXL	3613771C	3613769C1	1022	7	N/A		
HV17-G	16	WH	TXL	3613770C1	3613769C1	1022	8	N/A		
HV17-G	16	WH	TXL	3613770C1	3613769C1	1022	8	N/A		
BF70-GT	18	WH	TXL	3613771C	3613769C1	1022	9	N/A		
BM70-GT	18	WH	TXL	3613771C	3613769C1	1022	9	N/A		
BG70-GT	18	WH	TXL	3613771C1	3613769C1	1022	9	N/A		
BM70-GT	20	WH	TXL	3613771C	3613769C1	1022	9	N/A		
2V11-GBP	18	WH	TXL	3613771C1	3613769C1	1022	10	N/A		
CS11-GBP	18	WH	TXL	3613771C1	3613769C1	1022	10	N/A		
RV11-GBP	18	WH	TXL	3613771C1	3613769C1	1022	10	N/A		
YK11-GBP	18	WH	TXL	3613771C1	3613769C1	1022	10	N/A		
2V11-GBP	18	WH	TXL	3613771C1	3613769C1	1022	10	N/A		
CS11-GBP	18	WH	TXL	3613771C1	3613769C1	1022	10	N/A		
RV11-GBP	18	WH	TXL	3613771C1	3613769C1	1022	10	N/A		
SG11COG	16	WH	TXL	3613770C1	3613769C1	1022	10	N/A		
YK11-GBP	18	WH	TXL	3613771C1	3613769C1	1022	10	N/A		
5E11-GAR	18	WH	TXL	3613771C1	3613769C1	1022	11	N/A		
ZK11-G	20	WH	TXL	3613771C1	3613769C1	1022	11	N/A		
5E11-GAR	18	WH	TXL	3613771C1	3613769C1	1022	11	N/A		
ZR11-G	20	WH	TXL	3613771C1	3613769C1	1022	11	N/A		
3S11-GUC	20	WH	TXL	3613771C1	3613769C1	1022	12	N/A		
JY11-GA	18	WH	TXL	3613771C1	3613769C1	1022	12	N/A		
3S11-GUC	20	WH	TXL	3613771C1	3613769C1	1022	12	N/A		
JY11-GA	18	WH	TXL	3613771C1	3613769C1	1022	12	N/A		
LA98-G	20	WH	TXL	3613771C1	3613769C1	1022	13	N/A		
ZJ98-G	20	WH	TXL	3613771C1	3613769C1	1022	13	N/A		

Circuit Number	Gauge	Color	Insulation	Terminal / Splice Number	Connector Part number	Connector Number	Cavity	Seal/Sleeve	Lock 1	Lock 2
ZJ98-G	18	WH	TXL	3613771C1	3613769C1	1022	13	N/A		
XF11-GX	20	WH	TXL	3613771C1	3613769C1	1022	14	N/A		
XF11-GX	20	WH	TXL	3613771C1	3613769C1	1022	14	N/A		
RA11-GCB	14	WH	TXL	3613770C1	3613769C1	1023	1	N/A		
RB11-GCB	14	WH	TXL	3613770C1	3613769C1	1023	1	N/A		
RA11-GCB	14	WH	TXL	3613770C1	3613769C1	1023	1	N/A		
RB11-GCB	14	WH	TXL	3613770C1	3613769C1	1023	1	N/A		
3N11-GCF	14	WH	TXL	3613770C1	3613769C1	1023	2	N/A		
AD11-GCC	14	WH	TXL	3613770C1	3613769C1	1023	2	N/A		
AE11-GCC	14	WH	TXL	3613770C1	3613769C1	1023	2	N/A		
3N11-GCF	14	WH	TXL	3613770C1	3613769C1	1023	2	N/A		
AD11-GCC	14	WH	TXL	3613770C1	3613769C1	1023	2	N/A		
AE11-GCC	14	WH	TXL	3613770C1	3613769C1	1023	2	N/A		
MM92-GAH	18	WH	TXL	3613771C1	3613769C1	1023	3	N/A		
MM92-GAH	18	WH	TXL	3613771C1	3613769C1	1023	3	N/A		
FR11-GB	18	WH	TXL	3613771C1	3613769C1	1023	4	N/A		
FR11-GB	18	WH	TXL	3613771C1	3613769C1	1023	4	N/A		
CN11-GBF	18	WH	TXL	3613771C1	3613769C1	1023	5	N/A		
CR11-GBF	18	WH	TXL	3613771C1	3613769C1	1023	5	N/A		
ZY11-GBF	18	WH	TXL	3613771C1	3613769C1	1023	5	N/A		
CN11-GBF	20	WH	TXL	3613771C1	3613769C1	1023	5	N/A		
CR11-GBF	20	WH	TXL	3613771C1	3613769C1	1023	5	N/A		
ZY11-GBF	20	WH	TXL	3613771C1	3613769C1	1023	5	N/A		
CF11-GBE	18	WH	TXL	3613771C1	3613769C1	1023	6	N/A		
CG53-G	18	WH	TXL	3613771C	3613769C1	1023	6	N/A		
CK11-GBE	18	WH	TXL	3613771C1	3613769C1	1023	6	N/A		
FA11-GBG	16	WH	TXL	3613770C1	3613769C1	1023	6	N/A		
KC11-GBE	16	WH	TXL	3613770C1	3613769C1	1023	6	N/A		
MB11-GBE	16	WH	TXL	3613770C1	3613769C1	1023	6	N/A		
PH11-GBE	18	WH	TXL	3613771C1	3613769C1	1023	6	N/A		
SJ11-GBE	16	WH	TXL	3613770C1	3613769C1	1023	6	N/A		
XA11-GBE	16	WH	TXL	3613770C1	3613769C1	1023	6	N/A		
ZP11-GBE	16	WH	TXL	3613770C1	3613769C1	1023	6	N/A		
CF11-GBE	18	WH	TXL	3613771C1	3613769C1	1023	6	N/A		
CG53-G	20	WH	TXL	3613771C	3613769C1	1023	6	N/A		
CK11-GBE	18	WH	TXL	3613771C1	3613769C1	1023	6	N/A		
FA11-GBG	16	WH	TXL	3613770C1	3613769C1	1023	6	N/A		
KC11-GBE	16	WH	TXL	3613770C1	3613769C1	1023	6	N/A		
MB11-GBE	16	WH	TXL	3613770C1	3613769C1	1023	6	N/A		
PH11-GBE	18	WH	TXL	3613771C1	3613769C1	1023	6	N/A		
SJ11-GBE	16	WH	TXL	3613770C1	3613769C1	1023	6	N/A		
AK11-GKF	20	WH	TXL	3613771C1	3613769C1	1023	7	N/A		
AK11-GKF	20	WH	TXL	3613771C1	3613769C1	1023	7	N/A		
LM97-G	20	WH	TXL	3613771C1	3613769C1	1023	8	N/A		
LM97-G	20	WH	TXL	3613771C1	3613769C1	1023	8	N/A		
DR19-GB	18	WH	TXL	3613771C	3613769C1	1023	9	N/A		
DR19-GB	20	WH	TXL	3613771C	3613769C1	1023	9	N/A		
YJ11-G	20	WH	TXL	3613771C1	3613769C1	1023	10	N/A		
YJ11-G	20	WH	TXL	3613771C1	3613769C1	1023	10	N/A		
ZK98-G	18	WH	TXL	3613771C1	3613769C1	1023	10	N/A		
ZM98-G	18	WH	TXL	3613771C1	3613769C1	1023	10	N/A		
ZW50A	22	YL	TXL	4116922C1	3613769C1	1023	11	N/A		

Circuit Number	Gauge	Color	Insulation	Terminal / Splice Number	Connector Part number	Connector Number	Cavity	Seal/Sleeve	Lock 1	Lock 2
ZM98-G	18	WH	TXL	3613771C1	3613769C1	1023	12	N/A		
ZR98-G	18	WH	TXL	3613771C1	3613769C1	1023	12	N/A		
MD92-GD	18	WH	TXL	3613771C1	3613769C1	1023	13	N/A		
MD92-GD	18	WH	TXL	3613771C1	3613769C1	1023	13	N/A		
AG11-GRG	16	WH	GXL	3613770C1	3613769C1	1023	14	N/A		
ZZ50A	22	YL	TXL	4116922C1	3613769C1	1023	14	N/A		
3L5BF(-)	18	GN	TXL	3534164C1	3601838C1	1024	A	N/A		
AS5BC(-)	18	GN	TXL	3534164C1	3601838C1	1024	A	N/A		
3L5BF(-)	18	GN	TXL	3534164C1	3601838C1	1024	A	N/A		
AS5BC(-)	18	GN	TXL	3534164C1	3601838C1	1024	A	N/A		
PS5BC(-)	18	GN	TXL	3534164C1	3601838C1	1024	A	N/A		
5E5V(-)	18	GN	TXL	3534164C1	3601838C1	1024	B	N/A		
5E5V(-)	18	GN	TXL	3534164C1	3601838C1	1024	B	N/A		
3L5BG(-)	18	GN	TXL	3534164C1	3601838C1	1024	C	N/A		
AS5BD(-)	18	GN	TXL	3534164C1	3601838C1	1024	C	N/A		
3L5BG(-)	18	GN	TXL	3534164C1	3601838C1	1024	C	N/A		
AS5BD(-)	18	GN	TXL	3534164C1	3601838C1	1024	C	N/A		
PS5BD(-)	18	GN	TXL	3534164C1	3601838C1	1024	C	N/A		
3L5BG(-)	18	GN	TXL	3534164C1	3601838C1	1024	D	N/A		
AS5BD(-)	18	GN	TXL	3534164C1	3601838C1	1024	D	N/A		
3L5BG(-)	18	GN	TXL	3534164C1	3601838C1	1024	D	N/A		
AS5BD(-)	18	GN	TXL	3534164C1	3601838C1	1024	D	N/A		
PS5BD(-)	18	GN	TXL	3534164C1	3601838C1	1024	D	N/A		
JS5(-)	18	GN	TXL	3534164C1	3601838C1	1024	E	N/A		
KD5U(-)	18	GN	TXL	3534164C1	3601838C1	1024	E	N/A		
KK5(-)	18	GN	TXL	3534164C1	3601838C1	1024	E	N/A		
KR5BF(-)	18	GN	TXL	3534164C1	3601838C1	1024	E	N/A		
KS5BF(-)	18	GN	TXL	3534164C1	3601838C1	1024	E	N/A		
JT5(-)	20	YL	193	3535484C1	3601838C1	1024	E	N/A		
KD5U(-)	18	GN	TXL	3534164C1	3601838C1	1024	E	N/A		
KK5(-)	18	GN	TXL	3534164C1	3601838C1	1024	E	N/A		
KR5BF(-)	18	GN	TXL	3534164C1	3601838C1	1024	E	N/A		
KS5BF(-)	18	GN	TXL	3534164C1	3601838C1	1024	E	N/A		
3L5BA(-)	18	GN	TXL	3534164C1	3601838C1	1024	F	N/A	3577413C1	
AS5BE(-)	18	GN	TXL	3534164C1	3601838C1	1024	F	N/A		
3L5BA(-)	18	GN	TXL	3534164C1	3601838C1	1024	F	N/A		
AS5BE(-)	18	GN	TXL	3534164C1	3601838C1	1024	F	N/A		
PS5BE(-)	18	GN	TXL	3534164C1	3601838C1	1024	F	N/A		
3L5BA(+)	18	YL	TXL	3534164C1	3601838C1	1024	G	N/A		
AS5BE(+)	18	YL	TXL	3534164C1	3601838C1	1024	G	N/A		
3L5BA(+)	18	YL	TXL	3534164C1	3601838C1	1024	G	N/A		
AS5BE(+)	18	YL	TXL	3534164C1	3601838C1	1024	G	N/A		
PS5BE(+)	18	YL	TXL	3534164C1	3601838C1	1024	G	N/A		
JS5(+)	18	YL	TXL	3534164C1	3601838C1	1024	H	N/A		
KD5U(+)	18	YL	TXL	3534164C1	3601838C1	1024	H	N/A		
KK5(+)	18	YL	TXL	3534164C1	3601838C1	1024	H	N/A		
KR5BF(+)	18	YL	TXL	3534164C1	3601838C1	1024	H	N/A		
KS5BF(+)	18	YL	TXL	3534164C1	3601838C1	1024	H	N/A		
JT5(+)	20	GN	193	3535484C1	3601838C1	1024	H	N/A		
KD5U(+)	18	YL	TXL	3534164C1	3601838C1	1024	H	N/A		
KK5(+)	18	YL	TXL	3534164C1	3601838C1	1024	H	N/A		
KR5BF(+)	18	YL	TXL	3534164C1	3601838C1	1024	H	N/A		

Circuit Number	Gauge	Color	Insulation	Terminal / Splice Number	Connector Part number	Connector Number	Cavity	Seal/Sleeve	Lock 1	Lock 2
KS5BF(+)	18	YL	TXL	3534164C1	3601838C1	1024	H	N/A		
3L5BG(+)	18	YL	TXL	3534164C1	3601838C1	1024	J	N/A		
AS5BD(+)	18	YL	TXL	3534164C1	3601838C1	1024	J	N/A		
3L5BG(+)	18	YL	TXL	3534164C1	3601838C1	1024	J	N/A		
AS5BD(+)	18	YL	TXL	3534164C1	3601838C1	1024	J	N/A		
PS5BD(+)	18	YL	TXL	3534164C1	3601838C1	1024	J	N/A		
3L5BG(+)	18	YL	TXL	3534164C1	3601838C1	1024	K	N/A		
AS5BD(+)	18	YL	TXL	3534164C1	3601838C1	1024	K	N/A		
3L5BG(+)	18	YL	TXL	3534164C1	3601838C1	1024	K	N/A		
AS5BD(+)	18	YL	TXL	3534164C1	3601838C1	1024	K	N/A		
PS5BD(+)	18	YL	TXL	3534164C1	3601838C1	1024	K	N/A		
5E5V(+)	18	YL	TXL	3534164C1	3601838C1	1024	L	N/A		
5E5V(+)	18	YL	TXL	3534164C1	3601838C1	1024	L	N/A		
3L5BF(+)	18	YL	TXL	3534164C1	3601838C1	1024	M	N/A	3573833C1	3919239C1
AS5BC(+)	18	YL	TXL	3534164C1	3601838C1	1024	M	N/A		
3L5BF(+)	18	YL	TXL	3534164C1	3601838C1	1024	M	N/A		
AS5BC(+)	18	YL	TXL	3534164C1	3601838C1	1024	M	N/A		
PS5BC(+)	18	YL	TXL	3534164C1	3601838C1	1024	M	N/A		
3L5BK(-)	18	GN	TXL	3534164C1	3601838C1	1025	A	N/A		
AR5BC(-)	18	GN	TXL	3534164C1	3601838C1	1025	A	N/A		
3L5BK(-)	18	GN	TXL	3534164C1	3601838C1	1025	A	N/A		
AR5BC(-)	18	GN	TXL	3534164C1	3601838C1	1025	A	N/A		
BR5BC(-)	18	GN	TXL	3534164C1	3601838C1	1025	A	N/A		
EW5E(-)	18	GN	TXL	3534164C1	3601838C1	1025	B	N/A		
EW5E(-)	18	GN	TXL	3534164C1	3601838C1	1025	B	N/A		
3L5BD(-)	18	GN	TXL	3534164C1	3601838C1	1025	C	N/A		
AR5BD(-)	18	GN	TXL	3534164C1	3601838C1	1025	C	N/A		
3L5BD(-)	18	GN	TXL	3534164C1	3601838C1	1025	C	N/A		
AR5BD(-)	18	GN	TXL	3534164C1	3601838C1	1025	C	N/A		
BR5BD(-)	18	GN	TXL	3534164C1	3601838C1	1025	C	N/A		
3L5BD(-)	18	GN	TXL	3534164C1	3601838C1	1025	D	N/A	3683466C1	3573833C1
AR5BD(-)	18	GN	TXL	3534164C1	3601838C1	1025	D	N/A		
3L5BD(-)	18	GN	TXL	3534164C1	3601838C1	1025	D	N/A		
AR5BD(-)	18	GN	TXL	3534164C1	3601838C1	1025	D	N/A		
BR5BD(-)	18	GN	TXL	3534164C1	3601838C1	1025	D	N/A		
KB5U(-)	18	GN	TXL	3534164C1	3601838C1	1025	E	N/A		
KG5(-)	18	GN	TXL	3534164C1	3601838C1	1025	E	N/A		
LP5BF(-)	18	GN	TXL	3534164C1	3601838C1	1025	E	N/A		
RY5BF(-)	18	GN	TXL	3534164C1	3601838C1	1025	E	N/A		
ZP5BE(-)	18	GN	TXL	3534164C1	3601838C1	1025	E	N/A		
KB5U(-)	18	GN	TXL	3534164C1	3601838C1	1025	E	N/A		
KG5(-)	18	GN	TXL	3534164C1	3601838C1	1025	E	N/A		
LP5BF(-)	18	GN	TXL	3534164C1	3601838C1	1025	E	N/A		
RY5BF(-)	18	GN	TXL	3534164C1	3601838C1	1025	E	N/A		
3L5BE(-)	18	GN	TXL	3534164C1	3601838C1	1025	F	N/A	3765547C1	3765565C1
AR5BE(-)	18	GN	TXL	3534164C1	3601838C1	1025	F	N/A		
3L5BE(-)	18	GN	TXL	3534164C1	3601838C1	1025	F	N/A		
AR5BE(-)	18	GN	TXL	3534164C1	3601838C1	1025	F	N/A		
BR5BE(-)	18	GN	TXL	3534164C1	3601838C1	1025	F	N/A		
3L5BE(+)	18	YL	TXL	3534164C1	3601838C1	1025	G	N/A		
AR5BE(+)	18	YL	TXL	3534164C1	3601838C1	1025	G	N/A		
3L5BE(+)	18	YL	TXL	3534164C1	3601838C1	1025	G	N/A		

Circuit Number	Gauge	Color	Insulation	Terminal / Splice Number	Connector Part number	Connector Number	Cavity	Seal/Sleeve	Lock 1	Lock 2
AR5BE(+)	18	YL	TXL	3534164C1	3601838C1	1025	G	N/A		
BR5BE(+)	18	YL	TXL	3534164C1	3601838C1	1025	G	N/A		
KB5U(+)	18	YL	TXL	3534164C1	3601838C1	1025	H	N/A		
KG5(+)	18	YL	TXL	3534164C1	3601838C1	1025	H	N/A		
LP5BF(+)	18	YL	TXL	3534164C1	3601838C1	1025	H	N/A		
RY5BF(+)	18	YL	TXL	3534164C1	3601838C1	1025	H	N/A		
ZP5BE(+)	18	YL	TXL	3534164C1	3601838C1	1025	H	N/A		
KB5U(+)	18	YL	TXL	3534164C1	3601838C1	1025	H	N/A		
KG5(+)	18	YL	TXL	3534164C1	3601838C1	1025	H	N/A		
LP5BF(+)	18	YL	TXL	3534164C1	3601838C1	1025	H	N/A		
RY5BF(+)	18	YL	TXL	3534164C1	3601838C1	1025	H	N/A		
3L5BD(+)	18	YL	TXL	3534164C1	3601838C1	1025	J	N/A	3610532C1	
AR5BD(+)	18	YL	TXL	3534164C1	3601838C1	1025	J	N/A		
3L5BD(+)	18	YL	TXL	3534164C1	3601838C1	1025	J	N/A		
AR5BD(+)	18	YL	TXL	3534164C1	3601838C1	1025	J	N/A		
BR5BD(+)	18	YL	TXL	3534164C1	3601838C1	1025	J	N/A		
3L5BD(+)	18	YL	TXL	3534164C1	3601838C1	1025	K	N/A	3662518C1	
AR5BD(+)	18	YL	TXL	3534164C1	3601838C1	1025	K	N/A		
3L5BD(+)	18	YL	TXL	3534164C1	3601838C1	1025	K	N/A		
AR5BD(+)	18	YL	TXL	3534164C1	3601838C1	1025	K	N/A		
BR5BD(+)	18	YL	TXL	3534164C1	3601838C1	1025	K	N/A		
EW5E(+)	18	YL	TXL	3534164C1	3601838C1	1025	L	N/A		
EW5E(+)	18	YL	TXL	3534164C1	3601838C1	1025	L	N/A		
3L5BK(+)	18	YL	TXL	3534164C1	3601838C1	1025	M	N/A		
AR5BC(+)	18	YL	TXL	3534164C1	3601838C1	1025	M	N/A		
3L5BK(+)	18	YL	TXL	3534164C1	3601838C1	1025	M	N/A		
AR5BC(+)	18	YL	TXL	3534164C1	3601838C1	1025	M	N/A		
BR5BC(+)	18	YL	TXL	3534164C1	3601838C1	1025	M	N/A		
JK5AJ(-)	18	GN	TXL	3534164C1	3601838C1	1026	A	N/A		
LN5AJ(-)	18	GN	TXL	3534164C1	3601838C1	1026	A	N/A		
JK5AJ(-)	18	GN	TXL	3534164C1	3601838C1	1026	A	N/A		
LN5AJ(-)	18	GN	TXL	3534164C1	3601838C1	1026	A	N/A		
2V5CA(-)	18	GN	TXL	3534164C1	3601838C1	1026	B	N/A		
RV5CA(-)	18	GN	TXL	3534164C1	3601838C1	1026	B	N/A		
YH5A(-)	18	GN	TXL	3534164C1	3601838C1	1026	B	N/A		
2V5CA(-)	18	GN	TXL	3534164C1	3601838C1	1026	B	N/A		
RV5CA(-)	18	GN	TXL	3534164C1	3601838C1	1026	B	N/A		
YH5A(-)	18	GN	TXL	3534164C1	3601838C1	1026	B	N/A		
JK5AK(-)	18	GN	TXL	3534164C1	3601838C1	1026	C	N/A		
LN5AK(-)	18	GN	TXL	3534164C1	3601838C1	1026	C	N/A		
JK5AK(-)	18	GN	TXL	3534164C1	3601838C1	1026	C	N/A		
LN5AK(-)	18	GN	TXL	3534164C1	3601838C1	1026	C	N/A		
JK5AK(-)	18	GN	TXL	3534164C1	3601838C1	1026	D	N/A		
LN5AK(-)	18	GN	TXL	3534164C1	3601838C1	1026	D	N/A		
JK5AK(-)	18	GN	TXL	3534164C1	3601838C1	1026	D	N/A		
LN5AK(-)	18	GN	TXL	3534164C1	3601838C1	1026	D	N/A		
RN5L(-)	20	GN	193	3535484C1	3601838C1	1026	E	N/A		
ZK5A(-)	18	GN	TXL	3534164C1	3601838C1	1026	E	N/A		
RN5L(-)	20	GN	193	3535484C1	3601838C1	1026	E	N/A		
ZR5A(-)	18	GN	TXL	3534164C1	3601838C1	1026	E	N/A		
JK5AL(-)	18	GN	TXL	3534164C1	3601838C1	1026	F	N/A		
LN5AL(-)	18	GN	TXL	3534164C1	3601838C1	1026	F	N/A		

Circuit Number	Gauge	Color	Insulation	Terminal / Splice Number	Connector Part number	Connector Number	Cavity	Seal/Sleeve	Lock 1	Lock 2
JK5AL(-)	18	GN	TXL	3534164C1	3601838C1	1026	F	N/A		
LN5AL(-)	18	GN	TXL	3534164C1	3601838C1	1026	F	N/A		
JK5AL(+)	18	YL	TXL	3534164C1	3601838C1	1026	G	N/A		
LN5AL(+)	18	YL	TXL	3534164C1	3601838C1	1026	G	N/A		
JK5AL(+)	18	YL	TXL	3534164C1	3601838C1	1026	G	N/A		
LN5AL(+)	18	YL	TXL	3534164C1	3601838C1	1026	G	N/A		
RN5L(+)	20	YL	193	3535484C1	3601838C1	1026	H	N/A		
ZK5A(+)	18	YL	TXL	3534164C1	3601838C1	1026	H	N/A		
RN5L(+)	20	YL	193	3535484C1	3601838C1	1026	H	N/A		
ZR5A(+)	18	YL	TXL	3534164C1	3601838C1	1026	H	N/A		
JK5AK(+)	18	YL	TXL	3534164C1	3601838C1	1026	J	N/A		
LN5AK(+)	18	YL	TXL	3534164C1	3601838C1	1026	J	N/A		
JK5AK(+)	18	YL	TXL	3534164C1	3601838C1	1026	J	N/A		
LN5AK(+)	18	YL	TXL	3534164C1	3601838C1	1026	J	N/A		
JK5AK(+)	18	YL	TXL	3534164C1	3601838C1	1026	K	N/A		
LN5AK(+)	18	YL	TXL	3534164C1	3601838C1	1026	K	N/A		
JK5AK(+)	18	YL	TXL	3534164C1	3601838C1	1026	K	N/A		
LN5AK(+)	18	YL	TXL	3534164C1	3601838C1	1026	K	N/A		
2V5CA(+)	18	YL	TXL	3534164C1	3601838C1	1026	L	N/A		
RV5CA(+)	18	YL	TXL	3534164C1	3601838C1	1026	L	N/A		
YH5A(+)	18	YL	TXL	3534164C1	3601838C1	1026	L	N/A		
2V5CA(+)	18	YL	TXL	3534164C1	3601838C1	1026	L	N/A		
RV5CA(+)	18	YL	TXL	3534164C1	3601838C1	1026	L	N/A		
YH5A(+)	18	YL	TXL	3534164C1	3601838C1	1026	L	N/A		
JK5AJ(+)	18	YL	TXL	3534164C1	3601838C1	1026	M	N/A		
LN5AJ(+)	18	YL	TXL	3534164C1	3601838C1	1026	M	N/A		
JK5AJ(+)	18	YL	TXL	3534164C1	3601838C1	1026	M	N/A		
LN5AJ(+)	18	YL	TXL	3534164C1	3601838C1	1026	M	N/A		
RA11-GCC	14	WH	TXL	3613770C1	3613769C1	1027	1	N/A		
RB11-GCC	14	WH	TXL	3613770C1	3613769C1	1027	1	N/A		
RA11-GCC	14	WH	TXL	3613770C1	3613769C1	1027	1	N/A		
RB11-GCC	14	WH	TXL	3613770C1	3613769C1	1027	1	N/A		
CW58-GBG	16	WH	TXL	3613770C1	3613769C1	1027	2	N/A		
CW58-GBG	16	WH	TXL	3613770C1	3613769C1	1027	2	N/A		
CT11-GBE	16	WH	TXL	3613770C1	3613769C1	1027	3	N/A		
DL11-GBE	14	WH	TXL	3613770C1	3613769C1	1027	3	N/A		
JV11-GA	14	WH	TXL	3613770C1	3613769C1	1027	3	N/A		
KL11-GA	14	WH	TXL	3613770C1	3613769C1	1027	3	N/A		
RH11-GBE	14	WH	TXL	3613770C1	3613769C1	1027	3	N/A		
CT11-GBE	16	WH	TXL	3613770C1	3613769C1	1027	3	N/A		
DL11-GBE	14	WH	TXL	3613770C1	3613769C1	1027	3	N/A		
JV11-GA	18	WH	TXL	3613771C1	3613769C1	1027	3	N/A		
KL11-GA	18	WH	TXL	3613771C1	3613769C1	1027	3	N/A		
RH11-GBE	14	WH	TXL	3613770C1	3613769C1	1027	3	N/A		
DL11-GBH	18	WH	TXL	3613771C1	3613769C1	1027	4	N/A		
JV11-GB	16	WH	TXL	3613770C1	3613769C1	1027	4	N/A		
DL11-GBH	18	WH	TXL	3613771C1	3613769C1	1027	4	N/A		
JV11-GB	16	WH	TXL	3613770C1	3613769C1	1027	4	N/A		
DD78-GB	16	WH	TXL	3613770C1	3613769C1	1027	5	N/A		
DD78-GB	16	WH	TXL	3613770C1	3613769C1	1027	5	N/A		
DY54-GX	16	WH	TXL	3613770C1	3613769C1	1027	6	N/A		
PA54-GX	16	WH	TXL	3613770C1	3613769C1	1027	6	N/A		

Circuit Number	Gauge	Color	Insulation	Terminal / Splice Number	Connector Part number	Connector Number	Cavity	Seal/Sleeve	Lock 1	Lock 2
DY54-GX	16	WH	TXL	3613770C1	3613769C1	1027	6	N/A		
PA54-GX	16	WH	TXL	3613770C1	3613769C1	1027	6	N/A		
EW11-GR	14	WH	TXL	3613770C1	3613769C1	1027	7	N/A		
EW11-GR	14	WH	TXL	3613770C1	3613769C1	1027	7	N/A		
2A54-GXE	16	WH	TXL	3613770C1	3613769C1	1027	8	N/A		
3C54-GXE	16	WH	TXL	3613770C1	3613769C1	1027	8	N/A		
3E54-GXE	16	WH	TXL	3613770C1	3613769C1	1027	8	N/A		
AW54-GXE	16	WH	TXL	3613770C1	3613769C1	1027	8	N/A		
HY54-GXE	16	WH	TXL	3613770C1	3613769C1	1027	8	N/A		
AA54-GXE	16	WH	TXL	3613770C1	3613769C1	1027	8	N/A		
EM13-GBP	18	WH	TXL	3613771C1	3613769C1	1027	9	N/A		
GN13-GBP	18	WH	TXL	3613771C1	3613769C1	1027	9	N/A		
EM13-GBP	20	WH	TXL	3613771C1	3613769C1	1027	9	N/A		
GN13-GBP	14	WH	TXL	3613770C1	3613769C1	1027	9	N/A		
DW11-GZ	16	WH	TXL	3613770C1	3613769C1	1027	10	N/A		
DW11-GZ	16	WH	TXL	3613770C1	3613769C1	1027	10	N/A		
CW11-GFU	18	WH	TXL	3613771C	3613769C1	1027	14	N/A		
CX11-GFU	18	WH	TXL	3613771C1	3613769C1	1027	14	N/A		
CW11-GFU	20	WH	TXL	3613771C	3613769C1	1027	14	N/A		
CX11-GFU	20	WH	TXL	3613771C1	3613769C1	1027	14	N/A		
2A54	16	BN	TXL	3613770C1	3613769C1	1028	1	N/A		
3C54	16	BN	TXL	3613770C1	3613769C1	1028	1	N/A		
3.00E+54	16	BN	TXL	3613770C1	3613769C1	1028	1	N/A		
AV54	16	BN	TXL	3613770C1	3613769C1	1028	1	N/A		
AW54	16	BN	TXL	3613770C1	3613769C1	1028	1	N/A		
HY54	16	BN	TXL	3613770C1	3613769C1	1028	1	N/A		
AA58TA	16	BN	TXL	3613770C1	3613769C1	1028	1	N/A		
2A58	16	BN	TXL	3613770C1	3613769C1	1028	2	N/A		
AV58	16	BN	TXL	3613770C1	3613769C1	1028	2	N/A		
AW58	16	BN	TXL	3613770C1	3613769C1	1028	2	N/A		
HY58	16	BN	TXL	3613770C1	3613769C1	1028	2	N/A		
2A58TA	16	BN	TXL	3613770C1	3613769C1	1028	3	N/A		
3C58TA	16	BN	TXL	3613770C1	3613769C1	1028	3	N/A		
3E58TA	16	BN	TXL	3613770C1	3613769C1	1028	3	N/A		
AV58TA	16	BN	TXL	3613770C1	3613769C1	1028	3	N/A		
AW58TA	16	BN	TXL	3613770C1	3613769C1	1028	3	N/A		
HY58TA	16	BN	TXL	3613770C1	3613769C1	1028	3	N/A		
2A58	16	BN	TXL	3613770C1	3613769C1	1028	3	N/A		
2A58TB	18	BN	TXL	3613771C1	3613769C1	1028	4	N/A		
3C58TB	18	BN	TXL	3613771C1	3613769C1	1028	4	N/A		
3E58TB	18	BN	TXL	3613771C1	3613769C1	1028	4	N/A		
AV58TB	18	BN	TXL	3613771C1	3613769C1	1028	4	N/A		
AW58TB	18	BN	TXL	3613771C1	3613769C1	1028	4	N/A		
HY58TB	18	BN	TXL	3613771C1	3613769C1	1028	4	N/A		
AA54	16	BN	TXL	3613770C1	3613769C1	1028	4	N/A		
2A54A	16	BN	TXL	3613770C1	3613769C1	1028	5	N/A		
3C54A	16	BN	TXL	3613770C1	3613769C1	1028	5	N/A		
3E54A	16	BN	TXL	3613770C1	3613769C1	1028	5	N/A		
AV54A	16	BN	TXL	3613770C1	3613769C1	1028	5	N/A		
AW54A	16	BN	TXL	3613770C1	3613769C1	1028	5	N/A		
HY54A	16	BN	TXL	3613770C1	3613769C1	1028	5	N/A		
AA68A	18	BN	TXL	3613771C1	3613769C1	1028	5	N/A		

Circuit Number	Gauge	Color	Insulation	Terminal / Splice Number	Connector Part number	Connector Number	Cavity	Seal/Sleeve	Lock 1	Lock 2
2A58DA	18	BN	TXL	3613771C1	3613769C1	1028	6	N/A		
3C58DA	18	BN	TXL	3613771C1	3613769C1	1028	6	N/A		
AV58DA	18	BN	TXL	3613771C1	3613769C1	1028	6	N/A		
2A58DB	18	BN	TXL	3613771C1	3613769C1	1028	7	N/A		
3C58DB	18	BN	TXL	3613771C1	3613769C1	1028	7	N/A		
AV58DB	18	BN	TXL	3613771C1	3613769C1	1028	7	N/A		
AA54A	16	BN	TXL	3613770C1	3613769C1	1028	7	N/A		
2A68A	18	BN	TXL	3613771C1	3613769C1	1028	8	N/A		
3C68A	18	BN	TXL	3613771C1	3613769C1	1028	8	N/A		
3E68A	18	BN	TXL	3613771C1	3613769C1	1028	8	N/A		
AV68A	18	BN	TXL	3613771C1	3613769C1	1028	8	N/A		
AW68A	18	BN	TXL	3613771C1	3613769C1	1028	8	N/A		
HY68A	18	BN	TXL	3613771C1	3613769C1	1028	8	N/A		
2D58DA	18	BN	TXL	3613771C1	3613769C1	1028	8	N/A		
AA58TB	18	BN	TXL	3613771C1	3613769C1	1028	11	N/A		
2D58DB	18	BN	TXL	3613771C1	3613769C1	1028	13	N/A		
CW58B	18	BN	TXL	3613771C1	3613769C1	1028	14	N/A		
CX58B	18	BN	TXL	3613771C1	3613769C1	1028	14	N/A		
CW58B	20	BN	TXL	3613771C1	3613769C1	1028	14	N/A		
CX58B	20	BN	TXL	3613771C1	3613769C1	1028	14	N/A		
3L5BC(-)	18	GN	TXL	3534164C1	3601838C1	1029	A	N/A	3606525C1	
FH5BP(-)	18	GN	TXL	3534164C1	3601838C1	1029	A	N/A		
3L5BC(-)	18	GN	TXL	3534164C1	3601838C1	1029	A	N/A		
BV5BP(-)	18	GN	TXL	3534164C1	3601838C1	1029	A	N/A		
FH5BP(-)	18	GN	TXL	3534164C1	3601838C1	1029	A	N/A		
ZG5(-)	18	GN	TXL	3534164C1	3601838C1	1029	B	N/A		
ZG5(-)	18	GN	TXL	3534164C1	3601838C1	1029	B	N/A		
3L5BH(-)	18	GN	TXL	3534164C1	3601838C1	1029	C	N/A		
FH5BR(-)	18	GN	TXL	3534164C1	3601838C1	1029	C	N/A		
3L5BH(-)	18	GN	TXL	3534164C1	3601838C1	1029	C	N/A		
BV5BR(-)	18	GN	TXL	3534164C1	3601838C1	1029	C	N/A		
FH5BR(-)	18	GN	TXL	3534164C1	3601838C1	1029	C	N/A		
3L5BH(-)	18	GN	TXL	3534164C1	3601838C1	1029	D	N/A		
FH5BR(-)	18	GN	TXL	3534164C1	3601838C1	1029	D	N/A		
3L5BH(-)	18	GN	TXL	3534164C1	3601838C1	1029	D	N/A		
BV5BR(-)	18	GN	TXL	3534164C1	3601838C1	1029	D	N/A		
FH5BR(-)	18	GN	TXL	3534164C1	3601838C1	1029	D	N/A		
FM5UA(-)	18	GN	TXL	3534164C1	3601838C1	1029	E	N/A		
JE5(-)	18	GN	TXL	3534164C1	3601838C1	1029	E	N/A		
LB5UA(-)	18	GN	TXL	3534164C1	3601838C1	1029	E	N/A		
JE5(-)	20	GN	193	3535484C1	3601838C1	1029	E	N/A		
LB5UA(-)	18	GN	TXL	3534164C1	3601838C1	1029	E	N/A		
3L5BK(-)	18	GN	TXL	3534164C1	3601838C1	1029	F	N/A		
FH5BM(-)	18	GN	TXL	3534164C1	3601838C1	1029	F	N/A		
3L5BK(-)	18	GN	TXL	3534164C1	3601838C1	1029	F	N/A		
BV5BA(-)	18	GN	TXL	3534164C1	3601838C1	1029	F	N/A		
FH5BM(-)	18	GN	TXL	3534164C1	3601838C1	1029	F	N/A		
3L5BK(+)	18	YL	TXL	3534164C1	3601838C1	1029	G	N/A		
FH5BM(+)	18	YL	TXL	3534164C1	3601838C1	1029	G	N/A		
3L5BK(+)	18	YL	TXL	3534164C1	3601838C1	1029	G	N/A		
BV5BA(+)	18	YL	TXL	3534164C1	3601838C1	1029	G	N/A		
FH5BM(+)	18	YL	TXL	3534164C1	3601838C1	1029	G	N/A		

Circuit Number	Gauge	Color	Insulation	Terminal / Splice Number	Connector Part number	Connector Number	Cavity	Seal/Sleeve	Lock 1	Lock 2
FM5UA(+)	18	YL	TXL	3534164C1	3601838C1	1029	H	N/A		
JE5(+)	18	YL	TXL	3534164C1	3601838C1	1029	H	N/A		
LB5UA(+)	18	YL	TXL	3534164C1	3601838C1	1029	H	N/A		
JE5(+)	20	YL	193	3535484C1	3601838C1	1029	H	N/A		
LB5UA(+)	18	YL	TXL	3534164C1	3601838C1	1029	H	N/A		
3L5BH(+)	18	YL	TXL	3534164C1	3601838C1	1029	J	N/A		
FH5BR(+)	18	YL	TXL	3534164C1	3601838C1	1029	J	N/A		
3L5BH(+)	18	YL	TXL	3534164C1	3601838C1	1029	J	N/A		
BV5BR(+)	18	YL	TXL	3534164C1	3601838C1	1029	J	N/A		
FH5BR(+)	18	YL	TXL	3534164C1	3601838C1	1029	J	N/A		
3L5BH(+)	18	YL	TXL	3534164C1	3601838C1	1029	K	N/A		
FH5BR(+)	18	YL	TXL	3534164C1	3601838C1	1029	K	N/A		
3L5BH(+)	18	YL	TXL	3534164C1	3601838C1	1029	K	N/A		
BV5BR(+)	18	YL	TXL	3534164C1	3601838C1	1029	K	N/A		
FH5BR(+)	18	YL	TXL	3534164C1	3601838C1	1029	K	N/A		
ZG5(+)	18	YL	TXL	3534164C1	3601838C1	1029	L	N/A		
ZG5(+)	18	YL	TXL	3534164C1	3601838C1	1029	L	N/A		
3L5BC(+)	18	YL	TXL	3534164C1	3601838C1	1029	M	N/A	3601921C1	
FH5BP(+)	18	YL	TXL	3534164C1	3601838C1	1029	M	N/A		
3L5BC(+)	18	YL	TXL	3534164C1	3601838C1	1029	M	N/A		
BV5BP(+)	18	YL	TXL	3534164C1	3601838C1	1029	M	N/A		
FH5BP(+)	18	YL	TXL	3534164C1	3601838C1	1029	M	N/A		
ZF56AAA	18A	OR	TXL	3534164C1	3700745C1	1030	A	N/A		
2C56D	18	OR	TXL	3534164C1	3700745C1	1030	B	N/A		
AA56C	16	OR	TXL	3534164C1	3700745C1	1030	D	N/A		
AA56F	16	OR	TXL	3534164C1	3700745C1	1030	E	N/A		
AA56G	16	OR	TXL	3534164C1	3700745C1	1030	F	N/A		
AA57A	16	OR	TXL	3534164C1	3700745C1	1030	G	N/A		
AA57	16	OR	TXL	3534164C1	3700745C1	1030	H	N/A		
AA57F	16	OR	TXL	3534164C1	3700745C1	1030	J	N/A		
PA57BA	16	OR	TXL	3534164C1	3700745C1	1030	K	N/A		
2C57B	18	OR	TXL	3534164C1	3700745C1	1030	L	N/A		
ZD57AAA	20	OR	TXL	3535484C1	3700745C1	1030	M	N/A		
ZF57AAA	20	OR	TXL	3535484C1	3700745C1	1030	M	N/A		
3T71BA	16	OR	TXL	3534164C	3700745C1	1040	A	N/A		
BJ71BA	16	OR	TXL	3534164C	3700745C1	1040	A	N/A		
BK71B	16	OR	TXL	3534164C1	3700745C1	1040	A	N/A		
BP71B	16	OR	TXL	3534164C1	3700745C1	1040	A	N/A		
EY71BD	16	OR	TXL	3534164C1	3700745C1	1040	A	N/A		
GM71BA	16	OR	TXL	3534164C1	3700745C1	1040	A	N/A		
3T71BC	16	OR	TXL	3534164C1	3700745C1	1040	B	N/A		
BJ71BC	16	OR	TXL	3534164C1	3700745C1	1040	B	N/A		
BK71BA	16	OR	TXL	3534164C1	3700745C1	1040	B	N/A		
BP71BA	16	OR	TXL	3534164C1	3700745C1	1040	B	N/A		
EY71BE	16	OR	TXL	3534164C1	3700745C1	1040	B	N/A		
GM71BE	16	OR	TXL	3534164C1	3700745C1	1040	B	N/A		
BG71BB	16	LTBL	TXL	3534164C1	3700745C1	1040	C	N/A		
BL71BB	16	LTBL	TXL	3534164C1	3700745C1	1040	C	N/A		
AA56A	16	OR	TXL	3534164C1	3700745C1	1040	D	N/A		
AA56AB	16	OR	TXL	3534164C1	3700745C1	1040	E	N/A		
BG56BC	16	YL	TXL	3534164C1	3700745C1	1040	F	N/A		
BL56BC	16	YL	TXL	3534164C1	3700745C1	1040	F	N/A		

Circuit Number	Gauge	Color	Insulation	Terminal / Splice Number	Connector Part number	Connector Number	Cavity	Seal/Sleeve	Lock 1	Lock 2
AA57C	16	OR	TXL	3534164C1	3700745C1	1040	G	N/A		
AA57CA	16	OR	TXL	3534164C1	3700745C1	1040	H	N/A		
BG57BC	16	LTGN	TXL	3534164C1	3700745C1	1040	J	N/A		
BL57BC	16	LTGN	TXL	3534164C1	3700745C1	1040	J	N/A		
LR86AT	18	LTGN	TXL	1661262C1	1661260C1	1050	A	N/A		
MX86AT	18	LTGN	TXL	1661262C1	1661260C1	1050	A	N/A		
LR86AT	18	LTGN	TXL	1661262C1	1661260C1	1050	A	N/A		
MX86AT	18	LTGN	TXL	1661262C1	1661260C1	1050	A	N/A		
LR86AU	18	LTGN	TXL	1661262C1	1661260C1	1050	B	N/A		
MX86AU	18	LTGN	TXL	1661262C1	1661260C1	1050	B	N/A		
LR86AU	18	LTGN	TXL	1661262C1	1661260C1	1050	B	N/A		
MX86AU	18	LTGN	TXL	1661262C1	1661260C1	1050	B	N/A		
LR86AR	18	LTGN	TXL	1661262C1	1661260C1	1051	A	N/A		
MX86AR	18	LTGN	TXL	1661262C1	1661260C1	1051	A	N/A		
LR86AR	18	LTGN	TXL	1661262C1	1661260C1	1051	A	N/A		
MX86AR	18	LTGN	TXL	1661262C1	1661260C1	1051	A	N/A		
LR86AS	18	LTGN	TXL	1661262C1	1661260C1	1051	B	N/A		
MX86AS	18	LTGN	TXL	1661262C1	1661260C1	1051	B	N/A		
LR86AS	18	LTGN	TXL	1661262C1	1661260C1	1051	B	N/A		
MX86AS	18	LTGN	TXL	1661262C1	1661260C1	1051	B	N/A		
ZV50B	18	YL	TXL	1661261C1	1661259C1	1052	A	N/A		
ZX50B	18	YL	TXL	1661261C1	1661259C1	1052	A	N/A		
ZV50A	18	YL	TXL	1661261C1	1661259C1	1052	B	N/A		
ZX50A	18	YL	TXL	1661261C1	1661259C1	1052	B	N/A		
ZW75D	22	LTGN	TXL	4116777C1	4116776C1	1053	1	N/A		
2E75D	22	LTGN	TXL	4116777C1	4116776C1	1053	1	N/A		
ZW50B	22	RD	TXL	4116777C1	4116776C1	1053	2	N/A		
ZZ50B	22	RD	TXL	4116777C1	4116776C1	1053	2	N/A		
ZW14SUN	22	RD	TXL	4116777C1	4116776C1	1053	3	N/A		
ZZ14SUN	22	RD	TXL	4116777C1	4116776C1	1053	3	N/A		
ZW50A	22	YL	TXL	4116777C1	4116776C1	1053	4	N/A		
ZZ50A	22	YL	TXL	4116777C1	4116776C1	1053	4	N/A		
ZW75D-G	22	LTGN	TXL	4116777C1	4116776C1	1053	5	N/A		
2E75D-G	22	LTGN	TXL	4116777C1	4116776C1	1053	5	N/A		
AA15	18	RD	TXL	1661208C1	3546518C1	1100	A	N/A		
AA15	18	RD	TXL	1661208C1	3546518C1	1100	A	N/A		
ND17HA	16	PK	TXL	1661209C1	3546518C1	1100	B	N/A		
NE17H	18	PK	TXL	1661208C1	3546518C1	1100	B	N/A		
ND17HA	16	PK	TXL	1661209C1	3546518C1	1100	B	N/A		
NE17H	18	PK	TXL	1661208C1	3546518C1	1100	B	N/A		
AA149	18	GY	TXL	1661208C1	3546518C1	1100	C	N/A		
AA149	18	GY	TXL	1661208C1	3546518C1	1100	C	N/A		
AA149F	18	GY	TXL	1661208C1	3546518C1	1100	D	N/A		
AA149F	18	GY	TXL	1661208C1	3546518C1	1100	D	N/A		
FU79B	18	GY	GXL	1661262C1	1661260C1	1112	A	N/A		
JZ79A	18	GY	TXL	1661262C1	1661260C1	1112	A	N/A		
FU79B	18	GY	GXL	1661262C1	1661260C1	1112	A	N/A		
JZ79A	18	GY	TXL	1661262C1	1661260C1	1112	A	N/A		
FU9BC	18	GY	GXL	1661262C1	1661260C1	1112	B	N/A		
JZ9BB	18	GY	TXL	1661262C1	1661260C1	1112	B	N/A		
FU9BC	18	GY	GXL	1661262C1	1661260C1	1112	B	N/A		
JZ9BB	18	GY	TXL	1661262C1	1661260C1	1112	B	N/A		

Circuit Number	Gauge	Color	Insulation	Terminal / Splice Number	Connector Part number	Connector Number	Cavity	Seal/Sleeve	Lock 1	Lock 2
FU79C	18	GY	GXL	1661262C1	1661260C1	1113	A	N/A		
FU79C	18	GY	GXL	1661262C1	1661260C1	1113	A	N/A		
FU9BD	18	GY	GXL	1661262C1	1661260C1	1113	B	N/A		
FU9BD	18	GY	GXL	1661262C1	1661260C1	1113	B	N/A		
AA60-G	18	WH	TXL	1661261C1	3767197C1	1202	A	N/A		
AA60-G	18	WH	TXL	1661261C1	3767197C1	1202	A	N/A		
AA60C	18	OR	TXL	1661261C1	3767197C1	1202	B	N/A		
AA60C	18	OR	TXL	1661261C1	3767197C1	1202	B	N/A		
AA60A	18	OR	TXL	1661261C1	3767197C1	1202	C	N/A		
AA60A	18	OR	TXL	1661261C1	3767197C1	1202	C	N/A		
AA60B	18	OR	TXL	1661261C1	3767197C1	1202	D	N/A		
AA60B	18	OR	TXL	1661261C1	3767197C1	1202	D	N/A		
ZE75C	12	LTGN	TXL	2031531C1	2031522C1	1215	A	2025428C1		
RB75-GC	10	WH	TXL	2031531C1	2031522C1	1215	B	2025427C1		
GZ5AH(+)	18	YL	TXL	3597102C1	3597143C1	1300	1	N/A		
JK5AH(+)	18	YL	TXL	3597102C1	3597143C1	1300	1	N/A		
KP5AH(+)	18	YL	TXL	3597102C1	3597143C1	1300	1	N/A		
KU5AH(+)	18	YL	TXL	3597102C1	3597143C1	1300	1	N/A		
LN5AH(+)	18	YL	TXL	3597102C1	3597143C1	1300	1	N/A		
GZ5AH(+)	18	YL	TXL	3597102C1	3597143C1	1300	1	N/A		
JK5AH(+)	18	YL	TXL	3597102C1	3597143C1	1300	1	N/A		
KP5AH(+)	18	YL	TXL	3597102C1	3597143C1	1300	1	N/A		
KU5AH(+)	18	YL	TXL	3597102C1	3597143C1	1300	1	N/A		
LN5AH(+)	18	YL	TXL	3597102C1	3597143C1	1300	1	N/A		
GZ5AH(-)	18	GN	TXL	3597102C1	3597143C1	1300	2	N/A		
JK5AH(-)	18	GN	TXL	3597102C1	3597143C1	1300	2	N/A		
KP5AH(-)	18	GN	TXL	3597102C1	3597143C1	1300	2	N/A		
KU5AH(-)	18	GN	TXL	3597102C1	3597143C1	1300	2	N/A		
LN5AH(-)	18	GN	TXL	3597102C1	3597143C1	1300	2	N/A		
GZ5AH(-)	18	GN	TXL	3597102C1	3597143C1	1300	2	N/A		
JK5AH(-)	18	GN	TXL	3597102C1	3597143C1	1300	2	N/A		
KP5AH(-)	18	GN	TXL	3597102C1	3597143C1	1300	2	N/A		
KU5AH(-)	18	GN	TXL	3597102C1	3597143C1	1300	2	N/A		
LN5AH(-)	18	GN	TXL	3597102C1	3597143C1	1300	2	N/A		
MR86AE	18	LTGN	TXL	3597102C1	3597143C1	1300	4	N/A		
MZ86FF	18	LTGN	TXL	3597102C1	3597143C1	1300	4	N/A		
MR86AE	18	LTGN	TXL	3597102C1	3597143C1	1300	4	N/A		
MZ86AE	18	LTGN	TXL	3597102C1	3597143C1	1300	4	N/A		
NL86AE	18	LTGN	TXL	3597102C1	3597143C1	1300	4	N/A		
NP86AL	18	LTGN	TXL	3597102C1	3597143C1	1300	4	N/A		
MY66AA	18	LTGN	TXL	3597102C1	3597143C1	1300	5	N/A		
MY66AA	18	LTGN	TXL	3597102C1	3597143C1	1300	5	N/A		
MR86P	18	LTGN	TXL	3597102C1	3597143C1	1300	7	N/A		
MZ86AF	18	LTGN	TXL	3597102C1	3597143C1	1300	7	N/A		
MR86P	18	LTGN	TXL	3597102C1	3597143C1	1300	7	N/A		
MZ86AF	18	LTGN	TXL	3597102C1	3597143C1	1300	7	N/A		
NL86AF	18	LTGN	TXL	3597102C1	3597143C1	1300	7	N/A		
NP86P	18	LTGN	TXL	3597102C1	3597143C1	1300	7	N/A		
MR86-G	18	WH	TXL	3597102C1	3597143C1	1300	8	N/A		
MZ86-G	18	WH	TXL	3597102C1	3597143C1	1300	8	N/A		
MR86-G	18	WH	TXL	3597102C1	3597143C1	1300	8	N/A		
MZ86-G	18	WH	TXL	3597102C1	3597143C1	1300	8	N/A		

Circuit Number	Gauge	Color	Insulation	Terminal / Splice Number	Connector Part number	Connector Number	Cavity	Seal/Sleeve	Lock 1	Lock 2
NL86-G	18	WH	TXL	3597102C1	3597143C1	1300	8	N/A		
NP86-G	18	WH	TXL	3597102C1	3597143C1	1300	8	N/A		
MU86DA	18	LTGN	TXL	3597102C1	3597143C1	1300	9	N/A		
MW86DB	18	LTGN	TXL	3597102C1	3597143C1	1300	9	N/A		
MU86DA	18	LTGN	TXL	3597102C1	3597143C1	1300	9	N/A		
MW86DB	18	LTGN	TXL	3597102C1	3597143C1	1300	9	N/A		
MU86EA	18	LTGN	TXL	3597102C1	3597143C1	1300	10	N/A		
MW86EB	18	LTGN	TXL	3597102C1	3597143C1	1300	10	N/A		
MU86EA	18	LTGN	TXL	3597102C1	3597143C1	1300	10	N/A		
MW86EB	18	LTGN	TXL	3597102C1	3597143C1	1300	10	N/A		
CT86K	18	LTGN	TXL	3597102C1	3597143C1	1300	11	N/A		
MB86K	18	LTGN	TXL	3597102C1	3597143C1	1300	11	N/A		
MV86K	18	LTGN	TXL	3597102C1	3597143C1	1300	11	N/A		
MX86K	18	LTGN	TXL	3597102C1	3597143C1	1300	11	N/A		
CT86K	18	LTGN	TXL	3597102C1	3597143C1	1300	11	N/A		
MB86K	18	LTGN	TXL	3597102C1	3597143C1	1300	11	N/A		
MV86K	18	LTGN	TXL	3597102C1	3597143C1	1300	11	N/A		
MX86K	18	LTGN	TXL	3597102C1	3597143C1	1300	11	N/A		
CT86L	18	LTGN	TXL	3597102C1	3597143C1	1300	12	N/A		
MB86L	18	LTGN	TXL	3597102C1	3597143C1	1300	12	N/A		
MV86L	18	LTGN	TXL	3597102C1	3597143C1	1300	12	N/A		
MX86L	18	LTGN	TXL	3597102C1	3597143C1	1300	12	N/A		
CT86L	18	LTGN	TXL	3597102C1	3597143C1	1300	12	N/A		
MB86L	18	LTGN	TXL	3597102C1	3597143C1	1300	12	N/A		
MV86L	18	LTGN	TXL	3597102C1	3597143C1	1300	12	N/A		
MX86L	18	LTGN	TXL	3597102C1	3597143C1	1300	12	N/A		
CT86H	18	LTGN	TXL	3597102C1	3597143C1	1300	13	N/A		
MB86H	18	LTGN	TXL	3597102C1	3597143C1	1300	13	N/A		
MV86H	18	LTGN	TXL	3597102C1	3597143C1	1300	13	N/A		
MX86H	18	LTGN	TXL	3597102C1	3597143C1	1300	13	N/A		
CT86H	18	LTGN	TXL	3597102C1	3597143C1	1300	13	N/A		
MB86H	18	LTGN	TXL	3597102C1	3597143C1	1300	13	N/A		
MV86H	18	LTGN	TXL	3597102C1	3597143C1	1300	13	N/A		
MX86H	18	LTGN	TXL	3597102C1	3597143C1	1300	13	N/A		
CT86J	18	LTGN	TXL	3597102C1	3597143C1	1300	14	N/A		
MB86J	18	LTGN	TXL	3597102C1	3597143C1	1300	14	N/A		
MV86J	18	LTGN	TXL	3597102C1	3597143C1	1300	14	N/A		
MX86J	18	LTGN	TXL	3597102C1	3597143C1	1300	14	N/A		
CT86J	18	LTGN	TXL	3597102C1	3597143C1	1300	14	N/A		
MB86J	18	LTGN	TXL	3597102C1	3597143C1	1300	14	N/A		
MV86J	18	LTGN	TXL	3597102C1	3597143C1	1300	14	N/A		
MX86J	18	LTGN	TXL	3597102C1	3597143C1	1300	14	N/A		
MU86BA	18	LTGN	TXL	3597102C1	3597143C1	1300	15	N/A		
MW86BB	18	LTGN	TXL	3597102C1	3597143C1	1300	15	N/A		
MU86BA	18	LTGN	TXL	3597102C1	3597143C1	1300	15	N/A		
MW86BB	18	LTGN	TXL	3597102C1	3597143C1	1300	15	N/A		
MU86CA	18	LTGN	TXL	3597102C1	3597143C1	1300	16	N/A		
MW86CB	18	LTGN	TXL	3597102C1	3597143C1	1300	16	N/A		
MU86CA	18	LTGN	TXL	3597102C1	3597143C1	1300	16	N/A		
MW86CB	18	LTGN	TXL	3597102C1	3597143C1	1300	16	N/A		
MY86AC	18	LTGN	TXL	3600062C1	3600061C1	1301	2	N/A		
MY86AC	18	LTGN	TXL	3600062C1	3600061C1	1301	2	N/A		

Circuit Number	Gauge	Color	Insulation	Terminal / Splice Number	Connector Part number	Connector Number	Cavity	Seal/Sleeve	Lock 1	Lock 2
RF86AA	20	LTGN	TXL	3600062C1	3600061C1	1301	7	N/A		
RF86AA	20	LTGN	TXL	3600062C1	3600061C1	1301	7	N/A		
RF86AC	20	LTGN	TXL	3600062C1	3600061C1	1301	9	N/A		
RF86AC	20	LTGN	TXL	3600062C1	3600061C1	1301	9	N/A		
RF86AB	20	LTGN	TXL	3600062C1	3600061C1	1301	10	N/A		
RF86AB	20	LTGN	TXL	3600062C1	3600061C1	1301	10	N/A		
RF86AD	20	LTGN	TXL	3600062C1	3600061C1	1301	11	N/A		
RF86AD	20	LTGN	TXL	3600062C1	3600061C1	1301	11	N/A		
YW86A(+)	20	LTGN	TXL	3600062C1	3600061C1	1301	15	N/A		
YW86A(+)	20	LTGN	TXL	3600062C1	3600061C1	1301	15	N/A		
YW86A(-)	20	LTGN	TXL	3600062C1	3600061C1	1301	16	N/A		
YW86A(-)	20	LTGN	TXL	3600062C1	3600061C1	1301	16	N/A		
GM6B	20	VT	GXL	2033819C1	1687789C1	1378	A	1652325C1		
GN6B	20	VT	GXL	2033819C1	1687789C1	1378	A	1652325C1		
KD34	16	TN	TXL	2033819C1	1687789C1	1378	B	1652325C1		
KD34E	20	TN	TXL	2033819C1	1687789C1	1378	C	3517771C1		
GM34B	16	TN	TXL	2033819C1	1687789C1	1378	D	1652325C1		
GN34B	16	TN	TXL	2033819C1	1687789C1	1378	D	1652325C1		
KD34A	16	TN	TXL	2033819C1	1687789C1	1378	E	1652325C1		
XY94-GA	12	WH	TXL	3597157C1	3596926C1	1400	1	N/A		
XY94-GA	12	WH	TXL	3597157C1	3596926C1	1400	1	N/A		
3F94AA	16	GY	TXL	3598073C1	3596926C1	1400	2	N/A		
3F94AA	18	GY	TXL	3598072C1	3596926C1	1400	2	N/A		
XY94V	18	GY	TXL	3598072C1	3596926C1	1400	3	N/A		
XY94V	18	GY	TXL	3598072C1	3596926C1	1400	3	N/A		
XX94BN	18	GY	TXL	3598072C1	3596926C1	1400	4	N/A		
XX94BN	18	GY	TXL	3598072C1	3596926C1	1400	4	N/A		
XX94BM	18	GY	TXL	3598072C1	3596926C1	1400	5	N/A		
XX94BM	18	GY	TXL	3598072C1	3596926C1	1400	5	N/A		
3D5N(-)	18	GN	TXL	3598072C1	3596926C1	1400	7	N/A		
9K5N(-)	18	GN	TXL	3598072C1	3596926C1	1400	7	N/A		
9L5N(-)	18	GN	TXL	3598072C1	3596926C1	1400	7	N/A		
JC5N(-)	18	GN	TXL	3598072C1	3596926C1	1400	7	N/A		
JD5N(-)	18	GN	TXL	3598072C1	3596926C1	1400	7	N/A		
JF5N(-)	18	GN	TXL	3598072C1	3596926C1	1400	7	N/A		
JG5N(-)	18	GN	TXL	3598072C1	3596926C1	1400	7	N/A		
LC5N(-)	18	GN	TXL	3598072C1	3596926C1	1400	7	N/A		
LD5N(-)	18	GN	TXL	3598072C1	3596926C1	1400	7	N/A		
LE5N(-)	18	GN	TXL	3598072C1	3596926C1	1400	7	N/A		
LU5N(-)	18	GN	TXL	3598072C1	3596926C1	1400	7	N/A		
LV5N(-)	18	GN	TXL	3598072C1	3596926C1	1400	7	N/A		
PY5N(-)	18	GN	TXL	3598072C1	3596926C1	1400	7	N/A		
RJ5N(-)	18	GN	TXL	3598072C1	3596926C1	1400	7	N/A		
RS5N(-)	18	GN	TXL	3598072C1	3596926C1	1400	7	N/A		
RU5N(-)	18	GN	TXL	3598072C1	3596926C1	1400	7	N/A		
SB5N(-)	18	GN	TXL	3598072C1	3596926C1	1400	7	N/A		
SC5N(-)	18	GN	TXL	3598072C1	3596926C1	1400	7	N/A		
SD5N(-)	18	GN	TXL	3598072C1	3596926C1	1400	7	N/A		
SE5N(-)	18	GN	TXL	3598072C1	3596926C1	1400	7	N/A		
SN5N(-)	18	GN	TXL	3598072C1	3596926C1	1400	7	N/A		
VC5N(-)	18	GN	TXL	3598072C1	3596926C1	1400	7	N/A		
VD5N(-)	18	GN	TXL	3598072C1	3596926C1	1400	7	N/A		

Circuit Number	Gauge	Color	Insulation	Terminal / Splice Number	Connector Part number	Connector Number	Cavity	Seal/Sleeve	Lock 1	Lock 2
VE5N(-)	18	GN	TXL	3598072C1	3596926C1	1400	7	N/A		
VF5N(-)	18	GN	TXL	3598072C1	3596926C1	1400	7	N/A		
VV5N(-)	18	GN	TXL	3598072C1	3596926C1	1400	7	N/A		
YX5N(-)	18	GN	TXL	3598072C1	3596926C1	1400	7	N/A		
YZ5N(-)	18	GN	TXL	3598072C1	3596926C1	1400	7	N/A		
2H5N(-)	18	GN	TXL	3598072C1	3596926C1	1400	7	N/A		
2W5N(-)	18	GN	TXL	3598072C1	3596926C1	1400	7	N/A		
2Z5N(-)	18	GN	TXL	3598072C1	3596926C1	1400	7	N/A		
3C5N(-)	18	GN	TXL	3598072C1	3596926C1	1400	7	N/A		
3D5N(-)	18	GN	TXL	3598072C1	3596926C1	1400	7	N/A		
3E5N(-)	18	GN	TXL	3598072C1	3596926C1	1400	7	N/A		
3J5N(-)	18	GN	TXL	3598072C1	3596926C1	1400	7	N/A		
3R5N(-)	18	GN	TXL	3598072C1	3596926C1	1400	7	N/A		
3U5N(-)	18	GN	TXL	3598072C1	3596926C1	1400	7	N/A		
3W5N(-)	18	GN	TXL	3598072C1	3596926C1	1400	7	N/A		
9K5N(-)	18	GN	TXL	3598072C1	3596926C1	1400	7	N/A		
9L5N(-)	18	GN	TXL	3598072C1	3596926C1	1400	7	N/A		
JC5N(-)	18	GN	TXL	3598072C1	3596926C1	1400	7	N/A		
JD5N(-)	18	GN	TXL	3598072C1	3596926C1	1400	7	N/A		
JF5N(-)	18	GN	TXL	3598072C1	3596926C1	1400	7	N/A		
JG5N(-)	18	GN	TXL	3598072C1	3596926C1	1400	7	N/A		
LC5N(-)	18	GN	TXL	3598072C1	3596926C1	1400	7	N/A		
LD5N(-)	18	GN	TXL	3598072C1	3596926C1	1400	7	N/A		
LE5N(-)	18	GN	TXL	3598072C1	3596926C1	1400	7	N/A		
LU5N(-)	18	GN	TXL	3598072C1	3596926C1	1400	7	N/A		
LV5N(-)	18	GN	TXL	3598072C1	3596926C1	1400	7	N/A		
PY5N(-)	18	GN	TXL	3598072C1	3596926C1	1400	7	N/A		
RJ5N(-)	18	GN	TXL	3598072C1	3596926C1	1400	7	N/A		
RS5N(-)	18	GN	TXL	3598072C1	3596926C1	1400	7	N/A		
RU5N(-)	18	GN	TXL	3598072C1	3596926C1	1400	7	N/A		
SB5N(-)	18	GN	TXL	3598072C1	3596926C1	1400	7	N/A		
SC5N(-)	18	GN	TXL	3598072C1	3596926C1	1400	7	N/A		
SD5N(-)	18	GN	TXL	3598072C1	3596926C1	1400	7	N/A		
SE5N(-)	18	GN	TXL	3598072C1	3596926C1	1400	7	N/A		
SN5N(-)	18	GN	TXL	3598072C1	3596926C1	1400	7	N/A		
VC5N(-)	18	GN	TXL	3598072C1	3596926C1	1400	7	N/A		
VD5N(-)	18	GN	TXL	3598072C1	3596926C1	1400	7	N/A		
VE5N(-)	18	GN	TXL	3598072C1	3596926C1	1400	7	N/A		
VF5N(-)	18	GN	TXL	3598072C1	3596926C1	1400	7	N/A		
VG5N(-)	18	GN	TXL	3598072C1	3596926C1	1400	7	N/A		
YX5N(-)	18	GN	TXL	3598072C1	3596926C1	1400	7	N/A		
YZ5N(-)	18	GN	TXL	3598072C1	3596926C1	1400	7	N/A		
3D5N(+)	18	YL	TXL	3598072C1	3596926C1	1400	8	N/A		
9K5N(+)	18	YL	TXL	3598072C1	3596926C1	1400	8	N/A		
9L5N(+)	18	YL	TXL	3598072C1	3596926C1	1400	8	N/A		
JC5N(+)	18	YL	TXL	3598072C1	3596926C1	1400	8	N/A		
JD5N(+)	18	YL	TXL	3598072C1	3596926C1	1400	8	N/A		
JF5N(+)	18	YL	TXL	3598072C1	3596926C1	1400	8	N/A		
JG5N(+)	18	YL	TXL	3598072C1	3596926C1	1400	8	N/A		
LC5N(+)	18	YL	TXL	3598072C1	3596926C1	1400	8	N/A		
LD5N(+)	18	YL	TXL	3598072C1	3596926C1	1400	8	N/A		
LE5N(+)	18	YL	TXL	3598072C1	3596926C1	1400	8	N/A		

Circuit Number	Gauge	Color	Insulation	Terminal / Splice Number	Connector Part number	Connector Number	Cavity	Seal/Sleeve	Lock 1	Lock 2
LU5N(+)	18	YL	TXL	3598072C1	3596926C1	1400	8	N/A		
LV5N(+)	18	YL	TXL	3598072C1	3596926C1	1400	8	N/A		
PY5N(+)	18	YL	TXL	3598072C1	3596926C1	1400	8	N/A		
RJ5N(+)	18	YL	TXL	3598072C1	3596926C1	1400	8	N/A		
RS5N(+)	18	YL	TXL	3598072C1	3596926C1	1400	8	N/A		
RU5N(+)	18	YL	TXL	3598072C1	3596926C1	1400	8	N/A		
SB5N(+)	18	YL	TXL	3598072C1	3596926C1	1400	8	N/A		
SC5N(+)	18	YL	TXL	3598072C1	3596926C1	1400	8	N/A		
SD5N(+)	18	YL	TXL	3598072C1	3596926C1	1400	8	N/A		
SE5N(+)	18	YL	TXL	3598072C1	3596926C1	1400	8	N/A		
SN5N(+)	18	YL	TXL	3598072C1	3596926C1	1400	8	N/A		
VC5N(+)	18	YL	TXL	3598072C1	3596926C1	1400	8	N/A		
VD5N(+)	18	YL	TXL	3598072C1	3596926C1	1400	8	N/A		
VE5N(+)	18	YL	TXL	3598072C1	3596926C1	1400	8	N/A		
VF5N(+)	18	YL	TXL	3598072C1	3596926C1	1400	8	N/A		
VV5N(+)	18	YL	TXL	3598072C1	3596926C1	1400	8	N/A		
YX5N(+)	18	YL	TXL	3598072C1	3596926C1	1400	8	N/A		
YZ5N(+)	18	YL	TXL	3598072C1	3596926C1	1400	8	N/A		
2H5N(+)	18	YL	TXL	3598072C1	3596926C1	1400	8	N/A		
2W5N(+)	18	YL	TXL	3598072C1	3596926C1	1400	8	N/A		
2Z5N(+)	18	YL	TXL	3598072C1	3596926C1	1400	8	N/A		
3C5N(+)	18	YL	TXL	3598072C1	3596926C1	1400	8	N/A		
3D5N(+)	18	YL	TXL	3598072C1	3596926C1	1400	8	N/A		
3E5N(+)	18	YL	TXL	3598072C1	3596926C1	1400	8	N/A		
3J5N(+)	18	YL	TXL	3598072C1	3596926C1	1400	8	N/A		
3R5N(+)	18	YL	TXL	3598072C1	3596926C1	1400	8	N/A		
3U5N(+)	18	YL	TXL	3598072C1	3596926C1	1400	8	N/A		
3W5N(+)	18	YL	TXL	3598072C1	3596926C1	1400	8	N/A		
9K5N(+)	18	YL	TXL	3598072C1	3596926C1	1400	8	N/A		
9L5N(+)	18	YL	TXL	3598072C1	3596926C1	1400	8	N/A		
JC5N(+)	18	YL	TXL	3598072C1	3596926C1	1400	8	N/A		
JD5N(+)	18	YL	TXL	3598072C1	3596926C1	1400	8	N/A		
JF5N(+)	18	YL	TXL	3598072C1	3596926C1	1400	8	N/A		
JG5N(+)	18	YL	TXL	3598072C1	3596926C1	1400	8	N/A		
LC5N(+)	18	YL	TXL	3598072C1	3596926C1	1400	8	N/A		
LD5N(+)	18	YL	TXL	3598072C1	3596926C1	1400	8	N/A		
LE5N(+)	18	YL	TXL	3598072C1	3596926C1	1400	8	N/A		
LU5N(+)	18	YL	TXL	3598072C1	3596926C1	1400	8	N/A		
LV5N(+)	18	YL	TXL	3598072C1	3596926C1	1400	8	N/A		
PY5N(+)	18	YL	TXL	3598072C1	3596926C1	1400	8	N/A		
RJ5N(+)	18	YL	TXL	3598072C1	3596926C1	1400	8	N/A		
RS5N(+)	18	YL	TXL	3598072C1	3596926C1	1400	8	N/A		
RU5N(+)	18	YL	TXL	3598072C1	3596926C1	1400	8	N/A		
SB5N(+)	18	YL	TXL	3598072C1	3596926C1	1400	8	N/A		
SC5N(+)	18	YL	TXL	3598072C1	3596926C1	1400	8	N/A		
SD5N(+)	18	YL	TXL	3598072C1	3596926C1	1400	8	N/A		
SE5N(+)	18	YL	TXL	3598072C1	3596926C1	1400	8	N/A		
SN5N(+)	18	YL	TXL	3598072C1	3596926C1	1400	8	N/A		
VC5N(+)	18	YL	TXL	3598072C1	3596926C1	1400	8	N/A		
VD5N(+)	18	YL	TXL	3598072C1	3596926C1	1400	8	N/A		
VE5N(+)	18	YL	TXL	3598072C1	3596926C1	1400	8	N/A		
VF5N(+)	18	YL	TXL	3598072C1	3596926C1	1400	8	N/A		

Circuit Number	Gauge	Color	Insulation	Terminal / Splice Number	Connector Part number	Connector Number	Cavity	Seal/Sleeve	Lock 1	Lock 2
VG5N(+)	18	YL	TXL	3598072C1	3596926C1	1400	8	N/A		
YX5N(+)	18	YL	TXL	3598072C1	3596926C1	1400	8	N/A		
YZ5N(+)	18	YL	TXL	3598072C1	3596926C1	1400	8	N/A		
XY94BH	16	GY	TXL	3598073C1	3596926C1	1400	10	N/A		
XY94BH	16	GY	TXL	3598073C1	3596926C1	1400	10	N/A		
XY94BF	16	GY	TXL	3598073C1	3596926C1	1400	11	N/A		
XY94BF	16	GY	TXL	3598073C1	3596926C1	1400	11	N/A		
YJ5A(+)	18	YL	TXL	3598072C1	3596926C1	1400	13	N/A		
YJ5A(+)	18	YL	TXL	3598072C1	3596926C1	1400	13	N/A		
YJ5A(-)	18	GN	TXL	3598072C1	3596926C1	1400	14	N/A		
YJ5A(-)	18	GN	TXL	3598072C1	3596926C1	1400	14	N/A		
XY94AY	12	GY	TXL	3597157C1	3596926C1	1400	16	N/A		
XY94AY	12	GY	TXL	3597157C1	3596926C1	1400	16	N/A		
XY94B	18	GY	TXL	3598072C1	3596929C1	1401	1	N/A		
XY94B	18	GY	TXL	3598072C1	3596929C1	1401	1	N/A		
XY94	18	GY	TXL	3598072C1	3596929C1	1401	2	N/A		
XY94	18	GY	TXL	3598072C1	3596929C1	1401	2	N/A		
XY94A	18	GY	TXL	3598072C1	3596929C1	1401	3	N/A		
XY94A	18	GY	TXL	3598072C1	3596929C1	1401	3	N/A		
XY94K	18	GY	TXL	3598072C1	3596929C1	1401	4	N/A		
XY94K	18	GY	TXL	3598072C1	3596929C1	1401	4	N/A		
XY94C	16	GY	TXL	3598073C1	3596929C1	1401	5	N/A		
XY94C	16	GY	TXL	3598073C1	3596929C1	1401	5	N/A		
XY94J	18	GY	TXL	3598072C1	3596929C1	1401	6	N/A		
XY94J	18	GY	TXL	3598072C1	3596929C1	1401	6	N/A		
XY94H	18	GY	TXL	3598072C1	3596929C1	1401	7	N/A		
XY94H	18	GY	TXL	3598072C1	3596929C1	1401	7	N/A		
XY94D	16	GY	TXL	3598073C1	3596929C1	1401	8	N/A		
XY94D	16	GY	TXL	3598073C1	3596929C1	1401	8	N/A		
XY94BK	18	GY	TXL	3598072C1	3596929C1	1401	9	N/A		
XY94BK	18	GY	TXL	3598072C1	3596929C1	1401	9	N/A		
XY94BL	18	GY	TXL	3598072C1	3596929C1	1401	10	N/A		
XY94BL	18	GY	TXL	3598072C1	3596929C1	1401	10	N/A		
XY94E	16	GY	TXL	3598073C1	3596929C1	1401	11	N/A		
XY94E	16	GY	TXL	3598073C1	3596929C1	1401	11	N/A		
XY94BB	18	GY	TXL	3598072C1	3596929C1	1401	12	N/A		
XY94BB	18	GY	TXL	3598072C1	3596929C1	1401	12	N/A		
XY94BJ	18	GY	TXL	3598072C1	3596929C1	1401	13	N/A		
XY94BJ	18	GY	TXL	3598072C1	3596929C1	1401	13	N/A		
XY94F	16	GY	TXL	3598073C1	3596929C1	1401	14	N/A		
XY94F	16	GY	TXL	3598073C1	3596929C1	1401	14	N/A		
XY94BE	16	GY	TXL	3598073C1	3596929C1	1401	15	N/A		
XY94BE	16	GY	TXL	3598073C1	3596929C1	1401	15	N/A		
XY94BC	18	GY	TXL	3598072C1	3596929C1	1401	16	N/A		
XY94BC	18	GY	TXL	3598072C1	3596929C1	1401	16	N/A		
XY94BA	18	GY	TXL	3598072C1	3596929C1	1401	17	N/A		
XY94BA	18	GY	TXL	3598072C1	3596929C1	1401	17	N/A		
XY94BD	16	GY	TXL	3598073C1	3596929C1	1401	18	N/A		
XY94BD	16	GY	TXL	3598073C1	3596929C1	1401	18	N/A		
ZA94HA	18	GY	TXL	3598072C1	3596928C1	1402	2	N/A		
ZB94HA	18	GY	TXL	3598072C1	3596928C1	1402	2	N/A		
ZA94HA	18	GY	TXL	3598072C1	3596928C1	1402	2	N/A		

Circuit Number	Gauge	Color	Insulation	Terminal / Splice Number	Connector Part number	Connector Number	Cavity	Seal/Sleeve	Lock 1	Lock 2
ZB94HA	18	GY	TXL	3598072C1	3596928C1	1402	2	N/A		
ZA94SK	18	GY	TXL	3598072C1	3596928C1	1402	3	N/A		
ZB94SK	18	GY	TXL	3598072C1	3596928C1	1402	3	N/A		
ZC94SK	18	GY	TXL	3598072C1	3596928C1	1402	3	N/A		
ZA94SK	18	GY	TXL	3598072C1	3596928C1	1402	3	N/A		
ZB94SK	18	GY	TXL	3598072C1	3596928C1	1402	3	N/A		
ZC94SK	18	GY	TXL	3598072C1	3596928C1	1402	3	N/A		
PJ94BP	16	GY	TXL	3598073C1	3596928C1	1402	4	N/A		
PJ94BP	16	GY	TXL	3598073C1	3596928C1	1402	4	N/A		
XZ94SJ	18	GY	TXL	3598072C1	3596928C1	1402	5	N/A		
XZ94SJ	18	GY	TXL	3598072C1	3596928C1	1402	5	N/A		
PJ94BNN	16	GY	TXL	3598073C1	3596928C1	1402	6	N/A		
PJ94BNN	16	GY	TXL	3598073C1	3596928C1	1402	6	N/A		
PJ94BMM	16	GY	TXL	3598073C1	3596928C1	1402	7	N/A		
PJ94BMM	16	GY	TXL	3598073C1	3596928C1	1402	7	N/A		
PJ94BT	16	GY	GXL	3598073C1	3596928C1	1402	9	N/A		
PJ94BT	16	GY	GXL	3598073C1	3596928C1	1402	9	N/A		
PJ94BU	16	GY	GXL	3598073C1	3596928C1	1402	10	N/A		
PJ94BU	16	GY	GXL	3598073C1	3596928C1	1402	10	N/A		
PJ94BR	16	GY	TXL	3598073C1	3596928C1	1402	11	N/A		
PJ94BR	16	GY	TXL	3598073C1	3596928C1	1402	11	N/A		
PJ94BW	16	GY	TXL	3598073C1	3596928C1	1402	12	N/A		
PJ94BW	16	GY	TXL	3598073C1	3596928C1	1402	12	N/A		
PJ94BS	16	GY	GXL	3598073C1	3596928C1	1402	13	N/A		
PJ94BS	16	GY	GXL	3598073C1	3596928C1	1402	13	N/A		
PJ94BQ	16	GY	TXL	3598073C1	3596928C1	1402	14	N/A		
PJ94BQ	16	GY	TXL	3598073C1	3596928C1	1402	14	N/A		
PJ94BV	16	GY	TXL	3598073C1	3596928C1	1402	15	N/A		
PJ94BV	16	GY	TXL	3598073C1	3596928C1	1402	15	N/A		
XZ94SZD	16	GY	TXL	3598073C1	3596927C1	1403	1	N/A		
XZ94SZD	16	GY	TXL	3598073C1	3596927C1	1403	1	N/A		
XZ94SE	18	GY	TXL	3598072C1	3596927C1	1403	2	N/A		
XZ94SE	18	GY	TXL	3598072C1	3596927C1	1403	2	N/A		
XZ94SH	16	GY	TXL	3598073C1	3596927C1	1403	3	N/A		
XZ94SH	16	GY	TXL	3598073C1	3596927C1	1403	3	N/A		
XZ94SVD	16	GY	TXL	3598073C1	3596927C1	1403	4	N/A		
XZ94SVD	16	GY	TXL	3598073C1	3596927C1	1403	4	N/A		
XZ94SF	16	GY	TXL	3598073C1	3596927C1	1403	5	N/A		
XZ94SF	16	GY	TXL	3598073C1	3596927C1	1403	5	N/A		
XZ94SL	18	GY	TXL	3598072C1	3596927C1	1403	6	N/A		
XZ94SL	18	GY	TXL	3598072C1	3596927C1	1403	6	N/A		
XZ94SDA	18	LTGN	TXL	3598072C1	3596927C1	1403	7	N/A		
XZ94SDA	18	LTGN	TXL	3598072C1	3596927C1	1403	7	N/A		
XZ94SBA	18	GY	TXL	3598072C1	3596927C1	1403	8	N/A		
XZ94SBA	18	GY	TXL	3598072C1	3596927C1	1403	8	N/A		
XZ94SM	18	GY	TXL	3598072C1	3596927C1	1403	9	N/A		
XZ94SM	18	GY	TXL	3598072C1	3596927C1	1403	9	N/A		
XZ94SCA	18	GY	TXL	3598072C1	3596927C1	1403	10	N/A		
XZ94SCA	18	GY	TXL	3598072C1	3596927C1	1403	10	N/A		
XZ94SAA	18	GY	TXL	3598072C1	3596927C1	1403	11	N/A		
XZ94SAA	18	GY	TXL	3598072C1	3596927C1	1403	11	N/A		
XZ94SN	18	GY	TXL	3598072C1	3596927C1	1403	12	N/A		

Circuit Number	Gauge	Color	Insulation	Terminal / Splice Number	Connector Part number	Connector Number	Cavity	Seal/Sleeve	Lock 1	Lock 2
XZ94SN	18	GY	TXL	3598072C1	3596927C1	1403	12	N/A		
XD94SN	18	GY	TXL	3534164C1	3601838C1	1410	A	N/A		
XZ94SAA	18	GY	TXL	3534164C1	3601838C1	1410	A	N/A		
XD94SN	18	GY	TXL	3534164C1	3601838C1	1410	A	N/A		
XZ94SAA	18	GY	TXL	3534164C1	3601838C1	1410	A	N/A		
XD94SNA	18	GY	TXL	3534164C1	3601838C1	1410	B	N/A		
XZ94SAB	18	GY	TXL	3534164C1	3601838C1	1410	B	N/A		
XD94SNA	18	GY	TXL	3534164C1	3601838C1	1410	B	N/A		
XZ94SAB	18	GY	TXL	3534164C1	3601838C1	1410	B	N/A		
XD94SNB	18	GY	TXL	3534164C1	3601838C1	1410	C	N/A		
XZ94SA	18	GY	TXL	3534164C1	3601838C1	1410	C	N/A		
XD94SNB	18	GY	TXL	3534164C1	3601838C1	1410	C	N/A		
XZ94SA	18	GY	TXL	3534164C1	3601838C1	1410	C	N/A		
XD94SP	18	GY	TXL	3534164C1	3601838C1	1410	D	N/A		
XZ94SCA	18	GY	TXL	3534164C1	3601838C1	1410	D	N/A		
XD94SP	18	GY	TXL	3534164C1	3601838C1	1410	D	N/A		
XZ94SCA	18	GY	TXL	3534164C1	3601838C1	1410	D	N/A		
XD94SPA	18	GY	TXL	3534164C1	3601838C1	1410	E	N/A		
XZ94SCB	18	GY	TXL	3534164C1	3601838C1	1410	E	N/A		
XD94SPA	18	GY	TXL	3534164C1	3601838C1	1410	E	N/A		
XZ94SCB	18	GY	TXL	3534164C1	3601838C1	1410	E	N/A		
XD94SPB	18	GY	TXL	3534164C1	3601838C1	1410	F	N/A		
XZ94SC	18	GY	TXL	3534164C1	3601838C1	1410	F	N/A		
XD94SPB	18	GY	TXL	3534164C1	3601838C1	1410	F	N/A		
XZ94SC	18	GY	TXL	3534164C1	3601838C1	1410	F	N/A		
XD94SR	18	GY	TXL	3534164C1	3601838C1	1410	G	N/A		
XZ94SBA	18	GY	TXL	3534164C1	3601838C1	1410	G	N/A		
XD94SR	18	GY	TXL	3534164C1	3601838C1	1410	G	N/A		
XZ94SBA	18	GY	TXL	3534164C1	3601838C1	1410	G	N/A		
XD94SRA	18	GY	TXL	3534164C1	3601838C1	1410	H	N/A		
XZ94SBB	18	GY	TXL	3534164C1	3601838C1	1410	H	N/A		
XD94SRA	18	GY	TXL	3534164C1	3601838C1	1410	H	N/A		
XZ94SBB	18	GY	TXL	3534164C1	3601838C1	1410	H	N/A		
XD94SRB	18	GY	TXL	3534164C1	3601838C1	1410	J	N/A		
XZ94SB	18	GY	TXL	3534164C1	3601838C1	1410	J	N/A		
XD94SRB	18	GY	TXL	3534164C1	3601838C1	1410	J	N/A		
XZ94SB	18	GY	TXL	3534164C1	3601838C1	1410	J	N/A		
XD94SS	18	GY	TXL	3534164C1	3601838C1	1410	K	N/A		
XZ94SDA	18	LTGN	TXL	3534164C1	3601838C1	1410	K	N/A		
XD94SS	18	GY	TXL	3534164C1	3601838C1	1410	K	N/A		
XZ94SDA	18	LTGN	TXL	3534164C1	3601838C1	1410	K	N/A		
XD94SSA	18	GY	TXL	3534164C1	3601838C1	1410	L	N/A		
XZ94SDB	18	GY	TXL	3534164C1	3601838C1	1410	L	N/A		
XD94SSA	18	GY	TXL	3534164C1	3601838C1	1410	L	N/A		
XZ94SDB	18	GY	TXL	3534164C1	3601838C1	1410	L	N/A		
XD94SSB	18	GY	TXL	3534164C1	3601838C1	1410	M	N/A		
XZ94SD	18	GY	TXL	3534164C1	3601838C1	1410	M	N/A		
XD94SSB	18	GY	TXL	3534164C1	3601838C1	1410	M	N/A		
XZ94SD	18	GY	TXL	3534164C1	3601838C1	1410	M	N/A		
3M5N(-)	18	GN	TXL	3548971C1	3557922C1	1420	1	N/A		
9P5N(-)	18	GN	TXL	3548971C1	3557922C1	1420	1	N/A		
9V5N(-)	18	GN	TXL	3548971C1	3557922C1	1420	1	N/A		

Circuit Number	Gauge	Color	Insulation	Terminal / Splice Number	Connector Part number	Connector Number	Cavity	Seal/Sleeve	Lock 1	Lock 2
LF5N(-)	18	GN	TXL	3548971C1	3557922C1	1420	1	N/A		
LS5N(-)	18	GN	TXL	3548971C1	3557922C1	1420	1	N/A		
PZ5N(-)	18	GN	TXL	3548971C1	3557922C1	1420	1	N/A		
RD5N(-)	18	GN	TXL	3548971C1	3557922C1	1420	1	N/A		
RG5N(-)	18	GN	TXL	3548971C1	3557922C1	1420	1	N/A		
RM5N(-)	18	GN	TXL	3548971C1	3557922C1	1420	1	N/A		
SP5N(-)	18	GN	TXL	3548971C1	3557922C1	1420	1	N/A		
2J5N(-)	18	GN	TXL	3548971C1	3557922C1	1420	1	N/A		
2L5N(-)	18	GN	TXL	3548971C1	3557922C1	1420	1	N/A		
2M5N(-)	18	GN	TXL	3548971C1	3557922C1	1420	1	N/A		
2Y5N(-)	18	GN	TXL	3548971C1	3557922C1	1420	1	N/A		
3M5N(-)	18	GN	TXL	3548971C1	3557922C1	1420	1	N/A		
3Z5N(-)	18	GN	TXL	3548971C1	3557922C1	1420	1	N/A		
4E5N(-)	18	GN	TXL	3548971C1	3557922C1	1420	1	N/A		
4J5N(-)	18	GN	TXL	3548971C1	3557922C1	1420	1	N/A		
4L5N(-)	18	GN	TXL	3548971C1	3557922C1	1420	1	N/A		
4N5N(-)	18	GN	TXL	3548971C1	3557922C1	1420	1	N/A		
9P5N(-)	18	GN	TXL	3548971C1	3557922C1	1420	1	N/A		
9T5N(-)	18	GN	TXL	3548971C1	3557922C1	1420	1	N/A		
9V5N(-)	18	GN	TXL	3548971C1	3557922C1	1420	1	N/A		
9W5N(-)	18	GN	TXL	3548971C1	3557922C1	1420	1	N/A		
LF5N(-)	18	GN	TXL	3548971C1	3557922C1	1420	1	N/A		
LS5N(-)	18	GN	TXL	3548971C1	3557922C1	1420	1	N/A		
PV5N(-)	18	GN	TXL	3548971C1	3557922C1	1420	1	N/A		
PZ5N(-)	18	GN	TXL	3548971C1	3557922C1	1420	1	N/A		
RD5N(-)	18	GN	TXL	3548971C1	3557922C1	1420	1	N/A		
RG5N(-)	18	GN	TXL	3548971C1	3557922C1	1420	1	N/A		
RM5N(-)	18	GN	TXL	3548971C1	3557922C1	1420	1	N/A		
RR5N(-)	18	GN	TXL	3548971C1	3557922C1	1420	1	N/A		
RX5N(-)	18	GN	TXL	3548971C1	3557922C1	1420	1	N/A		
RZ5N(-)	18	GN	TXL	3548971C1	3557922C1	1420	1	N/A		
SP5N(-)	18	GN	TXL	3548971C1	3557922C1	1420	1	N/A		
SR5N(-)	18	GN	TXL	3548971C1	3557922C1	1420	1	N/A		
3M5N(+)	18	YL	TXL	3548971C1	3557922C1	1420	3	N/A		
9P5N(+)	18	YL	TXL	3548971C1	3557922C1	1420	3	N/A		
9V5N(+)	18	YL	TXL	3548971C1	3557922C1	1420	3	N/A		
LF5N(+)	18	YL	TXL	3548971C1	3557922C1	1420	3	N/A		
LS5N(+)	18	YL	TXL	3548971C1	3557922C1	1420	3	N/A		
PZ5N(+)	18	YL	TXL	3548971C1	3557922C1	1420	3	N/A		
RD5N(+)	18	YL	TXL	3548971C1	3557922C1	1420	3	N/A		
RG5N(+)	18	YL	TXL	3548971C1	3557922C1	1420	3	N/A		
RM5N(+)	18	YL	TXL	3548971C1	3557922C1	1420	3	N/A		
SP5N(+)	18	YL	TXL	3548971C1	3557922C1	1420	3	N/A		
2J5N(+)	18	YL	TXL	3548971C1	3557922C1	1420	3	N/A		
2L5N(+)	18	YL	TXL	3548971C1	3557922C1	1420	3	N/A		
2M5N(+)	18	YL	TXL	3548971C1	3557922C1	1420	3	N/A		
2Y5N(+)	18	YL	TXL	3548971C1	3557922C1	1420	3	N/A		
3M5N(+)	18	YL	TXL	3548971C1	3557922C1	1420	3	N/A		
3Z5N(+)	18	YL	TXL	3548971C1	3557922C1	1420	3	N/A		
4E5N(+)	18	YL	TXL	3548971C1	3557922C1	1420	3	N/A		
4J5N(+)	18	YL	TXL	3548971C1	3557922C1	1420	3	N/A		
4L5N(+)	18	YL	TXL	3548971C1	3557922C1	1420	3	N/A		

Circuit Number	Gauge	Color	Insulation	Terminal / Splice Number	Connector Part number	Connector Number	Cavity	Seal/Sleeve	Lock 1	Lock 2
4N5N(+)	18	YL	TXL	3548971C1	3557922C1	1420	3	N/A		
9P5N(+)	18	YL	TXL	3548971C1	3557922C1	1420	3	N/A		
9T5N(+)	18	YL	TXL	3548971C1	3557922C1	1420	3	N/A		
9V5N(+)	18	YL	TXL	3548971C1	3557922C1	1420	3	N/A		
9W5N(+)	18	YL	TXL	3548971C1	3557922C1	1420	3	N/A		
LF5N(+)	18	YL	TXL	3548971C1	3557922C1	1420	3	N/A		
LS5N(+)	18	YL	TXL	3548971C1	3557922C1	1420	3	N/A		
PV5N(+)	18	YL	TXL	3548971C1	3557922C1	1420	3	N/A		
PZ5N(+)	18	YL	TXL	3548971C1	3557922C1	1420	3	N/A		
RD5N(+)	18	YL	TXL	3548971C1	3557922C1	1420	3	N/A		
RG5N(+)	18	YL	TXL	3548971C1	3557922C1	1420	3	N/A		
RM5N(+)	18	YL	TXL	3548971C1	3557922C1	1420	3	N/A		
RR5N(+)	18	YL	TXL	3548971C1	3557922C1	1420	3	N/A		
RX5N(+)	18	YL	TXL	3548971C1	3557922C1	1420	3	N/A		
RZ5N(+)	18	YL	TXL	3548971C1	3557922C1	1420	3	N/A		
SP5N(+)	18	YL	TXL	3548971C1	3557922C1	1420	3	N/A		
SR5N(+)	18	YL	TXL	3548971C1	3557922C1	1420	3	N/A		
3A94-GB	18	WH	TXL	3548971C1	3557922C1	1420	4	N/A		
GS94-GB	18	WH	TXL	3548971C1	3557922C1	1420	4	N/A		
3A94-GB	18	WH	TXL	3548971C1	3557922C1	1420	4	N/A		
GS94-GB	18	WH	TXL	3548971C1	3557922C1	1420	4	N/A		
3A94V	14	GY	GXL	3548972C1	3557922C1	1420	7	N/A		
GS94V	14	GY	GXL	3548972C1	3557922C1	1420	7	N/A		
3A94V	14	GY	GXL	3548972C1	3557922C1	1420	7	N/A		
GS94V	14	GY	GXL	3548972C1	3557922C1	1420	7	N/A		
3A94AY	14	GY	GXL	3548972C1	3557922C1	1420	8	N/A		
GS94AY	14	GY	GXL	3548972C1	3557922C1	1420	8	N/A		
3A94AY	14	GY	GXL	3548972C1	3557922C1	1420	8	N/A		
GS94AY	14	GY	GXL	3548972C1	3557922C1	1420	8	N/A		
3A94-GA	18	WH	TXL	3548969C1	3557922C1	1420	9	N/A		
GS94-GA	18	WH	TXL	3548969C1	3557922C1	1420	9	N/A		
3A94-GA	18	WH	TXL	3548969C1	3557922C1	1420	9	N/A		
GS94-GA	18	WH	TXL	3548969C1	3557922C1	1420	9	N/A		
3A94MK	18	GY	TXL	3548971C1	3557921C1	1421	1	N/A		
GS94MK	18	GY	TXL	3548971C1	3557921C1	1421	1	N/A		
3A94MK	18	GY	TXL	3548971C1	3557921C1	1421	1	N/A		
GS94MK	18	GY	TXL	3548971C1	3557921C1	1421	1	N/A		
3A94BC	18	GY	TXL	3548971C1	3557921C1	1421	2	N/A		
GS94BC	18	GY	TXL	3548971C1	3557921C1	1421	2	N/A		
3A94BC	18	GY	TXL	3548971C1	3557921C1	1421	2	N/A		
GS94BC	18	GY	TXL	3548971C1	3557921C1	1421	2	N/A		
3A94MB	18	GY	TXL	3548971C1	3557921C1	1421	3	N/A		
GS94MB	18	GY	TXL	3548971C1	3557921C1	1421	3	N/A		
3A94MB	18	GY	TXL	3548971C1	3557921C1	1421	3	N/A		
GS94MB	18	GY	TXL	3548971C1	3557921C1	1421	3	N/A		
3A94MH	18	GY	TXL	3548971C1	3557921C1	1421	4	N/A		
GS94MH	18	GY	TXL	3548971C1	3557921C1	1421	4	N/A		
3A94MH	18	GY	TXL	3548971C1	3557921C1	1421	4	N/A		
GS94MH	18	GY	TXL	3548971C1	3557921C1	1421	4	N/A		
3A94BA	18	GY	TXL	3548971C1	3557921C1	1421	5	N/A		
GS94BA	18	GY	TXL	3548971C1	3557921C1	1421	5	N/A		
3A94BA	18	GY	TXL	3548971C1	3557921C1	1421	5	N/A		

Circuit Number	Gauge	Color	Insulation	Terminal / Splice Number	Connector Part number	Connector Number	Cavity	Seal/Sleeve	Lock 1	Lock 2
GS94BA	18	GY	TXL	3548971C1	3557921C1	1421	5	N/A		
3A94M	18	GY	TXL	3548971C1	3557921C1	1421	6	N/A		
GS94M	18	GY	TXL	3548971C1	3557921C1	1421	6	N/A		
3A94M	18	GY	TXL	3548971C1	3557921C1	1421	6	N/A		
GS94M	18	GY	TXL	3548971C1	3557921C1	1421	6	N/A		
GT94BN	18	GY	TXL	3548971C1	3557921C1	1421	7	N/A		
GT94BN	18	GY	TXL	3548971C1	3557921C1	1421	7	N/A		
3A94BL	14	GY	TXL	3548972C1	3557921C1	1421	8	N/A		
GS94BL	14	GY	TXL	3548972C1	3557921C1	1421	8	N/A		
3A94BL	14	GY	TXL	3548972C1	3557921C1	1421	8	N/A		
GS94BL	14	GY	TXL	3548972C1	3557921C1	1421	8	N/A		
3A94BJ	14	GY	TXL	3548972C1	3557921C1	1421	9	N/A		
GS94BJ	14	GY	TXL	3548972C1	3557921C1	1421	9	N/A		
3A94BJ	14	GY	TXL	3548972C1	3557921C1	1421	9	N/A		
GS94BJ	14	GY	TXL	3548972C1	3557921C1	1421	9	N/A		
3A94ME	18	GY	TXL	3548971C1	3557921C1	1421	10	N/A		
GS94ME	18	GY	TXL	3548971C1	3557921C1	1421	10	N/A		
3A94ME	18	GY	TXL	3548971C1	3557921C1	1421	10	N/A		
GS94ME	18	GY	TXL	3548971C1	3557921C1	1421	10	N/A		
3A94BD	18	GY	TXL	3548971C1	3557921C1	1421	11	N/A		
GS94BD	18	GY	TXL	3548971C1	3557921C1	1421	11	N/A		
3A94BD	18	GY	TXL	3548971C1	3557921C1	1421	11	N/A		
GS94BD	18	GY	TXL	3548971C1	3557921C1	1421	11	N/A		
3A94MC	18	GY	TXL	3548971C1	3557921C1	1421	12	N/A		
GS94MC	18	GY	TXL	3548971C1	3557921C1	1421	12	N/A		
3A94MC	18	GY	TXL	3548971C1	3557921C1	1421	12	N/A		
GS94MC	18	GY	TXL	3548971C1	3557921C1	1421	12	N/A		
3A94MF	18	GY	TXL	3548971C1	3557921C1	1421	13	N/A		
GS94MF	18	GY	TXL	3548971C1	3557921C1	1421	13	N/A		
3A94MF	18	GY	TXL	3548971C1	3557921C1	1421	13	N/A		
GS94MF	18	GY	TXL	3548971C1	3557921C1	1421	13	N/A		
3A94BE	18	GY	TXL	3548971C1	3557921C1	1421	14	N/A		
GS94BE	18	GY	TXL	3548971C1	3557921C1	1421	14	N/A		
3A94BE	18	GY	TXL	3548971C1	3557921C1	1421	14	N/A		
GS94BE	18	GY	TXL	3548971C1	3557921C1	1421	14	N/A		
3A94MD	18	GY	TXL	3548971C1	3557921C1	1421	15	N/A		
GS94MD	18	GY	TXL	3548971C1	3557921C1	1421	15	N/A		
3A94MD	18	GY	TXL	3548971C1	3557921C1	1421	15	N/A		
GS94MD	18	GY	TXL	3548971C1	3557921C1	1421	15	N/A		
GT94BM	18	GY	TXL	3548971C1	3557921C1	1421	16	N/A		
GT94BM	18	GY	TXL	3548971C1	3557921C1	1421	16	N/A		
3A94BH	18	GY	TXL	3548971C1	3557921C1	1421	17	N/A		
GS94BH	18	GY	TXL	3548971C1	3557921C1	1421	17	N/A		
3A94BH	18	GY	TXL	3548971C1	3557921C1	1421	17	N/A		
GS94BH	18	GY	TXL	3548971C1	3557921C1	1421	17	N/A		
3A94BF	18	GY	TXL	3548971C1	3557921C1	1421	18	N/A		
GS94BF	18	GY	TXL	3548971C1	3557921C1	1421	18	N/A		
3A94BF	18	GY	TXL	3548971C1	3557921C1	1421	18	N/A		
GS94BF	18	GY	TXL	3548971C1	3557921C1	1421	18	N/A		
3A94BR	18	GY	TXL	3548971C1	3548978C1	1422	2	N/A		
3A94BR	18	GY	TXL	3548971C1	3548978C1	1422	2	N/A		
3A94BP	18	GY	TXL	3548971C1	3548978C1	1422	3	N/A		

Circuit Number	Gauge	Color	Insulation	Terminal / Splice Number	Connector Part number	Connector Number	Cavity	Seal/Sleeve	Lock 1	Lock 2
3A94BP	18	GY	TXL	3548971C1	3548978C1	1422	3	N/A		
3A94BQ	18	GY	TXL	3548971C1	3548978C1	1422	5	N/A		
3A94BQ	18	GY	TXL	3548971C1	3548978C1	1422	5	N/A		
3A94BY	18	GY	TXL	3548971C1	3548978C1	1422	6	N/A		
3A94BX	18	GY	TXL	3548971C1	3548978C1	1422	6	N/A		
XG94SJ	18	GY	TXL	3548971C1	3548978C1	1422	8	N/A		
XG94SJ	18	GY	TXL	3548971C1	3548978C1	1422	8	N/A		
3A94BV	18	GY	TXL	3548971C1	3548978C1	1422	11	N/A		
3A94BV	18	GY	TXL	3548971C1	3548978C1	1422	11	N/A		
3A94BU	18	GY	TXL	3548971C1	3548978C1	1422	12	N/A		
3A94BU	18	GY	TXL	3548971C1	3548978C1	1422	12	N/A		
XG94SK	18	GY	TXL	3548971C1	3548978C1	1422	13	N/A		
XG94SK	18	GY	TXL	3548971C1	3548978C1	1422	13	N/A		
3A94BW	18	GY	TXL	3548971C1	3548978C1	1422	14	N/A		
3A94BW	18	GY	TXL	3548971C1	3548978C1	1422	14	N/A		
3A94BS	18	GY	TXL	3548971C1	3548978C1	1422	15	N/A		
3A94BS	18	GY	TXL	3548971C1	3548978C1	1422	15	N/A		
XD94SS	18	GY	TXL	3548971C1	3846885C1	1423	1	N/A		
XD94SS	18	GY	TXL	3548971C1	3846885C1	1423	1	N/A		
XD94SR	18	GY	TXL	3548971C1	3846885C1	1423	3	N/A		
XD94SR	18	GY	TXL	3548971C1	3846885C1	1423	3	N/A		
XD94SN	18	GY	TXL	3548971C1	3846885C1	1423	7	N/A		
XD94SN	18	GY	TXL	3548971C1	3846885C1	1423	7	N/A		
GX94BY	18	GY	TXL	3548971C1	3846885C1	1423	8	N/A		
GX94BY	18	GY	TXL	3548971C1	3846885C1	1423	8	N/A		
XD94SP	18	GY	TXL	3548971C1	3846885C1	1423	10	N/A		
XD94SP	18	GY	TXL	3548971C1	3846885C1	1423	10	N/A		
GX94-GCC	18	WH	TXL	3548971C1	3846885C1	1423	11	N/A		
GX94-GCC	18	WH	TXL	3548971C1	3846885C1	1423	11	N/A		
XD94SL	18	GY	TXL	3548971C1	3846885C1	1423	13	N/A		
XD94SL	18	GY	TXL	3548971C1	3846885C1	1423	13	N/A		
GX94MN	18	GY	TXL	3548971C1	3846885C1	1423	14	N/A		
GX94MN	18	GY	TXL	3548971C1	3846885C1	1423	14	N/A		
XD94SM	18	GY	TXL	3548971C1	3846885C1	1423	16	N/A		
XD94SM	18	GY	TXL	3548971C1	3846885C1	1423	16	N/A		
9S74Y	16	YL	GXL	1651969C1	3545577C1	1560	1	N/A		
4A74Y	16	LTGN	GXL	1680205C1	3545577C1	1560	1	N/A		
9S74G	16	LTGN	GXL	1651969C1	3545577C1	1560	2	N/A		
4A74G	16	LTGN	GXL	1680205C1	3545577C1	1560	2	N/A		
9S11-GBA	16	WH	GXL	1651969C1	3545577C1	1560	3	N/A		
4A11-GBA	16	WH	GXL	1680205C1	3545577C1	1560	3	N/A		
9S74RBA	16	RD	GXL	1651969C1	3545577C1	1560	4	N/A		
4A74RBA	16	LTGN	GXL	1680205C1	3545577C1	1560	4	N/A		
9S74RBB	16	RD	GXL	2206645C1		1561	1	N/A		
4A74RBB	16	LTGN	TXL	2206645C1		1561	1	N/A		
9S11-GBB	16	WH	GXL	2206645C1		1562	1	N/A		
4A11-GBB	16	WH	TXL	2206645C1		1562	1	N/A		
9S74J	16	RD	GXL	2206645C1		1563	1	N/A		
4A74J	16	LTGN	TXL	2206645C1		1563	1	N/A		
9S74G	16	LTGN	GXL	2206645C1		1564	1	N/A		
4A74G	16	LTGN	GXL	2206645C1		1564	1	N/A		
AA149	18	GY	TXL	3522073C1	3598706C1	1600	A1	N/A		

Circuit Number	Gauge	Color	Insulation	Terminal / Splice Number	Connector Part number	Connector Number	Cavity	Seal/Sleeve	Lock 1	Lock 2
AA149	18	GY	TXL	3522073C1	3598706C1	1600	A1	N/A		
AA82B	20	GY	TXL	3534303C1	3598706C1	1600	A10	N/A		
AA82B	20	GY	TXL	3534303C1	3598706C1	1600	A10	N/A		
AA82C	20	GY	TXL	3534303C1	3598706C1	1600	A11	N/A		
AA82C	20	GY	TXL	3534303C1	3598706C1	1600	A11	N/A		
AA44	20	GY	TXL	3534303C1	3598706C1	1600	A12	N/A		
AA44	20	GY	TXL	3534303C1	3598706C1	1600	A12	N/A		
AA63A	16	DKBL	TXL	3522073C1	3598706C1	1600	A13	N/A		
AA63A	16	DKBL	TXL	3522073C1	3598706C1	1600	A13	N/A		
AA102A	20	YL	TXL	3534303C1	3598706C1	1600	A14	N/A		
AA102A	20	YL	TXL	3534303C1	3598706C1	1600	A14	N/A		
AA87B	20	GY	TXL	3534303C1	3598706C1	1600	A15	N/A		
AA87B	20	GY	TXL	3534303C1	3598706C1	1600	A15	N/A		
AA149F	18	GY	TXL	3522073C1	3598706C1	1600	A16	N/A		
AA149F	18	GY	TXL	3522073C1	3598706C1	1600	A16	N/A		
FU79A	18	GY	TXL	3522073C1	3598706C1	1600	A2	N/A		
JZ79A	18	GY	TXL	3522073C1	3598706C1	1600	A2	N/A		
FU79A	18	GY	TXL	3522073C1	3598706C1	1600	A2	N/A		
JZ79A	18	GY	TXL	3522073C1	3598706C1	1600	A2	N/A		
AA52D	20	YL	TXL	3534303C1	3598706C1	1600	A4	N/A		
AA52D	20	YL	TXL	3534303C1	3598706C1	1600	A4	N/A		
AA85A	20	GY	TXL	3534303C1	3598706C1	1600	A5	N/A		
AA85A	20	GY	TXL	3534303C1	3598706C1	1600	A5	N/A		
AA57B	20	OR	TXL	3534303C1	3598706C1	1600	A6	N/A		
AA57B	20	OR	TXL	3534303C1	3598706C1	1600	A6	N/A		
AA56B	20	OR	TXL	3534303C1	3598706C1	1600	A7	N/A		
AA56B	20	OR	TXL	3534303C1	3598706C1	1600	A7	N/A		
AN87A	18	GY	TXL	3522073C1	3598706C1	1600	A8	N/A		
AN87A	18	GY	TXL	3522073C1	3598706C1	1600	A8	N/A		
AA82A	20	GY	TXL	3534303C1	3598706C1	1600	A9	N/A		
AA82A	20	GY	TXL	3534303C1	3598706C1	1600	A9	N/A		
MS86A	20	GY	GXL	3534303C1	3598706C1	1600	B1	N/A		
MS86A	20	GY	TXL	3534303C1	3598706C1	1600	B1	N/A		
DP32	18	OR	TXL	3522073C1	3598706C1	1600	B10	N/A		
DP32	18	OR	TXL	3522073C1	3598706C1	1600	B10	N/A		
DN32A	18	TN	TXL	3522073C1	3598706C1	1600	B11	N/A		
DP32A	18	OR	TXL	3522073C1	3598706C1	1600	B11	N/A		
DN32A	18	TN	TXL	3522073C1	3598706C1	1600	B11	N/A		
DP32A	18	OR	TXL	3522073C1	3598706C1	1600	B11	N/A		
3H77B	18	GY	TXL	3522073C1	3598706C1	1600	B12	N/A	1661874C1	
3H77B	18	GY	TXL	3522073C1	3598706C1	1600	B12	N/A		
DV40B	18	GY	TXL	3522073C1	3598706C1	1600	B14	N/A		
DV40B	18	GY	TXL	3522073C1	3598706C1	1600	B14	N/A		
DH75AA	18	LTGN	TXL	3522073C1	3598706C1	1600	B15	N/A		
DH75AA	18	LTGN	TXL	3522073C1	3598706C1	1600	B15	N/A		
AA150	18	LTGN	TXL	3522073C1	3598706C1	1600	B16	N/A		
AA150	18	LTGN	TXL	3522073C1	3598706C1	1600	B16	N/A		
AA40	20	GY	TXL	3534303C1	3598706C1	1600	B2	N/A		
AA40	20	GY	TXL	3534303C1	3598706C1	1600	B2	N/A		
AA40A	20	GY	TXL	3534303C1	3598706C1	1600	B3	N/A		
AA40A	20	GY	TXL	3534303C1	3598706C1	1600	B3	N/A		
DT97A	18	VT	TXL	3522073C1	3598706C1	1600	B4	N/A		

Circuit Number	Gauge	Color	Insulation	Terminal / Splice Number	Connector Part number	Connector Number	Cavity	Seal/Sleeve	Lock 1	Lock 2
DT97A	18	VT	TXL	3522073C1	3598706C1	1600	B4	N/A		
AA74	18	LTGN	TXL	3522073C1	3598706C1	1600	B5	N/A		
AA74	18	LTGN	TXL	3522073C1	3598706C1	1600	B5	N/A		
HA30B	16	TN	TXL	3522073C1	3598706C1	1600	B6	N/A		
HA30B	16	TN	TXL	3522073C1	3598706C1	1600	B6	N/A		
DS31	18	TN	TXL	3522073C1	3598706C1	1600	B7	N/A		
DS31J	18	TN	TXL	3522073C1	3598706C1	1600	B7	N/A		
AA36B	18	TN	TXL	3522073C1	3598706C1	1600	B8	N/A		
AA36B	18	TN	TXL	3522073C1	3598706C1	1600	B8	N/A		
CC72	18	OR	TXL	3522073C	3598707C1	1601	E11	N/A		
CC72	20	OR	TXL	3534303C	3598707C1	1601	E11	N/A		
EE14DA	18	RD	TXL	3522073C	3598707C1	1601	E14	N/A		
DR19A	18	GY	TXL	3522073C	3598707C1	1601	F12	N/A		
DR19A	20	GY	TXL	3534303C	3598707C1	1601	F12	N/A		
DD78RC	18	LTGN	TXL	3522073C	3598707C1	1601	F13	N/A		
JA78RC	18	LTGN	TXL	3522073C	3598707C1	1601	F13	N/A		
DD78RC	20	LTGN	TXL	3534303C	3598707C1	1601	F13	N/A		
JA78RC	20	LTGN	TXL	3534303C	3598707C1	1601	F13	N/A		
BF70C	18	OR	TXL	3522073C	3598707C1	1601	F15	N/A		
BM70C	18	OR	TXL	3522073C	3598707C1	1601	F15	N/A		
BM70C	20	OR	TXL	3534303C	3598707C1	1601	F15	N/A		
PA54XD	16	BN	TXL	3522073C	3598707C1	1601	F16	N/A		
PA54XD	20	BN	TXL	3534303C	3598707C1	1601	F16	N/A		
AA59C	18	GY	TXL	3522073C1	3598707C1	1601	E12	N/A		
AA59C	18	GY	TXL	3522073C1	3598707C1	1601	E12	N/A		
RK59E	18	GY	TXL	3522073C1	3598707C1	1601	E13	N/A		
RL59E	18	GY	TXL	3522073C1	3598707C1	1601	E13	N/A		
RK59E	18	GY	TXL	3522073C1	3598707C1	1601	E13	N/A		
RL59E	18	GY	TXL	3522073C1	3598707C1	1601	E13	N/A		
MD92A	18	TN	TXL	3522073C1	3598707C1	1601	E16	N/A		
MD92A	18	TN	TXL	3522073C1	3598707C1	1601	E16	N/A		
6K9LC	20	GY	TXL	3534303C1	3598707C1	1601	E3	N/A		
BC63J	18	DKBL	TXL	3522073C1	3598707C1	1601	E5	N/A		
BC63J	20	DKBL	TXL	3534303C1	3598707C1	1601	E5	N/A		
AA82H	18	GY	TXL	3522073C1	3598707C1	1601	E6	N/A		
AA82H	20	GY	TXL	3534303C1	3598707C1	1601	E6	N/A		
AA82F	18	GY	TXL	3522073C1	3598707C1	1601	E7	N/A		
AA82F	20	GY	TXL	3534303C1	3598707C1	1601	E7	N/A		
AA59H	18	GY	TXL	3522073C1	3598707C1	1601	E9	N/A		
AA59H	18	GY	TXL	3522073C1	3598707C1	1601	E9	N/A		
HA104BC	18	DKBL	TXL	3522073C1	3598707C1	1601	F1	N/A		
HA104BC	20	DKBL	TXL	3534303C1	3598707C1	1601	F1	N/A		
AA59B	18	GY	TXL	3522073C1	3598707C1	1601	F10	N/A		
AA59B	18	GY	TXL	3522073C1	3598707C1	1601	F10	N/A		
YE75WP	18	LTGN	TXL	3522073C1	3598707C1	1601	F11	N/A		
YE75WP	18	LTGN	TXL	3522073C1	3598707C1	1601	F11	N/A		
BG70C	18	OR	TXL	3522073C1	3598707C1	1601	F15	N/A		
BL70C	18	RD	TXL	3522073C1	3598707C1	1601	F15	N/A		
DY54XD	16	BN	TXL	3522073C1	3598707C1	1601	F16	N/A		
DY54XD	20	BN	TXL	3534303C1	3598707C1	1601	F16	N/A		
DX63C	18	DKBL	TXL	3522073C1	3598707C1	1601	F2	N/A		
DX63C	20	DKBL	TXL	3534303C1	3598707C1	1601	F2	N/A		

Circuit Number	Gauge	Color	Insulation	Terminal / Splice Number	Connector Part number	Connector Number	Cavity	Seal/Sleeve	Lock 1	Lock 2
AA59F	18	GY	TXL	3522073C1	3598707C1	1601	F4	N/A		
AA59F	18	GY	TXL	3522073C1	3598707C1	1601	F4	N/A		
AA59J	18	GY	TXL	3522073C1	3598707C1	1601	F5	N/A		
AA59J	18	GY	TXL	3522073C1	3598707C1	1601	F5	N/A		
RL59D	18	GY	TXL	3522073C1	3598707C1	1601	F8	N/A		
SF59D	18	GY	TXL	3522073C1	3598707C1	1601	F8	N/A		
RL59D	18	GY	TXL	3522073C1	3598707C1	1601	F8	N/A		
SF59D	18	GY	TXL	3522073C1	3598707C1	1601	F8	N/A		
CF98A(-)	18	GY	TXL	3522073C1	3598705C1	1602	E1	N/A		
CG98A(-)	18	DKBL	TXL	3522073C1	3598705C1	1602	E1	N/A		
CP3BD(-)	18	GY	TXL	3522073C1	3598705C1	1602	E1	N/A		
CT3BD(-)	18	GY	TXL	3522073C1	3598705C1	1602	E1	N/A		
DL3BD(-)	18	GY	TXL	3522073C1	3598705C1	1602	E1	N/A		
KC3BD(-)	18	GY	TXL	3522073C1	3598705C1	1602	E1	N/A		
MB3BD(-)	18	GY	TXL	3522073C1	3598705C1	1602	E1	N/A		
MJ3BD(-)	18	GY	TXL	3522073C1	3598705C1	1602	E1	N/A		
PH3BD(-)	18	GY	TXL	3522073C1	3598705C1	1602	E1	N/A		
RH3BD(-)	18	GY	TXL	3522073C1	3598705C1	1602	E1	N/A		
SJ3CE(-)	18	GY	TXL	3522073C1	3598705C1	1602	E1	N/A		
XA3BE(-)	18	GY	TXL	3522073C1	3598705C1	1602	E1	N/A		
CF98A(-)	18	GY	TXL	3522073C1	3598705C1	1602	E1	N/A		
CG98A(-)	18	DKBL	TXL	3522073C1	3598705C1	1602	E1	N/A		
CP3BD(-)	18	GY	TXL	3522073C1	3598705C1	1602	E1	N/A		
CT3BD(-)	18	GY	TXL	3522073C1	3598705C1	1602	E1	N/A		
DL3BD(-)	18	GY	TXL	3522073C1	3598705C1	1602	E1	N/A		
KC3BD(-)	18	GY	TXL	3522073C1	3598705C1	1602	E1	N/A		
MB3BD(-)	18	GY	TXL	3522073C1	3598705C1	1602	E1	N/A		
MJ3BD(-)	18	GY	TXL	3522073C1	3598705C1	1602	E1	N/A		
PH3BD(-)	18	GY	TXL	3522073C1	3598705C1	1602	E1	N/A		
RH3BD(-)	18	GY	TXL	3522073C1	3598705C1	1602	E1	N/A		
SJ3CE(-)	18	GY	TXL	3522073C1	3598705C1	1602	E1	N/A		
AA50	18	YL	TXL	3522073C1	3598705C1	1602	E11	N/A		
AA50	18	YL	TXL	3522073C1	3598705C1	1602	E11	N/A		
AA59A	18	GY	TXL	3522073C1	3598705C1	1602	E12	N/A		
AA59A	18	GY	TXL	3522073C1	3598705C1	1602	E12	N/A		
AA70	20	OR	TXL	3534303C1	3598705C1	1602	E14	N/A		
AA70	20	OR	TXL	3534303C1	3598705C1	1602	E14	N/A		
ZX70A	20	OR	TXL	3534303C1	3598705C1	1602	E15	N/A		
ZS70A	20	OR	TXL	3534303C1	3598705C1	1602	E15	N/A		
AA11-GL	18	WH	TXL	3522073C1	3598705C1	1602	E16	N/A		
AA11-GL	18	WH	TXL	3522073C1	3598705C1	1602	E16	N/A		
CF98A(+)	18	DKBL	TXL	3522073C1	3598705C1	1602	E2	N/A		
CG98A(+)	18	GY	TXL	3522073C1	3598705C1	1602	E2	N/A		
CP3BD(+)	18	DKBL	TXL	3522073C1	3598705C1	1602	E2	N/A		
CT3BD(+)	18	DKBL	TXL	3522073C1	3598705C1	1602	E2	N/A		
DL3BD(+)	18	DKBL	TXL	3522073C1	3598705C1	1602	E2	N/A		
KC3BD(+)	18	DKBL	TXL	3522073C1	3598705C1	1602	E2	N/A		
MB3BD(+)	18	DKBL	TXL	3522073C1	3598705C1	1602	E2	N/A		
MJ3BD(+)	18	DKBL	TXL	3522073C1	3598705C1	1602	E2	N/A		
PH3BD(+)	18	DKBL	TXL	3522073C1	3598705C1	1602	E2	N/A		
RH3BD(+)	18	DKBL	TXL	3522073C1	3598705C1	1602	E2	N/A		
SJ3CE(+)	18	DKBL	TXL	3522073C1	3598705C1	1602	E2	N/A		

Circuit Number	Gauge	Color	Insulation	Terminal / Splice Number	Connector Part number	Connector Number	Cavity	Seal/Sleeve	Lock 1	Lock 2
XA3BE(+)	18	DKBL	TXL	3522073C1	3598705C1	1602	E2	N/A		
CF98A(+)	18	DKBL	TXL	3522073C1	3598705C1	1602	E2	N/A		
CG98A(+)	18	GY	TXL	3522073C1	3598705C1	1602	E2	N/A		
CP3BD(+)	18	DKBL	TXL	3522073C1	3598705C1	1602	E2	N/A		
CT3BD(+)	18	DKBL	TXL	3522073C1	3598705C1	1602	E2	N/A		
DL3BD(+)	18	DKBL	TXL	3522073C1	3598705C1	1602	E2	N/A		
KC3BD(+)	18	DKBL	TXL	3522073C1	3598705C1	1602	E2	N/A		
MB3BD(+)	18	DKBL	TXL	3522073C1	3598705C1	1602	E2	N/A		
MJ3BD(+)	18	DKBL	TXL	3522073C1	3598705C1	1602	E2	N/A		
PH3BD(+)	18	DKBL	TXL	3522073C1	3598705C1	1602	E2	N/A		
RH3BD(+)	18	DKBL	TXL	3522073C1	3598705C1	1602	E2	N/A		
SJ3CE(+)	18	DKBL	TXL	3522073C1	3598705C1	1602	E2	N/A		
AA9Z	18	GY	TXL	3522073C1	3598705C1	1602	E3	N/A		
AA9Z	18	GY	TXL	3522073C1	3598705C1	1602	E3	N/A		
AA6	20	GY	TXL	3534303C1	3598705C1	1602	E4	N/A		
AA6	20	GY	TXL	3534303C1	3598705C1	1602	E4	N/A		
AA9A	18	GY	TXL	3522073C1	3598705C1	1602	E5	N/A		
AA9A	18	GY	TXL	3522073C1	3598705C1	1602	E5	N/A		
3H6DB	18	GY	TXL	3522073C1	3598705C1	1602	E6	N/A	1671608C1	
3H6DB	18	GY	TXL	3522073C1	3598705C1	1602	E6	N/A		
AA9B	18	GY	TXL	3522073C1	3598705C1	1602	E7	N/A		
AA9B	18	GY	TXL	3522073C1	3598705C1	1602	E7	N/A		
FF106	18	GY	TXL	3522073C1	3598705C1	1602	E8	N/A		
FF106	18	GY	TXL	3522073C1	3598705C1	1602	E8	N/A		
9B88	18	LTGN	TXL	3522073C1	3598705C1	1602	E9	N/A		
FC88	18	LTGN	TXL	3522073C1	3598705C1	1602	E9	N/A		
BK92RAB	18	TN	TXL	3522073C1	3598705C1	1602	F10	N/A		
EY71BB	18	OR	TXL	3522073C1	3598705C1	1602	F10	N/A		
GM71BC	18	OR	TXL	3522073C1	3598705C1	1602	F10	N/A		
BK92RAB	18	TN	TXL	3522073C1	3598705C1	1602	F10	N/A		
EY71BC	16	OR	TXL	3522073C1	3598705C1	1602	F10	N/A		
GM71BC	18	OR	TXL	3522073C1	3598705C1	1602	F10	N/A		
JL116LB	18	GY	GXL	3522073C1	3598705C1	1602	F11	N/A		
JL116LB	18	GY	TXL	3522073C1	3598705C1	1602	F11	N/A		
FD88	18	LTGN	TXL	3522073C1	3598705C1	1602	F14	N/A		
FD88	18	LTGN	TXL	3522073C1	3598705C1	1602	F14	N/A		
FE88A	18	LTGN	TXL	3522073C1	3598705C1	1602	F15	N/A		
FE88A	18	LTGN	TXL	3522073C1	3598705C1	1602	F15	N/A		
JL116UB	18	GY	TXL	3522073C1	3598705C1	1602	F16	N/A		
JL116UB	18	GY	TXL	3522073C1	3598705C1	1602	F16	N/A		
3L5BB(-)	18	GN	TXL	3522073C1	3598705C1	1602	F5	N/A		
AR5BB(-)	18	GN	TXL	3522073C1	3598705C1	1602	F5	N/A		
AS5BB(-)	18	GN	TXL	3522073C1	3598705C1	1602	F5	N/A		
FH5BT(-)	18	GN	TXL	3522073C1	3598705C1	1602	F5	N/A		
3L5BB(-)	18	GN	TXL	3522073C1	3598705C1	1602	F5	N/A		
AR5BB(-)	18	GN	TXL	3522073C1	3598705C1	1602	F5	N/A		
AS5BB(-)	18	GN	TXL	3522073C1	3598705C1	1602	F5	N/A		
BR5BB(-)	18	GN	TXL	3522073C1	3598705C1	1602	F5	N/A		
BV5BT(-)	18	GN	TXL	3522073C1	3598705C1	1602	F5	N/A		
FH5BT(-)	18	GN	TXL	3522073C1	3598705C1	1602	F5	N/A		
PS5BB(-)	18	GN	TXL	3522073C1	3598705C1	1602	F5	N/A		
3L5BB(+)	18	YL	TXL	3522073C1	3598705C1	1602	F6	N/A		

Circuit Number	Gauge	Color	Insulation	Terminal / Splice Number	Connector Part number	Connector Number	Cavity	Seal/Sleeve	Lock 1	Lock 2
AR5BB(+)	18	YL	TXL	3522073C1	3598705C1	1602	F6	N/A		
AS5BB(+)	18	YL	TXL	3522073C1	3598705C1	1602	F6	N/A		
FH5BT(+)	18	YL	TXL	3522073C1	3598705C1	1602	F6	N/A		
3L5BB(+)	18	YL	TXL	3522073C1	3598705C1	1602	F6	N/A		
AR5BB(+)	18	YL	TXL	3522073C1	3598705C1	1602	F6	N/A		
AS5BB(+)	18	YL	TXL	3522073C1	3598705C1	1602	F6	N/A		
BR5BB(+)	18	YL	TXL	3522073C1	3598705C1	1602	F6	N/A		
BV5BT(+)	18	YL	TXL	3522073C1	3598705C1	1602	F6	N/A		
FH5BT(+)	18	YL	TXL	3522073C1	3598705C1	1602	F6	N/A		
PS5BB(+)	18	YL	TXL	3522073C1	3598705C1	1602	F6	N/A		
FF61B	18	GY	TXL	3522073C1	3598705C1	1602	F7	N/A		
FF61B	18	GY	TXL	3522073C1	3598705C1	1602	F7	N/A		
AU28	18	TN	TXL	3522073C1	3598705C1	1602	F9	N/A		
AU28BA	18	TN	TXL	3522073C1	3598705C1	1602	F9	N/A		
BF57BB	16	OR	TXL	3544876C1	3598711C1	1603	A	N/A		
BM57T	12	OR	TXL	3544877C1	3598711C1	1603	A	N/A		
BG57BB	16	OR	TXL	3544876C1	3598711C1	1603	A	N/A		
BL57BB	16	LTGN	TXL	3544876C1	3598711C1	1603	A	N/A		
BM57T	12	OR	TXL	3544877C1	3598711C1	1603	A	N/A		
BF56BB	16	OR	TXL	3544876C1	3598711C1	1603	B	N/A		
BM56T	12	OR	TXL	3544877C1	3598711C1	1603	B	N/A		
BG56BB	16	OR	TXL	3544876C1	3598711C1	1603	B	N/A		
BL56BB	16	YL	TXL	3544876C1	3598711C1	1603	B	N/A		
BM56T	12	OR	TXL	3544877C1	3598711C1	1603	B	N/A		
AA77	18	LTGN	TXL	3544876C1	3598711C1	1603	C	N/A		
AA77	18	LTGN	TXL	3544876C1	3598711C1	1603	C	N/A		
2Z56A	16	OR	TXL	3544876C1	3598711C1	1603	D	N/A		
EA56A	16	OR	TXL	3544876C1	3598711C1	1603	D	N/A		
NB56A1	14	OR	TXL	3544877C1	3598711C1	1603	D	N/A		
NC56A	14	OR	TXL	3544877C1	3598711C1	1603	D	N/A		
NS56A	14	OR	TXL	3544877C1	3598711C1	1603	D	N/A		
AA56A	16	OR	TXL	3544876C1	3598711C1	1603	D	N/A		
AA85	16	GY	TXL	3544876C1	3598711C1	1603	E	N/A		
AA85	16	GY	TXL	3544876C1	3598711C1	1603	E	N/A		
CU64A	16	YL	TXL	3544876C1	3598711C1	1603	F	N/A		
CU64A	16	YL	TXL	3544876C1	3598711C1	1603	F	N/A		
BS65	18	OR	TXL	3544876C1	3598711C1	1603	G	N/A		
BT65	18	OR	TXL	3544876C1	3598711C1	1603	G	N/A		
BU65	16	OR	TXL	3544876C1	3598711C1	1603	G	N/A		
BW65	16	OR	TXL	3544876C1	3598711C1	1603	G	N/A		
BX65	16	OR	TXL	3544876C1	3598711C1	1603	G	N/A		
BY65	16	OR	TXL	3544876C1	3598711C1	1603	G	N/A		
BS65	18	OR	TXL	3544876C1	3598711C1	1603	G	N/A		
BT65	18	OR	TXL	3544876C1	3598711C1	1603	G	N/A		
BU65	16	OR	TXL	3544876C1	3598711C1	1603	G	N/A		
BW65	16	OR	TXL	3544876C1	3598711C1	1603	G	N/A		
BX65	16	OR	TXL	3544876C1	3598711C1	1603	G	N/A		
BY65	16	OR	TXL	3544876C1	3598711C1	1603	G	N/A		
BB52AA	14	YL	TXL	3544877C1	3598711C1	1603	H	N/A		
DE52A	14	YL	TXL	3544877C1	3598711C1	1603	H	N/A		
BB52AA	14	YL	TXL	3544877C1	3598711C1	1603	H	N/A		
DE52A	14	YL	TXL	3544877C1	3598711C1	1603	H	N/A		

Circuit Number	Gauge	Color	Insulation	Terminal / Splice Number	Connector Part number	Connector Number	Cavity	Seal/Sleeve	Lock 1	Lock 2
TN112	16	GY	TXL	3544876C1	3598711C1	1603	J	N/A		
2B58	16	BN	TXL	3544876C1	3598711C1	1603	J	N/A		
CU64B	16	YL	TXL	3544876C1	3598711C1	1603	K	N/A		
CU64B	16	YL	TXL	3544876C1	3598711C1	1603	K	N/A		
BB52B	14	YL	TXL	3544877C1	3598711C1	1603	L	N/A		
DE52B	14	YL	TXL	3544877C1	3598711C1	1603	L	N/A		
BB52B	14	YL	TXL	3544877C1	3598711C1	1603	L	N/A		
DE52B	14	YL	TXL	3544877C1	3598711C1	1603	L	N/A		
2Z57AA	16	OR	TXL	3544876C1	3598711C1	1603	M	N/A		
EA57AA	16	OR	TXL	3544876C1	3598711C1	1603	M	N/A		
NB57AA1	14	OR	TXL	3544877C1	3598711C1	1603	M	N/A		
NC57AA	14	OR	TXL	3544877C1	3598711C1	1603	M	N/A		
NS57AA	14	OR	TXL	3544877C1	3598711C1	1603	M	N/A		
AA57C	16	OR	TXL	3544876C1	3598711C1	1603	M	N/A		
AA82	16	GY	TXL	3544876C1	3598710C1	1604	A	N/A		
AA82	16	GY	TXL	3544876C1	3598710C1	1604	A	N/A		
BB53AA	14	YL	TXL	3544877C1	3598710C1	1604	B	N/A		
DE53A	14	YL	TXL	3544877C1	3598710C1	1604	B	N/A		
BB53AA	14	YL	TXL	3544877C1	3598710C1	1604	B	N/A		
DE53A	14	YL	TXL	3544877C1	3598710C1	1604	B	N/A		
2F56C	16	OR	TXL	3544876C1	3598710C1	1604	C	N/A		
2G56C	16	OR	TXL	3544876C1	3598710C1	1604	C	N/A	3543731C1	
2Z56C	16	OR	TXL	3544876C1	3598710C1	1604	C	N/A		
NB56C	16	OR	TXL	3544876C1	3598710C1	1604	C	N/A		
NC56C	16	OR	TXL	3544876C1	3598710C1	1604	C	N/A		
NS56C	16	OR	TXL	3544876C1	3598710C1	1604	C	N/A		
AA56C	16	OR	TXL	3544876C1	3598710C1	1604	C	N/A		
BF68BB	14	BN	TXL	3544877C1	3598710C1	1604	D	N/A		
BM68T	12	BN	TXL	3544877C1	3598710C1	1604	D	N/A		
BG68BB	14	BN	TXL	3544877C1	3598710C1	1604	D	N/A		
BL68BB	14	BN	TXL	3544877C1	3598710C1	1604	D	N/A		
BM68T	12	BN	TXL	3544877C1	3598710C1	1604	D	N/A		
AA11-GKC	12	WH	TXL	3544877C1	3598710C1	1604	E	N/A		
AA11-GKC	12	WH	TXL	3544877C1	3598710C1	1604	E	N/A		
BF54BB	14	BN	TXL	3544877C1	3598710C1	1604	F	N/A		
BM58T	12	BN	TXL	3544877C1	3598710C1	1604	F	N/A		
BG54BB	14	BN	TXL	3544877C1	3598710C1	1604	F	N/A		
BL54BB	14	BN	TXL	3544877C1	3598710C1	1604	F	N/A		
BM58TC	12	BN	TXL	3544877C1	3598710C1	1604	F	N/A		
3C54	16	BN	TXL	3544876C1	3598710C1	1604	G	N/A		
3.00E+54	16	BN	TXL	3544876C1	3598710C1	1604	G	N/A		
AV54	16	BN	TXL	3544876C1	3598710C1	1604	G	N/A		
AW54	16	BN	TXL	3544876C1	3598710C1	1604	G	N/A		
HY54	16	BN	TXL	3544876C1	3598710C1	1604	G	N/A		
AA54	16	BN	TXL	3544876C1	3598710C1	1604	G	N/A		
BB53B	14	YL	TXL	3544877C1	3598710C1	1604	H	N/A		
DE53B	14	YL	TXL	3544877C1	3598710C1	1604	H	N/A		
BB53B	14	YL	TXL	3544877C1	3598710C1	1604	H	N/A		
DE53B	14	YL	TXL	3544877C1	3598710C1	1604	H	N/A		
AA63	18	DKBL	TXL	3544876C1	3598710C1	1604	J	N/A		
AA63	18	DKBL	TXL	3544876C1	3598710C1	1604	J	N/A		
2B57F	16	OR	TXL	3544876C1	3598710C1	1604	K	N/A		

Circuit Number	Gauge	Color	Insulation	Terminal / Splice Number	Connector Part number	Connector Number	Cavity	Seal/Sleeve	Lock 1	Lock 2
2C57F	16	OR	TXL	3544876C1	3598710C1	1604	K	N/A		
2D57F	16	OR	TXL	3544876C1	3598710C1	1604	K	N/A		
2E57F	16	OR	TXL	3544876C1	3598710C1	1604	K	N/A		
2F57F	16	OR	TXL	3544876C1	3598710C1	1604	K	N/A	3525873C1	
2G57F	16	OR	TXL	3544876C1	3598710C1	1604	K	N/A		
NA57F	16	OR	TXL	3544876C1	3598710C1	1604	K	N/A		
NW57F	16	OR	TXL	3544876C1	3598710C1	1604	K	N/A		
NY57F	16	OR	TXL	3544876C1	3598710C1	1604	K	N/A		
AA57F	16	OR	TXL	3544876C1	3598710C1	1604	K	N/A		
AA14J	4	RD	SGX	571673C1		1605	A	2644004R1		
AZ17B	18	PK	TXL	3544884C	3759005C1	1606	M	N/A		
AZ17B	18	PK	TXL	3544884C	3759005C1	1606	M	N/A		
AH12H	18	LTBL	TXL	3544876C1	3759005C1	1606	A	N/A		
AM12H	18	LTBL	TXL	3544876C1	3759005C1	1606	A	N/A		
3Y12	20	LTBL	TXL	3544875C1	3759005C1	1606	A	N/A		
AV12	20	LTBL	TXL	3544875C1	3759005C1	1606	A	N/A		
AW12	20	LTBL	TXL	3544875C1	3759005C1	1606	A	N/A		
AY12	18	LTBL	TXL	3544876C1	3759005C1	1606	A	N/A		
AH13H	18	PK	TXL	3544884C1	3759005C1	1606	B	N/A		
AM13H	18	PK	TXL	3544884C1	3759005C1	1606	B	N/A		
6K166B	20	LTGN	TXL	3544883C1	3759005C1	1606	B	N/A		
GZ5AA(-)	18	GN	TXL	3544884C1	3759005C1	1606	D	N/A		
JK5AA(-)	18	GN	TXL	3544884C1	3759005C1	1606	D	N/A		
KP5AA(-)	18	GN	TXL	3544884C1	3759005C1	1606	D	N/A		
KU5AA(-)	18	GN	TXL	3544884C1	3759005C1	1606	D	N/A		
LN5AA(-)	18	GN	TXL	3544884C1	3759005C1	1606	D	N/A		
GZ5AA(-)	18	GN	TXL	3544884C1	3759005C1	1606	D	N/A		
JK5AA(-)	18	GN	TXL	3544884C1	3759005C1	1606	D	N/A		
KP5AA(-)	18	GN	TXL	3544884C1	3759005C1	1606	D	N/A		
KU5AA(-)	18	GN	TXL	3544884C1	3759005C1	1606	D	N/A		
LN5AA(-)	18	GN	TXL	3544884C1	3759005C1	1606	D	N/A		
GZ5AA(+)	18	YL	TXL	3544884C1	3759005C1	1606	E	N/A		
JK5AA(+)	18	YL	TXL	3544884C1	3759005C1	1606	E	N/A		
KP5AA(+)	18	YL	TXL	3544884C1	3759005C1	1606	E	N/A		
KU5AA(+)	18	YL	TXL	3544884C1	3759005C1	1606	E	N/A		
LN5AA(+)	18	YL	TXL	3544884C1	3759005C1	1606	E	N/A		
GZ5AA(+)	18	YL	TXL	3544884C1	3759005C1	1606	E	N/A		
JK5AA(+)	18	YL	TXL	3544884C1	3759005C1	1606	E	N/A		
KP5AA(+)	18	YL	TXL	3544884C1	3759005C1	1606	E	N/A		
KU5AA(+)	18	YL	TXL	3544884C1	3759005C1	1606	E	N/A		
LN5AA(+)	18	YL	TXL	3544884C1	3759005C1	1606	E	N/A		
3D5B(-)	18	GN	TXL	3544884C1	3759005C1	1606	G	N/A		
3M5B(-)	18	GN	TXL	3544884C1	3759005C1	1606	G	N/A		
9K5B(-)	18	GN	TXL	3544884C1	3759005C1	1606	G	N/A		
9L5B(-)	18	GN	TXL	3544884C1	3759005C1	1606	G	N/A		
9P5B(-)	18	GN	TXL	3544884C1	3759005C1	1606	G	N/A	1667734C1	
9V5B(-)	18	GN	TXL	3544884C1	3759005C1	1606	G	N/A		
JB5B(-)	18	GN	TXL	3544884C1	3759005C1	1606	G	N/A		
LC5B(-)	18	GN	TXL	3544884C1	3759005C1	1606	G	N/A		
LD5B(-)	18	GN	TXL	3544884C1	3759005C1	1606	G	N/A		
LE5B(-)	18	GN	TXL	3544884C1	3759005C1	1606	G	N/A		
LF5B(-)	18	GN	TXL	3544884C1	3759005C1	1606	G	N/A		

Circuit Number	Gauge	Color	Insulation	Terminal / Splice Number	Connector Part number	Connector Number	Cavity	Seal/Sleeve	Lock 1	Lock 2
LS5B(-)	18	GN	TXL	3544884C1	3759005C1	1606	G	N/A		
LT5B(-)	18	GN	TXL	3544884C1	3759005C1	1606	G	N/A		
LU5B(-)	18	GN	TXL	3544884C1	3759005C1	1606	G	N/A		
LW5B(-)	18	GN	TXL	3544884C1	3759005C1	1606	G	N/A		
NT5B(-)	18	GN	TXL	3544884C1	3759005C1	1606	G	N/A		
PY5B(-)	18	GN	TXL	3544884C1	3759005C1	1606	G	N/A		
PZ5B(-)	18	GN	TXL	3544884C1	3759005C1	1606	G	N/A		
RD5B(-)	18	GN	TXL	3544884C1	3759005C1	1606	G	N/A		
RG5B(-)	18	GN	TXL	3544884C1	3759005C1	1606	G	N/A		
RJ5B(-)	18	GN	TXL	3544884C1	3759005C1	1606	G	N/A		
RM5B(-)	18	GN	TXL	3544884C1	3759005C1	1606	G	N/A		
RS5B(-)	18	GN	TXL	3544884C1	3759005C1	1606	G	N/A		
RU5B(-)	18	GN	TXL	3544884C1	3759005C1	1606	G	N/A		
SA5B(-)	18	GN	TXL	3544884C1	3759005C1	1606	G	N/A		
SK5B(-)	18	GN	TXL	3544884C1	3759005C1	1606	G	N/A		
SN5B(-)	18	GN	TXL	3544884C1	3759005C1	1606	G	N/A		
SP5B(-)	18	GN	TXL	3544884C1	3759005C1	1606	G	N/A		
VC5B(-)	18	GN	TXL	3544884C1	3759005C1	1606	G	N/A		
VE5B(-)	18	GN	TXL	3544884C1	3759005C1	1606	G	N/A		
ZH5B(-)	18	GN	TXL	3544884C1	3759005C1	1606	G	N/A		
2H5B(-)	18	GN	TXL	3544884C1	3759005C1	1606	G	N/A		
2J5B(-)	18	GN	TXL	3544884C1	3759005C1	1606	G	N/A		
2L5B(-)	18	GN	TXL	3544884C1	3759005C1	1606	G	N/A		
2M5B(-)	18	GN	TXL	3544884C1	3759005C1	1606	G	N/A		
2W5B(-)	18	GN	TXL	3544884C1	3759005C1	1606	G	N/A		
2Y5B(-)	18	GN	TXL	3544884C1	3759005C1	1606	G	N/A		
2Z5B(-)	18	GN	TXL	3544884C1	3759005C1	1606	G	N/A		
3C5B(-)	18	GN	TXL	3544884C1	3759005C1	1606	G	N/A		
3D5B(-)	18	GN	TXL	3544884C1	3759005C1	1606	G	N/A		
3M5B(-)	18	GN	TXL	3544884C1	3759005C1	1606	G	N/A		
9K5B(-)	18	GN	TXL	3544884C1	3759005C1	1606	G	N/A		
9L5B(-)	18	GN	TXL	3544884C1	3759005C1	1606	G	N/A		
9P5B(-)	18	GN	TXL	3544884C1	3759005C1	1606	G	N/A		
9V5B(-)	18	GN	TXL	3544884C1	3759005C1	1606	G	N/A		
JB5B(-)	18	GN	TXL	3544884C1	3759005C1	1606	G	N/A		
LC5B(-)	18	GN	TXL	3544884C1	3759005C1	1606	G	N/A		
LD5B(-)	18	GN	TXL	3544884C1	3759005C1	1606	G	N/A		
LE5B(-)	18	GN	TXL	3544884C1	3759005C1	1606	G	N/A		
LF5B(-)	18	GN	TXL	3544884C1	3759005C1	1606	G	N/A		
LS5B(-)	18	GN	TXL	3544884C1	3759005C1	1606	G	N/A		
LT5B(-)	18	GN	TXL	3544884C1	3759005C1	1606	G	N/A		
LU5B(-)	18	GN	TXL	3544884C1	3759005C1	1606	G	N/A		
LW5B(-)	18	GN	TXL	3544884C1	3759005C1	1606	G	N/A		
PY5B(-)	18	GN	TXL	3544884C1	3759005C1	1606	G	N/A		
PZ5B(-)	18	GN	TXL	3544884C1	3759005C1	1606	G	N/A		
RD5B(-)	18	GN	TXL	3544884C1	3759005C1	1606	G	N/A		
RG5B(-)	18	GN	TXL	3544884C1	3759005C1	1606	G	N/A		
RJ5B(-)	18	GN	TXL	3544884C1	3759005C1	1606	G	N/A		
RM5B(-)	18	GN	TXL	3544884C1	3759005C1	1606	G	N/A		
RS5B(-)	18	GN	TXL	3544884C1	3759005C1	1606	G	N/A		
RU5B(-)	18	GN	TXL	3544884C1	3759005C1	1606	G	N/A		
SA5B(-)	18	GN	TXL	3544884C1	3759005C1	1606	G	N/A		

Circuit Number	Gauge	Color	Insulation	Terminal / Splice Number	Connector Part number	Connector Number	Cavity	Seal/Sleeve	Lock 1	Lock 2
SK5B(-)	18	GN	TXL	3544884C1	3759005C1	1606	G	N/A		
SN5B(-)	18	GN	TXL	3544884C1	3759005C1	1606	G	N/A		
SP5B(-)	18	GN	TXL	3544884C1	3759005C1	1606	G	N/A		
VC5B(-)	18	GN	TXL	3544884C1	3759005C1	1606	G	N/A		
VE5B(-)	18	GN	TXL	3544884C1	3759005C1	1606	G	N/A		
ZH5B(-)	18	GN	TXL	3544884C1	3759005C1	1606	G	N/A		
ZN5B(-)	18	GN	TXL	3544884C1	3759005C1	1606	G	N/A		
3D5B(+)	18	YL	TXL	3544884C1	3759005C1	1606	H	N/A		
3M5B(+)	18	YL	TXL	3544884C1	3759005C1	1606	H	N/A		
9K5B(+)	18	YL	TXL	3544884C1	3759005C1	1606	H	N/A		
9L5B(+)	18	YL	TXL	3544884C1	3759005C1	1606	H	N/A		
9P5B(+)	18	YL	TXL	3544884C1	3759005C1	1606	H	N/A	1661874C1	
9V5B(+)	18	YL	TXL	3544884C1	3759005C1	1606	H	N/A		
JB5B(+)	18	YL	TXL	3544884C1	3759005C1	1606	H	N/A		
LC5B(+)	18	YL	TXL	3544884C1	3759005C1	1606	H	N/A		
LD5B(+)	18	YL	TXL	3544884C1	3759005C1	1606	H	N/A		
LE5B(+)	18	YL	TXL	3544884C1	3759005C1	1606	H	N/A		
LF5B(+)	18	YL	TXL	3544884C1	3759005C1	1606	H	N/A		
LS5B(+)	18	YL	TXL	3544884C1	3759005C1	1606	H	N/A		
LT5B(+)	18	YL	TXL	3544884C1	3759005C1	1606	H	N/A		
LU5B(+)	18	YL	TXL	3544884C1	3759005C1	1606	H	N/A		
LW5B(+)	18	YL	TXL	3544884C1	3759005C1	1606	H	N/A		
NT5B(+)	18	YL	TXL	3544884C1	3759005C1	1606	H	N/A		
PY5B(+)	18	YL	TXL	3544884C1	3759005C1	1606	H	N/A		
PZ5B(+)	18	YL	TXL	3544884C1	3759005C1	1606	H	N/A		
RD5B(+)	18	YL	TXL	3544884C1	3759005C1	1606	H	N/A		
RG5B(+)	18	YL	TXL	3544884C1	3759005C1	1606	H	N/A		
RJ5B(+)	18	YL	TXL	3544884C1	3759005C1	1606	H	N/A		
RM5B(+)	18	YL	TXL	3544884C1	3759005C1	1606	H	N/A		
RS5B(+)	18	YL	TXL	3544884C1	3759005C1	1606	H	N/A		
RU5B(+)	18	YL	TXL	3544884C1	3759005C1	1606	H	N/A		
SA5B(+)	18	YL	TXL	3544884C1	3759005C1	1606	H	N/A		
SK5B(+)	18	YL	TXL	3544884C1	3759005C1	1606	H	N/A		
SN5B(+)	18	YL	TXL	3544884C1	3759005C1	1606	H	N/A		
SP5B(+)	18	YL	TXL	3544884C1	3759005C1	1606	H	N/A		
VC5B(+)	18	YL	TXL	3544884C1	3759005C1	1606	H	N/A		
VE5B(+)	18	YL	TXL	3544884C1	3759005C1	1606	H	N/A		
ZH5B(+)	18	YL	TXL	3544884C1	3759005C1	1606	H	N/A		
2H5B(+)	18	YL	TXL	3544884C1	3759005C1	1606	H	N/A		
2J5B(+)	18	YL	TXL	3544884C1	3759005C1	1606	H	N/A		
2L5B(+)	18	YL	TXL	3544884C1	3759005C1	1606	H	N/A		
2M5B(+)	18	YL	TXL	3544884C1	3759005C1	1606	H	N/A		
2W5B(+)	18	YL	TXL	3544884C1	3759005C1	1606	H	N/A		
2Y5B(+)	18	YL	TXL	3544884C1	3759005C1	1606	H	N/A		
2Z5B(+)	18	YL	TXL	3544884C1	3759005C1	1606	H	N/A		
3C5B(+)	18	YL	TXL	3544884C1	3759005C1	1606	H	N/A		
3D5B(+)	18	YL	TXL	3544884C1	3759005C1	1606	H	N/A		
3M5B(+)	18	YL	TXL	3544884C1	3759005C1	1606	H	N/A		
9K5B(+)	18	YL	TXL	3544884C1	3759005C1	1606	H	N/A		
9L5B(+)	18	YL	TXL	3544884C1	3759005C1	1606	H	N/A		
9P5B(+)	18	YL	TXL	3544884C1	3759005C1	1606	H	N/A		
9V5B(+)	18	YL	TXL	3544884C1	3759005C1	1606	H	N/A		

Circuit Number	Gauge	Color	Insulation	Terminal / Splice Number	Connector Part number	Connector Number	Cavity	Seal/Sleeve	Lock 1	Lock 2
JB5B(+)	18	YL	TXL	3544884C1	3759005C1	1606	H	N/A		
LC5B(+)	18	YL	TXL	3544884C1	3759005C1	1606	H	N/A		
LD5B(+)	18	YL	TXL	3544884C1	3759005C1	1606	H	N/A		
LE5B(+)	18	YL	TXL	3544884C1	3759005C1	1606	H	N/A		
LF5B(+)	18	YL	TXL	3544884C1	3759005C1	1606	H	N/A		
LS5B(+)	18	YL	TXL	3544884C1	3759005C1	1606	H	N/A		
LT5B(+)	18	YL	TXL	3544884C1	3759005C1	1606	H	N/A		
LU5B(+)	18	YL	TXL	3544884C1	3759005C1	1606	H	N/A		
LW5B(+)	18	YL	TXL	3544884C1	3759005C1	1606	H	N/A		
PY5B(+)	18	YL	TXL	3544884C1	3759005C1	1606	H	N/A		
PZ5B(+)	18	YL	TXL	3544884C1	3759005C1	1606	H	N/A		
RD5B(+)	18	YL	TXL	3544884C1	3759005C1	1606	H	N/A		
RG5B(+)	18	YL	TXL	3544884C1	3759005C1	1606	H	N/A		
RJ5B(+)	18	YL	TXL	3544884C1	3759005C1	1606	H	N/A		
RM5B(+)	18	YL	TXL	3544884C1	3759005C1	1606	H	N/A		
RS5B(+)	18	YL	TXL	3544884C1	3759005C1	1606	H	N/A		
RU5B(+)	18	YL	TXL	3544884C1	3759005C1	1606	H	N/A		
SA5B(+)	18	YL	TXL	3544884C1	3759005C1	1606	H	N/A		
SK5B(+)	18	YL	TXL	3544884C1	3759005C1	1606	H	N/A		
SN5B(+)	18	YL	TXL	3544884C1	3759005C1	1606	H	N/A		
SP5B(+)	18	YL	TXL	3544884C1	3759005C1	1606	H	N/A		
VC5B(+)	18	YL	TXL	3544884C1	3759005C1	1606	H	N/A		
VE5B(+)	18	YL	TXL	3544884C1	3759005C1	1606	H	N/A		
ZH5B(+)	18	YL	TXL	3544884C1	3759005C1	1606	H	N/A		
ZN5B(+)	18	YL	TXL	3544884C1	3759005C1	1606	H	N/A		
3C58	16	BN	TXL	3544876C1	3759005C1	1606	J	N/A		
3.00E+58	16	BN	TXL	3544876C1	3759005C1	1606	J	N/A		
AG166A	20	LTGN	TXL	3544875C1	3759005C1	1606	J	N/A		
AH166A	20	LTGN	TXL	3544875C1	3759005C1	1606	J	N/A		
6K11-GE	20	WH	TXL	3544875C1	3759005C1	1606	K	N/A		
AP75WC	18	LTGN	TXL	3544884C1	3759005C1	1606	L	N/A		
AP75WC	18	LTGN	TXL	3544884C1	3759005C1	1606	L	N/A		
DT104-GA	16	WH	TXL	3544884C1	3759005C1	1606	M	N/A		
GY92#141	18	TN	TXL	3544884C1	3759005C1	1606	M	N/A		
DT104-GA	16	WH	TXL	3544884C1	3759005C1	1606	M	N/A		
GY92#141A	18	TN	TXL	3544884C1	3759005C1	1606	M	N/A		
JM5BA(-)	18	LTGN	TXL	3544884C1	3759005C1	1606	N	N/A		
JN5BA(-)	18	LTGN	TXL	3544884C1	3759005C1	1606	N	N/A		
JP5BA(-)	18	LTGN	TXL	3544884C1	3759005C1	1606	N	N/A		
JR5BA(-)	18	LTGN	TXL	3544884C1	3759005C1	1606	N	N/A		
JM5BA(-)	18	LTGN	TXL	3544884C1	3759005C1	1606	N	N/A		
JN5BA(-)	18	LTGN	TXL	3544884C1	3759005C1	1606	N	N/A		
JP5BA(-)	18	LTGN	TXL	3544884C1	3759005C1	1606	N	N/A		
JR5BA(-)	18	LTGN	TXL	3544884C1	3759005C1	1606	N	N/A		
JM5BA(+)	18	YL	TXL	3544884C1	3759005C1	1606	P	N/A		
JN5BA(+)	18	YL	TXL	3544884C1	3759005C1	1606	P	N/A		
JP5BA(+)	18	YL	TXL	3544884C1	3759005C1	1606	P	N/A		
JR5BA(+)	18	YL	TXL	3544884C1	3759005C1	1606	P	N/A		
JM5BA(+)	18	YL	TXL	3544884C1	3759005C1	1606	P	N/A		
JN5BA(+)	18	YL	TXL	3544884C1	3759005C1	1606	P	N/A		
JP5BA(+)	18	YL	TXL	3544884C1	3759005C1	1606	P	N/A		
JR5BA(+)	18	YL	TXL	3544884C1	3759005C1	1606	P	N/A		

Circuit Number	Gauge	Color	Insulation	Terminal / Splice Number	Connector Part number	Connector Number	Cavity	Seal/Sleeve	Lock 1	Lock 2
ND17HA	16	PK	TXL	3544884C1	3759005C1	1606	S	N/A		
NE17H	18	PK	TXL	3544884C1	3759005C1	1606	S	N/A		
ND17HA	16	PK	TXL	3544884C1	3759005C1	1606	S	N/A		
NE17H	18	PK	TXL	3544884C1	3759005C1	1606	S	N/A		
3B17A	16	PK	TXL	3544884C1	3759005C1	1606	T	N/A		
AF17A	16	PK	TXL	3544884C1	3759005C1	1606	T	N/A		
GP17	16	PK	TXL	3544884C1	3759005C1	1606	T	N/A		
3B17	16	PK	TXL	3544884C1	3759005C1	1606	T	N/A		
AF17	16	PK	TXL	3544884C1	3759005C1	1606	T	N/A		
GP17	16	PK	TXL	3544884C1	3759005C1	1606	T	N/A		
AG166BAB	20	LTGN	TXL	3544875C1	3759005C1	1606	W	N/A		
AH166AA	20	LTGN	TXL	3544875C1	3759005C1	1606	W	N/A		
HA104SP	18	DKBL	TXL	3522073C1	3710061C1	1607	A1	N/A		
HA104SP	20	DKBL	TXL	3534303C1	3710061C1	1607	A1	N/A		
AA77D	20	LTGN	TXL	3534303C1	3710061C1	1607	A10	N/A		
AA77D	20	LTGN	TXL	3534303C1	3710061C1	1607	A10	N/A		
3H77BA	18	LTGN	TXL	3522073C1	3710061C1	1607	A12	N/A	3525875C1	
3H77BA	18	LTGN	TXL	3522073C1	3710061C1	1607	A12	N/A		
HA104SS	18	DKBL	TXL	3522073C1	3710061C1	1607	A2	N/A		
HA104SS	20	DKBL	TXL	3534303C1	3710061C1	1607	A2	N/A		
CY49	18	GY	TXL	3522073C1	3710061C1	1607	A3	N/A		
CZ49	18	GY	TXL	3522073C1	3710061C1	1607	A3	N/A		
CY49	18	GY	TXL	3522073C1	3710061C1	1607	A3	N/A		
CZ49	18	GY	TXL	3522073C1	3710061C1	1607	A3	N/A		
CZ49A	18	GY	TXL	3522073C1	3710061C1	1607	A4	N/A		
CZ49A	18	GY	TXL	3522073C1	3710061C1	1607	A4	N/A		
AA60A	18	OR	TXL	3522073C1	3710061C1	1607	A6	N/A		
AA60A	18	OR	TXL	3522073C1	3710061C1	1607	A6	N/A		
AK28A	20	TN	TXL	3534303C1	3710061C1	1607	A9	N/A		
AK28A	20	TN	TXL	3534303C1	3710061C1	1607	A9	N/A		
3G77A	20	LTGN	TXL	3534303C1	3710061C1	1607	B1	N/A		
3G77A	20	LTGN	TXL	3534303C1	3710061C1	1607	B1	N/A		
AA6AM	20	GY	TXL	3534303C1	3710061C1	1607	B10	N/A		
AA6AM	20	GY	TXL	3534303C1	3710061C1	1607	B10	N/A		
DT17B	18	PK	TXL	3522073C1	3710061C1	1607	B2	N/A		
DT17B	18	PK	TXL	3522073C1	3710061C1	1607	B2	N/A		
EL63F	18	DKBL	TXL	3522073C1	3710061C1	1607	B4	N/A		
EL63F	18	DKBL	TXL	3522073C1	3710061C1	1607	B4	N/A		
HV104C	16	DKBL	TXL	3522073C1	3710061C1	1607	B5	N/A		
HV104C	16	DKBL	TXL	3522073C1	3710061C1	1607	B5	N/A		
DX63E	18	DKBL	TXL	3522073C1	3710061C1	1607	B6	N/A		
DX63E	20	DKBL	TXL	3534303C1	3710061C1	1607	B6	N/A		
3G77B	20	LTGN	TXL	3534303C1	3710061C1	1607	B9	N/A		
3G77B	20	LTGN	TXL	3534303C1	3710061C1	1607	B9	N/A		
AA9Z	18	GY	TXL	1661208C1	2007315C1	1620	A	N/A		
AA9Z	18	GY	TXL	1661208C1	2007315C1	1620	A	N/A		
AK9CDC	20	GY	TXL	1661208C1	2007315C1	1620	B	N/A		
AK9CDC	20	GY	TXL	1661208C1	2007315C1	1620	B	N/A		
FF109	18	GY	TXL	1661208C1	2007315C1	1620	C	N/A		
FF109	18	GY	TXL	1661208C1	2007315C1	1620	C	N/A		
DX109S	18	GY	TXL	1661208C1	2007315C1	1620	D	N/A		
DX109S	20	GY	TXL	1661208C1	2007315C1	1620	D	N/A		

Circuit Number	Gauge	Color	Insulation	Terminal / Splice Number	Connector Part number	Connector Number	Cavity	Seal/Sleeve	Lock 1	Lock 2
AN9BB	18	GY	TXL	1661208C1	2007315C1	1620	E	N/A		
AN9BB	18	GY	TXL	1661208C1	2007315C1	1620	E	N/A		
AA9ZA	18	GY	TXL	1661208C1	2007315C1	1620	F	N/A		
AA9ZA	18	GY	TXL	1661208C1	2007315C1	1620	F	N/A		
JL116UV	18	GY	TXL	1661208C1	2007315C1	1620	G	N/A		
JL116UV	18	GY	TXL	1661208C1	2007315C1	1620	G	N/A		
RE9A	20	GY	TXL	1661208C1	2007315C1	1620	H	N/A		
RE9A	20	GY	TXL	1661208C1	2007315C1	1620	H	N/A		
FU9BB	18	GY	TXL	1661208C1	2007315C1	1620	J	N/A		
JZ9BB	18	GY	TXL	1661208C1	2007315C1	1620	J	N/A		
FU9BB	18	GY	TXL	1661208C1	2007315C1	1620	J	N/A		
JZ9BB	18	GY	TXL	1661208C1	2007315C1	1620	J	N/A		
ZR98-G	18	WH	TXL	3754236C1	3757649C1	1650	A	N/A		
ZK98-G	18	WH	TXL	3754236C1	3757649C1	1650	A	N/A		
ZR98H	18	RD	TXL	3754236C1	3757649C1	1650	B	N/A		
ZK98H	18	RD	TXL	3754236C1	3757649C1	1650	B	N/A		
3D5D(+)	18	YL	TXL	3754236C1	3757649C1	1650	C	N/A		
3M5D(+)	18	YL	TXL	3754236C1	3757649C1	1650	C	N/A		
9K5D(+)	18	YL	TXL	3754236C1	3757649C1	1650	C	N/A		
9L5D(+)	18	YL	TXL	3754236C1	3757649C1	1650	C	N/A		
9P5D(+)	18	YL	TXL	3754236C1	3757649C1	1650	C	N/A	2033927C1	
9V5D(+)	18	YL	TXL	3754236C1	3757649C1	1650	C	N/A		
JB5D(+)	18	YL	TXL	3754236C1	3757649C1	1650	C	N/A		
LC5D(+)	18	YL	TXL	3754236C1	3757649C1	1650	C	N/A		
LD5D(+)	18	YL	TXL	3754236C1	3757649C1	1650	C	N/A		
LE5D(+)	18	YL	TXL	3754236C1	3757649C1	1650	C	N/A		
LF5D(+)	18	YL	TXL	3754236C1	3757649C1	1650	C	N/A		
LS5D(+)	18	YL	TXL	3754236C1	3757649C1	1650	C	N/A		
LT5H(+)	18	YL	TXL	3754236C1	3757649C1	1650	C	N/A		
LU5E(+)	18	YL	TXL	3754236C1	3757649C1	1650	C	N/A		
LW5H(+)	18	YL	TXL	3754236C1	3757649C1	1650	C	N/A		
PY5D(+)	18	YL	TXL	3754236C1	3757649C1	1650	C	N/A		
PZ5D(+)	18	YL	TXL	3754236C1	3757649C1	1650	C	N/A		
RD5D(+)	18	YL	TXL	3754236C1	3757649C1	1650	C	N/A		
RG5D(+)	18	YL	TXL	3754236C1	3757649C1	1650	C	N/A		
RJ5D(+)	18	YL	TXL	3754236C1	3757649C1	1650	C	N/A		
RM5D(+)	18	YL	TXL	3754236C1	3757649C1	1650	C	N/A		
RS5D(+)	18	YL	TXL	3754236C1	3757649C1	1650	C	N/A		
RU5D(+)	18	YL	TXL	3754236C1	3757649C1	1650	C	N/A		
SA5D(+)	18	YL	TXL	3754236C1	3757649C1	1650	C	N/A		
SK5D(+)	18	YL	TXL	3754236C1	3757649C1	1650	C	N/A		
SN5D(+)	18	YL	TXL	3754236C1	3757649C1	1650	C	N/A		
SP5D(+)	18	YL	TXL	3754236C1	3757649C1	1650	C	N/A		
VC5D(+)	18	YL	TXL	3754236C1	3757649C1	1650	C	N/A		
VE5D(+)	18	YL	TXL	3754236C1	3757649C1	1650	C	N/A		
ZH5D(+)	18	YL	TXL	3754236C1	3757649C1	1650	C	N/A		
2H5D(+)	18	YL	TXL	3754236C1	3757649C1	1650	C	N/A		
2J5D(+)	18	YL	TXL	3754236C1	3757649C1	1650	C	N/A		
2L5D(+)	18	YL	TXL	3754236C1	3757649C1	1650	C	N/A		
2M5D(+)	18	YL	TXL	3754236C1	3757649C1	1650	C	N/A		
2W5D(+)	18	YL	TXL	3754236C1	3757649C1	1650	C	N/A		
2Y5D(+)	18	YL	TXL	3754236C1	3757649C1	1650	C	N/A		

Circuit Number	Gauge	Color	Insulation	Terminal / Splice Number	Connector Part number	Connector Number	Cavity	Seal/Sleeve	Lock 1	Lock 2
2Z5D(+)	18	YL	TXL	3754236C1	3757649C1	1650	C	N/A		
3C5D(+)	18	YL	TXL	3754236C1	3757649C1	1650	C	N/A		
3D5D(+)	18	YL	TXL	3754236C1	3757649C1	1650	C	N/A		
3M5D(+)	18	YL	TXL	3754236C1	3757649C1	1650	C	N/A		
9K5D(+)	18	YL	TXL	3754236C1	3757649C1	1650	C	N/A		
9L5D(+)	18	YL	TXL	3754236C1	3757649C1	1650	C	N/A		
9P5D(+)	18	YL	TXL	3754236C1	3757649C1	1650	C	N/A		
9V5D(+)	18	YL	TXL	3754236C1	3757649C1	1650	C	N/A		
JB5D(+)	18	YL	TXL	3754236C1	3757649C1	1650	C	N/A		
LC5D(+)	18	YL	TXL	3754236C1	3757649C1	1650	C	N/A		
LD5D(+)	18	YL	TXL	3754236C1	3757649C1	1650	C	N/A		
LE5D(+)	18	YL	TXL	3754236C1	3757649C1	1650	C	N/A		
LF5D(+)	18	YL	TXL	3754236C1	3757649C1	1650	C	N/A		
LS5D(+)	18	YL	TXL	3754236C1	3757649C1	1650	C	N/A		
LT5HE(+)	18	YL	TXL	3754236C1	3757649C1	1650	C	N/A		
LU5E(+)	18	YL	TXL	3754236C1	3757649C1	1650	C	N/A		
LW5HE(+)	18	YL	TXL	3754236C1	3757649C1	1650	C	N/A		
PY5D(+)	18	YL	TXL	3754236C1	3757649C1	1650	C	N/A		
PZ5D(+)	18	YL	TXL	3754236C1	3757649C1	1650	C	N/A		
RD5D(+)	18	YL	TXL	3754236C1	3757649C1	1650	C	N/A		
RG5D(+)	18	YL	TXL	3754236C1	3757649C1	1650	C	N/A		
RJ5D(+)	18	YL	TXL	3754236C1	3757649C1	1650	C	N/A		
RM5D(+)	18	YL	TXL	3754236C1	3757649C1	1650	C	N/A		
RS5D(+)	18	YL	TXL	3754236C1	3757649C1	1650	C	N/A		
RU5D(+)	18	YL	TXL	3754236C1	3757649C1	1650	C	N/A		
SA5D(+)	18	YL	TXL	3754236C1	3757649C1	1650	C	N/A		
SK5D(+)	18	YL	TXL	3754236C1	3757649C1	1650	C	N/A		
SN5D(+)	18	YL	TXL	3754236C1	3757649C1	1650	C	N/A		
SP5D(+)	18	YL	TXL	3754236C1	3757649C1	1650	C	N/A		
VC5D(+)	18	YL	TXL	3754236C1	3757649C1	1650	C	N/A		
VE5D(+)	18	YL	TXL	3754236C1	3757649C1	1650	C	N/A		
ZH5D(+)	18	YL	TXL	3754236C1	3757649C1	1650	C	N/A		
3D5D(-)	18	GN	TXL	3754236C1	3757649C1	1650	D	N/A		
3M5D(-)	18	GN	TXL	3754236C1	3757649C1	1650	D	N/A		
9K5D(-)	18	GN	TXL	3754236C1	3757649C1	1650	D	N/A		
9L5D(-)	18	GN	TXL	3754236C1	3757649C1	1650	D	N/A		
9P5D(-)	18	GN	TXL	3754236C1	3757649C1	1650	D	N/A	2039342C1	
9V5D(-)	18	GN	TXL	3754236C1	3757649C1	1650	D	N/A		
JB5D(-)	18	GN	TXL	3754236C1	3757649C1	1650	D	N/A		
LC5D(-)	18	GN	TXL	3754236C1	3757649C1	1650	D	N/A		
LD5D(-)	18	GN	TXL	3754236C1	3757649C1	1650	D	N/A		
LE5D(-)	18	GN	TXL	3754236C1	3757649C1	1650	D	N/A		
LF5D(-)	18	GN	TXL	3754236C1	3757649C1	1650	D	N/A		
LS5D(-)	18	GN	TXL	3754236C1	3757649C1	1650	D	N/A		
LT5H(-)	18	GN	TXL	3754236C1	3757649C1	1650	D	N/A		
LU5E(-)	18	GN	TXL	3754236C1	3757649C1	1650	D	N/A		
LW5H(-)	18	GN	TXL	3754236C1	3757649C1	1650	D	N/A		
PY5D(-)	18	GN	TXL	3754236C1	3757649C1	1650	D	N/A		
PZ5D(-)	18	GN	TXL	3754236C1	3757649C1	1650	D	N/A		
RD5D(-)	18	GN	TXL	3754236C1	3757649C1	1650	D	N/A		
RG5D(-)	18	GN	TXL	3754236C1	3757649C1	1650	D	N/A		
RJ5D(-)	18	GN	TXL	3754236C1	3757649C1	1650	D	N/A		

Circuit Number	Gauge	Color	Insulation	Terminal / Splice Number	Connector Part number	Connector Number	Cavity	Seal/Sleeve	Lock 1	Lock 2
RM5D(-)	18	GN	TXL	3754236C1	3757649C1	1650	D	N/A		
RS5D(-)	18	GN	TXL	3754236C1	3757649C1	1650	D	N/A		
RU5D(-)	18	GN	TXL	3754236C1	3757649C1	1650	D	N/A		
SA5D(-)	18	GN	TXL	3754236C1	3757649C1	1650	D	N/A		
SK5D(-)	18	GN	TXL	3754236C1	3757649C1	1650	D	N/A		
SN5D(-)	18	GN	TXL	3754236C1	3757649C1	1650	D	N/A		
SP5D(-)	18	GN	TXL	3754236C1	3757649C1	1650	D	N/A		
VC5D(-)	18	GN	TXL	3754236C1	3757649C1	1650	D	N/A		
VE5D(-)	18	GN	TXL	3754236C1	3757649C1	1650	D	N/A		
ZH5D(-)	18	GN	TXL	3754236C1	3757649C1	1650	D	N/A		
2H5D(-)	18	GN	TXL	3754236C1	3757649C1	1650	D	N/A		
2J5D(-)	18	GN	TXL	3754236C1	3757649C1	1650	D	N/A		
2L5D(-)	18	GN	TXL	3754236C1	3757649C1	1650	D	N/A		
2M5D(-)	18	GN	TXL	3754236C1	3757649C1	1650	D	N/A		
2W5D(-)	18	GN	TXL	3754236C1	3757649C1	1650	D	N/A		
2Y5D(-)	18	GN	TXL	3754236C1	3757649C1	1650	D	N/A		
2Z5D(-)	18	GN	TXL	3754236C1	3757649C1	1650	D	N/A		
3C5D(-)	18	GN	TXL	3754236C1	3757649C1	1650	D	N/A		
3D5D(-)	18	GN	TXL	3754236C1	3757649C1	1650	D	N/A		
3M5D(-)	18	GN	TXL	3754236C1	3757649C1	1650	D	N/A		
9K5D(-)	18	GN	TXL	3754236C1	3757649C1	1650	D	N/A		
9L5D(-)	18	GN	TXL	3754236C1	3757649C1	1650	D	N/A		
9P5D(-)	18	GN	TXL	3754236C1	3757649C1	1650	D	N/A		
9V5D(-)	18	GN	TXL	3754236C1	3757649C1	1650	D	N/A		
JB5D(-)	18	GN	TXL	3754236C1	3757649C1	1650	D	N/A		
LC5D(-)	18	GN	TXL	3754236C1	3757649C1	1650	D	N/A		
LD5D(-)	18	GN	TXL	3754236C1	3757649C1	1650	D	N/A		
LE5D(-)	18	GN	TXL	3754236C1	3757649C1	1650	D	N/A		
LF5D(-)	18	GN	TXL	3754236C1	3757649C1	1650	D	N/A		
LS5D(-)	18	GN	TXL	3754236C1	3757649C1	1650	D	N/A		
LT5HE(-)	18	GN	TXL	3754236C1	3757649C1	1650	D	N/A		
LU5E(-)	18	GN	TXL	3754236C1	3757649C1	1650	D	N/A		
LW5HE(-)	18	GN	TXL	3754236C1	3757649C1	1650	D	N/A		
PY5D(-)	18	GN	TXL	3754236C1	3757649C1	1650	D	N/A		
PZ5D(-)	18	GN	TXL	3754236C1	3757649C1	1650	D	N/A		
RD5D(-)	18	GN	TXL	3754236C1	3757649C1	1650	D	N/A		
RG5D(-)	18	GN	TXL	3754236C1	3757649C1	1650	D	N/A		
RJ5D(-)	18	GN	TXL	3754236C1	3757649C1	1650	D	N/A		
RM5D(-)	18	GN	TXL	3754236C1	3757649C1	1650	D	N/A		
RS5D(-)	18	GN	TXL	3754236C1	3757649C1	1650	D	N/A		
RU5D(-)	18	GN	TXL	3754236C1	3757649C1	1650	D	N/A		
SA5D(-)	18	GN	TXL	3754236C1	3757649C1	1650	D	N/A		
SK5D(-)	18	GN	TXL	3754236C1	3757649C1	1650	D	N/A		
SN5D(-)	18	GN	TXL	3754236C1	3757649C1	1650	D	N/A		
SP5D(-)	18	GN	TXL	3754236C1	3757649C1	1650	D	N/A		
VC5D(-)	18	GN	TXL	3754236C1	3757649C1	1650	D	N/A		
VE5D(-)	18	GN	TXL	3754236C1	3757649C1	1650	D	N/A		
ZH5D(-)	18	GN	TXL	3754236C1	3757649C1	1650	D	N/A		
GZ5AD(+)	18	YL	TXL	3754236C1	3757649C1	1650	H	N/A		
JK5AD(+)	18	YL	TXL	3754236C1	3757649C1	1650	H	N/A		
KU5AD(+)	18	YL	TXL	3754236C1	3757649C1	1650	H	N/A		
LN5AD(+)	18	YL	TXL	3754236C1	3757649C1	1650	H	N/A		

Circuit Number	Gauge	Color	Insulation	Terminal / Splice Number	Connector Part number	Connector Number	Cavity	Seal/Sleeve	Lock 1	Lock 2
GZ5AD(+)	18	YL	TXL	3754236C1	3757649C1	1650	H	N/A		
JK5AD(+)	18	YL	TXL	3754236C1	3757649C1	1650	H	N/A		
KU5AD(+)	18	YL	TXL	3754236C1	3757649C1	1650	H	N/A		
LN5AD(+)	18	YL	TXL	3754236C1	3757649C1	1650	H	N/A		
GZ5AD(-)	18	GN	TXL	3754236C1	3757649C1	1650	J	N/A		
JK5AD(-)	18	GN	TXL	3754236C1	3757649C1	1650	J	N/A		
KU5AD(-)	18	GN	TXL	3754236C1	3757649C1	1650	J	N/A		
LN5AD(-)	18	GN	TXL	3754236C1	3757649C1	1650	J	N/A		
GZ5AD(-)	18	GN	TXL	3754236C1	3757649C1	1650	J	N/A		
JK5AD(-)	18	GN	TXL	3754236C1	3757649C1	1650	J	N/A		
KU5AD(-)	18	GN	TXL	3754236C1	3757649C1	1650	J	N/A		
LN5AD(-)	18	GN	TXL	3754236C1	3757649C1	1650	J	N/A		
LA98-G	20	WH	TXL	3754236C1	3757649C1	1651	A	N/A		
ZJ98-G	20	WH	TXL	3754236C1	3757649C1	1651	A	N/A		
ZJ98-G	18	WH	TXL	3754236C1	3757649C1	1651	A	N/A		
LA98P	18	RD	TXL	3754236C1	3757649C1	1651	B	N/A		
ZJ98P	18	RD	TXL	3754236C1	3757649C1	1651	B	N/A		
ZJ98P	18	RD	TXL	3754236C1	3757649C1	1651	B	N/A		
LC5G(+)	18	YL	TXL	3754236C1	3757649C1	1651	C	N/A		
LD5G(+)	18	YL	TXL	3754236C1	3757649C1	1651	C	N/A		
LE5FD(+)	18	YL	TXL	3754236C1	3757649C1	1651	C	N/A		
LF5CC(+)	18	YL	TXL	3754236C1	3757649C1	1651	C	N/A		
LS5CC(+)	18	YL	TXL	3754236C1	3757649C1	1651	C	N/A		
LT5F(+)	18	YL	TXL	3754236C1	3757649C1	1651	C	N/A		
LU5FD(+)	18	YL	TXL	3754236C1	3757649C1	1651	C	N/A		
LW5D(+)	18	YL	TXL	3754236C1	3757649C1	1651	C	N/A		
SK5G(+)	18	YL	TXL	3754236C1	3757649C1	1651	C	N/A		
ZH5GA(+)	18	YL	TXL	3754236C1	3757649C1	1651	C	N/A		
LC5G(+)	18	YL	TXL	3754236C1	3757649C1	1651	C	N/A		
LD5G(+)	18	YL	TXL	3754236C1	3757649C1	1651	C	N/A		
LE5FD(+)	18	YL	TXL	3754236C1	3757649C1	1651	C	N/A		
LF5CC(+)	18	YL	TXL	3754236C1	3757649C1	1651	C	N/A		
LS5CC(+)	18	YL	TXL	3754236C1	3757649C1	1651	C	N/A		
LT5FE(+)	18	YL	TXL	3754236C1	3757649C1	1651	C	N/A		
LU5FD(+)	18	YL	TXL	3754236C1	3757649C1	1651	C	N/A		
LW5D(+)	18	YL	TXL	3754236C1	3757649C1	1651	C	N/A		
SK5G(+)	18	YL	TXL	3754236C1	3757649C1	1651	C	N/A		
ZH5GA(+)	18	YL	TXL	3754236C1	3757649C1	1651	C	N/A		
LC5G(-)	18	GN	TXL	3754236C1	3757649C1	1651	D	N/A		
LD5G(-)	18	GN	TXL	3754236C1	3757649C1	1651	D	N/A		
LE5FD(-)	18	GN	TXL	3754236C1	3757649C1	1651	D	N/A		
LF5CC(-)	18	GN	TXL	3754236C1	3757649C1	1651	D	N/A		
LS5CC(-)	18	GN	TXL	3754236C1	3757649C1	1651	D	N/A		
LT5F(-)	18	GN	TXL	3754236C1	3757649C1	1651	D	N/A		
LU5FD(-)	18	GN	TXL	3754236C1	3757649C1	1651	D	N/A		
LW5D(-)	18	GN	TXL	3754236C1	3757649C1	1651	D	N/A		
SK5G(-)	18	GN	TXL	3754236C1	3757649C1	1651	D	N/A		
ZH5GA(-)	18	GN	TXL	3754236C1	3757649C1	1651	D	N/A		
LC5G(-)	18	GN	TXL	3754236C1	3757649C1	1651	D	N/A		
LD5G(-)	18	GN	TXL	3754236C1	3757649C1	1651	D	N/A		
LE5FD(-)	18	GN	TXL	3754236C1	3757649C1	1651	D	N/A		
LF5CC(-)	18	GN	TXL	3754236C1	3757649C1	1651	D	N/A		

Circuit Number	Gauge	Color	Insulation	Terminal / Splice Number	Connector Part number	Connector Number	Cavity	Seal/Sleeve	Lock 1	Lock 2
LS5CC(-)	18	GN	TXL	3754236C1	3757649C1	1651	D	N/A		
LT5FE(-)	18	GN	TXL	3754236C1	3757649C1	1651	D	N/A		
LU5FD(-)	18	GN	TXL	3754236C1	3757649C1	1651	D	N/A		
LW5D(-)	18	GN	TXL	3754236C1	3757649C1	1651	D	N/A		
SK5G(-)	18	GN	TXL	3754236C1	3757649C1	1651	D	N/A		
ZH5GA(-)	18	GN	TXL	3754236C1	3757649C1	1651	D	N/A		
ZG5(+)	18	YL	TXL	3754236C1	3757649C1	1651	H	N/A		
ZG5(+)	18	YL	TXL	3754236C1	3757649C1	1651	H	N/A		
ZG5(-)	18	GN	TXL	3754236C1	3757649C1	1651	J	N/A		
ZG5(-)	18	GN	TXL	3754236C1	3757649C1	1651	J	N/A		
BB52A	14	YL	TXL	3574288C1	3595625C1	1700	1	N/A		
DE52A	14	YL	TXL	3574288C1	3595625C1	1700	1	N/A		
BB52A	14	YL	TXL	3574288C1	3595625C1	1700	1	N/A		
DE52A	14	YL	TXL	3574288C1	3595625C1	1700	1	N/A		
BB53A	14	YL	TXL	3574288C1	3595625C1	1700	2	N/A		
DE53A	14	YL	TXL	3574288C1	3595625C1	1700	2	N/A		
BB53A	14	YL	TXL	3574288C1	3595625C1	1700	2	N/A		
DE53A	14	YL	TXL	3574288C1	3595625C1	1700	2	N/A		
BB52B	14	YL	TXL	3574288C1	3595625C1	1700	3	N/A		
DE52B	14	YL	TXL	3574288C1	3595625C1	1700	3	N/A		
BB52B	14	YL	TXL	3574288C1	3595625C1	1700	3	N/A		
DE52B	14	YL	TXL	3574288C1	3595625C1	1700	3	N/A		
BB53B	14	YL	TXL	3574288C1	3595625C1	1700	4	N/A		
DE53B	14	YL	TXL	3574288C1	3595625C1	1700	4	N/A		
BB53B	14	YL	TXL	3574288C1	3595625C1	1700	4	N/A		
DE53B	14	YL	TXL	3574288C1	3595625C1	1700	4	N/A		
2A58	16	BN	TXL	3574288C1	3595625C1	1700	5	N/A		
3C58	16	BN	TXL	3574288C1	3595625C1	1700	5	N/A		
3.00E+58	16	BN	TXL	3574288C1	3595625C1	1700	5	N/A		
AV58	16	BN	TXL	3574288C1	3595625C1	1700	5	N/A		
AW58	16	BN	TXL	3574288C1	3595625C1	1700	5	N/A		
HY58	16	BN	TXL	3574288C1	3595625C1	1700	5	N/A		
2A58	16	BN	TXL	3574288C1	3595625C1	1700	5	N/A		
2B58	16	BN	TXL	3574288C1	3595625C1	1700	5	N/A		
DR19	14	GY	TXL	3574288C	3595625C1	1700	6	N/A		
DR19	14	GY	TXL	3574288C	3595625C1	1700	6	N/A		
2A58TA	16	BN	TXL	3574288C1	3595625C1	1700	7	N/A		
3C58TA	16	BN	TXL	3574288C1	3595625C1	1700	7	N/A		
3E58TA	16	BN	TXL	3574288C1	3595625C1	1700	7	N/A		
AV58TA	16	BN	TXL	3574288C1	3595625C1	1700	7	N/A		
AW58TA	16	BN	TXL	3574288C1	3595625C1	1700	7	N/A		
HY58TA	16	BN	TXL	3574288C1	3595625C1	1700	7	N/A		
AA58TA	16	BN	TXL	3574288C1	3595625C1	1700	7	N/A		
JA78	16	LTGN	TXL	3574288C	3595625C1	1700	8	N/A		
JA78	16	LTGN	TXL	3574288C	3595625C1	1700	8	N/A		
2F56F	16	OR	TXL	3574285C1	3595625C1	1700	14	N/A		
2G56F	16	OR	TXL	3574285C1	3595625C1	1700	14	N/A	3577413C1	
2Z56F	16	OR	TXL	3574285C1	3595625C1	1700	14	N/A		
NB56F	16	OR	TXL	3574285C1	3595625C1	1700	14	N/A		
NC56F	16	OR	TXL	3574285C1	3595625C1	1700	14	N/A		
NS56F	16	OR	TXL	3574285C1	3595625C1	1700	14	N/A		
AA56F	16	OR	TXL	3574285C1	3595625C1	1700	14	N/A		

Circuit Number	Gauge	Color	Insulation	Terminal / Splice Number	Connector Part number	Connector Number	Cavity	Seal/Sleeve	Lock 1	Lock 2
2B57	16	OR	TXL	3574285C1	3595625C1	1700	15	N/A		
2C57	16	OR	TXL	3574285C1	3595625C1	1700	15	N/A		
2D57	16	OR	TXL	3574285C1	3595625C1	1700	15	N/A		
2.00E+57	16	OR	TXL	3574285C1	3595625C1	1700	15	N/A		
2F57	16	OR	TXL	3574285C1	3595625C1	1700	15	N/A		
2G57	16	OR	TXL	3574285C1	3595625C1	1700	15	N/A		
NA57	16	OR	TXL	3574285C1	3595625C1	1700	15	N/A		
NW57	16	OR	TXL	3574285C1	3595625C1	1700	15	N/A		
NY57	16	OR	TXL	3574285C1	3595625C1	1700	15	N/A		
AA57	16	OR	TXL	3574285C1	3595625C1	1700	15	N/A		
2F56G	16	OR	TXL	3574285C1	3595625C1	1700	16	N/A		
2G56G	16	OR	TXL	3574285C1	3595625C1	1700	16	N/A	3598916C1	3598917C1
2Z56G	16	OR	TXL	3574285C1	3595625C1	1700	16	N/A		
NB56G	16	OR	TXL	3574285C1	3595625C1	1700	16	N/A		
NC56G	16	OR	TXL	3574285C1	3595625C1	1700	16	N/A		
NS56G	16	OR	TXL	3574285C1	3595625C1	1700	16	N/A		
AA56G	16	OR	TXL	3574285C1	3595625C1	1700	16	N/A		
AN87A	18	GY	TXL	2003343C1	3595625C1	1700	17	N/A		
AN87A	18	GY	TXL	2003343C1	3595625C1	1700	17	N/A		
AN9BB	18	GY	TXL	2003343C1	3595625C1	1700	18	N/A		
AN9BB	18	GY	TXL	2003343C1	3595625C1	1700	18	N/A		
AA87C	18	GY	TXL	2003343C1	3595625C1	1700	19	N/A		
AA87C	18	GY	TXL	2003343C1	3595625C1	1700	19	N/A		
AA87D	18	GY	TXL	2003343C1	3595625C1	1700	20	N/A		
AA87D	18	GY	TXL	2003343C1	3595625C1	1700	20	N/A		
AA85	16	GY	TXL	3574285C1	3595625C1	1700	21	N/A		
AA85	16	GY	TXL	3574285C1	3595625C1	1700	21	N/A		
CU64A	16	YL	TXL	3574285C1	3595625C1	1700	22	N/A		
CU64A	16	YL	TXL	3574285C1	3595625C1	1700	22	N/A		
CU64B	16	YL	TXL	3574285C1	3595625C1	1700	23	N/A		
CU64B	16	YL	TXL	3574285C1	3595625C1	1700	23	N/A		
DY54X	16	BN	TXL	3574285C1	3595625C1	1700	24	N/A		
PA54X	16	BN	TXL	3574285C1	3595625C1	1700	24	N/A		
DY54X	16	BN	TXL	3574285C1	3595625C1	1700	24	N/A		
PA54X	16	BN	TXL	3574285C1	3595625C1	1700	24	N/A		
3A94M	18	GY	TXL	2003343C1	3595625C1	1700	27	N/A		
GS94M	18	GY	TXL	2003343C1	3595625C1	1700	27	N/A		
XY94	18	GY	TXL	2003343C1	3595625C1	1700	27	N/A		
3A94M	18	GY	TXL	2003343C1	3595625C1	1700	27	N/A		
GS94M	18	GY	TXL	2003343C1	3595625C1	1700	27	N/A		
XY94	18	GY	TXL	2003343C1	3595625C1	1700	27	N/A		
3A94MA	18	GY	TXL	2003343C1	3595625C1	1700	28	N/A		
GS94MA	18	GY	TXL	2003343C1	3595625C1	1700	28	N/A		
XY94A	18	GY	TXL	2003343C1	3595625C1	1700	28	N/A		
3A94MA	18	GY	TXL	2003343C1	3595625C1	1700	28	N/A		
GS94MA	18	GY	TXL	2003343C1	3595625C1	1700	28	N/A		
XY94A	18	GY	TXL	2003343C1	3595625C1	1700	28	N/A		
3A94MB	18	GY	TXL	2003343C1	3595625C1	1700	29	N/A		
GS94MB	18	GY	TXL	2003343C1	3595625C1	1700	29	N/A		
XY94B	18	GY	TXL	2003343C1	3595625C1	1700	29	N/A		
3A94MB	18	GY	TXL	2003343C1	3595625C1	1700	29	N/A		
GS94MB	18	GY	TXL	2003343C1	3595625C1	1700	29	N/A		

Circuit Number	Gauge	Color	Insulation	Terminal / Splice Number	Connector Part number	Connector Number	Cavity	Seal/Sleeve	Lock 1	Lock 2
XY94B	18	GY	TXL	2003343C1	3595625C1	1700	29	N/A		
3A94MC	18	GY	TXL	2003343C1	3595625C1	1700	30	N/A		
GS94MC	18	GY	TXL	2003343C1	3595625C1	1700	30	N/A		
XY94C	16	GY	TXL	3574285C1	3595625C1	1700	30	N/A		
3A94MC	18	GY	TXL	2003343C1	3595625C1	1700	30	N/A		
GS94MC	18	GY	TXL	2003343C1	3595625C1	1700	30	N/A		
XY94C	16	GY	TXL	3574285C1	3595625C1	1700	30	N/A		
3A94MD	18	GY	TXL	2003343C1	3595625C1	1700	31	N/A		
GS94MD	18	GY	TXL	2003343C1	3595625C1	1700	31	N/A		
XY94D	16	GY	TXL	3574285C1	3595625C1	1700	31	N/A		
3A94MD	18	GY	TXL	2003343C1	3595625C1	1700	31	N/A		
GS94MD	18	GY	TXL	2003343C1	3595625C1	1700	31	N/A		
XY94D	16	GY	TXL	3574285C1	3595625C1	1700	31	N/A		
3A94ME	18	GY	TXL	2003343C1	3595625C1	1700	32	N/A		
GS94ME	18	GY	TXL	2003343C1	3595625C1	1700	32	N/A		
XY94E	16	GY	TXL	3574285C1	3595625C1	1700	32	N/A		
3A94ME	18	GY	TXL	2003343C1	3595625C1	1700	32	N/A		
GS94ME	18	GY	TXL	2003343C1	3595625C1	1700	32	N/A		
XY94E	16	GY	TXL	3574285C1	3595625C1	1700	32	N/A		
3A94MF	18	GY	TXL	2003343C1	3595625C1	1700	33	N/A		
GS94MF	18	GY	TXL	2003343C1	3595625C1	1700	33	N/A		
XY94F	16	GY	TXL	3574285C1	3595625C1	1700	33	N/A		
3A94MF	18	GY	TXL	2003343C1	3595625C1	1700	33	N/A		
GS94MF	18	GY	TXL	2003343C1	3595625C1	1700	33	N/A		
XY94F	16	GY	TXL	3574285C1	3595625C1	1700	33	N/A		
3A94MH	18	GY	TXL	2003343C1	3595625C1	1700	34	N/A		
GS94MH	18	GY	TXL	2003343C1	3595625C1	1700	34	N/A		
XY94H	18	GY	TXL	2003343C1	3595625C1	1700	34	N/A		
3A94MH	18	GY	TXL	2003343C1	3595625C1	1700	34	N/A		
GS94MH	18	GY	TXL	2003343C1	3595625C1	1700	34	N/A		
XY94H	18	GY	TXL	2003343C1	3595625C1	1700	34	N/A		
3A94MJ	18	GY	TXL	2003343C1	3595625C1	1700	35	N/A		
GS94MJ	18	GY	TXL	2003343C1	3595625C1	1700	35	N/A		
XY94J	18	GY	TXL	2003343C1	3595625C1	1700	35	N/A		
3A94MJ	18	GY	TXL	2003343C1	3595625C1	1700	35	N/A		
GS94MJ	18	GY	TXL	2003343C1	3595625C1	1700	35	N/A		
XY94J	18	GY	TXL	2003343C1	3595625C1	1700	35	N/A		
3A94MK	18	GY	TXL	2003343C1	3595625C1	1700	36	N/A		
GS94MK	18	GY	TXL	2003343C1	3595625C1	1700	36	N/A		
XY94K	18	GY	TXL	2003343C1	3595625C1	1700	36	N/A		
3A94MK	18	GY	TXL	2003343C1	3595625C1	1700	36	N/A		
GS94MK	18	GY	TXL	2003343C1	3595625C1	1700	36	N/A		
XY94K	18	GY	TXL	2003343C1	3595625C1	1700	36	N/A		
CS67-G	18	WH	TXL	2003343C1	3595625C1	1700	37	N/A		
YC67-G	18	WH	TXL	2003343C1	3595625C1	1700	37	N/A		
YK67-G	18	WH	TXL	2003343C1	3595625C1	1700	37	N/A		
CS67-G	18	WH	TXL	2003343C1	3595625C1	1700	37	N/A		
YC67-G	18	WH	TXL	2003343C1	3595625C1	1700	37	N/A		
YK67-G	18	WH	TXL	2003343C1	3595625C1	1700	37	N/A		
CS67Y	18	PK	TXL	2003343C1	3595625C1	1700	38	N/A		
YC67A	18	PK	TXL	2003343C1	3595625C1	1700	38	N/A		
YK67Y	18	PK	TXL	2003343C1	3595625C1	1700	38	N/A		

Circuit Number	Gauge	Color	Insulation	Terminal / Splice Number	Connector Part number	Connector Number	Cavity	Seal/Sleeve	Lock 1	Lock 2
CS67Y	18	PK	TXL	2003343C1	3595625C1	1700	38	N/A		
YC67A	18	PK	TXL	2003343C1	3595625C1	1700	38	N/A		
YK67Y	18	PK	TXL	2003343C1	3595625C1	1700	38	N/A		
HV17-G	16	WH	TXL	3574285C1	3595625C1	1700	43	N/A		
HV17-G	16	WH	TXL	3574285C1	3595625C1	1700	43	N/A		
HV104C	16	DKBL	TXL	3574285C1	3595625C1	1700	44	N/A		
HV104C	16	DKBL	TXL	3574285C1	3595625C1	1700	44	N/A		
CS5DA(+)	18	YL	TXL	2003343C1	3595625C1	1700	45	N/A		
YK5DB(+)	18	YL	TXL	2003343C1	3595625C1	1700	45	N/A		
CS5DA(+)	18	YL	TXL	2003343C1	3595625C1	1700	45	N/A		
YK5DB(+)	18	YL	TXL	2003343C1	3595625C1	1700	45	N/A		
CS5DA(-)	18	GN	TXL	2003343C1	3595625C1	1700	46	N/A		
YK5DB(-)	18	GN	TXL	2003343C1	3595625C1	1700	46	N/A		
CS5DA(-)	18	GN	TXL	2003343C1	3595625C1	1700	46	N/A		
YK5DB(-)	18	GN	TXL	2003343C1	3595625C1	1700	46	N/A		
RW22AA	16	PK	TXL	3574285C1	3595625C1	1700	47	N/A		
RW22AA	16	PK	TXL	3574285C1	3595625C1	1700	47	N/A		
RW22-GAN	18	WH	TXL	2003343C1	3595625C1	1700	48	N/A		
RW22-GAN	18	WH	TXL	2003343C1	3595625C1	1700	48	N/A		
FR72E	18	OR	TXL	3574289C1	3595625C1	1700	51	N/A		
FR72E	18	OR	TXL	3574289C1	3595625C1	1700	51	N/A		
FR72EB	18	OR	TXL	2003343C1	3595625C1	1700	52	N/A		
FR72EB	20	OR	TXL	2003343C1	3595625C1	1700	52	N/A		
3L5BA(+)	18	YL	TXL	2003343C1	3595625C1	1700	61	N/A	3551897C1	3540454C1
AR5BA(+)	18	YL	TXL	2003343C1	3595625C1	1700	61	N/A		
AS5BA(+)	18	YL	TXL	2003343C1	3595625C1	1700	61	N/A		
FH5BM(+)	18	YL	TXL	2003343C1	3595625C1	1700	61	N/A		
LU5A(-)	18	GN	TXL	2003343C1	3595625C1	1700	61	N/A		
3L5BA(+)	18	YL	TXL	2003343C1	3595625C1	1700	61	N/A		
AR5BA(+)	18	YL	TXL	2003343C1	3595625C1	1700	61	N/A		
AS5BA(+)	18	YL	TXL	2003343C1	3595625C1	1700	61	N/A		
BR5BA(+)	18	YL	TXL	2003343C1	3595625C1	1700	61	N/A		
BV5BM(+)	18	YL	TXL	2003343C1	3595625C1	1700	61	N/A		
FH5BM(+)	18	YL	TXL	2003343C1	3595625C1	1700	61	N/A		
PS5BA(+)	18	YL	TXL	2003343C1	3595625C1	1700	61	N/A		
3L5BA(-)	18	GN	TXL	2003343C1	3595625C1	1700	62	N/A		
AR5BA(-)	18	GN	TXL	2003343C1	3595625C1	1700	62	N/A		
AS5BA(-)	18	GN	TXL	2003343C1	3595625C1	1700	62	N/A		
FH5BM(-)	18	GN	TXL	2003343C1	3595625C1	1700	62	N/A		
3L5BA(-)	18	GN	TXL	2003343C1	3595625C1	1700	62	N/A		
AR5BA(-)	18	GN	TXL	2003343C1	3595625C1	1700	62	N/A		
AS5BA(-)	18	GN	TXL	2003343C1	3595625C1	1700	62	N/A		
BR5BA(-)	18	GN	TXL	2003343C1	3595625C1	1700	62	N/A		
BV5BM(-)	18	GN	TXL	2003343C1	3595625C1	1700	62	N/A		
FH5BM(-)	18	GN	TXL	2003343C1	3595625C1	1700	62	N/A		
PS5BA(-)	18	GN	TXL	2003343C1	3595625C1	1700	62	N/A		
3D5A(+)	18	YL	TXL	3574289C1	3595625C1	1700	65	N/A		
3M5A(+)	18	YL	TXL	3574289C1	3595625C1	1700	65	N/A		
9K5A(+)	18	YL	TXL	3574289C1	3595625C1	1700	65	N/A		
9L5A(+)	18	YL	TXL	3574289C1	3595625C1	1700	65	N/A		
9P5A(+)	18	YL	TXL	3574289C1	3595625C1	1700	65	N/A		
9V5A(+)	18	YL	TXL	3574289C1	3595625C1	1700	65	N/A		

Circuit Number	Gauge	Color	Insulation	Terminal / Splice Number	Connector Part number	Connector Number	Cavity	Seal/Sleeve	Lock 1	Lock 2
JB5A(+)	18	YL	TXL	3574289C1	3595625C1	1700	65	N/A		
LC5A(+)	18	YL	TXL	3574289C1	3595625C1	1700	65	N/A		
LD5A(+)	18	YL	TXL	3574289C1	3595625C1	1700	65	N/A		
LE5A(+)	18	YL	TXL	3574289C1	3595625C1	1700	65	N/A		
LF5A(+)	18	YL	TXL	3574289C1	3595625C1	1700	65	N/A		
LS5A(+)	18	YL	TXL	3574289C1	3595625C1	1700	65	N/A		
LT5A(+)	18	YL	TXL	3574289C1	3595625C1	1700	65	N/A		
LU5A(+)	18	YL	TXL	3574289C1	3595625C1	1700	65	N/A		
LW5A(+)	18	YL	TXL	3574289C1	3595625C1	1700	65	N/A		
NT5A(+)	18	YL	TXL	3574289C1	3595625C1	1700	65	N/A		
PY5A(+)	18	YL	TXL	3574289C1	3595625C1	1700	65	N/A		
PZ5A(+)	18	YL	TXL	3574289C1	3595625C1	1700	65	N/A		
RD5A(+)	18	YL	TXL	3574289C1	3595625C1	1700	65	N/A		
RG5A(+)	18	YL	TXL	3574289C1	3595625C1	1700	65	N/A		
RJ5A(+)	18	YL	TXL	3574289C1	3595625C1	1700	65	N/A		
RM5A(+)	18	YL	TXL	3574289C1	3595625C1	1700	65	N/A		
RS5A(+)	18	YL	TXL	3574289C1	3595625C1	1700	65	N/A		
RU5A(+)	18	YL	TXL	3574289C1	3595625C1	1700	65	N/A		
SA5A(+)	18	YL	TXL	3574289C1	3595625C1	1700	65	N/A		
SK5A(+)	18	YL	TXL	3574289C1	3595625C1	1700	65	N/A		
SN5A(+)	18	YL	TXL	3574289C1	3595625C1	1700	65	N/A		
SP5A(+)	18	YL	TXL	3574289C1	3595625C1	1700	65	N/A		
VC5A(+)	18	YL	TXL	3574289C1	3595625C1	1700	65	N/A		
VE5A(+)	18	YL	TXL	3574289C1	3595625C1	1700	65	N/A		
ZH5A(+)	18	YL	TXL	3574289C1	3595625C1	1700	65	N/A		
2H5A(+)	18	YL	TXL	3574289C1	3595625C1	1700	65	N/A		
2J5A(+)	18	YL	TXL	3574289C1	3595625C1	1700	65	N/A		
2L5A(+)	18	YL	TXL	3574289C1	3595625C1	1700	65	N/A		
2M5A(+)	18	YL	TXL	3574289C1	3595625C1	1700	65	N/A		
2W5A(+)	18	YL	TXL	3574289C1	3595625C1	1700	65	N/A		
2Y5A(+)	18	YL	TXL	3574289C1	3595625C1	1700	65	N/A		
2Z5A(+)	18	YL	TXL	3574289C1	3595625C1	1700	65	N/A		
3C5A(+)	18	YL	TXL	3574289C1	3595625C1	1700	65	N/A		
3D5A(+)	18	YL	TXL	3574289C1	3595625C1	1700	65	N/A		
3M5A(+)	18	YL	TXL	3574289C1	3595625C1	1700	65	N/A		
9K5A(+)	18	YL	TXL	3574289C1	3595625C1	1700	65	N/A		
9L5A(+)	18	YL	TXL	3574289C1	3595625C1	1700	65	N/A		
9P5A(+)	18	YL	TXL	3574289C1	3595625C1	1700	65	N/A		
9V5A(+)	18	YL	TXL	3574289C1	3595625C1	1700	65	N/A		
JB5A(+)	18	YL	TXL	3574289C1	3595625C1	1700	65	N/A		
LC5A(+)	18	YL	TXL	3574289C1	3595625C1	1700	65	N/A		
LD5A(+)	18	YL	TXL	3574289C1	3595625C1	1700	65	N/A		
LE5A(+)	18	YL	TXL	3574289C1	3595625C1	1700	65	N/A		
LF5A(+)	18	YL	TXL	3574289C1	3595625C1	1700	65	N/A		
LS5A(+)	18	YL	TXL	3574289C1	3595625C1	1700	65	N/A		
LT5A(+)	18	YL	TXL	3574289C1	3595625C1	1700	65	N/A		
LU5A(+)	18	YL	TXL	3574289C1	3595625C1	1700	65	N/A		
LW5A(+)	18	YL	TXL	3574289C1	3595625C1	1700	65	N/A		
PY5A(+)	18	YL	TXL	3574289C1	3595625C1	1700	65	N/A		
PZ5A(+)	18	YL	TXL	3574289C1	3595625C1	1700	65	N/A		
RD5A(+)	18	YL	TXL	3574289C1	3595625C1	1700	65	N/A		
RG5A(+)	18	YL	TXL	3574289C1	3595625C1	1700	65	N/A		

Circuit Number	Gauge	Color	Insulation	Terminal / Splice Number	Connector Part number	Connector Number	Cavity	Seal/Sleeve	Lock 1	Lock 2
RJ5A(+)	18	YL	TXL	3574289C1	3595625C1	1700	65	N/A		
RM5A(+)	18	YL	TXL	3574289C1	3595625C1	1700	65	N/A		
RS5A(+)	18	YL	TXL	3574289C1	3595625C1	1700	65	N/A		
RU5A(+)	18	YL	TXL	3574289C1	3595625C1	1700	65	N/A		
SA5A(+)	18	YL	TXL	3574289C1	3595625C1	1700	65	N/A		
SK5A(+)	18	YL	TXL	3574289C1	3595625C1	1700	65	N/A		
SN5A(+)	18	YL	TXL	3574289C1	3595625C1	1700	65	N/A		
SP5A(+)	18	YL	TXL	3574289C1	3595625C1	1700	65	N/A		
VC5A(+)	18	YL	TXL	3574289C1	3595625C1	1700	65	N/A		
VE5A(+)	18	YL	TXL	3574289C1	3595625C1	1700	65	N/A		
ZH5A(+)	18	YL	TXL	3574289C1	3595625C1	1700	65	N/A		
ZN5A(+)	18	YL	TXL	3574289C1	3595625C1	1700	65	N/A		
3D5A(-)	18	GN	TXL	3574289C1	3595625C1	1700	66	N/A		
3M5A(-)	18	GN	TXL	3574289C1	3595625C1	1700	66	N/A		
9K5A(-)	18	GN	TXL	3574289C1	3595625C1	1700	66	N/A		
9L5A(-)	18	GN	TXL	3574289C1	3595625C1	1700	66	N/A		
9P5A(-)	18	GN	TXL	3574289C1	3595625C1	1700	66	N/A		
9V5A(-)	18	GN	TXL	3574289C1	3595625C1	1700	66	N/A		
JB5A(-)	18	GN	TXL	3574289C1	3595625C1	1700	66	N/A		
LC5A(-)	18	GN	TXL	3574289C1	3595625C1	1700	66	N/A		
LD5A(-)	18	GN	TXL	3574289C1	3595625C1	1700	66	N/A		
LE5A(-)	18	GN	TXL	3574289C1	3595625C1	1700	66	N/A		
LF5A(-)	18	GN	TXL	3574289C1	3595625C1	1700	66	N/A		
LS5A(-)	18	GN	TXL	3574289C1	3595625C1	1700	66	N/A		
LT5A(-)	18	GN	TXL	3574289C1	3595625C1	1700	66	N/A		
LW5A(-)	18	GN	TXL	3574289C1	3595625C1	1700	66	N/A		
NT5A(-)	18	GN	TXL	3574289C1	3595625C1	1700	66	N/A		
PY5A(-)	18	GN	TXL	3574289C1	3595625C1	1700	66	N/A		
PZ5A(-)	18	GN	TXL	3574289C1	3595625C1	1700	66	N/A		
RD5A(-)	18	GN	TXL	3574289C1	3595625C1	1700	66	N/A		
RG5A(-)	18	GN	TXL	3574289C1	3595625C1	1700	66	N/A		
RJ5A(-)	18	GN	TXL	3574289C1	3595625C1	1700	66	N/A		
RM5A(-)	18	GN	TXL	3574289C1	3595625C1	1700	66	N/A		
RS5A(-)	18	GN	TXL	3574289C1	3595625C1	1700	66	N/A		
RU5A(-)	18	GN	TXL	3574289C1	3595625C1	1700	66	N/A		
SA5A(-)	18	GN	TXL	3574289C1	3595625C1	1700	66	N/A		
SK5A(-)	18	GN	TXL	3574289C1	3595625C1	1700	66	N/A		
SN5A(-)	18	GN	TXL	3574289C1	3595625C1	1700	66	N/A		
SP5A(-)	18	GN	TXL	3574289C1	3595625C1	1700	66	N/A		
VC5A(-)	18	GN	TXL	3574289C1	3595625C1	1700	66	N/A		
VE5A(-)	18	GN	TXL	3574289C1	3595625C1	1700	66	N/A		
ZH5A(-)	18	GN	TXL	3574289C1	3595625C1	1700	66	N/A		
2H5A(-)	18	GN	TXL	3574289C1	3595625C1	1700	66	N/A		
2J5A(-)	18	GN	TXL	3574289C1	3595625C1	1700	66	N/A		
2L5A(-)	18	GN	TXL	3574289C1	3595625C1	1700	66	N/A		
2M5A(-)	18	GN	TXL	3574289C1	3595625C1	1700	66	N/A		
2W5A(-)	18	GN	TXL	3574289C1	3595625C1	1700	66	N/A		
2Y5A(-)	18	GN	TXL	3574289C1	3595625C1	1700	66	N/A		
2Z5A(-)	18	GN	TXL	3574289C1	3595625C1	1700	66	N/A		
3C5A(-)	18	GN	TXL	3574289C1	3595625C1	1700	66	N/A		
3D5A(-)	18	GN	TXL	3574289C1	3595625C1	1700	66	N/A		
3M5A(-)	18	GN	TXL	3574289C1	3595625C1	1700	66	N/A		

Circuit Number	Gauge	Color	Insulation	Terminal / Splice Number	Connector Part number	Connector Number	Cavity	Seal/Sleeve	Lock 1	Lock 2
9K5A(-)	18	GN	TXL	3574289C1	3595625C1	1700	66	N/A		
9L5A(-)	18	GN	TXL	3574289C1	3595625C1	1700	66	N/A		
9P5A(-)	18	GN	TXL	3574289C1	3595625C1	1700	66	N/A		
9V5A(-)	18	GN	TXL	3574289C1	3595625C1	1700	66	N/A		
JB5A(-)	18	GN	TXL	3574289C1	3595625C1	1700	66	N/A		
LC5A(-)	18	GN	TXL	3574289C1	3595625C1	1700	66	N/A		
LD5A(-)	18	GN	TXL	3574289C1	3595625C1	1700	66	N/A		
LE5A(-)	18	GN	TXL	3574289C1	3595625C1	1700	66	N/A		
LF5A(-)	18	GN	TXL	3574289C1	3595625C1	1700	66	N/A		
LS5A(-)	18	GN	TXL	3574289C1	3595625C1	1700	66	N/A		
LT5A(-)	18	GN	TXL	3574289C1	3595625C1	1700	66	N/A		
LU5A(-)	18	GN	TXL	3574289C1	3595625C1	1700	66	N/A		
LW5A(-)	18	GN	TXL	3574289C1	3595625C1	1700	66	N/A		
PY5A(-)	18	GN	TXL	3574289C1	3595625C1	1700	66	N/A		
PZ5A(-)	18	GN	TXL	3574289C1	3595625C1	1700	66	N/A		
RD5A(-)	18	GN	TXL	3574289C1	3595625C1	1700	66	N/A		
RG5A(-)	18	GN	TXL	3574289C1	3595625C1	1700	66	N/A		
RJ5A(-)	18	GN	TXL	3574289C1	3595625C1	1700	66	N/A		
RM5A(-)	18	GN	TXL	3574289C1	3595625C1	1700	66	N/A		
RS5A(-)	18	GN	TXL	3574289C1	3595625C1	1700	66	N/A		
RU5A(-)	18	GN	TXL	3574289C1	3595625C1	1700	66	N/A		
SA5A(-)	18	GN	TXL	3574289C1	3595625C1	1700	66	N/A		
SK5A(-)	18	GN	TXL	3574289C1	3595625C1	1700	66	N/A		
SN5A(-)	18	GN	TXL	3574289C1	3595625C1	1700	66	N/A		
SP5A(-)	18	GN	TXL	3574289C1	3595625C1	1700	66	N/A		
VC5A(-)	18	GN	TXL	3574289C1	3595625C1	1700	66	N/A		
VE5A(-)	18	GN	TXL	3574289C1	3595625C1	1700	66	N/A		
ZH5A(-)	18	GN	TXL	3574289C1	3595625C1	1700	66	N/A		
ZN5A(-)	18	GN	TXL	3574289C1	3595625C1	1700	66	N/A		
BG12BB	16	LTBL	TXL	3574288C	3595625C1	1700	68	N/A		
BL12BB	16	LTBL	TXL	3574288C	3595625C1	1700	68	N/A		
BG56BBB	16	YL	TXL	3574288C1	3595625C1	1700	69	N/A		
BL56BB	16	YL	TXL	3574288C1	3595625C1	1700	69	N/A		
BG56BC	16	YL	TXL	3574288C1	3595625C1	1700	70	N/A		
BL56BC	16	YL	TXL	3574288C1	3595625C1	1700	70	N/A		
BG57BBB	16	LTGN	TXL	3574288C1	3595625C1	1700	71	N/A		
BL57BB	16	LTGN	TXL	3574288C1	3595625C1	1700	71	N/A		
BG57BC	16	LTGN	TXL	3574288C1	3595625C1	1700	72	N/A		
BL57BC	16	LTGN	TXL	3574288C1	3595625C1	1700	72	N/A		
BG54BBB	14	BN	TXL	3574288C1	3595625C1	1700	73	N/A		
BL54BB	14	BN	TXL	3574288C1	3595625C1	1700	73	N/A		
BG68BBB	14	BN	TXL	3574288C1	3595625C1	1700	74	N/A		
BL68BB	14	BN	TXL	3574288C1	3595625C1	1700	74	N/A		
BG70BBA	12	RD	TXL	3574287C	3595625C1	1700	75	N/A		
BL70BB	12	RD	TXL	3574287C	3595625C1	1700	75	N/A		
BG71BB	16	LTBL	TXL	3574288C1	3595625C1	1700	76	N/A		
BL71BB	16	LTBL	TXL	3574288C1	3595625C1	1700	76	N/A		
3T71BA	16	OR	TXL	3574288C	3595623C1	1701	1	N/A		
BJ71BA	16	OR	TXL	3574288C	3595623C1	1701	1	N/A		
BK71B	16	OR	TXL	3574288C1	3595623C1	1701	1	N/A		
BL71B	16	OR	TXL	3574288C1	3595623C1	1701	1	N/A		
BP71B	16	OR	TXL	3574288C1	3595623C1	1701	1	N/A		

Circuit Number	Gauge	Color	Insulation	Terminal / Splice Number	Connector Part number	Connector Number	Cavity	Seal/Sleeve	Lock 1	Lock 2
EY71BA	16	OR	TXL	3574288C1	3595623C1	1701	1	N/A		
GM71BA	16	OR	TXL	3574288C1	3595623C1	1701	1	N/A		
3T71BC	16	OR	TXL	3574288C1	3595623C1	1701	1	N/A		
BJ71BC	16	OR	TXL	3574288C1	3595623C1	1701	1	N/A		
BK71BA	16	OR	TXL	3574288C1	3595623C1	1701	1	N/A		
BP71BA	16	OR	TXL	3574288C1	3595623C1	1701	1	N/A		
EY71BE	16	OR	TXL	3574288C1	3595623C1	1701	1	N/A		
GM71BE	16	OR	TXL	3574288C1	3595623C1	1701	1	N/A		
2Z56A	16	OR	TXL	3574288C1	3595623C1	1701	2	N/A		
EA56A	16	OR	TXL	3574288C1	3595623C1	1701	2	N/A		
NB56A	14	OR	TXL	3574288C1	3595623C1	1701	2	N/A		
NC56A	14	OR	TXL	3574288C1	3595623C1	1701	2	N/A		
NS56A	14	OR	TXL	3574288C1	3595623C1	1701	2	N/A		
AA56AB	16	OR	TXL	3574288C1	3595623C1	1701	2	N/A		
2Z57AA	16	OR	TXL	3574288C1	3595623C1	1701	3	N/A		
EA57AA	16	OR	TXL	3574288C1	3595623C1	1701	3	N/A		
NB57AA	14	OR	TXL	3574288C1	3595623C1	1701	3	N/A		
NC57AA	14	OR	TXL	3574288C1	3595623C1	1701	3	N/A		
NS57AA	14	OR	TXL	3574288C1	3595623C1	1701	3	N/A		
AA57CA	16	OR	TXL	3574288C1	3595623C1	1701	3	N/A		
2A68A	18	BN	TXL	3574289C1	3595623C1	1701	4	N/A		
3C68A	18	BN	TXL	3574289C1	3595623C1	1701	4	N/A		
3E68A	18	BN	TXL	3574289C1	3595623C1	1701	4	N/A		
AV68A	18	BN	TXL	3574289C1	3595623C1	1701	4	N/A		
AW68A	18	BN	TXL	3574289C1	3595623C1	1701	4	N/A		
HY68A	18	BN	TXL	3574289C1	3595623C1	1701	4	N/A		
AA68A	18	BN	TXL	3574289C1	3595623C1	1701	4	N/A		
BF57BB	16	OR	TXL	3574288C1	3595623C1	1701	5	N/A		
BM56T	12	OR	TXL	3574287C1	3595623C1	1701	5	N/A		
BG56BBA	16	OR	TXL	3574288C1	3595623C1	1701	5	N/A		
BM56T	12	OR	TXL	3574287C1	3595623C1	1701	5	N/A		
BF56BB	16	OR	TXL	3574288C1	3595623C1	1701	6	N/A		
BM57T	12	OR	TXL	3574287C1	3595623C1	1701	6	N/A		
BG57BBA	16	OR	TXL	3574288C1	3595623C1	1701	6	N/A		
BM57T	12	OR	TXL	3574287C1	3595623C1	1701	6	N/A		
BF68BB	14	BN	TXL	3574288C1	3595623C1	1701	7	N/A		
BM58T	12	BN	TXL	3574287C1	3595623C1	1701	7	N/A		
BG54BBA	14	BN	TXL	3574288C1	3595623C1	1701	7	N/A		
BM58TC	12	BN	TXL	3574287C1	3595623C1	1701	7	N/A		
BF54BB	14	BN	TXL	3574288C1	3595623C1	1701	8	N/A		
BM68T	12	BN	TXL	3574287C1	3595623C1	1701	8	N/A		
BG68BBA	14	BN	TXL	3574288C1	3595623C1	1701	8	N/A		
BM68T	12	BN	TXL	3574287C1	3595623C1	1701	8	N/A		
BF70BB	14	OR	TXL	3574288C1	3595623C1	1701	9	N/A		
BM70T	12	OR	TXL	3574287C	3595623C1	1701	9	N/A		
BG70BB	12	OR	TXL	3574287C	3595623C1	1701	9	N/A		
BM70T	12	OR	TXL	3574287C	3595623C1	1701	9	N/A		
BN94T	12	GY	TXL	3574287C1	3595623C1	1701	10	N/A		
ER94T	12	GY	TXL	3574287C1	3595623C1	1701	10	N/A		
FB94U	12	GY	TXL	3574287C1	3595623C1	1701	10	N/A		
FR94T	12	GY	TXL	3574287C1	3595623C1	1701	10	N/A		
HF94T	12	GY	TXL	3574287C1	3595623C1	1701	10	N/A		

Circuit Number	Gauge	Color	Insulation	Terminal / Splice Number	Connector Part number	Connector Number	Cavity	Seal/Sleeve	Lock 1	Lock 2
HG94T	12	GY	TXL	3574287C1	3595623C1	1701	10	N/A		
BN94T	12	GY	TXL	3574287C1	3595623C1	1701	10	N/A		
ER94T	12	GY	TXL	3574287C1	3595623C1	1701	10	N/A		
FB94U	12	GY	TXL	3574287C1	3595623C1	1701	10	N/A		
FR94T	12	GY	TXL	3574287C1	3595623C1	1701	10	N/A		
HF94T	12	GY	TXL	3574287C1	3595623C1	1701	10	N/A		
HG94T	12	GY	TXL	3574287C1	3595623C1	1701	10	N/A		
CC72A	12	OR	TXL	3574287C	3595623C1	1701	11	N/A		
CC72A	12	OR	TXL	3574287C	3595623C1	1701	11	N/A		
YD67TA	18	PK	TXL	3574289C1	3595623C1	1701	12	N/A		
YD67TA	18	PK	TXL	3574289C1	3595623C1	1701	12	N/A		
XG94SJ	18	GY	TXL	3574289C1	3595623C1	1701	13	N/A		
XZ94SJ	18	GY	TXL	3574289C1	3595623C1	1701	13	N/A		
XG94SJ	18	GY	TXL	3574289C1	3595623C1	1701	13	N/A		
XZ94SJ	18	GY	TXL	3574289C1	3595623C1	1701	13	N/A		
GT94BM	18	GY	TXL	2003343C1	3595623C1	1701	14	N/A		
XX94BM	18	GY	TXL	2003343C1	3595623C1	1701	14	N/A		
GT94BM	18	GY	TXL	2003343C1	3595623C1	1701	14	N/A		
XX94BM	18	GY	TXL	2003343C1	3595623C1	1701	14	N/A		
GT94BN	18	GY	TXL	2003343C1	3595623C1	1701	15	N/A		
XX94BN	18	GY	TXL	2003343C1	3595623C1	1701	15	N/A		
GT94BN	18	GY	TXL	2003343C1	3595623C1	1701	15	N/A		
XX94BN	18	GY	TXL	2003343C1	3595623C1	1701	15	N/A		
3A94BE	18	GY	TXL	2003343C1	3595623C1	1701	16	N/A		
GS94BE	18	GY	TXL	2003343C1	3595623C1	1701	16	N/A		
XY94BE	16	GY	TXL	3574285C1	3595623C1	1701	16	N/A		
3A94BE	18	GY	TXL	2003343C1	3595623C1	1701	16	N/A		
GS94BE	18	GY	TXL	2003343C1	3595623C1	1701	16	N/A		
XY94BE	16	GY	TXL	3574285C1	3595623C1	1701	16	N/A		
3A94BD	18	GY	TXL	2003343C1	3595623C1	1701	17	N/A		
GS94BD	18	GY	TXL	2003343C1	3595623C1	1701	17	N/A		
XY94BD	16	GY	TXL	3574285C1	3595623C1	1701	17	N/A		
3A94BD	18	GY	TXL	2003343C1	3595623C1	1701	17	N/A		
GS94BD	18	GY	TXL	2003343C1	3595623C1	1701	17	N/A		
XY94BD	16	GY	TXL	3574285C1	3595623C1	1701	17	N/A		
3A94BH	18	GY	TXL	2003343C1	3595623C1	1701	18	N/A		
GS94BH	18	GY	TXL	2003343C1	3595623C1	1701	18	N/A		
XY94BH	16	GY	TXL	3574285C1	3595623C1	1701	18	N/A		
3A94BH	18	GY	TXL	2003343C1	3595623C1	1701	18	N/A		
GS94BH	18	GY	TXL	2003343C1	3595623C1	1701	18	N/A		
XY94BH	16	GY	TXL	3574285C1	3595623C1	1701	18	N/A		
3A94BF	18	GY	TXL	2003343C1	3595623C1	1701	19	N/A		
GS94BF	18	GY	TXL	2003343C1	3595623C1	1701	19	N/A		
XY94BF	16	GY	TXL	3574285C1	3595623C1	1701	19	N/A		
3A94BF	18	GY	TXL	2003343C1	3595623C1	1701	19	N/A		
GS94BF	18	GY	TXL	2003343C1	3595623C1	1701	19	N/A		
XY94BF	16	GY	TXL	3574285C1	3595623C1	1701	19	N/A		
3A94BL	14	GY	TXL	3574285C1	3595623C1	1701	20	N/A		
GS94BL	14	GY	TXL	3574285C1	3595623C1	1701	20	N/A		
XY94BL	18	GY	TXL	2003343C1	3595623C1	1701	20	N/A		
3A94BL	14	GY	TXL	3574285C1	3595623C1	1701	20	N/A		
GS94BL	14	GY	TXL	3574285C1	3595623C1	1701	20	N/A		

Circuit Number	Gauge	Color	Insulation	Terminal / Splice Number	Connector Part number	Connector Number	Cavity	Seal/Sleeve	Lock 1	Lock 2
XY94BL	18	GY	TXL	2003343C1	3595623C1	1701	20	N/A		
3A94BJ	14	GY	TXL	3574285C1	3595623C1	1701	21	N/A		
GS94BJ	14	GY	TXL	3574285C1	3595623C1	1701	21	N/A		
XY94BJ	18	GY	TXL	2003343C1	3595623C1	1701	21	N/A		
3A94BJ	14	GY	TXL	3574285C1	3595623C1	1701	21	N/A		
GS94BJ	14	GY	TXL	3574285C1	3595623C1	1701	21	N/A		
XY94BJ	18	GY	TXL	2003343C1	3595623C1	1701	21	N/A		
3A94BK	18	GY	TXL	2003343C1	3595623C1	1701	22	N/A		
GS94BK	18	GY	TXL	2003343C1	3595623C1	1701	22	N/A		
XY94BK	18	GY	TXL	2003343C1	3595623C1	1701	22	N/A		
3A94BK	18	GY	TXL	2003343C1	3595623C1	1701	22	N/A		
GS94BK	18	GY	TXL	2003343C1	3595623C1	1701	22	N/A		
XY94BK	18	GY	TXL	2003343C1	3595623C1	1701	22	N/A		
3A94BA	18	GY	TXL	2003343C1	3595623C1	1701	23	N/A		
GS94BA	18	GY	TXL	2003343C1	3595623C1	1701	23	N/A		
XY94BA	18	GY	TXL	2003343C1	3595623C1	1701	23	N/A		
3A94BA	18	GY	TXL	2003343C1	3595623C1	1701	23	N/A		
GS94BA	18	GY	TXL	2003343C1	3595623C1	1701	23	N/A		
XY94BA	18	GY	TXL	2003343C1	3595623C1	1701	23	N/A		
3A94BB	18	GY	TXL	2003343C1	3595623C1	1701	24	N/A		
GS94BB	18	GY	TXL	2003343C1	3595623C1	1701	24	N/A		
XY94BB	18	GY	TXL	2003343C1	3595623C1	1701	24	N/A		
3A94BB	18	GY	TXL	2003343C1	3595623C1	1701	24	N/A		
GS94BB	18	GY	TXL	2003343C1	3595623C1	1701	24	N/A		
XY94BB	18	GY	TXL	2003343C1	3595623C1	1701	24	N/A		
3A94BC	18	GY	TXL	2003343C1	3595623C1	1701	25	N/A		
GS94BC	18	GY	TXL	2003343C1	3595623C1	1701	25	N/A		
XY94BC	18	GY	TXL	2003343C1	3595623C1	1701	25	N/A		
3A94BC	18	GY	TXL	2003343C1	3595623C1	1701	25	N/A		
GS94BC	18	GY	TXL	2003343C1	3595623C1	1701	25	N/A		
XY94BC	18	GY	TXL	2003343C1	3595623C1	1701	25	N/A		
9S74Y	16	YL	GXL	3574288C1	3595623C1	1701	26	N/A		
JL116L	18	GY	TXL	3574289C1	3595623C1	1701	26	N/A		
4A74Y	16	LTGN	GXL	3574288C1	3595623C1	1701	26	N/A		
JL116L	20	GY	TXL	3574289C1	3595623C1	1701	26	N/A		
AA36B	18	TN	TXL	2003343C1	3595623C1	1701	27	N/A		
AA36B	18	TN	TXL	2003343C1	3595623C1	1701	27	N/A		
AA9BC	18	GY	TXL	2003343C1	3595623C1	1701	28	N/A		
AA9BC	18	GY	TXL	2003343C1	3595623C1	1701	28	N/A		
JL116M	18	GY	TXL	2003343C1	3595623C1	1701	29	N/A		
TN112	16	GY	TXL	3574285C1	3595623C1	1701	29	N/A		
JL116M	18	GY	TXL	2003343C1	3595623C1	1701	29	N/A		
JL116U	18	GY	TXL	2003343C1	3595623C1	1701	30	N/A		
RT39A	16	GY	TXL	3574285C1	3595623C1	1701	30	N/A		
JL116U	20	GY	TXL	2003343C1	3595623C1	1701	30	N/A		
RT39A	16	GY	TXL	3574285C1	3595623C1	1701	30	N/A		
BZ39	16	GY	TXL	3574285C1	3595623C1	1701	31	N/A		
RT39	16	GY	TXL	3574285C1	3595623C1	1701	31	N/A		
BZ39	16	GY	TXL	3574285C1	3595623C1	1701	31	N/A		
RT39	16	GY	TXL	3574285C1	3595623C1	1701	31	N/A		
AA59A	18	GY	TXL	2003343C1	3595623C1	1701	32	N/A		
AA59A	18	GY	TXL	2003343C1	3595623C1	1701	32	N/A		

Circuit Number	Gauge	Color	Insulation	Terminal / Splice Number	Connector Part number	Connector Number	Cavity	Seal/Sleeve	Lock 1	Lock 2
AA59B	18	GY	TXL	2003343C1	3595623C1	1701	33	N/A		
AA59B	18	GY	TXL	2003343C1	3595623C1	1701	33	N/A		
AA59C	18	GY	TXL	2003343C1	3595623C1	1701	34	N/A		
AA59C	18	GY	TXL	2003343C1	3595623C1	1701	34	N/A		
RL59D	18	GY	TXL	2003343C1	3595623C1	1701	35	N/A		
SF59DB	18	GY	TXL	2003343C1	3595623C1	1701	35	N/A		
RL59D	18	GY	TXL	2003343C1	3595623C1	1701	35	N/A		
SF59DB	18	GY	TXL	2003343C1	3595623C1	1701	35	N/A		
RK59EB	18	GY	TXL	2003343C1	3595623C1	1701	36	N/A		
RL59E	18	GY	TXL	2003343C1	3595623C1	1701	36	N/A		
RK59EB	18	GY	TXL	2003343C1	3595623C1	1701	36	N/A		
RL59E	18	GY	TXL	2003343C1	3595623C1	1701	36	N/A		
AA59F	18	GY	TXL	2003343C1	3595623C1	1701	37	N/A		
AA59F	18	GY	TXL	2003343C1	3595623C1	1701	37	N/A		
AA59H	18	GY	TXL	2003343C1	3595623C1	1701	38	N/A		
AA59H	18	GY	TXL	2003343C1	3595623C1	1701	38	N/A		
AA59J	18	GY	TXL	2003343C1	3595623C1	1701	39	N/A		
AA59J	18	GY	TXL	2003343C1	3595623C1	1701	39	N/A		
FF61B	18	GY	TXL	2003343C1	3595623C1	1701	40	N/A		
FF61B	18	GY	TXL	2003343C1	3595623C1	1701	40	N/A		
FF106	18	GY	TXL	2003343C1	3595623C1	1701	41	N/A		
FF106	18	GY	TXL	2003343C1	3595623C1	1701	41	N/A		
FF109	18	GY	TXL	2003343C1	3595623C1	1701	42	N/A		
FF109	18	GY	TXL	2003343C1	3595623C1	1701	42	N/A		
DN32A	18	TN	TXL	2003343C1	3595623C1	1701	43	N/A		
DP32A	18	OR	TXL	2003343C1	3595623C1	1701	43	N/A		
DN32A	18	TN	TXL	2003343C1	3595623C1	1701	43	N/A		
DP32A	18	OR	TXL	2003343C1	3595623C1	1701	43	N/A		
DP32	18	OR	TXL	2003343C1	3595623C1	1701	44	N/A		
DP32	18	OR	TXL	2003343C1	3595623C1	1701	44	N/A		
CY49	18	GY	TXL	2003343C1	3595623C1	1701	45	N/A		
CZ49	18	GY	TXL	2003343C1	3595623C1	1701	45	N/A		
CY49	18	GY	TXL	2003343C1	3595623C1	1701	45	N/A		
CZ49	18	GY	TXL	2003343C1	3595623C1	1701	45	N/A		
XD94SNA	18	GY	TXL	2003343C1	3595623C1	1701	46	N/A		
XZ94SAB	18	GY	TXL	2003343C1	3595623C1	1701	46	N/A		
XD94SNA	18	GY	TXL	2003343C1	3595623C1	1701	46	N/A		
XZ94SAB	18	GY	TXL	2003343C1	3595623C1	1701	46	N/A		
XD94SPA	18	GY	TXL	2003343C1	3595623C1	1701	47	N/A		
XZ94SBB	18	GY	TXL	2003343C1	3595623C1	1701	47	N/A		
XD94SPA	18	GY	TXL	2003343C1	3595623C1	1701	47	N/A		
XZ94SBB	18	GY	TXL	2003343C1	3595623C1	1701	47	N/A		
XD94SRA	18	GY	TXL	2003343C1	3595623C1	1701	48	N/A		
XZ94SCB	18	GY	TXL	2003343C1	3595623C1	1701	48	N/A		
XD94SRA	18	GY	TXL	2003343C1	3595623C1	1701	48	N/A		
XZ94SCB	18	GY	TXL	2003343C1	3595623C1	1701	48	N/A		
XD94SSA	18	GY	TXL	2003343C1	3595623C1	1701	49	N/A		
XZ94SDB	18	GY	TXL	2003343C1	3595623C1	1701	49	N/A		
XD94SSA	18	GY	TXL	2003343C1	3595623C1	1701	49	N/A		
XZ94SDB	18	GY	TXL	2003343C1	3595623C1	1701	49	N/A		
CZ49A	18	GY	TXL	2003343C1	3595623C1	1701	50	N/A		
CZ49A	18	GY	TXL	2003343C1	3595623C1	1701	50	N/A		

Circuit Number	Gauge	Color	Insulation	Terminal / Splice Number	Connector Part number	Connector Number	Cavity	Seal/Sleeve	Lock 1	Lock 2
BL71BB	16	OR	TXL	3574288C1	3595623C1	1701	51	N/A		
BU65AB	16	OR	TXL	3574288C1	3595623C1	1701	51	N/A		
BW65AB	16	OR	TXL	3574288C1	3595623C1	1701	51	N/A		
BU65AB	16	OR	TXL	3574288C1	3595623C1	1701	51	N/A		
BW65AB	16	OR	TXL	3574288C1	3595623C1	1701	51	N/A		
3A94BY	18	GY	TXL	2003343C1	3595623C1	1701	52	N/A		
PJ94BMM	16	GY	TXL	3574285C1	3595623C1	1701	52	N/A		
3A94BX	18	GY	TXL	2003343C1	3595623C1	1701	52	N/A		
PJ94BMM	16	GY	TXL	3574285C1	3595623C1	1701	52	N/A		
3A94BZ	18	GY	TXL	2003343C1	3595623C1	1701	53	N/A		
PJ94BNN	16	GY	TXL	3574285C1	3595623C1	1701	53	N/A		
3A94BZ	18	GY	TXL	2003343C1	3595623C1	1701	53	N/A		
PJ94BNN	16	GY	TXL	3574285C1	3595623C1	1701	53	N/A		
3A94BP	18	GY	TXL	2003343C1	3595623C1	1701	54	N/A		
PJ94BP	16	GY	TXL	3574285C1	3595623C1	1701	54	N/A		
3A94BP	18	GY	TXL	2003343C1	3595623C1	1701	54	N/A		
PJ94BP	16	GY	TXL	3574285C1	3595623C1	1701	54	N/A		
3A94BQ	18	GY	TXL	2003343C1	3595623C1	1701	55	N/A		
PJ94BQ	16	GY	TXL	3574285C1	3595623C1	1701	55	N/A		
3A94BQ	18	GY	TXL	2003343C1	3595623C1	1701	55	N/A		
PJ94BQ	16	GY	TXL	3574285C1	3595623C1	1701	55	N/A		
3A94BR	18	GY	TXL	2003343C1	3595623C1	1701	56	N/A		
PJ94BR	16	GY	TXL	3574285C1	3595623C1	1701	56	N/A		
3A94BR	18	GY	TXL	2003343C1	3595623C1	1701	56	N/A		
PJ94BR	16	GY	TXL	3574285C1	3595623C1	1701	56	N/A		
3A94BS	18	GY	TXL	2003343C1	3595623C1	1701	57	N/A		
PJ94BS	16	GY	GXL	3574285C1	3595623C1	1701	57	N/A		
3A94BS	18	GY	TXL	2003343C1	3595623C1	1701	57	N/A		
PJ94BS	16	GY	GXL	3574285C1	3595623C1	1701	57	N/A		
3A94BT	18	GY	TXL	2003343C1	3595623C1	1701	58	N/A		
PJ94BT	16	GY	GXL	3574285C1	3595623C1	1701	58	N/A		
3A94BT	18	GY	TXL	2003343C1	3595623C1	1701	58	N/A		
PJ94BT	16	GY	GXL	3574285C1	3595623C1	1701	58	N/A		
3A94BU	18	GY	TXL	2003343C1	3595623C1	1701	59	N/A		
PJ94BU	16	GY	GXL	3574285C1	3595623C1	1701	59	N/A		
3A94BU	18	GY	TXL	2003343C1	3595623C1	1701	59	N/A		
PJ94BU	16	GY	GXL	3574285C1	3595623C1	1701	59	N/A		
3A94BV	18	GY	TXL	2003343C1	3595623C1	1701	60	N/A		
PJ94BV	16	GY	TXL	3574285C1	3595623C1	1701	60	N/A		
3A94BV	18	GY	TXL	2003343C1	3595623C1	1701	60	N/A		
PJ94BV	16	GY	TXL	3574285C1	3595623C1	1701	60	N/A		
3F94AA	16	GY	TXL	3574285C1	3595623C1	1701	61	N/A		
KN116L	18	GY	TXL	2003343C1	3595623C1	1701	61	N/A		
NB56BB1	14	OR	TXL	3574285C1	3595623C1	1701	61	N/A		
3F94AA	18	GY	TXL	2003343C1	3595623C1	1701	61	N/A		
KN116L	18	GY	TXL	2003343C1	3595623C1	1701	61	N/A		
3F13AA	16	PK	TXL	3574285C1	3595623C1	1701	62	N/A		
KN116M	18	GY	TXL	2003343C1	3595623C1	1701	62	N/A		
NB57BB1	14	OR	TXL	3574285C1	3595623C1	1701	62	N/A		
3F13AA	18	PK	TXL	2003343C1	3595623C1	1701	62	N/A		
KN116M	18	GY	TXL	2003343C1	3595623C1	1701	62	N/A		
XD94SL	18	GY	TXL	2003343C1	3595623C1	1701	63	N/A		

Circuit Number	Gauge	Color	Insulation	Terminal / Splice Number	Connector Part number	Connector Number	Cavity	Seal/Sleeve	Lock 1	Lock 2
XZ94SZC	16	GY	TXL	3574285C1	3595623C1	1701	63	N/A		
XD94SL	18	GY	TXL	2003343C1	3595623C1	1701	63	N/A		
XZ94SZC	16	GY	TXL	3574285C1	3595623C1	1701	63	N/A		
3A94BW	18	GY	TXL	3574289C1	3595623C1	1701	64	N/A		
PJ94BW	16	GY	TXL	3574288C1	3595623C1	1701	64	N/A		
3A94BW	18	GY	TXL	3574289C1	3595623C1	1701	64	N/A		
PJ94BW	16	GY	TXL	3574288C1	3595623C1	1701	64	N/A		
9S74RC	12	RD	GXL	3574287C1	3595623C1	1701	65	N/A		
ZA94HA	18	GY	TXL	3574289C1	3595623C1	1701	65	N/A		
ZB94HA	18	GY	TXL	3574289C1	3595623C1	1701	65	N/A		
4A74RC	12	LTGN	TXL	3574287C1	3595623C1	1701	65	N/A		
ZA94HA	18	GY	TXL	3574289C1	3595623C1	1701	65	N/A		
ZB94HA	18	GY	TXL	3574289C1	3595623C1	1701	65	N/A		
9S11-GC	18	WH	GXL	3574289C1	3595623C1	1701	66	N/A		
ZA94SKB	18	GY	TXL	3574289C1	3595623C1	1701	66	N/A		
ZB94SK	18	GY	TXL	3574289C1	3595623C1	1701	66	N/A		
4A11-GC	18	WH	TXL	3574289C1	3595623C1	1701	66	N/A		
ZA94SKB	18	GY	TXL	3574289C1	3595623C1	1701	66	N/A		
ZB94SK	18	GY	TXL	3574289C1	3595623C1	1701	66	N/A		
XG94SK	18	GY	TXL	3574289C1	3595623C1	1701	67	N/A		
ZA94SKA	18	GY	TXL	3574289C1	3595623C1	1701	67	N/A		
ZC94SK	18	GY	TXL	3574289C1	3595623C1	1701	67	N/A		
XG94SK	18	GY	TXL	3574289C1	3595623C1	1701	67	N/A		
ZA94SKA	18	GY	TXL	3574289C1	3595623C1	1701	67	N/A		
ZC94SK	18	GY	TXL	3574289C1	3595623C1	1701	67	N/A		
BS65	18	OR	TXL	3574289C1	3595623C1	1701	68	N/A		
BW65AA	18	OR	TXL	3574289C1	3595623C1	1701	68	N/A		
BX65AA	18	OR	TXL	3574289C1	3595623C1	1701	68	N/A		
BS65	18	OR	TXL	3574289C1	3595623C1	1701	68	N/A		
BW65AA	18	OR	TXL	3574289C1	3595623C1	1701	68	N/A		
BX65AA	18	OR	TXL	3574289C1	3595623C1	1701	68	N/A		
YD67U	18	GY	GXL	3574289C1	3595623C1	1701	69	N/A		
YD67U	18	GY	GXL	3574289C1	3595623C1	1701	69	N/A		
YD67W	18	GY	GXL	3574289C1	3595623C1	1701	70	N/A		
YD67W	18	GY	GXL	3574289C1	3595623C1	1701	70	N/A		
YD67V	18	GY	GXL	3574289C1	3595623C1	1701	71	N/A		
YD67V	18	GY	GXL	3574289C1	3595623C1	1701	71	N/A		
XZ94SM	18	GY	TXL	3574289C1	3595623C1	1701	72	N/A		
XZ94SM	18	GY	TXL	3574289C1	3595623C1	1701	72	N/A		
XZ94SN	18	GY	TXL	3574289C1	3595623C1	1701	73	N/A		
XZ94SN	18	GY	TXL	3574289C1	3595623C1	1701	73	N/A		
XZ94SL	18	GY	TXL	3574289C1	3595623C1	1701	74	N/A		
XZ94SL	18	GY	TXL	3574289C1	3595623C1	1701	74	N/A		
XD94SM	18	GY	TXL	3574289C1	3595623C1	1701	75	N/A		
XZ94SVC	16	GY	TXL	3574288C1	3595623C1	1701	75	N/A		
XD94SM	18	GY	TXL	3574289C1	3595623C1	1701	75	N/A		
XZ94SVC	16	GY	TXL	3574288C1	3595623C1	1701	75	N/A		
XZ94SH	16	GY	TXL	3574288C1	3595623C1	1701	76	N/A		
XZ94SH	16	GY	TXL	3574288C1	3595623C1	1701	76	N/A		
KD92A20	18	WH	TXL	3574277C1	3595620C1	1702	1	N/A		
WA92A20	18	WH	TXL	3574277C1	3595620C1	1702	1	N/A		
WC92A20	18	WH	TXL	3574277C1	3595620C1	1702	1	N/A		

Circuit Number	Gauge	Color	Insulation	Terminal / Splice Number	Connector Part number	Connector Number	Cavity	Seal/Sleeve	Lock 1	Lock 2
AA9AAJ1	18	GY	TXL	2003343C1	3595621C1	1702	2	N/A		
AA9E	18	GY	TXL	2003343C1	3595621C1	1702	2	N/A		
YA9AA	16	GY	TXL	3549417C1	3595620C1	1702	2	N/A		
YK9AA	16	GY	TXL	3549417C1	3595620C1	1702	2	N/A		
3H6DBJ	18	GY	TXL	2003343C1	3595621C1	1702	3	N/A	1671608C1	
3H6DBJ	20	GY	TXL	2003343C1	3595621C1	1702	3	N/A		
YB6DB	20	GY	TXL	3549418C1	3595620C1	1702	3	N/A		
YL6DB	20	GY	TXL	3549418C1	3595620C1	1702	3	N/A		
YN6DB	20	GY	TXL	3549418C1	3595620C1	1702	3	N/A		
3H77BJ	18	LTGN	TXL	2003343C1	3595621C1	1702	4	N/A	3543731C1	
3H77BJ	20	LTGN	TXL	2003343C1	3595621C1	1702	4	N/A		
YB77B	20	LTGN	TXL	3549418C1	3595620C1	1702	4	N/A		
YL77B	20	LTGN	TXL	3549418C1	3595620C1	1702	4	N/A		
YN77B	20	LTGN	TXL	3549418C1	3595620C1	1702	4	N/A		
AU28J	18	TN	TXL	2003343C1	3595621C1	1702	5	N/A		
AU28B	18	TN	TXL	2003343C1	3595621C1	1702	5	N/A		
KE28	18	TN	TXL	3549418C1	3595620C1	1702	5	N/A		
JE28	18	TN	GXL	3549418C1	3595620C1	1702	5	N/A		
KE28	18	TN	GXL	3549418C1	3595620C1	1702	5	N/A		
BJ92R2J	20	TN	TXL	2003343C1	3595621C1	1702	6	N/A		
BK92R2J	20	TN	TXL	2003343C1	3595621C1	1702	6	N/A		
BL71AJ	16	OR	TXL	3574285C1	3595621C1	1702	6	N/A		
BP71AJ	16	OR	TXL	3574285C1	3595621C1	1702	6	N/A		
EY71AJ	18	OR	TXL	2003343C1	3595621C1	1702	6	N/A		
MD92#145J	18	TN	TXL	2003343C1	3595621C1	1702	6	N/A		
BJ92R2J	18	TN	TXL	2003343C1	3595621C1	1702	6	N/A		
BK92R2J	18	TN	TXL	2003343C1	3595621C1	1702	6	N/A		
BP71	16	OR	TXL	3574285C1	3595621C1	1702	6	N/A		
EY71BA	16	OR	TXL	3574285C1	3595621C1	1702	6	N/A		
KP71L	18	OR	TXL	3549418C1	3595620C1	1702	6	N/A		
KT71C	18	LTBL	TXL	3549418C1	3595620C1	1702	6	N/A		
KW71A	16	OR	GXL	3549417C1	3595620C1	1702	6	N/A		
KP71L	18	OR	TXL	3549418C1	3595620C1	1702	6	N/A		
KT71C	18	LTBL	TXL	3549418C1	3595620C1	1702	6	N/A		
KW71A	16	OR	GXL	3549417C1	3595620C1	1702	6	N/A		
PF71A	18	TN	GXL	3549418C1	3595620C1	1702	6	N/A		
SC92#145	18	OR	TXL	3549418C1	3595620C1	1702	6	N/A		
SD92#145	18	OR	TXL	3549418C1	3595620C1	1702	6	N/A		
3T92J#165	18	OR	TXL	2003343C1	3595621C1	1702	7	N/A		
BJ92R1J	20	TN	TXL	2003343C1	3595621C1	1702	7	N/A		
BK92R1J	20	TN	TXL	2003343C1	3595621C1	1702	7	N/A		
BL71BJ	16	OR	TXL	3574285C1	3595621C1	1702	7	N/A		
BP71BJ	16	OR	TXL	3574285C1	3595621C1	1702	7	N/A		
EY71BJ	16	OR	TXL	3574285C1	3595621C1	1702	7	N/A		
GM92J#165	18	OR	TXL	2003343C1	3595621C1	1702	7	N/A		
3T92#165	18	TN	TXL	2003343C1	3595621C1	1702	7	N/A		
BJ92T1J	18	TN	TXL	2003343C1	3595621C1	1702	7	N/A		
BK92R1J	18	TN	TXL	2003343C1	3595621C1	1702	7	N/A		
BP71BJ	16	OR	TXL	3574285C1	3595621C1	1702	7	N/A		
EY71BJ	16	OR	TXL	3574285C1	3595621C1	1702	7	N/A		
GM92#165	18	TN	TXL	2003343C1	3595621C1	1702	7	N/A		
KL71K	18	LTBL	TXL	3549418C1	3595620C1	1702	7	N/A		

Circuit Number	Gauge	Color	Insulation	Terminal / Splice Number	Connector Part number	Connector Number	Cavity	Seal/Sleeve	Lock 1	Lock 2
KV92#165	18	TN	TXL	3549418C1	3595620C1	1702	7	N/A		
KW71B	16	OR	GXL	3549417C1	3595620C1	1702	7	N/A		
KG71K	18	LTBL	TXL	3549418C1	3595620C1	1702	7	N/A		
KW71B	16	OR	GXL	3549417C1	3595620C1	1702	7	N/A		
PF71B	16	OR	GXL	3549417C1	3595620C1	1702	7	N/A		
TD92#165	18	TN	TXL	3549418C1	3595620C1	1702	7	N/A		
XV92#165	18	TN	TXL	3549418C1	3595620C1	1702	7	N/A		
AZ13AJ	16	PK	GXL	3574285C1	3595621C1	1702	8	N/A		
GY92J#163	16	PK	TXL	3574285C1	3595621C1	1702	8	N/A		
AZ13AJ	16	PK	GXL	3574285C1	3595621C1	1702	8	N/A		
GY92#163	16	PK	TXL	3574285C1	3595621C1	1702	8	N/A		
KH13A	14	PK	GXL	3549417C1	3595620C1	1702	8	N/A		
KL13A	16	PK	TXL	3549417C1	3595620C1	1702	8	N/A		
KV92#163	18	TN	TXL	3549418C1	3595620C1	1702	8	N/A		
KG13A	18	PK	TXL	3549418C1	3595620C1	1702	8	N/A		
KH13A	14	PK	GXL	3549417C1	3595620C1	1702	8	N/A		
TD92#163	18	TN	TXL	3549418C1	3595620C1	1702	8	N/A		
XV92#163	18	TN	TXL	3549418C1	3595620C1	1702	8	N/A		
AA77J	16	LTGN	GXL	3574285C1	3595621C1	1702	10	N/A		
AA77J	16	LTGN	GXL	3574285C1	3595621C1	1702	10	N/A		
KA77	16	LTGN	TXL	3549417C1	3595620C1	1702	10	N/A		
KA77	16	LTGN	GXL	3549417C1	3595620C1	1702	10	N/A		
3D5PJ(+)	18	YL	TXL	2003343C1	3595621C1	1702	11	N/A		
3M5PJ(+)	18	YL	TXL	2003343C1	3595621C1	1702	11	N/A		
9K5PJ(+)	18	YL	TXL	2003343C1	3595621C1	1702	11	N/A		
9L5PJ(+)	18	YL	TXL	2003343C1	3595621C1	1702	11	N/A		
9P5PJ(+)	18	YL	TXL	2003343C1	3595621C1	1702	11	N/A		
9V5PJ(+)	18	YL	TXL	2003343C1	3595621C1	1702	11	N/A		
JC5PJ(+)	18	YL	TXL	2003343C1	3595621C1	1702	11	N/A		
JD5PJ(+)	18	YL	TXL	2003343C1	3595621C1	1702	11	N/A		
JF5PJ(+)	18	YL	TXL	2003343C1	3595621C1	1702	11	N/A		
JG5PJ(+)	18	YL	TXL	2003343C1	3595621C1	1702	11	N/A		
LC5PJ(+)	18	YL	TXL	2003343C1	3595621C1	1702	11	N/A		
LD5PJ(+)	18	YL	TXL	2003343C1	3595621C1	1702	11	N/A		
LE5PJ(+)	18	YL	TXL	2003343C1	3595621C1	1702	11	N/A		
LF5PJ(+)	18	YL	TXL	2003343C1	3595621C1	1702	11	N/A		
LS5PJ(+)	18	YL	TXL	2003343C1	3595621C1	1702	11	N/A		
LU5PJ(+)	18	YL	TXL	2003343C1	3595621C1	1702	11	N/A		
LV5PJ(+)	18	YL	TXL	2003343C1	3595621C1	1702	11	N/A		
PY5PJ(+)	18	YL	TXL	2003343C1	3595621C1	1702	11	N/A		
PZ5PJ(+)	18	YL	TXL	2003343C1	3595621C1	1702	11	N/A		
RD5PJ(+)	18	YL	TXL	2003343C1	3595621C1	1702	11	N/A		
RG5PJ(+)	18	YL	TXL	2003343C1	3595621C1	1702	11	N/A		
RJ5PJ(+)	18	YL	TXL	2003343C1	3595621C1	1702	11	N/A		
RM5PJ(+)	18	YL	TXL	2003343C1	3595621C1	1702	11	N/A		
RS5PJ(+)	18	YL	TXL	2003343C1	3595621C1	1702	11	N/A		
RU5PJ(+)	18	YL	TXL	2003343C1	3595621C1	1702	11	N/A		
SB5PJ(+)	18	YL	TXL	2003343C1	3595621C1	1702	11	N/A		
SC5PJ(+)	18	YL	TXL	2003343C1	3595621C1	1702	11	N/A		
SD5PJ(+)	18	YL	TXL	2003343C1	3595621C1	1702	11	N/A		
SE5PJ(+)	18	YL	TXL	2003343C1	3595621C1	1702	11	N/A		
SN5PJ(+)	18	YL	TXL	2003343C1	3595621C1	1702	11	N/A		

Circuit Number	Gauge	Color	Insulation	Terminal / Splice Number	Connector Part number	Connector Number	Cavity	Seal/Sleeve	Lock 1	Lock 2
SP5PJ(+)	18	YL	TXL	2003343C1	3595621C1	1702	11	N/A		
VC5PJ(+)	18	YL	TXL	2003343C1	3595621C1	1702	11	N/A		
VD5PJ(+)	18	YL	TXL	2003343C1	3595621C1	1702	11	N/A		
VE5PJ(+)	18	YL	TXL	2003343C1	3595621C1	1702	11	N/A		
VF5PJ(+)	18	YL	TXL	2003343C1	3595621C1	1702	11	N/A		
VV5PJ(+)	18	YL	TXL	2003343C1	3595621C1	1702	11	N/A		
YX5PJ(+)	18	YL	TXL	2003343C1	3595621C1	1702	11	N/A		
YZ5PJ(+)	18	YL	TXL	2003343C1	3595621C1	1702	11	N/A		
2H5R(+)	18	YL	TXL	2003343C1	3595621C1	1702	11	N/A		
2J5R(+)	18	YL	TXL	2003343C1	3595621C1	1702	11	N/A		
2L5R(+)	18	YL	TXL	2003343C1	3595621C1	1702	11	N/A		
2M5R(+)	18	YL	TXL	2003343C1	3595621C1	1702	11	N/A		
2W5R(+)	18	YL	TXL	2003343C1	3595621C1	1702	11	N/A		
2Y5R(+)	18	YL	TXL	2003343C1	3595621C1	1702	11	N/A		
2Z5R(+)	18	YL	TXL	2003343C1	3595621C1	1702	11	N/A		
3C5R(+)	18	YL	TXL	2003343C1	3595621C1	1702	11	N/A		
3D5R(+)	18	YL	TXL	2003343C1	3595621C1	1702	11	N/A		
3E5R(+)	18	YL	TXL	2003343C1	3595621C1	1702	11	N/A		
3J5R(+)	18	YL	TXL	2003343C1	3595621C1	1702	11	N/A		
3M5R(+)	18	YL	TXL	2003343C1	3595621C1	1702	11	N/A		
3R5R(+)	18	YL	TXL	2003343C1	3595621C1	1702	11	N/A		
3U5R(+)	18	YL	TXL	2003343C1	3595621C1	1702	11	N/A		
3W5R(+)	18	YL	TXL	2003343C1	3595621C1	1702	11	N/A		
3Z5R(+)	18	YL	TXL	2003343C1	3595621C1	1702	11	N/A		
4E5R(+)	18	YL	TXL	2003343C1	3595621C1	1702	11	N/A		
4J5R(+)	18	YL	TXL	2003343C1	3595621C1	1702	11	N/A		
4L5R(+)	18	YL	TXL	2003343C1	3595621C1	1702	11	N/A		
4N5R(+)	18	YL	TXL	2003343C1	3595621C1	1702	11	N/A		
9K5R(+)	18	YL	TXL	2003343C1	3595621C1	1702	11	N/A		
9L5R(+)	18	YL	TXL	2003343C1	3595621C1	1702	11	N/A		
9P5R(+)	18	YL	TXL	2003343C1	3595621C1	1702	11	N/A		
9T5R(+)	18	YL	TXL	2003343C1	3595621C1	1702	11	N/A		
9V5R(+)	18	YL	TXL	2003343C1	3595621C1	1702	11	N/A		
9W5R(+)	18	YL	TXL	2003343C1	3595621C1	1702	11	N/A		
JC5R(+)	18	YL	TXL	2003343C1	3595621C1	1702	11	N/A		
JD5R(+)	18	YL	TXL	2003343C1	3595621C1	1702	11	N/A		
JF5R(+)	18	YL	TXL	2003343C1	3595621C1	1702	11	N/A		
JG5R(+)	18	YL	TXL	2003343C1	3595621C1	1702	11	N/A		
LC5R(+)	18	YL	TXL	2003343C1	3595621C1	1702	11	N/A		
LD5R(+)	18	YL	TXL	2003343C1	3595621C1	1702	11	N/A		
LE5R(+)	18	YL	TXL	2003343C1	3595621C1	1702	11	N/A		
LF5R(+)	18	YL	TXL	2003343C1	3595621C1	1702	11	N/A		
LS5PJ(+)	18	YL	TXL	2003343C1	3595621C1	1702	11	N/A		
LU5R(+)	18	YL	TXL	2003343C1	3595621C1	1702	11	N/A		
LV5R(+)	18	YL	TXL	2003343C1	3595621C1	1702	11	N/A		
PV5R(+)	18	YL	TXL	2003343C1	3595621C1	1702	11	N/A		
PY5R(+)	18	YL	TXL	2003343C1	3595621C1	1702	11	N/A		
PZ5R(+)	18	YL	TXL	2003343C1	3595621C1	1702	11	N/A		
RD5R(+)	18	YL	TXL	2003343C1	3595621C1	1702	11	N/A		
RG5R(+)	18	YL	TXL	2003343C1	3595621C1	1702	11	N/A		
RJ5R(+)	18	YL	TXL	2003343C1	3595621C1	1702	11	N/A		
RM5R(+)	18	YL	TXL	2003343C1	3595621C1	1702	11	N/A		

Circuit Number	Gauge	Color	Insulation	Terminal / Splice Number	Connector Part number	Connector Number	Cavity	Seal/Sleeve	Lock 1	Lock 2
RR5R(+)	18	YL	TXL	2003343C1	3595621C1	1702	11	N/A		
RS5R(+)	18	YL	TXL	2003343C1	3595621C1	1702	11	N/A		
RU5R(+)	18	YL	TXL	2003343C1	3595621C1	1702	11	N/A		
RX5R(+)	18	YL	TXL	2003343C1	3595621C1	1702	11	N/A		
RZ5R(+)	18	YL	TXL	2003343C1	3595621C1	1702	11	N/A		
SB5R(+)	18	YL	TXL	2003343C1	3595621C1	1702	11	N/A		
SC5R(+)	18	YL	TXL	2003343C1	3595621C1	1702	11	N/A		
SD5R(+)	18	YL	TXL	2003343C1	3595621C1	1702	11	N/A		
SE5R(+)	18	YL	TXL	2003343C1	3595621C1	1702	11	N/A		
SN5R(+)	18	YL	TXL	2003343C1	3595621C1	1702	11	N/A		
SP5R(+)	18	YL	TXL	2003343C1	3595621C1	1702	11	N/A		
SR5R(+)	18	YL	TXL	2003343C1	3595621C1	1702	11	N/A		
VC5R(+)	18	YL	TXL	2003343C1	3595621C1	1702	11	N/A		
VD5R(+)	18	YL	TXL	2003343C1	3595621C1	1702	11	N/A		
VE5R(+)	18	YL	TXL	2003343C1	3595621C1	1702	11	N/A		
VF5R(+)	18	YL	TXL	2003343C1	3595621C1	1702	11	N/A		
VG5R(+)	18	YL	TXL	2003343C1	3595621C1	1702	11	N/A		
YX5R(+)	18	YL	TXL	2003343C1	3595621C1	1702	11	N/A		
YZ5R(+)	18	YL	TXL	2003343C1	3595621C1	1702	11	N/A		
KF5R(+)	18	YL	TXL	3549418C1	3595620C1	1702	11	N/A		
KH5R(+)	18	YL	TXL	3549418C1	3595620C1	1702	11	N/A		
KL5AD(+)	18	YL	TXL	3549418C1	3595620C1	1702	11	N/A		
KV5C128	18	YL	TXL	3549418C1	3595620C1	1702	11	N/A		
KF5R(+)	18	YL	TXL	3549418C1	3595620C1	1702	11	N/A		
KG5AD(+)	18	YL	TXL	3549418C1	3595620C1	1702	11	N/A		
KH5R(+)	18	YL	TXL	3549418C1	3595620C1	1702	11	N/A		
XR5R106	18	YL	TXL	3549418C1	3595620C1	1702	11	N/A		
XZ5C106	18	YL	TXL	3549418C1	3595620C1	1702	11	N/A		
MN92J	18	TN	TXL	2003343C1	3595621C1	1702	12	N/A		
MN92J	18	TN	TXL	2003343C1	3595621C1	1702	12	N/A		
KH92A	18	TN	GXL	3549418C1	3595620C1	1702	12	N/A		
TG92A	18	TN	GXL	3549418C1	3595620C1	1702	12	N/A		
DS31J	18	TN	TXL	2003343C1	3595621C1	1702	13	N/A		
DS31	18	TN	TXL	2003343C1	3595621C1	1702	13	N/A		
KK31	18	TN	GXL	3549418C1	3595620C1	1702	13	N/A		
TA31	18	TN	GXL	3549418C1	3595620C1	1702	13	N/A		
XA31	18	TN	GXL	3549418C1	3595620C1	1702	13	N/A		
KK31	18	TN	GXL	3549418C1	3595620C1	1702	13	N/A		
PC31	18	TN	GXL	3549418C1	3595620C1	1702	13	N/A		
WP31	18	TN	GXL	3549418C1	3595620C1	1702	13	N/A		
9B88J	18	LTGN	TXL	2003343C1	3595621C1	1702	14	N/A		
FD88J	18	LTGN	TXL	2003343C1	3595621C1	1702	14	N/A		
FC88J	18	LTGN	TXL	2003343C1	3595621C1	1702	14	N/A		
FD88J	18	LTGN	TXL	2003343C1	3595621C1	1702	14	N/A		
KM88	16	LTGN	GXL	3549417C1	3595620C1	1702	14	N/A		
KS88	16	LTGN	GXL	3549417C1	3595620C1	1702	14	N/A		
KM88	16	LTGN	GXL	3549417C1	3595620C1	1702	14	N/A		
HZ41EJ	18	TN	TXL	2003343C1	3595621C1	1702	15	N/A		
HZ41E	18	TN	TXL	2003343C1	3595621C1	1702	15	N/A		
KC41D	20	WH	TXL	3549418C1	3595620C1	1702	15	N/A		
VL41E	18	TN	TXL	3549418C1	3595620C1	1702	15	N/A		
3B17	16	PK	TXL	3574285C1	3595621C1	1702	16	N/A		

Circuit Number	Gauge	Color	Insulation	Terminal / Splice Number	Connector Part number	Connector Number	Cavity	Seal/Sleeve	Lock 1	Lock 2
AF17	16	PK	GXL	3574285C1	3595621C1	1702	16	N/A		
GP17J	16	PK	TXL	3574285C1	3595621C1	1702	16	N/A		
3B17BA	16	PK	TXL	3574285C1	3595621C1	1702	16	N/A		
AF17B	16	PK	GXL	3574285C1	3595621C1	1702	16	N/A		
GP17BA	16	PK	TXL	3574285C1	3595621C1	1702	16	N/A		
VK17	16	PK	GXL	3549417C1	3595620C1	1702	16	N/A		
VT17	16	PK	GXL	3549417C1	3595620C1	1702	16	N/A		
KR17	16	PK	GXL	3549417C1	3595620C1	1702	16	N/A		
LB17	16	PK	GXL	3549417C1	3595620C1	1702	16	N/A		
VS17	16	PK	GXL	3549417C1	3595620C1	1702	16	N/A		
3D5PJ(-)	18	GN	TXL	2003343C1	3595621C1	1702	17	N/A		
3M5PJ(-)	18	GN	TXL	2003343C1	3595621C1	1702	17	N/A		
9K5PJ(-)	18	GN	TXL	2003343C1	3595621C1	1702	17	N/A		
9L5PJ(-)	18	GN	TXL	2003343C1	3595621C1	1702	17	N/A		
9P5PJ(-)	18	GN	TXL	2003343C1	3595621C1	1702	17	N/A		
9V5PJ(-)	18	GN	TXL	2003343C1	3595621C1	1702	17	N/A		
JC5PJ(-)	18	GN	TXL	2003343C1	3595621C1	1702	17	N/A		
JD5PJ(-)	18	GN	TXL	2003343C1	3595621C1	1702	17	N/A		
JF5PJ(-)	18	GN	TXL	2003343C1	3595621C1	1702	17	N/A		
JG5PJ(-)	18	GN	TXL	2003343C1	3595621C1	1702	17	N/A		
LC5PJ(-)	18	GN	TXL	2003343C1	3595621C1	1702	17	N/A		
LD5PJ(-)	18	GN	TXL	2003343C1	3595621C1	1702	17	N/A		
LE5PJ(-)	18	GN	TXL	2003343C1	3595621C1	1702	17	N/A		
LF5PJ(-)	18	GN	TXL	2003343C1	3595621C1	1702	17	N/A		
LS5PJ(-)	18	GN	TXL	2003343C1	3595621C1	1702	17	N/A		
LU5PJ(-)	18	GN	TXL	2003343C1	3595621C1	1702	17	N/A		
LV5PJ(-)	18	GN	TXL	2003343C1	3595621C1	1702	17	N/A		
PY5PJ(-)	18	GN	TXL	2003343C1	3595621C1	1702	17	N/A		
PZ5PJ(-)	18	GN	TXL	2003343C1	3595621C1	1702	17	N/A		
RD5PJ(-)	18	GN	TXL	2003343C1	3595621C1	1702	17	N/A		
RG5PJ(-)	18	GN	TXL	2003343C1	3595621C1	1702	17	N/A		
RJ5PJ(-)	18	GN	TXL	2003343C1	3595621C1	1702	17	N/A		
RM5PJ(-)	18	GN	TXL	2003343C1	3595621C1	1702	17	N/A		
RS5PJ(-)	18	GN	TXL	2003343C1	3595621C1	1702	17	N/A		
RU5PJ(-)	18	GN	TXL	2003343C1	3595621C1	1702	17	N/A		
SB5PJ(-)	18	GN	TXL	2003343C1	3595621C1	1702	17	N/A		
SC5PJ(-)	18	GN	TXL	2003343C1	3595621C1	1702	17	N/A		
SD5PJ(-)	18	GN	TXL	2003343C1	3595621C1	1702	17	N/A		
SE5PJ(-)	18	GN	TXL	2003343C1	3595621C1	1702	17	N/A		
SN5PJ(-)	18	GN	TXL	2003343C1	3595621C1	1702	17	N/A		
SP5PJ(-)	18	GN	TXL	2003343C1	3595621C1	1702	17	N/A		
VC5PJ(-)	18	GN	TXL	2003343C1	3595621C1	1702	17	N/A		
VD5PJ(-)	18	GN	TXL	2003343C1	3595621C1	1702	17	N/A		
VE5PJ(-)	18	GN	TXL	2003343C1	3595621C1	1702	17	N/A		
VF5PJ(-)	18	GN	TXL	2003343C1	3595621C1	1702	17	N/A		
VV5PJ(-)	18	GN	TXL	2003343C1	3595621C1	1702	17	N/A		
YX5PJ(-)	18	GN	TXL	2003343C1	3595621C1	1702	17	N/A		
YZ5PJ(-)	18	GN	TXL	2003343C1	3595621C1	1702	17	N/A		
2H5R(-)	18	GN	TXL	2003343C1	3595621C1	1702	17	N/A		
2J5R(-)	18	GN	TXL	2003343C1	3595621C1	1702	17	N/A		
2L5R(-)	18	GN	TXL	2003343C1	3595621C1	1702	17	N/A		
2M5R(-)	18	GN	TXL	2003343C1	3595621C1	1702	17	N/A		

Circuit Number	Gauge	Color	Insulation	Terminal / Splice Number	Connector Part number	Connector Number	Cavity	Seal/Sleeve	Lock 1	Lock 2
2W5R(-)	18	GN	TXL	2003343C1	3595621C1	1702	17	N/A		
2Y5R(-)	18	GN	TXL	2003343C1	3595621C1	1702	17	N/A		
2Z5R(-)	18	GN	TXL	2003343C1	3595621C1	1702	17	N/A		
3C5R(-)	18	GN	TXL	2003343C1	3595621C1	1702	17	N/A		
3D5R(-)	18	GN	TXL	2003343C1	3595621C1	1702	17	N/A		
3E5R(-)	18	GN	TXL	2003343C1	3595621C1	1702	17	N/A		
3J5R(-)	18	GN	TXL	2003343C1	3595621C1	1702	17	N/A		
3M5R(-)	18	GN	TXL	2003343C1	3595621C1	1702	17	N/A		
3R5R(-)	18	GN	TXL	2003343C1	3595621C1	1702	17	N/A		
3U5R(-)	18	GN	TXL	2003343C1	3595621C1	1702	17	N/A		
3W5R(-)	18	GN	TXL	2003343C1	3595621C1	1702	17	N/A		
3Z5R(-)	18	GN	TXL	2003343C1	3595621C1	1702	17	N/A		
4E5R(-)	18	GN	TXL	2003343C1	3595621C1	1702	17	N/A		
4J5R(-)	18	GN	TXL	2003343C1	3595621C1	1702	17	N/A		
4L5R(-)	18	GN	TXL	2003343C1	3595621C1	1702	17	N/A		
4N5R(-)	18	GN	TXL	2003343C1	3595621C1	1702	17	N/A		
9K5R(-)	18	GN	TXL	2003343C1	3595621C1	1702	17	N/A		
9L5R(-)	18	GN	TXL	2003343C1	3595621C1	1702	17	N/A		
9P5R(-)	18	GN	TXL	2003343C1	3595621C1	1702	17	N/A		
9T5R(-)	18	GN	TXL	2003343C1	3595621C1	1702	17	N/A		
9V5R(-)	18	GN	TXL	2003343C1	3595621C1	1702	17	N/A		
9W5R(-)	18	GN	TXL	2003343C1	3595621C1	1702	17	N/A		
JC5R(-)	18	GN	TXL	2003343C1	3595621C1	1702	17	N/A		
JD5R(-)	18	GN	TXL	2003343C1	3595621C1	1702	17	N/A		
JF5R(-)	18	GN	TXL	2003343C1	3595621C1	1702	17	N/A		
JG5R(-)	18	GN	TXL	2003343C1	3595621C1	1702	17	N/A		
LC5R(-)	18	GN	TXL	2003343C1	3595621C1	1702	17	N/A		
LD5R(-)	18	GN	TXL	2003343C1	3595621C1	1702	17	N/A		
LE5R(-)	18	GN	TXL	2003343C1	3595621C1	1702	17	N/A		
LF5R(-)	18	GN	TXL	2003343C1	3595621C1	1702	17	N/A		
LS5PJ(-)	18	GN	TXL	2003343C1	3595621C1	1702	17	N/A		
LU5R(-)	18	GN	TXL	2003343C1	3595621C1	1702	17	N/A		
LV5R(-)	18	GN	TXL	2003343C1	3595621C1	1702	17	N/A		
PV5R(-)	18	GN	TXL	2003343C1	3595621C1	1702	17	N/A		
PY5R(-)	18	GN	TXL	2003343C1	3595621C1	1702	17	N/A		
PZ5R(-)	18	GN	TXL	2003343C1	3595621C1	1702	17	N/A		
RD5R(-)	18	GN	TXL	2003343C1	3595621C1	1702	17	N/A		
RG5R(-)	18	GN	TXL	2003343C1	3595621C1	1702	17	N/A		
RJ5R(-)	18	GN	TXL	2003343C1	3595621C1	1702	17	N/A		
RM5R(-)	18	GN	TXL	2003343C1	3595621C1	1702	17	N/A		
RR5R(-)	18	GN	TXL	2003343C1	3595621C1	1702	17	N/A		
RS5R(-)	18	GN	TXL	2003343C1	3595621C1	1702	17	N/A		
RU5R(-)	18	GN	TXL	2003343C1	3595621C1	1702	17	N/A		
RX5R(-)	18	GN	TXL	2003343C1	3595621C1	1702	17	N/A		
RZ5R(-)	18	GN	TXL	2003343C1	3595621C1	1702	17	N/A		
SB5R(-)	18	GN	TXL	2003343C1	3595621C1	1702	17	N/A		
SC5R(-)	18	GN	TXL	2003343C1	3595621C1	1702	17	N/A		
SD5R(-)	18	GN	TXL	2003343C1	3595621C1	1702	17	N/A		
SE5R(-)	18	GN	TXL	2003343C1	3595621C1	1702	17	N/A		
SN5R(-)	18	GN	TXL	2003343C1	3595621C1	1702	17	N/A		
SP5R(-)	18	GN	TXL	2003343C1	3595621C1	1702	17	N/A		
SR5R(-)	18	GN	TXL	2003343C1	3595621C1	1702	17	N/A		

Circuit Number	Gauge	Color	Insulation	Terminal / Splice Number	Connector Part number	Connector Number	Cavity	Seal/Sleeve	Lock 1	Lock 2
VC5R(-)	18	GN	TXL	2003343C1	3595621C1	1702	17	N/A		
VD5R(-)	18	GN	TXL	2003343C1	3595621C1	1702	17	N/A		
VE5R(-)	18	GN	TXL	2003343C1	3595621C1	1702	17	N/A		
VF5R(-)	18	GN	TXL	2003343C1	3595621C1	1702	17	N/A		
VG5R(-)	18	GN	TXL	2003343C1	3595621C1	1702	17	N/A		
YX5R(-)	18	GN	TXL	2003343C1	3595621C1	1702	17	N/A		
YZ5R(-)	18	GN	TXL	2003343C1	3595621C1	1702	17	N/A		
KF5R(-)	18	GN	TXL	3549418C1	3595620C1	1702	17	N/A		
KH5R(-)	18	GN	TXL	3549418C1	3595620C1	1702	17	N/A		
KL5AD(-)	18	GN	TXL	3549418C1	3595620C1	1702	17	N/A		
KV5C108	18	GN	TXL	3549418C1	3595620C1	1702	17	N/A		
KF5R(-)	18	GN	TXL	3549418C1	3595620C1	1702	17	N/A		
KG5AD(-)	18	GN	TXL	3549418C1	3595620C1	1702	17	N/A		
KH5R(-)	18	GN	TXL	3549418C1	3595620C1	1702	17	N/A		
XR5R127	18	GN	TXL	3549418C1	3595620C1	1702	17	N/A		
XZ5C117	18	GN	TXL	3549418C1	3595620C1	1702	17	N/A		
HZ41DJ	18	TN	TXL	2003343C1	3595621C1	1702	18	N/A		
HZ41D	18	TN	TXL	2003343C1	3595621C1	1702	18	N/A		
KC41EA	18	TN	TXL	3549418C1	3595620C1	1702	18	N/A		
KD41D	18	WH	TXL	3549418C1	3595620C1	1702	18	N/A		
WA41D	18	WH	TXL	3549418C1	3595620C1	1702	18	N/A		
WC41D	18	WH	TXL	3549418C1	3595620C1	1702	18	N/A		
AZ92-GCJ	18	WH	TXL	2003343C1	3595621C1	1702	19	N/A		
GY92J#134	18	TN	TXL	2003343C1	3595621C1	1702	19	N/A		
AZ92-GCJ	18	WH	TXL	2003343C1	3595621C1	1702	19	N/A		
GY92#134	18	TN	TXL	2003343C1	3595621C1	1702	19	N/A		
KH17-GC	18	WH	GXL	3549418C1	3595620C1	1702	19	N/A		
KL17-GA	18	TN	TXL	3549418C1	3595620C1	1702	19	N/A		
KV92#134	18	TN	TXL	3549418C1	3595620C1	1702	19	N/A		
KG17-GA	18	WH	TXL	3549418C1	3595620C1	1702	19	N/A		
KH17-GC	18	PK	GXL	3549418C1	3595620C1	1702	19	N/A		
TD92#134	18	TN	TXL	3549418C1	3595620C1	1702	19	N/A		
XV92#134	18	TN	TXL	3549418C1	3595620C1	1702	19	N/A		
AZ92BJ	18	TN	TXL	2003343C1	3595621C1	1702	20	N/A		
GY92J#141	18	TN	TXL	2003343C1	3595621C1	1702	20	N/A		
AZ92BJ	18	TN	TXL	2003343C1	3595621C1	1702	20	N/A		
GY92#141	18	TN	TXL	2003343C1	3595621C1	1702	20	N/A		
KH17B	18	PK	GXL	3549418C1	3595620C1	1702	20	N/A		
KL17A	18	DKBL	TXL	3549418C1	3595620C1	1702	20	N/A		
KV92#141	18	TN	TXL	3549418C1	3595620C1	1702	20	N/A		
KG17A	18	PK	TXL	3549418C1	3595620C1	1702	20	N/A		
KH17B	18	PK	GXL	3549418C1	3595620C1	1702	20	N/A		
TD92#141	18	TN	TXL	3549418C1	3595620C1	1702	20	N/A		
XV92#141	18	TN	TXL	3549418C1	3595620C1	1702	20	N/A		
2T92ZBJ	18	TN	TXL	2003343C1	3595621C1	1702	21	N/A		
AF17C	16	PK	GXL	3574285C1	3595621C1	1702	21	N/A		
2T92ZBJ	18	TN	TXL	2003343C1	3595621C1	1702	21	N/A		
AF17C	16	PK	GXL	3574285C1	3595621C1	1702	21	N/A		
MD92#103J	18	TN	TXL	2003343C1	3595621C1	1702	21	N/A		
KH17C	18	PK	GXL	3549418C1	3595620C1	1702	21	N/A		
KL92A	18	TN	TXL	3549418C1	3595620C1	1702	21	N/A		
KG92A	18	TN	TXL	3549418C1	3595620C1	1702	21	N/A		

Circuit Number	Gauge	Color	Insulation	Terminal / Splice Number	Connector Part number	Connector Number	Cavity	Seal/Sleeve	Lock 1	Lock 2
KH17C	16	PK	TXL	3549417C1	3595620C1	1702	21	N/A		
TW92C103	18	YL	TXL	3549418C1	3595620C1	1702	21	N/A		
AA97CJ	18	VT	TXL	2003343C1	3595621C1	1702	22	N/A		
AA97CJ	18	VT	TXL	2003343C1	3595621C1	1702	22	N/A		
TJ97C	20	VT	TXL	3549418C1	3595620C1	1702	22	N/A		
TK97C	20	VT	TXL	3549418C1	3595620C1	1702	22	N/A		
KA97C	18	VT	TXL	3549418C1	3595620C1	1702	22	N/A		
AA97BJ	18	VT	TXL	2003343C1	3595621C1	1702	23	N/A		
AA97BJ	18	VT	TXL	2003343C1	3595621C1	1702	23	N/A		
TJ97B	20	VT	TXL	3549418C1	3595620C1	1702	23	N/A		
TK97B	20	VT	TXL	3549418C1	3595620C1	1702	23	N/A		
KA97B	18	VT	TXL	3549418C1	3595620C1	1702	23	N/A		
AA97MJ	18	VT	TXL	2003343C1	3595621C1	1702	24	N/A		
AA99D	18	VT	TXL	2003343C1	3595621C1	1702	24	N/A		
KA97M	20	VT	TXL	3549418C1	3595620C1	1702	24	N/A		
KA97M	18	VT	TXL	3549418C1	3595620C1	1702	24	N/A		
MD92#117J	18	TN	TXL	2003343C1	3595621C1	1702	25	N/A		
MD92#117J	18	TN	TXL	2003343C1	3595621C1	1702	25	N/A		
SC92#117	18	TN	TXL	3549418C1	3595620C1	1702	25	N/A		
SD92#117	18	TN	TXL	3549418C1	3595620C1	1702	25	N/A		
SJ92DN	18	TN	GXL	3549418C1	3595620C1	1702	25	N/A		
SJ92A3	18	TN	TXL	3549418C1	3595620C1	1702	26	N/A		
SJ92A11	16	TN	GXL	3549417C1	3595620C1	1702	27	N/A		
AA99BJ	18	VT	TXL	2003343C1	3595621C1	1702	28	N/A		
AA99BJ	18	VT	TXL	2003343C1	3595621C1	1702	28	N/A		
TJ99B	20	VT	TXL	3549418C1	3595620C1	1702	28	N/A		
TK99B	20	VT	TXL	3549418C1	3595620C1	1702	28	N/A		
KA99B	18	VT	TXL	3549418C1	3595620C1	1702	28	N/A		
AA97NJ	18	VT	TXL	2003343C1	3595621C1	1702	29	N/A		
AA97N	18	VT	TXL	2003343C1	3595621C1	1702	29	N/A		
KA97N	20	VT	TXL	3549418C1	3595620C1	1702	29	N/A		
KA97N	18	VT	TXL	3549418C1	3595620C1	1702	29	N/A		
AA99DJ	18	VT	TXL	2003343C1	3595621C1	1702	30	N/A		
AA97M	18	VT	TXL	2003343C1	3595621C1	1702	30	N/A		
GM99D	18	VT	GXL	3549418C1	3595620C1	1702	30	N/A		
GN99D	18	VT	GXL	3549418C1	3595620C1	1702	30	N/A		
KA97P	18	TN	TXL	3549418C1	3595620C1	1702	30	N/A		
DT104ALJ	16	DKBL	TXL	3574285C1	3595621C1	1702	32	N/A		
DT104ALJ	16	DKBL	TXL	3574285C1	3595621C1	1702	32	N/A		
WV97S	18	VT	GXL	3549418C1	3595620C1	1702	32	N/A		
KY97S	18	VT	GXL	3549418C1	3595620C1	1702	32	N/A		
PY97S	18	VT	GXL	3549418C1	3595620C1	1702	32	N/A		
DT104-GAJ	16	WH	TXL	3574285C1	3595621C1	1702	33	N/A		
DT104-GAJ	16	WH	TXL	3574285C1	3595621C1	1702	33	N/A		
WV97J	18	VT	GXL	3549418C1	3595620C1	1702	33	N/A		
KY97J	18	VT	GXL	3549418C1	3595620C1	1702	33	N/A		
PY97J	18	VT	GXL	3549418C1	3595620C1	1702	33	N/A		
HA30BJ	16	TN	TXL	3574288C1	3595621C1	1702	34	N/A		
HA30BJ	16	TN	TXL	3574288C1	3595621C1	1702	34	N/A		
WN30BC	16	TN	GXL	3549416C1	3595620C1	1702	34	N/A		
BF70DJ	18	OR	TXL	2003343C1	3595621C1	1702	35	N/A		
KH3BC(+)	18	DKBL	GXL	3549418C1	3595620C1	1702	35	N/A		

Circuit Number	Gauge	Color	Insulation	Terminal / Splice Number	Connector Part number	Connector Number	Cavity	Seal/Sleeve	Lock 1	Lock 2
KH3BA(+)	18	DKBL	GXL	3549418C1	3595620C1	1702	35	N/A		
BF70EJ	18	OR	TXL	2003343C1	3595621C1	1702	36	N/A		
KH3BC(-)	18	GY	GXL	3549418C1	3595620C1	1702	36	N/A		
KH3BA(-)	18	GY	GXL	3549418C1	3595620C1	1702	36	N/A		
EH97FJ	16	VT	TXL	3574285C1	3595621C1	1702	37	N/A		
EH97FA	16	VT	TXL	3574285C1	3595621C1	1702	37	N/A		
KA13B	18	PK	TXL	3549418C1	3595620C1	1702	37	N/A		
KA13	18	PK	TXL	3549418C1	3595620C1	1702	37	N/A		
6F13F	16	PK	TXL	3574285C1	3595621C1	1702	38	N/A		
6D13F	16	PK	TXL	3574285C1	3595621C1	1702	38	N/A		
KL47T	18	GY	TXL	3549418C1	3595620C1	1702	38	N/A		
MN9ZAJ	18	GY	TXL	2003343C1	3595621C1	1702	40	N/A		
MN92AJ	18	GY	TXL	2003343C1	3595621C1	1702	40	N/A		
KH92B	18	TN	GXL	3549418C1	3595620C1	1702	40	N/A		
TG92B	18	TN	GXL	3549418C1	3595620C1	1702	40	N/A		
FE88AJ	18	LTGN	TXL	2003343C1	3595621C1	1702	41	N/A		
FE88AJ	18	LTGN	TXL	2003343C1	3595621C1	1702	41	N/A		
KN88A	18	VT	GXL	3549418C1	3595620C1	1702	41	N/A		
KN88A	16	LTGN	GXL	3549417C1	3595620C1	1702	41	N/A		
SJ92A18A	16	TN	GXL	3549417C1	3595620C1	1702	41	N/A		
3H77BAJ	18	LTGN	TXL	3574289C1	3595621C1	1702	42	N/A	3538636C1	
3H77BAJ	18	LTGN	TXL	3574289C1	3595621C1	1702	42	N/A		
YB77C	20	LTGN	TXL	3574277C1	3595620C1	1702	42	N/A		
YL77C	20	LTGN	TXL	3574277C1	3595620C1	1702	42	N/A		
YN77C	20	LTGN	TXL	3574277C1	3595620C1	1702	42	N/A		
3D5L(-)	20	GN	193	4062808C1	4062806C1	1776	7	N/A		
3M5L(-)	20	GN	193	4062808C1	4062806C1	1776	7	N/A		
9L5L(-)	20	GN	193	4062808C1	4062806C1	1776	7	N/A		
9V5L(-)	20	GN	193	4062808C1	4062806C1	1776	7	N/A		
JC5L(-)	20	GN	193	4062808C1	4062806C1	1776	7	N/A		
JD5L(-)	20	GN	193	4062808C1	4062806C1	1776	7	N/A		
LT5D(-)	20	GN	193	4062808C1	4062806C1	1776	7	N/A		
RD5L(-)	20	GN	193	4062808C1	4062806C1	1776	7	N/A		
RJ5L(-)	20	GN	193	4062808C1	4062806C1	1776	7	N/A		
RM5L(-)	20	GN	193	4062808C1	4062806C1	1776	7	N/A		
RS5L(-)	20	GN	193	4062808C1	4062806C1	1776	7	N/A		
SB5L(-)	20	GN	193	4062808C1	4062806C1	1776	7	N/A		
SC5L(-)	20	GN	193	4062808C1	4062806C1	1776	7	N/A		
2L5L(-)	20	GN	193	4062808C1	4062806C1	1776	7	N/A		
2W5L(-)	20	GN	193	4062808C1	4062806C1	1776	7	N/A		
2Y5L(-)	20	GN	193	4062808C1	4062806C1	1776	7	N/A		
2Z5L(-)	20	GN	193	4062808C1	4062806C1	1776	7	N/A		
3D5L(-)	20	GN	193	4062808C1	4062806C1	1776	7	N/A		
3E5L(-)	20	GN	193	4062808C1	4062806C1	1776	7	N/A		
3J5L(-)	20	GN	193	4062808C1	4062806C1	1776	7	N/A		
3M5L(-)	20	GN	193	4062808C1	4062806C1	1776	7	N/A		
3Z5L(-)	20	GN	193	4062808C1	4062806C1	1776	7	N/A		
4J5L(-)	20	GN	193	4062808C1	4062806C1	1776	7	N/A		
4N5L(-)	20	GN	193	4062808C1	4062806C1	1776	7	N/A		
9L5L(-)	20	GN	193	4062808C1	4062806C1	1776	7	N/A		
9V5L(-)	20	GN	193	4062808C1	4062806C1	1776	7	N/A		
9W5L(-)	20	GN	193	4062808C1	4062806C1	1776	7	N/A		

Circuit Number	Gauge	Color	Insulation	Terminal / Splice Number	Connector Part number	Connector Number	Cavity	Seal/Sleeve	Lock 1	Lock 2
JC5L(-)	20	GN	193	4062808C1	4062806C1	1776	7	N/A		
JD5L(-)	20	GN	193	4062808C1	4062806C1	1776	7	N/A		
LT5D(-)	20	GN	193	4062808C1	4062806C1	1776	7	N/A		
RD5L(-)	20	GN	193	4062808C1	4062806C1	1776	7	N/A		
RJ5L(-)	20	GN	193	4062808C1	4062806C1	1776	7	N/A		
RM5L(-)	20	GN	193	4062808C1	4062806C1	1776	7	N/A		
RR5L(-)	20	GN	193	4062808C1	4062806C1	1776	7	N/A		
RS5L(-)	20	GN	193	4062808C1	4062806C1	1776	7	N/A		
RX5L(-)	20	GN	193	4062808C1	4062806C1	1776	7	N/A		
SB5L(-)	20	GN	193	4062808C1	4062806C1	1776	7	N/A		
SC5L(-)	20	GN	193	4062808C1	4062806C1	1776	7	N/A		
LM971G	20	PK	TXL	4062808C1	4062806C1	1776	8	N/A		
LM971G	20	PK	TXL	4062808C1	4062806C1	1776	8	N/A		
LM97-G	20	WH	TXL	4062808C1	4062806C1	1776	9	N/A		
LM97-G	20	WH	TXL	4062808C1	4062806C1	1776	9	N/A		
3D5L(+)	20	YL	193	4062808C1	4062806C1	1776	15	N/A		
3M5L(+)	20	YL	193	4062808C1	4062806C1	1776	15	N/A		
9L5L(+)	20	YL	193	4062808C1	4062806C1	1776	15	N/A		
9V5L(+)	20	YL	193	4062808C1	4062806C1	1776	15	N/A		
JC5L(+)	20	YL	193	4062808C1	4062806C1	1776	15	N/A		
JD5L(+)	20	YL	193	4062808C1	4062806C1	1776	15	N/A		
LT5D(+)	20	YL	193	4062808C1	4062806C1	1776	15	N/A		
RD5L(+)	20	YL	193	4062808C1	4062806C1	1776	15	N/A		
RJ5L(+)	20	YL	193	4062808C1	4062806C1	1776	15	N/A		
RM5L(+)	20	YL	193	4062808C1	4062806C1	1776	15	N/A		
RS5L(+)	20	YL	193	4062808C1	4062806C1	1776	15	N/A		
SB5L(+)	20	YL	193	4062808C1	4062806C1	1776	15	N/A		
SC5L(+)	20	YL	193	4062808C1	4062806C1	1776	15	N/A		
2L5L(+)	20	YL	193	4062808C1	4062806C1	1776	15	N/A		
2W5L(+)	20	YL	193	4062808C1	4062806C1	1776	15	N/A		
2Y5L(+)	20	YL	193	4062808C1	4062806C1	1776	15	N/A		
2Z5L(+)	20	YL	193	4062808C1	4062806C1	1776	15	N/A		
3D5L(+)	20	YL	193	4062808C1	4062806C1	1776	15	N/A		
3E5L(+)	20	YL	193	4062808C1	4062806C1	1776	15	N/A		
3J5L(+)	20	YL	193	4062808C1	4062806C1	1776	15	N/A		
3M5L(+)	20	YL	193	4062808C1	4062806C1	1776	15	N/A		
3Z5L(+)	20	YL	193	4062808C1	4062806C1	1776	15	N/A		
4J5L(+)	20	YL	193	4062808C1	4062806C1	1776	15	N/A		
4N5L(+)	20	YL	193	4062808C1	4062806C1	1776	15	N/A		
9L5L(+)	20	YL	193	4062808C1	4062806C1	1776	15	N/A		
9V5L(+)	20	YL	193	4062808C1	4062806C1	1776	15	N/A		
9W5L(+)	20	YL	193	4062808C1	4062806C1	1776	15	N/A		
JC5L(+)	20	YL	193	4062808C1	4062806C1	1776	15	N/A		
JD5L(+)	20	YL	193	4062808C1	4062806C1	1776	15	N/A		
LT5D(+)	20	YL	193	4062808C1	4062806C1	1776	15	N/A		
RD5L(+)	20	YL	193	4062808C1	4062806C1	1776	15	N/A		
RJ5L(+)	20	YL	193	4062808C1	4062806C1	1776	15	N/A		
RM5L(+)	20	YL	193	4062808C1	4062806C1	1776	15	N/A		
RR5L(+)	20	YL	193	4062808C1	4062806C1	1776	15	N/A		
RS5L(+)	20	YL	193	4062808C1	4062806C1	1776	15	N/A		
RX5L(+)	20	YL	193	4062808C1	4062806C1	1776	15	N/A		
SB5L(+)	20	YL	193	4062808C1	4062806C1	1776	15	N/A		

Circuit Number	Gauge	Color	Insulation	Terminal / Splice Number	Connector Part number	Connector Number	Cavity	Seal/Sleeve	Lock 1	Lock 2
SC5L(+)	20	YL	193	4062808C1	4062806C1	1776	15	N/A		
LM97B	20	RD	TXL	4062808C1	4062806C1	1776	18	N/A		
LM97B	20	RD	TXL	4062808C1	4062806C1	1776	18	N/A		
[LM97A]	NONE	-	NON	V-TERM	PAS1(1)	1777	1	N/A		
[LM97A]	NONE	-	NON	V-TERM	PAS1(1)	1777	1	N/A		
[LM97A]	NONE	-	NON	V-TERM	PAS1(1)	1778	1	N/A		
[LM97A]	NONE	-	NON	V-TERM	PAS1(1)	1778	1	N/A		
AA56B	20	OR	TXL	3544883C1	3553649C1	1800	A1	N/A		
AA56B	20	OR	TXL	3544883C1	3553649C1	1800	A1	N/A		
AA57B	20	OR	TXL	3544883C1	3553649C1	1800	A2	N/A		
AA57B	20	OR	TXL	3544883C1	3553649C1	1800	A2	N/A		
AA87-GA	18	WH	TXL	3544876C1	3553649C1	1800	A3	N/A		
AA87-GA	18	WH	TXL	3544876C1	3553649C1	1800	A3	N/A		
AA9	18	GY	GXL	3544876C1	3553649C1	1800	A4	N/A		
AA9	18	GY	GXL	3544876C1	3553649C1	1800	A4	N/A		
AA87E	18	GY	TXL	3544876C1	3553649C1	1800	A5	N/A		
AA87E	18	GY	TXL	3544876C1	3553649C1	1800	A5	N/A		
GX94MN	18	GY	TXL	3544876C1	3553649C1	1800	A6	N/A		
GX94MN	18	GY	TXL	3544876C1	3553649C1	1800	A6	N/A		
AA52D	20	YL	TXL	3544883C1	3553649C1	1800	A7	N/A		
AA52D	20	YL	TXL	3544883C1	3553649C1	1800	A7	N/A		
AA102A	20	YL	TXL	3544883C1	3553649C1	1800	A8	N/A		
AA102A	20	YL	TXL	3544883C1	3553649C1	1800	A8	N/A		
AA82C	20	GY	TXL	3544883C1	3553649C1	1800	B1	N/A		
AA82C	20	GY	TXL	3544883C1	3553649C1	1800	B1	N/A		
AA85A	20	GY	TXL	3544883C1	3553649C1	1800	B10	N/A		
AA85A	20	GY	TXL	3544883C1	3553649C1	1800	B10	N/A		
AA150	18	LTGN	TXL	3544884C1	3553649C1	1800	B11	N/A		
AA150	18	LTGN	TXL	3544884C1	3553649C1	1800	B11	N/A		
MS86A	20	GY	GXL	3544883C1	3553649C1	1800	B12	N/A		
MS86A	20	GY	TXL	3544883C1	3553649C1	1800	B12	N/A		
AA40A	20	GY	TXL	3544883C1	3553649C1	1800	B2	N/A		
AA40A	20	GY	TXL	3544883C1	3553649C1	1800	B2	N/A		
AA6	20	GY	TXL	3544883C1	3553649C1	1800	B3	N/A		
AA6	20	GY	TXL	3544883C1	3553649C1	1800	B3	N/A		
AA97B	18	VT	TXL	3544884C1	3553649C1	1800	B4	N/A		
AA97B	18	VT	TXL	3544884C1	3553649C1	1800	B4	N/A		
AA99D	18	VT	TXL	3544884C1	3553649C1	1800	B5	N/A		
AA97MA	18	VT	TXL	3544884C1	3553649C1	1800	B5	N/A		
AA97N	18	VT	TXL	3544884C1	3553649C1	1800	B6	N/A		
AA97NA	18	VT	TXL	3544884C1	3553649C1	1800	B6	N/A		
AA44	20	GY	TXL	3544883C1	3553649C1	1800	B7	N/A		
AA44	20	GY	TXL	3544883C1	3553649C1	1800	B7	N/A		
2A54	16	BN	TXL	3544884C1	3553649C1	1800	B8	N/A		
ZX70A	20	OR	TXL	3544883C1	3553649C1	1800	B8	N/A		
ZS70A	20	OR	TXL	3544883C1	3553649C1	1800	B8	N/A		
AA70	20	OR	TXL	3544883C1	3553649C1	1800	B9	N/A		
AA70	20	OR	TXL	3544883C1	3553649C1	1800	B9	N/A		
AA82B	20	GY	TXL	3544883C1	3553649C1	1800	C1	N/A		
AA82B	20	GY	TXL	3544883C1	3553649C1	1800	C1	N/A		
XZ94SZ	16	GY	TXL	3544884C1	3553649C1	1800	C10	N/A		
XZ94SZ	16	GY	TXL	3544884C1	3553649C1	1800	C10	N/A		

Circuit Number	Gauge	Color	Insulation	Terminal / Splice Number	Connector Part number	Connector Number	Cavity	Seal/Sleeve	Lock 1	Lock 2
DT97A	18	VT	TXL	3544884C1	3553649C1	1800	C11	N/A		
DT97A	18	VT	TXL	3544884C1	3553649C1	1800	C11	N/A		
AA40	20	GY	TXL	3544883C1	3553649C1	1800	C12	N/A		
AA40	20	GY	TXL	3544883C1	3553649C1	1800	C12	N/A		
DV40B	18	GY	TXL	3544884C1	3553649C1	1800	C2	N/A		
DV40B	18	GY	TXL	3544884C1	3553649C1	1800	C2	N/A		
XZ94SV	16	GY	TXL	3544884C1	3553649C1	1800	C3	N/A		
XZ94SV	16	GY	TXL	3544884C1	3553649C1	1800	C3	N/A		
AA99B	18	VT	TXL	3544884C1	3553649C1	1800	C4	N/A		
AA99B	18	VT	TXL	3544884C1	3553649C1	1800	C4	N/A		
AA97C	18	VT	TXL	3544884C1	3553649C1	1800	C5	N/A		
AA97C	18	VT	TXL	3544884C1	3553649C1	1800	C5	N/A		
AA97M	18	VT	TXL	3544884C1	3553649C1	1800	C6	N/A		
AA99DA	18	VT	TXL	3544884C1	3553649C1	1800	C6	N/A		
AA82A	20	GY	TXL	3544883C1	3553649C1	1800	C9	N/A		
AA82A	20	GY	TXL	3544883C1	3553649C1	1800	C9	N/A		
CF70E	18	OR	TXL	3544884C1	3553649C1	1800	D1	N/A		
CG70E	18	OR	TXL	3544884C1	3553649C1	1800	D1	N/A		
BF70E	18	OR	TXL	3544884C1	3553649C1	1800	D1	N/A		
CF70E	18	OR	TXL	3544884C1	3553649C1	1800	D1	N/A		
CG70E	18	OR	TXL	3544884C1	3553649C1	1800	D1	N/A		
CF70D	18	GY	TXL	3544884C1	3553649C1	1800	D2	N/A		
CG70D	18	OR	TXL	3544884C1	3553649C1	1800	D2	N/A		
BF70D	18	OR	TXL	3544884C1	3553649C1	1800	D2	N/A		
CF70D	18	GY	TXL	3544884C1	3553649C1	1800	D2	N/A		
CG70D	18	OR	TXL	3544884C1	3553649C1	1800	D2	N/A		
AA62DD	18	DKBL	TXL	3544876C1	3553649C1	1800	D3	N/A		
AA62DD	18	DKBL	TXL	3544876C1	3553649C1	1800	D3	N/A		
GX94-GCC	18	WH	TXL	3544876C1	3553649C1	1800	D5	N/A		
XZ94SE	18	GY	TXL	3544876C1	3553649C1	1800	D5	N/A		
GX94-GCC	18	WH	TXL	3544876C1	3553649C1	1800	D5	N/A		
XZ94SE	18	GY	TXL	3544876C1	3553649C1	1800	D5	N/A		
GX94BY	18	GY	TXL	3544876C1	3553649C1	1800	D6	N/A		
XZ94SF	16	GY	TXL	3544876C1	3553649C1	1800	D6	N/A		
GX94BY	18	GY	TXL	3544876C1	3553649C1	1800	D6	N/A		
XZ94SF	16	GY	TXL	3544876C1	3553649C1	1800	D6	N/A		
NE17AC	18	PK	TXL	3544884C1	3553649C1	1800	D7	N/A		
NE17AC	18	PK	TXL	3544884C1	3553649C1	1800	D7	N/A		
DT17B	18	PK	TXL	3544884C1	3553649C1	1800	D8	N/A		
DT17B	18	PK	TXL	3544884C1	3553649C1	1800	D8	N/A		
BA56B	18	OR	TXL	3571717C1	3539212C1	1801	1	N/A		
BA57B	18	OR	TXL	3571717C1	3539212C1	1801	2	N/A		
BA52B	18	YL	TXL	3571717C1	3539212C1	1801	3	N/A		
BA102A	18	YL	TXL	3571717C1	3539212C1	1801	4	N/A		
BA82C	18	GY	TXL	3571717C1	3539212C1	1801	5	N/A	1661874C1	
BH87-G	18	WH	TXL	3571717C1	3539212C1	1801	6	N/A		
BJ11-GA	18	WH	GXL	3571717C1	3539212C1	1801	6	N/A		
BM87-G	18	WH	TXL	3571717C1	3539212C1	1801	6	N/A		
BN87-G	18	WH	TXL	3571717C1	3539212C1	1801	6	N/A		
BP87-G	18	WH	TXL	3571717C1	3539212C1	1801	6	N/A		
BR11-GA	18	WH	GXL	3571717C1	3539212C1	1801	6	N/A		
BH9D	18	GY	TXL	3571717C1	3539212C1	1801	7	N/A	4062807C1	

Circuit Number	Gauge	Color	Insulation	Terminal / Splice Number	Connector Part number	Connector Number	Cavity	Seal/Sleeve	Lock 1	Lock 2
BJ9D	18	GY	TXL	3571717C1	3539212C1	1801	7	N/A		
BM9D	18	GY	TXL	3571717C1	3539212C1	1801	7	N/A		
BN9D	18	GY	TXL	3571717C1	3539212C1	1801	7	N/A		
BP9D	18	GY	TXL	3571717C1	3539212C1	1801	7	N/A		
BR9D	18	GY	TXL	3571717C1	3539212C1	1801	7	N/A		
BA82A	18	GY	TXL	3571717C1	3539212C1	1801	8	N/A		
BA82B	18	GY	TXL	3571717C1	3539212C1	1801	11	N/A	1661264C1	
BA87E	18	GY	TXL	3571717C1	3539212C1	1801	12	N/A	1661892C1	
BH97	20	GY	TXL	3608497C1	3608496C1	1802	1	N/A	3573833C1	
BM97	20	GY	TXL	3608497C1	3608496C1	1802	1	N/A		
BN97	20	GY	TXL	3608497C1	3608496C1	1802	1	N/A		
BP97	20	GY	TXL	3608497C1	3608496C1	1802	1	N/A		
BH100	20	GY	TXL	3608497C1	3608496C1	1802	2	N/A		
BM100	20	GY	TXL	3608497C1	3608496C1	1802	2	N/A		
BN100	20	GY	TXL	3608497C1	3608496C1	1802	2	N/A		
BP100	20	GY	TXL	3608497C1	3608496C1	1802	2	N/A		
BH85A	20	GY	TXL	3608497C1	3608496C1	1802	3	N/A		
BM85A	20	GY	TXL	3608497C1	3608496C1	1802	3	N/A		
BN85A	20	GY	TXL	3608497C1	3608496C1	1802	3	N/A		
BP85A	20	GY	TXL	3608497C1	3608496C1	1802	3	N/A		
BH9C	18	GY	TXL	3608497C1	3608496C1	1802	4	N/A		
BM9C	18	GY	TXL	3608497C1	3608496C1	1802	4	N/A		
BN9C	18	GY	TXL	3608497C1	3608496C1	1802	4	N/A		
BP9C	18	GY	TXL	3608497C1	3608496C1	1802	4	N/A		
BH62DD	20	DKBL	TXL	3608497C1	3608496C1	1802	5	N/A		
BM62DD	20	DKBL	TXL	3608497C1	3608496C1	1802	5	N/A		
BN62DD	20	DKBL	TXL	3608497C1	3608496C1	1802	5	N/A		
BP62DD	20	DKBL	TXL	3608497C1	3608496C1	1802	5	N/A		
BH62-GDD	18	WH	TXL	3608497C1	3608496C1	1802	6	N/A	3768011C1	
BM62-GDD	18	WH	TXL	3608497C1	3608496C1	1802	6	N/A		
BN62-GDD	18	WH	TXL	3608497C1	3608496C1	1802	6	N/A		
BP62-GDD	18	WH	TXL	3608497C1	3608496C1	1802	6	N/A		
BH9E	18	GY	GXL	1651943C1	1678137C1	1803	A	N/A	3573833C1	
BJ9E	18	GY	GXL	1651943C1	1678137C1	1803	A	N/A		
BM9E	18	GY	GXL	1651943C1	1678137C1	1803	A	N/A		
BN9E	18	GY	GXL	1651943C1	1678137C1	1803	A	N/A		
BP9E	18	GY	GXL	1651943C1	1678137C1	1803	A	N/A		
BR9E	18	GY	GXL	1651943C1	1678137C1	1803	A	N/A		
BA6A	18	GY	GXL	1651943C1	1678137C1	1803	B	N/A		
BA40	18	GY	GXL	1651943C1	1678137C1	1803	C	N/A		
BH9F	18	GY	GXL	1651943C1	1678137C1	1804	A	N/A		
BJ9F	18	GY	GXL	1651943C1	1678137C1	1804	A	N/A		
BM9F	18	GY	GXL	1651943C1	1678137C1	1804	A	N/A		
BN9F	18	GY	GXL	1651943C1	1678137C1	1804	A	N/A		
BP9F	18	GY	GXL	1651943C1	1678137C1	1804	A	N/A		
BR9F	18	GY	GXL	1651943C1	1678137C1	1804	A	N/A		
BA6B	18	GY	GXL	1651943C1	1678137C1	1804	B	N/A		
BA40A	18	GY	GXL	1651943C1	1678137C1	1804	C	N/A		
BH9H	18	GY	GXL	1651943C1	1678137C1	1805	A	N/A	4100116C1	
BJ9H	18	GY	GXL	1651943C1	1678137C1	1805	A	N/A		
BM9H	18	GY	GXL	1651943C1	1678137C1	1805	A	N/A		
BN9H	18	GY	GXL	1651943C1	1678137C1	1805	A	N/A		

Circuit Number	Gauge	Color	Insulation	Terminal / Splice Number	Connector Part number	Connector Number	Cavity	Seal/Sleeve	Lock 1	Lock 2
BP9H	18	GY	GXL	1651943C1	1678137C1	1805	A	N/A		
BR9H	18	GY	GXL	1651943C1	1678137C1	1805	A	N/A		
BA6C	18	GY	GXL	1651943C1	1678137C1	1805	B	N/A		
BA40B	18	GY	GXL	1651943C1	1678137C1	1805	C	N/A		
BA70	18	OR	GXL	1661875C1	1661777C1	1806	C	N/A		
BH9K	18	GY	GXL	1661875C1	1661777C1	1806	D	N/A		
BJ9K	18	GY	GXL	1661875C1	1661777C1	1806	D	N/A		
BM9K	18	GY	GXL	1661875C1	1661777C1	1806	D	N/A		
BN9K	18	GY	GXL	1661875C1	1661777C1	1806	D	N/A		
BP9K	18	GY	GXL	1661875C1	1661777C1	1806	D	N/A		
BR9K	18	GY	GXL	1661875C1	1661777C1	1806	D	N/A		
BJ97	20	GY	TXL	3544254C1	3547870C1	1807	A	N/A		
BR97	20	GY	TXL	3544254C1	3547870C1	1807	A	N/A		
BJ85A	20	GY	TXL	3544254C1	3547870C1	1807	B	N/A		
BR85A	20	GY	TXL	3544254C1	3547870C1	1807	B	N/A		
BJ62DD	20	DKBL	TXL	3544254C1	3547870C1	1807	C	N/A		
BR62DD	20	DKBL	TXL	3544254C1	3547870C1	1807	C	N/A		
BJ9C	18	GY	TXL	1661261C1	3547870C1	1807	D	N/A		
BR9C	18	GY	TXL	1661261C1	3547870C1	1807	D	N/A		
BA44	18	GY	GXL	1661875C1	1661777C1	1808	C	N/A		
BH9J	18	GY	GXL	1661875C1	1661777C1	1808	D	N/A	3756746C1	
BJ9J	18	GY	GXL	1661875C1	1661777C1	1808	D	N/A		
BM9J	18	GY	GXL	1661875C1	1661777C1	1808	D	N/A		
BN9J	18	GY	GXL	1661875C1	1661777C1	1808	D	N/A		
BP9J	18	GY	GXL	1661875C1	1661777C1	1808	D	N/A		
BR9J	18	GY	GXL	1661875C1	1661777C1	1808	D	N/A		
BD99B	18	VT/WH	GXL	2036586C1	1673744C1	1809	1	N/A		
BD97B	18	VT	GXL	2036586C1	1673744C1	1809	2	N/A	2011364C1	
BD97C	18	VT/BK	GXL	2036586C1	1673744C1	1809	3	N/A		
BD99D	18	VT/WH	GXL	2036586C1	1673744C1	1809	4	N/A		
BD97N	18	VT	GXL	2036586C1	1673744C1	1809	5	N/A	3540614C1	
BD97M	18	VT/BK	GXL	2036586C1	1673744C1	1809	6	N/A	3534158C1	
BC70A	18	OR	GXL	1661875C1	1661777C1	1810	C	N/A		
BM70A	18	OR	GXL	1661875C1	1661777C1	1810	C	N/A		
BN70A	18	OR	GXL	1661875C1	1661777C1	1810	C	N/A		
BC9N	18	GY	GXL	1661875C1	1661777C1	1810	D	N/A	2006503C1	
BM9N	18	GY	GXL	1661875C1	1661777C1	1810	D	N/A		
BN9N	18	GY	GXL	1661875C1	1661777C1	1810	D	N/A		
BN17A	18	PK	GXL	1667742C1	3540757C1	1811	A	N/A		
BP17A	18	PK	GXL	1667742C1	3540757C1	1811	A	N/A		
BR17A	18	PK	GXL	1667742C1	3540757C1	1811	A	N/A		
BN17AA	18	PK	GXL	1667742C1	3540757C1	1811	B	N/A		
BP17AA	18	PK	GXL	1667742C1	3540757C1	1811	B	N/A		
BR17AA	18	PK	GXL	1667742C1	3540757C1	1811	B	N/A		
BN97A	18	VT	GXL	1667742C1	3540757C1	1811	C	N/A		
BP97A	18	VT	GXL	1667742C1	3540757C1	1811	C	N/A		
BR97A	18	VT	GXL	1667742C1	3540757C1	1811	C	N/A		
BN9M	18	GY	GXL	1667742C1	3540757C1	1811	D	N/A		
BP9M	18	GY	GXL	1667742C1	3540757C1	1811	D	N/A		
BR9M	18	GY	GXL	1667742C1	3540757C1	1811	D	N/A		
BB70E	18	OR	GXL	1661875C1	1661777C1	1812	C	N/A		
BB70D	18	GY	GXL	1661875C1	1661777C1	1812	D	N/A	1667771C1	

Circuit Number	Gauge	Color	Insulation	Terminal / Splice Number	Connector Part number	Connector Number	Cavity	Seal/Sleeve	Lock 1	Lock 2
GE44G	18	GY	TXL	1661875C1	1661777C1	1814	C	3568570C1		
GE44A	20	GY	TXL	1661875C1	1661777C1	1814	D	3568570C1		
BG94SN	20	GY	TXL	3534481C1	1667529C1	1820	A	N/A	3601839C1	
BG94SP	20	GY	TXL	3534481C1	1667529C1	1820	B	N/A		
BG94SR	20	GY	TXL	3534481C1	1667529C1	1820	C	N/A	3503599C1	
BG94SS	20	GY	TXL	3534481C1	1667529C1	1820	D	N/A	3700749C1	
BE94SC	20	GY	TXL	3601801C1	3601800C1	1821	1	N/A	3553650C1	
BE94SA	20	GY	TXL	3601801C1	3601800C1	1821	2	N/A	3545579C1	
BE94SB	20	GY	TXL	3601801C1	3601800C1	1821	3	N/A	3549120C1	
BE94SD	20	GY	TXL	3601801C1	3601800C1	1821	4	N/A	3562309C1	
BE94SZA	18	GY	GXL	1651943C1	1678137C1	1822	A	N/A	1618846C1	1618847C1
BE94SVA	18	GY	GXL	1651943C1	1678137C1	1822	B	N/A	3562309C1	3562309C1
BE94SE	18	GY	GXL	1651943C1	1678137C1	1822	C	N/A	1661874C1	1661874C1
BE94SZB	18	GY	GXL	1651943C1	1678137C1	1823	A	N/A	3573833C1	
BE94SVB	18	GY	GXL	1651943C1	1678137C1	1823	B	N/A		
BE94SF	18	GY	GXL	1651943C1	1678137C1	1823	C	N/A		
KJ95W	20	TN	GXL	3536865C1	3590390C1	1874	1	3536867C1		
VA95W	18	TN	TXL	3561584C1	3590390C1	1874	1	3536867C1		
KJ95-GF	20	WH	GXL	3536865C1	3590390C1	1874	2	3536867C1		
VA95-GF	18	WH	TXL	3561584C1	3590390C1	1874	2	3536867C1		
CB84A	14	LTGN	TXL	3534165C1	3613000C1	1901	A	N/A		
CB84A	14	LTGN	TXL	3534165C1	3613000C1	1901	A	N/A		
CB84-GBB	14	WH	TXL	3534165C1	3613000C1	1901	C	N/A		
CB84-GBB	14	WH	TXL	3534165C1	3613000C1	1901	C	N/A		
AD86C	14	LTGN	TXL	3566715C1	1661196C1	1902	A	N/A		
AE86C1	14	LTGN	TXL	3566715C1	1661196C1	1902	A	N/A		
AD86C	14	LTGN	TXL	3566715C1	1661196C1	1902	A	N/A		
AE86C1	14	LTGN	TXL	3566715C1	1661196C1	1902	A	N/A		
AD11-GCC	14	WH	TXL	3566715C1	1661196C1	1902	B	N/A		
AE11-GCD	14	WH	TXL	3566715C1	1661196C1	1902	B	N/A		
AD11-GCC	14	WH	TXL	3566715C1	1661196C1	1902	B	N/A		
AE11-GCD	14	WH	TXL	3566715C1	1661196C1	1902	B	N/A		
CA84	14	LTGN	TXL	3534165C1	4094648C1	1903	A	N/A		
CB84	14	LTGN	TXL	3534165C1	4094648C1	1903	A	N/A		
CL84A	14	LTGN	TXL	3534165C1	4094648C1	1903	A	N/A		
CA84	14	LTGN	TXL	3534165C1	4094648C1	1903	A	N/A		
CB84	14	LTGN	TXL	3534165C1	4094648C1	1903	A	N/A		
CL84A	14	LTGN	TXL	3534165C1	4094648C1	1903	A	N/A		
CA84-GAF	14	WH	TXL	3534165C1	4094648C1	1903	C	N/A		
CB84-GAF	14	WH	TXL	3534165C1	4094648C1	1903	C	N/A		
CL84-GAF	14	WH	TXL	3534165C1	4094648C1	1903	C	N/A		
CA84-GAF	14	WH	TXL	3534165C1	4094648C1	1903	C	N/A		
CB84-GAF	14	WH	TXL	3534165C1	4094648C1	1903	C	N/A		
CL84-GAF	14	WH	TXL	3534165C1	4094648C1	1903	C	N/A		
CA11-GUA	20	WH	TXL	4081932C1	3768147C1	1904	1	N/A		
CB11-GUA	20	WH	TXL	4081932C1	3768147C1	1904	1	N/A		
CL11-GUA	20	WH	TXL	4081932C1	3768147C1	1904	1	N/A		
CA11-GUA	20	WH	TXL	3598294C1	3768147C1	1904	1	N/A		
CB11-GUA	20	WH	TXL	3598294C1	3768147C1	1904	1	N/A		
CL11-GUA	20	WH	TXL	3598294C1	3768147C1	1904	1	N/A		
CA13UA	20	PK	TXL	4081932C1	3768147C1	1904	2	N/A		
CB13UA	20	PK	TXL	4081932C1	3768147C1	1904	2	N/A		

Circuit Number	Gauge	Color	Insulation	Terminal / Splice Number	Connector Part number	Connector Number	Cavity	Seal/Sleeve	Lock 1	Lock 2
CL13UA	20	PK	TXL	4081932C1	3768147C1	1904	2	N/A		
CA13UA	20	PK	TXL	3598294C1	3768147C1	1904	2	N/A		
CB13UA	20	PK	TXL	3598294C1	3768147C1	1904	2	N/A		
CL13UA	20	PK	TXL	3598294C1	3768147C1	1904	2	N/A		
CB11-GUB	20	WH	TXL	4081932C1	3768147C1	1905	1	N/A		
CB11-GUB	20	WH	TXL	3598294C1	3768147C1	1905	1	N/A		
CB13UB	20	PK	TXL	4081932C1	3768147C1	1905	2	N/A		
CB13UB	20	PK	TXL	3598294C1	3768147C1	1905	2	N/A		
CW58C	16	BN	TXL	1661262C	1661891C1	1906	A	N/A		
CW58C	16	BN	TXL	1661262C	1661891C1	1906	A	N/A		
CW58-GBG	16	WH	TXL	1661262C1	1661891C1	1906	B	N/A		
CW58-GBG	16	WH	TXL	1661262C1	1661891C1	1906	B	N/A		
EL63JA	18	DKBL	TXL	1661261C1	1661259C1	1907	A	N/A		
MP63JA	18	DKBL	TXL	1661261C1	1661259C1	1907	A	N/A		
EL63JA	18	DKBL	TXL	1661261C1	1661259C1	1907	A	N/A		
MP63JA	18	DKBL	TXL	1661261C1	1661259C1	1907	A	N/A		
BC63-GAJ	18	WH	TXL	1661261C1	1661259C1	1907	B	N/A		
BC63-GAJ	18	WH	TXL	1661261C1	1661259C1	1907	B	N/A		
CT86H	18	LTGN	TXL	1661212C1	2005836C1	1916	A	N/A		
MB86H	18	LTGN	TXL	1661212C1	2005836C1	1916	A	N/A		
CT86H	18	LTGN	TXL	1661212C1	2005836C1	1916	A	N/A		
MB86H	18	LTGN	TXL	1661212C1	2005836C1	1916	A	N/A		
CT86J	18	LTGN	TXL	1661212C1	2005836C1	1916	B	N/A		
MB86J	18	LTGN	TXL	1661212C1	2005836C1	1916	B	N/A		
CT86J	18	LTGN	TXL	1661212C1	2005836C1	1916	B	N/A		
MB86J	18	LTGN	TXL	1661212C1	2005836C1	1916	B	N/A		
CT86HA	18	LTGN	TXL	1661212C1	2005836C1	1916	C	N/A		
MB86HA	18	LTGN	TXL	1661212C1	2005836C1	1916	C	N/A		
CT86HA	18	LTGN	TXL	1661212C1	2005836C1	1916	C	N/A		
MB86HA	18	LTGN	TXL	1661212C1	2005836C1	1916	C	N/A		
CT86JA	18	LTGN	TXL	1661212C1	2005836C1	1916	D	N/A		
MB86JA	18	LTGN	TXL	1661212C1	2005836C1	1916	D	N/A		
CT86JA	18	LTGN	TXL	1661212C1	2005836C1	1916	D	N/A		
MB86JA	18	LTGN	TXL	1661212C1	2005836C1	1916	D	N/A		
CT86-GD1	18	WH	TXL	1661212C1	2005836C1	1916	E	N/A		
MB86-GD1	18	WH	TXL	1661212C1	2005836C1	1916	E	N/A		
CT86-GD1	18	WH	TXL	1661212C1	2005836C1	1916	E	N/A		
MB86-GD1	18	WH	TXL	1661212C1	2005836C1	1916	E	N/A		
CT86HB	18	LTGN	TXL	1661212C1	2005836C1	1916	F	N/A		
MB86HB	18	LTGN	TXL	1661212C1	2005836C1	1916	F	N/A		
CT86HB	18	LTGN	TXL	1661212C1	2005836C1	1916	F	N/A		
MB86HB	18	LTGN	TXL	1661212C1	2005836C1	1916	F	N/A		
CT86JB	18	LTGN	TXL	1661212C1	2005836C1	1916	G	N/A		
MB86JB	18	LTGN	TXL	1661212C1	2005836C1	1916	G	N/A		
CT86JB	18	LTGN	TXL	1661212C1	2005836C1	1916	G	N/A		
MB86JB	18	LTGN	TXL	1661212C1	2005836C1	1916	G	N/A		
CT86RCD	18	LTGN	TXL	1661212C1	1661197C1	1917	A	N/A		
MB86RCD	18	LTGN	TXL	1661212C1	1661197C1	1917	A	N/A		
CT86RCD	18	LTGN	TXL	1661212C1	1661197C1	1917	A	N/A		
MB86RCD	18	LTGN	TXL	1661212C1	1661197C1	1917	A	N/A		
CT86-GD2	18	WH	TXL	1661212C1	1661197C1	1917	B	N/A		
MB86-GD2	18	WH	TXL	1661212C1	1661197C1	1917	B	N/A		

Circuit Number	Gauge	Color	Insulation	Terminal / Splice Number	Connector Part number	Connector Number	Cavity	Seal/Sleeve	Lock 1	Lock 2
CT86-GD2	18	WH	TXL	1661212C1	1661197C1	1917	B	N/A		
MB86-GD2	18	WH	TXL	1661212C1	1661197C1	1917	B	N/A		
CT14ED	18	RD	TXL	1661212C1	1661199C1	1918	A	N/A		
CT14ED	18	RD	TXL	1661212C1	1661199C1	1918	A	N/A		
CT13EE	18	PK	TXL	1661212C1	1661199C1	1918	B	N/A		
CT13EE	18	PK	TXL	1661212C1	1661199C1	1918	B	N/A		
CT11-GBE	16	WH	TXL	1661212C1	1661199C1	1918	C	N/A		
CT11-GBE	16	WH	TXL	1661212C1	1661199C1	1918	C	N/A		
CT86RCD	18	LTGN	TXL	1661212C1	2005836C1	1919	A	N/A		
CT86RCD	18	LTGN	TXL	1661212C1	2005836C1	1919	A	N/A		
CT11-GMW	20	WH	TXL	3539945C1	2005836C1	1919	B	N/A		
CT11-GMW	20	WH	TXL	3539945C1	2005836C1	1919	B	N/A		
CT3BD(+)	18	DKBL	TXL	1661212C1	2005836C1	1919	C	N/A		
CT3BD(+)	18	DKBL	TXL	1661212C1	2005836C1	1919	C	N/A		
CT3BD(-)	18	GY	TXL	1661212C1	2005836C1	1919	D	N/A		
CT3BD(-)	18	GY	TXL	1661212C1	2005836C1	1919	D	N/A		
CT86-GND	18	WH	TXL	1661212C1	2005836C1	1919	E	N/A		
CT86-GND	18	WH	TXL	1661212C1	2005836C1	1919	E	N/A		
CT86HA	18	LTGN	TXL	1661212C1	2005836C1	1919	F	N/A		
CT86HA	18	LTGN	TXL	1661212C1	2005836C1	1919	F	N/A		
CT86JA	18	LTGN	TXL	1661212C1	2005836C1	1919	G	N/A		
CT86JA	18	LTGN	TXL	1661212C1	2005836C1	1919	G	N/A		
MJ3BD(+)	18	DKBL	TXL	1661875C1	2011340C1	1920	A	3568570C1		
MJ3BD(+)	18	DKBL	TXL	1661875C1	2011340C1	1920	A	3568570C1		
MJ3BD(-)	18	GY	TXL	1661875C1	2011340C1	1920	B	3568570C1		
MJ3BD(-)	18	GY	TXL	1661875C1	2011340C1	1920	B	3568570C1		
CK14ED	18	RD	TXL	1661875C1	2011340C1	1920	C	3568570C1		
CK14ED	18	RD	TXL	1661875C1	2011340C1	1920	C	3568570C1		
CK11-GBE	18	WH	TXL	1661875C1	2011340C1	1920	D	3568570C1		
CK11-GBE	18	WH	TXL	1661875C1	2011340C1	1920	D	3568570C1		
CK13EE	18	PK	TXL	1661875C1	2011340C1	1920	E	3568570C1		
CK13EE	18	PK	TXL	1661875C1	2011340C1	1920	E	3568570C1		
MJ11-GMW	20	WH	TXL	1661875C1	2011340C1	1920	F	3568570C1		
MJ11-GMW	20	WH	GXL	1661875C1	2011340C1	1920	F	1661872C1		
CN98J	18	BK	TXL	587578C1	587565C91	1921	A	3517771C1		
CN98J	18	BK	TXL	587578C1	587565C91	1921	A	3517771C1		
ZY98-GBE	18	WH	TXL	1661262C1	1661260C1	1924	A	N/A		
ZY98-GBE	18	WH	TXL	1661262C1	1661260C1	1924	A	N/A		
ZY98J	18	BK	TXL	1661262C1	1661260C1	1924	B	N/A		
ZY98J	18	BK	TXL	1661262C1	1661260C1	1924	B	N/A		
HC105-GAP	18	WH	TXL	587578C1	587567C91	1925	A	N/A		
HC105-GAP	18	WH	TXL	587578C1	587567C91	1925	A	3517771C1		
HC105	18	LTGN	TXL	587578C1	587567C91	1925	B	N/A		
HC105	18	LTGN	TXL	587578C1	587567C91	1925	B	3517771C1		
5E13BA	18	PK	TXL	1661208C1	3544677C1	1926	A	N/A		
5E13BA	18	PK	TXL	1661208C1	3544677C1	1926	A	N/A		
5E11-GAR	18	WH	TXL	1661208C1	3544677C1	1926	B	N/A		
5E11-GAR	18	WH	TXL	1661208C1	3544677C1	1926	B	N/A		
5E5V(+)	18	YL	TXL	1661208C1	3544677C1	1926	C	N/A		
5E5V(+)	18	YL	TXL	1661208C1	3544677C1	1926	C	N/A		
5E5V(-)	18	GN	TXL	1661208C1	3544677C1	1926	D	N/A		
5E5V(-)	18	GN	TXL	1661208C1	3544677C1	1926	D	N/A		

Circuit Number	Gauge	Color	Insulation	Terminal / Splice Number	Connector Part number	Connector Number	Cavity	Seal/Sleeve	Lock 1	Lock 2
5.00E+179	18	WH	TXL	1661208C1	3544677C1	1926	E	N/A		
5.00E+179	18	WH	TXL	1661208C1	3544677C1	1926	E	N/A		
EW11-GR	14	WH	TXL	2034787C1	3572899C1	1930	2	N/A		
EW11-GR	14	WH	TXL	1680205C1	3572899C1	1930	2	N/A		
EW5E(+)	18	YL	TXL	1680205C1	3572899C1	1930	3	N/A		
EW5E(+)	18	YL	TXL	3757932C1	3572899C1	1930	3	N/A		
EW5E(-)	18	GN	TXL	1680205C1	3572899C1	1930	4	N/A		
EW5E(-)	18	GN	TXL	3757932C1	3572899C1	1930	4	N/A		
EW20	16	LTGN	GXL	1680205C1	3572899C1	1930	6	N/A		
EW20	16	LTGN	GXL	1680205C1	3572899C1	1930	6	N/A		
DW11-GZ	16	WH	TXL	3545087C1	4105318C1	1932	2	N/A		
DW11-GZ	16	WH	TXL	3545087C1	4105318C1	1932	2	N/A		
DW13Z	16	PK	TXL	3545087C1	4105318C1	1932	3	N/A		
DW13Z	16	PK	TXL	3545087C1	4105318C1	1932	3	N/A		
DW14Z	16	RD	TXL	3545087C1	4105318C1	1932	4	N/A		
DW14Z	16	RD	TXL	3545087C1	4105318C1	1932	4	N/A		
DL14ED	18	RD	GXL	1661875C1	2011340C1	1939	C	1661872C1		
DL14ED	18	RD	GXL	1661875C1	2011340C1	1939	C	1661872C1		
DL11-GBH	18	WH	TXL	1661875C1	2011340C1	1939	D	3568570C1		
DL11-GBH	18	WH	TXL	1661875C1	2011340C1	1939	D	3568570C1		
DL13EE	18	PK	TXL	1661875C1	2011340C1	1939	E	3568570C1		
DL13EE	18	PK	TXL	1661875C1	2011340C1	1939	E	3568570C1		
6L11COG3	18	WH	TXL	1661262C1	1661891C1	1942	A	N/A		
6L11COG3	18	WH	TXL	1661262C1	1661891C1	1942	A	N/A		
6L232-T2	20	YL	TXL	3534481C1	1661891C1	1942	B	N/A		
6L232-T2	20	YL	TXL	3534481C1	1661891C1	1942	B	N/A		
6L232-R2	20	LTGN	TXL	3534481C1	1661891C1	1942	C	N/A		
6L232-R2	20	LTGN	TXL	3534481C1	1661891C1	1942	C	N/A		
6A11COG2	18	WH	TXL	1661262C1	1661891C1	1943	A	N/A		
6A11COG2	18	WH	TXL	1661262C1	1661891C1	1943	A	N/A		
6A232-T1	20	YL	TXL	3534481C1	1661891C1	1943	B	N/A		
6A232-T1	20	YL	TXL	3534481C1	1661891C1	1943	B	N/A		
6A232-R1	20	LTGN	TXL	3534481C1	1661891C1	1943	C	N/A		
6A232-R1	20	LTGN	TXL	3534481C1	1661891C1	1943	C	N/A		
6W232-R3	20	LTGN	TXL	3613771C1	6114576C1	1944	1	N/A		
6W232-R3	20	LTGN	TXL	3613771C1	6114576C1	1944	1	N/A		
FM5UA(+)	18	YL	TXL	3613771C1	6114576C1	1944	2	N/A		
LB5UA(+)	18	YL	TXL	3613771C1	6114576C1	1944	2	N/A		
LW5F(+)	18	YL	TXL	3613771C1	6114576C1	1944	2	N/A		
SK5J(+)	18	YL	TXL	3613771C1	6114576C1	1944	2	N/A		
ZK5A(+)	18	YL	TXL	3613771C1	6114576C1	1944	2	N/A		
2H5PJ(+)	18	YL	TXL	3613771C1	6114576C1	1944	2	N/A		
2J5F(+)	18	YL	TXL	3613771C1	6114576C1	1944	2	N/A		
2L5T(+)	18	YL	TXL	3613771C1	6114576C1	1944	2	N/A		
2M5K(+)	18	YL	TXL	3613771C1	6114576C1	1944	2	N/A		
2W5K(+)	18	YL	TXL	3613771C1	6114576C1	1944	2	N/A		
2Y5K(+)	18	YL	TXL	3613771C1	6114576C1	1944	2	N/A		
2Z5T(+)	18	YL	TXL	3613771C1	6114576C1	1944	2	N/A		
3C5M(+)	18	YL	TXL	3613771C1	6114576C1	1944	2	N/A		
3E5PJ(+)	18	YL	TXL	3613771C1	6114576C1	1944	2	N/A		
3J5V(+)	18	YL	TXL	3613771C1	6114576C1	1944	2	N/A		
3R5L(+)	18	YL	TXL	3613771C1	6114576C1	1944	2	N/A		

Circuit Number	Gauge	Color	Insulation	Terminal / Splice Number	Connector Part number	Connector Number	Cavity	Seal/Sleeve	Lock 1	Lock 2
3U5F(+)	18	YL	TXL	3613771C1	6114576C1	1944	2	N/A		
3W5V(+)	18	YL	TXL	3613771C1	6114576C1	1944	2	N/A		
4E5F(+)	18	YL	TXL	3613771C1	6114576C1	1944	2	N/A		
4J5T(+)	18	YL	TXL	3613771C1	6114576C1	1944	2	N/A		
4L5K(+)	18	YL	TXL	3613771C1	6114576C1	1944	2	N/A		
4N5K(+)	18	YL	TXL	3613771C1	6114576C1	1944	2	N/A		
LB5UA(+)	18	YL	TXL	3613771C1	6114576C1	1944	2	N/A		
LW5FE(+)	18	YL	TXL	3613771C1	6114576C1	1944	2	N/A		
SK5J(+)	18	YL	TXL	3613771C1	6114576C1	1944	2	N/A		
ZR5A(+)	18	YL	TXL	3613771C1	6114576C1	1944	2	N/A		
VC5R(+)	18	YL	TXL	3613771C1	6114576C1	1944	4	N/A		
VD5R(+)	18	YL	TXL	3613771C1	6114576C1	1944	4	N/A		
VE5R(+)	18	YL	TXL	3613771C1	6114576C1	1944	4	N/A		
VF5R(+)	18	YL	TXL	3613771C1	6114576C1	1944	4	N/A		
VC5PJ(+)	18	YL	TXL	3613771C1	6114576C1	1944	4	N/A		
VD5PJ(+)	18	YL	TXL	3613771C1	6114576C1	1944	4	N/A		
VE5PJ(+)	18	YL	TXL	3613771C1	6114576C1	1944	4	N/A		
VG5PJ(+)	18	YL	TXL	3613771C1	6114576C1	1944	4	N/A		
KZ98J	18	BK	TXL	3613771C1	6114576C1	1944	5	N/A		
FA13EF	16	RD	TXL	3708816C1	6114576C1	1944	7	N/A		
ZK13A	18	PK	TXL	3613771C1	6114576C1	1944	7	N/A		
FA13EF	16	RD	TXL	3708816C1	6114576C1	1944	7	N/A		
ZR13A	18	PK	TXL	3613771C1	6114576C1	1944	7	N/A		
FA11-GBG	16	WH	TXL	3708816C1	6114576C1	1944	8	N/A		
ZK11-G	20	WH	TXL	3613771C1	6114576C1	1944	8	N/A		
FA11-GBG	16	WH	TXL	3708816C1	6114576C1	1944	8	N/A		
ZR11-G	20	WH	TXL	3613771C1	6114576C1	1944	8	N/A		
FM5UA(-)	18	GN	TXL	3613771C1	6114576C1	1944	9	N/A		
LB5UA(-)	18	GN	TXL	3613771C1	6114576C1	1944	9	N/A		
LW5F(-)	18	GN	TXL	3613771C1	6114576C1	1944	9	N/A		
SK5J(-)	18	GN	TXL	3613771C1	6114576C1	1944	9	N/A		
ZK5A(-)	18	GN	TXL	3613771C1	6114576C1	1944	9	N/A		
2H5PJ(-)	18	GN	TXL	3613771C1	6114576C1	1944	9	N/A		
2J5F(-)	18	GN	TXL	3613771C1	6114576C1	1944	9	N/A		
2L5T(-)	18	GN	TXL	3613771C1	6114576C1	1944	9	N/A		
2M5K(-)	18	GN	TXL	3613771C1	6114576C1	1944	9	N/A		
2W5K(-)	18	GN	TXL	3613771C1	6114576C1	1944	9	N/A		
2Y5K(-)	18	GN	TXL	3613771C1	6114576C1	1944	9	N/A		
2Z5T(-)	18	GN	TXL	3613771C1	6114576C1	1944	9	N/A		
3C5M(-)	18	GN	TXL	3613771C1	6114576C1	1944	9	N/A		
3E5PJ(-)	18	GN	TXL	3613771C1	6114576C1	1944	9	N/A		
3J5V(-)	18	GN	TXL	3613771C1	6114576C1	1944	9	N/A		
3R5L(-)	18	GN	TXL	3613771C1	6114576C1	1944	9	N/A		
3U5F(-)	18	GN	TXL	3613771C1	6114576C1	1944	9	N/A		
3W5V(-)	18	GN	TXL	3613771C1	6114576C1	1944	9	N/A		
4E5F(-)	18	GN	TXL	3613771C1	6114576C1	1944	9	N/A		
4J5T(-)	18	GN	TXL	3613771C1	6114576C1	1944	9	N/A		
4L5K(-)	18	GN	TXL	3613771C1	6114576C1	1944	9	N/A		
4N5K(-)	18	GN	TXL	3613771C1	6114576C1	1944	9	N/A		
LB5UA(-)	18	GN	TXL	3613771C1	6114576C1	1944	9	N/A		
LW5FE(-)	18	GN	TXL	3613771C1	6114576C1	1944	9	N/A		
SK5J(-)	18	GN	TXL	3613771C1	6114576C1	1944	9	N/A		

Circuit Number	Gauge	Color	Insulation	Terminal / Splice Number	Connector Part number	Connector Number	Cavity	Seal/Sleeve	Lock 1	Lock 2
ZR5A(-)	18	GN	TXL	3613771C1	6114576C1	1944	9	N/A		
6W232-T3	20	YL	TXL	3613771C1	6114576C1	1944	10	N/A		
6W232-T3	20	YL	TXL	3613771C1	6114576C1	1944	10	N/A		
VC5R(-)	18	GN	TXL	3613771C1	6114576C1	1944	11	N/A		
VD5R(-)	18	GN	TXL	3613771C1	6114576C1	1944	11	N/A		
VE5R(-)	18	GN	TXL	3613771C1	6114576C1	1944	11	N/A		
VF5R(-)	18	GN	TXL	3613771C1	6114576C1	1944	11	N/A		
VC5PJ(-)	18	GN	TXL	3613771C1	6114576C1	1944	11	N/A		
VD5PJ(-)	18	GN	TXL	3613771C1	6114576C1	1944	11	N/A		
VE5PJ(-)	18	GN	TXL	3613771C1	6114576C1	1944	11	N/A		
VG5PJ(-)	18	GN	TXL	3613771C1	6114576C1	1944	11	N/A		
KZ98-GBC	18	WH	TXL	3613771C1	6114576C1	1944	12	N/A		
6W11COG4	18	WH	TXL	3613771C1	6114576C1	1944	13	N/A		
6W11COG4	18	WH	TXL	3613771C1	6114576C1	1944	13	N/A		
FA14EG	16	RD	TXL	3708816C1	6114576C1	1944	14	N/A		
ZK14A	18	RD	TXL	3613771C1	6114576C1	1944	14	N/A		
FA14EG	16	RD	TXL	3708816C1	6114576C1	1944	14	N/A		
ZR14A	18	RD	TXL	3613771C1	6114576C1	1944	14	N/A		
6A11COG2	18	WH	TXL	1661261C1	1661889C1	1945	A	N/A		
6L11COG3	18	WH	TXL	1661261C1	1661889C1	1945	A	N/A		
6A11COG2	18	WH	TXL	1661261C1	1661889C1	1945	A	N/A		
6L11COG3	18	WH	TXL	1661261C1	1661889C1	1945	A	N/A		
6A232-T1	20	YL	TXL	3544254C1	1661889C1	1945	B	N/A		
6L232-T2	20	YL	TXL	3544254C1	1661889C1	1945	B	N/A		
6A232-T1	20	YL	TXL	3544254C1	1661889C1	1945	B	N/A		
6L232-T2	20	YL	TXL	3544254C1	1661889C1	1945	B	N/A		
6A232-R1	20	LTGN	TXL	3544254C1	1661889C1	1945	C	N/A		
6L232-R2	20	LTGN	TXL	3544254C1	1661889C1	1945	C	N/A		
6A232-R1	20	LTGN	TXL	3544254C1	1661889C1	1945	C	N/A		
6L232-R2	20	LTGN	TXL	3544254C1	1661889C1	1945	C	N/A		
6W11COG4	18	WH	TXL	1661262C1	1661891C1	1946	A	N/A		
6W11COG4	18	WH	TXL	1661262C1	1661891C1	1946	A	N/A		
6W232-T3	20	YL	TXL	3534481C1	1661891C1	1946	B	N/A		
6W232-T3	20	YL	TXL	3534481C1	1661891C1	1946	B	N/A		
6W232-R3	20	LTGN	TXL	3534481C1	1661891C1	1946	C	N/A		
6W232-R3	20	LTGN	TXL	3534481C1	1661891C1	1946	C	N/A		
JY14E	18	RD	TXL	3673333C1	3704182C1	1950	2	N/A		
JY14E	20	RD	TXL	3673333C1	3704182C1	1950	2	N/A		
JY13E	18	PK	TXL	3673333C1	3704182C1	1950	4	N/A		
JY13E	20	PK	TXL	3673333C1	3704182C1	1950	4	N/A		
JY11-GC	18	WH	TXL	3673333C1	3704182C1	1950	6	N/A		
JY11-GC	20	WH	TXL	3673333C1	3704182C1	1950	6	N/A		
JE5(+)	18	YL	TXL	3673333C1	3704182C1	1950	8	N/A		
JS5(+)	18	YL	TXL	3673333C1	3704182C1	1950	8	N/A		
JE5(+)	20	YL	193	3673333C1	3704182C1	1950	8	N/A		
JT5(+)	20	GN	193	3673333C1	3704182C1	1950	8	N/A		
JE5(-)	18	GN	TXL	3673333C1	3704182C1	1950	9	N/A		
JS5(-)	18	GN	TXL	3673333C1	3704182C1	1950	9	N/A		
JE5(-)	20	GN	193	3673333C1	3704182C1	1950	9	N/A		
JT5(-)	20	YL	193	3673333C1	3704182C1	1950	9	N/A		
JY91	18	VT	TXL	3673333C1	3704182C1	1950	16	N/A		
JY91	20	VT	TXL	3673333C1	3704182C1	1950	16	N/A		

Circuit Number	Gauge	Color	Insulation	Terminal / Splice Number	Connector Part number	Connector Number	Cavity	Seal/Sleeve	Lock 1	Lock 2
JY13F	18	PK	TXL	3673333C1	3704144C1	1951	1	N/A		
JY13F	18	PK	TXL	3673333C1	3704144C1	1951	1	N/A		
JY91	18	VT	TXL	3673333C1	3704144C1	1951	2	N/A		
JY91	20	VT	TXL	3673333C1	3704144C1	1951	2	N/A		
JY14B	18	RD	TXL	3673333C1	3704144C1	1951	3	N/A		
JY14BC	18	RD	TXL	3673333C1	3704144C1	1951	3	N/A		
JY11-GD	18	WH	TXL	3673333C1	3704144C1	1951	4	N/A		
JY11-GD	18	WH	TXL	3673333C1	3704144C1	1951	4	N/A		
CG50S	18	YL	TXL	1661875C	3538635C1	1970	K	3568570C		
CG50S	18	YL	TXL	1661875C	3538635C1	1970	K	3568570C		
CG14SD	18	RD	TXL	1661875C1	3538635C1	1970	A	3568570C1		
CP14ED	18	RD	TXL	1661875C1	3538635C1	1970	A	3568570C1		
KL14A	18	RD	GXL	1661875C1	3538635C1	1970	A	1661872C1		
PH14ED	18	RD	TXL	1661875C1	3538635C1	1970	A	3568570C1		
RH14ED	18	RD	GXL	1661875C1	3538635C1	1970	A	1661872C1		
CG14SD	18	RD	TXL	1661875C1	3538635C1	1970	A	3568570C1		
CP14ED	18	RD	TXL	1661875C1	3538635C1	1970	A	3568570C1		
KL14A	18	RD	GXL	1661875C1	3538635C1	1970	A	1661872C1		
PH14ED	18	RD	TXL	1661875C1	3538635C1	1970	A	3568570C1		
RH14ED	18	RD	GXL	1661875C1	3538635C1	1970	A	1661872C1		
CG13SD	18	PK	TXL	1661875C1	3538635C1	1970	B	3568570C1		
CP13EE	18	PK	TXL	1661875C1	3538635C1	1970	B	3568570C1		
KL13B	18	PK	TXL	1661875C1	3538635C1	1970	B	3568570C1		
PH13EE	18	PK	TXL	1661875C1	3538635C1	1970	B	3568570C1		
RH13EE	18	PK	TXL	1661875C1	3538635C1	1970	B	3568570C1		
CG13SD	18	PK	TXL	1661875C1	3538635C1	1970	B	3568570C1		
CP13EE	18	PK	TXL	1661875C1	3538635C1	1970	B	3568570C1		
KL13B	18	PK	TXL	1661875C1	3538635C1	1970	B	3568570C1		
PH13EE	18	PK	TXL	1661875C1	3538635C1	1970	B	3568570C1		
RH13EE	18	PK	TXL	1661875C1	3538635C1	1970	B	3568570C1		
CG98A(-)	18	DKBL	TXL	1661875C1	3538635C1	1970	C	3568570C1		
CP3BD(-)	18	GY	TXL	1661875C1	3538635C1	1970	C	3568570C1		
PH3BD(-)	18	GY	TXL	1661875C1	3538635C1	1970	C	3568570C1		
RH3BD(-)	18	GY	TXL	1661875C1	3538635C1	1970	C	3568570C1		
CG98A(-)	18	DKBL	TXL	1661875C1	3538635C1	1970	C	3568570C1		
CP3BD(-)	18	GY	TXL	1661875C1	3538635C1	1970	C	3568570C1		
PH3BD(-)	18	GY	TXL	1661875C1	3538635C1	1970	C	3568570C1		
RH3BD(-)	18	GY	TXL	1661875C1	3538635C1	1970	C	3568570C1		
CG98A(+)	18	GY	TXL	1661875C1	3538635C1	1970	D	3568570C1		
CP3BD(+)	18	DKBL	TXL	1661875C1	3538635C1	1970	D	3568570C1		
PH3BD(+)	18	DKBL	TXL	1661875C1	3538635C1	1970	D	3568570C1		
RH3BD(+)	18	DKBL	TXL	1661875C1	3538635C1	1970	D	3568570C1		
CG98A(+)	18	GY	TXL	1661875C1	3538635C1	1970	D	3568570C1		
CP3BD(+)	18	DKBL	TXL	1661875C1	3538635C1	1970	D	3568570C1		
PH3BD(+)	18	DKBL	TXL	1661875C1	3538635C1	1970	D	3568570C1		
RH3BD(+)	18	DKBL	TXL	1661875C1	3538635C1	1970	D	3568570C1		
CP11-GMW	20	WH	TXL	1661875C1	3538635C1	1970	E	3568570C1		
CP11-GMW	20	WH	GXL	1661875C1	3538635C1	1970	E	1661872C1		
CR98J	18	BK	TXL	1661875C1	3538635C1	1970	F	3568570C1		
PH11-GBE	18	WH	TXL	1661875C1	3538635C1	1970	F	3568570C1		
CR98J	18	BK	TXL	1661875C1	3538635C1	1970	F	3568570C1		
PH11-GBE	18	WH	TXL	1661875C1	3538635C1	1970	F	3568570C1		

Circuit Number	Gauge	Color	Insulation	Terminal / Splice Number	Connector Part number	Connector Number	Cavity	Seal/Sleeve	Lock 1	Lock 2
CG70E	18	OR	TXL	1661875C1	3538635C1	1970	J	3568570C1		
CG70E	18	OR	TXL	1661875C1	3538635C1	1970	J	3568570C1		
YJ11-GA	20	WH	TXL	3518961C1	4119705C1	1980	1	N/A		
YJ11-GA	20	WH	TXL	3518961C1	4119705C1	1980	1	N/A		
YJ62DA	20	DKBL	TXL	3518961C1	4119705C1	1980	2	N/A		
YJ62DA	20	DKBL	TXL	3518961C1	4119705C1	1980	2	N/A		
YJ11-GB	20	WH	TXL	3518961C1	4119705C1	1980	3	N/A		
YJ11-GB	20	WH	TXL	3518961C1	4119705C1	1980	3	N/A		
YJ62DB	20	DKBL	TXL	3518961C1	4119705C1	1980	4	N/A		
YJ62DB	20	DKBL	TXL	3518961C1	4119705C1	1980	4	N/A		
YJ14A	16	RD	TXL	1661209C1	2005835C1	1981	A	N/A		
YJ14A	16	RD	TXL	1661209C1	2005835C1	1981	A	N/A		
YJ13A	16	PK	TXL	1661209C1	2005835C1	1981	F	N/A		
YJ13A	16	PK	TXL	1661209C1	2005835C1	1981	F	N/A		
YX5H(+)	18	YL	TXL	1680206C1	1689499C1	1982	1	N/A		
YZ5H(+)	18	YL	TXL	1680206C1	1689499C1	1982	1	N/A		
YX5H(+)	18	YL	TXL	1651968C1	1689499C1	1982	1	N/A		
YZ5H(+)	18	YL	TXL	1651968C1	1689499C1	1982	1	N/A		
YX5H(-)	18	GN	TXL	1680206C1	1689499C1	1982	2	N/A		
YZ5H(-)	18	GN	TXL	1680206C1	1689499C1	1982	2	N/A		
YX5H(-)	18	GN	TXL	1651968C1	1689499C1	1982	2	N/A		
YZ5H(-)	18	GN	TXL	1651968C1	1689499C1	1982	2	N/A		
YX5R(+)	18	YL	TXL	1680206C1	1689499C1	1982	3	N/A		
YZ5R(+)	18	YL	TXL	1680206C1	1689499C1	1982	3	N/A		
YX5PJ(+)	18	YL	TXL	1651968C1	1689499C1	1982	3	N/A		
YZ5PJ(+)	18	YL	TXL	1651968C1	1689499C1	1982	3	N/A		
YX5R(-)	18	GN	TXL	1680206C1	1689499C1	1982	4	N/A		
YZ5R(-)	18	GN	TXL	1680206C1	1689499C1	1982	4	N/A		
YX5PJ(-)	18	GN	TXL	1651968C1	1689499C1	1982	4	N/A		
YZ5PJ(-)	18	GN	TXL	1651968C1	1689499C1	1982	4	N/A		
YK5DB(+)	18	YL	TXL	1680206C1	1689499C1	1982	5	N/A		
YK5DB(+)	18	YL	TXL	1651968C1	1689499C1	1982	5	N/A		
YK5DB(-)	18	GN	TXL	1680206C1	1689499C1	1982	6	N/A		
YK5DB(-)	18	GN	TXL	1651968C1	1689499C1	1982	6	N/A		
YK5DA(+)	18	YL	TXL	1680206C1	1689499C1	1982	7	N/A		
YK5DA(+)	18	YL	TXL	1651968C1	1689499C1	1982	7	N/A		
YK5DA(-)	18	GN	TXL	1680206C1	1689499C1	1982	8	N/A		
YK5DA(-)	18	GN	TXL	1651968C1	1689499C1	1982	8	N/A		
YJ5B(+)	18	YL	TXL	1680206C1	1689499C1	1982	9	N/A		
YJ5B(+)	18	YL	TXL	1651968C1	1689499C1	1982	9	N/A		
YJ5B(-)	18	GN	TXL	1680206C1	1689499C1	1982	10	N/A		
YJ5B(-)	18	GN	TXL	1651968C1	1689499C1	1982	10	N/A		
YJ5D(+)	18	YL	TXL	1680206C1	1689499C1	1982	11	N/A		
YJ5D(+)	18	YL	TXL	1651968C1	1689499C1	1982	11	N/A		
YJ5D(-)	18	GN	TXL	1680206C1	1689499C1	1982	12	N/A		
YJ5D(-)	18	GN	TXL	1651968C1	1689499C1	1982	12	N/A		
YJ5C(+)	18	YL	TXL	3535303C1	3683465C1	1983	A	3535424C1		
YJ5C(+)	18	YL	TXL	3535303C1	3683465C1	1983	A	3535424C1		
YJ5C(-)	18	GN	TXL	3535303C1	3683465C1	1983	B	3535424C1		
YJ5C(-)	18	GN	TXL	3535303C1	3683465C1	1983	B	3535424C1		
YJ5D(+)	18	YL	TXL	3535303C1	3683465C1	1984	A	3535424C1		
YJ5D(+)	18	YL	TXL	3535303C1	3683465C1	1984	A	3535424C1		

Circuit Number	Gauge	Color	Insulation	Terminal / Splice Number	Connector Part number	Connector Number	Cavity	Seal/Sleeve	Lock 1	Lock 2
YJ5D(-)	18	GN	TXL	3535303C1	3683465C1	1984	B	3535424C1		
YJ5D(-)	18	GN	TXL	3535303C1	3683465C1	1984	B	3535424C1		
2A58TB	18	BN	TXL	3544692C1	3544688C1	2000	1	N/A		
3C58TB	18	BN	TXL	3544692C1	3544688C1	2000	1	N/A		
3E58TB	18	BN	TXL	3544692C1	3544688C1	2000	1	N/A		
AV58TB	18	BN	TXL	3544692C1	3544688C1	2000	1	N/A		
AW58TB	18	BN	TXL	3544692C1	3544688C1	2000	1	N/A		
HY58TB	18	BN	TXL	3544692C1	3544688C1	2000	1	N/A		
AA58TB	18	BN	TXL	3544692C1	3544688C1	2000	1	N/A		
MR86F	18	LTGN	TXL	3544692C1	3544688C1	2000	2	N/A		
MZ86P	18	LTGN	TXL	3544692C1	3544688C1	2000	2	N/A		
MR86F	18	LTGN	TXL	3544692C1	3544688C1	2000	2	N/A		
MZ86P	18	LTGN	TXL	3544692C1	3544688C1	2000	2	N/A		
NL86P	18	LTGN	TXL	3544692C1	3544688C1	2000	2	N/A		
NP86F	18	LTGN	TXL	3544692C1	3544688C1	2000	2	N/A		
AA63-GA	16	WH	TXL	3544694C1	3544688C1	2000	3	N/A		
AA63-GA	16	WH	TXL	3544694C1	3544688C1	2000	3	N/A		
AA63D	18	DKBL	TXL	3544692C1	3544688C1	2000	4	N/A		
AA63D	18	DKBL	TXL	3544692C1	3544688C1	2000	4	N/A		
AA63BD	18	GY	TXL	3544692C1	3544688C1	2000	5	N/A		
AA63BD	18	GY	TXL	3544692C1	3544688C1	2000	5	N/A		
LR86YL	18	LTGN	TXL	3544692C1	3544688C1	2000	6	N/A		
LR86YL	18	LTGN	TXL	3544692C1	3544688C1	2000	6	N/A		
LR86AR	18	LTGN	TXL	3544692C1	3544688C1	2000	7	N/A		
LR86AR	18	LTGN	TXL	3544692C1	3544688C1	2000	7	N/A		
LR86AT	18	LTGN	TXL	3544692C1	3544688C1	2000	8	N/A		
LR86AT	18	LTGN	TXL	3544692C1	3544688C1	2000	8	N/A		
JC5F(-)	18	GN	TXL	3544692C1	3544688C1	2000	9	N/A		
JD5F(-)	18	GN	TXL	3544692C1	3544688C1	2000	9	N/A		
JF5F(-)	18	GN	TXL	3544692C1	3544688C1	2000	9	N/A		
JG5F(-)	18	GN	TXL	3544692C1	3544688C1	2000	9	N/A		
LV5F(-)	18	GN	TXL	3544692C1	3544688C1	2000	9	N/A		
SB5F(-)	18	GN	TXL	3544692C1	3544688C1	2000	9	N/A		
SC5F(-)	18	GN	TXL	3544692C1	3544688C1	2000	9	N/A		
SD5F(-)	18	GN	TXL	3544692C1	3544688C1	2000	9	N/A		
SE5F(-)	18	GN	TXL	3544692C1	3544688C1	2000	9	N/A		
VD5F(-)	18	GN	TXL	3544692C1	3544688C1	2000	9	N/A		
VF5F(-)	18	GN	TXL	3544692C1	3544688C1	2000	9	N/A		
VV5F(-)	18	GN	TXL	3544692C1	3544688C1	2000	9	N/A		
YX5F(-)	18	GN	TXL	3544692C1	3544688C1	2000	9	N/A		
YZ5F(-)	18	GN	TXL	3544692C1	3544688C1	2000	9	N/A		
3E5F(-)	18	GN	TXL	3544692C1	3544688C1	2000	9	N/A		
3J5F(-)	18	GN	TXL	3544692C1	3544688C1	2000	9	N/A		
3R5F(-)	18	GN	TXL	3544692C1	3544688C1	2000	9	N/A		
3U5PJ(-)	18	GN	TXL	3544692C1	3544688C1	2000	9	N/A		
3W5T(-)	18	GN	TXL	3544692C1	3544688C1	2000	9	N/A		
3Z5F(-)	18	GN	TXL	3544692C1	3544688C1	2000	9	N/A		
4E5E(-)	18	GN	TXL	3544692C1	3544688C1	2000	9	N/A		
4J5E(-)	18	GN	TXL	3544692C1	3544688C1	2000	9	N/A		
4L5E(-)	18	GN	TXL	3544692C1	3544688C1	2000	9	N/A		
4N5E(-)	18	GN	TXL	3544692C1	3544688C1	2000	9	N/A		
9T5F(-)	18	GN	TXL	3544692C1	3544688C1	2000	9	N/A		

Circuit Number	Gauge	Color	Insulation	Terminal / Splice Number	Connector Part number	Connector Number	Cavity	Seal/Sleeve	Lock 1	Lock 2
9W5F(-)	18	GN	TXL	3544692C1	3544688C1	2000	9	N/A		
JC5F(-)	18	GN	TXL	3544692C1	3544688C1	2000	9	N/A		
JD5F(-)	18	GN	TXL	3544692C1	3544688C1	2000	9	N/A		
JF5F(-)	18	GN	TXL	3544692C1	3544688C1	2000	9	N/A		
JG5F(-)	18	GN	TXL	3544692C1	3544688C1	2000	9	N/A		
LV5F(-)	18	GN	TXL	3544692C1	3544688C1	2000	9	N/A		
PV5F(-)	18	GN	TXL	3544692C1	3544688C1	2000	9	N/A		
RR5E(-)	18	GN	TXL	3544692C1	3544688C1	2000	9	N/A		
RX5E(-)	18	GN	TXL	3544692C1	3544688C1	2000	9	N/A		
RZ5E(-)	18	GN	TXL	3544692C1	3544688C1	2000	9	N/A		
SB5F(-)	18	GN	TXL	3544692C1	3544688C1	2000	9	N/A		
SC5F(-)	18	GN	TXL	3544692C1	3544688C1	2000	9	N/A		
SD5F(-)	18	GN	TXL	3544692C1	3544688C1	2000	9	N/A		
SE5E(-)	18	GN	TXL	3544692C1	3544688C1	2000	9	N/A		
SR5F(-)	18	GN	TXL	3544692C1	3544688C1	2000	9	N/A		
VD5F(-)	18	GN	TXL	3544692C1	3544688C1	2000	9	N/A		
VF5F(-)	18	GN	TXL	3544692C1	3544688C1	2000	9	N/A		
VG5F(-)	18	GN	TXL	3544692C1	3544688C1	2000	9	N/A		
YX5F(-)	18	GN	TXL	3544692C1	3544688C1	2000	9	N/A		
YZ5F(-)	18	GN	TXL	3544692C1	3544688C1	2000	9	N/A		
JC5F(+)	18	YL	TXL	3544692C1	3544688C1	2000	10	N/A		
JD5F(+)	18	YL	TXL	3544692C1	3544688C1	2000	10	N/A		
JF5F(+)	18	YL	TXL	3544692C1	3544688C1	2000	10	N/A		
JG5F(+)	18	YL	TXL	3544692C1	3544688C1	2000	10	N/A		
LV5F(+)	18	YL	TXL	3544692C1	3544688C1	2000	10	N/A		
SB5F(+)	18	YL	TXL	3544692C1	3544688C1	2000	10	N/A		
SC5F(+)	18	YL	TXL	3544692C1	3544688C1	2000	10	N/A		
SD5F(+)	18	YL	TXL	3544692C1	3544688C1	2000	10	N/A		
SE5F(+)	18	YL	TXL	3544692C1	3544688C1	2000	10	N/A		
VD5F(+)	18	YL	TXL	3544692C1	3544688C1	2000	10	N/A		
VF5F(+)	18	YL	TXL	3544692C1	3544688C1	2000	10	N/A		
VV5F(+)	18	YL	TXL	3544692C1	3544688C1	2000	10	N/A		
YX5F(+)	18	YL	TXL	3544692C1	3544688C1	2000	10	N/A		
YZ5F(+)	18	YL	TXL	3544692C1	3544688C1	2000	10	N/A		
3E5F(+)	18	YL	TXL	3544692C1	3544688C1	2000	10	N/A		
3J5F(+)	18	YL	TXL	3544692C1	3544688C1	2000	10	N/A		
3R5F(+)	18	YL	TXL	3544692C1	3544688C1	2000	10	N/A		
3U5PJ(+)	18	YL	TXL	3544692C1	3544688C1	2000	10	N/A		
3W5T(+)	18	YL	TXL	3544692C1	3544688C1	2000	10	N/A		
3Z5F(+)	18	YL	TXL	3544692C1	3544688C1	2000	10	N/A		
4E5E(+)	18	YL	TXL	3544692C1	3544688C1	2000	10	N/A		
4J5E(+)	18	YL	TXL	3544692C1	3544688C1	2000	10	N/A		
4L5E(+)	18	YL	TXL	3544692C1	3544688C1	2000	10	N/A		
4N5E(+)	18	YL	TXL	3544692C1	3544688C1	2000	10	N/A		
9T5F(+)	18	YL	TXL	3544692C1	3544688C1	2000	10	N/A		
9W5F(+)	18	YL	TXL	3544692C1	3544688C1	2000	10	N/A		
JC5F(+)	18	YL	TXL	3544692C1	3544688C1	2000	10	N/A		
JD5F(+)	18	YL	TXL	3544692C1	3544688C1	2000	10	N/A		
JF5F(+)	18	YL	TXL	3544692C1	3544688C1	2000	10	N/A		
JG5F(+)	18	YL	TXL	3544692C1	3544688C1	2000	10	N/A		
LV5F(+)	18	YL	TXL	3544692C1	3544688C1	2000	10	N/A		
PV5F(+)	18	YL	TXL	3544692C1	3544688C1	2000	10	N/A		

Circuit Number	Gauge	Color	Insulation	Terminal / Splice Number	Connector Part number	Connector Number	Cavity	Seal/Sleeve	Lock 1	Lock 2
RR5E(+)	18	YL	TXL	3544692C1	3544688C1	2000	10	N/A		
RX5E(+)	18	YL	TXL	3544692C1	3544688C1	2000	10	N/A		
RZ5E(+)	18	YL	TXL	3544692C1	3544688C1	2000	10	N/A		
SB5F(+)	18	YL	TXL	3544692C1	3544688C1	2000	10	N/A		
SC5F(+)	18	YL	TXL	3544692C1	3544688C1	2000	10	N/A		
SD5F(+)	18	YL	TXL	3544692C1	3544688C1	2000	10	N/A		
SE5E(+)	18	YL	TXL	3544692C1	3544688C1	2000	10	N/A		
SR5F(+)	18	YL	TXL	3544692C1	3544688C1	2000	10	N/A		
VD5F(+)	18	YL	TXL	3544692C1	3544688C1	2000	10	N/A		
VF5F(+)	18	YL	TXL	3544692C1	3544688C1	2000	10	N/A		
VG5F(+)	18	YL	TXL	3544692C1	3544688C1	2000	10	N/A		
YX5F(+)	18	YL	TXL	3544692C1	3544688C1	2000	10	N/A		
YZ5F(+)	18	YL	TXL	3544692C1	3544688C1	2000	10	N/A		
WN30BC	16	TN	GXL	2036586C1	2036584C1	2010	A	N/A		
KZ9AAC	18	GY	GXL	2036586C1	2036584C1	2010	B	N/A		
BX65AB	18	OR	TXL	1661261C1	1661259C1	2200	A	N/A		
BX65AB	18	OR	TXL	1661261C1	1661259C1	2200	A	N/A		
BX65-GFA	18	WH	TXL	1661261C1	1661259C1	2200	B	N/A		
BX65-GFA	18	WH	TXL	1661261C1	1661259C1	2200	B	N/A		
BX65AC	18	OR	TXL	1661261C1	1661259C1	2201	A	N/A		
BX65AC	18	OR	TXL	1661261C1	1661259C1	2201	A	N/A		
BX65-GFB	18	WH	TXL	1661261C1	1661259C1	2201	B	N/A		
BX65-GFB	18	WH	TXL	1661261C1	1661259C1	2201	B	N/A		
BH12A	18	LTBL	TXL	1661208C1	1669972C1	2223	A	N/A		
BH12A	18	LTBL	TXL	1661208C1	1669972C1	2223	A	N/A		
BH11-GAL	18	WH	TXL	1661208C1	1669972C1	2223	B	N/A		
BH11-GAL	18	WH	TXL	1661208C1	1669972C1	2223	B	N/A		
RF14A	20	PK	TXL	3535805C1	3833917C1	2224	1	N/A		
RF14AA	20	PK	TXL	3535805C1	3833917C1	2224	1	N/A		
RE10AA	20	WH	TXL	3535805C1	3833917C1	2224	2	N/A		
RE10AA	20	WH	TXL	3535805C1	3833917C1	2224	2	N/A		
RC12B	20	LTBL	TXL	3535805C1	3833917C1	2224	3	N/A		
RC12B	20	LTBL	TXL	3535805C1	3833917C1	2224	3	N/A		
RE10AB	20	WH	TXL	3535805C1	3833917C1	2224	5	N/A		
RE10AB	20	WH	TXL	3535805C1	3833917C1	2224	5	N/A		
RE9A	20	GY	TXL	3867325C1	3834322C1	2225	1	N/A		
RE9A	20	GY	TXL	3867325C1	3834322C1	2225	1	N/A		
RN5L(+)	20	YL	193	3867325C1	3834322C1	2225	8	N/A		
RN5L(+)	20	YL	193	3867325C1	3834322C1	2225	8	N/A		
RE10AC	20	WH	TXL	3867325C1	3834322C1	2225	10	N/A		
RE10AC	20	WH	TXL	3867325C1	3834322C1	2225	10	N/A		
RF86AA	20	LTGN	TXL	3867325C1	3834322C1	2225	11	N/A		
RF86AA	20	LTGN	TXL	3867325C1	3834322C1	2225	11	N/A		
RF86AB	20	LTGN	TXL	3867325C1	3834322C1	2225	12	N/A		
RF86AB	20	LTGN	TXL	3867325C1	3834322C1	2225	12	N/A		
RF86AC	20	LTGN	TXL	3867325C1	3834322C1	2225	13	N/A		
RF86AC	20	LTGN	TXL	3867325C1	3834322C1	2225	13	N/A		
RF86AD	20	LTGN	TXL	3867325C1	3834322C1	2225	14	N/A		
RF86AD	20	LTGN	TXL	3867325C1	3834322C1	2225	14	N/A		
RE10AD	20	WH	TXL	3867325C1	3834322C1	2225	15	N/A		
RE10AD	20	WH	TXL	3867325C1	3834322C1	2225	15	N/A		
RN5L(-)	20	GN	193	3867325C1	3834322C1	2225	16	N/A		

Circuit Number	Gauge	Color	Insulation	Terminal / Splice Number	Connector Part number	Connector Number	Cavity	Seal/Sleeve	Lock 1	Lock 2
RN5L(-)	20	GN	193	3867325C1	3834322C1	2225	16	N/A		
AA63B	16	DKBL	TXL	3534165C1	3533975C1	2312	A	N/A		
AA63B	16	DKBL	TXL	3534164C1	3533975C1	2312	A	N/A		
AA9BAA	16	GY	TXL	3534165C1	3533975C1	2312	B	N/A		
AA9BAA	16	GY	TXL	3534164C1	3533975C1	2312	B	N/A		
MU86BA	18	LTGN	TXL	3534164C1	3533975C1	2312	C	N/A		
MU86BA	18	LTGN	TXL	3534164C1	3533975C1	2312	C	N/A		
MU86CA	18	LTGN	TXL	3534164C1	3533975C1	2312	D	N/A		
MU86CA	18	LTGN	TXL	3534164C1	3533975C1	2312	D	N/A		
AA63C	16	DKBL	TXL	3534165C1	3533975C1	2313	A	N/A		
AA63C	16	DKBL	TXL	3534164C1	3533975C1	2313	A	N/A		
AA9BAB	16	GY	TXL	3534165C1	3533975C1	2313	B	N/A		
AA9BAB	16	GY	TXL	3534164C1	3533975C1	2313	B	N/A		
MU86DA	18	LTGN	TXL	3534164C1	3533975C1	2313	C	N/A		
MU86DA	18	LTGN	TXL	3534164C1	3533975C1	2313	C	N/A		
MU86EA	18	LTGN	TXL	3534164C1	3533975C1	2313	D	N/A		
MU86EA	18	LTGN	TXL	3534164C1	3533975C1	2313	D	N/A		
YW86A(-)	20	LTGN	TXL	3834457C1	3811207C1	2505	1	3665870C1		
YW86A(-)	20	LTGN	TXL	3834457C1	3811207C1	2505	1	3665870C1		
YW86A(+)	20	LTGN	TXL	3834457C1	3811207C1	2505	2	3665870C1		
YW86A(+)	20	LTGN	TXL	3834457C1	3811207C1	2505	2	3665870C1		
MA11-G	10	WH	GXL	2034790C1		4005	1	2644002R1		
MA11-G	10	WH	GXL	2034790C1		4005	1	2644002R1		
NA11-GA	10	WH	TXL	373756C2		4006	1	2644054R1		
NA11-GB	10	WH	TXL	373756C2		4006	1	2644054R1		
PB11-GA	10	WH	TXL	373756C2		4006	1	2644054R1		
PB11-GB	10	WH	TXL	373756C2		4006	1	2644054R1		
AA14J-FL	8	LTBL	FUS	373756C2		4007	1	2644054R1		
KH11-GA	10	WH	TXL	3866817C1		4007	1	2644005R1		
GS94-GC	16	WH	TXL	3549254C1		4081	1	2644038R1		
GS94-GC	16	WH	TXL	3549254C1		4081	1	2644038R1		
KA98YL	20	YL	193	3755838C1	3602454C1	4328	A	N/A		
KA98GN	20	GN	193	3755838C1	3602454C1	4328	B	N/A		
AA82DJ	16	GY	TXL	2033819C1	1661375C2	4500	A	1652325C1		
AA82DJ	16	GY	TXL	2033819C1	1661375C2	4500	A	1652325C1		
AA82JJ	16	GY	TXL	2033819C1	1661375C2	4500	B	1652325C1		
AA82JJ	16	GY	TXL	2033819C1	1661375C2	4500	B	1652325C1		
AA82-GJ	16	WH	TXL	2033819C1	1661375C2	4500	C	1652325C1		
AA82-GJ	16	WH	TXL	2033819C1	1661375C2	4500	C	1652325C1		
YG82KJ	16	GY	TXL	2033819C1	1661375C2	4500	D	1652325C1		
YH82KAJ	16	GY	TXL	2033819C1	1661375C2	4500	D	1652325C1		
YG82KJ	16	GY	TXL	2033819C1	1661375C2	4500	D	1652325C1		
YH82KAJ	16	GY	TXL	2033819C1	1661375C2	4500	D	1652325C1		
AA82LJ	16	GY	TXL	2033819C1	1661375C2	4500	E	1652325C1		
AA82LJ	16	GY	TXL	2033819C1	1661375C2	4500	E	1652325C1		
ZC92A15	18	TN	GXL	1667742C1	3538634C1	4705	A	1661872C1		
SG92A11	18	TN	TXL	1667742C1	3538634C1	4705	B	3568570C1		
SJ92A11	16	TN	GXL	1667742C1	3538634C1	4705	B	1661872C1		
KJ92A12	18	TN	TXL	1667742C1	3538634C1	4705	C	3568570C1		
KJ92A13	18	TN	TXL	1667742C1	3538634C1	4705	D	3568570C1		
KJ92A9	18	TN	TXL	1667742C1	3538634C1	4705	E	3568570C1		
KJ92A10	18	TN	TXL	1667742C1	3538634C1	4705	F	3568570C1		

Circuit Number	Gauge	Color	Insulation	Terminal / Splice Number	Connector Part number	Connector Number	Cavity	Seal/Sleeve	Lock 1	Lock 2
KJ92A8	18	TN	TXL	1667742C1	3538634C1	4705	G	3568570C1		
KJ92A16	18	TN	TXL	1667742C1	3538634C1	4705	H	3568570C1		
KJ92A17	18	TN	TXL	1667742C1	3538634C1	4705	J	3568570C1		
KJ92A5	18	TN	TXL	1661875C1	3538635C1	4706	A	3568570C1		
ZE92A4	18	TN	TXL	1661875C1	3538635C1	4706	B	3568570C1		
ZG92A4	18	TN	TXL	1661875C1	3538635C1	4706	B	3568570C1		
SG92A3	18	TN	TXL	1661875C1	3538635C1	4706	C	3568570C1		
SJ92A3	18	TN	TXL	1661875C1	3538635C1	4706	C	3568570C1		
KJ92A14	18	TN	TXL	1661875C1	3538635C1	4706	D	3568570C1		
KJ92A2	18	TN	TXL	1661875C1	3538635C1	4706	E	3568570C1		
KJ92A6	18	TN	TXL	1661875C1	3538635C1	4706	F	3568570C1		
KJ92A7	18	TN	TXL	1661875C1	3538635C1	4706	G	3568570C1		
KJ92A1	18	TN	TXL	1661875C1	3538635C1	4706	H	3568570C1		
KJ92A19	18	TN	TXL	1661875C1	3538635C1	4706	J	3568570C1		
RP11-G	8	WH	GXL	3756790C1	4108436C1	5002	1	3756745C1		
RP14W	8	RD	GXL	3756790C1	4108436C1	5002	2	3756745C1		
AC11-G	8	WH	GXL	3700153C1	3537133C1	5002	A	3537135C1		
GN58BLT	18	BN	TXL	1661262C1	1661891C1	5118	A	N/A		
GN58BLT	16	BN	TXL	1661262C1	1661891C1	5118	A	N/A		
GN13-GBR	18	WH	TXL	1661262C1	1661891C1	5118	B	N/A		
GN13-GBR	16	WH	TXL	1661262C1	1661891C1	5118	B	N/A		
HD11-GW	18	WH	TXL	2033911C1	3553961C1	5219	A	3517771C1		
HD74R	18	RD	TXL	2033911C1	3553961C1	5219	B	3517771C1		
HD74Y	18	YL	TXL	2033911C1	3553961C1	5219	C	3517771C1		
DK14TRI	16	RD	GXL	1661212C1	1661197C1	5754	A	N/A		
DK77SBY	16	LTGN	GXL	1661212C1	1661197C1	5754	B	N/A		
DK77SBY	16	LTGN	GXL	1661212C1	1661197C1	5754	B	N/A		
DK13TRIB	16	PK	GXL	333733C1	872291R1	5757	A	N/A		
DK13TRIB	16	PK	GXL	333733C1	872291R1	5757	A	N/A		
DK13TRIA	16	PK	GXL	333733C1	872291R1	5757	B	N/A		
DK13TRIA	16	PK	GXL	333733C1	872291R1	5757	B	N/A		
KA14A6	16	RD	TXL	3743666C1	3945694C1	6000	1	N/A		
KA95GBE	16	TN	TXL	3743666C1	3945694C1	6000	3	N/A		
KA13B	18	PK	TXL	3743666C1	3945694C1	6000	5	N/A		
TJ95F	20	TN	TXL	3743668C1	3945694C1	6000	6	N/A		
TK95F	20	TN	TXL	3743668C1	3945694C1	6000	6	N/A		
GM6A	20	VT	TXL	3743668C1	3945694C1	6000	8	N/A		
GN6A	20	VT	TXL	3743668C1	3945694C1	6000	8	N/A		
TJ97C	20	VT	TXL	3743668C1	3945694C1	6000	9	N/A		
TK97C	20	VT	TXL	3743668C1	3945694C1	6000	9	N/A		
TJ99B	20	VT	TXL	3743668C1	3945694C1	6000	10	N/A		
TK99B	20	VT	TXL	3743668C1	3945694C1	6000	10	N/A		
GA95WA	20	TN	TXL	3743668C1	3945694C1	6000	13	N/A		
KJ95WA	20	TN	TXL	3743668C1	3945694C1	6000	13	N/A		
KY95WA	20	TN	TXL	3743668C1	3945694C1	6000	13	N/A		
TP95K	20	TN	150	3743668C1	3945694C1	6000	16	N/A		
TY95K	20	TN	150	3743668C1	3945694C1	6000	16	N/A		
KL5BD(+)	20	YL	193	3743668C1	3945694C1	6000	21	N/A		
KF5(+)	20	YL	193	3743668C1	3945694C1	6000	22	N/A		
KH5(+)	20	YL	193	3743668C1	3945694C1	6000	22	N/A		
KL5AE(+)	20	YL	193	3743668C1	3945694C1	6000	22	N/A		
KV5R128	20	YL	193	3743668C1	3945694C1	6000	22	N/A		

Circuit Number	Gauge	Color	Insulation	Terminal / Splice Number	Connector Part number	Connector Number	Cavity	Seal/Sleeve	Lock 1	Lock 2
KA14A5	16	RD	TXL	3743666C1	3945694C1	6000	25	N/A		
KA14A4	16	RD	TXL	3743666C1	3945694C1	6000	26	N/A		
KA14A2	16	RD	TXL	3743666C1	3945694C1	6000	27	N/A		
KA14A1	16	RD	TXL	3743666C1	3945694C1	6000	28	N/A		
GM9A	20	TN	TXL	3743668C1	3945694C1	6000	32	N/A		
GN9A	20	TN	TXL	3743668C1	3945694C1	6000	32	N/A		
TJ97B	20	VT	TXL	3743668C1	3945694C1	6000	33	N/A		
TK97B	20	VT	TXL	3743668C1	3945694C1	6000	33	N/A		
GK34	20	TN	TXL	3743668C1	3945694C1	6000	35	N/A		
KD34E	20	TN	TXL	3743668C1	3945694C1	6000	35	N/A		
TJ95AT2	20	TN	TXL	3743668C1	3945694C1	6000	38	N/A		
TK95AT2	20	TN	TXL	3743668C1	3945694C1	6000	38	N/A		
TJ95AS2	20	TN	TXL	3743668C1	3945694C1	6000	39	N/A		
TK95AS2	20	TN	TXL	3743668C1	3945694C1	6000	39	N/A		
TJ95AU2	20	TN	TXL	3743668C1	3945694C1	6000	40	N/A		
TK95AU2	20	TN	TXL	3743668C1	3945694C1	6000	40	N/A		
TP95BA	20	TN	150	3743668C1	3945694C1	6000	41	N/A		
TY95BA	20	TN	150	3743668C1	3945694C1	6000	41	N/A		
TP95BC	20	TN	150	3743668C1	3945694C1	6000	42	N/A		
TY95BC	20	TN	150	3743668C1	3945694C1	6000	42	N/A		
KL5BD(-)	20	GN	193	3743668C1	3945694C1	6000	45	N/A		
KF5(-)	20	GN	193	3743668C1	3945694C1	6000	46	N/A		
KH5(-)	20	GN	193	3743668C1	3945694C1	6000	46	N/A		
KL5AE(-)	20	GN	193	3743668C1	3945694C1	6000	46	N/A		
KV5R108	20	GN	193	3743668C1	3945694C1	6000	46	N/A		
KA10-GH	16	WH	TXL	3743666C1	3945694C1	6000	49	N/A		
KA10-GG	16	WH	TXL	3743666C1	3945694C1	6000	50	N/A		
KA10-GF	16	WH	TXL	3743666C1	3945694C1	6000	51	N/A		
KA10-GE	16	WH	TXL	3743666C1	3945694C1	6000	52	N/A		
TP95DVL	20	TN	150	3743668C1	3945694C1	6000	53	N/A		
TY95DVL	20	TN	150	3743668C1	3945694C1	6000	53	N/A		
TJ95E	20	TN	TXL	3743668C1	3945694C1	6000	54	N/A		
TK95E	20	TN	TXL	3743668C1	3945694C1	6000	54	N/A		
TJ95AA	20	TN	TXL	3743668C1	3945694C1	6000	57	N/A		
TK95AA	20	TN	TXL	3743668C1	3945694C1	6000	57	N/A		
KF47AA	20	GY	TXL	3743668C1	3945694C1	6000	59	N/A		
KF47	20	GY	TXL	3743668C1	3945694C1	6000	60	N/A		
XY47A125	18	TN	TXL	3743667C1	3945694C1	6000	60	N/A		
KA97N	20	VT	TXL	3743668C1	3945694C1	6000	61	N/A		
KA95G	20	WH	TXL	3743668C1	3945694C1	6000	62	N/A		
KA97M	20	VT	TXL	3743668C1	3945694C1	6000	64	N/A		
KC41E	20	TN	TXL	3743668C1	3945694C1	6000	65	N/A		
KA10-GB	16	WH	TXL	3743666C1	3945694C1	6000	73	N/A		
KU21	16	TN	TXL	3743666C1	3945694C1	6000	75	N/A		
KU21A	16	TN	TXL	3743666C1	3945694C1	6000	76	N/A		
TP95DVH	20	TN	150	3743668C1	3945694C1	6000	77	N/A		
TY95DVH	20	TN	150	3743668C1	3945694C1	6000	77	N/A		
TJ23	20	TN	TXL	3743668C1	3945694C1	6000	78	N/A		
TK23	20	TN	TXL	3743668C1	3945694C1	6000	78	N/A		
KA95SB	20	TN	TXL	3743668C1	3945694C1	6000	79	N/A		
TJ95AC	20	TN	TXL	3743668C1	3945694C1	6000	82	N/A		
TK95AC	20	TN	TXL	3743668C1	3945694C1	6000	82	N/A		

Circuit Number	Gauge	Color	Insulation	Terminal / Splice Number	Connector Part number	Connector Number	Cavity	Seal/Sleeve	Lock 1	Lock 2
GE44A	20	GY	TXL	3743668C1	3945694C1	6000	93	N/A		
CA95GE	18	TN	TXL	4078605C1	3952655C1	6018	1	N/A		
CB95GE	18	TN	TXL	4078605C1	3952655C1	6018	1	N/A		
CC95GE	18	TN	TXL	4078605C1	3952655C1	6018	1	N/A		
CD95GE	18	TN	TXL	4078605C1	3952655C1	6018	1	N/A		
KA97B	18	VT	TXL	4078605C1	3952655C1	6018	2	N/A		
AJ95F	18	TN	TXL	4078605C1	3952655C1	6018	4	N/A		
AK95F	18	TN	TXL	4078605C1	3952655C1	6018	4	N/A		
KA95-GC	18	BK	TXL	4078605C1	3952655C1	6018	5	N/A		
KA97C	18	VT	TXL	4078605C1	3952655C1	6018	6	N/A		
AP95BC	18	TN	150	4078605C1	3952655C1	6018	7	N/A		
AY95BC	18	TN	150	4078605C1	3952655C1	6018	7	N/A		
LE95BC	18	TN	150	4078605C1	3952655C1	6018	7	N/A		
LF95BC	18	TN	150	4078605C1	3952655C1	6018	7	N/A		
KB34D	18	TN	TXL	4078605C1	3952655C1	6018	8	N/A		
VL41E	18	TN	TXL	4078605C1	3952655C1	6018	9	N/A		
AP95BA	18	TN	150	4078605C1	3952655C1	6018	10	N/A		
AY95BA	18	TN	150	4078605C1	3952655C1	6018	10	N/A		
LE95BA	18	TN	150	4078605C1	3952655C1	6018	10	N/A		
LF95BA	18	TN	150	4078605C1	3952655C1	6018	10	N/A		
KA41-GA	18	WH	TXL	4078605C1	3952655C1	6018	11	N/A		
KA97P	18	TN	TXL	4078605C1	3952655C1	6018	12	N/A		
KJ92A19	18	TN	TXL	4078605C1	3952655C1	6018	14	N/A		
KJ92A13	18	TN	TXL	4078605C1	3952655C1	6018	16	N/A		
KA13	18	PK	TXL	4078605C1	3952655C1	6018	17	N/A		
KJ92A2	18	TN	TXL	4078605C1	3952655C1	6018	20	N/A		
KJ92A17	18	TN	TXL	4078605C1	3952655C1	6018	21	N/A		
KJ92A14	18	TN	TXL	4078605C1	3952655C1	6018	22	N/A		
KJ92A6	18	TN	TXL	4078605C1	3952655C1	6018	23	N/A		
KA95GBE	18	TN	TXL	4078605C1	3952655C1	6018	24	N/A		
ZB23A	18	TN	TXL	4078605C1	3952655C1	6018	25	N/A		
ZC23A	18	TN	TXL	4078605C1	3952655C1	6018	25	N/A		
AJ95AB	18	TN	TXL	4078605C1	3952655C1	6018	28	N/A		
AK95AB	18	TN	TXL	4078605C1	3952655C1	6018	28	N/A		
KA97N	18	VT	TXL	4078605C1	3952655C1	6018	29	N/A		
KA41A	18	TN	TXL	4078605C1	3952655C1	6018	31	N/A		
KA99B	18	VT	TXL	4078605C1	3952655C1	6018	33	N/A		
AP95K	18	TN	150	4078605C1	3952655C1	6018	34	N/A		
AY95K	18	TN	150	4078605C1	3952655C1	6018	34	N/A		
LE95K	18	TN	150	4078605C1	3952655C1	6018	34	N/A		
LF95K	18	TN	150	4078605C1	3952655C1	6018	34	N/A		
ZD95DA	18	TN	150	4078605C1	3952655C1	6018	36	N/A		
ZE95DA	18	TN	TXL	4078605C1	3952655C1	6018	36	N/A		
ZF95DA	18	TN	150	4078605C1	3952655C1	6018	36	N/A		
ZG95DA	18	TN	TXL	4078605C1	3952655C1	6018	36	N/A		
KJ92A1	18	TN	TXL	4078605C1	3952655C1	6018	39	N/A		
KJ92A9	18	TN	TXL	4078605C1	3952655C1	6018	40	N/A		
KJ92A16	18	TN	TXL	4078605C1	3952655C1	6018	46	N/A		
CC99D	18	VT	TXL	4078605C1	3952655C1	6018	50	N/A		
CD99D	18	VT	TXL	4078605C1	3952655C1	6018	50	N/A		
VA95-GF	18	WH	TXL	4078605C1	3952655C1	6018	55	N/A		
VE95-GF	18	WH	TXL	4078605C1	3952655C1	6018	55	N/A		

Circuit Number	Gauge	Color	Insulation	Terminal / Splice Number	Connector Part number	Connector Number	Cavity	Seal/Sleeve	Lock 1	Lock 2
KJ92A5	18	TN	TXL	4078605C1	3952655C1	6018	56	N/A		
KA97M	18	VT	TXL	4078605C1	3952655C1	6018	57	N/A		
AJ95H	18	TN	TXL	4078605C1	3952655C1	6018	58	N/A		
AK95H	18	TN	TXL	4078605C1	3952655C1	6018	58	N/A		
KF5S(-)	20	GN	193	4078604C1	3952655C1	6018	59	N/A		
KG5AE(-)	20	GN	193	4078604C1	3952655C1	6018	59	N/A		
KH5S(-)	20	GN	193	4078604C1	3952655C1	6018	59	N/A		
XR5S127	20	GN	193	4078604C1	3952655C1	6018	59	N/A		
XZ5R117	20	GN	193	4078604C1	3952655C1	6018	59	N/A		
AP5A(-)	18	GN	TXL	4078605C1	3952655C1	6018	60	N/A		
AY5A(-)	18	GN	TXL	4078605C1	3952655C1	6018	60	N/A		
LE5A(-)	18	GN	TXL	4078605C1	3952655C1	6018	60	N/A		
LF5A(-)	18	GN	TXL	4078605C1	3952655C1	6018	60	N/A		
KA98GN	20	GN	193	4078604C1	3952655C1	6018	61	N/A		
AP9A	18	TN	TXL	4078605C1	3952655C1	6018	63	N/A		
AY9A	18	TN	TXL	4078605C1	3952655C1	6018	63	N/A		
LE9A	18	TN	150	4078605C1	3952655C1	6018	63	N/A		
LF9A	18	TN	150	4078605C1	3952655C1	6018	63	N/A		
AJ95AT2	18	TN	TXL	4078605C1	3952655C1	6018	64	N/A		
AK95AT2	18	TN	TXL	4078605C1	3952655C1	6018	64	N/A		
KJ92A7	18	TN	TXL	4078605C1	3952655C1	6018	65	N/A		
SG92A11	18	TN	TXL	4078605C1	3952655C1	6018	66	N/A		
SJ92A18	18	TN	TXL	4078605C1	3952655C1	6018	66	N/A		
AJ95AR2	18	RD	TXL	4078605C1	3952655C1	6018	67	N/A		
AK95AR2	18	RD	TXL	4078605C1	3952655C1	6018	67	N/A		
AJ95AU2	18	TN	TXL	4078605C1	3952655C1	6018	69	N/A		
AK95AU2	18	TN	TXL	4078605C1	3952655C1	6018	69	N/A		
KA95TB	18	GY	TXL	4078605C1	3952655C1	6018	72	N/A		
ZA23-G	18	WH	TXL	4078605C1	3952655C1	6018	76	N/A		
KJ92A8	18	TN	TXL	4078605C1	3952655C1	6018	77	N/A		
KJ92A10	18	TN	TXL	4078605C1	3952655C1	6018	78	N/A		
KL47T	18	GY	TXL	4078605C1	3952655C1	6018	78	N/A		
KF5S(+)	20	YL	193	4078604C1	3952655C1	6018	83	N/A		
KG5AE(+)	20	YL	193	4078604C1	3952655C1	6018	83	N/A		
KH5S(+)	20	YL	193	4078604C1	3952655C1	6018	83	N/A		
XR5S106	20	YL	193	4078604C1	3952655C1	6018	83	N/A		
XZ5R106	20	YL	193	4078604C1	3952655C1	6018	83	N/A		
AP5A(+)	18	YL	TXL	4078605C1	3952655C1	6018	84	N/A		
AY5A(+)	18	YL	TXL	4078605C1	3952655C1	6018	84	N/A		
LE5A(+)	18	YL	TXL	4078605C1	3952655C1	6018	84	N/A		
LF5A(+)	18	YL	TXL	4078605C1	3952655C1	6018	84	N/A		
KA98YL	20	YL	193	4078604C1	3952655C1	6018	85	N/A		
AJ95AS2	18	TN	TXL	4078605C1	3952655C1	6018	87	N/A		
AK95AS2	18	TN	TXL	4078605C1	3952655C1	6018	87	N/A		
KJ92A12	18	TN	TXL	4078605C1	3952655C1	6018	90	N/A		
PL47	18	GY	TXL	4078605C1	3952655C1	6018	91	N/A		
XN47	18	GY	TXL	4078605C1	3952655C1	6018	91	N/A		
XP47A125	18	TN	TXL	4078605C1	3952655C1	6018	91	N/A		
XY47A125	18	TN	TXL	4078605C1	3952655C1	6018	91	N/A		
PL47A	18	GY	TXL	4078605C1	3952655C1	6018	92	N/A		
XN47A	18	GY	TXL	4078605C1	3952655C1	6018	92	N/A		
AP95DVH	20	TN	150	3689959C1	3952656C1	6019	1	3623615C1		

Circuit Number	Gauge	Color	Insulation	Terminal / Splice Number	Connector Part number	Connector Number	Cavity	Seal/Sleeve	Lock 1	Lock 2
AY95DVH	20	TN	150	3689959C1	3952656C1	6019	1	3623615C1		
LE95DVH	20	TN	150	3689959C1	3952656C1	6019	1	3623615C1		
LF95DVH	20	TN	150	3689959C1	3952656C1	6019	1	3623615C1		
AJ95E	20	TN	TXL	3689959C1	3952656C1	6019	2	3623615C1		
AK95E	20	TN	TXL	3689959C1	3952656C1	6019	2	3623615C1		
KA14G	14	RD	TXL	3687802C1	3952656C1	6019	3	3624233C1		
KA92D16	14	WH	TXL	3687802C1	3952656C1	6019	4	3624233C1		
AP95DVL	20	TN	150	3689959C1	3952656C1	6019	6	3623615C1		
AY95DVL	20	TN	150	3689959C1	3952656C1	6019	6	3623615C1		
LE95DVL	20	TN	150	3689959C1	3952656C1	6019	6	3623615C1		
LF95DVL	20	TN	150	3689959C1	3952656C1	6019	6	3623615C1		
KA92BA16	14	WH	TXL	3687802C1	3952656C1	6019	7	3624233C1		
KA14HC	14	RD	TXL	3687802C1	3952656C1	6019	8	3624233C1		
KA14K	14	RD	TXL	3687802C1	3952656C1	6019	9	3624233C1		
KA92C16	14	WH	TXL	3687802C1	3952656C1	6019	10	3624233C1		
KA95SB	20	TN	TXL	3689959C1	3952656C1	6019	11	3623615C1		
KA92BB16	14	WH	TXL	3687802C1	3952656C1	6019	13	3624233C1		
KA14KAA	14	RD	TXL	3687802C1	3952656C1	6019	14	3624233C1		
KA14H	14	RD	TXL	3687802C1	3952656C1	6019	15	3624233C1		
KA92E16	14	WH	TXL	3687802C1	3952656C1	6019	16	3624233C1		
CC21B2	18	TN	TXL	3535303C1	3917967C1	6033	A	3535424C1		
CD21B2	18	TN	TXL	3535303C1	3917967C1	6033	A	3535424C1		
CC21B1	18	TN	TXL	3535303C1	3917967C1	6033	B	3535424C1		
CD21B1	18	TN	TXL	3535303C1	3917967C1	6033	B	3535424C1		
CC21B3	18	TN	TXL	3535303C1	3917967C1	6033	C	3535424C1		
CD21B3	18	TN	TXL	3535303C1	3917967C1	6033	C	3535424C1		
AL13AB	18	RD	TXL	3535303C1	3917967C1	6033	D	3535424C1		
AM13AB	18	RD	TXL	3535303C1	3917967C1	6033	D	3535424C1		
AS13AB	18	RD	TXL	3535303C1	3917967C1	6033	D	3535424C1		
KA41A	18	TN	TXL	3535303C1	3917967C1	6033	E	3535424C1		
KA41-GA	18	WH	TXL	3535303C1	3917967C1	6033	F	3535424C1		
KA41-GB	18	WH	TXL	3535303C1	3917967C1	6033	G	3535424C1		
KA41-GC	18	WH	TXL	3535303C1	3917967C1	6033	H	3535424C1		
CC99D	18	VT	TXL	3601686C1	6113104C1	6104	1	3733609C1		
CD99D	18	VT	TXL	3601686C1	6113104C1	6104	1	3733609C1		
CC95GC	18	VT	GXL	3601686C1	6113104C1	6104	2	3601687C1		
CD95GC	18	VT	GXL	3601686C1	6113104C1	6104	2	3601687C1		
KA77-G	16	WH	TXL	2033819C1	1671610C1	6200	A	1652325C1		
KG10-GD	16	WH	GXL	2033819C1	1671610C1	6200	A	1652325C1		
WA10-GA	16	WH	GXL	2033819C1	1671610C1	6200	A	1652325C1		
WC10-GA	12	WH	GXL	2033816C1	1671610C1	6200	A	589390C1		
KA77	16	LTGN	TXL	2033819C1	1671610C1	6200	B	1652325C1		
KA77	16	LTGN	GXL	2033819C1	1671610C1	6200	B	1652325C1		
YB9AB	20	GY	TXL	3600325C1	3600324C1	6201	1	3600327C1		
YB77B	20	LTGN	TXL	3600325C1	3600324C1	6201	2	3600327C1		
YB77C	20	LTGN	TXL	3600325C1	3600324C1	6201	3	3600327C1		
YB6DB	20	GY	TXL	3600325C1	3600324C1	6201	4	3600327C1		
AA9AE	18	GY	TXL	1661875C1	3590299C1	6202	A	3568570C1		
AA9AE	18	GY	TXL	1661875C1	3590299C1	6202	A	3568570C1		
AA74J	18	LTGN	TXL	1661875C1	3590299C1	6202	B	3568570C1		
AA74J	18	LTGN	TXL	1661875C1	3590299C1	6202	B	3568570C1		
VM2A-FL	10	RS	FUS	338892C2		6301	1	2644054R1		

Circuit Number	Gauge	Color	Insulation	Terminal / Splice Number	Connector Part number	Connector Number	Cavity	Seal/Sleeve	Lock 1	Lock 2
VM2B-FL	10	RS	FUS	338892C2		6301	1	2644054R1		
KB2-G	2	WH	SGX	475963C1		6302	1	2644004R1		
KA10-G	8	WH	GXL	373756C2		6303	1	2644054R1		
VG2-G	2	WH	SGX	475963C1		6304	1	2644004R1		
VT17	16	PK	GXL	3728984C1		6305	1	2644038R1		
KR17	16	PK	GXL	3692844C1		6306	1	2644038R1		
KL10C	10	BK	TXL	3866817C1		6306	A	2644005R1		
VD2-G	1	WH	SGX	475965C1		6307	1	2644004R1		
VS17	16	PK	GXL	3692844C1		6307	1	2644038R1		
VE2-G	2	WH	SGX	475963C1		6309	1	2644004R1		
WX2-G	2	WH	SGX	475963C1		6309	1	2644004R1		
VF2-G	2	WH	SGX	475963C1		6310	1	2644004R1		
LB17D	16	PK	GXL	3692844C1		6317	1	2644038R1		
KR2-G	2	WH	SGX	475963C1		6317	A	2644004R1		
TJ23	20	TN	TXL	1661875C1	3522068C1	6400	A	3568570C1		
TK23	20	TN	TXL	1661875C1	3522068C1	6400	A	3568570C1		
TJ23-G	20	TN	TXL	1661875C1	3522068C1	6400	B	3568570C1		
TK23-G	20	TN	TXL	1661875C1	3522068C1	6400	B	3568570C1		
KD34	16	TN	TXL	2033819C1	1671610C1	6401	A	1652325C1		
KB34D	18	TN	TXL	3554322C1	3662425C1	6401	A	3554318C1		
KD34A	16	TN	TXL	2033819C1	1671610C1	6401	B	1652325C1		
KB34B	18	TN	TXL	3554322C1	3662425C1	6401	B	3554318C1		
GK34A	18	TN	TXL	3554322C1	3662425C1	6402	A	3554318C1		
GK34-G	18	TN	TXL	3554322C1	3662425C1	6402	B	3554318C1		
KU21	16	TN	TXL	2033819C1	1671610C1	6550	A	1652325C1		
KU21A	16	TN	TXL	2033819C1	1671610C1	6550	B	1652325C1		
CC21A1	12	TN	GXL	374377C2		6564	1	2644002R1		
CC21A2	12	TN	GXL	374377C2		6564	1	2644002R1		
CD21A1	12	TN	GXL	374377C2		6564	1	2644002R1		
CD21A2	12	TN	GXL	374377C2		6564	1	2644002R1		
CC14A	8	RD	TXL	3752570C1		6565	1	2644054R1		
CD14A	8	RD	TXL	3752570C1		6565	1	2644054R1		
KA14AF	10	RD	TXL	3752553C1	6113338C1	6566	1	6113347C1		
KA14J2	10	RD	GXL	3752553C1	6113338C1	6566	1	6113347C1		
KH14K	10	RD	TXL	3752553C1	6113338C1	6566	3	6113347C1		
VV14N	10	RD	GXL	3752553C1	6113338C1	6566	3	6113347C1		
KA14B	16	RD	TXL	3830798C1	6113341C1	6567	1	3509903C1		
KA14B	16	RD	TXL	3830798C1	6113341C1	6567	1	3509903C1		
KL14B	16	RD	TXL	3830798C1	6113341C1	6567	4	3509903C1		
KG14B	16	RD	TXL	3830798C1	6113341C1	6567	4	3509903C1		
KH14A	12	RD	TXL	3830799C1	6113341C1	6567	7	3575783C1		
KL14A	16	RD	TXL	3830798C1	6113341C1	6567	7	3509903C1		
KV92#110	12	RD	TXL	3830799C1	6113341C1	6567	7	3575783C1		
KG14A	16	RD	TXL	3830798C1	6113341C1	6567	7	3509903C1		
LJ14A	12	RD	TXL	3830799C1	6113341C1	6567	7	3575783C1		
TD92A170	14	RD	GXL	3830798C1	6113341C1	6567	7	3509903C1		
XV92#110	12	RD	TXL	3830799C1	6113341C1	6567	7	3575783C1		
KA14D	12	RD	TXL	3830799C1	6113341C1	6567	13	3575783C1		
KA14D	12	RD	TXL	3830799C1	6113341C1	6567	13	3575783C1		
YA9AA	16	GY	TXL	3535303C1	3543729C1	6702	A	3535424C1		
YK9AA	16	GY	TXL	3535303C1	3543729C1	6702	A	3535424C1		
YB9AB	20	GY	TXL	3535302C1	3543729C1	6702	B	3535423C1		

Circuit Number	Gauge	Color	Insulation	Terminal / Splice Number	Connector Part number	Connector Number	Cavity	Seal/Sleeve	Lock 1	Lock 2
YL9AB	20	GY	TXL	3535302C1	3543729C1	6702	B	3535423C1		
YN9AB	20	GY	TXL	3535302C1	3543729C1	6702	B	3535423C1		
YC9AAD	18	GY	GXL	3535303C1	3543729C1	6702	C	3535424C1		
YE9AAD	18	GY	GXL	3535303C1	3543729C1	6702	C	3535424C1		
YG9AAD	18	GY	GXL	3535303C1	3543729C1	6702	C	3535424C1		
KK9AAD	18	GY	GXL	3535303C1	3543729C1	6702	C	3535424C1		
PC9AAD	18	GY	TXL	3535303C1	3543729C1	6702	C	3535424C1		
WP9AAD	18	GY	GXL	3535303C1	3543729C1	6702	C	3535424C1		
KE9AAB	18	GY	TXL	3535303C1	3543729C1	6702	D	3535424C1		
JE9AAB	18	GY	GXL	3535303C1	3543729C1	6702	D	3535424C1		
KE9AAB	18	GY	TXL	3535303C1	3543729C1	6702	D	3535424C1		
KZ9AAC	18	GY	GXL	3535303C1	3543729C1	6702	E	3535424C1		
KA95G	20	WH	TXL	3535302C1	3543729C1	6703	A	3535423C1		
KC41D	20	WH	TXL	3535302C1	3543729C1	6703	B	3535423C1		
GA95-GF	20	WH	GXL	3535302C1	3543729C1	6703	C	3535424C1		
KJ95-GF	20	WH	GXL	3535302C1	3543729C1	6703	C	3535424C1		
KY95-GG	18	WH	GXL	3535303C1	3543729C1	6703	C	3535424C1		
GE44G	18	GY	TXL	3535303C1	3543729C1	6703	D	3535424C1		
GK34-G	18	TN	TXL	3535303C1	3543729C1	6703	E	3535424C1		
KA10H2	10	WH	TXL	1687847C1	3551896C1	6704	A	589390C1		
KA92F16	14	WH	TXL	2033816C1	3551896C1	6704	A	1652325C1		
TJ95-GB	16	BK	TXL	2033819C1	3551896C1	6704	B	1652325C1		
TK95-GB	16	BK	TXL	2033819C1	3551896C1	6704	B	1652325C1		
AL10-H	10	WH	TXL	1687847C1	3551896C1	6704	B	589390C1		
AM10-H	10	WH	TXL	1687847C1	3551896C1	6704	B	589390C1		
AS10-H	10	WH	TXL	1687847C1	3551896C1	6704	B	589390C1		
KA95-GC	18	BK	TXL	2033819C1	3551896C1	6704	C	3517771C1		
KA41-GD	12	WH	GXL	2033816C1	3551896C1	6704	C	589390C1		
TL10-G	10	WH	TXL	1687847C1	3551896C1	6704	D	589390C1		
TM10-G	10	WH	TXL	1687847C1	3551896C1	6704	D	589390C1		
TS10-G	10	WH	TXL	1687847C1	3551896C1	6704	D	589390C1		
TD92-G	14	WH	GXL	2033816C1	3551896C1	6704	D	589391C1		
XV92-G	12	WH	TXL	2033816C1	3551896C1	6704	D	589391C1		
KA10H3	10	WH	TXL	1687847C1	3551896C1	6704	E	589390C1		
KA41-GE	10	WH	TXL	1687847C1	3551896C1	6704	E	589390C1		
KV92-G	12	WH	TXL	2033816C1	3551896C1	6704	F	589391C1		
KA41-GF	10	WH	TXL	1687847C1	3551896C1	6704	F	589390C1		
AP5B(+)	18	YL	TXL	3754236C1	3602454C1	6748	A	N/A		
AY5B(+)	18	YL	TXL	3754236C1	3602454C1	6748	A	N/A		
LE5B(-)	18	GN	TXL	3754236C1	3602454C1	6748	A	N/A		
LF5B(-)	18	GN	TXL	3754236C1	3602454C1	6748	A	N/A		
AP5B(-)	18	GN	TXL	3754236C1	3602454C1	6748	B	N/A		
AY5B(-)	18	GN	TXL	3754236C1	3602454C1	6748	B	N/A		
LE5B(+)	18	YL	TXL	3754236C1	3602454C1	6748	B	N/A		
LF5B(+)	18	YL	TXL	3754236C1	3602454C1	6748	B	N/A		
JS1A	16	RD	TXL	365876C2		7000	1	2644038R1		
JS1A	14	LTBL	GXL	365876C2		7000	1	2644038R1		
JS1B	16	RD	TXL	3695859C1		7100	1	2644005R1		
JS1B	14	TN	GXL	3695859C1		7100	1	2644005R1		
KH5V(-)	18	GN	TXL	3555249C1	3599542C1	7105	2	N/A		
KH5V(+)	18	YL	TXL	3555249C1	3599542C1	7105	3	N/A		
KH17-GC	18	WH	GXL	3555249C1	3599542C1	7105	4	N/A		

Circuit Number	Gauge	Color	Insulation	Terminal / Splice Number	Connector Part number	Connector Number	Cavity	Seal/Sleeve	Lock 1	Lock 2
KH3BC(+)	18	DKBL	GXL	3555249C1	3599542C1	7105	10	N/A		
KH3BC(-)	18	GY	GXL	3555249C1	3599542C1	7105	11	N/A		
KH92A	18	TN	GXL	3555249C1	3599542C1	7105	16	N/A		
KH92B	18	TN	GXL	3555249C1	3599542C1	7105	17	N/A		
KH92DP	18	TN	GXL	3555249C1	3599542C1	7105	18	N/A		
KH17C	18	PK	GXL	3555249C1	3599542C1	7105	26	N/A		
KH17B	18	PK	GXL	3555249C1	3599542C1	7105	32	N/A		
KH92DR	18	TN	GXL	3555249C1	3599542C1	7105	34	N/A		
KH13A	14	PK	GXL	3841699C1	3599542C1	7105	35	N/A		
KH10-GK	12	WH	TXL	3841699C1	3599542C1	7105	36	N/A		
KH14A	12	RD	TXL	3841699C1	3599542C1	7105	38	N/A		
KL17-GA	18	TN	TXL	3766445C1	3765544C1	7106	4	3554318C1		
KG17-GA	18	WH	TXL	3766445C1	3765544C1	7106	4	3554318C1		
KL10B	16	BK	TXL	3766445C1	3765544C1	7106	5	3554318C1		
KG10-GB	16	BK	TXL	3766445C1	3765544C1	7106	5	3554318C1		
KL14A	16	RD	TXL	3766445C1	3765544C1	7106	6	3554318C1		
KG14A	16	RD	TXL	3766445C1	3765544C1	7106	6	3554318C1		
KL31A	18	TN	TXL	3766445C1	3765544C1	7106	7	3554318C1		
KG31A	18	TN	TXL	3766445C1	3765544C1	7106	7	3554318C1		
KL92A	18	TN	TXL	3766445C1	3765544C1	7106	9	3554318C1		
KG92A	18	TN	TXL	3766445C1	3765544C1	7106	9	3554318C1		
KL13A	16	PK	TXL	3766445C1	3765544C1	7106	10	3554318C1		
KG13A	18	PK	TXL	3766445C1	3765544C1	7106	10	3554318C1		
KL5A(+)	18	YL	TXL	3766445C1	3765544C1	7106	11	3554318C1		
KG5A(+)	18	YL	TXL	3766445C1	3765544C1	7106	11	3554318C1		
KL5A(-)	18	GN	TXL	3766445C1	3765544C1	7106	12	3554318C1		
KG5A(-)	18	GN	TXL	3766445C1	3765544C1	7106	12	3554318C1		
KL17A	18	DKBL	TXL	3766445C1	3765544C1	7106	14	3554318C1		
KG17A	18	PK	TXL	3766445C1	3765544C1	7106	14	3554318C1		
KL10A	16	BK	TXL	3766445C1	3765544C1	7106	15	3554318C1		
KG10-GA	16	BK	TXL	3766445C1	3765544C1	7106	15	3554318C1		
KL14B	16	RD	TXL	3766445C1	3765544C1	7106	16	3554318C1		
KG14B	16	RD	TXL	3766445C1	3765544C1	7106	16	3554318C1		
KL31B	18	TN	TXL	3766445C1	3765544C1	7106	18	3554318C1		
KG31B	18	TN	TXL	3766445C1	3765544C1	7106	18	3554318C1		
KL31C	18	TN	TXL	3766445C1	3765544C1	7106	19	3554318C1		
KG31C	18	TN	TXL	3766445C1	3765544C1	7106	19	3554318C1		
KL71K	18	LTBL	TXL	3766445C1	3765545C1	7107	1	3554318C1		
KG71K	18	LTBL	TXL	3766445C1	3765545C1	7107	1	3554318C1		
KT92#202	18	LTBL	TXL	3766445C1	3765545C1	7107	2	3554318C1		
KT92#202	18	TN	TXL	3766445C1	3765545C1	7107	2	3554318C1		
KP71L	18	OR	TXL	3766445C1	3765545C1	7107	5	3554318C1		
KT71A	18	LTBL	TXL	3766445C1	3765545C1	7107	5	3554318C1		
KP71L	18	OR	TXL	3766445C1	3765545C1	7107	5	3554318C1		
KT71A	18	LTBL	TXL	3766445C1	3765545C1	7107	5	3554318C1		
KL5B(+)	18	YL	TXL	3766445C1	3765545C1	7107	7	3554318C1		
LE5D(+)	18	YL	TXL	3766445C1	3765545C1	7107	7	3554318C1		
LF5D(+)	18	YL	TXL	3766445C1	3765545C1	7107	7	3554318C1		
KL5B(-)	18	GN	TXL	3766445C1	3765545C1	7107	8	3554318C1		
LE5D(-)	18	GN	TXL	3766445C1	3765545C1	7107	8	3554318C1		
LF5D(-)	18	GN	TXL	3766445C1	3765545C1	7107	8	3554318C1		
KT92#214	18	TN	TXL	3766445C1	3765545C1	7107	14	3554318C1		

Circuit Number	Gauge	Color	Insulation	Terminal / Splice Number	Connector Part number	Connector Number	Cavity	Seal/Sleeve	Lock 1	Lock 2
KT92#214	18	TN	TXL	3766445C1	3765545C1	7107	14	3554318C1		
KT92#215	18	TN	TXL	3766445C1	3765545C1	7107	15	3554318C1		
KT92#215	18	TN	TXL	3766445C1	3765545C1	7107	15	3554318C1		
KT92#216	18	TN	TXL	3766445C1	3765545C1	7107	16	3554318C1		
KT92#216	18	TN	TXL	3766445C1	3765545C1	7107	16	3554318C1		
KF5TB(+)	18	YL	TXL	3683464C1	3683465C1	7110	A	3535424C1		
KL5BE(+)	18	YL	TXL	3683464C1	3683465C1	7110	A	3535424C1		
KV5A128	18	YL	TXL	3683464C1	3683465C1	7110	A	3535424C1		
KF5TB(-)	18	GN	TXL	3683464C1	3683465C1	7110	A	3535424C1		
KH5TB(-)	18	GN	TXL	3683464C1	3683465C1	7110	A	3535424C1		
XR5C127	18	GN	TXL	3683464C1	3683465C1	7110	A	3535424C1		
XZ5A117	18	GN	TXL	3683464C1	3683465C1	7110	A	3535424C1		
KF5TB(-)	18	GN	TXL	3683464C1	3683465C1	7110	B	3535424C1		
KL5BE(-)	18	GN	TXL	3683464C1	3683465C1	7110	B	3535424C1		
KV5A108	18	GN	TXL	3683464C1	3683465C1	7110	B	3535424C1		
KF5TB(+)	18	YL	TXL	3683464C1	3683465C1	7110	B	3535424C1		
KH5TB(+)	18	YL	TXL	3683464C1	3683465C1	7110	B	3535424C1		
XR5C106	18	YL	TXL	3683464C1	3683465C1	7110	B	3535424C1		
XZ5A106	18	YL	TXL	3683464C1	3683465C1	7110	B	3535424C1		
KG5AB(-)	18	GN	TXL	3535303C1	3683465C1	7111	A	3535424C1		
KG5AB(+)	18	YL	TXL	3535303C1	3683465C1	7111	B	3535424C1		
KL31C	18	TN	TXL	4104390C1	4104389C1	7135	1	3600327C1		
KG31C	18	TN	TXL	4104390C1	4104389C1	7135	1	3600327C1		
KL31B	18	TN	TXL	4104390C1	4104389C1	7135	2	3600327C1		
KG31B	18	TN	TXL	4104390C1	4104389C1	7135	2	3600327C1		
KL31A	18	TN	TXL	4104390C1	4104389C1	7135	3	3600327C1		
KG31A	18	TN	TXL	4104390C1	4104389C1	7135	3	3600327C1		
TD92#101	18	LTBL	TXL	3686945C1	3605713C1	7150	1	N/A		
TW92#103	18	YL	TXL	3686945C1	3605713C1	7150	3	N/A		
TD92#105	18	TN	TXL	3686945C1	3605713C1	7150	5	N/A		
XR5B106	18	YL	TXL	3686945C1	3605713C1	7150	6	N/A		
TD92#109	18	GY	TXL	3686945C1	3605713C1	7150	9	N/A		
TD92#110	18	PK	TXL	3686945C1	3605713C1	7150	10	N/A		
TD92#111	18	OR	TXL	3686945C1	3605713C1	7150	11	N/A		
TW92#112	18	TN	TXL	3686945C1	3605713C1	7150	12	N/A		
TD92#116	18	LTBL	TXL	3686945C1	3605713C1	7150	16	N/A		
SA92#117	18	TN	TXL	3686945C1	3605713C1	7150	17	N/A		
SC92A117	18	TN	TXL	3686945C1	3605713C1	7150	17	N/A		
SD92#117	18	TN	TXL	3686945C1	3605713C1	7150	17	N/A		
TD92#118	18	TN	TXL	3686945C1	3605713C1	7150	18	N/A		
TP92#120	18	LTBL	TXL	3686945C1	3605713C1	7150	20	N/A		
TD92#122	18	YL	TXL	3686945C1	3605713C1	7150	22	N/A		
TD92#123	18	LTBL	TXL	3686945C1	3605713C1	7150	23	N/A		
TW92#124	18	TN	TXL	3686945C1	3605713C1	7150	24	N/A		
XP47A125	18	TN	TXL	3686945C1	3605713C1	7150	25	N/A		
XR5B127	18	GN	TXL	3686945C1	3605713C1	7150	27	N/A		
TD92#130	18	WH	TXL	3686945C1	3605713C1	7150	30	N/A		
TU92#131	18	YL	TXL	3686945C1	3605713C1	7150	31	N/A		
TD92#133	18	YL	TXL	3686945C1	3605713C1	7150	33	N/A		
TD92#134	18	TN	TXL	3686945C1	3605713C1	7150	34	N/A		
TD92#136	18	OR	TXL	3686945C1	3605713C1	7150	36	N/A		
TD92#137	18	TN	TXL	3686945C1	3605713C1	7150	37	N/A		

Circuit Number	Gauge	Color	Insulation	Terminal / Splice Number	Connector Part number	Connector Number	Cavity	Seal/Sleeve	Lock 1	Lock 2
TP48#139	18	OR	TXL	3686945C1	3605713C1	7150	39	N/A		
TD47#140	18	LTGN	TXL	3686945C1	3605713C1	7150	40	N/A		
TD92#141	18	TN	TXL	3686945C1	3605713C1	7150	41	N/A		
SC92#142	18	TN	TXL	3686945C1	3605713C1	7150	42	N/A		
TD92#143	18	LTBL	TXL	3686945C1	3605713C1	7150	43	N/A		
SA92#145	18	OR	TXL	3686945C1	3605713C1	7150	45	N/A		
SC92#145	18	OR	TXL	3686945C1	3605713C1	7150	45	N/A		
SD92#145	18	OR	TXL	3686945C1	3605713C1	7150	45	N/A		
TD92#151	18	WH	TXL	3686945C1	3605713C1	7150	51	N/A		
TD92#152	18	LTGN	TXL	3686945C1	3605713C1	7150	52	N/A		
TD92#154	18	TN	TXL	3686945C1	3605713C1	7150	54	N/A		
TD92#155	18	TN	TXL	3686945C1	3605713C1	7150	55	N/A		
TD92#157	18	WH	TXL	3686945C1	3605713C1	7150	57	N/A		
TU92#158	18	LTGN	TXL	3686945C1	3605713C1	7150	58	N/A		
TP48#159	18	TN	TXL	3686945C1	3605713C1	7150	59	N/A		
TD47#160	18	YL	TXL	3686945C1	3605713C1	7150	60	N/A		
TW92#161	18	TN	TXL	3686945C1	3605713C1	7150	61	N/A		
TD92#162	18	YL	TXL	3686945C1	3605713C1	7150	62	N/A		
TD92#163	18	TN	TXL	3686945C1	3605713C1	7150	63	N/A		
TD92#164	18	LTBL	TXL	3686945C1	3605713C1	7150	64	N/A		
TD92#165	18	TN	TXL	3686945C1	3605713C1	7150	65	N/A		
TD92#169	18	TN	TXL	3686945C1	3605713C1	7150	69	N/A		
TD92#170	18	TN	TXL	3686945C1	3605713C1	7150	70	N/A		
TD92#171	18	TN	TXL	3686945C1	3605713C1	7150	71	N/A		
TD92#174	18	TN	TXL	3686945C1	3605713C1	7150	74	N/A		
TD92#176	18	YL	TXL	3686945C1	3605713C1	7150	76	N/A		
TD92#177	18	LTGN	TXL	3686945C1	3605713C1	7150	77	N/A		
TP92#180	18	TN	TXL	3686945C1	3605713C1	7150	80	N/A		
TW92B103	18	YL	TXL	1661875C1	3525872C1	7205	A	3568570C1		
TW92#161	18	TN	TXL	1661875C1	3525872C1	7205	B	3568570C1		
TD92#157	18	WH	TXL	1661875C1	3525872C1	7205	C	3568570C1		
TW92#124	18	TN	TXL	1661875C1	3525872C1	7205	D	3568570C1		
TD92#122	18	YL	TXL	1661875C1	3525872C1	7205	E	3568570C1		
TD92#105	18	TN	TXL	1661875C1	3525872C1	7205	F	3568570C1		
TD92#164	18	LTBL	TXL	1661875C1	3525872C1	7205	G	3568570C1		
TD92#162	18	YL	TXL	1661875C1	3525872C1	7205	H	3568570C1		
TD92#101	18	LTBL	TXL	1667742C1	3525874C1	7206	A	3568570C1		
SA92#117	18	TN	TXL	1667742C1	3525874C1	7206	B	3568570C1		
TW92A103	18	YL	TXL	1667742C1	3525874C1	7206	C	3568570C1		
TD92#143	18	LTBL	TXL	1667742C1	3525874C1	7206	D	3568570C1		
SA92#145	18	OR	TXL	1667742C1	3525874C1	7206	F	3568570C1		
TD92#130	18	WH	TXL	1667742C1	3525874C1	7206	G	3568570C1		
TD92#123	18	LTBL	TXL	1667742C1	3525874C1	7206	H	3568570C1		
XT92#113	18	TN	TXL	1661875C1	3525872C1	7207	A	3568570C1		
XT92#113	18	TN	TXL	1661875C1	3525872C1	7207	A	3568570C1		
XT92#107	18	TN	TXL	1661875C1	3525872C1	7207	B	3568570C1		
XT92#107	18	TN	TXL	1661875C1	3525872C1	7207	B	3568570C1		
XT92#109	18	TN	TXL	1661875C1	3525872C1	7207	D	3568570C1		
XT92#109	18	TN	TXL	1661875C1	3525872C1	7207	D	3568570C1		
XT92#115	18	TN	TXL	1661875C1	3525872C1	7207	E	3568570C1		
XT92#115	18	TN	TXL	1661875C1	3525872C1	7207	E	3568570C1		
XT92#101	18	TN	TXL	1661875C1	3525872C1	7207	H	3568570C1		

Circuit Number	Gauge	Color	Insulation	Terminal / Splice Number	Connector Part number	Connector Number	Cavity	Seal/Sleeve	Lock 1	Lock 2
XT92#101	18	TN	TXL	1661875C1	3525872C1	7207	H	3568570C1		
TD92#111	18	OR	TXL	3686945C1	3605715C1	7250	1	N/A		
TD92#155	18	TN	TXL	3686945C1	3605715C1	7250	2	N/A		
TD92#177	18	LTGN	TXL	3686945C1	3605715C1	7250	3	N/A		
TD92#136	18	OR	TXL	3686945C1	3605715C1	7250	4	N/A		
TD92#152	18	LTGN	TXL	3686945C1	3605715C1	7250	5	N/A		
TD92#171	18	TN	TXL	3686945C1	3605715C1	7250	6	N/A		
TD92#174	18	TN	TXL	3686945C1	3605715C1	7250	8	N/A		
TD92#133	18	YL	TXL	3686945C1	3605715C1	7250	9	N/A		
TD92#151	18	WH	TXL	3686945C1	3605715C1	7250	10	N/A		
TU92#131	18	YL	TXL	3686945C1	3605715C1	7250	11	N/A		
TD92#137	18	TN	TXL	3686945C1	3605715C1	7250	12	N/A		
TP92#180	18	TN	TXL	3686945C1	3605715C1	7250	13	N/A		
TP92#120	18	LTBL	TXL	3686945C1	3605715C1	7250	14	N/A		
TD92#116	18	LTBL	TXL	3686945C1	3605715C1	7250	15	N/A		
TW92#112	18	TN	TXL	3686945C1	3605715C1	7250	16	N/A		
TD92#118	18	TN	TXL	3686945C1	3605715C1	7250	17	N/A		
TD92#154	18	TN	TXL	3686945C1	3605715C1	7250	18	N/A		
TU92#158	18	LTGN	TXL	3686945C1	3605715C1	7250	19	N/A		
TD92#176	18	YL	TXL	3686945C1	3605715C1	7250	20	N/A		
KE9AAB	18	GY	TXL	1661875C1	3522068C1	7303	A	3568570C1		
KE28	18	TN	TXL	1661875C1	3522068C1	7303	B	3568570C1		
XT92#101	18	TN	TXL	3733188C1	3755755C1	7350	1	N/A		
XT92#101	18	TN	TXL	3733188C1	3755755C1	7350	1	N/A		
KV92-G	12	WH	TXL	3755758C1	3755755C1	7350	3	N/A		
XV92-G	12	WH	TXL	3755758C1	3755755C1	7350	3	N/A		
KV92#165	18	TN	TXL	3733188C1	3755755C1	7350	4	N/A		
XV92#165	18	TN	TXL	3733188C1	3755755C1	7350	4	N/A		
KV5B106	18	YL	TXL	3733188C1	3755755C1	7350	6	N/A		
XZ5B106	18	YL	TXL	3733188C1	3755755C1	7350	6	N/A		
XT92#107	18	TN	TXL	3733188C1	3755755C1	7350	7	N/A		
XT92#107	18	TN	TXL	3733188C1	3755755C1	7350	7	N/A		
XT92#109	18	TN	TXL	3733188C1	3755755C1	7350	9	N/A		
XT92#109	18	TN	TXL	3733188C1	3755755C1	7350	9	N/A		
XY47A125	18	TN	TXL	3733188C1	3755755C1	7350	10	N/A		
XY47A125	18	TN	TXL	3733188C1	3755755C1	7350	10	N/A		
XT92#113	18	TN	TXL	3733188C1	3755755C1	7350	13	N/A		
XT92#113	18	TN	TXL	3733188C1	3755755C1	7350	13	N/A		
XT92#115	18	TN	TXL	3733188C1	3755755C1	7350	15	N/A		
XT92#115	18	TN	TXL	3733188C1	3755755C1	7350	15	N/A		
KV92#163	18	TN	TXL	3733188C1	3755755C1	7350	16	N/A		
XV92#163	18	TN	TXL	3733188C1	3755755C1	7350	16	N/A		
KV5B117	18	GN	TXL	3733188C1	3755755C1	7350	17	N/A		
XZ5B117	18	GN	TXL	3733188C1	3755755C1	7350	17	N/A		
KV92#134	18	TN	TXL	3733188C1	3755755C1	7350	19	N/A		
XV92#134	18	TN	TXL	3733188C1	3755755C1	7350	19	N/A		
KV92#141	18	TN	TXL	3733188C1	3755755C1	7350	20	N/A		
XV92#141	18	TN	TXL	3733188C1	3755755C1	7350	20	N/A		
KV92#110	12	RD	TXL	3755758C1	3755755C1	7350	22	N/A		
XV92#110	12	RD	TXL	3755758C1	3755755C1	7350	22	N/A		
KH11-G	10	WH	TXL	3841700C1	3577412C1	7501	1	N/A		
WC11-G	10	WH	TXL	3841700C1	3577412C1	7501	1	N/A		

Circuit Number	Gauge	Color	Insulation	Terminal / Splice Number	Connector Part number	Connector Number	Cavity	Seal/Sleeve	Lock 1	Lock 2
KH14K	10	RD	TXL	3841700C1	3577412C1	7501	2	N/A		
VV14N	10	RD	GXL	3841700C1	3577412C1	7501	2	N/A		
KH92DP	18	TN	GXL	587578C1	587567C91	7502	A	1652325C1		
VY92DP	18	TN	GXL	587578C1	587567C91	7502	A	1652325C1		
KH92DR	18	TN	GXL	587578C1	587567C91	7502	B	1652325C1		
VY92DR	18	TN	GXL	587578C1	587567C91	7502	B	1652325C1		
KF47A	18	GY	TXL	3554322C1	3610533C1	7600	A	3554318C1		
XN47	18	GY	TXL	3554322C1	3610533C1	7600	A	3554318C1		
KF47B	18	GY	TXL	3554322C1	3610533C1	7600	B	3554318C1		
XN47A	18	GY	TXL	3554322C1	3610533C1	7600	B	3554318C1		
TD47#160	18	YL	TXL	3554322C1	3610533C1	7605	A	3554318C1		
TD47#140	18	LTGN	TXL	3554322C1	3610533C1	7605	B	3554318C1		
KM88	16	LTGN	GXL	N/A	BLUNT_SL_V	7800	A	N/A		
KM88	16	LTGN	GXL	N/A	BLUNT_SL_V	7800	A	N/A		
KN88A	18	VT	GXL	N/A	BLUNT_SL_V	7801	A	N/A		
KN88A	16	LTGN	GXL	N/A	BLUNT_SL_V	7801	A	N/A		
WV97J	18	VT	GXL	587578C1	3540051C91	7802	A	1652325C1		
KY97J	18	VT	GXL	587578C1	3540051C91	7802	A	1652325C1		
WV97S	18	VT	GXL	587578C1	3540051C91	7802	B	1652325C1		
KY97S	18	VT	GXL	587578C1	3540051C91	7802	B	1652325C1		
KS88	16	LTGN	GXL	N/A	BLUNT_SL_V	7803	A	N/A		
LG112	16	GY	GXL	1661875C1	3522068C1	7803	A	1661872C1		
LG112-GD	16	WH	TXL	1661875C1	3522068C1	7803	B	1661872C1		
MA52B	14	YL	GXL	2033816C1	1661375C2	8000	A	589391C1	3554019C1	
MA11-GB	14	WH	GXL	2033816C1	1661375C2	8000	B	589391C1		
MA53B	14	YL	GXL	2033816C1	1661375C2	8000	C	589391C1		
MA57	16	OR	GXL	2033819C1	1661375C2	8000	D	1652325C1		
MA58B	16	BN	GXL	2033819C1	1661375C2	8000	E	1652325C1		
MA52A	14	YL	GXL	2033816C1	1661375C2	8001	A	589391C1	1661874C1	
MA11-GA	14	WH	GXL	2033816C1	1661375C2	8001	B	589391C1		
MA53A	14	YL	GXL	2033816C1	1661375C2	8001	C	589391C1		
MA56	16	OR	GXL	2033819C1	1661375C2	8001	D	1652325C1	1684263C1	
MA58A	16	BN	GXL	2033819C1	1661375C2	8001	E	1652325C1		
MA52A	14	YL	GXL	3618273C1	3612306C1	8002	1	N/A		
MA11-GA	14	WH	GXL	3618273C1	3612306C1	8002	2	N/A		
MA53A	14	YL	GXL	3618273C1	3612306C1	8002	3	N/A		
MA56	16	OR	GXL	3618273C1	3612306C1	8002	4	N/A		
MA58A	16	BN	GXL	3618273C1	3612306C1	8002	5	N/A		
MA52B	14	YL	GXL	3618273C1	3612306C1	8003	1	N/A		
MA11-GB	14	WH	GXL	3618273C1	3612306C1	8003	2	N/A		
MA53B	14	YL	GXL	3618273C1	3612306C1	8003	3	N/A		
MA57	16	OR	GXL	3618273C1	3612306C1	8003	4	N/A		
MA58B	16	BN	GXL	3618273C1	3612306C1	8003	5	N/A		
MJ54X	16	OR	GXL	1661875C1	1661778C1	8050	A	1661872C1		
MA54XB	16	OR	GXL	1661875C1	1661778C1	8050	A	1661872C1		
MJ54-GA	16	WH	GXL	1661875C1	1661778C1	8050	B	1661872C1		
MA54-GA	16	WH	GXL	1661875C1	1661778C1	8050	B	1661872C1		
DY54XAJ	16	BN	TXL	1661875C1	1661778C1	8051	A	1661872C1		
PA54XE	16	BN	TXL	1661875C1	1661778C1	8051	A	1661872C1		
DY54XAJ	16	BN	TXL	1661875C1	1661778C1	8051	A	1661872C1		
PA54XE	16	BN	TXL	1661875C1	1661778C1	8051	A	1661872C1		
DY54-GXAJ	16	WH	TXL	1661875C1	1661778C1	8051	B	1661872C1		

Circuit Number	Gauge	Color	Insulation	Terminal / Splice Number	Connector Part number	Connector Number	Cavity	Seal/Sleeve	Lock 1	Lock 2
PA54-GXAJ	16	WH	TXL	1661875C1	1661778C1	8051	B	1661872C1		
DY54-GXAJ	16	WH	TXL	1661875C1	1661778C1	8051	B	1661872C1		
PA54-GXAJ	16	WH	TXL	1661875C1	1661778C1	8051	B	1661872C1		
PA54-GXD	16	WH	TXL	1667742C1	1667740C1	8052	A	1661872C1		
MA54XC	16	OR	GXL	2033819C1	1671610C1	8052	A	1652325C1		
PA54-GXD	16	WH	TXL	1667742C1	1667740C1	8052	A	1661872C1		
NA57CJ	16	OR	TXL	1667742C1	1667740C1	8052	B	1661872C1		
NW57CJ	16	OR	TXL	1667742C1	1667740C1	8052	B	1661872C1		
NY57CJ	16	OR	TXL	1667742C1	1667740C1	8052	B	1661872C1		
MA54-GE	16	VT	GXL	2033819C1	1671610C1	8052	B	1652325C1		
PA57BAJ	16	OR	TXL	1667742C1	1667740C1	8052	B	1661872C1		
PA54XC	16	BN	TXL	1667742C1	1667740C1	8052	C	1661872C1		
PA54XC	16	BN	TXL	1667742C1	1667740C1	8052	C	1661872C1		
PA54-GXE	16	WH	TXL	1661875C1	1667741C1	8053	A	1661872C1		
NA57BJ	16	OR	TXL	1661875C1	1667741C1	8053	B	1661872C1		
NW57BJ	16	OR	TXL	1661875C1	1667741C1	8053	B	1661872C1		
NY57BJ	16	OR	TXL	1661875C1	1667741C1	8053	B	1661872C1		
AV54AJ	16	BN	TXL	1661875C1	1667741C1	8053	C	1661872C1		
AW54AJ	16	BN	TXL	1661875C1	1667741C1	8053	C	1661872C1		
2A54-GXEJ	16	WH	TXL	1661875C1	1667741C1	8054	A	1661872C1		
3C54-GXEJ	16	WH	TXL	1661875C1	1667741C1	8054	A	1661872C1		
3E54-GXEJ	16	WH	TXL	1661875C1	1667741C1	8054	A	1661872C1		
HY54-GXEJ	16	WH	TXL	1661875C1	1667741C1	8054	A	1661872C1		
AA54-GXEJ	16	WH	TXL	1661875C1	1667741C1	8054	A	1661872C1		
2B57AJ	16	OR	TXL	1661875C1	1667741C1	8054	B	1661872C1		
2C57AJ	16	OR	TXL	1661875C1	1667741C1	8054	B	1661872C1		
2D57AJ	16	OR	TXL	1661875C1	1667741C1	8054	B	1661872C1		
2E57AJ	16	OR	TXL	1661875C1	1667741C1	8054	B	1661872C1		
2F57AJ	16	OR	TXL	1661875C1	1667741C1	8054	B	1661872C1		
2G57AJ	16	OR	TXL	1661875C1	1667741C1	8054	B	1661872C1		
AA57AJ	16	OR	TXL	1661875C1	1667741C1	8054	B	1661872C1		
2A54AJ	16	BN	TXL	1661875C1	1667741C1	8054	C	1661872C1		
3C54AJ	16	BN	TXL	1661875C1	1667741C1	8054	C	1661872C1		
3E54AJ	16	BN	TXL	1661875C1	1667741C1	8054	C	1661872C1		
HY54AJ	16	BN	TXL	1661875C1	1667741C1	8054	C	1661872C1		
AA54AJ	16	BN	TXL	1661875C1	1667741C1	8054	C	1661872C1		
PN78B	16	LTGN	GXL	587577C1	587567C91	8070	A	1652325C1		
PN78-GA	16	WH	GXL	587577C1	587567C91	8070	B	1652325C1		
PN78C	16	LTGN	GXL	587577C1	587567C91	8071	A	1652325C1		
PN78-GB	16	WH	GXL	587577C1	587567C91	8071	B	1652325C1		
MA11-GBB	16	WH	GXL	1661875C1	1667741C1	8100	A	1661872C1	1661376C1	
MA11-GBB	16	WH	GXL	1661875C1	1667741C1	8100	A	1661872C1		
MA56A	16	OR	GXL	1661875C1	1667741C1	8100	B	1661872C1		
MA56AB	16	OR	GXL	1661875C1	1667741C1	8100	B	1661872C1		
MA58C	16	BN	GXL	1661875C1	1667741C1	8100	C	1661872C1		
MA58CA	16	BN	GXL	1661875C1	1667741C1	8100	C	1661872C1		
MA54-GCC	16	WH	GXL	1667742C1	1667740C1	8102	A	1661872C1		
MA56AC	16	OR	GXL	1667742C1	1667740C1	8102	B	1661872C1		
MA58CB	16	BN	GXL	1667742C1	1667740C1	8102	C	1661872C1		
ME64B	16	YL	GXL	587577C1	587567C91	8200	A	1652325C1		
ME64-GB	16	WH	GXL	587577C1	587567C91	8200	B	1652325C1		
ME64A	16	YL	GXL	587577C1	587567C91	8201	A	1652325C1		

Circuit Number	Gauge	Color	Insulation	Terminal / Splice Number	Connector Part number	Connector Number	Cavity	Seal/Sleeve	Lock 1	Lock 2
ME64-GA	16	WH	GXL	587577C1	587567C91	8201	B	1652325C1		
MD64B	16	YL	TXL	4080004C1	6131286C1	8202	1	4080000C1		
MD64-GB	16	WH	TXL	4080004C1	6131286C1	8202	2	4080000C1		
MD64A	16	YL	TXL	4080004C1	6131286C1	8203	1	4080000C1		
ME64A	16	YL	GXL	3825461C1	3824986C1	8203	1	3578677C1		
MD64-GA	16	WH	TXL	4080004C1	6131286C1	8203	2	4080000C1		
ME64-GA	16	WH	GXL	3825461C1	3824986C1	8203	2	3578677C1		
ME64B	16	YL	GXL	3825461C1	3824986C1	8203	3	3578677C1		
ME64-GB	16	WH	GXL	3825461C1	3824986C1	8203	4	3578677C1		
MA85	16	GY	GXL	1661875C1	1661778C1	8303	A	1661872C1		
MA85	16	GY	GXL	1661875C1	1661778C1	8303	A	1661872C1		
MA85-GA	16	WH	GXL	1661875C1	1661778C1	8303	B	1661872C1		
MA85-GA	16	WH	GXL	1661875C1	1661778C1	8303	B	1661872C1		
MA87C	16	GY	GXL	3536865C1	3536864C1	8350	1	3536868C1		
MA87D	16	GY	GXL	3536865C1	3536864C1	8350	2	3536868C1		
WW87A	18	GY	TXL	3554322C1	3554317C1	8351	1	3554318C1		
WW87A	18	GY	TXL	3554322C1	3554317C1	8351	1	3554318C1		
WW9BB	18	GY	TXL	3554322C1	3554317C1	8351	2	3554318C1		
WW9BB	18	GY	TXL	3554322C1	3554317C1	8351	2	3554318C1		
MA87C	16	GY	GXL	1661875C1	3522068C1	8352	A	1661872C1		
MA87D	16	GY	GXL	1661875C1	3522068C1	8352	B	1661872C1		
CC21A1	12	TN	GXL	3664983C1	3664985C1	8410	1	3664987C1		
CD21A1	12	TN	GXL	3664983C1	3664985C1	8410	1	3664987C1		
CC21A2	12	TN	GXL	3664983C1	3664985C1	8410	2	3664987C1		
CD21A2	12	TN	GXL	3664983C1	3664985C1	8410	2	3664987C1		
CC14A	8	RD	TXL	3664982C1	3664985C1	8410	3	3664986C1		
CD14A	8	RD	TXL	3664982C1	3664985C1	8410	3	3664986C1		
CC21B1	18	TN	TXL	3664984C1	3664985C1	8410	6	3664988C1		
CD21B1	18	TN	TXL	3664984C1	3664985C1	8410	6	3664988C1		
CC21B2	18	TN	TXL	3664984C1	3664985C1	8410	7	3664988C1		
CD21B2	18	TN	TXL	3664984C1	3664985C1	8410	7	3664988C1		
CC21B3	18	TN	TXL	3664984C1	3664985C1	8410	8	3664988C1		
CD21B3	18	TN	TXL	3664984C1	3664985C1	8410	8	3664988C1		
NA72EA	16	OR	GXL	3594831C1	1661777C1	8454	C	1661872C1		
NA72EA	16	OR	GXL	3594831C1	1661777C1	8454	C	1661872C1		
NA72EB	16	OR	GXL	3594831C1	1661777C1	8454	D	1661872C1		
NA72EB	16	OR	GXL	3594831C1	1661777C1	8454	D	1661872C1		
TJ95H	18	TN	TXL	3573077C1	6114576C1	8500	1	N/A		
TK95H	18	TN	TXL	3573077C1	6114576C1	8500	1	N/A		
TP5A(+)	18	YL	193	3573077C1	6114576C1	8500	2	N/A		
TY5A(+)	18	YL	193	3573077C1	6114576C1	8500	2	N/A		
KA95TB	18	GY	TXL	3573077C1	6114576C1	8500	5	N/A		
TL13AB	18	RD	TXL	3573077C1	6114576C1	8500	6	N/A		
TM13AB	18	RD	TXL	3573077C1	6114576C1	8500	6	N/A		
TS13AB	18	RD	TXL	3573077C1	6114576C1	8500	6	N/A		
TJ95AR2	18	RD	TXL	3573077C1	6114576C1	8500	8	N/A		
TK95AR2	18	RD	TXL	3573077C1	6114576C1	8500	8	N/A		
TP5A(-)	18	GN	193	3573077C1	6114576C1	8500	9	N/A		
TY5A(-)	18	GN	193	3573077C1	6114576C1	8500	9	N/A		
TL10-GK	16	BK	TXL	3989901C1	6114576C1	8500	13	N/A		
TM10-GK	16	BK	TXL	3989901C1	6114576C1	8500	13	N/A		
TS10-GK	16	BK	TXL	3989901C1	6114576C1	8500	13	N/A		

Circuit Number	Gauge	Color	Insulation	Terminal / Splice Number	Connector Part number	Connector Number	Cavity	Seal/Sleeve	Lock 1	Lock 2
MB94	18	GY	GXL	2033819C1	1686834C1	8500	A	1652325C1		
MB94	18	GY	GXL	2033819C1	1686834C1	8500	A	1652325C1		
MB94A	18	GY	GXL	2033819C1	1686834C1	8500	B	1652325C1		
MB94A	18	GY	GXL	2033819C1	1686834C1	8500	B	1652325C1		
MB94B	18	GY	GXL	2033819C1	1686834C1	8500	C	1652325C1		
MB94B	18	GY	GXL	2033819C1	1686834C1	8500	C	1652325C1		
MB94H	18	GY	GXL	2033819C1	1686834C1	8501	A	1652325C1		
MB94H	18	GY	GXL	2033819C1	1686834C1	8501	A	1652325C1		
MB94J	18	GY	GXL	2033819C1	1686834C1	8501	B	1652325C1		
MB94J	18	GY	GXL	2033819C1	1686834C1	8501	B	1652325C1		
MB94K	18	GY	GXL	2033819C1	1686834C1	8501	C	1652325C1		
MB94K	18	GY	GXL	2033819C1	1686834C1	8501	C	1652325C1		
NB94C	18	GY	GXL	1680205C1	3866308C1	8502	1	N/A		
NB94C	18	GY	GXL	1680205C1	3866308C1	8502	1	N/A		
NB94D	18	GY	GXL	1680205C1	3866308C1	8502	2	N/A		
NB94D	18	GY	GXL	1680205C1	3866308C1	8502	2	N/A		
NB94E	18	GY	GXL	1680205C1	3866308C1	8503	1	N/A		
NB94E	18	GY	GXL	1680205C1	3866308C1	8503	1	N/A		
NB94F	18	GY	GXL	1680205C1	3866308C1	8503	2	N/A		
NB94F	18	GY	GXL	1680205C1	3866308C1	8503	2	N/A		
MX94M	18	GY	TXL	3601686C1	3919376C1	8504	1	3733609C1		
MX94M	18	GY	TXL	3601686C1	3919376C1	8504	1	3733609C1		
MX94MA	18	GY	TXL	3601686C1	3919376C1	8504	2	3733609C1		
MX94MA	18	GY	TXL	3601686C1	3919376C1	8504	2	3733609C1		
MX94MB	18	GY	TXL	3601686C1	3919376C1	8504	3	3733609C1		
MX94MB	18	GY	TXL	3601686C1	3919376C1	8504	3	3733609C1		
MZ94MH	18	GY	TXL	3601686C1	3919376C1	8505	1	3733609C1		
MZ94MH	18	GY	TXL	3601686C1	3919376C1	8505	1	3733609C1		
MZ94MJ	18	GY	TXL	3601686C1	3919376C1	8505	2	3733609C1		
MZ94MJ	18	GY	TXL	3601686C1	3919376C1	8505	2	3733609C1		
MZ94MK	18	GY	TXL	3601686C1	3919376C1	8505	3	3733609C1		
MZ94MK	18	GY	TXL	3601686C1	3919376C1	8505	3	3733609C1		
NC94MC	18	GY	TXL	6111842C1	6111844C1	8506	1	6111843C1		
NC94MC	18	GY	TXL	6111842C1	6111844C1	8506	1	6111843C1		
NC94MD	18	GY	TXL	6111842C1	6111844C1	8506	2	6111843C1		
NC94MD	18	GY	TXL	6111842C1	6111844C1	8506	2	6111843C1		
PC94ME	18	GY	TXL	6111842C1	6111844C1	8507	1	6111843C1		
PC94ME	18	GY	TXL	6111842C1	6111844C1	8507	1	6111843C1		
PC94MF	18	GY	TXL	6111842C1	6111844C1	8507	2	6111843C1		
PC94MF	18	GY	TXL	6111842C1	6111844C1	8507	2	6111843C1		
MH19	14	GY	GXL	587577C1	587567C91	8550	A	589391C1		
MH19	14	GY	GXL	587577C1	587567C91	8550	A	589391C1		
MH19-GA	14	WH	GXL	587577C1	587567C91	8550	B	589391C1		
MH19-GA	14	WH	GXL	587577C1	587567C91	8550	B	589391C1		
MA11-GC	12	WH	GXL	1673747C1	587566C91	8600	A	589390C1	1667771C1	
MA11-GC	12	WH	GXL	1673747C1	587566C91	8600	A	589390C1		
MA11-GD	12	WH	GXL	2033816C1	3551896C1	8800	A	589390C1	1664408C1	
MA11-GD	12	WH	GXL	2033816C1	3551896C1	8800	A	589390C1		
MD64-GA	16	WH	TXL	2033819C1	3551896C1	8800	B	1652325C1		
ME64-GA	16	WH	GXL	2033819C1	3551896C1	8800	B	1652325C1		
ME64-GA	16	WH	GXL	2033819C1	3551896C1	8800	B	1652325C1		
MD64-GB	16	WH	TXL	2033819C1	3551896C1	8800	C	1652325C1		

Circuit Number	Gauge	Color	Insulation	Terminal / Splice Number	Connector Part number	Connector Number	Cavity	Seal/Sleeve	Lock 1	Lock 2
ME64-GB	16	WH	GXL	2033819C1	3551896C1	8800	C	1652325C1		
ME64-GB	16	WH	GXL	2033819C1	3551896C1	8800	C	1652325C1		
MH19-GA	14	WH	GXL	2033816C1	3551896C1	8800	D	589391C1		
MK19-GA	14	WH	GXL	2033816C1	3551896C1	8800	D	589391C1		
MH19-GA	14	WH	GXL	2033816C1	3551896C1	8800	D	589391C1		
MJ54-GA	16	WH	GXL	2033819C1	3551896C1	8800	E	1652325C1		
PN78-G	16	WH	GXL	2033819C1	3551896C1	8800	E	1652325C1		
MA85-GA	16	WH	GXL	2033819C1	3551896C1	8800	F	1652325C1		
MA85-GA	16	WH	GXL	2033819C1	3551896C1	8800	F	1652325C1		
NA9BC	18	GY	GXL	2033819C1	3551896C1	8802	A	1652325C1		
PB9BC	18	GY	GXL	2033819C1	3551896C1	8802	A	1652325C1		
FA9BE	18	GY	GXL	2033819C1	3551896C1	8802	C	1652325C1		
FB9BE	18	GY	GXL	2033819C1	3551896C1	8802	C	1652325C1		
FC9BE	18	GY	GXL	2033819C1	3551896C1	8802	C	1652325C1		
FD9BE	18	GY	GXL	2033819C1	3551896C1	8802	C	1652325C1		
FE9BE	18	GY	GXL	2033819C1	3551896C1	8802	C	1652325C1		
FF9BE	18	GY	GXL	2033819C1	3551896C1	8802	C	1652325C1		
NR9BF	18	GY	GXL	2033819C1	3551896C1	8802	D	1652325C1		
NA11-GA	10	WH	TXL	1687847C1	3551896C1	8803	A	589390C1		
PB11-GA	10	WH	TXL	1687847C1	3551896C1	8803	A	589390C1		
NA10-G	12	WH	TXL	2033816C1	3551896C1	8803	B	589391C1		
PB10-G	12	WH	TXL	2033816C1	3551896C1	8803	B	589391C1		
PB68D	16	WH	TXL	2033819C1	3551896C1	8803	C	1652325C1		
GD39-GA	16	WH	GXL	2033819C1	3551896C1	8803	D	1652325C1		
GF39-GA	16	WH	GXL	2033819C1	3551896C1	8803	D	1652325C1		
LG112-GD	16	WH	TXL	2033819C1	3551896C1	8803	D	1652325C1		
GA39-G	16	WH	GXL	2033819C1	3551896C1	8803	E	1652325C1		
GB39-G	16	WH	GXL	2033819C1	3551896C1	8803	E	1652325C1		
RE39-G	18	WH	GXL	2033819C1	3551896C1	8803	F	1652325C1		
NA11-GB	10	WH	TXL	1687847C1	3551896C1	8804	A	589390C1		
PB11-GB	10	WH	TXL	1687847C1	3551896C1	8804	A	589390C1		
CA59-G	14	WH	GXL	2033816C1	3551896C1	8804	B	589391C1		
CB59-G	14	WH	GXL	2033816C1	3551896C1	8804	B	589391C1		
CC59-G	14	WH	GXL	2033816C1	3551896C1	8804	B	589391C1		
CD59-G	14	WH	GXL	2033816C1	3551896C1	8804	B	589391C1		
CE59-G	14	WH	GXL	2033816C1	3551896C1	8804	B	589391C1		
SV59-GA	14	WH	GXL	2033816C1	3551896C1	8804	C	589391C1		
SW59-GA	14	WH	GXL	2033816C1	3551896C1	8804	C	589391C1		
SX59-GA	16	GY	GXL	2033819C1	3551896C1	8804	C	1652325C1		
SY59-GA	14	WH	GXL	2033816C1	3551896C1	8804	C	589391C1		
SZ59-GA	14	WH	GXL	2033816C1	3551896C1	8804	C	589391C1		
NT49-G	18	WH	GXL	2033819C1	3551896C1	8804	D	1652325C1		
NV65-G	16	WH	GXL	2033819C1	3551896C1	8804	E	1652325C1		
NX65-GA	14	WH	GXL	2033816C1	3551896C1	8804	F	589391C1		
NY65-GA	14	WH	GXL	2033816C1	3551896C1	8804	F	589391C1		
PU11-GBB	12	WH	TXL	2033816C1	3551896C1	8804	F	589391C1		
PV11-GBB	12	WH	TXL	2033816C1	3551896C1	8804	F	589391C1		
SV5UE(+)	20	YL	193	3987168C1	6111813C1	8903	1	3987169C1		
SV5UE(+)	20	YL	193	3987168C1	6111813C1	8903	1	3987169C1		
WX5UE(+)	18	YL	TXL	4062164C1	6111813C1	8903	2	4062195C1		
WX5UE(+)	20	YL	193	3987168C1	6111813C1	8903	2	3987169C1		
NW67-GG	20	WH	TXL	3987168C1	6111813C1	8903	5	3987169C1		

Circuit Number	Gauge	Color	Insulation	Terminal / Splice Number	Connector Part number	Connector Number	Cavity	Seal/Sleeve	Lock 1	Lock 2
NW67-GG	20	WH	TXL	3987168C1	6111813C1	8903	5	3987169C1		
SV5UE(-)	20	GN	193	3987168C1	6111813C1	8903	6	3987169C1		
SV5UE(-)	20	GN	193	3987168C1	6111813C1	8903	6	3987169C1		
WX5UE(-)	18	GN	TXL	4062164C1	6111813C1	8903	7	4062195C1		
WX5UE(-)	20	GN	193	3987168C1	6111813C1	8903	7	3987169C1		
NW67Y	20	PK	TXL	3987168C1	6111813C1	8903	8	3987169C1		
NW67Y	20	PK	TXL	3987168C1	6111813C1	8903	8	3987169C1		
WU67YB	20	PK	TXL	3702881C1	3852527C1	8904	1	3600327C1		
WU67YB	20	PK	TXL	3702881C1	3852527C1	8904	1	3600327C1		
WU67YC	20	PK	TXL	3702881C1	3852527C1	8904	2	3600327C1		
WU67YC	20	PK	TXL	3702881C1	3852527C1	8904	2	3600327C1		
SK5UF(+)	20	YL	193	3702881C1	3852527C1	8904	3	3600327C1	3554019C1	
SK5UF(+)	20	YL	193	3702881C1	3852527C1	8904	3	3600327C1		
SK5UF(-)	20	GN	193	3702881C1	3852527C1	8904	6	3600327C1		
SK5UF(-)	20	GN	193	3702881C1	3852527C1	8904	6	3600327C1		
WU67-G	20	WH	TXL	3702881C1	3852527C1	8904	8	3600327C1		
WU67-G	20	WH	TXL	3702881C1	3852527C1	8904	8	3600327C1		
SK5UH(+)	18	YL	TXL	3683464C1	3683465C1	8956	A	3535424C1		
SR5U(+)	18	YL	TXL	3683464C1	3683465C1	8956	A	3535424C1		
SV5UB(+)	18	YL	TXL	3683464C1	3683465C1	8956	A	3535424C1		
SK5UH(+)	18	YL	TXL	3683464C1	3683465C1	8956	A	3535424C1		
SR5U(+)	18	YL	TXL	3683464C1	3683465C1	8956	A	3535424C1		
SV5UB(+)	18	YL	TXL	3683464C1	3683465C1	8956	A	3535424C1		
SK5UH(-)	18	GN	TXL	3683464C1	3683465C1	8956	B	3535424C1		
SR5U(-)	18	GN	TXL	3683464C1	3683465C1	8956	B	3535424C1		
SV5UB(-)	18	GN	TXL	3683464C1	3683465C1	8956	B	3535424C1		
SK5UH(-)	18	GN	TXL	3683464C1	3683465C1	8956	B	3535424C1		
SR5U(-)	18	GN	TXL	3683464C1	3683465C1	8956	B	3535424C1		
SV5UB(-)	18	GN	TXL	3683464C1	3683465C1	8956	B	3535424C1		
RK5UH(+)	18	YL	TXL	3683464C1	3683465C1	8958	A	3535424C1		
RS5U(+)	18	YL	TXL	3683464C1	3683465C1	8958	A	3535424C1		
RK5UH(+)	18	YL	TXL	3683464C1	3683465C1	8958	A	3535424C1		
RS5U(+)	18	YL	TXL	3683464C1	3683465C1	8958	A	3535424C1		
RK5UH(-)	18	GN	TXL	3683464C1	3683465C1	8958	B	3535424C1	2039342C1	
RS5U(-)	18	GN	TXL	3683464C1	3683465C1	8958	B	3535424C1		
RK5UH(-)	18	GN	TXL	3683464C1	3683465C1	8958	B	3535424C1		
RS5U(-)	18	GN	TXL	3683464C1	3683465C1	8958	B	3535424C1		
KA10-H	4	WH	SGX	475961C1		9260	1	3812582R1		
RA71BA	12	OR	TXL	3612307C1	3612305C1	9303	1	N/A		
RA56A	14	OR	GXL	3613770C1	3612305C1	9303	2	N/A		
RA57A	14	OR	GXL	3613770C1	3612305C1	9303	3	N/A		
RA68A	14	BN	GXL	3613770C1	3612305C1	9303	4	N/A		
RA10-G	12	WH	TXL	3612307C1	3612305C1	9303	5	N/A		
RB94BD	16	GY	GXL	1680205C1	3539777C1	9501	1	N/A		
RB94BE	16	GY	GXL	1680205C1	3539777C1	9501	2	N/A		
RB94BA	16	GY	GXL	2033819C1	1686834C1	9502	A	1652325C1		
RB94BB	16	GY	GXL	2033819C1	1686834C1	9502	B	1652325C1		
RB94BC	16	GY	GXL	2033819C1	1686834C1	9502	C	1652325C1		
RB94BF	16	GY	GXL	1680205C1	3539777C1	9503	1	N/A		
RB94BH	16	GY	GXL	1680205C1	3539777C1	9503	2	N/A		
RB94BJ	16	GY	GXL	2033819C1	1686834C1	9504	A	1652325C1		
RB94BK	16	GY	GXL	2033819C1	1686834C1	9504	B	1652325C1		

Circuit Number	Gauge	Color	Insulation	Terminal / Splice Number	Connector Part number	Connector Number	Cavity	Seal/Sleeve	Lock 1	Lock 2
RB94BL	16	GY	GXL	2033819C1	1686834C1	9504	C	1652325C1		
RC94BM	16	GY	GXL	3679224C1	3678796C1	9505	1	3601687C1		
RC94BN	16	GY	GXL	3679224C1	3678796C1	9505	2	3601687C1		
ST94MD	18	GY	TXL	6111842C1	6111844C1	9506	1	6111843C1	2006504C1	
ST94ME	18	GY	TXL	6111842C1	6111844C1	9506	2	6111843C1	2011364C1	
ST94MA	18	GY	TXL	3601686C1	3919376C1	9507	1	3733609C1	1667771C1	1667771C1
ST94MB	18	GY	TXL	3601686C1	3919376C1	9507	2	3733609C1		
ST94MC	18	GY	TXL	3601686C1	3919376C1	9507	3	3733609C1	1689428C1	
ST94MF	18	GY	TXL	6111842C1	6111844C1	9508	1	6111843C1		
ST94MH	18	GY	TXL	6111842C1	6111844C1	9508	2	6111843C1		
ST94MJ	18	GY	TXL	3601686C1	3919376C1	9509	1	3733609C1	3534158C1	
ST94MK	18	GY	TXL	3601686C1	3919376C1	9509	2	3733609C1	3538636C1	
ST94ML	18	GY	TXL	3601686C1	3919376C1	9509	3	3733609C1	3540615C1	
SZ94BF	16	GY	GXL	1680205C1	3539777C1	9511	1	N/A	1661874C1	
TF94BF	16	GY	GXL	1680205C1	3539777C1	9511	1	N/A		
UP94BF	16	GY	GXL	1680205C1	3539777C1	9511	1	N/A		
PS94SAB	18	GY	GXL	3601686C1	3601685C1	9511	1	3601687C1		
SZ94BH	16	GY	GXL	1680205C1	3539777C1	9511	2	N/A		
TF94BH	16	GY	GXL	1680205C1	3539777C1	9511	2	N/A		
UP94BH	16	GY	GXL	1680205C1	3539777C1	9511	2	N/A		
PS94SCB	18	GY	GXL	3601686C1	3601685C1	9511	2	3601687C1		
PS94SBB	18	GY	GXL	3601686C1	3601685C1	9511	3	3601687C1		
PS94SDB	18	GY	GXL	3601686C1	3601685C1	9511	4	3601687C1		
SZ94BD	16	GY	GXL	1680205C1	3539777C1	9512	1	N/A	3554821C1	
TF94BD	16	GY	GXL	1680205C1	3539777C1	9512	1	N/A	3539892C1	3539893C1
UP94BD	16	GY	GXL	1680205C1	3539777C1	9512	1	N/A		
PM94SJ	16	GY	GXL	3679224C1	3678796C1	9512	1	3601687C1		
SZ94BE	16	GY	GXL	1680205C1	3539777C1	9512	2	N/A	3549120C1	
TF94BE	16	GY	GXL	1680205C1	3539777C1	9512	2	N/A	3573833C1	
UP94BE	16	GY	GXL	1680205C1	3539777C1	9512	2	N/A		
PM94SK	16	GY	GXL	3679224C1	3678796C1	9512	2	3601687C1		
TF94BA	16	GY	GXL	2033819C1	1686834C1	9513	A	1652325C1		
PM94SM	16	GY	GXL	2033819C1	1686834C1	9513	A	1652325C1		
TF94BB	16	GY	GXL	2033819C1	1686834C1	9513	B	1652325C1	3503599C1	3503599C1
PM94SN	16	GY	GXL	2033819C1	1686834C1	9513	B	1652325C1		
TF94BC	16	GY	GXL	2033819C1	1686834C1	9513	C	1652325C1		
PM94SL	16	GY	GXL	2033819C1	1686834C1	9513	C	1652325C1		
TF94BJ	16	GY	GXL	2033819C1	1686834C1	9514	A	1652325C1		
TF94BK	16	GY	GXL	2033819C1	1686834C1	9514	B	1652325C1		
TF94BL	16	GY	GXL	2033819C1	1686834C1	9514	C	1652325C1		
HA94A	16	GY	GXL	3679224C1	3678796C1	9515	1	3601687C1		
HA94B	16	GY	GXL	3679224C1	3678796C1	9515	2	3601687C1		
UJ94MJ	18	GY	TXL	3601686C1	3919376C1	9516	1	3733609C1		
HB94A	16	GY	GXL	3679224C1	3678796C1	9516	1	3601687C1		
UJ94MK	18	GY	TXL	3601686C1	3919376C1	9516	2	3733609C1		
HB94B	16	GY	GXL	3679224C1	3678796C1	9516	2	3601687C1		
UJ94ML	18	GY	TXL	3601686C1	3919376C1	9516	3	3733609C1		
UJ94MF	18	GY	TXL	6111842C1	6111844C1	9517	1	6111843C1		
US94MF	18	GY	TXL	6111842C1	6111844C1	9517	1	6111843C1		
UJ94MH	18	GY	TXL	6111842C1	6111844C1	9517	2	6111843C1		
US94MH	18	GY	TXL	6111842C1	6111844C1	9517	2	6111843C1		
UJ94MD	18	GY	TXL	6111842C1	6111844C1	9518	1	6111843C1		

Circuit Number	Gauge	Color	Insulation	Terminal / Splice Number	Connector Part number	Connector Number	Cavity	Seal/Sleeve	Lock 1	Lock 2
US94MD	18	GY	TXL	6111842C1	6111844C1	9518	1	6111843C1		
UJ94ME	18	GY	TXL	6111842C1	6111844C1	9518	2	6111843C1		
US94ME	18	GY	TXL	6111842C1	6111844C1	9518	2	6111843C1		
UJ94MA	18	GY	TXL	3601686C1	3919376C1	9519	1	3733609C1		
UJ94MB	18	GY	TXL	3601686C1	3919376C1	9519	2	3733609C1		
UJ94MC	18	GY	TXL	3601686C1	3919376C1	9519	3	3733609C1		
VA94BA	16	GY	GXL	2033819C1	1686834C1	9520	A	1652325C1		
VA94BB	16	GY	GXL	2033819C1	1686834C1	9520	B	1652325C1		
VA94BC	16	GY	GXL	2033819C1	1686834C1	9520	C	1652325C1		
VA94BD	16	GY	GXL	1680205C1	3539777C1	9521	1	N/A		
VA94BE	16	GY	GXL	1680205C1	3539777C1	9521	2	N/A		
VA94BY	16	GY	GXL	2033819C1	1686834C1	9522	A	1652325C1		
VA94BZ	16	GY	GXL	2033819C1	1686834C1	9522	B	1652325C1		
VA94BP	16	GY	GXL	2033819C1	1686834C1	9522	C	1652325C1		
VA94BQ	16	GY	GXL	1680205C1	3539777C1	9523	1	N/A		
VA94BR	16	GY	GXL	1680205C1	3539777C1	9523	2	N/A		
VA94BS	16	GY	GXL	2033819C1	1686834C1	9524	A	1652325C1		
VA94BT	16	GY	GXL	2033819C1	1686834C1	9524	B	1652325C1		
VA94BU	16	GY	GXL	2033819C1	1686834C1	9524	C	1652325C1		
VA94BV	16	GY	GXL	1680205C1	3539777C1	9525	1	N/A		
VA94BW	16	GY	GXL	1680205C1	3539777C1	9525	2	N/A		
VA94BJ	16	GY	GXL	2033819C1	1686834C1	9526	A	1652325C1		
VA94BK	16	GY	GXL	2033819C1	1686834C1	9526	B	1652325C1		
VA94BL	16	GY	GXL	2033819C1	1686834C1	9526	C	1652325C1		
VA94BF	16	GY	GXL	1680205C1	3539777C1	9527	1	N/A		
VA94BH	16	GY	GXL	1680205C1	3539777C1	9527	2	N/A		
VB94MA	18	GY	TXL	3601686C1	3919376C1	9528	1	3733609C1		
VB94MB	18	GY	TXL	3601686C1	3919376C1	9528	2	3733609C1	1684263C1	1684263C1
VB94MC	18	GY	TXL	3601686C1	3919376C1	9528	3	3733609C1		
VB94MD	18	GY	TXL	6111842C1	6111844C1	9529	1	6111843C1		
VB94ME	18	GY	TXL	6111842C1	6111844C1	9529	2	6111843C1		
TB49	18	GY	GXL	587578C1	3593684C91	9530	A	1652325C1	3573833C1	
UY49A	18	GY	GXL	587578C1	3593684C91	9530	A	1652325C1		
TB49-G	18	WH	GXL	587578C1	3593684C91	9530	B	1652325C1		
UY49-GB	18	WH	GXL	587578C1	3593684C91	9530	B	1652325C1		
UV49	18	GY	GXL	587578C1	3593684C91	9531	A	1652325C1		
UV49-G	18	WH	GXL	587578C1	3593684C91	9531	B	1652325C1		
VB94BSA	18	GY	TXL	3601686C1	3919376C1	9532	1	3733609C1		
VB94BTA	18	GY	TXL	3601686C1	3919376C1	9532	2	3733609C1		
VB94BUA	18	GY	TXL	3601686C1	3919376C1	9532	3	3733609C1	1661873C1	
UW49	18	GY	GXL	587578C1	3593684C91	9533	A	1652325C1		
UX49-G	18	WH	GXL	587578C1	3593684C91	9533	B	1652325C1		
UY49-GA	18	WH	GXL	587578C1	3593684C91	9533	B	1652325C1		
VB94MJ	18	GY	TXL	3601686C1	3919376C1	9534	1	3733609C1		
VB94MK	18	GY	TXL	3601686C1	3919376C1	9534	2	3733609C1		
VB94ML	18	GY	TXL	3601686C1	3919376C1	9534	3	3733609C1		
VB94MF	18	GY	TXL	6111842C1	6111844C1	9535	1	6111843C1		
VB94MH	18	GY	TXL	6111842C1	6111844C1	9535	2	6111843C1		
VB94BYA	18	GY	TXL	3601686C1	3919376C1	9536	1	3733609C1		
VB94BZA	18	GY	TXL	3601686C1	3919376C1	9536	2	3733609C1		
VB94BPA	18	GY	TXL	3601686C1	3919376C1	9536	3	3733609C1		
VB94BQA	18	GY	TXL	6111842C1	6111844C1	9537	1	6111843C1		

Circuit Number	Gauge	Color	Insulation	Terminal / Splice Number	Connector Part number	Connector Number	Cavity	Seal/Sleeve	Lock 1	Lock 2
VB94BRA	18	GY	TXL	6111842C1	6111844C1	9537	2	6111843C1		
VB94BVA	18	GY	TXL	6111842C1	6111844C1	9538	1	6111843C1	1667771C1	
VB94BWA	18	GY	TXL	6111842C1	6111844C1	9538	2	6111843C1	2039342C1	
MA152AB	16	GY	TXL	1661875C1	3522068C1	9545	A	1661872C1		
MA152AA	16	GY	TXL	1661875C1	3522068C1	9545	B	1661872C1		
UC10-GBB	8	WH	GXL	3517439C1	3517441C1	9717	A	N/A		
NV65	16	OR	GXL	1661875C1	1661778C1	9718	A	1661872C1		
NV65-G	16	WH	GXL	1661875C1	1661778C1	9718	B	1661872C1		
NX65BD	16	OR	GXL	N/A	BLUNT_SL_V	9719	A	N/A		
NX65-GB	16	WH	GXL	N/A	BLUNT_SL_V	9719	B	N/A		
NX65BE	16	OR	GXL	N/A	BLUNT_SL_V	9720	A	N/A		
NX65-GC	16	WH	GXL	N/A	BLUNT_SL_V	9720	B	N/A		
VZ10-GBB	8	WH	GXL	N/A	BLUNT_SL_V	9724	A	N/A		
VX70BB	10	RD	GXL	N/A	BLUNT_SL_V	9724	B	N/A		
VX68BB	10	BN	GXL	N/A	BLUNT_SL_V	9724	C	N/A		
VX94BB	10	DKBL	GXL	N/A	BLUNT_SL_V	9724	D	N/A		
VX58BB	10	BK	GXL	N/A	BLUNT_SL_V	9724	E	N/A		
VX56BB	10	YL	GXL	N/A	BLUNT_SL_V	9724	F	N/A		
VX57BB	10	LTGN	GXL	N/A	BLUNT_SL_V	9724	G	N/A		
CA59-G	14	WH	GXL	2033816C1	1661375C2	9736	A	589391C1		
CA59A	18	GY	GXL	2033819C1	1661375C2	9736	B	1652325C1		
CA59B	18	GY	GXL	2033819C1	1661375C2	9736	C	1652325C1		
CA59C	18	GY	GXL	2033819C1	1661375C2	9736	D	1652325C1		
CA59D	18	GY	GXL	2033819C1	1661375C2	9736	E	1652325C1		
SW59-GA	14	WH	GXL	2033816C1	1661375C2	9737	A	589391C1		
SW59E	18	GY	GXL	2033819C1	1661375C2	9737	B	1652325C1		
SW59F	18	GY	GXL	2033819C1	1661375C2	9737	C	1652325C1		
SW59H	18	GY	GXL	2033819C1	1661375C2	9737	D	1652325C1		
SW59J	18	GY	GXL	2033819C1	1661375C2	9737	E	1652325C1		
CC59-G	14	WH	GXL	2033816C1	1661375C2	9738	A	589391C1		
CC59A	16	GY	GXL	2033819C1	1661375C2	9738	B	1652325C1		
CC59B	16	GY	GXL	2033819C1	1661375C2	9738	C	1652325C1		
CC59C	16	GY	GXL	2033819C1	1661375C2	9738	D	1652325C1		
CC59D	16	GY	GXL	2033819C1	1661375C2	9738	E	1652325C1		
CB59-G	14	WH	GXL	2033816C1	1661375C2	9739	A	589391C1		
CB59A	16	GY	GXL	2033819C1	1661375C2	9739	B	1652325C1		
CB59B	16	GY	GXL	2033819C1	1661375C2	9739	C	1652325C1		
CB59C	16	GY	GXL	2033819C1	1661375C2	9739	D	1652325C1		
CB59D	16	GY	GXL	2033819C1	1661375C2	9739	E	1652325C1		
CD59-G	14	WH	GXL	2033816C1	1661375C2	9740	A	589391C1		
CD59A	18	GY	GXL	2033819C1	1661375C2	9740	B	1652325C1		
CD59B	18	GY	GXL	2033819C1	1661375C2	9740	C	1652325C1		
CD59C	18	GY	GXL	2033819C1	1661375C2	9740	D	1652325C1		
CD59D	18	GY	GXL	2033819C1	1661375C2	9740	E	1652325C1		
CE59-G	14	WH	GXL	2033816C1	1661375C2	9741	A	589391C1		
CE59A	18	GY	GXL	2033819C1	1661375C2	9741	B	1652325C1		
CE59B	18	GY	GXL	2033819C1	1661375C2	9741	C	1652325C1		
CE59C	18	GY	GXL	2033819C1	1661375C2	9741	D	1652325C1		
CE59D	18	GY	GXL	2033819C1	1661375C2	9741	E	1652325C1		
UB67TA	16	GY	GXL	3572626C1	3673640C1	9769	1	N/A		
UB67-G	16	WH	GXL	3572626C1	3673640C1	9769	2	N/A		
UB67U	16	GY	GXL	3572626C1	3673640C1	9769	3	N/A		

Circuit Number	Gauge	Color	Insulation	Terminal / Splice Number	Connector Part number	Connector Number	Cavity	Seal/Sleeve	Lock 1	Lock 2
UB67V	16	GY	GXL	3572626C1	3673640C1	9769	4	N/A		
UB67W	16	GY	GXL	3572626C1	3673640C1	9769	5	N/A		
UB67-G	16	WH	GXL	3549254C1		9771	1	2644038R1		
PB68C	16	BN	GXL	3522190C1	2206588C1	9790	1	3522194C1		
PB68D	16	WH	TXL	3522190C1	2206588C1	9790	2	3522193C1		
RH32	18	TN	GXL	3536865C1	3536864C1	9811	1	3536868C1		
TA32	18	TN	GXL	3536865C1	3536864C1	9811	1	3536868C1	1618847C1	1618846C1
RH9C	18	GY	GXL	3536865C1	3536864C1	9811	2	3536868C1		
TA9C	18	GY	GXL	3536865C1	3536864C1	9811	2	3536868C1	1618846C1	1618847C1
RH32A	18	TN	GXL	3536865C1	3536864C1	9812	1	3536868C1		
RH9B	18	GY	GXL	3536865C1	3536864C1	9812	2	3536868C1		
RJ32A	18	TN	GXL	3536865C1	3536864C1	9813	1	3536868C1		
RJ9	18	GY	GXL	3536865C1	3536864C1	9813	2	3536868C1		
RN49A	18	GY	GXL	587578C1	587567C91	9814	A	1652325C1		
RN49-GB	18	WH	GXL	587578C1	587567C91	9814	B	1652325C1	3515764C1	
RM49	18	GY	GXL	587578C1	587567C91	9815	A	1652325C1		
RN49-GA	18	WH	GXL	587578C1	587567C91	9815	B	1652325C1		
RP49-G	18	WH	GXL	587578C1	587567C91	9815	B	1652325C1		
RL49	18	GY	GXL	587578C1	587567C91	9816	A	1652325C1		
RL49-G	18	WH	GXL	587578C1	587567C91	9816	B	1652325C1	1667530C1	
RD109B	18	GY	GXL	1651943C1	1678137C1	9830	A	N/A		
RD106B	18	GY	GXL	1651943C1	1678137C1	9830	B	N/A		
RD61B	18	GY	GXL	1651943C1	1678137C1	9830	C	N/A		
RE109B	18	GY	GXL	1651943C1	1678137C1	9832	A	N/A		
RE106B	18	GY	GXL	1651943C1	1678137C1	9832	B	N/A		
RE61B	18	GY	GXL	1651943C1	1678137C1	9832	C	N/A		
GB39	16	GY	GXL	2033819C1	1673790C1	9902	A	1652325C1		
GB39-G	16	WH	GXL	2033819C1	1673790C1	9902	B	1652325C1		
RE39A	18	GY	GXL	2033819C1	1671610C1	9903	A	1652325C1		
RE39-GA	18	WH	GXL	2033819C1	1671610C1	9903	B	1652325C1		
RE39B	18	GY	GXL	2033819C1	1671610C1	9904	A	1652325C1		
RE39-GB	18	WH	GXL	2033819C1	1671610C1	9904	B	1652325C1		
UC32	18	TN	GXL	3536865C1	3536864C1	9911	1	3536868C1	3768011C1	
UC9C	18	GY	GXL	3536865C1	3536864C1	9911	2	3536868C1	3768016C1	
UC32A	18	TN	GXL	3561584C1	3536864C1	9912	1	3536868C1	3768011C1	
UC9B	18	GY	GXL	3561584C1	3536864C1	9912	2	3536868C1	3768016C1	
BB52AB	18	YL	TXL	382181C	B	BS11	-	2644000		
BB52AB	18	YL	TXL	0 382181C	A	BS11	-	2644000		
CD14SAB	18	RD	TXL	3541250C	3928059C1	1112M	4	N/A		
CE14SAB	18	RD	TXL	3541250C	3928059C1	1112M	4	N/A		
CD14SAB	18	RD	TXL	3541250C	3928059C1	1112M	4	N/A		
CE14SAB	18	RD	TXL	3541250C	3928059C1	1112M	4	N/A		
CE14SBB	18	RD	TXL	3541250C	3928059C1	1113M	4	N/A		
CE14SBB	18	RD	TXL	3541250C	3928059C1	1113M	4	N/A		
AZ92-GC	18	WH	TXL	2003343C	3595625C1	1703M	21	N/A		
AZ92-GC	20	WH	TXL	2003343C	3595625C1	1703M	21	N/A		
3T92#165	18	OR	TXL	2003343C	3595625C1	1703M	45	N/A		
BJ92R1	20	TN	GXL	2003343C	3595625C1	1703M	45	N/A		
BK92R1	20	TN	GXL	2003343C	3595625C1	1703M	45	N/A		
GM92#165	18	OR	TXL	2003343C	3595625C1	1703M	45	N/A		
3T92#165A	18	TN	TXL	2003343C	3595625C1	1703M	45	N/A		
BJ92R1	18	TN	TXL	2003343C	3595625C1	1703M	45	N/A		

Circuit Number	Gauge	Color	Insulation	Terminal / Splice Number	Connector Part number	Connector Number	Cavity	Seal/Sleeve	Lock 1	Lock 2
BK92R1	18	TN	TXL	2003343C	3595625C1	1703M	45	N/A		
GM92#165A	18	TN	TXL	2003343C	3595625C1	1703M	45	N/A		
BJ92R2	20	TN	GXL	3574289C	3595625C1	1703M	66	N/A		
BK92R2	20	TN	GXL	3574289C	3595625C1	1703M	66	N/A		
BJ92R2	18	TN	TXL	3574289C	3595625C1	1703M	66	N/A		
BK92R2	18	TN	TXL	3574289C	3595625C1	1703M	66	N/A		
CF50S	18	YL	TXL	3722128C		2TB2	1	2644038R		
CF50S	18	YL	TXL	3722128C		2TB2	1	2644038R		
EL63JB	18	DKBL	TXL	2003343C	3595621C1	5000A	7	SWS_N_RE		
EL63JB	18	DKBL	TXL	2003343C	3595621C1	5000A	7	N/A		
CX58C	16	BN	TXL	3574285C	3595621C1	5000A	19	SWS_N_RE		
CX58C	16	BN	TXL	3574285C	3595621C1	5000A	19	N/A		
GD14SAH	14	LTBL	TXL	3574285C	3595621C1	5000A	30	SWS_N_RE		
GH14SAF	14	LTBL	TXL	3574285C	3595621C1	5000A	30	SWS_N_RE		
GD14SAH	14	LTBL	TXL	3574285C	3595621C1	5000A	30	N/A		
GH14SAF	14	LTBL	TXL	3574285C	3595621C1	5000A	30	N/A		
AW12A	20	LTBL	TXL	239481R1	A	AS6	-	2644000R		
BB53AB	18	YL	TXL	382181C1	B	BS12	-	2644000R		
BB53AC	18	YL	TXL	382181C1	B	BS12	-	2644000R		
BB53AB	20	YL	TXL	239481R1	A	BS12	-	2644000R		
BB53AC	18	YL	TXL	239481R1	A	BS12	-	2644000R		
AA11-GU	18	WH	TXL	239481R1	B	FS1	-	2644000R		
AA11-GV	18	WH	TXL	239481R1	B	FS1	-	2644000R		
AA11-GW	18	WH	TXL	239481R1	B	FS1	-	2644000R		
EM13-GBM	18	WH	TXL	239481R1	B	GS1	-	2644000R		
GN13-GBM	18	WH	TXL	239481R1	B	GS1	-	2644000R		
EM13-GBM	20	WH	TXL	239481R1	A	GS1	-	2644000R		
GN13-GBM	20	WH	TXL	239481R1	A	GS1	-	2644000R		
YH82K	16	GY	TXL	239481R1	B	GS12	-	2644000R		
YH82K	16	GY	TXL	239481R1	B	GS12	-	2644000R		
6K9LCA	20	GY	TXL	239481R1	B	GS13	-	2644000R		
6K9LCC	20	GY	TXL	239481R1	B	GS13	-	2644000R		
PA54XB	16	BN	TXL	382182C1	B	GS14	-	2644000R		
PA54XB	16	BN	TXL	382182C1	B	GS14	-	2644000R		
DD78	16	LTGN	TXL	239481R1	B	GS17	-	2644000R		
DD78	16	LTGN	TXL	239481R1	B	GS17	-	2644000R		
CD14-GSB	18	WH	TXL	239481R1	B	GS18	-	2644000R		
CE14-GSB	18	WH	TXL	239481R1	B	GS18	-	2644000R		
CE14-GSD	18	WH	TXL	239481R1	B	GS18	-	2644000R		
CD14-GSB	20	WH	TXL	239481R1	B	GS18	-	2644000R		
CE14-GSB	20	WH	TXL	239481R1	B	GS18	-	2644000R		
CE14-GSD	20	WH	TXL	239481R1	B	GS18	-	2644000R		
JL116LZ	18	GY	TXL	239481R1	B	GS2	-	2644000R		
JL116UZ	18	GY	TXL	239481R1	B	GS2	-	2644000R		
JL116LZ	18	GY	TXL	239481R1	B	GS2	-	2644000R		
JL116UZ	18	GY	TXL	239481R1	B	GS2	-	2644000R		
BC63JJ	18	GY	GXL	239481R1	A	GS22	-	2644000R		
BC63JV	18	GY	GXL	239481R1	A	GS22	-	2644000R		
BC63JJ	20	GY	TXL	239481R1	B	GS22	-	2644000R		
BC63JV	18	GY	GXL	239481R1	B	GS22	-	2644000R		
AH12K	18	LTBL	TXL	239481R1	B	GS23	-	2644000R		
AM12BB	18	LTBL	TXL	239481R1	B	GS23	-	2644000R		

Circuit Number	Gauge	Color	Insulation	Terminal / Splice Number	Connector Part number	Connector Number	Cavity	Seal/Sleeve	Lock 1	Lock 2
AM12K	18	LTBL	TXL	239481R1	B	GS23	-	2644000R		
AH13K	18	PK	TXL	239481R1	B	GS24	-	2644000R		
AH13M	18	PK	TXL	239481R1	B	GS24	-	2644000R		
AM13K	18	PK	TXL	239481R1	B	GS24	-	2644000R		
AM13M	18	PK	TXL	239481R1	B	GS24	-	2644000R		
YV13U	12	PK	TXL	382182C1	B	GS26	-	2644000R		
YY13U	12	PK	TXL	382182C1	B	GS26	-	2644000R		
AL14AB	10	RD	TXL	239481R1	B	GS28	-	2644000R		
AL14AD	12	RD	TXL	239481R1	B	GS28	-	2644000R		
AL14AF	12	RD	TXL	239481R1	B	GS28	-	2644000R		
AL14AS	18	RD	TXL	239481R1	B	GS28	-	2644000R		
AL14AC	12	RD	TXL	239481R1	B	GS30	-	2644000R		
AL14AE	12	RD	TXL	239481R1	B	GS30	-	2644000R		
AL14AH	12	RD	TXL	239481R1	B	GS30	-	2644000R		
EE11-GDA	18	GY	TXL	239481R1	B	GS32	-	2644000R		
EE11-GDB	18	WH	TXL	239481R1	A	GS32	-	2644000R		
EE11-GDC	18	WH	TXL	239481R1	B	GS32	-	2644000R		
EE11-GDD	18	WH	TXL	239481R1	A	GS32	-	2644000R		
GJ11-GDB	18	WH	TXL	239481R1	A	GS32	-	2644000R		
GJ11-GDC	18	WH	TXL	239481R1	B	GS32	-	2644000R		
GJ11-GDD	18	WH	TXL	239481R1	A	GS32	-	2644000R		
6K166BB	20	LTGN	TXL	239481R1	B	GS32	-	2644000R		
AL14N	10	RD	TXL	239481R1	A	GS33	-	2644000R		
AA82E	16	GY	TXL	382181C1	B	GS34	-	2644000R		
AA82M	18	GY	TXL	382181C1	B	GS34	-	2644000R		
AA82N	18	GY	TXL	382181C1	B	GS34	-	2644000R		
AA82E	16	GY	TXL	239481R1	B	GS34	-	2644000R		
AA82M	20	GY	TXL	239481R1	B	GS34	-	2644000R		
AA82N	20	GY	TXL	239481R1	B	GS34	-	2644000R		
FR72EE	18	OR	TXL	239481R1	A	GS36	-	2644000R		
FR72EE	20	OR	TXL	239481R1	A	GS36	-	2644000R		
FR72-GB3	18	WH	TXL	239481R1	A	GS37	-	2644000R		
FR72-GB3	20	WH	TXL	239481R1	A	GS37	-	2644000R		
FR94TA	12	GY	TXL	382182C1	B	GS38	-	2644000R		
FR94TB	12	GY	TXL	382182C1	B	GS38	-	2644000R		
FR94TA	12	GY	TXL	382182C1	B	GS38	-	2644000R		
FR94TB	12	GY	TXL	382182C1	B	GS38	-	2644000R		
HF94TT1	12	GY	TXL	505040C1	B	GS39	-	2644027R		
HG94TT1	12	GY	TXL	505040C1	B	GS39	-	2644027R		
HF94TT1	12	GY	TXL	505040C1	B	GS39	-	2644027R		
HG94TT1	12	GY	TXL	505040C1	B	GS39	-	2644027R		
BK71A	16	OR	TXL	382182C1	B	GS44	-	2644000R		
GM71BD	16	OR	TXL	382182C1	B	GS44	-	2644000R		
BK71A	16	OR	TXL	382182C1	B	GS44	-	2644000R		
GM71BD	16	OR	TXL	382182C1	B	GS44	-	2644000R		
FB94TT3	12	GY	TXL	382182C1	B	GS50	-	2644000R		
FB94TT3	12	GY	TXL	382182C1	B	GS50	-	2644000R		
AL14AS	10	RD	TXL	1613947C	B	GS54	-	2644000R		
AL14BB	10	RD	TXL	1613947C	A	GS54	-	2644000R		
NJ14AS	10	RD	TXL	1613947C	B	GS54	-	2644000R		
NJ14BB	10	RD	TXL	1613947C	A	GS54	-	2644000R		
AB12M	10	LTBL	GXL	468358C1	B	GS56	-	2644000R		

Circuit Number	Gauge	Color	Insulation	Terminal / Splice Number	Connector Part number	Connector Number	Cavity	Seal/Sleeve	Lock 1	Lock 2
BG70CA	18	OR	TXL	239481R1	B	GS66	-	2644000R		
BG70CB	18	RD	TXL	239481R1	B	GS66	-	2644000R		
3Y12A	20	LTBL	TXL	239481R1	B	GS67	-	2644000R		
3Y12BB	20	LTBL	TXL	239481R1	B	GS67	-	2644000R		
AY12A	18	LTBL	TXL	239481R1	B	GS67	-	2644000R		
AY12BB	18	LTBL	TXL	239481R1	B	GS67	-	2644000R		
EE11-GDE	18	WH	TXL	ABRSPLIC	B	GS7	-	N/A		
EE11-GDF	18	WH	TXL	ABRSPLIC	B	GS7	-	N/A		
YV13-GFF	18	WH	TXL	ABRSPLIC	B	GS7	-	N/A		
YY13-GFF	18	WH	TXL	ABRSPLIC	B	GS7	-	N/A		
YY13-GFF	20	WH	TXL	ABRSPLIC	B	GS7	-	N/A		
JL116L-G	18	WH	TXL	239481R1	B	GS8	-	2644000R		
JL116U-G	18	WH	TXL	239481R1	B	GS8	-	2644000R		
JL116L-G	20	WH	TXL	239481R1	B	GS8	-	2644000R		
JL116U-G	20	WH	TXL	239481R1	B	GS8	-	2644000R		
CF53-G	18	WH	TXL	239481R1	B	NS9	-	2644000R		
CF53-G	20	WH	TXL	239481R1	A	NS9	-	2644000R		
DY54-GXB	18	WH	TXL	382182C1	B	PS3	-	2644000R		
PA54-GXB	18	WH	TXL	382182C1	B	PS3	-	2644000R		
DY54-GXB	20	WH	TXL	239481R1	A	PS3	-	2644000R		
PA54-GXB	20	WH	TXL	239481R1	A	PS3	-	2644000R		
AT28A	20	TN	TXL	4062808C1	4063415C1	1000A	1	N/A		
AT28A	20	TN	TXL	4062808C1	4063415C1	1000A	1	N/A		
AT28B	20	TN	TXL	4062808C1	4063415C1	1000A	3	N/A		
AT28B	20	TN	TXL	4062808C1	4063415C1	1000A	3	N/A		
AT28C	20	TN	TXL	4062808C1	4063415C1	1000A	4	N/A		
AT28C	20	TN	TXL	4062808C1	4063415C1	1000A	4	N/A		
CV81-G	10	WH	TXL	2020632C1		1004A	1	2644002R1		
CV81-G	10	WH	TXL	2020632C1		1004A	1	2644002R1		
AA11-GCA	12	WH	TXL	3710088C1		1004B	1	2644005R1		
AA11-GKC	12	WH	TXL	3710088C1		1004B	1	2644005R1		
AA11-GCA	12	WH	TXL	3710088C1		1004B	1	2644005R1		
AA11-GKC	12	WH	TXL	3710088C1		1004B	1	2644005R1		
RA11-GKJ	6	WH	SGX	2015884C1		1005A	1	2644002R1		
RB11-GKJ	6	WH	SGX	2015884C1		1005A	1	2644002R1		
RA11-GKJ	6	WH	SGX	2015884C1		1005A	1	2644002R1		
RB11-GKJ	6	WH	SGX	2015884C1		1005A	1	2644002R1		
AC11-G	8	WH	GXL	3710088C1		1005B	1	2644005R1		
RP11-G	8	WH	GXL	3710088C1		1005B	1	2644005R1		
AG14AA	8	RD	GXL	2230259C1	4107138C1	1029A	30	N/A		
AG11-GRG	16	WH	GXL	3535326C1	4107138C1	1029A	85	N/A		
AG14XS	16	RD	GXL	3535326C1	4107138C1	1029A	86	N/A		
AG14XY	8	RD	GXL	2230259C1	4107138C1	1029A	87	N/A		
JN5BH(+)	18	YL	TXL	2035086C1	3768593C1	1101F	5	N/A		
JR5BH(+)	18	YL	TXL	2035086C1	3768593C1	1101F	5	N/A		
JN5BH(+)	18	YL	TXL	2035086C1	3768593C1	1101F	5	N/A		
JR5BH(+)	18	YL	TXL	2035086C1	3768593C1	1101F	5	N/A		
JN5BH(-)	18	LTGN	TXL	2035086C1	3768593C1	1101F	6	N/A		
JR5BH(-)	18	LTGN	TXL	2035086C1	3768593C1	1101F	6	N/A		
JN5BH(-)	18	LTGN	TXL	2035086C1	3768593C1	1101F	6	N/A		
JR5BH(-)	18	LTGN	TXL	2035086C1	3768593C1	1101F	6	N/A		
JN5BG(+)	18	YL	TXL	3522073C1	3522071C1	1101M	5	N/A		

Circuit Number	Gauge	Color	Insulation	Terminal / Splice Number	Connector Part number	Connector Number	Cavity	Seal/Sleeve	Lock 1	Lock 2
JR5BG(+)	18	YL	TXL	3522073C1	3522071C1	1101M	5	N/A		
JN5BG(+)	18	YL	TXL	3522073C1	3522071C1	1101M	5	N/A		
JR5BG(+)	18	YL	TXL	3522073C1	3522071C1	1101M	5	N/A		
JN5BG(-)	18	LTGN	TXL	3522073C1	3522071C1	1101M	6	N/A		
JR5BG(-)	18	LTGN	TXL	3522073C1	3522071C1	1101M	6	N/A		
JN5BG(-)	18	LTGN	TXL	3522073C1	3522071C1	1101M	6	N/A		
JR5BG(-)	18	LTGN	TXL	3522073C1	3522071C1	1101M	6	N/A		
AA11-GKD	18	WH	TXL	3522073C1	3522071C1	1101M	8	N/A		
AA11-GKD	18	WH	TXL	3522073C1	3522071C1	1101M	8	N/A		
AA14MUX	18	RD	TXL	3522073C1	3522071C1	1101M	10	N/A		
2G14MUX	18	RD	TXL	3522073C1	3522071C1	1101M	10	N/A		
FR72EB	18	OR	TXL	1661224C1	3928059C1	1110M	2	N/A		
FR72EB	20	OR	TXL	3693774C1	3928059C1	1110M	2	N/A		
FR72EC	18	OR	TXL	1661224C1	3928059C1	1110M	4	N/A		
FR72EC	20	OR	TXL	3693774C1	3928059C1	1110M	4	N/A		
FR72-GB1	18	WH	TXL	1661224C1	3928059C1	1110M	9	N/A		
FR72-GB1	20	WH	TXL	3693774C1	3928059C1	1110M	9	N/A		
FR72ED	18	OR	TXL	1661224C1	3928059C1	1110M	10	N/A		
FR72ED	20	OR	TXL	3693774C1	3928059C1	1110M	10	N/A		
FR72-GB2	18	WH	TXL	1661224C1	3928059C1	1110M	11	N/A		
FR72-GB2	20	WH	TXL	3693774C1	3928059C1	1110M	11	N/A		
XW62DG	18	DKBL	TXL	1661224C1	3928059C1	1110M	12	N/A		
XW62DG	20	DKBL	TXL	3693774C1	3928059C1	1110M	12	N/A		
CN11-GBC	18	WH	TXL	1661224C1	3928059C1	1111M	2	N/A		
CR11-GBC	18	WH	TXL	1661224C1	3928059C1	1111M	2	N/A		
ZY11-GBC	18	WH	TXL	1661224C1	3928059C1	1111M	2	N/A		
CN11-GBC	20	WH	TXL	3693774C1	3928059C1	1111M	2	N/A		
CR11-GBC	20	WH	TXL	3693774C1	3928059C1	1111M	2	N/A		
KZ98-GBC	18	WH	TXL	1661224C1	3928059C1	1111M	2	N/A		
ZY11-GBC	20	WH	TXL	3693774C1	3928059C1	1111M	2	N/A		
CN98J	18	BK	TXL	1661224C1	3928059C1	1111M	4	N/A		
CR98J	18	BK	TXL	1661224C1	3928059C1	1111M	4	N/A		
ZY98J	18	BK	TXL	1661224C1	3928059C1	1111M	4	N/A		
CN98J	18	BK	TXL	1661224C1	3928059C1	1111M	4	N/A		
CR98J	18	BK	TXL	1661224C1	3928059C1	1111M	4	N/A		
KZ98J	18	BK	TXL	1661224C1	3928059C1	1111M	4	N/A		
ZY98J	18	BK	TXL	1661224C1	3928059C1	1111M	4	N/A		
CN11-GBD	18	WH	TXL	1661224C1	3928059C1	1111M	11	N/A		
CR11-GBD	18	WH	TXL	1661224C1	3928059C1	1111M	11	N/A		
ZY11-GBD	18	WH	TXL	1661224C1	3928059C1	1111M	11	N/A		
CN11-GBD	20	WH	TXL	3693774C1	3928059C1	1111M	11	N/A		
CR11-GBD	20	WH	TXL	3693774C1	3928059C1	1111M	11	N/A		
ZY11-GBD	20	WH	TXL	3693774C1	3928059C1	1111M	11	N/A		
CN62DH	18	DKBL	TXL	1661224C1	3928059C1	1111M	12	N/A		
CR62DH	18	DKBL	TXL	1661224C1	3928059C1	1111M	12	N/A		
ZY62DH	18	DKBL	TXL	1661224C1	3928059C1	1111M	12	N/A		
CN62DH	20	DKBL	TXL	3693774C1	3928059C1	1111M	12	N/A		
CR62DH	20	DKBL	TXL	3693774C1	3928059C1	1111M	12	N/A		
ZY62DH	20	DKBL	TXL	3693774C1	3928059C1	1111M	12	N/A		
CD14SA	18	RD	TXL	1661224C1	3928059C1	1112M	2	N/A		
CE14SA	18	RD	TXL	1661224C1	3928059C1	1112M	2	N/A		
CD14SA	20	RD	TXL	3693774C1	3928059C1	1112M	2	N/A		

Circuit Number	Gauge	Color	Insulation	Terminal / Splice Number	Connector Part number	Connector Number	Cavity	Seal/Sleeve	Lock 1	Lock 2
CE14SA	20	RD	TXL	3693774C1	3928059C1	1112M	2	N/A		
CD14SAA	18	RD	TXL	3541250C1	3928059C1	1112M	4	N/A		
CE14SAA	18	RD	TXL	3541250C1	3928059C1	1112M	4	N/A		
CD14SAA	18	RD	TXL	3541250C1	3928059C1	1112M	4	N/A		
CE14SAA	18	RD	TXL	3541250C1	3928059C1	1112M	4	N/A		
CD14-GSA	18	WH	TXL	1661224C1	3928059C1	1112M	9	N/A		
CE14-GSA	18	WH	TXL	1661224C1	3928059C1	1112M	9	N/A		
CD14-GSA	20	WH	TXL	3693774C1	3928059C1	1112M	9	N/A		
CE14-GSA	20	WH	TXL	3693774C1	3928059C1	1112M	9	N/A		
CD14SAA	18	RD	TXL	1661224C1	3928059C1	1112M	10	N/A		
CE14SAA	18	RD	TXL	1661224C1	3928059C1	1112M	10	N/A		
CD14SAA	18	RD	TXL	1661224C1	3928059C1	1112M	10	N/A		
CE14SAA	18	RD	TXL	1661224C1	3928059C1	1112M	10	N/A		
CD62-GAJ	18	WH	TXL	1661224C1	3928059C1	1112M	11	N/A		
CE62-GA	18	WH	TXL	1661224C1	3928059C1	1112M	11	N/A		
CD62-GAJ	20	WH	TXL	3693774C1	3928059C1	1112M	11	N/A		
CE62-GA	20	WH	TXL	3693774C1	3928059C1	1112M	11	N/A		
CD62DJ	18	DKBL	TXL	1661224C1	3928059C1	1112M	12	N/A		
CE62DJ	18	DKBL	TXL	1661224C1	3928059C1	1112M	12	N/A		
CD62DJ	20	DKBL	TXL	3693774C1	3928059C1	1112M	12	N/A		
CE62DJ	20	DKBL	TXL	3693774C1	3928059C1	1112M	12	N/A		
CE14SB	18	RD	TXL	1661224C1	3928059C1	1113M	2	N/A		
CE14SB	20	RD	TXL	3693774C1	3928059C1	1113M	2	N/A		
CE14SBA	18	RD	TXL	3541250C1	3928059C1	1113M	4	N/A		
CE14SBA	18	RD	TXL	3541250C1	3928059C1	1113M	4	N/A		
CE14-GSC	18	WH	TXL	1661224C1	3928059C1	1113M	9	N/A		
CE14-GSC	20	WH	TXL	3693774C1	3928059C1	1113M	9	N/A		
CE14SBA	18	RD	TXL	1661224C1	3928059C1	1113M	10	N/A		
CE14SBA	18	RD	TXL	1661224C1	3928059C1	1113M	10	N/A		
CE62-GB	18	WH	TXL	1661224C1	3928059C1	1113M	11	N/A		
CE62-GB	20	WH	TXL	3693774C1	3928059C1	1113M	11	N/A		
CE62DK	18	DKBL	TXL	1661224C1	3928059C1	1113M	12	N/A		
CE62DK	20	DKBL	TXL	3693774C1	3928059C1	1113M	12	N/A		
HA104SS	18	DKBL	TXL	1661224C1	3928059C1	1114M	1	N/A		
HA104SS	20	DKBL	TXL	3693774C1	3928059C1	1114M	1	N/A		
HA11-GAM	18	WH	TXL	3541250C1	3928059C1	1114M	2	N/A		
HA11-GT	18	WH	TXL	3541250C1	3928059C1	1114M	2	N/A		
HA11-GAM	18	WH	TXL	3541250C1	3928059C1	1114M	2	N/A		
HA11-GT	18	WH	TXL	3541250C1	3928059C1	1114M	2	N/A		
HA104SP	18	DKBL	TXL	1661224C1	3928059C1	1114M	4	N/A		
HA104SP	20	DKBL	TXL	3693774C1	3928059C1	1114M	4	N/A		
HA11-GAM	18	WH	TXL	1661224C1	3928059C1	1114M	9	N/A		
HA11-GAM	18	WH	TXL	1661224C1	3928059C1	1114M	9	N/A		
HA104BC	18	DKBL	TXL	1661224C1	3928059C1	1114M	10	N/A		
HA104BC	20	DKBL	TXL	3693774C1	3928059C1	1114M	10	N/A		
HA11-GAT	18	WH	TXL	3541250C1	3928059C1	1114M	11	N/A		
HA11-GT	18	WH	TXL	3541250C1	3928059C1	1114M	11	N/A		
HA11-GAT	18	WH	TXL	3541250C1	3928059C1	1114M	11	N/A		
HA11-GT	18	WH	TXL	3541250C1	3928059C1	1114M	11	N/A		
HA62DF	18	DKBL	TXL	1661224C1	3928059C1	1114M	12	N/A		
HA62DF	20	DKBL	TXL	3693774C1	3928059C1	1114M	12	N/A		
DK13TRIA	16	PK	GXL	1661226C1	3928059C1	1116M	1	N/A		

Circuit Number	Gauge	Color	Insulation	Terminal / Splice Number	Connector Part number	Connector Number	Cavity	Seal/Sleeve	Lock 1	Lock 2
DK13TRIA	16	PK	GXL	1661226C1	3928059C1	1116M	1	N/A		
DK77SBY	16	LTGN	GXL	1661226C1	3928059C1	1116M	2	N/A		
DK77SBY	16	LTGN	GXL	1661226C1	3928059C1	1116M	2	N/A		
DK14TRIA	16	RD	TXL	1661226C1	3928059C1	1116M	4	N/A		
DK62-GBN	18	WH	TXL	1661224C1	3928059C1	1116M	11	N/A		
DK62-GBN	20	WH	TXL	3693774C1	3928059C1	1116M	11	N/A		
DK62DF	18	DKBL	TXL	1661224C1	3928059C1	1116M	12	N/A		
DK62DF	20	DKBL	TXL	3693774C1	3928059C1	1116M	12	N/A		
EM13BL1	18	PK	TXL	1661224C1	3928059C1	1117M	2	N/A		
GN13BL1	18	PK	TXL	1661224C1	3928059C1	1117M	2	N/A		
EM13BL1	20	PK	TXL	3693774C1	3928059C1	1117M	2	N/A		
GN13BL1	20	PK	TXL	3693774C1	3928059C1	1117M	2	N/A		
EM13BL2	18	PK	TXL	3541250C1	3928059C1	1117M	4	N/A		
EM13BLT	18	PK	TXL	3541250C1	3928059C1	1117M	4	N/A		
GN13BL2	18	PK	TXL	3541250C1	3928059C1	1117M	4	N/A		
GN13BLT	18	PK	TXL	3541250C1	3928059C1	1117M	4	N/A		
EM13BL2	18	PK	TXL	3541250C1	3928059C1	1117M	4	N/A		
EM13BLT	18	PK	TXL	3541250C1	3928059C1	1117M	4	N/A		
GN13BL2	18	PK	TXL	3541250C1	3928059C1	1117M	4	N/A		
GN13BLT	18	PK	TXL	3541250C1	3928059C1	1117M	4	N/A		
EM13-GBL	18	WH	TXL	1661224C1	3928059C1	1117M	9	N/A		
GN13-GBL	18	WH	TXL	1661224C1	3928059C1	1117M	9	N/A		
EM13-GBL	20	WH	TXL	3693774C1	3928059C1	1117M	9	N/A		
GN13-GBL	20	WH	TXL	3693774C1	3928059C1	1117M	9	N/A		
EM13BL2	18	PK	TXL	1661224C1	3928059C1	1117M	10	N/A		
GN13BL2	18	PK	TXL	1661224C1	3928059C1	1117M	10	N/A		
EM13BL2	18	PK	TXL	1661224C1	3928059C1	1117M	10	N/A		
GN13BL2	18	PK	TXL	1661224C1	3928059C1	1117M	10	N/A		
EM62-GDL	18	WH	TXL	1661224C1	3928059C1	1117M	11	N/A		
GN62-GDL	18	WH	TXL	1661224C1	3928059C1	1117M	11	N/A		
EM62-GDL	20	WH	TXL	3693774C1	3928059C1	1117M	11	N/A		
GN62-GDL	20	WH	TXL	3693774C1	3928059C1	1117M	11	N/A		
EM62DL	18	DKBL	TXL	1661224C1	3928059C1	1117M	12	N/A		
GN62DL	18	DKBL	TXL	1661224C1	3928059C1	1117M	12	N/A		
EM62DL	20	DKBL	TXL	3693774C1	3928059C1	1117M	12	N/A		
GN62DL	20	DKBL	TXL	3693774C1	3928059C1	1117M	12	N/A		
RV11COG1	18	WH	TXL	1661224C1	3520850C1	1118M	1	N/A		
RV11COG1	18	WH	TXL	1661224C1	3520850C1	1118M	1	N/A		
RV11COG3	18	WH	TXL	1661224C1	3520850C1	1118M	3	N/A		
RV11COG3	18	WH	TXL	1661224C1	3520850C1	1118M	3	N/A		
RV67EN	16	TN	TXL	1661226C1	3520850C1	1118M	7	N/A		
RV67EN	16	TN	TXL	1661226C1	3520850C1	1118M	7	N/A		
RV67NA	16	TN	TXL	1661226C1	3520850C1	1118M	8	N/A		
RV67NA	16	TN	TXL	1661226C1	3520850C1	1118M	8	N/A		
RV13COG1	16	PK	TXL	1661226C1	3520850C1	1118M	9	N/A		
RV13COG1	16	PK	TXL	1661226C1	3520850C1	1118M	9	N/A		
RV13COG3	16	PK	TXL	1661226C1	3520850C1	1118M	10	N/A		
RV13COG3	16	PK	TXL	1661226C1	3520850C1	1118M	10	N/A		
RV67COG	18	WH	TXL	1661224C1	3520850C1	1118M	2B	N/A		
RV67COG	18	WH	TXL	1661224C1	3520850C1	1118M	2B	N/A		
2V67COG1	18	GY	TXL	1661224C1	3928059C1	1119M	1	N/A		
2V67COG1	20	GY	TXL	3693774C1	3928059C1	1119M	1	N/A		

Circuit Number	Gauge	Color	Insulation	Terminal / Splice Number	Connector Part number	Connector Number	Cavity	Seal/Sleeve	Lock 1	Lock 2
2V11COG1	18	WH	TXL	1661224C1	3928059C1	1119M	2	N/A		
2V11COG1	20	WH	TXL	3693774C1	3928059C1	1119M	2	N/A		
2V67COG2	18	GY	TXL	1661224C1	3928059C1	1119M	4	N/A		
2V67COG2	20	GY	TXL	3693774C1	3928059C1	1119M	4	N/A		
2V67EN	16	TN	TXL	1661226C1	3928059C1	1119M	9	N/A		
2V67EN	20	TN	TXL	3693774C1	3928059C1	1119M	9	N/A		
2V13COG3	16	PK	TXL	1661226C1	3928059C1	1119M	10	N/A		
2V13COG3	20	PK	TXL	3693774C1	3928059C1	1119M	10	N/A		
2V67NA	16	VT	TXL	1661226C1	3928059C1	1119M	11	N/A		
2V67NA	20	VT	TXL	3693774C1	3928059C1	1119M	11	N/A		
2V13COG1	16	PK	TXL	1661226C1	3928059C1	1119M	12	N/A		
2V13COG1	20	PK	TXL	3693774C1	3928059C1	1119M	12	N/A		
HN75HC	18	LTGN	GXL	1661224C1	3928059C1	1124M	2	N/A		
HN75HC	20	LTGN	TXL	3693774C1	3928059C1	1124M	2	N/A		
HN75AF	18	LTGN	GXL	1661224C1	3928059C1	1124M	4	N/A		
HN75AF	20	LTGN	TXL	3693774C1	3928059C1	1124M	4	N/A		
HN75AG	18	LTGN	GXL	1661224C1	3928059C1	1124M	9	N/A		
HN75AG	20	LTGN	TXL	3693774C1	3928059C1	1124M	9	N/A		
HN75AT	18	LTGN	GXL	1661224C1	3928059C1	1124M	10	N/A		
HN75AT	20	LTGN	TXL	3693774C1	3928059C1	1124M	10	N/A		
HN75-GAS	18	WH	GXL	3541250C1	3928059C1	1124M	11	N/A		
HN75HA	18	LTGN	GXL	3541250C1	3928059C1	1124M	11	N/A		
HN75-GAS	20	WH	TXL	3541250C1	3928059C1	1124M	11	N/A		
HN75HA	20	LTGN	TXL	3541250C1	3928059C1	1124M	11	N/A		
HN62AA	18	DKBL	TXL	3541250C1	3928059C1	1124M	12	N/A		
HN62J	18	DKBL	TXL	3541250C1	3928059C1	1124M	12	N/A		
HN62AA	20	DKBL	TXL	3541250C1	3928059C1	1124M	12	N/A		
HN62J	20	DKBL	TXL	3541250C1	3928059C1	1124M	12	N/A		
HN75HD	18	LTGN	GXL	1661224C1	3928059C1	1125M	2	N/A		
HN75HD	20	LTGN	TXL	3693774C1	3928059C1	1125M	2	N/A		
HN77NE	18	LTGN	GXL	1661224C1	3928059C1	1125M	4	N/A		
HN77NE	20	LTGN	TXL	3693774C1	3928059C1	1125M	4	N/A		
HN77NF	18	LTGN	GXL	1661224C1	3928059C1	1125M	9	N/A		
HN77NF	20	LTGN	TXL	3693774C1	3928059C1	1125M	9	N/A		
HN75HB	18	LTGN	GXL	1661224C1	3928059C1	1125M	10	N/A		
HN75HB	20	LTGN	TXL	3693774C1	3928059C1	1125M	10	N/A		
HN75HA	18	LTGN	GXL	1661224C1	3928059C1	1125M	11	N/A		
HN75HA	20	LTGN	TXL	3693774C1	3928059C1	1125M	11	N/A		
HN62AA	18	DKBL	TXL	1661224C1	3928059C1	1125M	12	N/A		
HN62AA	20	DKBL	TXL	3693774C1	3928059C1	1125M	12	N/A		
CS67COG1	18	GY	TXL	1661224C1	3928059C1	1126M	1	N/A		
YK67COG1	18	GY	TXL	1661224C1	3928059C1	1126M	1	N/A		
CS67COG1	20	GY	TXL	3693774C1	3928059C1	1126M	1	N/A		
YK67COG1	18	GY	TXL	1661224C1	3928059C1	1126M	1	N/A		
CS11COG1	18	WH	TXL	1661224C1	3928059C1	1126M	2	N/A		
YK11COG1	18	WH	TXL	1661224C1	3928059C1	1126M	2	N/A		
CS11COG1	20	WH	TXL	3693774C1	3928059C1	1126M	2	N/A		
YK11COG1	18	WH	TXL	1661224C1	3928059C1	1126M	2	N/A		
CS67COG2	18	GY	TXL	1661224C1	3928059C1	1126M	4	N/A		
YK67COG2	18	GY	TXL	1661224C1	3928059C1	1126M	4	N/A		
CS67COG2	20	GY	TXL	3693774C1	3928059C1	1126M	4	N/A		
YK67COG2	18	GY	TXL	1661224C1	3928059C1	1126M	4	N/A		

Circuit Number	Gauge	Color	Insulation	Terminal / Splice Number	Connector Part number	Connector Number	Cavity	Seal/Sleeve	Lock 1	Lock 2
CS67NB	16	VT	TXL	1661226C1	3928059C1	1126M	11	N/A		
YK67NB	16	VT	TXL	1661226C1	3928059C1	1126M	11	N/A		
CS67NB	20	VT	TXL	3693774C1	3928059C1	1126M	11	N/A		
YK67NB	16	VT	TXL	1661226C1	3928059C1	1126M	11	N/A		
CS62A	18	DKBL	TXL	1661224C1	3928059C1	1126M	12	N/A		
YK62A	18	DKBL	TXL	1661224C1	3928059C1	1126M	12	N/A		
CS62A	20	DKBL	TXL	3693774C1	3928059C1	1126M	12	N/A		
YK62A	18	DKBL	TXL	1661224C1	3928059C1	1126M	12	N/A		
AA73A	20	LTGN	TXL	3673333C1	3768152C1	1200A	1	N/A		
AA73A	20	LTGN	TXL	3673333C1	3768152C1	1200A	1	N/A		
AA74-G	20	WH	TXL	3673333C1	3768152C1	1200A	2	N/A		
AA74-G	20	WH	TXL	3673333C1	3768152C1	1200A	2	N/A		
ZW75D-G	22	LTGN	TXL	6086792C1	3768152C1	1200A	3	N/A		
2E75D-G	22	LTGN	TXL	6086792C1	3768152C1	1200A	3	N/A		
ZW75D	22	LTGN	TXL	6086792C1	3768152C1	1200A	4	N/A		
2E75D	22	LTGN	TXL	6086792C1	3768152C1	1200A	4	N/A		
AA75B	20	LTGN	TXL	3673333C1	3768152C1	1200A	5	N/A		
AA75B	20	LTGN	TXL	3673333C1	3768152C1	1200A	5	N/A		
DH75A	20	LTGN	TXL	3673333C1	3768152C1	1200A	6	N/A		
DH75A	20	LTGN	TXL	3673333C1	3768152C1	1200A	6	N/A		
GZ5AF(+)	20	YL	193	3673333C1	3768152C1	1200A	7	N/A		
JK5AF(+)	20	YL	193	3673333C1	3768152C1	1200A	7	N/A		
KP5AF(+)	20	YL	193	3673333C1	3768152C1	1200A	7	N/A		
KU5AF(+)	20	YL	193	3673333C1	3768152C1	1200A	7	N/A		
LN5AF(+)	20	YL	193	3673333C1	3768152C1	1200A	7	N/A		
GZ5AF(+)	20	YL	193	3673333C1	3768152C1	1200A	7	N/A		
JK5AF(+)	20	YL	193	3673333C1	3768152C1	1200A	7	N/A		
KP5AF(+)	20	YL	193	3673333C1	3768152C1	1200A	7	N/A		
KU5AF(+)	20	YL	193	3673333C1	3768152C1	1200A	7	N/A		
LN5AF(+)	20	YL	193	3673333C1	3768152C1	1200A	7	N/A		
GZ5AF(-)	20	GN	193	3673333C1	3768152C1	1200A	8	N/A		
JK5AF(-)	20	GN	193	3673333C1	3768152C1	1200A	8	N/A		
KP5AF(-)	20	GN	193	3673333C1	3768152C1	1200A	8	N/A		
KU5AF(-)	20	GN	193	3673333C1	3768152C1	1200A	8	N/A		
LN5AF(-)	20	GN	193	3673333C1	3768152C1	1200A	8	N/A		
GZ5AF(-)	20	GN	193	3673333C1	3768152C1	1200A	8	N/A		
JK5AF(-)	20	GN	193	3673333C1	3768152C1	1200A	8	N/A		
KP5AF(-)	20	GN	193	3673333C1	3768152C1	1200A	8	N/A		
KU5AF(-)	20	GN	193	3673333C1	3768152C1	1200A	8	N/A		
LN5AF(-)	20	GN	193	3673333C1	3768152C1	1200A	8	N/A		
AA74A2	20	LTGN	TXL	3673333C1	3768152C1	1200A	9	N/A		
AA74A2	20	LTGN	TXL	3673333C1	3768152C1	1200A	9	N/A		
AA74B2	20	LTGN	TXL	3673333C1	3768152C1	1200A	10	N/A		
AA74B2	20	LTGN	TXL	3673333C1	3768152C1	1200A	10	N/A		
AA74D5	20	LTGN	TXL	3673333C1	3768152C1	1200A	11	N/A		
AA74D5	20	LTGN	TXL	3673333C1	3768152C1	1200A	11	N/A		
AA73B	20	LTGN	TXL	3673333C1	3768152C1	1200A	12	N/A		
AA73B	20	LTGN	TXL	3673333C1	3768152C1	1200A	12	N/A		
AA74-GA	20	WH	TXL	3673333C1	3768152C1	1200A	13	N/A		
AA74-GA	20	WH	TXL	3673333C1	3768152C1	1200A	13	N/A		
ZW75TS1	20	LTGN	TXL	3673333C1	3768152C1	1200A	14	N/A		
2E75TS1	20	LTGN	TXL	3673333C1	3768152C1	1200A	14	N/A		

Circuit Number	Gauge	Color	Insulation	Terminal / Splice Number	Connector Part number	Connector Number	Cavity	Seal/Sleeve	Lock 1	Lock 2
ZW75TS2	20	LTGN	TXL	3673333C1	3768152C1	1200A	15	N/A		
2E75TS2	20	LTGN	TXL	3673333C1	3768152C1	1200A	15	N/A		
ZW75TS3	20	LTGN	TXL	3673333C1	3768152C1	1200A	16	N/A		
2E75TS3	20	LTGN	TXL	3673333C1	3768152C1	1200A	16	N/A		
ZW75TS4	20	LTGN	TXL	3673333C1	3768152C1	1200A	17	N/A		
2E75TS4	20	LTGN	TXL	3673333C1	3768152C1	1200A	17	N/A		
AA74C2	20	LTGN	TXL	3673333C1	3768152C1	1200A	18	N/A		
AA74C2	20	LTGN	TXL	3673333C1	3768152C1	1200A	18	N/A		
AA74E2	20	LTGN	TXL	3673333C1	3768152C1	1200A	19	N/A		
AA74E2	20	LTGN	TXL	3673333C1	3768152C1	1200A	19	N/A		
AA74D2	20	LTGN	TXL	3673333C1	3768152C1	1200A	21	N/A		
AA74D2	20	LTGN	TXL	3673333C1	3768152C1	1200A	21	N/A		
AA74D4	20	LTGN	TXL	3673333C1	3768152C1	1200A	22	N/A		
AA74D4	20	LTGN	TXL	3673333C1	3768152C1	1200A	22	N/A		
AA74B1	20	LTGN	TXL	3673333C1	3768153C1	1200B	1	N/A		
AA74B1	20	LTGN	TXL	3673333C1	3768153C1	1200B	1	N/A		
AA74B3	20	LTGN	TXL	3673333C1	3768153C1	1200B	2	N/A		
AA74B3	20	LTGN	TXL	3673333C1	3768153C1	1200B	2	N/A		
AA74B4	20	LTGN	TXL	3673333C1	3768153C1	1200B	3	N/A		
AA74B4	20	LTGN	TXL	3673333C1	3768153C1	1200B	3	N/A		
AA74C1	20	LTGN	TXL	3673333C1	3768153C1	1200B	4	N/A		
AA74C1	20	LTGN	TXL	3673333C1	3768153C1	1200B	4	N/A		
AA74C3	20	LTGN	TXL	3673333C1	3768153C1	1200B	5	N/A		
AA74C3	20	LTGN	TXL	3673333C1	3768153C1	1200B	5	N/A		
AA74C4	20	LTGN	TXL	3673333C1	3768153C1	1200B	6	N/A		
AA74C4	20	LTGN	TXL	3673333C1	3768153C1	1200B	6	N/A		
AA74C5	20	LTGN	TXL	3673333C1	3768153C1	1200B	7	N/A		
AA74C5	20	LTGN	TXL	3673333C1	3768153C1	1200B	7	N/A		
AA74E1	20	LTGN	TXL	3673333C1	3768153C1	1200B	8	N/A		
AA74E1	20	LTGN	TXL	3673333C1	3768153C1	1200B	8	N/A		
AA74E3	20	LTGN	TXL	3673333C1	3768153C1	1200B	9	N/A		
AA74E3	20	LTGN	TXL	3673333C1	3768153C1	1200B	9	N/A		
AA74E4	20	LTGN	TXL	3673333C1	3768153C1	1200B	10	N/A		
AA74E4	20	LTGN	TXL	3673333C1	3768153C1	1200B	10	N/A		
AA74E5	20	LTGN	TXL	3673333C1	3768153C1	1200B	11	N/A		
AA74E5	20	LTGN	TXL	3673333C1	3768153C1	1200B	11	N/A		
AA74B5	20	LTGN	TXL	3673333C1	3768153C1	1200B	12	N/A		
AA74B5	20	LTGN	TXL	3673333C1	3768153C1	1200B	12	N/A		
AA74A1	20	LTGN	TXL	3673333C1	3768153C1	1200B	13	N/A		
AA74A1	20	LTGN	TXL	3673333C1	3768153C1	1200B	13	N/A		
AA74A3	20	LTGN	TXL	3673333C1	3768153C1	1200B	14	N/A		
AA74A3	20	LTGN	TXL	3673333C1	3768153C1	1200B	14	N/A		
AA74A4	20	LTGN	TXL	3673333C1	3768153C1	1200B	15	N/A		
AA74A4	20	LTGN	TXL	3673333C1	3768153C1	1200B	15	N/A		
AA74A5	20	LTGN	TXL	3673333C1	3768153C1	1200B	16	N/A		
AA74A5	20	LTGN	TXL	3673333C1	3768153C1	1200B	16	N/A		
AA74D1	20	LTGN	TXL	3673333C1	3768153C1	1200B	21	N/A		
AA74D1	20	LTGN	TXL	3673333C1	3768153C1	1200B	21	N/A		
AA74D3	20	LTGN	TXL	3673333C1	3768153C1	1200B	22	N/A		
AA74D3	20	LTGN	TXL	3673333C1	3768153C1	1200B	22	N/A		
AA74C1	20	LTGN	TXL	3544883C1	4057474C1	1200C	A	N/A		
AA74C1	20	LTGN	TXL	3544883C1	4057474C1	1200C	A	N/A		

Circuit Number	Gauge	Color	Insulation	Terminal / Splice Number	Connector Part number	Connector Number	Cavity	Seal/Sleeve	Lock 1	Lock 2
AA74C2	20	LTGN	TXL	3544883C1	4057474C1	1200C	B	N/A		
AA74C2	20	LTGN	TXL	3544883C1	4057474C1	1200C	B	N/A		
AA74C3	20	LTGN	TXL	3544883C1	4057474C1	1200C	C	N/A		
AA74C3	20	LTGN	TXL	3544883C1	4057474C1	1200C	C	N/A		
AA74C4	20	LTGN	TXL	3544883C1	4057474C1	1200C	D	N/A		
AA74C4	20	LTGN	TXL	3544883C1	4057474C1	1200C	D	N/A		
AA74C5	20	LTGN	TXL	3544883C1	4057474C1	1200C	E	N/A		
AA74C5	20	LTGN	TXL	3544883C1	4057474C1	1200C	E	N/A		
AA74D1	20	LTGN	TXL	3544883C1	4057474C1	1200C	F	N/A		
AA74D1	20	LTGN	TXL	3544883C1	4057474C1	1200C	F	N/A		
AA74D2	20	LTGN	TXL	3544883C1	4057474C1	1200C	G	N/A		
AA74D2	20	LTGN	TXL	3544883C1	4057474C1	1200C	G	N/A		
AA74D3	20	LTGN	TXL	3544883C1	4057474C1	1200C	H	N/A		
AA74D3	20	LTGN	TXL	3544883C1	4057474C1	1200C	H	N/A		
AA74D4	20	LTGN	TXL	3544883C1	4057474C1	1200C	J	N/A		
AA74D4	20	LTGN	TXL	3544883C1	4057474C1	1200C	J	N/A		
AA74D5	20	LTGN	TXL	3544883C1	4057474C1	1200C	K	N/A		
AA74D5	20	LTGN	TXL	3544883C1	4057474C1	1200C	K	N/A		
AA74E1	20	LTGN	TXL	3544883C1	4057474C1	1200C	L	N/A		
AA74E1	20	LTGN	TXL	3544883C1	4057474C1	1200C	L	N/A		
AA74E2	20	LTGN	TXL	3544883C1	4057474C1	1200C	M	N/A		
AA74E2	20	LTGN	TXL	3544883C1	4057474C1	1200C	M	N/A		
AA74E3	20	LTGN	TXL	3544883C1	4057474C1	1200C	N	N/A		
AA74E3	20	LTGN	TXL	3544883C1	4057474C1	1200C	N	N/A		
AA74E4	20	LTGN	TXL	3544883C1	4057474C1	1200C	P	N/A		
AA74E4	20	LTGN	TXL	3544883C1	4057474C1	1200C	P	N/A		
AA74E5	20	LTGN	TXL	3544883C1	4057474C1	1200C	S	N/A		
AA74E5	20	LTGN	TXL	3544883C1	4057474C1	1200C	S	N/A		
DH75	12	RD	TXL	1661227C1	4061870C1	1200D	A	N/A		
DH75	12	RD	TXL	1661227C1	4061870C1	1200D	A	N/A		
AA75-G	12	WH	TXL	1661227C1	4061870C1	1200D	B	N/A		
AA75-G	12	WH	TXL	1661227C1	4061870C1	1200D	B	N/A		
AA74A1	20	LTGN	TXL	3544883C1	4057658C1	1200E	A	N/A		
AA74A1	20	LTGN	TXL	3544883C1	4057658C1	1200E	A	N/A		
AA74A2	20	LTGN	TXL	3544883C1	4057658C1	1200E	B	N/A		
AA74A2	20	LTGN	TXL	3544883C1	4057658C1	1200E	B	N/A		
AA74A3	20	LTGN	TXL	3544883C1	4057658C1	1200E	C	N/A		
AA74A3	20	LTGN	TXL	3544883C1	4057658C1	1200E	C	N/A		
AA74A4	20	LTGN	TXL	3544883C1	4057658C1	1200E	D	N/A		
AA74A4	20	LTGN	TXL	3544883C1	4057658C1	1200E	D	N/A		
AA74A5	20	LTGN	TXL	3544883C1	4057658C1	1200E	E	N/A		
AA74A5	20	LTGN	TXL	3544883C1	4057658C1	1200E	E	N/A		
AA74B1	20	LTGN	TXL	3544883C1	4057658C1	1200E	F	N/A		
AA74B1	20	LTGN	TXL	3544883C1	4057658C1	1200E	F	N/A		
AA74B2	20	LTGN	TXL	3544883C1	4057658C1	1200E	G	N/A		
AA74B2	20	LTGN	TXL	3544883C1	4057658C1	1200E	G	N/A		
AA74B3	20	LTGN	TXL	3544883C1	4057658C1	1200E	H	N/A		
AA74B3	20	LTGN	TXL	3544883C1	4057658C1	1200E	H	N/A		
AA74B4	20	LTGN	TXL	3544883C1	4057658C1	1200E	J	N/A		
AA74B4	20	LTGN	TXL	3544883C1	4057658C1	1200E	J	N/A		
AA74B5	20	LTGN	TXL	3544883C1	4057658C1	1200E	K	N/A		
AA74B5	20	LTGN	TXL	3544883C1	4057658C1	1200E	K	N/A		

Circuit Number	Gauge	Color	Insulation	Terminal / Splice Number	Connector Part number	Connector Number	Cavity	Seal/Sleeve	Lock 1	Lock 2
AA77D	20	LTGN	TXL	3544883C1	4057658C1	1200E	L	N/A		
AA77D	20	LTGN	TXL	3544883C1	4057658C1	1200E	L	N/A		
AA6AM	20	GY	TXL	3544883C1	4057658C1	1200E	M	N/A		
AA6AM	20	GY	TXL	3544883C1	4057658C1	1200E	M	N/A		
DH75AB	18	LTGN	TXL	3544884C1	4057658C1	1200E	N	N/A		
DH75AB	18	LTGN	TXL	3544884C1	4057658C1	1200E	N	N/A		
AA75B	20	LTGN	TXL	3544883C1	4057658C1	1200E	P	N/A		
AA75B	20	LTGN	TXL	3544883C1	4057658C1	1200E	P	N/A		
ZW75TS2	20	LTGN	TXL	4062808C1	4116508C1	1200F	1	N/A		
2E75TS2	20	LTGN	TXL	4062808C1	4116508C1	1200F	1	N/A		
ZW75TS1	20	LTGN	TXL	4062808C1	4116508C1	1200F	2	N/A		
2E75TS1	20	LTGN	TXL	4062808C1	4116508C1	1200F	2	N/A		
ZW75TS4	20	LTGN	TXL	4062808C1	4116508C1	1200F	3	N/A		
2E75TS4	20	LTGN	TXL	4062808C1	4116508C1	1200F	3	N/A		
ZW75TS3	20	LTGN	TXL	4062808C1	4116508C1	1200F	4	N/A		
2E75TS3	20	LTGN	TXL	4062808C1	4116508C1	1200F	4	N/A		
3D5G(-)	18	GN	TXL	3522073C1	3710061C1	1500A	A10	N/A		
3M5G(-)	18	GN	TXL	3522073C1	3710061C1	1500A	A10	N/A		
9K5G(-)	18	GN	TXL	3522073C1	3710061C1	1500A	A10	N/A		
9L5G(-)	18	GN	TXL	3522073C1	3710061C1	1500A	A10	N/A		
9P5G(-)	18	GN	TXL	3522073C1	3710061C1	1500A	A10	N/A	3558056C1	
9V5G(-)	18	GN	TXL	3522073C1	3710061C1	1500A	A10	N/A		
JC5G(-)	18	GN	TXL	3522073C1	3710061C1	1500A	A10	N/A		
JD5G(-)	18	GN	TXL	3522073C1	3710061C1	1500A	A10	N/A		
JF5G(-)	18	GN	TXL	3522073C1	3710061C1	1500A	A10	N/A		
JG5G(-)	18	GN	TXL	3522073C1	3710061C1	1500A	A10	N/A		
LC5J(-)	18	GN	TXL	3522073C1	3710061C1	1500A	A10	N/A		
LD5L(-)	18	GN	TXL	3522073C1	3710061C1	1500A	A10	N/A		
LE5G(-)	18	GN	TXL	3522073C1	3710061C1	1500A	A10	N/A		
LF5G(-)	18	GN	TXL	3522073C1	3710061C1	1500A	A10	N/A		
LS5G(-)	18	GN	TXL	3522073C1	3710061C1	1500A	A10	N/A		
LU5G(-)	18	GN	TXL	3522073C1	3710061C1	1500A	A10	N/A		
LV5G(-)	18	GN	TXL	3522073C1	3710061C1	1500A	A10	N/A		
PY5G(-)	18	GN	TXL	3522073C1	3710061C1	1500A	A10	N/A		
PZ5G(-)	18	GN	TXL	3522073C1	3710061C1	1500A	A10	N/A		
RD5G(-)	18	GN	TXL	3522073C1	3710061C1	1500A	A10	N/A		
RG5G(-)	18	GN	TXL	3522073C1	3710061C1	1500A	A10	N/A		
RJ5G(-)	18	GN	TXL	3522073C1	3710061C1	1500A	A10	N/A		
RM5G(-)	18	GN	TXL	3522073C1	3710061C1	1500A	A10	N/A		
RS5G(-)	18	GN	TXL	3522073C1	3710061C1	1500A	A10	N/A		
RU5G(-)	18	GN	TXL	3522073C1	3710061C1	1500A	A10	N/A		
SB5G(-)	18	GN	TXL	3522073C1	3710061C1	1500A	A10	N/A		
SC5G(-)	18	GN	TXL	3522073C1	3710061C1	1500A	A10	N/A		
SD5G(-)	18	GN	TXL	3522073C1	3710061C1	1500A	A10	N/A		
SE5G(-)	18	GN	TXL	3522073C1	3710061C1	1500A	A10	N/A		
SN5G(-)	18	GN	TXL	3522073C1	3710061C1	1500A	A10	N/A		
SP5G(-)	18	GN	TXL	3522073C1	3710061C1	1500A	A10	N/A		
VC5G(-)	18	GN	TXL	3522073C1	3710061C1	1500A	A10	N/A		
VD5G(-)	18	GN	TXL	3522073C1	3710061C1	1500A	A10	N/A		
VE5G(-)	18	GN	TXL	3522073C1	3710061C1	1500A	A10	N/A		
VF5G(-)	18	GN	TXL	3522073C1	3710061C1	1500A	A10	N/A		
VV5G(-)	18	GN	TXL	3522073C1	3710061C1	1500A	A10	N/A		

Circuit Number	Gauge	Color	Insulation	Terminal / Splice Number	Connector Part number	Connector Number	Cavity	Seal/Sleeve	Lock 1	Lock 2
YX5G(-)	18	GN	TXL	3522073C1	3710061C1	1500A	A10	N/A		
YZ5G(-)	18	GN	TXL	3522073C1	3710061C1	1500A	A10	N/A		
2H5G(-)	18	GN	TXL	3522073C1	3710061C1	1500A	A10	N/A		
2J5G(-)	18	GN	TXL	3522073C1	3710061C1	1500A	A10	N/A		
2L5G(-)	18	GN	TXL	3522073C1	3710061C1	1500A	A10	N/A		
2M5G(-)	18	GN	TXL	3522073C1	3710061C1	1500A	A10	N/A		
2W5G(-)	18	GN	TXL	3522073C1	3710061C1	1500A	A10	N/A		
2Y5G(-)	18	GN	TXL	3522073C1	3710061C1	1500A	A10	N/A		
2Z5G(-)	18	GN	TXL	3522073C1	3710061C1	1500A	A10	N/A		
3C5G(-)	18	GN	TXL	3522073C1	3710061C1	1500A	A10	N/A		
3D5G(-)	18	GN	TXL	3522073C1	3710061C1	1500A	A10	N/A		
3E5G(-)	18	GN	TXL	3522073C1	3710061C1	1500A	A10	N/A		
3J5G(-)	18	GN	TXL	3522073C1	3710061C1	1500A	A10	N/A		
3M5G(-)	18	GN	TXL	3522073C1	3710061C1	1500A	A10	N/A		
3R5G(-)	18	GN	TXL	3522073C1	3710061C1	1500A	A10	N/A		
3U5G(-)	18	GN	TXL	3522073C1	3710061C1	1500A	A10	N/A		
3W5W(-)	18	GN	TXL	3522073C1	3710061C1	1500A	A10	N/A		
3Z5G(-)	18	GN	TXL	3522073C1	3710061C1	1500A	A10	N/A		
4E5G(-)	18	GN	TXL	3522073C1	3710061C1	1500A	A10	N/A		
4J5G(-)	18	GN	TXL	3522073C1	3710061C1	1500A	A10	N/A		
4L5G(-)	18	GN	TXL	3522073C1	3710061C1	1500A	A10	N/A		
4N5G(-)	18	GN	TXL	3522073C1	3710061C1	1500A	A10	N/A		
9K5G(-)	18	GN	TXL	3522073C1	3710061C1	1500A	A10	N/A		
9L5G(-)	18	GN	TXL	3522073C1	3710061C1	1500A	A10	N/A		
9P5G(-)	18	GN	TXL	3522073C1	3710061C1	1500A	A10	N/A		
9T5G(-)	18	GN	TXL	3522073C1	3710061C1	1500A	A10	N/A		
9V5G(-)	18	GN	TXL	3522073C1	3710061C1	1500A	A10	N/A		
9W5G(-)	18	GN	TXL	3522073C1	3710061C1	1500A	A10	N/A		
JC5G(-)	18	GN	TXL	3522073C1	3710061C1	1500A	A10	N/A		
JD5G(-)	18	GN	TXL	3522073C1	3710061C1	1500A	A10	N/A		
JF5G(-)	18	GN	TXL	3522073C1	3710061C1	1500A	A10	N/A		
JG5G(-)	18	GN	TXL	3522073C1	3710061C1	1500A	A10	N/A		
LC5J(-)	18	GN	TXL	3522073C1	3710061C1	1500A	A10	N/A		
LD5L(-)	18	GN	TXL	3522073C1	3710061C1	1500A	A10	N/A		
LE5G(-)	18	GN	TXL	3522073C1	3710061C1	1500A	A10	N/A		
LF5G(-)	18	GN	TXL	3522073C1	3710061C1	1500A	A10	N/A		
LS5G(-)	18	GN	TXL	3522073C1	3710061C1	1500A	A10	N/A		
LU5G(-)	18	GN	TXL	3522073C1	3710061C1	1500A	A10	N/A		
LV5G(-)	18	GN	TXL	3522073C1	3710061C1	1500A	A10	N/A		
PV5G(-)	18	GN	TXL	3522073C1	3710061C1	1500A	A10	N/A		
PY5G(-)	18	GN	TXL	3522073C1	3710061C1	1500A	A10	N/A		
PZ5G(-)	18	GN	TXL	3522073C1	3710061C1	1500A	A10	N/A		
RD5G(-)	18	GN	TXL	3522073C1	3710061C1	1500A	A10	N/A		
RG5G(-)	18	GN	TXL	3522073C1	3710061C1	1500A	A10	N/A		
RJ5G(-)	18	GN	TXL	3522073C1	3710061C1	1500A	A10	N/A		
RM5G(-)	18	GN	TXL	3522073C1	3710061C1	1500A	A10	N/A		
RR5G(-)	18	GN	TXL	3522073C1	3710061C1	1500A	A10	N/A		
RS5G(-)	18	GN	TXL	3522073C1	3710061C1	1500A	A10	N/A		
RU5G(-)	18	GN	TXL	3522073C1	3710061C1	1500A	A10	N/A		
RX5G(-)	18	GN	TXL	3522073C1	3710061C1	1500A	A10	N/A		
RZ5G(-)	18	GN	TXL	3522073C1	3710061C1	1500A	A10	N/A		
SB5G(-)	18	GN	TXL	3522073C1	3710061C1	1500A	A10	N/A		

Circuit Number	Gauge	Color	Insulation	Terminal / Splice Number	Connector Part number	Connector Number	Cavity	Seal/Sleeve	Lock 1	Lock 2
SC5G(-)	18	GN	TXL	3522073C1	3710061C1	1500A	A10	N/A		
SD5G(-)	18	GN	TXL	3522073C1	3710061C1	1500A	A10	N/A		
SE5G(-)	18	GN	TXL	3522073C1	3710061C1	1500A	A10	N/A		
SN5G(-)	18	GN	TXL	3522073C1	3710061C1	1500A	A10	N/A		
SP5G(-)	18	GN	TXL	3522073C1	3710061C1	1500A	A10	N/A		
SR5G(-)	18	GN	TXL	3522073C1	3710061C1	1500A	A10	N/A		
VC5G(-)	18	GN	TXL	3522073C1	3710061C1	1500A	A10	N/A		
VD5G(-)	18	GN	TXL	3522073C1	3710061C1	1500A	A10	N/A		
VE5G(-)	18	GN	TXL	3522073C1	3710061C1	1500A	A10	N/A		
VF5G(-)	18	GN	TXL	3522073C1	3710061C1	1500A	A10	N/A		
VG5G(-)	18	GN	TXL	3522073C1	3710061C1	1500A	A10	N/A		
YX5G(-)	18	GN	TXL	3522073C1	3710061C1	1500A	A10	N/A		
YZ5G(-)	18	GN	TXL	3522073C1	3710061C1	1500A	A10	N/A		
AA14EE	16	RD	TXL	3522073C1	3710061C1	1500A	A2	N/A		
AA14EE	16	RD	TXL	3522073C1	3710061C1	1500A	A2	N/A		
AA13EA	18	PK	TXL	3522073C1	3710061C1	1500A	A3	N/A		
AA13EA	18	PK	TXL	3522073C1	3710061C1	1500A	A3	N/A		
5E13C	18	PK	TXL	3522073C1	3710061C1	1500A	A6	N/A		
5E13C	18	PK	TXL	3522073C1	3710061C1	1500A	A6	N/A		
5.00E+179	18	WH	TXL	3522073C1	3710061C1	1500A	A7	N/A		
5.00E+179	18	WH	TXL	3522073C1	3710061C1	1500A	A7	N/A		
3D5G(+)	18	YL	TXL	3522073C1	3710061C1	1500A	A9	N/A		
3M5G(+)	18	YL	TXL	3522073C1	3710061C1	1500A	A9	N/A		
9K5G(+)	18	YL	TXL	3522073C1	3710061C1	1500A	A9	N/A		
9L5G(+)	18	YL	TXL	3522073C1	3710061C1	1500A	A9	N/A		
9P5G(+)	18	YL	TXL	3522073C1	3710061C1	1500A	A9	N/A	3540454C1	3551897C1
9V5G(+)	18	YL	TXL	3522073C1	3710061C1	1500A	A9	N/A		
JC5G(+)	18	YL	TXL	3522073C1	3710061C1	1500A	A9	N/A		
JD5G(+)	18	YL	TXL	3522073C1	3710061C1	1500A	A9	N/A		
JF5G(+)	18	YL	TXL	3522073C1	3710061C1	1500A	A9	N/A		
JG5G(+)	18	YL	TXL	3522073C1	3710061C1	1500A	A9	N/A		
LC5J(+)	18	YL	TXL	3522073C1	3710061C1	1500A	A9	N/A		
LD5L(+)	18	YL	TXL	3522073C1	3710061C1	1500A	A9	N/A		
LE5G(+)	18	YL	TXL	3522073C1	3710061C1	1500A	A9	N/A		
LF5G(+)	18	YL	TXL	3522073C1	3710061C1	1500A	A9	N/A		
LS5G(+)	18	YL	TXL	3522073C1	3710061C1	1500A	A9	N/A		
LU5G(+)	18	YL	TXL	3522073C1	3710061C1	1500A	A9	N/A		
LV5G(+)	18	YL	TXL	3522073C1	3710061C1	1500A	A9	N/A		
PY5G(+)	18	YL	TXL	3522073C1	3710061C1	1500A	A9	N/A		
PZ5G(+)	18	YL	TXL	3522073C1	3710061C1	1500A	A9	N/A		
RD5G(+)	18	YL	TXL	3522073C1	3710061C1	1500A	A9	N/A		
RG5G(+)	18	YL	TXL	3522073C1	3710061C1	1500A	A9	N/A		
RJ5G(+)	18	YL	TXL	3522073C1	3710061C1	1500A	A9	N/A		
RM5G(+)	18	YL	TXL	3522073C1	3710061C1	1500A	A9	N/A		
RS5G(+)	18	YL	TXL	3522073C1	3710061C1	1500A	A9	N/A		
RU5G(+)	18	YL	TXL	3522073C1	3710061C1	1500A	A9	N/A		
SB5G(+)	18	YL	TXL	3522073C1	3710061C1	1500A	A9	N/A		
SC5G(+)	18	YL	TXL	3522073C1	3710061C1	1500A	A9	N/A		
SD5G(+)	18	YL	TXL	3522073C1	3710061C1	1500A	A9	N/A		
SE5G(+)	18	YL	TXL	3522073C1	3710061C1	1500A	A9	N/A		
SN5G(+)	18	YL	TXL	3522073C1	3710061C1	1500A	A9	N/A		
SP5G(+)	18	YL	TXL	3522073C1	3710061C1	1500A	A9	N/A		

Circuit Number	Gauge	Color	Insulation	Terminal / Splice Number	Connector Part number	Connector Number	Cavity	Seal/Sleeve	Lock 1	Lock 2
VC5G(+)	18	YL	TXL	3522073C1	3710061C1	1500A	A9	N/A		
VD5G(+)	18	YL	TXL	3522073C1	3710061C1	1500A	A9	N/A		
VE5G(+)	18	YL	TXL	3522073C1	3710061C1	1500A	A9	N/A		
VF5G(+)	18	YL	TXL	3522073C1	3710061C1	1500A	A9	N/A		
VV5G(+)	18	YL	TXL	3522073C1	3710061C1	1500A	A9	N/A		
YX5G(+)	18	YL	TXL	3522073C1	3710061C1	1500A	A9	N/A		
YZ5G(+)	18	YL	TXL	3522073C1	3710061C1	1500A	A9	N/A		
2H5G(+)	18	YL	TXL	3522073C1	3710061C1	1500A	A9	N/A		
2J5G(+)	18	YL	TXL	3522073C1	3710061C1	1500A	A9	N/A		
2L5G(+)	18	YL	TXL	3522073C1	3710061C1	1500A	A9	N/A		
2M5G(+)	18	YL	TXL	3522073C1	3710061C1	1500A	A9	N/A		
2W5G(+)	18	YL	TXL	3522073C1	3710061C1	1500A	A9	N/A		
2Y5G(+)	18	YL	TXL	3522073C1	3710061C1	1500A	A9	N/A		
2Z5G(+)	18	YL	TXL	3522073C1	3710061C1	1500A	A9	N/A		
3C5G(+)	18	YL	TXL	3522073C1	3710061C1	1500A	A9	N/A		
3D5G(+)	18	YL	TXL	3522073C1	3710061C1	1500A	A9	N/A		
3E5G(+)	18	YL	TXL	3522073C1	3710061C1	1500A	A9	N/A		
3J5G(+)	18	YL	TXL	3522073C1	3710061C1	1500A	A9	N/A		
3M5G(+)	18	YL	TXL	3522073C1	3710061C1	1500A	A9	N/A		
3R5G(+)	18	YL	TXL	3522073C1	3710061C1	1500A	A9	N/A		
3U5G(+)	18	YL	TXL	3522073C1	3710061C1	1500A	A9	N/A		
3W5W(+)	18	YL	TXL	3522073C1	3710061C1	1500A	A9	N/A		
3Z5G(+)	18	YL	TXL	3522073C1	3710061C1	1500A	A9	N/A		
4E5G(+)	18	YL	TXL	3522073C1	3710061C1	1500A	A9	N/A		
4J5G(+)	18	YL	TXL	3522073C1	3710061C1	1500A	A9	N/A		
4L5G(+)	18	YL	TXL	3522073C1	3710061C1	1500A	A9	N/A		
4N5G(+)	18	YL	TXL	3522073C1	3710061C1	1500A	A9	N/A		
9K5G(+)	18	YL	TXL	3522073C1	3710061C1	1500A	A9	N/A		
9L5G(+)	18	YL	TXL	3522073C1	3710061C1	1500A	A9	N/A		
9P5G(+)	18	YL	TXL	3522073C1	3710061C1	1500A	A9	N/A		
9T5G(+)	18	YL	TXL	3522073C1	3710061C1	1500A	A9	N/A		
9V5G(+)	18	YL	TXL	3522073C1	3710061C1	1500A	A9	N/A		
9W5G(+)	18	YL	TXL	3522073C1	3710061C1	1500A	A9	N/A		
JC5G(+)	18	YL	TXL	3522073C1	3710061C1	1500A	A9	N/A		
JD5G(+)	18	YL	TXL	3522073C1	3710061C1	1500A	A9	N/A		
JF5G(+)	18	YL	TXL	3522073C1	3710061C1	1500A	A9	N/A		
JG5G(+)	18	YL	TXL	3522073C1	3710061C1	1500A	A9	N/A		
LC5J(+)	18	YL	TXL	3522073C1	3710061C1	1500A	A9	N/A		
LD5L(+)	18	YL	TXL	3522073C1	3710061C1	1500A	A9	N/A		
LE5G(+)	18	YL	TXL	3522073C1	3710061C1	1500A	A9	N/A		
LF5G(+)	18	YL	TXL	3522073C1	3710061C1	1500A	A9	N/A		
LS5G(+)	18	YL	TXL	3522073C1	3710061C1	1500A	A9	N/A		
LU5G(+)	18	YL	TXL	3522073C1	3710061C1	1500A	A9	N/A		
LV5G(+)	18	YL	TXL	3522073C1	3710061C1	1500A	A9	N/A		
PV5G(+)	18	YL	TXL	3522073C1	3710061C1	1500A	A9	N/A		
PY5G(+)	18	YL	TXL	3522073C1	3710061C1	1500A	A9	N/A		
PZ5G(+)	18	YL	TXL	3522073C1	3710061C1	1500A	A9	N/A		
RD5G(+)	18	YL	TXL	3522073C1	3710061C1	1500A	A9	N/A		
RG5G(+)	18	YL	TXL	3522073C1	3710061C1	1500A	A9	N/A		
RJ5G(+)	18	YL	TXL	3522073C1	3710061C1	1500A	A9	N/A		
RM5G(+)	18	YL	TXL	3522073C1	3710061C1	1500A	A9	N/A		
RR5G(+)	18	YL	TXL	3522073C1	3710061C1	1500A	A9	N/A		

Circuit Number	Gauge	Color	Insulation	Terminal / Splice Number	Connector Part number	Connector Number	Cavity	Seal/Sleeve	Lock 1	Lock 2
RS5G(+)	18	YL	TXL	3522073C1	3710061C1	1500A	A9	N/A		
RU5G(+)	18	YL	TXL	3522073C1	3710061C1	1500A	A9	N/A		
RX5G(+)	18	YL	TXL	3522073C1	3710061C1	1500A	A9	N/A		
RZ5G(+)	18	YL	TXL	3522073C1	3710061C1	1500A	A9	N/A		
SB5G(+)	18	YL	TXL	3522073C1	3710061C1	1500A	A9	N/A		
SC5G(+)	18	YL	TXL	3522073C1	3710061C1	1500A	A9	N/A		
SD5G(+)	18	YL	TXL	3522073C1	3710061C1	1500A	A9	N/A		
SE5G(+)	18	YL	TXL	3522073C1	3710061C1	1500A	A9	N/A		
SN5G(+)	18	YL	TXL	3522073C1	3710061C1	1500A	A9	N/A		
SP5G(+)	18	YL	TXL	3522073C1	3710061C1	1500A	A9	N/A		
SR5G(+)	18	YL	TXL	3522073C1	3710061C1	1500A	A9	N/A		
VC5G(+)	18	YL	TXL	3522073C1	3710061C1	1500A	A9	N/A		
VD5G(+)	18	YL	TXL	3522073C1	3710061C1	1500A	A9	N/A		
VE5G(+)	18	YL	TXL	3522073C1	3710061C1	1500A	A9	N/A		
VF5G(+)	18	YL	TXL	3522073C1	3710061C1	1500A	A9	N/A		
VG5G(+)	18	YL	TXL	3522073C1	3710061C1	1500A	A9	N/A		
YX5G(+)	18	YL	TXL	3522073C1	3710061C1	1500A	A9	N/A		
YZ5G(+)	18	YL	TXL	3522073C1	3710061C1	1500A	A9	N/A		
AT28B	20	TN	TXL	3534303C1	3710061C1	1500A	B10	N/A		
AT28B	20	TN	TXL	3534303C1	3710061C1	1500A	B10	N/A		
AA11-GKE	16	WH	TXL	3522073C1	3710061C1	1500A	B3	N/A		
AA11-GKE	16	WH	TXL	3522073C1	3710061C1	1500A	B3	N/A		
CP98F	20	TN	TXL	3534303C1	3710061C1	1500A	B4	N/A		
CT98F	20	TN	TXL	3534303C1	3710061C1	1500A	B4	N/A		
MB98F	20	TN	TXL	3534303C1	3710061C1	1500A	B4	N/A		
MJ98F	20	TN	TXL	3534303C1	3710061C1	1500A	B4	N/A		
CP98F	20	TN	TXL	3534303C1	3710061C1	1500A	B4	N/A		
CT98F	20	TN	TXL	3534303C1	3710061C1	1500A	B4	N/A		
MB98F	20	TN	TXL	3534303C1	3710061C1	1500A	B4	N/A		
MJ98F	20	TN	TXL	3534303C1	3710061C1	1500A	B4	N/A		
CP11-GMW	20	WH	TXL	3534303C1	3710061C1	1500A	B5	N/A		
CT11-GMW	20	WH	TXL	3534303C1	3710061C1	1500A	B5	N/A		
MB11-GMW	20	WH	TXL	3534303C1	3710061C1	1500A	B5	N/A		
MJ11-GMW	20	WH	TXL	3534303C1	3710061C1	1500A	B5	N/A		
CP11-GMW	20	WH	GXL	3534303C1	3710061C1	1500A	B5	N/A		
CT11-GMW	20	WH	TXL	3534303C1	3710061C1	1500A	B5	N/A		
MB11-GMW	20	WH	TXL	3534303C1	3710061C1	1500A	B5	N/A		
MJ11-GMW	20	WH	GXL	3534303C1	3710061C1	1500A	B5	N/A		
DX63AW	20	DKBL	TXL	3534303C1	3710061C1	1500A	B6	N/A		
DX63AW	20	DKBL	TXL	3534303C1	3710061C1	1500A	B6	N/A		
DX11-GLD	20	WH	TXL	3534303C1	3710061C1	1500A	B7	N/A		
DX11-GLD	20	WH	TXL	3534303C1	3710061C1	1500A	B7	N/A		
AT28C	20	TN	TXL	3534303C1	3710061C1	1500A	B8	N/A		
AT28C	20	TN	TXL	3534303C1	3710061C1	1500A	B8	N/A		
AT28A	20	TN	TXL	3534303C1	3710061C1	1500A	B9	N/A		
AT28A	20	TN	TXL	3534303C1	3710061C1	1500A	B9	N/A		
ZM98-G	18	WH	TXL	3754236C1	3544066C1	1650MA	A	N/A		
ZM98-G	18	WH	TXL	3754236C1	3544066C1	1650MA	A	N/A		
ZM98H	18	RD	TXL	3754236C1	3544066C1	1650MA	B	N/A		
ZM98H	18	RD	TXL	3754236C1	3544066C1	1650MA	B	N/A		
NT5D(+)	18	YL	TXL	3754236C1	3544066C1	1650MA	C	N/A		
ZN5D(+)	18	YL	TXL	3754236C1	3544066C1	1650MA	C	N/A		

Circuit Number	Gauge	Color	Insulation	Terminal / Splice Number	Connector Part number	Connector Number	Cavity	Seal/Sleeve	Lock 1	Lock 2
NT5D(-)	18	GN	TXL	3754236C1	3544066C1	1650MA	D	N/A		
ZN5D(-)	18	GN	TXL	3754236C1	3544066C1	1650MA	D	N/A		
KP5AD(+)	18	YL	TXL	3754236C1	3544066C1	1650MA	H	N/A		
KP5AD(+)	18	YL	TXL	3754236C1	3544066C1	1650MA	H	N/A		
KP5AD(-)	18	GN	TXL	3754236C1	3544066C1	1650MA	J	N/A		
KP5AD(-)	18	GN	TXL	3754236C1	3544066C1	1650MA	J	N/A		
2V67EN	16	TN	TXL	1661262C1	3540613C1	16B	A	N/A		
RV67EN	16	TN	TXL	1661262C1	3540613C1	16B	A	N/A		
2V67EN	20	TN	TXL	3534481C1	3540613C1	16B	A	N/A		
RV67EN	16	TN	TXL	1661262C1	3540613C1	16B	A	N/A		
2V67NA	16	VT	TXL	1661262C1	3540613C1	16B	B	N/A		
RV67NA	16	TN	TXL	1661262C1	3540613C1	16B	B	N/A		
2V67NA	20	VT	TXL	3534481C1	3540613C1	16B	B	N/A		
RV67NA	16	TN	TXL	1661262C1	3540613C1	16B	B	N/A		
2V13COG	16	PK	TXL	1661262C1	3540613C1	16B	C	N/A		
CS13COG	16	PK	TXL	1661262C1	3540613C1	16B	C	N/A		
RV13COG	16	PK	TXL	1661262C1	3540613C1	16B	C	N/A		
YK13COG	16	PK	TXL	1661262C1	3540613C1	16B	C	N/A		
2V13COG	16	PK	TXL	1661262C1	3540613C1	16B	C	N/A		
CS13COG	16	PK	TXL	1661262C1	3540613C1	16B	C	N/A		
RV13COG	16	PK	TXL	1661262C1	3540613C1	16B	C	N/A		
SG13COG	16	PK	TXL	1661262C1	3540613C1	16B	C	N/A		
YK13COG	16	PK	TXL	1661262C1	3540613C1	16B	C	N/A		
2V11COG	18	WH	TXL	1661262C1	3540613C1	16B	D	N/A		
CS11COG	18	WH	TXL	1661262C1	3540613C1	16B	D	N/A		
RV11COG	18	WH	TXL	1661262C1	3540613C1	16B	D	N/A		
YK11COG	18	WH	TXL	1661262C1	3540613C1	16B	D	N/A		
2V11COG	20	WH	TXL	3534481C1	3540613C1	16B	D	N/A		
CS11COG	18	WH	TXL	1661262C1	3540613C1	16B	D	N/A		
RV11COG	18	WH	TXL	1661262C1	3540613C1	16B	D	N/A		
SG11COG	16	WH	TXL	1661262C1	3540613C1	16B	D	N/A		
YK11COG	18	WH	TXL	1661262C1	3540613C1	16B	D	N/A		
2F56A4	16	OR	TXL	1661262C1	3540613C1	16B	E	N/A		
2G56A4	16	OR	TXL	1661262C1	3540613C1	16B	E	N/A		
2Z56A2	16	OR	TXL	1661262C1	3540613C1	16B	E	N/A		
CS5DA(-)	18	GN	TXL	1661262C1	3540613C1	16B	E	N/A		
YK5DA(-)	18	GN	TXL	1661262C1	3540613C1	16B	E	N/A		
CS5DA(-)	18	GN	TXL	1661262C1	3540613C1	16B	E	N/A		
YK5DA(-)	18	GN	TXL	1661262C1	3540613C1	16B	E	N/A		
ZF56AAA	18A	OR	TXL	1661262C1	3540613C1	16B	E	N/A		
2F57A2	16	OR	TXL	1661262C1	3540613C1	16B	F	N/A	1661874C1	
2G57A2	16	OR	TXL	1661262C1	3540613C1	16B	F	N/A		
2Z57A4	16	OR	TXL	1661262C1	3540613C1	16B	F	N/A		
CS5DA(+)	18	YL	TXL	1661262C1	3540613C1	16B	F	N/A		
YK5DA(+)	18	YL	TXL	1661262C1	3540613C1	16B	F	N/A		
CS5DA(+)	18	YL	TXL	1661262C1	3540613C1	16B	F	N/A		
YK5DA(+)	18	YL	TXL	1661262C1	3540613C1	16B	F	N/A		
ZF57AAA	20	OR	TXL	3534481C1	3540613C1	16B	F	N/A		
2V67COG	18	GY	TXL	1661262C1	3540613C1	16B	G	N/A		
CS67COG	18	GY	TXL	1661262C1	3540613C1	16B	G	N/A		
RV67COG	18	WH	TXL	1661262C1	3540613C1	16B	G	N/A		
YK67COG	18	GY	TXL	1661262C1	3540613C1	16B	G	N/A		

Circuit Number	Gauge	Color	Insulation	Terminal / Splice Number	Connector Part number	Connector Number	Cavity	Seal/Sleeve	Lock 1	Lock 2
2V67COG	18	GY	TXL	1661262C1	3540613C1	16B	G	N/A		
CS67COG	18	GY	TXL	1661262C1	3540613C1	16B	G	N/A		
RV67COG	18	WH	TXL	1661262C1	3540613C1	16B	G	N/A		
YK67COG	18	GY	TXL	1661262C1	3540613C1	16B	G	N/A		
2V14CSB	16	RD	TXL	1661262C1	3540613C1	16B	H	N/A		
CS14CSB	16	RD	TXL	1661262C1	3540613C1	16B	H	N/A		
YK14CSB	16	RD	TXL	1661262C1	3540613C1	16B	H	N/A		
2V14CSB	16	RD	TXL	1661262C1	3540613C1	16B	H	N/A		
CS14CSB	16	RD	TXL	1661262C1	3540613C1	16B	H	N/A		
YK14CSB	16	RD	TXL	1661262C1	3540613C1	16B	H	N/A		
2V5CA(-)	18	GN	TXL	1661262C1	3540613C1	16B	J	N/A		
JB5EB(-)	18	GN	TXL	1661262C1	3540613C1	16B	J	N/A		
LT5J(-)	18	GN	TXL	1661262C1	3540613C1	16B	J	N/A		
LW5J(-)	18	GN	TXL	1661262C1	3540613C1	16B	J	N/A		
NT5EB(-)	18	GN	TXL	1661262C1	3540613C1	16B	J	N/A		
RV5CA(-)	18	GN	TXL	1661262C1	3540613C1	16B	J	N/A		
SA5E(-)	18	GN	TXL	1661262C1	3540613C1	16B	J	N/A		
SK5E(-)	18	GN	TXL	1661262C1	3540613C1	16B	J	N/A		
ZH5EA(-)	18	GN	TXL	1661262C1	3540613C1	16B	J	N/A		
2V5CA(-)	18	GN	TXL	1661262C1	3540613C1	16B	J	N/A		
JB5EB(-)	18	GN	TXL	1661262C1	3540613C1	16B	J	N/A		
LT5JE(-)	18	GN	TXL	1661262C1	3540613C1	16B	J	N/A		
LW5JE(-)	18	GN	TXL	1661262C1	3540613C1	16B	J	N/A		
RV5CA(-)	18	GN	TXL	1661262C1	3540613C1	16B	J	N/A		
SA5E(-)	18	GN	TXL	1661262C1	3540613C1	16B	J	N/A		
SK5E(-)	18	GN	TXL	1661262C1	3540613C1	16B	J	N/A		
ZH5EA(-)	18	GN	TXL	1661262C1	3540613C1	16B	J	N/A		
ZN5EB(-)	18	GN	TXL	1661262C1	3540613C1	16B	J	N/A		
2V5CA(+)	18	YL	TXL	1661262C1	3540613C1	16B	K	N/A		
JB5EB(+)	18	YL	TXL	1661262C1	3540613C1	16B	K	N/A		
LT5J(+)	18	YL	TXL	1661262C1	3540613C1	16B	K	N/A		
LW5J(+)	18	YL	TXL	1661262C1	3540613C1	16B	K	N/A		
NT5EB(+)	18	YL	TXL	1661262C1	3540613C1	16B	K	N/A		
RV5CA(+)	18	YL	TXL	1661262C1	3540613C1	16B	K	N/A		
SA5E(+)	18	YL	TXL	1661262C1	3540613C1	16B	K	N/A		
SK5E(+)	18	YL	TXL	1661262C1	3540613C1	16B	K	N/A		
ZH5EA(+)	18	YL	TXL	1661262C1	3540613C1	16B	K	N/A		
2V5CA(+)	18	YL	TXL	1661262C1	3540613C1	16B	K	N/A		
JB5EB(+)	18	YL	TXL	1661262C1	3540613C1	16B	K	N/A		
LT5JE(+)	18	YL	TXL	1661262C1	3540613C1	16B	K	N/A		
LW5JE(+)	18	YL	TXL	1661262C1	3540613C1	16B	K	N/A		
RV5CA(+)	18	YL	TXL	1661262C1	3540613C1	16B	K	N/A		
SA5E(+)	18	YL	TXL	1661262C1	3540613C1	16B	K	N/A		
SK5E(+)	18	YL	TXL	1661262C1	3540613C1	16B	K	N/A		
ZH5EA(+)	18	YL	TXL	1661262C1	3540613C1	16B	K	N/A		
ZN5EB(+)	18	YL	TXL	1661262C1	3540613C1	16B	K	N/A		
MA52A	14	YL	GXL	3549416C1	3595624C1	1700F	1	N/A		
MA52A	14	YL	GXL	3549416C1	3595624C1	1700F	1	N/A		
MA53A	14	YL	GXL	3549416C1	3595624C1	1700F	2	N/A		
MA53A	14	YL	GXL	3549416C1	3595624C1	1700F	2	N/A		
MA52B	14	YL	GXL	3549416C1	3595624C1	1700F	3	N/A	3540454C1	3551897C1
MA52B	14	YL	GXL	3549416C1	3595624C1	1700F	3	N/A		

Circuit Number	Gauge	Color	Insulation	Terminal / Splice Number	Connector Part number	Connector Number	Cavity	Seal/Sleeve	Lock 1	Lock 2
MA53B	14	YL	GXL	3549416C1	3595624C1	1700F	4	N/A	3683466C1	3573833C1
MA53B	14	YL	GXL	3549416C1	3595624C1	1700F	4	N/A		
MA58	14	BN	GXL	3549416C1	3595624C1	1700F	5	N/A		
MA58	14	BN	GXL	3549416C1	3595624C1	1700F	5	N/A		
MH19	14	GY	GXL	3549416C1	3595624C1	1700F	6	N/A		
MK19	14	GY	GXL	3549416C1	3595624C1	1700F	6	N/A		
MH19	14	GY	GXL	3549416C1	3595624C1	1700F	6	N/A		
MA58C	16	BN	GXL	3549416C1	3595624C1	1700F	7	N/A		
MA58C	16	BN	GXL	3549416C1	3595624C1	1700F	7	N/A		
PN78A	16	LTGN	GXL	3549416C1	3595624C1	1700F	8	N/A		
MA56	16	OR	GXL	3549417C1	3595624C1	1700F	14	N/A		
MA56	16	OR	GXL	3549417C1	3595624C1	1700F	14	N/A		
MA57	16	OR	GXL	3549417C1	3595624C1	1700F	15	N/A		
MA57	16	OR	GXL	3549417C1	3595624C1	1700F	15	N/A		
MA56A	16	OR	GXL	3549417C1	3595624C1	1700F	16	N/A		
MA56A	16	OR	GXL	3549417C1	3595624C1	1700F	16	N/A		
WW87A	18	GY	TXL	3549418C1	3595624C1	1700F	17	N/A		
WW87A	18	GY	TXL	3549418C1	3595624C1	1700F	17	N/A		
WW9BB	18	GY	TXL	3549418C1	3595624C1	1700F	18	N/A		
WW9BB	18	GY	TXL	3549418C1	3595624C1	1700F	18	N/A		
MA87C	16	GY	GXL	3549417C1	3595624C1	1700F	19	N/A		
MA87C	16	GY	GXL	3549417C1	3595624C1	1700F	19	N/A		
MA87D	16	GY	GXL	3549417C1	3595624C1	1700F	20	N/A		
MA87D	16	GY	GXL	3549417C1	3595624C1	1700F	20	N/A		
MA85	16	GY	GXL	3549417C1	3595624C1	1700F	21	N/A		
MA85	16	GY	GXL	3549417C1	3595624C1	1700F	21	N/A		
MD64A	16	YL	TXL	3549417C1	3595624C1	1700F	22	N/A		
ME64A	16	YL	GXL	3549417C1	3595624C1	1700F	22	N/A		
ME64A	16	YL	GXL	3549417C1	3595624C1	1700F	22	N/A		
MD64B	16	YL	TXL	3549417C1	3595624C1	1700F	23	N/A		
ME64B	16	YL	GXL	3549417C1	3595624C1	1700F	23	N/A		
ME64B	16	YL	GXL	3549417C1	3595624C1	1700F	23	N/A		
MJ54X	16	OR	GXL	3549417C1	3595624C1	1700F	24	N/A		
MA54X	16	OR	GXL	3549417C1	3595624C1	1700F	24	N/A		
MB94	18	GY	GXL	3549418C1	3595624C1	1700F	27	N/A		
MX94M	18	GY	TXL	3549418C1	3595624C1	1700F	27	N/A		
MB94	18	GY	GXL	3549418C1	3595624C1	1700F	27	N/A		
MX94M	18	GY	TXL	3549418C1	3595624C1	1700F	27	N/A		
MB94A	18	GY	GXL	3549418C1	3595624C1	1700F	28	N/A		
MX94MA	18	GY	TXL	3549418C1	3595624C1	1700F	28	N/A		
MB94A	18	GY	GXL	3549418C1	3595624C1	1700F	28	N/A		
MX94MA	18	GY	TXL	3549418C1	3595624C1	1700F	28	N/A		
MB94B	18	GY	GXL	3549418C1	3595624C1	1700F	29	N/A		
MX94MB	18	GY	TXL	3549418C1	3595624C1	1700F	29	N/A		
MB94B	18	GY	GXL	3549418C1	3595624C1	1700F	29	N/A		
MX94MB	18	GY	TXL	3549418C1	3595624C1	1700F	29	N/A		
NB94C	18	GY	GXL	3549418C1	3595624C1	1700F	30	N/A		
NC94MC	18	GY	TXL	3549418C1	3595624C1	1700F	30	N/A		
NB94C	18	GY	GXL	3549418C1	3595624C1	1700F	30	N/A		
NC94MC	18	GY	TXL	3549418C1	3595624C1	1700F	30	N/A		
NB94D	18	GY	GXL	3549418C1	3595624C1	1700F	31	N/A		
NC94MD	18	GY	TXL	3549418C1	3595624C1	1700F	31	N/A		

Circuit Number	Gauge	Color	Insulation	Terminal / Splice Number	Connector Part number	Connector Number	Cavity	Seal/Sleeve	Lock 1	Lock 2
NB94D	18	GY	GXL	3549418C1	3595624C1	1700F	31	N/A		
NC94MD	18	GY	TXL	3549418C1	3595624C1	1700F	31	N/A		
NB94E	18	GY	GXL	3549418C1	3595624C1	1700F	32	N/A		
PC94ME	18	GY	TXL	3549418C1	3595624C1	1700F	32	N/A		
NB94E	18	GY	GXL	3549418C1	3595624C1	1700F	32	N/A		
PC94ME	18	GY	TXL	3549418C1	3595624C1	1700F	32	N/A		
NB94F	18	GY	GXL	3549418C1	3595624C1	1700F	33	N/A		
PC94MF	18	GY	TXL	3549418C1	3595624C1	1700F	33	N/A		
NB94F	18	GY	GXL	3549418C1	3595624C1	1700F	33	N/A		
PC94MF	18	GY	TXL	3549418C1	3595624C1	1700F	33	N/A		
MB94H	18	GY	GXL	3549418C1	3595624C1	1700F	34	N/A		
MZ94MH	18	GY	TXL	3549418C1	3595624C1	1700F	34	N/A		
MB94H	18	GY	GXL	3549418C1	3595624C1	1700F	34	N/A		
MZ94MH	18	GY	TXL	3549418C1	3595624C1	1700F	34	N/A		
MB94J	18	GY	GXL	3549418C1	3595624C1	1700F	35	N/A		
MZ94MJ	18	GY	TXL	3549418C1	3595624C1	1700F	35	N/A		
MB94J	18	GY	GXL	3549418C1	3595624C1	1700F	35	N/A		
MZ94MJ	18	GY	TXL	3549418C1	3595624C1	1700F	35	N/A		
MB94K	18	GY	GXL	3549418C1	3595624C1	1700F	36	N/A		
MZ94MK	18	GY	TXL	3549418C1	3595624C1	1700F	36	N/A		
MB94K	18	GY	GXL	3549418C1	3595624C1	1700F	36	N/A		
MZ94MK	18	GY	TXL	3549418C1	3595624C1	1700F	36	N/A		
NW67-GG	20	WH	TXL	3549418C1	3595624C1	1700F	37	N/A		
WU67-G	20	WH	TXL	3549418C1	3595624C1	1700F	37	N/A		
NW67-GG	20	WH	TXL	3549418C1	3595624C1	1700F	37	N/A		
WU67-G	20	WH	TXL	3549418C1	3595624C1	1700F	37	N/A		
NW67Y	20	PK	TXL	3549418C1	3595624C1	1700F	38	N/A		
WU67YA	20	PK	TXL	3549418C1	3595624C1	1700F	38	N/A		
NW67Y	20	PK	TXL	3549418C1	3595624C1	1700F	38	N/A		
WU67YA	20	PK	TXL	3549418C1	3595624C1	1700F	38	N/A		
PV97H	18	VT	GXL	3549418C1	3595624C1	1700F	43	N/A		
PV97H	18	VT	GXL	3549418C1	3595624C1	1700F	43	N/A		
PV97J	18	VT	GXL	3549418C1	3595624C1	1700F	44	N/A		
PV97J	18	VT	GXL	3549418C1	3595624C1	1700F	44	N/A		
WX5UE(+)	18	YL	TXL	3549418C1	3595624C1	1700F	45	N/A		
WX5UE(+)	20	YL	193	3549418C1	3595624C1	1700F	45	N/A		
WX5UE(-)	18	GN	TXL	3549418C1	3595624C1	1700F	46	N/A		
WX5UE(-)	20	GN	193	3549418C1	3595624C1	1700F	46	N/A		
NS22AA	18	PK	TXL	3549418C1	3595624C1	1700F	47	N/A		
NS22AA	18	PK	TXL	3549418C1	3595624C1	1700F	47	N/A		
NS22AG	18	WH	TXL	3549418C1	3595624C1	1700F	48	N/A		
NS22AG	18	WH	TXL	3549418C1	3595624C1	1700F	48	N/A		
NA72EA	16	OR	GXL	3549416C1	3595624C1	1700F	51	N/A		
NA72EA	16	OR	GXL	3549416C1	3595624C1	1700F	51	N/A		
NA72EB	16	OR	GXL	3549417C1	3595624C1	1700F	52	N/A		
NA72EB	16	OR	GXL	3549417C1	3595624C1	1700F	52	N/A		
RK5U(+)	18	YL	TXL	3549418C1	3595624C1	1700F	61	N/A		
RS5U(+)	18	YL	TXL	3549418C1	3595624C1	1700F	61	N/A	1661874C1	
RK5U(+)	18	YL	TXL	3549418C1	3595624C1	1700F	61	N/A		
RS5U(+)	18	YL	TXL	3549418C1	3595624C1	1700F	61	N/A		
RK5U(-)	18	GN	TXL	3549418C1	3595624C1	1700F	62	N/A		
RS5U(-)	18	GN	TXL	3549418C1	3595624C1	1700F	62	N/A	3539784C1	

Circuit Number	Gauge	Color	Insulation	Terminal / Splice Number	Connector Part number	Connector Number	Cavity	Seal/Sleeve	Lock 1	Lock 2
RK5U(-)	18	GN	TXL	3549418C1	3595624C1	1700F	62	N/A		
RS5U(-)	18	GN	TXL	3549418C1	3595624C1	1700F	62	N/A		
SK5UK(+)	18	YL	TXL	3574277C1	3595624C1	1700F	65	N/A		
SR5U(+)	18	YL	TXL	3574277C1	3595624C1	1700F	65	N/A		
SV5U(+)	18	YL	TXL	3574277C1	3595624C1	1700F	65	N/A		
SK5UK(+)	18	YL	TXL	3574277C1	3595624C1	1700F	65	N/A		
SR5U(+)	18	YL	TXL	3574277C1	3595624C1	1700F	65	N/A		
SV5U(+)	18	YL	TXL	3574277C1	3595624C1	1700F	65	N/A		
SK5UK(-)	18	GN	TXL	3574277C1	3595624C1	1700F	66	N/A		
SR5U(-)	18	GN	TXL	3574277C1	3595624C1	1700F	66	N/A		
SV5U(-)	18	GN	TXL	3574277C1	3595624C1	1700F	66	N/A		
SK5UK(-)	18	GN	TXL	3574277C1	3595624C1	1700F	66	N/A		
SR5U(-)	18	GN	TXL	3574277C1	3595624C1	1700F	66	N/A		
SV5U(-)	18	GN	TXL	3574277C1	3595624C1	1700F	66	N/A		
BB12	16	LTBL	TXL	3549416C1	3595624C1	1700F	68	N/A		
BB12	16	LTBL	TXL	3549416C1	3595624C1	1700F	68	N/A		
BB56A	16	YL	TXL	3549416C1	3595624C1	1700F	69	N/A		
BB56AA	16	YL	TXL	3549416C1	3595624C1	1700F	69	N/A		
BB56B	16	YL	TXL	3549416C1	3595624C1	1700F	70	N/A		
BB56B	16	YL	TXL	3549416C1	3595624C1	1700F	70	N/A		
BB57A	16	LTGN	TXL	3549416C1	3595624C1	1700F	71	N/A		
BB57A	16	LTGN	TXL	3549416C1	3595624C1	1700F	71	N/A		
BB57B	16	LTGN	TXL	3549416C1	3595624C1	1700F	72	N/A		
BB57B	16	LTGN	TXL	3549416C1	3595624C1	1700F	72	N/A		
BB54	14	BN	TXL	3549416C1	3595624C1	1700F	73	N/A		
BB54	14	BN	TXL	3549416C1	3595624C1	1700F	73	N/A		
BB68	14	BN	TXL	3549416C1	3595624C1	1700F	74	N/A		
BB68	14	BN	TXL	3549416C1	3595624C1	1700F	74	N/A		
BB70	12	RD	TXL	3549415C1	3595624C1	1700F	75	N/A		
BB70	12	RD	TXL	3549415C1	3595624C1	1700F	75	N/A		
BB71	16	LTBL	TXL	3549416C1	3595624C1	1700F	76	N/A		
BB71	16	LTBL	TXL	3549416C1	3595624C1	1700F	76	N/A		
NA71BA	14	OR	GXL	3549416C1	3595622C1	1701F	1	N/A		
PB71BA	14	OR	GXL	3549416C1	3595622C1	1701F	1	N/A		
NA56A	14	OR	GXL	3549416C1	3595622C1	1701F	2	N/A		
PB56A	14	OR	GXL	3549416C1	3595622C1	1701F	2	N/A		
NA57A	14	OR	GXL	3549416C1	3595622C1	1701F	3	N/A		
PB57A	14	OR	GXL	3549416C1	3595622C1	1701F	3	N/A		
NA68A	14	BN	GXL	3549416C1	3595622C1	1701F	4	N/A		
PB68A	14	BN	GXL	3549416C1	3595622C1	1701F	4	N/A		
NH56T	10	YL	GXL	3549415C1	3595622C1	1701F	5	N/A		
NK56T	10	YL	GXL	3549415C1	3595622C1	1701F	5	N/A		
NM56T	10	YL	GXL	3549415C1	3595622C1	1701F	5	N/A		
RG56T	10	YL	GXL	3549415C1	3595622C1	1701F	5	N/A		
RZ56T	10	YL	GXL	3549415C1	3595622C1	1701F	5	N/A		
SG56T	10	YL	GXL	3549415C1	3595622C1	1701F	5	N/A		
SH56T	10	YL	GXL	3549415C1	3595622C1	1701F	5	N/A		
YT56T	10	YL	GXL	3549415C1	3595622C1	1701F	5	N/A		
NH57T	10	LTGN	GXL	3549415C1	3595622C1	1701F	6	N/A		
NK57T	10	LTGN	GXL	3549415C1	3595622C1	1701F	6	N/A		
NM57T	10	LTGN	GXL	3549415C1	3595622C1	1701F	6	N/A		
RG57T	10	LTGN	GXL	3549415C1	3595622C1	1701F	6	N/A		

Circuit Number	Gauge	Color	Insulation	Terminal / Splice Number	Connector Part number	Connector Number	Cavity	Seal/Sleeve	Lock 1	Lock 2
RZ57T	10	LTGN	GXL	3549415C1	3595622C1	1701F	6	N/A		
SG57T	10	LTGN	GXL	3549415C1	3595622C1	1701F	6	N/A		
SH57T	10	LTGN	GXL	3549415C1	3595622C1	1701F	6	N/A		
YT57T	10	LTGN	GXL	3549415C1	3595622C1	1701F	6	N/A		
NH58T	10	BK	GXL	3549415C1	3595622C1	1701F	7	N/A		
NK58T	10	BK	GXL	3549415C1	3595622C1	1701F	7	N/A		
NM58T	10	BK	GXL	3549415C1	3595622C1	1701F	7	N/A		
RG58T	10	BK	GXL	3549415C1	3595622C1	1701F	7	N/A		
RZ58T	10	BK	GXL	3549415C1	3595622C1	1701F	7	N/A		
SG58T	10	BK	GXL	3549415C1	3595622C1	1701F	7	N/A		
SH58T	10	BK	GXL	3549415C1	3595622C1	1701F	7	N/A		
YT58T	10	BK	GXL	3549415C1	3595622C1	1701F	7	N/A		
NH68T	10	BN	TXL	3549415C1	3595622C1	1701F	8	N/A		
NK68T	10	BN	GXL	3549415C1	3595622C1	1701F	8	N/A		
NM68T	10	BN	TXL	3549415C1	3595622C1	1701F	8	N/A		
RG68T	10	BN	TXL	3549415C1	3595622C1	1701F	8	N/A		
RZ68T	10	BN	TXL	3549415C1	3595622C1	1701F	8	N/A		
SG68T	10	BN	TXL	3549415C1	3595622C1	1701F	8	N/A		
SH68T	10	BN	TXL	3549415C1	3595622C1	1701F	8	N/A		
YT68T	10	BN	GXL	3549415C1	3595622C1	1701F	8	N/A		
NH70T	10	RD	TXL	3549415C1	3595622C1	1701F	9	N/A		
NK70T	10	RD	GXL	3549415C1	3595622C1	1701F	9	N/A		
NM70T	10	RD	TXL	3549415C1	3595622C1	1701F	9	N/A		
RG70T	10	RD	TXL	3549415C1	3595622C1	1701F	9	N/A		
RZ70T	10	RD	TXL	3549415C1	3595622C1	1701F	9	N/A		
SG70T	10	RD	TXL	3549415C1	3595622C1	1701F	9	N/A		
SH70T	10	RD	TXL	3549415C1	3595622C1	1701F	9	N/A		
YT70T	10	RD	GXL	3549415C1	3595622C1	1701F	9	N/A		
MD94T	10	DKBL	TXL	3549415C1	3595622C1	1701F	10	N/A		
ME94T	10	DKBL	TXL	3549415C1	3595622C1	1701F	10	N/A		
MG94T	10	DKBL	TXL	3549415C1	3595622C1	1701F	10	N/A		
MH94T	10	DKBL	TXL	3549415C1	3595622C1	1701F	10	N/A		
NH94T	10	GY	TXL	3549415C1	3595622C1	1701F	10	N/A		
NK94T	10	GY	GXL	3549415C1	3595622C1	1701F	10	N/A		
NM94T	10	GY	TXL	3549415C1	3595622C1	1701F	10	N/A		
RG94T	10	GY	TXL	3549415C1	3595622C1	1701F	10	N/A		
RZ94T	10	GY	TXL	3549415C1	3595622C1	1701F	10	N/A		
YT94T	10	GY	GXL	3549415C1	3595622C1	1701F	10	N/A		
MD72V	10	OR	TXL	3549415C1	3595622C1	1701F	11	N/A		
ME72V	10	OR	TXL	3549415C1	3595622C1	1701F	11	N/A		
MG72V	10	OR	TXL	3549415C1	3595622C1	1701F	11	N/A		
MH72V	10	OR	TXL	3549415C1	3595622C1	1701F	11	N/A		
NJ72V	12	OR	GXL	3549415C1	3595622C1	1701F	11	N/A		
RJ72V	12	OR	GXL	3549415C1	3595622C1	1701F	11	N/A		
UB67TA	16	GY	GXL	3549416C1	3595622C1	1701F	12	N/A		
PM94SJ	16	GY	GXL	3549416C1	3595622C1	1701F	13	N/A		
[PP94SJ]	16	-	GXL	3549416C1	3595622C1	1701F	13	N/A		
BC94BM	16	GY	GXL	3549417C1	3595622C1	1701F	14	N/A		
NC94BM	16	GY	GXL	3549417C1	3595622C1	1701F	14	N/A		
BC94BN	16	GY	GXL	3549417C1	3595622C1	1701F	15	N/A		
NC94BN	16	GY	GXL	3549417C1	3595622C1	1701F	15	N/A		
BB94BE	16	GY	GXL	3549417C1	3595622C1	1701F	16	N/A		

Circuit Number	Gauge	Color	Insulation	Terminal / Splice Number	Connector Part number	Connector Number	Cavity	Seal/Sleeve	Lock 1	Lock 2
NB94BE	16	GY	GXL	3549417C1	3595622C1	1701F	16	N/A		
BB94BD	16	GY	GXL	3549417C1	3595622C1	1701F	17	N/A		
NB94BD	16	GY	GXL	3549417C1	3595622C1	1701F	17	N/A		
BB94BH	16	GY	GXL	3549417C1	3595622C1	1701F	18	N/A		
NB94BH	16	GY	GXL	3549417C1	3595622C1	1701F	18	N/A		
BB94BF	16	GY	GXL	3549417C1	3595622C1	1701F	19	N/A		
NB94BF	16	GY	GXL	3549417C1	3595622C1	1701F	19	N/A		
BB94BL	14	GY	GXL	3549417C1	3595622C1	1701F	20	N/A		
NB94BL	14	GY	GXL	3549417C1	3595622C1	1701F	20	N/A		
BB94BJ	14	GY	GXL	3549417C1	3595622C1	1701F	21	N/A		
NB94BJ	14	GY	GXL	3549417C1	3595622C1	1701F	21	N/A		
BB94BK	16	GY	GXL	3549417C1	3595622C1	1701F	22	N/A		
NB94BK	16	GY	GXL	3549417C1	3595622C1	1701F	22	N/A		
BB94BA	16	GY	GXL	3549417C1	3595622C1	1701F	23	N/A		
NB94BA	16	GY	GXL	3549417C1	3595622C1	1701F	23	N/A		
BB94BB	16	GY	GXL	3549417C1	3595622C1	1701F	24	N/A		
NB94BB	16	GY	GXL	3549417C1	3595622C1	1701F	24	N/A		
BB94BC	16	GY	GXL	3549417C1	3595622C1	1701F	25	N/A		
NB94BC	16	GY	GXL	3549417C1	3595622C1	1701F	25	N/A		
HD74Y	18	YL	TXL	3574277C1	3595622C1	1701F	26	N/A		
MD94TA	12	YL	GXL	3549415C1	3595622C1	1701F	26	N/A		
MG94TA	12	YL	GXL	3549415C1	3595622C1	1701F	26	N/A		
YY116L	18	GY	GXL	3574277C1	3595622C1	1701F	26	N/A		
FA36A	18	TN	GXL	3549418C1	3595622C1	1701F	27	N/A		
FB36A	18	TN	GXL	3549418C1	3595622C1	1701F	27	N/A		
FC36A	18	TN	GXL	3549418C1	3595622C1	1701F	27	N/A		
FD36A	18	TN	GXL	3549418C1	3595622C1	1701F	27	N/A		
FE36A	18	TN	GXL	3549418C1	3595622C1	1701F	27	N/A		
FF36A	18	TN	GXL	3549418C1	3595622C1	1701F	27	N/A		
NA9BC	18	GY	GXL	3549418C1	3595622C1	1701F	28	N/A		
PB9BC	18	GY	GXL	3549418C1	3595622C1	1701F	28	N/A		
LG112	16	GY	GXL	3549417C1	3595622C1	1701F	29	N/A		
YY116M	18	GY	TXL	3549418C1	3595622C1	1701F	29	N/A		
GD39A	16	GY	GXL	3549417C1	3595622C1	1701F	30	N/A		
GF39A	16	GY	GXL	3549417C1	3595622C1	1701F	30	N/A		
RE39	18	GY	GXL	3549418C1	3595622C1	1701F	30	N/A		
YY116U	18	GY	GXL	3549418C1	3595622C1	1701F	30	N/A		
GA39	16	GY	GXL	3549417C1	3595622C1	1701F	31	N/A		
GB39	16	GY	GXL	3549417C1	3595622C1	1701F	31	N/A		
CA59A	18	GY	GXL	3549418C1	3595622C1	1701F	32	N/A		
CB59A	16	GY	GXL	3549417C1	3595622C1	1701F	32	N/A		
CC59A	16	GY	GXL	3549417C1	3595622C1	1701F	32	N/A		
CD59A	18	GY	GXL	3549418C1	3595622C1	1701F	32	N/A		
CE59A	18	GY	GXL	3549418C1	3595622C1	1701F	32	N/A		
CA59B	18	GY	GXL	3549418C1	3595622C1	1701F	33	N/A		
CB59B	16	GY	GXL	3549417C1	3595622C1	1701F	33	N/A		
CC59B	16	GY	GXL	3549417C1	3595622C1	1701F	33	N/A		
CD59B	18	GY	GXL	3549418C1	3595622C1	1701F	33	N/A		
CE59B	18	GY	GXL	3549418C1	3595622C1	1701F	33	N/A		
CA59C	18	GY	GXL	3549418C1	3595622C1	1701F	34	N/A		
CB59C	16	GY	GXL	3549417C1	3595622C1	1701F	34	N/A		
CC59C	16	GY	GXL	3549417C1	3595622C1	1701F	34	N/A		

Circuit Number	Gauge	Color	Insulation	Terminal / Splice Number	Connector Part number	Connector Number	Cavity	Seal/Sleeve	Lock 1	Lock 2
CD59C	18	GY	GXL	3549418C1	3595622C1	1701F	34	N/A		
CE59C	18	GY	GXL	3549418C1	3595622C1	1701F	34	N/A		
CA59D	18	GY	GXL	3549418C1	3595622C1	1701F	35	N/A		
CB59D	16	GY	GXL	3549417C1	3595622C1	1701F	35	N/A		
CC59D	16	GY	GXL	3549417C1	3595622C1	1701F	35	N/A		
CD59D	18	GY	GXL	3549418C1	3595622C1	1701F	35	N/A		
CE59D	18	GY	GXL	3549418C1	3595622C1	1701F	35	N/A		
SV59E	18	GY	GXL	3549418C1	3595622C1	1701F	36	N/A		
SW59E	18	GY	GXL	3549418C1	3595622C1	1701F	36	N/A		
SX59E	16	GY	GXL	3549417C1	3595622C1	1701F	36	N/A		
SY59E	16	GY	GXL	3549417C1	3595622C1	1701F	36	N/A		
SZ59E	18	GY	GXL	3549418C1	3595622C1	1701F	36	N/A		
SV59F	18	GY	GXL	3549418C1	3595622C1	1701F	37	N/A		
SW59F	18	GY	GXL	3549418C1	3595622C1	1701F	37	N/A		
SX59F	16	GY	GXL	3549417C1	3595622C1	1701F	37	N/A		
SY59F	16	GY	GXL	3549417C1	3595622C1	1701F	37	N/A		
SZ59F	18	GY	GXL	3549418C1	3595622C1	1701F	37	N/A		
SV59H	18	GY	GXL	3549418C1	3595622C1	1701F	38	N/A		
SW59H	18	GY	GXL	3549418C1	3595622C1	1701F	38	N/A		
SX59H	16	GY	GXL	3549417C1	3595622C1	1701F	38	N/A		
SY59H	16	GY	GXL	3549417C1	3595622C1	1701F	38	N/A		
SZ59H	18	GY	GXL	3549418C1	3595622C1	1701F	38	N/A		
SV59J	18	GY	GXL	3549418C1	3595622C1	1701F	39	N/A		
SW59J	18	GY	GXL	3549418C1	3595622C1	1701F	39	N/A		
SX59J	16	GY	GXL	3549417C1	3595622C1	1701F	39	N/A		
SY59J	16	GY	GXL	3549417C1	3595622C1	1701F	39	N/A		
SZ59J	18	GY	GXL	3549418C1	3595622C1	1701F	39	N/A		
NP61B	18	GY	GXL	3549418C1	3595622C1	1701F	40	N/A		
NP106B	18	OR	GXL	3549418C1	3595622C1	1701F	41	N/A		
NP109B	18	GY	GXL	3549418C1	3595622C1	1701F	42	N/A		
NR32A	18	TN	GXL	3549418C1	3595622C1	1701F	43	N/A		
NS32	18	TN	GXL	3549418C1	3595622C1	1701F	44	N/A		
NT49	18	GY	GXL	3549418C1	3595622C1	1701F	45	N/A		
PR94SAB	18	GY	GXL	3549418C1	3595622C1	1701F	46	N/A		
PS94SAB	18	GY	GXL	3549418C1	3595622C1	1701F	46	N/A		
[YJ94SN]	18	-	GXL	3549418C1	3595622C1	1701F	46	N/A		
[YK94SN]	18	-	GXL	3549418C1	3595622C1	1701F	46	N/A		
PR94SBB	18	GY	GXL	3549418C1	3595622C1	1701F	47	N/A		
PS94SBB	18	GY	GXL	3549418C1	3595622C1	1701F	47	N/A		
[YJ94SP]	18	-	GXL	3549418C1	3595622C1	1701F	47	N/A		
[YK94SP]	18	-	GXL	3549418C1	3595622C1	1701F	47	N/A		
PR94SCB	18	GY	GXL	3549418C1	3595622C1	1701F	48	N/A		
PS94SCB	18	GY	GXL	3549418C1	3595622C1	1701F	48	N/A		
[YJ94SR]	18	-	GXL	3549418C1	3595622C1	1701F	48	N/A		
[YK94SR]	18	-	GXL	3549418C1	3595622C1	1701F	48	N/A		
PR94SDB	18	GY	GXL	3549418C1	3595622C1	1701F	49	N/A		
PS94SDB	18	GY	GXL	3549418C1	3595622C1	1701F	49	N/A		
[YJ94SS]	18	-	GXL	3549418C1	3595622C1	1701F	49	N/A		
[YK94SS]	18	-	GXL	3549418C1	3595622C1	1701F	49	N/A		
NU49A	18	GY	GXL	3549418C1	3595622C1	1701F	50	N/A		
NX65BC	14	OR	GXL	3549416C1	3595622C1	1701F	51	N/A		
NY65BC	14	OR	GXL	3549416C1	3595622C1	1701F	51	N/A		

Circuit Number	Gauge	Color	Insulation	Terminal / Splice Number	Connector Part number	Connector Number	Cavity	Seal/Sleeve	Lock 1	Lock 2
BA94BY	16	GY	GXL	3549417C1	3595622C1	1701F	52	N/A		
SA94BY	16	GY	GXL	3549417C1	3595622C1	1701F	52	N/A		
BA94BZ	16	GY	GXL	3549417C1	3595622C1	1701F	53	N/A		
SA94BZ	16	GY	GXL	3549417C1	3595622C1	1701F	53	N/A		
BA94BP	16	GY	GXL	3549417C1	3595622C1	1701F	54	N/A		
SA94BP	16	GY	GXL	3549417C1	3595622C1	1701F	54	N/A		
BA94BQ	16	GY	GXL	3549417C1	3595622C1	1701F	55	N/A		
SA94BQ	16	GY	GXL	3549417C1	3595622C1	1701F	55	N/A		
BA94BR	16	GY	GXL	3549417C1	3595622C1	1701F	56	N/A		
SA94BR	16	GY	GXL	3549417C1	3595622C1	1701F	56	N/A		
BA94BS	16	GY	GXL	3549417C1	3595622C1	1701F	57	N/A		
SA94BS	16	GY	GXL	3549417C1	3595622C1	1701F	57	N/A		
BA94BT	16	GY	GXL	3549417C1	3595622C1	1701F	58	N/A		
SA94BT	16	GY	GXL	3549417C1	3595622C1	1701F	58	N/A		
BA94BU	16	GY	GXL	3549417C1	3595622C1	1701F	59	N/A		
SA94BU	16	GY	GXL	3549417C1	3595622C1	1701F	59	N/A		
BA94BV	16	GY	GXL	3549417C1	3595622C1	1701F	60	N/A		
SA94BV	16	GY	GXL	3549417C1	3595622C1	1701F	60	N/A		
PA152AA	16	GY	TXL	3549417C1	3595622C1	1701F	61	N/A		
YV116L	18	GY	TXL	3549418C1	3595622C1	1701F	61	N/A		
PA152AB	16	GY	TXL	3549417C1	3595622C1	1701F	62	N/A		
YV116M	18	GY	TXL	3549418C1	3595622C1	1701F	62	N/A		
PM94SZC	16	GY	GXL	3549417C1	3595622C1	1701F	63	N/A		
[YH94SL]	16	-	GXL	3549417C1	3595622C1	1701F	63	N/A		
BA94BW	16	GY	GXL	3549416C1	3595622C1	1701F	64	N/A		
SA94BW	16	GY	GXL	3549416C1	3595622C1	1701F	64	N/A		
HA94A	16	GY	GXL	3549416C1	3595622C1	1701F	65	N/A		
HB94A	16	GY	GXL	3549416C1	3595622C1	1701F	65	N/A		
HC94A	16	GY	GXL	3549416C1	3595622C1	1701F	65	N/A		
HD74R	18	RD	TXL	3574277C1	3595622C1	1701F	65	N/A		
HA94B	16	GY	GXL	3549416C1	3595622C1	1701F	66	N/A		
HB94B	16	GY	GXL	3549416C1	3595622C1	1701F	66	N/A		
HC94B	16	GY	GXL	3549416C1	3595622C1	1701F	66	N/A		
HD11-GW	18	WH	TXL	3574277C1	3595622C1	1701F	66	N/A		
PM94SK	16	GY	GXL	3549416C1	3595622C1	1701F	67	N/A		
[PP94SK]	16	-	GXL	3549416C1	3595622C1	1701F	67	N/A		
NV65	16	OR	GXL	3549416C1	3595622C1	1701F	68	N/A		
UB67U	16	GY	GXL	3549416C1	3595622C1	1701F	69	N/A		
UB67W	16	GY	GXL	3549416C1	3595622C1	1701F	70	N/A		
UB67V	16	GY	GXL	3549416C1	3595622C1	1701F	71	N/A		
PM94SM	16	GY	GXL	3549416C1	3595622C1	1701F	72	N/A		
PM94SN	16	GY	GXL	3549416C1	3595622C1	1701F	73	N/A		
PM94SL	16	GY	GXL	3549416C1	3595622C1	1701F	74	N/A		
PM94SVC	16	GY	GXL	3549416C1	3595622C1	1701F	75	N/A		
[YH94SM]	16	-	GXL	3549416C1	3595622C1	1701F	75	N/A		
PM94SH	16	GY	GXL	3549416C1	3595622C1	1701F	76	N/A		
AA57AJ	16	OR	TXL	3549416C1	3595624C1	1703F	1	N/A		
PA57BAJ	16	OR	TXL	3549416C1	3595624C1	1703F	2	N/A		
AA82-GJ	16	WH	TXL	3549416C1	3595624C1	1703F	8	N/A		
AA82-GJ	16	WH	TXL	3549416C1	3595624C1	1703F	8	N/A		
2A54-GXEJ	16	WH	TXL	3549416C1	3595624C1	1703F	10	N/A		
3C54-GXEJ	16	WH	TXL	3549416C1	3595624C1	1703F	10	N/A		

Circuit Number	Gauge	Color	Insulation	Terminal / Splice Number	Connector Part number	Connector Number	Cavity	Seal/Sleeve	Lock 1	Lock 2
3E54-GXEJ	16	WH	TXL	3549416C1	3595624C1	1703F	10	N/A		
HY54-GXEJ	16	WH	TXL	3549416C1	3595624C1	1703F	10	N/A		
AA54-GXEJ	16	WH	TXL	3549416C1	3595624C1	1703F	10	N/A		
DY54-GXAJ	16	WH	TXL	3549416C1	3595624C1	1703F	12	N/A		
PA54-GXAH	16	WH	TXL	3549416C1	3595624C1	1703F	12	N/A		
DY54-GXAJ	16	WH	TXL	3549416C1	3595624C1	1703F	12	N/A		
PA54-GXAH	16	WH	TXL	3549416C1	3595624C1	1703F	12	N/A		
2B57AJ	16	OR	TXL	3549417C1	3595624C1	1703F	14	N/A		
2C57AJ	16	OR	TXL	3549417C1	3595624C1	1703F	14	N/A		
2D57AJ	16	OR	TXL	3549417C1	3595624C1	1703F	14	N/A		
2E57AJ	16	OR	TXL	3549417C1	3595624C1	1703F	14	N/A		
2F57AJ	16	OR	TXL	3549417C1	3595624C1	1703F	14	N/A	1661376C1	
2G57AJ	16	OR	TXL	3549417C1	3595624C1	1703F	14	N/A	3765547C1	3765565C1
NA57BJ	16	OR	TXL	3549417C1	3595624C1	1703F	14	N/A		
NW57BJ	16	OR	TXL	3549417C1	3595624C1	1703F	14	N/A		
NY57BJ	16	OR	TXL	3549417C1	3595624C1	1703F	14	N/A		
2A54AJ	16	BN	TXL	3549417C1	3595624C1	1703F	15	N/A		
3C54AJ	16	BN	TXL	3549417C1	3595624C1	1703F	15	N/A		
3E54AJ	16	BN	TXL	3549417C1	3595624C1	1703F	15	N/A		
AV54AJ	16	BN	TXL	3549417C1	3595624C1	1703F	15	N/A		
AW54AJ	16	BN	TXL	3549417C1	3595624C1	1703F	15	N/A		
HY54AJ	16	BN	TXL	3549417C1	3595624C1	1703F	15	N/A		
AA54AJ	16	BN	TXL	3549417C1	3595624C1	1703F	15	N/A		
HA30BJ	16	TN	TXL	3549417C1	3595624C1	1703F	16	N/A		
HA30BJ	16	TN	TXL	3549417C1	3595624C1	1703F	16	N/A		
AA74J	18	LTGN	TXL	3549418C1	3595624C1	1703F	17	N/A		
AA74J	18	LTGN	TXL	3549418C1	3595624C1	1703F	17	N/A		
AU28J	18	TN	TXL	3549418C1	3595624C1	1703F	18	N/A		
AU28B	18	TN	TXL	3549418C1	3595624C1	1703F	18	N/A		
3H6DBJ	18	GY	TXL	3549418C1	3595624C1	1703F	19	N/A		
3H6DBJ	20	GY	TXL	3549418C1	3595624C1	1703F	19	N/A		
3H77BJ	18	LTGN	TXL	3549418C1	3595624C1	1703F	20	N/A		
3H77BJ	20	LTGN	TXL	3549418C1	3595624C1	1703F	20	N/A		
AZ92-GCJ	18	WH	TXL	3549418C1	3595624C1	1703F	21	N/A		
GY92J#134	18	TN	TXL	3549418C1	3595624C1	1703F	21	N/A		
AZ92-GCJ	18	WH	TXL	3549418C1	3595624C1	1703F	21	N/A		
GY92#134	18	TN	TXL	3549418C1	3595624C1	1703F	21	N/A		
DT104-GAJ	16	WH	TXL	3549417C1	3595624C1	1703F	22	N/A		
DT104-GAJ	16	WH	TXL	3549417C1	3595624C1	1703F	22	N/A		
3H77BAJ	18	LTGN	TXL	3549418C1	3595624C1	1703F	23	N/A	3538636C1	
3H77BAJ	18	LTGN	TXL	3549418C1	3595624C1	1703F	23	N/A		
HZ41EJ	18	TN	TXL	3549418C1	3595624C1	1703F	24	N/A		
HZ41E	18	TN	TXL	3549418C1	3595624C1	1703F	24	N/A		
HZ41DJ	18	TN	TXL	3549418C1	3595624C1	1703F	25	N/A		
HZ41D	18	TN	TXL	3549418C1	3595624C1	1703F	25	N/A		
2T92ZBJ	18	TN	TXL	3574277C1	3595624C1	1703F	26	N/A		
2T92ZBJ	18	TN	TXL	3574277C1	3595624C1	1703F	26	N/A		
NA57CJ	16	OR	TXL	3549417C1	3595624C1	1703F	27	N/A		
NW57CJ	16	OR	TXL	3549417C1	3595624C1	1703F	27	N/A		
NY57CJ	16	OR	TXL	3549417C1	3595624C1	1703F	27	N/A		
AZ92BJ	18	TN	TXL	3549418C1	3595624C1	1703F	28	N/A		
GY92J#141	18	TN	TXL	3549418C1	3595624C1	1703F	28	N/A		

Circuit Number	Gauge	Color	Insulation	Terminal / Splice Number	Connector Part number	Connector Number	Cavity	Seal/Sleeve	Lock 1	Lock 2
AZ92BJ	18	TN	TXL	3549418C1	3595624C1	1703F	28	N/A		
GY92#141	18	TN	TXL	3549418C1	3595624C1	1703F	28	N/A		
3B17	16	PK	TXL	3549417C1	3595624C1	1703F	29	N/A		
AF17B	16	PK	GXL	3549417C1	3595624C1	1703F	29	N/A		
GP17J	16	PK	TXL	3549417C1	3595624C1	1703F	29	N/A		
3B17BA	16	PK	TXL	3549417C1	3595624C1	1703F	29	N/A		
AF17A	16	PK	GXL	3549417C1	3595624C1	1703F	29	N/A		
GP17BA	16	PK	TXL	3549417C1	3595624C1	1703F	29	N/A		
MD92#145J	18	TN	TXL	3549418C1	3595624C1	1703F	30	N/A		
MD92#103J	18	TN	TXL	3549418C1	3595624C1	1703F	30	N/A		
MD92#117J	18	TN	TXL	3549418C1	3595624C1	1703F	31	N/A		
MD92#117J	18	TN	TXL	3549418C1	3595624C1	1703F	31	N/A		
MN92J	18	TN	TXL	3549418C1	3595624C1	1703F	33	N/A		
MN92J	18	TN	TXL	3549418C1	3595624C1	1703F	33	N/A		
MN9ZAJ	18	GY	TXL	3549418C1	3595624C1	1703F	34	N/A		
MN92AJ	18	GY	TXL	3549418C1	3595624C1	1703F	34	N/A		
AA9AAJ	18	GY	TXL	3549418C1	3595624C1	1703F	35	N/A		
AA9AAJ	18	GY	TXL	3549418C1	3595624C1	1703F	35	N/A		
AA97BJ	18	VT	TXL	3549418C1	3595624C1	1703F	36	N/A		
AA97BJ	18	VT	TXL	3549418C1	3595624C1	1703F	36	N/A		
AA97NJ	18	VT	TXL	3549418C1	3595624C1	1703F	37	N/A		
AA97N	18	VT	TXL	3549418C1	3595624C1	1703F	37	N/A		
AA99DJ	18	VT	TXL	3549418C1	3595624C1	1703F	38	N/A		
AA97M	18	VT	TXL	3549418C1	3595624C1	1703F	38	N/A		
DT104ALJ	16	DKBL	TXL	3549417C1	3595624C1	1703F	40	N/A		
DT104ALJ	16	DKBL	TXL	3549417C1	3595624C1	1703F	40	N/A		
AZ13AJ	16	PK	GXL	3549417C1	3595624C1	1703F	42	N/A		
GY92J#163	16	PK	TXL	3549417C1	3595624C1	1703F	42	N/A		
AZ13AJ	16	PK	GXL	3549417C1	3595624C1	1703F	42	N/A		
GY92#163	16	PK	TXL	3549417C1	3595624C1	1703F	42	N/A		
BL71BJ	16	OR	TXL	3549417C1	3595624C1	1703F	44	N/A		
BP71BJ	16	OR	TXL	3549417C1	3595624C1	1703F	44	N/A		
EY71BJ	16	OR	TXL	3549417C1	3595624C1	1703F	44	N/A		
BP71BJ	16	OR	TXL	3549417C1	3595624C1	1703F	44	N/A		
EY71BJ	16	OR	TXL	3549417C1	3595624C1	1703F	44	N/A		
3T92J#165	18	OR	TXL	3549418C1	3595624C1	1703F	45	N/A		
BJ92R1J	20	TN	TXL	3549418C1	3595624C1	1703F	45	N/A		
BK92R1J	20	TN	TXL	3549418C1	3595624C1	1703F	45	N/A		
GM92J#165	18	OR	TXL	3549418C1	3595624C1	1703F	45	N/A		
3T92#165	18	TN	TXL	3549418C1	3595624C1	1703F	45	N/A		
BJ92T1J	18	TN	TXL	3549418C1	3595624C1	1703F	45	N/A		
BK92R1J	18	TN	TXL	3549418C1	3595624C1	1703F	45	N/A		
GM92#165	18	TN	TXL	3549418C1	3595624C1	1703F	45	N/A		
AA99BJ	18	VT	TXL	3549418C1	3595624C1	1703F	47	N/A		
AA99BJ	18	VT	TXL	3549418C1	3595624C1	1703F	47	N/A		
AA97MJ	18	VT	TXL	3549418C1	3595624C1	1703F	48	N/A		
AA99D	18	VT	TXL	3549418C1	3595624C1	1703F	48	N/A		
AA97CJ	18	VT	TXL	3549418C1	3595624C1	1703F	49	N/A		
AA97CJ	18	VT	TXL	3549418C1	3595624C1	1703F	49	N/A		
3D5PJ(-)	18	GN	TXL	3549418C1	3595624C1	1703F	52	N/A		
3M5PJ(-)	18	GN	TXL	3549418C1	3595624C1	1703F	52	N/A		
9K5PJ(-)	18	GN	TXL	3549418C1	3595624C1	1703F	52	N/A		

Circuit Number	Gauge	Color	Insulation	Terminal / Splice Number	Connector Part number	Connector Number	Cavity	Seal/Sleeve	Lock 1	Lock 2
9L5PJ(-)	18	GN	TXL	3549418C1	3595624C1	1703F	52	N/A		
9P5PJ(-)	18	GN	TXL	3549418C1	3595624C1	1703F	52	N/A		
9V5PJ(-)	18	GN	TXL	3549418C1	3595624C1	1703F	52	N/A		
JC5PJ(-)	18	GN	TXL	3549418C1	3595624C1	1703F	52	N/A		
JD5PJ(-)	18	GN	TXL	3549418C1	3595624C1	1703F	52	N/A		
JF5PJ(-)	18	GN	TXL	3549418C1	3595624C1	1703F	52	N/A		
JG5PJ(-)	18	GN	TXL	3549418C1	3595624C1	1703F	52	N/A		
LC5PJ(-)	18	GN	TXL	3549418C1	3595624C1	1703F	52	N/A		
LD5PJ(-)	18	GN	TXL	3549418C1	3595624C1	1703F	52	N/A		
LE5PJ(-)	18	GN	TXL	3549418C1	3595624C1	1703F	52	N/A		
LF5PJ(-)	18	GN	TXL	3549418C1	3595624C1	1703F	52	N/A		
LS5PJ(-)	18	GN	TXL	3549418C1	3595624C1	1703F	52	N/A		
LU5PJ(-)	18	GN	TXL	3549418C1	3595624C1	1703F	52	N/A		
LV5PJ(-)	18	GN	TXL	3549418C1	3595624C1	1703F	52	N/A		
PY5PJ(-)	18	GN	TXL	3549418C1	3595624C1	1703F	52	N/A		
PZ5PJ(-)	18	GN	TXL	3549418C1	3595624C1	1703F	52	N/A		
RD5PJ(-)	18	GN	TXL	3549418C1	3595624C1	1703F	52	N/A		
RG5PJ(-)	18	GN	TXL	3549418C1	3595624C1	1703F	52	N/A		
RJ5PJ(-)	18	GN	TXL	3549418C1	3595624C1	1703F	52	N/A		
RM5PJ(-)	18	GN	TXL	3549418C1	3595624C1	1703F	52	N/A		
RS5PJ(-)	18	GN	TXL	3549418C1	3595624C1	1703F	52	N/A		
RU5PJ(-)	18	GN	TXL	3549418C1	3595624C1	1703F	52	N/A		
SB5PJ(-)	18	GN	TXL	3549418C1	3595624C1	1703F	52	N/A		
SC5PJ(-)	18	GN	TXL	3549418C1	3595624C1	1703F	52	N/A		
SD5PJ(-)	18	GN	TXL	3549418C1	3595624C1	1703F	52	N/A		
SE5PJ(-)	18	GN	TXL	3549418C1	3595624C1	1703F	52	N/A		
SN5PJ(-)	18	GN	TXL	3549418C1	3595624C1	1703F	52	N/A		
SP5PJ(-)	18	GN	TXL	3549418C1	3595624C1	1703F	52	N/A		
VC5PJ(-)	18	GN	TXL	3549418C1	3595624C1	1703F	52	N/A		
VD5PJ(-)	18	GN	TXL	3549418C1	3595624C1	1703F	52	N/A		
VE5PJ(-)	18	GN	TXL	3549418C1	3595624C1	1703F	52	N/A		
VF5PJ(-)	18	GN	TXL	3549418C1	3595624C1	1703F	52	N/A		
VV5PJ(-)	18	GN	TXL	3549418C1	3595624C1	1703F	52	N/A		
YX5PJ(-)	18	GN	TXL	3549418C1	3595624C1	1703F	52	N/A		
YZ5PJ(-)	18	GN	TXL	3549418C1	3595624C1	1703F	52	N/A		
2H5R(-)	18	GN	TXL	3549418C1	3595624C1	1703F	52	N/A		
2J5R(-)	18	GN	TXL	3549418C1	3595624C1	1703F	52	N/A		
2L5R(-)	18	GN	TXL	3549418C1	3595624C1	1703F	52	N/A		
2M5R(-)	18	GN	TXL	3549418C1	3595624C1	1703F	52	N/A		
2W5R(-)	18	GN	TXL	3549418C1	3595624C1	1703F	52	N/A		
2Y5R(-)	18	GN	TXL	3549418C1	3595624C1	1703F	52	N/A		
2Z5R(-)	18	GN	TXL	3549418C1	3595624C1	1703F	52	N/A		
3C5R(-)	18	GN	TXL	3549418C1	3595624C1	1703F	52	N/A		
3D5R(-)	18	GN	TXL	3549418C1	3595624C1	1703F	52	N/A		
3E5R(-)	18	GN	TXL	3549418C1	3595624C1	1703F	52	N/A		
3J5R(-)	18	GN	TXL	3549418C1	3595624C1	1703F	52	N/A		
3M5R(-)	18	GN	TXL	3549418C1	3595624C1	1703F	52	N/A		
3R5R(-)	18	GN	TXL	3549418C1	3595624C1	1703F	52	N/A		
3U5R(-)	18	GN	TXL	3549418C1	3595624C1	1703F	52	N/A		
3W5R(-)	18	GN	TXL	3549418C1	3595624C1	1703F	52	N/A		
3Z5R(-)	18	GN	TXL	3549418C1	3595624C1	1703F	52	N/A		
4E5R(-)	18	GN	TXL	3549418C1	3595624C1	1703F	52	N/A		

Circuit Number	Gauge	Color	Insulation	Terminal / Splice Number	Connector Part number	Connector Number	Cavity	Seal/Sleeve	Lock 1	Lock 2
4J5R(-)	18	GN	TXL	3549418C1	3595624C1	1703F	52	N/A		
4L5R(-)	18	GN	TXL	3549418C1	3595624C1	1703F	52	N/A		
4N5R(-)	18	GN	TXL	3549418C1	3595624C1	1703F	52	N/A		
9K5R(-)	18	GN	TXL	3549418C1	3595624C1	1703F	52	N/A		
9L5R(-)	18	GN	TXL	3549418C1	3595624C1	1703F	52	N/A		
9P5R(-)	18	GN	TXL	3549418C1	3595624C1	1703F	52	N/A		
9T5R(-)	18	GN	TXL	3549418C1	3595624C1	1703F	52	N/A		
9V5R(-)	18	GN	TXL	3549418C1	3595624C1	1703F	52	N/A		
9W5R(-)	18	GN	TXL	3549418C1	3595624C1	1703F	52	N/A		
JC5R(-)	18	GN	TXL	3549418C1	3595624C1	1703F	52	N/A		
JD5R(-)	18	GN	TXL	3549418C1	3595624C1	1703F	52	N/A		
JF5R(-)	18	GN	TXL	3549418C1	3595624C1	1703F	52	N/A		
JG5R(-)	18	GN	TXL	3549418C1	3595624C1	1703F	52	N/A		
LC5R(-)	18	GN	TXL	3549418C1	3595624C1	1703F	52	N/A		
LD5R(-)	18	GN	TXL	3549418C1	3595624C1	1703F	52	N/A		
LE5R(-)	18	GN	TXL	3549418C1	3595624C1	1703F	52	N/A		
LF5R(-)	18	GN	TXL	3549418C1	3595624C1	1703F	52	N/A		
LS5PJ(-)	18	GN	TXL	3549418C1	3595624C1	1703F	52	N/A		
LU5R(-)	18	GN	TXL	3549418C1	3595624C1	1703F	52	N/A		
LV5R(-)	18	GN	TXL	3549418C1	3595624C1	1703F	52	N/A		
PV5R(-)	18	GN	TXL	3549418C1	3595624C1	1703F	52	N/A		
PY5R(-)	18	GN	TXL	3549418C1	3595624C1	1703F	52	N/A		
PZ5R(-)	18	GN	TXL	3549418C1	3595624C1	1703F	52	N/A		
RD5R(-)	18	GN	TXL	3549418C1	3595624C1	1703F	52	N/A		
RG5R(-)	18	GN	TXL	3549418C1	3595624C1	1703F	52	N/A		
RJ5R(-)	18	GN	TXL	3549418C1	3595624C1	1703F	52	N/A		
RM5R(-)	18	GN	TXL	3549418C1	3595624C1	1703F	52	N/A		
RR5R(-)	18	GN	TXL	3549418C1	3595624C1	1703F	52	N/A		
RS5R(-)	18	GN	TXL	3549418C1	3595624C1	1703F	52	N/A		
RU5R(-)	18	GN	TXL	3549418C1	3595624C1	1703F	52	N/A		
RX5R(-)	18	GN	TXL	3549418C1	3595624C1	1703F	52	N/A		
RZ5R(-)	18	GN	TXL	3549418C1	3595624C1	1703F	52	N/A		
SB5R(-)	18	GN	TXL	3549418C1	3595624C1	1703F	52	N/A		
SC5R(-)	18	GN	TXL	3549418C1	3595624C1	1703F	52	N/A		
SD5R(-)	18	GN	TXL	3549418C1	3595624C1	1703F	52	N/A		
SE5R(-)	18	GN	TXL	3549418C1	3595624C1	1703F	52	N/A		
SN5R(-)	18	GN	TXL	3549418C1	3595624C1	1703F	52	N/A		
SP5R(-)	18	GN	TXL	3549418C1	3595624C1	1703F	52	N/A		
SR5R(-)	18	GN	TXL	3549418C1	3595624C1	1703F	52	N/A		
VC5R(-)	18	GN	TXL	3549418C1	3595624C1	1703F	52	N/A		
VD5R(-)	18	GN	TXL	3549418C1	3595624C1	1703F	52	N/A		
VE5R(-)	18	GN	TXL	3549418C1	3595624C1	1703F	52	N/A		
VF5R(-)	18	GN	TXL	3549418C1	3595624C1	1703F	52	N/A		
VG5R(-)	18	GN	TXL	3549418C1	3595624C1	1703F	52	N/A		
YX5R(-)	18	GN	TXL	3549418C1	3595624C1	1703F	52	N/A		
YZ5R(-)	18	GN	TXL	3549418C1	3595624C1	1703F	52	N/A		
3D5PJ(+)	18	YL	TXL	3549418C1	3595624C1	1703F	53	N/A		
3M5PJ(+)	18	YL	TXL	3549418C1	3595624C1	1703F	53	N/A		
9K5PJ(+)	18	YL	TXL	3549418C1	3595624C1	1703F	53	N/A		
9L5PJ(+)	18	YL	TXL	3549418C1	3595624C1	1703F	53	N/A		
9P5PJ(+)	18	YL	TXL	3549418C1	3595624C1	1703F	53	N/A		
9V5PJ(+)	18	YL	TXL	3549418C1	3595624C1	1703F	53	N/A		

Circuit Number	Gauge	Color	Insulation	Terminal / Splice Number	Connector Part number	Connector Number	Cavity	Seal/Sleeve	Lock 1	Lock 2
JC5PJ(+)	18	YL	TXL	3549418C1	3595624C1	1703F	53	N/A		
JD5PJ(+)	18	YL	TXL	3549418C1	3595624C1	1703F	53	N/A		
JF5PJ(+)	18	YL	TXL	3549418C1	3595624C1	1703F	53	N/A		
JG5PJ(+)	18	YL	TXL	3549418C1	3595624C1	1703F	53	N/A		
LC5PJ(+)	18	YL	TXL	3549418C1	3595624C1	1703F	53	N/A		
LD5PJ(+)	18	YL	TXL	3549418C1	3595624C1	1703F	53	N/A		
LE5PJ(+)	18	YL	TXL	3549418C1	3595624C1	1703F	53	N/A		
LF5PJ(+)	18	YL	TXL	3549418C1	3595624C1	1703F	53	N/A		
LS5PJ(+)	18	YL	TXL	3549418C1	3595624C1	1703F	53	N/A		
LU5PJ(+)	18	YL	TXL	3549418C1	3595624C1	1703F	53	N/A		
LV5PJ(+)	18	YL	TXL	3549418C1	3595624C1	1703F	53	N/A		
PY5PJ(+)	18	YL	TXL	3549418C1	3595624C1	1703F	53	N/A		
PZ5PJ(+)	18	YL	TXL	3549418C1	3595624C1	1703F	53	N/A		
RD5PJ(+)	18	YL	TXL	3549418C1	3595624C1	1703F	53	N/A		
RG5PJ(+)	18	YL	TXL	3549418C1	3595624C1	1703F	53	N/A		
RJ5PJ(+)	18	YL	TXL	3549418C1	3595624C1	1703F	53	N/A		
RM5PJ(+)	18	YL	TXL	3549418C1	3595624C1	1703F	53	N/A		
RS5PJ(+)	18	YL	TXL	3549418C1	3595624C1	1703F	53	N/A		
RU5PJ(+)	18	YL	TXL	3549418C1	3595624C1	1703F	53	N/A		
SB5PJ(+)	18	YL	TXL	3549418C1	3595624C1	1703F	53	N/A		
SC5PJ(+)	18	YL	TXL	3549418C1	3595624C1	1703F	53	N/A		
SD5PJ(+)	18	YL	TXL	3549418C1	3595624C1	1703F	53	N/A		
SE5PJ(+)	18	YL	TXL	3549418C1	3595624C1	1703F	53	N/A		
SN5PJ(+)	18	YL	TXL	3549418C1	3595624C1	1703F	53	N/A		
SP5PJ(+)	18	YL	TXL	3549418C1	3595624C1	1703F	53	N/A		
VC5PJ(+)	18	YL	TXL	3549418C1	3595624C1	1703F	53	N/A		
VD5PJ(+)	18	YL	TXL	3549418C1	3595624C1	1703F	53	N/A		
VE5PJ(+)	18	YL	TXL	3549418C1	3595624C1	1703F	53	N/A		
VF5PJ(+)	18	YL	TXL	3549418C1	3595624C1	1703F	53	N/A		
VV5PJ(+)	18	YL	TXL	3549418C1	3595624C1	1703F	53	N/A		
YX5PJ(+)	18	YL	TXL	3549418C1	3595624C1	1703F	53	N/A		
YZ5PJ(+)	18	YL	TXL	3549418C1	3595624C1	1703F	53	N/A		
2H5R(+)	18	YL	TXL	3549418C1	3595624C1	1703F	53	N/A		
2J5R(+)	18	YL	TXL	3549418C1	3595624C1	1703F	53	N/A		
2L5R(+)	18	YL	TXL	3549418C1	3595624C1	1703F	53	N/A		
2M5R(+)	18	YL	TXL	3549418C1	3595624C1	1703F	53	N/A		
2W5R(+)	18	YL	TXL	3549418C1	3595624C1	1703F	53	N/A		
2Y5R(+)	18	YL	TXL	3549418C1	3595624C1	1703F	53	N/A		
2Z5R(+)	18	YL	TXL	3549418C1	3595624C1	1703F	53	N/A		
3C5R(+)	18	YL	TXL	3549418C1	3595624C1	1703F	53	N/A		
3D5R(+)	18	YL	TXL	3549418C1	3595624C1	1703F	53	N/A		
3E5R(+)	18	YL	TXL	3549418C1	3595624C1	1703F	53	N/A		
3J5R(+)	18	YL	TXL	3549418C1	3595624C1	1703F	53	N/A		
3M5R(+)	18	YL	TXL	3549418C1	3595624C1	1703F	53	N/A		
3R5R(+)	18	YL	TXL	3549418C1	3595624C1	1703F	53	N/A		
3U5R(+)	18	YL	TXL	3549418C1	3595624C1	1703F	53	N/A		
3W5R(+)	18	YL	TXL	3549418C1	3595624C1	1703F	53	N/A		
3Z5R(+)	18	YL	TXL	3549418C1	3595624C1	1703F	53	N/A		
4E5R(+)	18	YL	TXL	3549418C1	3595624C1	1703F	53	N/A		
4J5R(+)	18	YL	TXL	3549418C1	3595624C1	1703F	53	N/A		
4L5R(+)	18	YL	TXL	3549418C1	3595624C1	1703F	53	N/A		
4N5R(+)	18	YL	TXL	3549418C1	3595624C1	1703F	53	N/A		

Circuit Number	Gauge	Color	Insulation	Terminal / Splice Number	Connector Part number	Connector Number	Cavity	Seal/Sleeve	Lock 1	Lock 2
9K5R(+)	18	YL	TXL	3549418C1	3595624C1	1703F	53	N/A		
9L5R(+)	18	YL	TXL	3549418C1	3595624C1	1703F	53	N/A		
9P5R(+)	18	YL	TXL	3549418C1	3595624C1	1703F	53	N/A		
9T5R(+)	18	YL	TXL	3549418C1	3595624C1	1703F	53	N/A		
9V5R(+)	18	YL	TXL	3549418C1	3595624C1	1703F	53	N/A		
9W5R(+)	18	YL	TXL	3549418C1	3595624C1	1703F	53	N/A		
JC5R(+)	18	YL	TXL	3549418C1	3595624C1	1703F	53	N/A		
JD5R(+)	18	YL	TXL	3549418C1	3595624C1	1703F	53	N/A		
JF5R(+)	18	YL	TXL	3549418C1	3595624C1	1703F	53	N/A		
JG5R(+)	18	YL	TXL	3549418C1	3595624C1	1703F	53	N/A		
LC5R(+)	18	YL	TXL	3549418C1	3595624C1	1703F	53	N/A		
LD5R(+)	18	YL	TXL	3549418C1	3595624C1	1703F	53	N/A		
LE5R(+)	18	YL	TXL	3549418C1	3595624C1	1703F	53	N/A		
LF5R(+)	18	YL	TXL	3549418C1	3595624C1	1703F	53	N/A		
LS5PJ(+)	18	YL	TXL	3549418C1	3595624C1	1703F	53	N/A		
LU5R(+)	18	YL	TXL	3549418C1	3595624C1	1703F	53	N/A		
LV5R(+)	18	YL	TXL	3549418C1	3595624C1	1703F	53	N/A		
PV5R(+)	18	YL	TXL	3549418C1	3595624C1	1703F	53	N/A		
PY5R(+)	18	YL	TXL	3549418C1	3595624C1	1703F	53	N/A		
PZ5R(+)	18	YL	TXL	3549418C1	3595624C1	1703F	53	N/A		
RD5R(+)	18	YL	TXL	3549418C1	3595624C1	1703F	53	N/A		
RG5R(+)	18	YL	TXL	3549418C1	3595624C1	1703F	53	N/A		
RJ5R(+)	18	YL	TXL	3549418C1	3595624C1	1703F	53	N/A		
RM5R(+)	18	YL	TXL	3549418C1	3595624C1	1703F	53	N/A		
RR5R(+)	18	YL	TXL	3549418C1	3595624C1	1703F	53	N/A		
RS5R(+)	18	YL	TXL	3549418C1	3595624C1	1703F	53	N/A		
RU5R(+)	18	YL	TXL	3549418C1	3595624C1	1703F	53	N/A		
RX5R(+)	18	YL	TXL	3549418C1	3595624C1	1703F	53	N/A		
RZ5R(+)	18	YL	TXL	3549418C1	3595624C1	1703F	53	N/A		
SB5R(+)	18	YL	TXL	3549418C1	3595624C1	1703F	53	N/A		
SC5R(+)	18	YL	TXL	3549418C1	3595624C1	1703F	53	N/A		
SD5R(+)	18	YL	TXL	3549418C1	3595624C1	1703F	53	N/A		
SE5R(+)	18	YL	TXL	3549418C1	3595624C1	1703F	53	N/A		
SN5R(+)	18	YL	TXL	3549418C1	3595624C1	1703F	53	N/A		
SP5R(+)	18	YL	TXL	3549418C1	3595624C1	1703F	53	N/A		
SR5R(+)	18	YL	TXL	3549418C1	3595624C1	1703F	53	N/A		
VC5R(+)	18	YL	TXL	3549418C1	3595624C1	1703F	53	N/A		
VD5R(+)	18	YL	TXL	3549418C1	3595624C1	1703F	53	N/A		
VE5R(+)	18	YL	TXL	3549418C1	3595624C1	1703F	53	N/A		
VF5R(+)	18	YL	TXL	3549418C1	3595624C1	1703F	53	N/A		
VG5R(+)	18	YL	TXL	3549418C1	3595624C1	1703F	53	N/A		
YX5R(+)	18	YL	TXL	3549418C1	3595624C1	1703F	53	N/A		
YZ5R(+)	18	YL	TXL	3549418C1	3595624C1	1703F	53	N/A		
EH97FJ	16	VT	TXL	3549417C1	3595624C1	1703F	54	N/A		
EH97FA	16	VT	TXL	3549417C1	3595624C1	1703F	54	N/A		
BF70DJ	18	OR	TXL	3549418C1	3595624C1	1703F	55	N/A		
BF70EJ	18	OR	TXL	3549418C1	3595624C1	1703F	56	N/A		
FE88AJ	18	LTGN	TXL	3549418C1	3595624C1	1703F	59	N/A		
FE88AJ	18	LTGN	TXL	3549418C1	3595624C1	1703F	59	N/A		
9B88J	18	LTGN	TXL	3549418C1	3595624C1	1703F	60	N/A		
FD88J	18	LTGN	TXL	3549418C1	3595624C1	1703F	60	N/A		
FC88J	18	LTGN	TXL	3549418C1	3595624C1	1703F	60	N/A		

Circuit Number	Gauge	Color	Insulation	Terminal / Splice Number	Connector Part number	Connector Number	Cavity	Seal/Sleeve	Lock 1	Lock 2
FD88J	18	LTGN	TXL	3549418C1	3595624C1	1703F	60	N/A		
DS31J	18	TN	TXL	3549418C1	3595624C1	1703F	61	N/A		
DS31	18	TN	TXL	3549418C1	3595624C1	1703F	61	N/A		
AA77J	16	LTGN	GXL	3549416C1	3595624C1	1703F	65	N/A		
AA77J	16	LTGN	GXL	3549416C1	3595624C1	1703F	65	N/A		
BJ92R2J	20	TN	TXL	3574277C1	3595624C1	1703F	66	N/A		
BK92R2J	20	TN	TXL	3574277C1	3595624C1	1703F	66	N/A		
BL71AJ	16	OR	TXL	3549416C1	3595624C1	1703F	66	N/A		
BP71AJ	16	OR	TXL	3549416C1	3595624C1	1703F	66	N/A		
EY71AJ	18	OR	TXL	3574277C1	3595624C1	1703F	66	N/A		
BJ92R2J	18	TN	TXL	3574277C1	3595624C1	1703F	66	N/A		
BK92R2J	18	TN	TXL	3574277C1	3595624C1	1703F	66	N/A		
BP71	16	OR	TXL	3549416C1	3595624C1	1703F	66	N/A		
EY71BA	16	OR	TXL	3549416C1	3595624C1	1703F	66	N/A		
YG82KJ	16	GY	TXL	3549416C1	3595624C1	1703F	69	N/A		
YH82KAJ	16	GY	TXL	3549416C1	3595624C1	1703F	69	N/A		
YG82KJ	16	GY	TXL	3549416C1	3595624C1	1703F	69	N/A		
YH82KAJ	16	GY	TXL	3549416C1	3595624C1	1703F	69	N/A		
AA82LJ	16	GY	TXL	3549416C1	3595624C1	1703F	70	N/A		
AA82LJ	16	GY	TXL	3549416C1	3595624C1	1703F	70	N/A		
AA82JJ	16	GY	TXL	3549416C1	3595624C1	1703F	72	N/A		
AA82JJ	16	GY	TXL	3549416C1	3595624C1	1703F	72	N/A		
AA82DJ	16	GY	TXL	3549416C1	3595624C1	1703F	74	N/A		
AA82DJ	16	GY	TXL	3549416C1	3595624C1	1703F	74	N/A		
6F13F	16	PK	TXL	3549416C1	3595624C1	1703F	75	N/A		
6D13F	16	PK	TXL	3549416C1	3595624C1	1703F	75	N/A		
DY54XAJ	16	BN	TXL	3549416C1	3595624C1	1703F	76	N/A		
PA54XAJ	16	BN	TXL	3549416C1	3595624C1	1703F	76	N/A		
DY54XAJ	16	BN	TXL	3549416C1	3595624C1	1703F	76	N/A		
AA57A	16	OR	TXL	3574288C1	3595625C1	1703M	1	N/A		
AA82-G	16	WH	TXL	3574288C1	3595625C1	1703M	8	N/A		
AA82-G	16	WH	TXL	3574288C1	3595625C1	1703M	8	N/A		
2A54-GXE	16	WH	TXL	3574288C1	3595625C1	1703M	10	N/A		
3C54-GXE	16	WH	TXL	3574288C1	3595625C1	1703M	10	N/A		
3E54-GXE	16	WH	TXL	3574288C1	3595625C1	1703M	10	N/A		
AW54-GXE	16	WH	TXL	3574288C1	3595625C1	1703M	10	N/A		
HY54-GXE	16	WH	TXL	3574288C1	3595625C1	1703M	10	N/A		
AA54-GXE	16	WH	TXL	3574288C1	3595625C1	1703M	10	N/A		
DY54-GXA	16	WH	TXL	3574288C1	3595625C1	1703M	12	N/A		
PA54-GXA	16	WH	TXL	3574288C1	3595625C1	1703M	12	N/A		
DY54-GXA	16	WH	TXL	3574288C1	3595625C1	1703M	12	N/A		
PA54-GXA	16	WH	TXL	3574288C1	3595625C1	1703M	12	N/A		
AA54A	16	BN	TXL	3574288C1	3595625C1	1703M	13	N/A		
2B57A	16	OR	TXL	3574285C1	3595625C1	1703M	14	N/A		
2C57A	16	OR	TXL	3574285C1	3595625C1	1703M	14	N/A		
2D57A	16	OR	TXL	3574285C1	3595625C1	1703M	14	N/A		
2E57A	16	OR	TXL	3574285C1	3595625C1	1703M	14	N/A		
2F57A	16	OR	TXL	3574285C1	3595625C1	1703M	14	N/A		
2G57A	16	OR	TXL	3574285C1	3595625C1	1703M	14	N/A	3662518C1	
NA57B	16	OR	TXL	3574285C1	3595625C1	1703M	14	N/A		
NW57B	16	OR	TXL	3574285C1	3595625C1	1703M	14	N/A		
NY57B	16	OR	TXL	3574285C1	3595625C1	1703M	14	N/A		

Circuit Number	Gauge	Color	Insulation	Terminal / Splice Number	Connector Part number	Connector Number	Cavity	Seal/Sleeve	Lock 1	Lock 2
PA57BA	16	OR	TXL	3574285C1	3595625C1	1703M	14	N/A		
2A54A	16	BN	TXL	3574285C1	3595625C1	1703M	15	N/A		
3C54A	16	BN	TXL	3574285C1	3595625C1	1703M	15	N/A		
3E54A	16	BN	TXL	3574285C1	3595625C1	1703M	15	N/A		
AV54A	16	BN	TXL	3574285C1	3595625C1	1703M	15	N/A		
AW54A	16	BN	TXL	3574285C1	3595625C1	1703M	15	N/A		
HY54A	16	BN	TXL	3574285C1	3595625C1	1703M	15	N/A		
HA30B	16	TN	TXL	3574285C1	3595625C1	1703M	16	N/A		
HA30B	16	TN	TXL	3574285C1	3595625C1	1703M	16	N/A		
AA74	18	LTGN	TXL	2003343C1	3595625C1	1703M	17	N/A		
AA74	18	LTGN	TXL	2003343C1	3595625C1	1703M	17	N/A		
AU28	18	TN	TXL	2003343C1	3595625C1	1703M	18	N/A		
AU28BA	18	TN	TXL	2003343C1	3595625C1	1703M	18	N/A		
3H6DB	18	GY	TXL	2003343C1	3595625C1	1703M	19	N/A	1661874C1	
3H6DB	18	GY	TXL	2003343C1	3595625C1	1703M	19	N/A		
3H77B	18	GY	TXL	2003343C1	3595625C1	1703M	20	N/A	3525873C1	
3H77B	18	GY	TXL	2003343C1	3595625C1	1703M	20	N/A		
GY92#134	18	TN	TXL	2003343C1	3595625C1	1703M	21	N/A		
GY92#134A	18	TN	TXL	2003343C1	3595625C1	1703M	21	N/A		
DT104-GA	16	WH	TXL	3574285C1	3595625C1	1703M	22	N/A		
DT104-GA	16	WH	TXL	3574285C1	3595625C1	1703M	22	N/A		
3H77BA	18	LTGN	TXL	2003343C1	3595625C1	1703M	23	N/A		
3H77BA	18	LTGN	TXL	2003343C1	3595625C1	1703M	23	N/A		
HZ41E	18	GY	TXL	2003343C1	3595625C1	1703M	24	N/A		
HZ41EJ	18	GY	TXL	2003343C1	3595625C1	1703M	24	N/A		
HZ41D	18	TN	TXL	2003343C1	3595625C1	1703M	25	N/A		
HZ41DJ	18	TN	TXL	2003343C1	3595625C1	1703M	25	N/A		
2T92ZB	18	TN	TXL	3574289C1	3595625C1	1703M	26	N/A		
2T92ZB	18	TN	TXL	3574289C1	3595625C1	1703M	26	N/A		
NA57C	16	OR	TXL	3574285C1	3595625C1	1703M	27	N/A		
NW57C	16	OR	TXL	3574285C1	3595625C1	1703M	27	N/A		
NY57C	16	OR	TXL	3574285C1	3595625C1	1703M	27	N/A		
AZ92B	18	TN	TXL	2003343C1	3595625C1	1703M	28	N/A		
GY92#141	18	TN	TXL	2003343C1	3595625C1	1703M	28	N/A		
AZ92B	18	TN	TXL	2003343C1	3595625C1	1703M	28	N/A		
GY92#141A	18	TN	TXL	2003343C1	3595625C1	1703M	28	N/A		
3B17A	16	PK	TXL	3574285C1	3595625C1	1703M	29	N/A		
AF17A	16	PK	TXL	3574285C1	3595625C1	1703M	29	N/A		
GP17	16	PK	TXL	3574285C1	3595625C1	1703M	29	N/A		
3B17	16	PK	TXL	3574285C1	3595625C1	1703M	29	N/A		
AF17	16	PK	TXL	3574285C1	3595625C1	1703M	29	N/A		
GP17	16	PK	TXL	3574285C1	3595625C1	1703M	29	N/A		
MD92#145	18	TN	TXL	2003343C1	3595625C1	1703M	30	N/A		
MD92#103	18	TN	TXL	2003343C1	3595625C1	1703M	30	N/A		
MD92#117	18	TN	TXL	2003343C1	3595625C1	1703M	31	N/A		
MD92#117	18	TN	TXL	2003343C1	3595625C1	1703M	31	N/A		
MN92	18	TN	TXL	2003343C1	3595625C1	1703M	33	N/A		
MN92	18	TN	TXL	2003343C1	3595625C1	1703M	33	N/A		
MN9ZA	18	GY	TXL	2003343C1	3595625C1	1703M	34	N/A		
MN92AA	18	GY	TXL	2003343C1	3595625C1	1703M	34	N/A		
AA9AA	18	GY	TXL	2003343C1	3595625C1	1703M	35	N/A		
AA9AA	18	GY	TXL	2003343C1	3595625C1	1703M	35	N/A		

Circuit Number	Gauge	Color	Insulation	Terminal / Splice Number	Connector Part number	Connector Number	Cavity	Seal/Sleeve	Lock 1	Lock 2
AA97B	18	VT	TXL	2003343C1	3595625C1	1703M	36	N/A		
AA97B	18	VT	TXL	2003343C1	3595625C1	1703M	36	N/A		
AA97N	18	VT	TXL	2003343C1	3595625C1	1703M	37	N/A		
AA97NA	18	VT	TXL	2003343C1	3595625C1	1703M	37	N/A		
AA99D	18	VT	TXL	2003343C1	3595625C1	1703M	38	N/A		
AA97MA	18	VT	TXL	2003343C1	3595625C1	1703M	38	N/A		
DT104AL	16	DKBL	TXL	3574285C1	3595625C1	1703M	40	N/A		
DT104AL	16	DKBL	TXL	3574285C1	3595625C1	1703M	40	N/A		
AZ13A	16	PK	GXL	3574285C1	3595625C1	1703M	42	N/A		
GY92#163	16	PK	TXL	3574285C1	3595625C1	1703M	42	N/A		
AZ13A	16	PK	GXL	3574285C1	3595625C1	1703M	42	N/A		
GY92#163A	16	PK	TXL	3574285C1	3595625C1	1703M	42	N/A		
BL71B2	16	OR	TXL	3574285C1	3595625C1	1703M	44	N/A		
BP71B	16	OR	TXL	3574285C1	3595625C1	1703M	44	N/A		
EY71B	16	OR	TXL	3574285C1	3595625C1	1703M	44	N/A		
BP71B	16	OR	TXL	3574285C1	3595625C1	1703M	44	N/A		
EY71B	16	OR	TXL	3574285C1	3595625C1	1703M	44	N/A		
AA99B	18	VT	TXL	2003343C1	3595625C1	1703M	47	N/A		
AA99B	18	VT	TXL	2003343C1	3595625C1	1703M	47	N/A		
AA97M	18	VT	TXL	2003343C1	3595625C1	1703M	48	N/A		
AA99DA	18	VT	TXL	2003343C1	3595625C1	1703M	48	N/A		
AA97C	18	VT	TXL	2003343C1	3595625C1	1703M	49	N/A		
AA97C	18	VT	TXL	2003343C1	3595625C1	1703M	49	N/A		
3D5P(-)	18	GN	TXL	2003343C1	3595625C1	1703M	52	N/A		
3M5P(-)	18	GN	TXL	2003343C1	3595625C1	1703M	52	N/A		
9K5P(-)	18	GN	TXL	2003343C1	3595625C1	1703M	52	N/A		
9L5P(-)	18	GN	TXL	2003343C1	3595625C1	1703M	52	N/A		
9P5P(-)	18	GN	TXL	2003343C1	3595625C1	1703M	52	N/A		
9V5P(-)	18	GN	TXL	2003343C1	3595625C1	1703M	52	N/A		
JC5P(-)	18	GN	TXL	2003343C1	3595625C1	1703M	52	N/A		
JD5P(-)	18	GN	TXL	2003343C1	3595625C1	1703M	52	N/A		
JF5P(-)	18	GN	TXL	2003343C1	3595625C1	1703M	52	N/A		
JG5P(-)	18	GN	TXL	2003343C1	3595625C1	1703M	52	N/A		
LC5P(-)	18	GN	TXL	2003343C1	3595625C1	1703M	52	N/A		
LD5P(-)	18	GN	TXL	2003343C1	3595625C1	1703M	52	N/A		
LE5P(-)	18	GN	TXL	2003343C1	3595625C1	1703M	52	N/A		
LF5P(-)	18	GN	TXL	2003343C1	3595625C1	1703M	52	N/A		
LS5P(-)	18	GN	TXL	2003343C1	3595625C1	1703M	52	N/A		
LU5P(-)	18	GN	TXL	2003343C1	3595625C1	1703M	52	N/A		
LV5P(-)	18	GN	TXL	2003343C1	3595625C1	1703M	52	N/A		
PY5P(-)	18	GN	TXL	2003343C1	3595625C1	1703M	52	N/A		
PZ5P(-)	18	GN	TXL	2003343C1	3595625C1	1703M	52	N/A		
RD5P(-)	18	GN	TXL	2003343C1	3595625C1	1703M	52	N/A		
RG5P(-)	18	GN	TXL	2003343C1	3595625C1	1703M	52	N/A		
RJ5P(-)	18	GN	TXL	2003343C1	3595625C1	1703M	52	N/A		
RM5P(-)	18	GN	TXL	2003343C1	3595625C1	1703M	52	N/A		
RS5P(-)	18	GN	TXL	2003343C1	3595625C1	1703M	52	N/A		
RU5P(-)	18	GN	TXL	2003343C1	3595625C1	1703M	52	N/A		
SB5P(-)	18	GN	TXL	2003343C1	3595625C1	1703M	52	N/A		
SC5P(-)	18	GN	TXL	2003343C1	3595625C1	1703M	52	N/A		
SD5P(-)	18	GN	TXL	2003343C1	3595625C1	1703M	52	N/A		
SE5P(-)	18	GN	TXL	2003343C1	3595625C1	1703M	52	N/A		

Circuit Number	Gauge	Color	Insulation	Terminal / Splice Number	Connector Part number	Connector Number	Cavity	Seal/Sleeve	Lock 1	Lock 2
SN5P(-)	18	GN	TXL	2003343C1	3595625C1	1703M	52	N/A		
SP5P(-)	18	GN	TXL	2003343C1	3595625C1	1703M	52	N/A		
VC5P(-)	18	GN	TXL	2003343C1	3595625C1	1703M	52	N/A		
VD5P(-)	18	GN	TXL	2003343C1	3595625C1	1703M	52	N/A		
VE5P(-)	18	GN	TXL	2003343C1	3595625C1	1703M	52	N/A		
VF5P(-)	18	GN	TXL	2003343C1	3595625C1	1703M	52	N/A		
VV5P(-)	18	GN	TXL	2003343C1	3595625C1	1703M	52	N/A		
YX5P(-)	18	GN	TXL	2003343C1	3595625C1	1703M	52	N/A		
YZ5P(-)	18	GN	TXL	2003343C1	3595625C1	1703M	52	N/A		
2H5P(-)	18	GN	TXL	2003343C1	3595625C1	1703M	52	N/A		
2J5P(-)	18	GN	TXL	2003343C1	3595625C1	1703M	52	N/A		
2L5P(-)	18	GN	TXL	2003343C1	3595625C1	1703M	52	N/A		
2M5P(-)	18	GN	TXL	2003343C1	3595625C1	1703M	52	N/A		
2W5P(-)	18	GN	TXL	2003343C1	3595625C1	1703M	52	N/A		
2Y5P(-)	18	GN	TXL	2003343C1	3595625C1	1703M	52	N/A		
2Z5P(-)	18	GN	TXL	2003343C1	3595625C1	1703M	52	N/A		
3C5P(-)	18	GN	TXL	2003343C1	3595625C1	1703M	52	N/A		
3D5P(-)	18	GN	TXL	2003343C1	3595625C1	1703M	52	N/A		
3E5P(-)	18	GN	TXL	2003343C1	3595625C1	1703M	52	N/A		
3J5P(-)	18	GN	TXL	2003343C1	3595625C1	1703M	52	N/A		
3M5P(-)	18	GN	TXL	2003343C1	3595625C1	1703M	52	N/A		
3R5P(-)	18	GN	TXL	2003343C1	3595625C1	1703M	52	N/A		
3U5P(-)	18	GN	TXL	2003343C1	3595625C1	1703M	52	N/A		
3W5P(-)	18	GN	TXL	2003343C1	3595625C1	1703M	52	N/A		
3Z5P(-)	18	GN	TXL	2003343C1	3595625C1	1703M	52	N/A		
4E5P(-)	18	GN	TXL	2003343C1	3595625C1	1703M	52	N/A		
4J5P(-)	18	GN	TXL	2003343C1	3595625C1	1703M	52	N/A		
4L5P(-)	18	GN	TXL	2003343C1	3595625C1	1703M	52	N/A		
4N5P(-)	18	GN	TXL	2003343C1	3595625C1	1703M	52	N/A		
9K5P(-)	18	GN	TXL	2003343C1	3595625C1	1703M	52	N/A		
9L5P(-)	18	GN	TXL	2003343C1	3595625C1	1703M	52	N/A		
9P5P(-)	18	GN	TXL	2003343C1	3595625C1	1703M	52	N/A		
9T5P(-)	18	GN	TXL	2003343C1	3595625C1	1703M	52	N/A		
9V5P(-)	18	GN	TXL	2003343C1	3595625C1	1703M	52	N/A		
9W5P(-)	18	GN	TXL	2003343C1	3595625C1	1703M	52	N/A		
JC5P(-)	18	GN	TXL	2003343C1	3595625C1	1703M	52	N/A		
JD5P(-)	18	GN	TXL	2003343C1	3595625C1	1703M	52	N/A		
JF5P(-)	18	GN	TXL	2003343C1	3595625C1	1703M	52	N/A		
JG5P(-)	18	GN	TXL	2003343C1	3595625C1	1703M	52	N/A		
LC5P(-)	18	GN	TXL	2003343C1	3595625C1	1703M	52	N/A		
LD5P(-)	18	GN	TXL	2003343C1	3595625C1	1703M	52	N/A		
LE5P(-)	18	GN	TXL	2003343C1	3595625C1	1703M	52	N/A		
LF5P(-)	18	GN	TXL	2003343C1	3595625C1	1703M	52	N/A		
LS5P(-)	18	GN	TXL	2003343C1	3595625C1	1703M	52	N/A		
LU5P(-)	18	GN	TXL	2003343C1	3595625C1	1703M	52	N/A		
LV5P(-)	18	GN	TXL	2003343C1	3595625C1	1703M	52	N/A		
PV5P(-)	18	GN	TXL	2003343C1	3595625C1	1703M	52	N/A		
PY5P(-)	18	GN	TXL	2003343C1	3595625C1	1703M	52	N/A		
PZ5P(-)	18	GN	TXL	2003343C1	3595625C1	1703M	52	N/A		
RD5P(-)	18	GN	TXL	2003343C1	3595625C1	1703M	52	N/A		
RG5P(-)	18	GN	TXL	2003343C1	3595625C1	1703M	52	N/A		
RJ5P(-)	18	GN	TXL	2003343C1	3595625C1	1703M	52	N/A		

Circuit Number	Gauge	Color	Insulation	Terminal / Splice Number	Connector Part number	Connector Number	Cavity	Seal/Sleeve	Lock 1	Lock 2
RM5P(-)	18	GN	TXL	2003343C1	3595625C1	1703M	52	N/A		
RR5P(-)	18	GN	TXL	2003343C1	3595625C1	1703M	52	N/A		
RS5P(-)	18	GN	TXL	2003343C1	3595625C1	1703M	52	N/A		
RU5P(-)	18	GN	TXL	2003343C1	3595625C1	1703M	52	N/A		
RX5P(-)	18	GN	TXL	2003343C1	3595625C1	1703M	52	N/A		
RZ5P(-)	18	GN	TXL	2003343C1	3595625C1	1703M	52	N/A		
SB5P(-)	18	GN	TXL	2003343C1	3595625C1	1703M	52	N/A		
SC5P(-)	18	GN	TXL	2003343C1	3595625C1	1703M	52	N/A		
SD5P(-)	18	GN	TXL	2003343C1	3595625C1	1703M	52	N/A		
SE5P(-)	18	GN	TXL	2003343C1	3595625C1	1703M	52	N/A		
SN5P(-)	18	GN	TXL	2003343C1	3595625C1	1703M	52	N/A		
SP5P(-)	18	GN	TXL	2003343C1	3595625C1	1703M	52	N/A		
SR5P(-)	18	GN	TXL	2003343C1	3595625C1	1703M	52	N/A		
VC5P(-)	18	GN	TXL	2003343C1	3595625C1	1703M	52	N/A		
VD5P(-)	18	GN	TXL	2003343C1	3595625C1	1703M	52	N/A		
VE5P(-)	18	GN	TXL	2003343C1	3595625C1	1703M	52	N/A		
VF5P(-)	18	GN	TXL	2003343C1	3595625C1	1703M	52	N/A		
VG5P(-)	18	GN	TXL	2003343C1	3595625C1	1703M	52	N/A		
YX5P(-)	18	GN	TXL	2003343C1	3595625C1	1703M	52	N/A		
YZ5P(-)	18	GN	TXL	2003343C1	3595625C1	1703M	52	N/A		
3D5P(+)	18	YL	TXL	2003343C1	3595625C1	1703M	53	N/A		
3M5P(+)	18	YL	TXL	2003343C1	3595625C1	1703M	53	N/A		
9K5P(+)	18	YL	TXL	2003343C1	3595625C1	1703M	53	N/A		
9L5P(+)	18	YL	TXL	2003343C1	3595625C1	1703M	53	N/A		
9P5P(+)	18	YL	TXL	2003343C1	3595625C1	1703M	53	N/A		
9V5P(+)	18	YL	TXL	2003343C1	3595625C1	1703M	53	N/A		
JC5P(+)	18	YL	TXL	2003343C1	3595625C1	1703M	53	N/A		
JD5P(+)	18	YL	TXL	2003343C1	3595625C1	1703M	53	N/A		
JF5P(+)	18	YL	TXL	2003343C1	3595625C1	1703M	53	N/A		
JG5P(+)	18	YL	TXL	2003343C1	3595625C1	1703M	53	N/A		
LC5P(+)	18	YL	TXL	2003343C1	3595625C1	1703M	53	N/A		
LD5P(+)	18	YL	TXL	2003343C1	3595625C1	1703M	53	N/A		
LE5P(+)	18	YL	TXL	2003343C1	3595625C1	1703M	53	N/A		
LF5P(+)	18	YL	TXL	2003343C1	3595625C1	1703M	53	N/A		
LS5P(+)	18	YL	TXL	2003343C1	3595625C1	1703M	53	N/A		
LU5P(+)	18	YL	TXL	2003343C1	3595625C1	1703M	53	N/A		
LV5P(+)	18	YL	TXL	2003343C1	3595625C1	1703M	53	N/A		
PY5P(+)	18	YL	TXL	2003343C1	3595625C1	1703M	53	N/A		
PZ5P(+)	18	YL	TXL	2003343C1	3595625C1	1703M	53	N/A		
RD5P(+)	18	YL	TXL	2003343C1	3595625C1	1703M	53	N/A		
RG5P(+)	18	YL	TXL	2003343C1	3595625C1	1703M	53	N/A		
RJ5P(+)	18	YL	TXL	2003343C1	3595625C1	1703M	53	N/A		
RM5P(+)	18	YL	TXL	2003343C1	3595625C1	1703M	53	N/A		
RS5P(+)	18	YL	TXL	2003343C1	3595625C1	1703M	53	N/A		
RU5P(+)	18	YL	TXL	2003343C1	3595625C1	1703M	53	N/A		
SB5P(+)	18	YL	TXL	2003343C1	3595625C1	1703M	53	N/A		
SC5P(+)	18	YL	TXL	2003343C1	3595625C1	1703M	53	N/A		
SD5P(+)	18	YL	TXL	2003343C1	3595625C1	1703M	53	N/A		
SE5P(+)	18	YL	TXL	2003343C1	3595625C1	1703M	53	N/A		
SN5P(+)	18	YL	TXL	2003343C1	3595625C1	1703M	53	N/A		
SP5P(+)	18	YL	TXL	2003343C1	3595625C1	1703M	53	N/A		
VC5P(+)	18	YL	TXL	2003343C1	3595625C1	1703M	53	N/A		

Circuit Number	Gauge	Color	Insulation	Terminal / Splice Number	Connector Part number	Connector Number	Cavity	Seal/Sleeve	Lock 1	Lock 2
VD5P(+)	18	YL	TXL	2003343C1	3595625C1	1703M	53	N/A		
VE5P(+)	18	YL	TXL	2003343C1	3595625C1	1703M	53	N/A		
VF5P(+)	18	YL	TXL	2003343C1	3595625C1	1703M	53	N/A		
VV5P(+)	18	YL	TXL	2003343C1	3595625C1	1703M	53	N/A		
YX5P(+)	18	YL	TXL	2003343C1	3595625C1	1703M	53	N/A		
YZ5P(+)	18	YL	TXL	2003343C1	3595625C1	1703M	53	N/A		
2H5P(+)	18	YL	TXL	2003343C1	3595625C1	1703M	53	N/A		
2J5P(+)	18	YL	TXL	2003343C1	3595625C1	1703M	53	N/A		
2L5P(+)	18	YL	TXL	2003343C1	3595625C1	1703M	53	N/A		
2M5P(+)	18	YL	TXL	2003343C1	3595625C1	1703M	53	N/A		
2W5P(+)	18	YL	TXL	2003343C1	3595625C1	1703M	53	N/A		
2Y5P(+)	18	YL	TXL	2003343C1	3595625C1	1703M	53	N/A		
2Z5P(+)	18	YL	TXL	2003343C1	3595625C1	1703M	53	N/A		
3C5P(+)	18	YL	TXL	2003343C1	3595625C1	1703M	53	N/A		
3D5P(+)	18	YL	TXL	2003343C1	3595625C1	1703M	53	N/A		
3E5P(+)	18	YL	TXL	2003343C1	3595625C1	1703M	53	N/A		
3J5P(+)	18	YL	TXL	2003343C1	3595625C1	1703M	53	N/A		
3M5P(+)	18	YL	TXL	2003343C1	3595625C1	1703M	53	N/A		
3R5P(+)	18	YL	TXL	2003343C1	3595625C1	1703M	53	N/A		
3U5P(+)	18	YL	TXL	2003343C1	3595625C1	1703M	53	N/A		
3W5P(+)	18	YL	TXL	2003343C1	3595625C1	1703M	53	N/A		
3Z5P(+)	18	YL	TXL	2003343C1	3595625C1	1703M	53	N/A		
4E5P(+)	18	YL	TXL	2003343C1	3595625C1	1703M	53	N/A		
4J5P(+)	18	YL	TXL	2003343C1	3595625C1	1703M	53	N/A		
4L5P(+)	18	YL	TXL	2003343C1	3595625C1	1703M	53	N/A		
4N5P(+)	18	YL	TXL	2003343C1	3595625C1	1703M	53	N/A		
9K5P(+)	18	YL	TXL	2003343C1	3595625C1	1703M	53	N/A		
9L5P(+)	18	YL	TXL	2003343C1	3595625C1	1703M	53	N/A		
9P5P(+)	18	YL	TXL	2003343C1	3595625C1	1703M	53	N/A		
9T5P(+)	18	YL	TXL	2003343C1	3595625C1	1703M	53	N/A		
9V5P(+)	18	YL	TXL	2003343C1	3595625C1	1703M	53	N/A		
9W5P(+)	18	YL	TXL	2003343C1	3595625C1	1703M	53	N/A		
JC5P(+)	18	YL	TXL	2003343C1	3595625C1	1703M	53	N/A		
JD5P(+)	18	YL	TXL	2003343C1	3595625C1	1703M	53	N/A		
JF5P(+)	18	YL	TXL	2003343C1	3595625C1	1703M	53	N/A		
JG5P(+)	18	YL	TXL	2003343C1	3595625C1	1703M	53	N/A		
LC5P(+)	18	YL	TXL	2003343C1	3595625C1	1703M	53	N/A		
LD5P(+)	18	YL	TXL	2003343C1	3595625C1	1703M	53	N/A		
LE5P(+)	18	YL	TXL	2003343C1	3595625C1	1703M	53	N/A		
LF5P(+)	18	YL	TXL	2003343C1	3595625C1	1703M	53	N/A		
LS5P(+)	18	YL	TXL	2003343C1	3595625C1	1703M	53	N/A		
LU5P(+)	18	YL	TXL	2003343C1	3595625C1	1703M	53	N/A		
LV5P(+)	18	YL	TXL	2003343C1	3595625C1	1703M	53	N/A		
PV5P(+)	18	YL	TXL	2003343C1	3595625C1	1703M	53	N/A		
PY5P(+)	18	YL	TXL	2003343C1	3595625C1	1703M	53	N/A		
PZ5P(+)	18	YL	TXL	2003343C1	3595625C1	1703M	53	N/A		
RD5P(+)	18	YL	TXL	2003343C1	3595625C1	1703M	53	N/A		
RG5P(+)	18	YL	TXL	2003343C1	3595625C1	1703M	53	N/A		
RJ5P(+)	18	YL	TXL	2003343C1	3595625C1	1703M	53	N/A		
RM5P(+)	18	YL	TXL	2003343C1	3595625C1	1703M	53	N/A		
RR5P(+)	18	YL	TXL	2003343C1	3595625C1	1703M	53	N/A		
RS5P(+)	18	YL	TXL	2003343C1	3595625C1	1703M	53	N/A		

Circuit Number	Gauge	Color	Insulation	Terminal / Splice Number	Connector Part number	Connector Number	Cavity	Seal/Sleeve	Lock 1	Lock 2
RU5P(+)	18	YL	TXL	2003343C1	3595625C1	1703M	53	N/A		
RX5P(+)	18	YL	TXL	2003343C1	3595625C1	1703M	53	N/A		
RZ5P(+)	18	YL	TXL	2003343C1	3595625C1	1703M	53	N/A		
SB5P(+)	18	YL	TXL	2003343C1	3595625C1	1703M	53	N/A		
SC5P(+)	18	YL	TXL	2003343C1	3595625C1	1703M	53	N/A		
SD5P(+)	18	YL	TXL	2003343C1	3595625C1	1703M	53	N/A		
SE5P(+)	18	YL	TXL	2003343C1	3595625C1	1703M	53	N/A		
SN5P(+)	18	YL	TXL	2003343C1	3595625C1	1703M	53	N/A		
SP5P(+)	18	YL	TXL	2003343C1	3595625C1	1703M	53	N/A		
SR5P(+)	18	YL	TXL	2003343C1	3595625C1	1703M	53	N/A		
VC5P(+)	18	YL	TXL	2003343C1	3595625C1	1703M	53	N/A		
VD5P(+)	18	YL	TXL	2003343C1	3595625C1	1703M	53	N/A		
VE5P(+)	18	YL	TXL	2003343C1	3595625C1	1703M	53	N/A		
VF5P(+)	18	YL	TXL	2003343C1	3595625C1	1703M	53	N/A		
VG5P(+)	18	YL	TXL	2003343C1	3595625C1	1703M	53	N/A		
YX5P(+)	18	YL	TXL	2003343C1	3595625C1	1703M	53	N/A		
YZ5P(+)	18	YL	TXL	2003343C1	3595625C1	1703M	53	N/A		
EH97F	16	VT	TXL	3574285C1	3595625C1	1703M	54	N/A		
EH97F	16	VT	TXL	3574285C1	3595625C1	1703M	54	N/A		
BF70D	18	OR	TXL	2003343C1	3595625C1	1703M	55	N/A		
BF70E	18	OR	TXL	2003343C1	3595625C1	1703M	56	N/A		
FE88A	18	LTGN	TXL	2003343C1	3595625C1	1703M	59	N/A		
FE88A	18	LTGN	TXL	2003343C1	3595625C1	1703M	59	N/A		
9B88	18	LTGN	TXL	2003343C1	3595625C1	1703M	60	N/A		
FD88	18	LTGN	TXL	2003343C1	3595625C1	1703M	60	N/A		
FC88	18	LTGN	TXL	2003343C1	3595625C1	1703M	60	N/A		
FD88	18	LTGN	TXL	2003343C1	3595625C1	1703M	60	N/A		
DS31	18	TN	TXL	2003343C1	3595625C1	1703M	61	N/A		
DS31J	18	TN	TXL	2003343C1	3595625C1	1703M	61	N/A		
AA77	18	LTGN	TXL	3574289C1	3595625C1	1703M	65	N/A		
AA77	18	LTGN	TXL	3574289C1	3595625C1	1703M	65	N/A		
BL71A	16	OR	TXL	3574288C1	3595625C1	1703M	66	N/A		
BP71A	16	OR	TXL	3574288C1	3595625C1	1703M	66	N/A		
EY71A	18	OR	TXL	3574289C1	3595625C1	1703M	66	N/A		
BP71AA	16	OR	TXL	3574288C1	3595625C1	1703M	66	N/A		
EY71BB	16	OR	TXL	3574288C1	3595625C1	1703M	66	N/A		
YG82K	16	GY	TXL	3574288C1	3595625C1	1703M	69	N/A		
YH82KA	16	GY	TXL	3574288C1	3595625C1	1703M	69	N/A		
YG82K	16	GY	TXL	3574288C1	3595625C1	1703M	69	N/A		
YH82KA	16	GY	TXL	3574288C1	3595625C1	1703M	69	N/A		
AA82L	16	GY	TXL	3574288C1	3595625C1	1703M	70	N/A		
AA82L	16	GY	TXL	3574288C1	3595625C1	1703M	70	N/A		
AA82J	16	GY	TXL	3574288C1	3595625C1	1703M	72	N/A		
AA82J	16	GY	TXL	3574288C1	3595625C1	1703M	72	N/A		
AA82D	16	GY	TXL	3574288C1	3595625C1	1703M	74	N/A		
AA82D	16	GY	TXL	3574288C1	3595625C1	1703M	74	N/A		
6F13E	16	PK	TXL	3574288C1	3595625C1	1703M	75	N/A		
6D13E	16	PK	TXL	3574288C1	3595625C1	1703M	75	N/A		
DY54XA	16	BN	TXL	3574288C1	3595625C1	1703M	76	N/A		
PA54XA	16	BN	TXL	3574288C1	3595625C1	1703M	76	N/A		
DY54XA	16	BN	TXL	3574288C1	3595625C1	1703M	76	N/A		
PA54XA	16	BN	TXL	3574288C1	3595625C1	1703M	76	N/A		

Circuit Number	Gauge	Color	Insulation	Terminal / Splice Number	Connector Part number	Connector Number	Cavity	Seal/Sleeve	Lock 1	Lock 2
BA56B	18	OR	TXL	3544886C1	3612512C1	1800F	A1	N/A		
BA57B	18	OR	TXL	3544886C1	3612512C1	1800F	A2	N/A		
BH11-GA	18	WH	GXL	3544880C1	3612512C1	1800F	A3	N/A	3573833C1	
BJ11-GA	18	WH	GXL	3544880C1	3612512C1	1800F	A3	N/A	4119706C1	
BM11-GA	18	WH	GXL	3544880C1	3612512C1	1800F	A3	N/A		
BN11-GA	18	WH	GXL	3544880C1	3612512C1	1800F	A3	N/A		
BP11-GA	18	WH	GXL	3544880C1	3612512C1	1800F	A3	N/A		
BR11-GA	18	WH	GXL	3544880C1	3612512C1	1800F	A3	N/A		
BH9	18	GY	GXL	3544880C1	3612512C1	1800F	A4	N/A		
BJ9	18	GY	GXL	3544880C1	3612512C1	1800F	A4	N/A		
BM9	18	GY	GXL	3544880C1	3612512C1	1800F	A4	N/A		
BN9	18	GY	GXL	3544880C1	3612512C1	1800F	A4	N/A		
BP9	18	GY	GXL	3544880C1	3612512C1	1800F	A4	N/A		
BR9	18	GY	GXL	3544880C1	3612512C1	1800F	A4	N/A		
BA87E	18	GY	TXL	3544880C1	3612512C1	1800F	A5	N/A	1661890C1	1661890C1
[BF94MN]	14	-	TXL	3544881C1	3612512C1	1800F	A6	N/A		
BA52B	18	YL	TXL	3544886C1	3612512C1	1800F	A7	N/A		
BA102A	18	YL	TXL	3544886C1	3612512C1	1800F	A8	N/A		
BA82C	18	GY	TXL	3544886C1	3612512C1	1800F	B1	N/A	1661376C1	
BH85A	20	GY	TXL	3544885C1	3612512C1	1800F	B10	N/A		
BJ85A	20	GY	TXL	3544885C1	3612512C1	1800F	B10	N/A		
BM85A	20	GY	TXL	3544885C1	3612512C1	1800F	B10	N/A		
BN85A	20	GY	TXL	3544885C1	3612512C1	1800F	B10	N/A		
BP85A	20	GY	TXL	3544885C1	3612512C1	1800F	B10	N/A		
BR85A	20	GY	TXL	3544885C1	3612512C1	1800F	B10	N/A		
BH100	20	GY	TXL	3544885C1	3612512C1	1800F	B11	N/A	3539892C1	3539893C1
BM100	20	GY	TXL	3544885C1	3612512C1	1800F	B11	N/A		
BN100	20	GY	TXL	3544885C1	3612512C1	1800F	B11	N/A		
BP100	20	GY	TXL	3544885C1	3612512C1	1800F	B11	N/A		
BH97	20	GY	TXL	3544885C1	3612512C1	1800F	B12	N/A		
BJ97	20	GY	TXL	3544885C1	3612512C1	1800F	B12	N/A		
BM97	20	GY	TXL	3544885C1	3612512C1	1800F	B12	N/A		
BN97	20	GY	TXL	3544885C1	3612512C1	1800F	B12	N/A		
BP97	20	GY	TXL	3544885C1	3612512C1	1800F	B12	N/A		
BR97	20	GY	TXL	3544885C1	3612512C1	1800F	B12	N/A		
BA40A	18	GY	GXL	3544886C1	3612512C1	1800F	B2	N/A		
BA6	18	GY	GXL	3544886C1	3612512C1	1800F	B3	N/A		
BD97B	18	VT	GXL	3544886C1	3612512C1	1800F	B4	N/A	2007316C1	
BD99D	18	VT/WH	GXL	3544886C1	3612512C1	1800F	B5	N/A	3544678C1	3544678C1
BD97N	18	VT	GXL	3544886C1	3612512C1	1800F	B6	N/A	3538636C1	
BA44	18	GY	GXL	3544886C1	3612512C1	1800F	B7	N/A		
BC70A	18	OR	GXL	3544886C1	3612512C1	1800F	B8	N/A	1689501C1	
BM70A	18	OR	GXL	3544886C1	3612512C1	1800F	B8	N/A		
BN70A	18	OR	GXL	3544886C1	3612512C1	1800F	B8	N/A		
BA70	18	OR	GXL	3544886C1	3612512C1	1800F	B9	N/A		
BA82B	18	GY	TXL	3544886C1	3612512C1	1800F	C1	N/A	1661263C1	1661263C1
BE94SZ	18	GY	GXL	3544886C1	3612512C1	1800F	C10	N/A		
BN97A	18	VT	GXL	3544886C1	3612512C1	1800F	C11	N/A		
BP97A	18	VT	GXL	3544886C1	3612512C1	1800F	C11	N/A		
BR97A	18	VT	GXL	3544886C1	3612512C1	1800F	C11	N/A		
BA40	18	GY	GXL	3544886C1	3612512C1	1800F	C12	N/A		
BA40B	18	GY	GXL	3544886C1	3612512C1	1800F	C2	N/A		

Circuit Number	Gauge	Color	Insulation	Terminal / Splice Number	Connector Part number	Connector Number	Cavity	Seal/Sleeve	Lock 1	Lock 2
BE94SV	18	GY	GXL	3544886C1	3612512C1	1800F	C3	N/A		
BD99B	18	VT/WH	GXL	3544886C1	3612512C1	1800F	C4	N/A	3540615C1	
BD97C	18	VT/BK	GXL	3544886C1	3612512C1	1800F	C5	N/A	3515765C1	3515765C1
BD97M	18	VT/BK	GXL	3544886C1	3612512C1	1800F	C6	N/A		
BA82A	18	GY	TXL	3544886C1	3612512C1	1800F	C9	N/A		
BB70E	18	OR	GXL	3544886C1	3612512C1	1800F	D1	N/A	1667771C1	
BB70D	18	GY	GXL	3544886C1	3612512C1	1800F	D2	N/A	1661263C1	
BH62DD	20	DKBL	TXL	3544879C1	3612512C1	1800F	D3	N/A		
BJ62DD	20	DKBL	TXL	3544879C1	3612512C1	1800F	D3	N/A		
BM62DD	20	DKBL	TXL	3544879C1	3612512C1	1800F	D3	N/A		
BN62DD	20	DKBL	TXL	3544879C1	3612512C1	1800F	D3	N/A		
BP62DD	20	DKBL	TXL	3544879C1	3612512C1	1800F	D3	N/A		
BR62DD	20	DKBL	TXL	3544879C1	3612512C1	1800F	D3	N/A		
BE94SE	18	GY	GXL	3544880C1	3612512C1	1800F	D5	N/A	2005242C1	
[BF94-G]	14	-	TXL	3544881C1	3612512C1	1800F	D5	N/A		
BE94SF	18	GY	GXL	3544880C1	3612512C1	1800F	D6	N/A	3598918C1	3598919C1
[BF94BY]	14	-	TXL	3544881C1	3612512C1	1800F	D6	N/A		
BN17A	18	PK	GXL	3544886C1	3612512C1	1800F	D7	N/A		
BP17A	18	PK	GXL	3544886C1	3612512C1	1800F	D7	N/A		
BR17A	18	PK	GXL	3544886C1	3612512C1	1800F	D7	N/A		
BN17AA	18	PK	GXL	3544886C1	3612512C1	1800F	D8	N/A		
BP17AA	18	PK	GXL	3544886C1	3612512C1	1800F	D8	N/A		
BR17AA	18	PK	GXL	3544886C1	3612512C1	1800F	D8	N/A		
BE94SA	20	GY	TXL	3534481C1	1667529C1	1820F	A	N/A	3546519C1	
BE94SB	20	GY	TXL	3534481C1	1667529C1	1820F	B	N/A	3553460C1	
BE94SC	20	GY	TXL	3534481C1	1667529C1	1820F	C	N/A	3554821C1	
BE94SD	20	GY	TXL	3534481C1	1667529C1	1820F	D	N/A	3549120C1	
XD94SNB	18	GY	TXL	1661261C1	1667305C1	1820M	A	N/A		
XZ94SA	18	GY	TXL	1661261C1	1667305C1	1820M	A	N/A		
XD94SNB	18	GY	TXL	1661261C1	1667305C1	1820M	A	N/A		
XZ94SA	18	GY	TXL	1661261C1	1667305C1	1820M	A	N/A		
XD94SPB	18	GY	TXL	1661261C1	1667305C1	1820M	B	N/A		
XZ94SB	18	GY	TXL	1661261C1	1667305C1	1820M	B	N/A		
XD94SPB	18	GY	TXL	1661261C1	1667305C1	1820M	B	N/A		
XZ94SB	18	GY	TXL	1661261C1	1667305C1	1820M	B	N/A		
XD94SRB	18	GY	TXL	1661261C1	1667305C1	1820M	C	N/A		
XZ94SC	18	GY	TXL	1661261C1	1667305C1	1820M	C	N/A		
XD94SRB	18	GY	TXL	1661261C1	1667305C1	1820M	C	N/A		
XZ94SC	18	GY	TXL	1661261C1	1667305C1	1820M	C	N/A		
XD94SSB	18	GY	TXL	1661261C1	1667305C1	1820M	D	N/A		
XZ94SD	18	GY	TXL	1661261C1	1667305C1	1820M	D	N/A		
XD94SSB	18	GY	TXL	1661261C1	1667305C1	1820M	D	N/A		
XZ94SD	18	GY	TXL	1661261C1	1667305C1	1820M	D	N/A		
BG94SS	20	GY	TXL	3602660C1	3889458C1	1821A	1	N/A	3573833C1	3683466C1
BG94ST	20	GY	TXL	3602660C1	3889458C1	1821A	2	N/A		
BG94ST	20	GY	TXL	3602660C1	3889458C1	1821A	3	N/A		
BG94SR	20	GY	TXL	3602660C1	3889458C1	1821A	4	N/A		
BG94SN	20	GY	TXL	3602660C1	3889458C1	1821A	5	N/A		
BG94SP	20	GY	TXL	3602660C1	3889458C1	1821A	6	N/A	3557682C1	
BK92#134	18	TN	TXL	3544884C1	4064551C1	1825F	B	N/A		
XX92	18	TN	TXL	3544884C1	4064551C1	1825F	C	N/A		
XX9ZA	18	GY	TXL	3544884C1	4064551C1	1825F	D	N/A		

Circuit Number	Gauge	Color	Insulation	Terminal / Splice Number	Connector Part number	Connector Number	Cavity	Seal/Sleeve	Lock 1	Lock 2
BK5FA(+)	18	YL	TXL	3544884C1	4064551C1	1825F	E	N/A		
BK5FA(-)	18	GN	TXL	3544884C1	4064551C1	1825F	F	N/A		
BK62DC	18	DKBL	TXL	3544884C1	4064551C1	1825F	G	N/A		
BK92-GAH	18	WH	TXL	3544884C1	4064551C1	1825F	H	N/A		
KY95W	18	TN	GXL	3526966C1	3977821C1	1874A	1	N/A		
KY95-GG	18	WH	GXL	3526966C1	3977821C1	1874A	2	N/A		
GA95W	20	TN	GXL	3561584C1	3590390C1	1874B	1	3536867C1		
GA95-GF	20	WH	GXL	3561584C1	3590390C1	1874B	2	3536867C1		
VE95W	18	TN	TXL	3561584C1	3590390C1	1874C	1	3536867C1		
VE95-GF	18	WH	TXL	3561584C1	3590390C1	1874C	2	3536867C1		
3N86CC	14	LTGN	TXL	3534165C1	3613000C1	1901A	A	N/A		
AE86C2	14	LTGN	TXL	3534165C1	3613000C1	1901A	A	N/A		
CL84B	14	LTGN	TXL	3534165C1	3613000C1	1901A	A	N/A		
3N86CC	14	LTGN	TXL	3534165C1	3613000C1	1901A	A	N/A		
AE86C2	14	LTGN	TXL	3534165C1	3613000C1	1901A	A	N/A		
CL84B	14	LTGN	TXL	3534165C1	3613000C1	1901A	A	N/A		
3N11-GCF	14	WH	TXL	3534165C1	3613000C1	1901A	C	N/A		
AE11-GCE	14	WH	TXL	3534165C1	3613000C1	1901A	C	N/A		
CL84-GAB	14	WH	TXL	3534165C1	3613000C1	1901A	C	N/A		
3N11-GCF	14	WH	TXL	3534165C1	3613000C1	1901A	C	N/A		
AE11-GCE	14	WH	TXL	3534165C1	3613000C1	1901A	C	N/A		
CL84-GAB	14	WH	TXL	3534165C1	3613000C1	1901A	C	N/A		
3S11-GUC	20	WH	TXL	4081932C1	3768147C1	1905A	1	N/A		
CL11-GUB	20	WH	TXL	4081932C1	3768147C1	1905A	1	N/A		
3S11-GUC	20	WH	TXL	3598294C1	3768147C1	1905A	1	N/A		
CL11-GUB	20	WH	TXL	3598294C1	3768147C1	1905A	1	N/A		
3S13UC	20	PK	TXL	4081932C1	3768147C1	1905A	2	N/A		
CL13UB	20	PK	TXL	4081932C1	3768147C1	1905A	2	N/A		
3S13UC	20	PK	TXL	3598294C1	3768147C1	1905A	2	N/A		
CL13UB	20	PK	TXL	3598294C1	3768147C1	1905A	2	N/A		
XA14EA	16	RD	TXL	1661261C1	1667305C1	1910A	A	N/A		
ZP14EA	16	RD	TXL	1661261C1	1667305C1	1910A	A	N/A		
XA11-GBE	16	WH	TXL	1661261C1	1667305C1	1910A	B	N/A		
ZP11-GBE	16	WH	TXL	1661261C1	1667305C1	1910A	B	N/A		
XA3BE(+)	18	DKBL	TXL	1661261C1	1667305C1	1910A	C	N/A		
ZP5BE(+)	18	YL	TXL	1661261C1	1667305C1	1910A	C	N/A		
XA3BE(-)	18	GY	TXL	1661261C1	1667305C1	1910A	D	N/A		
ZP5BE(-)	18	GN	TXL	1661261C1	1667305C1	1910A	D	N/A		
XA11-G	8	WH	GXL	373759C2		1910G	1	2644054R1		
ZP11-G	8	WH	GXL	373759C2		1910G	1	2644054R1		
MB14ED	16	RD	TXL	1661212C1	1661199C1	1918A	A	N/A		
MB14ED	16	RD	TXL	1661212C1	1661199C1	1918A	A	N/A		
MB13EE	16	PK	TXL	1661212C1	1661199C1	1918A	B	N/A		
MB13EE	16	PK	TXL	1661212C1	1661199C1	1918A	B	N/A		
MB11-GBE	16	WH	TXL	1661212C1	1661199C1	1918A	C	N/A		
MB11-GBE	16	WH	TXL	1661212C1	1661199C1	1918A	C	N/A		
KC14ED	16	RD	TXL	1661212C1	1661199C1	1918B	A	N/A		
KC14ED	16	RD	TXL	1661212C1	1661199C1	1918B	A	N/A		
KC13EE	16	PK	TXL	1661212C1	1661199C1	1918B	B	N/A		
KC13EE	16	PK	TXL	1661212C1	1661199C1	1918B	B	N/A		
KC11-GBE	16	WH	TXL	1661212C1	1661199C1	1918B	C	N/A		
KC11-GBE	16	WH	TXL	1661212C1	1661199C1	1918B	C	N/A		

Circuit Number	Gauge	Color	Insulation	Terminal / Splice Number	Connector Part number	Connector Number	Cavity	Seal/Sleeve	Lock 1	Lock 2
MB86RCD	18	LTGN	TXL	1661212C1	2005836C1	1919A	A	N/A		
MB86RCD	18	LTGN	TXL	1661212C1	2005836C1	1919A	A	N/A		
MB11-GMW	20	WH	TXL	3539945C1	2005836C1	1919A	B	N/A		
MB11-GMW	20	WH	TXL	3539945C1	2005836C1	1919A	B	N/A		
MB3BD(+)	18	DKBL	TXL	1661212C1	2005836C1	1919A	C	N/A		
MB3BD(+)	18	DKBL	TXL	1661212C1	2005836C1	1919A	C	N/A		
MB3BD(-)	18	GY	TXL	1661212C1	2005836C1	1919A	D	N/A		
MB3BD(-)	18	GY	TXL	1661212C1	2005836C1	1919A	D	N/A		
MB86-GND	18	WH	TXL	1661212C1	2005836C1	1919A	E	N/A		
MB86-GND	18	WH	TXL	1661212C1	2005836C1	1919A	E	N/A		
MB86HA	18	LTGN	TXL	1661212C1	2005836C1	1919A	F	N/A		
MB86HA	18	LTGN	TXL	1661212C1	2005836C1	1919A	F	N/A		
MB86JA	18	LTGN	TXL	1661212C1	2005836C1	1919A	G	N/A		
MB86JA	18	LTGN	TXL	1661212C1	2005836C1	1919A	G	N/A		
KC3BD(+)	18	DKBL	TXL	1661212C1	2005836C1	1919B	C	N/A		
KC3BD(+)	18	DKBL	TXL	1661212C1	2005836C1	1919B	C	N/A		
KC3BD(-)	18	GY	TXL	1661212C1	2005836C1	1919B	D	N/A		
KC3BD(-)	18	GY	TXL	1661212C1	2005836C1	1919B	D	N/A		
LE5M(+)	20	YL	193	3598294C1	4110679C1	1931A	1	N/A		
LS5L(+)	20	YL	193	3598294C1	4110679C1	1931A	1	N/A		
LU5M(+)	20	YL	193	3598294C1	4110679C1	1931A	1	N/A		
LV5M(+)	20	YL	193	3598294C1	4110679C1	1931A	1	N/A		
PY5K(+)	20	YL	193	3598294C1	4110679C1	1931A	1	N/A		
PZ5R(+)	20	YL	193	3598294C1	4110679C1	1931A	1	N/A		
RD5R(+)	20	YL	193	3598294C1	4110679C1	1931A	1	N/A		
RG5J(+)	20	YL	193	3598294C1	4110679C1	1931A	1	N/A		
RJ5J(+)	20	YL	193	3598294C1	4110679C1	1931A	1	N/A		
RM5J(+)	20	YL	193	3598294C1	4110679C1	1931A	1	N/A		
RS5R(+)	20	YL	193	3598294C1	4110679C1	1931A	1	N/A		
RU5L(+)	20	YL	193	3598294C1	4110679C1	1931A	1	N/A		
SB5K(+)	20	YL	193	3598294C1	4110679C1	1931A	1	N/A		
SC5T(+)	20	YL	193	3598294C1	4110679C1	1931A	1	N/A		
SD5K(+)	20	YL	193	3598294C1	4110679C1	1931A	1	N/A		
SE5M(+)	20	YL	193	3598294C1	4110679C1	1931A	1	N/A		
VE5L(+)	20	YL	193	3598294C1	4110679C1	1931A	1	N/A		
VF5M(+)	20	YL	193	3598294C1	4110679C1	1931A	1	N/A		
YZ5M(+)	20	YL	193	3598294C1	4110679C1	1931A	1	N/A		
2H5K(+)	20	YL	193	3598294C1	4110679C1	1931A	1	N/A		
2J5PJ(+)	20	YL	193	3598294C1	4110679C1	1931A	1	N/A		
2L5PJ(+)	20	YL	193	3598294C1	4110679C1	1931A	1	N/A		
2M5J(+)	20	YL	193	3598294C1	4110679C1	1931A	1	N/A		
2W5J(+)	20	YL	193	3598294C1	4110679C1	1931A	1	N/A		
2Y5J(+)	20	YL	193	3598294C1	4110679C1	1931A	1	N/A		
2Z5PJ(+)	20	YL	193	3598294C1	4110679C1	1931A	1	N/A		
3C5L(+)	20	YL	193	3598294C1	4110679C1	1931A	1	N/A		
3E5K(+)	20	YL	193	3598294C1	4110679C1	1931A	1	N/A		
3J5T(+)	20	YL	193	3598294C1	4110679C1	1931A	1	N/A		
3R5K(+)	20	YL	193	3598294C1	4110679C1	1931A	1	N/A		
3U5M(+)	20	YL	193	3598294C1	4110679C1	1931A	1	N/A		
3W5M(+)	20	YL	193	3598294C1	4110679C1	1931A	1	N/A		
4E5PJ(+)	20	YL	193	3598294C1	4110679C1	1931A	1	N/A		
4J5PJ(+)	20	YL	193	3598294C1	4110679C1	1931A	1	N/A		

Circuit Number	Gauge	Color	Insulation	Terminal / Splice Number	Connector Part number	Connector Number	Cavity	Seal/Sleeve	Lock 1	Lock 2
4L5J(+)	20	YL	193	3598294C1	4110679C1	1931A	1	N/A		
4N5J(+)	20	YL	193	3598294C1	4110679C1	1931A	1	N/A		
LE5M(+)	20	YL	193	3598294C1	4110679C1	1931A	1	N/A		
LS5L(+)	20	YL	193	3598294C1	4110679C1	1931A	1	N/A		
LU5M(+)	20	YL	193	3598294C1	4110679C1	1931A	1	N/A		
LV5M(+)	20	YL	193	3598294C1	4110679C1	1931A	1	N/A		
PV5PJ(+)	20	YL	193	3598294C1	4110679C1	1931A	1	N/A		
PY5K(+)	20	YL	193	3598294C1	4110679C1	1931A	1	N/A		
PZ5PJ(+)	20	YL	193	3598294C1	4110679C1	1931A	1	N/A		
RD5PJ(+)	20	YL	193	3598294C1	4110679C1	1931A	1	N/A		
RG5J(+)	20	YL	193	3598294C1	4110679C1	1931A	1	N/A		
RJ5J(+)	20	YL	193	3598294C1	4110679C1	1931A	1	N/A		
RM5J(+)	20	YL	193	3598294C1	4110679C1	1931A	1	N/A		
RR5J(+)	20	YL	193	3598294C1	4110679C1	1931A	1	N/A		
RS5PJ(+)	20	YL	193	3598294C1	4110679C1	1931A	1	N/A		
RU5L(+)	20	YL	193	3598294C1	4110679C1	1931A	1	N/A		
RX5PJ(+)	20	YL	193	3598294C1	4110679C1	1931A	1	N/A		
RZ5J(+)	20	YL	193	3598294C1	4110679C1	1931A	1	N/A		
SB5K(+)	20	YL	193	3598294C1	4110679C1	1931A	1	N/A		
SC5T(+)	20	YL	193	3598294C1	4110679C1	1931A	1	N/A		
SD5K(+)	20	YL	193	3598294C1	4110679C1	1931A	1	N/A		
SE5M(+)	20	YL	193	3598294C1	4110679C1	1931A	1	N/A		
VE5L(+)	20	YL	193	3598294C1	4110679C1	1931A	1	N/A		
VG5M(+)	20	YL	193	3598294C1	4110679C1	1931A	1	N/A		
YZ5M(+)	20	YL	193	3598294C1	4110679C1	1931A	1	N/A		
LE5M(-)	20	GN	193	3598294C1	4110679C1	1931A	8	N/A		
LS5L(-)	20	GN	193	3598294C1	4110679C1	1931A	8	N/A		
LU5M(-)	20	GN	193	3598294C1	4110679C1	1931A	8	N/A		
LV5M(-)	20	GN	193	3598294C1	4110679C1	1931A	8	N/A		
PY5K(-)	20	GN	193	3598294C1	4110679C1	1931A	8	N/A		
PZ5R(-)	20	GN	193	3598294C1	4110679C1	1931A	8	N/A		
RD5R(-)	20	GN	193	3598294C1	4110679C1	1931A	8	N/A		
RG5J(-)	20	GN	193	3598294C1	4110679C1	1931A	8	N/A		
RJ5J(-)	20	GN	193	3598294C1	4110679C1	1931A	8	N/A		
RM5J(-)	20	GN	193	3598294C1	4110679C1	1931A	8	N/A		
RS5R(-)	20	GN	193	3598294C1	4110679C1	1931A	8	N/A		
RU5L(-)	20	GN	193	3598294C1	4110679C1	1931A	8	N/A		
SB5K(-)	20	GN	193	3598294C1	4110679C1	1931A	8	N/A		
SC5T(-)	20	GN	193	3598294C1	4110679C1	1931A	8	N/A		
SD5K(-)	20	GN	193	3598294C1	4110679C1	1931A	8	N/A		
SE5M(-)	20	GN	193	3598294C1	4110679C1	1931A	8	N/A		
VE5L(-)	20	GN	193	3598294C1	4110679C1	1931A	8	N/A		
VF5M(-)	20	GN	193	3598294C1	4110679C1	1931A	8	N/A		
YZ5M(-)	20	GN	193	3598294C1	4110679C1	1931A	8	N/A		
2H5K(-)	20	GN	193	3598294C1	4110679C1	1931A	8	N/A		
2J5PJ(-)	20	GN	193	3598294C1	4110679C1	1931A	8	N/A		
2L5PJ(-)	20	GN	193	3598294C1	4110679C1	1931A	8	N/A		
2M5J(-)	20	GN	193	3598294C1	4110679C1	1931A	8	N/A		
2W5J(-)	20	GN	193	3598294C1	4110679C1	1931A	8	N/A		
2Y5J(-)	20	GN	193	3598294C1	4110679C1	1931A	8	N/A		
2Z5PJ(-)	20	GN	193	3598294C1	4110679C1	1931A	8	N/A		
3C5L(-)	20	GN	193	3598294C1	4110679C1	1931A	8	N/A		

Circuit Number	Gauge	Color	Insulation	Terminal / Splice Number	Connector Part number	Connector Number	Cavity	Seal/Sleeve	Lock 1	Lock 2
3E5K(-)	20	GN	193	3598294C1	4110679C1	1931A	8	N/A		
3J5T(-)	20	GN	193	3598294C1	4110679C1	1931A	8	N/A		
3R5K(-)	20	GN	193	3598294C1	4110679C1	1931A	8	N/A		
3U5M(-)	20	GN	193	3598294C1	4110679C1	1931A	8	N/A		
3W5M(-)	20	GN	193	3598294C1	4110679C1	1931A	8	N/A		
4E5PJ(-)	20	GN	193	3598294C1	4110679C1	1931A	8	N/A		
4J5PJ(-)	20	GN	193	3598294C1	4110679C1	1931A	8	N/A		
4L5J(-)	20	GN	193	3598294C1	4110679C1	1931A	8	N/A		
4N5J(-)	20	GN	193	3598294C1	4110679C1	1931A	8	N/A		
LE5M(-)	20	GN	193	3598294C1	4110679C1	1931A	8	N/A		
LS5L(-)	20	GN	193	3598294C1	4110679C1	1931A	8	N/A		
LU5M(-)	20	GN	193	3598294C1	4110679C1	1931A	8	N/A		
LV5M(-)	20	GN	193	3598294C1	4110679C1	1931A	8	N/A		
PV5PJ(-)	20	GN	193	3598294C1	4110679C1	1931A	8	N/A		
PY5K(-)	20	GN	193	3598294C1	4110679C1	1931A	8	N/A		
PZ5PJ(-)	20	GN	193	3598294C1	4110679C1	1931A	8	N/A		
RD5PJ(-)	20	GN	193	3598294C1	4110679C1	1931A	8	N/A		
RG5J(-)	20	GN	193	3598294C1	4110679C1	1931A	8	N/A		
RJ5J(-)	20	GN	193	3598294C1	4110679C1	1931A	8	N/A		
RM5J(-)	20	GN	193	3598294C1	4110679C1	1931A	8	N/A		
RR5J(-)	20	GN	193	3598294C1	4110679C1	1931A	8	N/A		
RS5PJ(-)	20	GN	193	3598294C1	4110679C1	1931A	8	N/A		
RU5L(-)	20	GN	193	3598294C1	4110679C1	1931A	8	N/A		
RX5PJ(-)	20	GN	193	3598294C1	4110679C1	1931A	8	N/A		
RZ5J(-)	20	GN	193	3598294C1	4110679C1	1931A	8	N/A		
SB5K(-)	20	GN	193	3598294C1	4110679C1	1931A	8	N/A		
SC5T(-)	20	GN	193	3598294C1	4110679C1	1931A	8	N/A		
SD5K(-)	20	GN	193	3598294C1	4110679C1	1931A	8	N/A		
SE5M(-)	20	GN	193	3598294C1	4110679C1	1931A	8	N/A		
VE5L(-)	20	GN	193	3598294C1	4110679C1	1931A	8	N/A		
VG5M(-)	20	GN	193	3598294C1	4110679C1	1931A	8	N/A		
YZ5M(-)	20	GN	193	3598294C1	4110679C1	1931A	8	N/A		
XF11-GX	20	WH	TXL	3598294C1	4110679C1	1931A	13	N/A		
XF11-GX	20	WH	TXL	3598294C1	4110679C1	1931A	13	N/A		
XF14L	20	RD	TXL	3598294C1	4110679C1	1931A	14	N/A		
XF14L	20	RD	TXL	3598294C1	4110679C1	1931A	14	N/A		
RH11-GBE	14	WH	TXL	3534167C1	3554818C1	1934M	A	N/A		
DL11-GBE	14	WH	TXL	3534167C1	3554818C1	1934M	A	N/A		
JV11-GA	18	WH	TXL	1661212C1	3554818C1	1934M	A	N/A		
KL11-GA	18	WH	TXL	1661212C1	3554818C1	1934M	A	N/A		
RH11-GBE	14	WH	TXL	3534167C1	3554818C1	1934M	A	N/A		
RH14EA	14	RD	TXL	3534167C1	3554818C1	1934M	B	N/A		
DL14EA	14	RD	TXL	3534167C1	3554818C1	1934M	B	N/A		
JV14C	18	RD	TXL	1661212C1	3554818C1	1934M	B	N/A		
KL14C	18	RD	TXL	1661212C1	3554818C1	1934M	B	N/A		
RH14EA	14	RD	TXL	3534167C1	3554818C1	1934M	B	N/A		
AS5BE(+)	18	YL	TXL	3535303C1	3683465C1	1935M	A	3535424C1		
FH5BS(+)	18	YL	TXL	3535303C1	3683465C1	1935M	A	3535424C1		
AS5BE(+)	18	YL	TXL	3535303C1	3683465C1	1935M	A	3535424C1		
BV5BS(+)	18	YL	TXL	3535303C1	3683465C1	1935M	A	3535424C1		
FH5BS(+)	18	YL	TXL	3535303C1	3683465C1	1935M	A	3535424C1		
PS5BE(+)	18	YL	TXL	3535303C1	3683465C1	1935M	A	3535424C1		

Circuit Number	Gauge	Color	Insulation	Terminal / Splice Number	Connector Part number	Connector Number	Cavity	Seal/Sleeve	Lock 1	Lock 2
AS5BE(-)	18	GN	TXL	3535303C1	3683465C1	1935M	B	3535424C1		
FH5BS(-)	18	GN	TXL	3535303C1	3683465C1	1935M	B	3535424C1		
AS5BE(-)	18	GN	TXL	3535303C1	3683465C1	1935M	B	3535424C1		
BV5BS(-)	18	GN	TXL	3535303C1	3683465C1	1935M	B	3535424C1		
FH5BS(-)	18	GN	TXL	3535303C1	3683465C1	1935M	B	3535424C1		
PS5BE(-)	18	GN	TXL	3535303C1	3683465C1	1935M	B	3535424C1		
3L5BE(+)	18	YL	TXL	3535303C1	3683465C1	1935N	A	3535424C1	3765546C1	3765565C1
AR5BE(+)	18	YL	TXL	3535303C1	3683465C1	1935N	A	3535424C1		
3L5BE(+)	18	YL	TXL	3535303C1	3683465C1	1935N	A	3535424C1		
AR5BE(+)	18	YL	TXL	3535303C1	3683465C1	1935N	A	3535424C1		
BR5BE(+)	18	YL	TXL	3535303C1	3683465C1	1935N	A	3535424C1		
3L5BE(-)	18	GN	TXL	3535303C1	3683465C1	1935N	B	3535424C1		
AR5BE(-)	18	GN	TXL	3535303C1	3683465C1	1935N	B	3535424C1		
3L5BE(-)	18	GN	TXL	3535303C1	3683465C1	1935N	B	3535424C1		
AR5BE(-)	18	GN	TXL	3535303C1	3683465C1	1935N	B	3535424C1		
BR5BE(-)	18	GN	TXL	3535303C1	3683465C1	1935N	B	3535424C1		
SF59DA	18	GY	TXL	587576C1	587568C91	1936M	A	3517771C1		
SF59DA	18	GY	TXL	587576C1	587568C91	1936M	A	3517771C1		
RK59EA	18	GY	TXL	587576C1	587568C91	1936M	B	3517771C1		
RK59EA	18	GY	TXL	587576C1	587568C91	1936M	B	3517771C1		
KS5BF(+)	18	YL	TXL	1661875C1	1667741C1	1937M	A	3568570C1		
KS5BF(+)	18	YL	TXL	1661875C1	1667741C1	1937M	A	3568570C1		
KS5BF(-)	18	GN	TXL	1661875C1	1667741C1	1937M	C	3568570C1		
KS5BF(-)	18	GN	TXL	1661875C1	1667741C1	1937M	C	3568570C1		
KR5BF(+)	18	YL	TXL	1661875C1	1667741C1	1937N	A	3568570C1		
RY5BF(+)	18	YL	TXL	1661875C1	1667741C1	1937N	A	3568570C1		
KR5BF(+)	18	YL	TXL	1661875C1	1667741C1	1937N	A	3568570C1		
RY5BF(+)	18	YL	TXL	1661875C1	1667741C1	1937N	A	3568570C1		
KR5BF(-)	18	GN	TXL	1661875C1	1667741C1	1937N	C	3568570C1		
RY5BF(-)	18	GN	TXL	1661875C1	1667741C1	1937N	C	3568570C1		
KR5BF(-)	18	GN	TXL	1661875C1	1667741C1	1937N	C	3568570C1		
RY5BF(-)	18	GN	TXL	1661875C1	1667741C1	1937N	C	3568570C1		
KB5U(+)	18	YL	TXL	1661875C1	1667741C1	1937P	A	N/A		
KD5U(+)	18	YL	TXL	1661875C1	1667741C1	1937P	A	N/A		
KB5U(+)	18	YL	TXL	1661875C1	1667741C1	1937P	A	3568570C1		
KD5U(+)	18	YL	TXL	1661875C1	1667741C1	1937P	A	3568570C1		
KB5U(-)	18	GN	TXL	1661875C1	1667741C1	1937P	C	N/A		
KD5U(-)	18	GN	TXL	1661875C1	1667741C1	1937P	C	N/A		
KB5U(-)	18	GN	TXL	1661875C1	1667741C1	1937P	C	3568570C1		
KD5U(-)	18	GN	TXL	1661875C1	1667741C1	1937P	C	3568570C1		
DL11-GBE	14	WH	TXL	3534167C1	3554818C1	1938M	A	N/A		
DL14EA	14	RD	TXL	3534167C1	3554818C1	1938M	B	N/A		
JM5BB(+)	18	YL	TXL	3683464C1	3683465C1	1939-1	A	3535424C1		
JM5BG(+)	18	YL	TXL	3683464C1	3683465C1	1939-1	A	3535424C1		
JN5BB(+)	18	YL	TXL	3683464C1	3683465C1	1939-1	A	3535424C1		
JN5BH(+)	18	YL	TXL	3683464C1	3683465C1	1939-1	A	3535424C1		
JP5BB(+)	18	YL	TXL	3683464C1	3683465C1	1939-1	A	3535424C1		
JP5BJ(+)	18	YL	TXL	3683464C1	3683465C1	1939-1	A	3535424C1		
JR5BB(+)	18	YL	TXL	3683464C1	3683465C1	1939-1	A	3535424C1		
JR5BJ(+)	18	YL	TXL	3683464C1	3683465C1	1939-1	A	3535424C1		
JM5BB(-)	18	LTGN	TXL	3683464C1	3683465C1	1939-1	B	3535424C1		
JM5BG(-)	18	LTGN	TXL	3683464C1	3683465C1	1939-1	B	3535424C1		

Circuit Number	Gauge	Color	Insulation	Terminal / Splice Number	Connector Part number	Connector Number	Cavity	Seal/Sleeve	Lock 1	Lock 2
JN5BB(-)	18	LTGN	TXL	3683464C1	3683465C1	1939-1	B	3535424C1		
JN5BH(-)	18	LTGN	TXL	3683464C1	3683465C1	1939-1	B	3535424C1		
JP5BB(-)	18	LTGN	TXL	3683464C1	3683465C1	1939-1	B	3535424C1		
JP5BJ(-)	18	LTGN	TXL	3683464C1	3683465C1	1939-1	B	3535424C1		
JR5BB(-)	18	LTGN	TXL	3683464C1	3683465C1	1939-1	B	3535424C1		
JR5BJ(-)	18	LTGN	TXL	3683464C1	3683465C1	1939-1	B	3535424C1		
GZ5AB(+)	18	YL	TXL	3683464C1	3683465C1	1939-2	A	3535424C1		
GZ5AG(+)	18	YL	TXL	3683464C1	3683465C1	1939-2	A	3535424C1		
JK5AB(+)	18	YL	TXL	3683464C1	3683465C1	1939-2	A	3535424C1		
JK5AG(+)	18	YL	TXL	3683464C1	3683465C1	1939-2	A	3535424C1		
KP5AB(+)	18	YL	TXL	3683464C1	3683465C1	1939-2	A	3535424C1		
KU5AB(+)	18	YL	TXL	3683464C1	3683465C1	1939-2	A	3535424C1		
LN5AB(+)	18	YL	TXL	3683464C1	3683465C1	1939-2	A	3535424C1		
GZ5AB(-)	18	GN	TXL	3683464C1	3683465C1	1939-2	B	3535424C1		
GZ5AG(-)	18	GN	TXL	3683464C1	3683465C1	1939-2	B	3535424C1		
JK5AB(-)	18	GN	TXL	3683464C1	3683465C1	1939-2	B	3535424C1		
JK5AG(-)	18	GN	TXL	3683464C1	3683465C1	1939-2	B	3535424C1		
KP5AB(-)	18	GN	TXL	3683464C1	3683465C1	1939-2	B	3535424C1		
KU5AB(-)	18	GN	TXL	3683464C1	3683465C1	1939-2	B	3535424C1		
LN5AB(-)	18	GN	TXL	3683464C1	3683465C1	1939-2	B	3535424C1		
KG5(-)	18	GN	TXL	2005483C1	3616085C1	1939A	2	N/A		
KG5(-)	18	GN	TXL	2005483C1	3616085C1	1939A	2	N/A		
JV13B	18	PK	TXL	2005483C1	3616085C1	1939A	3	N/A		
JV13B	18	PK	TXL	2005483C1	3616085C1	1939A	3	N/A		
JV11-GB	16	WH	TXL	2005483C1	3616085C1	1939A	4	N/A		
JV11-GB	16	WH	TXL	2005483C1	3616085C1	1939A	4	N/A		
JV14A	18	RD	TXL	2005483C1	3616085C1	1939A	5	N/A		
JV14A	18	RD	TXL	2005483C1	3616085C1	1939A	5	N/A		
KG5(+)	18	YL	TXL	2005483C1	3616085C1	1939A	7	N/A		
KG5(+)	18	YL	TXL	2005483C1	3616085C1	1939A	7	N/A		
JM5BB(+)	18	YL	TXL	3683464C1	3683465C1	1939B	A	3535424C1		
JN5BB(+)	18	YL	TXL	3683464C1	3683465C1	1939B	A	3535424C1		
JP5BB(+)	18	YL	TXL	3683464C1	3683465C1	1939B	A	3535424C1		
JR5BB(+)	18	YL	TXL	3683464C1	3683465C1	1939B	A	3535424C1		
JM5BB(-)	18	LTGN	TXL	3683464C1	3683465C1	1939B	B	3535424C1		
JN5BB(-)	18	LTGN	TXL	3683464C1	3683465C1	1939B	B	3535424C1		
JP5BB(-)	18	LTGN	TXL	3683464C1	3683465C1	1939B	B	3535424C1		
JR5BB(-)	18	LTGN	TXL	3683464C1	3683465C1	1939B	B	3535424C1		
GZ5AB(+)	18	YL	TXL	3683464C1	3683465C1	1939C	A	3535424C1		
JK5AB(+)	18	YL	TXL	3683464C1	3683465C1	1939C	A	3535424C1		
GZ5AB(-)	18	GN	TXL	3683464C1	3683465C1	1939C	B	3535424C1		
JK5AB(-)	18	GN	TXL	3683464C1	3683465C1	1939C	B	3535424C1		
JV11-GA	14	WH	TXL	3534167C1	3554818C1	1939D	A	N/A		
JV14C	14	RD	GXL	3534167C1	3554818C1	1939D	B	N/A		
KL11-GA	14	WH	TXL	3534167C1	3554818C1	1939E	A	N/A		
KL14C	14	RD	GXL	3534167C1	3554818C1	1939E	B	N/A		
JM5BG(+)	18	YL	TXL	3683464C1	3683465C1	1939F	A	3535424C1		
JN5BH(+)	18	YL	TXL	3683464C1	3683465C1	1939F	A	3535424C1		
JP5BJ(+)	18	YL	TXL	3683464C1	3683465C1	1939F	A	3535424C1		
JR5BJ(+)	18	YL	TXL	3683464C1	3683465C1	1939F	A	3535424C1		
JM5BG(-)	18	LTGN	TXL	3683464C1	3683465C1	1939F	B	3535424C1		
JN5BH(-)	18	LTGN	TXL	3683464C1	3683465C1	1939F	B	3535424C1		

Circuit Number	Gauge	Color	Insulation	Terminal / Splice Number	Connector Part number	Connector Number	Cavity	Seal/Sleeve	Lock 1	Lock 2
JP5BJ(-)	18	LTGN	TXL	3683464C1	3683465C1	1939F	B	3535424C1		
JR5BJ(-)	18	LTGN	TXL	3683464C1	3683465C1	1939F	B	3535424C1		
GZ5AG(+)	18	YL	TXL	3683464C1	3683465C1	1939G	A	3535424C1		
JK5AG(+)	18	YL	TXL	3683464C1	3683465C1	1939G	A	3535424C1		
KP5AB(+)	18	YL	TXL	3683464C1	3683465C1	1939G	A	3535424C1		
KU5AB(+)	18	YL	TXL	3683464C1	3683465C1	1939G	A	3535424C1		
LN5AB(+)	18	YL	TXL	3683464C1	3683465C1	1939G	A	3535424C1		
GZ5AG(-)	18	GN	TXL	3683464C1	3683465C1	1939G	B	3535424C1		
JK5AG(-)	18	GN	TXL	3683464C1	3683465C1	1939G	B	3535424C1		
KP5AB(-)	18	GN	TXL	3683464C1	3683465C1	1939G	B	3535424C1		
KU5AB(-)	18	GN	TXL	3683464C1	3683465C1	1939G	B	3535424C1		
LN5AB(-)	18	GN	TXL	3683464C1	3683465C1	1939G	B	3535424C1		
DL3BD(+)	18	DKBL	TXL	3727971C1	3553404C1	1939M	4	N/A		
DL3BD(+)	18	DKBL	TXL	3727971C1	3553404C1	1939M	4	N/A		
DL3BD(-)	18	GY	TXL	3727971C1	3553404C1	1939M	5	N/A		
DL3BD(-)	18	GY	TXL	3727971C1	3553404C1	1939M	5	N/A		
LP5BF(-)	18	GN	TXL	3727971C1	3553404C1	1939M	11	N/A		
LP5BF(-)	18	GN	TXL	3727971C1	3553404C1	1939M	11	N/A		
LP5BF(+)	18	YL	TXL	3727971C1	3553404C1	1939M	12	N/A		
LP5BF(+)	18	YL	TXL	3727971C1	3553404C1	1939M	12	N/A		
YD67V	18	GY	GXL	3754236C1	3673259C1	1942F	1	N/A		
YD67V	18	GY	GXL	1680206C1	3673259C1	1942F	1	N/A		
YD67W	18	GY	GXL	3754236C1	3673259C1	1942F	2	N/A		
YD67W	18	GY	GXL	1680206C1	3673259C1	1942F	2	N/A		
YD67U	18	GY	GXL	3754236C1	3673259C1	1942F	3	N/A		
YD67U	18	GY	GXL	1680206C1	3673259C1	1942F	3	N/A		
2D57C	18	OR	TXL	3754236C1	3673259C1	1942F	4	N/A		
2E57C	18	OR	TXL	3754236C1	3673259C1	1942F	4	N/A		
2G57C	18	OR	TXL	3754236C1	3673259C1	1942F	4	N/A		
NA57A	18	OR	TXL	3754236C1	3673259C1	1942F	4	N/A		
ZD57AAA	20	OR	TXL	3754236C1	3673259C1	1942F	4	N/A		
HN75AG	18	LTGN	GXL	1661262C1	3515763C1	1946F	A	N/A		
HN75AG	20	LTGN	TXL	3534481C1	3515763C1	1946F	A	N/A		
HN75AF	18	LTGN	GXL	1661262C1	3515763C1	1946F	B	N/A		
HN75AF	20	LTGN	TXL	3534481C1	3515763C1	1946F	B	N/A		
HN75AR	18	LTGN	GXL	1661262C1	3515763C1	1946F	C	N/A		
HN75AR	20	LTGN	TXL	3534481C1	3515763C1	1946F	C	N/A		
HN75-GAS	18	WH	GXL	1661262C1	3515763C1	1946F	D	N/A		
HN75-GAS	20	WH	TXL	3534481C1	3515763C1	1946F	D	N/A		
HN77NE	18	LTGN	GXL	1661262C1	3515763C1	1946F	E	N/A		
HN77NE	20	LTGN	TXL	3534481C1	3515763C1	1946F	E	N/A		
HN77NF	18	LTGN	GXL	1661262C1	3515763C1	1946F	F	N/A		
HN77NF	20	LTGN	TXL	3534481C1	3515763C1	1946F	F	N/A		
HN62J	18	DKBL	TXL	1661262C1	3515763C1	1946F	G	N/A		
HN62J	20	DKBL	TXL	3534481C1	3515763C1	1946F	G	N/A		
YX5T(+)	18	YL	TXL	1680205C1	1689500C1	1982A	1	N/A		
YZ5T(+)	18	YL	TXL	1680205C1	1689500C1	1982A	1	N/A		
YX5T(+)	18	YL	TXL	1651969C1	1689500C1	1982A	1	N/A		
YZ5T(+)	18	YL	TXL	1651969C1	1689500C1	1982A	1	N/A		
YX5T(-)	18	GN	TXL	1680205C1	1689500C1	1982A	2	N/A		
YZ5T(-)	18	GN	TXL	1680205C1	1689500C1	1982A	2	N/A		
YX5T(-)	18	GN	TXL	1651969C1	1689500C1	1982A	2	N/A		

Circuit Number	Gauge	Color	Insulation	Terminal / Splice Number	Connector Part number	Connector Number	Cavity	Seal/Sleeve	Lock 1	Lock 2
YZ5T(-)	18	GN	TXL	1651969C1	1689500C1	1982A	2	N/A		
YX5T(+)	18	YL	TXL	1680205C1	1689500C1	1982A	3	N/A		
YZ5T(+)	18	YL	TXL	1680205C1	1689500C1	1982A	3	N/A		
YX5T(+)	18	YL	TXL	1651969C1	1689500C1	1982A	3	N/A		
YZ5T(+)	18	YL	TXL	1651969C1	1689500C1	1982A	3	N/A		
YX5T(-)	18	GN	TXL	1680205C1	1689500C1	1982A	4	N/A		
YZ5T(-)	18	GN	TXL	1680205C1	1689500C1	1982A	4	N/A		
YX5T(-)	18	GN	TXL	1651969C1	1689500C1	1982A	4	N/A		
YZ5T(-)	18	GN	TXL	1651969C1	1689500C1	1982A	4	N/A		
JS1B	16	RD	TXL	1661707C1	3565207C1	1F	A	N/A		
JS1B	14	TN	GXL	1661707C1	3565207C1	1F	A	N/A		
JS1A	16	RD	TXL	1661707C1	3565207C1	1F	B	N/A		
JS1A	14	LTBL	GXL	1661707C1	3565207C1	1F	B	N/A		
CF14SD	18	RD	TXL	3722128C1		1TB1	1	2644038R1		
CF14SD	18	RD	TXL	3722128C1		1TB1	1	2644038R1		
CF70E	18	OR	TXL	3722128C1		1TB2	1	2644038R1		
CF70E	18	OR	TXL	3722128C1		1TB2	1	2644038R1		
BR5BF(-)	18	GN	TXL	3544884C1	4064551C1	250M	A	N/A		
BV5BM(-)	18	GN	TXL	3544884C1	4064551C1	250M	A	N/A		
PS5BA(-)	18	GN	TXL	3544884C1	4064551C1	250M	A	N/A		
BR5BF(+)	18	YL	TXL	3544884C1	4064551C1	250M	B	N/A		
BV5BM(+)	18	YL	TXL	3544884C1	4064551C1	250M	B	N/A		
PS5BA(+)	18	YL	TXL	3544884C1	4064551C1	250M	B	N/A		
NJ14KBB	18	RD	TXL	3544884C1	4064551C1	250M	C	N/A		
NL86AK	18	LTGN	TXL	3544884C1	4064551C1	250M	D	N/A		
NP86AK	18	LTGN	TXL	3544884C1	4064551C1	250M	D	N/A		
BR5BC(-)	18	GN	TXL	3544884C1	4064551C1	250M	E	N/A		
BV5BA(-)	18	GN	TXL	3544884C1	4064551C1	250M	E	N/A		
PS5BF(-)	18	GN	TXL	3544884C1	4064551C1	250M	E	N/A		
BR5BC(+)	18	YL	TXL	3544884C1	4064551C1	250M	F	N/A		
BV5BA(+)	18	YL	TXL	3544884C1	4064551C1	250M	F	N/A		
PS5BF(+)	18	YL	TXL	3544884C1	4064551C1	250M	F	N/A		
CF11-GSD	18	WH	TXL	3722128C1		2TB1	1	2644038R1		
CF11-GSD	18	WH	TXL	3722128C1		2TB1	1	2644038R1		
2A58DA	18	BN	TXL	1661212C1	1661201C1	3200F	A	N/A		
2F56D	18	OR	TXL	1661212C1	1661201C1	3200F	A	N/A		
2G56D	18	OR	TXL	1661212C1	1661201C1	3200F	A	N/A		
3C58DA	18	BN	TXL	1661212C1	1661201C1	3200F	A	N/A		
AV58DA	18	BN	TXL	1661212C1	1661201C1	3200F	A	N/A		
NS56D	18	OR	TXL	1661212C1	1661201C1	3200F	A	N/A		
2C56D	18	OR	TXL	1661212C1	1661201C1	3200F	A	N/A		
2D58DA	18	BN	TXL	1661212C1	1661201C1	3200F	A	N/A		
DD78A	16	LTGN	TXL	1661212C1	1661201C1	3200F	B	N/A		
DD78A	16	LTGN	TXL	1661212C1	1661201C1	3200F	B	N/A		
DF78D	18	LTGN	TXL	1661212C1	1661201C1	3200F	D	N/A		
DF78D	18	LTGN	TXL	1661212C1	1661201C1	3200F	D	N/A		
DF78E	18	LTGN	TXL	1661212C1	1661201C1	3200F	E	N/A		
DF78E	18	LTGN	TXL	1661212C1	1661201C1	3200F	E	N/A		
DF78F	18	LTGN	TXL	1661212C1	1661201C1	3200F	F	N/A		
DF78F	18	LTGN	TXL	1661212C1	1661201C1	3200F	F	N/A		
JP5BD(-)	18	LTGN	TXL	1661208C1	1661200C1	3200M	A	N/A		
JR5BD(-)	18	LTGN	TXL	1661208C1	1661200C1	3200M	A	N/A		

Circuit Number	Gauge	Color	Insulation	Terminal / Splice Number	Connector Part number	Connector Number	Cavity	Seal/Sleeve	Lock 1	Lock 2
JP5BD(-)	18	LTGN	TXL	1661208C1	1661200C1	3200M	A	N/A		
JR5BD(-)	18	LTGN	TXL	1661208C1	1661200C1	3200M	A	N/A		
JP5BD(+)	18	YL	TXL	1661208C1	1661200C1	3200M	B	N/A		
JR5BD(+)	18	YL	TXL	1661208C1	1661200C1	3200M	B	N/A		
JP5BD(+)	18	YL	TXL	1661208C1	1661200C1	3200M	B	N/A		
JR5BD(+)	18	YL	TXL	1661208C1	1661200C1	3200M	B	N/A		
CV81B	12	RD	TXL	3566715C1	1661200C1	3200M	C	N/A		
DF78V	12	LTGN	TXL	3566715C1	1661200C1	3200M	C	N/A		
CV81B	12	RD	TXL	3566715C1	1661200C1	3200M	C	N/A		
DF78V	12	LTGN	TXL	3566715C1	1661200C1	3200M	C	N/A		
CV81-GA	12	WH	TXL	3566715C1	1661200C1	3200M	D	N/A		
DD78-GA	16	WH	TXL	1661209C1	1661200C1	3200M	D	N/A		
CV81-GA	12	WH	TXL	3566715C1	1661200C1	3200M	D	N/A		
DD78-GA	16	WH	TXL	1661209C1	1661200C1	3200M	D	N/A		
HZ41D	18	TN	TXL	1661208C1	1661200C1	3200M	E	N/A		
HZ41DJ	18	TN	TXL	1661208C1	1661200C1	3200M	E	N/A		
HZ41E	18	GY	TXL	1661208C1	1661200C1	3200M	F	N/A		
HZ41EJ	18	GY	TXL	1661208C1	1661200C1	3200M	F	N/A		
2A58DB	18	BN	TXL	1661212C1	1661201C1	3204F	A	N/A		
2C57B	18	OR	TXL	1661212C1	1661201C1	3204F	A	N/A		
2E57B	18	OR	TXL	1661212C1	1661201C1	3204F	A	N/A		
2F57B	18	OR	TXL	1661212C1	1661201C1	3204F	A	N/A		
2G57B	18	OR	TXL	1661212C1	1661201C1	3204F	A	N/A	3743662C1	
3C58DB	18	BN	TXL	1661212C1	1661201C1	3204F	A	N/A		
AV58DB	18	BN	TXL	1661212C1	1661201C1	3204F	A	N/A		
NA57BA	16	OR	TXL	1661212C1	1661201C1	3204F	A	N/A		
NY57BA	16	OR	TXL	1661212C1	1661201C1	3204F	A	N/A		
2C57B	18	OR	TXL	1661212C1	1661201C1	3204F	A	N/A		
2D58DB	18	BN	TXL	1661212C1	1661201C1	3204F	A	N/A		
DD78B	16	LTGN	TXL	1661212C1	1661201C1	3204F	B	N/A		
DD78B	16	LTGN	TXL	1661212C1	1661201C1	3204F	B	N/A		
DF62DD	18	DKBL	TXL	1661212C1	1661201C1	3204F	C	N/A		
DF62DD	18	DKBL	TXL	1661212C1	1661201C1	3204F	C	N/A		
DF78D	18	LTGN	TXL	1661212C1	1661201C1	3204F	D	N/A		
DF78D	18	LTGN	TXL	1661212C1	1661201C1	3204F	D	N/A		
DF78E	18	LTGN	TXL	1661212C1	1661201C1	3204F	E	N/A		
DF78E	18	LTGN	TXL	1661212C1	1661201C1	3204F	E	N/A		
DF78F	18	LTGN	TXL	1661212C1	1661201C1	3204F	F	N/A		
DF78F	18	LTGN	TXL	1661212C1	1661201C1	3204F	F	N/A		
JP5BK(-)	18	LTGN	TXL	1661208C1	1661200C1	3204M	A	N/A		
JR5BK(-)	18	LTGN	TXL	1661208C1	1661200C1	3204M	A	N/A		
JP5BK(-)	18	LTGN	TXL	1661208C1	1661200C1	3204M	A	N/A		
JR5BK(-)	18	LTGN	TXL	1661208C1	1661200C1	3204M	A	N/A		
JP5BK(+)	18	YL	TXL	1661208C1	1661200C1	3204M	B	N/A		
JR5BK(+)	18	YL	TXL	1661208C1	1661200C1	3204M	B	N/A		
JP5BK(+)	18	YL	TXL	1661208C1	1661200C1	3204M	B	N/A		
JR5BK(+)	18	YL	TXL	1661208C1	1661200C1	3204M	B	N/A		
CV81C	12	RD	TXL	3566715C1	1661200C1	3204M	C	N/A		
CV81C	12	RD	TXL	3566715C1	1661200C1	3204M	C	N/A		
CV81-GB	12	WH	TXL	3566715C1	1661200C1	3204M	D	N/A		
DD78-GB	16	WH	TXL	1661209C1	1661200C1	3204M	D	N/A		
CV81-GB	12	WH	TXL	3566715C1	1661200C1	3204M	D	N/A		

Circuit Number	Gauge	Color	Insulation	Terminal / Splice Number	Connector Part number	Connector Number	Cavity	Seal/Sleeve	Lock 1	Lock 2
DD78-GB	16	WH	TXL	1661209C1	1661200C1	3204M	D	N/A		
AA63BB	18	DKBL	TXL	1661261C1	1667305C1	3205M	A	N/A		
AA63BB	18	DKBL	TXL	1661261C1	1667305C1	3205M	A	N/A		
AA11-G	18	WH	TXL	1661261C1	1667305C1	3205M	B	N/A		
AA11-G	18	WH	TXL	1661261C1	1667305C1	3205M	B	N/A		
CT86HB	18	LTGN	TXL	1661261C1	1667305C1	3205M	C	N/A		
MB86HB	18	LTGN	TXL	1661261C1	1667305C1	3205M	C	N/A		
MV86H	18	LTGN	TXL	1661261C1	1667305C1	3205M	C	N/A		
MX86AH	18	LTGN	TXL	1661261C1	1667305C1	3205M	C	N/A		
CT86HB	18	LTGN	TXL	1661261C1	1667305C1	3205M	C	N/A		
MB86HB	18	LTGN	TXL	1661261C1	1667305C1	3205M	C	N/A		
MV86H	18	LTGN	TXL	1661261C1	1667305C1	3205M	C	N/A		
MX86AH	18	LTGN	TXL	1661261C1	1667305C1	3205M	C	N/A		
CT86JB	18	LTGN	TXL	1661261C1	1667305C1	3205M	D	N/A		
MB86JB	18	LTGN	TXL	1661261C1	1667305C1	3205M	D	N/A		
MV86J	18	LTGN	TXL	1661261C1	1667305C1	3205M	D	N/A		
MX86AJ	18	LTGN	TXL	1661261C1	1667305C1	3205M	D	N/A		
CT86JB	18	LTGN	TXL	1661261C1	1667305C1	3205M	D	N/A		
MB86JB	18	LTGN	TXL	1661261C1	1667305C1	3205M	D	N/A		
MV86J	18	LTGN	TXL	1661261C1	1667305C1	3205M	D	N/A		
MX86AJ	18	LTGN	TXL	1661261C1	1667305C1	3205M	D	N/A		
AA63BC	18	DKBL	TXL	1661261C1	1667305C1	3206M	A	N/A		
AA63BC	18	DKBL	TXL	1661261C1	1667305C1	3206M	A	N/A		
AA11-GK	18	WH	TXL	1661261C1	1667305C1	3206M	B	N/A		
AA11-GK	18	WH	TXL	1661261C1	1667305C1	3206M	B	N/A		
CT86K	18	LTGN	TXL	1661261C1	1667305C1	3206M	C	N/A		
MB86K	18	LTGN	TXL	1661261C1	1667305C1	3206M	C	N/A		
MV86K	18	LTGN	TXL	1661261C1	1667305C1	3206M	C	N/A		
MX86AK	18	LTGN	TXL	1661261C1	1667305C1	3206M	C	N/A		
CT86K	18	LTGN	TXL	1661261C1	1667305C1	3206M	C	N/A		
MB86K	18	LTGN	TXL	1661261C1	1667305C1	3206M	C	N/A		
MV86K	18	LTGN	TXL	1661261C1	1667305C1	3206M	C	N/A		
MX86AK	18	LTGN	TXL	1661261C1	1667305C1	3206M	C	N/A		
CT86L	18	LTGN	TXL	1661261C1	1667305C1	3206M	D	N/A		
MB86L	18	LTGN	TXL	1661261C1	1667305C1	3206M	D	N/A		
MV86L	18	LTGN	TXL	1661261C1	1667305C1	3206M	D	N/A		
MX86AL	18	LTGN	TXL	1661261C1	1667305C1	3206M	D	N/A		
CT86L	18	LTGN	TXL	1661261C1	1667305C1	3206M	D	N/A		
MB86L	18	LTGN	TXL	1661261C1	1667305C1	3206M	D	N/A		
MV86L	18	LTGN	TXL	1661261C1	1667305C1	3206M	D	N/A		
MX86AL	18	LTGN	TXL	1661261C1	1667305C1	3206M	D	N/A		
MA11-GC	12	WH	GXL	3866817C1		4005B	1	2644005R1	1661874C1	
MA11-GC	12	WH	GXL	3866817C1		4005B	1	2644005R1		
AG14P	8	RD	GXL	373756C2		4007A	1	2644054R1		
AG14P	8	RD	GXL	3525614C1	3515523C1	4007B	A	3515525C1		
AG14AA	8	RD	GXL	3525614C1	3515523C1	4007B	B	3515525C1		
3A94-GD	14	WH	TXL	3581768C1		4081A	1	2644038R1		
XY94-GA	12	WH	TXL	3581768C1		4081A	1	2644038R1		
3A94-GD	14	WH	TXL	3581768C1		4081A	1	2644038R1		
XY94-GA	12	WH	TXL	3581768C1		4081A	1	2644038R1		
RX68BB	14	BN	TXL	3535486C1	2039311C91	4450BM	A	1652325C1		
RX56BB	16	YL	TXL	2039343C1	2039311C91	4450BM	B	1652325C1		

Circuit Number	Gauge	Color	Insulation	Terminal / Splice Number	Connector Part number	Connector Number	Cavity	Seal/Sleeve	Lock 1	Lock 2
RX57BB	16	LTGN	TXL	2039343C1	2039311C91	4450BM	C	1652325C1		
RX54BB	14	BN	TXL	3535486C1	2039311C91	4450BM	D	1652325C1		
RX71BB	16	LTBL	TXL	2039343C1	2039311C91	4450BM	E	1652325C1		
RX12BB	16	LTBL	TXL	2039343C1	2039311C91	4450BM	F	1652325C1		
RX11-GBB	12	WH	TXL	2039313C1	2039311C91	4450BM	G	589391C1		
BB68	14	BN	TXL	2033912C1	2039312C91	4450F	A	1652325C1		
RX68BB	14	BN	TXL	2033912C1	2039312C91	4450F	A	1652325C1		
BB68	14	BN	TXL	2033912C1	2039312C91	4450F	A	1652325C1		
BB56A	16	YL	TXL	2033911C1	2039312C91	4450F	B	1652325C1		
RX56BB	16	YL	TXL	2033911C1	2039312C91	4450F	B	1652325C1		
BB56AA	16	YL	TXL	2033911C1	2039312C91	4450F	B	1652325C1		
BB57A	16	LTGN	TXL	2033911C1	2039312C91	4450F	C	1652325C1		
RX57BB	16	LTGN	TXL	2033911C1	2039312C91	4450F	C	1652325C1		
BB57A	16	LTGN	TXL	2033911C1	2039312C91	4450F	C	1652325C1		
BB54	14	BN	TXL	2033912C1	2039312C91	4450F	D	1652325C1		
RX54BB	14	BN	TXL	2033912C1	2039312C91	4450F	D	1652325C1		
BB54	14	BN	TXL	2033912C1	2039312C91	4450F	D	1652325C1		
BB71	16	LTBL	TXL	2033911C1	2039312C91	4450F	E	1652325C1		
RX71BB	16	LTBL	TXL	2033911C1	2039312C91	4450F	E	1652325C1		
BB71	16	LTBL	TXL	2033911C1	2039312C91	4450F	E	1652325C1		
BB12	16	LTBL	TXL	2033911C1	2039312C91	4450F	F	1652325C1		
RX12BB	16	LTBL	TXL	2033911C1	2039312C91	4450F	F	1652325C1		
BB12	16	LTBL	TXL	2033911C1	2039312C91	4450F	F	1652325C1		
RX11-GBB	12	WH	TXL	2033912C1	2039312C91	4450F	G	589391C1		
PU68BB	14	BN	TXL	3535486C1	2039311C91	4450FM	A	1652325C1		
PV68BB	14	BN	TXL	3535486C1	2039311C91	4450FM	A	1652325C1		
PU56BB	16	YL	TXL	2039343C1	2039311C91	4450FM	B	1652325C1		
PV56BB	16	YL	TXL	2039343C1	2039311C91	4450FM	B	1652325C1		
PU57BB	16	LTGN	TXL	2039343C1	2039311C91	4450FM	C	1652325C1		
PV57BB	16	LTGN	TXL	2039343C1	2039311C91	4450FM	C	1652325C1		
PU54BB	14	BN	TXL	3535486C1	2039311C91	4450FM	D	1652325C1		
PV54BB	14	BN	TXL	3535486C1	2039311C91	4450FM	D	1652325C1		
PV71BB	16	LTBL	TXL	2039343C1	2039311C91	4450FM	E	1652325C1		
PU12BB	16	LTBL	TXL	2039343C1	2039311C91	4450FM	F	1652325C1		
PV12BB	16	LTBL	TXL	2039343C1	2039311C91	4450FM	F	1652325C1		
PU68BB	14	BN	TXL	3535486C1	2039311C91	4450M	A	1652325C1		
PU56BB	16	YL	TXL	2039343C1	2039311C91	4450M	B	1652325C1		
PU57BB	16	LTGN	TXL	2039343C1	2039311C91	4450M	C	1652325C1		
PU54BB	14	BN	TXL	3535486C1	2039311C91	4450M	D	1652325C1		
PU71BB	16	LTBL	TXL	2039343C1	2039311C91	4450M	E	1652325C1		
PU71BB	16	LTBL	TXL	2039343C1	2039311C91	4450M	E	1652325C1		
PU12BB	16	LTBL	TXL	2039343C1	2039311C91	4450M	F	1652325C1		
PU11-GBB	12	WH	TXL	2039313C1	2039311C91	4450M	G	589391C1		
PV68BB	14	BN	TXL	3535486C1	2039311C91	4450RM	A	1652325C1		
PV56BB	16	YL	TXL	2039343C1	2039311C91	4450RM	B	1652325C1		
PV57BB	16	LTGN	TXL	2039343C1	2039311C91	4450RM	C	1652325C1		
PV54BB	14	BN	TXL	3535486C1	2039311C91	4450RM	D	1652325C1		
PV71BB	16	LTBL	TXL	2039343C1	2039311C91	4450RM	E	1652325C1		
PV12BB	16	LTBL	TXL	2039343C1	2039311C91	4450RM	F	1652325C1		
PV11-GBB	12	WH	TXL	2039313C1	2039311C91	4450RM	G	589391C1		
RX56BC	16	YL	TXL	2033819C1	1686834C1	4460BM	A	1652325C1		
RX57BC	16	LTGN	TXL	2033819C1	1686834C1	4460BM	B	1652325C1		

Circuit Number	Gauge	Color	Insulation	Terminal / Splice Number	Connector Part number	Connector Number	Cavity	Seal/Sleeve	Lock 1	Lock 2
RX70BB	12	RD	TXL	2033816C1	1686834C1	4460BM	C	589391C1		
BB56B	16	YL	TXL	2033911C1	3553961C1	4460F	A	1652325C1		
RX56BC	16	YL	TXL	2033911C1	3553961C1	4460F	A	1652325C1		
BB56B	16	YL	TXL	2033911C1	3553961C1	4460F	A	1652325C1		
BB57B	16	LTGN	TXL	2033911C1	3553961C1	4460F	B	1652325C1		
RX57BC	16	LTGN	TXL	2033911C1	3553961C1	4460F	B	1652325C1		
BB57B	16	LTGN	TXL	2033911C1	3553961C1	4460F	B	1652325C1		
BB70	12	RD	TXL	2033912C1	3553961C1	4460F	C	589391C1		
RX70BB	12	RD	TXL	2033912C1	3553961C1	4460F	C	589391C1		
BB70	12	RD	TXL	2033912C1	3553961C1	4460F	C	589391C1		
PU56BC	16	YL	TXL	2033819C1	1686834C1	4460FM	A	1652325C1		
PV56BC	16	YL	TXL	2033819C1	1686834C1	4460FM	A	1652325C1		
PU57BC	16	LTGN	TXL	2033819C1	1686834C1	4460FM	B	1652325C1		
PV57BC	16	LTGN	TXL	2033819C1	1686834C1	4460FM	B	1652325C1		
PU70BB	12	RD	TXL	2033816C1	1686834C1	4460FM	C	589391C1		
PV70BB	12	RD	TXL	2033816C1	1686834C1	4460FM	C	589391C1		
PU56BC	16	YL	TXL	2033819C1	1686834C1	4460M	A	1652325C1		
PU57BC	16	LTGN	TXL	2033819C1	1686834C1	4460M	B	1652325C1		
PU70BB	12	RD	TXL	2033816C1	1686834C1	4460M	C	589391C1		
PV56BC	16	YL	TXL	2033819C1	1686834C1	4460RM	A	1652325C1		
PV57BC	16	LTGN	TXL	2033819C1	1686834C1	4460RM	B	1652325C1		
PV70BB	12	RD	TXL	2033816C1	1686834C1	4460RM	C	589391C1		
CF13SD	18	PK	TXL	3722128C1		4TB1	1	2644038R1		
CF13SD	18	PK	TXL	3722128C1		4TB1	1	2644038R1		
DX14VA	12	RD	TXL	3574287C1	3595621C1	5000A	1	N/A		
5H182AC	18	LTGN	GXL	2003343C1	3595621C1	5000A	2	N/A		
3Y12B	20	LTBL	TXL	2003343C1	3595621C1	5000A	2	N/A		
AW12B	20	LTBL	TXL	2003343C1	3595621C1	5000A	2	N/A		
MW86BB	18	LTGN	TXL	2003343C1	3595621C1	5000A	3	N/A		
MW86BB	18	LTGN	TXL	2003343C1	3595621C1	5000A	3	N/A		
MW86CB	18	LTGN	TXL	2003343C1	3595621C1	5000A	4	N/A		
MW86CB	18	LTGN	TXL	2003343C1	3595621C1	5000A	4	N/A		
MW86DB	18	LTGN	TXL	2003343C1	3595621C1	5000A	5	N/A		
MW86DB	18	LTGN	TXL	2003343C1	3595621C1	5000A	5	N/A		
MW86EB	18	LTGN	TXL	2003343C1	3595621C1	5000A	6	N/A		
MW86EB	18	LTGN	TXL	2003343C1	3595621C1	5000A	6	N/A		
MY66AA	18	LTGN	TXL	2003343C1	3595621C1	5000A	8	N/A		
MY66AA	18	LTGN	TXL	2003343C1	3595621C1	5000A	8	N/A		
DA62DC	16	DKBL	TXL	3574288C1	3595621C1	5000A	9	N/A		
4G62DC	16	DKBL	TXL	3574288C1	3595621C1	5000A	9	N/A		
MY86AC	18	LTGN	TXL	2003343C1	3595621C1	5000A	10	N/A		
MY86AC	18	LTGN	TXL	2003343C1	3595621C1	5000A	10	N/A		
MX86K	18	LTGN	TXL	2003343C1	3595621C1	5000A	11	N/A		
MX86K	18	LTGN	TXL	2003343C1	3595621C1	5000A	11	N/A		
MX86L	18	LTGN	TXL	2003343C1	3595621C1	5000A	12	N/A		
MX86L	18	LTGN	TXL	2003343C1	3595621C1	5000A	12	N/A		
MX86AK	18	LTGN	TXL	2003343C1	3595621C1	5000A	13	N/A		
MX86AK	18	LTGN	TXL	2003343C1	3595621C1	5000A	13	N/A		
MX86AL	18	LTGN	TXL	2003343C1	3595621C1	5000A	14	N/A		
MX86AL	18	LTGN	TXL	2003343C1	3595621C1	5000A	14	N/A		
MX86AH	18	LTGN	TXL	2003343C1	3595621C1	5000A	15	N/A		
MX86AH	18	LTGN	TXL	2003343C1	3595621C1	5000A	15	N/A		

Circuit Number	Gauge	Color	Insulation	Terminal / Splice Number	Connector Part number	Connector Number	Cavity	Seal/Sleeve	Lock 1	Lock 2
MX86AJ	18	LTGN	TXL	2003343C1	3595621C1	5000A	16	N/A		
MX86AJ	18	LTGN	TXL	2003343C1	3595621C1	5000A	16	N/A		
AC12B	18	LTBL	TXL	2003343C1	3595621C1	5000A	17	N/A		
DX63AW	20	DKBL	TXL	2003343C1	3595621C1	5000A	18	N/A		
DX63AW	20	DKBL	TXL	2003343C1	3595621C1	5000A	18	N/A		
EM58BLT	14	BN	TXL	3574285C1	3595621C1	5000A	19	N/A		
EM58BLT	14	BN	TXL	3574285C1	3595621C1	5000A	19	N/A		
BT65	18	OR	TXL	2003343C1	3595621C1	5000A	20	N/A		
BU65AA	18	OR	TXL	2003343C1	3595621C1	5000A	20	N/A		
BY65AA	16	OR	TXL	3574285C1	3595621C1	5000A	20	N/A		
BT65	18	OR	TXL	2003343C1	3595621C1	5000A	20	N/A		
BU65AA	18	OR	TXL	2003343C1	3595621C1	5000A	20	N/A		
BY65AA	16	OR	TXL	3574285C1	3595621C1	5000A	20	N/A		
BY65AB	16	OR	TXL	3574285C1	3595621C1	5000A	21	N/A		
BY65AB	16	OR	TXL	3574285C1	3595621C1	5000A	21	N/A		
DX109S	18	GY	TXL	2003343C1	3595621C1	5000A	22	N/A		
DX109S	20	GY	TXL	2003343C1	3595621C1	5000A	22	N/A		
MX86H	18	LTGN	TXL	2003343C1	3595621C1	5000A	23	N/A		
MX86H	18	LTGN	TXL	2003343C1	3595621C1	5000A	23	N/A		
MX86J	18	LTGN	TXL	2003343C1	3595621C1	5000A	24	N/A		
MX86J	18	LTGN	TXL	2003343C1	3595621C1	5000A	24	N/A		
YE75WA	14	RD	TXL	3574285C1	3595621C1	5000A	25	N/A		
YE75WP	18	LTGN	TXL	2003343C1	3595621C1	5000A	26	N/A		
YE75WP	18	LTGN	TXL	2003343C1	3595621C1	5000A	26	N/A		
AP75WC	18	LTGN	TXL	2003343C1	3595621C1	5000A	27	N/A		
AP75WC	18	LTGN	TXL	2003343C1	3595621C1	5000A	27	N/A		
3G77A	20	LTGN	TXL	2003343C1	3595621C1	5000A	28	N/A		
3G77A	20	LTGN	TXL	2003343C1	3595621C1	5000A	28	N/A		
3G77B	20	LTGN	TXL	2003343C1	3595621C1	5000A	29	N/A		
3G77B	20	LTGN	TXL	2003343C1	3595621C1	5000A	29	N/A		
2J62A	18	DKBL	TXL	2003343C1	3595621C1	5000A	31	N/A		
DX62A	18	DKBL	TXL	2003343C1	3595621C1	5000A	31	N/A		
DX63E	18	DKBL	TXL	2003343C1	3595621C1	5000A	32	N/A		
DX63E	20	DKBL	TXL	2003343C1	3595621C1	5000A	32	N/A		
EL63F	18	DKBL	TXL	2003343C1	3595621C1	5000A	33	N/A		
EL63F	18	DKBL	TXL	2003343C1	3595621C1	5000A	33	N/A		
RP14XX	12	RD	TXL	3574287C1	3595621C1	5000A	34	N/A		
KP5AG(+)	18	YL	TXL	2003343C1	3595621C1	5000A	35	N/A		
KU5AG(+)	18	YL	TXL	2003343C1	3595621C1	5000A	35	N/A		
LN5AG(+)	18	YL	TXL	2003343C1	3595621C1	5000A	35	N/A		
KP5AG(+)	18	YL	TXL	2003343C1	3595621C1	5000A	35	N/A		
KU5AG(+)	18	YL	TXL	2003343C1	3595621C1	5000A	35	N/A		
LN5AG(+)	18	YL	TXL	2003343C1	3595621C1	5000A	35	N/A		
KP5AG(-)	18	GN	TXL	2003343C1	3595621C1	5000A	36	N/A		
KU5AG(-)	18	GN	TXL	2003343C1	3595621C1	5000A	36	N/A		
LN5AG(-)	18	GN	TXL	2003343C1	3595621C1	5000A	36	N/A		
KP5AG(-)	18	GN	TXL	2003343C1	3595621C1	5000A	36	N/A		
KU5AG(-)	18	GN	TXL	2003343C1	3595621C1	5000A	36	N/A		
LN5AG(-)	18	GN	TXL	2003343C1	3595621C1	5000A	36	N/A		
DX63C	18	DKBL	TXL	2003343C1	3595621C1	5000A	37	N/A		
DX63C	20	DKBL	TXL	2003343C1	3595621C1	5000A	37	N/A		
KK5(+)	18	YL	TXL	2003343C1	3595621C1	5000A	38	N/A		

Circuit Number	Gauge	Color	Insulation	Terminal / Splice Number	Connector Part number	Connector Number	Cavity	Seal/Sleeve	Lock 1	Lock 2
KK5(+)	18	YL	TXL	2003343C1	3595621C1	5000A	38	N/A		
KK5(-)	18	GN	TXL	2003343C1	3595621C1	5000A	39	N/A		
KK5(-)	18	GN	TXL	2003343C1	3595621C1	5000A	39	N/A		
AG166BBA	20	LTGN	TXL	2003343C1	3595621C1	5000A	40	N/A		
YE75WB	18	RD	TXL	2003343C1	3595621C1	5000A	41	N/A		
AG166AB	20	LTGN	TXL	2003343C1	3595621C1	5000A	41	N/A		
DX14VBA	10	RD	TXL	3574287C1	3595621C1	5000A	42	N/A		
MZ86R	18	LTGN	TXL	1661261C1	3540612C1	5011M	A	N/A		
MZ86R	20	LTGN	TXL	3544254C1	3540612C1	5011M	A	N/A		
NL86AJ	18	LTGN	TXL	1661261C1	3540612C1	5011M	A	N/A		
MZ86AE	18	LTGN	TXL	1661261C1	3540612C1	5011M	B	N/A		
MZ86AE	18	LTGN	TXL	1661261C1	3540612C1	5011M	B	N/A		
NL86AE	18	LTGN	TXL	1661261C1	3540612C1	5011M	B	N/A		
MZ86F	18	YL	TXL	1661261C1	3540612C1	5011M	E	N/A		
MZ86F	18	YL	TXL	1661261C1	3540612C1	5011M	E	N/A		
NL86F	18	YL	TXL	1661261C1	3540612C1	5011M	E	N/A		
MX86AR	18	LTGN	TXL	1661261C1	3540612C1	5011M	F	N/A		
MX86AR	18	LTGN	TXL	1661261C1	3540612C1	5011M	F	N/A		
MX86AS	18	LTGN	TXL	1661261C1	3540612C1	5011M	G	N/A		
MX86AS	18	LTGN	TXL	1661261C1	3540612C1	5011M	G	N/A		
MX86AT	18	LTGN	TXL	1661261C1	3540612C1	5011M	H	N/A		
MX86AT	18	LTGN	TXL	1661261C1	3540612C1	5011M	H	N/A		
MX86AU	18	LTGN	TXL	1661261C1	3540612C1	5011M	J	N/A		
MX86AU	18	LTGN	TXL	1661261C1	3540612C1	5011M	J	N/A		
HF94TT	14	GY	TXL	587577C1	587567C91	5758F	A	1652325C1		
HF94TT	18	GY	TXL	587578C1	587567C91	5758F	A	3517771C1		
HG94TT	14	GY	TXL	587577C1	587567C91	5759F	A	1652325C1		
HG94TT	18	GY	TXL	587578C1	587567C91	5759F	A	3517771C1		
VG2	2	RD	SGX	2012973C1		6100A	1	2644004R1		
KB2	2	RD	SGX	3820000C1		6100B	1	3812582R1		
VD2	1	RD	SGX	3870430C1		6100D	1	2643308R1		
VM2	1	RD	SGX	3870430C1		6100E	1	2643308R1		
VE2	2	RD	SGX	2012973C1		6100F	1	2644004R1		
VF2	2	RD	SGX	571717C1		6100G	1	3812582R1		
WX2	2	RD	SGX	2012973C1		6100H	1	2644004R1		
KR2	2	RD	SGX	3820000C1		6100J	A	3812582R1		
VG2-G	2	WH	SGX	2012973C1		6101A	1	2644004R1		
KB2-G	2	WH	SGX	571717C1		6101B	1	3812582R1		
VD2-G	1	WH	SGX	3870430C1		6101D	1	2643308R1		
VM2-G	1	WH	SGX	3870430C1		6101E	1	2643308R1		
VE2-G	2	WH	SGX	571717C1		6101F	1	3812582R1		
VF2-G	2	WH	SGX	571717C1		6101G	1	3812582R1		
WX2-G	2	WH	SGX	571717C1		6101H	1	3812582R1		
KR2-G	2	WH	SGX	571717C1		6101J	A	3812582R1		
YN9AB	20	GY	TXL	3702881C1	3600324C1	6201B	1	3600327C1		
YN77B	20	LTGN	TXL	3702881C1	3600324C1	6201B	2	3600327C1		
YN77C	20	LTGN	TXL	3702881C1	3600324C1	6201B	3	3600327C1		
YN6DB	20	GY	TXL	3702881C1	3600324C1	6201B	4	3600327C1		
YL9AB	20	GY	TXL	3702881C1	3600324C1	6201P	1	3600327C1		
YL77B	20	LTGN	TXL	3702881C1	3600324C1	6201P	2	3600327C1		
YL77C	20	LTGN	TXL	3702881C1	3600324C1	6201P	3	3600327C1		
YL6DB	20	GY	TXL	3702881C1	3600324C1	6201P	4	3600327C1		

Circuit Number	Gauge	Color	Insulation	Terminal / Splice Number	Connector Part number	Connector Number	Cavity	Seal/Sleeve	Lock 1	Lock 2
VD2C-FL	10	RS	FUS	3693775C1		6301C	1	2644005R1		
VD2A-FL	10	RS	FUS	338892C2		6301D	1	2644054R1		
VD2B-FL	10	RS	FUS	338892C2		6301D	1	2644054R1		
KB2A-FL	10	RS	FUS	338892C2		6301E	1	2644054R1		
KB2B-FL	10	RS	FUS	338892C2		6301E	1	2644054R1		
VG2A-FL	10	RS	FUS	338892C2		6301E	1	2644054R1		
VG2B-FL	10	RS	FUS	338892C2		6301E	1	2644054R1		
VM2C-FL	10	RS	FUS	365685C2		6301F	1	2644005R1		
VE2A-FL	10	RS	FUS	338892C2		6301G	1	2644054R1		
VE2B-FL	10	RS	FUS	338892C2		6301G	1	2644054R1		
WX2A-FL	10	RS	FUS	338892C2		6301G	1	2644054R1		
WX2B-FL	10	RS	FUS	338892C2		6301G	1	2644054R1		
VF2A-FL	10	RS	FUS	338892C2		6301H	1	2644054R1		
VF2B-FL	10	RS	FUS	338892C2		6301H	1	2644054R1		
KR2A-FL	10	RS	FUS	338892C2		6301J	A	2644054R1		
KR2B-FL	10	RS	FUS	338892C2		6301J	A	2644054R1		
VM2-G	1	WH	SGX	475965C1		6302B	1	2644004R1		
VK17D	16	PK	GXL	3692844C1		6305M	1	2644038R1		
WA10-GA	16	WH	GXL	3695859C1		6314A	1	2644005R1		
WC10-GF	6	WH	SGX	480417C1		6314B	1	2644002R1		
KG10-GC	10	BK	TXL	3866817C1		6314C	1	2644005R1		
VK17D	16	PK	GXL	2036586C1	2036583C1	6316M	A	N/A		
LB17D	16	PK	GXL	2036586C1	2036583C1	6316M	A	N/A		
VK17	16	PK	GXL	2036586C1	2036583C1	6316M	B	N/A		
LB17	16	PK	GXL	2036586C1	2036583C1	6316M	B	N/A		
ZB23A	18	TN	TXL	1661875C1	3522068C1	6400A	A	3568570C1		
ZC23A2	18	TN	TXL	1661875C1	3522068C1	6400A	A	3568570C1		
ZA23-G	18	WH	TXL	1661875C1	3522068C1	6400A	B	3568570C1		
JE9AAB	18	GY	GXL	1661875C1	3522068C1	6703A	A	1661872C1		
JE28	18	TN	GXL	1661875C1	3522068C1	6703A	B	1661872C1		
KE9AAB	18	GY	TXL	1661875C1	3522068C1	6703B	A	3568570C1		
KE28	18	TN	GXL	1661875C1	3522068C1	6703B	B	1661872C1		
AP9B	18	VT	TXL	2033819C1	3551896C1	6704B	A	3517771C1		
AY9B	18	VT	TXL	2033819C1	3551896C1	6704B	A	3517771C1		
LE9B	18	VT	TXL	2033819C1	3551896C1	6704B	A	3517771C1		
LF9B	18	VT	TXL	2033819C1	3551896C1	6704B	A	3517771C1		
KD92B20	18	TN	TXL	2033819C1	3551896C1	6704B	B	3517771C1		
WA92B20	18	TN	TXL	2033819C1	3551896C1	6704B	B	3517771C1		
WC92B20	18	TN	TXL	2033819C1	3551896C1	6704B	B	3517771C1		
SG92A3	18	TN	TXL	2033819C1	3551896C1	6704B	C	3517771C1		
VA95W	18	TN	TXL	2033819C1	3551896C1	6704B	D	3517771C1		
VE95W	18	TN	TXL	2033819C1	3551896C1	6704B	D	3517771C1		
KB34B	18	TN	TXL	2033819C1	3551896C1	6704B	F	3517771C1		
KA41-GH	4	WH	SGX	475961C1		6704H	1	3812582R1		
TP95DVL	20	TN	150	3573077C1	3573078C1	670A	1	N/A		
AP95DVL	20	TN	150	3573077C1	3573078C1	670A	1	N/A		
LE95DVL	20	TN	150	3573077C1	3573078C1	670A	1	N/A		
TP95DVH	20	TN	150	3573077C1	3573078C1	670A	2	N/A		
AP95DVH	20	TN	150	3573077C1	3573078C1	670A	2	N/A		
LE95DVH	20	TN	150	3573077C1	3573078C1	670A	2	N/A		
TP95BA	20	TN	150	3573077C1	3573078C1	670A	3	N/A		
AP95BA	18	TN	150	3573077C1	3573078C1	670A	3	N/A		

Circuit Number	Gauge	Color	Insulation	Terminal / Splice Number	Connector Part number	Connector Number	Cavity	Seal/Sleeve	Lock 1	Lock 2
LE95BA	18	TN	150	3573077C1	3573078C1	670A	3	N/A		
TP95BC	20	TN	150	3573077C1	3573078C1	670A	4	N/A		
AP95BC	18	TN	150	3573077C1	3573078C1	670A	4	N/A		
LE95BC	18	TN	150	3573077C1	3573078C1	670A	4	N/A		
GM6	18	TN	150	3573077C1	3573078C1	670A	5	N/A		
ZD95DA	18	TN	150	3573077C1	3573078C1	670A	5	N/A		
ZE95DB	20	TN	150	3573077C1	3573078C1	670A	5	N/A		
GM9	18	TN	150	3573077C1	3573078C1	670A	7	N/A		
AP9	20	TN	150	3573077C1	3573078C1	670A	7	N/A		
LE9	20	TN	150	3573077C1	3573078C1	670A	7	N/A		
TP95K	20	TN	150	3573077C1	3573078C1	670A	8	N/A		
AP95K	18	TN	150	3573077C1	3573078C1	670A	8	N/A		
LE95K	18	TN	150	3573077C1	3573078C1	670A	8	N/A		
TP5A(+)	18	YL	193	3573077C1	3573078C1	670A	9	N/A		
AP5C(+)	18	YL	193	3573077C1	3573078C1	670A	9	N/A		
LE5C(+)	18	YL	193	3573077C1	3573078C1	670A	9	N/A		
TP5A(-)	18	GN	193	3573077C1	3573078C1	670A	10	N/A		
AP5C(-)	18	GN	193	3573077C1	3573078C1	670A	10	N/A		
LE5C(-)	18	GN	193	3573077C1	3573078C1	670A	10	N/A		
TL10-AH	12	WH	150	3753255C1	3573078C1	670A	11	N/A		
TM10-AH	12	WH	150	3753255C1	3573078C1	670A	11	N/A		
AL10-AG	12	WH	150	3753255C1	3573078C1	670A	11	N/A		
AM10-AG	12	WH	150	3753255C1	3573078C1	670A	11	N/A		
TL13R2	12	PK	150	3753255C1	3573078C1	670A	12	N/A		
TM13R2	12	PK	150	3753255C1	3573078C1	670A	12	N/A		
AL13R	12	PK	150	3753255C1	3573078C1	670A	12	N/A		
AM13R	12	PK	150	3753255C1	3573078C1	670A	12	N/A		
TL5(+)	18	YL	193	3573077C1	3573078C1	670A	13	N/A		
TM5(+)	18	YL	193	3573077C1	3573078C1	670A	13	N/A		
AL5(+)	18	YL	193	3573077C1	3573078C1	670A	13	N/A		
AM5(+)	18	YL	193	3573077C1	3573078C1	670A	13	N/A		
TL5(-)	18	GN	193	3573077C1	3573078C1	670A	14	N/A		
TM5(-)	18	GN	193	3573077C1	3573078C1	670A	14	N/A		
AL5(-)	18	GN	193	3573077C1	3573078C1	670A	14	N/A		
AM5(-)	18	GN	193	3573077C1	3573078C1	670A	14	N/A		
TY95DVL	20	TN	150	3573077C1	3573078C1	670B	1	N/A		
AY95DVL	20	TN	150	3573077C1	3573078C1	670B	1	N/A		
LF95DVL	20	TN	150	3573077C1	3573078C1	670B	1	N/A		
TY95DVH	20	TN	150	3573077C1	3573078C1	670B	2	N/A		
AY95DVH	20	TN	150	3573077C1	3573078C1	670B	2	N/A		
LF95DVH	20	TN	150	3573077C1	3573078C1	670B	2	N/A		
TY95BA	20	TN	150	3573077C1	3573078C1	670B	3	N/A		
AY95BA	18	TN	150	3573077C1	3573078C1	670B	3	N/A		
LF95BA	18	TN	150	3573077C1	3573078C1	670B	3	N/A		
TY95BC	20	TN	150	3573077C1	3573078C1	670B	4	N/A		
AY95BC	18	TN	150	3573077C1	3573078C1	670B	4	N/A		
LF95BC	18	TN	150	3573077C1	3573078C1	670B	4	N/A		
GN6	18	TN	150	3573077C1	3573078C1	670B	5	N/A		
ZF95DA	18	TN	150	3573077C1	3573078C1	670B	5	N/A		
ZG95DB	20	TN	150	3573077C1	3573078C1	670B	5	N/A		
GN9	18	TN	150	3573077C1	3573078C1	670B	7	N/A		
AY9	20	TN	150	3573077C1	3573078C1	670B	7	N/A		

Circuit Number	Gauge	Color	Insulation	Terminal / Splice Number	Connector Part number	Connector Number	Cavity	Seal/Sleeve	Lock 1	Lock 2
LF9	20	TN	150	3573077C1	3573078C1	670B	7	N/A		
TY95K	20	TN	150	3573077C1	3573078C1	670B	8	N/A		
AY95K	18	TN	150	3573077C1	3573078C1	670B	8	N/A		
LF95K	18	TN	150	3573077C1	3573078C1	670B	8	N/A		
TY5A(+)	18	YL	193	3573077C1	3573078C1	670B	9	N/A		
AY5C(+)	18	YL	193	3573077C1	3573078C1	670B	9	N/A		
LF5C(+)	18	YL	193	3573077C1	3573078C1	670B	9	N/A		
TY5A(-)	18	GN	193	3573077C1	3573078C1	670B	10	N/A		
AY5C(-)	18	GN	193	3573077C1	3573078C1	670B	10	N/A		
LF5C(-)	18	GN	193	3573077C1	3573078C1	670B	10	N/A		
TS10-AH	12	WH	150	3753255C1	3573078C1	670B	11	N/A		
AS10-AG	12	WH	150	3753255C1	3573078C1	670B	11	N/A		
TS13R2	12	PK	150	3753255C1	3573078C1	670B	12	N/A		
AS13R	12	PK	150	3753255C1	3573078C1	670B	12	N/A		
TS5(+)	18	YL	193	3573077C1	3573078C1	670B	13	N/A		
AS5(+)	18	YL	193	3573077C1	3573078C1	670B	13	N/A		
TS5(-)	18	GN	193	3573077C1	3573078C1	670B	14	N/A		
AS5(-)	18	GN	193	3573077C1	3573078C1	670B	14	N/A		
TK95E	20	TN	TXL	3626441C1	6114577C1	674B	1	N/A		
AK95E	20	TN	TXL	3626441C1	6114577C1	674B	1	N/A		
TK95F	20	TN	TXL	3626441C1	6114577C1	674B	2	N/A		
AK95F	18	TN	TXL	3626441C1	6114577C1	674B	2	N/A		
TK95H	18	TN	TXL	3626441C1	6114577C1	674B	3	N/A		
AK95H	18	TN	TXL	3626441C1	6114577C1	674B	3	N/A		
TK95AR1	18	TN	TXL	3626441C1	6114577C1	674B	4	N/A		
AK95AR1	18	TN	TXL	3626441C1	6114577C1	674B	4	N/A		
TK95AC	20	TN	TXL	3626441C1	6114577C1	674B	5	N/A		
CB95GE	18	TN	TXL	3626441C1	6114577C1	674B	5	N/A		
CD95AC	20	TN	TXL	3626441C1	6114577C1	674B	5	N/A		
TK95AB	18	TN	TXL	3626441C1	6114577C1	674B	6	N/A		
AK95AB	18	TN	TXL	3626441C1	6114577C1	674B	6	N/A		
TK95AS1	18	TN	TXL	3626441C1	6114577C1	674B	7	N/A		
AK95AS1	18	TN	TXL	3626441C1	6114577C1	674B	7	N/A		
TK95AT1	18	TN	TXL	3626441C1	6114577C1	674B	8	N/A		
AK95AT1	18	TN	TXL	3626441C1	6114577C1	674B	8	N/A		
TK95AU1	18	TN	TXL	3626441C1	6114577C1	674B	9	N/A		
AK95AU1	18	TN	TXL	3626441C1	6114577C1	674B	9	N/A		
TK95-GB	16	BK	TXL	3627568C1	6114577C1	674B	10	N/A		
AM95-GB	16	BK	TXL	3627568C1	6114577C1	674B	10	N/A		
TM10-GL	18	WH	TXL	3626441C1	6114577C1	674B	11	N/A		
AM95-GL	16	BK	TXL	3627568C1	6114577C1	674B	11	N/A		
TM13AA	18	PK	TXL	3626441C1	6114577C1	674B	12	N/A		
AM13AA	18	RD	TXL	3626441C1	6114577C1	674B	12	N/A		
TM5(+)	18	YL	193	3626441C1	6114577C1	674B	13	N/A		
AM5(+)	18	YL	193	3626441C1	6114577C1	674B	13	N/A		
TM5(-)	18	GN	193	3626441C1	6114577C1	674B	14	N/A		
AM5(-)	18	GN	193	3626441C1	6114577C1	674B	14	N/A		
CF98A(+)	18	DKBL	TXL	3722128C1		6TB1	1	2644038R1		
CF98A(+)	18	DKBL	TXL	3722128C1		6TB1	1	2644038R1		
KH5V(-)	18	GN	TXL	3555249C1	3599542C1	7105A	2	N/A		
KH5V(+)	18	YL	TXL	3555249C1	3599542C1	7105A	3	N/A		
KH17-GC	18	PK	GXL	3518963C1	3599542C1	7105A	4	N/A		

Circuit Number	Gauge	Color	Insulation	Terminal / Splice Number	Connector Part number	Connector Number	Cavity	Seal/Sleeve	Lock 1	Lock 2
KH3BA(+)	18	DKBL	GXL	3555249C1	3599542C1	7105A	10	N/A		
KH3BA(-)	18	GY	GXL	3555249C1	3599542C1	7105A	11	N/A		
TG92A	18	TN	GXL	3518963C1	3599542C1	7105A	16	N/A		
TG92B	18	TN	GXL	3518963C1	3599542C1	7105A	17	N/A		
VY92DP	18	TN	GXL	3518963C1	3599542C1	7105A	18	N/A		
SJ92DN	18	TN	GXL	3518963C1	3599542C1	7105A	24	N/A		
KH17C	16	PK	TXL	3518963C1	3599542C1	7105A	26	N/A		
KH17B	18	PK	GXL	3518963C1	3599542C1	7105A	32	N/A		
VY92DR	18	TN	GXL	3518963C1	3599542C1	7105A	34	N/A		
KH13A	14	PK	GXL	3557534C1	3599542C1	7105A	35	N/A		
WC10-GE	12	WH	GXL	3557534C1	3599542C1	7105A	36	N/A		
LJ14A	12	RD	TXL	3557534C1	3599542C1	7105A	38	N/A		
KH5B(+)	18	YL	TXL	3683464C1	3683465C1	7110A	A	3535424C1		
KH5B(-)	18	GN	TXL	3683464C1	3683465C1	7110A	B	3535424C1		
KL5AB(+)	18	YL	TXL	3535303C1	3683465C1	7110X	A	3535424C1		
KL5AB(-)	18	GN	TXL	3535303C1	3683465C1	7110X	B	3535424C1		
KL5BB(+)	18	YL	TXL	3535303C1	3683465C1	7110Z	A	3535424C1		
KL5BB(-)	18	GN	TXL	3535303C1	3683465C1	7110Z	B	3535424C1		
KT92#202	18	LTBL	TXL	1667742C1	3525874C1	7208A	A	3568570C1		
KT92#202	18	TN	TXL	1667742C1	3525874C1	7208A	A	3568570C1		
KT92#205	18	LTBL	TXL	1667742C1	3525874C1	7208A	B	3568570C1		
KT92#205	18	LTBL	TXL	1667742C1	3525874C1	7208A	B	3568570C1		
KT92#214	18	TN	TXL	1667742C1	3525874C1	7208A	C	3568570C1		
KT92#214	18	TN	TXL	1667742C1	3525874C1	7208A	C	3568570C1		
KT92#215	18	TN	TXL	1667742C1	3525874C1	7208A	D	3568570C1		
KT92#215	18	TN	TXL	1667742C1	3525874C1	7208A	D	3568570C1		
KT92#216	18	TN	TXL	1667742C1	3525874C1	7208A	E	3568570C1		
KT92#216	18	TN	TXL	1667742C1	3525874C1	7208A	E	3568570C1		
PF71A	18	TN	GXL	1661875C1	1661778C1	7500T	A	1661872C1		
PF71B	16	OR	GXL	1661875C1	1661778C1	7500T	B	1661872C1		
KW71A	16	OR	GXL	1661875C1	1661778C1	7500W	A	1661872C1		
KW71A	16	OR	GXL	1661875C1	1661778C1	7500W	A	1661872C1		
KW71B	16	OR	GXL	1661875C1	1661778C1	7500W	B	1661872C1		
KW71B	16	OR	GXL	1661875C1	1661778C1	7500W	B	1661872C1		
PL47	18	GY	TXL	3554322C1	3610533C1	7600T	A	3554318C1		
PL47A	18	GY	TXL	3554322C1	3610533C1	7600T	B	3554318C1		
TP48#159	18	TN	TXL	3554322C1	3610533C1	7603M	A	3554318C1		
TP48#139	18	OR	TXL	3554322C1	3610533C1	7603M	B	3554318C1		
KK31	18	TN	GXL	3536865C1	3536864C1	7700K	1	3536868C1		
KK31	18	TN	GXL	3561584C1	3536864C1	7700K	1	3536868C1		
YG9AAD	18	GY	GXL	3536865C1	3536864C1	7700K	2	3536868C1		
KK9AAD	18	GY	GXL	3561584C1	3536864C1	7700K	2	3536868C1		
WP31	18	TN	GXL	3561584C1	3536864C1	7700L	1	3536868C1		
WP9AAD	18	GY	GXL	3561584C1	3536864C1	7700L	2	3536868C1		
XA31	18	TN	GXL	3536865C1	3536864C1	7700M	1	3536868C1		
YC9AAD	18	GY	GXL	3536865C1	3536864C1	7700M	2	3536868C1		
TA31	18	TN	GXL	3536865C1	3536864C1	7700T	1	3536868C1		
PC31	18	TN	GXL	3561584C1	3536864C1	7700T	1	3536868C1		
YE9AAD	18	GY	GXL	3536865C1	3536864C1	7700T	2	3536868C1		
PC9AAD	18	GY	TXL	3561584C1	3536864C1	7700T	2	3536867C1		
PY97J	18	VT	GXL	587578C1	3540051C91	7802T	A	1652325C1		
PY97S	18	VT	GXL	587578C1	3540051C91	7802T	B	1652325C1		

Circuit Number	Gauge	Color	Insulation	Terminal / Splice Number	Connector Part number	Connector Number	Cavity	Seal/Sleeve	Lock 1	Lock 2
2T92ZB	18	TN	TXL	3544884C1	4064551C1	7900F	B	N/A		
GY92#134	18	TN	TXL	3544884C1	4064551C1	7900F	B	N/A		
2T92ZB	18	TN	TXL	3544884C1	4064551C1	7900F	B	N/A		
GY92#134A	18	TN	TXL	3544884C1	4064551C1	7900F	B	N/A		
MN92	18	TN	TXL	3544884C1	4064551C1	7900F	C	N/A		
MN92	18	TN	TXL	3544884C1	4064551C1	7900F	C	N/A		
MN9ZA	18	GY	TXL	3544884C1	4064551C1	7900F	D	N/A		
MN92AA	18	GY	TXL	3544884C1	4064551C1	7900F	D	N/A		
3D5J(+)	18	YL	TXL	3544884C1	4064551C1	7900F	E	N/A		
3M5J(+)	18	YL	TXL	3544884C1	4064551C1	7900F	E	N/A		
JD5J(+)	18	YL	TXL	3544884C1	4064551C1	7900F	E	N/A		
JG5J(+)	18	YL	TXL	3544884C1	4064551C1	7900F	E	N/A		
LD5J(+)	18	YL	TXL	3544884C1	4064551C1	7900F	E	N/A		
LE5J(+)	18	YL	TXL	3544884C1	4064551C1	7900F	E	N/A		
LF5J(+)	18	YL	TXL	3544884C1	4064551C1	7900F	E	N/A		
LS5J(+)	18	YL	TXL	3544884C1	4064551C1	7900F	E	N/A		
PZ5J(+)	18	YL	TXL	3544884C1	4064551C1	7900F	E	N/A		
RD5J(+)	18	YL	TXL	3544884C1	4064551C1	7900F	E	N/A		
RS5J(+)	18	YL	TXL	3544884C1	4064551C1	7900F	E	N/A		
RU5J(+)	18	YL	TXL	3544884C1	4064551C1	7900F	E	N/A		
SC5J(+)	18	YL	TXL	3544884C1	4064551C1	7900F	E	N/A		
SE5J(+)	18	YL	TXL	3544884C1	4064551C1	7900F	E	N/A		
SN5J(+)	18	YL	TXL	3544884C1	4064551C1	7900F	E	N/A		
SP5J(+)	18	YL	TXL	3544884C1	4064551C1	7900F	E	N/A		
VC5J(+)	18	YL	TXL	3544884C1	4064551C1	7900F	E	N/A		
VD5J(+)	18	YL	TXL	3544884C1	4064551C1	7900F	E	N/A		
VE5J(+)	18	YL	TXL	3544884C1	4064551C1	7900F	E	N/A		
VF5J(+)	18	YL	TXL	3544884C1	4064551C1	7900F	E	N/A		
YX5J(+)	18	YL	TXL	3544884C1	4064551C1	7900F	E	N/A		
YZ5J(+)	18	YL	TXL	3544884C1	4064551C1	7900F	E	N/A		
2J5J(+)	18	YL	TXL	3544884C1	4064551C1	7900F	E	N/A		
2L5J(+)	18	YL	TXL	3544884C1	4064551C1	7900F	E	N/A		
2Z5J(+)	18	YL	TXL	3544884C1	4064551C1	7900F	E	N/A		
3C5J(+)	18	YL	TXL	3544884C1	4064551C1	7900F	E	N/A		
3D5J(+)	18	YL	TXL	3544884C1	4064551C1	7900F	E	N/A		
3J5J(+)	18	YL	TXL	3544884C1	4064551C1	7900F	E	N/A		
3M5J(+)	18	YL	TXL	3544884C1	4064551C1	7900F	E	N/A		
3U5J(+)	18	YL	TXL	3544884C1	4064551C1	7900F	E	N/A		
3W5J(+)	18	YL	TXL	3544884C1	4064551C1	7900F	E	N/A		
3Z5J(+)	18	YL	TXL	3544884C1	4064551C1	7900F	E	N/A		
4E5J(+)	18	YL	TXL	3544884C1	4064551C1	7900F	E	N/A		
4J5J(+)	18	YL	TXL	3544884C1	4064551C1	7900F	E	N/A		
JD5J(+)	18	YL	TXL	3544884C1	4064551C1	7900F	E	N/A		
JG5J(+)	18	YL	TXL	3544884C1	4064551C1	7900F	E	N/A		
LD5J(+)	18	YL	TXL	3544884C1	4064551C1	7900F	E	N/A		
LE5J(+)	18	YL	TXL	3544884C1	4064551C1	7900F	E	N/A		
LF5J(+)	18	YL	TXL	3544884C1	4064551C1	7900F	E	N/A		
LS5J(+)	18	YL	TXL	3544884C1	4064551C1	7900F	E	N/A		
PV5J(+)	18	YL	TXL	3544884C1	4064551C1	7900F	E	N/A		
PZ5J(+)	18	YL	TXL	3544884C1	4064551C1	7900F	E	N/A		
RD5J(+)	18	YL	TXL	3544884C1	4064551C1	7900F	E	N/A		
RS5J(+)	18	YL	TXL	3544884C1	4064551C1	7900F	E	N/A		

Circuit Number	Gauge	Color	Insulation	Terminal / Splice Number	Connector Part number	Connector Number	Cavity	Seal/Sleeve	Lock 1	Lock 2
RU5J(+)	18	YL	TXL	3544884C1	4064551C1	7900F	E	N/A		
RX5J(+)	18	YL	TXL	3544884C1	4064551C1	7900F	E	N/A		
SC5J(+)	18	YL	TXL	3544884C1	4064551C1	7900F	E	N/A		
SE5J(+)	18	YL	TXL	3544884C1	4064551C1	7900F	E	N/A		
SN5J(+)	18	YL	TXL	3544884C1	4064551C1	7900F	E	N/A		
SP5J(+)	18	YL	TXL	3544884C1	4064551C1	7900F	E	N/A		
SR5J(+)	18	YL	TXL	3544884C1	4064551C1	7900F	E	N/A		
VC5J(+)	18	YL	TXL	3544884C1	4064551C1	7900F	E	N/A		
VD5J(+)	18	YL	TXL	3544884C1	4064551C1	7900F	E	N/A		
VE5J(+)	18	YL	TXL	3544884C1	4064551C1	7900F	E	N/A		
VG5J(+)	18	YL	TXL	3544884C1	4064551C1	7900F	E	N/A		
YX5J(+)	18	YL	TXL	3544884C1	4064551C1	7900F	E	N/A		
YZ5J(+)	18	YL	TXL	3544884C1	4064551C1	7900F	E	N/A		
3D5J(-)	18	GN	TXL	3544884C1	4064551C1	7900F	F	N/A		
3M5J(-)	18	GN	TXL	3544884C1	4064551C1	7900F	F	N/A		
JD5J(-)	18	GN	TXL	3544884C1	4064551C1	7900F	F	N/A		
JG5J(-)	18	GN	TXL	3544884C1	4064551C1	7900F	F	N/A		
LD5J(-)	18	GN	TXL	3544884C1	4064551C1	7900F	F	N/A		
LE5J(-)	18	GN	TXL	3544884C1	4064551C1	7900F	F	N/A		
LF5J(-)	18	GN	TXL	3544884C1	4064551C1	7900F	F	N/A		
LS5J(-)	18	GN	TXL	3544884C1	4064551C1	7900F	F	N/A		
PZ5J(-)	18	GN	TXL	3544884C1	4064551C1	7900F	F	N/A		
RD5J(-)	18	GN	TXL	3544884C1	4064551C1	7900F	F	N/A		
RS5J(-)	18	GN	TXL	3544884C1	4064551C1	7900F	F	N/A		
RU5J(-)	18	GN	TXL	3544884C1	4064551C1	7900F	F	N/A		
SC5J(-)	18	GN	TXL	3544884C1	4064551C1	7900F	F	N/A		
SE5J(-)	18	GN	TXL	3544884C1	4064551C1	7900F	F	N/A		
SN5J(-)	18	GN	TXL	3544884C1	4064551C1	7900F	F	N/A		
SP5J(-)	18	GN	TXL	3544884C1	4064551C1	7900F	F	N/A		
VC5J(-)	18	GN	TXL	3544884C1	4064551C1	7900F	F	N/A		
VD5J(-)	18	GN	TXL	3544884C1	4064551C1	7900F	F	N/A		
VE5J(-)	18	GN	TXL	3544884C1	4064551C1	7900F	F	N/A		
VF5J(-)	18	GN	TXL	3544884C1	4064551C1	7900F	F	N/A		
YX5J(-)	18	GN	TXL	3544884C1	4064551C1	7900F	F	N/A		
YZ5J(-)	18	GN	TXL	3544884C1	4064551C1	7900F	F	N/A		
2J5J(-)	18	GN	TXL	3544884C1	4064551C1	7900F	F	N/A		
2L5J(-)	18	GN	TXL	3544884C1	4064551C1	7900F	F	N/A		
2Z5J(-)	18	GN	TXL	3544884C1	4064551C1	7900F	F	N/A		
3C5J(-)	18	GN	TXL	3544884C1	4064551C1	7900F	F	N/A		
3D5J(-)	18	GN	TXL	3544884C1	4064551C1	7900F	F	N/A		
3J5J(-)	18	GN	TXL	3544884C1	4064551C1	7900F	F	N/A		
3M5J(-)	18	GN	TXL	3544884C1	4064551C1	7900F	F	N/A		
3U5J(-)	18	GN	TXL	3544884C1	4064551C1	7900F	F	N/A		
3W5J(-)	18	GN	TXL	3544884C1	4064551C1	7900F	F	N/A		
3Z5J(-)	18	GN	TXL	3544884C1	4064551C1	7900F	F	N/A		
4E5J(-)	18	GN	TXL	3544884C1	4064551C1	7900F	F	N/A		
4J5J(-)	18	GN	TXL	3544884C1	4064551C1	7900F	F	N/A		
JD5J(-)	18	GN	TXL	3544884C1	4064551C1	7900F	F	N/A		
JG5J(-)	18	GN	TXL	3544884C1	4064551C1	7900F	F	N/A		
LD5J(-)	18	GN	TXL	3544884C1	4064551C1	7900F	F	N/A		
LE5J(-)	18	GN	TXL	3544884C1	4064551C1	7900F	F	N/A		
LF5J(-)	18	GN	TXL	3544884C1	4064551C1	7900F	F	N/A		

Circuit Number	Gauge	Color	Insulation	Terminal / Splice Number	Connector Part number	Connector Number	Cavity	Seal/Sleeve	Lock 1	Lock 2
LS5J(-)	18	GN	TXL	3544884C1	4064551C1	7900F	F	N/A		
PV5J(-)	18	GN	TXL	3544884C1	4064551C1	7900F	F	N/A		
PZ5J(-)	18	GN	TXL	3544884C1	4064551C1	7900F	F	N/A		
RD5J(-)	18	GN	TXL	3544884C1	4064551C1	7900F	F	N/A		
RS5J(-)	18	GN	TXL	3544884C1	4064551C1	7900F	F	N/A		
RU5J(-)	18	GN	TXL	3544884C1	4064551C1	7900F	F	N/A		
RX5J(-)	18	GN	TXL	3544884C1	4064551C1	7900F	F	N/A		
SC5J(-)	18	GN	TXL	3544884C1	4064551C1	7900F	F	N/A		
SE5J(-)	18	GN	TXL	3544884C1	4064551C1	7900F	F	N/A		
SN5J(-)	18	GN	TXL	3544884C1	4064551C1	7900F	F	N/A		
SP5J(-)	18	GN	TXL	3544884C1	4064551C1	7900F	F	N/A		
SR5J(-)	18	GN	TXL	3544884C1	4064551C1	7900F	F	N/A		
VC5J(-)	18	GN	TXL	3544884C1	4064551C1	7900F	F	N/A		
VD5J(-)	18	GN	TXL	3544884C1	4064551C1	7900F	F	N/A		
VE5J(-)	18	GN	TXL	3544884C1	4064551C1	7900F	F	N/A		
VG5J(-)	18	GN	TXL	3544884C1	4064551C1	7900F	F	N/A		
YX5J(-)	18	GN	TXL	3544884C1	4064551C1	7900F	F	N/A		
YZ5J(-)	18	GN	TXL	3544884C1	4064551C1	7900F	F	N/A		
MM92DC	18	TN	TXL	3544884C1	4064551C1	7900F	G	N/A		
MM92DC	18	TN	TXL	3544884C1	4064551C1	7900F	G	N/A		
MM92-GAH	18	WH	TXL	3544884C1	4064551C1	7900F	H	N/A		
MM92-GAH	18	WH	TXL	3544884C1	4064551C1	7900F	H	N/A		
BK92#134	18	TN	TXL	3544886C1	4064552C1	7900M	B	N/A		
XX92	18	TN	TXL	3544886C1	4064552C1	7900M	C	N/A		
XX9ZA	18	GY	TXL	3544886C1	4064552C1	7900M	D	N/A		
BK5FA(+)	18	YL	TXL	3544886C1	4064552C1	7900M	E	N/A		
BK5FA(-)	18	GN	TXL	3544886C1	4064552C1	7900M	F	N/A		
BK62DC	18	DKBL	TXL	3544886C1	4064552C1	7900M	G	N/A		
BK92-GAH	18	WH	TXL	3544886C1	4064552C1	7900M	H	N/A		
CF98A(-)	18	GY	TXL	3722128C1		7TB1	1	2644038R1		
CF98A(-)	18	GY	TXL	3722128C1		7TB1	1	2644038R1		
PV97H	18	VT	GXL	587576C1	587568C91	8450A	A	1652325C1		
PV97H	18	VT	GXL	587576C1	587568C91	8450A	A	1652325C1		
PV97J	18	VT	GXL	587576C1	587568C91	8450A	B	1652325C1		
PV97J	18	VT	GXL	587576C1	587568C91	8450A	B	1652325C1		
MK19	14	GY	GXL	587577C1	587567C91	8550B	A	589391C1		
MK19-GA	14	WH	GXL	587577C1	587567C91	8550B	B	589391C1		
NS22AG	18	WH	TXL	3672054C1	3823761C1	8993F	1	N/A		
NS22AG	18	WH	TXL	3672054C1	3823761C1	8993F	1	N/A		
NS22AA	18	PK	TXL	3672054C1	3823761C1	8993F	2	N/A		
NS22AA	18	PK	TXL	3672054C1	3823761C1	8993F	2	N/A		
RK5UF(-)	18	GN	TXL	3672054C1	3823761C1	8993F	11	N/A	1667771C1	
RK5UF(-)	18	GN	TXL	3672054C1	3823761C1	8993F	11	N/A		
RK5UF(+)	18	YL	TXL	3672054C1	3823761C1	8993F	12	N/A	1667734C1	
RK5UF(+)	18	YL	TXL	3672054C1	3823761C1	8993F	12	N/A		
FA36A	18	TN	GXL	1661875C1	1661778C1	9100A	A	1661872C1		
FA9BE	18	GY	GXL	1661875C1	1661778C1	9100A	B	1661872C1		
FB36A	18	TN	GXL	1661875C1	1661778C1	9100B	A	1661872C1		
FB9BE	18	GY	GXL	1661875C1	1661778C1	9100B	B	1661872C1		
FC36A	18	TN	GXL	1661875C1	1661778C1	9100C	A	1661872C1		
FC9BE	18	GY	GXL	1661875C1	1661778C1	9100C	B	1661872C1		
FD36A	18	TN	GXL	1661875C1	1661778C1	9100D	A	1661872C1		

Circuit Number	Gauge	Color	Insulation	Terminal / Splice Number	Connector Part number	Connector Number	Cavity	Seal/Sleeve	Lock 1	Lock 2
FD9BE	18	GY	GXL	1661875C1	1661778C1	9100D	B	1661872C1		
FE36A	18	TN	GXL	1661875C1	1661778C1	9100E	A	1661872C1		
FE9BE	18	GY	GXL	1661875C1	1661778C1	9100E	B	1661872C1		
FF36A	18	TN	GXL	1661875C1	1661778C1	9100F	A	1661872C1		
FF9BE	18	GY	GXL	1661875C1	1661778C1	9100F	B	1661872C1		
SA71BA	12	OR	TXL	3612307C1	3612305C1	9303A	1	N/A		
SA56A	14	OR	GXL	3613770C1	3612305C1	9303A	2	N/A		
SA57A	14	OR	GXL	3613770C1	3612305C1	9303A	3	N/A		
SA68A	14	BN	GXL	3613770C1	3612305C1	9303A	4	N/A		
SA10-G	12	WH	TXL	3612307C1	3612305C1	9303A	5	N/A		
VH71BE	12	OR	TXL	3612307C1	3612305C1	9303K	1	N/A		
VJ71BE	12	OR	TXL	3612307C1	3612305C1	9303K	1	N/A		
VG56A	14	OR	GXL	3613770C1	3612305C1	9303K	2	N/A		
VL56AA	14	OR	GXL	3613770C1	3612305C1	9303K	3	N/A		
VG68AC	14	BN	GXL	3613770C1	3612305C1	9303K	4	N/A		
VL68ACA	14	BN	GXL	3613770C1	3612305C1	9303K	4	N/A		
VH10-GE	12	WH	TXL	3612307C1	3612305C1	9303K	5	N/A		
VJ10-GE	12	WH	TXL	3612307C1	3612305C1	9303K	5	N/A		
VH71BG	12	OR	TXL	3612307C1	3612305C1	9303L	1	N/A		
VJ71BG	12	OR	TXL	3612307C1	3612305C1	9303L	1	N/A		
VG57A	14	OR	GXL	3613770C1	3612305C1	9303L	3	N/A		
VL57AA	14	OR	GXL	3613770C1	3612305C1	9303L	3	N/A		
VG68AD	14	BN	GXL	3613770C1	3612305C1	9303L	4	N/A		
VL68ADA	14	BN	GXL	3613770C1	3612305C1	9303L	4	N/A		
VH10-GG	12	WH	TXL	3612307C1	3612305C1	9303L	5	N/A		
VJ10-GG	12	WH	TXL	3612307C1	3612305C1	9303L	5	N/A		
VF71BC	12	OR	TXL	3612307C1	3612305C1	9303M	1	N/A		
VK71BC	12	OR	TXL	3612307C1	3612305C1	9303M	1	N/A		
VE56A	14	OR	GXL	3613770C1	3612305C1	9303M	2	N/A		
VE68AB	14	BN	GXL	3613770C1	3612305C1	9303M	4	N/A		
VF10-GC	12	WH	TXL	3612307C1	3612305C1	9303M	5	N/A		
VK10-GC	12	WH	TXL	3612307C1	3612305C1	9303M	5	N/A		
VF71BD	12	OR	TXL	3612307C1	3612305C1	9303N	1	N/A		
VK71BD	12	OR	TXL	3612307C1	3612305C1	9303N	1	N/A		
VE57A	14	OR	GXL	3613770C1	3612305C1	9303N	3	N/A		
VE68AA	14	BN	GXL	3613770C1	3612305C1	9303N	4	N/A		
VF10-GB	12	WH	TXL	3612307C1	3612305C1	9303N	5	N/A		
VK10-GB	12	WH	TXL	3612307C1	3612305C1	9303N	5	N/A		
VH71BF	12	OR	GXL	2033816C1	1671610C1	9305B	A	589390C1		
VH10-GF	12	WH	TXL	2033816C1	1671610C1	9305B	B	589391C1		
VF71BB	12	OR	TXL	2033816C1	1671610C1	9305C	A	589391C1		
VF10-GD	12	WH	TXL	2033816C1	1671610C1	9305C	B	589391C1		
SB94BD	16	GY	GXL	1680205C1	3539777C1	9501D	1	N/A		
SD94BD	16	GY	GXL	1680205C1	3539777C1	9501D	1	N/A		
TF94BQ	16	GY	GXL	1680205C1	3539777C1	9501D	1	N/A	4062807C1	
UP94BQ	16	GY	GXL	1680205C1	3539777C1	9501D	1	N/A		
SB94BE	16	GY	GXL	1680205C1	3539777C1	9501D	2	N/A		
SD94BE	16	GY	GXL	1680205C1	3539777C1	9501D	2	N/A		
TF94BR	16	GY	GXL	1680205C1	3539777C1	9501D	2	N/A	3573833C1	
UP94BR	16	GY	GXL	1680205C1	3539777C1	9501D	2	N/A		
SB94BA	16	GY	GXL	2033819C1	1686834C1	9502A	A	1652325C1		
UP94BA	16	GY	GXL	2033819C1	1686834C1	9502A	A	1652325C1		

Circuit Number	Gauge	Color	Insulation	Terminal / Splice Number	Connector Part number	Connector Number	Cavity	Seal/Sleeve	Lock 1	Lock 2
SB94BB	16	GY	GXL	2033819C1	1686834C1	9502A	B	1652325C1		
UP94BB	16	GY	GXL	2033819C1	1686834C1	9502A	B	1652325C1		
SB94BC	16	GY	GXL	2033819C1	1686834C1	9502A	C	1652325C1		
UP94BC	16	GY	GXL	2033819C1	1686834C1	9502A	C	1652325C1		
SD94BA	16	GY	GXL	2033819C1	1686834C1	9502B	A	1652325C1		
SZ94BA	16	GY	GXL	2033819C1	1686834C1	9502B	A	1652325C1		
TF94BY	16	GY	GXL	2033819C1	1686834C1	9502B	A	1652325C1		
UP94BY	16	GY	GXL	2033819C1	1686834C1	9502B	A	1652325C1		
SD94BB	16	GY	GXL	2033819C1	1686834C1	9502B	B	1652325C1		
SZ94BB	16	GY	GXL	2033819C1	1686834C1	9502B	B	1652325C1	3546519C1	
TF94BZ	16	GY	GXL	2033819C1	1686834C1	9502B	B	1652325C1		
UP94BZ	16	GY	GXL	2033819C1	1686834C1	9502B	B	1652325C1		
SD94BC	16	GY	GXL	2033819C1	1686834C1	9502B	C	1652325C1		
SZ94BC	16	GY	GXL	2033819C1	1686834C1	9502B	C	1652325C1	3553460C1	
TF94BP	16	GY	GXL	2033819C1	1686834C1	9502B	C	1652325C1		
UP94BP	16	GY	GXL	2033819C1	1686834C1	9502B	C	1652325C1		
SB94BF	16	GY	GXL	1680205C1	3539777C1	9503D	1	N/A		
SD94BF	16	GY	GXL	1680205C1	3539777C1	9503D	1	N/A		
TF94BV	16	GY	GXL	1680205C1	3539777C1	9503D	1	N/A		
UP94BV	16	GY	GXL	1680205C1	3539777C1	9503D	1	N/A		
SB94BH	16	GY	GXL	1680205C1	3539777C1	9503D	2	N/A		
SD94BH	16	GY	GXL	1680205C1	3539777C1	9503D	2	N/A		
TF94BW	16	GY	GXL	1680205C1	3539777C1	9503D	2	N/A		
UP94BW	16	GY	GXL	1680205C1	3539777C1	9503D	2	N/A		
SD94BJ	16	GY	GXL	2033819C1	1686834C1	9504A	A	1652325C1		
SZ94BJ	16	GY	GXL	2033819C1	1686834C1	9504A	A	1652325C1		
TF94BS	16	GY	GXL	2033819C1	1686834C1	9504A	A	1652325C1		
UP94BS	16	GY	GXL	2033819C1	1686834C1	9504A	A	1652325C1		
SD94BK	16	GY	GXL	2033819C1	1686834C1	9504A	B	1652325C1		
SZ94BK	16	GY	GXL	2033819C1	1686834C1	9504A	B	1652325C1		
TF94BT	16	GY	GXL	2033819C1	1686834C1	9504A	B	1652325C1		
UP94BT	16	GY	GXL	2033819C1	1686834C1	9504A	B	1652325C1		
SD94BL	16	GY	GXL	2033819C1	1686834C1	9504A	C	1652325C1		
SZ94BL	16	GY	GXL	2033819C1	1686834C1	9504A	C	1652325C1		
TF94BU	16	GY	GXL	2033819C1	1686834C1	9504A	C	1652325C1	4110680C1	
UP94BU	16	GY	GXL	2033819C1	1686834C1	9504A	C	1652325C1		
SB94BJ	16	GY	GXL	2033819C1	1686834C1	9504B	A	1652325C1		
UP94BJ	16	GY	GXL	2033819C1	1686834C1	9504B	A	1652325C1		
SB94BK	16	GY	GXL	2033819C1	1686834C1	9504B	B	1652325C1		
UP94BK	16	GY	GXL	2033819C1	1686834C1	9504B	B	1652325C1		
SB94BL	16	GY	GXL	2033819C1	1686834C1	9504B	C	1652325C1		
UP94BL	16	GY	GXL	2033819C1	1686834C1	9504B	C	1652325C1		
SC94BM	16	GY	GXL	3679224C1	3678796C1	9505A	1	3601687C1		
SE94BM	16	GY	GXL	3679224C1	3678796C1	9505A	1	3601687C1		
SC94BN	16	GY	GXL	3679224C1	3678796C1	9505A	2	3601687C1		
SE94BN	16	GY	GXL	3679224C1	3678796C1	9505A	2	3601687C1		
SR94MD	18	GY	TXL	6111842C1	6111844C1	9506D	1	6111843C1		
US94BQA	18	GY	TXL	6111842C1	6111844C1	9506D	1	6111843C1		
VT94MD	18	GY	TXL	6111842C1	6111844C1	9506D	1	6111843C1		
SR94ME	18	GY	TXL	6111842C1	6111844C1	9506D	2	6111843C1		
US94BRA	18	GY	TXL	6111842C1	6111844C1	9506D	2	6111843C1		
VT94ME	18	GY	TXL	6111842C1	6111844C1	9506D	2	6111843C1		

Circuit Number	Gauge	Color	Insulation	Terminal / Splice Number	Connector Part number	Connector Number	Cavity	Seal/Sleeve	Lock 1	Lock 2
SS94MD	18	GY	TXL	6111842C1	6111844C1	9506E	1	6111843C1		
UJ94BQA	18	GY	TXL	6111842C1	6111844C1	9506E	1	6111843C1		
SS94ME	18	GY	TXL	6111842C1	6111844C1	9506E	2	6111843C1		
UJ94BRA	18	GY	TXL	6111842C1	6111844C1	9506E	2	6111843C1		
SR94MA	18	GY	TXL	3601686C1	3919376C1	9507A	1	3733609C1		
US94MA	18	GY	TXL	3601686C1	3919376C1	9507A	1	3733609C1		
SR94MB	18	GY	TXL	3601686C1	3919376C1	9507A	2	3733609C1		
US94MB	18	GY	TXL	3601686C1	3919376C1	9507A	2	3733609C1		
SR94MC	18	GY	TXL	3601686C1	3919376C1	9507A	3	3733609C1		
US94MC	18	GY	TXL	3601686C1	3919376C1	9507A	3	3733609C1		
SS94MA	18	GY	TXL	3601686C1	3919376C1	9507B	1	3733609C1		
UJ94BYA	18	GY	TXL	3601686C1	3919376C1	9507B	1	3733609C1		
US94BYA	18	GY	TXL	3601686C1	3919376C1	9507B	1	3733609C1		
VT94MA	18	GY	TXL	3601686C1	3919376C1	9507B	1	3733609C1		
SS94MB	18	GY	TXL	3601686C1	3919376C1	9507B	2	3733609C1		
UJ94BZA	18	GY	TXL	3601686C1	3919376C1	9507B	2	3733609C1		
US94BZA	18	GY	TXL	3601686C1	3919376C1	9507B	2	3733609C1		
VT94MB	18	GY	TXL	3601686C1	3919376C1	9507B	2	3733609C1		
SS94MC	18	GY	TXL	3601686C1	3919376C1	9507B	3	3733609C1		
UJ94BPA	18	GY	TXL	3601686C1	3919376C1	9507B	3	3733609C1		
US94BPA	18	GY	TXL	3601686C1	3919376C1	9507B	3	3733609C1		
VT94MC	18	GY	TXL	3601686C1	3919376C1	9507B	3	3733609C1		
SR94MF	18	GY	TXL	6111842C1	6111844C1	9508D	1	6111843C1		
US94BVA	18	GY	TXL	6111842C1	6111844C1	9508D	1	6111843C1		
VT94MF	18	GY	TXL	6111842C1	6111844C1	9508D	1	6111843C1		
SR94MH	18	GY	TXL	6111842C1	6111844C1	9508D	2	6111843C1		
US94BWA	18	GY	TXL	6111842C1	6111844C1	9508D	2	6111843C1		
VT94MH	18	GY	TXL	6111842C1	6111844C1	9508D	2	6111843C1		
SS94MF	18	GY	TXL	6111842C1	6111844C1	9508E	1	6111843C1		
UJ94BVA	18	GY	TXL	6111842C1	6111844C1	9508E	1	6111843C1		
SS94MH	18	GY	TXL	6111842C1	6111844C1	9508E	2	6111843C1		
UJ94BWA	18	GY	TXL	6111842C1	6111844C1	9508E	2	6111843C1		
SS94MJ	18	GY	TXL	3601686C1	3919376C1	9509A	1	3733609C1	1661264C1	
UJ94BSA	18	GY	TXL	3601686C1	3919376C1	9509A	1	3733609C1		
US94BSA	18	GY	TXL	3601686C1	3919376C1	9509A	1	3733609C1		
VT94MJ	18	GY	TXL	3601686C1	3919376C1	9509A	1	3733609C1		
SS94MK	18	GY	TXL	3601686C1	3919376C1	9509A	2	3733609C1	1661874C1	
UJ94BTA	18	GY	TXL	3601686C1	3919376C1	9509A	2	3733609C1		
US94BTA	18	GY	TXL	3601686C1	3919376C1	9509A	2	3733609C1		
VT94MK	18	GY	TXL	3601686C1	3919376C1	9509A	2	3733609C1		
SS94ML	18	GY	TXL	3601686C1	3919376C1	9509A	3	3733609C1	1661892C1	
UJ94BUA	18	GY	TXL	3601686C1	3919376C1	9509A	3	3733609C1		
US94BUA	18	GY	TXL	3601686C1	3919376C1	9509A	3	3733609C1		
VT94ML	18	GY	TXL	3601686C1	3919376C1	9509A	3	3733609C1		
SR94MJ	18	GY	TXL	3601686C1	3919376C1	9509B	1	3733609C1		
US94MJ	18	GY	TXL	3601686C1	3919376C1	9509B	1	3733609C1		
SR94MK	18	GY	TXL	3601686C1	3919376C1	9509B	2	3733609C1		
US94MK	18	GY	TXL	3601686C1	3919376C1	9509B	2	3733609C1		
SR94ML	18	GY	TXL	3601686C1	3919376C1	9509B	3	3733609C1		
US94ML	18	GY	TXL	3601686C1	3919376C1	9509B	3	3733609C1		
SJ94SZC	18	GY	GXL	1651943C1	1678137C1	9510A	A	N/A		
SJ94SVC	18	GY	GXL	1651943C1	1678137C1	9510A	B	N/A		

Circuit Number	Gauge	Color	Insulation	Terminal / Splice Number	Connector Part number	Connector Number	Cavity	Seal/Sleeve	Lock 1	Lock 2
SJ94SH	18	GY	GXL	1651943C1	1678137C1	9510A	C	N/A		
PM94SZC	16	GY	GXL	1661875C1	1667741C1	9510F	A	1661872C1		
PM94SVC	16	GY	GXL	1661875C1	1667741C1	9510F	B	1661872C1		
PM94SH	16	GY	GXL	1661875C1	1667741C1	9510F	C	1661872C1		
SJ94SZC	18	GY	GXL	1667742C1	1667740C1	9510M	A	1661872C1		
SJ94SVC	18	GY	GXL	1667742C1	1667740C1	9510M	B	1661872C1		
SJ94SH	18	GY	GXL	1667742C1	1667740C1	9510M	C	1661872C1		
PR94SAB	18	GY	GXL	3601686C1	3601685C1	9511A	1	3601687C1		
PR94SCB	18	GY	GXL	3601686C1	3601685C1	9511A	2	3601687C1		
PR94SBB	18	GY	GXL	3601686C1	3601685C1	9511A	3	3601687C1		
PR94SDB	18	GY	GXL	3601686C1	3601685C1	9511A	4	3601687C1		
HC94A	16	GY	GXL	3679224C1	3678796C1	9516B	1	3601687C1		
HC94B	16	GY	GXL	3679224C1	3678796C1	9516B	2	3601687C1		
TF94BY	16	GY	GXL	3618273C1	6112506C1	9516M	1	N/A		
UJ94BY	18	GY	GXL	3618272C1	6112506C1	9516M	1	N/A		
UP94BY	16	GY	GXL	3618273C1	6112506C1	9516M	1	N/A		
US94BY	18	GY	GXL	3618272C1	6112506C1	9516M	1	N/A		
VA94BY	16	GY	GXL	3618273C1	6112506C1	9516M	1	N/A		
VB94BY	18	GY	GXL	3618272C1	6112506C1	9516M	1	N/A	1661874C1	
BA94BY	16	GY	GXL	3613770C1	3690369C1	9516M	1	N/A		
SA94BY	16	GY	GXL	3613770C1	3690369C1	9516M	1	N/A		
TF94BZ	16	GY	GXL	3618273C1	6112506C1	9516M	2	N/A		
UJ94BZ	18	GY	GXL	3618272C1	6112506C1	9516M	2	N/A		
UP94BZ	16	GY	GXL	3618273C1	6112506C1	9516M	2	N/A		
US94BZ	18	GY	GXL	3618272C1	6112506C1	9516M	2	N/A		
VA94BZ	16	GY	GXL	3618273C1	6112506C1	9516M	2	N/A		
VB94BZ	18	GY	GXL	3618272C1	6112506C1	9516M	2	N/A		
BA94BZ	16	GY	GXL	3613770C1	3690369C1	9516M	2	N/A		
SA94BZ	16	GY	GXL	3613770C1	3690369C1	9516M	2	N/A		
TF94BP	16	GY	GXL	3618273C1	6112506C1	9516M	3	N/A		
UJ94BP	18	GY	GXL	3618272C1	6112506C1	9516M	3	N/A		
UP94BP	16	GY	GXL	3618273C1	6112506C1	9516M	3	N/A		
US94BP	18	GY	GXL	3618272C1	6112506C1	9516M	3	N/A		
VA94BP	16	GY	GXL	3618273C1	6112506C1	9516M	3	N/A		
VB94BP	18	GY	GXL	3618272C1	6112506C1	9516M	3	N/A		
BA94BP	16	GY	GXL	3613770C1	3690369C1	9516M	3	N/A		
SA94BP	16	GY	GXL	3613770C1	3690369C1	9516M	3	N/A		
TF94BQ	16	GY	GXL	3618273C1	6112506C1	9516M	4	N/A	4064677C1	
UJ94BQ	18	GY	GXL	3618272C1	6112506C1	9516M	4	N/A		
UP94BQ	16	GY	GXL	3618273C1	6112506C1	9516M	4	N/A		
US94BQ	18	GY	GXL	3618272C1	6112506C1	9516M	4	N/A		
VA94BQ	16	GY	GXL	3618273C1	6112506C1	9516M	4	N/A		
VB94BQ	18	GY	GXL	3618272C1	6112506C1	9516M	4	N/A		
BA94BQ	16	GY	GXL	3613770C1	3690369C1	9516M	4	N/A		
SA94BQ	16	GY	GXL	3613770C1	3690369C1	9516M	4	N/A		
TF94BR	16	GY	GXL	3618273C1	6112506C1	9516M	5	N/A	2037987C1	
UJ94BR	18	GY	GXL	3618272C1	6112506C1	9516M	5	N/A		
UP94BR	16	GY	GXL	3618273C1	6112506C1	9516M	5	N/A		
US94BR	18	GY	GXL	3618272C1	6112506C1	9516M	5	N/A		
VA94BR	16	GY	GXL	3618273C1	6112506C1	9516M	5	N/A		
VB94BR	18	GY	GXL	3618272C1	6112506C1	9516M	5	N/A		
BA94BR	16	GY	GXL	3613770C1	3690369C1	9516M	5	N/A		

Circuit Number	Gauge	Color	Insulation	Terminal / Splice Number	Connector Part number	Connector Number	Cavity	Seal/Sleeve	Lock 1	Lock 2
SA94BR	16	GY	GXL	3613770C1	3690369C1	9516M	5	N/A		
TF94BS	16	GY	GXL	3618273C1	6112506C1	9516M	6	N/A		
UJ94BS	18	GY	GXL	3618272C1	6112506C1	9516M	6	N/A		
UP94BS	16	GY	GXL	3618273C1	6112506C1	9516M	6	N/A		
US94BS	18	GY	GXL	3618272C1	6112506C1	9516M	6	N/A		
VA94BS	16	GY	GXL	3618273C1	6112506C1	9516M	6	N/A		
VB94BS	18	GY	GXL	3618272C1	6112506C1	9516M	6	N/A		
BA94BS	16	GY	GXL	3613770C1	3690369C1	9516M	6	N/A		
SA94BS	16	GY	GXL	3613770C1	3690369C1	9516M	6	N/A		
TF94BT	16	GY	GXL	3618273C1	6112506C1	9516M	7	N/A	3557682C1	
UJ94BT	18	GY	GXL	3618272C1	6112506C1	9516M	7	N/A		
UP94BT	16	GY	GXL	3618273C1	6112506C1	9516M	7	N/A		
US94BT	18	GY	GXL	3618272C1	6112506C1	9516M	7	N/A		
VA94BT	16	GY	GXL	3618273C1	6112506C1	9516M	7	N/A		
VB94BT	18	GY	GXL	3618272C1	6112506C1	9516M	7	N/A		
BA94BT	16	GY	GXL	3613770C1	3690369C1	9516M	7	N/A		
SA94BT	16	GY	GXL	3613770C1	3690369C1	9516M	7	N/A		
TF94BU	16	GY	GXL	3618273C1	6112506C1	9516M	8	N/A	2230260C1	
UJ94BU	18	GY	GXL	3618272C1	6112506C1	9516M	8	N/A		
UP94BU	16	GY	GXL	3618273C1	6112506C1	9516M	8	N/A		
US94BU	18	GY	GXL	3618272C1	6112506C1	9516M	8	N/A		
VA94BU	16	GY	GXL	3618273C1	6112506C1	9516M	8	N/A		
VB94BU	18	GY	GXL	3618272C1	6112506C1	9516M	8	N/A		
BA94BU	16	GY	GXL	3613770C1	3690369C1	9516M	8	N/A		
SA94BU	16	GY	GXL	3613770C1	3690369C1	9516M	8	N/A		
TF94BV	16	GY	GXL	3618273C1	6112506C1	9516M	9	N/A		
UJ94BV	18	GY	GXL	3618272C1	6112506C1	9516M	9	N/A		
UP94BV	16	GY	GXL	3618273C1	6112506C1	9516M	9	N/A		
US94BV	18	GY	GXL	3618272C1	6112506C1	9516M	9	N/A		
VA94BV	16	GY	GXL	3618273C1	6112506C1	9516M	9	N/A		
VB94BV	18	GY	GXL	3618272C1	6112506C1	9516M	9	N/A	1661874C1	
BA94BV	16	GY	GXL	3613770C1	3690369C1	9516M	9	N/A		
SA94BV	16	GY	GXL	3613770C1	3690369C1	9516M	9	N/A		
TF94BW	16	GY	GXL	3618273C1	6112506C1	9516M	10	N/A	4119706C1	
UJ94BW	18	GY	GXL	3618272C1	6112506C1	9516M	10	N/A		
UP94BW	16	GY	GXL	3618273C1	6112506C1	9516M	10	N/A		
US94BW	18	GY	GXL	3618272C1	6112506C1	9516M	10	N/A		
VA94BW	16	GY	GXL	3618273C1	6112506C1	9516M	10	N/A		
VB94BW	18	GY	GXL	3618272C1	6112506C1	9516M	10	N/A		
BA94BW	16	GY	GXL	3613770C1	3690369C1	9516M	10	N/A		
SA94BW	16	GY	GXL	3613770C1	3690369C1	9516M	10	N/A		
MA152AA	16	GY	TXL	3618273C1	3924162C1	9540F	1	N/A		
MA152AB	16	GY	TXL	3618273C1	3924162C1	9540F	2	N/A		
PA152AA	16	GY	TXL	3613770C1	3626435C1	9540M	1	N/A		
PA152AB	16	GY	TXL	3613770C1	3626435C1	9540M	2	N/A		
RR70W	10	RD	GXL	2025425C1	1667732C1	9715F	A	1667735C1		
RS70W	10	RD	GXL	2025425C1	1667732C1	9715F	A	1667735C1		
VX70BB	10	RD	GXL	2025425C1	1667732C1	9715F	A	1667735C1		
VY70BB	10	RD	GXL	2025425C1	1667732C1	9715F	A	1667735C1		
RR68W	10	BN	GXL	2025425C1	1667732C1	9715F	B	1667735C1		
RS68W	10	BN	GXL	2025425C1	1667732C1	9715F	B	1667735C1		
VX68BB	10	BN	GXL	2025425C1	1667732C1	9715F	B	1667735C1		

Circuit Number	Gauge	Color	Insulation	Terminal / Splice Number	Connector Part number	Connector Number	Cavity	Seal/Sleeve	Lock 1	Lock 2
VY68BB	10	BN	GXL	2025425C1	1667732C1	9715F	B	1667735C1		
RR94W	10	DKBL	GXL	2025425C1	1667732C1	9715F	C	1667735C1		
RS94W	10	DKBL	GXL	2025425C1	1667732C1	9715F	C	1667735C1		
VX94BB	10	DKBL	GXL	2025425C1	1667732C1	9715F	C	1667735C1		
VY94BB	10	DKBL	GXL	2025425C1	1667732C1	9715F	C	1667735C1		
NK70W	10	RD	GXL	1667737C1	1667733C1	9715M	A	1667735C1		
NM70T	10	RD	TXL	1667737C1	1667733C1	9715M	A	1667735C1		
YT70W	10	RD	GXL	1667737C1	1667733C1	9715M	A	1667735C1		
NK68W	10	BN	GXL	1667737C1	1667733C1	9715M	B	1667735C1		
NM68T	10	BN	TXL	1667737C1	1667733C1	9715M	B	1667735C1		
YT68W	10	BN	GXL	1667737C1	1667733C1	9715M	B	1667735C1		
NK94W	10	GY	GXL	1667737C1	1667733C1	9715M	C	1667735C1		
NM94T	10	GY	TXL	1667737C1	1667733C1	9715M	C	1667735C1		
YT94W	10	GY	GXL	1667737C1	1667733C1	9715M	C	1667735C1		
NK58W	10	BK	GXL	2025425C1	1667732C1	9716F	A	1667735C1		
NM58T	10	BK	GXL	2025425C1	1667732C1	9716F	A	1667735C1		
YT58W	10	BK	GXL	2025425C1	1667732C1	9716F	A	1667735C1		
NK56W	10	YL	GXL	2025425C1	1667732C1	9716F	B	1667735C1		
NM56T	10	YL	GXL	2025425C1	1667732C1	9716F	B	1667735C1		
YT56W	10	YL	GXL	2025425C1	1667732C1	9716F	B	1667735C1		
NK57W	10	LTGN	GXL	2025425C1	1667732C1	9716F	C	1667735C1		
NM57T	10	LTGN	GXL	2025425C1	1667732C1	9716F	C	1667735C1		
YT57W	10	LTGN	GXL	2025425C1	1667732C1	9716F	C	1667735C1		
RR58W	10	BK	GXL	1667737C1	1667733C1	9716M	A	1667735C1		
RS58W	10	BK	GXL	1667737C1	1667733C1	9716M	A	1667735C1		
VX58BB	10	BK	GXL	1667737C1	1667733C1	9716M	A	1667735C1		
VY58BB	10	BK	GXL	1667737C1	1667733C1	9716M	A	1667735C1		
RR56W	10	YL	GXL	1667737C1	1667733C1	9716M	B	1667735C1		
RS56W	10	YL	GXL	1667737C1	1667733C1	9716M	B	1667735C1		
VX56BB	10	YL	GXL	1667737C1	1667733C1	9716M	B	1667735C1		
VY56BB	10	YL	GXL	1667737C1	1667733C1	9716M	B	1667735C1		
RR57W	10	LTGN	GXL	1667737C1	1667733C1	9716M	C	1667735C1		
RS57W	10	LTGN	GXL	1667737C1	1667733C1	9716M	C	1667735C1		
VX57BB	10	LTGN	GXL	1667737C1	1667733C1	9716M	C	1667735C1		
VY57BB	10	LTGN	GXL	1667737C1	1667733C1	9716M	C	1667735C1		
YV116-GA	18	WH	TXL	3549254C1		9717F	1	2644038R1		
YY116-GA	18	WH	TXL	3549254C1		9717F	1	2644038R1		
VZ10-GBB	8	WH	GXL	3517818C1	3517817C1	9717F	A	N/A		
WA10-GBB	8	WH	GXL	3517818C1	3517817C1	9717F	A	N/A		
UC10-GBB	8	WH	GXL	3710088C1		9717M	A	2644005R1		
NY65BD	16	OR	GXL	N/A	BLUNT_SL_V	9719A	A	N/A		
NY65-GB	16	WH	GXL	N/A	BLUNT_SL_V	9719A	B	N/A		
NY65BE	16	OR	GXL	N/A	BLUNT_SL_V	9720A	A	N/A		
NY65-GC	16	WH	GXL	N/A	BLUNT_SL_V	9720A	B	N/A		
WA10-GBB	8	WH	GXL	N/A	BLUNT_SL_V	9724A	A	N/A		
VY56BB	10	YL	GXL	N/A	BLUNT_SL_V	9724A	B	N/A		
VY57BB	10	LTGN	GXL	N/A	BLUNT_SL_V	9724A	C	N/A		
VY58BB	10	BK	GXL	N/A	BLUNT_SL_V	9724A	D	N/A		
VY68BB	10	BN	GXL	N/A	BLUNT_SL_V	9724A	E	N/A		
VY70BB	10	RD	GXL	N/A	BLUNT_SL_V	9724A	F	N/A		
VY94BB	10	DKBL	GXL	N/A	BLUNT_SL_V	9724A	G	N/A		
SY59-GA	14	WH	GXL	2033816C1	1661375C2	9738B	A	589391C1		

Circuit Number	Gauge	Color	Insulation	Terminal / Splice Number	Connector Part number	Connector Number	Cavity	Seal/Sleeve	Lock 1	Lock 2
SY59E	16	GY	GXL	2033819C1	1661375C2	9738B	B	1652325C1		
SY59F	16	GY	GXL	2033819C1	1661375C2	9738B	C	1652325C1		
SY59H	16	GY	GXL	2033819C1	1661375C2	9738B	D	1652325C1		
SY59J	16	GY	GXL	2033819C1	1661375C2	9738B	E	1652325C1		
SX59-GA	16	GY	GXL	2033819C1	1661375C2	9739B	A	1652325C1		
SX59E	16	GY	GXL	2033819C1	1661375C2	9739B	B	1652325C1		
SX59F	16	GY	GXL	2033819C1	1661375C2	9739B	C	1652325C1		
SX59H	16	GY	GXL	2033819C1	1661375C2	9739B	D	1652325C1		
SX59J	16	GY	GXL	2033819C1	1661375C2	9739B	E	1652325C1		
SZ59-GA	14	WH	GXL	2033816C1	1661375C2	9740A	A	589391C1		
SZ59E	18	GY	GXL	2033819C1	1661375C2	9740A	B	1652325C1		
SZ59F	18	GY	GXL	2033819C1	1661375C2	9740A	C	1652325C1		
SZ59H	18	GY	GXL	2033819C1	1661375C2	9740A	D	1652325C1		
SZ59J	18	GY	GXL	2033819C1	1661375C2	9740A	E	1652325C1		
SV59-GA	14	WH	GXL	2033816C1	1661375C2	9741A	A	589391C1		
SV59E	18	GY	GXL	2033819C1	1661375C2	9741A	B	1652325C1		
SV59F	18	GY	GXL	2033819C1	1661375C2	9741A	C	1652325C1		
SV59H	18	GY	GXL	2033819C1	1661375C2	9741A	D	1652325C1		
SV59J	18	GY	GXL	2033819C1	1661375C2	9741A	E	1652325C1		
NH58T	10	BK	GXL	2025425C1	1667732C1	9779F	A	1667735C1		
NK58U	10	BK	GXL	2025425C1	1667732C1	9779F	A	1667735C1		
SG58T	10	BK	GXL	2025425C1	1667732C1	9779F	A	1667735C1		
NH56T	10	YL	GXL	2025425C1	1667732C1	9779F	B	1667735C1		
NK56U	10	YL	GXL	2025425C1	1667732C1	9779F	B	1667735C1		
SG56T	10	YL	GXL	2025425C1	1667732C1	9779F	B	1667735C1		
NH57T	10	LTGN	GXL	2025425C1	1667732C1	9779F	C	1667735C1		
NK57U	10	LTGN	GXL	2025425C1	1667732C1	9779F	C	1667735C1		
SG57T	10	LTGN	GXL	2025425C1	1667732C1	9779F	C	1667735C1		
RZ58T	10	BK	GXL	2025425C1	1667732C1	9779F1	A	1667735C1		
RZ56T	10	YL	GXL	2025425C1	1667732C1	9779F1	B	1667735C1		
RZ57T	10	LTGN	GXL	2025425C1	1667732C1	9779F1	C	1667735C1		
MD72V	10	OR	TXL	1687847C1	3535482C1	9780M	A	589390C1		
ME94T	10	DKBL	TXL	1687847C1	3535482C1	9780M	A	589390C1		
NH94T	10	GY	TXL	1687847C1	3535482C1	9780M	A	589390C1		
NK94U	10	GY	TXL	1687847C1	3535482C1	9780M	A	589390C1		
NH68T	10	BN	TXL	1687847C1	3535482C1	9780M	B	589390C1		
NK68U	10	BN	TXL	1687847C1	3535482C1	9780M	B	589390C1		
SG68T	10	BN	TXL	1687847C1	3535482C1	9780M	B	589390C1		
NH70T	10	RD	TXL	1687847C1	3535482C1	9780M	C	589390C1		
NK70U	10	RD	TXL	1687847C1	3535482C1	9780M	C	589390C1		
SG70T	10	RD	TXL	1687847C1	3535482C1	9780M	C	589390C1		
NJ72V	12	OR	GXL	2033816C1	3535482C1	9780M	D	589390C1		
RZ94T	10	GY	TXL	1667737C1	1667733C1	9780M1	A	1667735C1		
RZ68T	10	BN	TXL	1667737C1	1667733C1	9780M1	B	1667735C1		
RZ70T	10	RD	TXL	1667737C1	1667733C1	9780M1	C	1667735C1		
RG58T	10	BK	GXL	2025425C1	1667732C1	9781F	A	1667735C1		
SH58T	10	BK	GXL	2025425C1	1667732C1	9781F	A	1667735C1		
YT58U	10	BK	GXL	2025425C1	1667732C1	9781F	A	1667735C1		
RG56T	10	YL	GXL	2025425C1	1667732C1	9781F	B	1667735C1		
SH56T	10	YL	GXL	2025425C1	1667732C1	9781F	B	1667735C1		
YT56U	10	YL	GXL	2025425C1	1667732C1	9781F	B	1667735C1		
RG57T	10	LTGN	GXL	2025425C1	1667732C1	9781F	C	1667735C1		

Circuit Number	Gauge	Color	Insulation	Terminal / Splice Number	Connector Part number	Connector Number	Cavity	Seal/Sleeve	Lock 1	Lock 2
SH57T	10	LTGN	GXL	2025425C1	1667732C1	9781F	C	1667735C1		
YT57U	10	LTGN	GXL	2025425C1	1667732C1	9781F	C	1667735C1		
MG72V	10	OR	TXL	1687847C1	3535482C1	9782M	A	589390C1		
MH94T	10	DKBL	TXL	1687847C1	3535482C1	9782M	A	589390C1		
RG94T	10	GY	TXL	1687847C1	3535482C1	9782M	A	589390C1		
YT94U	10	GY	TXL	1687847C1	3535482C1	9782M	A	589390C1		
RG68T	10	BN	TXL	1687847C1	3535482C1	9782M	B	589390C1		
SH68T	10	BN	TXL	1687847C1	3535482C1	9782M	B	589390C1		
YT68U	10	BN	TXL	1687847C1	3535482C1	9782M	B	589390C1		
RG70T	10	RD	TXL	1687847C1	3535482C1	9782M	C	589390C1		
SH70T	10	RD	TXL	1687847C1	3535482C1	9782M	C	589390C1		
YT70U	10	RD	TXL	1687847C1	3535482C1	9782M	C	589390C1		
RJ72V	12	OR	GXL	2033816C1	3535482C1	9782M	D	589390C1		
MD94T	10	DKBL	TXL	2031531C1	2031522C1	9783M	A	2025427C1		
ME72V	10	OR	TXL	2031531C1	2031522C1	9783M	A	2025427C1		
MG94T	10	DKBL	TXL	2031531C1	2031522C1	9783M	A	2025427C1		
MH72V	10	OR	TXL	2031531C1	2031522C1	9783M	A	2025427C1		
MD94TA	12	YL	GXL	2031531C1	2031522C1	9783M	B	2025428C1		
MG94TA	12	YL	GXL	2031531C1	2031522C1	9783M	B	2025428C1		
RR58W	10	BK	GXL	2025425C1	1667732C1	9789F	A	1667735C1		
RR56W	10	YL	GXL	2025425C1	1667732C1	9789F	B	1667735C1		
RR57W	10	LTGN	GXL	2025425C1	1667732C1	9789F	C	1667735C1		
RS58W	10	BK	GXL	2025425C1	1667732C1	9789FA	A	1667735C1		
RS56W	10	YL	GXL	2025425C1	1667732C1	9789FA	B	1667735C1		
RS57W	10	LTGN	GXL	2025425C1	1667732C1	9789FA	C	1667735C1		
RR70W	10	RD	GXL	1667737C1	1667733C1	9790M	A	1667735C1		
RR68W	10	BN	GXL	1667737C1	1667733C1	9790M	B	1667735C1		
RR94W	10	DKBL	GXL	1667737C1	1667733C1	9790M	C	1667735C1		
RS70W	10	RD	GXL	1667737C1	1667733C1	9790MA	A	1667735C1		
RS68W	10	BN	GXL	1667737C1	1667733C1	9790MA	B	1667735C1		
RS94W	10	DKBL	GXL	1667737C1	1667733C1	9790MA	C	1667735C1		
NA71BA	14	OR	GXL	3559035C1	3558026C1	9800F	1	3575783C1		
PB71BA	14	OR	GXL	3559035C1	3558026C1	9800F	1	3575783C1		
NA56A	14	OR	GXL	3559035C1	3558026C1	9800F	2	3575783C1		
PB56A	14	OR	GXL	3559035C1	3558026C1	9800F	2	3575783C1		
NA57A	14	OR	GXL	3559035C1	3558026C1	9800F	3	3575783C1		
PB57A	14	OR	GXL	3559035C1	3558026C1	9800F	3	3575783C1		
NA68A	14	BN	GXL	3559035C1	3558026C1	9800F	4	3575783C1		
PB68B	14	BN	GXL	3559035C1	3558026C1	9800F	4	3575783C1		
NA10-G	12	WH	TXL	3559035C1	3558026C1	9800F	5	3575783C1		
PB10-G	12	WH	TXL	3559035C1	3558026C1	9800F	5	3575783C1		
NR32A	18	TN	GXL	3509874C1	3558026C1	9800F	6	3509903C1		
NR9BF	18	GY	GXL	3509874C1	3558026C1	9800F	7	3509903C1		
NS32	18	TN	GXL	3509874C1	3558026C1	9800F	8	3509903C1		
NT49	18	GY	GXL	3509874C1	3558026C1	9800F	9	3509903C1		
NT49-G	18	WH	GXL	3509874C1	3558026C1	9800F	10	3509903C1		
NU49A	18	GY	GXL	3509874C1	3558026C1	9800F	11	3509903C1		
BB94BA	16	GY	GXL	3559035C1	3558026C1	9800F	13	3509903C1		
NB94BA	16	GY	GXL	3559035C1	3558026C1	9800F	13	3509903C1		
BB94BB	16	GY	GXL	3559035C1	3558026C1	9800F	14	3509903C1		
NB94BB	16	GY	GXL	3559035C1	3558026C1	9800F	14	3509903C1		
BB94BC	16	GY	GXL	3559035C1	3558026C1	9800F	15	3509903C1		

Circuit Number	Gauge	Color	Insulation	Terminal / Splice Number	Connector Part number	Connector Number	Cavity	Seal/Sleeve	Lock 1	Lock 2
NB94BC	16	GY	GXL	3559035C1	3558026C1	9800F	15	3509903C1		
BB94BD	16	GY	GXL	3559035C1	3558026C1	9800F	16	3509903C1		
NB94BD	16	GY	GXL	3559035C1	3558026C1	9800F	16	3509903C1		
BB94BE	16	GY	GXL	3559035C1	3558026C1	9800F	17	3509903C1		
NB94BE	16	GY	GXL	3559035C1	3558026C1	9800F	17	3509903C1		
BB94BF	16	GY	GXL	3559035C1	3558026C1	9800F	18	3509903C1		
NB94BF	16	GY	GXL	3559035C1	3558026C1	9800F	18	3509903C1		
BB94BH	16	GY	GXL	3559035C1	3558026C1	9800F	19	3509903C1		
NB94BH	16	GY	GXL	3559035C1	3558026C1	9800F	19	3509903C1		
BB94BJ	14	GY	GXL	3559035C1	3558026C1	9800F	20	3575783C1		
NB94BJ	14	GY	GXL	3559035C1	3558026C1	9800F	20	3575783C1		
BB94BK	16	GY	GXL	3559035C1	3558026C1	9800F	21	3509903C1		
NB94BK	16	GY	GXL	3559035C1	3558026C1	9800F	21	3509903C1		
BB94BL	14	GY	GXL	3559035C1	3558026C1	9800F	22	3575783C1		
NB94BL	14	GY	GXL	3559035C1	3558026C1	9800F	22	3575783C1		
BC94BM	16	GY	GXL	3559035C1	3558026C1	9800F	23	3509903C1		
NC94BM	16	GY	GXL	3559035C1	3558026C1	9800F	23	3509903C1		
BC94BN	16	GY	GXL	3559035C1	3558026C1	9800F	24	3509903C1		
NC94BN	16	GY	GXL	3559035C1	3558026C1	9800F	24	3509903C1		
RA71BA	12	OR	TXL	3559037C1	3558022C1	9800M	1	3575783C1		
SA71BA	12	OR	TXL	3559037C1	3558022C1	9800M	1	3575783C1		
VF71BA	12	OR	TXL	3559037C1	3558022C1	9800M	1	3575783C1		
VH71BA	12	OR	TXL	3559037C1	3558022C1	9800M	1	3575783C1		
VJ71BA	12	OR	TXL	3559037C1	3558022C1	9800M	1	3575783C1		
VK71BA	12	OR	TXL	3559037C1	3558022C1	9800M	1	3575783C1		
RA56A	14	OR	GXL	3559037C1	3558022C1	9800M	2	3575783C1		
SA56A	14	OR	GXL	3559037C1	3558022C1	9800M	2	3575783C1		
VE56A	14	OR	GXL	3559037C1	3558022C1	9800M	2	3575783C1		
VG56A	14	OR	GXL	3559037C1	3558022C1	9800M	2	3575783C1		
VL56AA	14	OR	GXL	3559037C1	3558022C1	9800M	2	3575783C1		
RA57A	14	OR	GXL	3559037C1	3558022C1	9800M	3	3575783C1		
SA57A	14	OR	GXL	3559037C1	3558022C1	9800M	3	3575783C1		
VE57A	14	OR	GXL	3559037C1	3558022C1	9800M	3	3575783C1		
VG57A	14	OR	GXL	3559037C1	3558022C1	9800M	3	3575783C1		
VL57AA	14	OR	GXL	3559037C1	3558022C1	9800M	3	3575783C1		
RA68A	14	BN	GXL	3559037C1	3558022C1	9800M	4	3575783C1		
SA68A	14	BN	GXL	3559037C1	3558022C1	9800M	4	3575783C1		
VE68A	14	BN	GXL	3559037C1	3558022C1	9800M	4	3575783C1		
VG68A	14	BN	GXL	3559037C1	3558022C1	9800M	4	3575783C1		
VL68AA	14	BN	GXL	3559037C1	3558022C1	9800M	4	3575783C1		
RA10-G	12	WH	TXL	3559037C1	3558022C1	9800M	5	3575783C1		
SA10-G	12	WH	TXL	3559037C1	3558022C1	9800M	5	3575783C1		
VF10-G	12	WH	TXL	3559037C1	3558022C1	9800M	5	3575783C1		
VH10-G	12	WH	TXL	3559037C1	3558022C1	9800M	5	3575783C1		
VJ10-G	12	WH	TXL	3559037C1	3558022C1	9800M	5	3575783C1		
VK10-G	12	WH	TXL	3559037C1	3558022C1	9800M	5	3575783C1		
RH32A	18	TN	GXL	3559036C1	3558022C1	9800M	6	3509903C1		
RJ32A	18	TN	GXL	3559036C1	3558022C1	9800M	6	3509903C1		
TA32	18	TN	GXL	3559036C1	3558022C1	9800M	6	3509903C1		
UC32A	18	TN	GXL	3559036C1	3558022C1	9800M	6	3509903C1	3768011C1	
RH9A	18	GY	GXL	3559036C1	3558022C1	9800M	7	3509903C1		
RJ9	18	GY	GXL	3559036C1	3558022C1	9800M	7	3509903C1		

Circuit Number	Gauge	Color	Insulation	Terminal / Splice Number	Connector Part number	Connector Number	Cavity	Seal/Sleeve	Lock 1	Lock 2
TA9C	18	GY	GXL	3559036C1	3558022C1	9800M	7	3509903C1	1618847C1	1618846C1
UC9A	18	GY	GXL	3559036C1	3558022C1	9800M	7	3509903C1	3768016C1	
RH32	18	TN	GXL	3559036C1	3558022C1	9800M	8	3509903C1		
UC32	18	TN	GXL	3559036C1	3558022C1	9800M	8	3509903C1	3768011C1	
RL49	18	GY	GXL	3559036C1	3558022C1	9800M	9	3509903C1		
RM49	18	GY	GXL	3559036C1	3558022C1	9800M	9	3509903C1		
TB49	18	GY	GXL	3559036C1	3558022C1	9800M	9	3509903C1	3573833C1	
UV49	18	GY	GXL	3559036C1	3558022C1	9800M	9	3509903C1		
UW49	18	GY	GXL	3559036C1	3558022C1	9800M	9	3509903C1		
RL49-G	18	WH	GXL	3559036C1	3558022C1	9800M	10	3509903C1	1661873C1	
RN49-GC	18	WH	GXL	3559036C1	3558022C1	9800M	10	3509903C1		
RP49-G	18	WH	GXL	3559036C1	3558022C1	9800M	10	3509903C1		
TB49-G	18	WH	GXL	3559036C1	3558022C1	9800M	10	3509903C1	3601839C1	
UV49-G	18	WH	GXL	3559036C1	3558022C1	9800M	10	3509903C1		
UX49-G	18	WH	GXL	3559036C1	3558022C1	9800M	10	3509903C1		
UY49-GC	18	WH	GXL	3559036C1	3558022C1	9800M	10	3509903C1		
RN49A	18	GY	GXL	3559036C1	3558022C1	9800M	11	3509903C1		
UY49A	18	GY	GXL	3559036C1	3558022C1	9800M	11	3509903C1		
RB94BA	16	GY	GXL	3559037C1	3558022C1	9800M	13	3509903C1		
SB94BA	16	GY	GXL	3559037C1	3558022C1	9800M	13	3509903C1		
SD94BA	16	GY	GXL	3559037C1	3558022C1	9800M	13	3509903C1		
SR94MA	18	GY	TXL	3559036C1	3558022C1	9800M	13	3532128C1		
SS94MA	18	GY	TXL	3559036C1	3558022C1	9800M	13	3532128C1		
ST94MA	18	GY	TXL	3559036C1	3558022C1	9800M	13	3532128C1	1667771C1	
SZ94BA	16	GY	GXL	3559037C1	3558022C1	9800M	13	3509903C1		
TF94BA	16	GY	GXL	3559037C1	3558022C1	9800M	13	3509903C1	3557682C1	
UJ94MA	18	GY	TXL	3559036C1	3558022C1	9800M	13	3532128C1		
UP94BA	16	GY	GXL	3559037C1	3558022C1	9800M	13	3509903C1		
US94MA	18	GY	TXL	3559036C1	3558022C1	9800M	13	3532128C1		
VA94BA	16	GY	GXL	3559037C1	3558022C1	9800M	13	3509903C1		
VB94MA	18	GY	TXL	3559036C1	3558022C1	9800M	13	3532128C1		
VT94MA	18	GY	TXL	3559036C1	3558022C1	9800M	13	3532128C1		
RB94BB	16	GY	GXL	3559037C1	3558022C1	9800M	14	3509903C1		
SB94BB	16	GY	GXL	3559037C1	3558022C1	9800M	14	3509903C1		
SD94BB	16	GY	GXL	3559037C1	3558022C1	9800M	14	3509903C1		
SR94MB	18	GY	TXL	3559036C1	3558022C1	9800M	14	3532128C1		
SS94MB	18	GY	TXL	3559036C1	3558022C1	9800M	14	3532128C1		
ST94MB	18	GY	TXL	3559036C1	3558022C1	9800M	14	3532128C1	1689501C1	
SZ94BB	16	GY	GXL	3559037C1	3558022C1	9800M	14	3509903C1	3545579C1	
TF94BB	16	GY	GXL	3559037C1	3558022C1	9800M	14	3509903C1		
UJ94MB	18	GY	TXL	3559036C1	3558022C1	9800M	14	3532128C1		
UP94BB	16	GY	GXL	3559037C1	3558022C1	9800M	14	3509903C1		
US94MB	18	GY	TXL	3559036C1	3558022C1	9800M	14	3532128C1		
VA94BB	16	GY	GXL	3559037C1	3558022C1	9800M	14	3509903C1		
VB94MB	18	GY	TXL	3559036C1	3558022C1	9800M	14	3532128C1		
VT94MB	18	GY	TXL	3559036C1	3558022C1	9800M	14	3532128C1		
RB94BC	16	GY	GXL	3559037C1	3558022C1	9800M	15	3509903C1		
SB94BC	16	GY	GXL	3559037C1	3558022C1	9800M	15	3509903C1		
SD94BC	16	GY	GXL	3559037C1	3558022C1	9800M	15	3509903C1		
SR94MC	18	GY	TXL	3559036C1	3558022C1	9800M	15	3532128C1		
SS94MC	18	GY	TXL	3559036C1	3558022C1	9800M	15	3532128C1		
ST94MC	18	GY	TXL	3559036C1	3558022C1	9800M	15	3532128C1	2006503C1	

Circuit Number	Gauge	Color	Insulation	Terminal / Splice Number	Connector Part number	Connector Number	Cavity	Seal/Sleeve	Lock 1	Lock 2
SZ94BC	16	GY	GXL	3559037C1	3558022C1	9800M	15	3509903C1	3549120C1	
TF94BC	16	GY	GXL	3559037C1	3558022C1	9800M	15	3509903C1	3683466C1	3683466C1
UJ94MC	18	GY	TXL	3559036C1	3558022C1	9800M	15	3532128C1		
UP94BC	16	GY	GXL	3559037C1	3558022C1	9800M	15	3509903C1		
US94MC	18	GY	TXL	3559036C1	3558022C1	9800M	15	3532128C1		
VA94BC	16	GY	GXL	3559037C1	3558022C1	9800M	15	3509903C1		
VB94MC	18	GY	TXL	3559036C1	3558022C1	9800M	15	3532128C1		
VT94MC	18	GY	TXL	3559036C1	3558022C1	9800M	15	3532128C1		
RB94BD	16	GY	GXL	3559037C1	3558022C1	9800M	16	3509903C1		
SB94BD	16	GY	GXL	3559037C1	3558022C1	9800M	16	3509903C1		
SD94BD	16	GY	GXL	3559037C1	3558022C1	9800M	16	3509903C1		
SR94MD	18	GY	TXL	3559036C1	3558022C1	9800M	16	3532128C1		
SS94MD	18	GY	TXL	3559036C1	3558022C1	9800M	16	3532128C1		
ST94MD	18	GY	TXL	3559036C1	3558022C1	9800M	16	3532128C1	2007316C1	
SZ94BD	16	GY	GXL	3559037C1	3558022C1	9800M	16	3509903C1	3553650C1	
TF94BD	16	GY	GXL	3559037C1	3558022C1	9800M	16	3509903C1		
UJ94MD	18	GY	TXL	3559036C1	3558022C1	9800M	16	3532128C1		
UP94BD	16	GY	GXL	3559037C1	3558022C1	9800M	16	3509903C1		
US94MD	18	GY	TXL	3559036C1	3558022C1	9800M	16	3532128C1		
VA94BD	16	GY	GXL	3559037C1	3558022C1	9800M	16	3509903C1		
VB94MD	18	GY	TXL	3559036C1	3558022C1	9800M	16	3532128C1		
VT94MD	18	GY	TXL	3559036C1	3558022C1	9800M	16	3532128C1		
RB94BE	16	GY	GXL	3559037C1	3558022C1	9800M	17	3509903C1		
SB94BE	16	GY	GXL	3559037C1	3558022C1	9800M	17	3509903C1		
SD94BE	16	GY	GXL	3559037C1	3558022C1	9800M	17	3509903C1		
SR94ME	18	GY	TXL	3559036C1	3558022C1	9800M	17	3532128C1		
SS94ME	18	GY	TXL	3559036C1	3558022C1	9800M	17	3532128C1		
ST94ME	18	GY	TXL	3559036C1	3558022C1	9800M	17	3532128C1		
SZ94BE	16	GY	GXL	3559037C1	3558022C1	9800M	17	3509903C1	3562309C1	
TF94BE	16	GY	GXL	3559037C1	3558022C1	9800M	17	3509903C1		
UJ94ME	18	GY	TXL	3559036C1	3558022C1	9800M	17	3532128C1		
UP94BE	16	GY	GXL	3559037C1	3558022C1	9800M	17	3509903C1		
US94ME	18	GY	TXL	3559036C1	3558022C1	9800M	17	3532128C1		
VA94BE	16	GY	GXL	3559037C1	3558022C1	9800M	17	3509903C1		
VB94ME	18	GY	TXL	3559036C1	3558022C1	9800M	17	3532128C1		
VT94ME	18	GY	TXL	3559036C1	3558022C1	9800M	17	3532128C1		
RB94BF	16	GY	GXL	3559037C1	3558022C1	9800M	18	3509903C1		
SB94BF	16	GY	GXL	3559037C1	3558022C1	9800M	18	3509903C1		
SD94BF	16	GY	GXL	3559037C1	3558022C1	9800M	18	3509903C1		
SR94MF	18	GY	TXL	3559036C1	3558022C1	9800M	18	3532128C1		
SS94MF	18	GY	TXL	3559036C1	3558022C1	9800M	18	3532128C1		
ST94MF	18	GY	TXL	3559036C1	3558022C1	9800M	18	3532128C1	3515765C1	
SZ94BF	16	GY	GXL	3559037C1	3558022C1	9800M	18	3509903C1	2005242C1	
TF94BF	16	GY	GXL	3559037C1	3558022C1	9800M	18	3509903C1	1661263C1	3540454C1
UJ94MF	18	GY	TXL	3559036C1	3558022C1	9800M	18	3532128C1		
UP94BF	16	GY	GXL	3559037C1	3558022C1	9800M	18	3509903C1		
US94MF	18	GY	TXL	3559036C1	3558022C1	9800M	18	3532128C1		
VA94BF	16	GY	GXL	3559037C1	3558022C1	9800M	18	3509903C1		
VB94MF	18	GY	TXL	3559036C1	3558022C1	9800M	18	3532128C1		
VT94MF	18	GY	TXL	3559036C1	3558022C1	9800M	18	3532128C1		
RB94BH	16	GY	GXL	3559037C1	3558022C1	9800M	19	3509903C1		
SB94BH	16	GY	GXL	3559037C1	3558022C1	9800M	19	3509903C1		

Circuit Number	Gauge	Color	Insulation	Terminal / Splice Number	Connector Part number	Connector Number	Cavity	Seal/Sleeve	Lock 1	Lock 2
SD94BH	16	GY	GXL	3559037C1	3558022C1	9800M	19	3509903C1		
SR94MH	18	GY	TXL	3559036C1	3558022C1	9800M	19	3532128C1		
SS94MH	18	GY	TXL	3559036C1	3558022C1	9800M	19	3532128C1	1661263C1	
ST94MH	18	GY	TXL	3559036C1	3558022C1	9800M	19	3532128C1		
SZ94BH	16	GY	GXL	3559037C1	3558022C1	9800M	19	3509903C1	3598918C1	3598919C1
TF94BH	16	GY	GXL	3559037C1	3558022C1	9800M	19	3509903C1		
UJ94MH	18	GY	TXL	3559036C1	3558022C1	9800M	19	3532128C1		
UP94BH	16	GY	GXL	3559037C1	3558022C1	9800M	19	3509903C1		
US94MH	18	GY	TXL	3559036C1	3558022C1	9800M	19	3532128C1		
VA94BH	16	GY	GXL	3559037C1	3558022C1	9800M	19	3509903C1		
VB94MH	18	GY	TXL	3559036C1	3558022C1	9800M	19	3532128C1		
VT94MH	18	GY	TXL	3559036C1	3558022C1	9800M	19	3532128C1		
RB94BJ	16	GY	GXL	3559037C1	3558022C1	9800M	20	3509903C1		
SB94BJ	16	GY	GXL	3559037C1	3558022C1	9800M	20	3509903C1		
SD94BJ	16	GY	GXL	3559037C1	3558022C1	9800M	20	3509903C1		
SR94MJ	18	GY	TXL	3559036C1	3558022C1	9800M	20	3532128C1		
SS94MJ	18	GY	TXL	3559036C1	3558022C1	9800M	20	3532128C1	1661376C1	
ST94MJ	18	GY	TXL	3559036C1	3558022C1	9800M	20	3532128C1		
SZ94BJ	16	GY	GXL	3559037C1	3558022C1	9800M	20	3509903C1		
TF94BJ	16	GY	GXL	3559037C1	3558022C1	9800M	20	3509903C1		
UJ94MJ	18	GY	TXL	3559036C1	3558022C1	9800M	20	3532128C1		
UP94BJ	16	GY	GXL	3559037C1	3558022C1	9800M	20	3509903C1		
US94MJ	18	GY	TXL	3559036C1	3558022C1	9800M	20	3532128C1		
VA94BJ	16	GY	GXL	3559037C1	3558022C1	9800M	20	3509903C1		
VB94MJ	18	GY	TXL	3559036C1	3558022C1	9800M	20	3532128C1		
VT94MJ	18	GY	TXL	3559036C1	3558022C1	9800M	20	3532128C1		
RB94BK	16	GY	GXL	3559037C1	3558022C1	9800M	21	3509903C1		
SB94BK	16	GY	GXL	3559037C1	3558022C1	9800M	21	3509903C1		
SD94BK	16	GY	GXL	3559037C1	3558022C1	9800M	21	3509903C1		
SR94MK	18	GY	TXL	3559036C1	3558022C1	9800M	21	3532128C1		
SS94MK	18	GY	TXL	3559036C1	3558022C1	9800M	21	3532128C1	1661890C1	
ST94MK	18	GY	TXL	3559036C1	3558022C1	9800M	21	3532128C1	3540614C1	
SZ94BK	16	GY	GXL	3559037C1	3558022C1	9800M	21	3509903C1	3562309C1	
TF94BK	16	GY	GXL	3559037C1	3558022C1	9800M	21	3509903C1		
UJ94MK	18	GY	TXL	3559036C1	3558022C1	9800M	21	3532128C1		
UP94BK	16	GY	GXL	3559037C1	3558022C1	9800M	21	3509903C1		
US94MK	18	GY	TXL	3559036C1	3558022C1	9800M	21	3532128C1		
VA94BK	16	GY	GXL	3559037C1	3558022C1	9800M	21	3509903C1		
VB94MK	18	GY	TXL	3559036C1	3558022C1	9800M	21	3532128C1		
VT94MK	18	GY	TXL	3559036C1	3558022C1	9800M	21	3532128C1		
RB94BL	16	GY	GXL	3559037C1	3558022C1	9800M	22	3509903C1		
SB94BL	16	GY	GXL	3559037C1	3558022C1	9800M	22	3509903C1		
SD94BL	16	GY	GXL	3559037C1	3558022C1	9800M	22	3509903C1		
SR94ML	18	GY	TXL	3559036C1	3558022C1	9800M	22	3532128C1		
SS94ML	18	GY	TXL	3559036C1	3558022C1	9800M	22	3532128C1	1661263C1	
ST94ML	18	GY	TXL	3559036C1	3558022C1	9800M	22	3532128C1		
SZ94BL	16	GY	GXL	3559037C1	3558022C1	9800M	22	3509903C1		
TF94BL	16	GY	GXL	3559037C1	3558022C1	9800M	22	3509903C1	3562309C1	
UJ94ML	18	GY	TXL	3559036C1	3558022C1	9800M	22	3532128C1		
UP94BL	16	GY	GXL	3559037C1	3558022C1	9800M	22	3509903C1		
US94ML	18	GY	TXL	3559036C1	3558022C1	9800M	22	3532128C1		
VA94BL	16	GY	GXL	3559037C1	3558022C1	9800M	22	3509903C1		

Circuit Number	Gauge	Color	Insulation	Terminal / Splice Number	Connector Part number	Connector Number	Cavity	Seal/Sleeve	Lock 1	Lock 2
VB94ML	18	GY	TXL	3559036C1	3558022C1	9800M	22	3532128C1		
VT94ML	18	GY	TXL	3559036C1	3558022C1	9800M	22	3532128C1		
RC94BM	16	GY	GXL	3559037C1	3558022C1	9800M	23	3509903C1		
SC94BM	16	GY	GXL	3559037C1	3558022C1	9800M	23	3509903C1		
SE94BM	16	GY	GXL	3559037C1	3558022C1	9800M	23	3509903C1		
[SU94MM]	16	-	GXL	3559037C1	3558022C1	9800M	23	3509903C1		
[SV94MM]	16	-	GXL	3559037C1	3558022C1	9800M	23	3509903C1		
[SW94MM]	16	-	GXL	3559037C1	3558022C1	9800M	23	3509903C1		
RC94BN	16	GY	GXL	3559037C1	3558022C1	9800M	24	3509903C1		
SC94BN	16	GY	GXL	3559037C1	3558022C1	9800M	24	3509903C1		
SE94BN	16	GY	GXL	3559037C1	3558022C1	9800M	24	3509903C1		
[SU94MN]	16	-	GXL	3559037C1	3558022C1	9800M	24	3509903C1		
[SV94MN]	16	-	GXL	3559037C1	3558022C1	9800M	24	3509903C1		
[SW94MN]	16	-	GXL	3559037C1	3558022C1	9800M	24	3509903C1		
NP109B	18	GY	GXL	1667742C1	1667740C1	9865F	A	1661872C1		
NP106B	18	OR	GXL	1667742C1	1667740C1	9865F	B	1661872C1		
NP61B	18	GY	GXL	1667742C1	1667740C1	9865F	C	1661872C1		
RD109B	18	GY	GXL	1661875C1	1667741C1	9865M	A	1661872C1		
RE109B	18	GY	GXL	1661875C1	1667741C1	9865M	A	1661872C1		
RD106B	18	GY	GXL	1661875C1	1667741C1	9865M	B	1661872C1		
RE106B	18	GY	GXL	1661875C1	1667741C1	9865M	B	1661872C1		
RD61B	18	GY	GXL	1661875C1	1667741C1	9865M	C	1661872C1		
RE61B	18	GY	GXL	1661875C1	1667741C1	9865M	C	1661872C1		
GA39	16	GY	GXL	2033819C1	1673790C1	9901A	A	1652325C1		
GA39-G	16	WH	GXL	2033819C1	1673790C1	9901A	B	1652325C1		
GF39A	16	GY	GXL	2033819C1	1673790C1	9901B	A	1652325C1		
GF39-GA	16	WH	GXL	2033819C1	1673790C1	9901B	B	1652325C1		
GD39A	16	GY	GXL	2033819C1	1673790C1	9902A	A	1652325C1		
GD39-GA	16	WH	GXL	2033819C1	1673790C1	9902A	B	1652325C1		
YV116-GA	18	WH	TXL	3727971C1	3539139C1	9989A	1	N/A		
YV116L	18	GY	TXL	3727971C1	3539139C1	9989A	2	N/A		
YV116M	18	GY	TXL	3727971C1	3539139C1	9989A	3	N/A		
YY116M	18	GY	TXL	3757932C1	3991593C1	9989B	1	N/A		
YY116-GA	18	WH	TXL	3757932C1	3991593C1	9989B	2	N/A		
YY116L	18	GY	GXL	3757932C1	3991593C1	9989B	3	N/A		
YY116U	18	GY	GXL	3757932C1	3991593C1	9989B	4	N/A		
AA14J	4	RD	SGX	1613947C1		AS1	-	2644000R1		
AA14J-FL	8	LTBL	FUS	1613947C1		AS1	-	2644000R1		
AG166A	20	LTGN	TXL	239481R1		AS1	-	2644000R1		
AG166AA	20	LTGN	TXL	239481R1		AS1	-	2644000R1		
AG166AB	20	LTGN	TXL	239481R1		AS1	-	2644000R1		
FU9BB	18	GY	TXL	239481R1		AS10	-	2644000R1		
FU9BC	18	GY	GXL	239481R1		AS10	-	2644000R1		
FU9BD	18	GY	GXL	239481R1		AS10	-	2644000R1		
FU9BB	18	GY	TXL	239481R1		AS10	-	2644000R1		
FU9BC	18	GY	GXL	239481R1		AS10	-	2644000R1		
FU9BD	18	GY	GXL	239481R1		AS10	-	2644000R1		
FU79A	18	GY	TXL	239481R1		AS11	-	2644000R1		
FU79B	18	GY	GXL	239481R1		AS11	-	2644000R1		
FU79C	18	GY	GXL	239481R1		AS11	-	2644000R1		
FU79A	18	GY	TXL	239481R1		AS11	-	2644000R1		
FU79B	18	GY	GXL	239481R1		AS11	-	2644000R1		

Circuit Number	Gauge	Color	Insulation	Terminal / Splice Number	Connector Part number	Connector Number	Cavity	Seal/Sleeve	Lock 1	Lock 2
FU79C	18	GY	GXL	239481R1		AS11	-	2644000R1		
AA60B	18	OR	TXL	239481R1		AS12	-	2644000R1		
AA9	18	GY	GXL	239481R1		AS12	-	2644000R1		
AA9A	18	GY	TXL	239481R1		AS12	-	2644000R1		
AA9AA	18	GY	TXL	239481R1		AS12	-	2644000R1		
AA60B	18	OR	TXL	239481R1		AS12	-	2644000R1		
AA9	18	GY	GXL	239481R1		AS12	-	2644000R1		
AA9A	18	GY	TXL	239481R1		AS12	-	2644000R1		
AA9AA	18	GY	TXL	239481R1		AS12	-	2644000R1		
GZ5AA(-)	18	GN	TXL	239481R1		AS13	-	2644000R1		
GZ5AB(-)	18	GN	TXL	239481R1		AS13	-	2644000R1		
GZ5AC(-)	18	GN	TXL	239481R1		AS13	-	2644000R1		
JK5AA(-)	18	GN	TXL	239481R1		AS13	-	2644000R1		
JK5AB(-)	18	GN	TXL	239481R1		AS13	-	2644000R1		
JK5AC(-)	18	GN	TXL	239481R1		AS13	-	2644000R1		
KU5AA(-)	18	GN	TXL	239481R1		AS13	-	2644000R1		
KU5AC(-)	18	GN	TXL	239481R1		AS13	-	2644000R1		
KU5AG(-)	18	GN	TXL	239481R1		AS13	-	2644000R1		
LN5AA(-)	18	GN	TXL	239481R1		AS13	-	2644000R1		
LN5AC(-)	18	GN	TXL	239481R1		AS13	-	2644000R1		
LN5AG(-)	18	GN	TXL	239481R1		AS13	-	2644000R1		
GZ5AA(-)	18	GN	TXL	239481R1		AS13	-	2644000R1		
GZ5AB(-)	18	GN	TXL	239481R1		AS13	-	2644000R1		
GZ5AC(-)	18	GN	TXL	239481R1		AS13	-	2644000R1		
JK5AA(-)	18	GN	TXL	239481R1		AS13	-	2644000R1		
JK5AB(-)	18	GN	TXL	239481R1		AS13	-	2644000R1		
JK5AC(-)	18	GN	TXL	239481R1		AS13	-	2644000R1		
KU5AA(-)	18	GN	TXL	239481R1		AS13	-	2644000R1		
KU5AC(-)	18	GN	TXL	239481R1		AS13	-	2644000R1		
KU5AG(-)	18	GN	TXL	239481R1		AS13	-	2644000R1		
LN5AA(-)	18	GN	TXL	239481R1		AS13	-	2644000R1		
LN5AC(-)	18	GN	TXL	239481R1		AS13	-	2644000R1		
LN5AG(-)	18	GN	TXL	239481R1		AS13	-	2644000R1		
GZ5AA(+)	18	YL	TXL	239481R1		AS14	-	2644000R1		
GZ5AB(+)	18	YL	TXL	239481R1		AS14	-	2644000R1		
GZ5AC(+)	18	YL	TXL	239481R1		AS14	-	2644000R1		
JK5AA(+)	18	YL	TXL	239481R1		AS14	-	2644000R1		
JK5AB(+)	18	YL	TXL	239481R1		AS14	-	2644000R1		
JK5AC(+)	18	YL	TXL	239481R1		AS14	-	2644000R1		
KU5AA(+)	18	YL	TXL	239481R1		AS14	-	2644000R1		
KU5AC(+)	18	YL	TXL	239481R1		AS14	-	2644000R1		
KU5AG(+)	18	YL	TXL	239481R1		AS14	-	2644000R1		
LN5AA(+)	18	YL	TXL	239481R1		AS14	-	2644000R1		
LN5AC(+)	18	YL	TXL	239481R1		AS14	-	2644000R1		
LN5AG(+)	18	YL	TXL	239481R1		AS14	-	2644000R1		
GZ5AA(+)	18	YL	TXL	239481R1		AS14	-	2644000R1		
GZ5AB(+)	18	YL	TXL	239481R1		AS14	-	2644000R1		
GZ5AC(+)	18	YL	TXL	239481R1		AS14	-	2644000R1		
JK5AA(+)	18	YL	TXL	239481R1		AS14	-	2644000R1		
JK5AB(+)	18	YL	TXL	239481R1		AS14	-	2644000R1		
JK5AC(+)	18	YL	TXL	239481R1		AS14	-	2644000R1		
KU5AA(+)	18	YL	TXL	239481R1		AS14	-	2644000R1		

Circuit Number	Gauge	Color	Insulation	Terminal / Splice Number	Connector Part number	Connector Number	Cavity	Seal/Sleeve	Lock 1	Lock 2
KU5AC(+)	18	YL	TXL	239481R1		AS14	-	2644000R1		
KU5AG(+)	18	YL	TXL	239481R1		AS14	-	2644000R1		
LN5AA(+)	18	YL	TXL	239481R1		AS14	-	2644000R1		
LN5AC(+)	18	YL	TXL	239481R1		AS14	-	2644000R1		
LN5AG(+)	18	YL	TXL	239481R1		AS14	-	2644000R1		
AA63A	16	DKBL	TXL	239481R1		AS15	-	2644000R1		
AA63B	16	DKBL	TXL	239481R1		AS15	-	2644000R1		
AA63C	16	DKBL	TXL	239481R1		AS15	-	2644000R1		
AA63A	16	DKBL	TXL	239481R1		AS15	-	2644000R1		
AA63B	16	DKBL	TXL	239481R1		AS15	-	2644000R1		
AA63C	16	DKBL	TXL	239481R1		AS15	-	2644000R1		
AA9B	18	GY	TXL	239481R1		AS16	-	2644000R1		
AA9BAA	16	GY	TXL	239481R1		AS16	-	2644000R1		
AA9BAB	16	GY	TXL	239481R1		AS16	-	2644000R1		
AA9BC	18	GY	TXL	239481R1		AS16	-	2644000R1		
AA9B	18	GY	TXL	239481R1		AS16	-	2644000R1		
AA9BAA	16	GY	TXL	239481R1		AS16	-	2644000R1		
AA9BAB	16	GY	TXL	239481R1		AS16	-	2644000R1		
AA9BC	18	GY	TXL	239481R1		AS16	-	2644000R1		
AA63	18	DKBL	TXL	239481R1		AS17	-	2644000R1		
AA63BB	18	DKBL	TXL	239481R1		AS17	-	2644000R1		
AA63BC	18	DKBL	TXL	239481R1		AS17	-	2644000R1		
AA63D	18	DKBL	TXL	239481R1		AS17	-	2644000R1		
AA63	18	DKBL	TXL	239481R1		AS17	-	2644000R1		
AA63BB	18	DKBL	TXL	239481R1		AS17	-	2644000R1		
AA63BC	18	DKBL	TXL	239481R1		AS17	-	2644000R1		
AA63D	18	DKBL	TXL	239481R1		AS17	-	2644000R1		
BY65	16	OR	TXL	239481R1		AS18	-	2644000R1		
BY65AA	16	OR	TXL	239481R1		AS18	-	2644000R1		
BY65AB	16	OR	TXL	239481R1		AS18	-	2644000R1		
BY65	16	OR	TXL	239481R1		AS18	-	2644000R1		
BY65AA	16	OR	TXL	239481R1		AS18	-	2644000R1		
BY65AB	16	OR	TXL	239481R1		AS18	-	2644000R1		
CT86-GD1	18	WH	TXL	239481R1		AS19	-	2644000R1		
CT86-GD2	18	WH	TXL	239481R1		AS19	-	2644000R1		
CT86-GND	18	WH	TXL	239481R1		AS19	-	2644000R1		
CT86-GD1	18	WH	TXL	239481R1		AS19	-	2644000R1		
CT86-GD2	18	WH	TXL	239481R1		AS19	-	2644000R1		
CT86-GND	18	WH	TXL	239481R1		AS19	-	2644000R1		
3D5A(+)	18	YL	TXL	239481R1		AS2	-	2644000R1		
3D5B(+)	18	YL	TXL	239481R1		AS2	-	2644000R1		
3D5C(+)	18	YL	TXL	239481R1		AS2	-	2644000R1		
3M5A(+)	18	YL	TXL	239481R1		AS2	-	2644000R1		
3M5B(+)	18	YL	TXL	239481R1		AS2	-	2644000R1		
3M5C(+)	18	YL	TXL	239481R1		AS2	-	2644000R1		
9K5A(+)	18	YL	TXL	239481R1		AS2	-	2644000R1		
9K5B(+)	18	YL	TXL	239481R1		AS2	-	2644000R1		
9K5C(+)	18	YL	TXL	239481R1		AS2	-	2644000R1		
9L5A(+)	18	YL	TXL	239481R1		AS2	-	2644000R1		
9L5B(+)	18	YL	TXL	239481R1		AS2	-	2644000R1		
9L5C(+)	18	YL	TXL	239481R1		AS2	-	2644000R1		
9P5A(+)	18	YL	TXL	239481R1		AS2	-	2644000R1		

Circuit Number	Gauge	Color	Insulation	Terminal / Splice Number	Connector Part number	Connector Number	Cavity	Seal/Sleeve	Lock 1	Lock 2
9P5B(+)	18	YL	TXL	239481R1		AS2	-	2644000R1	1667734C1	
9P5C(+)	18	YL	TXL	239481R1		AS2	-	2644000R1	1671608C1	
9V5A(+)	18	YL	TXL	239481R1		AS2	-	2644000R1		
9V5B(+)	18	YL	TXL	239481R1		AS2	-	2644000R1		
9V5C(+)	18	YL	TXL	239481R1		AS2	-	2644000R1		
JB5A(+)	18	YL	TXL	239481R1		AS2	-	2644000R1		
JB5B(+)	18	YL	TXL	239481R1		AS2	-	2644000R1		
JB5C(+)	18	YL	TXL	239481R1		AS2	-	2644000R1		
LC5A(+)	18	YL	TXL	239481R1		AS2	-	2644000R1		
LC5B(+)	18	YL	TXL	239481R1		AS2	-	2644000R1		
LC5F(+)	18	YL	TXL	239481R1		AS2	-	2644000R1		
LD5A(+)	18	YL	TXL	239481R1		AS2	-	2644000R1		
LD5B(+)	18	YL	TXL	239481R1		AS2	-	2644000R1		
LD5F(+)	18	YL	TXL	239481R1		AS2	-	2644000R1		
LE5A(+)	18	YL	TXL	239481R1		AS2	-	2644000R1		
LE5B(+)	18	YL	TXL	239481R1		AS2	-	2644000R1		
LE5F(+)	18	YL	TXL	239481R1		AS2	-	2644000R1		
LF5A(+)	18	YL	TXL	239481R1		AS2	-	2644000R1		
LF5B(+)	18	YL	TXL	239481R1		AS2	-	2644000R1		
LF5C(+)	18	YL	TXL	239481R1		AS2	-	2644000R1		
LS5A(+)	18	YL	TXL	239481R1		AS2	-	2644000R1		
LS5B(+)	18	YL	TXL	239481R1		AS2	-	2644000R1		
LS5C(+)	18	YL	TXL	239481R1		AS2	-	2644000R1		
LT5A(+)	18	YL	TXL	239481R1		AS2	-	2644000R1		
LT5B(+)	18	YL	TXL	239481R1		AS2	-	2644000R1		
LT5C(+)	18	YL	TXL	239481R1		AS2	-	2644000R1		
LU5A(+)	18	YL	TXL	239481R1		AS2	-	2644000R1		
LU5B(+)	18	YL	TXL	239481R1		AS2	-	2644000R1		
LU5C(+)	18	YL	TXL	239481R1		AS2	-	2644000R1		
LW5A(+)	18	YL	TXL	239481R1		AS2	-	2644000R1		
LW5B(+)	18	YL	TXL	239481R1		AS2	-	2644000R1		
LW5C(+)	18	YL	TXL	239481R1		AS2	-	2644000R1		
PY5A(+)	18	YL	TXL	239481R1		AS2	-	2644000R1		
PY5B(+)	18	YL	TXL	239481R1		AS2	-	2644000R1		
PY5C(+)	18	YL	TXL	239481R1		AS2	-	2644000R1		
PZ5A(+)	18	YL	TXL	239481R1		AS2	-	2644000R1		
PZ5B(+)	18	YL	TXL	239481R1		AS2	-	2644000R1		
PZ5C(+)	18	YL	TXL	239481R1		AS2	-	2644000R1		
RD5A(+)	18	YL	TXL	239481R1		AS2	-	2644000R1		
RD5B(+)	18	YL	TXL	239481R1		AS2	-	2644000R1		
RD5C(+)	18	YL	TXL	239481R1		AS2	-	2644000R1		
RG5A(+)	18	YL	TXL	239481R1		AS2	-	2644000R1		
RG5B(+)	18	YL	TXL	239481R1		AS2	-	2644000R1		
RG5C(+)	18	YL	TXL	239481R1		AS2	-	2644000R1		
RJ5A(+)	18	YL	TXL	239481R1		AS2	-	2644000R1		
RJ5B(+)	18	YL	TXL	239481R1		AS2	-	2644000R1		
RJ5C(+)	18	YL	TXL	239481R1		AS2	-	2644000R1		
RM5A(+)	18	YL	TXL	239481R1		AS2	-	2644000R1		
RM5B(+)	18	YL	TXL	239481R1		AS2	-	2644000R1		
RM5C(+)	18	YL	TXL	239481R1		AS2	-	2644000R1		
RS5A(+)	18	YL	TXL	239481R1		AS2	-	2644000R1		
RS5B(+)	18	YL	TXL	239481R1		AS2	-	2644000R1		

Circuit Number	Gauge	Color	Insulation	Terminal / Splice Number	Connector Part number	Connector Number	Cavity	Seal/Sleeve	Lock 1	Lock 2
RS5C(+)	18	YL	TXL	239481R1		AS2	-	2644000R1		
RU5A(+)	18	YL	TXL	239481R1		AS2	-	2644000R1		
RU5B(+)	18	YL	TXL	239481R1		AS2	-	2644000R1		
RU5C(+)	18	YL	TXL	239481R1		AS2	-	2644000R1		
SA5A(+)	18	YL	TXL	239481R1		AS2	-	2644000R1		
SA5B(+)	18	YL	TXL	239481R1		AS2	-	2644000R1		
SA5C(+)	18	YL	TXL	239481R1		AS2	-	2644000R1		
SK5A(+)	18	YL	TXL	239481R1		AS2	-	2644000R1		
SK5B(+)	18	YL	TXL	239481R1		AS2	-	2644000R1		
SK5F(+)	18	YL	TXL	239481R1		AS2	-	2644000R1		
SN5A(+)	18	YL	TXL	239481R1		AS2	-	2644000R1		
SN5B(+)	18	YL	TXL	239481R1		AS2	-	2644000R1		
SN5C(+)	18	YL	TXL	239481R1		AS2	-	2644000R1		
SP5A(+)	18	YL	TXL	239481R1		AS2	-	2644000R1		
SP5B(+)	18	YL	TXL	239481R1		AS2	-	2644000R1		
SP5C(+)	18	YL	TXL	239481R1		AS2	-	2644000R1		
VC5A(+)	18	YL	TXL	239481R1		AS2	-	2644000R1		
VC5B(+)	18	YL	TXL	239481R1		AS2	-	2644000R1		
VC5C(+)	18	YL	TXL	239481R1		AS2	-	2644000R1		
VE5A(+)	18	YL	TXL	239481R1		AS2	-	2644000R1		
VE5B(+)	18	YL	TXL	239481R1		AS2	-	2644000R1		
VE5C(+)	18	YL	TXL	239481R1		AS2	-	2644000R1		
ZH5A(+)	18	YL	TXL	239481R1		AS2	-	2644000R1		
ZH5B(+)	18	YL	TXL	239481R1		AS2	-	2644000R1		
ZH5FA(+)	18	YL	TXL	239481R1		AS2	-	2644000R1		
2H5A(+)	18	YL	TXL	239481R1		AS2	-	2644000R1		
2H5B(+)	18	YL	TXL	239481R1		AS2	-	2644000R1		
2H5C(+)	18	YL	TXL	239481R1		AS2	-	2644000R1		
2J5A(+)	18	YL	TXL	239481R1		AS2	-	2644000R1		
2J5B(+)	18	YL	TXL	239481R1		AS2	-	2644000R1		
2J5C(+)	18	YL	TXL	239481R1		AS2	-	2644000R1		
2L5A(+)	18	YL	TXL	239481R1		AS2	-	2644000R1		
2L5B(+)	18	YL	TXL	239481R1		AS2	-	2644000R1		
2L5C(+)	18	YL	TXL	239481R1		AS2	-	2644000R1		
2M5A(+)	18	YL	TXL	239481R1		AS2	-	2644000R1		
2M5B(+)	18	YL	TXL	239481R1		AS2	-	2644000R1		
2M5C(+)	18	YL	TXL	239481R1		AS2	-	2644000R1		
2W5A(+)	18	YL	TXL	239481R1		AS2	-	2644000R1		
2W5B(+)	18	YL	TXL	239481R1		AS2	-	2644000R1		
2W5C(+)	18	YL	TXL	239481R1		AS2	-	2644000R1		
2Y5A(+)	18	YL	TXL	239481R1		AS2	-	2644000R1		
2Y5B(+)	18	YL	TXL	239481R1		AS2	-	2644000R1		
2Y5C(+)	18	YL	TXL	239481R1		AS2	-	2644000R1		
2Z5A(+)	18	YL	TXL	239481R1		AS2	-	2644000R1		
2Z5B(+)	18	YL	TXL	239481R1		AS2	-	2644000R1		
2Z5C(+)	18	YL	TXL	239481R1		AS2	-	2644000R1		
3C5A(+)	18	YL	TXL	239481R1		AS2	-	2644000R1		
3C5B(+)	18	YL	TXL	239481R1		AS2	-	2644000R1		
3C5C(+)	18	YL	TXL	239481R1		AS2	-	2644000R1		
3D5A(+)	18	YL	TXL	239481R1		AS2	-	2644000R1		
3D5B(+)	18	YL	TXL	239481R1		AS2	-	2644000R1		
3D5C(+)	18	YL	TXL	239481R1		AS2	-	2644000R1		

Circuit Number	Gauge	Color	Insulation	Terminal / Splice Number	Connector Part number	Connector Number	Cavity	Seal/Sleeve	Lock 1	Lock 2
3M5A(+)	18	YL	TXL	239481R1		AS2	-	2644000R1		
3M5B(+)	18	YL	TXL	239481R1		AS2	-	2644000R1		
3M5C(+)	18	YL	TXL	239481R1		AS2	-	2644000R1		
9K5A(+)	18	YL	TXL	239481R1		AS2	-	2644000R1		
9K5B(+)	18	YL	TXL	239481R1		AS2	-	2644000R1		
9K5C(+)	18	YL	TXL	239481R1		AS2	-	2644000R1		
9L5A(+)	18	YL	TXL	239481R1		AS2	-	2644000R1		
9L5B(+)	18	YL	TXL	239481R1		AS2	-	2644000R1		
9L5C(+)	18	YL	TXL	239481R1		AS2	-	2644000R1		
9P5A(+)	18	YL	TXL	239481R1		AS2	-	2644000R1		
9P5B(+)	18	YL	TXL	239481R1		AS2	-	2644000R1		
9P5C(+)	18	YL	TXL	239481R1		AS2	-	2644000R1		
9V5A(+)	18	YL	TXL	239481R1		AS2	-	2644000R1		
9V5B(+)	18	YL	TXL	239481R1		AS2	-	2644000R1		
9V5C(+)	18	YL	TXL	239481R1		AS2	-	2644000R1		
JB5A(+)	18	YL	TXL	239481R1		AS2	-	2644000R1		
JB5B(+)	18	YL	TXL	239481R1		AS2	-	2644000R1		
JB5C(+)	18	YL	TXL	239481R1		AS2	-	2644000R1		
LC5A(+)	18	YL	TXL	239481R1		AS2	-	2644000R1		
LC5B(+)	18	YL	TXL	239481R1		AS2	-	2644000R1		
LC5F(+)	18	YL	TXL	239481R1		AS2	-	2644000R1		
LD5A(+)	18	YL	TXL	239481R1		AS2	-	2644000R1		
LD5B(+)	18	YL	TXL	239481R1		AS2	-	2644000R1		
LD5F(+)	18	YL	TXL	239481R1		AS2	-	2644000R1		
LE5A(+)	18	YL	TXL	239481R1		AS2	-	2644000R1		
LE5B(+)	18	YL	TXL	239481R1		AS2	-	2644000R1		
LE5F(+)	18	YL	TXL	239481R1		AS2	-	2644000R1		
LF5A(+)	18	YL	TXL	239481R1		AS2	-	2644000R1		
LF5B(+)	18	YL	TXL	239481R1		AS2	-	2644000R1		
LF5C(+)	18	YL	TXL	239481R1		AS2	-	2644000R1		
LS5A(+)	18	YL	TXL	239481R1		AS2	-	2644000R1		
LS5B(+)	18	YL	TXL	239481R1		AS2	-	2644000R1		
LS5C(+)	18	YL	TXL	239481R1		AS2	-	2644000R1		
LT5A(+)	18	YL	TXL	239481R1		AS2	-	2644000R1		
LT5B(+)	18	YL	TXL	239481R1		AS2	-	2644000R1		
LT5C(+)	18	YL	TXL	239481R1		AS2	-	2644000R1		
LU5A(+)	18	YL	TXL	239481R1		AS2	-	2644000R1		
LU5B(+)	18	YL	TXL	239481R1		AS2	-	2644000R1		
LU5C(+)	18	YL	TXL	239481R1		AS2	-	2644000R1		
LW5A(+)	18	YL	TXL	239481R1		AS2	-	2644000R1		
LW5B(+)	18	YL	TXL	239481R1		AS2	-	2644000R1		
LW5C(+)	18	YL	TXL	239481R1		AS2	-	2644000R1		
PY5A(+)	18	YL	TXL	239481R1		AS2	-	2644000R1		
PY5B(+)	18	YL	TXL	239481R1		AS2	-	2644000R1		
PY5C(+)	18	YL	TXL	239481R1		AS2	-	2644000R1		
PZ5A(+)	18	YL	TXL	239481R1		AS2	-	2644000R1		
PZ5B(+)	18	YL	TXL	239481R1		AS2	-	2644000R1		
PZ5C(+)	18	YL	TXL	239481R1		AS2	-	2644000R1		
RD5A(+)	18	YL	TXL	239481R1		AS2	-	2644000R1		
RD5B(+)	18	YL	TXL	239481R1		AS2	-	2644000R1		
RD5C(+)	18	YL	TXL	239481R1		AS2	-	2644000R1		
RG5A(+)	18	YL	TXL	239481R1		AS2	-	2644000R1		

Circuit Number	Gauge	Color	Insulation	Terminal / Splice Number	Connector Part number	Connector Number	Cavity	Seal/Sleeve	Lock 1	Lock 2
RG5B(+)	18	YL	TXL	239481R1		AS2	-	2644000R1		
RG5C(+)	18	YL	TXL	239481R1		AS2	-	2644000R1		
RJ5A(+)	18	YL	TXL	239481R1		AS2	-	2644000R1		
RJ5B(+)	18	YL	TXL	239481R1		AS2	-	2644000R1		
RJ5C(+)	18	YL	TXL	239481R1		AS2	-	2644000R1		
RM5A(+)	18	YL	TXL	239481R1		AS2	-	2644000R1		
RM5B(+)	18	YL	TXL	239481R1		AS2	-	2644000R1		
RM5C(+)	18	YL	TXL	239481R1		AS2	-	2644000R1		
RS5A(+)	18	YL	TXL	239481R1		AS2	-	2644000R1		
RS5B(+)	18	YL	TXL	239481R1		AS2	-	2644000R1		
RS5C(+)	18	YL	TXL	239481R1		AS2	-	2644000R1		
RU5A(+)	18	YL	TXL	239481R1		AS2	-	2644000R1		
RU5B(+)	18	YL	TXL	239481R1		AS2	-	2644000R1		
RU5C(+)	18	YL	TXL	239481R1		AS2	-	2644000R1		
SA5A(+)	18	YL	TXL	239481R1		AS2	-	2644000R1		
SA5B(+)	18	YL	TXL	239481R1		AS2	-	2644000R1		
SA5C(+)	18	YL	TXL	239481R1		AS2	-	2644000R1		
SK5A(+)	18	YL	TXL	239481R1		AS2	-	2644000R1		
SK5B(+)	18	YL	TXL	239481R1		AS2	-	2644000R1		
SK5F(+)	18	YL	TXL	239481R1		AS2	-	2644000R1		
SN5A(+)	18	YL	TXL	239481R1		AS2	-	2644000R1		
SN5B(+)	18	YL	TXL	239481R1		AS2	-	2644000R1		
SN5C(+)	18	YL	TXL	239481R1		AS2	-	2644000R1		
SP5A(+)	18	YL	TXL	239481R1		AS2	-	2644000R1		
SP5B(+)	18	YL	TXL	239481R1		AS2	-	2644000R1		
SP5C(+)	18	YL	TXL	239481R1		AS2	-	2644000R1		
VC5A(+)	18	YL	TXL	239481R1		AS2	-	2644000R1		
VC5B(+)	18	YL	TXL	239481R1		AS2	-	2644000R1		
VC5C(+)	18	YL	TXL	239481R1		AS2	-	2644000R1		
VE5A(+)	18	YL	TXL	239481R1		AS2	-	2644000R1		
VE5B(+)	18	YL	TXL	239481R1		AS2	-	2644000R1		
VE5C(+)	18	YL	TXL	239481R1		AS2	-	2644000R1		
LC5C(-)	18	GN	TXL	239481R1		AS20	-	2644000R1		
LC5F(-)	18	GN	TXL	239481R1		AS20	-	2644000R1		
LC5G(-)	18	GN	TXL	239481R1		AS20	-	2644000R1		
LD5C(-)	18	GN	TXL	239481R1		AS20	-	2644000R1		
LD5F(-)	18	GN	TXL	239481R1		AS20	-	2644000R1		
LD5G(-)	18	GN	TXL	239481R1		AS20	-	2644000R1		
LE5C(-)	18	GN	TXL	239481R1		AS20	-	2644000R1		
LE5F(-)	18	GN	TXL	239481R1		AS20	-	2644000R1		
LE5FD(-)	18	GN	TXL	239481R1		AS20	-	2644000R1		
LF5C(-)	18	GN	TXL	239481R1		AS20	-	2644000R1		
LF5CC(-)	18	GN	TXL	239481R1		AS20	-	2644000R1		
LF5CD(-)	18	GN	TXL	239481R1		AS20	-	2644000R1		
LS5C(-)	18	GN	TXL	239481R1		AS20	-	2644000R1		
LS5CC(-)	18	GN	TXL	239481R1		AS20	-	2644000R1		
LS5CD(-)	18	GN	TXL	239481R1		AS20	-	2644000R1		
LT5E(-)	18	GN	TXL	239481R1		AS20	-	2644000R1		
LT5F(-)	18	GN	TXL	239481R1		AS20	-	2644000R1		
LT5G(-)	18	GN	TXL	239481R1		AS20	-	2644000R1		
LU5C(-)	18	GN	TXL	239481R1		AS20	-	2644000R1		
LU5D(-)	18	GN	TXL	239481R1		AS20	-	2644000R1		

Circuit Number	Gauge	Color	Insulation	Terminal / Splice Number	Connector Part number	Connector Number	Cavity	Seal/Sleeve	Lock 1	Lock 2
LU5FD(-)	18	GN	TXL	239481R1		AS20	-	2644000R1		
LW5C(-)	18	GN	TXL	239481R1		AS20	-	2644000R1		
LW5D(-)	18	GN	TXL	239481R1		AS20	-	2644000R1		
LW5E(-)	18	GN	TXL	239481R1		AS20	-	2644000R1		
SK5F(-)	18	GN	TXL	239481R1		AS20	-	2644000R1		
SK5G(-)	18	GN	TXL	239481R1		AS20	-	2644000R1		
SK5L(-)	18	GN	TXL	239481R1		AS20	-	2644000R1		
ZH5C(-)	18	GN	TXL	239481R1		AS20	-	2644000R1		
ZH5FA(-)	18	GN	TXL	239481R1		AS20	-	2644000R1		
ZH5GA(-)	18	GN	TXL	239481R1		AS20	-	2644000R1		
LC5C(-)	18	GN	TXL	239481R1		AS20	-	2644000R1		
LC5F(-)	18	GN	TXL	239481R1		AS20	-	2644000R1		
LC5G(-)	18	GN	TXL	239481R1		AS20	-	2644000R1		
LD5C(-)	18	GN	TXL	239481R1		AS20	-	2644000R1		
LD5F(-)	18	GN	TXL	239481R1		AS20	-	2644000R1		
LD5G(-)	18	GN	TXL	239481R1		AS20	-	2644000R1		
LE5C(-)	18	GN	TXL	239481R1		AS20	-	2644000R1		
LE5F(-)	18	GN	TXL	239481R1		AS20	-	2644000R1		
LE5FD(-)	18	GN	TXL	239481R1		AS20	-	2644000R1		
LF5C(-)	18	GN	TXL	239481R1		AS20	-	2644000R1		
LF5CC(-)	18	GN	TXL	239481R1		AS20	-	2644000R1		
LF5CD(-)	18	GN	TXL	239481R1		AS20	-	2644000R1		
LU5C(-)	18	GN	TXL	239481R1		AS20	-	2644000R1		
LU5D(-)	18	GN	TXL	239481R1		AS20	-	2644000R1		
LU5FD(-)	18	GN	TXL	239481R1		AS20	-	2644000R1		
ZH5A(+)	18	YL	TXL	239481R1		AS20	-	2644000R1		
ZH5B(+)	18	YL	TXL	239481R1		AS20	-	2644000R1		
ZH5FA(+)	18	YL	TXL	239481R1		AS20	-	2644000R1		
LC5C(+)	18	YL	TXL	239481R1		AS21	-	2644000R1		
LC5F(+)	18	YL	TXL	239481R1		AS21	-	2644000R1		
LC5G(+)	18	YL	TXL	239481R1		AS21	-	2644000R1		
LD5C(+)	18	YL	TXL	239481R1		AS21	-	2644000R1		
LD5F(+)	18	YL	TXL	239481R1		AS21	-	2644000R1		
LD5G(+)	18	YL	TXL	239481R1		AS21	-	2644000R1		
LE5C(+)	18	YL	TXL	239481R1		AS21	-	2644000R1		
LE5F(+)	18	YL	TXL	239481R1		AS21	-	2644000R1		
LE5FD(+)	18	YL	TXL	239481R1		AS21	-	2644000R1		
LF5C(+)	18	YL	TXL	239481R1		AS21	-	2644000R1		
LF5CC(+)	18	YL	TXL	239481R1		AS21	-	2644000R1		
LF5CD(+)	18	YL	TXL	239481R1		AS21	-	2644000R1		
LS5C(+)	18	YL	TXL	239481R1		AS21	-	2644000R1		
LS5CC(+)	18	YL	TXL	239481R1		AS21	-	2644000R1		
LS5CD(+)	18	YL	TXL	239481R1		AS21	-	2644000R1		
LT5E(+)	18	YL	TXL	239481R1		AS21	-	2644000R1		
LT5F(+)	18	YL	TXL	239481R1		AS21	-	2644000R1		
LT5G(+)	18	YL	TXL	239481R1		AS21	-	2644000R1		
LU5C(+)	18	YL	TXL	239481R1		AS21	-	2644000R1		
LU5D(+)	18	YL	TXL	239481R1		AS21	-	2644000R1		
LU5FD(+)	18	YL	TXL	239481R1		AS21	-	2644000R1		
LW5C(+)	18	YL	TXL	239481R1		AS21	-	2644000R1		
LW5D(+)	18	YL	TXL	239481R1		AS21	-	2644000R1		
LW5E(+)	18	YL	TXL	239481R1		AS21	-	2644000R1		

Circuit Number	Gauge	Color	Insulation	Terminal / Splice Number	Connector Part number	Connector Number	Cavity	Seal/Sleeve	Lock 1	Lock 2
SK5F(+)	18	YL	TXL	239481R1		AS21	-	2644000R1		
SK5G(+)	18	YL	TXL	239481R1		AS21	-	2644000R1		
SK5L(+)	18	YL	TXL	239481R1		AS21	-	2644000R1		
ZH5C(+)	18	YL	TXL	239481R1		AS21	-	2644000R1		
ZH5FA(+)	18	YL	TXL	239481R1		AS21	-	2644000R1		
ZH5GA(+)	18	YL	TXL	239481R1		AS21	-	2644000R1		
LC5C(+)	18	YL	TXL	239481R1		AS21	-	2644000R1		
LC5F(+)	18	YL	TXL	239481R1		AS21	-	2644000R1		
LC5G(+)	18	YL	TXL	239481R1		AS21	-	2644000R1		
LD5C(+)	18	YL	TXL	239481R1		AS21	-	2644000R1		
LD5F(+)	18	YL	TXL	239481R1		AS21	-	2644000R1		
LD5G(+)	18	YL	TXL	239481R1		AS21	-	2644000R1		
LE5C(+)	18	YL	TXL	239481R1		AS21	-	2644000R1		
LE5F(+)	18	YL	TXL	239481R1		AS21	-	2644000R1		
LE5FD(+)	18	YL	TXL	239481R1		AS21	-	2644000R1		
LF5C(+)	18	YL	TXL	239481R1		AS21	-	2644000R1		
LF5CC(+)	18	YL	TXL	239481R1		AS21	-	2644000R1		
LF5CD(+)	18	YL	TXL	239481R1		AS21	-	2644000R1		
LU5C(+)	18	YL	TXL	239481R1		AS21	-	2644000R1		
LU5D(+)	18	YL	TXL	239481R1		AS21	-	2644000R1		
LU5FD(+)	18	YL	TXL	239481R1		AS21	-	2644000R1		
ZH5A(-)	18	GN	TXL	239481R1		AS21	-	2644000R1		
ZH5B(-)	18	GN	TXL	239481R1		AS21	-	2644000R1		
ZH5FA(-)	18	GN	TXL	239481R1		AS21	-	2644000R1		
ZH5C(+)	18	YL	TXL	239481R1		AS22	-	2644000R1		
ZH5FA(+)	18	YL	TXL	239481R1		AS22	-	2644000R1		
ZH5GA(+)	18	YL	TXL	239481R1		AS22	-	2644000R1		
LW5E(+)	18	YL	TXL	382182C1		AS23	-	2644000R1		
LW5F(+)	18	YL	TXL	382182C1		AS23	-	2644000R1		
LW5G(+)	18	YL	TXL	382182C1		AS23	-	2644000R1		
SK5H(+)	18	YL	TXL	382182C1		AS23	-	2644000R1		
SK5J(+)	18	YL	TXL	382182C1		AS23	-	2644000R1		
SK5L(+)	18	YL	TXL	382182C1		AS23	-	2644000R1		
ZH5C(-)	18	GN	TXL	239481R1		AS23	-	2644000R1		
ZH5FA(-)	18	GN	TXL	239481R1		AS23	-	2644000R1		
ZH5GA(-)	18	GN	TXL	239481R1		AS23	-	2644000R1		
LW5E(-)	18	GN	TXL	382182C1		AS24	-	2644000R1		
LW5F(-)	18	GN	TXL	382182C1		AS24	-	2644000R1		
LW5G(-)	18	GN	TXL	382182C1		AS24	-	2644000R1		
SK5H(-)	18	GN	TXL	382182C1		AS24	-	2644000R1		
SK5J(-)	18	GN	TXL	382182C1		AS24	-	2644000R1		
SK5L(-)	18	GN	TXL	382182C1		AS24	-	2644000R1		
AG166BAA	20	LTGN	TXL	239481R1		AS24	-	2644000R1		
AG166BAB	20	LTGN	TXL	239481R1		AS24	-	2644000R1		
AG166BBA	20	LTGN	TXL	239481R1		AS24	-	2644000R1		
AS5BA(+)	18	YL	TXL	239481R1		AS25	-	2644000R1		
AS5BB(+)	18	YL	TXL	239481R1		AS25	-	2644000R1		
AS5BC(+)	18	YL	TXL	239481R1		AS25	-	2644000R1		
PS5BB(+)	18	YL	TXL	239481R1		AS25	-	2644000R1		
PS5BC(+)	18	YL	TXL	239481R1		AS25	-	2644000R1		
PS5BF(+)	18	YL	TXL	239481R1		AS25	-	2644000R1		
AS5BA(-)	18	GN	TXL	239481R1		AS26	-	2644000R1		

Circuit Number	Gauge	Color	Insulation	Terminal / Splice Number	Connector Part number	Connector Number	Cavity	Seal/Sleeve	Lock 1	Lock 2
AS5BB(-)	18	GN	TXL	239481R1		AS26	-	2644000R1		
AS5BC(-)	18	GN	TXL	239481R1		AS26	-	2644000R1		
PS5BB(-)	18	GN	TXL	239481R1		AS26	-	2644000R1		
PS5BC(-)	18	GN	TXL	239481R1		AS26	-	2644000R1		
PS5BF(-)	18	GN	TXL	239481R1		AS26	-	2644000R1		
NT5A(+)	18	YL	TXL	239481R1		AS27	-	2644000R1		
NT5B(+)	18	YL	TXL	239481R1		AS27	-	2644000R1		
NT5C(+)	18	YL	TXL	239481R1		AS27	-	2644000R1		
ZN5A(+)	18	YL	TXL	239481R1		AS27	-	2644000R1		
ZN5B(+)	18	YL	TXL	239481R1		AS27	-	2644000R1		
ZN5C(+)	18	YL	TXL	239481R1		AS27	-	2644000R1		
NT5A(-)	18	GN	TXL	239481R1		AS28	-	2644000R1		
NT5B(-)	18	GN	TXL	239481R1		AS28	-	2644000R1		
NT5C(-)	18	GN	TXL	239481R1		AS28	-	2644000R1		
ZN5A(-)	18	GN	TXL	239481R1		AS28	-	2644000R1		
ZN5B(-)	18	GN	TXL	239481R1		AS28	-	2644000R1		
ZN5C(-)	18	GN	TXL	239481R1		AS28	-	2644000R1		
KP5AA(-)	18	GN	TXL	239481R1		AS29	-	2644000R1		
KP5AC(-)	18	GN	TXL	239481R1		AS29	-	2644000R1		
KP5AG(-)	18	GN	TXL	239481R1		AS29	-	2644000R1		
KP5AA(-)	18	GN	TXL	239481R1		AS29	-	2644000R1		
KP5AC(-)	18	GN	TXL	239481R1		AS29	-	2644000R1		
KP5AG(-)	18	GN	TXL	239481R1		AS29	-	2644000R1		
3D5A(-)	18	GN	TXL	239481R1		AS3	-	2644000R1		
3D5B(-)	18	GN	TXL	239481R1		AS3	-	2644000R1		
3D5C(-)	18	GN	TXL	239481R1		AS3	-	2644000R1		
3M5A(-)	18	GN	TXL	239481R1		AS3	-	2644000R1		
3M5B(-)	18	GN	TXL	239481R1		AS3	-	2644000R1		
3M5C(-)	18	GN	TXL	239481R1		AS3	-	2644000R1		
9K5A(-)	18	GN	TXL	239481R1		AS3	-	2644000R1		
9K5B(-)	18	GN	TXL	239481R1		AS3	-	2644000R1		
9K5C(-)	18	GN	TXL	239481R1		AS3	-	2644000R1		
9L5A(-)	18	GN	TXL	239481R1		AS3	-	2644000R1		
9L5B(-)	18	GN	TXL	239481R1		AS3	-	2644000R1		
9L5C(-)	18	GN	TXL	239481R1		AS3	-	2644000R1		
9P5A(-)	18	GN	TXL	239481R1		AS3	-	2644000R1	1661376C1	
9P5B(-)	18	GN	TXL	239481R1		AS3	-	2644000R1	1667771C1	1667771C1
9P5C(-)	18	GN	TXL	239481R1		AS3	-	2644000R1	1664408C1	
9V5A(-)	18	GN	TXL	239481R1		AS3	-	2644000R1		
9V5B(-)	18	GN	TXL	239481R1		AS3	-	2644000R1		
9V5C(-)	18	GN	TXL	239481R1		AS3	-	2644000R1		
JB5A(-)	18	GN	TXL	239481R1		AS3	-	2644000R1		
JB5B(-)	18	GN	TXL	239481R1		AS3	-	2644000R1		
JB5C(-)	18	GN	TXL	239481R1		AS3	-	2644000R1		
LC5A(-)	18	GN	TXL	239481R1		AS3	-	2644000R1		
LC5B(-)	18	GN	TXL	239481R1		AS3	-	2644000R1		
LC5F(-)	18	GN	TXL	239481R1		AS3	-	2644000R1		
LD5A(-)	18	GN	TXL	239481R1		AS3	-	2644000R1		
LD5B(-)	18	GN	TXL	239481R1		AS3	-	2644000R1		
LD5F(-)	18	GN	TXL	239481R1		AS3	-	2644000R1		
LE5A(-)	18	GN	TXL	239481R1		AS3	-	2644000R1		
LE5B(-)	18	GN	TXL	239481R1		AS3	-	2644000R1		

Circuit Number	Gauge	Color	Insulation	Terminal / Splice Number	Connector Part number	Connector Number	Cavity	Seal/Sleeve	Lock 1	Lock 2
LE5F(-)	18	GN	TXL	239481R1		AS3	-	2644000R1		
LF5A(-)	18	GN	TXL	239481R1		AS3	-	2644000R1		
LF5B(-)	18	GN	TXL	239481R1		AS3	-	2644000R1		
LF5C(-)	18	GN	TXL	239481R1		AS3	-	2644000R1		
LS5A(-)	18	GN	TXL	239481R1		AS3	-	2644000R1		
LS5B(-)	18	GN	TXL	239481R1		AS3	-	2644000R1		
LS5C(-)	18	GN	TXL	239481R1		AS3	-	2644000R1		
LT5A(-)	18	GN	TXL	239481R1		AS3	-	2644000R1		
LT5B(-)	18	GN	TXL	239481R1		AS3	-	2644000R1		
LT5C(-)	18	GN	TXL	239481R1		AS3	-	2644000R1		
LU5A(-)	18	GN	TXL	239481R1		AS3	-	2644000R1		
LU5B(-)	18	GN	TXL	239481R1		AS3	-	2644000R1		
LU5C(-)	18	GN	TXL	239481R1		AS3	-	2644000R1		
LW5A(-)	18	GN	TXL	239481R1		AS3	-	2644000R1		
LW5B(-)	18	GN	TXL	239481R1		AS3	-	2644000R1		
LW5C(-)	18	GN	TXL	239481R1		AS3	-	2644000R1		
PY5A(-)	18	GN	TXL	239481R1		AS3	-	2644000R1		
PY5B(-)	18	GN	TXL	239481R1		AS3	-	2644000R1		
PY5C(-)	18	GN	TXL	239481R1		AS3	-	2644000R1		
PZ5A(-)	18	GN	TXL	239481R1		AS3	-	2644000R1		
PZ5B(-)	18	GN	TXL	239481R1		AS3	-	2644000R1		
PZ5C(-)	18	GN	TXL	239481R1		AS3	-	2644000R1		
RD5A(-)	18	GN	TXL	239481R1		AS3	-	2644000R1		
RD5B(-)	18	GN	TXL	239481R1		AS3	-	2644000R1		
RD5C(-)	18	GN	TXL	239481R1		AS3	-	2644000R1		
RG5A(-)	18	GN	TXL	239481R1		AS3	-	2644000R1		
RG5B(-)	18	GN	TXL	239481R1		AS3	-	2644000R1		
RG5C(-)	18	GN	TXL	239481R1		AS3	-	2644000R1		
RJ5A(-)	18	GN	TXL	239481R1		AS3	-	2644000R1		
RJ5B(-)	18	GN	TXL	239481R1		AS3	-	2644000R1		
RJ5C(-)	18	GN	TXL	239481R1		AS3	-	2644000R1		
RM5A(-)	18	GN	TXL	239481R1		AS3	-	2644000R1		
RM5B(-)	18	GN	TXL	239481R1		AS3	-	2644000R1		
RM5C(-)	18	GN	TXL	239481R1		AS3	-	2644000R1		
RS5A(-)	18	GN	TXL	239481R1		AS3	-	2644000R1		
RS5B(-)	18	GN	TXL	239481R1		AS3	-	2644000R1		
RS5C(-)	18	GN	TXL	239481R1		AS3	-	2644000R1		
RU5A(-)	18	GN	TXL	239481R1		AS3	-	2644000R1		
RU5B(-)	18	GN	TXL	239481R1		AS3	-	2644000R1		
RU5C(-)	18	GN	TXL	239481R1		AS3	-	2644000R1		
SA5A(-)	18	GN	TXL	239481R1		AS3	-	2644000R1		
SA5B(-)	18	GN	TXL	239481R1		AS3	-	2644000R1		
SA5C(-)	18	GN	TXL	239481R1		AS3	-	2644000R1		
SK5A(-)	18	GN	TXL	239481R1		AS3	-	2644000R1		
SK5B(-)	18	GN	TXL	239481R1		AS3	-	2644000R1		
SK5F(-)	18	GN	TXL	239481R1		AS3	-	2644000R1		
SN5A(-)	18	GN	TXL	239481R1		AS3	-	2644000R1		
SN5B(-)	18	GN	TXL	239481R1		AS3	-	2644000R1		
SN5C(-)	18	GN	TXL	239481R1		AS3	-	2644000R1		
SP5A(-)	18	GN	TXL	239481R1		AS3	-	2644000R1		
SP5B(-)	18	GN	TXL	239481R1		AS3	-	2644000R1		
SP5C(-)	18	GN	TXL	239481R1		AS3	-	2644000R1		

Circuit Number	Gauge	Color	Insulation	Terminal / Splice Number	Connector Part number	Connector Number	Cavity	Seal/Sleeve	Lock 1	Lock 2
VC5A(-)	18	GN	TXL	239481R1		AS3	-	2644000R1		
VC5B(-)	18	GN	TXL	239481R1		AS3	-	2644000R1		
VC5C(-)	18	GN	TXL	239481R1		AS3	-	2644000R1		
VE5A(-)	18	GN	TXL	239481R1		AS3	-	2644000R1		
VE5B(-)	18	GN	TXL	239481R1		AS3	-	2644000R1		
VE5C(-)	18	GN	TXL	239481R1		AS3	-	2644000R1		
ZH5A(-)	18	GN	TXL	239481R1		AS3	-	2644000R1		
ZH5B(-)	18	GN	TXL	239481R1		AS3	-	2644000R1		
ZH5FA(-)	18	GN	TXL	239481R1		AS3	-	2644000R1		
2H5A(-)	18	GN	TXL	239481R1		AS3	-	2644000R1		
2H5B(-)	18	GN	TXL	239481R1		AS3	-	2644000R1		
2H5C(-)	18	GN	TXL	239481R1		AS3	-	2644000R1		
2J5A(-)	18	GN	TXL	239481R1		AS3	-	2644000R1		
2J5B(-)	18	GN	TXL	239481R1		AS3	-	2644000R1		
2J5C(-)	18	GN	TXL	239481R1		AS3	-	2644000R1		
2L5A(-)	18	GN	TXL	239481R1		AS3	-	2644000R1		
2L5B(-)	18	GN	TXL	239481R1		AS3	-	2644000R1		
2L5C(-)	18	GN	TXL	239481R1		AS3	-	2644000R1		
2M5A(-)	18	GN	TXL	239481R1		AS3	-	2644000R1		
2M5B(-)	18	GN	TXL	239481R1		AS3	-	2644000R1		
2M5C(-)	18	GN	TXL	239481R1		AS3	-	2644000R1		
2W5A(-)	18	GN	TXL	239481R1		AS3	-	2644000R1		
2W5B(-)	18	GN	TXL	239481R1		AS3	-	2644000R1		
2W5C(-)	18	GN	TXL	239481R1		AS3	-	2644000R1		
2Y5A(-)	18	GN	TXL	239481R1		AS3	-	2644000R1		
2Y5B(-)	18	GN	TXL	239481R1		AS3	-	2644000R1		
2Y5C(-)	18	GN	TXL	239481R1		AS3	-	2644000R1		
2Z5A(-)	18	GN	TXL	239481R1		AS3	-	2644000R1		
2Z5B(-)	18	GN	TXL	239481R1		AS3	-	2644000R1		
2Z5C(-)	18	GN	TXL	239481R1		AS3	-	2644000R1		
3C5A(-)	18	GN	TXL	239481R1		AS3	-	2644000R1		
3C5B(-)	18	GN	TXL	239481R1		AS3	-	2644000R1		
3C5C(-)	18	GN	TXL	239481R1		AS3	-	2644000R1		
3D5A(-)	18	GN	TXL	239481R1		AS3	-	2644000R1		
3D5B(-)	18	GN	TXL	239481R1		AS3	-	2644000R1		
3D5C(-)	18	GN	TXL	239481R1		AS3	-	2644000R1		
3M5A(-)	18	GN	TXL	239481R1		AS3	-	2644000R1		
3M5B(-)	18	GN	TXL	239481R1		AS3	-	2644000R1		
3M5C(-)	18	GN	TXL	239481R1		AS3	-	2644000R1		
9K5A(-)	18	GN	TXL	239481R1		AS3	-	2644000R1		
9K5B(-)	18	GN	TXL	239481R1		AS3	-	2644000R1		
9K5C(-)	18	GN	TXL	239481R1		AS3	-	2644000R1		
9L5A(-)	18	GN	TXL	239481R1		AS3	-	2644000R1		
9L5B(-)	18	GN	TXL	239481R1		AS3	-	2644000R1		
9L5C(-)	18	GN	TXL	239481R1		AS3	-	2644000R1		
9P5A(-)	18	GN	TXL	239481R1		AS3	-	2644000R1		
9P5B(-)	18	GN	TXL	239481R1		AS3	-	2644000R1		
9P5C(-)	18	GN	TXL	239481R1		AS3	-	2644000R1		
9V5A(-)	18	GN	TXL	239481R1		AS3	-	2644000R1		
9V5B(-)	18	GN	TXL	239481R1		AS3	-	2644000R1		
9V5C(-)	18	GN	TXL	239481R1		AS3	-	2644000R1		
JB5A(-)	18	GN	TXL	239481R1		AS3	-	2644000R1		

Circuit Number	Gauge	Color	Insulation	Terminal / Splice Number	Connector Part number	Connector Number	Cavity	Seal/Sleeve	Lock 1	Lock 2
JB5B(-)	18	GN	TXL	239481R1		AS3	-	2644000R1		
JB5C(-)	18	GN	TXL	239481R1		AS3	-	2644000R1		
LC5A(-)	18	GN	TXL	239481R1		AS3	-	2644000R1		
LC5B(-)	18	GN	TXL	239481R1		AS3	-	2644000R1		
LC5F(-)	18	GN	TXL	239481R1		AS3	-	2644000R1		
LD5A(-)	18	GN	TXL	239481R1		AS3	-	2644000R1		
LD5B(-)	18	GN	TXL	239481R1		AS3	-	2644000R1		
LD5F(-)	18	GN	TXL	239481R1		AS3	-	2644000R1		
LE5A(-)	18	GN	TXL	239481R1		AS3	-	2644000R1		
LE5B(-)	18	GN	TXL	239481R1		AS3	-	2644000R1		
LE5F(-)	18	GN	TXL	239481R1		AS3	-	2644000R1		
LF5A(-)	18	GN	TXL	239481R1		AS3	-	2644000R1		
LF5B(-)	18	GN	TXL	239481R1		AS3	-	2644000R1		
LF5C(-)	18	GN	TXL	239481R1		AS3	-	2644000R1		
LS5A(-)	18	GN	TXL	239481R1		AS3	-	2644000R1		
LS5B(-)	18	GN	TXL	239481R1		AS3	-	2644000R1		
LS5C(-)	18	GN	TXL	239481R1		AS3	-	2644000R1		
LT5A(-)	18	GN	TXL	239481R1		AS3	-	2644000R1		
LT5B(-)	18	GN	TXL	239481R1		AS3	-	2644000R1		
LT5C(-)	18	GN	TXL	239481R1		AS3	-	2644000R1		
LU5A(-)	18	GN	TXL	239481R1		AS3	-	2644000R1		
LU5B(-)	18	GN	TXL	239481R1		AS3	-	2644000R1		
LU5C(-)	18	GN	TXL	239481R1		AS3	-	2644000R1		
LW5A(-)	18	GN	TXL	239481R1		AS3	-	2644000R1		
LW5B(-)	18	GN	TXL	239481R1		AS3	-	2644000R1		
LW5C(-)	18	GN	TXL	239481R1		AS3	-	2644000R1		
PY5A(-)	18	GN	TXL	239481R1		AS3	-	2644000R1		
PY5B(-)	18	GN	TXL	239481R1		AS3	-	2644000R1		
PY5C(-)	18	GN	TXL	239481R1		AS3	-	2644000R1		
PZ5A(-)	18	GN	TXL	239481R1		AS3	-	2644000R1		
PZ5B(-)	18	GN	TXL	239481R1		AS3	-	2644000R1		
PZ5C(-)	18	GN	TXL	239481R1		AS3	-	2644000R1		
RD5A(-)	18	GN	TXL	239481R1		AS3	-	2644000R1		
RD5B(-)	18	GN	TXL	239481R1		AS3	-	2644000R1		
RD5C(-)	18	GN	TXL	239481R1		AS3	-	2644000R1		
RG5A(-)	18	GN	TXL	239481R1		AS3	-	2644000R1		
RG5B(-)	18	GN	TXL	239481R1		AS3	-	2644000R1		
RG5C(-)	18	GN	TXL	239481R1		AS3	-	2644000R1		
RJ5A(-)	18	GN	TXL	239481R1		AS3	-	2644000R1		
RJ5B(-)	18	GN	TXL	239481R1		AS3	-	2644000R1		
RJ5C(-)	18	GN	TXL	239481R1		AS3	-	2644000R1		
RM5A(-)	18	GN	TXL	239481R1		AS3	-	2644000R1		
RM5B(-)	18	GN	TXL	239481R1		AS3	-	2644000R1		
RM5C(-)	18	GN	TXL	239481R1		AS3	-	2644000R1		
RS5A(-)	18	GN	TXL	239481R1		AS3	-	2644000R1		
RS5B(-)	18	GN	TXL	239481R1		AS3	-	2644000R1		
RS5C(-)	18	GN	TXL	239481R1		AS3	-	2644000R1		
RU5A(-)	18	GN	TXL	239481R1		AS3	-	2644000R1		
RU5B(-)	18	GN	TXL	239481R1		AS3	-	2644000R1		
RU5C(-)	18	GN	TXL	239481R1		AS3	-	2644000R1		
SA5A(-)	18	GN	TXL	239481R1		AS3	-	2644000R1		
SA5B(-)	18	GN	TXL	239481R1		AS3	-	2644000R1		

Circuit Number	Gauge	Color	Insulation	Terminal / Splice Number	Connector Part number	Connector Number	Cavity	Seal/Sleeve	Lock 1	Lock 2
SA5C(-)	18	GN	TXL	239481R1		AS3	-	2644000R1		
SK5A(-)	18	GN	TXL	239481R1		AS3	-	2644000R1		
SK5B(-)	18	GN	TXL	239481R1		AS3	-	2644000R1		
SK5F(-)	18	GN	TXL	239481R1		AS3	-	2644000R1		
SN5A(-)	18	GN	TXL	239481R1		AS3	-	2644000R1		
SN5B(-)	18	GN	TXL	239481R1		AS3	-	2644000R1		
SN5C(-)	18	GN	TXL	239481R1		AS3	-	2644000R1		
SP5A(-)	18	GN	TXL	239481R1		AS3	-	2644000R1		
SP5B(-)	18	GN	TXL	239481R1		AS3	-	2644000R1		
SP5C(-)	18	GN	TXL	239481R1		AS3	-	2644000R1		
VC5A(-)	18	GN	TXL	239481R1		AS3	-	2644000R1		
VC5B(-)	18	GN	TXL	239481R1		AS3	-	2644000R1		
VC5C(-)	18	GN	TXL	239481R1		AS3	-	2644000R1		
VE5A(-)	18	GN	TXL	239481R1		AS3	-	2644000R1		
VE5B(-)	18	GN	TXL	239481R1		AS3	-	2644000R1		
VE5C(-)	18	GN	TXL	239481R1		AS3	-	2644000R1		
KP5AA(+)	18	YL	TXL	239481R1		AS30	-	2644000R1		
KP5AC(+)	18	YL	TXL	239481R1		AS30	-	2644000R1		
KP5AG(+)	18	YL	TXL	239481R1		AS30	-	2644000R1		
KP5AA(+)	18	YL	TXL	239481R1		AS30	-	2644000R1		
KP5AC(+)	18	YL	TXL	239481R1		AS30	-	2644000R1		
KP5AG(+)	18	YL	TXL	239481R1		AS30	-	2644000R1		
BG54BB	14	BN	TXL	239481R1		AS31	-	2644000R1		
BG54BBA	14	BN	TXL	239481R1		AS31	-	2644000R1		
BG54BBB	14	BN	TXL	239481R1		AS31	-	2644000R1		
BG68BBB	14	BN	TXL	239481R1		AS31	-	2644000R1		
BG56BB	16	OR	TXL	239481R1		AS32	-	2644000R1		
BG56BBA	16	OR	TXL	239481R1		AS32	-	2644000R1		
BG56BBB	16	YL	TXL	239481R1		AS32	-	2644000R1		
BG57BB	16	OR	TXL	239481R1		AS33	-	2644000R1		
BG57BBA	16	OR	TXL	239481R1		AS33	-	2644000R1		
BG57BBB	16	LTGN	TXL	239481R1		AS33	-	2644000R1		
BG68BB	14	BN	TXL	239481R1		AS34	-	2644000R1		
BG68BBA	14	BN	TXL	239481R1		AS34	-	2644000R1		
JM5BA(-)	18	LTGN	TXL	239481R1		AS4	-	2644000R1		
JM5BB(-)	18	LTGN	TXL	239481R1		AS4	-	2644000R1		
JM5BC(-)	18	LTGN	TXL	239481R1		AS4	-	2644000R1		
JN5BA(-)	18	LTGN	TXL	239481R1		AS4	-	2644000R1		
JN5BB(-)	18	LTGN	TXL	239481R1		AS4	-	2644000R1		
JN5BC(-)	18	LTGN	TXL	239481R1		AS4	-	2644000R1		
JP5BA(-)	18	LTGN	TXL	239481R1		AS4	-	2644000R1		
JP5BB(-)	18	LTGN	TXL	239481R1		AS4	-	2644000R1		
JP5BC(-)	18	LTGN	TXL	239481R1		AS4	-	2644000R1		
JR5BA(-)	18	LTGN	TXL	239481R1		AS4	-	2644000R1		
JR5BB(-)	18	LTGN	TXL	239481R1		AS4	-	2644000R1		
JR5BC(-)	18	LTGN	TXL	239481R1		AS4	-	2644000R1		
JM5BA(-)	18	LTGN	TXL	239481R1		AS4	-	2644000R1		
JM5BB(-)	18	LTGN	TXL	239481R1		AS4	-	2644000R1		
JM5BC(-)	18	LTGN	TXL	239481R1		AS4	-	2644000R1		
JN5BA(-)	18	LTGN	TXL	239481R1		AS4	-	2644000R1		
JN5BB(-)	18	LTGN	TXL	239481R1		AS4	-	2644000R1		
JN5BC(-)	18	LTGN	TXL	239481R1		AS4	-	2644000R1		

Circuit Number	Gauge	Color	Insulation	Terminal / Splice Number	Connector Part number	Connector Number	Cavity	Seal/Sleeve	Lock 1	Lock 2
JP5BA(-)	18	LTGN	TXL	239481R1		AS4	-	2644000R1		
JP5BB(-)	18	LTGN	TXL	239481R1		AS4	-	2644000R1		
JP5BC(-)	18	LTGN	TXL	239481R1		AS4	-	2644000R1		
JR5BA(-)	18	LTGN	TXL	239481R1		AS4	-	2644000R1		
JR5BB(-)	18	LTGN	TXL	239481R1		AS4	-	2644000R1		
JR5BC(-)	18	LTGN	TXL	239481R1		AS4	-	2644000R1		
JM5BA(+)	18	YL	TXL	239481R1		AS5	-	2644000R1		
JM5BB(+)	18	YL	TXL	239481R1		AS5	-	2644000R1		
JM5BC(+)	18	YL	TXL	239481R1		AS5	-	2644000R1		
JN5BA(+)	18	YL	TXL	239481R1		AS5	-	2644000R1		
JN5BB(+)	18	YL	TXL	239481R1		AS5	-	2644000R1		
JN5BC(+)	18	YL	TXL	239481R1		AS5	-	2644000R1		
JP5BA(+)	18	YL	TXL	239481R1		AS5	-	2644000R1		
JP5BB(+)	18	YL	TXL	239481R1		AS5	-	2644000R1		
JP5BC(+)	18	YL	TXL	239481R1		AS5	-	2644000R1		
JR5BA(+)	18	YL	TXL	239481R1		AS5	-	2644000R1		
JR5BB(+)	18	YL	TXL	239481R1		AS5	-	2644000R1		
JR5BC(+)	18	YL	TXL	239481R1		AS5	-	2644000R1		
JM5BA(+)	18	YL	TXL	239481R1		AS5	-	2644000R1		
JM5BB(+)	18	YL	TXL	239481R1		AS5	-	2644000R1		
JM5BC(+)	18	YL	TXL	239481R1		AS5	-	2644000R1		
JN5BA(+)	18	YL	TXL	239481R1		AS5	-	2644000R1		
JN5BB(+)	18	YL	TXL	239481R1		AS5	-	2644000R1		
JN5BC(+)	18	YL	TXL	239481R1		AS5	-	2644000R1		
JP5BA(+)	18	YL	TXL	239481R1		AS5	-	2644000R1		
JP5BB(+)	18	YL	TXL	239481R1		AS5	-	2644000R1		
JP5BC(+)	18	YL	TXL	239481R1		AS5	-	2644000R1		
JR5BA(+)	18	YL	TXL	239481R1		AS5	-	2644000R1		
JR5BB(+)	18	YL	TXL	239481R1		AS5	-	2644000R1		
JR5BC(+)	18	YL	TXL	239481R1		AS5	-	2644000R1		
AW12	20	LTBL	TXL	239481R1		AS6	-	2644000R1		
AW12B	20	LTBL	TXL	239481R1		AS6	-	2644000R1		
SF59D	18	GY	TXL	239481R1		AS8	-	2644000R1		
SF59DA	18	GY	TXL	239481R1		AS8	-	2644000R1		
SF59DB	18	GY	TXL	239481R1		AS8	-	2644000R1		
SF59D	18	GY	TXL	239481R1		AS8	-	2644000R1		
SF59DA	18	GY	TXL	239481R1		AS8	-	2644000R1		
SF59DB	18	GY	TXL	239481R1		AS8	-	2644000R1		
RK59E	18	GY	TXL	239481R1		AS9	-	2644000R1		
RK59EA	18	GY	TXL	239481R1		AS9	-	2644000R1		
RK59EB	18	GY	TXL	239481R1		AS9	-	2644000R1		
RK59E	18	GY	TXL	239481R1		AS9	-	2644000R1		
RK59EA	18	GY	TXL	239481R1		AS9	-	2644000R1		
RK59EB	18	GY	TXL	239481R1		AS9	-	2644000R1		
3D5C(-)	18	GN	TXL	239481R1		BS1	-	2644000R1		
3D5D(-)	18	GN	TXL	239481R1		BS1	-	2644000R1		
3D5E(-)	18	GN	TXL	239481R1		BS1	-	2644000R1		
3M5C(-)	18	GN	TXL	239481R1		BS1	-	2644000R1		
3M5D(-)	18	GN	TXL	239481R1		BS1	-	2644000R1		
3M5E(-)	18	GN	TXL	239481R1		BS1	-	2644000R1		
9K5C(-)	18	GN	TXL	239481R1		BS1	-	2644000R1		
9K5D(-)	18	GN	TXL	239481R1		BS1	-	2644000R1		

Circuit Number	Gauge	Color	Insulation	Terminal / Splice Number	Connector Part number	Connector Number	Cavity	Seal/Sleeve	Lock 1	Lock 2
9K5E(-)	18	GN	TXL	239481R1		BS1	-	2644000R1		
9L5C(-)	18	GN	TXL	239481R1		BS1	-	2644000R1		
9L5D(-)	18	GN	TXL	239481R1		BS1	-	2644000R1		
9L5E(-)	18	GN	TXL	239481R1		BS1	-	2644000R1		
9P5C(-)	18	GN	TXL	239481R1		BS1	-	2644000R1	1673791C1	1673791C1
9P5D(-)	18	GN	TXL	239481R1		BS1	-	2644000R1		
9P5E(-)	18	GN	TXL	239481R1		BS1	-	2644000R1	3539144C1	
9V5C(-)	18	GN	TXL	239481R1		BS1	-	2644000R1		
9V5D(-)	18	GN	TXL	239481R1		BS1	-	2644000R1		
9V5E(-)	18	GN	TXL	239481R1		BS1	-	2644000R1		
JB5C(-)	18	GN	TXL	239481R1		BS1	-	2644000R1		
JB5D(-)	18	GN	TXL	239481R1		BS1	-	2644000R1		
JB5EB(-)	18	GN	TXL	239481R1		BS1	-	2644000R1		
LC5C(-)	18	GN	TXL	239481R1		BS1	-	2644000R1		
LC5D(-)	18	GN	TXL	239481R1		BS1	-	2644000R1		
LC5E(-)	18	GN	TXL	239481R1		BS1	-	2644000R1		
LD5C(-)	18	GN	TXL	239481R1		BS1	-	2644000R1		
LD5D(-)	18	GN	TXL	239481R1		BS1	-	2644000R1		
LD5E(-)	18	GN	TXL	239481R1		BS1	-	2644000R1		
LE5C(-)	18	GN	TXL	239481R1		BS1	-	2644000R1		
LE5D(-)	18	GN	TXL	239481R1		BS1	-	2644000R1		
LE5E(-)	18	GN	TXL	239481R1		BS1	-	2644000R1		
LF5CD(-)	18	GN	TXL	239481R1		BS1	-	2644000R1		
LF5D(-)	18	GN	TXL	239481R1		BS1	-	2644000R1		
LF5E(-)	18	GN	TXL	239481R1		BS1	-	2644000R1		
LS5CD(-)	18	GN	TXL	239481R1		BS1	-	2644000R1		
LS5D(-)	18	GN	TXL	239481R1		BS1	-	2644000R1		
LS5E(-)	18	GN	TXL	239481R1		BS1	-	2644000R1		
LT5G(-)	18	GN	TXL	239481R1		BS1	-	2644000R1		
LT5H(-)	18	GN	TXL	239481R1		BS1	-	2644000R1		
LT5J(-)	18	GN	TXL	239481R1		BS1	-	2644000R1		
LU5D(-)	18	GN	TXL	239481R1		BS1	-	2644000R1		
LU5E(-)	18	GN	TXL	239481R1		BS1	-	2644000R1		
LU5F(-)	18	GN	TXL	239481R1		BS1	-	2644000R1		
LW5G(-)	18	GN	TXL	239481R1		BS1	-	2644000R1		
LW5H(-)	18	GN	TXL	239481R1		BS1	-	2644000R1		
LW5J(-)	18	GN	TXL	239481R1		BS1	-	2644000R1		
PY5C(-)	18	GN	TXL	239481R1		BS1	-	2644000R1		
PY5D(-)	18	GN	TXL	239481R1		BS1	-	2644000R1		
PY5E(-)	18	GN	TXL	239481R1		BS1	-	2644000R1		
PZ5C(-)	18	GN	TXL	239481R1		BS1	-	2644000R1		
PZ5D(-)	18	GN	TXL	239481R1		BS1	-	2644000R1		
PZ5E(-)	18	GN	TXL	239481R1		BS1	-	2644000R1		
RD5C(-)	18	GN	TXL	239481R1		BS1	-	2644000R1		
RD5D(-)	18	GN	TXL	239481R1		BS1	-	2644000R1		
RD5E(-)	18	GN	TXL	239481R1		BS1	-	2644000R1		
RG5C(-)	18	GN	TXL	239481R1		BS1	-	2644000R1		
RG5D(-)	18	GN	TXL	239481R1		BS1	-	2644000R1		
RG5E(-)	18	GN	TXL	239481R1		BS1	-	2644000R1		
RJ5C(-)	18	GN	TXL	239481R1		BS1	-	2644000R1		
RJ5D(-)	18	GN	TXL	239481R1		BS1	-	2644000R1		
RJ5E(-)	18	GN	TXL	239481R1		BS1	-	2644000R1		

Circuit Number	Gauge	Color	Insulation	Terminal / Splice Number	Connector Part number	Connector Number	Cavity	Seal/Sleeve	Lock 1	Lock 2
RM5C(-)	18	GN	TXL	239481R1		BS1	-	2644000R1		
RM5D(-)	18	GN	TXL	239481R1		BS1	-	2644000R1		
RM5E(-)	18	GN	TXL	239481R1		BS1	-	2644000R1		
RS5C(-)	18	GN	TXL	239481R1		BS1	-	2644000R1		
RS5D(-)	18	GN	TXL	239481R1		BS1	-	2644000R1		
RS5E(-)	18	GN	TXL	239481R1		BS1	-	2644000R1		
RU5C(-)	18	GN	TXL	239481R1		BS1	-	2644000R1		
RU5D(-)	18	GN	TXL	239481R1		BS1	-	2644000R1		
RU5E(-)	18	GN	TXL	239481R1		BS1	-	2644000R1		
SA5C(-)	18	GN	TXL	239481R1		BS1	-	2644000R1		
SA5D(-)	18	GN	TXL	239481R1		BS1	-	2644000R1		
SA5E(-)	18	GN	TXL	239481R1		BS1	-	2644000R1		
SK5D(-)	18	GN	TXL	239481R1		BS1	-	2644000R1		
SK5E(-)	18	GN	TXL	239481R1		BS1	-	2644000R1		
SK5H(-)	18	GN	TXL	239481R1		BS1	-	2644000R1		
SN5C(-)	18	GN	TXL	239481R1		BS1	-	2644000R1		
SN5D(-)	18	GN	TXL	239481R1		BS1	-	2644000R1		
SN5E(-)	18	GN	TXL	239481R1		BS1	-	2644000R1		
SP5C(-)	18	GN	TXL	239481R1		BS1	-	2644000R1		
SP5D(-)	18	GN	TXL	239481R1		BS1	-	2644000R1		
SP5E(-)	18	GN	TXL	239481R1		BS1	-	2644000R1		
VC5C(-)	18	GN	TXL	239481R1		BS1	-	2644000R1		
VC5D(-)	18	GN	TXL	239481R1		BS1	-	2644000R1		
VC5E(-)	18	GN	TXL	239481R1		BS1	-	2644000R1		
VE5C(-)	18	GN	TXL	239481R1		BS1	-	2644000R1		
VE5D(-)	18	GN	TXL	239481R1		BS1	-	2644000R1		
VE5E(-)	18	GN	TXL	239481R1		BS1	-	2644000R1		
ZH5C(-)	18	GN	TXL	239481R1		BS1	-	2644000R1		
ZH5D(-)	18	GN	TXL	239481R1		BS1	-	2644000R1		
ZH5EA(-)	18	GN	TXL	239481R1		BS1	-	2644000R1		
2H5C(-)	18	GN	TXL	239481R1		BS1	-	2644000R1		
2H5D(-)	18	GN	TXL	239481R1		BS1	-	2644000R1		
2H5E(-)	18	GN	TXL	239481R1		BS1	-	2644000R1		
2J5C(-)	18	GN	TXL	239481R1		BS1	-	2644000R1		
2J5D(-)	18	GN	TXL	239481R1		BS1	-	2644000R1		
2J5E(-)	18	GN	TXL	239481R1		BS1	-	2644000R1		
2L5C(-)	18	GN	TXL	239481R1		BS1	-	2644000R1		
2L5D(-)	18	GN	TXL	239481R1		BS1	-	2644000R1		
2L5E(-)	18	GN	TXL	239481R1		BS1	-	2644000R1		
2M5C(-)	18	GN	TXL	239481R1		BS1	-	2644000R1		
2M5D(-)	18	GN	TXL	239481R1		BS1	-	2644000R1		
2M5E(-)	18	GN	TXL	239481R1		BS1	-	2644000R1		
2W5C(-)	18	GN	TXL	239481R1		BS1	-	2644000R1		
2W5D(-)	18	GN	TXL	239481R1		BS1	-	2644000R1		
2W5E(-)	18	GN	TXL	239481R1		BS1	-	2644000R1		
2Y5C(-)	18	GN	TXL	239481R1		BS1	-	2644000R1		
2Y5D(-)	18	GN	TXL	239481R1		BS1	-	2644000R1		
2Y5E(-)	18	GN	TXL	239481R1		BS1	-	2644000R1		
2Z5C(-)	18	GN	TXL	239481R1		BS1	-	2644000R1		
2Z5D(-)	18	GN	TXL	239481R1		BS1	-	2644000R1		
2Z5E(-)	18	GN	TXL	239481R1		BS1	-	2644000R1		
3C5C(-)	18	GN	TXL	239481R1		BS1	-	2644000R1		

Circuit Number	Gauge	Color	Insulation	Terminal / Splice Number	Connector Part number	Connector Number	Cavity	Seal/Sleeve	Lock 1	Lock 2
3C5D(-)	18	GN	TXL	239481R1		BS1	-	2644000R1		
3C5E(-)	18	GN	TXL	239481R1		BS1	-	2644000R1		
3D5C(-)	18	GN	TXL	239481R1		BS1	-	2644000R1		
3D5D(-)	18	GN	TXL	239481R1		BS1	-	2644000R1		
3D5E(-)	18	GN	TXL	239481R1		BS1	-	2644000R1		
3M5C(-)	18	GN	TXL	239481R1		BS1	-	2644000R1		
3M5D(-)	18	GN	TXL	239481R1		BS1	-	2644000R1		
3M5E(-)	18	GN	TXL	239481R1		BS1	-	2644000R1		
9K5C(-)	18	GN	TXL	239481R1		BS1	-	2644000R1		
9K5D(-)	18	GN	TXL	239481R1		BS1	-	2644000R1		
9K5E(-)	18	GN	TXL	239481R1		BS1	-	2644000R1		
9L5C(-)	18	GN	TXL	239481R1		BS1	-	2644000R1		
9L5D(-)	18	GN	TXL	239481R1		BS1	-	2644000R1		
9L5E(-)	18	GN	TXL	239481R1		BS1	-	2644000R1		
9P5C(-)	18	GN	TXL	239481R1		BS1	-	2644000R1		
9P5D(-)	18	GN	TXL	239481R1		BS1	-	2644000R1		
9P5E(-)	18	GN	TXL	239481R1		BS1	-	2644000R1		
9V5C(-)	18	GN	TXL	239481R1		BS1	-	2644000R1		
9V5D(-)	18	GN	TXL	239481R1		BS1	-	2644000R1		
9V5E(-)	18	GN	TXL	239481R1		BS1	-	2644000R1		
JB5C(-)	18	GN	TXL	239481R1		BS1	-	2644000R1		
JB5D(-)	18	GN	TXL	239481R1		BS1	-	2644000R1		
JB5EB(-)	18	GN	TXL	239481R1		BS1	-	2644000R1		
LC5C(-)	18	GN	TXL	239481R1		BS1	-	2644000R1		
LC5D(-)	18	GN	TXL	239481R1		BS1	-	2644000R1		
LC5E(-)	18	GN	TXL	239481R1		BS1	-	2644000R1		
LD5C(-)	18	GN	TXL	239481R1		BS1	-	2644000R1		
LD5D(-)	18	GN	TXL	239481R1		BS1	-	2644000R1		
LD5E(-)	18	GN	TXL	239481R1		BS1	-	2644000R1		
LE5C(-)	18	GN	TXL	239481R1		BS1	-	2644000R1		
LE5D(-)	18	GN	TXL	239481R1		BS1	-	2644000R1		
LE5E(-)	18	GN	TXL	239481R1		BS1	-	2644000R1		
LF5CD(-)	18	GN	TXL	239481R1		BS1	-	2644000R1		
LF5D(-)	18	GN	TXL	239481R1		BS1	-	2644000R1		
LF5E(-)	18	GN	TXL	239481R1		BS1	-	2644000R1		
LS5CD(-)	18	GN	TXL	239481R1		BS1	-	2644000R1		
LS5D(-)	18	GN	TXL	239481R1		BS1	-	2644000R1		
LS5E(-)	18	GN	TXL	239481R1		BS1	-	2644000R1		
LT5GE(-)	18	GN	TXL	239481R1		BS1	-	2644000R1		
LT5HE(-)	18	GN	TXL	239481R1		BS1	-	2644000R1		
LT5JE(-)	18	GN	TXL	239481R1		BS1	-	2644000R1		
LU5D(-)	18	GN	TXL	239481R1		BS1	-	2644000R1		
LU5E(-)	18	GN	TXL	239481R1		BS1	-	2644000R1		
LU5F(-)	18	GN	TXL	239481R1		BS1	-	2644000R1		
LW5GE(-)	18	GN	TXL	239481R1		BS1	-	2644000R1		
LW5HE(-)	18	GN	TXL	239481R1		BS1	-	2644000R1		
LW5JE(-)	18	GN	TXL	239481R1		BS1	-	2644000R1		
PY5C(-)	18	GN	TXL	239481R1		BS1	-	2644000R1		
PY5D(-)	18	GN	TXL	239481R1		BS1	-	2644000R1		
PY5E(-)	18	GN	TXL	239481R1		BS1	-	2644000R1		
PZ5C(-)	18	GN	TXL	239481R1		BS1	-	2644000R1		
PZ5D(-)	18	GN	TXL	239481R1		BS1	-	2644000R1		

Circuit Number	Gauge	Color	Insulation	Terminal / Splice Number	Connector Part number	Connector Number	Cavity	Seal/Sleeve	Lock 1	Lock 2
PZ5E(-)	18	GN	TXL	239481R1		BS1	-	2644000R1		
RD5C(-)	18	GN	TXL	239481R1		BS1	-	2644000R1		
RD5D(-)	18	GN	TXL	239481R1		BS1	-	2644000R1		
RD5E(-)	18	GN	TXL	239481R1		BS1	-	2644000R1		
RG5C(-)	18	GN	TXL	239481R1		BS1	-	2644000R1		
RG5D(-)	18	GN	TXL	239481R1		BS1	-	2644000R1		
RG5E(-)	18	GN	TXL	239481R1		BS1	-	2644000R1		
RJ5C(-)	18	GN	TXL	239481R1		BS1	-	2644000R1		
RJ5D(-)	18	GN	TXL	239481R1		BS1	-	2644000R1		
RJ5E(-)	18	GN	TXL	239481R1		BS1	-	2644000R1		
RM5C(-)	18	GN	TXL	239481R1		BS1	-	2644000R1		
RM5D(-)	18	GN	TXL	239481R1		BS1	-	2644000R1		
RM5E(-)	18	GN	TXL	239481R1		BS1	-	2644000R1		
RS5C(-)	18	GN	TXL	239481R1		BS1	-	2644000R1		
RS5D(-)	18	GN	TXL	239481R1		BS1	-	2644000R1		
RS5E(-)	18	GN	TXL	239481R1		BS1	-	2644000R1		
RU5C(-)	18	GN	TXL	239481R1		BS1	-	2644000R1		
RU5D(-)	18	GN	TXL	239481R1		BS1	-	2644000R1		
RU5E(-)	18	GN	TXL	239481R1		BS1	-	2644000R1		
SA5C(-)	18	GN	TXL	239481R1		BS1	-	2644000R1		
SA5D(-)	18	GN	TXL	239481R1		BS1	-	2644000R1		
SA5E(-)	18	GN	TXL	239481R1		BS1	-	2644000R1		
SK5D(-)	18	GN	TXL	239481R1		BS1	-	2644000R1		
SK5E(-)	18	GN	TXL	239481R1		BS1	-	2644000R1		
SK5H(-)	18	GN	TXL	239481R1		BS1	-	2644000R1		
SN5C(-)	18	GN	TXL	239481R1		BS1	-	2644000R1		
SN5D(-)	18	GN	TXL	239481R1		BS1	-	2644000R1		
SN5E(-)	18	GN	TXL	239481R1		BS1	-	2644000R1		
SP5C(-)	18	GN	TXL	239481R1		BS1	-	2644000R1		
SP5D(-)	18	GN	TXL	239481R1		BS1	-	2644000R1		
SP5E(-)	18	GN	TXL	239481R1		BS1	-	2644000R1		
VC5C(-)	18	GN	TXL	239481R1		BS1	-	2644000R1		
VC5D(-)	18	GN	TXL	239481R1		BS1	-	2644000R1		
VC5E(-)	18	GN	TXL	239481R1		BS1	-	2644000R1		
VE5C(-)	18	GN	TXL	239481R1		BS1	-	2644000R1		
VE5D(-)	18	GN	TXL	239481R1		BS1	-	2644000R1		
VE5E(-)	18	GN	TXL	239481R1		BS1	-	2644000R1		
ZH5C(-)	18	GN	TXL	239481R1		BS1	-	2644000R1		
ZH5D(-)	18	GN	TXL	239481R1		BS1	-	2644000R1		
ZH5EA(-)	18	GN	TXL	239481R1		BS1	-	2644000R1		
BB52A	14	YL	TXL	382181C1		BS11	-	2644000R1		
BB52AA	14	YL	TXL	382181C1		BS11	-	2644000R1		
BB52A	14	YL	TXL	382181C1		BS11	-	2644000R1		
BB52AA	14	YL	TXL	382181C1		BS11	-	2644000R1		
BB53A	14	YL	TXL	382181C1		BS12	-	2644000R1		
BB53AA	14	YL	TXL	382181C1		BS12	-	2644000R1		
BB53A	14	YL	TXL	239481R1		BS12	-	2644000R1		
BB53AA	14	YL	TXL	239481R1		BS12	-	2644000R1		
GZ5AC(+)	18	YL	TXL	239481R1		BS13	-	2644000R1		
GZ5AD(+)	18	YL	TXL	239481R1		BS13	-	2644000R1		
GZ5AE(+)	18	YL	TXL	239481R1		BS13	-	2644000R1		
JK5AC(+)	18	YL	TXL	239481R1		BS13	-	2644000R1		

Circuit Number	Gauge	Color	Insulation	Terminal / Splice Number	Connector Part number	Connector Number	Cavity	Seal/Sleeve	Lock 1	Lock 2
JK5AD(+)	18	YL	TXL	239481R1		BS13	-	2644000R1		
JK5AE(+)	18	YL	TXL	239481R1		BS13	-	2644000R1		
KU5AC(+)	18	YL	TXL	239481R1		BS13	-	2644000R1		
KU5AD(+)	18	YL	TXL	239481R1		BS13	-	2644000R1		
KU5AE(+)	18	YL	TXL	239481R1		BS13	-	2644000R1		
LN5AC(+)	18	YL	TXL	239481R1		BS13	-	2644000R1		
LN5AD(+)	18	YL	TXL	239481R1		BS13	-	2644000R1		
LN5AE(+)	18	YL	TXL	239481R1		BS13	-	2644000R1		
GZ5AC(+)	18	YL	TXL	239481R1		BS13	-	2644000R1		
GZ5AD(+)	18	YL	TXL	239481R1		BS13	-	2644000R1		
GZ5AE(+)	18	YL	TXL	239481R1		BS13	-	2644000R1		
JK5AC(+)	18	YL	TXL	239481R1		BS13	-	2644000R1		
JK5AD(+)	18	YL	TXL	239481R1		BS13	-	2644000R1		
JK5AE(+)	18	YL	TXL	239481R1		BS13	-	2644000R1		
KU5AC(+)	18	YL	TXL	239481R1		BS13	-	2644000R1		
KU5AD(+)	18	YL	TXL	239481R1		BS13	-	2644000R1		
KU5AE(+)	18	YL	TXL	239481R1		BS13	-	2644000R1		
LN5AC(+)	18	YL	TXL	239481R1		BS13	-	2644000R1		
LN5AD(+)	18	YL	TXL	239481R1		BS13	-	2644000R1		
LN5AE(+)	18	YL	TXL	239481R1		BS13	-	2644000R1		
LS5C(+)	18	YL	TXL	239481R1		BS13	-	2644000R1		
LS5CC(+)	18	YL	TXL	239481R1		BS13	-	2644000R1		
LS5CD(+)	18	YL	TXL	239481R1		BS13	-	2644000R1		
LT5E(+)	18	YL	TXL	239481R1		BS13	-	2644000R1		
LT5FE(+)	18	YL	TXL	239481R1		BS13	-	2644000R1		
LT5GE(+)	18	YL	TXL	239481R1		BS13	-	2644000R1		
LW5C(+)	18	YL	TXL	239481R1		BS13	-	2644000R1		
LW5D(+)	18	YL	TXL	239481R1		BS13	-	2644000R1		
LW5E(+)	18	YL	TXL	239481R1		BS13	-	2644000R1		
SK5F(+)	18	YL	TXL	239481R1		BS13	-	2644000R1		
SK5G(+)	18	YL	TXL	239481R1		BS13	-	2644000R1		
SK5L(+)	18	YL	TXL	239481R1		BS13	-	2644000R1		
GZ5AC(-)	18	GN	TXL	239481R1		BS14	-	2644000R1		
GZ5AD(-)	18	GN	TXL	239481R1		BS14	-	2644000R1		
GZ5AE(-)	18	GN	TXL	239481R1		BS14	-	2644000R1		
JK5AC(-)	18	GN	TXL	239481R1		BS14	-	2644000R1		
JK5AD(-)	18	GN	TXL	239481R1		BS14	-	2644000R1		
JK5AE(-)	18	GN	TXL	239481R1		BS14	-	2644000R1		
KU5AC(-)	18	GN	TXL	239481R1		BS14	-	2644000R1		
KU5AD(-)	18	GN	TXL	239481R1		BS14	-	2644000R1		
KU5AE(-)	18	GN	TXL	239481R1		BS14	-	2644000R1		
LN5AC(-)	18	GN	TXL	239481R1		BS14	-	2644000R1		
LN5AD(-)	18	GN	TXL	239481R1		BS14	-	2644000R1		
LN5AE(-)	18	GN	TXL	239481R1		BS14	-	2644000R1		
GZ5AC(-)	18	GN	TXL	239481R1		BS14	-	2644000R1		
GZ5AD(-)	18	GN	TXL	239481R1		BS14	-	2644000R1		
GZ5AE(-)	18	GN	TXL	239481R1		BS14	-	2644000R1		
JK5AC(-)	18	GN	TXL	239481R1		BS14	-	2644000R1		
JK5AD(-)	18	GN	TXL	239481R1		BS14	-	2644000R1		
JK5AE(-)	18	GN	TXL	239481R1		BS14	-	2644000R1		
KU5AC(-)	18	GN	TXL	239481R1		BS14	-	2644000R1		
KU5AD(-)	18	GN	TXL	239481R1		BS14	-	2644000R1		

Circuit Number	Gauge	Color	Insulation	Terminal / Splice Number	Connector Part number	Connector Number	Cavity	Seal/Sleeve	Lock 1	Lock 2
KU5AE(-)	18	GN	TXL	239481R1		BS14	-	2644000R1		
LN5AC(-)	18	GN	TXL	239481R1		BS14	-	2644000R1		
LN5AD(-)	18	GN	TXL	239481R1		BS14	-	2644000R1		
LN5AE(-)	18	GN	TXL	239481R1		BS14	-	2644000R1		
LS5C(-)	18	GN	TXL	239481R1		BS14	-	2644000R1		
LS5CC(-)	18	GN	TXL	239481R1		BS14	-	2644000R1		
LS5CD(-)	18	GN	TXL	239481R1		BS14	-	2644000R1		
LT5E(-)	18	GN	TXL	239481R1		BS14	-	2644000R1		
LT5FE(-)	18	GN	TXL	239481R1		BS14	-	2644000R1		
LT5GE(-)	18	GN	TXL	239481R1		BS14	-	2644000R1		
LW5C(-)	18	GN	TXL	239481R1		BS14	-	2644000R1		
LW5D(-)	18	GN	TXL	239481R1		BS14	-	2644000R1		
LW5E(-)	18	GN	TXL	239481R1		BS14	-	2644000R1		
SK5F(-)	18	GN	TXL	239481R1		BS14	-	2644000R1		
SK5G(-)	18	GN	TXL	239481R1		BS14	-	2644000R1		
SK5L(-)	18	GN	TXL	239481R1		BS14	-	2644000R1		
ZA94SK	18	GY	TXL	239481R1		BS15	-	2644000R1		
ZA94SKA	18	GY	TXL	239481R1		BS15	-	2644000R1		
ZA94SKB	18	GY	TXL	239481R1		BS15	-	2644000R1		
ZA94SK	18	GY	TXL	239481R1		BS15	-	2644000R1		
ZA94SKA	18	GY	TXL	239481R1		BS15	-	2644000R1		
ZA94SKB	18	GY	TXL	239481R1		BS15	-	2644000R1		
BU65	16	OR	TXL	239481R1		BS16	-	2644000R1		
BU65AA	18	OR	TXL	239481R1		BS16	-	2644000R1		
BU65AB	16	OR	TXL	239481R1		BS16	-	2644000R1		
BW65	16	OR	TXL	239481R1		BS16	-	2644000R1		
BW65AA	18	OR	TXL	239481R1		BS16	-	2644000R1		
BW65AB	16	OR	TXL	239481R1		BS16	-	2644000R1		
BX65	16	OR	TXL	239481R1		BS16	-	2644000R1		
BX65AA	18	OR	TXL	239481R1		BS16	-	2644000R1		
BX65AB	18	OR	TXL	239481R1		BS16	-	2644000R1		
BX65AC	18	OR	TXL	239481R1		BS16	-	2644000R1		
BU65	16	OR	TXL	239481R1		BS16	-	2644000R1		
BU65AA	18	OR	TXL	239481R1		BS16	-	2644000R1		
BU65AB	16	OR	TXL	239481R1		BS16	-	2644000R1		
BW65	16	OR	TXL	239481R1		BS16	-	2644000R1		
BW65AA	18	OR	TXL	239481R1		BS16	-	2644000R1		
BW65AB	16	OR	TXL	239481R1		BS16	-	2644000R1		
BX65	16	OR	TXL	239481R1		BS16	-	2644000R1		
BX65AA	18	OR	TXL	239481R1		BS16	-	2644000R1		
BX65AB	18	OR	TXL	239481R1		BS16	-	2644000R1		
BX65AC	18	OR	TXL	239481R1		BS16	-	2644000R1		
FH5BP(-)	18	GN	TXL	239481R1		BS17	-	2644000R1		
FH5BS(-)	18	GN	TXL	239481R1		BS17	-	2644000R1		
FH5BT(-)	18	GN	TXL	239481R1		BS17	-	2644000R1		
ZN5C(-)	18	GN	TXL	239481R1		BS17	-	2644000R1		
ZN5D(-)	18	GN	TXL	239481R1		BS17	-	2644000R1		
ZN5EB(-)	18	GN	TXL	239481R1		BS17	-	2644000R1		
2F56A4	16	OR	TXL	239481R1		BS18	-	2644000R1		
2F56C	16	OR	TXL	239481R1		BS18	-	2644000R1		
2F56D	18	OR	TXL	239481R1		BS18	-	2644000R1		
2F56F	16	OR	TXL	239481R1		BS18	-	2644000R1		

Circuit Number	Gauge	Color	Insulation	Terminal / Splice Number	Connector Part number	Connector Number	Cavity	Seal/Sleeve	Lock 1	Lock 2
2F56G	16	OR	TXL	239481R1		BS18	-	2644000R1		
2G56A4	16	OR	TXL	239481R1		BS18	-	2644000R1		
2G56C	16	OR	TXL	239481R1		BS18	-	2644000R1	3540454C1	3551897C1
2G56D	18	OR	TXL	239481R1		BS18	-	2644000R1		
2G56F	16	OR	TXL	239481R1		BS18	-	2644000R1		
2G56G	16	OR	TXL	239481R1		BS18	-	2644000R1		
2Z56A2	16	OR	TXL	239481R1		BS18	-	2644000R1		
2Z56C	16	OR	TXL	239481R1		BS18	-	2644000R1		
2Z56F	16	OR	TXL	239481R1		BS18	-	2644000R1		
2Z56G	16	OR	TXL	239481R1		BS18	-	2644000R1		
NB56C	16	OR	TXL	239481R1		BS18	-	2644000R1		
NB56F	16	OR	TXL	239481R1		BS18	-	2644000R1		
NB56G	16	OR	TXL	239481R1		BS18	-	2644000R1		
NC56C	16	OR	TXL	239481R1		BS18	-	2644000R1		
NC56F	16	OR	TXL	239481R1		BS18	-	2644000R1		
NC56G	16	OR	TXL	239481R1		BS18	-	2644000R1		
NS56C	16	OR	TXL	239481R1		BS18	-	2644000R1		
NS56D	18	OR	TXL	239481R1		BS18	-	2644000R1		
NS56F	16	OR	TXL	239481R1		BS18	-	2644000R1		
NS56G	16	OR	TXL	239481R1		BS18	-	2644000R1		
ZN5C(+)	18	YL	TXL	239481R1		BS18	-	2644000R1		
ZN5D(+)	18	YL	TXL	239481R1		BS18	-	2644000R1		
ZN5EB(+)	18	YL	TXL	239481R1		BS18	-	2644000R1		
NB56A	14	OR	TXL	239481R1		BS19	-	2644000R1		
NB56A1	14	OR	TXL	239481R1		BS19	-	2644000R1		
NB56BB1	14	OR	TXL	239481R1		BS19	-	2644000R1		
KP5AC(+)	18	YL	TXL	239481R1		BS19	-	2644000R1		
KP5AD(+)	18	YL	TXL	239481R1		BS19	-	2644000R1		
KP5AE(+)	18	YL	TXL	239481R1		BS19	-	2644000R1		
3D5C(+)	18	YL	TXL	239481R1		BS2	-	2644000R1		
3D5D(+)	18	YL	TXL	239481R1		BS2	-	2644000R1		
3D5E(+)	18	YL	TXL	239481R1		BS2	-	2644000R1		
3M5C(+)	18	YL	TXL	239481R1		BS2	-	2644000R1		
3M5D(+)	18	YL	TXL	239481R1		BS2	-	2644000R1		
3M5E(+)	18	YL	TXL	239481R1		BS2	-	2644000R1		
9K5C(+)	18	YL	TXL	239481R1		BS2	-	2644000R1		
9K5D(+)	18	YL	TXL	239481R1		BS2	-	2644000R1		
9K5E(+)	18	YL	TXL	239481R1		BS2	-	2644000R1		
9L5C(+)	18	YL	TXL	239481R1		BS2	-	2644000R1		
9L5D(+)	18	YL	TXL	239481R1		BS2	-	2644000R1		
9L5E(+)	18	YL	TXL	239481R1		BS2	-	2644000R1		
9P5C(+)	18	YL	TXL	239481R1		BS2	-	2644000R1	1667771C1	
9P5D(+)	18	YL	TXL	239481R1		BS2	-	2644000R1	2039342C1	
9P5E(+)	18	YL	TXL	239481R1		BS2	-	2644000R1	1661874C1	
9V5C(+)	18	YL	TXL	239481R1		BS2	-	2644000R1		
9V5D(+)	18	YL	TXL	239481R1		BS2	-	2644000R1		
9V5E(+)	18	YL	TXL	239481R1		BS2	-	2644000R1		
JB5C(+)	18	YL	TXL	239481R1		BS2	-	2644000R1		
JB5D(+)	18	YL	TXL	239481R1		BS2	-	2644000R1		
JB5EB(+)	18	YL	TXL	239481R1		BS2	-	2644000R1		
LC5C(+)	18	YL	TXL	239481R1		BS2	-	2644000R1		
LC5D(+)	18	YL	TXL	239481R1		BS2	-	2644000R1		

Circuit Number	Gauge	Color	Insulation	Terminal / Splice Number	Connector Part number	Connector Number	Cavity	Seal/Sleeve	Lock 1	Lock 2
LC5E(+)	18	YL	TXL	239481R1		BS2	-	2644000R1		
LD5C(+)	18	YL	TXL	239481R1		BS2	-	2644000R1		
LD5D(+)	18	YL	TXL	239481R1		BS2	-	2644000R1		
LD5E(+)	18	YL	TXL	239481R1		BS2	-	2644000R1		
LE5C(+)	18	YL	TXL	239481R1		BS2	-	2644000R1		
LE5D(+)	18	YL	TXL	239481R1		BS2	-	2644000R1		
LE5E(+)	18	YL	TXL	239481R1		BS2	-	2644000R1		
LF5CD(+)	18	YL	TXL	239481R1		BS2	-	2644000R1		
LF5D(+)	18	YL	TXL	239481R1		BS2	-	2644000R1		
LF5E(+)	18	YL	TXL	239481R1		BS2	-	2644000R1		
LS5CD(+)	18	YL	TXL	239481R1		BS2	-	2644000R1		
LS5D(+)	18	YL	TXL	239481R1		BS2	-	2644000R1		
LS5E(+)	18	YL	TXL	239481R1		BS2	-	2644000R1		
LT5G(+)	18	YL	TXL	239481R1		BS2	-	2644000R1		
LT5H(+)	18	YL	TXL	239481R1		BS2	-	2644000R1		
LT5J(+)	18	YL	TXL	239481R1		BS2	-	2644000R1		
LU5D(+)	18	YL	TXL	239481R1		BS2	-	2644000R1		
LU5E(+)	18	YL	TXL	239481R1		BS2	-	2644000R1		
LU5F(+)	18	YL	TXL	239481R1		BS2	-	2644000R1		
LW5G(+)	18	YL	TXL	239481R1		BS2	-	2644000R1		
LW5H(+)	18	YL	TXL	239481R1		BS2	-	2644000R1		
LW5J(+)	18	YL	TXL	239481R1		BS2	-	2644000R1		
PY5C(+)	18	YL	TXL	239481R1		BS2	-	2644000R1		
PY5D(+)	18	YL	TXL	239481R1		BS2	-	2644000R1		
PY5E(+)	18	YL	TXL	239481R1		BS2	-	2644000R1		
PZ5C(+)	18	YL	TXL	239481R1		BS2	-	2644000R1		
PZ5D(+)	18	YL	TXL	239481R1		BS2	-	2644000R1		
PZ5E(+)	18	YL	TXL	239481R1		BS2	-	2644000R1		
RD5C(+)	18	YL	TXL	239481R1		BS2	-	2644000R1		
RD5D(+)	18	YL	TXL	239481R1		BS2	-	2644000R1		
RD5E(+)	18	YL	TXL	239481R1		BS2	-	2644000R1		
RG5C(+)	18	YL	TXL	239481R1		BS2	-	2644000R1		
RG5D(+)	18	YL	TXL	239481R1		BS2	-	2644000R1		
RG5E(+)	18	YL	TXL	239481R1		BS2	-	2644000R1		
RJ5C(+)	18	YL	TXL	239481R1		BS2	-	2644000R1		
RJ5D(+)	18	YL	TXL	239481R1		BS2	-	2644000R1		
RJ5E(+)	18	YL	TXL	239481R1		BS2	-	2644000R1		
RM5C(+)	18	YL	TXL	239481R1		BS2	-	2644000R1		
RM5D(+)	18	YL	TXL	239481R1		BS2	-	2644000R1		
RM5E(+)	18	YL	TXL	239481R1		BS2	-	2644000R1		
RS5C(+)	18	YL	TXL	239481R1		BS2	-	2644000R1		
RS5D(+)	18	YL	TXL	239481R1		BS2	-	2644000R1		
RS5E(+)	18	YL	TXL	239481R1		BS2	-	2644000R1		
RU5C(+)	18	YL	TXL	239481R1		BS2	-	2644000R1		
RU5D(+)	18	YL	TXL	239481R1		BS2	-	2644000R1		
RU5E(+)	18	YL	TXL	239481R1		BS2	-	2644000R1		
SA5C(+)	18	YL	TXL	239481R1		BS2	-	2644000R1		
SA5D(+)	18	YL	TXL	239481R1		BS2	-	2644000R1		
SA5E(+)	18	YL	TXL	239481R1		BS2	-	2644000R1		
SK5D(+)	18	YL	TXL	239481R1		BS2	-	2644000R1		
SK5E(+)	18	YL	TXL	239481R1		BS2	-	2644000R1		
SK5H(+)	18	YL	TXL	239481R1		BS2	-	2644000R1		

Circuit Number	Gauge	Color	Insulation	Terminal / Splice Number	Connector Part number	Connector Number	Cavity	Seal/Sleeve	Lock 1	Lock 2
SN5C(+)	18	YL	TXL	239481R1		BS2	-	2644000R1		
SN5D(+)	18	YL	TXL	239481R1		BS2	-	2644000R1		
SN5E(+)	18	YL	TXL	239481R1		BS2	-	2644000R1		
SP5C(+)	18	YL	TXL	239481R1		BS2	-	2644000R1		
SP5D(+)	18	YL	TXL	239481R1		BS2	-	2644000R1		
SP5E(+)	18	YL	TXL	239481R1		BS2	-	2644000R1		
VC5C(+)	18	YL	TXL	239481R1		BS2	-	2644000R1		
VC5D(+)	18	YL	TXL	239481R1		BS2	-	2644000R1		
VC5E(+)	18	YL	TXL	239481R1		BS2	-	2644000R1		
VE5C(+)	18	YL	TXL	239481R1		BS2	-	2644000R1		
VE5D(+)	18	YL	TXL	239481R1		BS2	-	2644000R1		
VE5E(+)	18	YL	TXL	239481R1		BS2	-	2644000R1		
ZH5C(+)	18	YL	TXL	239481R1		BS2	-	2644000R1		
ZH5D(+)	18	YL	TXL	239481R1		BS2	-	2644000R1		
ZH5EA(+)	18	YL	TXL	239481R1		BS2	-	2644000R1		
2H5C(+)	18	YL	TXL	239481R1		BS2	-	2644000R1		
2H5D(+)	18	YL	TXL	239481R1		BS2	-	2644000R1		
2H5E(+)	18	YL	TXL	239481R1		BS2	-	2644000R1		
2J5C(+)	18	YL	TXL	239481R1		BS2	-	2644000R1		
2J5D(+)	18	YL	TXL	239481R1		BS2	-	2644000R1		
2J5E(+)	18	YL	TXL	239481R1		BS2	-	2644000R1		
2L5C(+)	18	YL	TXL	239481R1		BS2	-	2644000R1		
2L5D(+)	18	YL	TXL	239481R1		BS2	-	2644000R1		
2L5E(+)	18	YL	TXL	239481R1		BS2	-	2644000R1		
2M5C(+)	18	YL	TXL	239481R1		BS2	-	2644000R1		
2M5D(+)	18	YL	TXL	239481R1		BS2	-	2644000R1		
2M5E(+)	18	YL	TXL	239481R1		BS2	-	2644000R1		
2W5C(+)	18	YL	TXL	239481R1		BS2	-	2644000R1		
2W5D(+)	18	YL	TXL	239481R1		BS2	-	2644000R1		
2W5E(+)	18	YL	TXL	239481R1		BS2	-	2644000R1		
2Y5C(+)	18	YL	TXL	239481R1		BS2	-	2644000R1		
2Y5D(+)	18	YL	TXL	239481R1		BS2	-	2644000R1		
2Y5E(+)	18	YL	TXL	239481R1		BS2	-	2644000R1		
2Z5C(+)	18	YL	TXL	239481R1		BS2	-	2644000R1		
2Z5D(+)	18	YL	TXL	239481R1		BS2	-	2644000R1		
2Z5E(+)	18	YL	TXL	239481R1		BS2	-	2644000R1		
3C5C(+)	18	YL	TXL	239481R1		BS2	-	2644000R1		
3C5D(+)	18	YL	TXL	239481R1		BS2	-	2644000R1		
3C5E(+)	18	YL	TXL	239481R1		BS2	-	2644000R1		
3D5C(+)	18	YL	TXL	239481R1		BS2	-	2644000R1		
3D5D(+)	18	YL	TXL	239481R1		BS2	-	2644000R1		
3D5E(+)	18	YL	TXL	239481R1		BS2	-	2644000R1		
3M5C(+)	18	YL	TXL	239481R1		BS2	-	2644000R1		
3M5D(+)	18	YL	TXL	239481R1		BS2	-	2644000R1		
3M5E(+)	18	YL	TXL	239481R1		BS2	-	2644000R1		
9K5C(+)	18	YL	TXL	239481R1		BS2	-	2644000R1		
9K5D(+)	18	YL	TXL	239481R1		BS2	-	2644000R1		
9K5E(+)	18	YL	TXL	239481R1		BS2	-	2644000R1		
9L5C(+)	18	YL	TXL	239481R1		BS2	-	2644000R1		
9L5D(+)	18	YL	TXL	239481R1		BS2	-	2644000R1		
9L5E(+)	18	YL	TXL	239481R1		BS2	-	2644000R1		
9P5C(+)	18	YL	TXL	239481R1		BS2	-	2644000R1		

Circuit Number	Gauge	Color	Insulation	Terminal / Splice Number	Connector Part number	Connector Number	Cavity	Seal/Sleeve	Lock 1	Lock 2
9P5D(+)	18	YL	TXL	239481R1		BS2	-	2644000R1		
9P5E(+)	18	YL	TXL	239481R1		BS2	-	2644000R1		
9V5C(+)	18	YL	TXL	239481R1		BS2	-	2644000R1		
9V5D(+)	18	YL	TXL	239481R1		BS2	-	2644000R1		
9V5E(+)	18	YL	TXL	239481R1		BS2	-	2644000R1		
JB5C(+)	18	YL	TXL	239481R1		BS2	-	2644000R1		
JB5D(+)	18	YL	TXL	239481R1		BS2	-	2644000R1		
JB5EB(+)	18	YL	TXL	239481R1		BS2	-	2644000R1		
LC5C(+)	18	YL	TXL	239481R1		BS2	-	2644000R1		
LC5D(+)	18	YL	TXL	239481R1		BS2	-	2644000R1		
LC5E(+)	18	YL	TXL	239481R1		BS2	-	2644000R1		
LD5C(+)	18	YL	TXL	239481R1		BS2	-	2644000R1		
LD5D(+)	18	YL	TXL	239481R1		BS2	-	2644000R1		
LD5E(+)	18	YL	TXL	239481R1		BS2	-	2644000R1		
LE5C(+)	18	YL	TXL	239481R1		BS2	-	2644000R1		
LE5D(+)	18	YL	TXL	239481R1		BS2	-	2644000R1		
LE5E(+)	18	YL	TXL	239481R1		BS2	-	2644000R1		
LF5CD(+)	18	YL	TXL	239481R1		BS2	-	2644000R1		
LF5D(+)	18	YL	TXL	239481R1		BS2	-	2644000R1		
LF5E(+)	18	YL	TXL	239481R1		BS2	-	2644000R1		
LS5CD(+)	18	YL	TXL	239481R1		BS2	-	2644000R1		
LS5D(+)	18	YL	TXL	239481R1		BS2	-	2644000R1		
LS5E(+)	18	YL	TXL	239481R1		BS2	-	2644000R1		
LT5GE(+)	18	YL	TXL	239481R1		BS2	-	2644000R1		
LT5HE(+)	18	YL	TXL	239481R1		BS2	-	2644000R1		
LT5JE(+)	18	YL	TXL	239481R1		BS2	-	2644000R1		
LU5D(+)	18	YL	TXL	239481R1		BS2	-	2644000R1		
LU5E(+)	18	YL	TXL	239481R1		BS2	-	2644000R1		
LU5F(+)	18	YL	TXL	239481R1		BS2	-	2644000R1		
LW5GE(+)	18	YL	TXL	239481R1		BS2	-	2644000R1		
LW5HE(+)	18	YL	TXL	239481R1		BS2	-	2644000R1		
LW5JE(+)	18	YL	TXL	239481R1		BS2	-	2644000R1		
PY5C(+)	18	YL	TXL	239481R1		BS2	-	2644000R1		
PY5D(+)	18	YL	TXL	239481R1		BS2	-	2644000R1		
PY5E(+)	18	YL	TXL	239481R1		BS2	-	2644000R1		
PZ5C(+)	18	YL	TXL	239481R1		BS2	-	2644000R1		
PZ5D(+)	18	YL	TXL	239481R1		BS2	-	2644000R1		
PZ5E(+)	18	YL	TXL	239481R1		BS2	-	2644000R1		
RD5C(+)	18	YL	TXL	239481R1		BS2	-	2644000R1		
RD5D(+)	18	YL	TXL	239481R1		BS2	-	2644000R1		
RD5E(+)	18	YL	TXL	239481R1		BS2	-	2644000R1		
RG5C(+)	18	YL	TXL	239481R1		BS2	-	2644000R1		
RG5D(+)	18	YL	TXL	239481R1		BS2	-	2644000R1		
RG5E(+)	18	YL	TXL	239481R1		BS2	-	2644000R1		
RJ5C(+)	18	YL	TXL	239481R1		BS2	-	2644000R1		
RJ5D(+)	18	YL	TXL	239481R1		BS2	-	2644000R1		
RJ5E(+)	18	YL	TXL	239481R1		BS2	-	2644000R1		
RM5C(+)	18	YL	TXL	239481R1		BS2	-	2644000R1		
RM5D(+)	18	YL	TXL	239481R1		BS2	-	2644000R1		
RM5E(+)	18	YL	TXL	239481R1		BS2	-	2644000R1		
RS5C(+)	18	YL	TXL	239481R1		BS2	-	2644000R1		
RS5D(+)	18	YL	TXL	239481R1		BS2	-	2644000R1		

Circuit Number	Gauge	Color	Insulation	Terminal / Splice Number	Connector Part number	Connector Number	Cavity	Seal/Sleeve	Lock 1	Lock 2
RS5E(+)	18	YL	TXL	239481R1		BS2	-	2644000R1		
RU5C(+)	18	YL	TXL	239481R1		BS2	-	2644000R1		
RU5D(+)	18	YL	TXL	239481R1		BS2	-	2644000R1		
RU5E(+)	18	YL	TXL	239481R1		BS2	-	2644000R1		
SA5C(+)	18	YL	TXL	239481R1		BS2	-	2644000R1		
SA5D(+)	18	YL	TXL	239481R1		BS2	-	2644000R1		
SA5E(+)	18	YL	TXL	239481R1		BS2	-	2644000R1		
SK5D(+)	18	YL	TXL	239481R1		BS2	-	2644000R1		
SK5E(+)	18	YL	TXL	239481R1		BS2	-	2644000R1		
SK5H(+)	18	YL	TXL	239481R1		BS2	-	2644000R1		
SN5C(+)	18	YL	TXL	239481R1		BS2	-	2644000R1		
SN5D(+)	18	YL	TXL	239481R1		BS2	-	2644000R1		
SN5E(+)	18	YL	TXL	239481R1		BS2	-	2644000R1		
SP5C(+)	18	YL	TXL	239481R1		BS2	-	2644000R1		
SP5D(+)	18	YL	TXL	239481R1		BS2	-	2644000R1		
SP5E(+)	18	YL	TXL	239481R1		BS2	-	2644000R1		
VC5C(+)	18	YL	TXL	239481R1		BS2	-	2644000R1		
VC5D(+)	18	YL	TXL	239481R1		BS2	-	2644000R1		
VC5E(+)	18	YL	TXL	239481R1		BS2	-	2644000R1		
VE5C(+)	18	YL	TXL	239481R1		BS2	-	2644000R1		
VE5D(+)	18	YL	TXL	239481R1		BS2	-	2644000R1		
VE5E(+)	18	YL	TXL	239481R1		BS2	-	2644000R1		
ZH5C(+)	18	YL	TXL	239481R1		BS2	-	2644000R1		
ZH5D(+)	18	YL	TXL	239481R1		BS2	-	2644000R1		
ZH5EA(+)	18	YL	TXL	239481R1		BS2	-	2644000R1		
NB57AA	14	OR	TXL	239481R1		BS20	-	2644000R1		
NB57AA1	14	OR	TXL	239481R1		BS20	-	2644000R1		
NB57BB1	14	OR	TXL	239481R1		BS20	-	2644000R1		
KP5AC(-)	18	GN	TXL	239481R1		BS20	-	2644000R1		
KP5AD(-)	18	GN	TXL	239481R1		BS20	-	2644000R1		
KP5AE(-)	18	GN	TXL	239481R1		BS20	-	2644000R1		
NT5C(-)	18	GN	TXL	239481R1		BS21	-	2644000R1		
NT5D(-)	18	GN	TXL	239481R1		BS21	-	2644000R1		
NT5EB(-)	18	GN	TXL	239481R1		BS21	-	2644000R1		
NT5C(+)	18	YL	TXL	239481R1		BS22	-	2644000R1		
NT5D(+)	18	YL	TXL	239481R1		BS22	-	2644000R1		
NT5EB(+)	18	YL	TXL	239481R1		BS22	-	2644000R1		
KP5AC(-)	18	GN	TXL	239481R1		BS23	-	2644000R1		
KP5AD(-)	18	GN	TXL	239481R1		BS23	-	2644000R1		
KP5AE(-)	18	GN	TXL	239481R1		BS23	-	2644000R1		
KP5AC(+)	18	YL	TXL	239481R1		BS24	-	2644000R1		
KP5AD(+)	18	YL	TXL	239481R1		BS24	-	2644000R1		
KP5AE(+)	18	YL	TXL	239481R1		BS24	-	2644000R1		
JP5BC(+)	18	YL	TXL	382181C1		BS3	-	2644000R1		
JP5BD(+)	18	YL	TXL	382181C1		BS3	-	2644000R1		
JP5BE(+)	18	YL	TXL	382181C1		BS3	-	2644000R1		
JR5BC(+)	18	YL	TXL	382181C1		BS3	-	2644000R1		
JR5BD(+)	18	YL	TXL	382181C1		BS3	-	2644000R1		
JR5BE(+)	18	YL	TXL	382181C1		BS3	-	2644000R1		
JP5BC(+)	18	YL	TXL	382181C1		BS3	-	2644000R1		
JP5BD(+)	18	YL	TXL	382181C1		BS3	-	2644000R1		
JP5BE(+)	18	YL	TXL	382181C1		BS3	-	2644000R1		

Circuit Number	Gauge	Color	Insulation	Terminal / Splice Number	Connector Part number	Connector Number	Cavity	Seal/Sleeve	Lock 1	Lock 2
JR5BC(+)	18	YL	TXL	382181C1		BS3	-	2644000R1		
JR5BD(+)	18	YL	TXL	382181C1		BS3	-	2644000R1		
JR5BE(+)	18	YL	TXL	382181C1		BS3	-	2644000R1		
JP5BC(-)	18	LTGN	TXL	382181C1		BS4	-	2644000R1		
JP5BD(-)	18	LTGN	TXL	382181C1		BS4	-	2644000R1		
JP5BE(-)	18	LTGN	TXL	382181C1		BS4	-	2644000R1		
JR5BC(-)	18	LTGN	TXL	382181C1		BS4	-	2644000R1		
JR5BD(-)	18	LTGN	TXL	382181C1		BS4	-	2644000R1		
JR5BE(-)	18	LTGN	TXL	382181C1		BS4	-	2644000R1		
JP5BC(-)	18	LTGN	TXL	382181C1		BS4	-	2644000R1		
JP5BD(-)	18	LTGN	TXL	382181C1		BS4	-	2644000R1		
JP5BE(-)	18	LTGN	TXL	382181C1		BS4	-	2644000R1		
JR5BC(-)	18	LTGN	TXL	382181C1		BS4	-	2644000R1		
JR5BD(-)	18	LTGN	TXL	382181C1		BS4	-	2644000R1		
JR5BE(-)	18	LTGN	TXL	382181C1		BS4	-	2644000R1		
3L5BB(+)	18	YL	TXL	239481R1		BS5	-	2644000R1	3598916C1	3598917C1
3L5BC(+)	18	YL	TXL	239481R1		BS5	-	2644000R1	1655705C1	
3L5BF(+)	18	YL	TXL	239481R1		BS5	-	2644000R1	3978364C1	
AR5BA(+)	18	YL	TXL	239481R1		BS5	-	2644000R1		
AR5BB(+)	18	YL	TXL	239481R1		BS5	-	2644000R1		
AR5BC(+)	18	YL	TXL	239481R1		BS5	-	2644000R1		
AS5BA(+)	18	YL	TXL	239481R1		BS5	-	2644000R1		
AS5BB(+)	18	YL	TXL	239481R1		BS5	-	2644000R1		
AS5BC(+)	18	YL	TXL	239481R1		BS5	-	2644000R1		
3L5BB(+)	18	YL	TXL	382181C1		BS5	-	2644000R1		
3L5BC(+)	18	YL	TXL	382181C1		BS5	-	2644000R1		
3L5BF(+)	18	YL	TXL	382181C1		BS5	-	2644000R1		
AR5BA(+)	18	YL	TXL	382181C1		BS5	-	2644000R1		
AR5BB(+)	18	YL	TXL	382181C1		BS5	-	2644000R1		
AR5BC(+)	18	YL	TXL	382181C1		BS5	-	2644000R1		
BR5BA(+)	18	YL	TXL	382181C1		BS5	-	2644000R1		
BR5BB(+)	18	YL	TXL	382181C1		BS5	-	2644000R1		
BR5BF(+)	18	YL	TXL	382181C1		BS5	-	2644000R1		
3L5BB(-)	18	GN	TXL	239481R1		BS6	-	2644000R1		
3L5BC(-)	18	GN	TXL	239481R1		BS6	-	2644000R1	3606532C1	
3L5BF(-)	18	GN	TXL	239481R1		BS6	-	2644000R1		
AR5BA(-)	18	GN	TXL	239481R1		BS6	-	2644000R1		
AR5BB(-)	18	GN	TXL	239481R1		BS6	-	2644000R1		
AR5BC(-)	18	GN	TXL	239481R1		BS6	-	2644000R1		
AS5BA(-)	18	GN	TXL	239481R1		BS6	-	2644000R1		
AS5BB(-)	18	GN	TXL	239481R1		BS6	-	2644000R1		
AS5BC(-)	18	GN	TXL	239481R1		BS6	-	2644000R1		
3L5BB(-)	18	GN	TXL	382181C1		BS6	-	2644000R1		
3L5BC(-)	18	GN	TXL	382181C1		BS6	-	2644000R1		
3L5BF(-)	18	GN	TXL	382181C1		BS6	-	2644000R1		
AR5BA(-)	18	GN	TXL	382181C1		BS6	-	2644000R1		
AR5BB(-)	18	GN	TXL	382181C1		BS6	-	2644000R1		
AR5BC(-)	18	GN	TXL	382181C1		BS6	-	2644000R1		
BR5BA(-)	18	GN	TXL	382181C1		BS6	-	2644000R1		
BR5BB(-)	18	GN	TXL	382181C1		BS6	-	2644000R1		
BR5BF(-)	18	GN	TXL	382181C1		BS6	-	2644000R1		
FH5BP(+)	18	YL	TXL	239481R1		BS7	-	2644000R1		

Circuit Number	Gauge	Color	Insulation	Terminal / Splice Number	Connector Part number	Connector Number	Cavity	Seal/Sleeve	Lock 1	Lock 2
FH5BS(+)	18	YL	TXL	239481R1		BS7	-	2644000R1		
FH5BT(+)	18	YL	TXL	239481R1		BS7	-	2644000R1		
BV5BP(+)	18	YL	TXL	239481R1		BS7	-	2644000R1		
BV5BS(+)	18	YL	TXL	239481R1		BS7	-	2644000R1		
BV5BT(+)	18	YL	TXL	239481R1		BS7	-	2644000R1		
FH5BP(+)	18	YL	TXL	239481R1		BS7	-	2644000R1		
FH5BS(+)	18	YL	TXL	239481R1		BS7	-	2644000R1		
FH5BT(+)	18	YL	TXL	239481R1		BS7	-	2644000R1		
2B57	16	OR	TXL	239481R1		BS8	-	2644000R1		
2B57A	16	OR	TXL	239481R1		BS8	-	2644000R1		
2B57F	16	OR	TXL	239481R1		BS8	-	2644000R1		
2C57	16	OR	TXL	239481R1		BS8	-	2644000R1		
2C57A	16	OR	TXL	239481R1		BS8	-	2644000R1		
2C57B	18	OR	TXL	239481R1		BS8	-	2644000R1		
2C57F	16	OR	TXL	239481R1		BS8	-	2644000R1		
2D57	16	OR	TXL	239481R1		BS8	-	2644000R1		
2D57A	16	OR	TXL	239481R1		BS8	-	2644000R1		
2D57C	18	OR	TXL	239481R1		BS8	-	2644000R1		
2D57F	16	OR	TXL	239481R1		BS8	-	2644000R1		
2.00E+57	16	OR	TXL	239481R1		BS8	-	2644000R1		
2E57A	16	OR	TXL	239481R1		BS8	-	2644000R1		
2E57B	18	OR	TXL	239481R1		BS8	-	2644000R1		
2E57C	18	OR	TXL	239481R1		BS8	-	2644000R1		
2E57F	16	OR	TXL	239481R1		BS8	-	2644000R1		
2F57	16	OR	TXL	239481R1		BS8	-	2644000R1		
2F57A	16	OR	TXL	239481R1		BS8	-	2644000R1	1661873C1	
2F57A2	16	OR	TXL	239481R1		BS8	-	2644000R1	1671608C1	
2F57B	18	OR	TXL	239481R1		BS8	-	2644000R1	1661874C1	
2F57F	16	OR	TXL	239481R1		BS8	-	2644000R1	3525875C1	
2G57	16	OR	TXL	239481R1		BS8	-	2644000R1	3610532C1	
2G57A	16	OR	TXL	239481R1		BS8	-	2644000R1	3683466C1	3573833C1
2G57A2	16	OR	TXL	239481R1		BS8	-	2644000R1	3765546C1	3765565C1
2G57B	18	OR	TXL	239481R1		BS8	-	2644000R1		
2G57C	18	OR	TXL	239481R1		BS8	-	2644000R1		
2G57F	16	OR	TXL	239481R1		BS8	-	2644000R1		
2Z57A4	16	OR	TXL	239481R1		BS8	-	2644000R1		
NA57	16	OR	TXL	239481R1		BS8	-	2644000R1		
NA57A	18	OR	TXL	239481R1		BS8	-	2644000R1		
NA57B	16	OR	TXL	239481R1		BS8	-	2644000R1		
NA57BA	16	OR	TXL	239481R1		BS8	-	2644000R1		
NA57C	16	OR	TXL	239481R1		BS8	-	2644000R1		
NA57F	16	OR	TXL	239481R1		BS8	-	2644000R1		
NW57	16	OR	TXL	239481R1		BS8	-	2644000R1		
NW57B	16	OR	TXL	239481R1		BS8	-	2644000R1		
NW57C	16	OR	TXL	239481R1		BS8	-	2644000R1		
NW57F	16	OR	TXL	239481R1		BS8	-	2644000R1		
NY57	16	OR	TXL	239481R1		BS8	-	2644000R1		
NY57B	16	OR	TXL	239481R1		BS8	-	2644000R1		
NY57BA	16	OR	TXL	239481R1		BS8	-	2644000R1		
NY57C	16	OR	TXL	239481R1		BS8	-	2644000R1		
NY57F	16	OR	TXL	239481R1		BS8	-	2644000R1		
BV5BP(-)	18	GN	TXL	239481R1		BS8	-	2644000R1		

Circuit Number	Gauge	Color	Insulation	Terminal / Splice Number	Connector Part number	Connector Number	Cavity	Seal/Sleeve	Lock 1	Lock 2
BV5BS(-)	18	GN	TXL	239481R1		BS8	-	2644000R1		
BV5BT(-)	18	GN	TXL	239481R1		BS8	-	2644000R1		
FH5BP(-)	18	GN	TXL	239481R1		BS8	-	2644000R1		
FH5BS(-)	18	GN	TXL	239481R1		BS8	-	2644000R1		
FH5BT(-)	18	GN	TXL	239481R1		BS8	-	2644000R1		
BL71B	16	OR	TXL	382181C1		BS9	-	2644000R1		
BL71B2	16	OR	TXL	382181C1		BS9	-	2644000R1		
BL71BB	16	OR	TXL	382181C1		BS9	-	2644000R1		
CV81-G	10	WH	TXL	468358C1		CS1	-	2644000R1		
CV81-GA	12	WH	TXL	468358C1		CS1	-	2644000R1		
CV81-GB	12	WH	TXL	468358C1		CS1	-	2644000R1		
CV81-G	10	WH	TXL	468358C1		CS1	-	2644000R1		
CV81-GA	12	WH	TXL	468358C1		CS1	-	2644000R1		
CV81-GB	12	WH	TXL	468358C1		CS1	-	2644000R1		
3A94-GC	16	WH	TXL	382181C1		CS2	-	2644000R1		
3A94-GD	14	WH	TXL	382181C1		CS2	-	2644000R1		
3A94BT	18	GY	TXL	382181C1		CS2	-	2644000R1		
3A94BZ	18	GY	TXL	382181C1		CS2	-	2644000R1		
3A94-GC	16	WH	TXL	382181C1		CS2	-	2644000R1		
3A94-GD	14	WH	TXL	382181C1		CS2	-	2644000R1		
3A94BT	18	GY	TXL	382181C1		CS2	-	2644000R1		
3A94BZ	18	GY	TXL	382181C1		CS2	-	2644000R1		
AG14K	8	RD	TXL	239481R1		CS3	-	2644000R1		
AG14M	8	RD	TXL	239481R1		CS3	-	2644000R1		
AG14W	6	RD	SGX	239481R1		CS3	-	2644000R1		
AL14K	8	RD	TXL	239481R1		CS3	-	2644000R1		
AL14M	8	RD	TXL	239481R1		CS3	-	2644000R1		
AL14W	6	RD	SGX	239481R1		CS3	-	2644000R1		
LR86AS	18	LTGN	TXL	239481R1		CS3	-	2644000R1		
LR86AU	18	LTGN	TXL	239481R1		CS3	-	2644000R1		
LR86YL	18	LTGN	TXL	239481R1		CS3	-	2644000R1		
AG14	6	RD	SGX	239481R1		CS4	-	2644000R1		
AG14F	8	RD	TXL	239481R1		CS4	-	2644000R1		
AG14H	8	RD	TXL	239481R1		CS4	-	2644000R1		
AL14	6	RD	SGX	239481R1		CS4	-	2644000R1		
AL14F	8	RD	TXL	239481R1		CS4	-	2644000R1		
AL14H	8	RD	TXL	239481R1		CS4	-	2644000R1		
LR86AS	18	LTGN	TXL	239481R1		CS5	-	2644000R1		
LR86AU	18	LTGN	TXL	239481R1		CS5	-	2644000R1		
LR86YL	18	LTGN	TXL	239481R1		CS5	-	2644000R1		
ZW14D	18	RD	TXL	239481R1		CS6	-	2644000R1		
ZW14DB	18	RD	TXL	239481R1		CS6	-	2644000R1		
ZW14SUN	22	RD	TXL	239481R1		CS6	-	2644000R1		
JM5BC(+)	18	YL	TXL	239481R1		DS1	-	2644000R1		
JM5BF(+)	18	YL	TXL	239481R1		DS1	-	2644000R1		
JM5BG(+)	18	YL	TXL	239481R1		DS1	-	2644000R1		
JN5BC(+)	18	YL	TXL	239481R1		DS1	-	2644000R1		
JN5BF(+)	18	YL	TXL	239481R1		DS1	-	2644000R1		
JN5BG(+)	18	YL	TXL	239481R1		DS1	-	2644000R1		
JP5BE(+)	18	YL	TXL	239481R1		DS1	-	2644000R1		
JP5BF(+)	18	YL	TXL	239481R1		DS1	-	2644000R1		
JP5BG(+)	18	YL	TXL	239481R1		DS1	-	2644000R1		

Circuit Number	Gauge	Color	Insulation	Terminal / Splice Number	Connector Part number	Connector Number	Cavity	Seal/Sleeve	Lock 1	Lock 2
JR5BE(+)	18	YL	TXL	239481R1		DS1	-	2644000R1		
JR5BF(+)	18	YL	TXL	239481R1		DS1	-	2644000R1		
JR5BG(+)	18	YL	TXL	239481R1		DS1	-	2644000R1		
JM5BC(+)	18	YL	TXL	239481R1		DS1	-	2644000R1		
JM5BF(+)	18	YL	TXL	239481R1		DS1	-	2644000R1		
JM5BG(+)	18	YL	TXL	239481R1		DS1	-	2644000R1		
JN5BC(+)	18	YL	TXL	239481R1		DS1	-	2644000R1		
JN5BF(+)	18	YL	TXL	239481R1		DS1	-	2644000R1		
JN5BG(+)	18	YL	TXL	239481R1		DS1	-	2644000R1		
JP5BE(+)	18	YL	TXL	239481R1		DS1	-	2644000R1		
JP5BF(+)	18	YL	TXL	239481R1		DS1	-	2644000R1		
JP5BG(+)	18	YL	TXL	239481R1		DS1	-	2644000R1		
JR5BE(+)	18	YL	TXL	239481R1		DS1	-	2644000R1		
JR5BF(+)	18	YL	TXL	239481R1		DS1	-	2644000R1		
JR5BG(+)	18	YL	TXL	239481R1		DS1	-	2644000R1		
LW5E(+)	18	YL	TXL	239481R1		DS1	-	2644000R1		
LW5FE(+)	18	YL	TXL	239481R1		DS1	-	2644000R1		
LW5GE(+)	18	YL	TXL	239481R1		DS1	-	2644000R1		
SK5H(+)	18	YL	TXL	239481R1		DS1	-	2644000R1		
SK5J(+)	18	YL	TXL	239481R1		DS1	-	2644000R1		
SK5L(+)	18	YL	TXL	239481R1		DS1	-	2644000R1		
JM5BC(-)	18	LTGN	TXL	239481R1		DS2	-	2644000R1		
JM5BF(-)	18	LTGN	TXL	239481R1		DS2	-	2644000R1		
JM5BG(-)	18	LTGN	TXL	239481R1		DS2	-	2644000R1		
JN5BC(-)	18	LTGN	TXL	239481R1		DS2	-	2644000R1		
JN5BF(-)	18	LTGN	TXL	239481R1		DS2	-	2644000R1		
JN5BG(-)	18	LTGN	TXL	239481R1		DS2	-	2644000R1		
JP5BE(-)	18	LTGN	TXL	239481R1		DS2	-	2644000R1		
JP5BF(-)	18	LTGN	TXL	239481R1		DS2	-	2644000R1		
JP5BG(-)	18	LTGN	TXL	239481R1		DS2	-	2644000R1		
JR5BE(-)	18	LTGN	TXL	239481R1		DS2	-	2644000R1		
JR5BF(-)	18	LTGN	TXL	239481R1		DS2	-	2644000R1		
JR5BG(-)	18	LTGN	TXL	239481R1		DS2	-	2644000R1		
JM5BC(-)	18	LTGN	TXL	239481R1		DS2	-	2644000R1		
JM5BF(-)	18	LTGN	TXL	239481R1		DS2	-	2644000R1		
JM5BG(-)	18	LTGN	TXL	239481R1		DS2	-	2644000R1		
JN5BC(-)	18	LTGN	TXL	239481R1		DS2	-	2644000R1		
JN5BF(-)	18	LTGN	TXL	239481R1		DS2	-	2644000R1		
JN5BG(-)	18	LTGN	TXL	239481R1		DS2	-	2644000R1		
JP5BE(-)	18	LTGN	TXL	239481R1		DS2	-	2644000R1		
JP5BF(-)	18	LTGN	TXL	239481R1		DS2	-	2644000R1		
JP5BG(-)	18	LTGN	TXL	239481R1		DS2	-	2644000R1		
JR5BE(-)	18	LTGN	TXL	239481R1		DS2	-	2644000R1		
JR5BF(-)	18	LTGN	TXL	239481R1		DS2	-	2644000R1		
JR5BG(-)	18	LTGN	TXL	239481R1		DS2	-	2644000R1		
LW5E(-)	18	GN	TXL	239481R1		DS2	-	2644000R1		
LW5FE(-)	18	GN	TXL	239481R1		DS2	-	2644000R1		
LW5GE(-)	18	GN	TXL	239481R1		DS2	-	2644000R1		
SK5H(-)	18	GN	TXL	239481R1		DS2	-	2644000R1		
SK5J(-)	18	GN	TXL	239481R1		DS2	-	2644000R1		
SK5L(-)	18	GN	TXL	239481R1		DS2	-	2644000R1		
RA11-GBA	14	WH	TXL	239481R1		DS3	-	2644000R1		

Circuit Number	Gauge	Color	Insulation	Terminal / Splice Number	Connector Part number	Connector Number	Cavity	Seal/Sleeve	Lock 1	Lock 2
RA11-GCB	14	WH	TXL	239481R1		DS3	-	2644000R1		
RA11-GCC	14	WH	TXL	239481R1		DS3	-	2644000R1		
RA11-GKJ	6	WH	SGX	239481R1		DS3	-	2644000R1		
RB11-GBA	14	WH	TXL	239481R1		DS3	-	2644000R1		
RB11-GCB	14	WH	TXL	239481R1		DS3	-	2644000R1		
RB11-GCC	14	WH	TXL	239481R1		DS3	-	2644000R1		
RB11-GKJ	6	WH	SGX	239481R1		DS3	-	2644000R1		
RB75-GC	10	WH	TXL	239481R1		DS3	-	2644000R1		
RA11-GBA	14	WH	TXL	239481R1		DS3	-	2644000R1		
RA11-GCB	14	WH	TXL	239481R1		DS3	-	2644000R1		
RA11-GCC	14	WH	TXL	239481R1		DS3	-	2644000R1		
RA11-GKJ	6	WH	SGX	239481R1		DS3	-	2644000R1		
RB11-GBA	14	WH	TXL	239481R1		DS3	-	2644000R1		
RB11-GCB	14	WH	TXL	239481R1		DS3	-	2644000R1		
RB11-GCC	14	WH	TXL	239481R1		DS3	-	2644000R1		
RB11-GKJ	6	WH	SGX	239481R1		DS3	-	2644000R1		
AA60C	18	OR	TXL	239481R1		DS4	-	2644000R1		
AA62	18	DKBL	TXL	239481R1		DS4	-	2644000R1		
AA62DD	18	DKBL	TXL	239481R1		DS4	-	2644000R1		
AA60C	18	OR	TXL	239481R1		DS4	-	2644000R1		
AA62	18	DKBL	TXL	239481R1		DS4	-	2644000R1		
AA62DD	18	DKBL	TXL	239481R1		DS4	-	2644000R1		
DA62DA	16	DKBL	TXL	239481R1		DS5	-	2644000R1		
DA62DB	16	DKBL	TXL	239481R1		DS5	-	2644000R1		
DA62DC	16	DKBL	TXL	239481R1		DS5	-	2644000R1		
4G62DA	16	DKBL	TXL	239481R1		DS5	-	2644000R1		
4G62DB	16	DKBL	TXL	239481R1		DS5	-	2644000R1		
4G62DC	16	DKBL	TXL	239481R1		DS5	-	2644000R1		
3D5E(+)	18	YL	TXL	239481R1		ES1	-	2644000R1		
3D5G(+)	18	YL	TXL	239481R1		ES1	-	2644000R1		
3D5H(+)	18	YL	TXL	239481R1		ES1	-	2644000R1		
3M5E(+)	18	YL	TXL	239481R1		ES1	-	2644000R1		
3M5G(+)	18	YL	TXL	239481R1		ES1	-	2644000R1		
3M5H(+)	18	YL	TXL	239481R1		ES1	-	2644000R1		
9K5E(+)	18	YL	TXL	239481R1		ES1	-	2644000R1		
9K5G(+)	18	YL	TXL	239481R1		ES1	-	2644000R1		
9K5H(+)	18	YL	TXL	239481R1		ES1	-	2644000R1		
9L5E(+)	18	YL	TXL	239481R1		ES1	-	2644000R1		
9L5G(+)	18	YL	TXL	239481R1		ES1	-	2644000R1		
9L5H(+)	18	YL	TXL	239481R1		ES1	-	2644000R1		
9P5E(+)	18	YL	TXL	239481R1		ES1	-	2644000R1		
9P5G(+)	18	YL	TXL	239481R1		ES1	-	2644000R1	3554019C1	
9P5H(+)	18	YL	TXL	239481R1		ES1	-	2644000R1		
9V5E(+)	18	YL	TXL	239481R1		ES1	-	2644000R1		
9V5G(+)	18	YL	TXL	239481R1		ES1	-	2644000R1		
9V5H(+)	18	YL	TXL	239481R1		ES1	-	2644000R1		
JC5F(+)	18	YL	TXL	239481R1		ES1	-	2644000R1		
JC5G(+)	18	YL	TXL	239481R1		ES1	-	2644000R1		
JC5H(+)	18	YL	TXL	239481R1		ES1	-	2644000R1		
JD5F(+)	18	YL	TXL	239481R1		ES1	-	2644000R1		
JD5G(+)	18	YL	TXL	239481R1		ES1	-	2644000R1		
JD5H(+)	18	YL	TXL	239481R1		ES1	-	2644000R1		

Circuit Number	Gauge	Color	Insulation	Terminal / Splice Number	Connector Part number	Connector Number	Cavity	Seal/Sleeve	Lock 1	Lock 2
JF5F(+)	18	YL	TXL	239481R1		ES1	-	2644000R1		
JF5G(+)	18	YL	TXL	239481R1		ES1	-	2644000R1		
JF5H(+)	18	YL	TXL	239481R1		ES1	-	2644000R1		
JG5F(+)	18	YL	TXL	239481R1		ES1	-	2644000R1		
JG5G(+)	18	YL	TXL	239481R1		ES1	-	2644000R1		
JG5H(+)	18	YL	TXL	239481R1		ES1	-	2644000R1		
LC5E(+)	18	YL	TXL	239481R1		ES1	-	2644000R1		
LC5H(+)	18	YL	TXL	239481R1		ES1	-	2644000R1		
LC5J(+)	18	YL	TXL	239481R1		ES1	-	2644000R1		
LD5E(+)	18	YL	TXL	239481R1		ES1	-	2644000R1		
LD5H(+)	18	YL	TXL	239481R1		ES1	-	2644000R1		
LD5L(+)	18	YL	TXL	239481R1		ES1	-	2644000R1		
LE5E(+)	18	YL	TXL	239481R1		ES1	-	2644000R1		
LE5G(+)	18	YL	TXL	239481R1		ES1	-	2644000R1		
LE5H(+)	18	YL	TXL	239481R1		ES1	-	2644000R1		
LF5E(+)	18	YL	TXL	239481R1		ES1	-	2644000R1		
LF5G(+)	18	YL	TXL	239481R1		ES1	-	2644000R1		
LF5H(+)	18	YL	TXL	239481R1		ES1	-	2644000R1		
LS5E(+)	18	YL	TXL	239481R1		ES1	-	2644000R1		
LS5G(+)	18	YL	TXL	239481R1		ES1	-	2644000R1		
LS5H(+)	18	YL	TXL	239481R1		ES1	-	2644000R1		
LU5F(+)	18	YL	TXL	239481R1		ES1	-	2644000R1		
LU5G(+)	18	YL	TXL	239481R1		ES1	-	2644000R1		
LU5H(+)	18	YL	TXL	239481R1		ES1	-	2644000R1		
LV5F(+)	18	YL	TXL	239481R1		ES1	-	2644000R1		
LV5G(+)	18	YL	TXL	239481R1		ES1	-	2644000R1		
LV5H(+)	18	YL	TXL	239481R1		ES1	-	2644000R1		
PY5E(+)	18	YL	TXL	239481R1		ES1	-	2644000R1		
PY5G(+)	18	YL	TXL	239481R1		ES1	-	2644000R1		
PY5J(+)	18	YL	TXL	239481R1		ES1	-	2644000R1		
PZ5E(+)	18	YL	TXL	239481R1		ES1	-	2644000R1		
PZ5G(+)	18	YL	TXL	239481R1		ES1	-	2644000R1		
PZ5H(+)	18	YL	TXL	239481R1		ES1	-	2644000R1		
RD5E(+)	18	YL	TXL	239481R1		ES1	-	2644000R1		
RD5G(+)	18	YL	TXL	239481R1		ES1	-	2644000R1		
RD5H(+)	18	YL	TXL	239481R1		ES1	-	2644000R1		
RG5E(+)	18	YL	TXL	239481R1		ES1	-	2644000R1		
RG5F(+)	18	YL	TXL	239481R1		ES1	-	2644000R1		
RG5G(+)	18	YL	TXL	239481R1		ES1	-	2644000R1		
RJ5E(+)	18	YL	TXL	239481R1		ES1	-	2644000R1		
RJ5G(+)	18	YL	TXL	239481R1		ES1	-	2644000R1		
RJ5H(+)	18	YL	TXL	239481R1		ES1	-	2644000R1		
RM5E(+)	18	YL	TXL	239481R1		ES1	-	2644000R1		
RM5G(+)	18	YL	TXL	239481R1		ES1	-	2644000R1		
RM5H(+)	18	YL	TXL	239481R1		ES1	-	2644000R1		
RS5E(+)	18	YL	TXL	239481R1		ES1	-	2644000R1		
RS5G(+)	18	YL	TXL	239481R1		ES1	-	2644000R1		
RS5H(+)	18	YL	TXL	239481R1		ES1	-	2644000R1		
RU5E(+)	18	YL	TXL	239481R1		ES1	-	2644000R1		
RU5G(+)	18	YL	TXL	239481R1		ES1	-	2644000R1		
RU5H(+)	18	YL	TXL	239481R1		ES1	-	2644000R1		
SB5F(+)	18	YL	TXL	239481R1		ES1	-	2644000R1		

Circuit Number	Gauge	Color	Insulation	Terminal / Splice Number	Connector Part number	Connector Number	Cavity	Seal/Sleeve	Lock 1	Lock 2
SB5G(+)	18	YL	TXL	239481R1		ES1	-	2644000R1		
SB5H(+)	18	YL	TXL	239481R1		ES1	-	2644000R1		
SC5F(+)	18	YL	TXL	239481R1		ES1	-	2644000R1		
SC5G(+)	18	YL	TXL	239481R1		ES1	-	2644000R1		
SC5H(+)	18	YL	TXL	239481R1		ES1	-	2644000R1		
SD5F(+)	18	YL	TXL	239481R1		ES1	-	2644000R1		
SD5G(+)	18	YL	TXL	239481R1		ES1	-	2644000R1		
SD5J(+)	18	YL	TXL	239481R1		ES1	-	2644000R1		
SE5F(+)	18	YL	TXL	239481R1		ES1	-	2644000R1		
SE5G(+)	18	YL	TXL	239481R1		ES1	-	2644000R1		
SE5H(+)	18	YL	TXL	239481R1		ES1	-	2644000R1		
SN5E(+)	18	YL	TXL	239481R1		ES1	-	2644000R1		
SN5G(+)	18	YL	TXL	239481R1		ES1	-	2644000R1		
SN5H(+)	18	YL	TXL	239481R1		ES1	-	2644000R1		
SP5E(+)	18	YL	TXL	239481R1		ES1	-	2644000R1		
SP5G(+)	18	YL	TXL	239481R1		ES1	-	2644000R1		
SP5H(+)	18	YL	TXL	239481R1		ES1	-	2644000R1		
VC5E(+)	18	YL	TXL	239481R1		ES1	-	2644000R1		
VC5G(+)	18	YL	TXL	239481R1		ES1	-	2644000R1		
VC5H(+)	18	YL	TXL	239481R1		ES1	-	2644000R1		
VD5F(+)	18	YL	TXL	239481R1		ES1	-	2644000R1		
VD5G(+)	18	YL	TXL	239481R1		ES1	-	2644000R1		
VD5H(+)	18	YL	TXL	239481R1		ES1	-	2644000R1		
VE5E(+)	18	YL	TXL	239481R1		ES1	-	2644000R1		
VE5G(+)	18	YL	TXL	239481R1		ES1	-	2644000R1		
VE5H(+)	18	YL	TXL	239481R1		ES1	-	2644000R1		
VF5F(+)	18	YL	TXL	239481R1		ES1	-	2644000R1		
VF5G(+)	18	YL	TXL	239481R1		ES1	-	2644000R1		
VF5H(+)	18	YL	TXL	239481R1		ES1	-	2644000R1		
YX5F(+)	18	YL	TXL	239481R1		ES1	-	2644000R1		
YX5G(+)	18	YL	TXL	239481R1		ES1	-	2644000R1		
YX5H(+)	18	YL	TXL	239481R1		ES1	-	2644000R1		
YZ5F(+)	18	YL	TXL	239481R1		ES1	-	2644000R1		
YZ5G(+)	18	YL	TXL	239481R1		ES1	-	2644000R1		
YZ5H(+)	18	YL	TXL	239481R1		ES1	-	2644000R1		
2H5E(+)	18	YL	TXL	239481R1		ES1	-	2644000R1		
2H5G(+)	18	YL	TXL	239481R1		ES1	-	2644000R1		
2H5J(+)	18	YL	TXL	239481R1		ES1	-	2644000R1		
2J5E(+)	18	YL	TXL	239481R1		ES1	-	2644000R1		
2J5G(+)	18	YL	TXL	239481R1		ES1	-	2644000R1		
2J5H(+)	18	YL	TXL	239481R1		ES1	-	2644000R1		
2L5E(+)	18	YL	TXL	239481R1		ES1	-	2644000R1		
2L5F(+)	18	YL	TXL	239481R1		ES1	-	2644000R1		
2L5G(+)	18	YL	TXL	239481R1		ES1	-	2644000R1		
2M5E(+)	18	YL	TXL	239481R1		ES1	-	2644000R1		
2M5F(+)	18	YL	TXL	239481R1		ES1	-	2644000R1		
2M5G(+)	18	YL	TXL	239481R1		ES1	-	2644000R1		
2W5E(+)	18	YL	TXL	239481R1		ES1	-	2644000R1		
2W5F(+)	18	YL	TXL	239481R1		ES1	-	2644000R1		
2W5G(+)	18	YL	TXL	239481R1		ES1	-	2644000R1		
2Y5E(+)	18	YL	TXL	239481R1		ES1	-	2644000R1		
2Y5G(+)	18	YL	TXL	239481R1		ES1	-	2644000R1		

Circuit Number	Gauge	Color	Insulation	Terminal / Splice Number	Connector Part number	Connector Number	Cavity	Seal/Sleeve	Lock 1	Lock 2
2Y5H(+)	18	YL	TXL	239481R1		ES1	-	2644000R1		
2Z5E(+)	18	YL	TXL	239481R1		ES1	-	2644000R1		
2Z5F(+)	18	YL	TXL	239481R1		ES1	-	2644000R1		
2Z5G(+)	18	YL	TXL	239481R1		ES1	-	2644000R1		
3C5E(+)	18	YL	TXL	239481R1		ES1	-	2644000R1		
3C5G(+)	18	YL	TXL	239481R1		ES1	-	2644000R1		
3C5H(+)	18	YL	TXL	239481R1		ES1	-	2644000R1		
3D5E(+)	18	YL	TXL	239481R1		ES1	-	2644000R1		
3D5G(+)	18	YL	TXL	239481R1		ES1	-	2644000R1		
3D5H(+)	18	YL	TXL	239481R1		ES1	-	2644000R1		
3E5F(+)	18	YL	TXL	239481R1		ES1	-	2644000R1		
3E5G(+)	18	YL	TXL	239481R1		ES1	-	2644000R1		
3E5J(+)	18	YL	TXL	239481R1		ES1	-	2644000R1		
3J5F(+)	18	YL	TXL	239481R1		ES1	-	2644000R1		
3J5G(+)	18	YL	TXL	239481R1		ES1	-	2644000R1		
3J5H(+)	18	YL	TXL	239481R1		ES1	-	2644000R1		
3M5E(+)	18	YL	TXL	239481R1		ES1	-	2644000R1		
3M5G(+)	18	YL	TXL	239481R1		ES1	-	2644000R1		
3M5H(+)	18	YL	TXL	239481R1		ES1	-	2644000R1		
3R5F(+)	18	YL	TXL	239481R1		ES1	-	2644000R1		
3R5G(+)	18	YL	TXL	239481R1		ES1	-	2644000R1		
3R5J(+)	18	YL	TXL	239481R1		ES1	-	2644000R1		
3U5G(+)	18	YL	TXL	239481R1		ES1	-	2644000R1		
3U5H(+)	18	YL	TXL	239481R1		ES1	-	2644000R1		
3U5PJ(+)	18	YL	TXL	239481R1		ES1	-	2644000R1		
3W5H(+)	18	YL	TXL	239481R1		ES1	-	2644000R1		
3W5T(+)	18	YL	TXL	239481R1		ES1	-	2644000R1		
3W5W(+)	18	YL	TXL	239481R1		ES1	-	2644000R1		
3Z5F(+)	18	YL	TXL	239481R1		ES1	-	2644000R1		
3Z5G(+)	18	YL	TXL	239481R1		ES1	-	2644000R1		
3Z5H(+)	18	YL	TXL	239481R1		ES1	-	2644000R1		
4E5E(+)	18	YL	TXL	239481R1		ES1	-	2644000R1		
4E5G(+)	18	YL	TXL	239481R1		ES1	-	2644000R1		
4E5H(+)	18	YL	TXL	239481R1		ES1	-	2644000R1		
4J5E(+)	18	YL	TXL	239481R1		ES1	-	2644000R1		
4J5F(+)	18	YL	TXL	239481R1		ES1	-	2644000R1		
4J5G(+)	18	YL	TXL	239481R1		ES1	-	2644000R1		
4L5E(+)	18	YL	TXL	239481R1		ES1	-	2644000R1		
4L5F(+)	18	YL	TXL	239481R1		ES1	-	2644000R1		
4L5G(+)	18	YL	TXL	239481R1		ES1	-	2644000R1		
4N5E(+)	18	YL	TXL	239481R1		ES1	-	2644000R1		
4N5G(+)	18	YL	TXL	239481R1		ES1	-	2644000R1		
4N5H(+)	18	YL	TXL	239481R1		ES1	-	2644000R1		
9K5E(+)	18	YL	TXL	239481R1		ES1	-	2644000R1		
9K5G(+)	18	YL	TXL	239481R1		ES1	-	2644000R1		
9K5H(+)	18	YL	TXL	239481R1		ES1	-	2644000R1		
9L5E(+)	18	YL	TXL	239481R1		ES1	-	2644000R1		
9L5G(+)	18	YL	TXL	239481R1		ES1	-	2644000R1		
9L5H(+)	18	YL	TXL	239481R1		ES1	-	2644000R1		
9P5E(+)	18	YL	TXL	239481R1		ES1	-	2644000R1		
9P5G(+)	18	YL	TXL	239481R1		ES1	-	2644000R1		
9P5H(+)	18	YL	TXL	239481R1		ES1	-	2644000R1		

Circuit Number	Gauge	Color	Insulation	Terminal / Splice Number	Connector Part number	Connector Number	Cavity	Seal/Sleeve	Lock 1	Lock 2
9T5F(+)	18	YL	TXL	239481R1		ES1	-	2644000R1		
9T5G(+)	18	YL	TXL	239481R1		ES1	-	2644000R1		
9T5H(+)	18	YL	TXL	239481R1		ES1	-	2644000R1		
9V5E(+)	18	YL	TXL	239481R1		ES1	-	2644000R1		
9V5G(+)	18	YL	TXL	239481R1		ES1	-	2644000R1		
9V5H(+)	18	YL	TXL	239481R1		ES1	-	2644000R1		
9W5F(+)	18	YL	TXL	239481R1		ES1	-	2644000R1		
9W5G(+)	18	YL	TXL	239481R1		ES1	-	2644000R1		
9W5H(+)	18	YL	TXL	239481R1		ES1	-	2644000R1		
JC5F(+)	18	YL	TXL	239481R1		ES1	-	2644000R1		
JC5G(+)	18	YL	TXL	239481R1		ES1	-	2644000R1		
JC5H(+)	18	YL	TXL	239481R1		ES1	-	2644000R1		
JD5F(+)	18	YL	TXL	239481R1		ES1	-	2644000R1		
JD5G(+)	18	YL	TXL	239481R1		ES1	-	2644000R1		
JD5H(+)	18	YL	TXL	239481R1		ES1	-	2644000R1		
JF5F(+)	18	YL	TXL	239481R1		ES1	-	2644000R1		
JF5G(+)	18	YL	TXL	239481R1		ES1	-	2644000R1		
JF5H(+)	18	YL	TXL	239481R1		ES1	-	2644000R1		
JG5F(+)	18	YL	TXL	239481R1		ES1	-	2644000R1		
JG5G(+)	18	YL	TXL	239481R1		ES1	-	2644000R1		
JG5H(+)	18	YL	TXL	239481R1		ES1	-	2644000R1		
LC5E(+)	18	YL	TXL	239481R1		ES1	-	2644000R1		
LC5H(+)	18	YL	TXL	239481R1		ES1	-	2644000R1		
LC5J(+)	18	YL	TXL	239481R1		ES1	-	2644000R1		
LD5E(+)	18	YL	TXL	239481R1		ES1	-	2644000R1		
LD5H(+)	18	YL	TXL	239481R1		ES1	-	2644000R1		
LD5L(+)	18	YL	TXL	239481R1		ES1	-	2644000R1		
LE5E(+)	18	YL	TXL	239481R1		ES1	-	2644000R1		
LE5G(+)	18	YL	TXL	239481R1		ES1	-	2644000R1		
LE5H(+)	18	YL	TXL	239481R1		ES1	-	2644000R1		
LF5E(+)	18	YL	TXL	239481R1		ES1	-	2644000R1		
LF5G(+)	18	YL	TXL	239481R1		ES1	-	2644000R1		
LF5H(+)	18	YL	TXL	239481R1		ES1	-	2644000R1		
LS5E(+)	18	YL	TXL	239481R1		ES1	-	2644000R1		
LS5G(+)	18	YL	TXL	239481R1		ES1	-	2644000R1		
LS5H(+)	18	YL	TXL	239481R1		ES1	-	2644000R1		
LU5F(+)	18	YL	TXL	239481R1		ES1	-	2644000R1		
LU5G(+)	18	YL	TXL	239481R1		ES1	-	2644000R1		
LU5H(+)	18	YL	TXL	239481R1		ES1	-	2644000R1		
LV5F(+)	18	YL	TXL	239481R1		ES1	-	2644000R1		
LV5G(+)	18	YL	TXL	239481R1		ES1	-	2644000R1		
LV5H(+)	18	YL	TXL	239481R1		ES1	-	2644000R1		
PV5F(+)	18	YL	TXL	239481R1		ES1	-	2644000R1		
PV5G(+)	18	YL	TXL	239481R1		ES1	-	2644000R1		
PV5H(+)	18	YL	TXL	239481R1		ES1	-	2644000R1		
PY5E(+)	18	YL	TXL	239481R1		ES1	-	2644000R1		
PY5G(+)	18	YL	TXL	239481R1		ES1	-	2644000R1		
PY5J(+)	18	YL	TXL	239481R1		ES1	-	2644000R1		
PZ5E(+)	18	YL	TXL	239481R1		ES1	-	2644000R1		
PZ5G(+)	18	YL	TXL	239481R1		ES1	-	2644000R1		
PZ5H(+)	18	YL	TXL	239481R1		ES1	-	2644000R1		
RD5E(+)	18	YL	TXL	239481R1		ES1	-	2644000R1		

Circuit Number	Gauge	Color	Insulation	Terminal / Splice Number	Connector Part number	Connector Number	Cavity	Seal/Sleeve	Lock 1	Lock 2
RD5G(+)	18	YL	TXL	239481R1		ES1	-	2644000R1		
RD5H(+)	18	YL	TXL	239481R1		ES1	-	2644000R1		
RG5E(+)	18	YL	TXL	239481R1		ES1	-	2644000R1		
RG5F(+)	18	YL	TXL	239481R1		ES1	-	2644000R1		
RG5G(+)	18	YL	TXL	239481R1		ES1	-	2644000R1		
RJ5E(+)	18	YL	TXL	239481R1		ES1	-	2644000R1		
RJ5G(+)	18	YL	TXL	239481R1		ES1	-	2644000R1		
RJ5H(+)	18	YL	TXL	239481R1		ES1	-	2644000R1		
RM5E(+)	18	YL	TXL	239481R1		ES1	-	2644000R1		
RM5G(+)	18	YL	TXL	239481R1		ES1	-	2644000R1		
RM5H(+)	18	YL	TXL	239481R1		ES1	-	2644000R1		
RR5E(+)	18	YL	TXL	239481R1		ES1	-	2644000R1		
RR5G(+)	18	YL	TXL	239481R1		ES1	-	2644000R1		
RR5H(+)	18	YL	TXL	239481R1		ES1	-	2644000R1		
RS5E(+)	18	YL	TXL	239481R1		ES1	-	2644000R1		
RS5G(+)	18	YL	TXL	239481R1		ES1	-	2644000R1		
RS5H(+)	18	YL	TXL	239481R1		ES1	-	2644000R1		
RU5E(+)	18	YL	TXL	239481R1		ES1	-	2644000R1		
RU5G(+)	18	YL	TXL	239481R1		ES1	-	2644000R1		
RU5H(+)	18	YL	TXL	239481R1		ES1	-	2644000R1		
RX5E(+)	18	YL	TXL	239481R1		ES1	-	2644000R1		
RX5G(+)	18	YL	TXL	239481R1		ES1	-	2644000R1		
RX5H(+)	18	YL	TXL	239481R1		ES1	-	2644000R1		
RZ5E(+)	18	YL	TXL	239481R1		ES1	-	2644000R1		
RZ5F(+)	18	YL	TXL	239481R1		ES1	-	2644000R1		
RZ5G(+)	18	YL	TXL	239481R1		ES1	-	2644000R1		
SB5F(+)	18	YL	TXL	239481R1		ES1	-	2644000R1		
SB5G(+)	18	YL	TXL	239481R1		ES1	-	2644000R1		
SB5H(+)	18	YL	TXL	239481R1		ES1	-	2644000R1		
SC5F(+)	18	YL	TXL	239481R1		ES1	-	2644000R1		
SC5G(+)	18	YL	TXL	239481R1		ES1	-	2644000R1		
SC5H(+)	18	YL	TXL	239481R1		ES1	-	2644000R1		
SD5F(+)	18	YL	TXL	239481R1		ES1	-	2644000R1		
SD5G(+)	18	YL	TXL	239481R1		ES1	-	2644000R1		
SD5J(+)	18	YL	TXL	239481R1		ES1	-	2644000R1		
SE5E(+)	18	YL	TXL	239481R1		ES1	-	2644000R1		
SE5G(+)	18	YL	TXL	239481R1		ES1	-	2644000R1		
SE5H(+)	18	YL	TXL	239481R1		ES1	-	2644000R1		
SN5E(+)	18	YL	TXL	239481R1		ES1	-	2644000R1		
SN5G(+)	18	YL	TXL	239481R1		ES1	-	2644000R1		
SN5H(+)	18	YL	TXL	239481R1		ES1	-	2644000R1		
SP5E(+)	18	YL	TXL	239481R1		ES1	-	2644000R1		
SP5G(+)	18	YL	TXL	239481R1		ES1	-	2644000R1		
SP5H(+)	18	YL	TXL	239481R1		ES1	-	2644000R1		
SR5F(+)	18	YL	TXL	239481R1		ES1	-	2644000R1		
SR5G(+)	18	YL	TXL	239481R1		ES1	-	2644000R1		
SR5H(+)	18	YL	TXL	239481R1		ES1	-	2644000R1		
VC5E(+)	18	YL	TXL	239481R1		ES1	-	2644000R1		
VC5G(+)	18	YL	TXL	239481R1		ES1	-	2644000R1		
VC5H(+)	18	YL	TXL	239481R1		ES1	-	2644000R1		
VD5F(+)	18	YL	TXL	239481R1		ES1	-	2644000R1		
VD5G(+)	18	YL	TXL	239481R1		ES1	-	2644000R1		

Circuit Number	Gauge	Color	Insulation	Terminal / Splice Number	Connector Part number	Connector Number	Cavity	Seal/Sleeve	Lock 1	Lock 2
VD5H(+)	18	YL	TXL	239481R1		ES1	-	2644000R1		
VE5E(+)	18	YL	TXL	239481R1		ES1	-	2644000R1		
VE5G(+)	18	YL	TXL	239481R1		ES1	-	2644000R1		
VE5H(+)	18	YL	TXL	239481R1		ES1	-	2644000R1		
VG5F(+)	18	YL	TXL	239481R1		ES1	-	2644000R1		
VG5G(+)	18	YL	TXL	239481R1		ES1	-	2644000R1		
VG5H(+)	18	YL	TXL	239481R1		ES1	-	2644000R1		
YX5F(+)	18	YL	TXL	239481R1		ES1	-	2644000R1		
YX5G(+)	18	YL	TXL	239481R1		ES1	-	2644000R1		
YX5H(+)	18	YL	TXL	239481R1		ES1	-	2644000R1		
YZ5F(+)	18	YL	TXL	239481R1		ES1	-	2644000R1		
YZ5G(+)	18	YL	TXL	239481R1		ES1	-	2644000R1		
YZ5H(+)	18	YL	TXL	239481R1		ES1	-	2644000R1		
3D5E(-)	18	GN	TXL	239481R1		ES2	-	2644000R1		
3D5G(-)	18	GN	TXL	239481R1		ES2	-	2644000R1		
3D5H(-)	18	GN	TXL	239481R1		ES2	-	2644000R1		
3M5E(-)	18	GN	TXL	239481R1		ES2	-	2644000R1		
3M5G(-)	18	GN	TXL	239481R1		ES2	-	2644000R1		
3M5H(-)	18	GN	TXL	239481R1		ES2	-	2644000R1		
9K5E(-)	18	GN	TXL	239481R1		ES2	-	2644000R1		
9K5G(-)	18	GN	TXL	239481R1		ES2	-	2644000R1		
9K5H(-)	18	GN	TXL	239481R1		ES2	-	2644000R1		
9L5E(-)	18	GN	TXL	239481R1		ES2	-	2644000R1		
9L5G(-)	18	GN	TXL	239481R1		ES2	-	2644000R1		
9L5H(-)	18	GN	TXL	239481R1		ES2	-	2644000R1		
9P5E(-)	18	GN	TXL	239481R1		ES2	-	2644000R1	3535483C1	
9P5G(-)	18	GN	TXL	239481R1		ES2	-	2644000R1		
9P5H(-)	18	GN	TXL	239481R1		ES2	-	2644000R1	2005243C1	
9V5E(-)	18	GN	TXL	239481R1		ES2	-	2644000R1		
9V5G(-)	18	GN	TXL	239481R1		ES2	-	2644000R1		
9V5H(-)	18	GN	TXL	239481R1		ES2	-	2644000R1		
JC5F(-)	18	GN	TXL	239481R1		ES2	-	2644000R1		
JC5G(-)	18	GN	TXL	239481R1		ES2	-	2644000R1		
JC5H(-)	18	GN	TXL	239481R1		ES2	-	2644000R1		
JD5F(-)	18	GN	TXL	239481R1		ES2	-	2644000R1		
JD5G(-)	18	GN	TXL	239481R1		ES2	-	2644000R1		
JD5H(-)	18	GN	TXL	239481R1		ES2	-	2644000R1		
JF5F(-)	18	GN	TXL	239481R1		ES2	-	2644000R1		
JF5G(-)	18	GN	TXL	239481R1		ES2	-	2644000R1		
JF5H(-)	18	GN	TXL	239481R1		ES2	-	2644000R1		
JG5F(-)	18	GN	TXL	239481R1		ES2	-	2644000R1		
JG5G(-)	18	GN	TXL	239481R1		ES2	-	2644000R1		
JG5H(-)	18	GN	TXL	239481R1		ES2	-	2644000R1		
LC5E(-)	18	GN	TXL	239481R1		ES2	-	2644000R1		
LC5H(-)	18	GN	TXL	239481R1		ES2	-	2644000R1		
LC5J(-)	18	GN	TXL	239481R1		ES2	-	2644000R1		
LD5E(-)	18	GN	TXL	239481R1		ES2	-	2644000R1		
LD5H(-)	18	GN	TXL	239481R1		ES2	-	2644000R1		
LD5L(-)	18	GN	TXL	239481R1		ES2	-	2644000R1		
LE5E(-)	18	GN	TXL	239481R1		ES2	-	2644000R1		
LE5G(-)	18	GN	TXL	239481R1		ES2	-	2644000R1		
LE5H(-)	18	GN	TXL	239481R1		ES2	-	2644000R1		

Circuit Number	Gauge	Color	Insulation	Terminal / Splice Number	Connector Part number	Connector Number	Cavity	Seal/Sleeve	Lock 1	Lock 2
LF5E(-)	18	GN	TXL	239481R1		ES2	-	2644000R1		
LF5G(-)	18	GN	TXL	239481R1		ES2	-	2644000R1		
LF5H(-)	18	GN	TXL	239481R1		ES2	-	2644000R1		
LS5E(-)	18	GN	TXL	239481R1		ES2	-	2644000R1		
LS5G(-)	18	GN	TXL	239481R1		ES2	-	2644000R1		
LS5H(-)	18	GN	TXL	239481R1		ES2	-	2644000R1		
LU5F(-)	18	GN	TXL	239481R1		ES2	-	2644000R1		
LU5G(-)	18	GN	TXL	239481R1		ES2	-	2644000R1		
LU5H(-)	18	GN	TXL	239481R1		ES2	-	2644000R1		
LV5F(-)	18	GN	TXL	239481R1		ES2	-	2644000R1		
LV5G(-)	18	GN	TXL	239481R1		ES2	-	2644000R1		
LV5H(-)	18	GN	TXL	239481R1		ES2	-	2644000R1		
PY5E(-)	18	GN	TXL	239481R1		ES2	-	2644000R1		
PY5G(-)	18	GN	TXL	239481R1		ES2	-	2644000R1		
PY5J(-)	18	GN	TXL	239481R1		ES2	-	2644000R1		
PZ5E(-)	18	GN	TXL	239481R1		ES2	-	2644000R1		
PZ5G(-)	18	GN	TXL	239481R1		ES2	-	2644000R1		
PZ5H(-)	18	GN	TXL	239481R1		ES2	-	2644000R1		
RD5E(-)	18	GN	TXL	239481R1		ES2	-	2644000R1		
RD5G(-)	18	GN	TXL	239481R1		ES2	-	2644000R1		
RD5H(-)	18	GN	TXL	239481R1		ES2	-	2644000R1		
RG5E(-)	18	GN	TXL	239481R1		ES2	-	2644000R1		
RG5F(-)	18	GN	TXL	239481R1		ES2	-	2644000R1		
RG5G(-)	18	GN	TXL	239481R1		ES2	-	2644000R1		
RJ5E(-)	18	GN	TXL	239481R1		ES2	-	2644000R1		
RJ5G(-)	18	GN	TXL	239481R1		ES2	-	2644000R1		
RJ5H(-)	18	GN	TXL	239481R1		ES2	-	2644000R1		
RM5E(-)	18	GN	TXL	239481R1		ES2	-	2644000R1		
RM5G(-)	18	GN	TXL	239481R1		ES2	-	2644000R1		
RM5H(-)	18	GN	TXL	239481R1		ES2	-	2644000R1		
RS5E(-)	18	GN	TXL	239481R1		ES2	-	2644000R1		
RS5G(-)	18	GN	TXL	239481R1		ES2	-	2644000R1		
RS5H(-)	18	GN	TXL	239481R1		ES2	-	2644000R1		
RU5E(-)	18	GN	TXL	239481R1		ES2	-	2644000R1		
RU5G(-)	18	GN	TXL	239481R1		ES2	-	2644000R1		
RU5H(-)	18	GN	TXL	239481R1		ES2	-	2644000R1		
SB5F(-)	18	GN	TXL	239481R1		ES2	-	2644000R1		
SB5G(-)	18	GN	TXL	239481R1		ES2	-	2644000R1		
SB5H(-)	18	GN	TXL	239481R1		ES2	-	2644000R1		
SC5F(-)	18	GN	TXL	239481R1		ES2	-	2644000R1		
SC5G(-)	18	GN	TXL	239481R1		ES2	-	2644000R1		
SC5H(-)	18	GN	TXL	239481R1		ES2	-	2644000R1		
SD5F(-)	18	GN	TXL	239481R1		ES2	-	2644000R1		
SD5G(-)	18	GN	TXL	239481R1		ES2	-	2644000R1		
SD5J(-)	18	GN	TXL	239481R1		ES2	-	2644000R1		
SE5F(-)	18	GN	TXL	239481R1		ES2	-	2644000R1		
SE5G(-)	18	GN	TXL	239481R1		ES2	-	2644000R1		
SE5H(-)	18	GN	TXL	239481R1		ES2	-	2644000R1		
SN5E(-)	18	GN	TXL	239481R1		ES2	-	2644000R1		
SN5G(-)	18	GN	TXL	239481R1		ES2	-	2644000R1		
SN5H(-)	18	GN	TXL	239481R1		ES2	-	2644000R1		
SP5E(-)	18	GN	TXL	239481R1		ES2	-	2644000R1		

Circuit Number	Gauge	Color	Insulation	Terminal / Splice Number	Connector Part number	Connector Number	Cavity	Seal/Sleeve	Lock 1	Lock 2
SP5G(-)	18	GN	TXL	239481R1		ES2	-	2644000R1		
SP5H(-)	18	GN	TXL	239481R1		ES2	-	2644000R1		
VC5E(-)	18	GN	TXL	239481R1		ES2	-	2644000R1		
VC5G(-)	18	GN	TXL	239481R1		ES2	-	2644000R1		
VC5H(-)	18	GN	TXL	239481R1		ES2	-	2644000R1		
VD5F(-)	18	GN	TXL	239481R1		ES2	-	2644000R1		
VD5G(-)	18	GN	TXL	239481R1		ES2	-	2644000R1		
VD5H(-)	18	GN	TXL	239481R1		ES2	-	2644000R1		
VE5E(-)	18	GN	TXL	239481R1		ES2	-	2644000R1		
VE5G(-)	18	GN	TXL	239481R1		ES2	-	2644000R1		
VE5H(-)	18	GN	TXL	239481R1		ES2	-	2644000R1		
VF5F(-)	18	GN	TXL	239481R1		ES2	-	2644000R1		
VF5G(-)	18	GN	TXL	239481R1		ES2	-	2644000R1		
VF5H(-)	18	GN	TXL	239481R1		ES2	-	2644000R1		
YX5F(-)	18	GN	TXL	239481R1		ES2	-	2644000R1		
YX5G(-)	18	GN	TXL	239481R1		ES2	-	2644000R1		
YX5H(-)	18	GN	TXL	239481R1		ES2	-	2644000R1		
YZ5F(-)	18	GN	TXL	239481R1		ES2	-	2644000R1		
YZ5G(-)	18	GN	TXL	239481R1		ES2	-	2644000R1		
YZ5H(-)	18	GN	TXL	239481R1		ES2	-	2644000R1		
2H5E(-)	18	GN	TXL	239481R1		ES2	-	2644000R1		
2H5G(-)	18	GN	TXL	239481R1		ES2	-	2644000R1		
2H5J(-)	18	GN	TXL	239481R1		ES2	-	2644000R1		
2J5E(-)	18	GN	TXL	239481R1		ES2	-	2644000R1		
2J5G(-)	18	GN	TXL	239481R1		ES2	-	2644000R1		
2J5H(-)	18	GN	TXL	239481R1		ES2	-	2644000R1		
2L5E(-)	18	GN	TXL	239481R1		ES2	-	2644000R1		
2L5F(-)	18	GN	TXL	239481R1		ES2	-	2644000R1		
2L5G(-)	18	GN	TXL	239481R1		ES2	-	2644000R1		
2M5E(-)	18	GN	TXL	239481R1		ES2	-	2644000R1		
2M5F(-)	18	GN	TXL	239481R1		ES2	-	2644000R1		
2M5G(-)	18	GN	TXL	239481R1		ES2	-	2644000R1		
2W5E(-)	18	GN	TXL	239481R1		ES2	-	2644000R1		
2W5F(-)	18	GN	TXL	239481R1		ES2	-	2644000R1		
2W5G(-)	18	GN	TXL	239481R1		ES2	-	2644000R1		
2Y5E(-)	18	GN	TXL	239481R1		ES2	-	2644000R1		
2Y5G(-)	18	GN	TXL	239481R1		ES2	-	2644000R1		
2Y5H(-)	18	GN	TXL	239481R1		ES2	-	2644000R1		
2Z5E(-)	18	GN	TXL	239481R1		ES2	-	2644000R1		
2Z5F(-)	18	GN	TXL	239481R1		ES2	-	2644000R1		
2Z5G(-)	18	GN	TXL	239481R1		ES2	-	2644000R1		
3C5E(-)	18	GN	TXL	239481R1		ES2	-	2644000R1		
3C5G(-)	18	GN	TXL	239481R1		ES2	-	2644000R1		
3C5H(-)	18	GN	TXL	239481R1		ES2	-	2644000R1		
3D5E(-)	18	GN	TXL	239481R1		ES2	-	2644000R1		
3D5G(-)	18	GN	TXL	239481R1		ES2	-	2644000R1		
3D5H(-)	18	GN	TXL	239481R1		ES2	-	2644000R1		
3E5F(-)	18	GN	TXL	239481R1		ES2	-	2644000R1		
3E5G(-)	18	GN	TXL	239481R1		ES2	-	2644000R1		
3E5J(-)	18	GN	TXL	239481R1		ES2	-	2644000R1		
3J5F(-)	18	GN	TXL	239481R1		ES2	-	2644000R1		
3J5G(-)	18	GN	TXL	239481R1		ES2	-	2644000R1		

Circuit Number	Gauge	Color	Insulation	Terminal / Splice Number	Connector Part number	Connector Number	Cavity	Seal/Sleeve	Lock 1	Lock 2
3J5H(-)	18	GN	TXL	239481R1		ES2	-	2644000R1		
3M5E(-)	18	GN	TXL	239481R1		ES2	-	2644000R1		
3M5G(-)	18	GN	TXL	239481R1		ES2	-	2644000R1		
3M5H(-)	18	GN	TXL	239481R1		ES2	-	2644000R1		
3R5F(-)	18	GN	TXL	239481R1		ES2	-	2644000R1		
3R5G(-)	18	GN	TXL	239481R1		ES2	-	2644000R1		
3R5J(-)	18	GN	TXL	239481R1		ES2	-	2644000R1		
3U5G(-)	18	GN	TXL	239481R1		ES2	-	2644000R1		
3U5H(-)	18	GN	TXL	239481R1		ES2	-	2644000R1		
3U5PJ(-)	18	GN	TXL	239481R1		ES2	-	2644000R1		
3W5H(-)	18	GN	TXL	239481R1		ES2	-	2644000R1		
3W5T(-)	18	GN	TXL	239481R1		ES2	-	2644000R1		
3W5W(-)	18	GN	TXL	239481R1		ES2	-	2644000R1		
3Z5F(-)	18	GN	TXL	239481R1		ES2	-	2644000R1		
3Z5G(-)	18	GN	TXL	239481R1		ES2	-	2644000R1		
3Z5H(-)	18	GN	TXL	239481R1		ES2	-	2644000R1		
4E5E(-)	18	GN	TXL	239481R1		ES2	-	2644000R1		
4E5G(-)	18	GN	TXL	239481R1		ES2	-	2644000R1		
4E5H(-)	18	GN	TXL	239481R1		ES2	-	2644000R1		
4J5E(-)	18	GN	TXL	239481R1		ES2	-	2644000R1		
4J5F(-)	18	GN	TXL	239481R1		ES2	-	2644000R1		
4J5G(-)	18	GN	TXL	239481R1		ES2	-	2644000R1		
4L5E(-)	18	GN	TXL	239481R1		ES2	-	2644000R1		
4L5F(-)	18	GN	TXL	239481R1		ES2	-	2644000R1		
4L5G(-)	18	GN	TXL	239481R1		ES2	-	2644000R1		
4N5E(-)	18	GN	TXL	239481R1		ES2	-	2644000R1		
4N5G(-)	18	GN	TXL	239481R1		ES2	-	2644000R1		
4N5H(-)	18	GN	TXL	239481R1		ES2	-	2644000R1		
9K5E(-)	18	GN	TXL	239481R1		ES2	-	2644000R1		
9K5G(-)	18	GN	TXL	239481R1		ES2	-	2644000R1		
9K5H(-)	18	GN	TXL	239481R1		ES2	-	2644000R1		
9L5E(-)	18	GN	TXL	239481R1		ES2	-	2644000R1		
9L5G(-)	18	GN	TXL	239481R1		ES2	-	2644000R1		
9L5H(-)	18	GN	TXL	239481R1		ES2	-	2644000R1		
9P5E(-)	18	GN	TXL	239481R1		ES2	-	2644000R1		
9P5G(-)	18	GN	TXL	239481R1		ES2	-	2644000R1		
9P5H(-)	18	GN	TXL	239481R1		ES2	-	2644000R1		
9T5F(-)	18	GN	TXL	239481R1		ES2	-	2644000R1		
9T5G(-)	18	GN	TXL	239481R1		ES2	-	2644000R1		
9T5H(-)	18	GN	TXL	239481R1		ES2	-	2644000R1		
9V5E(-)	18	GN	TXL	239481R1		ES2	-	2644000R1		
9V5G(-)	18	GN	TXL	239481R1		ES2	-	2644000R1		
9V5H(-)	18	GN	TXL	239481R1		ES2	-	2644000R1		
9W5F(-)	18	GN	TXL	239481R1		ES2	-	2644000R1		
9W5G(-)	18	GN	TXL	239481R1		ES2	-	2644000R1		
9W5H(-)	18	GN	TXL	239481R1		ES2	-	2644000R1		
JC5F(-)	18	GN	TXL	239481R1		ES2	-	2644000R1		
JC5G(-)	18	GN	TXL	239481R1		ES2	-	2644000R1		
JC5H(-)	18	GN	TXL	239481R1		ES2	-	2644000R1		
JD5F(-)	18	GN	TXL	239481R1		ES2	-	2644000R1		
JD5G(-)	18	GN	TXL	239481R1		ES2	-	2644000R1		
JD5H(-)	18	GN	TXL	239481R1		ES2	-	2644000R1		

Circuit Number	Gauge	Color	Insulation	Terminal / Splice Number	Connector Part number	Connector Number	Cavity	Seal/Sleeve	Lock 1	Lock 2
JF5F(-)	18	GN	TXL	239481R1		ES2	-	2644000R1		
JF5G(-)	18	GN	TXL	239481R1		ES2	-	2644000R1		
JF5H(-)	18	GN	TXL	239481R1		ES2	-	2644000R1		
JG5F(-)	18	GN	TXL	239481R1		ES2	-	2644000R1		
JG5G(-)	18	GN	TXL	239481R1		ES2	-	2644000R1		
JG5H(-)	18	GN	TXL	239481R1		ES2	-	2644000R1		
LC5E(-)	18	GN	TXL	239481R1		ES2	-	2644000R1		
LC5H(-)	18	GN	TXL	239481R1		ES2	-	2644000R1		
LC5J(-)	18	GN	TXL	239481R1		ES2	-	2644000R1		
LD5E(-)	18	GN	TXL	239481R1		ES2	-	2644000R1		
LD5H(-)	18	GN	TXL	239481R1		ES2	-	2644000R1		
LD5L(-)	18	GN	TXL	239481R1		ES2	-	2644000R1		
LE5E(-)	18	GN	TXL	239481R1		ES2	-	2644000R1		
LE5G(-)	18	GN	TXL	239481R1		ES2	-	2644000R1		
LE5H(-)	18	GN	TXL	239481R1		ES2	-	2644000R1		
LF5E(-)	18	GN	TXL	239481R1		ES2	-	2644000R1		
LF5G(-)	18	GN	TXL	239481R1		ES2	-	2644000R1		
LF5H(-)	18	GN	TXL	239481R1		ES2	-	2644000R1		
LS5E(-)	18	GN	TXL	239481R1		ES2	-	2644000R1		
LS5G(-)	18	GN	TXL	239481R1		ES2	-	2644000R1		
LS5H(-)	18	GN	TXL	239481R1		ES2	-	2644000R1		
LU5F(-)	18	GN	TXL	239481R1		ES2	-	2644000R1		
LU5G(-)	18	GN	TXL	239481R1		ES2	-	2644000R1		
LU5H(-)	18	GN	TXL	239481R1		ES2	-	2644000R1		
LV5F(-)	18	GN	TXL	239481R1		ES2	-	2644000R1		
LV5G(-)	18	GN	TXL	239481R1		ES2	-	2644000R1		
LV5H(-)	18	GN	TXL	239481R1		ES2	-	2644000R1		
PV5F(-)	18	GN	TXL	239481R1		ES2	-	2644000R1		
PV5G(-)	18	GN	TXL	239481R1		ES2	-	2644000R1		
PV5H(-)	18	GN	TXL	239481R1		ES2	-	2644000R1		
PY5E(-)	18	GN	TXL	239481R1		ES2	-	2644000R1		
PY5G(-)	18	GN	TXL	239481R1		ES2	-	2644000R1		
PY5J(-)	18	GN	TXL	239481R1		ES2	-	2644000R1		
PZ5E(-)	18	GN	TXL	239481R1		ES2	-	2644000R1		
PZ5G(-)	18	GN	TXL	239481R1		ES2	-	2644000R1		
PZ5H(-)	18	GN	TXL	239481R1		ES2	-	2644000R1		
RD5E(-)	18	GN	TXL	239481R1		ES2	-	2644000R1		
RD5G(-)	18	GN	TXL	239481R1		ES2	-	2644000R1		
RD5H(-)	18	GN	TXL	239481R1		ES2	-	2644000R1		
RG5E(-)	18	GN	TXL	239481R1		ES2	-	2644000R1		
RG5F(-)	18	GN	TXL	239481R1		ES2	-	2644000R1		
RG5G(-)	18	GN	TXL	239481R1		ES2	-	2644000R1		
RJ5E(-)	18	GN	TXL	239481R1		ES2	-	2644000R1		
RJ5G(-)	18	GN	TXL	239481R1		ES2	-	2644000R1		
RJ5H(-)	18	GN	TXL	239481R1		ES2	-	2644000R1		
RM5E(-)	18	GN	TXL	239481R1		ES2	-	2644000R1		
RM5G(-)	18	GN	TXL	239481R1		ES2	-	2644000R1		
RM5H(-)	18	GN	TXL	239481R1		ES2	-	2644000R1		
RR5E(-)	18	GN	TXL	239481R1		ES2	-	2644000R1		
RR5G(-)	18	GN	TXL	239481R1		ES2	-	2644000R1		
RR5H(-)	18	GN	TXL	239481R1		ES2	-	2644000R1		
RS5E(-)	18	GN	TXL	239481R1		ES2	-	2644000R1		

Circuit Number	Gauge	Color	Insulation	Terminal / Splice Number	Connector Part number	Connector Number	Cavity	Seal/Sleeve	Lock 1	Lock 2
RS5G(-)	18	GN	TXL	239481R1		ES2	-	2644000R1		
RS5H(-)	18	GN	TXL	239481R1		ES2	-	2644000R1		
RU5E(-)	18	GN	TXL	239481R1		ES2	-	2644000R1		
RU5G(-)	18	GN	TXL	239481R1		ES2	-	2644000R1		
RU5H(-)	18	GN	TXL	239481R1		ES2	-	2644000R1		
RX5E(-)	18	GN	TXL	239481R1		ES2	-	2644000R1		
RX5G(-)	18	GN	TXL	239481R1		ES2	-	2644000R1		
RX5H(-)	18	GN	TXL	239481R1		ES2	-	2644000R1		
RZ5E(-)	18	GN	TXL	239481R1		ES2	-	2644000R1		
RZ5F(-)	18	GN	TXL	239481R1		ES2	-	2644000R1		
RZ5G(-)	18	GN	TXL	239481R1		ES2	-	2644000R1		
SB5F(-)	18	GN	TXL	239481R1		ES2	-	2644000R1		
SB5G(-)	18	GN	TXL	239481R1		ES2	-	2644000R1		
SB5H(-)	18	GN	TXL	239481R1		ES2	-	2644000R1		
SC5F(-)	18	GN	TXL	239481R1		ES2	-	2644000R1		
SC5G(-)	18	GN	TXL	239481R1		ES2	-	2644000R1		
SC5H(-)	18	GN	TXL	239481R1		ES2	-	2644000R1		
SD5F(-)	18	GN	TXL	239481R1		ES2	-	2644000R1		
SD5G(-)	18	GN	TXL	239481R1		ES2	-	2644000R1		
SD5J(-)	18	GN	TXL	239481R1		ES2	-	2644000R1		
SE5E(-)	18	GN	TXL	239481R1		ES2	-	2644000R1		
SE5G(-)	18	GN	TXL	239481R1		ES2	-	2644000R1		
SE5H(-)	18	GN	TXL	239481R1		ES2	-	2644000R1		
SN5E(-)	18	GN	TXL	239481R1		ES2	-	2644000R1		
SN5G(-)	18	GN	TXL	239481R1		ES2	-	2644000R1		
SN5H(-)	18	GN	TXL	239481R1		ES2	-	2644000R1		
SP5E(-)	18	GN	TXL	239481R1		ES2	-	2644000R1		
SP5G(-)	18	GN	TXL	239481R1		ES2	-	2644000R1		
SP5H(-)	18	GN	TXL	239481R1		ES2	-	2644000R1		
SR5F(-)	18	GN	TXL	239481R1		ES2	-	2644000R1		
SR5G(-)	18	GN	TXL	239481R1		ES2	-	2644000R1		
SR5H(-)	18	GN	TXL	239481R1		ES2	-	2644000R1		
VC5E(-)	18	GN	TXL	239481R1		ES2	-	2644000R1		
VC5G(-)	18	GN	TXL	239481R1		ES2	-	2644000R1		
VC5H(-)	18	GN	TXL	239481R1		ES2	-	2644000R1		
VD5F(-)	18	GN	TXL	239481R1		ES2	-	2644000R1		
VD5G(-)	18	GN	TXL	239481R1		ES2	-	2644000R1		
VD5H(-)	18	GN	TXL	239481R1		ES2	-	2644000R1		
VE5E(-)	18	GN	TXL	239481R1		ES2	-	2644000R1		
VE5G(-)	18	GN	TXL	239481R1		ES2	-	2644000R1		
VE5H(-)	18	GN	TXL	239481R1		ES2	-	2644000R1		
VG5F(-)	18	GN	TXL	239481R1		ES2	-	2644000R1		
VG5G(-)	18	GN	TXL	239481R1		ES2	-	2644000R1		
VG5H(-)	18	GN	TXL	239481R1		ES2	-	2644000R1		
YX5F(-)	18	GN	TXL	239481R1		ES2	-	2644000R1		
YX5G(-)	18	GN	TXL	239481R1		ES2	-	2644000R1		
YX5H(-)	18	GN	TXL	239481R1		ES2	-	2644000R1		
YZ5F(-)	18	GN	TXL	239481R1		ES2	-	2644000R1		
YZ5G(-)	18	GN	TXL	239481R1		ES2	-	2644000R1		
YZ5H(-)	18	GN	TXL	239481R1		ES2	-	2644000R1		
MB86-GD1	18	WH	TXL	239481R1		ES3	-	2644000R1		
MB86-GD2	18	WH	TXL	239481R1		ES3	-	2644000R1		

Circuit Number	Gauge	Color	Insulation	Terminal / Splice Number	Connector Part number	Connector Number	Cavity	Seal/Sleeve	Lock 1	Lock 2
MB86-GND	18	WH	TXL	239481R1		ES3	-	2644000R1		
MB86-GD1	18	WH	TXL	239481R1		ES3	-	2644000R1		
MB86-GD2	18	WH	TXL	239481R1		ES3	-	2644000R1		
MB86-GND	18	WH	TXL	239481R1		ES3	-	2644000R1		
VV5F(+)	18	YL	TXL	239481R1		ES4	-	2644000R1		
VV5G(+)	18	YL	TXL	239481R1		ES4	-	2644000R1		
VV5H(+)	18	YL	TXL	239481R1		ES4	-	2644000R1		
VF5F(+)	18	YL	TXL	239481R1		ES4	-	2644000R1		
VF5G(+)	18	YL	TXL	239481R1		ES4	-	2644000R1		
VF5H(+)	18	YL	TXL	239481R1		ES4	-	2644000R1		
VV5F(-)	18	GN	TXL	239481R1		ES5	-	2644000R1		
VV5G(-)	18	GN	TXL	239481R1		ES5	-	2644000R1		
VV5H(-)	18	GN	TXL	239481R1		ES5	-	2644000R1		
VF5F(-)	18	GN	TXL	239481R1		ES5	-	2644000R1		
VF5G(-)	18	GN	TXL	239481R1		ES5	-	2644000R1		
VF5H(-)	18	GN	TXL	239481R1		ES5	-	2644000R1		
AA11-G	18	WH	TXL	239481R1		FS1	-	2644000R1		
AA11-GCA	12	WH	TXL	239481R1		FS1	-	2644000R1		
AA11-GK	18	WH	TXL	239481R1		FS1	-	2644000R1		
AA11-GKD	18	WH	TXL	239481R1		FS1	-	2644000R1		
AA11-GKE	16	WH	TXL	239481R1		FS1	-	2644000R1		
AA11-GL	18	WH	TXL	239481R1		FS1	-	2644000R1		
AA11-GN	18	WH	TXL	239481R1		FS1	-	2644000R1		
AA60-G	18	WH	TXL	239481R1		FS1	-	2644000R1		
AA63-GA	16	WH	TXL	239481R1		FS1	-	2644000R1		
AA74-G	20	WH	TXL	239481R1		FS1	-	2644000R1		
AA74-GA	20	WH	TXL	239481R1		FS1	-	2644000R1		
AA75-G	12	WH	TXL	239481R1		FS1	-	2644000R1		
AA82-G	16	WH	TXL	239481R1		FS1	-	2644000R1		
AA87-GA	18	WH	TXL	239481R1		FS1	-	2644000R1		
AA11-G	18	WH	TXL	239481R1		FS1	-	2644000R1		
AA11-GCA	12	WH	TXL	239481R1		FS1	-	2644000R1		
AA11-GK	18	WH	TXL	239481R1		FS1	-	2644000R1		
AA11-GKD	18	WH	TXL	239481R1		FS1	-	2644000R1		
AA11-GKE	16	WH	TXL	239481R1		FS1	-	2644000R1		
AA11-GL	18	WH	TXL	239481R1		FS1	-	2644000R1		
AA11-GN	18	WH	TXL	239481R1		FS1	-	2644000R1		
AA166-G	20	GY	TXL	239481R1		FS1	-	2644000R1		
AA60-G	18	WH	TXL	239481R1		FS1	-	2644000R1		
AA63-GA	16	WH	TXL	239481R1		FS1	-	2644000R1		
AA74-G	20	WH	TXL	239481R1		FS1	-	2644000R1		
AA74-GA	20	WH	TXL	239481R1		FS1	-	2644000R1		
AA75-G	12	WH	TXL	239481R1		FS1	-	2644000R1		
AA82-G	16	WH	TXL	239481R1		FS1	-	2644000R1		
AA87-GA	18	WH	TXL	239481R1		FS1	-	2644000R1		
AA87B	20	GY	TXL	239481R1		FS3	-	2644000R1		
AA87D	18	GY	TXL	239481R1		FS3	-	2644000R1		
AA87E	18	GY	TXL	239481R1		FS3	-	2644000R1		
AA87B	20	GY	TXL	239481R1		FS3	-	2644000R1		
AA87D	18	GY	TXL	239481R1		FS3	-	2644000R1		
AA87E	18	GY	TXL	239481R1		FS3	-	2644000R1		
EM13-GBL	18	WH	TXL	239481R1		GS1	-	2644000R1		

Circuit Number	Gauge	Color	Insulation	Terminal / Splice Number	Connector Part number	Connector Number	Cavity	Seal/Sleeve	Lock 1	Lock 2
EM13-GBP	18	WH	TXL	239481R1		GS1	-	2644000R1		
EM62-GDL	18	WH	TXL	239481R1		GS1	-	2644000R1		
GN13-GBL	18	WH	TXL	239481R1		GS1	-	2644000R1		
GN13-GBP	18	WH	TXL	239481R1		GS1	-	2644000R1		
GN13-GBR	18	WH	TXL	239481R1		GS1	-	2644000R1		
GN62-GDL	18	WH	TXL	239481R1		GS1	-	2644000R1		
EM13-GBL	20	WH	TXL	239481R1		GS1	-	2644000R1		
EM13-GBP	20	WH	TXL	239481R1		GS1	-	2644000R1		
EM62-GDL	20	WH	TXL	239481R1		GS1	-	2644000R1		
GN13-GBL	20	WH	TXL	239481R1		GS1	-	2644000R1		
GN13-GBP	14	WH	TXL	239481R1		GS1	-	2644000R1		
GN13-GBR	16	WH	TXL	239481R1		GS1	-	2644000R1		
GN62-GDL	20	WH	TXL	239481R1		GS1	-	2644000R1		
2V13COG	16	PK	TXL	239481R1		GS10	-	2644000R1		
2V13COG1	16	PK	TXL	239481R1		GS10	-	2644000R1		
2V13COG2	16	PK	TXL	239481R1		GS10	-	2644000R1		
2V13COG3	16	PK	TXL	239481R1		GS10	-	2644000R1		
RV13COG	16	PK	TXL	239481R1		GS10	-	2644000R1		
RV13COG1	16	PK	TXL	239481R1		GS10	-	2644000R1		
RV13COG2	16	PK	TXL	239481R1		GS10	-	2644000R1		
RV13COG3	16	PK	TXL	239481R1		GS10	-	2644000R1		
2V13COG	16	PK	TXL	239481R1		GS10	-	2644000R1		
2V13COG1	20	PK	TXL	239481R1		GS10	-	2644000R1		
2V13COG2	16	PK	TXL	239481R1		GS10	-	2644000R1		
2V13COG3	20	PK	TXL	239481R1		GS10	-	2644000R1		
RV13COG	16	PK	TXL	239481R1		GS10	-	2644000R1		
RV13COG1	16	PK	TXL	239481R1		GS10	-	2644000R1		
RV13COG2	16	PK	TXL	239481R1		GS10	-	2644000R1		
RV13COG3	16	PK	TXL	239481R1		GS10	-	2644000R1		
2V67COG	18	GY	TXL	239481R1		GS11	-	2644000R1		
2V67COG1	18	GY	TXL	239481R1		GS11	-	2644000R1		
2V67COG2	18	GY	TXL	239481R1		GS11	-	2644000R1		
2V67COG	18	GY	TXL	239481R1		GS11	-	2644000R1		
2V67COG1	20	GY	TXL	239481R1		GS11	-	2644000R1		
2V67COG2	20	GY	TXL	239481R1		GS11	-	2644000R1		
YH82KA	16	GY	TXL	239481R1		GS12	-	2644000R1		
YH82KB	16	GY	TXL	239481R1		GS12	-	2644000R1		
YH82KA	16	GY	TXL	239481R1		GS12	-	2644000R1		
YH82KB	16	GY	TXL	239481R1		GS12	-	2644000R1		
6K9LC	20	GY	TXL	239481R1		GS13	-	2644000R1		
DY54X	16	BN	TXL	382182C1		GS14	-	2644000R1		
DY54XA	16	BN	TXL	382182C1		GS14	-	2644000R1		
DY54XB	16	BN	TXL	382182C1		GS14	-	2644000R1		
PA54X	16	BN	TXL	382182C1		GS14	-	2644000R1		
PA54XA	16	BN	TXL	382182C1		GS14	-	2644000R1		
DY54X	16	BN	TXL	382182C1		GS14	-	2644000R1		
DY54XA	16	BN	TXL	382182C1		GS14	-	2644000R1		
DY54XB	16	BN	TXL	382182C1		GS14	-	2644000R1		
PA54X	16	BN	TXL	382182C1		GS14	-	2644000R1		
PA54XA	16	BN	TXL	382182C1		GS14	-	2644000R1		
CS13COG	16	PK	TXL	382182C1		GS15	-	2644000R1		
CS67A	16	PK	TXL	382182C1		GS15	-	2644000R1		

Circuit Number	Gauge	Color	Insulation	Terminal / Splice Number	Connector Part number	Connector Number	Cavity	Seal/Sleeve	Lock 1	Lock 2
CS67Y	18	PK	TXL	382182C1		GS15	-	2644000R1		
YK13COG	16	PK	TXL	382182C1		GS15	-	2644000R1		
YK67A	16	PK	TXL	382182C1		GS15	-	2644000R1		
YK67Y	18	PK	TXL	382182C1		GS15	-	2644000R1		
CS13COG	16	PK	TXL	239481R1		GS15	-	2644000R1		
CS67A	16	PK	TXL	239481R1		GS15	-	2644000R1		
CS67Y	18	PK	TXL	239481R1		GS15	-	2644000R1		
YK13COG	16	PK	TXL	239481R1		GS15	-	2644000R1		
YK67A	16	PK	TXL	239481R1		GS15	-	2644000R1		
YK67Y	18	PK	TXL	239481R1		GS15	-	2644000R1		
DD78A	16	LTGN	TXL	239481R1		GS17	-	2644000R1		
DD78B	16	LTGN	TXL	239481R1		GS17	-	2644000R1		
DD78A	16	LTGN	TXL	239481R1		GS17	-	2644000R1		
DD78B	16	LTGN	TXL	239481R1		GS17	-	2644000R1		
CD14-GAG	18	WH	TXL	239481R1		GS18	-	2644000R1		
CD14-GSA	18	WH	TXL	239481R1		GS18	-	2644000R1		
CD62-GAJ	18	WH	TXL	239481R1		GS18	-	2644000R1		
CE14-GAG	18	WH	TXL	239481R1		GS18	-	2644000R1		
CE14-GSA	18	WH	TXL	239481R1		GS18	-	2644000R1		
CE14-GSC	18	WH	TXL	239481R1		GS18	-	2644000R1		
CE62-GA	18	WH	TXL	239481R1		GS18	-	2644000R1		
CE62-GB	18	WH	TXL	239481R1		GS18	-	2644000R1		
CD14-GAG	18	WH	TXL	239481R1		GS18	-	2644000R1		
CD14-GSA	20	WH	TXL	239481R1		GS18	-	2644000R1		
CD62-GAJ	20	WH	TXL	239481R1		GS18	-	2644000R1		
CE14-GAG	18	WH	TXL	239481R1		GS18	-	2644000R1		
CE14-GSA	20	WH	TXL	239481R1		GS18	-	2644000R1		
CE14-GSC	20	WH	TXL	239481R1		GS18	-	2644000R1		
CE62-GA	20	WH	TXL	239481R1		GS18	-	2644000R1		
CE62-GB	20	WH	TXL	239481R1		GS18	-	2644000R1		
CE14S	18	RD	TXL	239481R1		GS19	-	2644000R1		
CE14SA	18	RD	TXL	239481R1		GS19	-	2644000R1		
CE14SB	18	RD	TXL	239481R1		GS19	-	2644000R1		
CE14S	18	RD	TXL	239481R1		GS19	-	2644000R1		
CE14SA	20	RD	TXL	239481R1		GS19	-	2644000R1		
CE14SB	20	RD	TXL	239481R1		GS19	-	2644000R1		
JL116UV	18	GY	TXL	239481R1		GS2	-	2644000R1		
JL116UV	18	GY	TXL	239481R1		GS2	-	2644000R1		
MZ86AE	18	LTGN	TXL	239481R1		GS20	-	2644000R1		
MZ86FE	18	LTGN	TXL	239481R1		GS20	-	2644000R1		
MZ86FF	18	LTGN	TXL	239481R1		GS20	-	2644000R1		
MZ86AA	18	LTGN	TXL	239481R1		GS21	-	2644000R1		
MZ86AF	18	LTGN	TXL	239481R1		GS21	-	2644000R1		
MZ86F	18	YL	TXL	239481R1		GS21	-	2644000R1		
MZ86AA	18	LTGN	TXL	239481R1		GS21	-	2644000R1		
MZ86AF	18	LTGN	TXL	239481R1		GS21	-	2644000R1		
MZ86F	18	YL	TXL	239481R1		GS21	-	2644000R1		
NL86AA	18	LTGN	TXL	239481R1		GS21	-	2644000R1		
NL86AF	18	LTGN	TXL	239481R1		GS21	-	2644000R1		
NL86F	18	YL	TXL	239481R1		GS21	-	2644000R1		
BC63JK	18	DKBL	TXL	239481R1		GS22	-	2644000R1		
BC63JK	18	DKBL	TXL	239481R1		GS22	-	2644000R1		

Circuit Number	Gauge	Color	Insulation	Terminal / Splice Number	Connector Part number	Connector Number	Cavity	Seal/Sleeve	Lock 1	Lock 2
AH12H	18	LTBL	TXL	239481R1		GS23	-	2644000R1		
AH12J	18	LTBL	TXL	239481R1		GS23	-	2644000R1		
AM12H	18	LTBL	TXL	239481R1		GS23	-	2644000R1		
AM12J	18	LTBL	TXL	239481R1		GS23	-	2644000R1		
2H5J(+)	18	YL	TXL	239481R1		GS23	-	2644000R1		
2H5M(+)	18	YL	TXL	239481R1		GS23	-	2644000R1		
2H5PJ(+)	18	YL	TXL	239481R1		GS23	-	2644000R1		
2J5F(+)	18	YL	TXL	239481R1		GS23	-	2644000R1		
2J5H(+)	18	YL	TXL	239481R1		GS23	-	2644000R1		
2J5L(+)	18	YL	TXL	239481R1		GS23	-	2644000R1		
2L5H(+)	18	YL	TXL	239481R1		GS23	-	2644000R1		
2L5T(+)	18	YL	TXL	239481R1		GS23	-	2644000R1		
2L5V(+)	18	YL	TXL	239481R1		GS23	-	2644000R1		
2M5F(+)	18	YL	TXL	239481R1		GS23	-	2644000R1		
2M5K(+)	18	YL	TXL	239481R1		GS23	-	2644000R1		
2M5M(+)	18	YL	TXL	239481R1		GS23	-	2644000R1		
2W5H(+)	18	YL	TXL	239481R1		GS23	-	2644000R1		
2W5K(+)	18	YL	TXL	239481R1		GS23	-	2644000R1		
2W5PJ(+)	18	YL	TXL	239481R1		GS23	-	2644000R1		
2Y5F(+)	18	YL	TXL	239481R1		GS23	-	2644000R1		
2Y5K(+)	18	YL	TXL	239481R1		GS23	-	2644000R1		
2Y5PJ(+)	18	YL	TXL	239481R1		GS23	-	2644000R1		
2Z5H(+)	18	YL	TXL	239481R1		GS23	-	2644000R1		
2Z5T(+)	18	YL	TXL	239481R1		GS23	-	2644000R1		
2Z5V(+)	18	YL	TXL	239481R1		GS23	-	2644000R1		
3C5H(+)	18	YL	TXL	239481R1		GS23	-	2644000R1		
3C5M(+)	18	YL	TXL	239481R1		GS23	-	2644000R1		
3C5PJ(+)	18	YL	TXL	239481R1		GS23	-	2644000R1		
3E5H(+)	18	YL	TXL	239481R1		GS23	-	2644000R1		
3E5PJ(+)	18	YL	TXL	239481R1		GS23	-	2644000R1		
3E5T(+)	18	YL	TXL	239481R1		GS23	-	2644000R1		
3J5K(+)	18	YL	TXL	239481R1		GS23	-	2644000R1		
3J5V(+)	18	YL	TXL	239481R1		GS23	-	2644000R1		
3J5W(+)	18	YL	TXL	239481R1		GS23	-	2644000R1		
3R5J(+)	18	YL	TXL	239481R1		GS23	-	2644000R1		
3R5L(+)	18	YL	TXL	239481R1		GS23	-	2644000R1		
3R5M(+)	18	YL	TXL	239481R1		GS23	-	2644000R1		
3U5F(+)	18	YL	TXL	239481R1		GS23	-	2644000R1		
3U5H(+)	18	YL	TXL	239481R1		GS23	-	2644000R1		
3U5T(+)	18	YL	TXL	239481R1		GS23	-	2644000R1		
3W5H(+)	18	YL	TXL	239481R1		GS23	-	2644000R1		
3W5PJ(+)	18	YL	TXL	239481R1		GS23	-	2644000R1		
3W5V(+)	18	YL	TXL	239481R1		GS23	-	2644000R1		
4E5F(+)	18	YL	TXL	239481R1		GS23	-	2644000R1		
4E5H(+)	18	YL	TXL	239481R1		GS23	-	2644000R1		
4E5L(+)	18	YL	TXL	239481R1		GS23	-	2644000R1		
4J5H(+)	18	YL	TXL	239481R1		GS23	-	2644000R1		
4J5T(+)	18	YL	TXL	239481R1		GS23	-	2644000R1		
4J5V(+)	18	YL	TXL	239481R1		GS23	-	2644000R1		
4L5F(+)	18	YL	TXL	239481R1		GS23	-	2644000R1		
4L5K(+)	18	YL	TXL	239481R1		GS23	-	2644000R1		
4L5M(+)	18	YL	TXL	239481R1		GS23	-	2644000R1		

Circuit Number	Gauge	Color	Insulation	Terminal / Splice Number	Connector Part number	Connector Number	Cavity	Seal/Sleeve	Lock 1	Lock 2
4N5F(+)	18	YL	TXL	239481R1		GS23	-	2644000R1		
4N5K(+)	18	YL	TXL	239481R1		GS23	-	2644000R1		
4N5PJ(+)	18	YL	TXL	239481R1		GS23	-	2644000R1		
AH13H	18	PK	TXL	239481R1		GS24	-	2644000R1		
AH13J	18	PK	TXL	239481R1		GS24	-	2644000R1		
AM13H	18	PK	TXL	239481R1		GS24	-	2644000R1		
AM13J	18	PK	TXL	239481R1		GS24	-	2644000R1		
2H5J(-)	18	GN	TXL	239481R1		GS24	-	2644000R1		
2H5M(-)	18	GN	TXL	239481R1		GS24	-	2644000R1		
2H5PJ(-)	18	GN	TXL	239481R1		GS24	-	2644000R1		
2J5F(-)	18	GN	TXL	239481R1		GS24	-	2644000R1		
2J5H(-)	18	GN	TXL	239481R1		GS24	-	2644000R1		
2J5L(-)	18	GN	TXL	239481R1		GS24	-	2644000R1		
2L5H(-)	18	GN	TXL	239481R1		GS24	-	2644000R1		
2L5T(-)	18	GN	TXL	239481R1		GS24	-	2644000R1		
2L5V(-)	18	GN	TXL	239481R1		GS24	-	2644000R1		
2M5F(-)	18	GN	TXL	239481R1		GS24	-	2644000R1		
2M5K(-)	18	GN	TXL	239481R1		GS24	-	2644000R1		
2M5M(-)	18	GN	TXL	239481R1		GS24	-	2644000R1		
2W5H(-)	18	GN	TXL	239481R1		GS24	-	2644000R1		
2W5K(-)	18	GN	TXL	239481R1		GS24	-	2644000R1		
2W5PJ(-)	18	GN	TXL	239481R1		GS24	-	2644000R1		
2Y5F(-)	18	GN	TXL	239481R1		GS24	-	2644000R1		
2Y5K(-)	18	GN	TXL	239481R1		GS24	-	2644000R1		
2Y5PJ(-)	18	GN	TXL	239481R1		GS24	-	2644000R1		
2Z5H(-)	18	GN	TXL	239481R1		GS24	-	2644000R1		
2Z5T(-)	18	GN	TXL	239481R1		GS24	-	2644000R1		
2Z5V(-)	18	GN	TXL	239481R1		GS24	-	2644000R1		
3C5H(-)	18	GN	TXL	239481R1		GS24	-	2644000R1		
3C5M(-)	18	GN	TXL	239481R1		GS24	-	2644000R1		
3C5PJ(-)	18	GN	TXL	239481R1		GS24	-	2644000R1		
3E5H(-)	18	GN	TXL	239481R1		GS24	-	2644000R1		
3E5PJ(-)	18	GN	TXL	239481R1		GS24	-	2644000R1		
3E5T(-)	18	GN	TXL	239481R1		GS24	-	2644000R1		
3J5K(-)	18	GN	TXL	239481R1		GS24	-	2644000R1		
3J5V(-)	18	GN	TXL	239481R1		GS24	-	2644000R1		
3J5W(-)	18	GN	TXL	239481R1		GS24	-	2644000R1		
3R5J(-)	18	GN	TXL	239481R1		GS24	-	2644000R1		
3R5L(-)	18	GN	TXL	239481R1		GS24	-	2644000R1		
3R5M(-)	18	GN	TXL	239481R1		GS24	-	2644000R1		
3U5F(-)	18	GN	TXL	239481R1		GS24	-	2644000R1		
3U5H(-)	18	GN	TXL	239481R1		GS24	-	2644000R1		
3U5T(-)	18	GN	TXL	239481R1		GS24	-	2644000R1		
3W5H(-)	18	GN	TXL	239481R1		GS24	-	2644000R1		
3W5PJ(-)	18	GN	TXL	239481R1		GS24	-	2644000R1		
3W5V(-)	18	GN	TXL	239481R1		GS24	-	2644000R1		
4E5F(-)	18	GN	TXL	239481R1		GS24	-	2644000R1		
4E5H(-)	18	GN	TXL	239481R1		GS24	-	2644000R1		
4E5L(-)	18	GN	TXL	239481R1		GS24	-	2644000R1		
4J5H(-)	18	GN	TXL	239481R1		GS24	-	2644000R1		
4J5T(-)	18	GN	TXL	239481R1		GS24	-	2644000R1		
4J5V(-)	18	GN	TXL	239481R1		GS24	-	2644000R1		

Circuit Number	Gauge	Color	Insulation	Terminal / Splice Number	Connector Part number	Connector Number	Cavity	Seal/Sleeve	Lock 1	Lock 2
4L5F(-)	18	GN	TXL	239481R1		GS24	-	2644000R1		
4L5K(-)	18	GN	TXL	239481R1		GS24	-	2644000R1		
4L5M(-)	18	GN	TXL	239481R1		GS24	-	2644000R1		
4N5F(-)	18	GN	TXL	239481R1		GS24	-	2644000R1		
4N5K(-)	18	GN	TXL	239481R1		GS24	-	2644000R1		
4N5PJ(-)	18	GN	TXL	239481R1		GS24	-	2644000R1		
CB84	14	LTGN	TXL	468358C1		GS25	-	2644000R1		
CB84A	14	LTGN	TXL	468358C1		GS25	-	2644000R1		
CB84B	14	LTGN	TXL	468358C1		GS25	-	2644000R1		
CL84	14	LTGN	TXL	468358C1		GS25	-	2644000R1		
CL84A	14	LTGN	TXL	468358C1		GS25	-	2644000R1		
CL84B	14	LTGN	TXL	468358C1		GS25	-	2644000R1		
CB84	14	LTGN	TXL	468358C1		GS25	-	2644000R1		
CB84A	14	LTGN	TXL	468358C1		GS25	-	2644000R1		
CB84B	14	LTGN	TXL	468358C1		GS25	-	2644000R1		
CL84	14	LTGN	TXL	468358C1		GS25	-	2644000R1		
CL84A	14	LTGN	TXL	468358C1		GS25	-	2644000R1		
CL84B	14	LTGN	TXL	468358C1		GS25	-	2644000R1		
YV13V	12	PK	TXL	382182C1		GS26	-	2644000R1		
YV13W	12	PK	TXL	382182C1		GS26	-	2644000R1		
YY13V	12	PK	TXL	382182C1		GS26	-	2644000R1		
YY13W	12	PK	TXL	382182C1		GS26	-	2644000R1		
CB13U	18	PK	TXL	239481R1		GS27	-	2644000R1		
CB13UA	20	PK	TXL	239481R1		GS27	-	2644000R1		
CB13UB	20	PK	TXL	239481R1		GS27	-	2644000R1		
CL13U	18	PK	TXL	239481R1		GS27	-	2644000R1		
CL13UA	20	PK	TXL	239481R1		GS27	-	2644000R1		
CL13UB	20	PK	TXL	239481R1		GS27	-	2644000R1		
CB13U	18	PK	TXL	239481R1		GS27	-	2644000R1		
CB13UA	20	PK	TXL	239481R1		GS27	-	2644000R1		
CB13UB	20	PK	TXL	239481R1		GS27	-	2644000R1		
CL13U	18	PK	TXL	239481R1		GS27	-	2644000R1		
CL13UA	20	PK	TXL	239481R1		GS27	-	2644000R1		
CL13UB	20	PK	TXL	239481R1		GS27	-	2644000R1		
AG14AB	10	RD	TXL	239481R1		GS28	-	2644000R1		
AG14AD	12	RD	TXL	239481R1		GS28	-	2644000R1		
AG14AF	12	RD	TXL	239481R1		GS28	-	2644000R1		
AG14AS	18	RD	TXL	239481R1		GS28	-	2644000R1		
AG14AU	12	RD	TXL	239481R1		GS28	-	2644000R1		
AG14F	8	RD	TXL	239481R1		GS28	-	2644000R1		
AL14AU	12	RD	TXL	239481R1		GS28	-	2644000R1		
AL14F	8	RD	TXL	239481R1		GS28	-	2644000R1		
AL14	4	RD	SGX	239481R1		GS28	-	2644000R1		
AL14F	8	RD	TXL	239481R1		GS28	-	2644000R1		
AL14H	8	RD	TXL	239481R1		GS28	-	2644000R1		
AL14K	8	RD	TXL	239481R1		GS28	-	2644000R1		
AL14M	6	RD	SGX	239481R1		GS28	-	2644000R1		
NJ14	4	RD	SGX	239481R1		GS28	-	2644000R1		
NJ14F	8	RD	TXL	239481R1		GS28	-	2644000R1		
NJ14H	8	RD	TXL	239481R1		GS28	-	2644000R1		
NJ14K	8	RD	TXL	239481R1		GS28	-	2644000R1		
NJ14M	6	RD	SGX	239481R1		GS28	-	2644000R1		

Circuit Number	Gauge	Color	Insulation	Terminal / Splice Number	Connector Part number	Connector Number	Cavity	Seal/Sleeve	Lock 1	Lock 2
AG14AN	12	RD	TXL	239481R1		GS29	-	2644000R1		
AG14AP	12	RD	TXL	239481R1		GS29	-	2644000R1		
AG14AR	18	RD	TXL	239481R1		GS29	-	2644000R1		
AG14H	8	RD	TXL	239481R1		GS29	-	2644000R1		
AL14AN	12	RD	TXL	239481R1		GS29	-	2644000R1		
AL14AP	12	RD	TXL	239481R1		GS29	-	2644000R1		
AL14AR	18	RD	TXL	239481R1		GS29	-	2644000R1		
AL14H	8	RD	TXL	239481R1		GS29	-	2644000R1		
3D5H(+)	18	YL	TXL	239481R1		GS3	-	2644000R1		
3D5K(+)	18	YL	TXL	239481R1		GS3	-	2644000R1		
3D5L(+)	20	YL	193	239481R1		GS3	-	2644000R1		
3M5H(+)	18	YL	TXL	239481R1		GS3	-	2644000R1		
3M5K(+)	18	YL	TXL	239481R1		GS3	-	2644000R1		
3M5L(+)	20	YL	193	239481R1		GS3	-	2644000R1		
9L5H(+)	18	YL	TXL	239481R1		GS3	-	2644000R1		
9L5L(+)	20	YL	193	239481R1		GS3	-	2644000R1		
9L5M(+)	18	YL	TXL	239481R1		GS3	-	2644000R1		
9V5H(+)	18	YL	TXL	239481R1		GS3	-	2644000R1		
9V5L(+)	20	YL	193	239481R1		GS3	-	2644000R1		
9V5M(+)	18	YL	TXL	239481R1		GS3	-	2644000R1		
JC5H(+)	18	YL	TXL	239481R1		GS3	-	2644000R1		
JC5L(+)	20	YL	193	239481R1		GS3	-	2644000R1		
JC5M(+)	18	YL	TXL	239481R1		GS3	-	2644000R1		
JD5H(+)	18	YL	TXL	239481R1		GS3	-	2644000R1		
JD5K(+)	18	YL	TXL	239481R1		GS3	-	2644000R1		
JD5L(+)	20	YL	193	239481R1		GS3	-	2644000R1		
LT5C(+)	18	YL	TXL	239481R1		GS3	-	2644000R1		
LT5D(+)	20	YL	193	239481R1		GS3	-	2644000R1		
LT5E(+)	18	YL	TXL	239481R1		GS3	-	2644000R1		
RD5F(+)	18	YL	TXL	239481R1		GS3	-	2644000R1		
RD5H(+)	18	YL	TXL	239481R1		GS3	-	2644000R1		
RD5K(+)	18	YL	TXL	239481R1		GS3	-	2644000R1		
RD5L(+)	20	YL	193	239481R1		GS3	-	2644000R1		
RJ5F(+)	18	YL	TXL	239481R1		GS3	-	2644000R1		
RJ5H(+)	18	YL	TXL	239481R1		GS3	-	2644000R1		
RJ5L(+)	20	YL	193	239481R1		GS3	-	2644000R1		
RM5F(+)	18	YL	TXL	239481R1		GS3	-	2644000R1		
RM5H(+)	18	YL	TXL	239481R1		GS3	-	2644000R1		
RM5L(+)	20	YL	193	239481R1		GS3	-	2644000R1		
RS5F(+)	18	YL	TXL	239481R1		GS3	-	2644000R1		
RS5H(+)	18	YL	TXL	239481R1		GS3	-	2644000R1		
RS5L(+)	20	YL	193	239481R1		GS3	-	2644000R1		
SB5H(+)	18	YL	TXL	239481R1		GS3	-	2644000R1		
SB5J(+)	18	YL	TXL	239481R1		GS3	-	2644000R1		
SB5L(+)	20	YL	193	239481R1		GS3	-	2644000R1		
SC5H(+)	18	YL	TXL	239481R1		GS3	-	2644000R1		
SC5K(+)	18	YL	TXL	239481R1		GS3	-	2644000R1		
SC5L(+)	20	YL	193	239481R1		GS3	-	2644000R1		
2L5F(+)	18	YL	TXL	239481R1		GS3	-	2644000R1		
2L5H(+)	18	YL	TXL	239481R1		GS3	-	2644000R1		
2L5L(+)	20	YL	193	239481R1		GS3	-	2644000R1		
2W5F(+)	18	YL	TXL	239481R1		GS3	-	2644000R1		

Circuit Number	Gauge	Color	Insulation	Terminal / Splice Number	Connector Part number	Connector Number	Cavity	Seal/Sleeve	Lock 1	Lock 2
2W5H(+)	18	YL	TXL	239481R1		GS3	-	2644000R1		
2W5L(+)	20	YL	193	239481R1		GS3	-	2644000R1		
2Y5H(+)	18	YL	TXL	239481R1		GS3	-	2644000R1		
2Y5L(+)	20	YL	193	239481R1		GS3	-	2644000R1		
2Y5PJ(+)	18	YL	TXL	239481R1		GS3	-	2644000R1		
2Z5F(+)	18	YL	TXL	239481R1		GS3	-	2644000R1		
2Z5H(+)	18	YL	TXL	239481R1		GS3	-	2644000R1		
2Z5L(+)	20	YL	193	239481R1		GS3	-	2644000R1		
3D5H(+)	18	YL	TXL	239481R1		GS3	-	2644000R1		
3D5K(+)	18	YL	TXL	239481R1		GS3	-	2644000R1		
3D5L(+)	20	YL	193	239481R1		GS3	-	2644000R1		
3E5H(+)	18	YL	TXL	239481R1		GS3	-	2644000R1		
3E5J(+)	18	YL	TXL	239481R1		GS3	-	2644000R1		
3E5L(+)	20	YL	193	239481R1		GS3	-	2644000R1		
3J5H(+)	18	YL	TXL	239481R1		GS3	-	2644000R1		
3J5L(+)	20	YL	193	239481R1		GS3	-	2644000R1		
3J5W(+)	18	YL	TXL	239481R1		GS3	-	2644000R1		
3M5H(+)	18	YL	TXL	239481R1		GS3	-	2644000R1		
3M5K(+)	18	YL	TXL	239481R1		GS3	-	2644000R1		
3M5L(+)	20	YL	193	239481R1		GS3	-	2644000R1		
3Z5H(+)	18	YL	TXL	239481R1		GS3	-	2644000R1		
3Z5K(+)	18	YL	TXL	239481R1		GS3	-	2644000R1		
3Z5L(+)	20	YL	193	239481R1		GS3	-	2644000R1		
4J5F(+)	18	YL	TXL	239481R1		GS3	-	2644000R1		
4J5H(+)	18	YL	TXL	239481R1		GS3	-	2644000R1		
4J5L(+)	20	YL	193	239481R1		GS3	-	2644000R1		
4N5H(+)	18	YL	TXL	239481R1		GS3	-	2644000R1		
4N5L(+)	20	YL	193	239481R1		GS3	-	2644000R1		
4N5PJ(+)	18	YL	TXL	239481R1		GS3	-	2644000R1		
9L5H(+)	18	YL	TXL	239481R1		GS3	-	2644000R1		
9L5L(+)	20	YL	193	239481R1		GS3	-	2644000R1		
9L5M(+)	18	YL	TXL	239481R1		GS3	-	2644000R1		
9V5H(+)	18	YL	TXL	239481R1		GS3	-	2644000R1		
9V5L(+)	20	YL	193	239481R1		GS3	-	2644000R1		
9V5M(+)	18	YL	TXL	239481R1		GS3	-	2644000R1		
9W5H(+)	18	YL	TXL	239481R1		GS3	-	2644000R1		
9W5L(+)	20	YL	193	239481R1		GS3	-	2644000R1		
9W5M(+)	18	YL	TXL	239481R1		GS3	-	2644000R1		
JC5H(+)	18	YL	TXL	239481R1		GS3	-	2644000R1		
JC5L(+)	20	YL	193	239481R1		GS3	-	2644000R1		
JC5M(+)	18	YL	TXL	239481R1		GS3	-	2644000R1		
JD5H(+)	18	YL	TXL	239481R1		GS3	-	2644000R1		
JD5K(+)	18	YL	TXL	239481R1		GS3	-	2644000R1		
JD5L(+)	20	YL	193	239481R1		GS3	-	2644000R1		
LT5C(+)	18	YL	TXL	239481R1		GS3	-	2644000R1		
LT5D(+)	20	YL	193	239481R1		GS3	-	2644000R1		
LT5E(+)	18	YL	TXL	239481R1		GS3	-	2644000R1		
RD5F(+)	18	YL	TXL	239481R1		GS3	-	2644000R1		
RD5H(+)	18	YL	TXL	239481R1		GS3	-	2644000R1		
RD5L(+)	20	YL	193	239481R1		GS3	-	2644000R1		
RJ5F(+)	18	YL	TXL	239481R1		GS3	-	2644000R1		
RJ5H(+)	18	YL	TXL	239481R1		GS3	-	2644000R1		

Circuit Number	Gauge	Color	Insulation	Terminal / Splice Number	Connector Part number	Connector Number	Cavity	Seal/Sleeve	Lock 1	Lock 2
RJ5L(+)	20	YL	193	239481R1		GS3	-	2644000R1		
RM5F(+)	18	YL	TXL	239481R1		GS3	-	2644000R1		
RM5H(+)	18	YL	TXL	239481R1		GS3	-	2644000R1		
RM5L(+)	20	YL	193	239481R1		GS3	-	2644000R1		
RR5F(+)	18	YL	TXL	239481R1		GS3	-	2644000R1		
RR5H(+)	18	YL	TXL	239481R1		GS3	-	2644000R1		
RR5L(+)	20	YL	193	239481R1		GS3	-	2644000R1		
RS5F(+)	18	YL	TXL	239481R1		GS3	-	2644000R1		
RS5H(+)	18	YL	TXL	239481R1		GS3	-	2644000R1		
RS5L(+)	20	YL	193	239481R1		GS3	-	2644000R1		
RX5F(+)	18	YL	TXL	239481R1		GS3	-	2644000R1		
RX5H(+)	18	YL	TXL	239481R1		GS3	-	2644000R1		
RX5L(+)	20	YL	193	239481R1		GS3	-	2644000R1		
SB5H(+)	18	YL	TXL	239481R1		GS3	-	2644000R1		
SB5J(+)	18	YL	TXL	239481R1		GS3	-	2644000R1		
SB5L(+)	20	YL	193	239481R1		GS3	-	2644000R1		
SC5H(+)	18	YL	TXL	239481R1		GS3	-	2644000R1		
SC5K(+)	18	YL	TXL	239481R1		GS3	-	2644000R1		
SC5L(+)	20	YL	193	239481R1		GS3	-	2644000R1		
AG14AC	12	RD	TXL	239481R1		GS30	-	2644000R1		
AG14AE	12	RD	TXL	239481R1		GS30	-	2644000R1		
AG14AH	12	RD	TXL	239481R1		GS30	-	2644000R1		
AG14K	8	RD	TXL	239481R1		GS30	-	2644000R1		
AL14K	8	RD	TXL	239481R1		GS30	-	2644000R1		
AG14AJ	12	RD	TXL	239481R1		GS31	-	2644000R1		
AG14AK	12	RD	TXL	239481R1		GS31	-	2644000R1		
AG14AL	12	RD	TXL	239481R1		GS31	-	2644000R1		
AG14AM	12	RD	TXL	239481R1		GS31	-	2644000R1		
AG14AT	12	RD	TXL	239481R1		GS31	-	2644000R1		
AG14M	8	RD	TXL	239481R1		GS31	-	2644000R1		
AL14AJ	12	RD	TXL	239481R1		GS31	-	2644000R1		
AL14AK	12	RD	TXL	239481R1		GS31	-	2644000R1		
AL14AL	12	RD	TXL	239481R1		GS31	-	2644000R1		
AL14AM	12	RD	TXL	239481R1		GS31	-	2644000R1		
AL14AT	12	RD	TXL	239481R1		GS31	-	2644000R1		
AL14M	8	RD	TXL	239481R1		GS31	-	2644000R1		
EE11-GDJ	18	WH	TXL	239481R1		GS32	-	2644000R1		
GJ11-GDA	18	WH	TXL	239481R1		GS32	-	2644000R1		
6K166B	20	LTGN	TXL	239481R1		GS32	-	2644000R1		
6K166BA	20	LTGN	TXL	239481R1		GS32	-	2644000R1		
AG14AV	12	RD	TXL	239481R1		GS33	-	2644000R1		
AG14N	10	RD	TXL	239481R1		GS33	-	2644000R1		
AG14R	12	RD	TXL	239481R1		GS33	-	2644000R1		
AG14XS	16	RD	GXL	239481R1		GS33	-	2644000R1		
AL14AV	12	RD	TXL	239481R1		GS33	-	2644000R1		
AL14R	12	RD	TXL	239481R1		GS33	-	2644000R1		
AL14X	12	RD	TXL	239481R1		GS33	-	2644000R1		
AL14Y	12	RD	TXL	239481R1		GS33	-	2644000R1		
AL14KA	8	RD	TXL	505040C1		GS33	-	2644027R1		
AL14KAA	12	RD	TXL	505040C1		GS33	-	2644027R1		
AL14KAB	12	RD	TXL	505040C1		GS33	-	2644027R1		
AL14KAC	12	RD	TXL	505040C1		GS33	-	2644027R1		

Circuit Number	Gauge	Color	Insulation	Terminal / Splice Number	Connector Part number	Connector Number	Cavity	Seal/Sleeve	Lock 1	Lock 2
AL14KAD	12	RD	TXL	505040C1		GS33	-	2644027R1		
AL14KAE	12	RD	TXL	505040C1		GS33	-	2644027R1		
NJ14KA	8	RD	TXL	505040C1		GS33	-	2644027R1		
NJ14KAA	12	RD	TXL	505040C1		GS33	-	2644027R1		
NJ14KAB	12	RD	TXL	505040C1		GS33	-	2644027R1		
NJ14KAC	12	RD	TXL	505040C1		GS33	-	2644027R1		
NJ14KAD	12	RD	TXL	505040C1		GS33	-	2644027R1		
NJ14KAE	12	RD	TXL	505040C1		GS33	-	2644027R1		
NJ14S	18	RD	TXL	505040C1		GS33	-	2644027R1		
AA82	16	GY	TXL	382181C1		GS34	-	2644000R1		
AA82D	16	GY	TXL	382181C1		GS34	-	2644000R1		
AA82	16	GY	TXL	239481R1		GS34	-	2644000R1		
AA82D	16	GY	TXL	239481R1		GS34	-	2644000R1		
FR94TV	12	GY	TXL	382181C1		GS35	-	2644000R1		
FR94TV1	16	GY	TXL	382181C1		GS35	-	2644000R1		
FR94TV2	16	GY	TXL	382181C1		GS35	-	2644000R1		
FR94TV	12	GY	TXL	382181C1		GS35	-	2644000R1		
FR94TV1	16	GY	TXL	382181C1		GS35	-	2644000R1		
FR94TV2	16	GY	TXL	382181C1		GS35	-	2644000R1		
CS67COG	18	GY	TXL	239481R1		GS36	-	2644000R1		
CS67COG1	18	GY	TXL	239481R1		GS36	-	2644000R1		
CS67COG2	18	GY	TXL	239481R1		GS36	-	2644000R1		
FR72EC	18	OR	TXL	239481R1		GS36	-	2644000R1		
FR72ED	18	OR	TXL	239481R1		GS36	-	2644000R1		
YK67COG	18	GY	TXL	239481R1		GS36	-	2644000R1		
YK67COG1	18	GY	TXL	239481R1		GS36	-	2644000R1		
YK67COG2	18	GY	TXL	239481R1		GS36	-	2644000R1		
CS67COG	18	GY	TXL	239481R1		GS36	-	2644000R1		
CS67COG1	20	GY	TXL	239481R1		GS36	-	2644000R1		
CS67COG2	20	GY	TXL	239481R1		GS36	-	2644000R1		
FR72EC	20	OR	TXL	239481R1		GS36	-	2644000R1		
FR72ED	20	OR	TXL	239481R1		GS36	-	2644000R1		
YK67COG	18	GY	TXL	239481R1		GS36	-	2644000R1		
YK67COG1	18	GY	TXL	239481R1		GS36	-	2644000R1		
YK67COG2	18	GY	TXL	239481R1		GS36	-	2644000R1		
FR11-GB	18	WH	TXL	239481R1		GS37	-	2644000R1		
FR72-GB1	18	WH	TXL	239481R1		GS37	-	2644000R1		
FR72-GB2	18	WH	TXL	239481R1		GS37	-	2644000R1		
FR11-GB	18	WH	TXL	239481R1		GS37	-	2644000R1		
FR72-GB1	20	WH	TXL	239481R1		GS37	-	2644000R1		
FR72-GB2	20	WH	TXL	239481R1		GS37	-	2644000R1		
FR94T	12	GY	TXL	382182C1		GS38	-	2644000R1		
FR94T	12	GY	TXL	382182C1		GS38	-	2644000R1		
HF94T	12	GY	TXL	505040C1		GS39	-	2644027R1		
HF94TT2	14	GY	TXL	505040C1		GS39	-	2644027R1		
HG94T	12	GY	TXL	505040C1		GS39	-	2644027R1		
HG94TT2	14	GY	TXL	505040C1		GS39	-	2644027R1		
HF94T	12	GY	TXL	505040C1		GS39	-	2644027R1		
HF94TT2	18	GY	TXL	505040C1		GS39	-	2644027R1		
HG94T	12	GY	TXL	505040C1		GS39	-	2644027R1		
HG94TT2	18	GY	TXL	505040C1		GS39	-	2644027R1		
3D5H(-)	18	GN	TXL	239481R1		GS4	-	2644000R1		

Circuit Number	Gauge	Color	Insulation	Terminal / Splice Number	Connector Part number	Connector Number	Cavity	Seal/Sleeve	Lock 1	Lock 2
3D5K(-)	18	GN	TXL	239481R1		GS4	-	2644000R1		
3D5L(-)	20	GN	193	239481R1		GS4	-	2644000R1		
3M5H(-)	18	GN	TXL	239481R1		GS4	-	2644000R1		
3M5K(-)	18	GN	TXL	239481R1		GS4	-	2644000R1		
3M5L(-)	20	GN	193	239481R1		GS4	-	2644000R1		
9L5H(-)	18	GN	TXL	239481R1		GS4	-	2644000R1		
9L5L(-)	20	GN	193	239481R1		GS4	-	2644000R1		
9L5M(-)	18	GN	TXL	239481R1		GS4	-	2644000R1		
9V5H(-)	18	GN	TXL	239481R1		GS4	-	2644000R1		
9V5L(-)	20	GN	193	239481R1		GS4	-	2644000R1		
9V5M(-)	18	GN	TXL	239481R1		GS4	-	2644000R1		
JC5H(-)	18	GN	TXL	239481R1		GS4	-	2644000R1		
JC5L(-)	20	GN	193	239481R1		GS4	-	2644000R1		
JC5M(-)	18	GN	TXL	239481R1		GS4	-	2644000R1		
JD5H(-)	18	GN	TXL	239481R1		GS4	-	2644000R1		
JD5K(-)	18	GN	TXL	239481R1		GS4	-	2644000R1		
JD5L(-)	20	GN	193	239481R1		GS4	-	2644000R1		
LT5C(-)	18	GN	TXL	239481R1		GS4	-	2644000R1		
LT5D(-)	20	GN	193	239481R1		GS4	-	2644000R1		
LT5E(-)	18	GN	TXL	239481R1		GS4	-	2644000R1		
RD5F(-)	18	GN	TXL	239481R1		GS4	-	2644000R1		
RD5H(-)	18	GN	TXL	239481R1		GS4	-	2644000R1		
RD5K(-)	18	GN	TXL	239481R1		GS4	-	2644000R1		
RD5L(-)	20	GN	193	239481R1		GS4	-	2644000R1		
RJ5F(-)	18	GN	TXL	239481R1		GS4	-	2644000R1		
RJ5H(-)	18	GN	TXL	239481R1		GS4	-	2644000R1		
RJ5L(-)	20	GN	193	239481R1		GS4	-	2644000R1		
RM5F(-)	18	GN	TXL	239481R1		GS4	-	2644000R1		
RM5H(-)	18	GN	TXL	239481R1		GS4	-	2644000R1		
RM5L(-)	20	GN	193	239481R1		GS4	-	2644000R1		
RS5F(-)	18	GN	TXL	239481R1		GS4	-	2644000R1		
RS5H(-)	18	GN	TXL	239481R1		GS4	-	2644000R1		
RS5L(-)	20	GN	193	239481R1		GS4	-	2644000R1		
SB5H(-)	18	GN	TXL	239481R1		GS4	-	2644000R1		
SB5J(-)	18	GN	TXL	239481R1		GS4	-	2644000R1		
SB5L(-)	20	GN	193	239481R1		GS4	-	2644000R1		
SC5H(-)	18	GN	TXL	239481R1		GS4	-	2644000R1		
SC5K(-)	18	GN	TXL	239481R1		GS4	-	2644000R1		
SC5L(-)	20	GN	193	239481R1		GS4	-	2644000R1		
2L5F(-)	18	GN	TXL	239481R1		GS4	-	2644000R1		
2L5H(-)	18	GN	TXL	239481R1		GS4	-	2644000R1		
2L5L(-)	20	GN	193	239481R1		GS4	-	2644000R1		
2W5F(-)	18	GN	TXL	239481R1		GS4	-	2644000R1		
2W5H(-)	18	GN	TXL	239481R1		GS4	-	2644000R1		
2W5L(-)	20	GN	193	239481R1		GS4	-	2644000R1		
2Y5H(-)	18	GN	TXL	239481R1		GS4	-	2644000R1		
2Y5L(-)	20	GN	193	239481R1		GS4	-	2644000R1		
2Y5PJ(-)	18	GN	TXL	239481R1		GS4	-	2644000R1		
2Z5F(-)	18	GN	TXL	239481R1		GS4	-	2644000R1		
2Z5H(-)	18	GN	TXL	239481R1		GS4	-	2644000R1		
2Z5L(-)	20	GN	193	239481R1		GS4	-	2644000R1		
3D5H(-)	18	GN	TXL	239481R1		GS4	-	2644000R1		

Circuit Number	Gauge	Color	Insulation	Terminal / Splice Number	Connector Part number	Connector Number	Cavity	Seal/Sleeve	Lock 1	Lock 2
3D5K(-)	18	GN	TXL	239481R1		GS4	-	2644000R1		
3D5L(-)	20	GN	193	239481R1		GS4	-	2644000R1		
3E5H(-)	18	GN	TXL	239481R1		GS4	-	2644000R1		
3E5J(-)	18	GN	TXL	239481R1		GS4	-	2644000R1		
3E5L(-)	20	GN	193	239481R1		GS4	-	2644000R1		
3J5H(-)	18	GN	TXL	239481R1		GS4	-	2644000R1		
3J5L(-)	20	GN	193	239481R1		GS4	-	2644000R1		
3J5W(-)	18	GN	TXL	239481R1		GS4	-	2644000R1		
3M5H(-)	18	GN	TXL	239481R1		GS4	-	2644000R1		
3M5K(-)	18	GN	TXL	239481R1		GS4	-	2644000R1		
3M5L(-)	20	GN	193	239481R1		GS4	-	2644000R1		
3Z5H(-)	18	GN	TXL	239481R1		GS4	-	2644000R1		
3Z5K(-)	18	GN	TXL	239481R1		GS4	-	2644000R1		
3Z5L(-)	20	GN	193	239481R1		GS4	-	2644000R1		
4J5F(-)	18	GN	TXL	239481R1		GS4	-	2644000R1		
4J5H(-)	18	GN	TXL	239481R1		GS4	-	2644000R1		
4J5L(-)	20	GN	193	239481R1		GS4	-	2644000R1		
4N5H(-)	18	GN	TXL	239481R1		GS4	-	2644000R1		
4N5L(-)	20	GN	193	239481R1		GS4	-	2644000R1		
4N5PJ(-)	18	GN	TXL	239481R1		GS4	-	2644000R1		
9L5H(-)	18	GN	TXL	239481R1		GS4	-	2644000R1		
9L5L(-)	20	GN	193	239481R1		GS4	-	2644000R1		
9L5M(-)	18	GN	TXL	239481R1		GS4	-	2644000R1		
9V5H(-)	18	GN	TXL	239481R1		GS4	-	2644000R1		
9V5L(-)	20	GN	193	239481R1		GS4	-	2644000R1		
9V5M(-)	18	GN	TXL	239481R1		GS4	-	2644000R1		
9W5H(-)	18	GN	TXL	239481R1		GS4	-	2644000R1		
9W5L(-)	20	GN	193	239481R1		GS4	-	2644000R1		
9W5M(-)	18	GN	TXL	239481R1		GS4	-	2644000R1		
JC5H(-)	18	GN	TXL	239481R1		GS4	-	2644000R1		
JC5L(-)	20	GN	193	239481R1		GS4	-	2644000R1		
JC5M(-)	18	GN	TXL	239481R1		GS4	-	2644000R1		
JD5H(-)	18	GN	TXL	239481R1		GS4	-	2644000R1		
JD5K(-)	18	GN	TXL	239481R1		GS4	-	2644000R1		
JD5L(-)	20	GN	193	239481R1		GS4	-	2644000R1		
LT5C(-)	18	GN	TXL	239481R1		GS4	-	2644000R1		
LT5D(-)	20	GN	193	239481R1		GS4	-	2644000R1		
LT5E(-)	18	GN	TXL	239481R1		GS4	-	2644000R1		
RD5F(-)	18	GN	TXL	239481R1		GS4	-	2644000R1		
RD5H(-)	18	GN	TXL	239481R1		GS4	-	2644000R1		
RD5L(-)	20	GN	193	239481R1		GS4	-	2644000R1		
RJ5F(-)	18	GN	TXL	239481R1		GS4	-	2644000R1		
RJ5H(-)	18	GN	TXL	239481R1		GS4	-	2644000R1		
RJ5L(-)	20	GN	193	239481R1		GS4	-	2644000R1		
RM5F(-)	18	GN	TXL	239481R1		GS4	-	2644000R1		
RM5H(-)	18	GN	TXL	239481R1		GS4	-	2644000R1		
RM5L(-)	20	GN	193	239481R1		GS4	-	2644000R1		
RR5F(-)	18	GN	TXL	239481R1		GS4	-	2644000R1		
RR5H(-)	18	GN	TXL	239481R1		GS4	-	2644000R1		
RR5L(-)	20	GN	193	239481R1		GS4	-	2644000R1		
RS5F(-)	18	GN	TXL	239481R1		GS4	-	2644000R1		
RS5H(-)	18	GN	TXL	239481R1		GS4	-	2644000R1		

Circuit Number	Gauge	Color	Insulation	Terminal / Splice Number	Connector Part number	Connector Number	Cavity	Seal/Sleeve	Lock 1	Lock 2
RS5L(-)	20	GN	193	239481R1		GS4	-	2644000R1		
RX5F(-)	18	GN	TXL	239481R1		GS4	-	2644000R1		
RX5H(-)	18	GN	TXL	239481R1		GS4	-	2644000R1		
RX5L(-)	20	GN	193	239481R1		GS4	-	2644000R1		
SB5H(-)	18	GN	TXL	239481R1		GS4	-	2644000R1		
SB5J(-)	18	GN	TXL	239481R1		GS4	-	2644000R1		
SB5L(-)	20	GN	193	239481R1		GS4	-	2644000R1		
SC5H(-)	18	GN	TXL	239481R1		GS4	-	2644000R1		
SC5K(-)	18	GN	TXL	239481R1		GS4	-	2644000R1		
SC5L(-)	20	GN	193	239481R1		GS4	-	2644000R1		
5E13AB	18	PK	TXL	239481R1		GS40	-	2644000R1		
5E13BA	18	PK	TXL	239481R1		GS40	-	2644000R1		
5E13C	18	PK	TXL	239481R1		GS40	-	2644000R1		
5E13AB	18	PK	TXL	239481R1		GS40	-	2644000R1		
5E13BA	18	PK	TXL	239481R1		GS40	-	2644000R1		
5E13C	18	PK	TXL	239481R1		GS40	-	2644000R1		
AE11-GCC	14	WH	TXL	382181C1		GS41	-	2644000R1		
AE11-GCD	14	WH	TXL	382181C1		GS41	-	2644000R1		
AE11-GCE	14	WH	TXL	382181C1		GS41	-	2644000R1		
AE11-GCC	14	WH	TXL	382181C1		GS41	-	2644000R1		
AE11-GCD	14	WH	TXL	382181C1		GS41	-	2644000R1		
AE11-GCE	14	WH	TXL	382181C1		GS41	-	2644000R1		
AE86C	14	LTGN	TXL	382181C1		GS42	-	2644000R1		
AE86C1	14	LTGN	TXL	382181C1		GS42	-	2644000R1		
AE86C2	14	LTGN	TXL	382181C1		GS42	-	2644000R1		
AE86C	14	LTGN	TXL	382181C1		GS42	-	2644000R1		
AE86C1	14	LTGN	TXL	382181C1		GS42	-	2644000R1		
AE86C2	14	LTGN	TXL	382181C1		GS42	-	2644000R1		
3T71	16	OR	TXL	382182C1		GS43	-	2644000R1		
3T71A	16	OR	TXL	382182C1		GS43	-	2644000R1		
3T71B	18	OR	TXL	382182C1		GS43	-	2644000R1		
GM71	16	OR	TXL	382182C1		GS43	-	2644000R1		
GM71A	16	OR	TXL	382182C1		GS43	-	2644000R1		
GM71B	18	OR	TXL	382182C1		GS43	-	2644000R1		
3T71	16	OR	TXL	239481R1		GS43	-	2644000R1		
3T71A	16	OR	TXL	239481R1		GS43	-	2644000R1		
3T71B	20	OR	TXL	239481R1		GS43	-	2644000R1		
GM71	16	OR	TXL	239481R1		GS43	-	2644000R1		
GM71A	16	OR	TXL	239481R1		GS43	-	2644000R1		
GM71B	20	OR	TXL	239481R1		GS43	-	2644000R1		
BK71B	16	OR	TXL	382182C1		GS44	-	2644000R1		
BK92RAB	18	TN	TXL	382182C1		GS44	-	2644000R1		
GM71BA	16	OR	TXL	382182C1		GS44	-	2644000R1		
GM71BC	18	OR	TXL	382182C1		GS44	-	2644000R1		
BK71B	16	OR	TXL	382182C1		GS44	-	2644000R1		
BK92RAB	18	TN	TXL	382182C1		GS44	-	2644000R1		
GM71BA	16	OR	TXL	382182C1		GS44	-	2644000R1		
GM71BC	18	OR	TXL	382182C1		GS44	-	2644000R1		
CF13SD	18	PK	TXL	382181C1		GS45	-	2644000R1		
CF13SD1	18	PK	TXL	382181C1		GS45	-	2644000R1		
CF70D	18	GY	TXL	382181C1		GS45	-	2644000R1		
CG13SD	18	PK	TXL	382181C1		GS45	-	2644000R1		

Circuit Number	Gauge	Color	Insulation	Terminal / Splice Number	Connector Part number	Connector Number	Cavity	Seal/Sleeve	Lock 1	Lock 2
CG13SD1	18	PK	TXL	382181C1		GS45	-	2644000R1		
CG70D	18	OR	TXL	382181C1		GS45	-	2644000R1		
CF13SD	18	PK	TXL	382181C1		GS45	-	2644000R1		
CF13SD1	18	PK	TXL	382181C1		GS45	-	2644000R1		
CF70D	18	GY	TXL	382181C1		GS45	-	2644000R1		
CG13SD	18	PK	TXL	382181C1		GS45	-	2644000R1		
CG13SD1	18	PK	TXL	382181C1		GS45	-	2644000R1		
CG70D	18	OR	TXL	382181C1		GS45	-	2644000R1		
DX14VB	12	RD	TXL	382182C1		GS46	-	2644000R1		
DX14VBA	10	RD	TXL	382182C1		GS46	-	2644000R1		
JY11-GA	18	WH	TXL	239481R1		GS47	-	2644000R1		
JY11-GC	18	WH	TXL	239481R1		GS47	-	2644000R1		
JY11-GD	18	WH	TXL	239481R1		GS47	-	2644000R1		
JY11-GA	18	WH	TXL	239481R1		GS47	-	2644000R1		
JY11-GC	20	WH	TXL	239481R1		GS47	-	2644000R1		
JY11-GD	18	WH	TXL	239481R1		GS47	-	2644000R1		
JY13	18	PK	TXL	239481R1		GS48	-	2644000R1		
JY13E	18	PK	TXL	239481R1		GS48	-	2644000R1		
JY13F	18	PK	TXL	239481R1		GS48	-	2644000R1		
JY13	18	PK	TXL	239481R1		GS48	-	2644000R1		
JY13E	20	PK	TXL	239481R1		GS48	-	2644000R1		
JY13F	18	PK	TXL	239481R1		GS48	-	2644000R1		
JY14B	18	RD	TXL	239481R1		GS49	-	2644000R1		
JY14C	18	RD	TXL	239481R1		GS49	-	2644000R1		
JY14E	18	RD	TXL	239481R1		GS49	-	2644000R1		
JY14BC	18	RD	TXL	239481R1		GS49	-	2644000R1		
JY14C	18	RD	TXL	239481R1		GS49	-	2644000R1		
JY14E	20	RD	TXL	239481R1		GS49	-	2644000R1		
3D5J(+)	18	YL	TXL	239481R1		GS5	-	2644000R1		
3D5K(+)	18	YL	TXL	239481R1		GS5	-	2644000R1		
3D5M(+)	18	YL	TXL	239481R1		GS5	-	2644000R1		
3M5J(+)	18	YL	TXL	239481R1		GS5	-	2644000R1		
3M5K(+)	18	YL	TXL	239481R1		GS5	-	2644000R1		
3M5M(+)	18	YL	TXL	239481R1		GS5	-	2644000R1		
JD5J(+)	18	YL	TXL	239481R1		GS5	-	2644000R1		
JD5K(+)	18	YL	TXL	239481R1		GS5	-	2644000R1		
JD5M(+)	18	YL	TXL	239481R1		GS5	-	2644000R1		
JG5H(+)	18	YL	TXL	239481R1		GS5	-	2644000R1		
JG5J(+)	18	YL	TXL	239481R1		GS5	-	2644000R1		
JG5K(+)	18	YL	TXL	239481R1		GS5	-	2644000R1		
LD5H(+)	18	YL	TXL	239481R1		GS5	-	2644000R1		
LD5J(+)	18	YL	TXL	239481R1		GS5	-	2644000R1		
LD5K(+)	18	YL	TXL	239481R1		GS5	-	2644000R1		
LE5H(+)	18	YL	TXL	239481R1		GS5	-	2644000R1		
LE5J(+)	18	YL	TXL	239481R1		GS5	-	2644000R1		
LE5L(+)	18	YL	TXL	239481R1		GS5	-	2644000R1		
LF5H(+)	18	YL	TXL	239481R1		GS5	-	2644000R1		
LF5J(+)	18	YL	TXL	239481R1		GS5	-	2644000R1		
LF5K(+)	18	YL	TXL	239481R1		GS5	-	2644000R1		
LS5H(+)	18	YL	TXL	239481R1		GS5	-	2644000R1		
LS5J(+)	18	YL	TXL	239481R1		GS5	-	2644000R1		
LS5K(+)	18	YL	TXL	239481R1		GS5	-	2644000R1		

Circuit Number	Gauge	Color	Insulation	Terminal / Splice Number	Connector Part number	Connector Number	Cavity	Seal/Sleeve	Lock 1	Lock 2
PZ5H(+)	18	YL	TXL	239481R1		GS5	-	2644000R1		
PZ5J(+)	18	YL	TXL	239481R1		GS5	-	2644000R1		
PZ5M(+)	18	YL	TXL	239481R1		GS5	-	2644000R1		
RD5F(+)	18	YL	TXL	239481R1		GS5	-	2644000R1		
RD5F(-)	18	GN	TXL	239481R1		GS5	-	2644000R1		
RD5J(+)	18	YL	TXL	239481R1		GS5	-	2644000R1		
RD5K(+)	18	YL	TXL	239481R1		GS5	-	2644000R1		
RS5F(+)	18	YL	TXL	239481R1		GS5	-	2644000R1		
RS5J(+)	18	YL	TXL	239481R1		GS5	-	2644000R1		
RS5K(+)	18	YL	TXL	239481R1		GS5	-	2644000R1		
RU5F(+)	18	YL	TXL	239481R1		GS5	-	2644000R1		
RU5H(+)	18	YL	TXL	239481R1		GS5	-	2644000R1		
RU5J(+)	18	YL	TXL	239481R1		GS5	-	2644000R1		
SC5J(+)	18	YL	TXL	239481R1		GS5	-	2644000R1		
SC5K(+)	18	YL	TXL	239481R1		GS5	-	2644000R1		
SC5R(+)	18	YL	TXL	239481R1		GS5	-	2644000R1		
SE5H(+)	18	YL	TXL	239481R1		GS5	-	2644000R1		
SE5J(+)	18	YL	TXL	239481R1		GS5	-	2644000R1		
SE5L(+)	18	YL	TXL	239481R1		GS5	-	2644000R1		
SN5H(+)	18	YL	TXL	239481R1		GS5	-	2644000R1		
SN5J(+)	18	YL	TXL	239481R1		GS5	-	2644000R1		
SN5K(+)	18	YL	TXL	239481R1		GS5	-	2644000R1		
SP5H(+)	18	YL	TXL	239481R1		GS5	-	2644000R1		
SP5J(+)	18	YL	TXL	239481R1		GS5	-	2644000R1		
SP5K(+)	18	YL	TXL	239481R1		GS5	-	2644000R1		
VC5J(+)	18	YL	TXL	239481R1		GS5	-	2644000R1		
VC5K(+)	18	YL	TXL	239481R1		GS5	-	2644000R1		
VC5T(+)	18	YL	TXL	239481R1		GS5	-	2644000R1		
VD5J(+)	18	YL	TXL	239481R1		GS5	-	2644000R1		
VD5K(+)	18	YL	TXL	239481R1		GS5	-	2644000R1		
VD5T(+)	18	YL	TXL	239481R1		GS5	-	2644000R1		
VE5F(+)	18	YL	TXL	239481R1		GS5	-	2644000R1		
VE5J(+)	18	YL	TXL	239481R1		GS5	-	2644000R1		
VE5T(+)	18	YL	TXL	239481R1		GS5	-	2644000R1		
VF5J(+)	18	YL	TXL	239481R1		GS5	-	2644000R1		
VF5L(+)	18	YL	TXL	239481R1		GS5	-	2644000R1		
VF5T(+)	18	YL	TXL	239481R1		GS5	-	2644000R1		
YX5J(+)	18	YL	TXL	239481R1		GS5	-	2644000R1		
YX5K(+)	18	YL	TXL	239481R1		GS5	-	2644000R1		
YX5R(+)	18	YL	TXL	239481R1		GS5	-	2644000R1		
YZ5J(+)	18	YL	TXL	239481R1		GS5	-	2644000R1		
YZ5L(+)	18	YL	TXL	239481R1		GS5	-	2644000R1		
YZ5R(+)	18	YL	TXL	239481R1		GS5	-	2644000R1		
2J5J(+)	18	YL	TXL	239481R1		GS5	-	2644000R1		
2J5L(+)	18	YL	TXL	239481R1		GS5	-	2644000R1		
2J5M(+)	18	YL	TXL	239481R1		GS5	-	2644000R1		
2L5J(+)	18	YL	TXL	239481R1		GS5	-	2644000R1		
2L5K(+)	18	YL	TXL	239481R1		GS5	-	2644000R1		
2L5V(+)	18	YL	TXL	239481R1		GS5	-	2644000R1		
2Z5J(+)	18	YL	TXL	239481R1		GS5	-	2644000R1		
2Z5K(+)	18	YL	TXL	239481R1		GS5	-	2644000R1		
2Z5V(+)	18	YL	TXL	239481R1		GS5	-	2644000R1		

Circuit Number	Gauge	Color	Insulation	Terminal / Splice Number	Connector Part number	Connector Number	Cavity	Seal/Sleeve	Lock 1	Lock 2
3C5F(+)	18	YL	TXL	239481R1		GS5	-	2644000R1		
3C5J(+)	18	YL	TXL	239481R1		GS5	-	2644000R1		
3C5PJ(+)	18	YL	TXL	239481R1		GS5	-	2644000R1		
3D5J(+)	18	YL	TXL	239481R1		GS5	-	2644000R1		
3D5K(+)	18	YL	TXL	239481R1		GS5	-	2644000R1		
3D5M(+)	18	YL	TXL	239481R1		GS5	-	2644000R1		
3J5J(+)	18	YL	TXL	239481R1		GS5	-	2644000R1		
3J5K(+)	18	YL	TXL	239481R1		GS5	-	2644000R1		
3J5PJ(+)	18	YL	TXL	239481R1		GS5	-	2644000R1		
3M5J(+)	18	YL	TXL	239481R1		GS5	-	2644000R1		
3M5K(+)	18	YL	TXL	239481R1		GS5	-	2644000R1		
3M5M(+)	18	YL	TXL	239481R1		GS5	-	2644000R1		
3U5J(+)	18	YL	TXL	239481R1		GS5	-	2644000R1		
3U5L(+)	18	YL	TXL	239481R1		GS5	-	2644000R1		
3U5T(+)	18	YL	TXL	239481R1		GS5	-	2644000R1		
3W5J(+)	18	YL	TXL	239481R1		GS5	-	2644000R1		
3W5L(+)	18	YL	TXL	239481R1		GS5	-	2644000R1		
3W5PJ(+)	18	YL	TXL	239481R1		GS5	-	2644000R1		
3Z5J(+)	18	YL	TXL	239481R1		GS5	-	2644000R1		
3Z5K(+)	18	YL	TXL	239481R1		GS5	-	2644000R1		
3Z5M(+)	18	YL	TXL	239481R1		GS5	-	2644000R1		
4E5J(+)	18	YL	TXL	239481R1		GS5	-	2644000R1		
4E5L(+)	18	YL	TXL	239481R1		GS5	-	2644000R1		
4E5M(+)	18	YL	TXL	239481R1		GS5	-	2644000R1		
4J5J(+)	18	YL	TXL	239481R1		GS5	-	2644000R1		
4J5K(+)	18	YL	TXL	239481R1		GS5	-	2644000R1		
4J5V(+)	18	YL	TXL	239481R1		GS5	-	2644000R1		
JD5J(+)	18	YL	TXL	239481R1		GS5	-	2644000R1		
JD5K(+)	18	YL	TXL	239481R1		GS5	-	2644000R1		
JD5M(+)	18	YL	TXL	239481R1		GS5	-	2644000R1		
JG5H(+)	18	YL	TXL	239481R1		GS5	-	2644000R1		
JG5J(+)	18	YL	TXL	239481R1		GS5	-	2644000R1		
JG5K(+)	18	YL	TXL	239481R1		GS5	-	2644000R1		
LD5H(+)	18	YL	TXL	239481R1		GS5	-	2644000R1		
LD5J(+)	18	YL	TXL	239481R1		GS5	-	2644000R1		
LD5K(+)	18	YL	TXL	239481R1		GS5	-	2644000R1		
LE5H(+)	18	YL	TXL	239481R1		GS5	-	2644000R1		
LE5J(+)	18	YL	TXL	239481R1		GS5	-	2644000R1		
LE5L(+)	18	YL	TXL	239481R1		GS5	-	2644000R1		
LF5H(+)	18	YL	TXL	239481R1		GS5	-	2644000R1		
LF5J(+)	18	YL	TXL	239481R1		GS5	-	2644000R1		
LF5K(+)	18	YL	TXL	239481R1		GS5	-	2644000R1		
LS5H(+)	18	YL	TXL	239481R1		GS5	-	2644000R1		
LS5J(+)	18	YL	TXL	239481R1		GS5	-	2644000R1		
LS5K(+)	18	YL	TXL	239481R1		GS5	-	2644000R1		
PV5H(+)	18	YL	TXL	239481R1		GS5	-	2644000R1		
PV5J(+)	18	YL	TXL	239481R1		GS5	-	2644000R1		
PV5M(+)	18	YL	TXL	239481R1		GS5	-	2644000R1		
PZ5H(+)	18	YL	TXL	239481R1		GS5	-	2644000R1		
PZ5J(+)	18	YL	TXL	239481R1		GS5	-	2644000R1		
PZ5M(+)	18	YL	TXL	239481R1		GS5	-	2644000R1		
RD5F(+)	18	YL	TXL	239481R1		GS5	-	2644000R1		

Circuit Number	Gauge	Color	Insulation	Terminal / Splice Number	Connector Part number	Connector Number	Cavity	Seal/Sleeve	Lock 1	Lock 2
RD5J(+)	18	YL	TXL	239481R1		GS5	-	2644000R1		
RD5K(+)	18	YL	TXL	239481R1		GS5	-	2644000R1		
RS5F(+)	18	YL	TXL	239481R1		GS5	-	2644000R1		
RS5J(+)	18	YL	TXL	239481R1		GS5	-	2644000R1		
RS5K(+)	18	YL	TXL	239481R1		GS5	-	2644000R1		
RU5F(+)	18	YL	TXL	239481R1		GS5	-	2644000R1		
RU5H(+)	18	YL	TXL	239481R1		GS5	-	2644000R1		
RU5J(+)	18	YL	TXL	239481R1		GS5	-	2644000R1		
RX5F(+)	18	YL	TXL	239481R1		GS5	-	2644000R1		
RX5J(+)	18	YL	TXL	239481R1		GS5	-	2644000R1		
RX5K(+)	18	YL	TXL	239481R1		GS5	-	2644000R1		
SC5J(+)	18	YL	TXL	239481R1		GS5	-	2644000R1		
SC5K(+)	18	YL	TXL	239481R1		GS5	-	2644000R1		
SC5PJ(+)	18	YL	TXL	239481R1		GS5	-	2644000R1		
SE5H(+)	18	YL	TXL	239481R1		GS5	-	2644000R1		
SE5J(+)	18	YL	TXL	239481R1		GS5	-	2644000R1		
SE5L(+)	18	YL	TXL	239481R1		GS5	-	2644000R1		
SN5H(+)	18	YL	TXL	239481R1		GS5	-	2644000R1		
SN5J(+)	18	YL	TXL	239481R1		GS5	-	2644000R1		
SN5K(+)	18	YL	TXL	239481R1		GS5	-	2644000R1		
SP5H(+)	18	YL	TXL	239481R1		GS5	-	2644000R1		
SP5J(+)	18	YL	TXL	239481R1		GS5	-	2644000R1		
SP5K(+)	18	YL	TXL	239481R1		GS5	-	2644000R1		
SR5H(+)	18	YL	TXL	239481R1		GS5	-	2644000R1		
SR5J(+)	18	YL	TXL	239481R1		GS5	-	2644000R1		
SR5K(+)	18	YL	TXL	239481R1		GS5	-	2644000R1		
VC5J(+)	18	YL	TXL	239481R1		GS5	-	2644000R1		
VC5K(+)	18	YL	TXL	239481R1		GS5	-	2644000R1		
VC5T(+)	18	YL	TXL	239481R1		GS5	-	2644000R1		
VD5J(+)	18	YL	TXL	239481R1		GS5	-	2644000R1		
VD5K(+)	18	YL	TXL	239481R1		GS5	-	2644000R1		
VD5T(+)	18	YL	TXL	239481R1		GS5	-	2644000R1		
VE5F(+)	18	YL	TXL	239481R1		GS5	-	2644000R1		
VE5J(+)	18	YL	TXL	239481R1		GS5	-	2644000R1		
VE5T(+)	18	YL	TXL	239481R1		GS5	-	2644000R1		
VF5T(+)	18	YL	TXL	239481R1		GS5	-	2644000R1		
VG5J(+)	18	YL	TXL	239481R1		GS5	-	2644000R1		
VG5L(+)	18	YL	TXL	239481R1		GS5	-	2644000R1		
VG5T(+)	18	YL	TXL	239481R1		GS5	-	2644000R1		
YX5J(+)	18	YL	TXL	239481R1		GS5	-	2644000R1		
YX5K(+)	18	YL	TXL	239481R1		GS5	-	2644000R1		
YX5PJ(+)	18	YL	TXL	239481R1		GS5	-	2644000R1		
YZ5J(+)	18	YL	TXL	239481R1		GS5	-	2644000R1		
YZ5L(+)	18	YL	TXL	239481R1		GS5	-	2644000R1		
YZ5PJ(+)	18	YL	TXL	239481R1		GS5	-	2644000R1		
FB94TT4	14	GY	TXL	382182C1		GS50	-	2644000R1		
FB94U	12	GY	TXL	382182C1		GS50	-	2644000R1		
FB94TT4	16	GY	TXL	382182C1		GS50	-	2644000R1		
FB94U	12	GY	TXL	382182C1		GS50	-	2644000R1		
HN75AR	18	LTGN	GXL	239481R1		GS51	-	2644000R1		
HN75AT	18	LTGN	GXL	239481R1		GS51	-	2644000R1		
HN75HB	18	LTGN	GXL	239481R1		GS51	-	2644000R1		

Circuit Number	Gauge	Color	Insulation	Terminal / Splice Number	Connector Part number	Connector Number	Cavity	Seal/Sleeve	Lock 1	Lock 2
HN75HC	18	LTGN	GXL	239481R1		GS51	-	2644000R1		
HN75HD	18	LTGN	GXL	239481R1		GS51	-	2644000R1		
HN75AR	20	LTGN	TXL	239481R1		GS51	-	2644000R1		
HN75AT	20	LTGN	TXL	239481R1		GS51	-	2644000R1		
HN75HB	20	LTGN	TXL	239481R1		GS51	-	2644000R1		
HN75HC	20	LTGN	TXL	239481R1		GS51	-	2644000R1		
HN75HD	20	LTGN	TXL	239481R1		GS51	-	2644000R1		
AG14X	12	RD	TXL	505040C1		GS52	-	2644027R1		
AG14XY	8	RD	GXL	505040C1		GS52	-	2644027R1		
AG14Y	12	RD	TXL	505040C1		GS52	-	2644027R1		
AL14AJ	12	RD	TXL	1613947C1		GS52	-	2644000R1		
AL14AK	12	RD	TXL	1613947C1		GS52	-	2644000R1		
AL14AM	12	RD	TXL	1613947C1		GS52	-	2644000R1		
AL14AP	12	RD	TXL	1613947C1		GS52	-	2644000R1		
AL14AT	12	RD	TXL	1613947C1		GS52	-	2644000R1		
AL14M	6	RD	SGX	1613947C1		GS52	-	2644000R1		
NJ14AJ	12	RD	TXL	1613947C1		GS52	-	2644000R1		
NJ14AK	12	RD	TXL	1613947C1		GS52	-	2644000R1		
NJ14AM	12	RD	TXL	1613947C1		GS52	-	2644000R1		
NJ14AP	12	RD	TXL	1613947C1		GS52	-	2644000R1		
NJ14AT	12	RD	TXL	1613947C1		GS52	-	2644000R1		
NJ14M	6	RD	SGX	1613947C1		GS52	-	2644000R1		
9S11-GB	18	WH	GXL	239481R1		GS53	-	2644000R1		
9S11-GBA	16	WH	GXL	239481R1		GS53	-	2644000R1		
9S11-GBB	16	WH	GXL	239481R1		GS53	-	2644000R1		
AL14AB	12	RD	TXL	505040C1		GS53	-	2644027R1		
AL14AC	12	RD	TXL	505040C1		GS53	-	2644027R1		
AL14AD	12	RD	TXL	505040C1		GS53	-	2644027R1		
AL14AE	12	RD	TXL	505040C1		GS53	-	2644027R1		
AL14AF	12	RD	TXL	505040C1		GS53	-	2644027R1		
AL14H	8	RD	TXL	505040C1		GS53	-	2644027R1		
NJ14AB	12	RD	TXL	505040C1		GS53	-	2644027R1		
NJ14AC	12	RD	TXL	505040C1		GS53	-	2644027R1		
NJ14AD	12	RD	TXL	505040C1		GS53	-	2644027R1		
NJ14AE	12	RD	TXL	505040C1		GS53	-	2644027R1		
NJ14AF	12	RD	TXL	505040C1		GS53	-	2644027R1		
NJ14H	8	RD	TXL	505040C1		GS53	-	2644027R1		
9S11-GA	18	WH	GXL	239481R1		GS54	-	2644000R1		
9S11-GB	18	WH	GXL	239481R1		GS54	-	2644000R1		
9S11-GC	18	WH	GXL	239481R1		GS54	-	2644000R1		
AL14F	8	RD	TXL	1613947C1		GS54	-	2644000R1		
AL14G	8	RD	TXL	1613947C1		GS54	-	2644000R1		
NJ14F	8	RD	TXL	1613947C1		GS54	-	2644000R1		
NJ14G	8	RD	TXL	1613947C1		GS54	-	2644000R1		
9S74J	16	RD	GXL	382181C1		GS55	-	2644000R1		
9S74RB2	16	RD	GXL	382181C1		GS55	-	2644000R1		
9S74RBA	16	RD	GXL	382181C1		GS55	-	2644000R1		
9S74RBB	16	RD	GXL	382181C1		GS55	-	2644000R1		
YY13P	8	PK	GXL	239481R1		GS55	-	2644000R1		
YY13PA	12	PK	TXL	239481R1		GS55	-	2644000R1		
YY13PB	12	PK	TXL	239481R1		GS55	-	2644000R1		
YY13PC	12	PK	TXL	239481R1		GS55	-	2644000R1		

Circuit Number	Gauge	Color	Insulation	Terminal / Splice Number	Connector Part number	Connector Number	Cavity	Seal/Sleeve	Lock 1	Lock 2
YY13PD	12	PK	TXL	239481R1		GS55	-	2644000R1		
YY13PE	12	PK	TXL	239481R1		GS55	-	2644000R1		
YY13PF	12	PK	TXL	239481R1		GS55	-	2644000R1		
9S74RA	12	RD	GXL	382182C1		GS56	-	2644000R1		
9S74RB	16	RD	GXL	382182C1		GS56	-	2644000R1		
9S74RC	12	RD	GXL	382182C1		GS56	-	2644000R1		
AB12MA	12	LTBL	TXL	468358C1		GS56	-	2644000R1		
AB12MB	12	LTBL	TXL	468358C1		GS56	-	2644000R1		
PY5H(+)	18	YL	TXL	239481R1		GS57	-	2644000R1		
PY5J(+)	18	YL	TXL	239481R1		GS57	-	2644000R1		
PY5K(+)	20	YL	193	239481R1		GS57	-	2644000R1		
RG5F(+)	18	YL	TXL	239481R1		GS57	-	2644000R1		
RG5H(+)	18	YL	TXL	239481R1		GS57	-	2644000R1		
RG5J(+)	20	YL	193	239481R1		GS57	-	2644000R1		
SD5H(+)	18	YL	TXL	239481R1		GS57	-	2644000R1		
SD5J(+)	18	YL	TXL	239481R1		GS57	-	2644000R1		
SD5K(+)	20	YL	193	239481R1		GS57	-	2644000R1		
PY5H(-)	18	GN	TXL	239481R1		GS58	-	2644000R1		
PY5J(-)	18	GN	TXL	239481R1		GS58	-	2644000R1		
PY5K(-)	20	GN	193	239481R1		GS58	-	2644000R1		
RG5F(-)	18	GN	TXL	239481R1		GS58	-	2644000R1		
RG5H(-)	18	GN	TXL	239481R1		GS58	-	2644000R1		
RG5J(-)	20	GN	193	239481R1		GS58	-	2644000R1		
SD5H(-)	18	GN	TXL	239481R1		GS58	-	2644000R1		
SD5J(-)	18	GN	TXL	239481R1		GS58	-	2644000R1		
SD5K(-)	20	GN	193	239481R1		GS58	-	2644000R1		
YJ11-G	20	WH	TXL	239481R1		GS59	-	2644000R1		
YJ11-GA	20	WH	TXL	239481R1		GS59	-	2644000R1		
YJ11-GB	20	WH	TXL	239481R1		GS59	-	2644000R1		
4A74RA	12	LTGN	TXL	382182C1		GS59	-	2644000R1		
4A74RB	16	LTGN	TXL	382182C1		GS59	-	2644000R1		
4A74RC	12	LTGN	TXL	382182C1		GS59	-	2644000R1		
3D5J(-)	18	GN	TXL	239481R1		GS6	-	2644000R1		
3D5K(-)	18	GN	TXL	239481R1		GS6	-	2644000R1		
3D5M(-)	18	GN	TXL	239481R1		GS6	-	2644000R1		
3M5J(-)	18	GN	TXL	239481R1		GS6	-	2644000R1		
3M5K(-)	18	GN	TXL	239481R1		GS6	-	2644000R1		
3M5M(-)	18	GN	TXL	239481R1		GS6	-	2644000R1		
JD5J(-)	18	GN	TXL	239481R1		GS6	-	2644000R1		
JD5K(-)	18	GN	TXL	239481R1		GS6	-	2644000R1		
JD5M(-)	18	GN	TXL	239481R1		GS6	-	2644000R1		
JG5H(-)	18	GN	TXL	239481R1		GS6	-	2644000R1		
JG5J(-)	18	GN	TXL	239481R1		GS6	-	2644000R1		
JG5K(-)	18	GN	TXL	239481R1		GS6	-	2644000R1		
LD5H(-)	18	GN	TXL	239481R1		GS6	-	2644000R1		
LD5J(-)	18	GN	TXL	239481R1		GS6	-	2644000R1		
LD5K(-)	18	GN	TXL	239481R1		GS6	-	2644000R1		
LE5H(-)	18	GN	TXL	239481R1		GS6	-	2644000R1		
LE5J(-)	18	GN	TXL	239481R1		GS6	-	2644000R1		
LE5L(-)	18	GN	TXL	239481R1		GS6	-	2644000R1		
LF5H(-)	18	GN	TXL	239481R1		GS6	-	2644000R1		
LF5J(-)	18	GN	TXL	239481R1		GS6	-	2644000R1		

Circuit Number	Gauge	Color	Insulation	Terminal / Splice Number	Connector Part number	Connector Number	Cavity	Seal/Sleeve	Lock 1	Lock 2
LF5K(-)	18	GN	TXL	239481R1		GS6	-	2644000R1		
LS5H(-)	18	GN	TXL	239481R1		GS6	-	2644000R1		
LS5J(-)	18	GN	TXL	239481R1		GS6	-	2644000R1		
LS5K(-)	18	GN	TXL	239481R1		GS6	-	2644000R1		
PZ5H(-)	18	GN	TXL	239481R1		GS6	-	2644000R1		
PZ5J(-)	18	GN	TXL	239481R1		GS6	-	2644000R1		
PZ5M(-)	18	GN	TXL	239481R1		GS6	-	2644000R1		
RD5J(-)	18	GN	TXL	239481R1		GS6	-	2644000R1		
RD5K(-)	18	GN	TXL	239481R1		GS6	-	2644000R1		
RS5F(-)	18	GN	TXL	239481R1		GS6	-	2644000R1		
RS5J(-)	18	GN	TXL	239481R1		GS6	-	2644000R1		
RS5K(-)	18	GN	TXL	239481R1		GS6	-	2644000R1		
RU5F(-)	18	GN	TXL	239481R1		GS6	-	2644000R1		
RU5H(-)	18	GN	TXL	239481R1		GS6	-	2644000R1		
RU5J(-)	18	GN	TXL	239481R1		GS6	-	2644000R1		
SC5J(-)	18	GN	TXL	239481R1		GS6	-	2644000R1		
SC5K(-)	18	GN	TXL	239481R1		GS6	-	2644000R1		
SC5R(-)	18	GN	TXL	239481R1		GS6	-	2644000R1		
SE5H(-)	18	GN	TXL	239481R1		GS6	-	2644000R1		
SE5J(-)	18	GN	TXL	239481R1		GS6	-	2644000R1		
SE5L(-)	18	GN	TXL	239481R1		GS6	-	2644000R1		
SN5H(-)	18	GN	TXL	239481R1		GS6	-	2644000R1		
SN5J(-)	18	GN	TXL	239481R1		GS6	-	2644000R1		
SN5K(-)	18	GN	TXL	239481R1		GS6	-	2644000R1		
SP5H(-)	18	GN	TXL	239481R1		GS6	-	2644000R1		
SP5J(-)	18	GN	TXL	239481R1		GS6	-	2644000R1		
SP5K(-)	18	GN	TXL	239481R1		GS6	-	2644000R1		
VC5J(-)	18	GN	TXL	239481R1		GS6	-	2644000R1		
VC5K(-)	18	GN	TXL	239481R1		GS6	-	2644000R1		
VC5T(-)	18	GN	TXL	239481R1		GS6	-	2644000R1		
VD5J(-)	18	GN	TXL	239481R1		GS6	-	2644000R1		
VD5K(-)	18	GN	TXL	239481R1		GS6	-	2644000R1		
VD5T(-)	18	GN	TXL	239481R1		GS6	-	2644000R1		
VE5F(-)	18	GN	TXL	239481R1		GS6	-	2644000R1		
VE5J(-)	18	GN	TXL	239481R1		GS6	-	2644000R1		
VE5T(-)	18	GN	TXL	239481R1		GS6	-	2644000R1		
VF5J(-)	18	GN	TXL	239481R1		GS6	-	2644000R1		
VF5L(-)	18	GN	TXL	239481R1		GS6	-	2644000R1		
VF5T(-)	18	GN	TXL	239481R1		GS6	-	2644000R1		
YX5J(-)	18	GN	TXL	239481R1		GS6	-	2644000R1		
YX5K(-)	18	GN	TXL	239481R1		GS6	-	2644000R1		
YX5R(-)	18	GN	TXL	239481R1		GS6	-	2644000R1		
YZ5J(-)	18	GN	TXL	239481R1		GS6	-	2644000R1		
YZ5L(-)	18	GN	TXL	239481R1		GS6	-	2644000R1		
YZ5R(-)	18	GN	TXL	239481R1		GS6	-	2644000R1		
2J5J(-)	18	GN	TXL	239481R1		GS6	-	2644000R1		
2J5L(-)	18	GN	TXL	239481R1		GS6	-	2644000R1		
2J5M(-)	18	GN	TXL	239481R1		GS6	-	2644000R1		
2L5J(-)	18	GN	TXL	239481R1		GS6	-	2644000R1		
2L5K(-)	18	GN	TXL	239481R1		GS6	-	2644000R1		
2L5V(-)	18	GN	TXL	239481R1		GS6	-	2644000R1		
2Z5J(-)	18	GN	TXL	239481R1		GS6	-	2644000R1		

Circuit Number	Gauge	Color	Insulation	Terminal / Splice Number	Connector Part number	Connector Number	Cavity	Seal/Sleeve	Lock 1	Lock 2
2Z5K(-)	18	GN	TXL	239481R1		GS6	-	2644000R1		
2Z5V(-)	18	GN	TXL	239481R1		GS6	-	2644000R1		
3C5F(-)	18	GN	TXL	239481R1		GS6	-	2644000R1		
3C5J(-)	18	GN	TXL	239481R1		GS6	-	2644000R1		
3C5PJ(-)	18	GN	TXL	239481R1		GS6	-	2644000R1		
3D5J(-)	18	GN	TXL	239481R1		GS6	-	2644000R1		
3D5K(-)	18	GN	TXL	239481R1		GS6	-	2644000R1		
3D5M(-)	18	GN	TXL	239481R1		GS6	-	2644000R1		
3J5J(-)	18	GN	TXL	239481R1		GS6	-	2644000R1		
3J5K(-)	18	GN	TXL	239481R1		GS6	-	2644000R1		
3J5PJ(-)	18	GN	TXL	239481R1		GS6	-	2644000R1		
3M5J(-)	18	GN	TXL	239481R1		GS6	-	2644000R1		
3M5K(-)	18	GN	TXL	239481R1		GS6	-	2644000R1		
3M5M(-)	18	GN	TXL	239481R1		GS6	-	2644000R1		
3U5J(-)	18	GN	TXL	239481R1		GS6	-	2644000R1		
3U5L(-)	18	GN	TXL	239481R1		GS6	-	2644000R1		
3U5T(-)	18	GN	TXL	239481R1		GS6	-	2644000R1		
3W5J(-)	18	GN	TXL	239481R1		GS6	-	2644000R1		
3W5L(-)	18	GN	TXL	239481R1		GS6	-	2644000R1		
3W5PJ(-)	18	GN	TXL	239481R1		GS6	-	2644000R1		
3Z5J(-)	18	GN	TXL	239481R1		GS6	-	2644000R1		
3Z5K(-)	18	GN	TXL	239481R1		GS6	-	2644000R1		
3Z5M(-)	18	GN	TXL	239481R1		GS6	-	2644000R1		
4E5J(-)	18	GN	TXL	239481R1		GS6	-	2644000R1		
4E5L(-)	18	GN	TXL	239481R1		GS6	-	2644000R1		
4E5M(-)	18	GN	TXL	239481R1		GS6	-	2644000R1		
4J5J(-)	18	GN	TXL	239481R1		GS6	-	2644000R1		
4J5K(-)	18	GN	TXL	239481R1		GS6	-	2644000R1		
4J5V(-)	18	GN	TXL	239481R1		GS6	-	2644000R1		
JD5J(-)	18	GN	TXL	239481R1		GS6	-	2644000R1		
JD5K(-)	18	GN	TXL	239481R1		GS6	-	2644000R1		
JD5M(-)	18	GN	TXL	239481R1		GS6	-	2644000R1		
JG5H(-)	18	GN	TXL	239481R1		GS6	-	2644000R1		
JG5J(-)	18	GN	TXL	239481R1		GS6	-	2644000R1		
JG5K(-)	18	GN	TXL	239481R1		GS6	-	2644000R1		
LD5H(-)	18	GN	TXL	239481R1		GS6	-	2644000R1		
LD5J(-)	18	GN	TXL	239481R1		GS6	-	2644000R1		
LD5K(-)	18	GN	TXL	239481R1		GS6	-	2644000R1		
LE5H(-)	18	GN	TXL	239481R1		GS6	-	2644000R1		
LE5J(-)	18	GN	TXL	239481R1		GS6	-	2644000R1		
LE5L(-)	18	GN	TXL	239481R1		GS6	-	2644000R1		
LF5H(-)	18	GN	TXL	239481R1		GS6	-	2644000R1		
LF5J(-)	18	GN	TXL	239481R1		GS6	-	2644000R1		
LF5K(-)	18	GN	TXL	239481R1		GS6	-	2644000R1		
LS5H(-)	18	GN	TXL	239481R1		GS6	-	2644000R1		
LS5J(-)	18	GN	TXL	239481R1		GS6	-	2644000R1		
LS5K(-)	18	GN	TXL	239481R1		GS6	-	2644000R1		
PV5H(-)	18	GN	TXL	239481R1		GS6	-	2644000R1		
PV5J(-)	18	GN	TXL	239481R1		GS6	-	2644000R1		
PV5M(-)	18	GN	TXL	239481R1		GS6	-	2644000R1		
PZ5H(-)	18	GN	TXL	239481R1		GS6	-	2644000R1		
PZ5J(-)	18	GN	TXL	239481R1		GS6	-	2644000R1		

Circuit Number	Gauge	Color	Insulation	Terminal / Splice Number	Connector Part number	Connector Number	Cavity	Seal/Sleeve	Lock 1	Lock 2
PZ5M(-)	18	GN	TXL	239481R1		GS6	-	2644000R1		
RD5F(-)	18	GN	TXL	239481R1		GS6	-	2644000R1		
RD5J(-)	18	GN	TXL	239481R1		GS6	-	2644000R1		
RD5K(-)	18	GN	TXL	239481R1		GS6	-	2644000R1		
RS5F(-)	18	GN	TXL	239481R1		GS6	-	2644000R1		
RS5J(-)	18	GN	TXL	239481R1		GS6	-	2644000R1		
RS5K(-)	18	GN	TXL	239481R1		GS6	-	2644000R1		
RU5F(-)	18	GN	TXL	239481R1		GS6	-	2644000R1		
RU5H(-)	18	GN	TXL	239481R1		GS6	-	2644000R1		
RU5J(-)	18	GN	TXL	239481R1		GS6	-	2644000R1		
RX5F(-)	18	GN	TXL	239481R1		GS6	-	2644000R1		
RX5J(-)	18	GN	TXL	239481R1		GS6	-	2644000R1		
RX5K(-)	18	GN	TXL	239481R1		GS6	-	2644000R1		
SC5J(-)	18	GN	TXL	239481R1		GS6	-	2644000R1		
SC5K(-)	18	GN	TXL	239481R1		GS6	-	2644000R1		
SC5PJ(-)	18	GN	TXL	239481R1		GS6	-	2644000R1		
SE5H(-)	18	GN	TXL	239481R1		GS6	-	2644000R1		
SE5J(-)	18	GN	TXL	239481R1		GS6	-	2644000R1		
SE5L(-)	18	GN	TXL	239481R1		GS6	-	2644000R1		
SN5H(-)	18	GN	TXL	239481R1		GS6	-	2644000R1		
SN5J(-)	18	GN	TXL	239481R1		GS6	-	2644000R1		
SN5K(-)	18	GN	TXL	239481R1		GS6	-	2644000R1		
SP5H(-)	18	GN	TXL	239481R1		GS6	-	2644000R1		
SP5J(-)	18	GN	TXL	239481R1		GS6	-	2644000R1		
SP5K(-)	18	GN	TXL	239481R1		GS6	-	2644000R1		
SR5H(-)	18	GN	TXL	239481R1		GS6	-	2644000R1		
SR5J(-)	18	GN	TXL	239481R1		GS6	-	2644000R1		
SR5K(-)	18	GN	TXL	239481R1		GS6	-	2644000R1		
VC5J(-)	18	GN	TXL	239481R1		GS6	-	2644000R1		
VC5K(-)	18	GN	TXL	239481R1		GS6	-	2644000R1		
VC5T(-)	18	GN	TXL	239481R1		GS6	-	2644000R1		
VD5J(-)	18	GN	TXL	239481R1		GS6	-	2644000R1		
VD5K(-)	18	GN	TXL	239481R1		GS6	-	2644000R1		
VD5T(-)	18	GN	TXL	239481R1		GS6	-	2644000R1		
VE5F(-)	18	GN	TXL	239481R1		GS6	-	2644000R1		
VE5J(-)	18	GN	TXL	239481R1		GS6	-	2644000R1		
VE5T(-)	18	GN	TXL	239481R1		GS6	-	2644000R1		
VF5T(-)	18	GN	TXL	239481R1		GS6	-	2644000R1		
VG5J(-)	18	GN	TXL	239481R1		GS6	-	2644000R1		
VG5L(-)	18	GN	TXL	239481R1		GS6	-	2644000R1		
VG5T(-)	18	GN	TXL	239481R1		GS6	-	2644000R1		
YX5J(-)	18	GN	TXL	239481R1		GS6	-	2644000R1		
YX5K(-)	18	GN	TXL	239481R1		GS6	-	2644000R1		
YX5PJ(-)	18	GN	TXL	239481R1		GS6	-	2644000R1		
YZ5J(-)	18	GN	TXL	239481R1		GS6	-	2644000R1		
YZ5L(-)	18	GN	TXL	239481R1		GS6	-	2644000R1		
YZ5PJ(-)	18	GN	TXL	239481R1		GS6	-	2644000R1		
VC5H(+)	18	YL	TXL	239481R1		GS60	-	2644000R1		
VC5R(+)	18	YL	TXL	239481R1		GS60	-	2644000R1		
VC5T(+)	18	YL	TXL	239481R1		GS60	-	2644000R1		
VD5H(+)	18	YL	TXL	239481R1		GS60	-	2644000R1		
VD5R(+)	18	YL	TXL	239481R1		GS60	-	2644000R1		

Circuit Number	Gauge	Color	Insulation	Terminal / Splice Number	Connector Part number	Connector Number	Cavity	Seal/Sleeve	Lock 1	Lock 2
VD5T(+)	18	YL	TXL	239481R1		GS60	-	2644000R1		
VE5H(+)	18	YL	TXL	239481R1		GS60	-	2644000R1		
VE5R(+)	18	YL	TXL	239481R1		GS60	-	2644000R1		
VE5T(+)	18	YL	TXL	239481R1		GS60	-	2644000R1		
VF5H(+)	18	YL	TXL	239481R1		GS60	-	2644000R1		
VF5R(+)	18	YL	TXL	239481R1		GS60	-	2644000R1		
VF5T(+)	18	YL	TXL	239481R1		GS60	-	2644000R1		
4A74J	16	LTGN	TXL	382181C1		GS60	-	2644000R1		
4A74RB2	16	LTGN	TXL	382181C1		GS60	-	2644000R1		
4A74RBA	16	LTGN	GXL	382181C1		GS60	-	2644000R1		
4A74RBB	16	LTGN	TXL	382181C1		GS60	-	2644000R1		
VC5H(-)	18	GN	TXL	239481R1		GS61	-	2644000R1		
VC5R(-)	18	GN	TXL	239481R1		GS61	-	2644000R1		
VC5T(-)	18	GN	TXL	239481R1		GS61	-	2644000R1		
VD5H(-)	18	GN	TXL	239481R1		GS61	-	2644000R1		
VD5R(-)	18	GN	TXL	239481R1		GS61	-	2644000R1		
VD5T(-)	18	GN	TXL	239481R1		GS61	-	2644000R1		
VE5H(-)	18	GN	TXL	239481R1		GS61	-	2644000R1		
VE5R(-)	18	GN	TXL	239481R1		GS61	-	2644000R1		
VE5T(-)	18	GN	TXL	239481R1		GS61	-	2644000R1		
VF5H(-)	18	GN	TXL	239481R1		GS61	-	2644000R1		
VF5R(-)	18	GN	TXL	239481R1		GS61	-	2644000R1		
VF5T(-)	18	GN	TXL	239481R1		GS61	-	2644000R1		
4A11-GB	18	WH	TXL	239481R1		GS61	-	2644000R1		
4A11-GBA	16	WH	GXL	239481R1		GS61	-	2644000R1		
4A11-GBB	16	WH	TXL	239481R1		GS61	-	2644000R1		
4A11-GA	18	WH	TXL	239481R1		GS62	-	2644000R1		
4A11-GB	18	WH	TXL	239481R1		GS62	-	2644000R1		
4A11-GC	18	WH	TXL	239481R1		GS62	-	2644000R1		
VC5H(+)	18	YL	TXL	239481R1		GS63	-	2644000R1		
VC5PJ(+)	18	YL	TXL	239481R1		GS63	-	2644000R1		
VC5T(+)	18	YL	TXL	239481R1		GS63	-	2644000R1		
VD5H(+)	18	YL	TXL	239481R1		GS63	-	2644000R1		
VD5PJ(+)	18	YL	TXL	239481R1		GS63	-	2644000R1		
VD5T(+)	18	YL	TXL	239481R1		GS63	-	2644000R1		
VE5H(+)	18	YL	TXL	239481R1		GS63	-	2644000R1		
VE5PJ(+)	18	YL	TXL	239481R1		GS63	-	2644000R1		
VE5T(+)	18	YL	TXL	239481R1		GS63	-	2644000R1		
VF5T(+)	18	YL	TXL	239481R1		GS63	-	2644000R1		
VG5H(+)	18	YL	TXL	239481R1		GS63	-	2644000R1		
VG5PJ(+)	18	YL	TXL	239481R1		GS63	-	2644000R1		
VG5T(+)	18	YL	TXL	239481R1		GS63	-	2644000R1		
VC5H(-)	18	GN	TXL	239481R1		GS64	-	2644000R1		
VC5PJ(-)	18	GN	TXL	239481R1		GS64	-	2644000R1		
VC5T(-)	18	GN	TXL	239481R1		GS64	-	2644000R1		
VD5H(-)	18	GN	TXL	239481R1		GS64	-	2644000R1		
VD5PJ(-)	18	GN	TXL	239481R1		GS64	-	2644000R1		
VD5T(-)	18	GN	TXL	239481R1		GS64	-	2644000R1		
VE5H(-)	18	GN	TXL	239481R1		GS64	-	2644000R1		
VE5PJ(-)	18	GN	TXL	239481R1		GS64	-	2644000R1		
VE5T(-)	18	GN	TXL	239481R1		GS64	-	2644000R1		
VF5T(-)	18	GN	TXL	239481R1		GS64	-	2644000R1		

Circuit Number	Gauge	Color	Insulation	Terminal / Splice Number	Connector Part number	Connector Number	Cavity	Seal/Sleeve	Lock 1	Lock 2
VG5H(-)	18	GN	TXL	239481R1		GS64	-	2644000R1		
VG5PJ(-)	18	GN	TXL	239481R1		GS64	-	2644000R1		
VG5T(-)	18	GN	TXL	239481R1		GS64	-	2644000R1		
YJ11-G	20	WH	TXL	239481R1		GS65	-	2644000R1		
YJ11-GA	20	WH	TXL	239481R1		GS65	-	2644000R1		
YJ11-GB	20	WH	TXL	239481R1		GS65	-	2644000R1		
BG70C	18	OR	TXL	239481R1		GS66	-	2644000R1		
3Y12	20	LTBL	TXL	239481R1		GS67	-	2644000R1		
3Y12B	20	LTBL	TXL	239481R1		GS67	-	2644000R1		
AY12	18	LTBL	TXL	239481R1		GS67	-	2644000R1		
NL86AH	18	LTGN	TXL	239481R1		GS68	-	2644000R1		
NL86AJ	18	LTGN	TXL	239481R1		GS68	-	2644000R1		
NL86AK	18	LTGN	TXL	239481R1		GS68	-	2644000R1		
NP86AH	18	LTGN	TXL	239481R1		GS68	-	2644000R1		
NP86AK	18	LTGN	TXL	239481R1		GS68	-	2644000R1		
NP86AL	18	LTGN	TXL	239481R1		GS68	-	2644000R1		
9S11-GA	18	WH	GXL	ABRSPLIC0		GS7	-	N/A		
BC63-GAJ	18	WH	TXL	ABRSPLIC0		GS7	-	N/A		
BH11-GAL	18	WH	TXL	ABRSPLIC0		GS7	-	N/A		
BX65-GFA	18	WH	TXL	ABRSPLIC0		GS7	-	N/A		
BX65-GFB	18	WH	TXL	ABRSPLIC0		GS7	-	N/A		
CA11-GUA	20	WH	TXL	ABRSPLIC0		GS7	-	N/A		
CA84-GAF	14	WH	TXL	ABRSPLIC0		GS7	-	N/A		
CB11-GUA	20	WH	TXL	ABRSPLIC0		GS7	-	N/A		
CB11-GUB	20	WH	TXL	ABRSPLIC0		GS7	-	N/A		
CB84-GAF	14	WH	TXL	ABRSPLIC0		GS7	-	N/A		
CB84-GBB	14	WH	TXL	ABRSPLIC0		GS7	-	N/A		
CD14-GAG	18	WH	TXL	ABRSPLIC0		GS7	-	N/A		
CE14-GAG	18	WH	TXL	ABRSPLIC0		GS7	-	N/A		
CL11-GUA	20	WH	TXL	ABRSPLIC0		GS7	-	N/A		
CL11-GUB	20	WH	TXL	ABRSPLIC0		GS7	-	N/A		
CL84-GAB	14	WH	TXL	ABRSPLIC0		GS7	-	N/A		
CL84-GAF	14	WH	TXL	ABRSPLIC0		GS7	-	N/A		
DB11-GAA	14	WH	TXL	ABRSPLIC0		GS7	-	N/A		
DK62-GBN	18	WH	TXL	ABRSPLIC0		GS7	-	N/A		
DX11-GLD	20	WH	TXL	ABRSPLIC0		GS7	-	N/A		
EE11-GDH	18	WH	TXL	ABRSPLIC0		GS7	-	N/A		
GJ11-GDE	18	WH	TXL	ABRSPLIC0		GS7	-	N/A		
HA11-GAT	18	WH	TXL	ABRSPLIC0		GS7	-	N/A		
HC105-GAP	18	WH	TXL	ABRSPLIC0		GS7	-	N/A		
JL116GAG	18	WH	TXL	ABRSPLIC0		GS7	-	N/A		
MR86-G	18	WH	TXL	ABRSPLIC0		GS7	-	N/A		
MZ86-G	18	WH	TXL	ABRSPLIC0		GS7	-	N/A		
RE11-GAL	20	WH	TXL	ABRSPLIC0		GS7	-	N/A		
RW22-GAN	18	WH	TXL	ABRSPLIC0		GS7	-	N/A		
4A11-GA	18	WH	TXL	ABRSPLIC0		GS7	-	N/A		
6K11-GE	20	WH	TXL	ABRSPLIC0		GS7	-	N/A		
BC63-GAJ	18	WH	TXL	ABRSPLIC0		GS7	-	N/A		
BH11-GAL	18	WH	TXL	ABRSPLIC0		GS7	-	N/A		
BX65-GFA	18	WH	TXL	ABRSPLIC0		GS7	-	N/A		
BX65-GFB	18	WH	TXL	ABRSPLIC0		GS7	-	N/A		
CA11-GUA	20	WH	TXL	ABRSPLIC0		GS7	-	N/A		

Circuit Number	Gauge	Color	Insulation	Terminal / Splice Number	Connector Part number	Connector Number	Cavity	Seal/Sleeve	Lock 1	Lock 2
CA84-GAF	14	WH	TXL	ABRSPLIC0		GS7	-	N/A		
CB11-GUA	20	WH	TXL	ABRSPLIC0		GS7	-	N/A		
CB11-GUB	20	WH	TXL	ABRSPLIC0		GS7	-	N/A		
CB84-GAF	14	WH	TXL	ABRSPLIC0		GS7	-	N/A		
CB84-GBB	14	WH	TXL	ABRSPLIC0		GS7	-	N/A		
CD14-GAG	18	WH	TXL	ABRSPLIC0		GS7	-	N/A		
CE14-GAG	18	WH	TXL	ABRSPLIC0		GS7	-	N/A		
CL11-GUA	20	WH	TXL	ABRSPLIC0		GS7	-	N/A		
CL11-GUB	20	WH	TXL	ABRSPLIC0		GS7	-	N/A		
CL84-GAB	14	WH	TXL	ABRSPLIC0		GS7	-	N/A		
CL84-GAF	14	WH	TXL	ABRSPLIC0		GS7	-	N/A		
DB11-GAA	14	WH	TXL	ABRSPLIC0		GS7	-	N/A		
DK62-GBN	20	WH	TXL	ABRSPLIC0		GS7	-	N/A		
DX11-GLD	20	WH	TXL	ABRSPLIC0		GS7	-	N/A		
HA11-GAT	18	WH	TXL	ABRSPLIC0		GS7	-	N/A		
HC105-GAP	18	WH	TXL	ABRSPLIC0		GS7	-	N/A		
JL116GAG	18	WH	TXL	ABRSPLIC0		GS7	-	N/A		
MR86-G	18	WH	TXL	ABRSPLIC0		GS7	-	N/A		
MZ86-G	18	WH	TXL	ABRSPLIC0		GS7	-	N/A		
NL86-G	18	WH	TXL	ABRSPLIC0		GS7	-	N/A		
NP86-G	18	WH	TXL	ABRSPLIC0		GS7	-	N/A		
RE11-GAL	20	WH	TXL	ABRSPLIC0		GS7	-	N/A		
RW22-GAN	18	WH	TXL	ABRSPLIC0		GS7	-	N/A		
JL116GAG	18	WH	TXL	239481R1		GS8	-	2644000R1		
JL116GAG	18	WH	TXL	239481R1		GS8	-	2644000R1		
2V11-GBP	18	WH	TXL	239481R1		GS9	-	2644000R1		
2V11COG	18	WH	TXL	239481R1		GS9	-	2644000R1		
2V11COG1	18	WH	TXL	239481R1		GS9	-	2644000R1		
CS11-GBP	18	WH	TXL	239481R1		GS9	-	2644000R1		
CS11COG	18	WH	TXL	239481R1		GS9	-	2644000R1		
CS11COG1	18	WH	TXL	239481R1		GS9	-	2644000R1		
CS67NB	16	VT	TXL	239481R1		GS9	-	2644000R1		
RV11-GBP	18	WH	TXL	239481R1		GS9	-	2644000R1		
RV11COG	18	WH	TXL	239481R1		GS9	-	2644000R1		
RV11COG1	18	WH	TXL	239481R1		GS9	-	2644000R1		
RV11COG3	18	WH	TXL	239481R1		GS9	-	2644000R1		
YK11-GBP	18	WH	TXL	239481R1		GS9	-	2644000R1		
YK11COG	18	WH	TXL	239481R1		GS9	-	2644000R1		
YK11COG1	18	WH	TXL	239481R1		GS9	-	2644000R1		
YK67NB	16	VT	TXL	239481R1		GS9	-	2644000R1		
2V11-GBP	18	WH	TXL	239481R1		GS9	-	2644000R1		
2V11COG	20	WH	TXL	239481R1		GS9	-	2644000R1		
2V11COG1	20	WH	TXL	239481R1		GS9	-	2644000R1		
CS11-GBP	18	WH	TXL	239481R1		GS9	-	2644000R1		
CS11COG	18	WH	TXL	239481R1		GS9	-	2644000R1		
CS11COG1	20	WH	TXL	239481R1		GS9	-	2644000R1		
CS67NB	20	VT	TXL	239481R1		GS9	-	2644000R1		
RV11-GBP	18	WH	TXL	239481R1		GS9	-	2644000R1		
RV11COG	18	WH	TXL	239481R1		GS9	-	2644000R1		
RV11COG1	18	WH	TXL	239481R1		GS9	-	2644000R1		
RV11COG3	18	WH	TXL	239481R1		GS9	-	2644000R1		
YK11-GBP	18	WH	TXL	239481R1		GS9	-	2644000R1		

Circuit Number	Gauge	Color	Insulation	Terminal / Splice Number	Connector Part number	Connector Number	Cavity	Seal/Sleeve	Lock 1	Lock 2
YK11COG	18	WH	TXL	239481R1		GS9	-	2644000R1		
YK11COG1	18	WH	TXL	239481R1		GS9	-	2644000R1		
YK67NB	16	VT	TXL	239481R1		GS9	-	2644000R1		
RE10AA	20	WH	TXL	239481R1		HS1	-	2644000R1		
RE10AB	20	WH	TXL	239481R1		HS1	-	2644000R1		
RE10AC	20	WH	TXL	239481R1		HS1	-	2644000R1		
RE10AD	20	WH	TXL	239481R1		HS1	-	2644000R1		
RE11-GAL	20	WH	TXL	239481R1		HS1	-	2644000R1		
RE10AA	20	WH	TXL	239481R1		HS1	-	2644000R1		
RE10AB	20	WH	TXL	239481R1		HS1	-	2644000R1		
RE10AC	20	WH	TXL	239481R1		HS1	-	2644000R1		
RE10AD	20	WH	TXL	239481R1		HS1	-	2644000R1		
RE11-GAL	20	WH	TXL	239481R1		HS1	-	2644000R1		
GZ5AE(+)	18	YL	TXL	239481R1		HS2	-	2644000R1		
GZ5AH(+)	18	YL	TXL	239481R1		HS2	-	2644000R1		
GZ5AJ(+)	18	YL	TXL	239481R1		HS2	-	2644000R1		
JK5AE(+)	18	YL	TXL	239481R1		HS2	-	2644000R1		
JK5AH(+)	18	YL	TXL	239481R1		HS2	-	2644000R1		
JK5AJ(+)	18	YL	TXL	239481R1		HS2	-	2644000R1		
KU5AE(+)	18	YL	TXL	239481R1		HS2	-	2644000R1		
KU5AH(+)	18	YL	TXL	239481R1		HS2	-	2644000R1		
KU5AJ(+)	18	YL	TXL	239481R1		HS2	-	2644000R1		
LN5AE(+)	18	YL	TXL	239481R1		HS2	-	2644000R1		
LN5AH(+)	18	YL	TXL	239481R1		HS2	-	2644000R1		
LN5AJ(+)	18	YL	TXL	239481R1		HS2	-	2644000R1		
GZ5AE(+)	18	YL	TXL	239481R1		HS2	-	2644000R1		
GZ5AH(+)	18	YL	TXL	239481R1		HS2	-	2644000R1		
GZ5AJ(+)	18	YL	TXL	239481R1		HS2	-	2644000R1		
JK5AE(+)	18	YL	TXL	239481R1		HS2	-	2644000R1		
JK5AH(+)	18	YL	TXL	239481R1		HS2	-	2644000R1		
JK5AJ(+)	18	YL	TXL	239481R1		HS2	-	2644000R1		
KU5AE(+)	18	YL	TXL	239481R1		HS2	-	2644000R1		
KU5AH(+)	18	YL	TXL	239481R1		HS2	-	2644000R1		
KU5AJ(+)	18	YL	TXL	239481R1		HS2	-	2644000R1		
LN5AE(+)	18	YL	TXL	239481R1		HS2	-	2644000R1		
LN5AH(+)	18	YL	TXL	239481R1		HS2	-	2644000R1		
LN5AJ(+)	18	YL	TXL	239481R1		HS2	-	2644000R1		
GZ5AE(-)	18	GN	TXL	239481R1		HS3	-	2644000R1		
GZ5AH(-)	18	GN	TXL	239481R1		HS3	-	2644000R1		
GZ5AJ(-)	18	GN	TXL	239481R1		HS3	-	2644000R1		
JK5AE(-)	18	GN	TXL	239481R1		HS3	-	2644000R1		
JK5AH(-)	18	GN	TXL	239481R1		HS3	-	2644000R1		
JK5AJ(-)	18	GN	TXL	239481R1		HS3	-	2644000R1		
KU5AE(-)	18	GN	TXL	239481R1		HS3	-	2644000R1		
KU5AH(-)	18	GN	TXL	239481R1		HS3	-	2644000R1		
KU5AJ(-)	18	GN	TXL	239481R1		HS3	-	2644000R1		
LN5AE(-)	18	GN	TXL	239481R1		HS3	-	2644000R1		
LN5AH(-)	18	GN	TXL	239481R1		HS3	-	2644000R1		
LN5AJ(-)	18	GN	TXL	239481R1		HS3	-	2644000R1		
GZ5AE(-)	18	GN	TXL	239481R1		HS3	-	2644000R1		
GZ5AH(-)	18	GN	TXL	239481R1		HS3	-	2644000R1		
GZ5AJ(-)	18	GN	TXL	239481R1		HS3	-	2644000R1		

Circuit Number	Gauge	Color	Insulation	Terminal / Splice Number	Connector Part number	Connector Number	Cavity	Seal/Sleeve	Lock 1	Lock 2
JK5AE(-)	18	GN	TXL	239481R1		HS3	-	2644000R1		
JK5AH(-)	18	GN	TXL	239481R1		HS3	-	2644000R1		
JK5AJ(-)	18	GN	TXL	239481R1		HS3	-	2644000R1		
KU5AE(-)	18	GN	TXL	239481R1		HS3	-	2644000R1		
KU5AH(-)	18	GN	TXL	239481R1		HS3	-	2644000R1		
KU5AJ(-)	18	GN	TXL	239481R1		HS3	-	2644000R1		
LN5AE(-)	18	GN	TXL	239481R1		HS3	-	2644000R1		
LN5AH(-)	18	GN	TXL	239481R1		HS3	-	2644000R1		
LN5AJ(-)	18	GN	TXL	239481R1		HS3	-	2644000R1		
KP5AE(+)	18	YL	TXL	239481R1		HS4	-	2644000R1		
KP5AH(+)	18	YL	TXL	239481R1		HS4	-	2644000R1		
KP5AJ(+)	18	YL	TXL	239481R1		HS4	-	2644000R1		
KP5AE(+)	18	YL	TXL	239481R1		HS4	-	2644000R1		
KP5AH(+)	18	YL	TXL	239481R1		HS4	-	2644000R1		
KP5AJ(+)	18	YL	TXL	239481R1		HS4	-	2644000R1		
KP5AE(-)	18	GN	TXL	239481R1		HS5	-	2644000R1		
KP5AH(-)	18	GN	TXL	239481R1		HS5	-	2644000R1		
KP5AJ(-)	18	GN	TXL	239481R1		HS5	-	2644000R1		
KP5AE(-)	18	GN	TXL	239481R1		HS5	-	2644000R1		
KP5AH(-)	18	GN	TXL	239481R1		HS5	-	2644000R1		
KP5AJ(-)	18	GN	TXL	239481R1		HS5	-	2644000R1		
2G14D	18	RD	TXL	239481R1		JS1	-	2644000R1		
2G14LCM	18	RD	TXL	239481R1		JS1	-	2644000R1		
2G14MUX	18	RD	TXL	239481R1		JS1	-	2644000R1		
LE5K(+)	18	YL	TXL	239481R1		KS1	-	2644000R1		
LE5L(+)	18	YL	TXL	239481R1		KS1	-	2644000R1		
LE5M(+)	20	YL	193	239481R1		KS1	-	2644000R1		
LS5F(+)	18	YL	TXL	239481R1		KS1	-	2644000R1		
LS5K(+)	18	YL	TXL	239481R1		KS1	-	2644000R1		
LS5L(+)	20	YL	193	239481R1		KS1	-	2644000R1		
LU5H(+)	18	YL	TXL	239481R1		KS1	-	2644000R1		
LU5K(+)	18	YL	TXL	239481R1		KS1	-	2644000R1		
LU5M(+)	20	YL	193	239481R1		KS1	-	2644000R1		
LV5H(+)	18	YL	TXL	239481R1		KS1	-	2644000R1		
LV5K(+)	18	YL	TXL	239481R1		KS1	-	2644000R1		
LV5M(+)	20	YL	193	239481R1		KS1	-	2644000R1		
PZ5K(+)	18	YL	TXL	239481R1		KS1	-	2644000R1		
PZ5M(+)	18	YL	TXL	239481R1		KS1	-	2644000R1		
PZ5R(+)	20	YL	193	239481R1		KS1	-	2644000R1		
RD5M(+)	18	YL	TXL	239481R1		KS1	-	2644000R1		
RD5R(+)	20	YL	193	239481R1		KS1	-	2644000R1		
RJ5F(+)	18	YL	TXL	239481R1		KS1	-	2644000R1		
RJ5J(+)	20	YL	193	239481R1		KS1	-	2644000R1		
RJ5M(+)	18	YL	TXL	239481R1		KS1	-	2644000R1		
RM5F(+)	18	YL	TXL	239481R1		KS1	-	2644000R1		
RM5J(+)	20	YL	193	239481R1		KS1	-	2644000R1		
RM5M(+)	18	YL	TXL	239481R1		KS1	-	2644000R1		
RS5K(+)	18	YL	TXL	239481R1		KS1	-	2644000R1		
RS5M(+)	18	YL	TXL	239481R1		KS1	-	2644000R1		
RS5R(+)	20	YL	193	239481R1		KS1	-	2644000R1		
RU5F(+)	18	YL	TXL	239481R1		KS1	-	2644000R1		
RU5K(+)	18	YL	TXL	239481R1		KS1	-	2644000R1		

Circuit Number	Gauge	Color	Insulation	Terminal / Splice Number	Connector Part number	Connector Number	Cavity	Seal/Sleeve	Lock 1	Lock 2
RU5L(+)	20	YL	193	239481R1		KS1	-	2644000R1		
SB5J(+)	18	YL	TXL	239481R1		KS1	-	2644000R1		
SB5K(+)	20	YL	193	239481R1		KS1	-	2644000R1		
SB5M(+)	18	YL	TXL	239481R1		KS1	-	2644000R1		
SC5M(+)	18	YL	TXL	239481R1		KS1	-	2644000R1		
SC5R(+)	18	YL	TXL	239481R1		KS1	-	2644000R1		
SC5T(+)	20	YL	193	239481R1		KS1	-	2644000R1		
SE5K(+)	18	YL	TXL	239481R1		KS1	-	2644000R1		
SE5L(+)	18	YL	TXL	239481R1		KS1	-	2644000R1		
SE5M(+)	20	YL	193	239481R1		KS1	-	2644000R1		
VE5F(+)	18	YL	TXL	239481R1		KS1	-	2644000R1		
VE5K(+)	18	YL	TXL	239481R1		KS1	-	2644000R1		
VE5L(+)	20	YL	193	239481R1		KS1	-	2644000R1		
VF5K(+)	18	YL	TXL	239481R1		KS1	-	2644000R1		
VF5L(+)	18	YL	TXL	239481R1		KS1	-	2644000R1		
VF5M(+)	20	YL	193	239481R1		KS1	-	2644000R1		
YZ5K(+)	18	YL	TXL	239481R1		KS1	-	2644000R1		
YZ5L(+)	18	YL	TXL	239481R1		KS1	-	2644000R1		
YZ5M(+)	20	YL	193	239481R1		KS1	-	2644000R1		
2H5H(+)	18	YL	TXL	239481R1		KS1	-	2644000R1		
2H5K(+)	20	YL	193	239481R1		KS1	-	2644000R1		
2H5M(+)	18	YL	TXL	239481R1		KS1	-	2644000R1		
2J5K(+)	18	YL	TXL	239481R1		KS1	-	2644000R1		
2J5M(+)	18	YL	TXL	239481R1		KS1	-	2644000R1		
2J5PJ(+)	20	YL	193	239481R1		KS1	-	2644000R1		
2L5K(+)	18	YL	TXL	239481R1		KS1	-	2644000R1		
2L5M(+)	18	YL	TXL	239481R1		KS1	-	2644000R1		
2L5PJ(+)	20	YL	193	239481R1		KS1	-	2644000R1		
2M5H(+)	18	YL	TXL	239481R1		KS1	-	2644000R1		
2M5J(+)	20	YL	193	239481R1		KS1	-	2644000R1		
2M5M(+)	18	YL	TXL	239481R1		KS1	-	2644000R1		
2W5J(+)	20	YL	193	239481R1		KS1	-	2644000R1		
2W5M(+)	18	YL	TXL	239481R1		KS1	-	2644000R1		
2W5PJ(+)	18	YL	TXL	239481R1		KS1	-	2644000R1		
2Y5F(+)	18	YL	TXL	239481R1		KS1	-	2644000R1		
2Y5J(+)	20	YL	193	239481R1		KS1	-	2644000R1		
2Y5M(+)	18	YL	TXL	239481R1		KS1	-	2644000R1		
2Z5K(+)	18	YL	TXL	239481R1		KS1	-	2644000R1		
2Z5M(+)	18	YL	TXL	239481R1		KS1	-	2644000R1		
2Z5PJ(+)	20	YL	193	239481R1		KS1	-	2644000R1		
3C5F(+)	18	YL	TXL	239481R1		KS1	-	2644000R1		
3C5K(+)	18	YL	TXL	239481R1		KS1	-	2644000R1		
3C5L(+)	20	YL	193	239481R1		KS1	-	2644000R1		
3E5K(+)	20	YL	193	239481R1		KS1	-	2644000R1		
3E5M(+)	18	YL	TXL	239481R1		KS1	-	2644000R1		
3E5T(+)	18	YL	TXL	239481R1		KS1	-	2644000R1		
3J5M(+)	18	YL	TXL	239481R1		KS1	-	2644000R1		
3J5PJ(+)	18	YL	TXL	239481R1		KS1	-	2644000R1		
3J5T(+)	20	YL	193	239481R1		KS1	-	2644000R1		
3R5H(+)	18	YL	TXL	239481R1		KS1	-	2644000R1		
3R5K(+)	20	YL	193	239481R1		KS1	-	2644000R1		
3R5M(+)	18	YL	TXL	239481R1		KS1	-	2644000R1		

Circuit Number	Gauge	Color	Insulation	Terminal / Splice Number	Connector Part number	Connector Number	Cavity	Seal/Sleeve	Lock 1	Lock 2
3U5K(+)	18	YL	TXL	239481R1		KS1	-	2644000R1		
3U5L(+)	18	YL	TXL	239481R1		KS1	-	2644000R1		
3U5M(+)	20	YL	193	239481R1		KS1	-	2644000R1		
3W5K(+)	18	YL	TXL	239481R1		KS1	-	2644000R1		
3W5L(+)	18	YL	TXL	239481R1		KS1	-	2644000R1		
3W5M(+)	20	YL	193	239481R1		KS1	-	2644000R1		
4E5K(+)	18	YL	TXL	239481R1		KS1	-	2644000R1		
4E5M(+)	18	YL	TXL	239481R1		KS1	-	2644000R1		
4E5PJ(+)	20	YL	193	239481R1		KS1	-	2644000R1		
4J5K(+)	18	YL	TXL	239481R1		KS1	-	2644000R1		
4J5M(+)	18	YL	TXL	239481R1		KS1	-	2644000R1		
4J5PJ(+)	20	YL	193	239481R1		KS1	-	2644000R1		
4L5H(+)	18	YL	TXL	239481R1		KS1	-	2644000R1		
4L5J(+)	20	YL	193	239481R1		KS1	-	2644000R1		
4L5M(+)	18	YL	TXL	239481R1		KS1	-	2644000R1		
4N5F(+)	18	YL	TXL	239481R1		KS1	-	2644000R1		
4N5J(+)	20	YL	193	239481R1		KS1	-	2644000R1		
4N5M(+)	18	YL	TXL	239481R1		KS1	-	2644000R1		
LE5K(+)	18	YL	TXL	239481R1		KS1	-	2644000R1		
LE5L(+)	18	YL	TXL	239481R1		KS1	-	2644000R1		
LE5M(+)	20	YL	193	239481R1		KS1	-	2644000R1		
LS5F(+)	18	YL	TXL	239481R1		KS1	-	2644000R1		
LS5K(+)	18	YL	TXL	239481R1		KS1	-	2644000R1		
LS5L(+)	20	YL	193	239481R1		KS1	-	2644000R1		
LU5H(+)	18	YL	TXL	239481R1		KS1	-	2644000R1		
LU5K(+)	18	YL	TXL	239481R1		KS1	-	2644000R1		
LU5M(+)	20	YL	193	239481R1		KS1	-	2644000R1		
LV5H(+)	18	YL	TXL	239481R1		KS1	-	2644000R1		
LV5K(+)	18	YL	TXL	239481R1		KS1	-	2644000R1		
LV5M(+)	20	YL	193	239481R1		KS1	-	2644000R1		
PV5K(+)	18	YL	TXL	239481R1		KS1	-	2644000R1		
PV5M(+)	18	YL	TXL	239481R1		KS1	-	2644000R1		
PV5PJ(+)	20	YL	193	239481R1		KS1	-	2644000R1		
PY5H(+)	18	YL	TXL	239481R1		KS1	-	2644000R1		
PY5J(+)	18	YL	TXL	239481R1		KS1	-	2644000R1		
PY5K(+)	20	YL	193	239481R1		KS1	-	2644000R1		
PZ5K(+)	18	YL	TXL	239481R1		KS1	-	2644000R1		
PZ5M(+)	18	YL	TXL	239481R1		KS1	-	2644000R1		
PZ5PJ(+)	20	YL	193	239481R1		KS1	-	2644000R1		
RD5K(+)	18	YL	TXL	239481R1		KS1	-	2644000R1		
RD5M(+)	18	YL	TXL	239481R1		KS1	-	2644000R1		
RD5PJ(+)	20	YL	193	239481R1		KS1	-	2644000R1		
RG5F(+)	18	YL	TXL	239481R1		KS1	-	2644000R1		
RG5H(+)	18	YL	TXL	239481R1		KS1	-	2644000R1		
RG5J(+)	20	YL	193	239481R1		KS1	-	2644000R1		
RJ5F(+)	18	YL	TXL	239481R1		KS1	-	2644000R1		
RJ5J(+)	20	YL	193	239481R1		KS1	-	2644000R1		
RJ5M(+)	18	YL	TXL	239481R1		KS1	-	2644000R1		
RM5F(+)	18	YL	TXL	239481R1		KS1	-	2644000R1		
RM5J(+)	20	YL	193	239481R1		KS1	-	2644000R1		
RM5M(+)	18	YL	TXL	239481R1		KS1	-	2644000R1		
RR5F(+)	18	YL	TXL	239481R1		KS1	-	2644000R1		

Circuit Number	Gauge	Color	Insulation	Terminal / Splice Number	Connector Part number	Connector Number	Cavity	Seal/Sleeve	Lock 1	Lock 2
RR5J(+)	20	YL	193	239481R1		KS1	-	2644000R1		
RR5M(+)	18	YL	TXL	239481R1		KS1	-	2644000R1		
RS5K(+)	18	YL	TXL	239481R1		KS1	-	2644000R1		
RS5M(+)	18	YL	TXL	239481R1		KS1	-	2644000R1		
RS5PJ(+)	20	YL	193	239481R1		KS1	-	2644000R1		
RU5F(+)	18	YL	TXL	239481R1		KS1	-	2644000R1		
RU5K(+)	18	YL	TXL	239481R1		KS1	-	2644000R1		
RU5L(+)	20	YL	193	239481R1		KS1	-	2644000R1		
RX5K(+)	18	YL	TXL	239481R1		KS1	-	2644000R1		
RX5M(+)	18	YL	TXL	239481R1		KS1	-	2644000R1		
RX5PJ(+)	20	YL	193	239481R1		KS1	-	2644000R1		
RZ5F(+)	18	YL	TXL	239481R1		KS1	-	2644000R1		
RZ5H(+)	18	YL	TXL	239481R1		KS1	-	2644000R1		
RZ5J(+)	20	YL	193	239481R1		KS1	-	2644000R1		
SB5J(+)	18	YL	TXL	239481R1		KS1	-	2644000R1		
SB5K(+)	20	YL	193	239481R1		KS1	-	2644000R1		
SB5M(+)	18	YL	TXL	239481R1		KS1	-	2644000R1		
SC5M(+)	18	YL	TXL	239481R1		KS1	-	2644000R1		
SC5PJ(+)	18	YL	TXL	239481R1		KS1	-	2644000R1		
SC5T(+)	20	YL	193	239481R1		KS1	-	2644000R1		
SD5H(+)	18	YL	TXL	239481R1		KS1	-	2644000R1		
SD5J(+)	18	YL	TXL	239481R1		KS1	-	2644000R1		
SD5K(+)	20	YL	193	239481R1		KS1	-	2644000R1		
SE5K(+)	18	YL	TXL	239481R1		KS1	-	2644000R1		
SE5L(+)	18	YL	TXL	239481R1		KS1	-	2644000R1		
SE5M(+)	20	YL	193	239481R1		KS1	-	2644000R1		
VE5F(+)	18	YL	TXL	239481R1		KS1	-	2644000R1		
VE5K(+)	18	YL	TXL	239481R1		KS1	-	2644000R1		
VE5L(+)	20	YL	193	239481R1		KS1	-	2644000R1		
VG5K(+)	18	YL	TXL	239481R1		KS1	-	2644000R1		
VG5L(+)	18	YL	TXL	239481R1		KS1	-	2644000R1		
VG5M(+)	20	YL	193	239481R1		KS1	-	2644000R1		
YZ5K(+)	18	YL	TXL	239481R1		KS1	-	2644000R1		
YZ5L(+)	18	YL	TXL	239481R1		KS1	-	2644000R1		
YZ5M(+)	20	YL	193	239481R1		KS1	-	2644000R1		
LE5K(-)	18	GN	TXL	239481R1		KS2	-	2644000R1		
LE5L(-)	18	GN	TXL	239481R1		KS2	-	2644000R1		
LE5M(-)	20	GN	193	239481R1		KS2	-	2644000R1		
LS5F(-)	18	GN	TXL	239481R1		KS2	-	2644000R1		
LS5K(-)	18	GN	TXL	239481R1		KS2	-	2644000R1		
LS5L(-)	20	GN	193	239481R1		KS2	-	2644000R1		
LU5H(-)	18	GN	TXL	239481R1		KS2	-	2644000R1		
LU5K(-)	18	GN	TXL	239481R1		KS2	-	2644000R1		
LU5M(-)	20	GN	193	239481R1		KS2	-	2644000R1		
LV5H(-)	18	GN	TXL	239481R1		KS2	-	2644000R1		
LV5K(-)	18	GN	TXL	239481R1		KS2	-	2644000R1		
LV5M(-)	20	GN	193	239481R1		KS2	-	2644000R1		
PZ5K(-)	18	GN	TXL	239481R1		KS2	-	2644000R1		
PZ5M(-)	18	GN	TXL	239481R1		KS2	-	2644000R1		
PZ5R(-)	20	GN	193	239481R1		KS2	-	2644000R1		
RD5M(-)	18	GN	TXL	239481R1		KS2	-	2644000R1		
RD5R(-)	20	GN	193	239481R1		KS2	-	2644000R1		

Circuit Number	Gauge	Color	Insulation	Terminal / Splice Number	Connector Part number	Connector Number	Cavity	Seal/Sleeve	Lock 1	Lock 2
RJ5F(-)	18	GN	TXL	239481R1		KS2	-	2644000R1		
RJ5J(-)	20	GN	193	239481R1		KS2	-	2644000R1		
RJ5M(-)	18	GN	TXL	239481R1		KS2	-	2644000R1		
RM5F(-)	18	GN	TXL	239481R1		KS2	-	2644000R1		
RM5J(-)	20	GN	193	239481R1		KS2	-	2644000R1		
RM5M(-)	18	GN	TXL	239481R1		KS2	-	2644000R1		
RS5K(-)	18	GN	TXL	239481R1		KS2	-	2644000R1		
RS5M(-)	18	GN	TXL	239481R1		KS2	-	2644000R1		
RS5R(-)	20	GN	193	239481R1		KS2	-	2644000R1		
RU5F(-)	18	GN	TXL	239481R1		KS2	-	2644000R1		
RU5K(-)	18	GN	TXL	239481R1		KS2	-	2644000R1		
RU5L(-)	20	GN	193	239481R1		KS2	-	2644000R1		
SB5J(-)	18	GN	TXL	239481R1		KS2	-	2644000R1		
SB5K(-)	20	GN	193	239481R1		KS2	-	2644000R1		
SB5M(-)	18	GN	TXL	239481R1		KS2	-	2644000R1		
SC5M(-)	18	GN	TXL	239481R1		KS2	-	2644000R1		
SC5R(-)	18	GN	TXL	239481R1		KS2	-	2644000R1		
SC5T(-)	20	GN	193	239481R1		KS2	-	2644000R1		
SE5K(-)	18	GN	TXL	239481R1		KS2	-	2644000R1		
SE5L(-)	18	GN	TXL	239481R1		KS2	-	2644000R1		
SE5M(-)	20	GN	193	239481R1		KS2	-	2644000R1		
VE5F(-)	18	GN	TXL	239481R1		KS2	-	2644000R1		
VE5K(-)	18	GN	TXL	239481R1		KS2	-	2644000R1		
VE5L(-)	20	GN	193	239481R1		KS2	-	2644000R1		
VF5K(-)	18	GN	TXL	239481R1		KS2	-	2644000R1		
VF5L(-)	18	GN	TXL	239481R1		KS2	-	2644000R1		
VF5M(-)	20	GN	193	239481R1		KS2	-	2644000R1		
YZ5K(-)	18	GN	TXL	239481R1		KS2	-	2644000R1		
YZ5L(-)	18	GN	TXL	239481R1		KS2	-	2644000R1		
YZ5M(-)	20	GN	193	239481R1		KS2	-	2644000R1		
2H5H(-)	18	GN	TXL	239481R1		KS2	-	2644000R1		
2H5K(-)	20	GN	193	239481R1		KS2	-	2644000R1		
2H5M(-)	18	GN	TXL	239481R1		KS2	-	2644000R1		
2J5K(-)	18	GN	TXL	239481R1		KS2	-	2644000R1		
2J5M(-)	18	GN	TXL	239481R1		KS2	-	2644000R1		
2J5PJ(-)	20	GN	193	239481R1		KS2	-	2644000R1		
2L5K(-)	18	GN	TXL	239481R1		KS2	-	2644000R1		
2L5M(-)	18	GN	TXL	239481R1		KS2	-	2644000R1		
2L5PJ(-)	20	GN	193	239481R1		KS2	-	2644000R1		
2M5H(-)	18	GN	TXL	239481R1		KS2	-	2644000R1		
2M5J(-)	20	GN	193	239481R1		KS2	-	2644000R1		
2M5M(-)	18	GN	TXL	239481R1		KS2	-	2644000R1		
2W5J(-)	20	GN	193	239481R1		KS2	-	2644000R1		
2W5M(-)	18	GN	TXL	239481R1		KS2	-	2644000R1		
2W5PJ(-)	18	GN	TXL	239481R1		KS2	-	2644000R1		
2Y5F(-)	18	GN	TXL	239481R1		KS2	-	2644000R1		
2Y5J(-)	20	GN	193	239481R1		KS2	-	2644000R1		
2Y5M(-)	18	GN	TXL	239481R1		KS2	-	2644000R1		
2Z5K(-)	18	GN	TXL	239481R1		KS2	-	2644000R1		
2Z5M(-)	18	GN	TXL	239481R1		KS2	-	2644000R1		
2Z5PJ(-)	20	GN	193	239481R1		KS2	-	2644000R1		
3C5F(-)	18	GN	TXL	239481R1		KS2	-	2644000R1		

Circuit Number	Gauge	Color	Insulation	Terminal / Splice Number	Connector Part number	Connector Number	Cavity	Seal/Sleeve	Lock 1	Lock 2
3C5K(-)	18	GN	TXL	239481R1		KS2	-	2644000R1		
3C5L(-)	20	GN	193	239481R1		KS2	-	2644000R1		
3E5K(-)	20	GN	193	239481R1		KS2	-	2644000R1		
3E5M(-)	18	GN	TXL	239481R1		KS2	-	2644000R1		
3E5T(-)	18	GN	TXL	239481R1		KS2	-	2644000R1		
3J5M(-)	18	GN	TXL	239481R1		KS2	-	2644000R1		
3J5PJ(-)	18	GN	TXL	239481R1		KS2	-	2644000R1		
3J5T(-)	20	GN	193	239481R1		KS2	-	2644000R1		
3R5H(-)	18	GN	TXL	239481R1		KS2	-	2644000R1		
3R5K(-)	20	GN	193	239481R1		KS2	-	2644000R1		
3R5M(-)	18	GN	TXL	239481R1		KS2	-	2644000R1		
3U5K(-)	18	GN	TXL	239481R1		KS2	-	2644000R1		
3U5L(-)	18	GN	TXL	239481R1		KS2	-	2644000R1		
3U5M(-)	20	GN	193	239481R1		KS2	-	2644000R1		
3W5K(-)	18	GN	TXL	239481R1		KS2	-	2644000R1		
3W5L(-)	18	GN	TXL	239481R1		KS2	-	2644000R1		
3W5M(-)	20	GN	193	239481R1		KS2	-	2644000R1		
4E5K(-)	18	GN	TXL	239481R1		KS2	-	2644000R1		
4E5M(-)	18	GN	TXL	239481R1		KS2	-	2644000R1		
4E5PJ(-)	20	GN	193	239481R1		KS2	-	2644000R1		
4J5K(-)	18	GN	TXL	239481R1		KS2	-	2644000R1		
4J5M(-)	18	GN	TXL	239481R1		KS2	-	2644000R1		
4J5PJ(-)	20	GN	193	239481R1		KS2	-	2644000R1		
4L5H(-)	18	GN	TXL	239481R1		KS2	-	2644000R1		
4L5J(-)	20	GN	193	239481R1		KS2	-	2644000R1		
4L5M(-)	18	GN	TXL	239481R1		KS2	-	2644000R1		
4N5F(-)	18	GN	TXL	239481R1		KS2	-	2644000R1		
4N5J(-)	20	GN	193	239481R1		KS2	-	2644000R1		
4N5M(-)	18	GN	TXL	239481R1		KS2	-	2644000R1		
LE5K(-)	18	GN	TXL	239481R1		KS2	-	2644000R1		
LE5L(-)	18	GN	TXL	239481R1		KS2	-	2644000R1		
LE5M(-)	20	GN	193	239481R1		KS2	-	2644000R1		
LS5F(-)	18	GN	TXL	239481R1		KS2	-	2644000R1		
LS5K(-)	18	GN	TXL	239481R1		KS2	-	2644000R1		
LS5L(-)	20	GN	193	239481R1		KS2	-	2644000R1		
LU5H(-)	18	GN	TXL	239481R1		KS2	-	2644000R1		
LU5K(-)	18	GN	TXL	239481R1		KS2	-	2644000R1		
LU5M(-)	20	GN	193	239481R1		KS2	-	2644000R1		
LV5H(-)	18	GN	TXL	239481R1		KS2	-	2644000R1		
LV5K(-)	18	GN	TXL	239481R1		KS2	-	2644000R1		
LV5M(-)	20	GN	193	239481R1		KS2	-	2644000R1		
PV5K(-)	18	GN	TXL	239481R1		KS2	-	2644000R1		
PV5M(-)	18	GN	TXL	239481R1		KS2	-	2644000R1		
PV5PJ(-)	20	GN	193	239481R1		KS2	-	2644000R1		
PY5H(-)	18	GN	TXL	239481R1		KS2	-	2644000R1		
PY5J(-)	18	GN	TXL	239481R1		KS2	-	2644000R1		
PY5K(-)	20	GN	193	239481R1		KS2	-	2644000R1		
PZ5K(-)	18	GN	TXL	239481R1		KS2	-	2644000R1		
PZ5M(-)	18	GN	TXL	239481R1		KS2	-	2644000R1		
PZ5PJ(-)	20	GN	193	239481R1		KS2	-	2644000R1		
RD5K(-)	18	GN	TXL	239481R1		KS2	-	2644000R1		
RD5M(-)	18	GN	TXL	239481R1		KS2	-	2644000R1		

Circuit Number	Gauge	Color	Insulation	Terminal / Splice Number	Connector Part number	Connector Number	Cavity	Seal/Sleeve	Lock 1	Lock 2
RD5PJ(-)	20	GN	193	239481R1		KS2	-	2644000R1		
RG5F(-)	18	GN	TXL	239481R1		KS2	-	2644000R1		
RG5H(-)	18	GN	TXL	239481R1		KS2	-	2644000R1		
RG5J(-)	20	GN	193	239481R1		KS2	-	2644000R1		
RJ5F(-)	18	GN	TXL	239481R1		KS2	-	2644000R1		
RJ5J(-)	20	GN	193	239481R1		KS2	-	2644000R1		
RJ5M(-)	18	GN	TXL	239481R1		KS2	-	2644000R1		
RM5F(-)	18	GN	TXL	239481R1		KS2	-	2644000R1		
RM5J(-)	20	GN	193	239481R1		KS2	-	2644000R1		
RM5M(-)	18	GN	TXL	239481R1		KS2	-	2644000R1		
RR5F(-)	18	GN	TXL	239481R1		KS2	-	2644000R1		
RR5J(-)	20	GN	193	239481R1		KS2	-	2644000R1		
RR5M(-)	18	GN	TXL	239481R1		KS2	-	2644000R1		
RS5K(-)	18	GN	TXL	239481R1		KS2	-	2644000R1		
RS5M(-)	18	GN	TXL	239481R1		KS2	-	2644000R1		
RS5PJ(-)	20	GN	193	239481R1		KS2	-	2644000R1		
RU5F(-)	18	GN	TXL	239481R1		KS2	-	2644000R1		
RU5K(-)	18	GN	TXL	239481R1		KS2	-	2644000R1		
RU5L(-)	20	GN	193	239481R1		KS2	-	2644000R1		
RX5K(-)	18	GN	TXL	239481R1		KS2	-	2644000R1		
RX5M(-)	18	GN	TXL	239481R1		KS2	-	2644000R1		
RX5PJ(-)	20	GN	193	239481R1		KS2	-	2644000R1		
RZ5F(-)	18	GN	TXL	239481R1		KS2	-	2644000R1		
RZ5H(-)	18	GN	TXL	239481R1		KS2	-	2644000R1		
RZ5J(-)	20	GN	193	239481R1		KS2	-	2644000R1		
SB5J(-)	18	GN	TXL	239481R1		KS2	-	2644000R1		
SB5K(-)	20	GN	193	239481R1		KS2	-	2644000R1		
SB5M(-)	18	GN	TXL	239481R1		KS2	-	2644000R1		
SC5M(-)	18	GN	TXL	239481R1		KS2	-	2644000R1		
SC5PJ(-)	18	GN	TXL	239481R1		KS2	-	2644000R1		
SC5T(-)	20	GN	193	239481R1		KS2	-	2644000R1		
SD5H(-)	18	GN	TXL	239481R1		KS2	-	2644000R1		
SD5J(-)	18	GN	TXL	239481R1		KS2	-	2644000R1		
SD5K(-)	20	GN	193	239481R1		KS2	-	2644000R1		
SE5K(-)	18	GN	TXL	239481R1		KS2	-	2644000R1		
SE5L(-)	18	GN	TXL	239481R1		KS2	-	2644000R1		
SE5M(-)	20	GN	193	239481R1		KS2	-	2644000R1		
VE5F(-)	18	GN	TXL	239481R1		KS2	-	2644000R1		
VE5K(-)	18	GN	TXL	239481R1		KS2	-	2644000R1		
VE5L(-)	20	GN	193	239481R1		KS2	-	2644000R1		
VG5K(-)	18	GN	TXL	239481R1		KS2	-	2644000R1		
VG5L(-)	18	GN	TXL	239481R1		KS2	-	2644000R1		
VG5M(-)	20	GN	193	239481R1		KS2	-	2644000R1		
YZ5K(-)	18	GN	TXL	239481R1		KS2	-	2644000R1		
YZ5L(-)	18	GN	TXL	239481R1		KS2	-	2644000R1		
YZ5M(-)	20	GN	193	239481R1		KS2	-	2644000R1		
CN11-GBC	18	WH	TXL	239481R1		MS1	-	2644000R1		
CN11-GBD	18	WH	TXL	239481R1		MS1	-	2644000R1		
CN11-GBF	18	WH	TXL	239481R1		MS1	-	2644000R1		
CR11-GBC	18	WH	TXL	239481R1		MS1	-	2644000R1		
CR11-GBD	18	WH	TXL	239481R1		MS1	-	2644000R1		
CR11-GBF	18	WH	TXL	239481R1		MS1	-	2644000R1		

Circuit Number	Gauge	Color	Insulation	Terminal / Splice Number	Connector Part number	Connector Number	Cavity	Seal/Sleeve	Lock 1	Lock 2
ZY11-GBC	18	WH	TXL	239481R1		MS1	-	2644000R1		
ZY11-GBD	18	WH	TXL	239481R1		MS1	-	2644000R1		
ZY11-GBF	18	WH	TXL	239481R1		MS1	-	2644000R1		
ZY98-GBE	18	WH	TXL	239481R1		MS1	-	2644000R1		
CN11-GBC	20	WH	TXL	239481R1		MS1	-	2644000R1		
CN11-GBD	20	WH	TXL	239481R1		MS1	-	2644000R1		
CN11-GBF	20	WH	TXL	239481R1		MS1	-	2644000R1		
CR11-GBC	20	WH	TXL	239481R1		MS1	-	2644000R1		
CR11-GBD	20	WH	TXL	239481R1		MS1	-	2644000R1		
CR11-GBF	20	WH	TXL	239481R1		MS1	-	2644000R1		
ZY11-GBC	20	WH	TXL	239481R1		MS1	-	2644000R1		
ZY11-GBD	20	WH	TXL	239481R1		MS1	-	2644000R1		
ZY11-GBF	20	WH	TXL	239481R1		MS1	-	2644000R1		
ZY98-GBE	18	WH	TXL	239481R1		MS1	-	2644000R1		
JP5BG(+)	18	YL	TXL	382181C1		NS1	-	2644000R1		
JP5BJ(+)	18	YL	TXL	382181C1		NS1	-	2644000R1		
JP5BK(+)	18	YL	TXL	382181C1		NS1	-	2644000R1		
JR5BH(+)	18	YL	TXL	382181C1		NS1	-	2644000R1		
JR5BJ(+)	18	YL	TXL	382181C1		NS1	-	2644000R1		
JR5BK(+)	18	YL	TXL	382181C1		NS1	-	2644000R1		
JP5BG(+)	18	YL	TXL	382181C1		NS1	-	2644000R1		
JP5BJ(+)	18	YL	TXL	382181C1		NS1	-	2644000R1		
JP5BK(+)	18	YL	TXL	382181C1		NS1	-	2644000R1		
JR5BH(+)	18	YL	TXL	382181C1		NS1	-	2644000R1		
JR5BJ(+)	18	YL	TXL	382181C1		NS1	-	2644000R1		
JR5BK(+)	18	YL	TXL	382181C1		NS1	-	2644000R1		
AA73A	20	LTGN	TXL	239481R1		NS10	-	2644000R1		
AA73B	20	LTGN	TXL	239481R1		NS10	-	2644000R1		
AA73C	20	LTGN	TXL	239481R1		NS10	-	2644000R1		
AA73A	20	LTGN	TXL	239481R1		NS10	-	2644000R1		
AA73B	20	LTGN	TXL	239481R1		NS10	-	2644000R1		
AA73C	20	LTGN	TXL	239481R1		NS10	-	2644000R1		
KP5AB(+)	18	YL	TXL	239481R1		NS11	-	2644000R1		
KP5AF(+)	20	YL	193	239481R1		NS11	-	2644000R1		
KP5AJ(+)	18	YL	TXL	239481R1		NS11	-	2644000R1		
KP5AB(+)	18	YL	TXL	239481R1		NS11	-	2644000R1		
KP5AF(+)	20	YL	193	239481R1		NS11	-	2644000R1		
KP5AJ(+)	18	YL	TXL	239481R1		NS11	-	2644000R1		
KP5AB(-)	18	GN	TXL	239481R1		NS12	-	2644000R1		
KP5AF(-)	20	GN	193	239481R1		NS12	-	2644000R1		
KP5AJ(-)	18	GN	TXL	239481R1		NS12	-	2644000R1		
KP5AB(-)	18	GN	TXL	239481R1		NS12	-	2644000R1		
KP5AF(-)	20	GN	193	239481R1		NS12	-	2644000R1		
KP5AJ(-)	18	GN	TXL	239481R1		NS12	-	2644000R1		
JP5BG(-)	18	LTGN	TXL	382181C1		NS2	-	2644000R1		
JP5BJ(-)	18	LTGN	TXL	382181C1		NS2	-	2644000R1		
JP5BK(-)	18	LTGN	TXL	382181C1		NS2	-	2644000R1		
JR5BH(-)	18	LTGN	TXL	382181C1		NS2	-	2644000R1		
JR5BJ(-)	18	LTGN	TXL	382181C1		NS2	-	2644000R1		
JR5BK(-)	18	LTGN	TXL	382181C1		NS2	-	2644000R1		
JP5BG(-)	18	LTGN	TXL	382181C1		NS2	-	2644000R1		
JP5BJ(-)	18	LTGN	TXL	382181C1		NS2	-	2644000R1		

Circuit Number	Gauge	Color	Insulation	Terminal / Splice Number	Connector Part number	Connector Number	Cavity	Seal/Sleeve	Lock 1	Lock 2
JP5BK(-)	18	LTGN	TXL	382181C1		NS2	-	2644000R1		
JR5BH(-)	18	LTGN	TXL	382181C1		NS2	-	2644000R1		
JR5BJ(-)	18	LTGN	TXL	382181C1		NS2	-	2644000R1		
JR5BK(-)	18	LTGN	TXL	382181C1		NS2	-	2644000R1		
DH75A	20	LTGN	TXL	239481R1		NS3	-	2644000R1		
DH75AA	18	LTGN	TXL	239481R1		NS3	-	2644000R1		
DH75AB	18	LTGN	TXL	239481R1		NS3	-	2644000R1		
DH75A	20	LTGN	TXL	239481R1		NS3	-	2644000R1		
DH75AA	18	LTGN	TXL	239481R1		NS3	-	2644000R1		
DH75AB	18	LTGN	TXL	239481R1		NS3	-	2644000R1		
3A94-GA	18	WH	TXL	239481R1		NS4	-	2644000R1		
3A94-GB	18	WH	TXL	239481R1		NS4	-	2644000R1		
3A94-GC	16	WH	TXL	239481R1		NS4	-	2644000R1		
3A94BB	18	GY	TXL	239481R1		NS4	-	2644000R1		
3A94BK	18	GY	TXL	239481R1		NS4	-	2644000R1		
3A94MA	18	GY	TXL	239481R1		NS4	-	2644000R1		
3A94MJ	18	GY	TXL	239481R1		NS4	-	2644000R1		
GS94-GA	18	WH	TXL	239481R1		NS4	-	2644000R1		
GS94-GB	18	WH	TXL	239481R1		NS4	-	2644000R1		
GS94-GC	16	WH	TXL	239481R1		NS4	-	2644000R1		
GS94BB	18	GY	TXL	239481R1		NS4	-	2644000R1		
GS94BK	18	GY	TXL	239481R1		NS4	-	2644000R1		
GS94MA	18	GY	TXL	239481R1		NS4	-	2644000R1		
GS94MJ	18	GY	TXL	239481R1		NS4	-	2644000R1		
3A94-GA	18	WH	TXL	239481R1		NS4	-	2644000R1		
3A94-GB	18	WH	TXL	239481R1		NS4	-	2644000R1		
3A94-GC	16	WH	TXL	239481R1		NS4	-	2644000R1		
3A94BB	18	GY	TXL	239481R1		NS4	-	2644000R1		
3A94BK	18	GY	TXL	239481R1		NS4	-	2644000R1		
3A94MA	18	GY	TXL	239481R1		NS4	-	2644000R1		
3A94MJ	18	GY	TXL	239481R1		NS4	-	2644000R1		
GS94-GA	18	WH	TXL	239481R1		NS4	-	2644000R1		
GS94-GB	18	WH	TXL	239481R1		NS4	-	2644000R1		
GS94-GC	16	WH	TXL	239481R1		NS4	-	2644000R1		
GS94BB	18	GY	TXL	239481R1		NS4	-	2644000R1		
GS94BK	18	GY	TXL	239481R1		NS4	-	2644000R1		
GS94MA	18	GY	TXL	239481R1		NS4	-	2644000R1		
GS94MJ	18	GY	TXL	239481R1		NS4	-	2644000R1		
GZ5AF(+)	20	YL	193	239481R1		NS5	-	2644000R1		
GZ5AG(+)	18	YL	TXL	239481R1		NS5	-	2644000R1		
GZ5AJ(+)	18	YL	TXL	239481R1		NS5	-	2644000R1		
JK5AF(+)	20	YL	193	239481R1		NS5	-	2644000R1		
JK5AG(+)	18	YL	TXL	239481R1		NS5	-	2644000R1		
JK5AL(+)	18	YL	TXL	239481R1		NS5	-	2644000R1		
KU5AB(+)	18	YL	TXL	239481R1		NS5	-	2644000R1		
KU5AF(+)	20	YL	193	239481R1		NS5	-	2644000R1		
KU5AJ(+)	18	YL	TXL	239481R1		NS5	-	2644000R1		
LN5AB(+)	18	YL	TXL	239481R1		NS5	-	2644000R1		
LN5AF(+)	20	YL	193	239481R1		NS5	-	2644000R1		
LN5AL(+)	18	YL	TXL	239481R1		NS5	-	2644000R1		
GZ5AF(+)	20	YL	193	239481R1		NS5	-	2644000R1		
GZ5AG(+)	18	YL	TXL	239481R1		NS5	-	2644000R1		

Circuit Number	Gauge	Color	Insulation	Terminal / Splice Number	Connector Part number	Connector Number	Cavity	Seal/Sleeve	Lock 1	Lock 2
GZ5AJ(+)	18	YL	TXL	239481R1		NS5	-	2644000R1		
JK5AF(+)	20	YL	193	239481R1		NS5	-	2644000R1		
JK5AG(+)	18	YL	TXL	239481R1		NS5	-	2644000R1		
JK5AL(+)	18	YL	TXL	239481R1		NS5	-	2644000R1		
KU5AB(+)	18	YL	TXL	239481R1		NS5	-	2644000R1		
KU5AF(+)	20	YL	193	239481R1		NS5	-	2644000R1		
KU5AJ(+)	18	YL	TXL	239481R1		NS5	-	2644000R1		
LN5AB(+)	18	YL	TXL	239481R1		NS5	-	2644000R1		
LN5AF(+)	20	YL	193	239481R1		NS5	-	2644000R1		
LN5AL(+)	18	YL	TXL	239481R1		NS5	-	2644000R1		
GZ5AF(-)	20	GN	193	239481R1		NS6	-	2644000R1		
GZ5AG(-)	18	GN	TXL	239481R1		NS6	-	2644000R1		
GZ5AJ(-)	18	GN	TXL	239481R1		NS6	-	2644000R1		
JK5AF(-)	20	GN	193	239481R1		NS6	-	2644000R1		
JK5AG(-)	18	GN	TXL	239481R1		NS6	-	2644000R1		
JK5AL(-)	18	GN	TXL	239481R1		NS6	-	2644000R1		
KU5AB(-)	18	GN	TXL	239481R1		NS6	-	2644000R1		
KU5AF(-)	20	GN	193	239481R1		NS6	-	2644000R1		
KU5AJ(-)	18	GN	TXL	239481R1		NS6	-	2644000R1		
LN5AB(-)	18	GN	TXL	239481R1		NS6	-	2644000R1		
LN5AF(-)	20	GN	193	239481R1		NS6	-	2644000R1		
LN5AL(-)	18	GN	TXL	239481R1		NS6	-	2644000R1		
GZ5AF(-)	20	GN	193	239481R1		NS6	-	2644000R1		
GZ5AG(-)	18	GN	TXL	239481R1		NS6	-	2644000R1		
GZ5AJ(-)	18	GN	TXL	239481R1		NS6	-	2644000R1		
JK5AF(-)	20	GN	193	239481R1		NS6	-	2644000R1		
JK5AG(-)	18	GN	TXL	239481R1		NS6	-	2644000R1		
JK5AL(-)	18	GN	TXL	239481R1		NS6	-	2644000R1		
KU5AB(-)	18	GN	TXL	239481R1		NS6	-	2644000R1		
KU5AF(-)	20	GN	193	239481R1		NS6	-	2644000R1		
KU5AJ(-)	18	GN	TXL	239481R1		NS6	-	2644000R1		
LN5AB(-)	18	GN	TXL	239481R1		NS6	-	2644000R1		
LN5AF(-)	20	GN	193	239481R1		NS6	-	2644000R1		
LN5AL(-)	18	GN	TXL	239481R1		NS6	-	2644000R1		
EY71B	16	OR	TXL	239481R1		NS7	-	2644000R1		
EY71BA	16	OR	TXL	239481R1		NS7	-	2644000R1		
EY71BB	18	OR	TXL	239481R1		NS7	-	2644000R1		
EY71B	16	OR	TXL	239481R1		NS7	-	2644000R1		
EY71BC	16	OR	TXL	239481R1		NS7	-	2644000R1		
EY71BD	16	OR	TXL	239481R1		NS7	-	2644000R1		
CF11-GBE	18	WH	TXL	239481R1		NS9	-	2644000R1		
CF11-GSD	18	WH	TXL	239481R1		NS9	-	2644000R1		
CF11-GBE	18	WH	TXL	239481R1		NS9	-	2644000R1		
CF11-GSD	18	WH	TXL	239481R1		NS9	-	2644000R1		
3D5M(-)	18	GN	TXL	239481R1		PS1	-	2644000R1		
3D5N(-)	18	GN	TXL	239481R1		PS1	-	2644000R1		
3D5P(-)	18	GN	TXL	239481R1		PS1	-	2644000R1		
3M5M(-)	18	GN	TXL	239481R1		PS1	-	2644000R1		
3M5N(-)	18	GN	TXL	239481R1		PS1	-	2644000R1		
3M5P(-)	18	GN	TXL	239481R1		PS1	-	2644000R1		
9K5H(-)	18	GN	TXL	239481R1		PS1	-	2644000R1		
9K5N(-)	18	GN	TXL	239481R1		PS1	-	2644000R1		

Circuit Number	Gauge	Color	Insulation	Terminal / Splice Number	Connector Part number	Connector Number	Cavity	Seal/Sleeve	Lock 1	Lock 2
9K5P(-)	18	GN	TXL	239481R1		PS1	-	2644000R1		
9L5M(-)	18	GN	TXL	239481R1		PS1	-	2644000R1		
9L5N(-)	18	GN	TXL	239481R1		PS1	-	2644000R1		
9L5P(-)	18	GN	TXL	239481R1		PS1	-	2644000R1		
9P5H(-)	18	GN	TXL	239481R1		PS1	-	2644000R1		
9P5N(-)	18	GN	TXL	239481R1		PS1	-	2644000R1		
9P5P(-)	18	GN	TXL	239481R1		PS1	-	2644000R1		
9V5M(-)	18	GN	TXL	239481R1		PS1	-	2644000R1		
9V5N(-)	18	GN	TXL	239481R1		PS1	-	2644000R1		
9V5P(-)	18	GN	TXL	239481R1		PS1	-	2644000R1		
JC5M(-)	18	GN	TXL	239481R1		PS1	-	2644000R1		
JC5N(-)	18	GN	TXL	239481R1		PS1	-	2644000R1		
JC5P(-)	18	GN	TXL	239481R1		PS1	-	2644000R1		
JD5M(-)	18	GN	TXL	239481R1		PS1	-	2644000R1		
JD5N(-)	18	GN	TXL	239481R1		PS1	-	2644000R1		
JD5P(-)	18	GN	TXL	239481R1		PS1	-	2644000R1		
JF5H(-)	18	GN	TXL	239481R1		PS1	-	2644000R1		
JF5N(-)	18	GN	TXL	239481R1		PS1	-	2644000R1		
JF5P(-)	18	GN	TXL	239481R1		PS1	-	2644000R1		
JG5K(-)	18	GN	TXL	239481R1		PS1	-	2644000R1		
JG5N(-)	18	GN	TXL	239481R1		PS1	-	2644000R1		
JG5P(-)	18	GN	TXL	239481R1		PS1	-	2644000R1		
LC5H(-)	18	GN	TXL	239481R1		PS1	-	2644000R1		
LC5N(-)	18	GN	TXL	239481R1		PS1	-	2644000R1		
LC5P(-)	18	GN	TXL	239481R1		PS1	-	2644000R1		
LD5K(-)	18	GN	TXL	239481R1		PS1	-	2644000R1		
LD5N(-)	18	GN	TXL	239481R1		PS1	-	2644000R1		
LD5P(-)	18	GN	TXL	239481R1		PS1	-	2644000R1		
LE5K(-)	18	GN	TXL	239481R1		PS1	-	2644000R1		
LE5N(-)	18	GN	TXL	239481R1		PS1	-	2644000R1		
LE5P(-)	18	GN	TXL	239481R1		PS1	-	2644000R1		
LF5K(-)	18	GN	TXL	239481R1		PS1	-	2644000R1		
LF5N(-)	18	GN	TXL	239481R1		PS1	-	2644000R1		
LF5P(-)	18	GN	TXL	239481R1		PS1	-	2644000R1		
LS5F(-)	18	GN	TXL	239481R1		PS1	-	2644000R1		
LS5N(-)	18	GN	TXL	239481R1		PS1	-	2644000R1		
LS5P(-)	18	GN	TXL	239481R1		PS1	-	2644000R1		
LU5K(-)	18	GN	TXL	239481R1		PS1	-	2644000R1		
LU5N(-)	18	GN	TXL	239481R1		PS1	-	2644000R1		
LU5P(-)	18	GN	TXL	239481R1		PS1	-	2644000R1		
LV5K(-)	18	GN	TXL	239481R1		PS1	-	2644000R1		
LV5N(-)	18	GN	TXL	239481R1		PS1	-	2644000R1		
LV5P(-)	18	GN	TXL	239481R1		PS1	-	2644000R1		
PY5H(-)	18	GN	TXL	239481R1		PS1	-	2644000R1		
PY5N(-)	18	GN	TXL	239481R1		PS1	-	2644000R1		
PY5P(-)	18	GN	TXL	239481R1		PS1	-	2644000R1		
PZ5K(-)	18	GN	TXL	239481R1		PS1	-	2644000R1		
PZ5N(-)	18	GN	TXL	239481R1		PS1	-	2644000R1		
PZ5P(-)	18	GN	TXL	239481R1		PS1	-	2644000R1		
RD5M(-)	18	GN	TXL	239481R1		PS1	-	2644000R1		
RD5N(-)	18	GN	TXL	239481R1		PS1	-	2644000R1		
RD5P(-)	18	GN	TXL	239481R1		PS1	-	2644000R1		

Circuit Number	Gauge	Color	Insulation	Terminal / Splice Number	Connector Part number	Connector Number	Cavity	Seal/Sleeve	Lock 1	Lock 2
RG5H(-)	18	GN	TXL	239481R1		PS1	-	2644000R1		
RG5N(-)	18	GN	TXL	239481R1		PS1	-	2644000R1		
RG5P(-)	18	GN	TXL	239481R1		PS1	-	2644000R1		
RJ5M(-)	18	GN	TXL	239481R1		PS1	-	2644000R1		
RJ5N(-)	18	GN	TXL	239481R1		PS1	-	2644000R1		
RJ5P(-)	18	GN	TXL	239481R1		PS1	-	2644000R1		
RM5M(-)	18	GN	TXL	239481R1		PS1	-	2644000R1		
RM5N(-)	18	GN	TXL	239481R1		PS1	-	2644000R1		
RM5P(-)	18	GN	TXL	239481R1		PS1	-	2644000R1		
RS5M(-)	18	GN	TXL	239481R1		PS1	-	2644000R1		
RS5N(-)	18	GN	TXL	239481R1		PS1	-	2644000R1		
RS5P(-)	18	GN	TXL	239481R1		PS1	-	2644000R1		
RU5K(-)	18	GN	TXL	239481R1		PS1	-	2644000R1		
RU5N(-)	18	GN	TXL	239481R1		PS1	-	2644000R1		
RU5P(-)	18	GN	TXL	239481R1		PS1	-	2644000R1		
SB5M(-)	18	GN	TXL	239481R1		PS1	-	2644000R1		
SB5N(-)	18	GN	TXL	239481R1		PS1	-	2644000R1		
SB5P(-)	18	GN	TXL	239481R1		PS1	-	2644000R1		
SC5M(-)	18	GN	TXL	239481R1		PS1	-	2644000R1		
SC5N(-)	18	GN	TXL	239481R1		PS1	-	2644000R1		
SC5P(-)	18	GN	TXL	239481R1		PS1	-	2644000R1		
SD5H(-)	18	GN	TXL	239481R1		PS1	-	2644000R1		
SD5N(-)	18	GN	TXL	239481R1		PS1	-	2644000R1		
SD5P(-)	18	GN	TXL	239481R1		PS1	-	2644000R1		
SE5K(-)	18	GN	TXL	239481R1		PS1	-	2644000R1		
SE5N(-)	18	GN	TXL	239481R1		PS1	-	2644000R1		
SE5P(-)	18	GN	TXL	239481R1		PS1	-	2644000R1		
SN5K(-)	18	GN	TXL	239481R1		PS1	-	2644000R1		
SN5N(-)	18	GN	TXL	239481R1		PS1	-	2644000R1		
SN5P(-)	18	GN	TXL	239481R1		PS1	-	2644000R1		
SP5K(-)	18	GN	TXL	239481R1		PS1	-	2644000R1		
SP5N(-)	18	GN	TXL	239481R1		PS1	-	2644000R1		
SP5P(-)	18	GN	TXL	239481R1		PS1	-	2644000R1		
VC5K(-)	18	GN	TXL	239481R1		PS1	-	2644000R1		
VC5N(-)	18	GN	TXL	239481R1		PS1	-	2644000R1		
VC5P(-)	18	GN	TXL	239481R1		PS1	-	2644000R1		
VD5K(-)	18	GN	TXL	239481R1		PS1	-	2644000R1		
VD5N(-)	18	GN	TXL	239481R1		PS1	-	2644000R1		
VD5P(-)	18	GN	TXL	239481R1		PS1	-	2644000R1		
VE5K(-)	18	GN	TXL	239481R1		PS1	-	2644000R1		
VE5N(-)	18	GN	TXL	239481R1		PS1	-	2644000R1		
VE5P(-)	18	GN	TXL	239481R1		PS1	-	2644000R1		
VF5K(-)	18	GN	TXL	239481R1		PS1	-	2644000R1		
VF5N(-)	18	GN	TXL	239481R1		PS1	-	2644000R1		
VF5P(-)	18	GN	TXL	239481R1		PS1	-	2644000R1		
YX5K(-)	18	GN	TXL	239481R1		PS1	-	2644000R1		
YX5N(-)	18	GN	TXL	239481R1		PS1	-	2644000R1		
YX5P(-)	18	GN	TXL	239481R1		PS1	-	2644000R1		
YZ5K(-)	18	GN	TXL	239481R1		PS1	-	2644000R1		
YZ5N(-)	18	GN	TXL	239481R1		PS1	-	2644000R1		
YZ5P(-)	18	GN	TXL	239481R1		PS1	-	2644000R1		
2H5H(-)	18	GN	TXL	239481R1		PS1	-	2644000R1		

Circuit Number	Gauge	Color	Insulation	Terminal / Splice Number	Connector Part number	Connector Number	Cavity	Seal/Sleeve	Lock 1	Lock 2
2H5N(-)	18	GN	TXL	239481R1		PS1	-	2644000R1		
2H5P(-)	18	GN	TXL	239481R1		PS1	-	2644000R1		
2J5K(-)	18	GN	TXL	239481R1		PS1	-	2644000R1		
2J5N(-)	18	GN	TXL	239481R1		PS1	-	2644000R1		
2J5P(-)	18	GN	TXL	239481R1		PS1	-	2644000R1		
2L5M(-)	18	GN	TXL	239481R1		PS1	-	2644000R1		
2L5N(-)	18	GN	TXL	239481R1		PS1	-	2644000R1		
2L5P(-)	18	GN	TXL	239481R1		PS1	-	2644000R1		
2M5H(-)	18	GN	TXL	239481R1		PS1	-	2644000R1		
2M5N(-)	18	GN	TXL	239481R1		PS1	-	2644000R1		
2M5P(-)	18	GN	TXL	239481R1		PS1	-	2644000R1		
2W5M(-)	18	GN	TXL	239481R1		PS1	-	2644000R1		
2W5N(-)	18	GN	TXL	239481R1		PS1	-	2644000R1		
2W5P(-)	18	GN	TXL	239481R1		PS1	-	2644000R1		
2Y5M(-)	18	GN	TXL	239481R1		PS1	-	2644000R1		
2Y5N(-)	18	GN	TXL	239481R1		PS1	-	2644000R1		
2Y5P(-)	18	GN	TXL	239481R1		PS1	-	2644000R1		
2Z5M(-)	18	GN	TXL	239481R1		PS1	-	2644000R1		
2Z5N(-)	18	GN	TXL	239481R1		PS1	-	2644000R1		
2Z5P(-)	18	GN	TXL	239481R1		PS1	-	2644000R1		
3C5K(-)	18	GN	TXL	239481R1		PS1	-	2644000R1		
3C5N(-)	18	GN	TXL	239481R1		PS1	-	2644000R1		
3C5P(-)	18	GN	TXL	239481R1		PS1	-	2644000R1		
3D5M(-)	18	GN	TXL	239481R1		PS1	-	2644000R1		
3D5N(-)	18	GN	TXL	239481R1		PS1	-	2644000R1		
3D5P(-)	18	GN	TXL	239481R1		PS1	-	2644000R1		
3E5M(-)	18	GN	TXL	239481R1		PS1	-	2644000R1		
3E5N(-)	18	GN	TXL	239481R1		PS1	-	2644000R1		
3E5P(-)	18	GN	TXL	239481R1		PS1	-	2644000R1		
3J5M(-)	18	GN	TXL	239481R1		PS1	-	2644000R1		
3J5N(-)	18	GN	TXL	239481R1		PS1	-	2644000R1		
3J5P(-)	18	GN	TXL	239481R1		PS1	-	2644000R1		
3M5M(-)	18	GN	TXL	239481R1		PS1	-	2644000R1		
3M5N(-)	18	GN	TXL	239481R1		PS1	-	2644000R1		
3M5P(-)	18	GN	TXL	239481R1		PS1	-	2644000R1		
3R5H(-)	18	GN	TXL	239481R1		PS1	-	2644000R1		
3R5N(-)	18	GN	TXL	239481R1		PS1	-	2644000R1		
3R5P(-)	18	GN	TXL	239481R1		PS1	-	2644000R1		
3U5K(-)	18	GN	TXL	239481R1		PS1	-	2644000R1		
3U5N(-)	18	GN	TXL	239481R1		PS1	-	2644000R1		
3U5P(-)	18	GN	TXL	239481R1		PS1	-	2644000R1		
3W5K(-)	18	GN	TXL	239481R1		PS1	-	2644000R1		
3W5N(-)	18	GN	TXL	239481R1		PS1	-	2644000R1		
3W5P(-)	18	GN	TXL	239481R1		PS1	-	2644000R1		
3Z5M(-)	18	GN	TXL	239481R1		PS1	-	2644000R1		
3Z5N(-)	18	GN	TXL	239481R1		PS1	-	2644000R1		
3Z5P(-)	18	GN	TXL	239481R1		PS1	-	2644000R1		
4E5K(-)	18	GN	TXL	239481R1		PS1	-	2644000R1		
4E5N(-)	18	GN	TXL	239481R1		PS1	-	2644000R1		
4E5P(-)	18	GN	TXL	239481R1		PS1	-	2644000R1		
4J5M(-)	18	GN	TXL	239481R1		PS1	-	2644000R1		
4J5N(-)	18	GN	TXL	239481R1		PS1	-	2644000R1		

Circuit Number	Gauge	Color	Insulation	Terminal / Splice Number	Connector Part number	Connector Number	Cavity	Seal/Sleeve	Lock 1	Lock 2
4J5P(-)	18	GN	TXL	239481R1		PS1	-	2644000R1		
4L5H(-)	18	GN	TXL	239481R1		PS1	-	2644000R1		
4L5N(-)	18	GN	TXL	239481R1		PS1	-	2644000R1		
4L5P(-)	18	GN	TXL	239481R1		PS1	-	2644000R1		
4N5M(-)	18	GN	TXL	239481R1		PS1	-	2644000R1		
4N5N(-)	18	GN	TXL	239481R1		PS1	-	2644000R1		
4N5P(-)	18	GN	TXL	239481R1		PS1	-	2644000R1		
9K5H(-)	18	GN	TXL	239481R1		PS1	-	2644000R1		
9K5N(-)	18	GN	TXL	239481R1		PS1	-	2644000R1		
9K5P(-)	18	GN	TXL	239481R1		PS1	-	2644000R1		
9L5M(-)	18	GN	TXL	239481R1		PS1	-	2644000R1		
9L5N(-)	18	GN	TXL	239481R1		PS1	-	2644000R1		
9L5P(-)	18	GN	TXL	239481R1		PS1	-	2644000R1		
9P5H(-)	18	GN	TXL	239481R1		PS1	-	2644000R1		
9P5N(-)	18	GN	TXL	239481R1		PS1	-	2644000R1		
9P5P(-)	18	GN	TXL	239481R1		PS1	-	2644000R1		
9T5H(-)	18	GN	TXL	239481R1		PS1	-	2644000R1		
9T5N(-)	18	GN	TXL	239481R1		PS1	-	2644000R1		
9T5P(-)	18	GN	TXL	239481R1		PS1	-	2644000R1		
9V5M(-)	18	GN	TXL	239481R1		PS1	-	2644000R1		
9V5N(-)	18	GN	TXL	239481R1		PS1	-	2644000R1		
9V5P(-)	18	GN	TXL	239481R1		PS1	-	2644000R1		
9W5M(-)	18	GN	TXL	239481R1		PS1	-	2644000R1		
9W5N(-)	18	GN	TXL	239481R1		PS1	-	2644000R1		
9W5P(-)	18	GN	TXL	239481R1		PS1	-	2644000R1		
JC5M(-)	18	GN	TXL	239481R1		PS1	-	2644000R1		
JC5N(-)	18	GN	TXL	239481R1		PS1	-	2644000R1		
JC5P(-)	18	GN	TXL	239481R1		PS1	-	2644000R1		
JD5M(-)	18	GN	TXL	239481R1		PS1	-	2644000R1		
JD5N(-)	18	GN	TXL	239481R1		PS1	-	2644000R1		
JD5P(-)	18	GN	TXL	239481R1		PS1	-	2644000R1		
JF5H(-)	18	GN	TXL	239481R1		PS1	-	2644000R1		
JF5N(-)	18	GN	TXL	239481R1		PS1	-	2644000R1		
JF5P(-)	18	GN	TXL	239481R1		PS1	-	2644000R1		
JG5K(-)	18	GN	TXL	239481R1		PS1	-	2644000R1		
JG5N(-)	18	GN	TXL	239481R1		PS1	-	2644000R1		
JG5P(-)	18	GN	TXL	239481R1		PS1	-	2644000R1		
LC5H(-)	18	GN	TXL	239481R1		PS1	-	2644000R1		
LC5N(-)	18	GN	TXL	239481R1		PS1	-	2644000R1		
LC5P(-)	18	GN	TXL	239481R1		PS1	-	2644000R1		
LD5K(-)	18	GN	TXL	239481R1		PS1	-	2644000R1		
LD5N(-)	18	GN	TXL	239481R1		PS1	-	2644000R1		
LD5P(-)	18	GN	TXL	239481R1		PS1	-	2644000R1		
LE5K(-)	18	GN	TXL	239481R1		PS1	-	2644000R1		
LE5N(-)	18	GN	TXL	239481R1		PS1	-	2644000R1		
LE5P(-)	18	GN	TXL	239481R1		PS1	-	2644000R1		
LF5K(-)	18	GN	TXL	239481R1		PS1	-	2644000R1		
LF5N(-)	18	GN	TXL	239481R1		PS1	-	2644000R1		
LF5P(-)	18	GN	TXL	239481R1		PS1	-	2644000R1		
LS5F(-)	18	GN	TXL	239481R1		PS1	-	2644000R1		
LS5N(-)	18	GN	TXL	239481R1		PS1	-	2644000R1		
LS5P(-)	18	GN	TXL	239481R1		PS1	-	2644000R1		

Circuit Number	Gauge	Color	Insulation	Terminal / Splice Number	Connector Part number	Connector Number	Cavity	Seal/Sleeve	Lock 1	Lock 2
LU5K(-)	18	GN	TXL	239481R1		PS1	-	2644000R1		
LU5N(-)	18	GN	TXL	239481R1		PS1	-	2644000R1		
LU5P(-)	18	GN	TXL	239481R1		PS1	-	2644000R1		
LV5K(-)	18	GN	TXL	239481R1		PS1	-	2644000R1		
LV5N(-)	18	GN	TXL	239481R1		PS1	-	2644000R1		
LV5P(-)	18	GN	TXL	239481R1		PS1	-	2644000R1		
PV5K(-)	18	GN	TXL	239481R1		PS1	-	2644000R1		
PV5N(-)	18	GN	TXL	239481R1		PS1	-	2644000R1		
PV5P(-)	18	GN	TXL	239481R1		PS1	-	2644000R1		
PY5H(-)	18	GN	TXL	239481R1		PS1	-	2644000R1		
PY5N(-)	18	GN	TXL	239481R1		PS1	-	2644000R1		
PY5P(-)	18	GN	TXL	239481R1		PS1	-	2644000R1		
PZ5K(-)	18	GN	TXL	239481R1		PS1	-	2644000R1		
PZ5N(-)	18	GN	TXL	239481R1		PS1	-	2644000R1		
PZ5P(-)	18	GN	TXL	239481R1		PS1	-	2644000R1		
RD5M(-)	18	GN	TXL	239481R1		PS1	-	2644000R1		
RD5N(-)	18	GN	TXL	239481R1		PS1	-	2644000R1		
RD5P(-)	18	GN	TXL	239481R1		PS1	-	2644000R1		
RG5H(-)	18	GN	TXL	239481R1		PS1	-	2644000R1		
RG5N(-)	18	GN	TXL	239481R1		PS1	-	2644000R1		
RG5P(-)	18	GN	TXL	239481R1		PS1	-	2644000R1		
RJ5M(-)	18	GN	TXL	239481R1		PS1	-	2644000R1		
RJ5N(-)	18	GN	TXL	239481R1		PS1	-	2644000R1		
RJ5P(-)	18	GN	TXL	239481R1		PS1	-	2644000R1		
RM5M(-)	18	GN	TXL	239481R1		PS1	-	2644000R1		
RM5N(-)	18	GN	TXL	239481R1		PS1	-	2644000R1		
RM5P(-)	18	GN	TXL	239481R1		PS1	-	2644000R1		
RR5M(-)	18	GN	TXL	239481R1		PS1	-	2644000R1		
RR5N(-)	18	GN	TXL	239481R1		PS1	-	2644000R1		
RR5P(-)	18	GN	TXL	239481R1		PS1	-	2644000R1		
RS5M(-)	18	GN	TXL	239481R1		PS1	-	2644000R1		
RS5N(-)	18	GN	TXL	239481R1		PS1	-	2644000R1		
RS5P(-)	18	GN	TXL	239481R1		PS1	-	2644000R1		
RU5K(-)	18	GN	TXL	239481R1		PS1	-	2644000R1		
RU5N(-)	18	GN	TXL	239481R1		PS1	-	2644000R1		
RU5P(-)	18	GN	TXL	239481R1		PS1	-	2644000R1		
RX5M(-)	18	GN	TXL	239481R1		PS1	-	2644000R1		
RX5N(-)	18	GN	TXL	239481R1		PS1	-	2644000R1		
RX5P(-)	18	GN	TXL	239481R1		PS1	-	2644000R1		
RZ5H(-)	18	GN	TXL	239481R1		PS1	-	2644000R1		
RZ5N(-)	18	GN	TXL	239481R1		PS1	-	2644000R1		
RZ5P(-)	18	GN	TXL	239481R1		PS1	-	2644000R1		
SB5M(-)	18	GN	TXL	239481R1		PS1	-	2644000R1		
SB5N(-)	18	GN	TXL	239481R1		PS1	-	2644000R1		
SB5P(-)	18	GN	TXL	239481R1		PS1	-	2644000R1		
SC5M(-)	18	GN	TXL	239481R1		PS1	-	2644000R1		
SC5N(-)	18	GN	TXL	239481R1		PS1	-	2644000R1		
SC5P(-)	18	GN	TXL	239481R1		PS1	-	2644000R1		
SD5H(-)	18	GN	TXL	239481R1		PS1	-	2644000R1		
SD5N(-)	18	GN	TXL	239481R1		PS1	-	2644000R1		
SD5P(-)	18	GN	TXL	239481R1		PS1	-	2644000R1		
SE5K(-)	18	GN	TXL	239481R1		PS1	-	2644000R1		

Circuit Number	Gauge	Color	Insulation	Terminal / Splice Number	Connector Part number	Connector Number	Cavity	Seal/Sleeve	Lock 1	Lock 2
SE5N(-)	18	GN	TXL	239481R1		PS1	-	2644000R1		
SE5P(-)	18	GN	TXL	239481R1		PS1	-	2644000R1		
SN5K(-)	18	GN	TXL	239481R1		PS1	-	2644000R1		
SN5N(-)	18	GN	TXL	239481R1		PS1	-	2644000R1		
SN5P(-)	18	GN	TXL	239481R1		PS1	-	2644000R1		
SP5K(-)	18	GN	TXL	239481R1		PS1	-	2644000R1		
SP5N(-)	18	GN	TXL	239481R1		PS1	-	2644000R1		
SP5P(-)	18	GN	TXL	239481R1		PS1	-	2644000R1		
SR5K(-)	18	GN	TXL	239481R1		PS1	-	2644000R1		
SR5N(-)	18	GN	TXL	239481R1		PS1	-	2644000R1		
SR5P(-)	18	GN	TXL	239481R1		PS1	-	2644000R1		
VC5K(-)	18	GN	TXL	239481R1		PS1	-	2644000R1		
VC5N(-)	18	GN	TXL	239481R1		PS1	-	2644000R1		
VC5P(-)	18	GN	TXL	239481R1		PS1	-	2644000R1		
VD5N(-)	18	GN	TXL	239481R1		PS1	-	2644000R1		
VD5P(-)	18	GN	TXL	239481R1		PS1	-	2644000R1		
VE5K(-)	18	GN	TXL	239481R1		PS1	-	2644000R1		
VE5N(-)	18	GN	TXL	239481R1		PS1	-	2644000R1		
VE5P(-)	18	GN	TXL	239481R1		PS1	-	2644000R1		
VG5K(-)	18	GN	TXL	239481R1		PS1	-	2644000R1		
VG5N(-)	18	GN	TXL	239481R1		PS1	-	2644000R1		
VG5P(-)	18	GN	TXL	239481R1		PS1	-	2644000R1		
YX5K(-)	18	GN	TXL	239481R1		PS1	-	2644000R1		
YX5N(-)	18	GN	TXL	239481R1		PS1	-	2644000R1		
YX5P(-)	18	GN	TXL	239481R1		PS1	-	2644000R1		
YZ5K(-)	18	GN	TXL	239481R1		PS1	-	2644000R1		
YZ5N(-)	18	GN	TXL	239481R1		PS1	-	2644000R1		
YZ5P(-)	18	GN	TXL	239481R1		PS1	-	2644000R1		
3D5M(+)	18	YL	TXL	239481R1		PS2	-	2644000R1		
3D5N(+)	18	YL	TXL	239481R1		PS2	-	2644000R1		
3D5P(+)	18	YL	TXL	239481R1		PS2	-	2644000R1		
3M5M(+)	18	YL	TXL	239481R1		PS2	-	2644000R1		
3M5N(+)	18	YL	TXL	239481R1		PS2	-	2644000R1		
3M5P(+)	18	YL	TXL	239481R1		PS2	-	2644000R1		
9K5H(+)	18	YL	TXL	239481R1		PS2	-	2644000R1		
9K5N(+)	18	YL	TXL	239481R1		PS2	-	2644000R1		
9K5P(+)	18	YL	TXL	239481R1		PS2	-	2644000R1		
9L5M(+)	18	YL	TXL	239481R1		PS2	-	2644000R1		
9L5N(+)	18	YL	TXL	239481R1		PS2	-	2644000R1		
9L5P(+)	18	YL	TXL	239481R1		PS2	-	2644000R1		
9P5H(+)	18	YL	TXL	239481R1		PS2	-	2644000R1		
9P5N(+)	18	YL	TXL	239481R1		PS2	-	2644000R1	3545579C1	
9P5P(+)	18	YL	TXL	239481R1		PS2	-	2644000R1		
9V5M(+)	18	YL	TXL	239481R1		PS2	-	2644000R1		
9V5N(+)	18	YL	TXL	239481R1		PS2	-	2644000R1		
9V5P(+)	18	YL	TXL	239481R1		PS2	-	2644000R1		
JC5M(+)	18	YL	TXL	239481R1		PS2	-	2644000R1		
JC5N(+)	18	YL	TXL	239481R1		PS2	-	2644000R1		
JC5P(+)	18	YL	TXL	239481R1		PS2	-	2644000R1		
JD5M(+)	18	YL	TXL	239481R1		PS2	-	2644000R1		
JD5N(+)	18	YL	TXL	239481R1		PS2	-	2644000R1		
JD5P(+)	18	YL	TXL	239481R1		PS2	-	2644000R1		

Circuit Number	Gauge	Color	Insulation	Terminal / Splice Number	Connector Part number	Connector Number	Cavity	Seal/Sleeve	Lock 1	Lock 2
JF5H(+)	18	YL	TXL	239481R1		PS2	-	2644000R1		
JF5N(+)	18	YL	TXL	239481R1		PS2	-	2644000R1		
JF5P(+)	18	YL	TXL	239481R1		PS2	-	2644000R1		
JG5K(+)	18	YL	TXL	239481R1		PS2	-	2644000R1		
JG5N(+)	18	YL	TXL	239481R1		PS2	-	2644000R1		
JG5P(+)	18	YL	TXL	239481R1		PS2	-	2644000R1		
LC5H(+)	18	YL	TXL	239481R1		PS2	-	2644000R1		
LC5N(+)	18	YL	TXL	239481R1		PS2	-	2644000R1		
LC5P(+)	18	YL	TXL	239481R1		PS2	-	2644000R1		
LD5K(+)	18	YL	TXL	239481R1		PS2	-	2644000R1		
LD5N(+)	18	YL	TXL	239481R1		PS2	-	2644000R1		
LD5P(+)	18	YL	TXL	239481R1		PS2	-	2644000R1		
LE5K(+)	18	YL	TXL	239481R1		PS2	-	2644000R1		
LE5N(+)	18	YL	TXL	239481R1		PS2	-	2644000R1		
LE5P(+)	18	YL	TXL	239481R1		PS2	-	2644000R1		
LF5K(+)	18	YL	TXL	239481R1		PS2	-	2644000R1		
LF5N(+)	18	YL	TXL	239481R1		PS2	-	2644000R1		
LF5P(+)	18	YL	TXL	239481R1		PS2	-	2644000R1		
LS5F(+)	18	YL	TXL	239481R1		PS2	-	2644000R1		
LS5N(+)	18	YL	TXL	239481R1		PS2	-	2644000R1		
LS5P(+)	18	YL	TXL	239481R1		PS2	-	2644000R1		
LU5K(+)	18	YL	TXL	239481R1		PS2	-	2644000R1		
LU5N(+)	18	YL	TXL	239481R1		PS2	-	2644000R1		
LU5P(+)	18	YL	TXL	239481R1		PS2	-	2644000R1		
LV5K(+)	18	YL	TXL	239481R1		PS2	-	2644000R1		
LV5N(+)	18	YL	TXL	239481R1		PS2	-	2644000R1		
LV5P(+)	18	YL	TXL	239481R1		PS2	-	2644000R1		
PY5H(+)	18	YL	TXL	239481R1		PS2	-	2644000R1		
PY5N(+)	18	YL	TXL	239481R1		PS2	-	2644000R1		
PY5P(+)	18	YL	TXL	239481R1		PS2	-	2644000R1		
PZ5K(+)	18	YL	TXL	239481R1		PS2	-	2644000R1		
PZ5N(+)	18	YL	TXL	239481R1		PS2	-	2644000R1		
PZ5P(+)	18	YL	TXL	239481R1		PS2	-	2644000R1		
RD5M(+)	18	YL	TXL	239481R1		PS2	-	2644000R1		
RD5N(+)	18	YL	TXL	239481R1		PS2	-	2644000R1		
RD5P(+)	18	YL	TXL	239481R1		PS2	-	2644000R1		
RG5H(+)	18	YL	TXL	239481R1		PS2	-	2644000R1		
RG5N(+)	18	YL	TXL	239481R1		PS2	-	2644000R1		
RG5P(+)	18	YL	TXL	239481R1		PS2	-	2644000R1		
RJ5M(+)	18	YL	TXL	239481R1		PS2	-	2644000R1		
RJ5N(+)	18	YL	TXL	239481R1		PS2	-	2644000R1		
RJ5P(+)	18	YL	TXL	239481R1		PS2	-	2644000R1		
RM5M(+)	18	YL	TXL	239481R1		PS2	-	2644000R1		
RM5N(+)	18	YL	TXL	239481R1		PS2	-	2644000R1		
RM5P(+)	18	YL	TXL	239481R1		PS2	-	2644000R1		
RS5M(+)	18	YL	TXL	239481R1		PS2	-	2644000R1		
RS5N(+)	18	YL	TXL	239481R1		PS2	-	2644000R1		
RS5P(+)	18	YL	TXL	239481R1		PS2	-	2644000R1		
RU5K(+)	18	YL	TXL	239481R1		PS2	-	2644000R1		
RU5N(+)	18	YL	TXL	239481R1		PS2	-	2644000R1		
RU5P(+)	18	YL	TXL	239481R1		PS2	-	2644000R1		
SB5M(+)	18	YL	TXL	239481R1		PS2	-	2644000R1		

Circuit Number	Gauge	Color	Insulation	Terminal / Splice Number	Connector Part number	Connector Number	Cavity	Seal/Sleeve	Lock 1	Lock 2
SB5N(+)	18	YL	TXL	239481R1		PS2	-	2644000R1		
SB5P(+)	18	YL	TXL	239481R1		PS2	-	2644000R1		
SC5M(+)	18	YL	TXL	239481R1		PS2	-	2644000R1		
SC5N(+)	18	YL	TXL	239481R1		PS2	-	2644000R1		
SC5P(+)	18	YL	TXL	239481R1		PS2	-	2644000R1		
SD5H(+)	18	YL	TXL	239481R1		PS2	-	2644000R1		
SD5N(+)	18	YL	TXL	239481R1		PS2	-	2644000R1		
SD5P(+)	18	YL	TXL	239481R1		PS2	-	2644000R1		
SE5K(+)	18	YL	TXL	239481R1		PS2	-	2644000R1		
SE5N(+)	18	YL	TXL	239481R1		PS2	-	2644000R1		
SE5P(+)	18	YL	TXL	239481R1		PS2	-	2644000R1		
SN5K(+)	18	YL	TXL	239481R1		PS2	-	2644000R1		
SN5N(+)	18	YL	TXL	239481R1		PS2	-	2644000R1		
SN5P(+)	18	YL	TXL	239481R1		PS2	-	2644000R1		
SP5K(+)	18	YL	TXL	239481R1		PS2	-	2644000R1		
SP5N(+)	18	YL	TXL	239481R1		PS2	-	2644000R1		
SP5P(+)	18	YL	TXL	239481R1		PS2	-	2644000R1		
VC5K(+)	18	YL	TXL	239481R1		PS2	-	2644000R1		
VC5N(+)	18	YL	TXL	239481R1		PS2	-	2644000R1		
VC5P(+)	18	YL	TXL	239481R1		PS2	-	2644000R1		
VD5K(+)	18	YL	TXL	239481R1		PS2	-	2644000R1		
VD5N(+)	18	YL	TXL	239481R1		PS2	-	2644000R1		
VD5P(+)	18	YL	TXL	239481R1		PS2	-	2644000R1		
VE5K(+)	18	YL	TXL	239481R1		PS2	-	2644000R1		
VE5N(+)	18	YL	TXL	239481R1		PS2	-	2644000R1		
VE5P(+)	18	YL	TXL	239481R1		PS2	-	2644000R1		
VF5K(+)	18	YL	TXL	239481R1		PS2	-	2644000R1		
VF5N(+)	18	YL	TXL	239481R1		PS2	-	2644000R1		
VF5P(+)	18	YL	TXL	239481R1		PS2	-	2644000R1		
YX5K(+)	18	YL	TXL	239481R1		PS2	-	2644000R1		
YX5N(+)	18	YL	TXL	239481R1		PS2	-	2644000R1		
YX5P(+)	18	YL	TXL	239481R1		PS2	-	2644000R1		
YZ5K(+)	18	YL	TXL	239481R1		PS2	-	2644000R1		
YZ5N(+)	18	YL	TXL	239481R1		PS2	-	2644000R1		
YZ5P(+)	18	YL	TXL	239481R1		PS2	-	2644000R1		
2H5H(+)	18	YL	TXL	239481R1		PS2	-	2644000R1		
2H5N(+)	18	YL	TXL	239481R1		PS2	-	2644000R1		
2H5P(+)	18	YL	TXL	239481R1		PS2	-	2644000R1		
2J5K(+)	18	YL	TXL	239481R1		PS2	-	2644000R1		
2J5N(+)	18	YL	TXL	239481R1		PS2	-	2644000R1		
2J5P(+)	18	YL	TXL	239481R1		PS2	-	2644000R1		
2L5M(+)	18	YL	TXL	239481R1		PS2	-	2644000R1		
2L5N(+)	18	YL	TXL	239481R1		PS2	-	2644000R1		
2L5P(+)	18	YL	TXL	239481R1		PS2	-	2644000R1		
2M5H(+)	18	YL	TXL	239481R1		PS2	-	2644000R1		
2M5N(+)	18	YL	TXL	239481R1		PS2	-	2644000R1		
2M5P(+)	18	YL	TXL	239481R1		PS2	-	2644000R1		
2W5M(+)	18	YL	TXL	239481R1		PS2	-	2644000R1		
2W5N(+)	18	YL	TXL	239481R1		PS2	-	2644000R1		
2W5P(+)	18	YL	TXL	239481R1		PS2	-	2644000R1		
2Y5M(+)	18	YL	TXL	239481R1		PS2	-	2644000R1		
2Y5N(+)	18	YL	TXL	239481R1		PS2	-	2644000R1		

Circuit Number	Gauge	Color	Insulation	Terminal / Splice Number	Connector Part number	Connector Number	Cavity	Seal/Sleeve	Lock 1	Lock 2
2Y5P(+)	18	YL	TXL	239481R1		PS2	-	2644000R1		
2Z5M(+)	18	YL	TXL	239481R1		PS2	-	2644000R1		
2Z5N(+)	18	YL	TXL	239481R1		PS2	-	2644000R1		
2Z5P(+)	18	YL	TXL	239481R1		PS2	-	2644000R1		
3C5K(+)	18	YL	TXL	239481R1		PS2	-	2644000R1		
3C5N(+)	18	YL	TXL	239481R1		PS2	-	2644000R1		
3C5P(+)	18	YL	TXL	239481R1		PS2	-	2644000R1		
3D5M(+)	18	YL	TXL	239481R1		PS2	-	2644000R1		
3D5N(+)	18	YL	TXL	239481R1		PS2	-	2644000R1		
3D5P(+)	18	YL	TXL	239481R1		PS2	-	2644000R1		
3E5M(+)	18	YL	TXL	239481R1		PS2	-	2644000R1		
3E5N(+)	18	YL	TXL	239481R1		PS2	-	2644000R1		
3E5P(+)	18	YL	TXL	239481R1		PS2	-	2644000R1		
3J5M(+)	18	YL	TXL	239481R1		PS2	-	2644000R1		
3J5N(+)	18	YL	TXL	239481R1		PS2	-	2644000R1		
3J5P(+)	18	YL	TXL	239481R1		PS2	-	2644000R1		
3M5M(+)	18	YL	TXL	239481R1		PS2	-	2644000R1		
3M5N(+)	18	YL	TXL	239481R1		PS2	-	2644000R1		
3M5P(+)	18	YL	TXL	239481R1		PS2	-	2644000R1		
3R5H(+)	18	YL	TXL	239481R1		PS2	-	2644000R1		
3R5N(+)	18	YL	TXL	239481R1		PS2	-	2644000R1		
3R5P(+)	18	YL	TXL	239481R1		PS2	-	2644000R1		
3U5K(+)	18	YL	TXL	239481R1		PS2	-	2644000R1		
3U5N(+)	18	YL	TXL	239481R1		PS2	-	2644000R1		
3U5P(+)	18	YL	TXL	239481R1		PS2	-	2644000R1		
3W5K(+)	18	YL	TXL	239481R1		PS2	-	2644000R1		
3W5N(+)	18	YL	TXL	239481R1		PS2	-	2644000R1		
3W5P(+)	18	YL	TXL	239481R1		PS2	-	2644000R1		
3Z5M(+)	18	YL	TXL	239481R1		PS2	-	2644000R1		
3Z5N(+)	18	YL	TXL	239481R1		PS2	-	2644000R1		
3Z5P(+)	18	YL	TXL	239481R1		PS2	-	2644000R1		
4E5K(+)	18	YL	TXL	239481R1		PS2	-	2644000R1		
4E5N(+)	18	YL	TXL	239481R1		PS2	-	2644000R1		
4E5P(+)	18	YL	TXL	239481R1		PS2	-	2644000R1		
4J5M(+)	18	YL	TXL	239481R1		PS2	-	2644000R1		
4J5N(+)	18	YL	TXL	239481R1		PS2	-	2644000R1		
4J5P(+)	18	YL	TXL	239481R1		PS2	-	2644000R1		
4L5H(+)	18	YL	TXL	239481R1		PS2	-	2644000R1		
4L5N(+)	18	YL	TXL	239481R1		PS2	-	2644000R1		
4L5P(+)	18	YL	TXL	239481R1		PS2	-	2644000R1		
4N5M(+)	18	YL	TXL	239481R1		PS2	-	2644000R1		
4N5N(+)	18	YL	TXL	239481R1		PS2	-	2644000R1		
4N5P(+)	18	YL	TXL	239481R1		PS2	-	2644000R1		
9K5H(+)	18	YL	TXL	239481R1		PS2	-	2644000R1		
9K5N(+)	18	YL	TXL	239481R1		PS2	-	2644000R1		
9K5P(+)	18	YL	TXL	239481R1		PS2	-	2644000R1		
9L5M(+)	18	YL	TXL	239481R1		PS2	-	2644000R1		
9L5N(+)	18	YL	TXL	239481R1		PS2	-	2644000R1		
9L5P(+)	18	YL	TXL	239481R1		PS2	-	2644000R1		
9P5H(+)	18	YL	TXL	239481R1		PS2	-	2644000R1		
9P5N(+)	18	YL	TXL	239481R1		PS2	-	2644000R1		
9P5P(+)	18	YL	TXL	239481R1		PS2	-	2644000R1		

Circuit Number	Gauge	Color	Insulation	Terminal / Splice Number	Connector Part number	Connector Number	Cavity	Seal/Sleeve	Lock 1	Lock 2
9T5H(+)	18	YL	TXL	239481R1		PS2	-	2644000R1		
9T5N(+)	18	YL	TXL	239481R1		PS2	-	2644000R1		
9T5P(+)	18	YL	TXL	239481R1		PS2	-	2644000R1		
9V5M(+)	18	YL	TXL	239481R1		PS2	-	2644000R1		
9V5N(+)	18	YL	TXL	239481R1		PS2	-	2644000R1		
9V5P(+)	18	YL	TXL	239481R1		PS2	-	2644000R1		
9W5M(+)	18	YL	TXL	239481R1		PS2	-	2644000R1		
9W5N(+)	18	YL	TXL	239481R1		PS2	-	2644000R1		
9W5P(+)	18	YL	TXL	239481R1		PS2	-	2644000R1		
JC5M(+)	18	YL	TXL	239481R1		PS2	-	2644000R1		
JC5N(+)	18	YL	TXL	239481R1		PS2	-	2644000R1		
JC5P(+)	18	YL	TXL	239481R1		PS2	-	2644000R1		
JD5M(+)	18	YL	TXL	239481R1		PS2	-	2644000R1		
JD5N(+)	18	YL	TXL	239481R1		PS2	-	2644000R1		
JD5P(+)	18	YL	TXL	239481R1		PS2	-	2644000R1		
JF5H(+)	18	YL	TXL	239481R1		PS2	-	2644000R1		
JF5N(+)	18	YL	TXL	239481R1		PS2	-	2644000R1		
JF5P(+)	18	YL	TXL	239481R1		PS2	-	2644000R1		
JG5K(+)	18	YL	TXL	239481R1		PS2	-	2644000R1		
JG5N(+)	18	YL	TXL	239481R1		PS2	-	2644000R1		
JG5P(+)	18	YL	TXL	239481R1		PS2	-	2644000R1		
LC5H(+)	18	YL	TXL	239481R1		PS2	-	2644000R1		
LC5N(+)	18	YL	TXL	239481R1		PS2	-	2644000R1		
LC5P(+)	18	YL	TXL	239481R1		PS2	-	2644000R1		
LD5K(+)	18	YL	TXL	239481R1		PS2	-	2644000R1		
LD5N(+)	18	YL	TXL	239481R1		PS2	-	2644000R1		
LD5P(+)	18	YL	TXL	239481R1		PS2	-	2644000R1		
LE5K(+)	18	YL	TXL	239481R1		PS2	-	2644000R1		
LE5N(+)	18	YL	TXL	239481R1		PS2	-	2644000R1		
LE5P(+)	18	YL	TXL	239481R1		PS2	-	2644000R1		
LF5K(+)	18	YL	TXL	239481R1		PS2	-	2644000R1		
LF5N(+)	18	YL	TXL	239481R1		PS2	-	2644000R1		
LF5P(+)	18	YL	TXL	239481R1		PS2	-	2644000R1		
LS5F(+)	18	YL	TXL	239481R1		PS2	-	2644000R1		
LS5N(+)	18	YL	TXL	239481R1		PS2	-	2644000R1		
LS5P(+)	18	YL	TXL	239481R1		PS2	-	2644000R1		
LU5K(+)	18	YL	TXL	239481R1		PS2	-	2644000R1		
LU5N(+)	18	YL	TXL	239481R1		PS2	-	2644000R1		
LU5P(+)	18	YL	TXL	239481R1		PS2	-	2644000R1		
LV5K(+)	18	YL	TXL	239481R1		PS2	-	2644000R1		
LV5N(+)	18	YL	TXL	239481R1		PS2	-	2644000R1		
LV5P(+)	18	YL	TXL	239481R1		PS2	-	2644000R1		
PV5K(+)	18	YL	TXL	239481R1		PS2	-	2644000R1		
PV5N(+)	18	YL	TXL	239481R1		PS2	-	2644000R1		
PV5P(+)	18	YL	TXL	239481R1		PS2	-	2644000R1		
PY5H(+)	18	YL	TXL	239481R1		PS2	-	2644000R1		
PY5N(+)	18	YL	TXL	239481R1		PS2	-	2644000R1		
PY5P(+)	18	YL	TXL	239481R1		PS2	-	2644000R1		
PZ5K(+)	18	YL	TXL	239481R1		PS2	-	2644000R1		
PZ5N(+)	18	YL	TXL	239481R1		PS2	-	2644000R1		
PZ5P(+)	18	YL	TXL	239481R1		PS2	-	2644000R1		
RD5M(+)	18	YL	TXL	239481R1		PS2	-	2644000R1		

Circuit Number	Gauge	Color	Insulation	Terminal / Splice Number	Connector Part number	Connector Number	Cavity	Seal/Sleeve	Lock 1	Lock 2
RD5N(+)	18	YL	TXL	239481R1		PS2	-	2644000R1		
RD5P(+)	18	YL	TXL	239481R1		PS2	-	2644000R1		
RG5H(+)	18	YL	TXL	239481R1		PS2	-	2644000R1		
RG5N(+)	18	YL	TXL	239481R1		PS2	-	2644000R1		
RG5P(+)	18	YL	TXL	239481R1		PS2	-	2644000R1		
RJ5M(+)	18	YL	TXL	239481R1		PS2	-	2644000R1		
RJ5N(+)	18	YL	TXL	239481R1		PS2	-	2644000R1		
RJ5P(+)	18	YL	TXL	239481R1		PS2	-	2644000R1		
RM5M(+)	18	YL	TXL	239481R1		PS2	-	2644000R1		
RM5N(+)	18	YL	TXL	239481R1		PS2	-	2644000R1		
RM5P(+)	18	YL	TXL	239481R1		PS2	-	2644000R1		
RR5M(+)	18	YL	TXL	239481R1		PS2	-	2644000R1		
RR5N(+)	18	YL	TXL	239481R1		PS2	-	2644000R1		
RR5P(+)	18	YL	TXL	239481R1		PS2	-	2644000R1		
RS5M(+)	18	YL	TXL	239481R1		PS2	-	2644000R1		
RS5N(+)	18	YL	TXL	239481R1		PS2	-	2644000R1		
RS5P(+)	18	YL	TXL	239481R1		PS2	-	2644000R1		
RU5K(+)	18	YL	TXL	239481R1		PS2	-	2644000R1		
RU5N(+)	18	YL	TXL	239481R1		PS2	-	2644000R1		
RU5P(+)	18	YL	TXL	239481R1		PS2	-	2644000R1		
RX5M(+)	18	YL	TXL	239481R1		PS2	-	2644000R1		
RX5N(+)	18	YL	TXL	239481R1		PS2	-	2644000R1		
RX5P(+)	18	YL	TXL	239481R1		PS2	-	2644000R1		
RZ5H(+)	18	YL	TXL	239481R1		PS2	-	2644000R1		
RZ5N(+)	18	YL	TXL	239481R1		PS2	-	2644000R1		
RZ5P(+)	18	YL	TXL	239481R1		PS2	-	2644000R1		
SB5M(+)	18	YL	TXL	239481R1		PS2	-	2644000R1		
SB5N(+)	18	YL	TXL	239481R1		PS2	-	2644000R1		
SB5P(+)	18	YL	TXL	239481R1		PS2	-	2644000R1		
SC5M(+)	18	YL	TXL	239481R1		PS2	-	2644000R1		
SC5N(+)	18	YL	TXL	239481R1		PS2	-	2644000R1		
SC5P(+)	18	YL	TXL	239481R1		PS2	-	2644000R1		
SD5H(+)	18	YL	TXL	239481R1		PS2	-	2644000R1		
SD5N(+)	18	YL	TXL	239481R1		PS2	-	2644000R1		
SD5P(+)	18	YL	TXL	239481R1		PS2	-	2644000R1		
SE5K(+)	18	YL	TXL	239481R1		PS2	-	2644000R1		
SE5N(+)	18	YL	TXL	239481R1		PS2	-	2644000R1		
SE5P(+)	18	YL	TXL	239481R1		PS2	-	2644000R1		
SN5K(+)	18	YL	TXL	239481R1		PS2	-	2644000R1		
SN5N(+)	18	YL	TXL	239481R1		PS2	-	2644000R1		
SN5P(+)	18	YL	TXL	239481R1		PS2	-	2644000R1		
SP5K(+)	18	YL	TXL	239481R1		PS2	-	2644000R1		
SP5N(+)	18	YL	TXL	239481R1		PS2	-	2644000R1		
SP5P(+)	18	YL	TXL	239481R1		PS2	-	2644000R1		
SR5K(+)	18	YL	TXL	239481R1		PS2	-	2644000R1		
SR5N(+)	18	YL	TXL	239481R1		PS2	-	2644000R1		
SR5P(+)	18	YL	TXL	239481R1		PS2	-	2644000R1		
VC5K(+)	18	YL	TXL	239481R1		PS2	-	2644000R1		
VC5N(+)	18	YL	TXL	239481R1		PS2	-	2644000R1		
VC5P(+)	18	YL	TXL	239481R1		PS2	-	2644000R1		
VD5K(+)	18	YL	TXL	239481R1		PS2	-	2644000R1		
VD5K(-)	18	GN	TXL	239481R1		PS2	-	2644000R1		

Circuit Number	Gauge	Color	Insulation	Terminal / Splice Number	Connector Part number	Connector Number	Cavity	Seal/Sleeve	Lock 1	Lock 2
VD5N(+)	18	YL	TXL	239481R1		PS2	-	2644000R1		
VD5P(+)	18	YL	TXL	239481R1		PS2	-	2644000R1		
VE5K(+)	18	YL	TXL	239481R1		PS2	-	2644000R1		
VE5N(+)	18	YL	TXL	239481R1		PS2	-	2644000R1		
VE5P(+)	18	YL	TXL	239481R1		PS2	-	2644000R1		
VG5K(+)	18	YL	TXL	239481R1		PS2	-	2644000R1		
VG5N(+)	18	YL	TXL	239481R1		PS2	-	2644000R1		
VG5P(+)	18	YL	TXL	239481R1		PS2	-	2644000R1		
YX5K(+)	18	YL	TXL	239481R1		PS2	-	2644000R1		
YX5N(+)	18	YL	TXL	239481R1		PS2	-	2644000R1		
YX5P(+)	18	YL	TXL	239481R1		PS2	-	2644000R1		
YZ5K(+)	18	YL	TXL	239481R1		PS2	-	2644000R1		
YZ5N(+)	18	YL	TXL	239481R1		PS2	-	2644000R1		
YZ5P(+)	18	YL	TXL	239481R1		PS2	-	2644000R1		
DY54-GX	16	WH	TXL	382182C1		PS3	-	2644000R1		
DY54-GXA	16	WH	TXL	382182C1		PS3	-	2644000R1		
PA54-GX	16	WH	TXL	382182C1		PS3	-	2644000R1		
PA54-GXA	16	WH	TXL	382182C1		PS3	-	2644000R1		
DY54-GX	16	WH	TXL	239481R1		PS3	-	2644000R1		
DY54-GXA	16	WH	TXL	239481R1		PS3	-	2644000R1		
PA54-GX	16	WH	TXL	239481R1		PS3	-	2644000R1		
PA54-GXA	16	WH	TXL	239481R1		PS3	-	2644000R1		
YJ5A(+)	18	YL	TXL	239481R1		PS4	-	2644000R1		
YJ5B(+)	18	YL	TXL	239481R1		PS4	-	2644000R1		
YJ5C(+)	18	YL	TXL	239481R1		PS4	-	2644000R1		
VF5H(-)	18	GN	TXL	239481R1		PS4	-	2644000R1		
VF5N(-)	18	GN	TXL	239481R1		PS4	-	2644000R1		
VF5P(-)	18	GN	TXL	239481R1		PS4	-	2644000R1		
YJ5A(+)	18	YL	TXL	239481R1		PS4	-	2644000R1		
YJ5B(+)	18	YL	TXL	239481R1		PS4	-	2644000R1		
YJ5C(+)	18	YL	TXL	239481R1		PS4	-	2644000R1		
YJ5A(-)	18	GN	TXL	239481R1		PS5	-	2644000R1		
YJ5B(-)	18	GN	TXL	239481R1		PS5	-	2644000R1		
YJ5C(-)	18	GN	TXL	239481R1		PS5	-	2644000R1		
VF5H(+)	18	YL	TXL	239481R1		PS5	-	2644000R1		
VF5N(+)	18	YL	TXL	239481R1		PS5	-	2644000R1		
VF5P(+)	18	YL	TXL	239481R1		PS5	-	2644000R1		
YJ5A(-)	18	GN	TXL	239481R1		PS5	-	2644000R1		
YJ5B(-)	18	GN	TXL	239481R1		PS5	-	2644000R1		
YJ5C(-)	18	GN	TXL	239481R1		PS5	-	2644000R1		
VV5H(-)	18	GN	TXL	239481R1		PS6	-	2644000R1		
VV5N(-)	18	GN	TXL	239481R1		PS6	-	2644000R1		
VV5P(-)	18	GN	TXL	239481R1		PS6	-	2644000R1		
VV5H(+)	18	YL	TXL	239481R1		PS7	-	2644000R1		
VV5N(+)	18	YL	TXL	239481R1		PS7	-	2644000R1		
VV5P(+)	18	YL	TXL	239481R1		PS7	-	2644000R1		
XZ94SV	16	GY	TXL	239481R1		RS1	-	2644000R1		
XZ94SVC	16	GY	TXL	239481R1		RS1	-	2644000R1		
XZ94SVD	16	GY	TXL	239481R1		RS1	-	2644000R1		
XZ94SV	16	GY	TXL	239481R1		RS1	-	2644000R1		
XZ94SVC	16	GY	TXL	239481R1		RS1	-	2644000R1		
XZ94SVD	16	GY	TXL	239481R1		RS1	-	2644000R1		

Circuit Number	Gauge	Color	Insulation	Terminal / Splice Number	Connector Part number	Connector Number	Cavity	Seal/Sleeve	Lock 1	Lock 2
XZ94SZ	16	GY	TXL	239481R1		RS2	-	2644000R1		
XZ94SZC	16	GY	TXL	239481R1		RS2	-	2644000R1		
XZ94SZD	16	GY	TXL	239481R1		RS2	-	2644000R1		
XZ94SZ	16	GY	TXL	239481R1		RS2	-	2644000R1		
XZ94SZC	16	GY	TXL	239481R1		RS2	-	2644000R1		
XZ94SZD	16	GY	TXL	239481R1		RS2	-	2644000R1		
MA54X	16	OR	GXL	382181C1		SAS1	-	2644000R1		
MA54XB	16	OR	GXL	382181C1		SAS1	-	2644000R1		
MA54XC	16	OR	GXL	382181C1		SAS1	-	2644000R1		
MA58CB	16	BN	GXL	382181C1		SAS1	-	2644000R1		
RN49-GA	18	WH	GXL	239481R1		SBS1	-	2644000R1		
RN49-GB	18	WH	GXL	239481R1		SBS1	-	2644000R1		
RN49-GC	18	WH	GXL	239481R1		SBS1	-	2644000R1	3612513C1	3553652C1
NK68T	10	BN	GXL	382181C1		SBS2	-	2644000R1		
NK68U	10	BN	TXL	382181C1		SBS2	-	2644000R1		
NK68W	10	BN	GXL	382181C1		SBS2	-	2644000R1		
NK57T	10	LTGN	GXL	382181C1		SBS5	-	2644000R1		
NK57U	10	LTGN	GXL	382181C1		SBS5	-	2644000R1		
NK57W	10	LTGN	GXL	382181C1		SBS5	-	2644000R1		
NY65BC	14	OR	GXL	382181C1		SBS6	-	2644000R1		
NY65BD	16	OR	GXL	382181C1		SBS6	-	2644000R1		
NY65BE	16	OR	GXL	382181C1		SBS6	-	2644000R1		
BA6	18	GY	GXL	239481R1		SCS1	-	2644000R1		
BA6A	18	GY	GXL	239481R1		SCS1	-	2644000R1		
BA6B	18	GY	GXL	239481R1		SCS1	-	2644000R1		
BA6C	18	GY	GXL	239481R1		SCS1	-	2644000R1		
BC9N	18	GY	GXL	382182C1		SCS2	-	2644000R1	2006504C1	
BH9	18	GY	GXL	382182C1		SCS2	-	2644000R1	3562309C1	
BH9C	18	GY	TXL	382182C1		SCS2	-	2644000R1	4064677C1	3540454C1
BH9D	18	GY	TXL	382182C1		SCS2	-	2644000R1		
BH9E	18	GY	GXL	382182C1		SCS2	-	2644000R1		
BH9F	18	GY	GXL	382182C1		SCS2	-	2644000R1	3557682C1	
BH9H	18	GY	GXL	382182C1		SCS2	-	2644000R1		
BH9J	18	GY	GXL	382182C1		SCS2	-	2644000R1	4110680C1	
BH9K	18	GY	GXL	382182C1		SCS2	-	2644000R1		
BJ9	18	GY	GXL	382182C1		SCS2	-	2644000R1		
BJ9C	18	GY	TXL	382182C1		SCS2	-	2644000R1		
BJ9D	18	GY	TXL	382182C1		SCS2	-	2644000R1		
BJ9E	18	GY	GXL	382182C1		SCS2	-	2644000R1		
BJ9F	18	GY	GXL	382182C1		SCS2	-	2644000R1		
BJ9H	18	GY	GXL	382182C1		SCS2	-	2644000R1		
BJ9J	18	GY	GXL	382182C1		SCS2	-	2644000R1		
BJ9K	18	GY	GXL	382182C1		SCS2	-	2644000R1		
BM9	18	GY	GXL	382182C1		SCS2	-	2644000R1		
BM9C	18	GY	TXL	382182C1		SCS2	-	2644000R1		
BM9D	18	GY	TXL	382182C1		SCS2	-	2644000R1		
BM9E	18	GY	GXL	382182C1		SCS2	-	2644000R1		
BM9F	18	GY	GXL	382182C1		SCS2	-	2644000R1		
BM9H	18	GY	GXL	382182C1		SCS2	-	2644000R1		
BM9J	18	GY	GXL	382182C1		SCS2	-	2644000R1		
BM9K	18	GY	GXL	382182C1		SCS2	-	2644000R1		
BM9N	18	GY	GXL	382182C1		SCS2	-	2644000R1		

Circuit Number	Gauge	Color	Insulation	Terminal / Splice Number	Connector Part number	Connector Number	Cavity	Seal/Sleeve	Lock 1	Lock 2
BN9	18	GY	GXL	382182C1		SCS2	-	2644000R1		
BN9C	18	GY	TXL	382182C1		SCS2	-	2644000R1		
BN9D	18	GY	TXL	382182C1		SCS2	-	2644000R1		
BN9E	18	GY	GXL	382182C1		SCS2	-	2644000R1		
BN9F	18	GY	GXL	382182C1		SCS2	-	2644000R1		
BN9H	18	GY	GXL	382182C1		SCS2	-	2644000R1		
BN9J	18	GY	GXL	382182C1		SCS2	-	2644000R1		
BN9K	18	GY	GXL	382182C1		SCS2	-	2644000R1		
BN9M	18	GY	GXL	382182C1		SCS2	-	2644000R1		
BN9N	18	GY	GXL	382182C1		SCS2	-	2644000R1		
BP9	18	GY	GXL	382182C1		SCS2	-	2644000R1		
BP9C	18	GY	TXL	382182C1		SCS2	-	2644000R1		
BP9D	18	GY	TXL	382182C1		SCS2	-	2644000R1		
BP9E	18	GY	GXL	382182C1		SCS2	-	2644000R1		
BP9F	18	GY	GXL	382182C1		SCS2	-	2644000R1		
BP9H	18	GY	GXL	382182C1		SCS2	-	2644000R1		
BP9J	18	GY	GXL	382182C1		SCS2	-	2644000R1		
BP9K	18	GY	GXL	382182C1		SCS2	-	2644000R1		
BP9M	18	GY	GXL	382182C1		SCS2	-	2644000R1		
BR9	18	GY	GXL	382182C1		SCS2	-	2644000R1		
BR9C	18	GY	TXL	382182C1		SCS2	-	2644000R1		
BR9D	18	GY	TXL	382182C1		SCS2	-	2644000R1		
BR9E	18	GY	GXL	382182C1		SCS2	-	2644000R1		
BR9F	18	GY	GXL	382182C1		SCS2	-	2644000R1		
BR9H	18	GY	GXL	382182C1		SCS2	-	2644000R1		
BR9J	18	GY	GXL	382182C1		SCS2	-	2644000R1		
BR9K	18	GY	GXL	382182C1		SCS2	-	2644000R1		
BR9M	18	GY	GXL	382182C1		SCS2	-	2644000R1		
BE94SV	18	GY	GXL	239481R1		SCS3	-	2644000R1		
BE94SVA	18	GY	GXL	239481R1		SCS3	-	2644000R1		
BE94SVB	18	GY	GXL	239481R1		SCS3	-	2644000R1		
BE94SZ	18	GY	GXL	239481R1		SCS4	-	2644000R1	1618846C1	1618847C1
BE94SZA	18	GY	GXL	239481R1		SCS4	-	2644000R1	1618846C1	1618847C1
BE94SZB	18	GY	GXL	239481R1		SCS4	-	2644000R1	3573833C1	
MA11-G	10	WH	GXL	505040C1		SDS1	-	2644027R1		
MA11-GA	14	WH	GXL	505040C1		SDS1	-	2644027R1		
MA11-GB	14	WH	GXL	505040C1		SDS1	-	2644027R1		
MA11-GBB	16	WH	GXL	505040C1		SDS1	-	2644027R1	1661873C1	
MA11-GD	12	WH	GXL	505040C1		SDS1	-	2644027R1	2039342C1	
RH9A	18	GY	GXL	239481R1		SDS1	-	2644000R1		
RH9B	18	GY	GXL	239481R1		SDS1	-	2644000R1		
RH9C	18	GY	GXL	239481R1		SDS1	-	2644000R1		
BH11-GA	18	WH	GXL	239481R1		SDS1	-	2644000R1	1661263C1	1661263C1
BH62-GDD	18	WH	TXL	239481R1		SDS1	-	2644000R1	3768016C1	
BH87-G	18	WH	TXL	239481R1		SDS1	-	2644000R1		
BM11-GA	18	WH	GXL	239481R1		SDS1	-	2644000R1		
BM62-GDD	18	WH	TXL	239481R1		SDS1	-	2644000R1		
BM87-G	18	WH	TXL	239481R1		SDS1	-	2644000R1		
BN11-GA	18	WH	GXL	239481R1		SDS1	-	2644000R1		
BN62-GDD	18	WH	TXL	239481R1		SDS1	-	2644000R1		
BN87-G	18	WH	TXL	239481R1		SDS1	-	2644000R1		
BP11-GA	18	WH	GXL	239481R1		SDS1	-	2644000R1		

Circuit Number	Gauge	Color	Insulation	Terminal / Splice Number	Connector Part number	Connector Number	Cavity	Seal/Sleeve	Lock 1	Lock 2
BP62-GDD	18	WH	TXL	239481R1		SDS1	-	2644000R1		
BP87-G	18	WH	TXL	239481R1		SDS1	-	2644000R1		
MA11-G	10	WH	GXL	239481R1		SDS1	-	2644000R1		
MA11-GA	14	WH	GXL	239481R1		SDS1	-	2644000R1		
MA11-GB	14	WH	GXL	239481R1		SDS1	-	2644000R1		
MA11-GD	12	WH	GXL	239481R1		SDS1	-	2644000R1		
MA54-GA	16	WH	GXL	239481R1		SDS1	-	2644000R1		
MA54-GBB	16	WH	GXL	239481R1		SDS1	-	2644000R1		
MA54-GE	16	VT	GXL	239481R1		SDS1	-	2644000R1		
PN78A	16	LTGN	GXL	239481R1		SDS2	-	2644000R1		
PN78B	16	LTGN	GXL	239481R1		SDS2	-	2644000R1		
PN78C	16	LTGN	GXL	239481R1		SDS2	-	2644000R1		
KA41-GB	18	WH	TXL	239481R1		SDS2	-	2644000R1		
KA41-GC	18	WH	TXL	239481R1		SDS2	-	2644000R1		
KA41-GD	12	WH	GXL	239481R1		SDS2	-	2644000R1		
NY65-GA	14	WH	GXL	382181C1		SDS7	-	2644000R1		
NY65-GB	16	WH	GXL	382181C1		SDS7	-	2644000R1		
NY65-GC	16	WH	GXL	382181C1		SDS7	-	2644000R1		
TW92#103	18	YL	TXL	239481R1		SDS8	-	2644000R1		
TW92A103	18	YL	TXL	239481R1		SDS8	-	2644000R1		
TW92B103	18	YL	TXL	239481R1		SDS8	-	2644000R1		
TW92C103	18	YL	TXL	239481R1		SDS8	-	2644000R1		
MA58	14	BN	GXL	382181C1		SES2	-	2644000R1		
MA58A	16	BN	GXL	382181C1		SES2	-	2644000R1		
MA58B	16	BN	GXL	382181C1		SES2	-	2644000R1		
MA58	14	BN	GXL	382181C1		SES2	-	2644000R1		
MA58A	16	BN	GXL	382181C1		SES2	-	2644000R1		
MA58B	16	BN	GXL	382181C1		SES2	-	2644000R1		
NX65BC	14	OR	GXL	382181C1		SES2	-	2644000R1		
NX65BD	16	OR	GXL	382181C1		SES2	-	2644000R1		
NX65BE	16	OR	GXL	382181C1		SES2	-	2644000R1		
PN78-G	16	WH	GXL	239481R1		SES3	-	2644000R1		
PN78-GA	16	WH	GXL	239481R1		SES3	-	2644000R1		
PN78-GB	16	WH	GXL	239481R1		SES3	-	2644000R1		
KF5R(+)	18	YL	TXL	239481R1		SES5	-	2644000R1		
KF5S(+)	20	YL	193	239481R1		SES5	-	2644000R1		
KF5TB(+)	18	YL	TXL	239481R1		SES5	-	2644000R1		
NX65-GA	14	WH	GXL	382181C1		SES5	-	2644000R1		
NX65-GB	16	WH	GXL	382181C1		SES5	-	2644000R1		
NX65-GC	16	WH	GXL	382181C1		SES5	-	2644000R1		
KF5R(-)	18	GN	TXL	239481R1		SES6	-	2644000R1		
KF5S(-)	20	GN	193	239481R1		SES6	-	2644000R1		
KF5TB(-)	18	GN	TXL	239481R1		SES6	-	2644000R1		
KH5R(+)	18	YL	TXL	239481R1		SES7	-	2644000R1		
KH5S(+)	20	YL	193	239481R1		SES7	-	2644000R1		
KH5TA(+)	18	YL	TXL	239481R1		SES7	-	2644000R1		
KH5R(-)	18	GN	TXL	239481R1		SES8	-	2644000R1		
KH5S(-)	20	GN	193	239481R1		SES8	-	2644000R1		
KH5TA(-)	18	GN	TXL	239481R1		SES8	-	2644000R1		
SC92#117	18	TN	TXL	239481R1		SGS17	-	2644000R1		
SC92#142	18	TN	TXL	239481R1		SGS17	-	2644000R1		
SC92A117	18	TN	TXL	239481R1		SGS17	-	2644000R1		

Circuit Number	Gauge	Color	Insulation	Terminal / Splice Number	Connector Part number	Connector Number	Cavity	Seal/Sleeve	Lock 1	Lock 2
TD92#109	18	GY	TXL	239481R1		SGS3	-	2644000R1		
TD92#169	18	TN	TXL	239481R1		SGS3	-	2644000R1		
TD92-G	14	WH	GXL	239481R1		SGS3	-	2644000R1		
TD92#110	18	PK	TXL	239481R1		SGS4	-	2644000R1		
TD92#170	18	TN	TXL	239481R1		SGS4	-	2644000R1		
TD92A170	14	RD	GXL	239481R1		SGS4	-	2644000R1		
KH5TA(+)	18	YL	TXL	239481R1		SGS7	-	2644000R1		
KH5TB(+)	18	YL	TXL	239481R1		SGS7	-	2644000R1		
KH5V(+)	18	YL	TXL	239481R1		SGS7	-	2644000R1		
KH5TA(-)	18	GN	TXL	239481R1		SGS8	-	2644000R1		
KH5TB(-)	18	GN	TXL	239481R1		SGS8	-	2644000R1		
KH5V(-)	18	GN	TXL	239481R1		SGS8	-	2644000R1		
SV5U(+)	18	YL	TXL	239481R1		SHS9	-	2644000R1		
SV5UB(+)	18	YL	TXL	239481R1		SHS9	-	2644000R1		
SV5UE(+)	20	YL	193	239481R1		SHS9	-	2644000R1		
SV5U(+)	18	YL	TXL	239481R1		SHS9	-	2644000R1		
SV5UB(+)	18	YL	TXL	239481R1		SHS9	-	2644000R1		
SV5UE(+)	20	YL	193	239481R1		SHS9	-	2644000R1		
AP9	20	TN	150	239481R1		SMS1	-	2644000R1		
AP9A	18	TN	TXL	239481R1		SMS1	-	2644000R1		
AP9B	18	VT	TXL	239481R1		SMS1	-	2644000R1		
LE9	20	TN	150	239481R1		SMS1	-	2644000R1		
LE9A	18	TN	150	239481R1		SMS1	-	2644000R1		
LE9B	18	VT	TXL	239481R1		SMS1	-	2644000R1		
LF9	20	TN	150	239481R1		SMS1	-	2644000R1		
LF9A	18	TN	150	239481R1		SMS1	-	2644000R1		
LF9B	18	VT	TXL	239481R1		SMS1	-	2644000R1		
KA14H	14	RD	TXL	382181C1		SMS4	-	2644000R1		
KA14KAA	14	RD	TXL	382181C1		SMS4	-	2644000R1		
KA14KB	14	RD	TXL	382181C1		SMS4	-	2644000R1		
NK56T	10	YL	GXL	382181C1		SNS2	-	2644000R1		
NK56U	10	YL	GXL	382181C1		SNS2	-	2644000R1		
NK56W	10	YL	GXL	382181C1		SNS2	-	2644000R1		
NK70T	10	RD	GXL	382181C1		SNS5	-	2644000R1		
NK70U	10	RD	TXL	382181C1		SNS5	-	2644000R1		
NK70W	10	RD	GXL	382181C1		SNS5	-	2644000R1		
NK94T	10	GY	GXL	382181C1		SNS6	-	2644000R1		
NK94U	10	GY	TXL	382181C1		SNS6	-	2644000R1		
NK94W	10	GY	GXL	382181C1		SNS6	-	2644000R1		
PB68A	14	BN	GXL	382181C1		SNS7	-	2644000R1		
PB68B	14	BN	GXL	382181C1		SNS7	-	2644000R1		
PB68C	16	BN	GXL	382181C1		SNS7	-	2644000R1		
KL10A	16	BK	TXL	239481R1		SPX11	-	2644000R1		
KL10B	16	BK	TXL	239481R1		SPX11	-	2644000R1		
KL10C	10	BK	TXL	239481R1		SPX11	-	2644000R1		
WU67YA	20	PK	TXL	6102309C1		SS1	-	2644000R1		
WU67YB	20	PK	TXL	6102309C1		SS1	-	2644000R1		
WU67YC	20	PK	TXL	6102309C1		SS1	-	2644000R1		
UC9A	18	GY	GXL	239481R1		SS1	-	2644000R1	3768016C1	
UC9B	18	GY	GXL	239481R1		SS1	-	2644000R1	3768016C1	
UC9C	18	GY	GXL	239481R1		SS1	-	2644000R1		
WU67YA	20	PK	TXL	6102309C1		SS1	-	2644000R1		

Circuit Number	Gauge	Color	Insulation	Terminal / Splice Number	Connector Part number	Connector Number	Cavity	Seal/Sleeve	Lock 1	Lock 2
WU67YB	20	PK	TXL	6102309C1		SS1	-	2644000R1		
WU67YC	20	PK	TXL	6102309C1		SS1	-	2644000R1		
KA14A4	16	RD	TXL	382181C1		SS1	-	2644000R1		
KA14A4A	10	RD	TXL	382181C1		SS1	-	2644000R1		
KA14A5	16	RD	TXL	382181C1		SS1	-	2644000R1		
KA14A6	16	RD	TXL	382181C1		SS1	-	2644000R1		
AY5A(+)	18	YL	TXL	239481R1		SS1	-	2644000R1		
AY5B(+)	18	YL	TXL	239481R1		SS1	-	2644000R1		
AY5C(+)	18	YL	193	239481R1		SS1	-	2644000R1		
NK58T	10	BK	GXL	382181C1		SS1	-	2644000R1		
NK58U	10	BK	GXL	382181C1		SS1	-	2644000R1		
NK58W	10	BK	GXL	382181C1		SS1	-	2644000R1		
VH71BA	12	OR	TXL	468358C1		SS10	-	2644000R1		
VH71BE	12	OR	TXL	468358C1		SS10	-	2644000R1		
VH71BF	12	OR	GXL	468358C1		SS10	-	2644000R1		
VH71BG	12	OR	TXL	468358C1		SS10	-	2644000R1		
KA10-H	4	WH	SGX	505040C1		SS10	-	2644027R1		
KA10H2	10	WH	TXL	505040C1		SS10	-	2644027R1		
KA10H3	10	WH	TXL	505040C1		SS10	-	2644027R1		
AM10-AH	10	WH	TXL	239481R1		SS10	-	2644000R1		
AM10-H	10	WH	TXL	239481R1		SS10	-	2644000R1		
AM95-GB	16	BK	TXL	239481R1		SS10	-	2644000R1		
AM95-GL	16	BK	TXL	239481R1		SS10	-	2644000R1		
YT56T	10	YL	GXL	382181C1		SS10	-	2644000R1		
YT56U	10	YL	GXL	382181C1		SS10	-	2644000R1		
YT56W	10	YL	GXL	382181C1		SS10	-	2644000R1		
KG5A(+)	18	YL	TXL	239481R1		SS100	-	2644000R1		
KG5AB(+)	18	YL	TXL	239481R1		SS100	-	2644000R1		
KG5AC(+)	18	YL	TXL	239481R1		SS100	-	2644000R1		
KG5AC(+)	18	YL	TXL	239481R1		SS101	-	2644000R1		
KG5AD(+)	18	YL	TXL	239481R1		SS101	-	2644000R1		
KG5AE(+)	20	YL	193	239481R1		SS101	-	2644000R1		
KG5A(-)	18	GN	TXL	239481R1		SS102	-	2644000R1		
KG5AB(-)	18	GN	TXL	239481R1		SS102	-	2644000R1		
KG5AC(-)	18	GN	TXL	239481R1		SS102	-	2644000R1		
KG5AC(-)	18	GN	TXL	239481R1		SS103	-	2644000R1		
KG5AD(-)	18	GN	TXL	239481R1		SS103	-	2644000R1		
KG5AE(-)	20	GN	193	239481R1		SS103	-	2644000R1		
KG10-GA	16	BK	TXL	239481R1		SS104	-	2644000R1		
KG10-GB	16	BK	TXL	239481R1		SS104	-	2644000R1		
KG10-GC	10	BK	TXL	239481R1		SS104	-	2644000R1		
KG10-GD	16	WH	GXL	239481R1		SS104	-	2644000R1		
KT71A	18	LTBL	TXL	239481R1		SS105	-	2644000R1		
KT71C	18	LTBL	TXL	239481R1		SS105	-	2644000R1		
KT92#205	18	LTBL	TXL	239481R1		SS105	-	2644000R1		
KT71A	18	LTBL	TXL	239481R1		SS105	-	2644000R1		
KT71C	18	LTBL	TXL	239481R1		SS105	-	2644000R1		
KT92#205	18	LTBL	TXL	239481R1		SS105	-	2644000R1		
LE5C(+)	18	YL	193	239481R1		SS106	-	2644000R1		
LE5D(+)	18	YL	TXL	239481R1		SS106	-	2644000R1		
LE5E(+)	18	YL	TXL	239481R1		SS106	-	2644000R1		
LE5C(-)	18	GN	193	239481R1		SS107	-	2644000R1		

Circuit Number	Gauge	Color	Insulation	Terminal / Splice Number	Connector Part number	Connector Number	Cavity	Seal/Sleeve	Lock 1	Lock 2
LE5D(-)	18	GN	TXL	239481R1		SS107	-	2644000R1		
LE5E(-)	18	GN	TXL	239481R1		SS107	-	2644000R1		
LF5C(+)	18	YL	193	239481R1		SS108	-	2644000R1		
LF5D(+)	18	YL	TXL	239481R1		SS108	-	2644000R1		
LF5E(+)	18	YL	TXL	239481R1		SS108	-	2644000R1		
LF5C(-)	18	GN	193	239481R1		SS109	-	2644000R1		
LF5D(-)	18	GN	TXL	239481R1		SS109	-	2644000R1		
LF5E(-)	18	GN	TXL	239481R1		SS109	-	2644000R1		
VJ71BA	12	OR	TXL	468358C1		SS11	-	2644000R1		
VJ71BE	12	OR	TXL	468358C1		SS11	-	2644000R1		
VJ71BG	12	OR	TXL	468358C1		SS11	-	2644000R1		
KH5(+)	20	YL	193	239481R1		SS11	-	2644000R1		
KH5A(+)	18	YL	TXL	239481R1		SS11	-	2644000R1		
KH5R(+)	18	YL	TXL	239481R1		SS11	-	2644000R1		
AP5A(-)	18	GN	TXL	239481R1		SS11	-	2644000R1		
AP5B(-)	18	GN	TXL	239481R1		SS11	-	2644000R1		
AP5C(-)	18	GN	193	239481R1		SS11	-	2644000R1		
YT57T	10	LTGN	GXL	382181C1		SS11	-	2644000R1		
YT57U	10	LTGN	GXL	382181C1		SS11	-	2644000R1		
YT57W	10	LTGN	GXL	382181C1		SS11	-	2644000R1		
VF10-G	12	WH	TXL	468358C1		SS12	-	2644000R1		
VF10-GB	12	WH	TXL	468358C1		SS12	-	2644000R1		
VF10-GC	12	WH	TXL	468358C1		SS12	-	2644000R1		
VF10-GD	12	WH	TXL	468358C1		SS12	-	2644000R1		
GM34B	16	TN	TXL	239481R1		SS12	-	2644000R1		
GM9	18	TN	150	239481R1		SS12	-	2644000R1		
GM9A	20	TN	TXL	239481R1		SS12	-	2644000R1		
AS10-AH	10	WH	TXL	239481R1		SS12	-	2644000R1		
AS10-H	10	WH	TXL	239481R1		SS12	-	2644000R1		
AS95-GB	16	BK	TXL	239481R1		SS12	-	2644000R1		
AS95-GL	18	BK	TXL	239481R1		SS12	-	2644000R1		
YT58T	10	BK	GXL	382181C1		SS12	-	2644000R1		
YT58U	10	BK	GXL	382181C1		SS12	-	2644000R1		
YT58W	10	BK	GXL	382181C1		SS12	-	2644000R1		
VK10-G	12	WH	TXL	468358C1		SS13	-	2644000R1		
VK10-GB	12	WH	TXL	468358C1		SS13	-	2644000R1		
VK10-GC	12	WH	TXL	468358C1		SS13	-	2644000R1		
KH5A(-)	18	GN	TXL	239481R1		SS13	-	2644000R1		
KH5B(-)	18	GN	TXL	239481R1		SS13	-	2644000R1		
KH5V(-)	18	GN	TXL	239481R1		SS13	-	2644000R1		
YT68T	10	BN	GXL	382181C1		SS13	-	2644000R1		
YT68U	10	BN	TXL	382181C1		SS13	-	2644000R1		
YT68W	10	BN	GXL	382181C1		SS13	-	2644000R1		
VE68A	14	BN	GXL	382181C1		SS14	-	2644000R1		
VE68AA	14	BN	GXL	382181C1		SS14	-	2644000R1		
VE68AB	14	BN	GXL	382181C1		SS14	-	2644000R1		
GN34B	16	TN	TXL	239481R1		SS14	-	2644000R1		
GN9	18	TN	150	239481R1		SS14	-	2644000R1		
GN9A	20	TN	TXL	239481R1		SS14	-	2644000R1		
YT70T	10	RD	GXL	382181C1		SS14	-	2644000R1		
YT70U	10	RD	TXL	382181C1		SS14	-	2644000R1		
YT70W	10	RD	GXL	382181C1		SS14	-	2644000R1		

Circuit Number	Gauge	Color	Insulation	Terminal / Splice Number	Connector Part number	Connector Number	Cavity	Seal/Sleeve	Lock 1	Lock 2
VF71BA	12	OR	TXL	468358C1		SS15	-	2644000R1		
VF71BB	12	OR	TXL	468358C1		SS15	-	2644000R1		
VF71BC	12	OR	TXL	468358C1		SS15	-	2644000R1		
VF71BD	12	OR	TXL	468358C1		SS15	-	2644000R1		
KF5(+)	20	YL	193	239481R1		SS15	-	2644000R1		
KF5R(+)	18	YL	TXL	239481R1		SS15	-	2644000R1		
KF5TB(+)	18	YL	TXL	239481R1		SS15	-	2644000R1		
AL13AA	18	RD	TXL	239481R1		SS15	-	2644000R1		
AL13AB	18	RD	TXL	239481R1		SS15	-	2644000R1		
AL13R2	10	RD	TXL	239481R1		SS15	-	2644000R1		
AL95KD	10	TN	TXL	239481R1		SS15	-	2644000R1		
YT94T	10	GY	GXL	382181C1		SS15	-	2644000R1		
YT94U	10	GY	TXL	382181C1		SS15	-	2644000R1		
YT94W	10	GY	GXL	382181C1		SS15	-	2644000R1		
VK71BA	12	OR	TXL	468358C1		SS16	-	2644000R1		
VK71BC	12	OR	TXL	468358C1		SS16	-	2644000R1		
VK71BD	12	OR	TXL	468358C1		SS16	-	2644000R1		
TJ23-G	20	TN	TXL	6102309C1		SS16	-	2644000R1		
TJ95AA	20	TN	TXL	6102309C1		SS16	-	2644000R1		
TJ95AB	18	TN	TXL	6102309C1		SS16	-	2644000R1		
AM13AA	18	RD	TXL	239481R1		SS16	-	2644000R1		
AM13AB	18	RD	TXL	239481R1		SS16	-	2644000R1		
AM13R2	10	RD	TXL	239481R1		SS16	-	2644000R1		
AM95KD	10	RD	TXL	239481R1		SS16	-	2644000R1		
UJ94BQ	18	GY	GXL	6102309C1		SS17	-	2644000R1		
UJ94BQA	18	GY	TXL	6102309C1		SS17	-	2644000R1		
TK23-G	20	TN	TXL	6102309C1		SS17	-	2644000R1		
TK95AA	20	TN	TXL	6102309C1		SS17	-	2644000R1		
TK95AB	18	TN	TXL	6102309C1		SS17	-	2644000R1		
AS13AA	18	RD	TXL	239481R1		SS17	-	2644000R1		
AS13AB	18	RD	TXL	239481R1		SS17	-	2644000R1		
AS13R2	10	RD	TXL	239481R1		SS17	-	2644000R1		
AS95KD	10	RD	TXL	239481R1		SS17	-	2644000R1		
US94BQ	18	GY	GXL	6102309C1		SS18	-	2644000R1		
US94BQA	18	GY	TXL	6102309C1		SS18	-	2644000R1		
KH5(-)	20	GN	193	239481R1		SS18	-	2644000R1		
KH5A(-)	18	GN	TXL	239481R1		SS18	-	2644000R1		
KH5R(-)	18	GN	TXL	239481R1		SS18	-	2644000R1		
VB94BQ	18	GY	GXL	6102309C1		SS19	-	2644000R1		
VB94BQA	18	GY	TXL	6102309C1		SS19	-	2644000R1		
KF47A	18	GY	TXL	6102309C1		SS19	-	2644000R1		
KF47AA	20	GY	TXL	6102309C1		SS19	-	2644000R1		
AJ95AS1	18	TN	TXL	239481R1		SS19	-	2644000R1		
AJ95AS2	18	TN	TXL	239481R1		SS19	-	2644000R1		
AJ95AS3	18	TN	TXL	239481R1		SS19	-	2644000R1		
SV5U(-)	18	GN	TXL	239481R1		SS2	-	2644000R1		
SV5UB(-)	18	GN	TXL	239481R1		SS2	-	2644000R1		
SV5UE(-)	20	GN	193	239481R1		SS2	-	2644000R1		
SV5U(-)	18	GN	TXL	239481R1		SS2	-	2644000R1		
SV5UB(-)	18	GN	TXL	239481R1		SS2	-	2644000R1		
SV5UE(-)	20	GN	193	239481R1		SS2	-	2644000R1		
KC41E	20	TN	TXL	6102309C1		SS2	-	2644000R1		

Circuit Number	Gauge	Color	Insulation	Terminal / Splice Number	Connector Part number	Connector Number	Cavity	Seal/Sleeve	Lock 1	Lock 2
KC41EA	18	TN	TXL	6102309C1		SS2	-	2644000R1		
AJ95AU1	18	TN	TXL	239481R1		SS2	-	2644000R1		
AJ95AU2	18	TN	TXL	239481R1		SS2	-	2644000R1		
AJ95AU3	18	TN	TXL	239481R1		SS2	-	2644000R1		
RE39-G	18	WH	GXL	239481R1		SS2	-	2644000R1		
RE39-GA	18	WH	GXL	239481R1		SS2	-	2644000R1		
RE39-GB	18	WH	GXL	239481R1		SS2	-	2644000R1		
UJ94BR	18	GY	GXL	6102309C1		SS20	-	2644000R1		
UJ94BRA	18	GY	TXL	6102309C1		SS20	-	2644000R1		
TS10-AG	10	WH	TXL	239481R1		SS20	-	2644000R1		
TS10-G	10	WH	TXL	239481R1		SS20	-	2644000R1		
TS10-GK	16	BK	TXL	239481R1		SS20	-	2644000R1		
TS10-GL	18	WH	TXL	239481R1		SS20	-	2644000R1		
US94BR	18	GY	GXL	6102309C1		SS21	-	2644000R1		
US94BRA	18	GY	TXL	6102309C1		SS21	-	2644000R1		
KY95W	18	TN	GXL	6102309C1		SS21	-	2644000R1		
KY95WA	20	TN	TXL	6102309C1		SS21	-	2644000R1		
AK95AS1	18	TN	TXL	239481R1		SS21	-	2644000R1		
AK95AS2	18	TN	TXL	239481R1		SS21	-	2644000R1		
AK95AS3	18	TN	TXL	239481R1		SS21	-	2644000R1		
VB94BR	18	GY	GXL	6102309C1		SS22	-	2644000R1		
VB94BRA	18	GY	TXL	6102309C1		SS22	-	2644000R1		
KH5A(+)	18	YL	TXL	239481R1		SS22	-	2644000R1		
KH5B(+)	18	YL	TXL	239481R1		SS22	-	2644000R1		
KH5V(+)	18	YL	TXL	239481R1		SS22	-	2644000R1		
AJ95AR1	18	TN	TXL	239481R1		SS22	-	2644000R1		
AJ95AR2	18	RD	TXL	239481R1		SS22	-	2644000R1		
AJ95AR3	18	TN	TXL	239481R1		SS22	-	2644000R1		
UJ94BS	18	GY	GXL	6102309C1		SS23	-	2644000R1		
UJ94BSA	18	GY	TXL	6102309C1		SS23	-	2644000R1		
KF5(-)	20	GN	193	239481R1		SS23	-	2644000R1		
KF5R(-)	18	GN	TXL	239481R1		SS23	-	2644000R1		
KF5TB(-)	18	GN	TXL	239481R1		SS23	-	2644000R1		
AK95AR1	18	TN	TXL	239481R1		SS23	-	2644000R1		
AK95AR2	18	RD	TXL	239481R1		SS23	-	2644000R1		
AK95AR3	18	BK	TXL	239481R1		SS23	-	2644000R1		
US94BS	18	GY	GXL	6102309C1		SS24	-	2644000R1		
US94BSA	18	GY	TXL	6102309C1		SS24	-	2644000R1		
TM10-AG	10	WH	TXL	239481R1		SS24	-	2644000R1		
TM10-G	10	WH	TXL	239481R1		SS24	-	2644000R1		
TM10-GK	16	BK	TXL	239481R1		SS24	-	2644000R1		
TM10-GL	18	WH	TXL	239481R1		SS24	-	2644000R1		
VB94BS	18	GY	GXL	6102309C1		SS25	-	2644000R1		
VB94BSA	18	GY	TXL	6102309C1		SS25	-	2644000R1		
TL10-AG	10	WH	TXL	239481R1		SS25	-	2644000R1		
TL10-G	10	WH	TXL	239481R1		SS25	-	2644000R1		
TL10-GK	16	BK	TXL	239481R1		SS25	-	2644000R1		
TL10-GL	18	WH	TXL	239481R1		SS25	-	2644000R1		
AP5A(+)	18	YL	TXL	239481R1		SS25	-	2644000R1		
AP5B(+)	18	YL	TXL	239481R1		SS25	-	2644000R1		
AP5C(+)	18	YL	193	239481R1		SS25	-	2644000R1		
UJ94BT	18	GY	GXL	6102309C1		SS26	-	2644000R1		

Circuit Number	Gauge	Color	Insulation	Terminal / Splice Number	Connector Part number	Connector Number	Cavity	Seal/Sleeve	Lock 1	Lock 2
UJ94BTA	18	GY	TXL	6102309C1		SS26	-	2644000R1		
VE2	2	RD	SGX	1613947C1		SS26	-	2644000R1		
VE2A-FL	10	RS	FUS	1613947C1		SS26	-	2644000R1		
VE2B-FL	10	RS	FUS	1613947C1		SS26	-	2644000R1		
KA95GBC	16	TN	TXL	239481R1		SS26	-	2644000R1		
KA95GBD	18	BK	TXL	239481R1		SS26	-	2644000R1		
KA95GBE	18	TN	TXL	239481R1		SS26	-	2644000R1		
US94BT	18	GY	GXL	6102309C1		SS27	-	2644000R1		
US94BTA	18	GY	TXL	6102309C1		SS27	-	2644000R1		
VF2	2	RD	SGX	1613947C1		SS27	-	2644000R1		
VF2A-FL	10	RS	FUS	1613947C1		SS27	-	2644000R1		
VF2B-FL	10	RS	FUS	1613947C1		SS27	-	2644000R1		
KA95H1	18	PK	TXL	382181C1		SS27	-	2644000R1		
KA95H2	18	PK	TXL	382181C1		SS27	-	2644000R1		
KA95H3	18	PK	TXL	382181C1		SS27	-	2644000R1		
KA95H4	18	PK	TXL	382181C1		SS27	-	2644000R1		
KA95H5	18	PK	TXL	382181C1		SS27	-	2644000R1		
KA95H6	18	PK	TXL	382181C1		SS27	-	2644000R1		
KA95H7	18	PK	TXL	382181C1		SS27	-	2644000R1		
VB94BT	18	GY	GXL	6102309C1		SS28	-	2644000R1		
VB94BTA	18	GY	TXL	6102309C1		SS28	-	2644000R1		
KF47	20	GY	TXL	6102309C1		SS28	-	2644000R1		
KF47B	18	GY	TXL	6102309C1		SS28	-	2644000R1		
KA14A	18	RD	TXL	382181C1		SS28	-	2644000R1		
KA14C	10	RD	TXL	382181C1		SS28	-	2644000R1		
KA14D	12	RD	TXL	382181C1		SS28	-	2644000R1		
UJ94BU	18	GY	GXL	6102309C1		SS29	-	2644000R1		
UJ94BUA	18	GY	TXL	6102309C1		SS29	-	2644000R1		
TJ95AR1	18	TN	TXL	239481R1		SS29	-	2644000R1		
TJ95AR2	18	RD	TXL	239481R1		SS29	-	2644000R1		
TJ95AR3	18	TN	TXL	239481R1		SS29	-	2644000R1		
KA95PA	10	PK	TXL	6102309C1		SS29	-	2644000R1		
KA95PB	10	PK	TXL	6102309C1		SS29	-	2644000R1		
KA95PC	18	PK	TXL	6102309C1		SS29	-	2644000R1		
RK5U(+)	18	YL	TXL	239481R1		SS3	-	2644000R1		
RK5UF(+)	18	YL	TXL	239481R1		SS3	-	2644000R1	1667771C1	1667771C1
RK5UH(+)	18	YL	TXL	239481R1		SS3	-	2644000R1	1664408C1	
RK5U(+)	18	YL	TXL	239481R1		SS3	-	2644000R1		
RK5UF(+)	18	YL	TXL	239481R1		SS3	-	2644000R1		
RK5UH(+)	18	YL	TXL	239481R1		SS3	-	2644000R1		
KB2	2	RD	SGX	1613947C1		SS3	-	2644000R1		
KB2A-FL	10	RS	FUS	1613947C1		SS3	-	2644000R1		
KB2B-FL	10	RS	FUS	1613947C1		SS3	-	2644000R1		
KR2	2	RD	SGX	1613947C1		SS3	-	2644000R1		
KR2A-FL	10	RS	FUS	1613947C1		SS3	-	2644000R1		
KR2B-FL	10	RS	FUS	1613947C1		SS3	-	2644000R1		
AK95AU1	18	TN	TXL	239481R1		SS3	-	2644000R1		
AK95AU2	18	TN	TXL	239481R1		SS3	-	2644000R1		
AK95AU3	18	TN	TXL	239481R1		SS3	-	2644000R1		
RE39	18	GY	GXL	239481R1		SS3	-	2644000R1		
RE39A	18	GY	GXL	239481R1		SS3	-	2644000R1		
RE39B	18	GY	GXL	239481R1		SS3	-	2644000R1		

Circuit Number	Gauge	Color	Insulation	Terminal / Splice Number	Connector Part number	Connector Number	Cavity	Seal/Sleeve	Lock 1	Lock 2
US94BU	18	GY	GXL	6102309C1		SS30	-	2644000R1		
US94BUA	18	GY	TXL	6102309C1		SS30	-	2644000R1		
TK95AR1	18	TN	TXL	239481R1		SS30	-	2644000R1		
TK95AR2	18	RD	TXL	239481R1		SS30	-	2644000R1		
TK95AR3	18	TN	TXL	239481R1		SS30	-	2644000R1		
KA95GBA	18	BK	TXL	239481R1		SS30	-	2644000R1		
KA95GBB	18	BK	TXL	239481R1		SS30	-	2644000R1		
KA95GBC	16	TN	TXL	239481R1		SS30	-	2644000R1		
VB94BU	18	GY	GXL	6102309C1		SS31	-	2644000R1		
VB94BUA	18	GY	TXL	6102309C1		SS31	-	2644000R1		
TJ95AS1	18	TN	TXL	239481R1		SS31	-	2644000R1		
TJ95AS2	20	TN	TXL	239481R1		SS31	-	2644000R1		
TJ95AS3	18	TN	TXL	239481R1		SS31	-	2644000R1		
SJ92A18	18	TN	TXL	6102309C1		SS31	-	2644000R1		
SJ92A18A	16	TN	GXL	6102309C1		SS31	-	2644000R1		
UJ94BV	18	GY	GXL	6102309C1		SS32	-	2644000R1		
UJ94BVA	18	GY	TXL	6102309C1		SS32	-	2644000R1		
TK95AS1	18	TN	TXL	239481R1		SS32	-	2644000R1		
TK95AS2	20	TN	TXL	239481R1		SS32	-	2644000R1		
TK95AS3	18	TN	TXL	239481R1		SS32	-	2644000R1		
ZG92A4	18	TN	TXL	239481R1		SS32	-	2644000R1		
ZG95DA	18	TN	TXL	239481R1		SS32	-	2644000R1		
ZG95DB	20	TN	150	239481R1		SS32	-	2644000R1		
US94BV	18	GY	GXL	6102309C1		SS33	-	2644000R1		
US94BVA	18	GY	TXL	6102309C1		SS33	-	2644000R1		
TL13AA	18	PK	TXL	239481R1		SS33	-	2644000R1		
TL13AB	18	RD	TXL	239481R1		SS33	-	2644000R1		
TL13R	10	RD	TXL	239481R1		SS33	-	2644000R1		
TL95KD	10	RD	TXL	239481R1		SS33	-	2644000R1		
AL13R	12	PK	150	239481R1		SS33	-	2644000R1		
AL13R2	10	RD	TXL	239481R1		SS33	-	2644000R1		
VB94BV	18	GY	GXL	6102309C1		SS34	-	2644000R1	1667771C1	1667771C1
VB94BVA	18	GY	TXL	6102309C1		SS34	-	2644000R1	1671608C1	
TS13R	10	RD	TXL	239481R1		SS34	-	2644000R1		
TS13R2	12	PK	150	239481R1		SS34	-	2644000R1		
UJ94BW	18	GY	GXL	6102309C1		SS35	-	2644000R1		
UJ94BWA	18	GY	TXL	6102309C1		SS35	-	2644000R1		
VD2	1	RD	SGX	1613947C1		SS35	-	2644000R1		
VD2A-FL	10	RS	FUS	1613947C1		SS35	-	2644000R1		
VD2B-FL	10	RS	FUS	1613947C1		SS35	-	2644000R1		
VD2C-FL	10	RS	FUS	1613947C1		SS35	-	2644000R1		
AM13R	12	PK	150	239481R1		SS35	-	2644000R1		
AM13R2	10	RD	TXL	239481R1		SS35	-	2644000R1		
US94BW	18	GY	GXL	6102309C1		SS36	-	2644000R1		
US94BWA	18	GY	TXL	6102309C1		SS36	-	2644000R1		
VM2	1	RD	SGX	1613947C1		SS36	-	2644000R1		
VM2A-FL	10	RS	FUS	1613947C1		SS36	-	2644000R1		
VM2B-FL	10	RS	FUS	1613947C1		SS36	-	2644000R1		
VM2C-FL	10	RS	FUS	1613947C1		SS36	-	2644000R1		
VB94BW	18	GY	GXL	6102309C1		SS37	-	2644000R1	1664408C1	
VB94BWA	18	GY	TXL	6102309C1		SS37	-	2644000R1	1661874C1	
WX2	2	RD	SGX	1613947C1		SS37	-	2644000R1		

Circuit Number	Gauge	Color	Insulation	Terminal / Splice Number	Connector Part number	Connector Number	Cavity	Seal/Sleeve	Lock 1	Lock 2
WX2A-FL	10	RS	FUS	1613947C1		SS37	-	2644000R1		
WX2B-FL	10	RS	FUS	1613947C1		SS37	-	2644000R1		
WC10-GD	8	WH	GXL	468358C1		SS37	-	2644000R1		
WC10-GE	12	WH	GXL	468358C1		SS37	-	2644000R1		
WC11-G	10	WH	TXL	468358C1		SS37	-	2644000R1		
UJ94BY	18	GY	GXL	6102309C1		SS38	-	2644000R1		
UJ94BYA	18	GY	TXL	6102309C1		SS38	-	2644000R1		
TS10-AG	10	WH	TXL	239481R1		SS38	-	2644000R1		
TS10-AH	12	WH	150	239481R1		SS38	-	2644000R1		
AL10-AG	12	WH	150	239481R1		SS38	-	2644000R1		
AL10-AH	10	WH	TXL	239481R1		SS38	-	2644000R1		
US94BY	18	GY	GXL	6102309C1		SS39	-	2644000R1		
US94BYA	18	GY	TXL	6102309C1		SS39	-	2644000R1		
GA95W	20	TN	GXL	6102309C1		SS39	-	2644000R1		
GA95WA	20	TN	TXL	6102309C1		SS39	-	2644000R1		
AM10-AG	12	WH	150	239481R1		SS39	-	2644000R1		
AM10-AH	10	WH	TXL	239481R1		SS39	-	2644000R1		
RK5U(-)	18	GN	TXL	239481R1		SS4	-	2644000R1	1667734C1	
RK5UF(-)	18	GN	TXL	239481R1		SS4	-	2644000R1	1671608C1	
RK5UH(-)	18	GN	TXL	239481R1		SS4	-	2644000R1	2039342C1	
UY49-GA	18	WH	GXL	239481R1		SS4	-	2644000R1		
UY49-GB	18	WH	GXL	239481R1		SS4	-	2644000R1		
UY49-GC	18	WH	GXL	239481R1		SS4	-	2644000R1		
RK5U(-)	18	GN	TXL	239481R1		SS4	-	2644000R1		
RK5UF(-)	18	GN	TXL	239481R1		SS4	-	2644000R1		
RK5UH(-)	18	GN	TXL	239481R1		SS4	-	2644000R1		
GN6	18	TN	150	239481R1		SS4	-	2644000R1		
GN6A	20	VT	TXL	239481R1		SS4	-	2644000R1		
GN6B	20	VT	GXL	239481R1		SS4	-	2644000R1		
GN99D	18	VT	GXL	239481R1		SS4	-	2644000R1		
AJ95AT1	18	TN	TXL	239481R1		SS4	-	2644000R1		
AJ95AT2	18	TN	TXL	239481R1		SS4	-	2644000R1		
AJ95AT3	18	TN	TXL	239481R1		SS4	-	2644000R1		
UJ94BZ	18	GY	GXL	6102309C1		SS40	-	2644000R1		
UJ94BZA	18	GY	TXL	6102309C1		SS40	-	2644000R1		
TM13AA	18	PK	TXL	239481R1		SS40	-	2644000R1		
TM13AB	18	RD	TXL	239481R1		SS40	-	2644000R1		
TM13R	10	RD	TXL	239481R1		SS40	-	2644000R1		
TM95KD	10	RD	TXL	239481R1		SS40	-	2644000R1		
US94BZ	18	GY	GXL	6102309C1		SS41	-	2644000R1		
US94BZA	18	GY	TXL	6102309C1		SS41	-	2644000R1		
KJ95W	20	TN	GXL	6102309C1		SS41	-	2644000R1		
KJ95WA	20	TN	TXL	6102309C1		SS41	-	2644000R1		
AS13R	12	PK	150	239481R1		SS41	-	2644000R1		
AS13R2	10	RD	TXL	239481R1		SS41	-	2644000R1		
VB94BP	18	GY	GXL	6102309C1		SS42	-	2644000R1		
VB94BPA	18	GY	TXL	6102309C1		SS42	-	2644000R1		
KA14A1	16	RD	TXL	382181C1		SS42	-	2644000R1		
KA14A2	16	RD	TXL	382181C1		SS42	-	2644000R1		
KA14A4B	10	RD	TXL	382181C1		SS42	-	2644000R1		
VB94BY	18	GY	GXL	6102309C1		SS43	-	2644000R1	3540454C1	3551897C1
VB94BYA	18	GY	TXL	6102309C1		SS43	-	2644000R1	3554019C1	

Circuit Number	Gauge	Color	Insulation	Terminal / Splice Number	Connector Part number	Connector Number	Cavity	Seal/Sleeve	Lock 1	Lock 2
KH10-GK	12	WH	TXL	239481R1		SS43	-	2644000R1		
KH11-G	10	WH	TXL	239481R1		SS43	-	2644000R1		
KH11-GA	10	WH	TXL	239481R1		SS43	-	2644000R1		
AY9	20	TN	150	239481R1		SS43	-	2644000R1		
AY9A	18	TN	TXL	239481R1		SS43	-	2644000R1		
AY9B	18	VT	TXL	239481R1		SS43	-	2644000R1		
VB94BZ	18	GY	GXL	6102309C1		SS44	-	2644000R1		
VB94BZA	18	GY	TXL	6102309C1		SS44	-	2644000R1	3683466C1	3573833C1
TL13R	10	RD	TXL	239481R1		SS44	-	2644000R1		
TL13R2	12	PK	150	239481R1		SS44	-	2644000R1		
AS10-AG	12	WH	150	239481R1		SS44	-	2644000R1		
AS10-AH	10	WH	TXL	239481R1		SS44	-	2644000R1		
VL68AA	14	BN	GXL	382181C1		SS45	-	2644000R1		
VL68ACA	14	BN	GXL	382181C1		SS45	-	2644000R1		
VL68ADA	14	BN	GXL	382181C1		SS45	-	2644000R1		
TS13AA	18	PK	TXL	239481R1		SS45	-	2644000R1		
TS13AB	18	RD	TXL	239481R1		SS45	-	2644000R1		
TS13R	10	RD	TXL	239481R1		SS45	-	2644000R1		
TS95KD	10	RD	TXL	239481R1		SS45	-	2644000R1		
LE5A(+)	18	YL	TXL	239481R1		SS45	-	2644000R1		
LE5B(+)	18	YL	TXL	239481R1		SS45	-	2644000R1		
LE5E(+)	18	YL	TXL	239481R1		SS45	-	2644000R1		
TJ95AT1	18	TN	TXL	239481R1		SS46	-	2644000R1		
TJ95AT2	20	TN	TXL	239481R1		SS46	-	2644000R1		
TJ95AT3	18	TN	TXL	239481R1		SS46	-	2644000R1		
LE5A(-)	18	GN	TXL	239481R1		SS46	-	2644000R1		
LE5B(-)	18	GN	TXL	239481R1		SS46	-	2644000R1		
LE5E(-)	18	GN	TXL	239481R1		SS46	-	2644000R1		
TK95AT1	18	TN	TXL	239481R1		SS47	-	2644000R1		
TK95AT2	20	TN	TXL	239481R1		SS47	-	2644000R1		
TK95AT3	18	TN	TXL	239481R1		SS47	-	2644000R1		
LF5A(+)	18	YL	TXL	239481R1		SS47	-	2644000R1		
LF5B(+)	18	YL	TXL	239481R1		SS47	-	2644000R1		
LF5E(+)	18	YL	TXL	239481R1		SS47	-	2644000R1		
TJ95AU1	18	TN	TXL	239481R1		SS48	-	2644000R1		
TJ95AU2	20	TN	TXL	239481R1		SS48	-	2644000R1		
TJ95AU3	18	TN	TXL	239481R1		SS48	-	2644000R1		
LF5A(-)	18	GN	TXL	239481R1		SS48	-	2644000R1		
LF5B(-)	18	GN	TXL	239481R1		SS48	-	2644000R1		
LF5E(-)	18	GN	TXL	239481R1		SS48	-	2644000R1		
TK95AU1	18	TN	TXL	239481R1		SS49	-	2644000R1		
TK95AU2	20	TN	TXL	239481R1		SS49	-	2644000R1		
TK95AU3	18	TN	TXL	239481R1		SS49	-	2644000R1		
SK5UF(+)	20	YL	193	239481R1		SS5	-	2644000R1	3558056C1	
SK5UH(+)	18	YL	TXL	239481R1		SS5	-	2644000R1		
SK5UK(+)	18	YL	TXL	239481R1		SS5	-	2644000R1		
UJ94BP	18	GY	GXL	6102309C1		SS5	-	2644000R1		
UJ94BPA	18	GY	TXL	6102309C1		SS5	-	2644000R1		
SK5UF(+)	20	YL	193	239481R1		SS5	-	2644000R1		
SK5UH(+)	18	YL	TXL	239481R1		SS5	-	2644000R1		
SK5UK(+)	18	YL	TXL	239481R1		SS5	-	2644000R1		
VG2	2	RD	SGX	1613947C1		SS5	-	2644000R1		

Circuit Number	Gauge	Color	Insulation	Terminal / Splice Number	Connector Part number	Connector Number	Cavity	Seal/Sleeve	Lock 1	Lock 2
VG2A-FL	10	RS	FUS	1613947C1		SS5	-	2644000R1		
VG2B-FL	10	RS	FUS	1613947C1		SS5	-	2644000R1		
AK95AT1	18	TN	TXL	239481R1		SS5	-	2644000R1		
AK95AT2	18	TN	TXL	239481R1		SS5	-	2644000R1		
AK95AT3	18	TN	TXL	239481R1		SS5	-	2644000R1		
KA95GBA	18	BK	TXL	239481R1		SS50	-	2644000R1		
KA95GBB	18	BK	TXL	239481R1		SS50	-	2644000R1		
KA95GBC	16	TN	TXL	239481R1		SS50	-	2644000R1		
KA95PA	10	PK	TXL	239481R1		SS51	-	2644000R1		
KA95PB	10	PK	TXL	239481R1		SS51	-	2644000R1		
KA95PC	18	PK	TXL	239481R1		SS51	-	2644000R1		
ZE92A4	18	TN	TXL	239481R1		SS51	-	2644000R1		
ZE95DA	18	TN	TXL	239481R1		SS51	-	2644000R1		
ZE95DB	20	TN	150	239481R1		SS51	-	2644000R1		
KA14A	16	RD	TXL	239481R1		SS52	-	2644000R1		
KA14C	10	RD	TXL	239481R1		SS52	-	2644000R1		
KA14D	12	RD	TXL	239481R1		SS52	-	2644000R1		
KA95H1	18	PK	TXL	382181C1		SS53	-	2644000R1		
KA95H2	18	PK	TXL	382181C1		SS53	-	2644000R1		
KA95H3	18	PK	TXL	382181C1		SS53	-	2644000R1		
KA95H4	18	PK	TXL	382181C1		SS53	-	2644000R1		
KA95H5	18	PK	TXL	382181C1		SS53	-	2644000R1		
KA95H6	18	PK	TXL	382181C1		SS53	-	2644000R1		
KA95H7	18	PK	TXL	382181C1		SS53	-	2644000R1		
KA95GBC	16	TN	TXL	239481R1		SS54	-	2644000R1		
KA95GBD	18	BK	TXL	239481R1		SS54	-	2644000R1		
KA95GBE	16	TN	TXL	239481R1		SS54	-	2644000R1		
TM13R	10	RD	TXL	239481R1		SS55	-	2644000R1		
TM13R2	12	PK	150	239481R1		SS55	-	2644000R1		
TL10-AG	10	WH	TXL	239481R1		SS56	-	2644000R1		
TL10-AH	12	WH	150	239481R1		SS56	-	2644000R1		
ZC23A	18	TN	TXL	239481R1		SS56	-	2644000R1		
ZC23A2	18	TN	TXL	239481R1		SS56	-	2644000R1		
ZC92A15	18	TN	GXL	239481R1		SS56	-	2644000R1		
TM10-AG	10	WH	TXL	239481R1		SS57	-	2644000R1		
TM10-AH	12	WH	150	239481R1		SS57	-	2644000R1		
KA14A4A	10	RD	TXL	382181C1		SS58	-	2644000R1		
KA14A4B	10	RD	TXL	382181C1		SS58	-	2644000R1		
KA14AF	10	RD	TXL	382181C1		SS58	-	2644000R1		
GK34	20	TN	TXL	6102309C1		SS59	-	2644000R1		
GK34A	18	TN	TXL	6102309C1		SS59	-	2644000R1		
SK5UF(-)	20	GN	193	239481R1		SS6	-	2644000R1		
SK5UH(-)	18	GN	TXL	239481R1		SS6	-	2644000R1		
SK5UK(-)	18	GN	TXL	239481R1		SS6	-	2644000R1		
US94BP	18	GY	GXL	6102309C1		SS6	-	2644000R1		
US94BPA	18	GY	TXL	6102309C1		SS6	-	2644000R1		
SK5UF(-)	20	GN	193	239481R1		SS6	-	2644000R1		
SK5UH(-)	18	GN	TXL	239481R1		SS6	-	2644000R1		
SK5UK(-)	18	GN	TXL	239481R1		SS6	-	2644000R1		
KA10-GA	10	WH	GXL	382181C1		SS6	-	2644000R1		
KA10-GF	16	WH	TXL	382181C1		SS6	-	2644000R1		
KA10-GG	16	WH	TXL	382181C1		SS6	-	2644000R1		

Circuit Number	Gauge	Color	Insulation	Terminal / Splice Number	Connector Part number	Connector Number	Cavity	Seal/Sleeve	Lock 1	Lock 2
KA10-GH	16	WH	TXL	382181C1		SS6	-	2644000R1		
KV5C108	18	GN	TXL	239481R1		SS60	-	2644000R1		
KV5R108	20	GN	193	239481R1		SS60	-	2644000R1		
KV5S108	18	GN	TXL	239481R1		SS60	-	2644000R1		
WA41D	18	WH	TXL	239481R1		SS60	-	2644000R1		
WA92A20	18	WH	TXL	239481R1		SS60	-	2644000R1		
WA92B20	18	TN	TXL	239481R1		SS60	-	2644000R1		
KV5C128	18	YL	TXL	239481R1		SS61	-	2644000R1		
KV5R128	20	YL	193	239481R1		SS61	-	2644000R1		
KV5S128	18	YL	TXL	239481R1		SS61	-	2644000R1		
KV5A108	18	GN	TXL	239481R1		SS62	-	2644000R1		
KV5B117	18	GN	TXL	239481R1		SS62	-	2644000R1		
KV5S108	18	GN	TXL	239481R1		SS62	-	2644000R1		
WC41D	18	WH	TXL	239481R1		SS62	-	2644000R1		
WC92A20	18	WH	TXL	239481R1		SS62	-	2644000R1		
WC92B20	18	TN	TXL	239481R1		SS62	-	2644000R1		
KV5A128	18	YL	TXL	239481R1		SS63	-	2644000R1		
KV5B106	18	YL	TXL	239481R1		SS63	-	2644000R1		
KV5S128	18	YL	TXL	239481R1		SS63	-	2644000R1		
KA41-GE	10	WH	TXL	505040C1		SS63	-	2644027R1		
KA41-GF	10	WH	TXL	505040C1		SS63	-	2644027R1		
KA41-GH	4	WH	SGX	505040C1		SS63	-	2644027R1		
KA14G	14	RD	TXL	382182C1		SS64	-	2644000R1		
KA14HA	14	RD	TXL	382182C1		SS64	-	2644000R1		
KA14HC	14	RD	TXL	382182C1		SS64	-	2644000R1		
KA14K	14	RD	TXL	382182C1		SS64	-	2644000R1		
CC95AC	20	TN	TXL	239481R1		SS65	-	2644000R1		
CC95GC	18	VT	GXL	239481R1		SS65	-	2644000R1		
CC95GE	18	TN	TXL	239481R1		SS65	-	2644000R1		
CD95AC	20	TN	TXL	239481R1		SS66	-	2644000R1		
CD95GC	18	VT	GXL	239481R1		SS66	-	2644000R1		
CD95GE	18	TN	TXL	239481R1		SS66	-	2644000R1		
KA92BB16	14	WH	TXL	382181C1		SS67	-	2644000R1		
KA92E16	14	WH	TXL	382181C1		SS67	-	2644000R1		
KA92G16	14	WH	TXL	382181C1		SS67	-	2644000R1		
KA92B16	14	TN	TXL	382181C1		SS68	-	2644000R1		
KA92F16	14	WH	TXL	382181C1		SS68	-	2644000R1		
KA92G16	14	WH	TXL	382181C1		SS68	-	2644000R1		
KA92B16	14	TN	TXL	382182C1		SS69	-	2644000R1		
KA92BA16	14	WH	TXL	382182C1		SS69	-	2644000R1		
KA92C16	14	WH	TXL	382182C1		SS69	-	2644000R1		
KA92D16	14	WH	TXL	382182C1		SS69	-	2644000R1		
VJ10-G	12	WH	TXL	468358C1		SS7	-	2644000R1		
VJ10-GE	12	WH	TXL	468358C1		SS7	-	2644000R1		
VJ10-GG	12	WH	TXL	468358C1		SS7	-	2644000R1		
KA10-GB	16	WH	TXL	239481R1		SS7	-	2644000R1		
KA10-GE	16	WH	TXL	239481R1		SS7	-	2644000R1		
KA10-GJ	10	WH	TXL	239481R1		SS7	-	2644000R1		
AY5A(-)	18	GN	TXL	239481R1		SS7	-	2644000R1		
AY5B(-)	18	GN	TXL	239481R1		SS7	-	2644000R1		
AY5C(-)	18	GN	193	239481R1		SS7	-	2644000R1		
XR5A127	18	GN	TXL	239481R1		SS73	-	2644000R1		

Circuit Number	Gauge	Color	Insulation	Terminal / Splice Number	Connector Part number	Connector Number	Cavity	Seal/Sleeve	Lock 1	Lock 2
XR5B127	18	GN	TXL	239481R1		SS73	-	2644000R1		
XR5C127	18	GN	TXL	239481R1		SS73	-	2644000R1		
XR5A106	18	YL	TXL	239481R1		SS74	-	2644000R1		
XR5B106	18	YL	TXL	239481R1		SS74	-	2644000R1		
XR5C106	18	YL	TXL	239481R1		SS74	-	2644000R1		
XR5A127	18	GN	TXL	239481R1		SS75	-	2644000R1		
XR5R127	18	GN	TXL	239481R1		SS75	-	2644000R1		
XR5S127	20	GN	193	239481R1		SS75	-	2644000R1		
VH10-G	12	WH	TXL	468358C1		SS8	-	2644000R1		
VH10-GE	12	WH	TXL	468358C1		SS8	-	2644000R1		
VH10-GF	12	WH	TXL	468358C1		SS8	-	2644000R1		
VH10-GG	12	WH	TXL	468358C1		SS8	-	2644000R1		
KA10-G	8	WH	GXL	468358C1		SS8	-	2644000R1		
KA10-GA	10	WH	GXL	468358C1		SS8	-	2644000R1		
KA10-GJ	10	WH	TXL	468358C1		SS8	-	2644000R1		
KA77-G	16	WH	TXL	468358C1		SS8	-	2644000R1		
KA14HA	14	RD	TXL	382181C1		SS8	-	2644000R1		
KA14J2	10	RD	GXL	382181C1		SS8	-	2644000R1		
KA14KB	14	RD	TXL	382181C1		SS8	-	2644000R1		
XZ5A117	18	GN	TXL	239481R1		SS84	-	2644000R1		
XZ5B117	18	GN	TXL	239481R1		SS84	-	2644000R1		
XZ5S117	18	GN	TXL	239481R1		SS84	-	2644000R1		
XZ5A106	18	YL	TXL	239481R1		SS85	-	2644000R1		
XZ5B106	18	YL	TXL	239481R1		SS85	-	2644000R1		
XZ5S106	18	YL	TXL	239481R1		SS85	-	2644000R1		
XZ5C106	18	YL	TXL	239481R1		SS86	-	2644000R1		
XZ5R106	20	YL	193	239481R1		SS86	-	2644000R1		
XZ5S106	18	YL	TXL	239481R1		SS86	-	2644000R1		
XZ5C117	18	GN	TXL	239481R1		SS87	-	2644000R1		
XZ5R117	20	GN	193	239481R1		SS87	-	2644000R1		
XZ5S117	18	GN	TXL	239481R1		SS87	-	2644000R1		
VG68A	14	BN	GXL	382181C1		SS9	-	2644000R1		
VG68AC	14	BN	GXL	382181C1		SS9	-	2644000R1		
VG68AD	14	BN	GXL	382181C1		SS9	-	2644000R1		
GM6	18	TN	150	239481R1		SS9	-	2644000R1		
GM6A	20	VT	TXL	239481R1		SS9	-	2644000R1		
GM6B	20	VT	GXL	239481R1		SS9	-	2644000R1		
GM99D	18	VT	GXL	239481R1		SS9	-	2644000R1		
AL10-AH	10	WH	TXL	239481R1		SS9	-	2644000R1		
AL10-H	10	WH	TXL	239481R1		SS9	-	2644000R1		
AL95-GB	16	BK	TXL	239481R1		SS9	-	2644000R1		
AL95-GL	16	BK	TXL	239481R1		SS9	-	2644000R1		
XR5A106	18	YL	TXL	239481R1		SS91	-	2644000R1		
XR5R106	18	YL	TXL	239481R1		SS91	-	2644000R1		
XR5S106	20	YL	193	239481R1		SS91	-	2644000R1		
WC10-GA	12	WH	GXL	239481R1		SS92	-	2644000R1		
WC10-GD	8	WH	GXL	239481R1		SS92	-	2644000R1		
WC10-GF	6	WH	SGX	239481R1		SS92	-	2644000R1		
KD41D	18	WH	TXL	239481R1		SS93	-	2644000R1		
KD92A20	18	WH	TXL	239481R1		SS93	-	2644000R1		
KD92B20	18	TN	TXL	239481R1		SS93	-	2644000R1		
MA11-GBB	16	WH	GXL	239481R1		SVS2	-	2644000R1		

Circuit Number	Gauge	Color	Insulation	Terminal / Splice Number	Connector Part number	Connector Number	Cavity	Seal/Sleeve	Lock 1	Lock 2
MA54-GBB	16	WH	GXL	239481R1		SVS2	-	2644000R1		
MA54-GCC	16	WH	GXL	239481R1		SVS2	-	2644000R1		
MA58C	16	BN	GXL	239481R1		SVS5	-	2644000R1		
MA58CA	16	BN	GXL	239481R1		SVS5	-	2644000R1		
MA56A	16	OR	GXL	239481R1		SVS6	-	2644000R1		
MA56AB	16	OR	GXL	239481R1		SVS6	-	2644000R1		
MA56AC	16	OR	GXL	239481R1		SVS6	-	2644000R1		
KL5AC(+)	18	YL	TXL	239481R1		SX2	-	2644000R1		
KL5AD(+)	18	YL	TXL	239481R1		SX2	-	2644000R1		
KL5AE(+)	20	YL	193	239481R1		SX2	-	2644000R1		
KL5A(-)	18	GN	TXL	239481R1		SX3	-	2644000R1		
KL5AB(-)	18	GN	TXL	239481R1		SX3	-	2644000R1		
KL5AC(-)	18	GN	TXL	239481R1		SX3	-	2644000R1		
KL5AC(-)	18	GN	TXL	239481R1		SX4	-	2644000R1		
KL5AD(-)	18	GN	TXL	239481R1		SX4	-	2644000R1		
KL5AE(-)	20	GN	193	239481R1		SX4	-	2644000R1		
KL5A(+)	18	YL	TXL	239481R1		SX5	-	2644000R1		
KL5AB(+)	18	YL	TXL	239481R1		SX5	-	2644000R1		
KL5AC(+)	18	YL	TXL	239481R1		SX5	-	2644000R1		
KL5B(-)	18	GN	TXL	239481R1		SX6	-	2644000R1		
KL5BB(-)	18	GN	TXL	239481R1		SX6	-	2644000R1		
KL5BC(-)	18	GN	TXL	239481R1		SX6	-	2644000R1		
KL5B(+)	18	YL	TXL	239481R1		SX7	-	2644000R1		
KL5BB(+)	18	YL	TXL	239481R1		SX7	-	2644000R1		
KL5BC(+)	18	YL	TXL	239481R1		SX7	-	2644000R1		
KL5BC(+)	18	YL	TXL	239481R1		SX8	-	2644000R1		
KL5BD(+)	20	YL	193	239481R1		SX8	-	2644000R1		
KL5BE(+)	18	YL	TXL	239481R1		SX8	-	2644000R1		
KL5BC(-)	18	GN	TXL	239481R1		SX9	-	2644000R1		
KL5BD(-)	20	GN	193	239481R1		SX9	-	2644000R1		
KL5BE(-)	18	GN	TXL	239481R1		SX9	-	2644000R1		
AA9AAJ	18	GY	TXL	239481R1		TS1	-	2644000R1		
AA9AAJ1	18	GY	TXL	239481R1		TS1	-	2644000R1		
AA9AE	18	GY	TXL	239481R1		TS1	-	2644000R1		
AA9AAJ	18	GY	TXL	239481R1		TS1	-	2644000R1		
AA9AE	18	GY	TXL	239481R1		TS1	-	2644000R1		
AA9E	18	GY	TXL	239481R1		TS1	-	2644000R1		
PA54-GXAH	16	WH	TXL	382181C1		TS2	-	2644000R1		
PA54-GXAJ	16	WH	TXL	382181C1		TS2	-	2644000R1		
PA54-GXD	16	WH	TXL	382181C1		TS2	-	2644000R1		
PA54-GXE	16	WH	TXL	382181C1		TS2	-	2644000R1		
PA54-GXAH	16	WH	TXL	239481R1		TS2	-	2644000R1		
PA54-GXAJ	16	WH	TXL	239481R1		TS2	-	2644000R1		
PA54-GXD	16	WH	TXL	239481R1		TS2	-	2644000R1		
PA54XAJ	16	BN	TXL	239481R1		TS3	-	2644000R1		
PA54XC	16	BN	TXL	239481R1		TS3	-	2644000R1		
PA54XE	16	BN	TXL	239481R1		TS3	-	2644000R1		
PA54XC	16	BN	TXL	239481R1		TS3	-	2644000R1		
PA54XE	16	BN	TXL	239481R1		TS3	-	2644000R1		
AF17	16	PK	GXL	239481R1		TS4	-	2644000R1		
AF17B	16	PK	GXL	239481R1		TS4	-	2644000R1		
AF17C	16	PK	GXL	239481R1		TS4	-	2644000R1		

Circuit Number	Gauge	Color	Insulation	Terminal / Splice Number	Connector Part number	Connector Number	Cavity	Seal/Sleeve	Lock 1	Lock 2
AF17A	16	PK	GXL	239481R1		TS4	-	2644000R1		
AF17B	16	PK	GXL	239481R1		TS4	-	2644000R1		
AF17C	16	PK	GXL	239481R1		TS4	-	2644000R1		
[KC11A]	20	-	GXL	V-TERM	PAS15(1	2)	1937PB	7		
[KC11B]	20	-	GXL	V-TERM	PAS15(1	2)	1937PB	8		
[KC13]	20	-	GXL	V-TERM	PAS15(1	2)	1937PB	5		
[KC14A]	20	-	GXL	V-TERM	PAS15(1	2)	1937PB	1		
[KC14B]	20	-	GXL	V-TERM	PAS15(1	2)	1937PB	2		
[KC3(+)]	20	-	GXL	V-TERM	PAS15(1	2)	1937PB	4		
[KC3(-)]	20	-	GXL	V-TERM	PAS15(1	2)	1937PB	3		
[KC4(+)]	20	-	GXL	V-TERM	PAS15(1	2)	1937PB	13		
[KC4(-)]	20	-	GXL	V-TERM	PAS15(1	2)	1937PB	14		
[KC5(+)]	20	-	GXL	V-TERM	PAS15(1	2)	1937PB	10		
[KC5(-)]	20	-	GXL	V-TERM	PAS15(1	2)	1937PB	12		
[KC11A]	20	-	GXL	V-TERM	PAS15(1	2)	1937PB	7		
[KC11B]	20	-	GXL	V-TERM	PAS15(1	2)	1937PB	8		
[KC13]	20	-	GXL	V-TERM	PAS15(1	2)	1937PB	5		
[KC14A]	20	-	GXL	V-TERM	PAS15(1	2)	1937PB	1		
[KC14B]	20	-	GXL	V-TERM	PAS15(1	2)	1937PB	2		
[KC3(+)]	20	-	GXL	V-TERM	PAS15(1	2)	1937PB	4		
[KC3(-)]	20	-	GXL	V-TERM	PAS15(1	2)	1937PB	3		
[KC4(+)]	20	-	GXL	V-TERM	PAS15(1	2)	1937PB	13		
[KC4(-)]	20	-	GXL	V-TERM	PAS15(1	2)	1937PB	14		
[KC5(+)]	20	-	GXL	V-TERM	PAS15(1	2)	1937PB	10		
[KC5(-)]	20	-	GXL	V-TERM	PAS15(1	2)	1937PB	12		
[BF94-G]	14	-	TXL	V-TERM	PAS3(1	2)	1824	2		
[BF94BY]	14	-	TXL	V-TERM	PAS3(1	2)	1824	1		
[BF94MN]	14	-	TXL	V-TERM	PAS3(1	2)	1824	3		
[PP94SJ]	16	-	GXL	V-TERM	PAS2(1	2)	9514	1		
[PP94SK]	16	-	GXL	V-TERM	PAS2(1	2)	9514	2		
[SU94MM]	16	-	GXL	V-TERM	PAS2(1	2)	9515	1		
[SU94MN]	16	-	GXL	V-TERM	PAS2(1	2)	9515	2		
[BDCORE]	NONE	-	NON	V-TERM	PAS2(1	2)	1A	1		
[BDSHLD]	NONE	-	NON	V-TERM	PAS2(1	2)	1A	2		
[BDCORE]	NONE	-	NON	V-TERM	PAS2(1	2)	1A	1		
[BDSHLD]	NONE	-	NON	V-TERM	PAS2(1	2)	1A	2		
[ZQBRN]	22	-	TXL	V-TERM	PAS8(1	2)	20A	2		
[ZQGRN]	22	-	TXL	V-TERM	PAS8(1	2)	20A	3		
[ZQGRY]	22	-	TXL	V-TERM	PAS8(1	2)	20A	5		
[ZQRED]	22	-	TXL	V-TERM	PAS8(1	2)	20A	8		
[ZQWHT]	22	-	TXL	V-TERM	PAS8(1	2)	20A	1		
[ZQYEL]	22	-	TXL	V-TERM	PAS8(1	2)	20A	4		
[ZQBRN]	22	-	TXL	V-TERM	PAS8(1	2)	21A	2		
[ZQGRN]	22	-	TXL	V-TERM	PAS8(1	2)	21A	3		
[ZQGRY]	22	-	TXL	V-TERM	PAS8(1	2)	21A	5		
[ZQRED]	22	-	TXL	V-TERM	PAS8(1	2)	21A	8		
[ZQWHT]	22	-	TXL	V-TERM	PAS8(1	2)	21A	1		
[ZQYEL]	22	-	TXL	V-TERM	PAS8(1	2)	21A	4		
[BDCORE]	NONE	-	NON	V-TERM	PAS2(1	2)	2A	1		
[BDSHLD]	NONE	-	NON	V-TERM	PAS2(1	2)	2A	2		
[BDCORE]	NONE	-	NON	V-TERM	PAS2(1	2)	2A	1		
[BDSHLD]	NONE	-	NON	V-TERM	PAS2(1	2)	2A	2		

Circuit Number	Gauge	Color	Insulation	Terminal / Splice Number	Connector Part number	Connector Number	Cavity	Seal/Sleeve	Lock 1	Lock 2
[BECORE]	NONE	-	NON	V-TERM	PAS2(1	2)	3A	1		
[BESHLD]	NONE	-	NON	V-TERM	PAS2(1	2)	3A	2		
[BECORE]	NONE	-	NON	V-TERM	PAS2(1	2)	3A	1		
[BESHLD]	NONE	-	NON	V-TERM	PAS2(1	2)	3A	2		
[BECORE]	NONE	-	NON	V-TERM	PAS2(1	2)	4A	1		
[BESHLD]	NONE	-	NON	V-TERM	PAS2(1	2)	4A	2		
[BECORE]	NONE	-	NON	V-TERM	PAS2(1	2)	4A	1		
[BESHLD]	NONE	-	NON	V-TERM	PAS2(1	2)	4A	2		
[YH94SL]	16	-	GXL	V-TERM	PAS2(1	2)	9414A	1		
[YH94SM]	16	-	GXL	V-TERM	PAS2(1	2)	9414A	2		
[YJ94SN]	18	-	GXL	V-TERM	PAS4(1	2)	9511B	1		
[YJ94SP]	18	-	GXL	V-TERM	PAS4(1	2)	9511B	2		
[YJ94SR]	18	-	GXL	V-TERM	PAS4(1	2)	9511B	3		
[YJ94SS]	18	-	GXL	V-TERM	PAS4(1	2)	9511B	4		
[YK94SN]	18	-	GXL	V-TERM	PAS4(1	2)	9511D	1		
[YK94SP]	18	-	GXL	V-TERM	PAS4(1	2)	9511D	2		
[YK94SR]	18	-	GXL	V-TERM	PAS4(1	2)	9511D	3		
[YK94SS]	18	-	GXL	V-TERM	PAS4(1	2)	9511D	4		
[SV94MM]	16	-	GXL	V-TERM	PAS2(1	2)	9515A	1		
[SV94MN]	16	-	GXL	V-TERM	PAS2(1	2)	9515A	2		
[SW94MM]	16	-	GXL	V-TERM	PAS2(1	2)	9515B	1		
[SW94MN]	16	-	GXL	V-TERM	PAS2(1	2)	9515B	2		
[KC11A]	20	-	GXL	V-TERM	PAS3(A	B)	1918BA	C		
[KC11B]	20	-	GXL	V-TERM	PAS3(A	B)	1918BA	C		
[KC13]	20	-	GXL	V-TERM	PAS3(A	B)	1918BA	B		
[KC14A]	20	-	GXL	V-TERM	PAS3(A	B)	1918BA	A		
[KC14B]	20	-	GXL	V-TERM	PAS3(A	B)	1918BA	A		
[KC11A]	20	-	GXL	V-TERM	PAS3(A	B)	1918BA	C		
[KC11B]	20	-	GXL	V-TERM	PAS3(A	B)	1918BA	C		
[KC13]	20	-	GXL	V-TERM	PAS3(A	B)	1918BA	B		
[KC14A]	20	-	GXL	V-TERM	PAS3(A	B)	1918BA	A		
[KC14B]	20	-	GXL	V-TERM	PAS3(A	B)	1918BA	A		
[KC3(+)]	20	-	GXL	V-TERM	PAS8(A	B)	1919BA	C		
[KC3(-)]	20	-	GXL	V-TERM	PAS8(A	B)	1919BA	D		
[KC3(+)]	20	-	GXL	V-TERM	PAS8(A	B)	1919BA	C		
[KC3(-)]	20	-	GXL	V-TERM	PAS8(A	B)	1919BA	D		
[KC5(+)]	20	-	GXL	V-TERM	PAS3(A	B)	1937PA	A		
[KC5(-)]	20	-	GXL	V-TERM	PAS3(A	B)	1937PA	C		
[KC5(+)]	20	-	GXL	V-TERM	PAS3(A	B)	1937PA	A		
[KC5(-)]	20	-	GXL	V-TERM	PAS3(A	B)	1937PA	C		
[KC4(+)]	20	-	GXL	V-TERM	PAS2(A	B)	1937PC	A		
[KC4(-)]	20	-	GXL	V-TERM	PAS2(A	B)	1937PC	B		
[KC4(+)]	20	-	GXL	V-TERM	PAS2(A	B)	1937PC	A		
[KC4(-)]	20	-	GXL	V-TERM	PAS2(A	B)	1937PC	B		
GB14SAG	12	LTGN	TXL	N/A	BLUNT_SL_	C 1940	A	N/A		
GF14SAD	12	LTGN	TXL	N/A	BLUNT_SL_	C 1940	A	N/A		
GB14SAG	12	LTGN	TXL	N/A	BLUNT_SL_	C 1940	A	N/A		
GF14SAD	12	LTGN	TXL	N/A	BLUNT_SL_	C 1940	A	N/A		
CE14SBD	12	LTGN	TXL	N/A	BLUNT_SL_	C 1941	A	N/A		
CE14SBD	12	LTGN	TXL	N/A	BLUNT_SL_	C 1941	A	N/A		

A

A01-381:BLUNT_SL_VC . . . 960
A01-382:BLUNT_SL_VC . . . 961
A01-1110M:3928059C1 . . . 913
A01-1114M:3928059C1 . . . 915
A01-1119M:3928059C1 . . . 917
A01-1126M:3928059C1 . . . 919
A01-1200A:3768152C1 . . . 921
A01-1200B:3768153C1 . . . 925
A01-1200C:4057474C1 . . . 928
A01-1200D:4061870C1 . . . 931
A01-1200E:4057658C1 . . . 932
A01-1400:3596926C1 . . . 935
A01-1401:3596929C1 . . . 938
A01-1402:3596928C1 . . . 941
A01-1403:3596927C1 . . . 944
A01-1420:3557922C1 . . . 946
A01-1421:3557921C1 . . . 948
A01-1422:3548978C1 . . . 954
A01-1423:3846885C1 . . . 956
A01-1776:4062806C1 . . . 958
A01-1942:3673259C1 . . . 959
A02-1TB1:3722128C1 . . . 967
A02-1TB2:3722128C1 . . . 968
A02-2TB1:3722128C1 . . . 1055
A02-2TB2:3722128C1 . . . 1056
A02-4TB1:3722128C1 . . . 1061
A02-0009:4063156C1 . . . 962
A02-1000A:4063415C1 . . . 969
A02-1020:4063041C1 . . . 970
A02-1021:3613769C1 . . . 971
A02-1028:3613769C1 . . . 974
A02-1030:3700745C1 . . . 976
A02-1040:3601838C1 . . . 978
A02-1050:1661259C1 . . . 981
A02-1051:1661259C1 . . . 982
A02-1052:1661259C1 . . . 983
A02-1053:4116776C1 . . . 984
A02-1100:3546518C1 . . . 986
A02-1101M:3522071C1 . . . 988
A02-1111M:3928059C1 . . . 989
A02-1112:1661260C1 . . . 993
A02-1112M:3928059C1 . . . 991
A02-1113:1661260C1 . . . 996
A02-1113M:3928059C1 . . . 994
A02-1116M:3928059C1 . . . 997
A02-1117M:3928059C1 . . . 999
A02-1127R:1667741C1 . . . 1002
A02-1200F:4116508C1 . . . 1003
A02-1202:3767197C1 . . . 1004
A02-1300:3597143C1 . . . 1005
A02-1301-MIC:3600061C1 . . . 1010
A02-1410:3601838C1 . . . 1012
A02-1500A:3710061C1 . . . 1016
A02-1620:2007315C1 . . . 1019
A02-1650:3757649C1 . . . 1022
A02-1650MA:3544066C1 . . . 1021
A02-1901:3590298C1 . . . 1025
A02-1901A:3590298C1 . . . 1023
A02-1903:3590298C1 . . . 1027
A02-1903:3590298C1 . . . 1031
A02-1904:3768147C1 . . . 1032
A02-1905:3768147C1 . . . 1035
A02-1905A:3768147C1 . . . 1034
A02-1916:2005836C1 . . . 1036
A02-1917:1661197C1 . . . 1038

A02-1918:1661199C1 . . . 1041
A02-1918A:1661199C1 . . . 1039
A02-1918B:1661199C1 . . . 1040
A02-1919:2005836C1 . . . 1044
A02-1919A:2005836C1 . . . 1042
A02-1921:587565C91 . . . 1046
A02-1924:1661260C1 . . . 1047
A02-1925:587567C91 . . . 1048
A02-1926:3544677C1 . . . 1049
A02-1930:3572899C1 . . . 1050
A02-1931A:4110679C1 . . . 1051
A02-1934M:3554818C1 . . . 1052
A02-1940:BLUNT_SL_VC . . . 1053
A02-1941:BLUNT_SL_VC . . . 1054
A02-2223:1669972C1 . . . 1057
A02-2224:3833917C1 . . . 1058
A02-2225:3834322C1 . . . 1059
A02-4500:1661375C2 . . . 1062
A02-5759F:587567C91 . . . 1064
A02-6202:3590299C1 . . . 1065
A02-8051:1661778C1 . . . 1066
ABS Private J1939 Design . . . 9

B

B01-1802:3608496C1 . . . 1067
B01-1803:1678137C1 . . . 1069
B01-1804:1678137C1 . . . 1070
B01-1805:1678137C1 . . . 1071
B01-1806:1661777C1 . . . 1072
B01-1807:3547870C1 . . . 1073
B01-1808:1661777C1 . . . 1075
B01-1809:1673744C1 . . . 1076
B01-1811:3540757C1 . . . 1078
B01-1812:1661777C1 . . . 1079
B01-1821:3601800C1 . . . 1081
B01-1821A:3889458C1 . . . 1080
B01-1822:1678137C1 . . . 1082
B01-1823:1678137C1 . . . 1083
B01-1824:3919376C1 . . . 1084
B01-1825F:4064551C1 . . . 1085
Battery Feed Design . . . 53
Body J1939 (250Kbps) Splice Pack 1024 Design . . . 16
Body J1939 (250Kbps) Splice Pack 1025 Design . . . 17
Body J1939 (250Kbps) Splice Pack 1029 Design . . . 18
Body J1939 (250Kbps) W/ 3 Splice Packs Design . . . 19

C

Cab J1939 (250Kbps) Design . . . 10
Connector Assembly List LT . . . 2869

D

D1N-166M:1661889C1 . . . 1087
D1N-1979:3831401C1 . . . 1089
D1N-1979A:4061584C1 . . . 1088
D1U-348:1661197C1 . . . 1091
D1U-349F:1661197C1 . . . 1092
D2E-241:1661259C1 . . . 1093
D2E_240:3709924C1 . . . 1094
D25-348F:1661197C1 . . . 1097
D25-349F:1661197C1 . . . 1098
D25-1979:3710061C1 . . . 1095
D48-166M:1661889C1 . . . 1099
D48-346F:1661197C1 . . . 1105
D48-347F:1661197C1 . . . 1106
D48-1979:3831401C1 . . . 1101
D48-1979A:4061584C1 . . . 1100

D48-2310:BLUNT_SL_VC . . . 1103
D48-2311:BLUNT_SL_VC . . . 1104
D51-166M:1661889C1 . . . 1107
D51-348F:1661197C1 . . . 1111
D51-349F:1661197C1 . . . 1112
D51-1979:3710061C1 . . . 1108
D78-745A:872291R1 . . . 1113
D81-2102F:1669972C1 . . . 1116
D82-2102F:1669972C1 . . . 1117
D99-2100M:1661889C1 . . . 1118

E

E05-3000:3538634C1 . . . 1119
E05-3003M:1671610C1 . . . 1121
E05-3100M:3767181C1 . . . 1122
E05-3201M:3709437C1 . . . 1123
E05-3202M:3820176C1 . . . 1124
E05-3203M:3709924C1 . . . 1125
E05-3300M:3535769C1 . . . 1127
E05-3400:1661259C1 . . . 1128
Engine Private J1939 A26 Design . . . 11
Engine Private J1939 X15 Design . . . 12

F

F05-3000:3538634C1 . . . 1129
F05-3003M:1671610C1 . . . 1131
F05-3100M:3767181C1 . . . 1132
F05-3201M:3709437C1 . . . 1133
F05-3202M:3820176C1 . . . 1134
F05-3203M:3709924C1 . . . 1135
F05-3300M:3535769C1 . . . 1137
F05-3400:1661259C1 . . . 1138
Fusion Private J1939 Design . . . 13

H

H01-1305:969541R1 . . . 1139
H01-5001B:4100325C1 . . . 1140
H01-5001B:4100325C1 . . . 1142
H01-5003:3613000C1 . . . 1144
H01-5005:872291R1 . . . 1147
H01-5012:872291R1 . . . 1150
H01-5013:872291R1 . . . 1152
H01-5110:1661196C1 . . . 1154
H01-5111:1661196C1 . . . 1155
H01-5112:239808R1 . . . 1156
H01-5113:239808R1 . . . 1157
H01-5114:239808R1 . . . 1158
H01-5115:239808R1 . . . 1159
H01-5128:1661259C1 . . . 1160
H01-5129:1661259C1 . . . 1161
H01-5130:1669972C1 . . . 1162
H01-5132:4092975C1 . . . 1163
H01-5133:4092975C1 . . . 1164
H01-5200-SPLR_HVAC_PANEL:2029979C1 . . . 1165
H01-5200:2029979C1 . . . 1169
H01-5201:3536187C1 . . . 1171
H01-5202:3599251C1 . . . 1172
H01-5205:3544870C1 . . . 1173
H01-5210:3548957C91 . . . 1177
H01-5212:3522071C1 . . . 1181
H01-5213:3602659C1 . . . 1183
H01-5214:3627940C1 . . . 1184
H01-5218A:3602659C1 . . . 1185
H01-5236:3540613C1 . . . 1186
H01-5237:3598711C1 . . . 1188
H01-5238:3540613C1 . . . 1190
H01-5312:3663001C1 . . . 1194

H01-5313:3663000C1 . . . 1196
H01-5314:1661200C1 . . . 1199
H01-5500:872291R1 . . . 1200
H01-5501:872291R1 . . . 1201
H01-5530:2011340C1 . . . 1202
H01-5704:872291R1 . . . 1203
H01-5706:872291R1 . . . 1204
H01-5756:366817C2 . . . 1205
H01-5759F:587567C91 . . . 1206
H01-5901:587565C91 . . . 1207
H01-5906:2028493C1 . . . 1208
H01-5907:2017533C1 . . . 1209
H01-5909:2005835C1 . . . 1211
H01-5927:2005836C1 . . . 1212
H01-5928A:4125377C1 . . . 1214
H01-5929A:3520850C1 . . . 1215
H02-5124:3520850C1 . . . 1216
H02-5222:3520850C1 . . . 1218
H02-5233:3520850C1 . . . 1220
H02-5235:1667529C1 . . . 1222
H02-5236:3515763C1 . . . 1223
H02-5237:1661200C1 . . . 1225
H03-5100:3522068C1 . . . 1227
H03-5101:3522068C1 . . . 1229
H03-5301:3535769C1 . . . 1231
H03-5302:3535769C1 . . . 1232

I

Interior PDM Chart Design . . . 54

J

J1-1603:3598711C1 . . . 1233
J1-1603:3598711C1 . . . 1244
J1:RING-E-1-2_0 . . . 1245
J2-1604:3598710C1 . . . 1246
J2-1604:3598710C1 . . . 1252
J3-1600:3598706C1 . . . 1254
J3-1600:3598706C1 . . . 1266
J3:RING-E-3-8_0 . . . 1268
J4-1601:3598707C1 . . . 1273
J4-REMOTE SENSE:RING-E-3-8_0 . . . 1270
J4:RING-E-3-8_0 . . . 1282
J5-1602:3598705C1 . . . 1283
J5-1602:3598705C1 . . . 1299
J6-1606:3759005C1 . . . 1300
J6-1606:3759005C1 . . . 1319
J6-1606:3759005C1 . . . 1320
J6-1606:3759005C1 . . . 1321
J6-1606:3759005C1 . . . 1322
J7-1607:3710061C1 . . . 1323

K

K01-1F:1667639C1 . . . 1332
K01-1F:1667639C1 . . . 1334
K01-670A:3573078C1 . . . 1366
K01-1874:3590390C1 . . . 1336
K01-1874C:3590390C1 . . . 1335
K01-6018:3952655C1 . . . 1337
K01-6019:3952656C1 . . . 1346
K01-6033:3917967C1 . . . 1348
K01-6104:6113104C1 . . . 1350
K01-6200:1671610C1 . . . 1351
K01-6201B:3600324C1 . . . 1352
K01-6201P:3600324C1 . . . 1353
K01-6301-DEL:RING-E-1-2_0 . . . 1354
K01-6301-DEL:RING-M-12_0 . . . 1356

K01-6301-MITS:RING-E-1-2_0 . . . 1357
K01-6307/6306-MITS:RING-M-6_0 . . . 1360
K01-6316M-DEL:2036583C1 . . . 1361
K01-6317-DEL:RING-M-5_0 . . . 1362
K01-6400A:3522068C1 . . . 1363
K01-6401:3662425C1 . . . 1364
K01-6564:374377C2 . . . 1365
K01-6702:3551896C1 . . . 1369
K01-6703A:3522068C1 . . . 1371
K01-6703B:3522068C1 . . . 1372
K01-6704B:3551896C1 . . . 1373
K01-7000:365876C2 . . . 1375
K01-7000:365876C2 . . . 1376
K01-7105A:3599542C1 . . . 1377
K01-7106:3765544C1 . . . 1380
K01-7107:3765545C1 . . . 1383
K01-7135:4104389C1 . . . 1385
K01-7150:3605713C1 . . . 1386
K01-7205:3525872C1 . . . 1398
K01-7206:3525874C1 . . . 1400
K01-7207:3525872C1 . . . 1402
K01-7250:3605715C1 . . . 1404
K01-7350:3755755C1 . . . 1407
K01-7500T:1661778C1 . . . 1410
K01-7500W:1661778C1 . . . 1412
K01-7501:3577412C1 . . . 1414
K01-7502:587567C91 . . . 1415
K01-7600:3662425C1 . . . 1417
K01-7600T:3662425C1 . . . 1416
K01-7603M:3610533C1 . . . 1418
K01-7605:3610533C1 . . . 1419
K01-7700K:3536864C1 . . . 1420
K01-7700L:3536864C1 . . . 1421
K01-7700T:3536864C1 . . . 1422
K01-7800:BLUNT_SL_VC . . . 1423
K01-7801:BLUNT_SL_VC . . . 1424
K01-7802:3540051C91 . . . 1426
K01-7802T:3540051C91 . . . 1425
K01-8410:3664985C1 . . . 1427
K01-J1-DEL:RING-E-1-2_0 . . . 1329
K01-J1-DEL:RING-M-12_0 . . . 1330
K01-J1-MITS:RING-E-1-2_0 . . . 1331
K02-670A:3573078C1 . . . 1475
K02-1378:1687789C1 . . . 1433
K02-1874:3590390C1 . . . 1437
K02-1874A:3977821C1 . . . 1435
K02-1874B:3590390C1 . . . 1436
K02-2010:2036584C1 . . . 1438
K02-6000:3945694C1 . . . 1439
K02-6100A/J:RING-M-8_0 . . . 1446
K02-6100B:RING-M-8_0 . . . 1447
K02-6100D:RING-E-5-16_0 . . . 1448
K02-6100E:RING-M-8_0 . . . 1449
K02-6100F:RING-M-8_0 . . . 1450
K02-6100G:RING-E-1-4_0 . . . 1451
K02-6100H:RING-M-8_0 . . . 1452
K02-6101A/J:RING-M-8_0 . . . 1453
K02-6101B:RING-M-6_0 . . . 1454
K02-6101D:RING-E-5-16_0 . . . 1455
K02-6101E:RING-M-8_0 . . . 1456
K02-6101F:RING-M-6_0 . . . 1457
K02-6101G:RING-E-1-4_0 . . . 1458
K02-6101H:RING-M-6_0 . . . 1459
K02-6200:1671610C1 . . . 1460
K02-6201:3600324C1 . . . 1461
K02-6301-DELCO:RING-M-12_0 . . . 1462

K02-6301-MITS:RING-E-1-2_0 1465
K02-6305-DELCO:RING-M-5_0 1468
K02-6305-MITS:RING-M-6_0 1469
K02-6316M-DELCO:2036583C1 1470
K02-6400:3522068C1 1471
K02-6401:1671610C1 1472
K02-6402:3662425C1 1473
K02-6550:1671610C1 1474
K02-6702:3551896C1 1477
K02-6703:3551896C1 1479
K02-7000:365876C2 1481
K02-7105:3599542C1 1483
K02-7106-ISX:3765544C1 1486
K02-7107-ISX:3765545C1 1489
K02-7135:4104389C1 1491
K02-7303:3522068C1 1492
K02-7350:3755755C1 1493
K02-7350:3755755C1 1495
K02-7500W:1661778C1 1497
K02-7500W:1661778C1 1500
K02-7502:587567C91 1501
K02-7600:3662425C1 1502
K02-7700K:3536864C1 1503
K02-7700M:3536864C1 1504
K02-7700T:3536864C1 1505
K02-7800:BLUNT_SL_VC 1506
K02-7801:BLUNT_SL_VC 1507
K02-7802:3540051C91 1508
K02-8500:6114576C1 1509
K02-J1-DELCO:RING-M-12_0 1429
K02-J1-MITS:RING-E-1-2_0 1431
Key Switch Accessory Design 55
Key Switch Ignition Design 56

L

L01-675:3854665C91 1521
L01-676:3854666C91 1522
L01-677:3854645C91 1523
L01-678:3991593C1 1524
L01-680:3993814C1 1525
L01-691:3714731C1 1526
L03-675:3854665C91 1527
L03-676:3854666C91 1528
L03-677:3854645C91 1529
L03-678:3991593C1 1530
L03-680:3993814C1 1531
L03-691:3714731C1 1532
L04-675:3854665C91 1533
L04-676:3854666C91 1534
L04-677:3854645C91 1535
L04-678:3991593C1 1536
L04-680:3993814C1 1537
L04-691:3714731C1 1538
L05-675:3854665C91 1539
L05-676:3854666C91 1540
L05-677:3854645C91 1541
L05-678:3991593C1 1542
L05-680:3993814C1 1543
L05-691:3714731C1 1544
LED 113:1661375C2 1511
LF 5162:3612305C1 1513
LINE:RING-E-3-8_0 1515
LOAD:RING-E-3-8_0 1516
LoneStar - X15 - Adaptive Cruise Control (Bendix - Fusion W/O DIU & N/ Safety Direct & Tweeters) Design 183
LoneStar - X15 - Adaptive Cruise Control (Bendix - Fusion W/O DIU & W/ Safety Direct & Reg Speakers) Option 1 Design 184

LoneStar - X15 - Adaptive Cruise Control (Bendix - Fusion W/O DIU & W/ Safety Direct & Reg Speakers) Option 2 Design 185
LoneStar - X15 - Adaptive Cruise Control (Bendix - Fusion W/O DIU & W/ Safety Direct & W/ Tweeters) Design 186
LoneStar - X15 - Adaptive Cruise Control w/o Display (Bendix) Design 182
LoneStar - X15 - Adaptive Cruise Control w/o Display (Wabco) Design 192
LoneStar - X15 - Antilock Brake System (ABS) - Wabco 4 Channel Implementation Design 320
LoneStar - X15 - Antilock Brake System (ABS) [Bendix 6 Channel Implementation] Design 306
LoneStar - X15 - Antilock Brake System (ABS)-BENDIX 4 Channel Implemenation Design 309
LoneStar - X15 - Antilock Brake System - Wabco ABS 6 Channel Implementation Design 324
LoneStar - X15 - Body Builder Lighting - (BOC EOF In Cab) (8HAB 8HAE 8HAU) (Automatic) Design 273
LoneStar - X15 - Body Builder Lighting - (BOC EOF In Cab) (8HAB 8HAE 8HAU) (Manual) Design 279
LoneStar - X15 - City Horn W/ 4PIN CLK W/O RKA Design 208
LoneStar - X15 - City Horn W/ 4PIN CLK W/RKA Design 209
LoneStar - X15 - City Horn W/ 10PIN CLK W/O RKA Design 206
LoneStar - X15 - City Horn W/ 10PIN CLK W/RKA Design 207
LoneStar - X15 - Cooling Fan Control With Switch Design 370
LoneStar - X15 - Cooling Fan Control Without Switch Design 369
LoneStar - X15 - Crank Inhibit with Hood Switch - with new BCM Pin Design . . 889
LoneStar - X15 - Fuel Heater (Vehicle Powered) (Davco) Design 603
LoneStar - X15 - Headlights Halogen N/INT N/LOWW Design 479
LoneStar - X15 - Headlights Halogen N/INT W/LOWW Design 480
LoneStar - X15 - Headlights Halogen W/INT N/LOWW Design 481
LoneStar - X15 - Headlights Halogen W/INT W/LOWW Design 482
LoneStar - X15 - Hood Switch Design 891
LoneStar - X15 - Lane Departure Warning - (Bendix Fusion W/Safety Direct))(US & Canada) Design 354
LoneStar - X15 - Lane Departure Warning - (Bendix Fusion W/Safety Direct))(US & Canada)- Design 355
LoneStar - X15 - Modesty Lighting W/ Day Cab W/ 2 Turn /0 Marker Design . . 518
LoneStar - X15 - Modesty Lighting W/ Sleeper W/ 4 Side Turns / 0 Marker Design 519
LoneStar - X15 - Tire Pressure (TPMS) (US & Canada) Design 249
LoneStar - X15 - Trailer Interface (ABS) - Center Pin Circuit Design 768
LoneStar - X15 - Windshield Washer Pump & Low Fluid Sensor Design 816
LoneStar - X15 - Windshield Washer Pump Design 815
LoneStar - X15/A26 - Front Fog Lamps Design 476
LoneStar - X15/A26 - Marker Lights (Halogen) Design 511
Low Speed J1939 (125Kbps) Design 14
LS 8053F:1667740C1 1517
LS 8100F:1667740C1 1518
LT - X15/A26 - Headlights Halogen N/INT N/LOWW Design 483
LT - X15/A26 - Headlights Halogen N/INT W/LOWW Design 484
LT - X15/A26 - Headlights Halogen W/INT N/LOWW Design 485
LT - X15/A26 - Headlights Halogen W/INT W/LOWW Design 486
LT - X15/A26 - Headlights LED N/ INT N/LOWW Design 487
LT - X15/A26 - Headlights LED N/ INT W/LOWW Design 488
LT - X15/A26 - Headlights LED W/INT N/LOWW Design 489
LT - X15/A26 - Headlights LED W/INT W/LOWW Design 490
LT 8054F:1667740C1 1519
LT/RH - A26 - Air Flow Restriction Monitoring A26 Design 663
LT/RH - A26 - Auto Neutral (Allison with Multiplex Switch and Confirmation Telltale) Design 802
LT/RH - A26 - Battery International (8) 12V Design 909
LT/RH - A26 - Body Builder Lighting - (BOC EOF In Cab) (8HAB 8HAE 8HAU) (Manual) Design 281
LT/RH - A26 - Bosch LH160_LH200 Alternator Design 832
LT/RH - A26 - Bosch LH160_LH200 Alternator W/ Mitsubishi Starter Design . . 853
LT/RH - A26 - Bosch LIL165_LIL200 Alternator W/ Remote Sense Design 833

LT/RH - A26 - Bosch LIL165_LIL200 Alternator W/ Remote Sense W/ Mitsubishi Starter Design . . . 854
LT/RH - A26 - Cranking (Starter) GEN4 BCM W/ Thermal Overcrank - External Switch Design . . . 878
LT/RH - A26 - Cranking (Starter) GEN4 BCM W/O Thermal Overcrank Wiring Design . . . 876
LT/RH - A26 - DEF Economy Monitor (Cluster) Design . . . 675
LT/RH - A26 - Delco Remy 28SI Alternator W/ Remote Sense Design . . . 834
LT/RH - A26 - Delco Remy 28SI Alternator W/ Remote Sense W/ Mitsubishi Starter Design . . . 855
LT/RH - A26 - Delco Remy 36SI Alternator W/ Remote Sense Design . . . 835
LT/RH - A26 - Delco Remy 36SI Alternator W/ Remote Sense W/ Mitsubishi Starter Design . . . 856
LT/RH - A26 - Delco Remy 40SI Alternator W/ Remote Sense Combination 1 Design . . . 836
LT/RH - A26 - Delco Remy 40SI Alternator W/ Remote Sense Combination 1 W/ Mitsubishi Starter Design . . . 857
LT/RH - A26 - Delco Remy 40SI Alternator W/ Remote Sense Combination 2 Design . . . 837
LT/RH - A26 - Delco Remy 40SI Alternator W/ Remote Sense Combination 2 W/ Mitsubishi Starter Design . . . 858
LT/RH - A26 - Interface Connector Design . . . 384
LT/RH - A26 - Leece-Neville - LN 325A Alternator W/ Remote Sense Design . . . 841
LT/RH - A26 - Leece-Neville - LN 325A Alternator W/ Remote Sense W/ Mitsubishi Starter Design . . . 862
LT/RH - A26 - Leece-Neville 320PAH Alternator Design . . . 840
LT/RH - A26 - Leece-Neville 320PAH Alternator W/ Mitsubishi Starter Design . . . 861
LT/RH - A26 - Leece-Neville AVI160 Alternator N/ Remote Sense Design . . . 838
LT/RH - A26 - Leece-Neville AVI160 Alternator N/ Remote Sense W/ Mitsubishi Starter Design . . . 859
LT/RH - A26 - Leece-Neville AVI160-210A/240A Alternator W/ Remote Sense Design . . . 839
LT/RH - A26 - Leece-Neville AVI160-210A/240A Alternator W/ Remote Sense W/ Mitsubishi Starter Design . . . 860
LT/RH - A26 - Selective Catalytic Reduction (SCR) Design . . . 259
LT/RH - A26 - Starter Interlock (BCM HSD controlled W/ Clutch Switch W/ Auto Start Stop) Design . . . 897
LT/RH - A26 - Starter Interlock (BCM LSD Controlled w/ Relay)_EATON XMSN Design . . . 899
LT/RH - A26 - Starter Interlocks (Service Brake Interlock) Design . . . 896
LT/RH - A26 - Starter Interlocks A26 3K Design . . . 895
LT/RH - A26 - Starter Interlocks A26 TC10 Design . . . 894
LT/RH - A26 - Transmission Oil Temperature-Manual Trans-Horizon Option 1 Design . . . 690
LT/RH - A26 - Transmission Oil Temperature-Manual Trans-Horizon Option 2 Design . . . 693
LT/RH - A26 - Transmission Power Take Off Dual PTO with Clutch Interlock Design . . . 291
LT/RH - A26 - Transmission Power Take Off Dual Solenoid AUTO Design . . . 292
LT/RH - A26 - Transmission Power Take Off Option 1 Design . . . 293
LT/RH - A26 - Transmission Power Take Off Option 2 Design . . . 294
LT/RH - A26 - Transmission Power Take Off W/ Clutch Interlock Design . . . 295
LT/RH - A26 - Transmission Shifter (Eaton Endurant and Eaton Procision) Design . . . 790
LT/RH - A26 - Transmission Shifter (Universal Shifter - Ultrashift+ & FAS) Design . . . 791
LT/RH - A26 - VEHICLE SPEEDOMETER SYSTEM (MANUAL XMSN) Design . . . 704
LT/RH - A26 - Water In Fuel (WIF) DAVCO N/ Heater Design . . . 614
LT/RH - A26 - Water In Fuel (WIF) Davco W/Heater Design . . . 616
LT/RH - A26 - Water In Fuel (WIF) RACOR N/ Heater Design . . . 618
LT/RH - A26 - Work Lights (2 Blunt Cuts Only W/O Relay) W/Backup W/Manual Trans Day Cab Design . . . 578
LT/RH - A26 - Work Lights - LED W/ Sw Pack - Customer Supplied - Sleeper W/ RKE W/MAN REV Design . . . 558

LT/RH - A26 - Work Lights - LED W/ Sw Pack - Customer Supplied - Sleeper W/O RKE W/MAN REV Design . . . 554
LT/RH - A26 - Work Lights -LED W/ Sw Pack - Sleeper W/ RKE W/MAN REV Design . . . 593
LT/RH - A26 - Work Lights -LED W/ Sw Pack - Sleeper W/O RKE W/MAN REV Design . . . 591
LT/RH - A26 - Work Lights LED W/ Sw Pack - Day Cab W/ RKE W/MAN REV Design . . . 576
LT/RH - A26 - Work Lights LED W/ Sw Pack - Day Cab W/O RKE W/MAN REV Design . . . 574
LT/RH - A26 - Work Lights W/ Sw Pack - Customer Supplied W/ RKE W/MAN REV Design . . . 537
LT/RH - A26 - Work Lights W/ Sw Pack - Customer Supplied W/O RKE W/MAN REV Design . . . 533
LT/RH - A26/X15 - Maxwell 12V Ultracapacitor Engine Start Module (ESM) Design . . . 887
LT/RH - X15 - Accelerator Interlock W/ Park Brake Controls Design . . . 363
LT/RH - X15 - Body Builder Lighting - (BOC EOF In Cab) (8HAB 8HAE 8HAU) (Manual) Design . . . 285
LT/RH - X15/A26 - 10 PIN ClockSpring Design . . . 195
LT/RH - X15/A26 - Adaptive Cruise Control (Bendix - Fusion W/O DIU & N/ Safety Direct & Reg Speakers) Design . . . 188
LT/RH - X15/A26 - Adaptive Cruise Control (Bendix - Fusion W/O DIU & N/ Safety Direct & Tweeters) Design . . . 189
LT/RH - X15/A26 - Adaptive Cruise Control (Bendix - Fusion W/O DIU & W/ Safety Direct & Reg Speakers) Design . . . 190
LT/RH - X15/A26 - Adaptive Cruise Control (Bendix - Fusion W/O DIU & W/ Safety Direct & W/ Tweeters) Design . . . 191
LT/RH - X15/A26 - Adaptive Cruise Control w/o Display (Bendix) Design . . . 187
LT/RH - X15/A26 - Adaptive Cruise Control w/o Display (Wabco) Design . . . 193
LT/RH - X15/A26 - Antilock Brake System (ABS) - Wabco 4 Channel Implementation Design . . . 327
LT/RH - X15/A26 - Antilock Brake System (ABS) BENDIX 4 Channel Implemenation Design . . . 313
LT/RH - X15/A26 - Antilock Brake System (ABS) Bendix 6 Channel Implementation Design . . . 317
LT/RH - X15/A26 - Antilock Brake System - Wabco ABS 6 Channel Implementation Design . . . 331
LT/RH - X15/A26 - Battery Disconnect Design . . . 831
LT/RH - X15/A26 - Bendix Stability Control For Tractor or Tractors with Trailer Tow Design . . . 340
LT/RH - X15/A26 - Bendix; Tractor or Towing Truck; W/ Air SUSP; J1939 Driven Lamp Design . . . 342
LT/RH - X15/A26 - Body Builder Lighting - (BOC EOF In Cab) (8HAB 8HAE 8HAU) (Automatic) Design . . . 275
LT/RH - X15/A26 - City Horn W/ 4PIN CLK W/O RKA Design . . . 212
LT/RH - X15/A26 - City Horn W/ 4PIN CLK W/RKA Design . . . 213
LT/RH - X15/A26 - City Horn W/ 10PIN CLK W/O RKA Design . . . 210
LT/RH - X15/A26 - City Horn W/ 10PIN CLK W/RKA Design . . . 211
LT/RH - X15/A26 - Directional Signal (Turn) With HEADLIGHTS (HAL-125) Design . . . 470
LT/RH - X15/A26 - Directional Signal (Turn) With HEADLIGHTS (LED-125) Design . . . 473
LT/RH - X15/A26 - Directional Signal (Turn) With HEADLIGHTS Design . . . 469
LT/RH - X15/A26 - Directional Signal (Turn) With HEADLIGHTS Option2 Design . . . 472
LT/RH - X15/A26 - Engine Block Heater (Purchased Assembly) Design . . . 380
LT/RH - X15/A26 - Engine Fuel and Block Heaters (Purchased Assembly) Design . . . 381
LT/RH - X15/A26 - Engine Oil and Block Heaters (Purchased Assembly) Design . . . 382
LT/RH - X15/A26 - Engine Oil Level Monitoring (CA2.0) Design . . . 679
LT/RH - X15/A26 - Engine Oil, Fuel, and Block Heaters (Purchased Assembly) Design . . . 383
LT/RH - X15/A26 - Fog Lights Lamps Design . . . 477

LT/RH - X15/A26 - Fuel Heater (Vehicle Powered) (Davco) Design 604
LT/RH - X15/A26 - Fuel Heater (Vehicle Powered) (RAVCOR) Design 606
LT/RH - X15/A26 - Hood Switch Design 892
LT/RH - X15/A26 - Intake Manifold Pressure AUX gauge Design 686
LT/RH - X15/A26 - Land Departure Warning - (Bendix - AutoVue W/ Qualcomm Safety Direct) Design 356
LT/RH - X15/A26 - Lane Departure Warning (Mobileye Per-Wire) Design 360
LT/RH - X15/A26 - Lane Departure Warning - (Bendix - AutoVue N/ Qualcomm Safety Direct) Design 359
LT/RH - X15/A26 - Lane Departure Warning - (Bendix Fusion W/Safety Direct))(US & Canada) Design 358
LT/RH - X15/A26 - Lane Departure Warning - (Wabco OnLane 2.0 w/ roof speakers) Design 361
LT/RH - X15/A26 - Lane Departure Warning - (Wabco OnLane) Design 362
LT/RH - X15/A26 - Lane Departure Warning - Bendix Design 357
LT/RH - X15/A26 - License Plate Light (Dual LED Lamp Tail Light) Option 1 Design 499
LT/RH - X15/A26 - License Plate Light (Dual LED Lamp Tail Light) Option 2 Design 501
LT/RH - X15/A26 - License Plate Light (Tail Light Single Assy.) Option 1 Design 505
LT/RH - X15/A26 - License Plate Light (Tail Light Single Assy.)Option 2 Design 503
LT/RH - X15/A26 - Marker Lights (With 113 Halogen) Design 512
LT/RH - X15/A26 - Marker Lights (With 125 Halogen) Design 513
LT/RH - X15/A26 - Marker Lights (With 125 LED) Design 515
LT/RH - X15/A26 - Marker Lights (With113 LED) Design 514
LT/RH - X15/A26 - Mirrors (Heat) [Switch Pack Actuated Relay Driven] Design 199
LT/RH - X15/A26 - Modesty Lighting W/ Day Cab W/ 2 Turn /0 Marker Design . 520
LT/RH - X15/A26 - Modesty Lighting W/ Sleeper W/ 4 Side Turns / 0 Marker Design 521
LT/RH - X15/A26 - Park Brake Control (Monitoring) (W/Vehicle Speed) Design 334
LT/RH - X15/A26 - Park Brake Control (Monitoring)(GEN IV BCM) Design 335
LT/RH - X15/A26 - Radio N/ Sterring Wheel Pod N/ Remote Design 77
LT/RH - X15/A26 - Radio W/Steering Wheel Pod N/ Remote Design 78
LT/RH - X15/A26 - Skirt Light Customer Supplied Design 522
LT/RH - X15/A26 - Tire Pressure (TPMS) (US & Canada) Design 250
LT/RH - X15/A26 - Trailer Interface (ABS) - Center Pin Circuit Design 772
LT/RH - X15/A26 - Wabco Full Stability Control Design 344
LT/RH - X15/A26 - Windshield Washer Pump & Low Fluid Sensor Design 818
LT/RH - X15/A26 - Windshield Washer Pump Design 817
LT/RH - X15/A26 - Windshield Wipers Cruise Disable & Park Brake W/Wipers ON Design 820
LT/RH - X15/A26 - Windshield Wipers Cruise Disable W/Wipers ON Design . . 819
LT/RH - X15/A26 - with Hood Switch - with new BCM Pin Design 893
LT/RH - X15/A26 - Work Lights W/ Sw Pack - Customer Supplied Design 542
LT/RH A26 - A26 - Heating Ventilation & Air Conditioning (HVAC) Manual Design 624
LT/RH A26 - Ambient Air Temperature Option 1 Design 666
LT/RH A26 - Ambient Air Temperature Option 2 Design 667
LT/RH A26 - Auto Start Stop and Sleeper Auto Climate / Cab Temp / Oil Mapping Manual Trans Design 825
LT/RH A26 - Auto Start Stop Battery & Oil Temp Mapping Auto Trans Design . 823
LT/RH A26 - Auto Start Stop Battery & Oil Temp Mapping Manual Trans Design 826
LT/RH A26 - Auto Start Stop with Sleeper Auto Climate / Cab Temp / Oil Mapping Auto Trans Design 824
LT/RH A26 - Back-Up Alarm (Manual) (W/ Tail Light Bar Assy) Design 110
LT/RH A26 - Back-Up Alarm (Manual) and UltraShift+ Design 102
LT/RH A26 - Backup Light (Dual Reverse Light) Allison-3K Design 402
LT/RH A26 - Backup Light (Dual Reverse Light) Allison-TC10 Design 394
LT/RH A26 - Backup Light (Dual Reverse Light) Design 432
LT/RH A26 - Backup Light (Reverse Light) Allison TC10 Design 396
LT/RH A26 - Backup Light (Reverse Light) Allison-3K Design 404
LT/RH A26 - Backup Light (Single Reverse Light) Allison 3K Design 406
LT/RH A26 - Backup Light (Single Reverse Light) Allison TC10 Design 398

LT/RH A26 - Backup Light (Single Reverse Light) Design 434
LT/RH A26 - Backup Light (Single Reverse Light) Endurant Design 436
LT/RH A26 - Backup Light (Single Reverse Light) W/Allison 3K Design 408
LT/RH A26 - Backup Light (Single Reverse Light) W/Allison TC10 Design 400
LT/RH A26 - Backup Light Endurant Trans Design 430
LT/RH A26 - Backup Lights (Dual Reverse Light) Eaton/Manual Trans Design . 410
LT/RH A26 - Backup Lights (Reverse Light) Eaton/Manual Trans Design 418
LT/RH A26 - Backup Lights (Reverse Lights) Eaton/Manual Trans Design 414
LT/RH A26 - Backup Lights (Single Reverse Light) Eaton/Manual Trans Design 422
LT/RH A26 - Backup Lights (Single Reverse Light) Eaton/Manual Trans/ Design 426
LT/RH A26 - Battery International (3) 12V Design 905
LT/RH A26 - Battery International (4) 12V Design 907
LT/RH A26 - Body Builder - Powertrain_MX1 Design 287
LT/RH A26 - Coolant Level Monitoring Design 364
LT/RH A26 - Cooling Fan Control With Switch Design 368
LT/RH A26 - Cooling Fan Control Without Switch Design 367
LT/RH A26 - ECM Design 29
LT/RH A26 - Endurant Transmission Design 794
LT/RH A26 - Heating Ventilation & Air Conditioning (HVAC) Auto Temp Control Design 628
LT/RH A26 - IP Underhood PDM Design 65
LT/RH A26 - Powertrain Aftertreatment PDM Design 51
LT/RH A26 - Powertrain Ground Splice Packs - 6704 Design 46
LT/RH A26 - Starting Aid (Flame Start) Design 385
LT/RH A26 - TC10 Series Design 804
LT/RH A26 - Transmission (Allison 3K/4K) Design 801
LT/RH A26 - Transmission (TC10 Series A65 w/Body Builder) Design 289
LT/RH A26 - Transmission (Ultrashift+ w/Body Builder) Design 806
LT/RH A26 - Transmission I/O (Allison 3K with Body Builder) Design 798
LT/RH A26 - Transmission I/O (Endurant Pressure Sensor) Design 813
LT/RH A26 - Ultrashift Plus Design 796
LT/RH A26 - X15/A26 - Up Shift Indicator (CA 2.0) Design 714
LT/RH A26 - ZVR Splice Packs - 6702 & 6704B Design 47
LT/RH LoneStar - X15/A26 - Fan - Sleeper/Bunk Design 214
LT/RH LoneStar - X15/A26 - Speakers:Four Speakers N/BT N/QC Design 83
LT/RH LoneStar - X15/A26 - Speakers:Four Speakers N/BT W/QC Design 85
LT/RH LoneStar - X15/A26 - Speakers:Four Speakers W/BT N/QC Design 88
LT/RH LoneStar - X15/A26 - Speakers:Four Speakers W/BT W/QC Design 90
LT/RH LoneStar - X15/A26 - Speakers:Speakers N/BT W/AMP N/QC Design . . 87
LT/RH LoneStar - X15/A26 - Speakers:Speakers W/BT W/AMP N/QC Design . . 92
LT/RH X15 - Backup Light (Dual Reverse Light) Allison-TC10 Design 438
LT/RH X15 - Backup Light (Dual Reverse LT) Procosion/Endurant Design 456
LT/RH X15 - Backup Light (Reverse Light) Allison TC10 Design 440
LT/RH X15 - Backup Light (Single Reverse Light) Allison TC10 Design 442
LT/RH X15 - Backup Light (Single Reverse Light) Endurant Design 458
LT/RH X15 - Backup Lights (Dual Reverse Light) Eaton/Manual Trans Design . 446
LT/RH X15 - Backup Lights (Reverse Light) Eaton/Manual Trans Design 450
LT/RH X15 - Backup Lights (Reverse Lights) Eaton/Manual Trans Design 448
LT/RH X15 - Backup Lights (Single Reverse Light) Eaton/Manual Trans Design 452
LT/RH X15 - Coolant Level Monitoring Design 365
LT/RH X15 - Cooling Fan Control With Switch Design 372
LT/RH X15 - Cooling Fan Control Without Switch Design 371
LT/RH/LoneStar - A26 - Vehicle Acceleration (w/ Two PWR Two GND & Two STS) Design 387
LT/RH/LoneStar - Vehicle Accessory Connector - 0008XMB Design 254
LT/RH/LoneStar - X15 - Air Flow Restriction Monitoring Design 665
LT/RH/LoneStar - X15 - Bosch LH160_LH200 Alternator W/ Mitsubishi Starter Design 863
LT/RH/LoneStar - X15 - Bosch LIL165_LIL200 Alternator W/ Remote Sense W/ Mitsubishi Starter Design 864
LT/RH/LoneStar - X15 - Coolant Level Monitoring Design 366
LT/RH/LoneStar - X15 - Cranking (Starter) GEN4 BCM W/ Thermal Overcrank - External Switch Design 879

LT/RH/LoneStar - X15 - Cranking (Starter) GEN4 BCM W/O Thermal Overcrank Wiring Design 877
LT/RH/LoneStar - X15 - DEF Economy Monitor (GEN IV Cluster w/ Cummins ENG) Design 676
LT/RH/LoneStar - X15 - Delco Remy 28SI Alternator W/ Remote Sense W/ Mitsubishi Starter Design 865
LT/RH/LoneStar - X15 - Delco Remy 36SI Alternator W/ Remote Sense W/ Mitsubishi Starter Design 867
LT/RH/LoneStar - X15 - Delco Remy 40SI Alternator W/ Remote Sense W/ Mitsubishi Starter Design 868
LT/RH/LoneStar - X15 - Leece-Neville - LN 325A Alternator W/ Remote Sense W/ Mitsubishi Starter Design 873
LT/RH/LoneStar - X15 - Leece-Neville 320PAH Alternator W/ Mitsubishi Starter Design 872
LT/RH/LoneStar - X15 - Leece-Neville AVI160 Alternator W/ Mitsubishi Starter Design 870
LT/RH/LoneStar - X15 - Leece-Neville AVI160-210A/240A Alternator W/ Remote Sense W/ Mitsubishi Starter Design 871
LT/RH/LoneStar - X15 - Selective Catalytic Reduction (SCR) Design 265
LT/RH/LoneStar - X15 - Starter Interlock (BCM HSD controlled W/ Clutch Switch W/ Auto Start Stop) Design 902
LT/RH/LoneStar - X15 - Starter Interlock (BCM LSD Controlled w/ Relay)_EATON XMSN Design 903
LT/RH/LoneStar - X15 - Starter Interlocks (Service Brake Interlock) Design . . . 901
LT/RH/LoneStar - X15 - Starter Interlocks ISX TC10 Design 900
LT/RH/LoneStar - X15 - Starting Aid (Ether Start) Design 386
LT/RH/LoneStar - X15 - Transmission Oil Temperature-Manual Trans-Horizon Option 1 Design 696
LT/RH/LoneStar - X15 - Transmission Oil Temperature-Manual Trans-Horizon Option 2 Design 699
LT/RH/LoneStar - X15 - Transmission Power Take Off Design 296
LT/RH/LoneStar - X15 - Transmission Power Take Off Dual PTO with Clutch Interlock MANUAL Design 297
LT/RH/LoneStar - X15 - Transmission Power Take Off Dual Solenoid AUTO Design 298
LT/RH/LoneStar - X15 - Transmission Power Take Off W/ Clutch Interlock Design 299
LT/RH/LoneStar - X15 - Transmission Shifter (Eaton Endurant and Eaton Procision) Design 792
LT/RH/LoneStar - X15 - Transmission Shifter (Universal Shifter - Ultrashift+ & FAS) Design 793
LT/RH/LoneStar - X15 - Transmission SINGLE Power Take Off MANUAL Design 300
LT/RH/LoneStar - X15 - Vehicle Acceleration (w/ Two PWR Two GND & Two STS) Design 388
LT/RH/LoneStar - X15 - Vehicle Speedometer System (Manual XMSN) ISX Design 706
LT/RH/LoneStar - X15 - Water In Fuel (WIF) DAVCO N/ Heater Design 619
LT/RH/LoneStar - X15 - Water In Fuel (WIF) DAVCO W/ Heater Design 621
LT/RH/LoneStar - X15 - Water In Fuel (WIF) RACOR N/ Heater Design 623
LT/RH/LoneStar - X15 - Work Lights (2 Blunt Cuts Only W/O Relay) W/Backup W/Manual Trans Design 582
LT/RH/LoneStar - X15 - Work Lights - LED W/ Sw Pack - Customer Supplied - Sleeper W/ RKE W/MAN REV Design 564
LT/RH/LoneStar - X15 - Work Lights - LED W/ Sw Pack - Customer Supplied - Sleeper W/O RKE W/MAN REV Design 562
LT/RH/LoneStar - X15 - Work Lights -LED W/ Sw Pack - Sleeper W/ RKE W/MAN REV Design 596
LT/RH/LoneStar - X15 - Work Lights -LED W/ Sw Pack - Sleeper W/O RKE W/MAN REV Design 595
LT/RH/LoneStar - X15 - Work Lights W/ Sw Pack - Customer Supplied W/ RKE W/MAN REV Design 546
LT/RH/LoneStar - X15 - Work Lights W/ Sw Pack - Customer Supplied W/O RKE W/MAN REV Design 544
LT/RH/LoneStar - X15/A26 - (Rand Mcnallly) GPS Display Design 215

LT/RH/LoneStar - X15/A26 - 2 Driver Controlled Locking Differential - FR & RR Axle (DANA) Design . . . 746
LT/RH/LoneStar - X15/A26 - 2 Driver Controlled Locking Differential - FR & RR Axle (MERITOR) Design . . . 751
LT/RH/LoneStar - X15/A26 - 9 Pin Diagnostic Connector (Green) Design . . . 911
LT/RH/LoneStar - X15/A26 - 9 Pin Diagnostic Connector (Green)(Export) Design . . . 912
LT/RH/LoneStar - X15/A26 - Adjustable Engine Speed Control (PTO) 4-pin Clockspring Design . . . 272
LT/RH/LoneStar - X15/A26 - Adjustable Engine Speed Control (PTO) 10-PIN ClockSpring Design . . . 271
LT/RH/LoneStar - X15/A26 - Air Shield Lighting w/ One Light Design . . . 390
LT/RH/LoneStar - X15/A26 - Analytic Cruise Control Design . . . 194
LT/RH/LoneStar - X15/A26 - Antenna (Film Antenna Sleeper Cab OTAPM and Radio) Design . . . 224
LT/RH/LoneStar - X15/A26 - Antenna (Shark Fin Day Cab OTAPM and Radio) Design . . . 225
LT/RH/LoneStar - X15/A26 - Auto Neutral (J1939 Comms TC10 and Ultrashift) Design . . . 803
LT/RH/LoneStar - X15/A26 - Automatic Lighting (Dual Sensor Solar/Twilight) Design . . . 392
LT/RH/LoneStar - X15/A26 - Automatic Lighting (Single Sensor Twilight) Design . . . 393
LT/RH/LoneStar - X15/A26 - Auxilary Gauges (Secondary) Design . . . 670
LT/RH/LoneStar - X15/A26 - Auxiliary Air Solenoids 4-pack (1 pack/4 solenoids) Design . . . 67
LT/RH/LoneStar - X15/A26 - Auxiliary Air Solenoids 4-pack (2 packs/8 solenoids) Design . . . 72
LT/RH/LoneStar - X15/A26 - Auxiliary Gauges (Primary) Design . . . 671
LT/RH/LoneStar - X15/A26 - Auxiliary Trailer Power CAV D Design . . . 763
LT/RH/LoneStar - X15/A26 - Auxiliary Trailer Power W/ ISO Trailer Socket Design . . . 765
LT/RH/LoneStar - X15/A26 - Axle Loading (Weight) Rear Design . . . 736
LT/RH/LoneStar - X15/A26 - Back-Up Alarm (Automatic) (W/ Tail Light Bar Assy) Design . . . 100
LT/RH/LoneStar - X15/A26 - Back-Up Alarm (Automatic) TC10 Design . . . 96
LT/RH/LoneStar - X15/A26 - Banana Plugs Receptacle Design . . . 120
LT/RH/LoneStar - X15/A26 - BCM (Body Control Module) Design . . . 1
LT/RH/LoneStar - X15/A26 - Beacon/Strobe Light Design . . . 464
LT/RH/LoneStar - X15/A26 - Body Builder Lighting - (Blunt Cut) Design . . . 277
LT/RH/LoneStar - X15/A26 - Brake Pressure (Auxiliary Gauge) Design . . . 672
LT/RH/LoneStar - X15/A26 - Brake Pressure (Virtual Gauge) Design . . . 673
LT/RH/LoneStar - X15/A26 - Brake Switch Design . . . 466
LT/RH/LoneStar - X15/A26 - Cab Dome Light (Day Cab) Design . . . 720
LT/RH/LoneStar - X15/A26 - Cab Dome Light - (Sleeper Cab) Design . . . 721
LT/RH/LoneStar - X15/A26 - Cab Ground Studs Design . . . 36
LT/RH/LoneStar - X15/A26 - Cabinet Refrigerator N/Relay Design . . . 218
LT/RH/LoneStar - X15/A26 - Cabinet Refrigerator W/Relay Design . . . 219
LT/RH/LoneStar - X15/A26 - CB Radio Power Only Design . . . 121
LT/RH/LoneStar - X15/A26 - Center Chassis Ground Splice Packs - 8803 & 8804 Design . . . 42
LT/RH/LoneStar - X15/A26 - Center Chassis ZVR Splice Packs - 8802 Design . . . 43
LT/RH/LoneStar - X15/A26 - Cigar Lighter Aux APO Design . . . 123
LT/RH/LoneStar - X15/A26 - Cigar Lighter Aux APO Overhead APO Design . . . 125
LT/RH/LoneStar - X15/A26 - Cigar Lighter Aux APO Rear Std APO Rear APO W/Cover 12V Panel Design . . . 127
LT/RH/LoneStar - X15/A26 - Cigar Lighter Aux APO Rear Std APO Rear APO w/Cover 12V Panel Overhead APO Design . . . 131
LT/RH/LoneStar - X15/A26 - Cigar Lighter Aux APO Rear Std APO Rear APO w/Cover 12V Panel Upr Bnk APO Design . . . 135
LT/RH/LoneStar - X15/A26 - Cigar Lighter Aux APO Rear Std APO Rear APO w/Cover 12V Panel Upr Bnk APO Rear Overhead APO Design . . . 139
LT/RH/LoneStar - X15/A26 - Cigar Lighter Design . . . 122
LT/RH/LoneStar - X15/A26 - Cigar Lighter Overhead APO Design . . . 143
LT/RH/LoneStar - X15/A26 - Cigar Lighter Rear Std APO APO W/Cover 12V Panel Design . . . 144

LT/RH/LoneStar - X15/A26 - Cigar Lighter Rear Std APO Rear APO W/Cover 12V Panel Overhead APO Design . . . 146
LT/RH/LoneStar - X15/A26 - Cigar Lighter Rear Std APO Rear APO W/Cover 12V Panel Upr Bnk APO Design . . . 148
LT/RH/LoneStar - X15/A26 - Cigar Lighter Rear Std APO Rear APO w/Cover 12V Panel Upr Bnk APO Rear Overhead APO Design . . . 150
LT/RH/LoneStar - X15/A26 - Clearance and Identification Lights (W/ Sunshade) Design . . . 467
LT/RH/LoneStar - X15/A26 - Clutch Monitoring (High and Low Switch to BCM) Design . . . 888
LT/RH/LoneStar - X15/A26 - Collision Avoidance System (Warning) Design . . . 353
LT/RH/LoneStar - X15/A26 - Compressed Air Supply (Primary and Secondary Gauge) Design . . . 674
LT/RH/LoneStar - X15/A26 - Coolant Temperature Monitoring (J1939 Comm) Design . . . 713
LT/RH/LoneStar - X15/A26 - Courtesy Light Cab Design . . . 719
LT/RH/LoneStar - X15/A26 - Cranking Request (BCM Controlled) Design . . . 874
LT/RH/LoneStar - X15/A26 - Daytime Running Lights Design . . . 468
LT/RH/LoneStar - X15/A26 - DC/AC Inverter (1200W W/switch control) Design . . . 881
LT/RH/LoneStar - X15/A26 - DC/AC Inverter (1800W) Design . . . 882
LT/RH/LoneStar - X15/A26 - DC/AC Inverter Design . . . 880
LT/RH/LoneStar - X15/A26 - DLB - Remote Power Module (2 RPM w/ Switch Packs) Design . . . 288
LT/RH/LoneStar - X15/A26 - Door Ajar Reminder (Entry/Exit) Design . . . 197
LT/RH/LoneStar - X15/A26 - DPF Regen Switch Only Design . . . 256
LT/RH/LoneStar - X15/A26 - DPF With Monostable Inhibit Switch Design . . . 257
LT/RH/LoneStar - X15/A26 - DPF With/ Bi-Stable Inhibit Switch Design . . . 258
LT/RH/LoneStar - X15/A26 - Drain Valve Heater Design . . . 305
LT/RH/LoneStar - X15/A26 - Driver Controlled Locking Differential - FR & RR Axle (DANA) Design . . . 745
LT/RH/LoneStar - X15/A26 - Driver Controlled Locking Differential - FR & RR Axle (MERITOR) Design . . . 750
LT/RH/LoneStar - X15/A26 - Driver Controlled Locking Differential - FR (MERITOR) Design . . . 749
LT/RH/LoneStar - X15/A26 - Driver Controlled Locking Differential - RR Axle (DANA) Design . . . 747
LT/RH/LoneStar - X15/A26 - Driver Controlled Locking Differential - RR Axle (MERITOR) Design . . . 752
LT/RH/LoneStar - X15/A26 - Dual Air Dryers Design . . . 301
LT/RH/LoneStar - X15/A26 - Dual Aux Switch Design . . . 93
LT/RH/LoneStar - X15/A26 - EGNR Diagnostic Connector Design . . . 376
LT/RH/LoneStar - X15/A26 - Electrical Load Control(Load Shed) Design . . . 883
LT/RH/LoneStar - X15/A26 - Engine Brake (CA2.0; Mux Switch) Design . . . 373
LT/RH/LoneStar - X15/A26 - Engine Brake (CA2.0; Stalk Shifter) Design . . . 374
LT/RH/LoneStar - X15/A26 - Engine Diagnostic Connector Design . . . 377
LT/RH/LoneStar - X15/A26 - Engine Idle Increment/Decrement (Steering Wheel Switch - 4 Pin) Design . . . 379
LT/RH/LoneStar - X15/A26 - Engine Idle Increment/Decrement (Steering Wheel Switch - 10 Pin) Design . . . 378
LT/RH/LoneStar - X15/A26 - Engine Oil Pressure Design . . . 680
LT/RH/LoneStar - X15/A26 - Engine Oil Temperature (NA MUX_AUX Gauge) Design . . . 681
LT/RH/LoneStar - X15/A26 - Engine Oil Temperature (NA-Mux) Design . . . 682
LT/RH/LoneStar - X15/A26 - Engine Speed (Tachometer_J1939) Design . . . 683
LT/RH/LoneStar - X15/A26 - Engine Speed Inhibit Only Design . . . 875
LT/RH/LoneStar - X15/A26 - Engine Usage Monitoring (Base) Design . . . 677
LT/RH/LoneStar - X15/A26 - Engine Usage Monitoring (VID Option) Design . . . 678
LT/RH/LoneStar - X15/A26 - Engine Warning (DM1 LAMPS - MUX) Design . . . 711
LT/RH/LoneStar - X15/A26 - Engine/Exhaust Brake Design . . . 375
LT/RH/LoneStar - X15/A26 - Exterior Lamp Check Design . . . 474
LT/RH/LoneStar - X15/A26 - Exterior Lamp Reminder Design . . . 475
LT/RH/LoneStar - X15/A26 - Fifth Wheel Slide Design . . . 599
LT/RH/LoneStar - X15/A26 - Floor/Search Lights DayCab Design . . . 723
LT/RH/LoneStar - X15/A26 - Floor/Search Lights Sleeper (1 Light) Design . . . 725
LT/RH/LoneStar - X15/A26 - Floor/Search Lights Sleeper Design . . . 724

LT/RH/LoneStar - X15/A26 - Forward Chassis Ground Splice Packs - 8800 Design 44
LT/RH/LoneStar - X15/A26 - Front Turn Signal & Back-Up Light Splice Packs - 1030 & 1040 Design 60
LT/RH/LoneStar - X15/A26 - Fuel Economy Monitor Design 684
LT/RH/LoneStar - X15/A26 - Fuel Heater (120VAC) Design 607
LT/RH/LoneStar - X15/A26 - Fuel Level (Single Tank - Left Side) Design 608
LT/RH/LoneStar - X15/A26 - Ground Splice Pack 1620 Design 40
LT/RH/LoneStar - X15/A26 - Ground Splice Packs - 1022 & 1023 Design 37
LT/RH/LoneStar - X15/A26 - Ground Splice Packs - 1027 Design 38
LT/RH/LoneStar - X15/A26 - Ground Splice Packs - 1410 Design 39
LT/RH/LoneStar - X15/A26 - Hazard Warning (CA 2.0) Design 478
LT/RH/LoneStar - X15/A26 - Heated Mirrors (Door Pod Actuated Cab and Hood Mounted) Design 200
LT/RH/LoneStar - X15/A26 - Heated Mirrors (Door Pod Actuated Cab Mounted) Design 201
LT/RH/LoneStar - X15/A26 - Height Control Design 754
LT/RH/LoneStar - X15/A26 - High Exhaust System Temperature (HEST) Monitoring Design 712
LT/RH/LoneStar - X15/A26 - Hill Start Aid (Bendix) Design 808
LT/RH/LoneStar - X15/A26 - Hill Start Aid (Wabco) Design 811
LT/RH/LoneStar - X15/A26 - Instrument Cluster (Premium) Design 32
LT/RH/LoneStar - X15/A26 - Instrument Cluster (Standard) Design 33
LT/RH/LoneStar - X15/A26 - Instrument Cluster - Bulb Check Design 34
LT/RH/LoneStar - X15/A26 - Instrument Cluster - Request and Status Design . . 35
LT/RH/LoneStar - X15/A26 - Intake Manifold Pressure Design 685
LT/RH/LoneStar - X15/A26 - Interior Task Lights (Map Light-Separate map light from cab dome) - Sleeper Cab Design 727
LT/RH/LoneStar - X15/A26 - Interior Task Lights (Map) (Cab Dome / Map Combo) - DayCab Design 726
LT/RH/LoneStar - X15/A26 - Jaw Monitoring Design 600
LT/RH/LoneStar - X15/A26 - Jaw Unlock Control (Standard) Design 602
LT/RH/LoneStar - X15/A26 - Jaw Unlock Control W/ SOLENOIDS W/SWITCH PACKS Design 601
LT/RH/LoneStar - X15/A26 - JUMP START STUD (DUAL) Design 884
LT/RH/LoneStar - X15/A26 - JUMP START STUD (SINGLE) Design 885
LT/RH/LoneStar - X15/A26 - Key Switch (Operator Input) Design 886
LT/RH/LoneStar - X15/A26 - Left Side Air Dryer-Bendix Design 303
LT/RH/LoneStar - X15/A26 - License Plate Light (Tail Light Single Assy.) Option 1 Design 507
LT/RH/LoneStar - X15/A26 - License Plate Light (Tail Light Single Assy.) Option 2 Design 509
LT/RH/LoneStar - X15/A26 - Lighting - Cabinet Lights Design 718
LT/RH/LoneStar - X15/A26 - Lighting Control Module Design 50
LT/RH/LoneStar - X15/A26 - Lighting Sleeper Dome Design 722
LT/RH/LoneStar - X15/A26 - Luggage Compartment Lights - W/ No Idle HVAC Design 729
LT/RH/LoneStar - X15/A26 - Luggage Compartment Lights - W/O No Idle HVAC Design 728
LT/RH/LoneStar - X15/A26 - MARKER/PARK LIGHTS - W/Marker Interrupt 10pin CLCKSPRING Design 516
LT/RH/LoneStar - X15/A26 - Marker/Park Lights Splice Pack - 1028 Design 61
LT/RH/LoneStar - X15/A26 - Mirror Lighting (Turns with Door Pods) Design . . . 204
LT/RH/LoneStar - X15/A26 - Mirror Lighting (Turns without Door Pods) Design 203
LT/RH/LoneStar - X15/A26 - Mirrors (Power) [Door Pod Actuated] Design 202
LT/RH/LoneStar - X15/A26 - Mobile Communications Sensor Wiring Effects for Trailer TRAC Design 766
LT/RH/LoneStar - X15/A26 - Multiplexed Switch Pack (Primary Switch) Design 216
LT/RH/LoneStar - X15/A26 - Navistar Telematics Module - Programming Design 226
LT/RH/LoneStar - X15/A26 - Navistar Telematics Module - Wiring Design 227
LT/RH/LoneStar - X15/A26 - No Idle HVAC - TRI-PAC Prewire Design 658
LT/RH/LoneStar - X15/A26 - Odometer (Cluster) Design 687
LT/RH/LoneStar - X15/A26 - Panel Backlighting (Cabin Dimmer) Option 1 Design 730

LT/RH/LoneStar - X15/A26 - Panel Backlighting (Cabin Dimmer) Option 2 Design 731
LT/RH/LoneStar - X15/A26 - Panel Dimmer Splice Pack - 1021 Design 62
LT/RH/LoneStar - X15/A26 - Park Brake Controls (Non Lever Park Brake) Design 336
LT/RH/LoneStar - X15/A26 - Park Brake Controls (with Alarm IGN ON/OFF) Design 337
LT/RH/LoneStar - X15/A26 - Park Brake Reminder (Non-Stationary) (CA2.0) Design 338
LT/RH/LoneStar - X15/A26 - Park Brake Reminder (Stationary) (CA2.0) Design 339
LT/RH/LoneStar - X15/A26 - PARK LIGHTS - W/Marker Interrupt 4 pin clockspring Design 517
LT/RH/LoneStar - X15/A26 - Power Divider Lock Control and Monitoring Design 755
LT/RH/LoneStar - X15/A26 - Power Door Locks Design 198
LT/RH/LoneStar - X15/A26 - Power Windows Design 205
LT/RH/LoneStar - X15/A26 - Radio (Bluetooth) W/Steering Wheel Pod N/ Remote W/MIC Design 81
LT/RH/LoneStar - X15/A26 - Radio N/ Steering Wheel Pod W/Remote Design . . 79
LT/RH/LoneStar - X15/A26 - Radio W/Steering Wheel Pod W/Remote Design . . 80
LT/RH/LoneStar - X15/A26 - Radio(Bluetooth) W/Steering Wheel W/Remote W/MIC Design 82
LT/RH/LoneStar - X15/A26 - Reading Lighting - W/Lower Design 732
LT/RH/LoneStar - X15/A26 - Reading Lighting - W/Upper& Lower Design 733
LT/RH/LoneStar - X15/A26 - Real Time Clock (RTC) (Standard) Design 217
LT/RH/LoneStar - X15/A26 - Rear AUTO HVAC (No Idle) W/ Pre-Heat (Bergstrom Heat and Cool w/ Condensation) 2 SWITCHES Design 639
LT/RH/LoneStar - X15/A26 - Rear HVAC (No Idle Heater) (Espar) Option 1 Design 653
LT/RH/LoneStar - X15/A26 - Rear HVAC (No Idle Heater) (Espar) Option 2 Design 654
LT/RH/LoneStar - X15/A26 - Rear HVAC (No Idle Heater) (Webasto Smartemp) Design 655
LT/RH/LoneStar - X15/A26 - Rear HVAC (No Idle Heater) (Webasto Std N/Swift) N/ Heat Swtich Design 656
LT/RH/LoneStar - X15/A26 - Rear HVAC (No Idle Heater) (Webasto Std W/Swift) N/ Heat Switch Design 657
LT/RH/LoneStar - X15/A26 - Rear HVAC (No Idle) W/ Pre-Heat (Bergstrom Heat and Cool w/ Condensation) 2 SWITCHES Option 1 Design 642
LT/RH/LoneStar - X15/A26 - Rear HVAC (No Idle) W/ Pre-Heat (Bergstrom Heat and Cool w/ Condensation) 2 SWITCHES Option 2 Design 644
LT/RH/LoneStar - X15/A26 - Rear HVAC (No Idle) W/ Pre-Heat (Bergstrom Heat and Cool w/ Condensation) 4 SWITCHES Option 1 Design 646
LT/RH/LoneStar - X15/A26 - Rear HVAC (No Idle) W/ Pre-Heat (Bergstrom Heat and Cool w/ Condensation) 4 SWITCHES Option 2 Design 648
LT/RH/LoneStar - X15/A26 - Rear HVAC (Sleeper W/ Deluxe) Design 659
LT/RH/LoneStar - X15/A26 - Rear HVAC (Sleeper W/ Premium) Design 661
LT/RH/LoneStar - X15/A26 - Rear Interior Dimming (Accent Light) Design 734
LT/RH/LoneStar - X15/A26 - Rear Interior Dimming (Accent/Mood) Design 735
LT/RH/LoneStar - X15/A26 - Rear Lights Stop - Dual Assembly Design 523
LT/RH/LoneStar - X15/A26 - Rear Lights Stop - Single Assembly Option 1 Design 525
LT/RH/LoneStar - X15/A26 - Rear Lights Stop - Single Assembly Option 2 Design 527
LT/RH/LoneStar - X15/A26 - Rear Manual HVAC (No Idle) W/ Pre-Heat (Bergstrom Heat and Cool w/ Condensation) 2 SWITCHES Design 650
LT/RH/LoneStar - X15/A26 - Remote Keyless Access Design 221
LT/RH/LoneStar - X15/A26 - Seatbelt Reminder (Warning)(Driver & Passenger in parallel) Design 762
LT/RH/LoneStar - X15/A26 - Seatbelt Reminder (Warning)(Driver only) Design 761
LT/RH/LoneStar - X15/A26 - Seats (RollTek) Driver and Passenger (Hard Wired) Design 757
LT/RH/LoneStar - X15/A26 - Seats (RolTek) Drivers Seat Only (Hard Wired) - Leather Design 758

LT/RH/LoneStar - X15/A26 - Seats (RolTek) Drivers Seat Only (Hard Wired) - Mordura Design . . . 759
LT/RH/LoneStar - X15/A26 - Seats (RolTek) Drivers Seat Only (Hard Wired) - Vinyl Design . . . 760
LT/RH/LoneStar - X15/A26 - Seats Climate Controlled (Drivers Heated Seat) Design . . . 756
LT/RH/LoneStar - X15/A26 - Single Aux Switch Design . . . 94
LT/RH/LoneStar - X15/A26 - Single Axle Temperature Monitoring Design . . . 738
LT/RH/LoneStar - X15/A26 - Single Axle Temperature Monitoring w/Aux Gauge Design . . . 739
LT/RH/LoneStar - X15/A26 - Single USB Design . . . 251
LT/RH/LoneStar - X15/A26 - Sleeper Ground Splice Packs - 5007 Design . . . 41
LT/RH/LoneStar - X15/A26 - Sleeper PDM Design . . . 63
LT/RH/LoneStar - X15/A26 - Special Power Distribution Design . . . 64
LT/RH/LoneStar - X15/A26 - Standard APO Aux APO Design . . . 153
LT/RH/LoneStar - X15/A26 - Standard APO Aux APO Overhead APO Design . . . 155
LT/RH/LoneStar - X15/A26 - Standard APO Design . . . 152
LT/RH/LoneStar - X15/A26 - Standard APO Overhead APO Design . . . 157
LT/RH/LoneStar - X15/A26 - Starter Interlock (BCM HSD controlled W/ Clutch Switch N/ Auto Start Stop) Design . . . 904
LT/RH/LoneStar - X15/A26 - Std APO Aux APO Rear Std APO Rear APO W/Cover 12V Panel Design . . . 158
LT/RH/LoneStar - X15/A26 - Std APO Aux APO Rear Std APO Rear APO W/Cover 12V Panel Overhead APO Design . . . 162
LT/RH/LoneStar - X15/A26 - Std APO Aux APO Rear Std APO Rear APO W/Cover 12V Panel Upr Bnk APO Design . . . 166
LT/RH/LoneStar - X15/A26 - Std APO Aux APO Rear Std APO Rear APO w/Cover 12V Panel Upr Bnk APO Rear Overhead APO Design . . . 170
LT/RH/LoneStar - X15/A26 - Std APO Rear Std APO Rear APO W/Cover 12V Panel Design . . . 174
LT/RH/LoneStar - X15/A26 - Std APO Rear Std APO Rear APO W/Cover 12V Panel Rear Overhead APO Design . . . 176
LT/RH/LoneStar - X15/A26 - Std APO Rear Std APO Rear APO W/Cover 12V Panel Upr Bnk APO Design . . . 178
LT/RH/LoneStar - X15/A26 - Std APO Rear Std APO Rear APO w/Cover 12V Panel Upr Bnk APO Rear Overhead APO Design . . . 180
LT/RH/LoneStar - X15/A26 - Tandem Axle Temperature Monitoring Design . . . 740
LT/RH/LoneStar - X15/A26 - Tandem Axle Temperature Monitoring w/ Single SNSR and AUX Gauge Design . . . 744
LT/RH/LoneStar - X15/A26 - Tandem Axle Temperature Monitoring w/Aux Gauge Design . . . 742
LT/RH/LoneStar - X15/A26 - Telematics (DRIVERTECH DAYCAB W/ J1939) Design . . . 222
LT/RH/LoneStar - X15/A26 - Telematics (DRIVERTECH SLEEPER W/ J1939) Design . . . 223
LT/RH/LoneStar - X15/A26 - Telematics (OMNIVISION MD) Design . . . 228
LT/RH/LoneStar - X15/A26 - Telematics (OMNIVISION W/ J1939 & PANIC BUTTON) Design . . . 230
LT/RH/LoneStar - X15/A26 - Telematics (PEOPLE NET DAYCAB) Design . . . 233
LT/RH/LoneStar - X15/A26 - Telematics (PEOPLE NET SLEEPER) Design . . . 234
LT/RH/LoneStar - X15/A26 - Telematics (QUALCOMM MCP50) Design . . . 243
LT/RH/LoneStar - X15/A26 - Telematics (QUALCOMM MCT w/ TRACS) Design . . . 245
LT/RH/LoneStar - X15/A26 - Telematics (QUALCOMM MCT w/o Tracs) Design . . . 244
LT/RH/LoneStar - X15/A26 - Telematics (TRIPMASTER DAYCAB) Design . . . 246
LT/RH/LoneStar - X15/A26 - Telematics (TRIPMASTER SLEEPER) Design . . . 247
LT/RH/LoneStar - X15/A26 - Telematics QUALCOMM IMCT DAYCAB With MVPC & PANIC BUTTON Design . . . 236
LT/RH/LoneStar - X15/A26 - Telematics QUALCOMM IMCT DAYCAB With MVPC Design . . . 235
LT/RH/LoneStar - X15/A26 - Telematics QUALCOMM IMCT DAYCAB With PANIC BUTTON Design . . . 237
LT/RH/LoneStar - X15/A26 - Telematics QUALCOMM IMCT MD Design . . . 239
LT/RH/LoneStar - X15/A26 - Telematics QUALCOMM TMCT Design . . . 241

LT/RH/LoneStar - X15/A26 - Telematics QUALCOMM TMCT With PANIC BUTTON Design . . . 242
LT/RH/LoneStar - X15/A26 - Telematics:OnCommand Telematics Module Design . . . 232
LT/RH/LoneStar - X15/A26 - Theft Deterrent (Standard J1939 Mux SW) Design . . . 248
LT/RH/LoneStar - X15/A26 - Traction Control (Bendix Controller) Design . . . 346
LT/RH/LoneStar - X15/A26 - Traction Control (Bendix Controller) Option 2 Design . . . 348
LT/RH/LoneStar - X15/A26 - Traction Control (Wabco Controller) Design . . . 350
LT/RH/LoneStar - X15/A26 - Trailer Interface (ABS) - BOC & EOF_NA Design 776
LT/RH/LoneStar - X15/A26 - Trailer Interface (ABS) - BOC_NA Design . . . 780
LT/RH/LoneStar - X15/A26 - Trailer Interface (ABS) - TRAMEC_NA Design . . . 782
LT/RH/LoneStar - X15/A26 - Trailer Interface (Lighting) – BOC & EOF_NA Design . . . 785
LT/RH/LoneStar - X15/A26 - Trailer Interface (Lighting) – BOC NA Design . . . 783
LT/RH/LoneStar - X15/A26 - Trailer Interface (Lighting) – TRAMEC_NA Design . . . 789
LT/RH/LoneStar - X15/A26 - Transmission - MODE Selection Design . . . 812
LT/RH/LoneStar - X15/A26 - Transmission Oil Level (Low Level Warning) Design . . . 689
LT/RH/LoneStar - X15/A26 - Transmission Oil Temperature (Automatic Trans W/ Aux Gauge) Design . . . 702
LT/RH/LoneStar - X15/A26 - Transmission Oil Temperature (Automatic Trans) Design . . . 703
LT/RH/LoneStar - X15/A26 - Transmission Range Inhibit (J1939 Comm) Design . . . 715
LT/RH/LoneStar - X15/A26 - Trip Odometer (Cluster) Design . . . 688
LT/RH/LoneStar - X15/A26 - Two USB Design . . . 252
LT/RH/LoneStar - X15/A26 - Underbunk Refrigerator N/Relay Design . . . 220
LT/RH/LoneStar - X15/A26 - Vehicle Information Display (VID-W/BT) Design . . . 716
LT/RH/LoneStar - X15/A26 - Vehicle Information Display (VID-W/O BT) Design . . . 717
LT/RH/LoneStar - X15/A26 - Vehicle Sleep Mode Design . . . 255
LT/RH/LoneStar - X15/A26 - Vehicle Speed Control (Cruise Control) 4 - PIN Design . . . 196
LT/RH/LoneStar - X15/A26 - Vehicle Speed Limit Override Design . . . 389
LT/RH/LoneStar - X15/A26 - Vehicle Speedometer System (W/AMT/AUTO TRANS) Design . . . 707
LT/RH/LoneStar - X15/A26 - Voltage Monitoring (Voltmeter) (with Aux gauge) Design . . . 710
LT/RH/LoneStar - X15/A26 - Voltage Monitoring (Voltmeter) Option 1 Design . . . 708
LT/RH/LoneStar - X15/A26 - Voltage Monitoring (Voltmeter) Option 2 Design . . . 709
LT/RH/LoneStar - X15/A26 - Windshield Wipers Park Brake W/Wipers ON Design . . . 821
LT/RH/LoneStar - X15/A26 - Windshield Wipers Standard Design . . . 822
LT/RH/LoneStar - X15/A26 - Work Lights (2 Blunt Cuts Only W/O Relay) Design . . . 587
LT/RH/LoneStar - X15/A26 - Work Lights (2 Blunt Cuts Only W/O Relay) W/Backup W/Auto Trans (Allison and Endurant) Design . . . 572
LT/RH/LoneStar - X15/A26 - Work Lights - LED W/ Sw Pack - Customer Supplied - Sleeper Design . . . 566
LT/RH/LoneStar - X15/A26 - Work Lights - LED W/ Sw Pack - Customer Supplied - Sleeper W/ RKE W/AUTO REV Design . . . 552
LT/RH/LoneStar - X15/A26 - Work Lights - LED W/ Sw Pack - Customer Supplied - Sleeper W/O RKE Design . . . 568
LT/RH/LoneStar - X15/A26 - Work Lights - LED W/ Sw Pack - Customer Supplied - Sleeper W/O RKE W/AUTO REV Design . . . 550
LT/RH/LoneStar - X15/A26 - Work Lights -LED W/ Sw Pack - Sleeper Design . . . 597
LT/RH/LoneStar - X15/A26 - Work Lights -LED W/ Sw Pack - Sleeper W/ RKE W/AUTO REV Design . . . 590
LT/RH/LoneStar - X15/A26 - Work Lights -LED W/ Sw Pack - Sleeper W/O RKE Design . . . 598
LT/RH/LoneStar - X15/A26 - Work Lights -LED W/ Sw Pack - Sleeper W/O RKE W/AUTO REV Design . . . 589
LT/RH/LoneStar - X15/A26 - Work Lights LED W/ Sw Pack - Day Cab Design . . . 585

LT/RH/LoneStar - X15/A26 - Work Lights LED W/ Sw Pack - Day Cab W/ RKE W/AUTO REV Design 571
LT/RH/LoneStar - X15/A26 - Work Lights LED W/ Sw Pack - Day Cab W/O RKE Design 586
LT/RH/LoneStar - X15/A26 - Work Lights LED W/ Sw Pack - Day Cab W/O RKE W/AUTO REV Design 570
LT/RH/LoneStar - X15/A26 - Work Lights W/ Sw Pack - Customer Supplied Design 548
LT/RH/LoneStar - X15/A26 - Work Lights W/ Sw Pack - Customer Supplied W/ RKE W/AUTO REV Design 531
LT/RH/LoneStar - X15/A26 - Work Lights W/ Sw Pack - Customer Supplied W/O RKE W/AUTO REV Design 529
LT/RH/LoneStar X15 - Ambient Air Temperature Option 1 Design 668
LT/RH/LoneStar X15 - Ambient Air Temperature Option 2 Design 669
LT/RH/LoneStar X15 - Auto Start Stop Oil Temp Sensor Auto Trans Design . . . 827
LT/RH/LoneStar X15 - Auto Start Stop Oil Temp Sensor Manual Trans Design 829
LT/RH/LoneStar X15 - Auto Start Stop with Sleeper Auto Climate / Cab Temp with Oil Temp Sensor Auto Trans Design 828
LT/RH/LoneStar X15 - Auto Start Stop with Sleeper Auto Climate / Cab Temp with Oil Temp Sensor Manual Trans Design 830
LT/RH/LoneStar X15 - Back-Up Alarm (Manual) (W/ Tail Light Bar Assy) Design 118
LT/RH/LoneStar X15 - Back-Up Alarm (Manual) and UltraShift+ Design 114
LT/RH/LoneStar X15 - Backup Light (Single Reverse Light) Endurant Design . . 462
LT/RH/LoneStar X15 - Backup Light (Single Reverse Light) W/Allison TC10 Design 444
LT/RH/LoneStar X15 - Backup Light Endurant Design 460
LT/RH/LoneStar X15 - Backup Lights (Single Reverse Light) Eaton/Manual Trans Design 454
LT/RH/LoneStar X15 - Battery International (3) 12V Design 906
LT/RH/LoneStar X15 - Battery International (4) 12V Design 908
LT/RH/LoneStar X15 - Battery International (8) 12V Design 910
LT/RH/LoneStar X15 - Bosch LH160_LH200 Alternator W/ Delco Starter Design 842
LT/RH/LoneStar X15 - Bosch LIL165_LIL200 Alternator W/ Remote Sense W/ Delco Starter Design 843
LT/RH/LoneStar X15 - Delco Remy 28SI Alternator W/ Remote Sense W/ Delco Starter Design 844
LT/RH/LoneStar X15 - Delco Remy 36SI Alternator W/ Remtoe Sense W/ Delco Starter Design 846
LT/RH/LoneStar X15 - Delco Remy 40SI Alternator W/ Remote Sense W/ Delco Starter Design 847
LT/RH/LoneStar X15 - ECM Design 31
LT/RH/LoneStar X15 - Endurant Transmission Design 795
LT/RH/LoneStar X15 - Heating Ventilation & Air Conditioning (HVAC) Auto Temp Control Design 634
LT/RH/LoneStar X15 - Heating Ventilation & Air Conditioning (HVAC) Manual Design 637
LT/RH/LoneStar X15 - IP Underhood PDM Design 66
LT/RH/LoneStar X15 - Leece-Neville - LN 325A Alternator W/ Remote Sense W/ Delco Starter Design 852
LT/RH/LoneStar X15 - Leece-Neville 320PAH Alternator W/ Delco Starter Design 851
LT/RH/LoneStar X15 - Leece-Neville AVI160 Alternator W/ Delco Starter Design 849
LT/RH/LoneStar X15 - Leece-Neville AVI160-210A/240A Alternator W/ Remote Sense W/ Delco Starter Design 850
LT/RH/LoneStar X15 - Powertrain Aftertreatment PDM Design 52
LT/RH/LoneStar X15 - Powertrain Ground Splice Packs - 6704 Design 48
LT/RH/LoneStar X15 - TC10 Series Design 805
LT/RH/LoneStar X15 - Transmission (TC10 Series A65 w/Body Builder) Design 290
LT/RH/LoneStar X15 - Transmission (Ultrashift+ w/Body Builder) Design 807
LT/RH/LoneStar X15 - Transmission I/O (Endurant Pressure Sensor) Design . . 814
LT/RH/LoneStar X15 - Ultrashift Plus Design 797

LT/RH/LoneStar X15 - Work Lights LED W/ Sw Pack - Day Cab W/ RKE W/MAN REV Design . . . 584
LT/RH/LoneStar X15 - Work Lights LED W/ Sw Pack - Day Cab W/O RKE W/MAN REV Design . . . 541
LT/RH/LoneStar X15 - ZVR Splice Packs - 6702 & 6703 Design . . . 49

M

M01-8050:1661778C1 . . . 1545
M01-8070:587567C91 . . . 1546
M01-8071:587567C91 . . . 1547
M01-8350:3536864C1 . . . 1548
M01-8351:3554317C1 . . . 1549
M01-8454:1661777C1 . . . 1550
M01-8500:1686834C1 . . . 1551
M01-8501:1686834C1 . . . 1552
M01-8502:3757487C1 . . . 1553
M01-8503:3757487C1 . . . 1554
M01-8504:3919376C1 . . . 1555
M01-8505:3919376C1 . . . 1556
M01-8506:6111844C1 . . . 1557
M01-8507:6111844C1 . . . 1558
M01-8550:587567C91 . . . 1560
M01-8550B:587567C91 . . . 1559
M01-8600:587566C91 . . . 1561
M01-8903:6111813C1 . . . 1562
M01-8904:3852527C1 . . . 1563
M01-8993F:3823761C1 . . . 1564
M02-8351:3554317C1 . . . 1565
M02-8352:3536864C1 . . . 1566
M02-8454:1661777C1 . . . 1567
M02-8500:1686834C1 . . . 1568
M02-8501:1686834C1 . . . 1569
M02-8502:3757487C1 . . . 1570
M02-8503:3757487C1 . . . 1571
M02-8504:3919376C1 . . . 1572
M02-8505:3919376C1 . . . 1573
M02-8506:6111844C1 . . . 1574
M02-8507:6111844C1 . . . 1575
M02-8550:587567C91 . . . 1576
M02-8600:587566C91 . . . 1577
M02-8903:6111813C1 . . . 1578
M02-8904:3852527C1 . . . 1579
M02-8993F:3823761C1 . . . 1580

N

N01-3741:1661375C2 . . . 1584
N01-3741A:1661375C2 . . . 1582
N01-8802:3551896C1 . . . 1586
N01-9100A:1661778C1 . . . 1588
N01-9100B:1661778C1 . . . 1589
N01-9100C:1661778C1 . . . 1590
N01-9100D:1661778C1 . . . 1591
N01-9100E:1661778C1 . . . 1592
N01-9100F:1661778C1 . . . 1593
N01-9511:3601685C1 . . . 1597
N01-9511A:3601685C1 . . . 1594
N01-9511B:3601685C1 . . . 1595
N01-9511D:3601685C1 . . . 1596
N01-9512:3678796C1 . . . 1598
N01-9513:1686834C1 . . . 1599
N01-9514:PAS2(1,2) . . . 1601
N01-9514A:3678796C1 . . . 1600
N01-9515:3678796C1 . . . 1602
N01-9516:3678796C1 . . . 1604
N01-9516B:3678796C1 . . . 1603
N01-9719:BLUNT_SL_VC . . . 1606

N01-9719A:BLUNT_SL_VC . . . 1605
N01-9720:BLUNT_SL_VC . . . 1609
N01-9720A:BLUNT_SL_VC . . . 1608
N01-9736:1661375C2 . . . 1611
N01-9738:1661375C2 . . . 1615
N01-9738B:1661375C2 . . . 1613
N01-9739:1661375C2 . . . 1619
N01-9739B:1661375C2 . . . 1617
N01-9740:1661375C2 . . . 1623
N01-9740A:1661375C2 . . . 1621
N01-9769:3673640C1 . . . 1625
N01-9779F1:1667732C1 . . . 1627
N01-9779F:1667732C1 . . . 1628
N01-9780M1:1667733C1 . . . 1630
N01-9780M:3535482C1 . . . 1631
N01-9781F:1667732C1 . . . 1633
N01-9782M:3535482C1 . . . 1635
N01-9783M:2031522C1 . . . 1637
N01-9901A:1673790C1 . . . 1638
N01-9901B:1673790C1 . . . 1639
N01-9902:1673790C1 . . . 1641
N01-9902A:1673790C1 . . . 1640
N01-9903:1671610C1 . . . 1642
N01-9904:1671610C1 . . . 1643
N01-9989B:3535481C1 . . . 1644
NEG_1:RING-E-3-8_0 . . . 1581

P

P01-8450B:587568C91 . . . 1646
P02-8311:1661778C1 . . . 1647
P2R-4410A:3572899C1 . . . 1654
P2R-4410B:3572899C1 . . . 1655
P03-101_1:RING-E-3-8_0 . . . 1648
P04-100:3756780C1 . . . 1650
P04-100A:RING-M-6_0 . . . 1649
P04-101:RING-E-3-8_0 . . . 1651
P05-8450B:587568C91 . . . 1652
P06-8311:1661778C1 . . . 1653
P30-LS 5157:3668886C1 . . . 1656
P30-LS-5156:3668886C1 . . . 1657
P34 DUPA-9305B:1671610C1 . . . 1658
P34-9305B:1671610C1 . . . 1659
P40-100D:RING-E-5-16_0 . . . 1660
P40-101D:RING-E-5-16_0 . . . 1661
P40-102C:3877760C1 . . . 1662
POS_1:RING-E-3-8_0 . . . 1645
Powertrain J1939 (500Kbps) Allison 3K Transmission A26 Design . . . 20
Powertrain J1939 (500Kbps) Eaton Ultrashift+ Transmission A26 Design . . . 21
Powertrain J1939 (500Kbps) Eaton Ultrashift+ Transmission X15 Design . . . 25
Powertrain J1939 (500Kbps) Edurant Transmission A26 Design . . . 22
Powertrain J1939 (500Kbps) Edurant Transmission X15 Design . . . 26
Powertrain J1939 (500Kbps) Manual Transmission A26 Design . . . 23
Powertrain J1939 (500Kbps) Manual Transmission X15 Design . . . 27
Powertrain J1939 (500Kbps) TC10 Transmission A26 Design . . . 24
Powertrain J1939 (500Kbps) TC10 Transmission X15 Design . . . 28

R

R01-5906E:6111844C1 . . . 1665
R01-9303-RL04/05/06:3612305C1 . . . 1677
R01-9303:3612305C1 . . . 1678
R01-9303A-RL04/05/06:3612305C1 . . . 1666
R01-9303A:3612305C1 . . . 1667
R01-9303K:3612305C1 . . . 1669
R01-9303L:3612305C1 . . . 1671
R01-9303M:3612305C1 . . . 1673
R01-9303N:3612305C1 . . . 1675

R01-9305B:1671610C1 . . . 1680
R01-9305C:1671610C1 . . . 1681
R01-9501 DA:3757487C1 . . . 1684
R01-9501D DA/AA:3757487C1 . . . 1682
R01-9502 DA:1686834C1 . . . 1689
R01-9502A DA:1686834C1 . . . 1685
R01-9502B DA/AA:1686834C1 . . . 1687
R01-9503 DA:3757487C1 . . . 1692
R01-9503D DA/AA:3757487C1 . . . 1690
R01-9504 DA:1686834C1 . . . 1697
R01-9504A DA/AA:1686834C1 . . . 1693
R01-9504B DA:1686834C1 . . . 1695
R01-9505:3678796C1 . . . 1699
R01-9505A:3678796C1 . . . 1698
R01-9506:6111844C1 . . . 1702
R01-9506D:6111844C1 . . . 1700
R01-9507:3919376C1 . . . 1707
R01-9507A:3919376C1 . . . 1703
R01-9507B:3919376C1 . . . 1705
R01-9508:6111844C1 . . . 1711
R01-9508D:6111844C1 . . . 1708
R01-9508E:6111844C1 . . . 1710
R01-9509:3919376C1 . . . 1716
R01-9509A:3919376C1 . . . 1712
R01-9509B:3919376C1 . . . 1714
R01-9510A:1678137C1 . . . 1717
R01-9511 DA:3757487C1 . . . 1718
R01-9512 DA:3757487C1 . . . 1720
R01-9513 DA:1686834C1 . . . 1722
R01-9514 DA:1686834C1 . . . 1723
R01-9515:PAS2(1,2) . . . 1725
R01-9515B:PAS2(1,2) . . . 1724
R01-9516:3919376C1 . . . 1726
R01-9517:6111844C1 . . . 1727
R01-9518:6111844C1 . . . 1728
R01-9519:3919376C1 . . . 1729
R01-9520 DA:1686834C1 . . . 1730
R01-9521 DA:3757487C1 . . . 1731
R01-9522 AA:1686834C1 . . . 1732
R01-9523 AA:3757487C1 . . . 1733
R01-9524 AA:1686834C1 . . . 1734
R01-9525 AA:3757487C1 . . . 1735
R01-9526 DA:1686834C1 . . . 1736
R01-9527 DA:3757487C1 . . . 1737
R01-9528:3919376C1 . . . 1738
R01-9529:6111844C1 . . . 1739
R01-9530:3593684C91 . . . 1740
R01-9531:3593684C91 . . . 1741
R01-9533:3593684C91 . . . 1742
R01-9534:3919376C1 . . . 1743
R01-9535:6111844C1 . . . 1744
R01-9537:6111844C1 . . . 1745
R01-9538:6111844C1 . . . 1746
R01-9545:3522068C1 . . . 1747
R01-9724:BLUNT_SL_VC . . . 1749
R01-9724A:BLUNT_SL_VC . . . 1748
R01-9789F:1667732C1 . . . 1751
R01-9789FA:1667732C1 . . . 1750
R01-9790M:1667733C1 . . . 1753
R01-9790MA:1667733C1 . . . 1752
R01-9811:3536864C1 . . . 1754
R01-9812:3536864C1 . . . 1755
R01-9813:3536864C1 . . . 1756
R01-9814:587567C91 . . . 1757
R01-9815:587567C91 . . . 1758
R01-9816:587567C91 . . . 1759

R01-9830:1678137C1 . . . 1760
R01-9832:1678137C1 . . . 1761
R01-9911:3536864C1 . . . 1762
R01-9912:3536864C1 . . . 1763
Relays - Grid Management (N/Load Shed Day Cab) Design . . . 57
Relays - Grid Management (W/Load Shed Day Cab) Design . . . 58
Relays - Grid Management (W/Load Shed Sleeper Cab) Design . . . 59
RH - X15/A26 - Directional Signal (Turn) W/HEADLIGHTS Design . . . 471
RH - X15/A26 - Headlights Halogen N/INT N/LOWW Design . . . 491
RH - X15/A26 - Headlights Halogen N/INT W/LOWW Design . . . 492
RH - X15/A26 - Headlights Halogen W/INT N/LOWW Design . . . 493
RH - X15/A26 - Headlights Halogen W/INT W/LOWW Design . . . 494
RH - X15/A26 - Headlights LED N/INT N/LOWW LT Design . . . 495
RH - X15/A26 - Headlights LED N/INT W/LOWW LT Design . . . 496
RH - X15/A26 - Headlights LED W/INT N/LOWW LT Design . . . 497
RH - X15/A26 - Headlights LED W/INT W/LOWW LT Design . . . 498
RS 5162:3612305C1 . . . 1663

S

S05-9255:1667639C1 . . . 1764

T

T01-6100G-SENSE:RING-M-8_0 . . . 1765
T01-6101G-SENSE:RING-M-6_0 . . . 1766
T02-6100D:RING-M-8_0 . . . 1767
T02-6101D:RING-M-8_0 . . . 1768
T04-6101:RING-M-8_0 . . . 1770
T04-6101D:RING-M-8_0 . . . 1769
T05-6100H-DELCO-28SI:RING-M-8_0 . . . 1771
T05-6100J-DELCO-36SI:RING-E-1-4_0 . . . 1772
T05-6101H-DELCO-28SI:RING-M-6_0 . . . 1773
T05-6101J-DELCO-36SI:RING-E-1-4_0 . . . 1774
T08-6100D:RING-M-8_0 . . . 1775
T08-6101D:RING-M-8_0 . . . 1776
T09-6100D:RING-E-5-16_0 . . . 1777
T09-6101D:RING-E-5-16_0 . . . 1778
T10-6100D:RING-M-8_0 . . . 1779
T10-6101D:RING-M-10_0 . . . 1780
Telematics J1708 Design . . . 15

V

V03-5103:1661198C1 . . . 1781
V03-5104:1661198C1 . . . 1782
V13-5015:3613000C1 . . . 1783
V13-5136:1669972C1 . . . 1785

W

W01-5909:2005835C1 . . . 1786
W02-LT 8100A:1667741C1 . . . 1787
W02-LT 8100B:1667741C1 . . . 1789
W08-2300:3535769C1 . . . 1790
W08-3500:239808R1 . . . 1791
W08-3501:239808R1 . . . 1792
W09-5120:BLUNT_SL_VC . . . 1793
W09-5121:BLUNT_SL_VC . . . 1794
W11-4411M:3517760C1 . . . 1795
W11-4412M:3517760C1 . . . 1796
W13-1000A:4063415C1 . . . 1797
W13-1000B:4063415C1 . . . 1798
W17-5120-5121:BLUNT_SL_VC . . . 1799
W22-5120-5121-SHIELD BEACON:BLUNT_SL_VC . . . 1800
W22-5120:BLUNT_SL_VC . . . 1801
W22-5121:BLUNT_SL_VC . . . 1802
W24-2300:3535769C1 . . . 1803
W24-3500:239808R1 . . . 1804
W24-3501:239808R1 . . . 1805

W25-5122/5123:BLUNT_SL_VC . . . 1806
W26-5122/5123:BLUNT_SL_VC . . . 1808
W27-1032:3543888C1 . . . 1810
W27-1032:3543888C1 . . . 1812
W28-5122/5123:BLUNT_SL_VC . . . 1813
W29-5122/5123:BLUNT_SL_VC . . . 1815
W30-LS 8053B:1667741C1 . . . 1817
W30-LS-8053A:1667741C1 . . . 1818
W31-LT 8054A:1667741C1 . . . 1820
W31-LT 8054B:1667741C1 . . . 1822
W32-LS 8100A:1667741C1 . . . 1823
W32-LS 8100B:1667741C1 . . . 1825
W43-100:4124472C1 . . . 1826
W43-101:4124471C1 . . . 1827
W43-200:1661259C1 . . . 1828
W43-201:1661260C1 . . . 1829

0

0009:4063156C1 . . . 1830

1

1F:1667639C1 . . . 1834
10F:1661197C1 . . . 1836
16B:3540613C1 . . . 2008
16B:3540613C1 . . . 2012
100:1661204C1 . . . 1867
100:3756780C1 . . . 1869
100A:1661205C1 . . . 1838
100A:RING-M-6_0 . . . 1837
100B:2031520C1 . . . 1840
100C:2031522C1 . . . 1846
100C:3756702C1 . . . 1847
100C:3757369C1 . . . 1848
100CN:1664531C1 . . . 1842
100CN:1664531C1 . . . 1843
100CP:1669834C1 . . . 1844
100CP:1669834C1 . . . 1845
100NB1:1669834C1 . . . 1849
100NB1:1669834C1 . . . 1850
100PB1:1664531C1 . . . 1851
100PB1:1664531C1 . . . 1852
100_1:365684C2 . . . 1870
100_1:365684C2 . . . 1871
100_1:475968C1 . . . 1872
100_1:475968C1 . . . 1873
101C:3606342C1 . . . 1874
101C:3757370C1 . . . 1875
102B:3756780C1 . . . 1929
102B:3756781C1 . . . 1930
113:3600049C1 . . . 1971
113:3625557C1 . . . 1972
113:3625557C1 . . . 1973
113:3625557C1 . . . 1974
113l:3600049C1 . . . 1970
113_:3625557C1 . . . 1975
125:3625557C1 . . . 1981
125:3625557C1 . . . 1982
125:3625557C1 . . . 1983
125:3625557C1 . . . 1984
125:4062974C1 . . . 1985
1000:3825184C1 . . . 1853
1000:3825185C1 . . . 1857
1001:3515762C1 . . . 1861
1001:3515763C1 . . . 1864
1010:3768015C1 . . . 1876
1011:3768010C1 . . . 1883

1012:3768010C1 . . . 1888
1013:3768010C1 . . . 1900
1014:3768010C1 . . . 1906
1015:3768015C1 . . . 1909
1016:4100070C1 . . . 1916
1017:3768015C1 . . . 1918
1018:3768015C1 . . . 1924
1018:3768015C1 . . . 1927
1020:4063041C1 . . . 1931
1022:3613769C1 . . . 1932
1023:3613769C1 . . . 1936
1024:3601838C1 . . . 1940
1025:3601838C1 . . . 1943
1026:3601838C1 . . . 1946
1027:3613769C1 . . . 1948
1029:3601838C1 . . . 1951
1051:1661259C1 . . . 1954
1101F:3768593C1 . . . 1955
1101M:3507395C1 . . . 1956
1101M:3507395C1 . . . 1957
1118M:3520850C1 . . . 1963
1124M:3928059C1 . . . 1965
1125M:3928059C1 . . . 1967
1127R:1667741C1 . . . 1969
1200A:3768152C1 . . . 1976
1200A:3768152C1 . . . 1977
1200A:3768152C1 . . . 1978
1200A:3768152C1 . . . 1979
1200A:3768152C1 . . . 1980
1300:3597143C1 . . . 1986
1400:3596926C1 . . . 1987
1403:3596927C1 . . . 1989
1410:3601838C1 . . . 1990
1420:3557922C1 . . . 1994
1423:3846885C1 . . . 1996
1500A:3710061C1 . . . 1997
1605:373759C2 . . . 2014
1650:3757649C1 . . . 2017
1650MA:3544066C1 . . . 2015
1650MA_:3757649C1 . . . 2016
1650_:3544066C1 . . . 2018
1651:3757649C1 . . . 2019
1700:3595625C1 . . . 2042
1700:3595625C1 . . . 2056
1700F:3595624C1 . . . 2021
1700F:3595624C1 . . . 2040
1701:3595623C1 . . . 2097
1701F:3595622C1 . . . 2058
1701F:3595622C1 . . . 2060
1701M:3595623C1 . . . 2095
1702:3595620C1 . . . 2125
1702:3595620C1 . . . 2126
1702:3595620C1 . . . 2127
1702:3595620C1 . . . 2128
1702:3595620C1 . . . 2129
1702:3595620C1 . . . 2130
1702:3595620C1 . . . 2131
1702:3595620C1 . . . 2132
1702:3595620C1 . . . 2133
1702:3595620C1 . . . 2134
1702:3595621C1 . . . 2156
1702:3595621C1 . . . 2157
1702:3595621C1 . . . 2158
1702:3595621C1 . . . 2159
1702:3595621C1 . . . 2160
1702:3595621C1 . . . 2161

1702:3595621C1 . . . 2162
1702:3595621C1 . . . 2163
1702:3595621C1 . . . 2164
1702:3595621C1 . . . 2165
1703F:3595624C1 . . . 2179
1703F:3595624C1 . . . 2180
1703F:3595624C1 . . . 2181
1703F:3595624C1 . . . 2182
1703F:3595624C1 . . . 2183
1703F:3595624C1 . . . 2184
1703F:3595624C1 . . . 2185
1703F:3595624C1 . . . 2186
1703F:3595624C1 . . . 2187
1703F:3595624C1 . . . 2188
1703F:3595624C1 . . . 2193
1703M:3595624C1 . . . 2205
1703M:3595624C1 . . . 2206
1703M:3595624C1 . . . 2207
1703M:3595624C1 . . . 2208
1703M:3595624C1 . . . 2209
1703M:3595624C1 . . . 2210
1703M:3595624C1 . . . 2211
1703M:3595624C1 . . . 2212
1703M:3595624C1 . . . 2213
1703M:3595625C1 . . . 2214
1703M:3595625C1 . . . 2219
1776:4062806C1 . . . 2231
1800:3553649C1 . . . 2243
1800:3553649C1 . . . 2251
1800F:3612512C1 . . . 2232
1800F:3612512C1 . . . 2241
1801:3539212C1 . . . 2252
1801:3539212C1 . . . 2253
1802:3608496C1 . . . 2256
1814:1661777C1 . . . 2258
1820F:1667529C1 . . . 2259
1820F:1667529C1 . . . 2261
1820M:1667305C1 . . . 2262
1820M:1667305C1 . . . 2264
1821:3601800C1 . . . 2266
1821A:3889458C1 . . . 2265
1825F:4064551C1 . . . 2267
1861:3517473C1 . . . 2268
1902:1661196C1 . . . 2269
1906:1661891C1 . . . 2273
1906F:1661891C1 . . . 2270
1906M:1661889C1 . . . 2271
1906M:1661889C1 . . . 2272
1907:1661259C1 . . . 2274
1919:2005836C1 . . . 2277
1919A:2005836C1 . . . 2275
1919B:2005836C1 . . . 2276
1920:2011340C1 . . . 2278
1926:3544677C1 . . . 2280
1931A:4110679C1 . . . 2281
1935M:3683465C1 . . . 2282
1935N:3683465C1 . . . 2283
1937M:1667741C1 . . . 2284
1937N:1667741C1 . . . 2285
1937P:1667741C1 . . . 2286
1939-125A:3683465C1 . . . 2290
1939-125B:3683465C1 . . . 2291
1939-250A:3683465C1 . . . 2292
1939-250B:3683465C1 . . . 2293
1939A:3616085C1 . . . 2287
1939M:3553404C1 . . . 2289

1944:6114576C1 . . . 2294
1944_:6114576C1 . . . 2296
1946F:3515763C1 . . . 2297
1946M:3515762C1 . . . 2299
1947:6114576C1 . . . 2301
1950:3704182C1 . . . 2302
1970:3538635C1 . . . 2303
1970:3538635C1 . . . 2304
1978:3540612C1 . . . 2307
1978:3540612C1 . . . 2310
1979A:4061584C1 . . . 2312
1979_1:3710061C1 . . . 2315
1979_2:3710061C1 . . . 2316
1979_BENDIX:3831401C1 . . . 2313
1979_WABCO:3710061C1 . . . 2314

2

23XX:3534156C1 . . . 2347
23XX:3534156C1 . . . 2349
220XF:1661260C1 . . . 2337
220XF:1661260C1 . . . 2339
220XM:1661259C1 . . . 2341
240:3709924C1 . . . 2361
250F:4064552C1 . . . 2362
250M:4064551C1 . . . 2363
2000:3544688C1 . . . 2322
2000:3544688C1 . . . 2323
2000F:3544687C1 . . . 2317
2000F:3544687C1 . . . 2318
2002M:1661259C1 . . . 2327
2003M:1661259C1 . . . 2328
2004M:1661259C1 . . . 2329
2005M:1661259C1 . . . 2330
2006M:1661259C1 . . . 2331
2100M:1661198C1 . . . 2332
2101F:1669973C1 . . . 2333
2101M:1669972C1 . . . 2334
2102M:1669972C1 . . . 2335
2103M:1669972C1 . . . 2336
2200:1661259C1 . . . 2343
2201:1661259C1 . . . 2345
2225:3834322C1 . . . 2346
2303F:1661196C1 . . . 2351
2303F:1661196C1 . . . 2352
2303M:1661197C1 . . . 2355
2303M:1661197C1 . . . 2356
2312:3533975C1 . . . 2359
2313:3533975C1 . . . 2360
2500F:3515763C1 . . . 2365
2500M:3515762C1 . . . 2366
2505:3811207C1 . . . 2368
2505M:3811181C1 . . . 2367

3

380:BLUNT_SL_VC . . . 2403
3000M:1661200C1 . . . 2369
3000M:1661200C1 . . . 2370
3000M:1661200C1 . . . 2371
3000M:1661200C1 . . . 2372
3000M:1661200C1 . . . 2373
3000M:1661200C1 . . . 2374
3200F:1661201C1 . . . 2375
3200F:1661201C1 . . . 2376
3200F:1661201C1 . . . 2377
3200F:1661201C1 . . . 2378
3200F:1661201C1 . . . 2379

3200F:1661201C1 . . . 2380
3200F:1661201C1 . . . 2381
3200M:1661200C1 . . . 2382
3200M:1661200C1 . . . 2383
3202M:3820176C1 . . . 2384
3202M_1:3820176C1 . . . 2385
3204F:1661201C1 . . . 2387
3204F:1661201C1 . . . 2388
3204F:1661201C1 . . . 2389
3204F:1661201C1 . . . 2390
3204M:1661200C1 . . . 2391
3204M:1661200C1 . . . 2392
3204M:1661200C1 . . . 2393
3205F:1667529C1 . . . 2394
3205F:1667529C1 . . . 2395
3205F:1667529C1 . . . 2397
3205M:1667305C1 . . . 2398
3206M:1667305C1 . . . 2400
3206M:1667305C1 . . . 2402

4

4005B:3866817C1 . . . 2404
4005B:3866817C1 . . . 2405
4028C:338892C2 . . . 2406
4320M:3517760C1 . . . 2407
4328:3602454C1 . . . 2408
4411F:3517759C1 . . . 2409
4412F:3517759C1 . . . 2410
4412M:3517760C1 . . . 2411
4450BM:2039311C91 . . . 2412
4450F:2039312C91 . . . 2416
4450FM:2039311C91 . . . 2414
4450M:2039311C91 . . . 2419
4460BM:1686834C1 . . . 2421
4460F:3553961C1 . . . 2424
4460F:3553961C1 . . . 2426
4460FM:1686834C1 . . . 2422
4460M:1686834C1 . . . 2427
4460RM:1686834C1 . . . 2428
4705:3538634C1 . . . 2429
4706:3538635C1 . . . 2431

5

512:1661200C1 . . . 2509
5000:3595620C1 . . . 2444
5000:3595620C1 . . . 2451
5000:3595621C1 . . . 2456
5000A:3595620C1 . . . 2433
5000A:3595621C1 . . . 2434
5000A:3595621C1 . . . 2440
5001A:4100324C1 . . . 2457
5001B:4100325C1 . . . 2461
5002:4108436C1 . . . 2465
5002A:4108438C1 . . . 2464
5006:1661197C1 . . . 2466
5007A:3613769C1 . . . 2467
5007B:3613769C1 . . . 2472
5010:3538634C1 . . . 2474
5010:3538634C1 . . . 2476
5011F:3540613C1 . . . 2480
5011F:3540613C1 . . . 2481
5011M:3540612C1 . . . 2482
5011M:3540612C1 . . . 2483
5020:3553404C1 . . . 2484
5102:2031871C1 . . . 2485
5102:2031872C1 . . . 2487

5107:3541785C1 . . . 2489
5117:1661889C1 . . . 2490
5117:1661889C1 . . . 2491
5117:1661889C1 . . . 2492
5117:1661889C1 . . . 2494
5117:1661889C1 . . . 2496
5117:1661891C1 . . . 2497
5118:1661259C1 . . . 2498
5118:1661891C1 . . . 2500
5119:1661259C1 . . . 2501
5124:3520850C1 . . . 2502
5125:2005835C1 . . . 2503
5125:2005836C1 . . . 2506
5131:1661197C1 . . . 2511
5134:1661196C1 . . . 2512
5135A:1661198C1 . . . 2513
5135B:1661198C1 . . . 2514
5135F:1661197C1 . . . 2515
5135M:1661196C1 . . . 2516
5205:3544870C1 . . . 2517
5210:3548957C91 . . . 2523
5219:1661198C1 . . . 2524
5219_1:1661198C1 . . . 2525
5220:1667305C1 . . . 2527
5220:1667529C1 . . . 2529
5222:3520850C1 . . . 2531
5230:1661200C1 . . . 2535
5230:1661201C1 . . . 2539
5230A:1661200C1 . . . 2533
5230A:1661201C1 . . . 2534
5231:3540612C1 . . . 2542
5231:3540613C1 . . . 2544
5233:3520850C1 . . . 2546
5300:2031871C1 . . . 2548
5300:2031872C1 . . . 2551
5303:3515763C1 . . . 2554
5600:3601838C1 . . . 2556
5754:1661196C1 . . . 2559
5754:1661197C1 . . . 2560
5755:3616095C1 . . . 2561
5757:872291R1 . . . 2562
5758F:587567C91 . . . 2563
5758F:587567C91 . . . 2564
5758M:587568C91 . . . 2565
5758M:587568C91 . . . 2566
5900:2011340C1 . . . 2567
5902:1661201C1 . . . 2569
5903:1669973C1 . . . 2571
5906:2028493C1 . . . 2572
5909:2005835C1 . . . 2573
5927:2005836C1 . . . 2574
5930M:3683465C1 . . . 2575

6

6TB1:3722128C1 . . . 2576
670A/670B:3573078C1 . . . 2656
674:6114576C1 . . . 2666
674:6114576C1 . . . 2669
674:6114577C1 . . . 2673
674B:6114577C1 . . . 2660
678:3991593C1 . . . 2678
681:3683465C1 . . . 2679
690:3765646C92 . . . 2680
6000:3945694C1 . . . 2577
6018:3952655C1 . . . 2589
6019:3952656C1 . . . 2603

6049_A:3866817C1 . . . 2606
6049_A:3866817C1 . . . 2608
6049_A:3866817C1 . . . 2609
6049_B:3866817C1 . . . 2610
6049_B:3866817C1 . . . 2611
6049_B:3866817C1 . . . 2612
6049_C:3866817C1 . . . 2613
6049_C:3866817C1 . . . 2614
6049_C:3866817C1 . . . 2615
6049_C:3866817C1 . . . 2616
6049_D:3866817C1 . . . 2617
6049_D:3866817C1 . . . 2618
6049_E:3866817C1 . . . 2619
6049_F:3866817C1 . . . 2620
6049_G:3866817C1 . . . 2621
6049_H:3866817C1 . . . 2622
6051_A:3866817C1 . . . 2623
6051_A:3866817C1 . . . 2625
6051_B:3866817C1 . . . 2626
6051_B:3866817C1 . . . 2627
6051_B:3866817C1 . . . 2628
6051_B:3866817C1 . . . 2629
6051_C:3866817C1 . . . 2630
6051_C:3866817C1 . . . 2631
6051_C:3866817C1 . . . 2632
6051_D:3866817C1 . . . 2633
6051_D:3866817C1 . . . 2634
6051_E:3866817C1 . . . 2635
6051_F:3866817C1 . . . 2636
6051_G:3866817C1 . . . 2637
6051_H:3866817C1 . . . 2638
6100D:RING-M-8_0 . . . 2639
6100D:RING-M-8_0 . . . 2640
6100G:RING-M-8_0 . . . 2641
6100H:RING-M-8_0 . . . 2642
6101D:RING-M-10_0 . . . 2643
6101D_5:RING-E-5-16_0 . . . 2644
6101D_6:RING-E-5-16_0 . . . 2645
6101D_7:RING-M-8_0 . . . 2646
6101G:RING-M-6_0 . . . 2647
6101H:RING-M-6_0 . . . 2648
6101_5:RING-E-5-16_0 . . . 2649
6101_6:RING-E-5-16_0 . . . 2650
6101_7:RING-M-8_0 . . . 2651
6301:RING-E-1-2_0 . . . 2652
6566:6113338C1 . . . 2653
6567:6113341C1 . . . 2654
6704:3551896C1 . . . 2657
6748:3602454C1 . . . 2664
6748:3602454C1 . . . 2665

7

7TB1:3722128C1 . . . 2687
7105:3599542C1 . . . 2690
7105A:3599542C1 . . . 2688
7106:3765544C1 . . . 2692
7107:3765545C1 . . . 2694
7110:3683465C1 . . . 2699
7110B:3683465C1 . . . 2696
7110X:3683465C1 . . . 2697
7110Z:3683465C1 . . . 2698
7110_:3683465C1 . . . 2700
7111:3683465C1 . . . 2701
7150:3605713C1 . . . 2702
7350:3755755C1 . . . 2704
7350_:3755755C1 . . . 2706

7900F:4064551C1 . . . 2708
7900F:4064551C1 . . . 2709
7900M:4064552C1 . . . 2711
7900M:4064552C1 . . . 2712

8

830:1661201C1 . . . 2762
8000:1661375C2 . . . 2715
8000:1661375C2 . . . 2716
8000F:1677851C1 . . . 2714
8000_:1661375C2 . . . 2718
8001:1661375C2 . . . 2725
8001:1661375C2 . . . 2727
8001F:1677851C1 . . . 2719
8001F:1677851C1 . . . 2722
8002:3612306C1 . . . 2732
8002L:6113477C1 . . . 2728
8002R:6113477C1 . . . 2730
8003:3612306C1 . . . 2737
8003L:6116207C1 . . . 2734
8003R:6116207C1 . . . 2736
8004L:3600049C1 . . . 2739
8004R:3600049C1 . . . 2740
8005L:3625557C1 . . . 2741
8005R:3625557C1 . . . 2742
8011L:3668886C1 . . . 2743
8011R:3668886C1 . . . 2744
8012L:3668886C1 . . . 2745
8012R:3668886C1 . . . 2746
8015L:3668886C1 . . . 2747
8015R:3668886C1 . . . 2748
8016L:3668886C1 . . . 2749
8016R:3668886C1 . . . 2750
8054:1667741C1 . . . 2751
8054:1667741C1 . . . 2752
8100:1667741C1 . . . 2755
8100:1667741C1 . . . 2756
8100F:1667740C1 . . . 2753
8202:6131286C1 . . . 2757
8203:3824986C1 . . . 2758
8203:3825517C91 . . . 2759
8203:6131286C1 . . . 2760
8303:1661778C1 . . . 2761
8310:3543888C1 . . . 2763
8450A:587567C91 . . . 2764
8450A:587568C91 . . . 2765
8800:3551896C1 . . . 2766
8803:3551896C1 . . . 2768
8804:3551896C1 . . . 2770
8903:6111813C1 . . . 2773
8904:3852527C1 . . . 2774
8956:3683465C1 . . . 2775
8958:3683465C1 . . . 2776
8993F:3823761C1 . . . 2777

9

9255:1667639C1 . . . 2778
9303:3612305C1 . . . 2779
9303:3612306C1 . . . 2780
9510F:1667741C1 . . . 2781
9510M:1667740C1 . . . 2782
9511/9511A:3601685C1 . . . 2784
9511B/9511D:3601685C1 . . . 2783
9515A:PAS2(1,2) . . . 2785
9516M:3690369C1 . . . 2786
9516M:6112506C1 . . . 2790

9532:3919376C1 2799
9536:3919376C1 2800
9540F:3924162C1 2801
9540M:3626435C1 2802
9715F:1667732C1 2803
9715M:1667733C1 2806
9716F:1667732C1 2808
9716M:1667733C1 2810
9717:3517441C1 2813
9717F:3517817C1 2812
9718:1661778C1 2814
9719:3543888C1 2816
9737:1661375C2 2818
9800F:3558026C1 2820
9800M:3558022C1 2832
9865F:1667740C1 2866
9865M:1667741C1 2867