2018 - 2020 International® HV Series Interactive Schematics

Navistar, Inc.
2701 Navistar Drive, Lisle, 60532 USA

© 2020 Navistar, Inc. All rights reserved. All marks are trademarks of their respective owners.

0000018823
Revision 13
March, 2020

TABLE OF CONTENTS

A26/B6.7/L9 - BCM (Body Control Module)
A26/B6.7/L9 - BCM (Body Control Module) Design 1

A26 - CAN Layout
A26 - CAN Layout Design 9

B6.7 - CAN Layout
B6.7 - CAN Layout Design 17

L9 - CAN Layout
L9 - CAN Layout Design 24

A26 - ABS Private J1939
A26 - ABS Private J1939 Design 31

A26 - Body J1939 (250kbps)
A26 - Body J1939 (250kbps) Design 32

A26 - Cab J1939 (250Kbps)
A26 - Cab J1939 (250Kbps) Design 33

A26 - Diagnostic Private J1939
A26 - Diagnostic Private J1939 Design 34

A26 - Engine Private J1939 (250kbps)
A26 - Engine Private J1939 (250kbps) Design 35

A26 - Low Speed J1939 (125Kbps)
A26 - Low Speed J1939 (125Kbps) Design 36

A26 - Telematics J1708 (9.6kbps)
A26 - Telematics J1708 (9.6kbps) Design 37

A26 - Powertrain J1939 Allison 3k/4k
A26 - Powertrain J1939 Allison 3k/4k Design 38

A26 - Powertrain J1939 UltraShift Transmission
A26 - Powertrain J1939 UltraShift Transmission Design 39

B6.7 - ABS Private J1939
B6.7 - ABS Private J1939 Design 40

B6.7 - Body J1939 (250kbps)
B6.7 - Body J1939 (250kbps) Design 41

B6.7 - Cab J1939 (250kbps)
B6.7 - Cab J1939 (250kbps) Design 42

B6.7 - Engine Private J1939 (250kbps)
B6.7 - Engine Private J1939 (250kbps) Design 43

B6.7 - Low Speed J1939 (125kbps)
B6.7 - Low Speed J1939 (125kbps) Design 44

B6.7 - Telematics J1708 (9.6kbps)
B6.7 - Telematics J1708 (9.6kbps) Design 45

B6.7 - Powertrain J1939 Allison 1k/2k
B6.7 - Powertrain J1939 Allison 1k/2k Design 46

TABLE OF CONTENTS

B6.7 - Powertrain J1939 Allison 3k/4k
B6.7 - Powertrain J1939 Allison 3k/4k Design 47

B6.7 - Powertrain J1939 Manual Transmission
B6.7 - Powertrain J1939 Manual Transmission Design 48

L9 - ABS Private J1939
L9 - ABS Private J1939 Design 49

L9 - Body J1939 (250kbps)
L9 - Body J1939 (250kbps) Design 50

L9 - Cab J1939 (250kbps)
L9 - Cab J1939 (250kbps) Design 51

L9 - Engine Private J1939 (250kbps)
L9 - Engine Private J1939 (250kbps) Design 52

L9 - Low Speed J1939 (125kbps)
L9 - Low Speed J1939 (125kbps) Design 53

L9 - Telematics J1708 (9.6kbps)
L9 - Telematics J1708 (9.6kbps) Design 54

L9 - Powertrain J1939 Allison 3k/4k
L9 - Powertrain J1939 Allison 3k/4k Design 55

L9 - Powertrain J1939 Eaton
L9 - Powertrain J1939 Eaton Design 56

L9 - Powertrain J1939 Manual Transmission
L9 - Powertrain J1939 Manual Transmission Design 57

A26 - ECM
A26 - ECM Design 58

B6.7 - ECM Cummins CM2350A
B6.7 - ECM Cummins CM2350A Design 59

L9 - ECM Cummins CM2350A
L9 - ECM Cummins CM2350A Design 60

A26/B6.7/L9 - Instrument Cluster (Premium)
A26/B6.7/L9 - Instrument Cluster (Premium) Design 61

A26/B6.7/L9 - Instrument Cluster (Standard)
A26/B6.7/L9 - Instrument Cluster (Standard) Design 63

A26/B6.7/L9 - Instrument Cluster - Bulb Check
A26/B6.7/L9 - Instrument Cluster - Bulb Check Design 65

A26/B6.7/L9 - Instrument Cluster - Request and Status
A26/B6.7/L9 - Instrument Cluster - Request and Status Design 66

A26/B6.7/L9 - Ground Splice Pack 1022 & 1023
A26/B6.7/L9 - Ground Splice Pack 1022 & 1023 Design 67

A26/B6.7/L9 - Ground Splice Pack 1027
A26/B6.7/L9 - Ground Splice Pack 1027 Design 68

TABLE OF CONTENTS

A26/B6.7/L9 - Interior Dual Post Ground Stud-Cowl Wall

A26/B6.7/L9 - Interior Dual Post Ground Stud-Cowl Wall Design 69

A26/B6.7/L9 - ZVR Splice Pack - 1620

A26/B6.7/L9 - ZVR Splice Pack - 1620 Design 70

A26 - Center Chassis Ground Splice Packs

A26 - Center Chassis Ground Splice Packs Design 71

B6.7 - Center Chassis Ground Splice Packs

B6.7 - Center Chassis Ground Splice Packs Design 72

L9 - Center Chassis Ground Splice Packs

L9 - Center Chassis Ground Splice Packs Design 73

A26 - Forward Chassis Ground Splice Packs 8800

A26 - Forward Chassis Ground Splice Packs 8800 Design 74

B6.7 - Forward Chassis Ground Splice Packs 8800

B6.7 - Forward Chassis Ground Splice Packs 8800 Design 75

L9 - Forward Chassis Ground Splice Packs 8800

L9 - Forward Chassis Ground Splice Packs 8800 Design 76

A26 - Powertrain Splice Pack 6704

A26 - Powertrain Splice Pack 6704 Design 77

A26 - ZVR Splice Packs 6702 & 6704B

A26 - ZVR Splice Packs 6702 & 6704B Design 78

B6.7 - Powertrain Splice Pack 6704

B6.7 - Powertrain Splice Pack 6704 Design 79

B6.7 - ZVR Splice Pack - 6747

B6.7 - ZVR Splice Pack - 6747 Design 80

L9 - Powertrain Splice Pack 6704 & 6704B

L9 - Powertrain Splice Pack 6704 & 6704B Design 81

L9 - ZVR Splice Pack - 6747

L9 - ZVR Splice Pack - 6747 Design 82

A26/B6.7/L9 - Lighting Control Module

A26/B6.7/L9 - Lighting Control Module Design 83

A26 - Aftertreatment PDM

A26 - Aftertreatment PDM Design 85

B6.7 - Aftertreatment PDM

B6.7 - Aftertreatment PDM Design 86

L9 - Aftertreatment PDM

L9 - Aftertreatment PDM Design 87

A26 - Auxilary Power Fuse

A26 - Auxilary Power Fuse Design 88

B6.7 - Auxilary Power Fuse

B6.7 - Auxilary Power Fuse Design 89

TABLE OF CONTENTS

L9 - Auxilary Power Fuse
L9 - Auxilary Power Fuse Design 90

A26 - Chassis PDM
A26 - Chassis PDM Design 91

B6.7/L9 - Chassis PDM
B6.7/L9 - Chassis PDM Design 92

A26/B6.7/L9 - Battery Feed
A26/B6.7/L9 - Battery Feed Design 93

A26/B6.7/L9 - Interior PDM Chart
A26/B6.7/L9 - Interior PDM Chart Design 94

A26/B6.7/L9 - Key Switch Accessory
A26/B6.7/L9 - Key Switch Accessory Design 95

A26/B6.7/L9 - Key Switch Ignition
A26/B6.7/L9 - Key Switch Ignition Design 96

A26 - Relays
A26 - Relays Design 97

B6.7 - Relays
B6.7 - Relays Design 98

L9 - Relays
L9 - Relays Design 99

A26/B6.7/L9 - ABS CAN Splice Pack - 1410
A26/B6.7/L9 - ABS CAN Splice Pack - 1410 Design 100

A26/B6.7/L9 - Panel Light Dimmer Splice Pack - 1021
A26/B6.7/L9 - Panel Light Dimmer Splice Pack - 1021 Design 101

A26/B6.7/L9 - Park / Turn Lights Splice Packs 1623/1625/400
A26/B6.7/L9 - Park / Turn Lights Splice Packs 1623/1625/400 Design 102

A26 - Underhood PDM
A26 - Underhood PDM Design 103

B6.7/L9 - Underhood PDM
B6.7/L9 - Underhood PDM Design 104

A26/B6.7/L9 - Radio
A26/B6.7/L9 - Radio Design 105

A26/B6.7/L9 - Radio w/Bluetooth
A26/B6.7/L9 - Radio w/Bluetooth Design 106

A26/B6.7/L9 - Radio w/Bluetooth without Steering Wheel Pod
A26/B6.7/L9 - Radio w/Bluetooth without Steering Wheel Pod Design 108

A26/B6.7/L9 - Radio w/Steering Wheel Pod
A26/B6.7/L9 - Radio w/Steering Wheel Pod Design 109

TABLE OF CONTENTS

A26/B6.7/L9 - Four Speakers Daycab BT n/QC

A26/B6.7/L9 - Four Speakers Daycab BT n/QC Design 111

A26/B6.7/L9 - Four Speakers Daycab n/BT n/QC

A26/B6.7/L9 - Four Speakers Daycab n/BT n/QC Design 112

A26/B6.7/L9 - Two Speakers Daycab BT n/QC

A26/B6.7/L9 - Two Speakers Daycab BT n/QC Design 113

A26/B6.7/L9 - Two Speakers Daycab n/BT n/QC

A26/B6.7/L9 - Two Speakers Daycab n/BT n/QC Design 114

B6.7 - Speakers:Four Speakers Daycab n/BT w/QC

B6.7 - Speakers:Four Speakers Daycab n/BT w/QC Design 115

B6.7 - Speakers:Two Speakers n/BT w/QC

B6.7 - Speakers:Two Speakers n/BT w/QC Design 116

B6.7 - Speakers:Two Speakers w/BT w/QC

B6.7 - Speakers:Two Speakers w/BT w/QC Design 117

B6.7 - Speaker:Four Speakers Daycab w/BT w/QC

B6.7 - Speaker:Four Speakers Daycab w/BT w/QC Design 118

L9 - Speakers:Four Speakers Daycab n/BT w/QC

L9 - Speakers:Four Speakers Daycab n/BT w/QC Design 119

L9 - Speakers:Two Speakers n/BT w/QC

L9 - Speakers:Two Speakers n/BT w/QC Design 120

L9 - Speakers:Two Speakers w/BT w/QC

L9 - Speakers:Two Speakers w/BT w/QC Design 121

L9 - Speaker:Four Speakers Daycab w/BT w/QC

L9 - Speaker:Four Speakers Daycab w/BT w/QC Design 122

A26/B6.7/L9 - Auxiliary Power (40A) HSD

A26/B6.7/L9 - Auxiliary Power (40A) HSD Design 123

A26 - Back-Up Alarm (Automatic) W/O Tailboard

A26 - Back-Up Alarm (Automatic) W/O Tailboard Design 124

A26 - Back-Up Alarm (Automatic) W/ Tailboard

A26 - Back-Up Alarm (Automatic) W/ Tailboard Design 125

A26 - Back-Up Alarm (Relay to 5 Pin 08TKC Tailboard to Alarm) (Automatic)

A26 - Back-Up Alarm (Relay to 5 Pin 08TKC Tailboard to Alarm) (Automatic) Design 126

A26 - Back-Up Alarm (Relay to 5 Pin 08TKC Tailboard. Alarm Plugs In) (Automatic)

A26 - Back-Up Alarm (Relay to 5 Pin 08TKC Tailboard. Alarm Plugs In) (Automatic) Design 127

A26 - Backup Alarm (Switch to 5 Pin 08TKC Tailboard to Alarm) (Manual)

A26 - Backup Alarm (Switch to 5 Pin 08TKC Tailboard to Alarm) (Manual) Design 128

TABLE OF CONTENTS

A26 - Backup Alarm (Switch to 5 Pin 08TKC Tailboard. Alarm Plugs In) (Manual)

A26 - Backup Alarm (Switch to 5 Pin 08TKC Tailboard. Alarm Plugs In) (Manual) Design 129

A26 - Back-Up Alarm (Manual) W/O Tailboard

A26 - Back-Up Alarm (Manual) W/O Tailboard Design 130

A26 - Back-Up Alarm (Manual) W/ Tailboard

A26 - Back-Up Alarm (Manual) W/ Tailboard Design 131

B6.7 - Back-Up Alarm (Automatic) W/O Tailboard

B6.7 - Back-Up Alarm (Automatic) W/O Tailboard Design 132

B6.7 - Back-Up Alarm (Automatic) W/ Tailboard

B6.7 - Back-Up Alarm (Automatic) W/ Tailboard Design 133

B6.7 - Back-Up Alarm (Manual) W/O Tailboard

B6.7 - Back-Up Alarm (Manual) W/O Tailboard Design 134

B6.7 - Back-Up Alarm (Manual) W/ Tailboard

B6.7 - Back-Up Alarm (Manual) W/ Tailboard Design 135

L9 - Back-Up Alarm (Automatic) W/O Tailboard

L9 - Back-Up Alarm (Automatic) W/O Tailboard Design 136

L9 - Back-Up Alarm (Automatic) W/ Tailboard

L9 - Back-Up Alarm (Automatic) W/ Tailboard Design 137

L9 - Back-Up Alarm (Manual) W/O Tailboard

L9 - Back-Up Alarm (Manual) W/O Tailboard Design 138

L9 - Back-Up Alarm (Manual) W/ Tailboard

L9 - Back-Up Alarm (Manual) W/ Tailboard Design 140

A26/B6.7/L9 - Banana Plugs Receptacle

A26/B6.7/L9 - Banana Plugs Receptacle Design 142

A26/B6.7/L9 - CB Radio - Power Only

A26/B6.7/L9 - CB Radio - Power Only Design 143

A26/B6.7/L9 - CB Radio - Power Only (Single Antenna)

A26/B6.7/L9 - CB Radio - Power Only (Single Antenna) Design 144

A26/B6.7/L9 - Cigar Lighter

A26/B6.7/L9 - Cigar Lighter Design 145

A26/B6.7/L9 - Cigar Lighter Aux APO

A26/B6.7/L9 - Cigar Lighter Aux APO Design 146

A26/B6.7/L9 - Standard APO

A26/B6.7/L9 - Standard APO Design 149

A26/B6.7/L9 - Standard APO Aux APO

A26/B6.7/L9 - Standard APO Aux APO Design 150

A26/B6.7/L9 - Cruise Control (W/ One Telltale 10 Pin)

A26/B6.7/L9 - Cruise Control (W/ One Telltale 10 Pin) Design 153

A26/B6.7/L9 - Vehicle Speed Control (Cruise Control) 10 Pin

A26/B6.7/L9 - Vehicle Speed Control (Cruise Control) 10 Pin Design 155

A26/B6.7/L9 - Cruise Control (W/ One Telltale 4 Pin)

A26/B6.7/L9 - Cruise Control (W/ One Telltale 4 Pin) Design 156

A26/B6.7/L9 - Vehicle Speed Control (Cruise Control) 4 Pin

A26/B6.7/L9 - Vehicle Speed Control (Cruise Control) 4 Pin Design 158

A26/B6.7/L9 - Door Ajar Reminder (Entry /Exit):4 Door

A26/B6.7/L9 - Door Ajar Reminder (Entry /Exit):4 Door Design 159

A26/B6.7/L9 - Door Ajar Reminder (Entry/Exit) 2 Door

A26/B6.7/L9 - Door Ajar Reminder (Entry/Exit) 2 Door Design 160

A26/B6.7/L9 - Door Pod Module (2 Door)

A26/B6.7/L9 - Door Pod Module (2 Door) Design 161

A26/B6.7/L9 - Door Pod Module (4 Door)

A26/B6.7/L9 - Door Pod Module (4 Door) Design 162

A26/B6.7/L9 - Mirrors (Heated)

A26/B6.7/L9 - Mirrors (Heated) Design 163

A26/B6.7/L9 - Mirrors (Heat) Switch Pack Actuated Relay Driven

A26/B6.7/L9 - Mirrors (Heat) Switch Pack Actuated Relay Driven Design 164

A26 - Heated Mirrors (Hood with Door Pods)

A26 - Heated Mirrors (Hood with Door Pods) Design 165

A26 - Heated Mirrors (RT Hood with Door Pods)

A26 - Heated Mirrors (RT Hood with Door Pods) Design 166

A26 - Mirrors (Heat) Switch Pack Actuated includes Hood Mirrors

A26 - Mirrors (Heat) Switch Pack Actuated includes Hood Mirrors Design 167

A26 - Mirrors (Heat) Switch Pack Actuated includes RT Hood Mirror

A26 - Mirrors (Heat) Switch Pack Actuated includes RT Hood Mirror Design . . . 168

B6.7 - Heated Mirrors (Hood with Door Pods)

B6.7 - Heated Mirrors (Hood with Door Pods) Design 169

B6.7 - Heated Mirrors (RT Hood with Door Pods)

B6.7 - Heated Mirrors (RT Hood with Door Pods) Design 171

B6.7 - Mirrors (Heat) Switch Pack Actuated includes Hood Mirrors

B6.7 - Mirrors (Heat) Switch Pack Actuated includes Hood Mirrors Design 175

B6.7 - Mirrors (Heat) Switch Pack Actuated includes RT Hood Mirror

B6.7 - Mirrors (Heat) Switch Pack Actuated includes RT Hood Mirror Design . . . 177

L9 - Heated Mirrors (Hood with Door Pods)

L9 - Heated Mirrors (Hood with Door Pods) Design 181

L9 - Heated Mirrors (RT Hood with Door Pods)

L9 - Heated Mirrors (RT Hood with Door Pods) Design 185

L9 - Mirrors (Heat) Switch Pack Actuated includes Hood Mirrors

L9 - Mirrors (Heat) Switch Pack Actuated includes Hood Mirrors Design 189

L9 - Mirrors (Heat) Switch Pack Actuated includes RT Hood Mirror

L9 - Mirrors (Heat) Switch Pack Actuated includes RT Hood Mirror Design 193

A26/B6.7/L9 - Power Mirrors (Control Switch Actuated)

A26/B6.7/L9 - Power Mirrors (Control Switch Actuated) Design 197

A26 - City Horn (W/ 10PIN Park Brake)

A26 - City Horn (W/ 10PIN Park Brake) Design 199

A26 - City Horn (W/ 10PIN)

A26 - City Horn (W/ 10PIN) Design 201

A26 - City Horn (W/ 4PIN Park Brake)

A26 - City Horn (W/ 4PIN Park Brake) Design 203

A26 - City Horn (W/ 4PIN)

A26 - City Horn (W/ 4PIN) Design 207

B6.7 - City Horn (W/ 10PIN CLK & Park Brake)

B6.7 - City Horn (W/ 10PIN CLK & Park Brake) Design 211

B6.7 - City Horn (W/ 10PIN CLK)

B6.7 - City Horn (W/ 10PIN CLK) Design 214

B6.7 - City Horn (W/ 4PIN CLK & Park Brake)

B6.7 - City Horn (W/ 4PIN CLK & Park Brake) Design 217

B6.7 - City Horn (W/ 4PIN CLK)

B6.7 - City Horn (W/ 4PIN CLK) Design 223

L9 - City Horn (W/ 10PIN CLK & Park Brake)

L9 - City Horn (W/ 10PIN CLK & Park Brake) Design 229

L9 - City Horn (W/ 10PIN CLK)

L9 - City Horn (W/ 10PIN CLK) Design 231

L9 - City Horn (W/ 4PIN CLK & Park Brake)

L9 - City Horn (W/ 4PIN CLK & Park Brake) Design 233

L9 - City Horn (W/ 4PIN CLK)

L9 - City Horn (W/ 4PIN CLK) Design 237

A26 - (Rand Mcnallly) GPS Display

A26 - (Rand Mcnallly) GPS Display Design 241

A26/B6.7/L9 - Heated Windshield

A26/B6.7/L9 - Heated Windshield Design 242

A26/B6.7/L9 - Multiplexed Switch Pack (Primary Switch)

A26/B6.7/L9 - Multiplexed Switch Pack (Primary Switch) Design 243

A26/B6.7/L9 - Real Time Clock (RTC) (BCM Controlled)

A26/B6.7/L9 - Real Time Clock (RTC) (BCM Controlled) Design 244

A26 - Remote Keyless Access

A26 - Remote Keyless Access Design 245

B6.7 - Remote Keyless Access

B6.7 - Remote Keyless Access Design 246

L9 - Remote Keyless Access

L9 - Remote Keyless Access Design 247

A26/B6.7/L9 - Over The Air Electrical I/O (OnCommand Link / N2 Module)

A26/B6.7/L9 - Over The Air Electrical I/O (OnCommand Link / N2 Module) Design 248

A26/B6.7/L9 - Over the Air Programming (OnCommand Link / N2 Module)

A26/B6.7/L9 - Over the Air Programming (OnCommand Link / N2 Module) Design 249

A26 - Telematics (PEOPLE NET, DAYCAB)

A26 - Telematics (PEOPLE NET, DAYCAB) Design 250

L9 - Telematics (PEOPLE NET DAYCAB)

L9 - Telematics (PEOPLE NET DAYCAB) Design 251

A26/B6.7/L9 - Theft Deterrent (Grid Controlled)

A26/B6.7/L9 - Theft Deterrent (Grid Controlled) Design 252

A26/B6.7/L9 - One USB

A26/B6.7/L9 - One USB Design 253

A26/B6.7/L9 - Two USB

A26/B6.7/L9 - Two USB Design 254

A26/B6.7/L9 - Vehicle Sleep Mode

A26/B6.7/L9 - Vehicle Sleep Mode Design 256

A26 - 2-Way Radio

A26 - 2-Way Radio Design 257

B6.7 - 2-Way Radio

B6.7 - 2-Way Radio Design 259

L9 - 2-Way Radio

L9 - 2-Way Radio Design 261

A26/B6.7/L9 - DPF Regen Switch Only

A26/B6.7/L9 - DPF Regen Switch Only Design 263

A26/B6.7/L9 - DPF With Bistable Inhibit Switch

A26/B6.7/L9 - DPF With Bistable Inhibit Switch Design 264

A26/B6.7/L9 - DPF With Monostable Inhibit Switch

A26/B6.7/L9 - DPF With Monostable Inhibit Switch Design 265

A26 - Selective Catalytic Reduction (SCR)

A26 - Selective Catalytic Reduction (SCR) Design 266

B6.7 - Selective Catalytic Reduction (SCR)

B6.7 - Selective Catalytic Reduction (SCR) Design 270

L9 - Selective Catalytic Reduction (SCR)

L9 - Selective Catalytic Reduction (SCR) Design 272

A26/B6.7/L9 - Adjustable Engine Speed Control (PTO) 10-pin

A26/B6.7/L9 - Adjustable Engine Speed Control (PTO) 10-pin Design 274

A26/B6.7/L9 - Adjustable Engine Speed Control (PTO) 4-pin

A26/B6.7/L9 - Adjustable Engine Speed Control (PTO) 4-pin Design 276

A26 - Auxiliary Air Solenoids Normally Closed

A26 - Auxiliary Air Solenoids Normally Closed Design 277

A26 - Auxillary Air Solenoids Normally Open

A26 - Auxillary Air Solenoids Normally Open Design 278

B6.7 - Auxiliary Air Solenoids (1 Normally Closed) Option 1

B6.7 - Auxiliary Air Solenoids (1 Normally Closed) Option 1 Design 284

B6.7 - Auxiliary Air Solenoids (1 Normally Closed) Option 2

B6.7 - Auxiliary Air Solenoids (1 Normally Closed) Option 2 Design 285

B6.7 - Auxiliary Air Solenoids (1 Normally Closed) Option 3

B6.7 - Auxiliary Air Solenoids (1 Normally Closed) Option 3 Design 288

L9 - Auxiliary Air Solenoids (1 Normally Closed)

L9 - Auxiliary Air Solenoids (1 Normally Closed) Design 291

L9 - Auxillary Air Solenoids Normally Closed

L9 - Auxillary Air Solenoids Normally Closed Design 292

L9 - Four Auxillary Air Solenoids

L9 - Four Auxillary Air Solenoids Design 298

L9 - Three Auxillary Air Solenoids

L9 - Three Auxillary Air Solenoids Design 299

A26/B6.7/L9 - Body Builder Aux Power (In Cab, BOC, or EOF)

A26/B6.7/L9 - Body Builder Aux Power (In Cab, BOC, or EOF) Design 302

A26 - Body Builder Lighting - BOC, 08HBX (Automatic)

A26 - Body Builder Lighting - BOC, 08HBX (Automatic) Design 305

A26 - Body Builder Lighting - BOC, 08HBX (Manual)

A26 - Body Builder Lighting - BOC, 08HBX (Manual) Design 306

A26 - Body Builder Lighting - Combined Turn and Stop Lamps (Automatic)

A26 - Body Builder Lighting - Combined Turn and Stop Lamps (Automatic) Design 307

A26 - Body Builder Lighting - Combined Turn and Stop Lamps (Manual)

A26 - Body Builder Lighting - Combined Turn and Stop Lamps (Manual) Design 310

A26 - Body Builder Lighting - Separate Turn and Stop Lamps (Blunt Cut) - Option 1

A26 - Body Builder Lighting - Separate Turn and Stop Lamps (Blunt Cut) - Option 1 Design 313

A26 - Body Builder Lighting - Separate Turn and Stop Lamps (Blunt Cut) - Option 2

A26 - Body Builder Lighting - Separate Turn and Stop Lamps (Blunt Cut) - Option 2 Design 314

B6.7 - Body Builder Lighting - Combined Turn and Stop Lamps (Automatic)

B6.7 - Body Builder Lighting - Combined Turn and Stop Lamps (Automatic) Design 315

B6.7 - Body Builder Lighting - Combined Turn and Stop Lamps (Manual)

B6.7 - Body Builder Lighting - Combined Turn and Stop Lamps (Manual) Design 318

B6.7 - Body Builder Lighting - Separate Turn and Stop Lamps (Blunt Cut) Option 1

B6.7 - Body Builder Lighting - Separate Turn and Stop Lamps (Blunt Cut) Option 1 Design 321

B6.7 - Body Builder Lighting - Separate Turn and Stop Lamps (Blunt Cut) Option 2

B6.7 - Body Builder Lighting - Separate Turn and Stop Lamps (Blunt Cut) Option 2 Design 322

L9 - Body Builder Lighting - Combined Turn and Stop Lamps (Automatic)

L9 - Body Builder Lighting - Combined Turn and Stop Lamps (Automatic) Design 323

L9 - Body Builder Lighting - Combined Turn and Stop Lamps (Manual)

L9 - Body Builder Lighting - Combined Turn and Stop Lamps (Manual) Design 326

L9 - Body Builder Lighting - Separate Turn and Stop Lamps (Blunt Cut) Option 1

L9 - Body Builder Lighting - Separate Turn and Stop Lamps (Blunt Cut) Option 1 Design 332

L9 - Body Builder Lighting - Separate Turn and Stop Lamps (Blunt Cut) Option 2

L9 - Body Builder Lighting - Separate Turn and Stop Lamps (Blunt Cut) Option 2 Design 333

A26 - I/O Expansion
A26 - I/O Expansion Design 334

B6.7 - I/O Expansion
B6.7 - I/O Expansion Design 335

L9 - I/O Expansion
L9 - I/O Expansion Design 336

A26 - Body Builder - Powertrain
A26 - Body Builder - Powertrain Design 337

A26 - Power Lift Gate
A26 - Power Lift Gate Design 338

B6.7 - Power Lift Gate
B6.7 - Power Lift Gate Design 339

L9 - Power Lift Gate
L9 - Power Lift Gate Design 340

A26 - DLB - Remote Power Modules (1 RPM n/ Switch Packs)
A26 - DLB - Remote Power Modules (1 RPM n/ Switch Packs) Design 341

A26 - DLB - Remote Power Modules (1 RPM w/ Switch Packs)
A26 - DLB - Remote Power Modules (1 RPM w/ Switch Packs) Design 344

A26 - DLB - Remote Power Modules (2 RPM n/ Switch Pack)
A26 - DLB - Remote Power Modules (2 RPM n/ Switch Pack) Design 347

A26 - DLB - Remote Power Modules (2 RPM n/ Switch Pack)Option2
A26 - DLB - Remote Power Modules (2 RPM n/ Switch Pack)Option2 Design . 350

A26 - DLB - Remote Power Modules (2 RPM w/ Switch Packs)
A26 - DLB - Remote Power Modules (2 RPM w/ Switch Packs) Design 351

A26 - DLB - Remote Power Modules (2 RPM w/ Switch Packs)Option2
A26 - DLB - Remote Power Modules (2 RPM w/ Switch Packs)Option2 Design352

A26 - DLB - Remote Power Modules (3 RPM w/ Swtich Packs)
A26 - DLB - Remote Power Modules (3 RPM w/ Swtich Packs) Design 355

A26 - DLB - Remote Power Modules (3 RPM w/ Swtich Packs)Option2
A26 - DLB - Remote Power Modules (3 RPM w/ Swtich Packs)Option2 Design356

A26 - DLB - Remote Power Module (3 RPM n/Switch Pack)
A26 - DLB - Remote Power Module (3 RPM n/Switch Pack) Design 358

A26 - DLB - Remote Power Module (3 RPM n/Switch Pack)Option2

A26 - DLB - Remote Power Module (3 RPM n/Switch Pack)Option2 Design . . .359

B6.7 - DLB - Remote Power Modules (1 RPM n/ Switch Packs)

B6.7 - DLB - Remote Power Modules (1 RPM n/ Switch Packs) Design 361

B6.7 - DLB - Remote Power Modules (1 RPM w/ Switch Packs)

B6.7 - DLB - Remote Power Modules (1 RPM w/ Switch Packs) Design 364

B6.7 - DLB - Remote Power Modules (2 RPM n/ Switch Pack)

B6.7 - DLB - Remote Power Modules (2 RPM n/ Switch Pack) Design 367

B6.7 - DLB - Remote Power Modules (2 RPM w/ Switch Packs)

B6.7 - DLB - Remote Power Modules (2 RPM w/ Switch Packs) Design 371

B6.7 - DLB - Remote Power Modules (3 RPM w/ Swtich Packs)

B6.7 - DLB - Remote Power Modules (3 RPM w/ Swtich Packs) Design 375

B6.7 - DLB - Remote Power Module (3 RPM n/Switch Pack)

B6.7 - DLB - Remote Power Module (3 RPM n/Switch Pack) Design 376

L9 - DLB - Remote Power Modules (1 RPM n/ Switch Packs)

L9 - DLB - Remote Power Modules (1 RPM n/ Switch Packs) Design 377

L9 - DLB - Remote Power Modules (1 RPM w/ Switch Packs)

L9 - DLB - Remote Power Modules (1 RPM w/ Switch Packs) Design 380

L9 - DLB - Remote Power Modules (2 RPM n/ Switch Pack)

L9 - DLB - Remote Power Modules (2 RPM n/ Switch Pack) Design 383

L9 - DLB - Remote Power Modules (2 RPM w/ Switch Packs)

L9 - DLB - Remote Power Modules (2 RPM w/ Switch Packs) Design 387

L9 - DLB - Remote Power Modules (3 RPM w/ Swtich Packs)

L9 - DLB - Remote Power Modules (3 RPM w/ Swtich Packs) Design 391

L9 - DLB - Remote Power Module (3 RPM n/Switch Pack)

L9 - DLB - Remote Power Module (3 RPM n/Switch Pack) Design 392

A26 - Remote Start/Stop

A26 - Remote Start/Stop Design 393

B6.7 - Remote Start/Stop

B6.7 - Remote Start/Stop Design 394

B6.7 - Remote Start/Stop w/ Emergency Pump

B6.7 - Remote Start/Stop w/ Emergency Pump Design 395

L9 - Remote Start/Stop

L9 - Remote Start/Stop Design 396

L9 - Remote Start/Stop w/ Emergency Pump

L9 - Remote Start/Stop w/ Emergency Pump Design 397

A26 - Transmission Power Take Off (Auto Trans Dual PTO W/ 42 Parameters)

A26 - Transmission Power Take Off (Auto Trans Dual PTO W/ 42 Parameters) Design 398

A26 - Transmission Power Take Off (Manual Trans Dual PTO W/ 42 Parameters)

A26 - Transmission Power Take Off (Manual Trans Dual PTO W/ 42 Parameters) Design 399

A26 - Transmission Power Take Off (Auto Trans Single PTO w/21 Parameters)

A26 - Transmission Power Take Off (Auto Trans Single PTO w/21 Parameters) Design 400

A26 - Transmission Power Take Off (Manual Trans Single PTO w/ 21 Parameters)

A26 - Transmission Power Take Off (Manual Trans Single PTO w/ 21 Parameters) Design 401

A26 - Transmission Power Take Off (Single Input Configurable pull up or pull down)

A26 - Transmission Power Take Off (Single Input Configurable pull up or pull down) Design 402

B6.7 - Transmission Power Take Off (Auto Trans Single PTO w/21 Parameters)

B6.7 - Transmission Power Take Off (Auto Trans Single PTO w/21 Parameters) Design 403

B6.7 - Transmission Power Take Off (Manual Trans Single PTO w/21 Parameters)

B6.7 - Transmission Power Take Off (Manual Trans Single PTO w/21 Parameters) Design 404

B6.7 - Transmission Power Take Off (Single Input configurable pull up or pull down)

B6.7 - Transmission Power Take Off (Single Input configurable pull up or pull down) Design 405

L9 - Transmission Power Take Off (Auto Trans Single PTO w/21 Parameters)

L9 - Transmission Power Take Off (Auto Trans Single PTO w/21 Parameters) Design 406

L9 - Transmission Power Take Off (Auto Trans with Lectradrive)

L9 - Transmission Power Take Off (Auto Trans with Lectradrive) Design 407

L9 - Transmission Power Take Off (Lectrashift PTO with Manual Trans)

L9 - Transmission Power Take Off (Lectrashift PTO with Manual Trans) Design 408

L9 - Transmission Power Take Off (Manual Trans Single PTO w/21 Parameters)

L9 - Transmission Power Take Off (Manual Trans Single PTO w/21 Parameters) Design 409

L9 - Transmission Power Take Off (Single Input configurable pull up or pull down)

L9 - Transmission Power Take Off (Single Input configurable pull up or pull down) Design 410

L9 - Transmission Power Take Off (Single PTO W/ RPM and Auto Trans)

L9 - Transmission Power Take Off (Single PTO W/ RPM and Auto Trans) Design 411

L9 - Transmission Power Take Off (Single PTO W/ RPM and Manual Trans)

L9 - Transmission Power Take Off (Single PTO W/ RPM and Manual Trans) Design 412

A26 - Rightside Air Dryer

A26 - Rightside Air Dryer Design 413

B6.7 - RIGHTSIDE AIR DRYER

B6.7 - RIGHTSIDE AIR DRYER Design 424

L9 - RIGHTSIDE AIR DRYER

L9 - RIGHTSIDE AIR DRYER Design 430

A26 - Drain Valve Heater

A26 - Drain Valve Heater Design 441

B6.7 - Drain Valve Heater

B6.7 - Drain Valve Heater Design 451

L9 - Drain Valve Heater

L9 - Drain Valve Heater Design 458

A26 - Antilock Brake System (ABS) Bendix

A26 - Antilock Brake System (ABS) Bendix Design 467

A26 - Antilock Brake System (ABS)-Wabco 4 Channel Implementation

A26 - Antilock Brake System (ABS)-Wabco 4 Channel Implementation Design 470

B6.7 - Antilock Brake System (ABS) BENDIX 4 Channel Implemenation

B6.7 - Antilock Brake System (ABS) BENDIX 4 Channel Implemenation Design 471

L9 - Antilock Brake System (ABS) BENDIX 4 Channel Implemenation

L9 - Antilock Brake System (ABS) BENDIX 4 Channel Implemenation Design . 474

L9 - Antilock Brake System (ABS) Bendix 6 Channel Implementation

L9 - Antilock Brake System (ABS) Bendix 6 Channel Implementation Design . . 475

L9 - Antilock Brake System (ABS) Wabco 4 Channel Implementation

L9 - Antilock Brake System (ABS) Wabco 4 Channel Implementation Design . . 484

A26 - Park Brake Control (Monitoring)(GEN IV BCM)

A26 - Park Brake Control (Monitoring)(GEN IV BCM) Design 485

B6.7 - Park Brake Controls (Monitoring) (Door Switch City Horn)

B6.7 - Park Brake Controls (Monitoring) (Door Switch City Horn) Design 486

L9 - Park Brake Controls (Monitoring) (Door Switch City Horn)

L9 - Park Brake Controls (Monitoring) (Door Switch City Horn) Design 487

L9 - Park Brake Control (Monitoring)(GEN IV BCM)

L9 - Park Brake Control (Monitoring)(GEN IV BCM) Design 488

A26 - Bendix Tractor or Towing Truck N/ Air SUSP J1939 Driven Lamp

A26 - Bendix Tractor or Towing Truck N/ Air SUSP J1939 Driven Lamp Design 489

A26 - Bendix Tractor or Towing Truck W/ Air SUSP J1939 Driven Lamp

A26 - Bendix Tractor or Towing Truck W/ Air SUSP J1939 Driven Lamp Design 493

A26 - Stability Control (Bendix Straight Truck J1939 Driven Lamp)

A26 - Stability Control (Bendix Straight Truck J1939 Driven Lamp) Design 497

B6.7 - Stability Control (Bendix Straight Truck J1939 Driven Lamp)

B6.7 - Stability Control (Bendix Straight Truck J1939 Driven Lamp) Design . . . 501

L9 - Bendix Tractor or Towing Truck W/ Air SUSP J1939 Driven Lamp

L9 - Bendix Tractor or Towing Truck W/ Air SUSP J1939 Driven Lamp Design 505

L9 - Stability Control (Bendix Straight Truck J1939 Driven Lamp)

L9 - Stability Control (Bendix Straight Truck J1939 Driven Lamp) Design 507

A26 - Traction Control (Bendix)

A26 - Traction Control (Bendix) Design 511

B6.7 - Traction Control (Bendix)

B6.7 - Traction Control (Bendix) Design 513

L9 - Traction Control (Bendix)

L9 - Traction Control (Bendix) Design 515

A26/B6.7/L9 - A26 - Adaptive Cruise Control w/o Display (Bendix)

A26/B6.7/L9 - A26 - Adaptive Cruise Control w/o Display (Bendix) Design 516

A26 - Coolant Level Monitoring (No Coolant Module)

A26 - Coolant Level Monitoring (No Coolant Module) Design 517

B6.7 - Coolant Level Monitoring (No Coolant Module)

B6.7 - Coolant Level Monitoring (No Coolant Module) Design 518

L9 - Coolant Level Monitoring (No Coolant Module)

L9 - Coolant Level Monitoring (No Coolant Module) Design 519

HV B6.7 - Coolant Level Monitoring (With Coolant Module)

HV B6.7 - Coolant Level Monitoring (With Coolant Module) Design 520

HV L9 - Coolant Level Monitoring (With Coolant Module)

HV L9 - Coolant Level Monitoring (With Coolant Module) Design 521

A26 - Cooling Fan Control Two-Speed

A26 - Cooling Fan Control Two-Speed Design 522

B6.7 - Cooling Fan Control Two-Speed

B6.7 - Cooling Fan Control Two-Speed Design 523

A26/B6.7/L9 - Engine Block Heater

A26/B6.7/L9 - Engine Block Heater Design 525

A26/B6.7/L9 - Engine Fuel and Block Heaters (Purchased Assembly)

A26/B6.7/L9 - Engine Fuel and Block Heaters (Purchased Assembly) Design . 526

A26/B6.7/L9 - Engine Oil and Block Heaters (Purchased Assembly)

A26/B6.7/L9 - Engine Oil and Block Heaters (Purchased Assembly) Design . . .527

A26/B6.7/L9 - Engine Oil Fuel and Block Heaters

A26/B6.7/L9 - Engine Oil Fuel and Block Heaters Design 528

A26 - Engine Brake Mux Switch

A26 - Engine Brake Mux Switch Design 529

A26 - Engine Brake W/ Stalk Shifter

A26 - Engine Brake W/ Stalk Shifter Design 530

B6.7/L9 - Engine Brake Mux Switch

B6.7/L9 - Engine Brake Mux Switch Design 531

B6.7/L9 - Engine Brake W/ Stalk Shifter

B6.7/L9 - Engine Brake W/ Stalk Shifter Design 532

A26 - Exhaust Brake

A26 - Exhaust Brake Design 533

B6.7 - Exhaust Brake (Cummins)

B6.7 - Exhaust Brake (Cummins) Design 534

L9 - Exhaust Brake (Cummins)

L9 - Exhaust Brake (Cummins) Design 535

A26 - Snow Valve Control

A26 - Snow Valve Control Design 536

A26/B6.7/L9 - Snow Valve Control

A26/B6.7/L9 - Snow Valve Control Design 538

B6.7 - Snow Valve Control

B6.7 - Snow Valve Control Design 539

L9 - Snow Valve Control

L9 - Snow Valve Control Design 541

A26 - Starting Aid (Flame Start)

A26 - Starting Aid (Flame Start) Design 543

B6.7 - Starting Aid (Grid Heater)

B6.7 - Starting Aid (Grid Heater) Design 544

L9 - Starting Aid (Grid Heater)

L9 - Starting Aid (Grid Heater) Design 545

A26 - Vehicle Acceleration (w/ Two PWR Two GND & Two STS)

A26 - Vehicle Acceleration (w/ Two PWR Two GND & Two STS) Design 546

B6.7 - Vehicle Acceleration (w/ Two PWR Two GND & Two STS)

B6.7 - Vehicle Acceleration (w/ Two PWR Two GND & Two STS) Design 547

L9 - Vehicle Acceleration (w/ Two PWR Two GND & Two STS)

L9 - Vehicle Acceleration (w/ Two PWR Two GND & Two STS) Design 548

A26/B6.7/L9 - Alternate Flashing (Wig Wag) - Park Brake disables High Beams

A26/B6.7/L9 - Alternate Flashing (Wig Wag) - Park Brake disables High Beams Design 549

A26/B6.7/L9 - Alternate Flashing (Wig Wag) - Park Brake disables Wig Wag

A26/B6.7/L9 - Alternate Flashing (Wig Wag) - Park Brake disables Wig Wag Design 550

A26/B6.7/L9 - Automatic Lighting - Dual Sensor Twilight/Solar

A26/B6.7/L9 - Automatic Lighting - Dual Sensor Twilight/Solar Design 551

A26/B6.7/L9 - Automatic Lighting - Single Sensor Twilight

A26/B6.7/L9 - Automatic Lighting - Single Sensor Twilight Design 553

A26 - Backup Light (Dual Daisy Reverse LT)Allison/ZF Trans 3K/4K

A26 - Backup Light (Dual Daisy Reverse LT)Allison/ZF Trans 3K/4K Design . . .555

A26 - Backup Light (Dual Reverse Light)Allison/ZF Trans 3K/4K

A26 - Backup Light (Dual Reverse Light)Allison/ZF Trans 3K/4K Design 557

A26 - Backup Lights (Dual Daisy Reverse Light) Eaton/Manual Trans

A26 - Backup Lights (Dual Daisy Reverse Light) Eaton/Manual Trans Design . . 559

A26 - Backup Lights (Dual Reverse Light) Eaton/Manual Trans

A26 - Backup Lights (Dual Reverse Light) Eaton/Manual Trans Design 560

A26 - Backup Light (Single Reverse Light)Allison 3K/4K

A26 - Backup Light (Single Reverse Light)Allison 3K/4K Design 561

A26 - Backup Light (Single Reverse Light) Allison 3K/4K

A26 - Backup Light (Single Reverse Light) Allison 3K/4K Design 563

A26 - Backup Light (Single Reverse Light) Allison 3K/4K Option2

A26 - Backup Light (Single Reverse Light) Allison 3K/4K Option2 Design 565

A26 - Backup Light (Single Reverse Light) W/Less Power Module Allison 3K/4K

A26 - Backup Light (Single Reverse Light) W/Less Power Module Allison 3K/4K Design 567

A26 - Backup Lights (Reverse) W/Less Power Module Eaton/Manual Trans

A26 - Backup Lights (Reverse) W/Less Power Module Eaton/Manual Trans Design 569

A26 - Backup Lights (Single Reverse Lights) Eaton/Manual Trans

A26 - Backup Lights (Single Reverse Lights) Eaton/Manual Trans Design 570

A26 - Backup Lights (Single Reverse Lights) Eaton/Manual Transmission

A26 - Backup Lights (Single Reverse Lights) Eaton/Manual Transmission Design 571

A26 - Backup Lights (Single Reverse Lights) Eaton/Manual Trans Option2

A26 - Backup Lights (Single Reverse Lights) Eaton/Manual Trans Option2 Design 572

A26 - Backup Lights (Single Reverse Light) Eaton/Manual Trans

A26 - Backup Lights (Single Reverse Light) Eaton/Manual Trans Design 573

B6.7 - Backup Light (Dual Daisy Reverse LT)Allison/ZF Trans 1K/2K

B6.7 - Backup Light (Dual Daisy Reverse LT)Allison/ZF Trans 1K/2K Design . . 574

B6.7 - Backup Light (Dual Daisy Reverse LT)Allison/ZF Trans 3K/4K

B6.7 - Backup Light (Dual Daisy Reverse LT)Allison/ZF Trans 3K/4K Design . . 575

B6.7 - Backup Light (Dual Reverse Light)Allison/ZF Trans 1K/2K

B6.7 - Backup Light (Dual Reverse Light)Allison/ZF Trans 1K/2K Design 577

B6.7 - Backup Light (Dual Reverse Light)Allison/ZF Trans 3K/4K

B6.7 - Backup Light (Dual Reverse Light)Allison/ZF Trans 3K/4K Design 578

B6.7 - Backup Lights (Dual Daisy Reverse Light) Eaton/Manual Trans

B6.7 - Backup Lights (Dual Daisy Reverse Light) Eaton/Manual Trans Design . 580

B6.7 - Backup Lights (Dual Reverse Light) Eaton/Manual Trans

B6.7 - Backup Lights (Dual Reverse Light) Eaton/Manual Trans Design 581

B6.7 - Backup Light (Single Reverse Light) Allison 1K/2K Option 1

B6.7 - Backup Light (Single Reverse Light) Allison 1K/2K Option 1 Design 582

B6.7 - Backup Light (Single Reverse Light) Allison 1K/2K Option 2

B6.7 - Backup Light (Single Reverse Light) Allison 1K/2K Option 2 Design 583

B6.7 - Backup Light (Single Reverse Light) Allison 1K/2K Option 3

B6.7 - Backup Light (Single Reverse Light) Allison 1K/2K Option 3 Design 584

B6.7 - Backup Light (Single Reverse Light) Allison 3K/4K Option 1

B6.7 - Backup Light (Single Reverse Light) Allison 3K/4K Option 1 Design 585

B6.7 - Backup Light (Single Reverse Light) Allison 3K/4K Option 2

B6.7 - Backup Light (Single Reverse Light) Allison 3K/4K Option 2 Design 587

B6.7 - Backup Light (Single Reverse Light) Allison 3K/4K Option 3

B6.7 - Backup Light (Single Reverse Light) Allison 3K/4K Option 3 Design 589

B6.7 - Backup Lights (Single Reverse Lights) Eaton/Manual Trans Option 1

B6.7 - Backup Lights (Single Reverse Lights) Eaton/Manual Trans Option 1 Design 591

B6.7 - Backup Lights (Single Reverse Lights) Eaton/Manual Trans Option 2

B6.7 - Backup Lights (Single Reverse Lights) Eaton/Manual Trans Option 2 Design 592

B6.7 - Backup Lights (Single Reverse Light) Eaton/Manual Trans

B6.7 - Backup Lights (Single Reverse Light) Eaton/Manual Trans Design 593

L9 - Backup Light (Dual Daisy Reverse Light)Allison/ZF Trans 3K/4K

L9 - Backup Light (Dual Daisy Reverse Light)Allison/ZF Trans 3K/4K Design . . 594

L9 - Backup Lights (Dual Daisy Reverse Light) Eaton/Manual Trans

L9 - Backup Lights (Dual Daisy Reverse Light) Eaton/Manual Trans Design . . . 596

L9 - Backup Lights (Dual Reverse Light) Eaton/Manual Trans

L9 - Backup Lights (Dual Reverse Light) Eaton/Manual Trans Design 598

L9 - Backup Light (Single Reverse Light)Allison

L9 - Backup Light (Single Reverse Light)Allison Design 600

L9 - Backup Light (Single Reverse Light) Allison 3K/4K Option 1

L9 - Backup Light (Single Reverse Light) Allison 3K/4K Option 1 Design 602

L9 - Backup Light (Single Reverse Light) Allison 3K/4K Option 2

L9 - Backup Light (Single Reverse Light) Allison 3K/4K Option 2 Design 604

L9 - Backup Light (Single Reverse Light) Allison 3K/4K Option 3

L9 - Backup Light (Single Reverse Light) Allison 3K/4K Option 3 Design 606

L9 - Backup Lights (Single Reverse Light) Eaton/Manual Trans Option 1

L9 - Backup Lights (Single Reverse Light) Eaton/Manual Trans Option 1 Design 608

L9 - Backup Lights (Single Reverse Light) Eaton/Manual Trans Option 2

L9 - Backup Lights (Single Reverse Light) Eaton/Manual Trans Option 2 Design 610

L9 - Backup Lights (Single Reverse Light) Eaton/Manual Trans Option 3

L9 - Backup Lights (Single Reverse Light) Eaton/Manual Trans Option 3 Design 612

L9 - Backup Lights (Single Reverse Light) Eaton/Manual Trans Option 4

L9 - Backup Lights (Single Reverse Light) Eaton/Manual Trans Option 4 Design 614

A26 - Brake Switch

A26 - Brake Switch Design 616

B6.7 - Brake Switch

B6.7 - Brake Switch Design 617

L9 - Brake Switch

L9 - Brake Switch Design 618

A26 - Rear Lights Stop - Daisy Chain

A26 - Rear Lights Stop - Daisy Chain Design 619

A26 - Rear Lights Stop - Dual Assembly

A26 - Rear Lights Stop - Dual Assembly Design 620

A26 - Rear Lights Stop - Single Assemby

A26 - Rear Lights Stop - Single Assemby Design 621

A26 - Rear Lights Stop - Single Assemby Jumper Harness W/08TKC, 08THM

A26 - Rear Lights Stop - Single Assemby Jumper Harness W/08TKC, 08THM Design 622

A26 - Rear Lights Stop - Single Assemby W/08TKJ

A26 - Rear Lights Stop - Single Assemby W/08TKJ Design 623

A26 - Separate Rear Lights (Stop) W/08TVH

A26 - Separate Rear Lights (Stop) W/08TVH Design 624

B6.7 - Rear Lights Stop - Daisy Chain

B6.7 - Rear Lights Stop - Daisy Chain Design 625

B6.7 - Rear Lights Stop - Dual Assembly

B6.7 - Rear Lights Stop - Dual Assembly Design 626

B6.7 - Rear Lights Stop - Single Assemby

B6.7 - Rear Lights Stop - Single Assemby Design 627

L9 - Rear Lights Stop - Daisy Chain

L9 - Rear Lights Stop - Daisy Chain Design 628

L9 - Rear Lights Stop - Dual Assembly

L9 - Rear Lights Stop - Dual Assembly Design 629

L9 - Rear Lights Stop - Single Assemby

L9 - Rear Lights Stop - Single Assemby Design 630

A26/B6.7/L9 - Clearance and Identification Lights

A26/B6.7/L9 - Clearance and Identification Lights Design 631

A26/B6.7/L9 - Daytime Running Lights (Output to Plow Lights)

A26/B6.7/L9 - Daytime Running Lights (Output to Plow Lights) Design 632

A26 - Directional Signal (Turn) W/ Daisy Chain Box Lamps

A26 - Directional Signal (Turn) W/ Daisy Chain Box Lamps Design 633

A26 - Directional Signal (Turn) W/ LED BOX LAMPS

A26 - Directional Signal (Turn) W/ LED BOX LAMPS Design 634

A26 - Directional Signal (Turn) W/ Less Power Module Tail Board, W/Hazard SW

A26 - Directional Signal (Turn) W/ Less Power Module Tail Board, W/Hazard SW Design 635

A26 - Directional Signal (Turn) W/ Single Tail Board W/Hazard SW

A26 - Directional Signal (Turn) W/ Single Tail Board W/Hazard SW Design . . . 636

A26 - Directional Signal (Turn) W/ Daisy Chain Box Lamps, W/Plow Lights

A26 - Directional Signal (Turn) W/ Daisy Chain Box Lamps, W/Plow Lights Design 637

A26 - Directional Signal (Turn) W/ LED BOX LAMPS, W/Plow Lights

A26 - Directional Signal (Turn) W/ LED BOX LAMPS, W/Plow Lights Design . . 639

A26 - Directional Signal (Turn) W/ Less Power Module Tail Board, W/Hazard SW, W/Plow Lights

A26 - Directional Signal (Turn) W/ Less Power Module Tail Board, W/Hazard SW, W/Plow Lights Design 641

A26 - Directional Signal (Turn) W/ Single Tail Board, W/Hazard SW, W/Plow Lights

A26 - Directional Signal (Turn) W/ Single Tail Board, W/Hazard SW, W/Plow Lights Design 643

B6.7 - Directional Signal (Turn) W/ DAISY CHAIN BOX LAMPS

B6.7 - Directional Signal (Turn) W/ DAISY CHAIN BOX LAMPS Design 645

B6.7 - Directional Signal (Turn) W/ LED BOX LAMPS

B6.7 - Directional Signal (Turn) W/ LED BOX LAMPS Design 647

B6.7 - Directional Signal (Turn) W/ Less Power Module Tail Board W/Hazard SW

B6.7 - Directional Signal (Turn) W/ Less Power Module Tail Board W/Hazard SW Design 649

B6.7 - Directional Signal (Turn) W/ Single Tail Board W/Hazard SW

B6.7 - Directional Signal (Turn) W/ Single Tail Board W/Hazard SW Design . . .651

B6.7 - Directional Signal (Turn) W/ Daisy Chain Box Lamps W/Plow Lights

B6.7 - Directional Signal (Turn) W/ Daisy Chain Box Lamps W/Plow Lights Design 653

B6.7 - Directional Signal (Turn) W/ LED BOX LAMPS W/Plow Lights

B6.7 - Directional Signal (Turn) W/ LED BOX LAMPS W/Plow Lights Design . . 657

B6.7 - Directional Signal (Turn) W/ Less Power Module Tail Board W/Hazard SW W/PLOW LIGHTS

B6.7 - Directional Signal (Turn) W/ Less Power Module Tail Board W/Hazard SW W/PLOW LIGHTS Design 661

B6.7 - Directional Signal (Turn) W/ Single Tail Board W/Plow Lights

B6.7 - Directional Signal (Turn) W/ Single Tail Board W/Plow Lights Design . . .665

L9 - Directional Signal (Turn) W/ DAISY CHAIN BOX LAMPS

L9 - Directional Signal (Turn) W/ DAISY CHAIN BOX LAMPS Design 669

L9 - Directional Signal (Turn) W/ LED BOX LAMPS

L9 - Directional Signal (Turn) W/ LED BOX LAMPS Design 671

L9 - Directional Signal (Turn) W/ Less Power Module Tail Board W/Hazard SW

L9 - Directional Signal (Turn) W/ Less Power Module Tail Board W/Hazard SW Design 673

L9 - Directional Signal (Turn) W/ Single Tail Board W/Hazard SW

L9 - Directional Signal (Turn) W/ Single Tail Board W/Hazard SW Design 675

L9 - Directional Signal (Turn) W/ Daisy Chain Box Lamps W/Plow Lights

L9 - Directional Signal (Turn) W/ Daisy Chain Box Lamps W/Plow Lights Design 677

L9 - Directional Signal (Turn) W/ LED BOX LAMPS W/Plow Lights

L9 - Directional Signal (Turn) W/ LED BOX LAMPS W/Plow Lights Design 681

L9 - Directional Signal (Turn) W/ Less Power Module Tail Board W/Hazard SW W/PLOW LIGHTS

L9 - Directional Signal (Turn) W/ Less Power Module Tail Board W/Hazard SW W/PLOW LIGHTS Design 685

L9 - Directional Signal (Turn) W/ Single Tail Board W/Plow Lights

L9 - Directional Signal (Turn) W/ Single Tail Board W/Plow Lights Design 689

A26/B6.7/L9 - Exterior Lamp Check

A26/B6.7/L9 - Exterior Lamp Check Design 693

A26/B6.7/L9 - Exterior Lamp Reminder

A26/B6.7/L9 - Exterior Lamp Reminder Design 694

A26 - Front Fog Lamps LED

A26 - Front Fog Lamps LED Design 695

A26 - Front Fog Lights W CONNECTOR Halogen

A26 - Front Fog Lights W CONNECTOR Halogen Design 697

B6.7 - Fog Lights (Halogen White)

B6.7 - Fog Lights (Halogen White) Design 699

B6.7 - Fog Lights (LED White)

B6.7 - Fog Lights (LED White) Design 702

B6.7 - Front Fog Lamps

B6.7 - Front Fog Lamps Design 705

B6.7 - Front Fog Lights W CONNECTOR

B6.7 - Front Fog Lights W CONNECTOR Design 708

L9 - Fog Lights (Halogen White)

L9 - Fog Lights (Halogen White) Design 710

L9 - Fog Lights (LED White)

L9 - Fog Lights (LED White) Design 712

L9 - Front Fog Lights W CONNECTOR

L9 - Front Fog Lights W CONNECTOR Design 714

A26 - Front Marker Lights

A26 - Front Marker Lights Design 716

A26 - Front Marker Lights W/Plow Lights

A26 - Front Marker Lights W/Plow Lights Design 717

B6.7 - Front Marker Lights - Without Snow Plow Lights

B6.7 - Front Marker Lights - Without Snow Plow Lights Design 719

B6.7 - Front Marker Lights - With Plow Lights

B6.7 - Front Marker Lights - With Plow Lights Design 721

L9 - Front Marker Lights - Without Snow Plow Lights

L9 - Front Marker Lights - Without Snow Plow Lights Design 725

L9 - Front Marker Lights - With Plow Lights

L9 - Front Marker Lights - With Plow Lights Design 727

A26 - Hazard Warning Light N/Trlr Socket

A26 - Hazard Warning Light N/Trlr Socket Design 731

L9 - Hazard Warning Light N/Trlr Socket

L9 - Hazard Warning Light N/Trlr Socket Design 733

A26 - Headlights W/LOWW, W/O Interrupt

A26 - Headlights W/LOWW, W/O Interrupt Design 735

A26 - Headlights W/O LOWW, W/O Interrupt

A26 - Headlights W/O LOWW, W/O Interrupt Design 737

A26 - Headlights W/LOWW, W/Interrupt - 10 PIN CLK

A26 - Headlights W/LOWW, W/Interrupt - 10 PIN CLK Design 739

A26 - Headlights W/O LOWW, W/Interrupt - 10 PIN CLK

A26 - Headlights W/O LOWW, W/Interrupt - 10 PIN CLK Design 741

A26 - Headlight W/Plowlights, W/LOWW, W/O Interrupt

A26 - Headlight W/Plowlights, W/LOWW, W/O Interrupt Design 743

A26 - Headlight W/Plowlights, W/O LOWW, W/O Interrupt

A26 - Headlight W/Plowlights, W/O LOWW, W/O Interrupt Design 747

A26 - Headlights W/PlowLights, W/LOWW, W/Interrupt - 10 PIN CLK

A26 - Headlights W/PlowLights, W/LOWW, W/Interrupt - 10 PIN CLK Design . . 751

A26 - Headlights W/PlowLights, W/O LOWW, W/Interrupt - 10 PIN CLK

A26 - Headlights W/PlowLights, W/O LOWW, W/Interrupt - 10 PIN CLK Design 755

B6.7 - Headlights W/O Lights ON With Wipers (LOWW) W/O Headlights Interrupt

B6.7 - Headlights W/O Lights ON With Wipers (LOWW) W/O Headlights Interrupt Design 759

B6.7 - Headlights W/O Lights ON with wipers (LOWW) W/ Headlights Interrupt

B6.7 - Headlights W/O Lights ON with wipers (LOWW) W/ Headlights Interrupt Design 763

B6.7 - Headlights W 10PIN CLK W/LOWW W/O Interrupt

B6.7 - Headlights W 10PIN CLK W/LOWW W/O Interrupt Design 767

B6.7 - Headlights W 10PIN CLK W/LOWW W/Interrupt

B6.7 - Headlights W 10PIN CLK W/LOWW W/Interrupt Design 771

B6.7 - Headlights W/Plowlights W/O Lights ON With Wipers (LOWW) W/O Headlights Interrupt

B6.7 - Headlights W/Plowlights W/O Lights ON With Wipers (LOWW) W/O Headlights Interrupt Design 775

B6.7 - Headlight W/Plowlights W/LOWW W/O Headlight Interrupt -10 PIN CLK

B6.7 - Headlight W/Plowlights W/LOWW W/O Headlight Interrupt -10 PIN CLK Design 783

B6.7 - Headlights W/PlowLights W/Headlight Interrupt -10PIN CLK W/LOWW W/Interrupt

B6.7 - Headlights W/PlowLights W/Headlight Interrupt -10PIN CLK W/LOWW W/Interrupt Design 791

B6.7 - Headlights W/PlowLights W/O Lights ON with wipers (LOWW) W/ Headlights Interrupt

B6.7 - Headlights W/PlowLights W/O Lights ON with wipers (LOWW) W/ Headlights Interrupt Design 799

L9 - Headlights W/O Lights ON With Wipers (LOWW) W/O Headlights Interrupt

L9 - Headlights W/O Lights ON With Wipers (LOWW) W/O Headlights Interrupt Design 807

L9 - Headlights W/O Lights ON with wipers (LOWW) W/ Headlights Interrupt

L9 - Headlights W/O Lights ON with wipers (LOWW) W/ Headlights Interrupt Design 811

L9 - Headlights W/Plowlights W/O Lights ON With Wipers (LOWW) W/O Headlights Interrupt

L9 - Headlights W/Plowlights W/O Lights ON With Wipers (LOWW) W/O Headlights Interrupt Design 815

L9 - Headlight W/Plowlights W/LOWW W/O Headlight Interrupt -10 PIN CLK

L9 - Headlight W/Plowlights W/LOWW W/O Headlight Interrupt -10 PIN CLK Design 823

L9 - Headlights W/PlowLights W/Headlight Interrupt -10PIN CLK W/LOWW W/Interrupt

L9 - Headlights W/PlowLights W/Headlight Interrupt -10PIN CLK W/LOWW W/Interrupt Design 831

L9 - Headlights W/PlowLights W/O Lights ON with wipers (LOWW) W/ Headlights Interrupt

L9 - Headlights W/PlowLights W/O Lights ON with wipers (LOWW) W/ Headlights Interrupt Design 839

L9 - Headlights W 10PIN CLK W/LOWW W/O Interrupt

L9 - Headlights W 10PIN CLK W/LOWW W/O Interrupt Design 847

L9 - Headlights W 10PIN CLK W/LOWW W/Interrupt

L9 - Headlights W 10PIN CLK W/LOWW W/Interrupt Design 851

A26 - License Plate Light (LED BOX LAMP Daisy Chain Tail Light)

A26 - License Plate Light (LED BOX LAMP Daisy Chain Tail Light) Design 855

A26 - License Plate Light (LED BOX LAMP Tail Light)

A26 - License Plate Light (LED BOX LAMP Tail Light) Design 856

A26 - License Plate Light (Tail Light Single Assembly)

A26 - License Plate Light (Tail Light Single Assembly) Design 857

A26 - License Plate Light (Tail Light Single Assembly)Option2

A26 - License Plate Light (Tail Light Single Assembly)Option2 Design 858

A26 - License Plate Light (Tail Light Single Assembly)Option3

A26 - License Plate Light (Tail Light Single Assembly)Option3 Design 859

A26 - License Plate Light (Tail Light Single Assy.) W/Less Power Module (W/08TKC, 08THM)

A26 - License Plate Light (Tail Light Single Assy.) W/Less Power Module (W/08TKC, 08THM) Design 860

B6.7 - License Plate Light (LED BOX LAMP Daisy Chain Tail Light)

B6.7 - License Plate Light (LED BOX LAMP Daisy Chain Tail Light) Design . . .861

B6.7 - License Plate Light (LED BOX LAMP Tail Light)

B6.7 - License Plate Light (LED BOX LAMP Tail Light) Design 862

B6.7 - License Plate Light (Tail Light Single Assy) Option 1

B6.7 - License Plate Light (Tail Light Single Assy) Option 1 Design 863

B6.7 - License Plate Light (Tail Light Single Assy) Option 2

B6.7 - License Plate Light (Tail Light Single Assy) Option 2 Design 864

B6.7 - License Plate Light (Tail Light Single Assy) Option 3

B6.7 - License Plate Light (Tail Light Single Assy) Option 3 Design 865

B6.7 - License Plate Light (Tail Light Single Assy) Option 4

B6.7 - License Plate Light (Tail Light Single Assy) Option 4 Design 866

B6.7 - License Plate Light (Tail Light Single Assy) W/Less Power Module

B6.7 - License Plate Light (Tail Light Single Assy) W/Less Power Module Design 867

L9 - License Plate Light (LED BOX LAMP Daisy Chain Tail Light)

L9 - License Plate Light (LED BOX LAMP Daisy Chain Tail Light) Design 868

L9 - License Plate Light (LED BOX LAMP Tail Light)

L9 - License Plate Light (LED BOX LAMP Tail Light) Design 869

L9 - License Plate Light (Tail Light Single Assy) Option 1

L9 - License Plate Light (Tail Light Single Assy) Option 1 Design 870

L9 - License Plate Light (Tail Light Single Assy) Option 2

L9 - License Plate Light (Tail Light Single Assy) Option 2 Design 871

L9 - License Plate Light (Tail Light Single Assy) Option 3

L9 - License Plate Light (Tail Light Single Assy) Option 3 Design 872

L9 - License Plate Light (Tail Light Single Assy) Option 4

L9 - License Plate Light (Tail Light Single Assy) Option 4 Design 873

A26/B6.7/L9 - PARK LIGHTS - N/Marker Interrupt

A26/B6.7/L9 - PARK LIGHTS - N/Marker Interrupt Design 874

A26/B6.7/L9 - PARK LIGHTS - W/Marker Interrupt 10pin CLCKSPRING

A26/B6.7/L9 - PARK LIGHTS - W/Marker Interrupt 10pin CLCKSPRING Design 876

A26/B6.7/L9 - PARK LIGHTS - W/Marker Interrupt 4 pin clockspring

A26/B6.7/L9 - PARK LIGHTS - W/Marker Interrupt 4 pin clockspring Design . . . 878

A26/B6.7/L9 - Snow Plow Lights

A26/B6.7/L9 - Snow Plow Lights Design 880

A26 - Rear Light (LED BOX LAMP Tail Light) W/08TPS, 08TPR

A26 - Rear Light (LED BOX LAMP Tail Light) W/08TPS, 08TPR Design 881

A26 - Rear Light (Tail Light) W/Less Power Module (W/08TKC, 08THM)

A26 - Rear Light (Tail Light) W/Less Power Module (W/08TKC, 08THM) Design 882

A26 - Rear Light (Tail Light) W/08THK

A26 - Rear Light (Tail Light) W/08THK Design 883

A26 - Rear Light (Tail Light) W/08TKB

A26 - Rear Light (Tail Light) W/08TKB Design 884

A26 - Rear Light (Tail Light) W/08TKJ

A26 - Rear Light (Tail Light) W/08TKJ Design 885

A26 - Rear Light (Tail Light) W_Daisy Chain pair of Box Lamps W/08TRS

A26 - Rear Light (Tail Light) W_Daisy Chain pair of Box Lamps W/08TRS Design 886

B6.7 - Rear Light (LED BOX LAMP Tail Light)

B6.7 - Rear Light (LED BOX LAMP Tail Light) Design 887

B6.7 - Rear Light (Tail Light) Option 1
B6.7 - Rear Light (Tail Light) Option 1 Design 888

B6.7 - Rear Light (Tail Light) Option 2
B6.7 - Rear Light (Tail Light) Option 2 Design 889

B6.7 - Rear Light (Tail Light) Option 3
B6.7 - Rear Light (Tail Light) Option 3 Design 890

B6.7 - Rear Light (Tail Light) Option 4
B6.7 - Rear Light (Tail Light) Option 4 Design 891

B6.7 - Rear Light (Tail Light) W_Daisy Chain pair of Box Lamps
B6.7 - Rear Light (Tail Light) W_Daisy Chain pair of Box Lamps Design 892

L9 - Rear Light (LED BOX LAMP Tail Light)
L9 - Rear Light (LED BOX LAMP Tail Light) Design 893

L9 - Rear Light (Tail Light)
L9 - Rear Light (Tail Light) Design 894

L9 - Rear Light (Tail Light) W Daisy Chain pair of Box Lamps
L9 - Rear Light (Tail Light) W Daisy Chain pair of Box Lamps Design 895

A26 - Work Lights LED W/ Sw Pack - Day Cab
A26 - Work Lights LED W/ Sw Pack - Day Cab Design 896

A26 - WORK LIGHT W Backup 1 Bulb
A26 - WORK LIGHT W Backup 1 Bulb Design 898

A26 - WORK LIGHT W BackUP 1 BULB
A26 - WORK LIGHT W BackUP 1 BULB Design 900

A26 - WORK LIGHT W RKE 1 BULB
A26 - WORK LIGHT W RKE 1 BULB Design 902

A26 - Work Light W/ Backup 1 Bulb W/Automatic W/ RKE
A26 - Work Light W/ Backup 1 Bulb W/Automatic W/ RKE Design 904

A26 - Work Light W/ Backup 1 Bulb W/Manual W/ RKE
A26 - Work Light W/ Backup 1 Bulb W/Manual W/ RKE Design 906

A26 - WORK LIGHT 1 BULB
A26 - WORK LIGHT 1 BULB Design 908

B6.7 - Work Lights LED W/ Sw Pack - Day Cab
B6.7 - Work Lights LED W/ Sw Pack - Day Cab Design 910

B6.7 - WORK LIGHT W BackUP 1 BULB
B6.7 - WORK LIGHT W BackUP 1 BULB Design 911

B6.7 - WORK LIGHT W RKE 1 BULB
B6.7 - WORK LIGHT W RKE 1 BULB Design 912

B6.7 - WORK LIGHT 1 BULB
B6.7 - WORK LIGHT 1 BULB Design 913

L9 - Work Lights LED W/ Sw Pack - Day Cab

L9 - Work Lights LED W/ Sw Pack - Day Cab Design 914

L9 - WORK LIGHT W BackUP 1 BULB Option 1

L9 - WORK LIGHT W BackUP 1 BULB Option 1 Design 916

L9 - WORK LIGHT W BackUP 1 BULB Option 2

L9 - WORK LIGHT W BackUP 1 BULB Option 2 Design 920

L9 - WORK LIGHT W RKE 1 BULB

L9 - WORK LIGHT W RKE 1 BULB Design 922

L9 - WORK LIGHT 1 BULB

L9 - WORK LIGHT 1 BULB Design 924

A26/B6.7/L9 - Fifth Wheel Slide

A26/B6.7/L9 - Fifth Wheel Slide Design 926

A26/B6.7/L9 - Jaw Unlock Control

A26/B6.7/L9 - Jaw Unlock Control Design 927

A26/B6.7/L9 - Jaw Unlock Control W/ SOLENOIDS W/SWITCH PACKS

A26/B6.7/L9 - Jaw Unlock Control W/ SOLENOIDS W/SWITCH PACKS Design 928

A26 - Fuel Heater (Vehicle Powered)(Davco)

A26 - Fuel Heater (Vehicle Powered)(Davco) Design 929

B6.7 - Fuel Heater (Vehicle Powered)(Davco)

B6.7 - Fuel Heater (Vehicle Powered)(Davco) Design 938

B6.7 - Fuel Heater (Vehicle Powered)(Racor)

B6.7 - Fuel Heater (Vehicle Powered)(Racor) Design 945

L9 - Fuel Heater (Vehicle Powered)(Davco)

L9 - Fuel Heater (Vehicle Powered)(Davco) Design 952

L9 - Fuel Heater (Vehicle Powered)(Racor)

L9 - Fuel Heater (Vehicle Powered)(Racor) Design 967

A26 - 26" Fuel Tank

A26 - 26" Fuel Tank Design 975

A26 - 26" Fuel Tank - Secondary

A26 - 26" Fuel Tank - Secondary Design 980

B6.7 - 26 inch Fuel Tank

B6.7 - 26 inch Fuel Tank Design 987

B6.7 - 26 inch Fuel Tank - Secondary

B6.7 - 26 inch Fuel Tank - Secondary Design 990

L9 - 26 inch Fuel Tank

L9 - 26 inch Fuel Tank Design 991

L9 - 26 inch Fuel Tank - Secondary

L9 - 26 inch Fuel Tank - Secondary Design 997

A26 - Water In Fuel (WIF) Davco N/ Heater

A26 - Water In Fuel (WIF) Davco N/ Heater Design 1004

A26 - Water In Fuel (WIF) Davco W/ Heater

A26 - Water In Fuel (WIF) Davco W/ Heater Design 1013

B6.7 - Water In Fuel (WIF) Racor N/ Heater

B6.7 - Water In Fuel (WIF) Racor N/ Heater Design 1022

B6.7 - Water In Fuel (WIF) Racor W/ Heater

B6.7 - Water In Fuel (WIF) Racor W/ Heater Design 1029

L9 - Water In Fuel (WIF) Davco N/ Heater

L9 - Water In Fuel (WIF) Davco N/ Heater Design 1036

L9 - Water In Fuel (WIF) Davco W/ Heater

L9 - Water In Fuel (WIF) Davco W/ Heater Design 1045

A26 - Heating Ventilation & Air Conditioning (HVAC) Auto Temp Control

A26 - Heating Ventilation & Air Conditioning (HVAC) Auto Temp Control Design 1054

B6.7 - Heating Ventilation & Air Conditioning (HVAC) Auto Temp Control

B6.7 - Heating Ventilation & Air Conditioning (HVAC) Auto Temp Control Design 1057

L9 - Heating Ventilation & Air Conditioning (HVAC) Auto Temp Control

L9 - Heating Ventilation & Air Conditioning (HVAC) Auto Temp Control Design 1060

A26 - Heating Ventilation & Air Conditioning (HVAC)

A26 - Heating Ventilation & Air Conditioning (HVAC) Design 1063

A26/B6.7/L9 - HVAC Assembly Actuators

A26/B6.7/L9 - HVAC Assembly Actuators Design 1064

B6.7 - Heating Ventilation & Air Conditioning (HVAC)

B6.7 - Heating Ventilation & Air Conditioning (HVAC) Design 1065

L9 - Heating Ventilation & Air Conditioning (HVAC)

L9 - Heating Ventilation & Air Conditioning (HVAC) Design 1066

A26 - Ambient Air Temperature

A26 - Ambient Air Temperature Design 1067

A26 - Ambient Temperature Monitoring

A26 - Ambient Temperature Monitoring Design 1068

L9 - Ambient Air Temperature

L9 - Ambient Air Temperature Design 1069

B6.7 - Current Monitoring (Ammeter)

B6.7 - Current Monitoring (Ammeter) Design 1070

A26 - Brake Pressure (Auxiliary Gauge)

A26 - Brake Pressure (Auxiliary Gauge) Design 1072

A26 - Brake Pressure (Virtual Gauge)
A26 - Brake Pressure (Virtual Gauge) Design 1073

B6.7 - Brake Pressure (Auxiliary Gauge)
B6.7 - Brake Pressure (Auxiliary Gauge) Design 1074

B6.7 - Brake Pressure (Virtual Gauge)
B6.7 - Brake Pressure (Virtual Gauge) Design 1075

L9 - Brake Pressure (Auxiliary Gauge)
L9 - Brake Pressure (Auxiliary Gauge) Design 1076

L9 - Brake Pressure (Virtual Gauge)
L9 - Brake Pressure (Virtual Gauge) Design 1077

A26/B6.7/L9 - Compressed Air Supply
A26/B6.7/L9 - Compressed Air Supply Design 1078

A26/B6.7/L9 - DEF Economy Monitor (GEN IV)
A26/B6.7/L9 - DEF Economy Monitor (GEN IV) Design 1079

L9 - Coolant Temperature Monitoring (J1939 Comm)
L9 - Coolant Temperature Monitoring (J1939 Comm) Design 1080

A26/B6.7/L9 - Engine Usage Monitoring (Base) NA
A26/B6.7/L9 - Engine Usage Monitoring (Base) NA Design 1081

A26/B6.7/L9 - Engine Usage Monitoring (VID Option)
A26/B6.7/L9 - Engine Usage Monitoring (VID Option) Design 1082

A26/B6.7/L9 - Engine Oil Level Monitoring
A26/B6.7/L9 - Engine Oil Level Monitoring Design 1083

A26/B6.7/L9 - Engine Oil Pressure
A26/B6.7/L9 - Engine Oil Pressure Design 1084

A26/B6.7/L9 - Engine Oil Temperature (NA Mux)
A26/B6.7/L9 - Engine Oil Temperature (NA Mux) Design 1085

A26/B6.7/L9 - Engine Oil Temperature(NA MUX AUX Gauge)
A26/B6.7/L9 - Engine Oil Temperature(NA MUX AUX Gauge) Design 1086

A26 - Engine Speed (Tachometer)
A26 - Engine Speed (Tachometer) Design 1087

B6.7 & L9 - Engine Speed (Tachometer)
B6.7 & L9 - Engine Speed (Tachometer) Design 1088

A26/B6.7/L9 - Fuel Economy Monitor
A26/B6.7/L9 - Fuel Economy Monitor Design 1089

A26/B6.7/L9 - Odometer (via BCM/EGC)
A26/B6.7/L9 - Odometer (via BCM/EGC) Design 1090

A26/B6.7/L9 - Trip Odometer w/VID
A26/B6.7/L9 - Trip Odometer w/VID Design 1091

A26/B6.7/L9 - Trip Odometer (Gen 4 Cluster)
A26/B6.7/L9 - Trip Odometer (Gen 4 Cluster) Design 1092

A26/B6.7/L9 - Trip Odometer (w/ECM & TCM)

A26/B6.7/L9 - Trip Odometer (w/ECM & TCM) Design 1093

A26/B6.7/L9 - PTO Hour Meter

A26/B6.7/L9 - PTO Hour Meter Design 1094

A26 - Transmission Oil Temperature-Manual Trans

A26 - Transmission Oil Temperature-Manual Trans Design 1095

A26 - Transmission Oil Temperature-Manual Trans w/Aux Gauge

A26 - Transmission Oil Temperature-Manual Trans w/Aux Gauge Design . . . 1097

B6.7 - Transmission Oil Temperature-Manual Trans

B6.7 - Transmission Oil Temperature-Manual Trans Design 1099

B6.7 - Transmission Oil Temperature-Manual Trans (w/Aux Gauge)

B6.7 - Transmission Oil Temperature-Manual Trans (w/Aux Gauge) Design . . 1100

L9 - Transmission Oil Temperature-Automatic Trans

L9 - Transmission Oil Temperature-Automatic Trans Design 1101

L9 - Transmission Oil Temperature-Automatic Trans w/Aux Gauge

L9 - Transmission Oil Temperature-Automatic Trans w/Aux Gauge Design . . . 1102

L9 - Transmission Oil Temperature-Manual Transmission

L9 - Transmission Oil Temperature-Manual Transmission Design 1103

L9 - Transmission Oil Temperature-Manual Trans w/Aux Gauge

L9 - Transmission Oil Temperature-Manual Trans w/Aux Gauge Design 1104

A26/B6.7/L9 - Vehicle Speedometer System (Automatic XMSN)

A26/B6.7/L9 - Vehicle Speedometer System (Automatic XMSN) Design 1105

A26 - Vehicle Speedometer System (Manual XMSN)

A26 - Vehicle Speedometer System (Manual XMSN) Design 1106

B6.7 - Vehicle Speedometer System (Manual XMSN)

B6.7 - Vehicle Speedometer System (Manual XMSN) Design 1107

L9 - Vehicle Speedometer System (Manual XMSN)

L9 - Vehicle Speedometer System (Manual XMSN) Design 1108

A26/B6.7/L9 - Vehicle Speed Limit Override

A26/B6.7/L9 - Vehicle Speed Limit Override Design 1109

A26/B6.7/L9 - Voltage Monitoring (Voltmeter)

A26/B6.7/L9 - Voltage Monitoring (Voltmeter) Design 1110

A26/B6.7/L9 - Voltage Monitoring (Voltmeter) (with Aux gauge)

A26/B6.7/L9 - Voltage Monitoring (Voltmeter) (with Aux gauge) Design 1111

A26/B6.7/L9 - Engine Warning_MUX

A26/B6.7/L9 - Engine Warning_MUX Design 1112

A26/B6.7/L9 - High Exhaust System Temperature (HEST) Monitoring

A26/B6.7/L9 - High Exhaust System Temperature (HEST) Monitoring Design 1113

A26/B6.7/L9 - Up Shift Indicator

A26/B6.7/L9 - Up Shift Indicator Design 1114

A26/B6.7/L9 - Trans Range Inhibit (J1939 Comm)

A26/B6.7/L9 - Trans Range Inhibit (J1939 Comm) Design 1115

B6.7 - Range Inhibit (sixth gear inhibit switch)

B6.7 - Range Inhibit (sixth gear inhibit switch) Design 1116

A26/B6.7/L9 - Vehicle Information Display Premium w/ Wi-Fi (VID)

A26/B6.7/L9 - Vehicle Information Display Premium w/ Wi-Fi (VID) Design . . . 1117

A26/B6.7/L9 - Vehicle Information Display (Without Bluetooth)

A26/B6.7/L9 - Vehicle Information Display (Without Bluetooth) Design 1118

A26/B6.7/L9 - Vehicle Information Display (With Bluetooth)

A26/B6.7/L9 - Vehicle Information Display (With Bluetooth) Design 1119

A26/B6.7/L9 - Cab Dome Light W/Classic Trim

A26/B6.7/L9 - Cab Dome Light W/Classic Trim Design 1120

A26/B6.7/L9 - Cab Dome Light W/ Combo in Diamond Trim

A26/B6.7/L9 - Cab Dome Light W/ Combo in Diamond Trim Design 1121

A26/B6.7/L9 - Interior Task Lights (Map) - Dome Combo

A26/B6.7/L9 - Interior Task Lights (Map) - Dome Combo Design 1122

A26/B6.7/L9 - Courtesy Light Cab 2 door

A26/B6.7/L9 - Courtesy Light Cab 2 door Design 1123

A26/B6.7/L9 - Courtesy Light 4 Door

A26/B6.7/L9 - Courtesy Light 4 Door Design 1124

A26/B6.7/L9 - Panel Backlighting (Cabin Dimmer)

A26/B6.7/L9 - Panel Backlighting (Cabin Dimmer) Design 1125

A26/B6.7/L9 - Axle Lift Controls

A26/B6.7/L9 - Axle Lift Controls Design 1126

A26 - Axle Lift Controls

A26 - Axle Lift Controls Design 1130

A26 - Lift Axle Controls (Center Pedestal Controls f/ 1 lift axle)

A26 - Lift Axle Controls (Center Pedestal Controls f/ 1 lift axle) Design 1132

A26 - Lift Axle Controls (Center Pedestal Controls f/ 2 Lift Axles)

A26 - Lift Axle Controls (Center Pedestal Controls f/ 2 Lift Axles) Design 1134

A26 - Lift Axle Controls (Center Pedestal Controls f/ 3 lift axles)

A26 - Lift Axle Controls (Center Pedestal Controls f/ 3 lift axles) Design 1135

L9 - Axle Lift Controls Option 2

L9 - Axle Lift Controls Option 2 Design 1136

L9 - Lift Axle Controls (Center Pedestal Controls f/ 1 lift axle)

L9 - Lift Axle Controls (Center Pedestal Controls f/ 1 lift axle) Design 1138

L9 - Lift Axle Controls (Center Pedestal Controls f/ 2 Lift Axles)

L9 - Lift Axle Controls (Center Pedestal Controls f/ 2 Lift Axles) Design 1140

L9 - Lift Axle Controls (Center Pedestal Controls f/ 3 lift axles)

L9 - Lift Axle Controls (Center Pedestal Controls f/ 3 lift axles) Design 1141

B6.7 - Axle Loading (Weight) Rear

B6.7 - Axle Loading (Weight) Rear Design 1142

L9 - Axle Loading (Weight) Rear

L9 - Axle Loading (Weight) Rear Design 1144

A26 - Axle Temperature Monitoring (Single Rear Aux Gauge)

A26 - Axle Temperature Monitoring (Single Rear Aux Gauge) Design 1146

A26 - Axle Temperature Monitoring (Single Rear Virtual Gauge)

A26 - Axle Temperature Monitoring (Single Rear Virtual Gauge) Design 1147

A26 - Axle Temperature Monitoring (Tandem Rear Aux Gauge)

A26 - Axle Temperature Monitoring (Tandem Rear Aux Gauge) Design 1148

A26 - Axle Temperature Monitoring (Tandem Rear Virtual Gauge)

A26 - Axle Temperature Monitoring (Tandem Rear Virtual Gauge) Design . . . 1149

B6.7 - Axle Temperature Monitoring (Single Rear Aux Gauge)

B6.7 - Axle Temperature Monitoring (Single Rear Aux Gauge) Design 1150

B6.7 - Axle Temperature Monitoring (Single Rear Virtual Gauge)

B6.7 - Axle Temperature Monitoring (Single Rear Virtual Gauge) Design 1151

L9 - Axle Temperature Monitoring (Tandem Rear Aux Gauge) Option 1

L9 - Axle Temperature Monitoring (Tandem Rear Aux Gauge) Option 1 Design 1152

L9 - Axle Temperature Monitoring (Tandem Rear Aux Gauge) Option 2

L9 - Axle Temperature Monitoring (Tandem Rear Aux Gauge) Option 2
Design 1153

L9 - Axle Temperature Monitoring (Tandem Rear Virtual Gauge) Option 1

L9 - Axle Temperature Monitoring (Tandem Rear Virtual Gauge) Option 1
Design 1154

L9 - Axle Temperature Monitoring (Tandem Rear Virtual Gauge) Option 2

L9 - Axle Temperature Monitoring (Tandem Rear Virtual Gauge) Option 2
Design 1155

A26 - Driver Controlled Locking Differential FR and RR Axles (Dana w/ two sw)

A26 - Driver Controlled Locking Differential FR and RR Axles (Dana w/ two sw)
Design 1156

A26 - Driver Controlled Locking Differential FR and RR Axle (Dana w/ one switch)

A26 - Driver Controlled Locking Differential FR and RR Axle (Dana w/ one switch)
Design 1157

A26 - Driver Controlled Locking Differential RR Axle (Dana w/ one sw)

A26 - Driver Controlled Locking Differential RR Axle (Dana w/ one sw)
Design 1158

A26 - Driver Controlled Locking Differential FR and RR Axles (Meritor w/ two sw)

A26 - Driver Controlled Locking Differential FR and RR Axles (Meritor w/ two sw)
Design 1159

A26 - Driver Controlled Locking Differential FR and RR Axle (Meritor w/ one sw)

A26 - Driver Controlled Locking Differential FR and RR Axle (Meritor w/ one sw)
Design 1160

A26 - Driver Controlled Locking Differential RR Axle (Meritor w/ one sw)

A26 - Driver Controlled Locking Differential RR Axle (Meritor w/ one sw)
Design 1161

B6.7 - Driver Controlled Locking Differential - RR Axle (Dana w/ one sw)

B6.7 - Driver Controlled Locking Differential - RR Axle (Dana w/ one sw)
Design 1162

B6.7 - Driver Controlled Locking Differential - RR Axle (Meritor w/ one sw)

B6.7 - Driver Controlled Locking Differential - RR Axle (Meritor w/ one sw)
Design 1163

L9 - Driver Controlled Locking Differential - FR and RR Axles (Dana w/ two sw)

L9 - Driver Controlled Locking Differential - FR and RR Axles (Dana w/ two sw)
Design 1164

L9 - Driver Controlled Locking Differential - FR and RR Axle (Dana w/ one sw)

L9 - Driver Controlled Locking Differential - FR and RR Axle (Dana w/ one sw) Design 1165

L9 - Driver Controlled Locking Differential - RR Axle (Dana w/ one sw)

L9 - Driver Controlled Locking Differential - RR Axle (Dana w/ one sw) Design 1166

L9 - Driver Controlled Locking Differential - FR and RR Axles (Meritor w/ two sw)

L9 - Driver Controlled Locking Differential - FR and RR Axles (Meritor w/ two sw) Design 1167

L9 - Driver Controlled Locking Differential - FR and RR Axle (Meritor w/ one sw)

L9 - Driver Controlled Locking Differential - FR and RR Axle (Meritor w/ one sw) Design 1168

L9 - Driver Controlled Locking Differential - RR Axle (Meritor w/ one sw)

L9 - Driver Controlled Locking Differential - RR Axle (Meritor w/ one sw) Design 1169

A26/B6.7/L9 - Height Control

A26/B6.7/L9 - Height Control Design 1170

A26/B6.7/L9 - Power Divider Lock Control and Monitoring

A26/B6.7/L9 - Power Divider Lock Control and Monitoring Design 1171

L9 - Rear Axle Load Distribution

L9 - Rear Axle Load Distribution Design 1172

A26/B6.7/L9 - Rear Suspension Pressure Monitoring (Auxiliary Gauge)

A26/B6.7/L9 - Rear Suspension Pressure Monitoring (Auxiliary Gauge) Design 1173

A26/B6.7/L9 - Rear Suspension Pressure Monitoring (Virtual Gauge)

A26/B6.7/L9 - Rear Suspension Pressure Monitoring (Virtual Gauge) Design . 1175

A26 - Two Speed Axle (Multiplex SW on Dash)

A26 - Two Speed Axle (Multiplex SW on Dash) Design 1177

B6.7 - Two Speed Axle (AirShift on Shifter)

B6.7 - Two Speed Axle (AirShift on Shifter) Design 1178

L9 - Two Speed Axle (AirShift on Shifter)

L9 - Two Speed Axle (AirShift on Shifter) Design 1179

L9 - Two Speed Axle (Multiplex SW on Dash)

L9 - Two Speed Axle (Multiplex SW on Dash) Design 1180

A26/B6.7/L9 - Driver and Passenger Seats - RollTek (Hard Wired)

A26/B6.7/L9 - Driver and Passenger Seats - RollTek (Hard Wired) Design . . . 1181

A26/B6.7/L9 - Seats (RollTek) Drivers Seat Only (Hard Wired) - Leather

A26/B6.7/L9 - Seats (RollTek) Drivers Seat Only (Hard Wired) - Leather Design 1182

A26/B6.7/L9 - Seats (RollTek) Drivers Seat Only (Hard Wired) - Mordular

A26/B6.7/L9 - Seats (RollTek) Drivers Seat Only (Hard Wired) - Mordular Design 1183

A26/B6.7/L9 - Seats (RollTek) Drivers Seat Only (Hard Wired) - Vinyl

A26/B6.7/L9 - Seats (RollTek) Drivers Seat Only (Hard Wired) - Vinyl Design 1184

A26/B6.7/L9 - Seatbelt Reminder 6 Seats

A26/B6.7/L9 - Seatbelt Reminder 6 Seats Design 1185

A26/B6.7/L9 - Seatbelt Reminder (Warning)(Driver only)

A26/B6.7/L9 - Seatbelt Reminder (Warning)(Driver only) Design 1186

A26/B6.7/L9 - Seatbelt Reminder (Warning)(Driver & Passenger in parallel)

A26/B6.7/L9 - Seatbelt Reminder (Warning)(Driver & Passenger in parallel) Design 1187

L9 - TEM Electric Trailer Brake Controller Activated Stop LT

L9 - TEM Electric Trailer Brake Controller Activated Stop LT Design 1188

A26 - TEM Electric Trailer Brake Controller Activated Stop LT

A26 - TEM Electric Trailer Brake Controller Activated Stop LT Design 1189

A26 - TEM Electric Trailer Brake Controller Activated Stop LT (Option2)

A26 - TEM Electric Trailer Brake Controller Activated Stop LT (Option2) Design 1190

B6.7 - TEM Electric Trailer Brake Controller Activated Stop LT Option 2

B6.7 - TEM Electric Trailer Brake Controller Activated Stop LT Option 2 Design 1191

B6.7 - TEM _Electric Trailer Brake Controller Activated Stop LT Option 1

B6.7 - TEM _Electric Trailer Brake Controller Activated Stop LT Option 1 Design 1192

B6.7 - Trailer Interface (Lighting) – BLUNT CUT (Part of Electric Trailer Brakes) Option 1

B6.7 - Trailer Interface (Lighting) – BLUNT CUT (Part of Electric Trailer Brakes) Option 1 Design 1193

B6.7 - Trailer Interface (Lighting) – BLUNT CUT (Part of Electric Trailer Brakes) Option 2

B6.7 - Trailer Interface (Lighting) – BLUNT CUT (Part of Electric Trailer Brakes) Option 2 Design 1194

L9 - Trailer Interface (Lighting) – BLUNT CUT (Part of Electric Trailer Brakes) Option 1

L9 - Trailer Interface (Lighting) – BLUNT CUT (Part of Electric Trailer Brakes) Option 1 Design 1195

L9 - Trailer Interface (Lighting) – BLUNT CUT (Part of Electric Trailer Brakes) Option 2

L9 - Trailer Interface (Lighting) – BLUNT CUT (Part of Electric Trailer Brakes) Option 2 Design 1196

A26 - Transmission Shifter (Stalk Shifter Allison)

A26 - Transmission Shifter (Stalk Shifter Allison) Design 1197

B6.7 - Transmission Shifter (Stalk Shifter Allison)

B6.7 - Transmission Shifter (Stalk Shifter Allison) Design 1199

B6.7 - Transmission Shifter (T-Handle for Allison With Park Position)

B6.7 - Transmission Shifter (T-Handle for Allison With Park Position) Design . 1201

B6.7 - T-Handle for Allison Without Park Position

B6.7 - T-Handle for Allison Without Park Position Design 1203

B6.7 - Transmission Shifter Allison 5th Gen Push Button(SURHD)

B6.7 - Transmission Shifter Allison 5th Gen Push Button(SURHD) Design . . . 1205

L9 - Transmission Shifter Allison 5th Gen Push Button(SURHD)

L9 - Transmission Shifter Allison 5th Gen Push Button(SURHD) Design 1207

L9 - Transmission Shifter (Stalk Shifter Allison)

L9 - Transmission Shifter (Stalk Shifter Allison) Design 1208

A26/B6.7/L9 - Transfer Case - High/Low Air Sol

A26/B6.7/L9 - Transfer Case - High/Low Air Sol Design 1210

A26/B6.7/L9 - Transfer Case - High/Neu/Low Air Sol

A26/B6.7/L9 - Transfer Case - High/Neu/Low Air Sol Design 1211

A26 - Ultrashift Plus

A26 - Ultrashift Plus Design 1212

L9 - Ultrashift Plus

L9 - Ultrashift Plus Design 1213

A26 - Transmission (Allison 3K/4K)

A26 - Transmission (Allison 3K/4K) Design 1214

L9 - Auto Neutral (Allison without Multiplex Switch and Confirmation Telltale)

L9 - Auto Neutral (Allison without Multiplex Switch and Confirmation Telltale) Design 1216

L9 - Auto Neutral (Allison with Multiplex Switch and Confirmation Telltale)

L9 - Auto Neutral (Allison with Multiplex Switch and Confirmation Telltale) Design 1218

B6.7 - Transmission (Allison 1K/2K)

B6.7 - Transmission (Allison 1K/2K) Design 1220

B6.7 - Transmission (Allison 3K/4K)

B6.7 - Transmission (Allison 3K/4K) Design 1221

L9 - Transmission I/O (Allison 3K with Body Builder) - 13WUC

L9 - Transmission I/O (Allison 3K with Body Builder) - 13WUC Design 1223

L9 - Transmission (Allison 3K/4K)

L9 - Transmission (Allison 3K/4K) Design 1224

A26 - Transmissions Electrical I/O (Eaton Ultrashift)

A26 - Transmissions Electrical I/O (Eaton Ultrashift) Design 1226

L9 - Transmissions Electrical I/O (Eaton Ultrashift)

L9 - Transmissions Electrical I/O (Eaton Ultrashift) Design 1227

A26 - Hill Start Aid (Bendix)

A26 - Hill Start Aid (Bendix) Design 1228

L9 - Hill Start Aid (Bendix)

L9 - Hill Start Aid (Bendix) Design 1230

L9 - Hill Start Aid (WABCO)

L9 - Hill Start Aid (WABCO) Design 1232

A26/B6.7/L9 - Transmission - MODE Selection

A26/B6.7/L9 - Transmission - MODE Selection Design 1233

B6.7 - Windshield Washer Pump

B6.7 - Windshield Washer Pump Design 1234

B6.7 - Windshield Washer Pump & Low Fluid Sensor

B6.7 - Windshield Washer Pump & Low Fluid Sensor Design 1235

L9 - Windshield Washer Pump & Low Fluid Sensor

L9 - Windshield Washer Pump & Low Fluid Sensor Design 1236

A26 - Windshield Wipers

A26 - Windshield Wipers Design 1238

B6.7 - Windshield Wipers

B6.7 - Windshield Wipers Design 1239

L9 - Windshield Wipers

L9 - Windshield Wipers Design 1240

A26 - Bosch LIL165 LIL200 Alternator W/Sensor

A26 - Bosch LIL165 LIL200 Alternator W/Sensor Design 1241

TABLE OF CONTENTS

A26 - Delco Remy 28SI Alternator W/Sensor
A26 - Delco Remy 28SI Alternator W/Sensor Design 1243

A26 - Delco Remy 36SI Alternator W/Sensor
A26 - Delco Remy 36SI Alternator W/Sensor Design 1245

A26 - Delco Remy 40SI Alternator W/Sensor
A26 - Delco Remy 40SI Alternator W/Sensor Design 1247

A26 - Leece-Neville AVI160 Alternator
A26 - Leece-Neville AVI160 Alternator Design 1249

A26 - Leece-Neville AVI160-210A/240A Alternator W/Sensor
A26 - Leece-Neville AVI160-210A/240A Alternator W/Sensor Design 1250

A26 - Leece-Neville 320PAH Alternator
A26 - Leece-Neville 320PAH Alternator Design 1252

A26 - Leece-Neville - LN 325A Alternator W/Sensor
A26 - Leece-Neville - LN 325A Alternator W/Sensor Design 1253

A26- Bosch LH160 LH200 Alternator
A26- Bosch LH160 LH200 Alternator Design 1255

B6.7 - Bosch LH160_LH200 Alternator
B6.7 - Bosch LH160_LH200 Alternator Design 1256

B6.7 - Delco Remy 28SI Alternator W/Sensor Option 1
B6.7 - Delco Remy 28SI Alternator W/Sensor Option 1 Design 1258

B6.7 - Delco Remy 28SI Alternator W/Sensor Option 2
B6.7 - Delco Remy 28SI Alternator W/Sensor Option 2 Design 1259

B6.7 - Delco Remy 36SI Alternator W/Sensor
B6.7 - Delco Remy 36SI Alternator W/Sensor Design 1260

B6.7 - Delco Remy 40SI Alternator W/Sensor
B6.7 - Delco Remy 40SI Alternator W/Sensor Design 1261

B6.7 - Leece-Neville AVI160 Alternator
B6.7 - Leece-Neville AVI160 Alternator Design 1262

B6.7 - Leece-Neville AVI160-210A/240A Alternator W/Sensor
B6.7 - Leece-Neville AVI160-210A/240A Alternator W/Sensor Design 1263

B6.7 - Leece-Neville 320PAH Alternator
B6.7 - Leece-Neville 320PAH Alternator Design 1264

B6.7 - Leece-Neville - LN 325A Alternator W/Sensor
B6.7 - Leece-Neville - LN 325A Alternator W/Sensor Design 1265

L9 - Bosch LH160_LH200 Alternator
L9 - Bosch LH160_LH200 Alternator Design 1266

L9 - Delco Remy 28SI Alternator W/Sensor
L9 - Delco Remy 28SI Alternator W/Sensor Design 1267

L9 - Delco Remy 36SI Alternator W/Sensor
L9 - Delco Remy 36SI Alternator W/Sensor Design 1268

L9 - Delco Remy 40SI Alternator W/Sensor

L9 - Delco Remy 40SI Alternator W/Sensor Design 1269

L9 - Leece-Neville AVI160 Alternator

L9 - Leece-Neville AVI160 Alternator Design 1270

L9 - Leece-Neville AVI160-210A/240A Alternator W/Sensor

L9 - Leece-Neville AVI160-210A/240A Alternator W/Sensor Design 1271

L9 - Leece-Neville - LN 325A Alternator W/Sensor

L9 - Leece-Neville - LN 325A Alternator W/Sensor Design 1272

A26/B6.7/L9 - Crank Inhibit (Engine Speed Inhibit Only)

A26/B6.7/L9 - Crank Inhibit (Engine Speed Inhibit Only) Design 1273

A26 - Cranking (Starter) GEN4 BCM W/O Thermal Overcrank

A26 - Cranking (Starter) GEN4 BCM W/O Thermal Overcrank Design 1274

A26 - Cranking (Starter) GEN4 BCM W/ Thermal Overcrank

A26 - Cranking (Starter) GEN4 BCM W/ Thermal Overcrank Design 1280

B6.7 - Cranking (Starter) GEN4 BCM W/O Thermal Overcrank

B6.7 - Cranking (Starter) GEN4 BCM W/O Thermal Overcrank Design 1286

L9 - Cranking (Starter) GEN4 BCM W/O Thermal Overcrank

L9 - Cranking (Starter) GEN4 BCM W/O Thermal Overcrank Design 1287

L9 - Cranking (Starter) GEN4 BCM W/ Thermal Overcrank - External Switch

L9 - Cranking (Starter) GEN4 BCM W/ Thermal Overcrank - External Switch Design 1288

A26 - Cranking Request (w/ Key Switch w/ BCM)

A26 - Cranking Request (w/ Key Switch w/ BCM) Design 1289

A26/B6.7/L9 - Key Switch (Operator Input)

A26/B6.7/L9 - Key Switch (Operator Input) Design 1291

B6.7 - Cranking Request (w/ Key Switch w/ BCM)

B6.7 - Cranking Request (w/ Key Switch w/ BCM) Design 1293

L9 - Cranking Request (w/ Key Switch w/ BCM)

L9 - Cranking Request (w/ Key Switch w/ BCM) Design 1295

A26 - Clutch Switch/Monitoring (High and Low Switch to BCM)

A26 - Clutch Switch/Monitoring (High and Low Switch to BCM) Design 1296

A26 - Starter Interlock (BCM Controlled with Input from Allison 3K/4K TCM)

A26 - Starter Interlock (BCM Controlled with Input from Allison 3K/4K TCM) Design 1297

A26 - Starter Interlock (BCM LSD Controlled w/ Relay & N/ Auto SS)

A26 - Starter Interlock (BCM LSD Controlled w/ Relay & N/ Auto SS) Design . . . 1299

B6.7 - Clutch Switch/Monitoring (High and Low Switch to BCM)

B6.7 - Clutch Switch/Monitoring (High and Low Switch to BCM) Design 1300

B6.7 - Starter Interlocks (BCM Controlled with Input from Allison 1K/2K TCM)

B6.7 - Starter Interlocks (BCM Controlled with Input from Allison 1K/2K TCM) Design 1301

B6.7 - Starter Interlocks (BCM Controlled with Input from Allison 3K/4K TCM)

B6.7 - Starter Interlocks (BCM Controlled with Input from Allison 3K/4K TCM) Design 1302

L9 - Clutch Switch/Monitoring (High and Low Switch to BCM)

L9 - Clutch Switch/Monitoring (High and Low Switch to BCM) Design 1304

L9 - Starter Interlocks (BCM Controlled with Input from Allison 3K/4K TCM)

L9 - Starter Interlocks (BCM Controlled with Input from Allison 3K/4K TCM) Design 1305

L9 - Starter Interlock (BCM HSD controlled W/ Clutch SW & N/Auto SS)

L9 - Starter Interlock (BCM HSD controlled W/ Clutch SW & N/Auto SS) Design 1307

L9 - Starter Interlock (BCM LSD Controlled w/ Relay & N/ Auto SS)_EATON XMSN

L9 - Starter Interlock (BCM LSD Controlled w/ Relay & N/ Auto SS)_EATON XMSN Design 1308

A26 - Battery International (4) 12V

A26 - Battery International (4) 12V Design 1309

B6.7 - Battery International (4) 12V

B6.7 - Battery International (4) 12V Design 1310

L9 - Battery International (4) 12V

L9 - Battery International (4) 12V Design 1311

Connectors 1312

Part Assembly List

Connector Assembly List HV 3343

Index 3551

Connector J1-1603

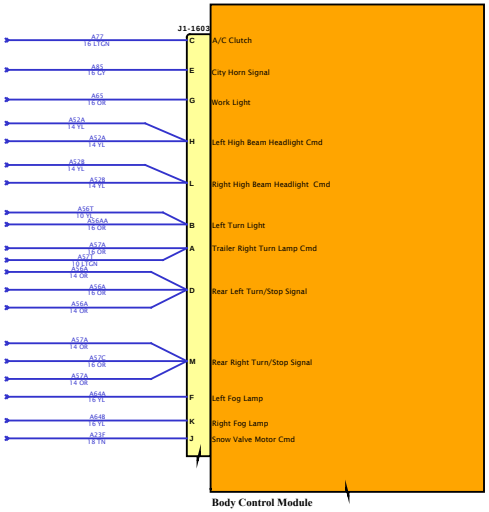

DESIGN DESCRIPTION

FEATURE CODES

SOFTWARE FEATURE CODES

NAVISTAR INC. CONFIDENTIAL PROPRIETARY

Connector J2-1604

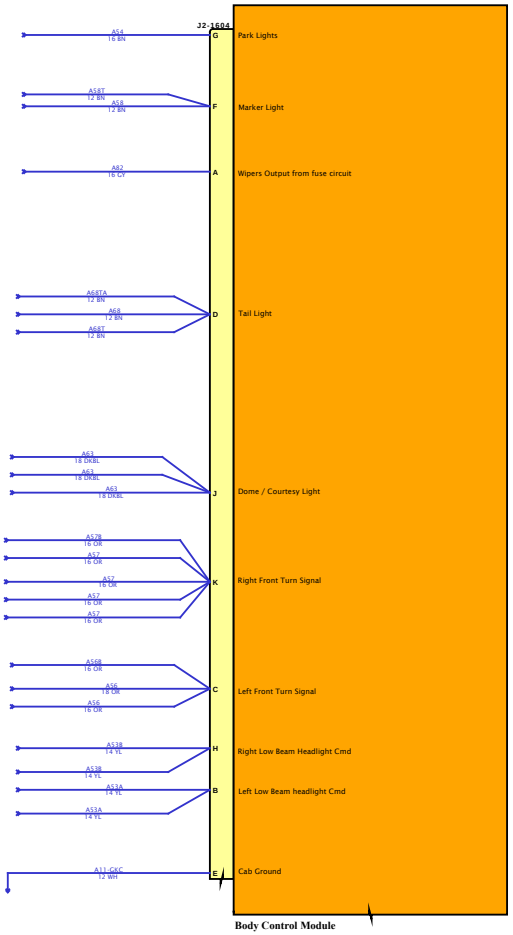

DESIGN DESCRIPTION

FEATURE CODES

SOFTWARE FEATURE CODES

NAVISTAR INC. CONFIDENTIAL PROPRIETARY

Connector J3-1600

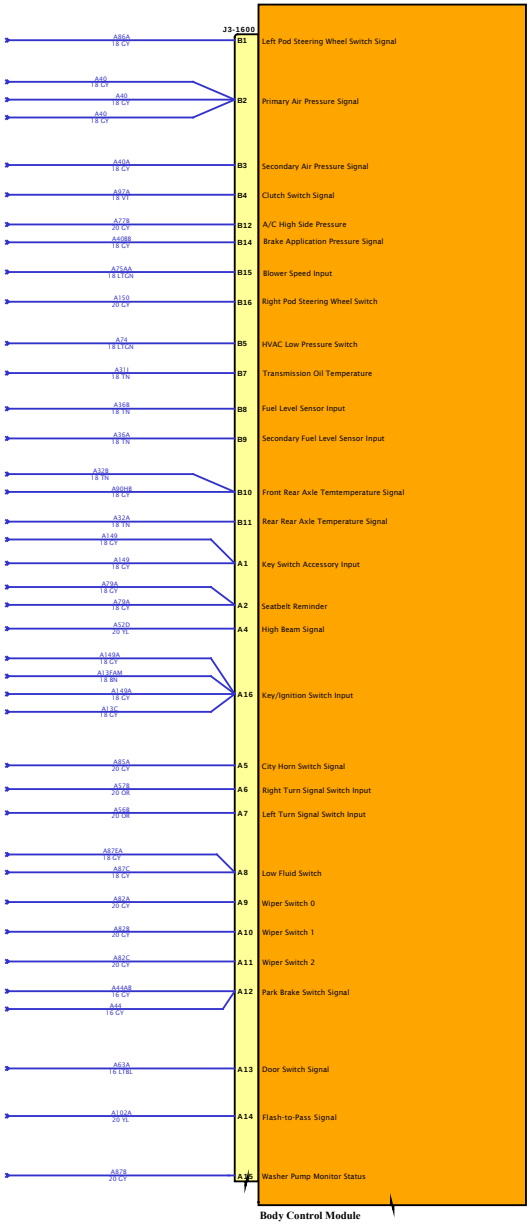

DESIGN DESCRIPTION

FEATURE CODES

SOFTWARE FEATURE CODES

NAVISTAR
NAVISTAR, INC. CONFIDENTIAL PROPRIETARY

Connector J4-1601

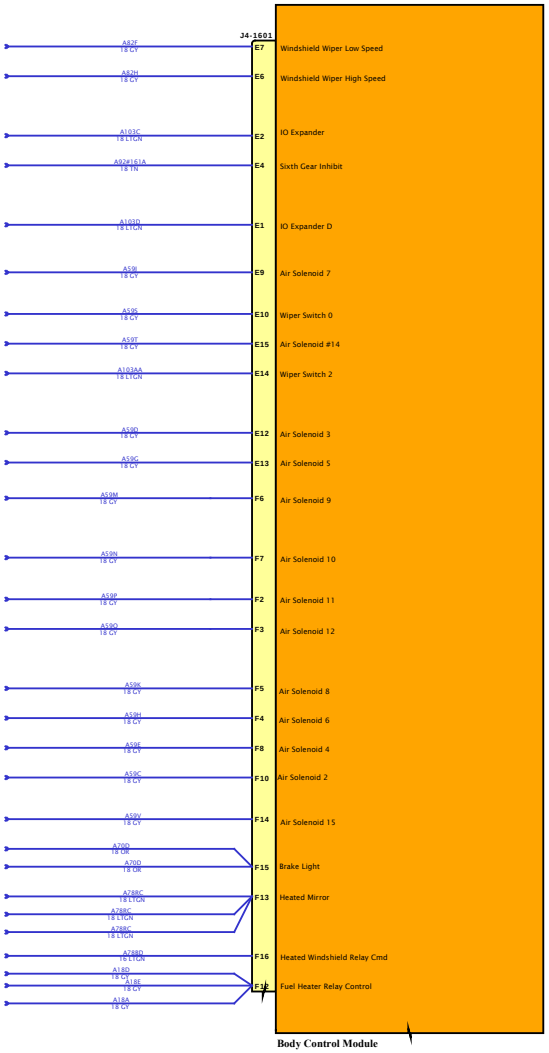

DESIGN DESCRIPTION

FEATURE CODES

SOFTWARE FEATURE CODES

NAVISTAR
NAVISTAR, INC. CONFIDENTIAL PROPRIETARY

Connector J5-1602

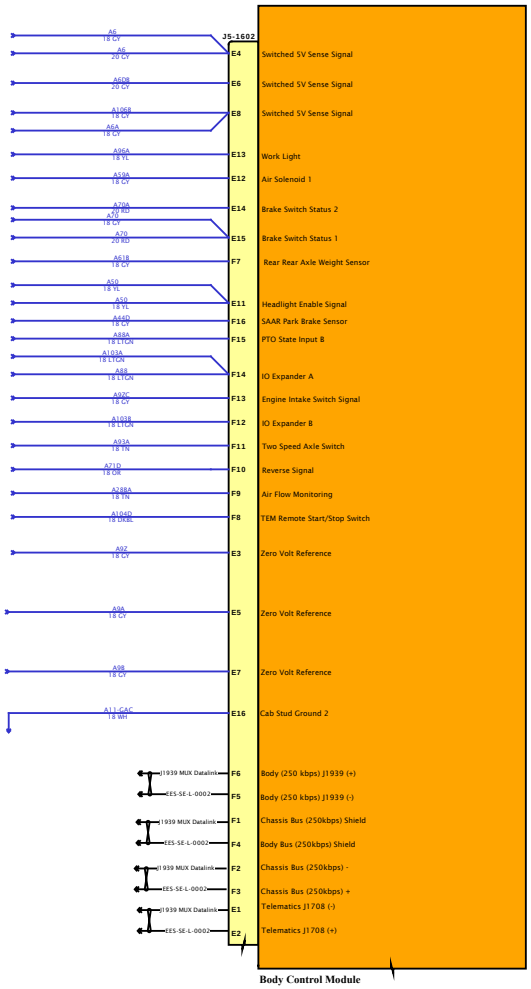

DESIGN DESCRIPTION

FEATURE CODES

SOFTWARE FEATURE CODES

NAVISTAR
NAVISTAR, INC. CONFIDENTIAL PROPRIETARY

Connector J6-1606

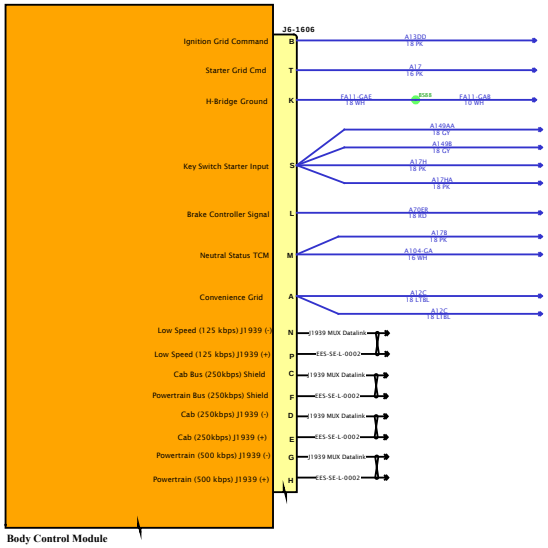

DESIGN DESCRIPTION

FEATURE CODES

SOFTWARE FEATURE CODES

NAVISTAR
NAVISTAR, INC. CONFIDENTIAL PROPRIETARY

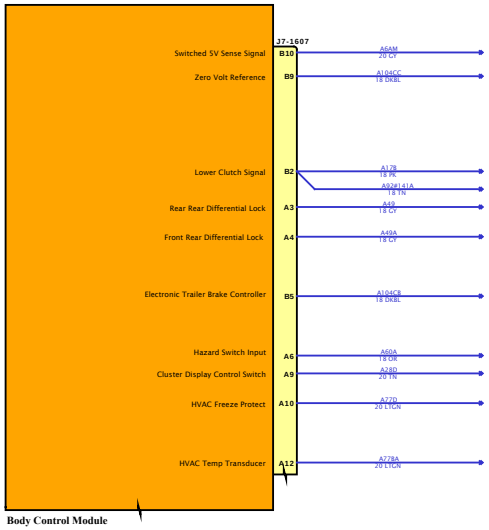

DESIGN DESCRIPTION

FEATURE CODES

SOFTWARE FEATURE CODES

NAVISTAR INC. CONFIDENTIAL PROPRIETARY

Connector J8 (Power Feed)

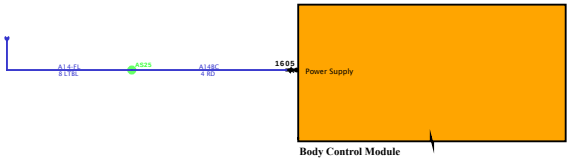

DESIGN DESCRIPTION

FEATURE CODES

SOFTWARE FEATURE CODES

NAVISTAR INC. CONFIDENTIAL PROPRIETARY

DESIGN DESCRIPTION

FEATURE CODES

SOFTWARE FEATURE CODES

BENDIX ABS IMPLEMENTATION

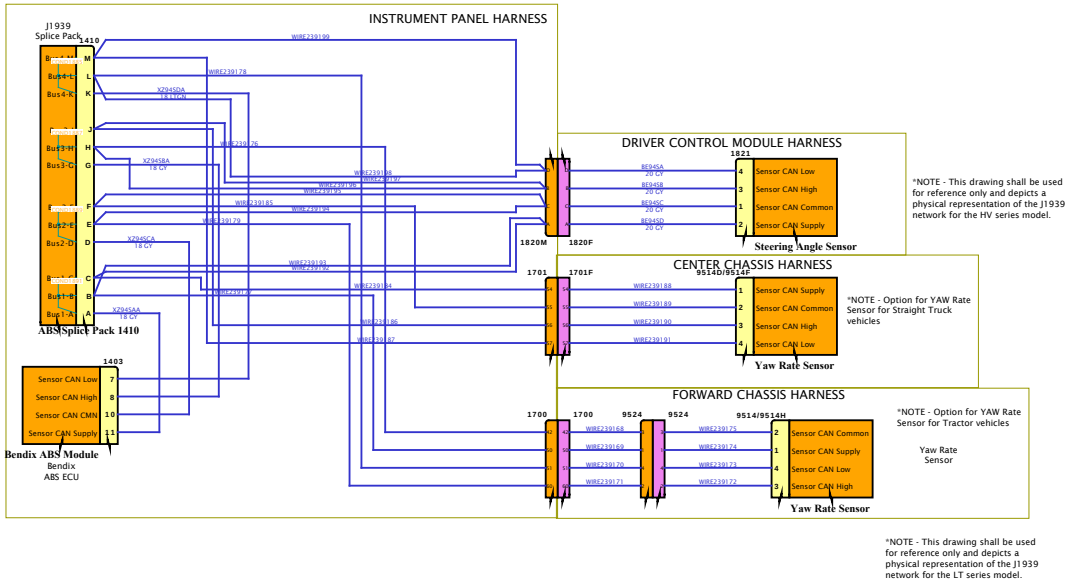

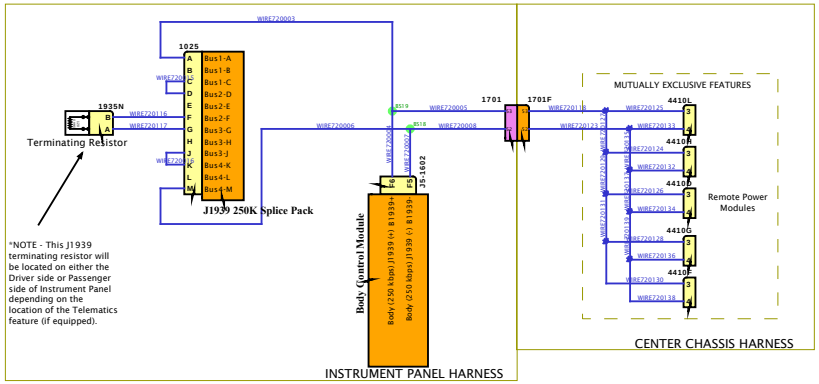

*NOTE - All wires shown are part of a jacketed J1939 twisted pair. This drawing shall be used for reference only and depicts a physical representation of the J1939 network with all features available for the HV A26 series model, which may not be a buildable combination.

DESIGN DESCRIPTION

FEATURE CODES

SOFTWARE FEATURE CODES

NAVISTAR INC. CONFIDENTIAL PROPRIETARY

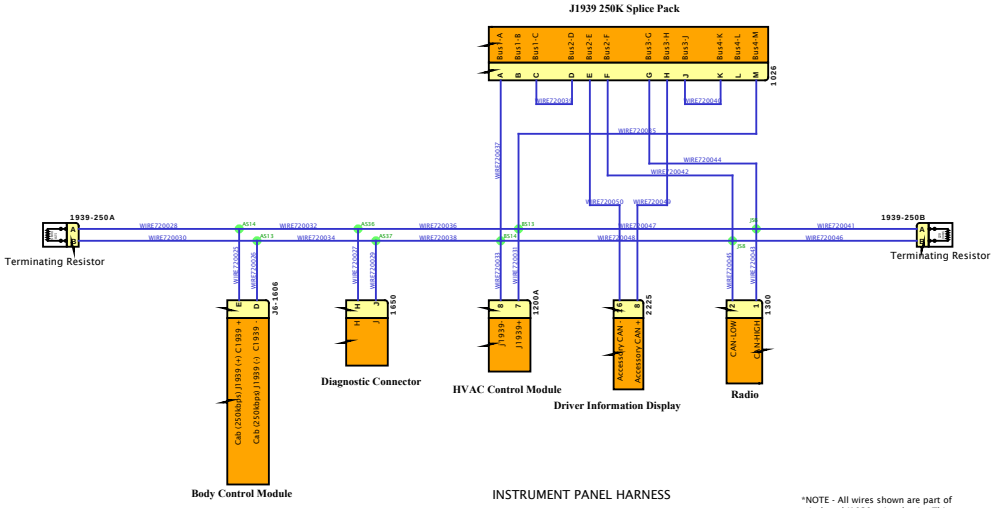

*NOTE - All wires shown are part of a jacketed J1939 twisted pair. This drawing shall be used for reference only and depicts a physical representation of the J1939 network with all features available for the LT series model, which may not be a buildable combination.

DESIGN DESCRIPTION

FEATURE CODES

SOFTWARE FEATURE CODES

NAVISTAR INC. CONFIDENTIAL PROPRIETARY

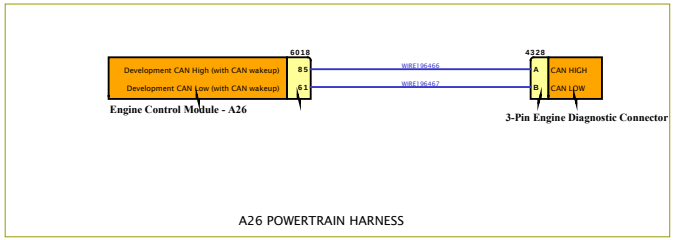

A26 POWERTRAIN HARNESS

*NOTE - All wires shown are part of a jacketed J1939 twisted pair. This drawing shall be used for reference only and depicts a physical representation of the J1939 network with all features available for the LT series model, which may not be a buildable combination.

DESIGN DESCRIPTION

FEATURE CODES

SOFTWARE FEATURE CODES

NAVISTAR INC. CONFIDENTIAL PROPRIETARY

DESIGN DESCRIPTION

FEATURE CODES

SOFTWARE FEATURE CODES

A26 ENGINE IMPLEMENTATION

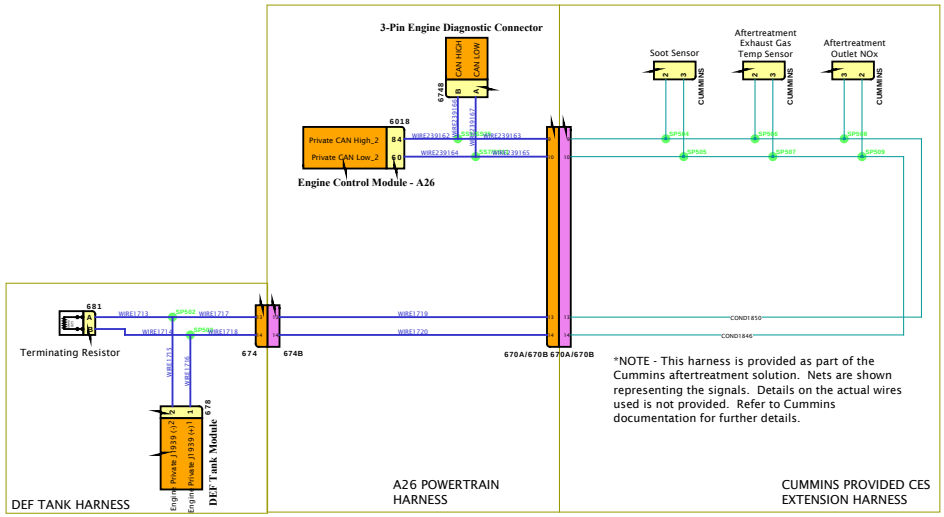

*NOTE - All wires shown are part of a jacketed J1939 twisted pair. This drawing shall be used for reference only and depicts a physical representation of the J1939 network with all features available for the LT series model, which may not be a buildable combination.

NAVISTAR INC. CONFIDENTIAL PROPRIETARY

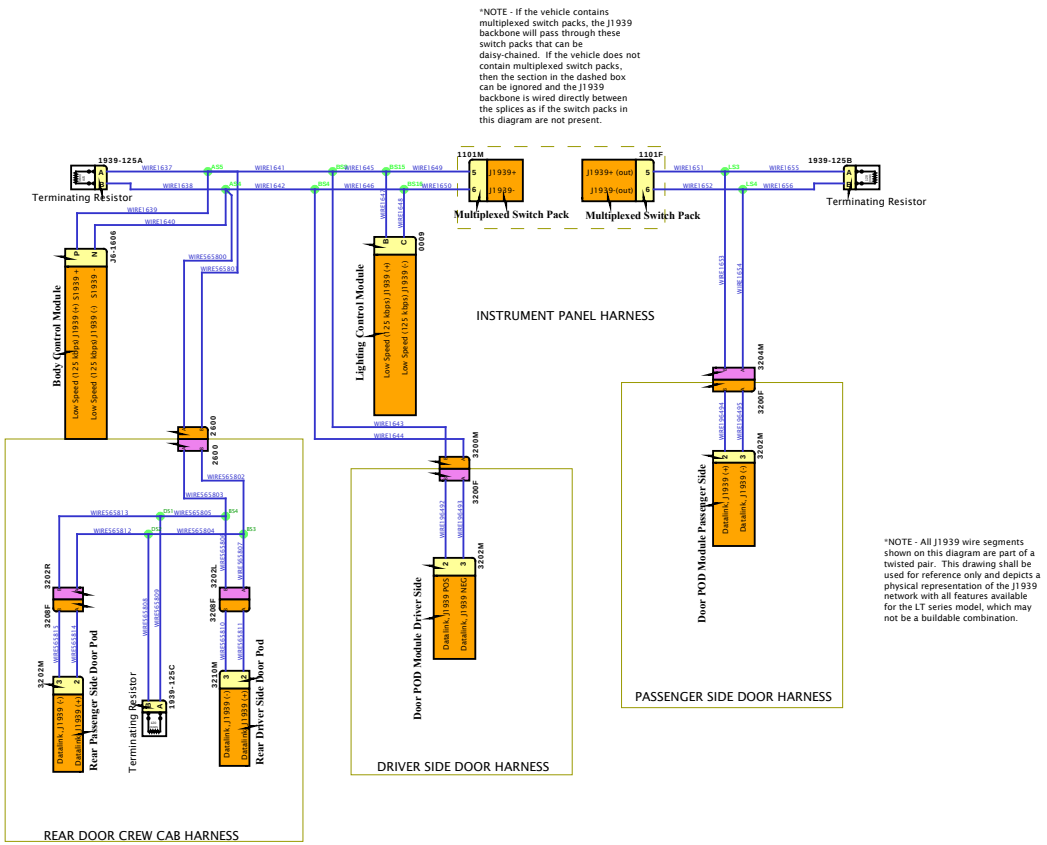

DESIGN DESCRIPTION

FEATURE CODES

SOFTWARE FEATURE CODES

NAVISTAR
NAVISTAR, INC. CONFIDENTIAL PROPRIETARY

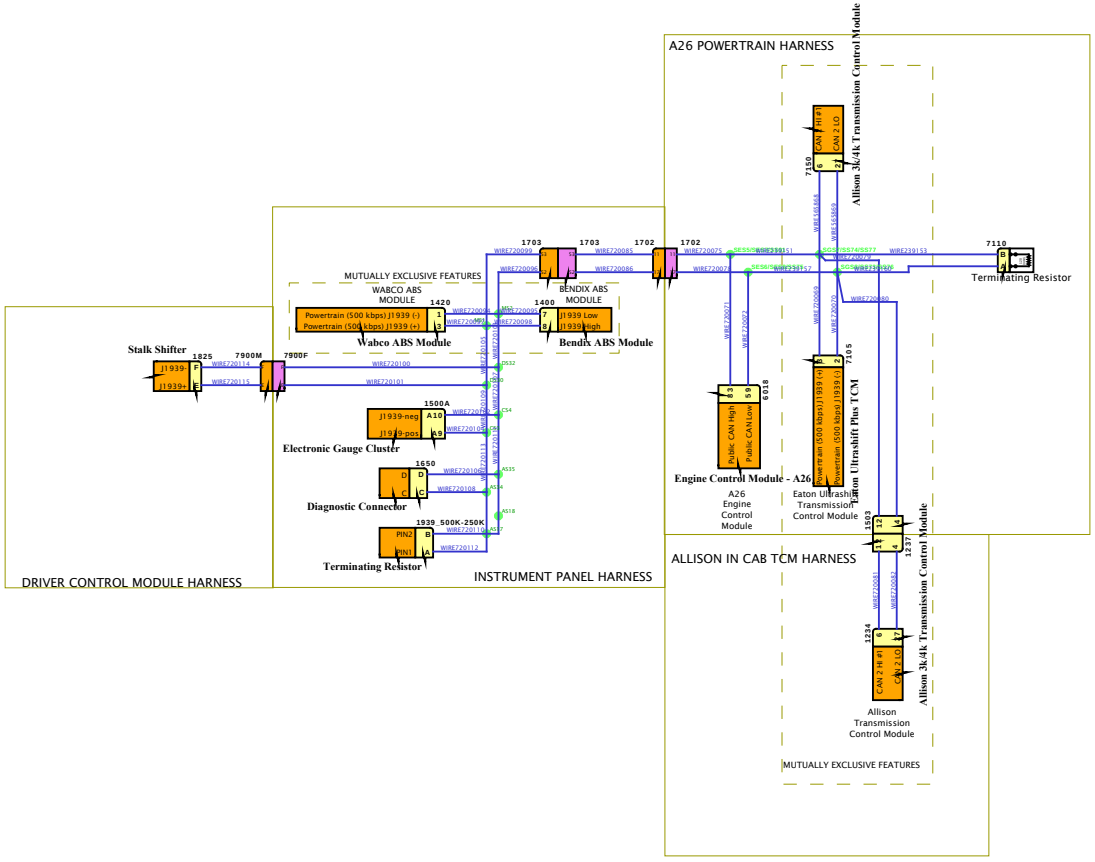

DESIGN DESCRIPTION

FEATURE CODES

SOFTWARE FEATURE CODES

NAVISTAR
NAVISTAR, INC. CONFIDENTIAL PROPRIETARY

DESIGN DESCRIPTION

FEATURE CODES

SOFTWARE FEATURE CODES

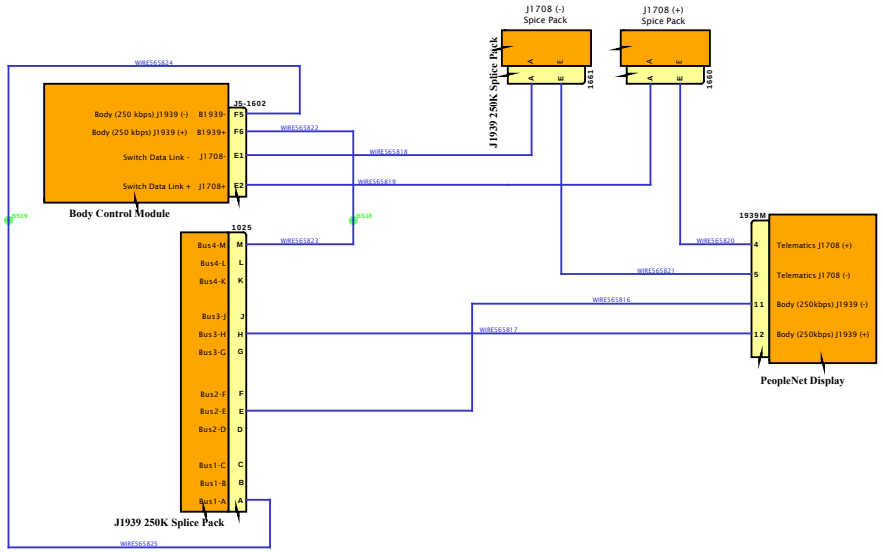

INSTRUMENT PANEL HARNESS

*NOTE - All wires shown are part of a jacketed J1939 twisted pair. This drawing shall be used for reference only and depicts a physical representation of the J1939 network with all features available for the HV series model, which may not be a buildable combination.

NAVISTAR INC. CONFIDENTIAL PROPRIETARY

DESIGN DESCRIPTION

FEATURE CODES

SOFTWARE FEATURE CODES

BENDIX ABS IMPLEMENTATION

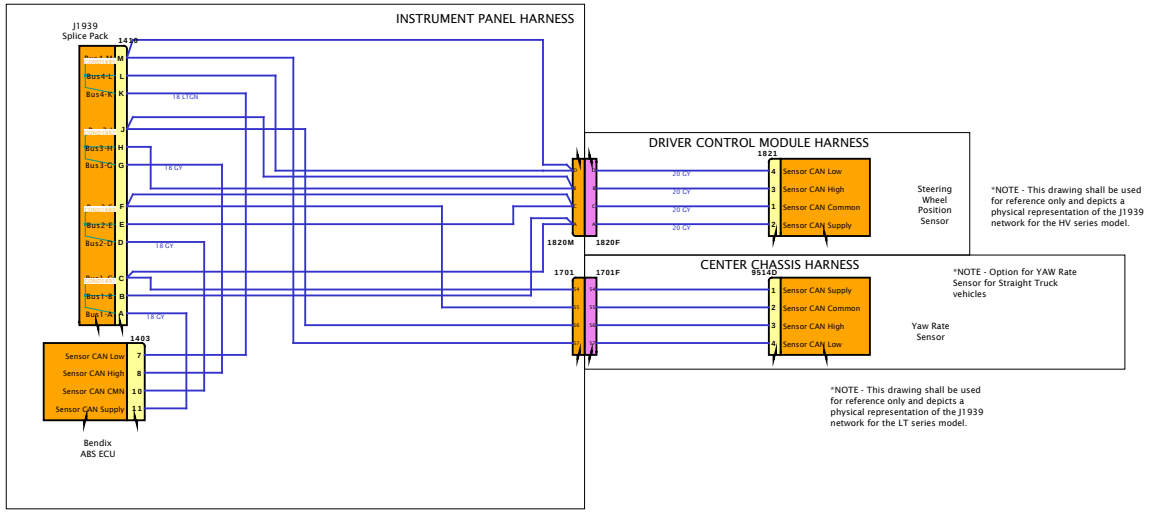

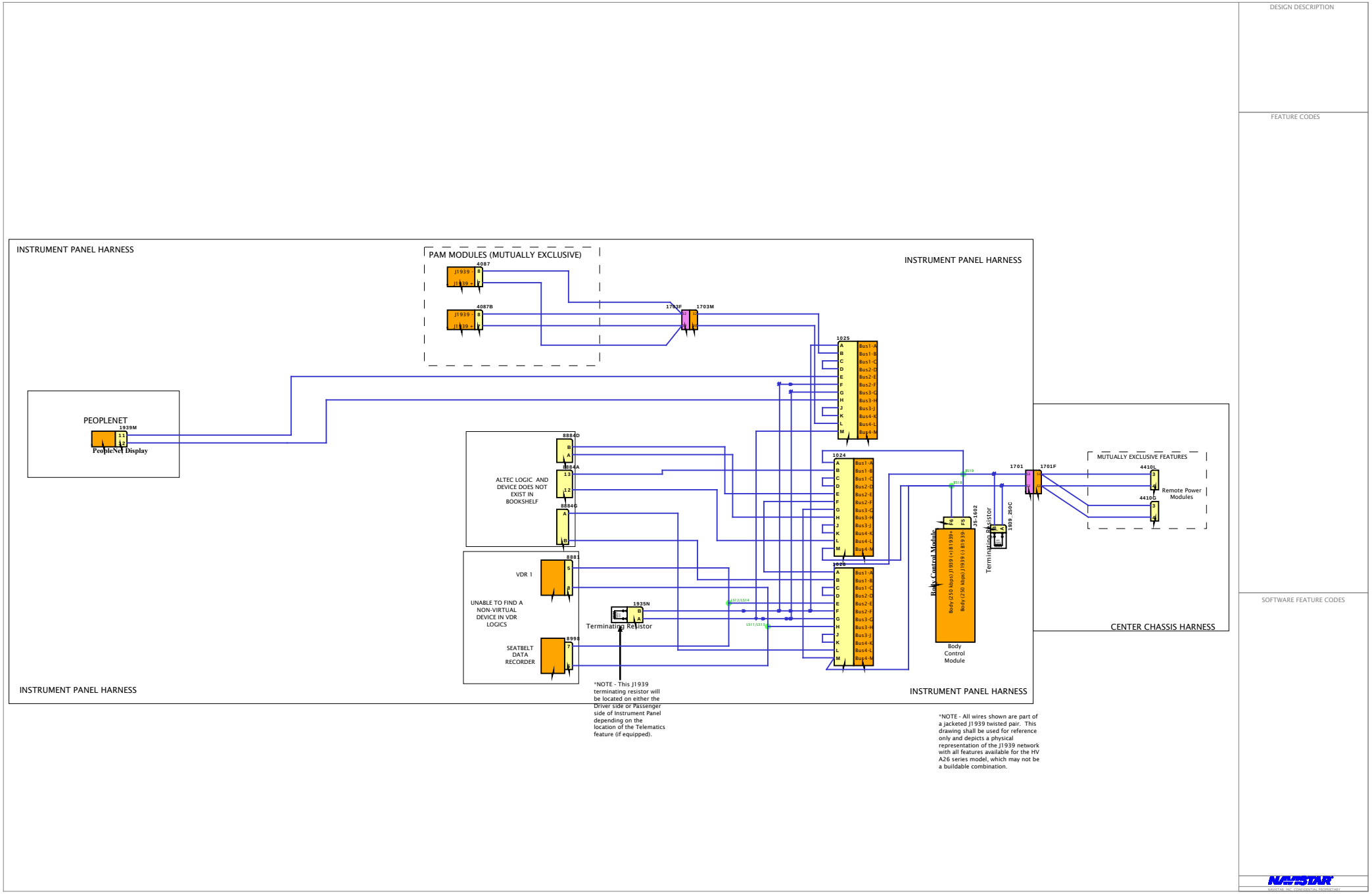
DESIGN DESCRIPTION
FEATURE CODES
SOFTWARE FEATURE CODES
INSTRUMENT PANEL HARNESS
PAM MODULES (MUTUALLY EXCLUSIVE)
INSTRUMENT PANEL HARNESS
PEOPLENET
PeopleNet Display
ALTEC LOGIC AND DEVICE DOES NOT EXIST IN BOOKSHELF
VDR 1
UNABLE TO FIND A NON-VIRTUAL DEVICE IN VDR LOGICS
SEATBELT DATA RECORDER
Terminating Resistor
*NOTE - This J1939 terminating resistor will be located on either the Driver side or Passenger side of Instrument Panel depending on the location of the Telematics feature (if equipped).
INSTRUMENT PANEL HARNESS
INSTRUMENT PANEL HARNESS
Body Control Module
Body (250 kbps) J1939 (+) J1939 (-)
Terminating Resistor
MUTUALLY EXCLUSIVE FEATURES
Remote Power Modules
CENTER CHASSIS HARNESS
*NOTE - All wires shown are part of a jacketed J1939 twisted pair. This drawing shall be used for reference only and depicts a physical representation of the J1939 network with all features available for the HV A26 series model, which may not be a buildable combination.
NAVISTAR
NAVISTAR, INC. CONFIDENTIAL PROPRIETARY

DESIGN DESCRIPTION

FEATURE CODES

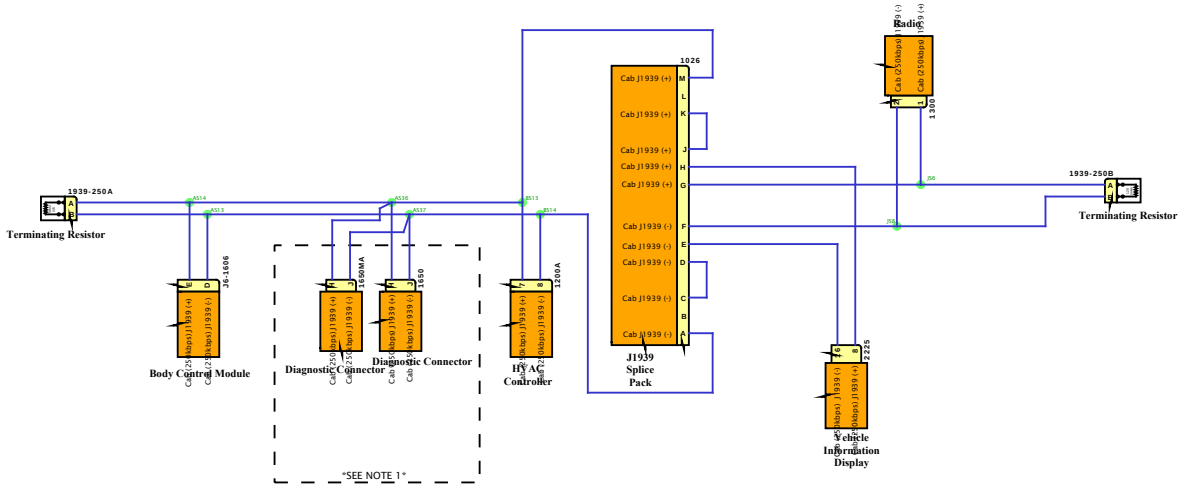

INSTRUMENT PANEL HARNESS

Note 1:
Only 1 device in the dashed area can be equipped at a time

*NOTE - All wires shown are part of a jacketed J1939 twisted pair. This drawing shall be used for reference only and depicts a physical representation of the J1939 network with all features available for the HV series model, which may not be a buildable combination.

SOFTWARE FEATURE CODES

NAVISTAR
NAVISTAR, INC. CONFIDENTIAL PROPRIETARY

DESIGN DESCRIPTION

FEATURE CODES

SOFTWARE FEATURE CODES

CUMMINS ENGINE IMPLEMENTATION

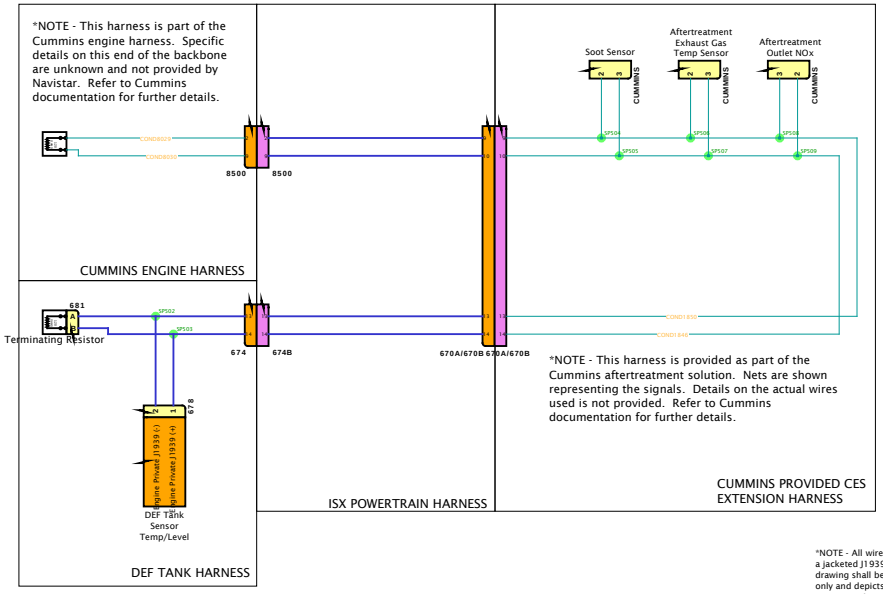

*NOTE - All wires shown are part of a jacketed J1939 twisted pair. This drawing shall be used for reference only and depicts a physical representation of the J1939 network with all features available for the LT series model, which may not be a buildable combination.

NAVISTAR INC. CONFIDENTIAL PROPRIETARY

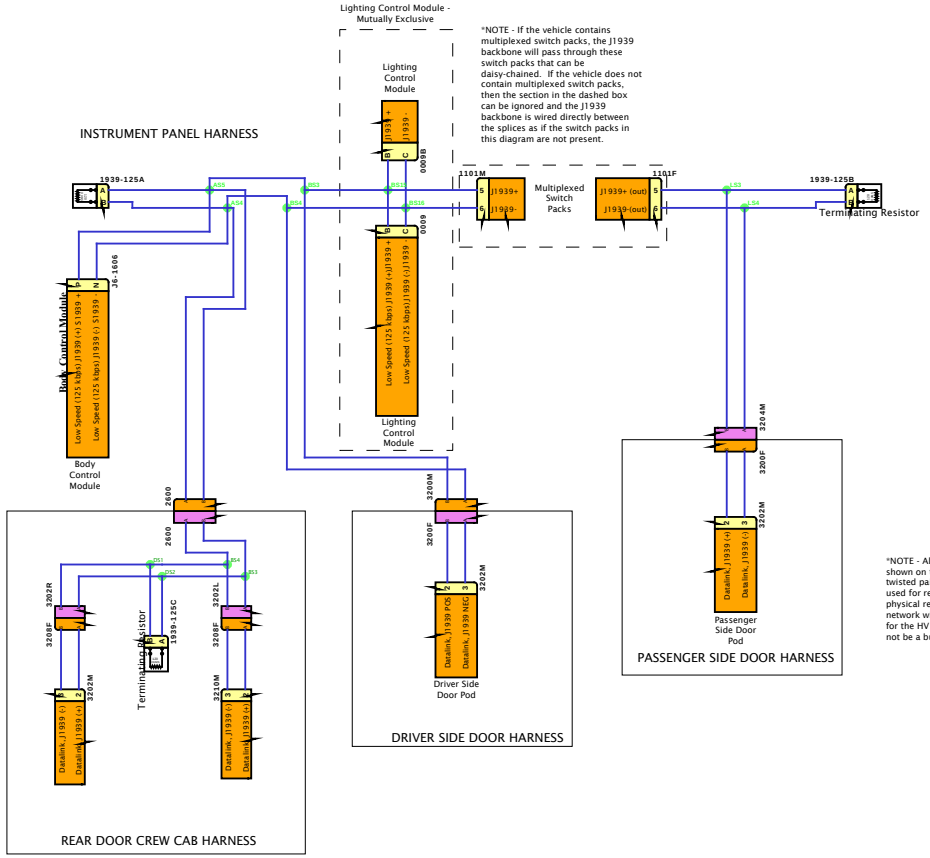

DESIGN DESCRIPTION

FEATURE CODES

SOFTWARE FEATURE CODES

Powertrain Standard J1939 (500Kbps)

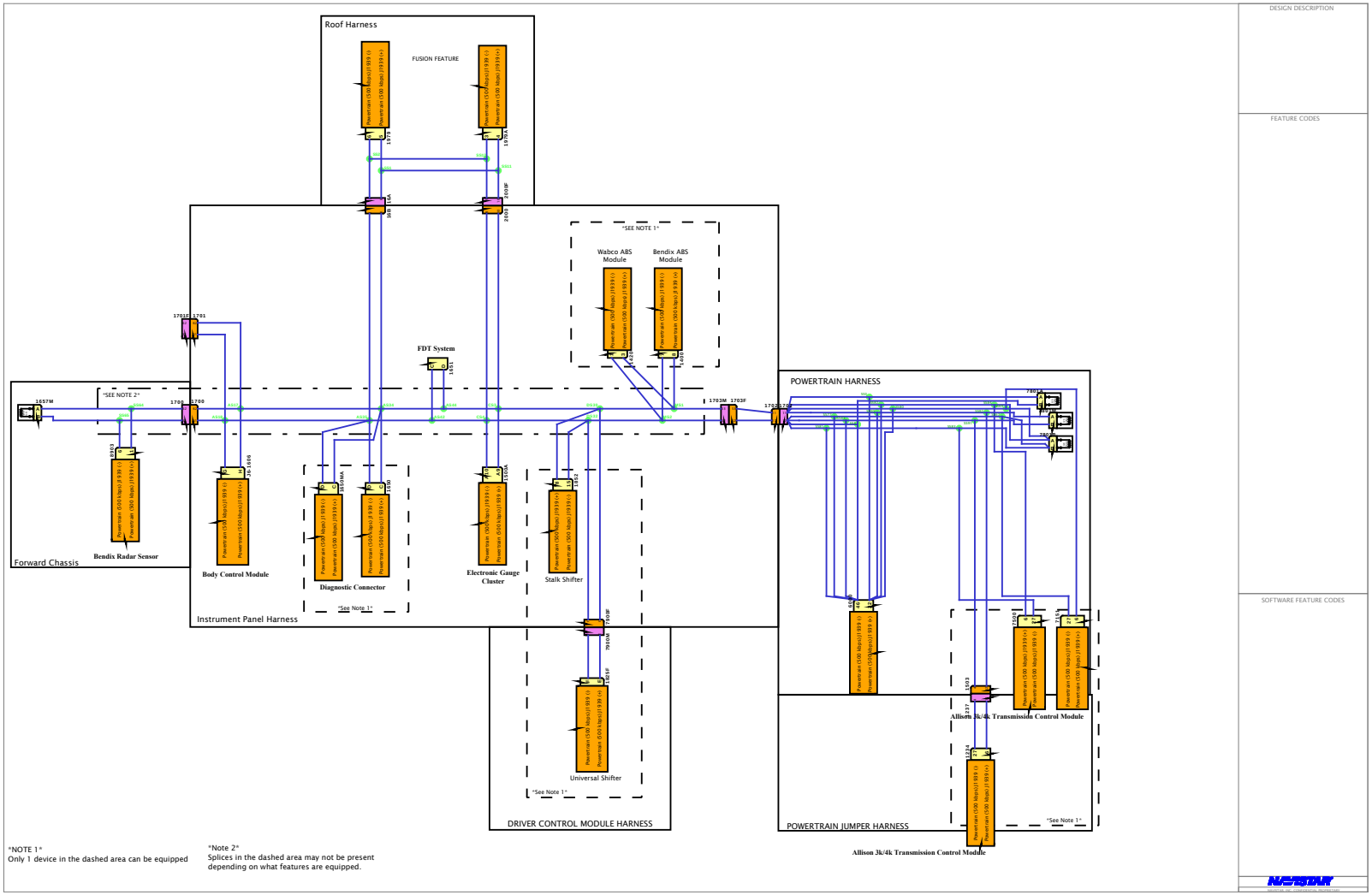

DESIGN DESCRIPTION

FEATURE CODES

SOFTWARE FEATURE CODES

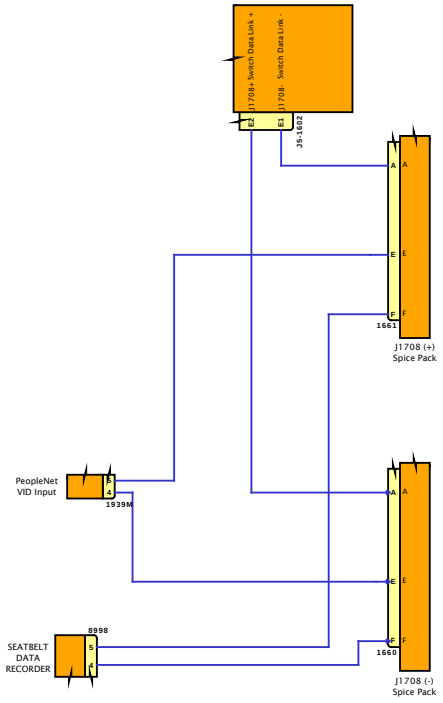

INSTRUMENT PANEL HARNESS

*NOTE - All wires shown are part of a jacketed J1939 twisted pair. This drawing shall be used for reference only and depicts a physical representation of the J1939 network with all features available for the HV series model, which may not be a buildable combination.

NAVISTAR INC. CONFIDENTIAL PROPRIETARY

DESIGN DESCRIPTION

FEATURE CODES

SOFTWARE FEATURE CODES

BENDIX ABS IMPLEMENTATION

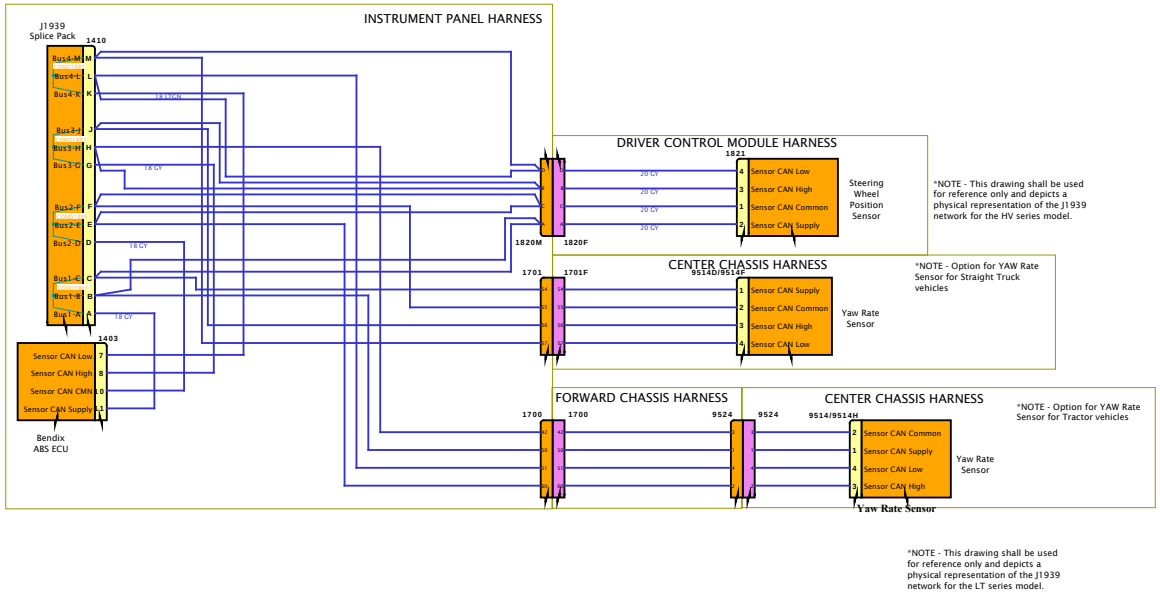

Body Standard J1939 (250Kbps)

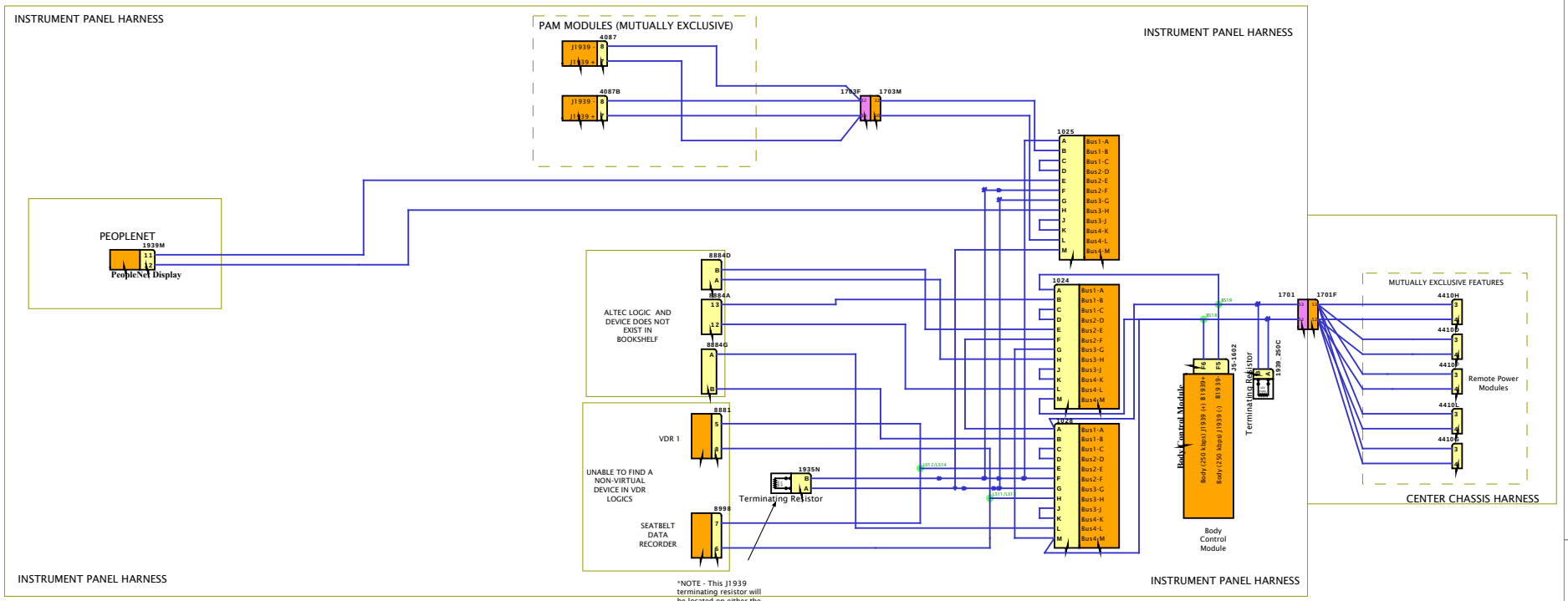

DESIGN DESCRIPTION

FEATURE CODES

SOFTWARE FEATURE CODES

Cab Standard J1939 (250Kbps)

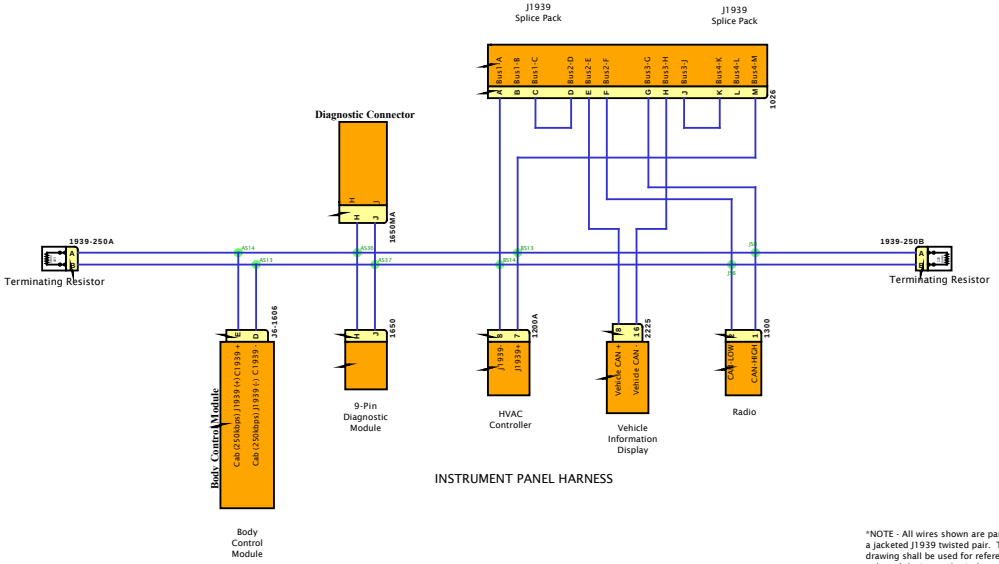

*NOTE - All wires shown are part of a jacketed J1939 twisted pair. This drawing shall be used for reference only and depicts a physical representation of the J1939 network with all features available for the LT series model, which may not be a buildable combination.

DESIGN DESCRIPTION

FEATURE CODES

SOFTWARE FEATURE CODES

NAVISTAR, INC. CONFIDENTIAL PROPRIETARY

DESIGN DESCRIPTION

FEATURE CODES

SOFTWARE FEATURE CODES

CUMMINS ENGINE IMPLEMENTATION

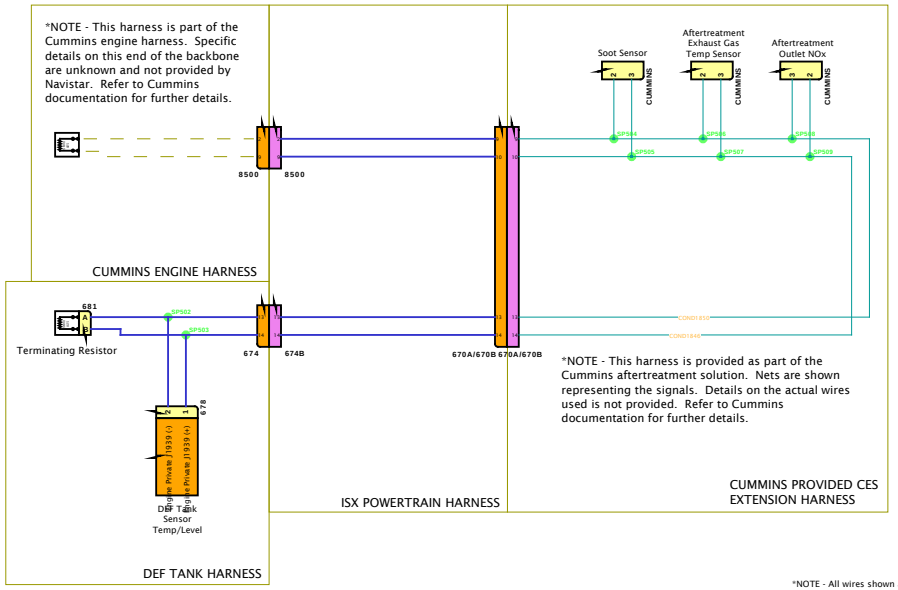

*NOTE - All wires shown are part of a jacketed J1939 twisted pair. This drawing shall be used for reference only and depicts a physical representation of the J1939 network with all features available for the LT series model, which may not be a buildable combination.

NAVISTAR
NAVISTAR, INC. CONFIDENTIAL PROPRIETARY

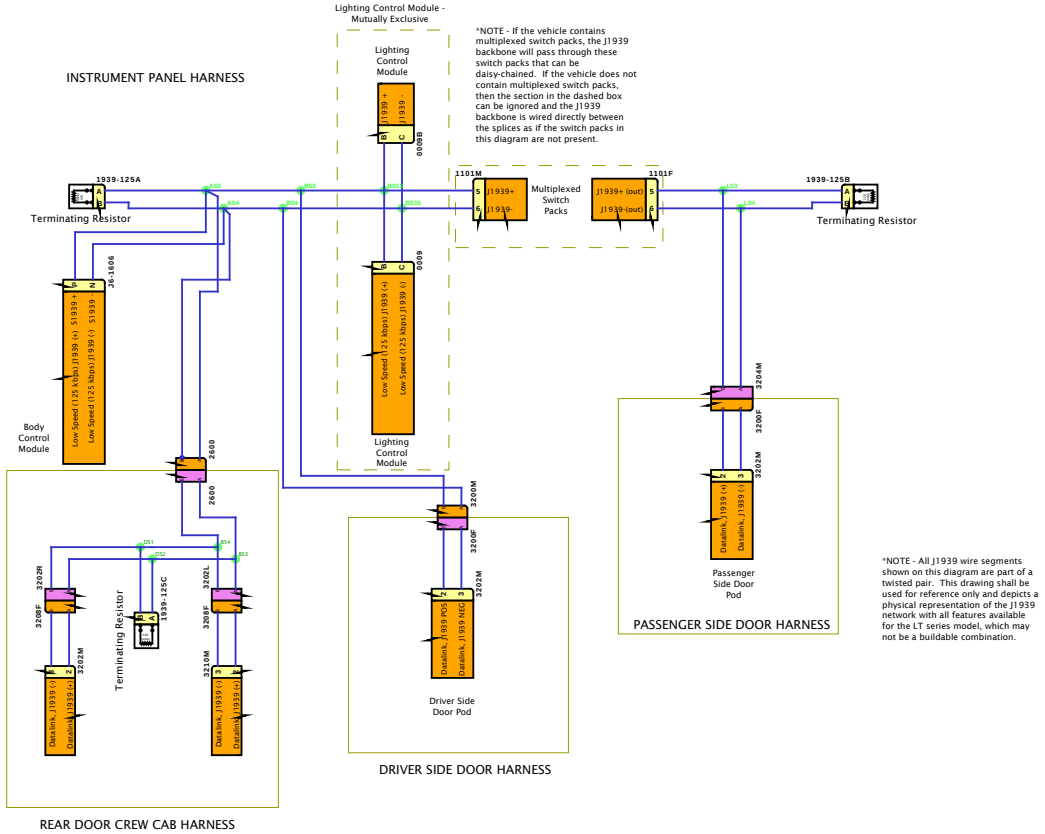

DESIGN DESCRIPTION

FEATURE CODES

SOFTWARE FEATURE CODES

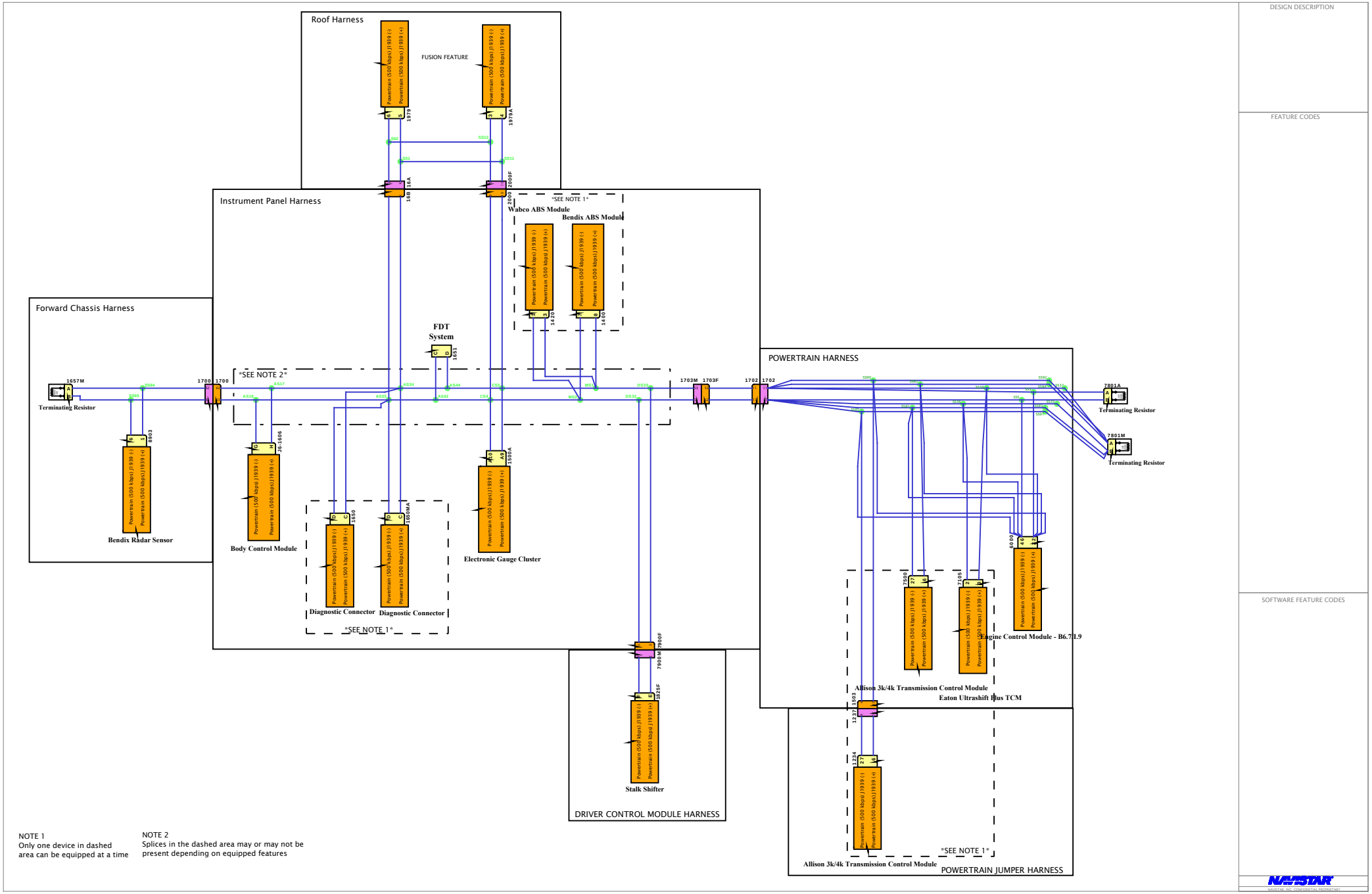
Roof Harness
FUSION FEATURE
Powertrain (500 kbps) J1939 (-)
Powertrain (500 kbps) J1939 (+)
1979
1979A
SS12
SS11
SS2
SS1
168 16A
2000 2000F
Instrument Panel Harness
SEE NOTE 1
Wabco ABS Module
Bendix ABS Module
1400
1400
Forward Chassis Harness
FDT System
1651
SEE NOTE 2
1657M
Terminating Resistor
SS64
SS65
1700 1700
AS17
AS16
AS34
AS35
AS44
AS42
CS3
CS4
MS3
MS2
DS33
DS32
1703M 1703F
1702 1702
POWERTRAIN HARNESS
SS90
SS91
SS92
SS93
SS94
SS95
SS96
SS97
SS98
SS99
SS100
SS101
SS102
SS103
SS104
SS105
SS106
SS107
SS108
SS109
SS110
SS111
SS112
SS113
SS114
SS115
SS116
SS117
SS118
SS119
7801A
Terminating Resistor
7801M
Terminating Resistor
8903
Bendix Radar Sensor
J6-1606
Body Control Module
1650
1650MA
Diagnostic Connector
Diagnostic Connector
SEE NOTE 1
1500A
Electronic Gauge Cluster
6000
Engine Control Module - B6.7 L9
1560
1705
Allison 3k/4k Transmission Control Module
Eaton Ultrashift Plus TCM
1503
1227
1234
Allison 3k/4k Transmission Control Module
SEE NOTE 1
POWERTRAIN JUMPER HARNESS
7900M 7900F
1825F
Stalk Shifter
DRIVER CONTROL MODULE HARNESS
NOTE 1
Only one device in dashed area can be equipped at a time
NOTE 2
Splices in the dashed area may or may not be present depending on equipped features
DESIGN DESCRIPTION
FEATURE CODES
SOFTWARE FEATURE CODES
NAVISTAR
NAVISTAR, INC. CONFIDENTIAL PROPRIETARY

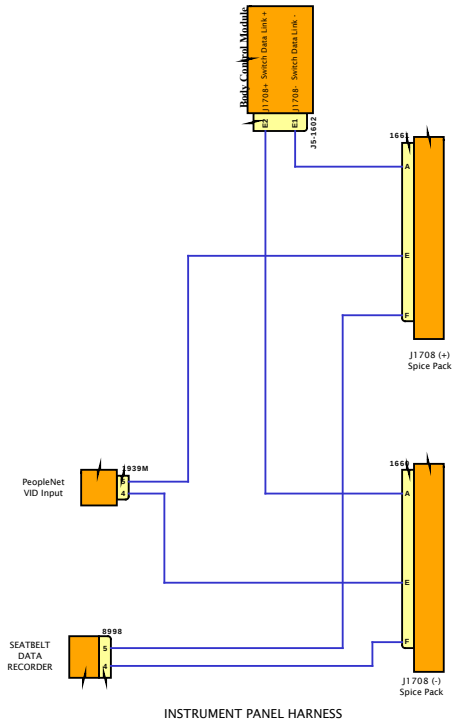

INSTRUMENT PANEL HARNESS

*NOTE - All wires shown are part of a jacketed J1939 twisted pair. This drawing shall be used for reference only and depicts a physical representation of the J1939 network with all features available for the HV series model, which may not be a buildable combination.

DESIGN DESCRIPTION

FEATURE CODES

SOFTWARE FEATURE CODES

NAVISTAR INC. CONFIDENTIAL PROPRIETARY

DESIGN DESCRIPTION

FEATURE CODES

SOFTWARE FEATURE CODES

BENDIX ABS IMPLEMENTATION

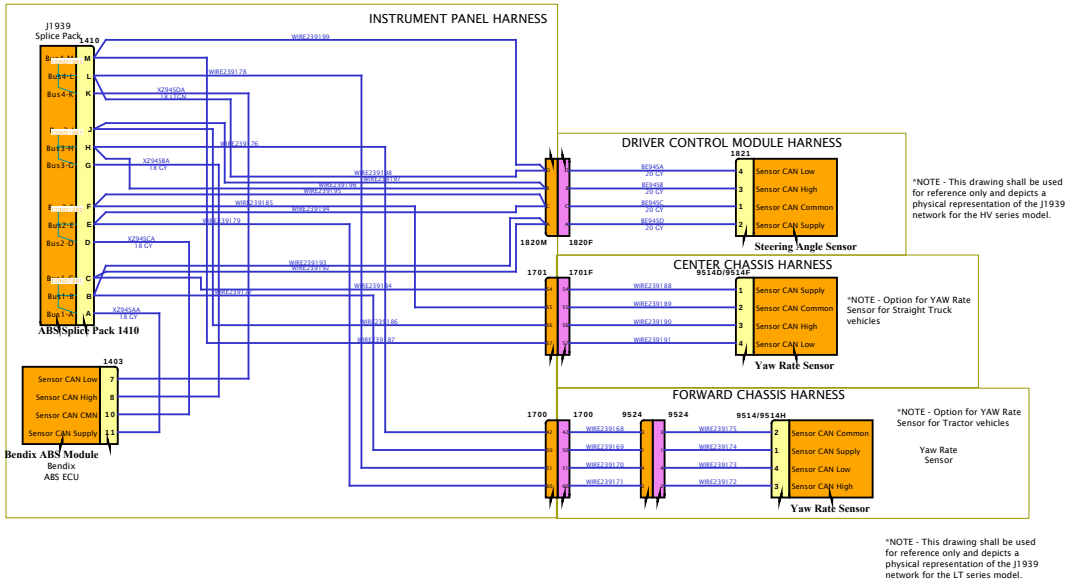

A26 - Body J1939 (250Kbps)

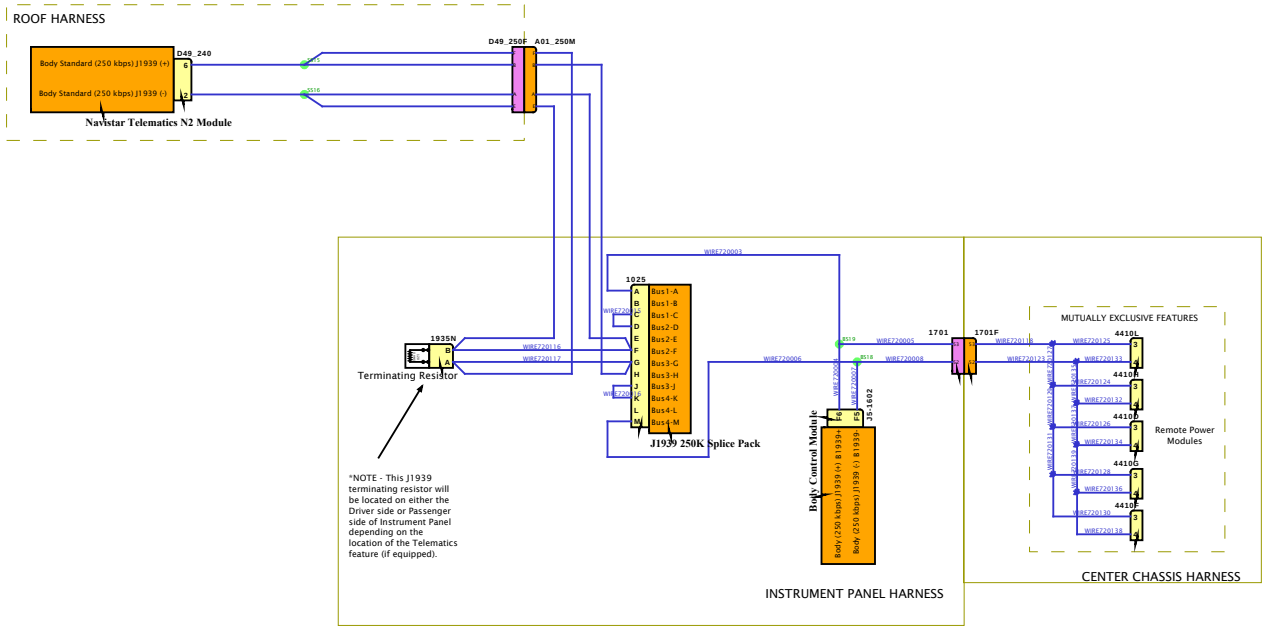

*NOTE - All wires shown are part of a jacketed J1939 twisted pair. This drawing shall be used for reference only and depicts a physical representation of the J1939 network with all features available for the HV A26 series model, which may not be a buildable combination.

DESIGN DESCRIPTION

FEATURE CODES

SOFTWARE FEATURE CODES

NAVISTAR INC. CONFIDENTIAL PROPRIETARY

A26 - Cab J1939 (250Kbps)

DESIGN DESCRIPTION

FEATURE CODES

SOFTWARE FEATURE CODES

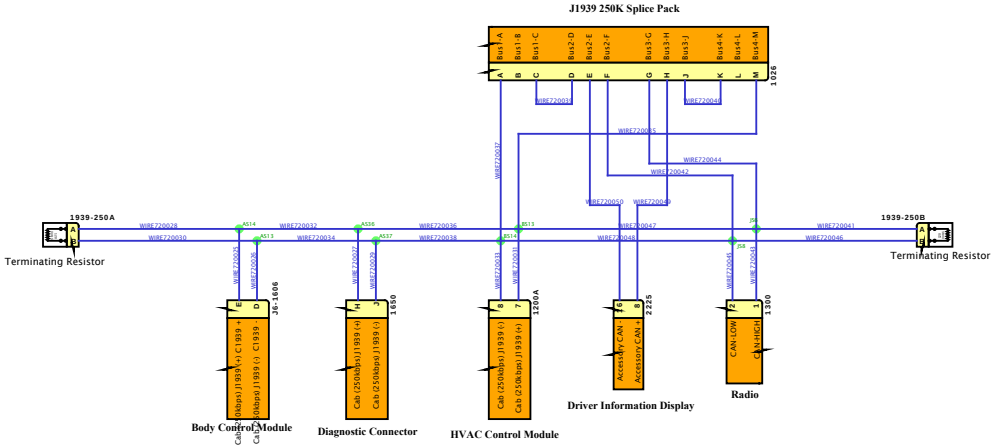

INSTRUMENT PANEL HARNESS

*NOTE - All wires shown are part of a jacketed J1939 twisted pair. This drawing shall be used for reference only and depicts a physical representation of the J1939 network with all features available for the LT series model, which may not be a buildable combination.

NAVISTAR, INC. CONFIDENTIAL PROPRIETARY

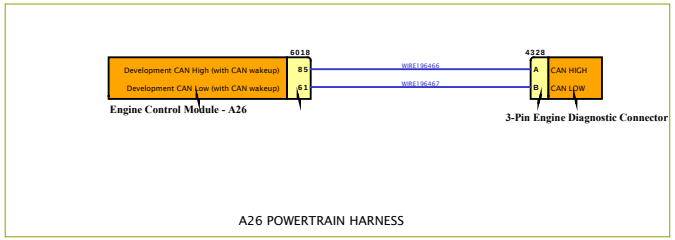

A26 POWERTRAIN HARNESS

*NOTE - All wires shown are part of a jacketed J1939 twisted pair. This drawing shall be used for reference only and depicts a physical representation of the J1939 network with all features available for the LT series model, which may not be a buildable combination.

DESIGN DESCRIPTION

FEATURE CODES

SOFTWARE FEATURE CODES

NAVISTAR INC. CONFIDENTIAL PROPRIETARY

DESIGN DESCRIPTION

FEATURE CODES

SOFTWARE FEATURE CODES

A26 ENGINE IMPLEMENTATION

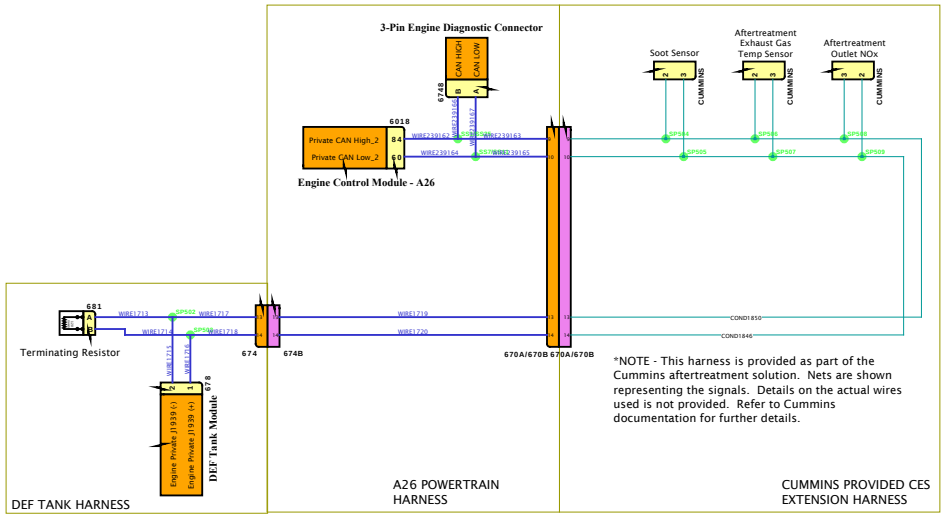

*NOTE - All wires shown are part of a jacketed J1939 twisted pair. This drawing shall be used for reference only and depicts a physical representation of the J1939 network with all features available for the LT series model, which may not be a buildable combination.

NAVISTAR INC. CONFIDENTIAL PROPRIETARY

A26 - HMI J1939 (125Kbps)

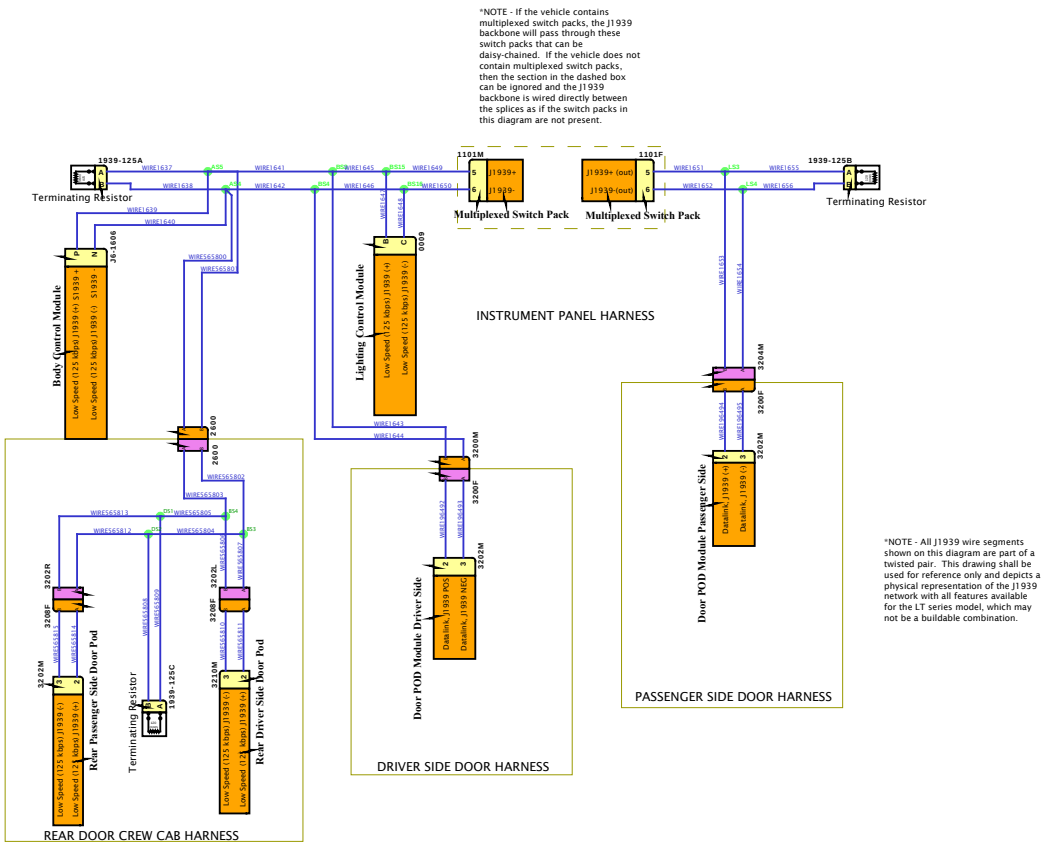

DESIGN DESCRIPTION

FEATURE CODES

SOFTWARE FEATURE CODES

DESIGN DESCRIPTION

FEATURE CODES

SOFTWARE FEATURE CODES

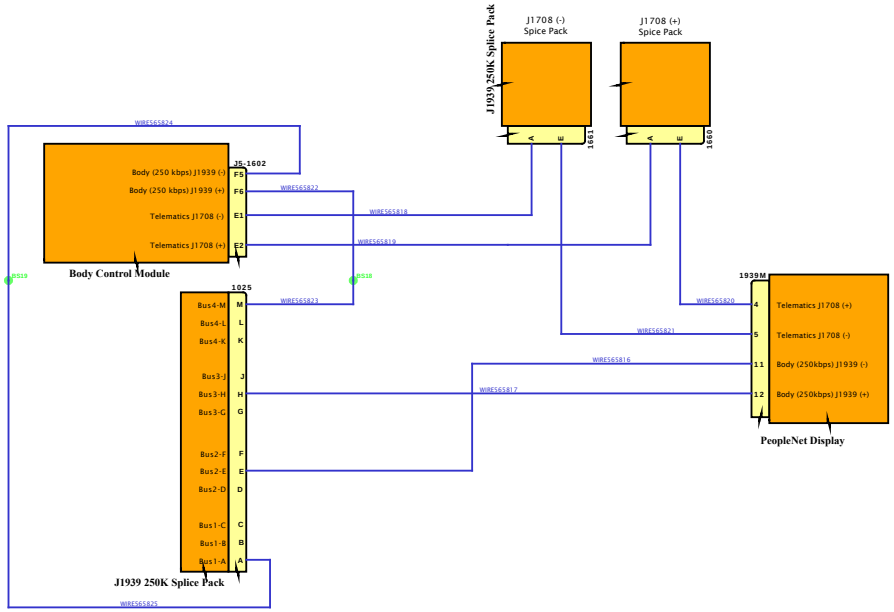

INSTRUMENT PANEL HARNESS

*NOTE - All wires shown are part of a jacketed J1939 twisted pair. This drawing shall be used for reference only and depicts a physical representation of the J1939 network with all features available for the HV series model, which may not be a buildable combination.

NAVISTAR INC. CONFIDENTIAL PROPRIETARY

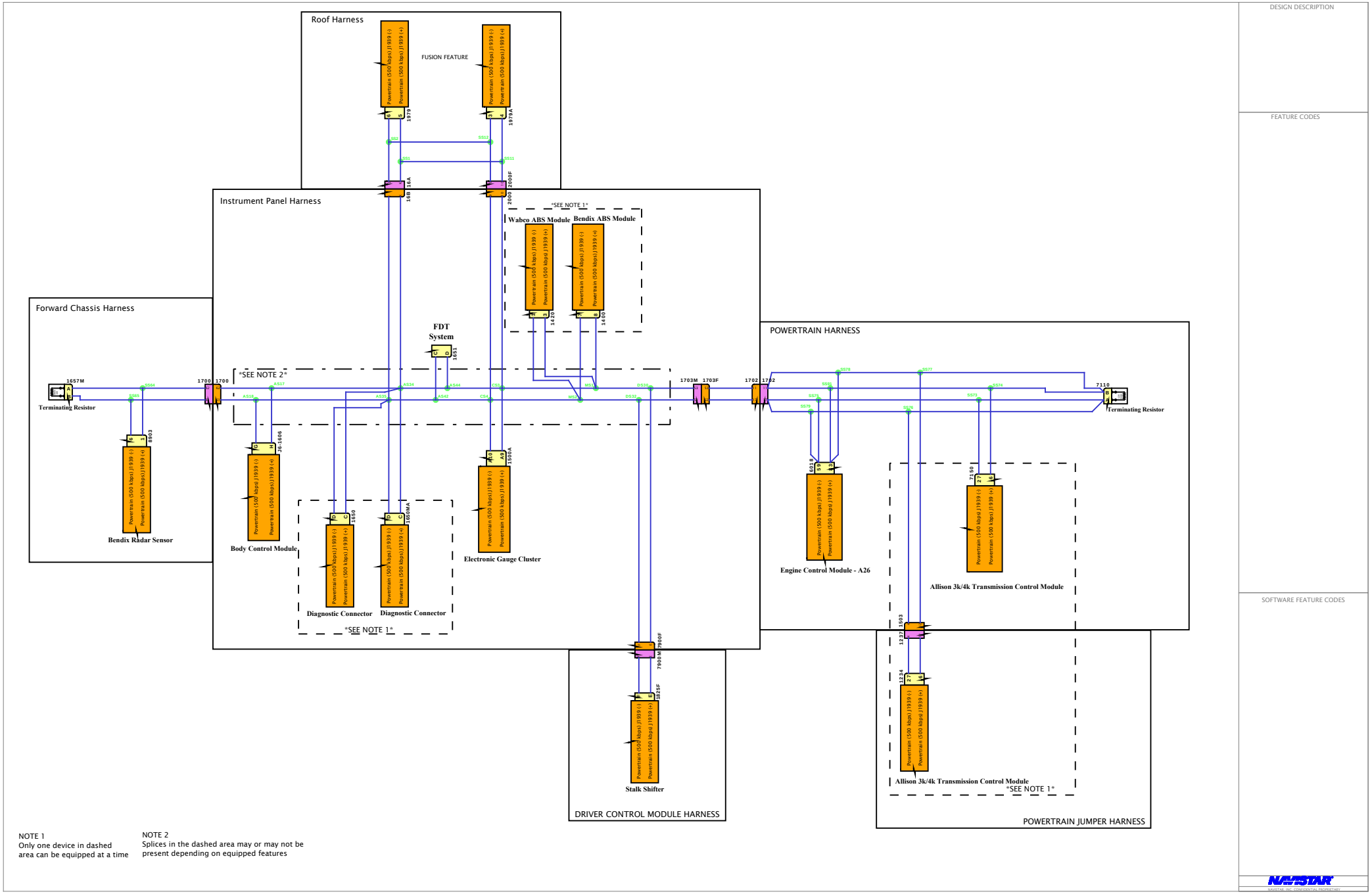

NOTE 1
Only one device in dashed area can be equipped at a time

NOTE 2
Splices in the dashed area may or may not be present depending on equipped features

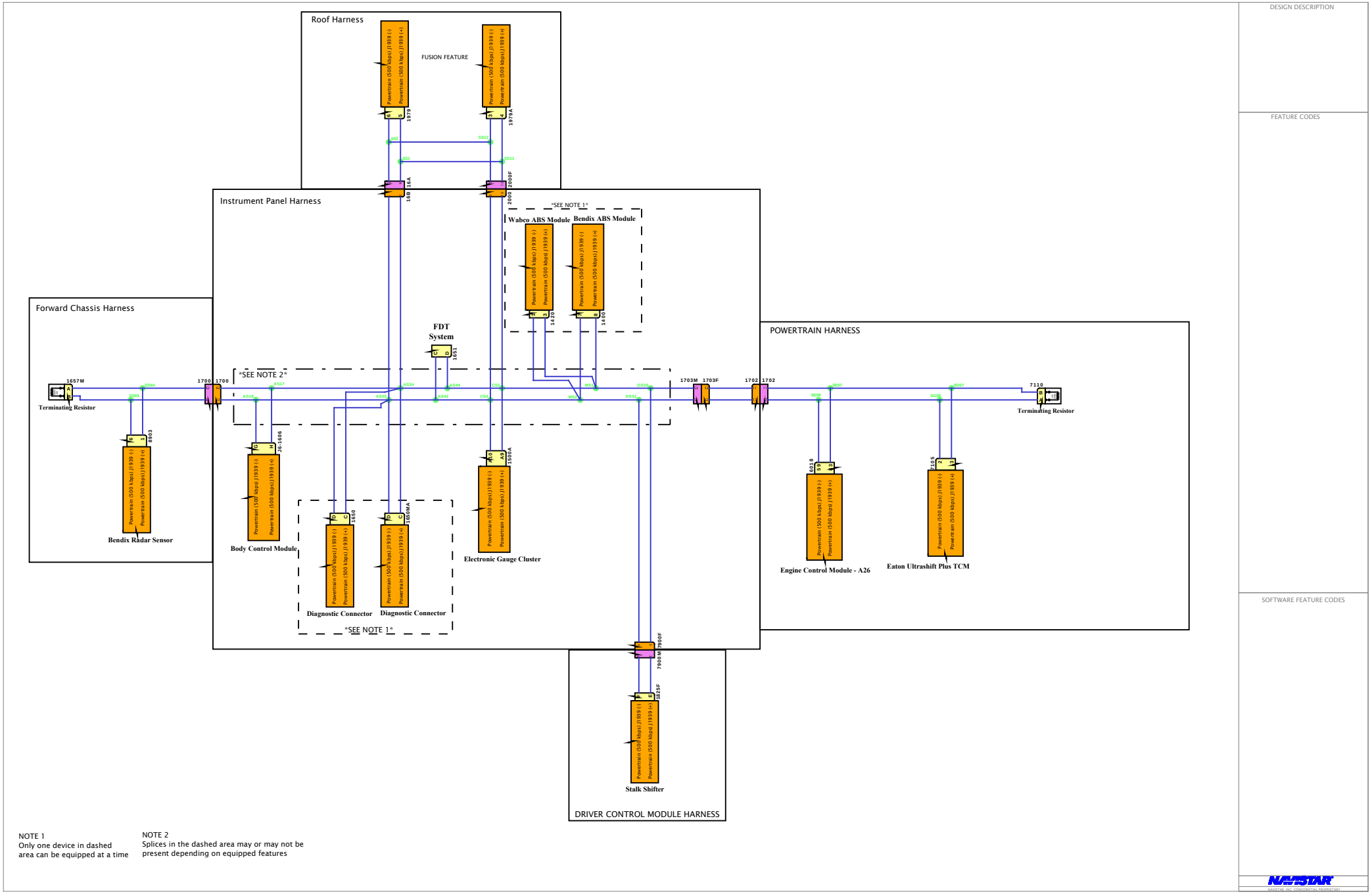
Roof Harness
FUSION FEATURE
Powertrain (500 kbps) J1939 (-)
Powertrain (500 kbps) J1939 (+)
1979
1979A
SS12
SS11
SS1
168 116A
2000 2000F
Instrument Panel Harness
SEE NOTE 1
Wabco ABS Module
Bendix ABS Module
1400
1400
Forward Chassis Harness
FDT System
1651
SEE NOTE 2
1657M
Terminating Resistor
1700 1700
AS64
AS65
AS16
AS17
AS34
AS35
AS44
AS42
CS3
CS4
MS3
MS4
DS30
DS32
1703M 1703F
1702 1702
SE57
SE58
SG57
SG58
7110
Terminating Resistor
8903
Bendix Radar Sensor
J6-1606
Body Control Module
1650
1650MA
Diagnostic Connector
Diagnostic Connector
SEE NOTE 1
1500A
Electronic Gauge Cluster
POWERTRAIN HARNESS
6018
Engine Control Module - A26
2105
Eaton Ultrashift Plus TCM
7900M 7900F
1825F
Stalk Shifter
DRIVER CONTROL MODULE HARNESS
NOTE 1
Only one device in dashed area can be equipped at a time
NOTE 2
Splices in the dashed area may or may not be present depending on equipped features
DESIGN DESCRIPTION
FEATURE CODES
SOFTWARE FEATURE CODES
NAVISTAR
NAVISTAR, INC. CONFIDENTIAL PROPRIETARY

DESIGN DESCRIPTION

FEATURE CODES

BENDIX ABS IMPLEMENTATION

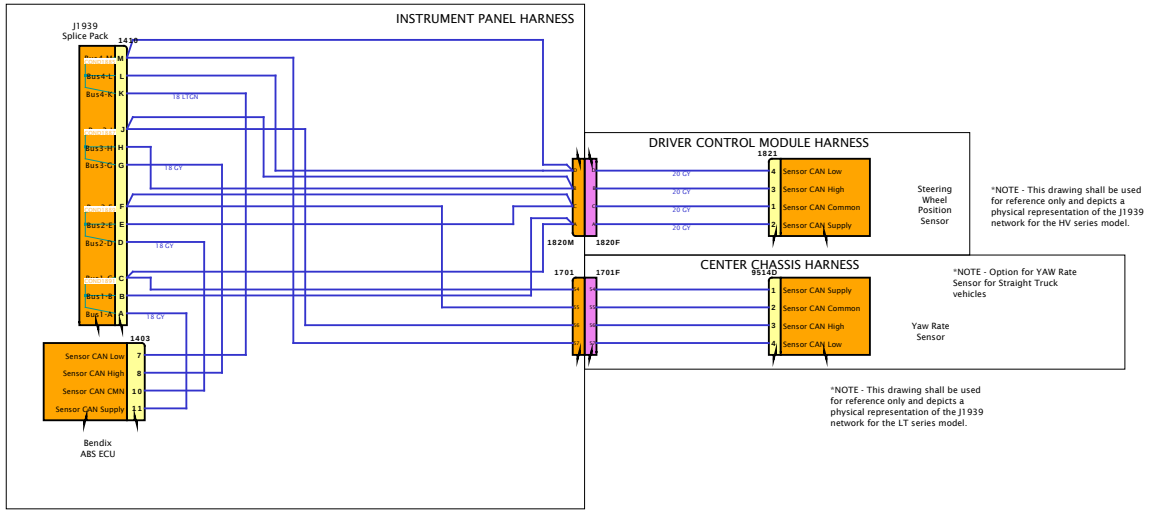

SOFTWARE FEATURE CODES

NAVISTAR
NAVISTAR, INC. CONFIDENTIAL PROPRIETARY

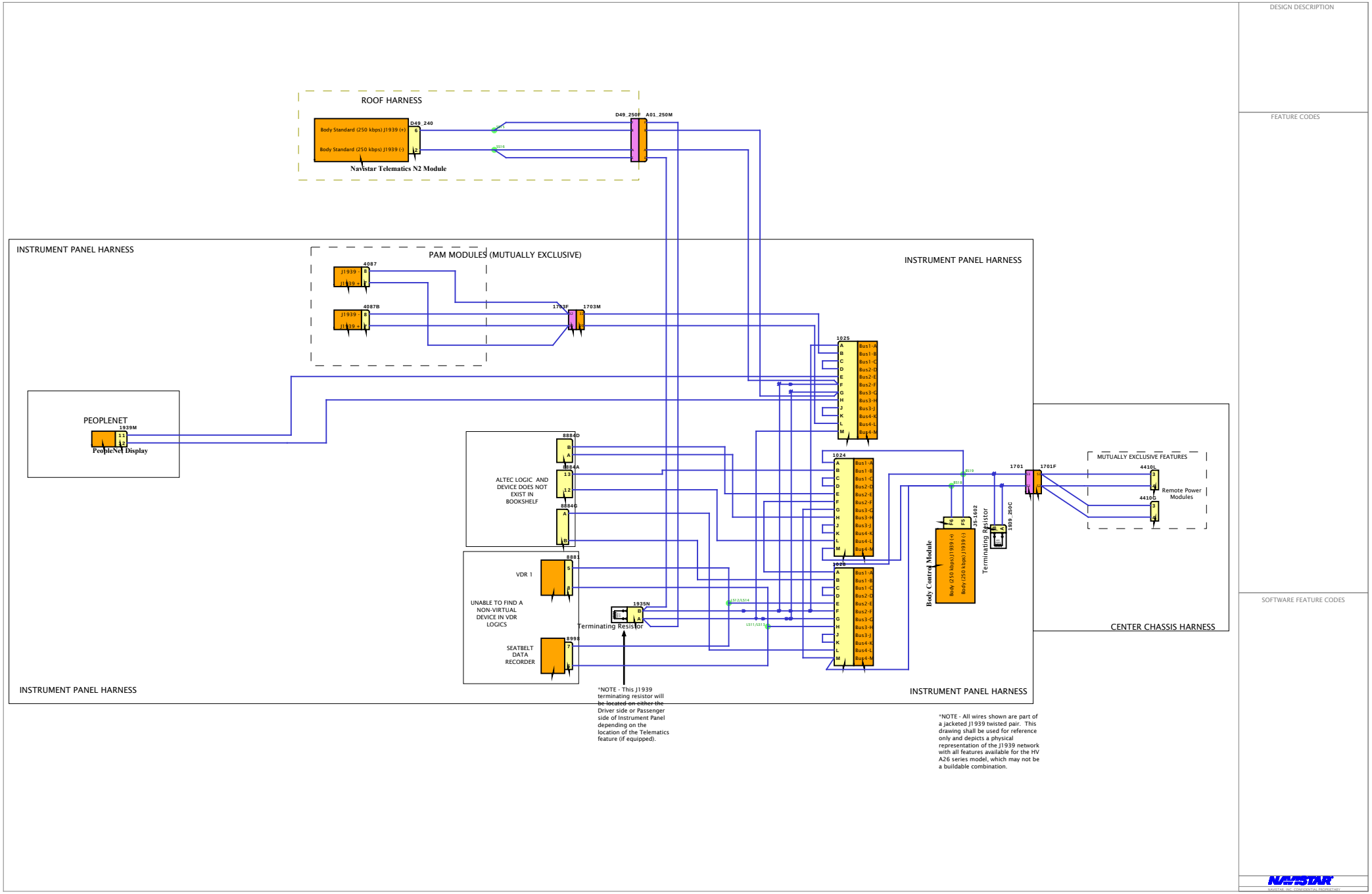
DESIGN DESCRIPTION
FEATURE CODES
SOFTWARE FEATURE CODES
ROOF HARNESS
Body Standard (250 kbps) J1939 (+)
Body Standard (250 kbps) J1939 (-)
D49_240
Navistar Telematics N2 Module
D49_250F
A01_250M
INSTRUMENT PANEL HARNESS
PAM MODULES (MUTUALLY EXCLUSIVE)
4087
4087B
1703F
1703M
PEOPLENET
1939M
PeopleNet Display
8884D
8884A
8884G
ALTEC LOGIC AND DEVICE DOES NOT EXIST IN BOOKSHELF
8881
VDR 1
UNABLE TO FIND A NON-VIRTUAL DEVICE IN VDR LOGICS
8998
SEATBELT DATA RECORDER
1935N
Terminating Resistor
1025
1024
1023
Body Control Module
Body (250 kbps) J1939 (+)
Body (250 kbps) J1939 (-)
F6
F5
351802
1939_250C
Terminating Resistor
1701
1701F
MUTUALLY EXCLUSIVE FEATURES
4410L
4410G
Remote Power Modules
CENTER CHASSIS HARNESS
*NOTE - This J1939 terminating resistor will be located on either the Driver side or Passenger side of Instrument Panel depending on the location of the Telematics feature (if equipped).
*NOTE - All wires shown are part of a jacketed J1939 twisted pair. This drawing shall be used for reference only and depicts a physical representation of the J1939 network with all features available for the HV A26 series model, which may not be a buildable combination.
NAVISTAR
NAVISTAR, INC. CONFIDENTIAL PROPRIETARY

DESIGN DESCRIPTION

FEATURE CODES

SOFTWARE FEATURE CODES

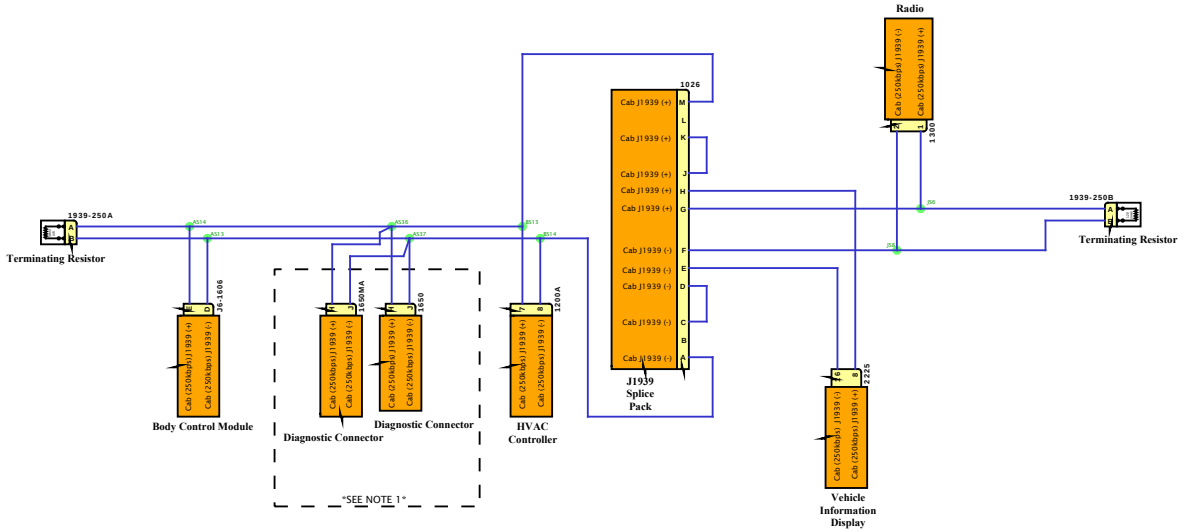

INSTRUMENT PANEL HARNESS

Note 1:
Only 1 device in the dashed area can be equipped at a time

*NOTE - All wires shown are part of a jacketed J1939 twisted pair. This drawing shall be used for reference only and depicts a physical representation of the J1939 network with all features available for the HV series model, which may not be a buildable combination.

NAVISTAR
NAVISTAR, INC. CONFIDENTIAL PROPRIETARY

DESIGN DESCRIPTION

FEATURE CODES

SOFTWARE FEATURE CODES

CUMMINS ENGINE IMPLEMENTATION

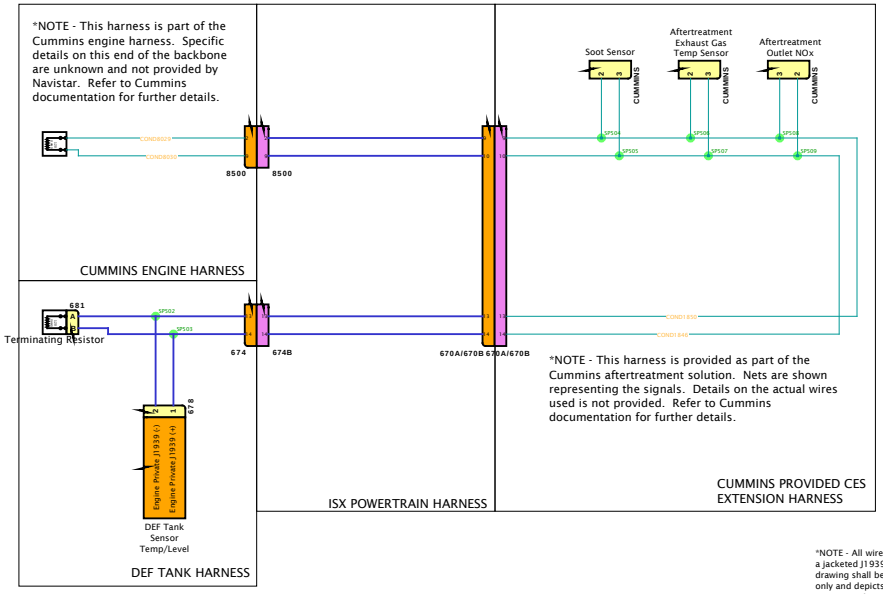

*NOTE - All wires shown are part of a jacketed J1939 twisted pair. This drawing shall be used for reference only and depicts a physical representation of the J1939 network with all features available for the LT series model, which may not be a buildable combination.

B6.7 - Low Speed J1939 (125kbps)

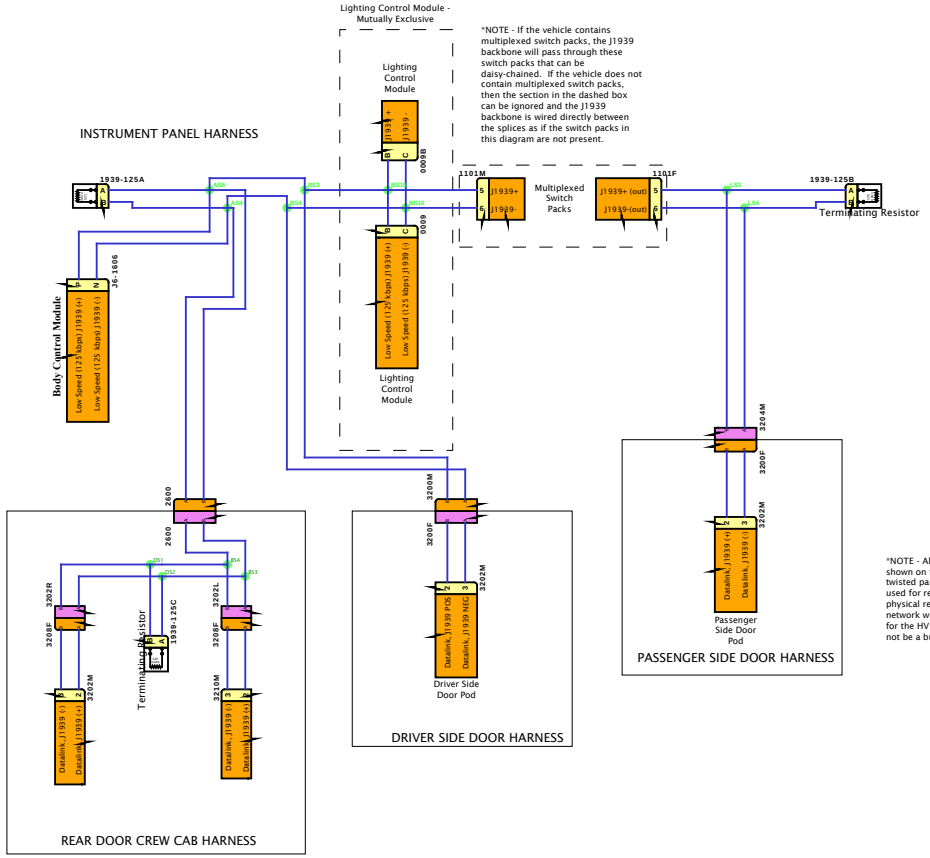

DESIGN DESCRIPTION

FEATURE CODES

SOFTWARE FEATURE CODES

NAVISTAR, INC. CONFIDENTIAL PROPRIETARY

DESIGN DESCRIPTION

FEATURE CODES

SOFTWARE FEATURE CODES

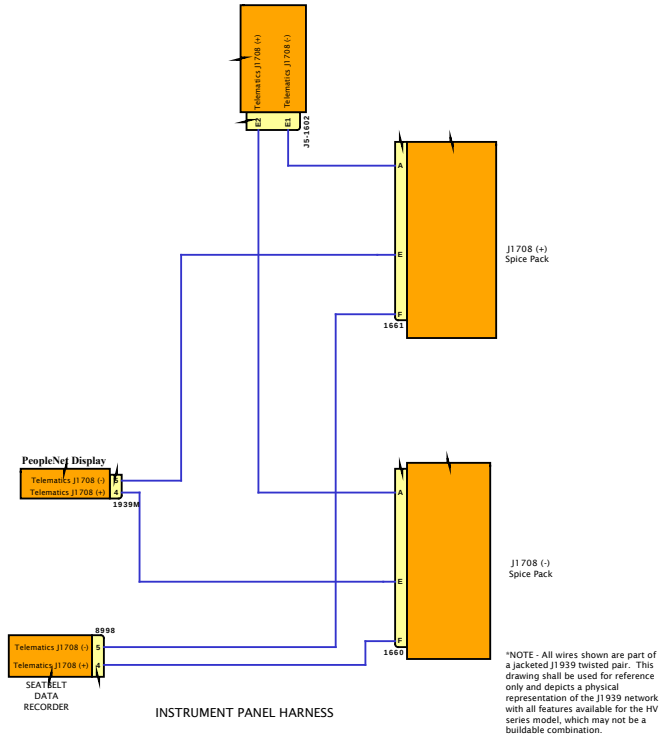

NAVISTAR
NAVISTAR, INC. CONFIDENTIAL PROPRIETARY

B6.7 - Allison 1k/2k Transmission

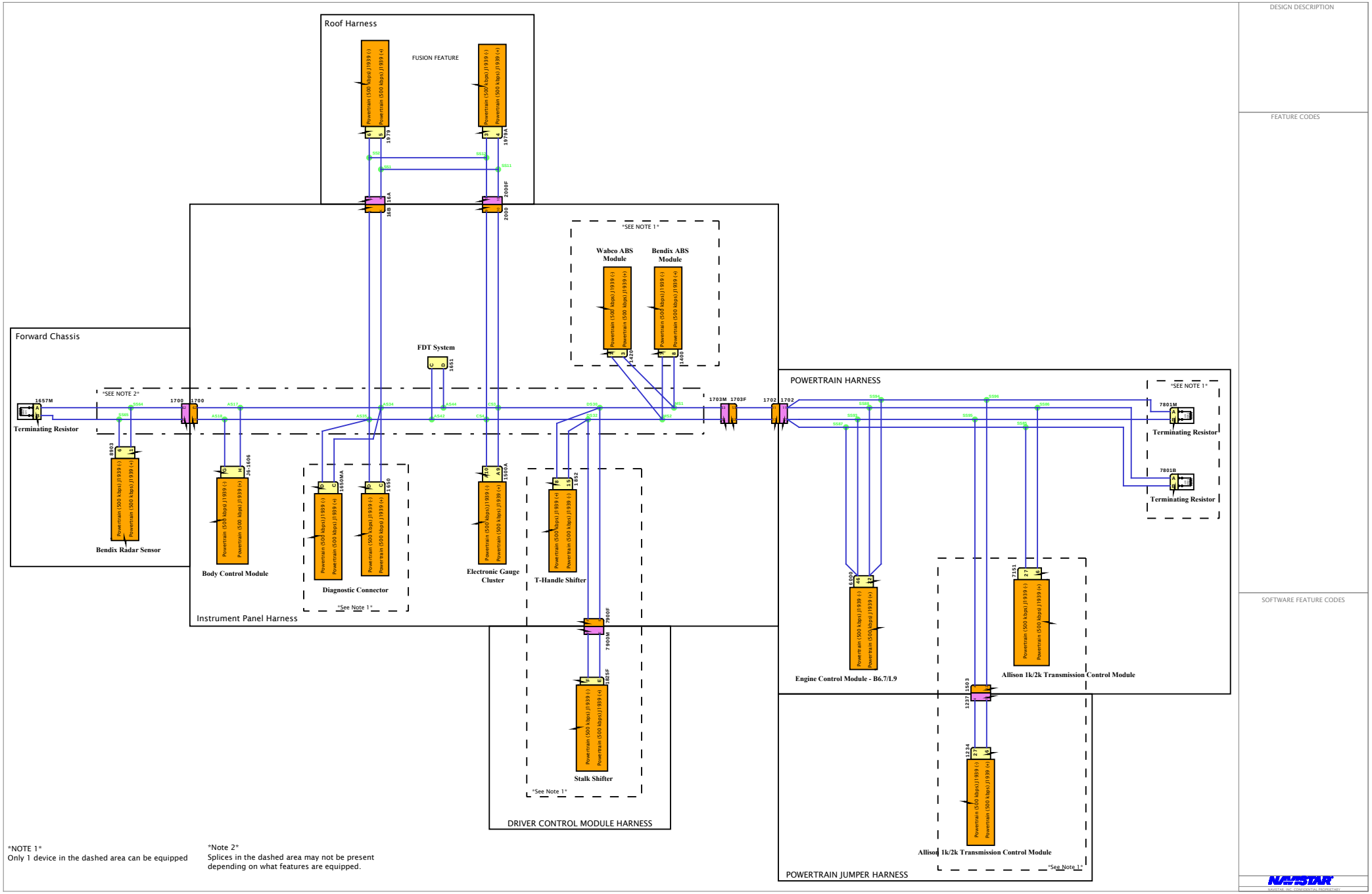

B6.7 - Allison 3k/4k Transmission

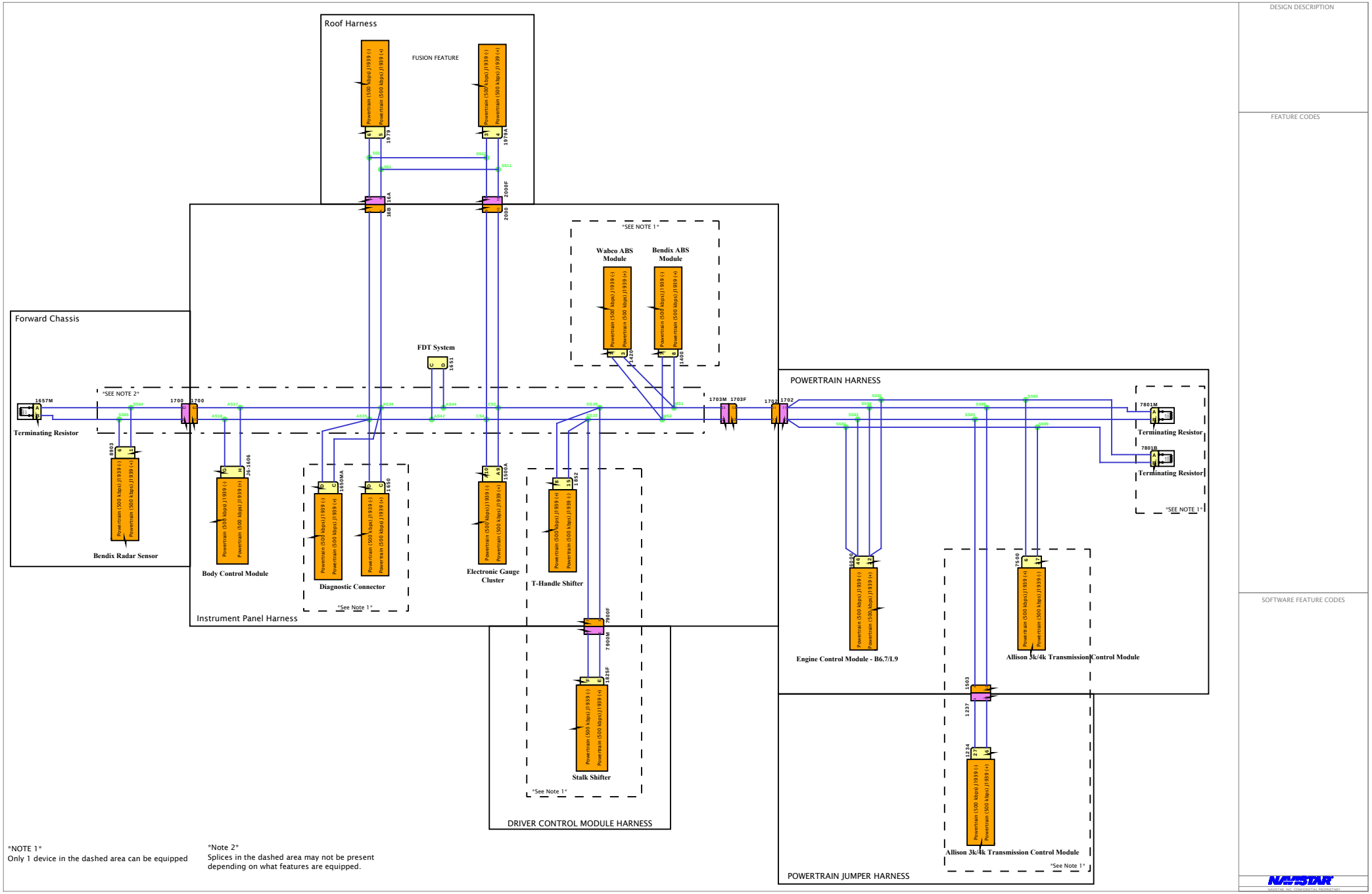

NOTE 1
Only 1 device in the dashed area can be equipped

Note 2
Splices in the dashed area may not be present depending on what features are equipped.

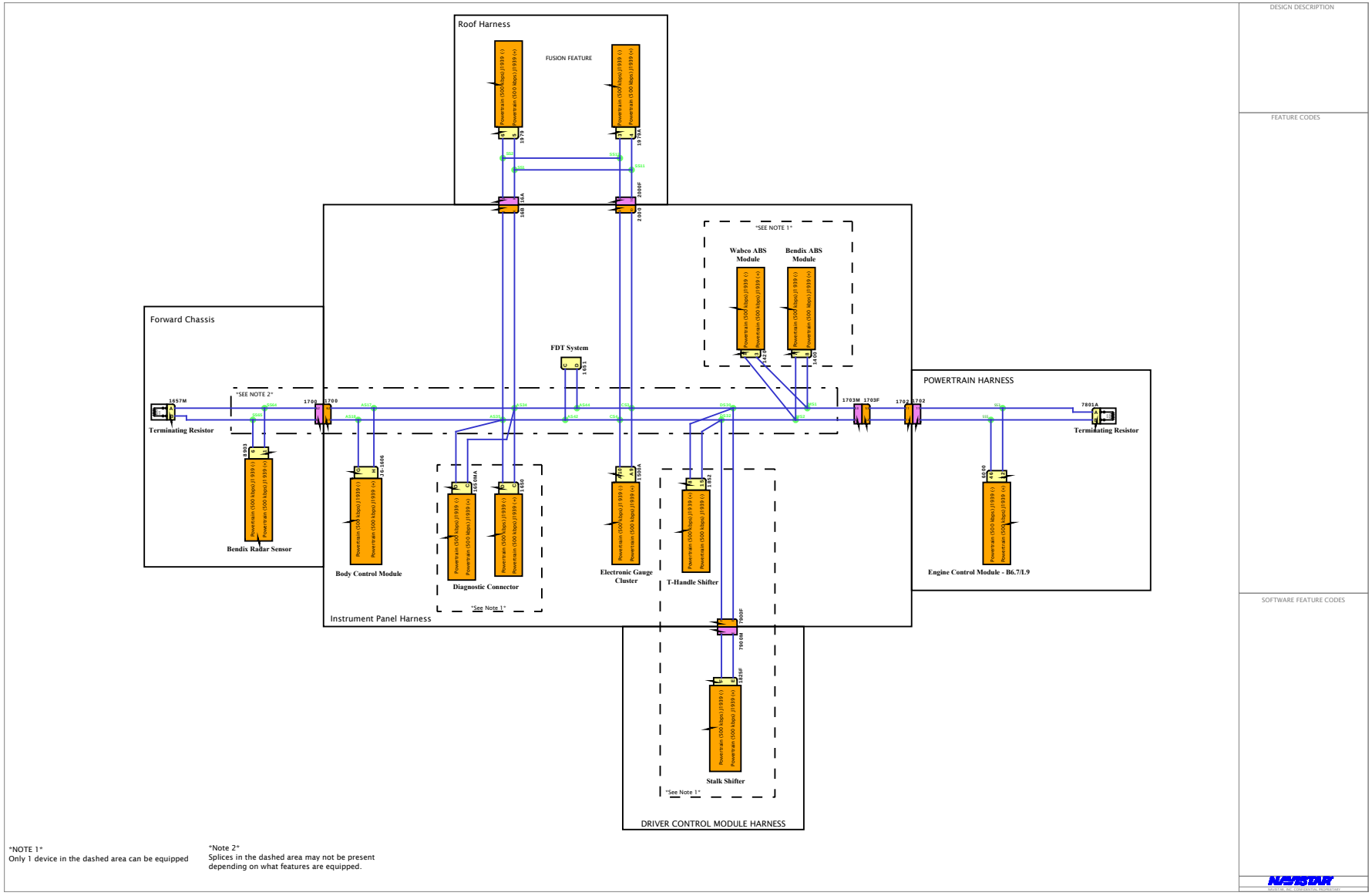
Roof Harness
FUSION FEATURE
Forward Chassis
Instrument Panel Harness
FDT System
Wabco ABS Module
Bendix ABS Module
SEE NOTE 1
SEE NOTE 2
POWERTRAIN HARNESS
Terminating Resistor
Terminating Resistor
Bendix Radar Sensor
Body Control Module
Diagnostic Connector
Electronic Gauge Cluster
T-Handle Shifter
Engine Control Module - B6.7/L9
Stalk Shifter
DRIVER CONTROL MODULE HARNESS
See Note 1
NOTE 1
Only 1 device in the dashed area can be equipped
Note 2
Splices in the dashed area may not be present depending on what features are equipped.
DESIGN DESCRIPTION
FEATURE CODES
SOFTWARE FEATURE CODES

DESIGN DESCRIPTION

FEATURE CODES

SOFTWARE FEATURE CODES

BENDIX ABS IMPLEMENTATION

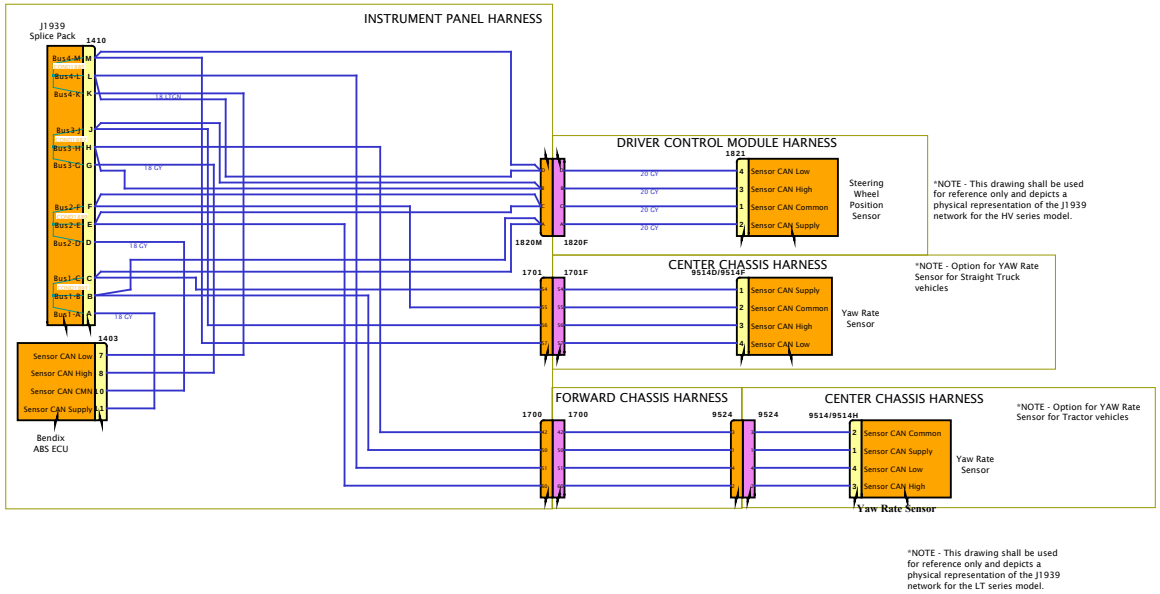

L9 - Body J1939 (250Kbps)

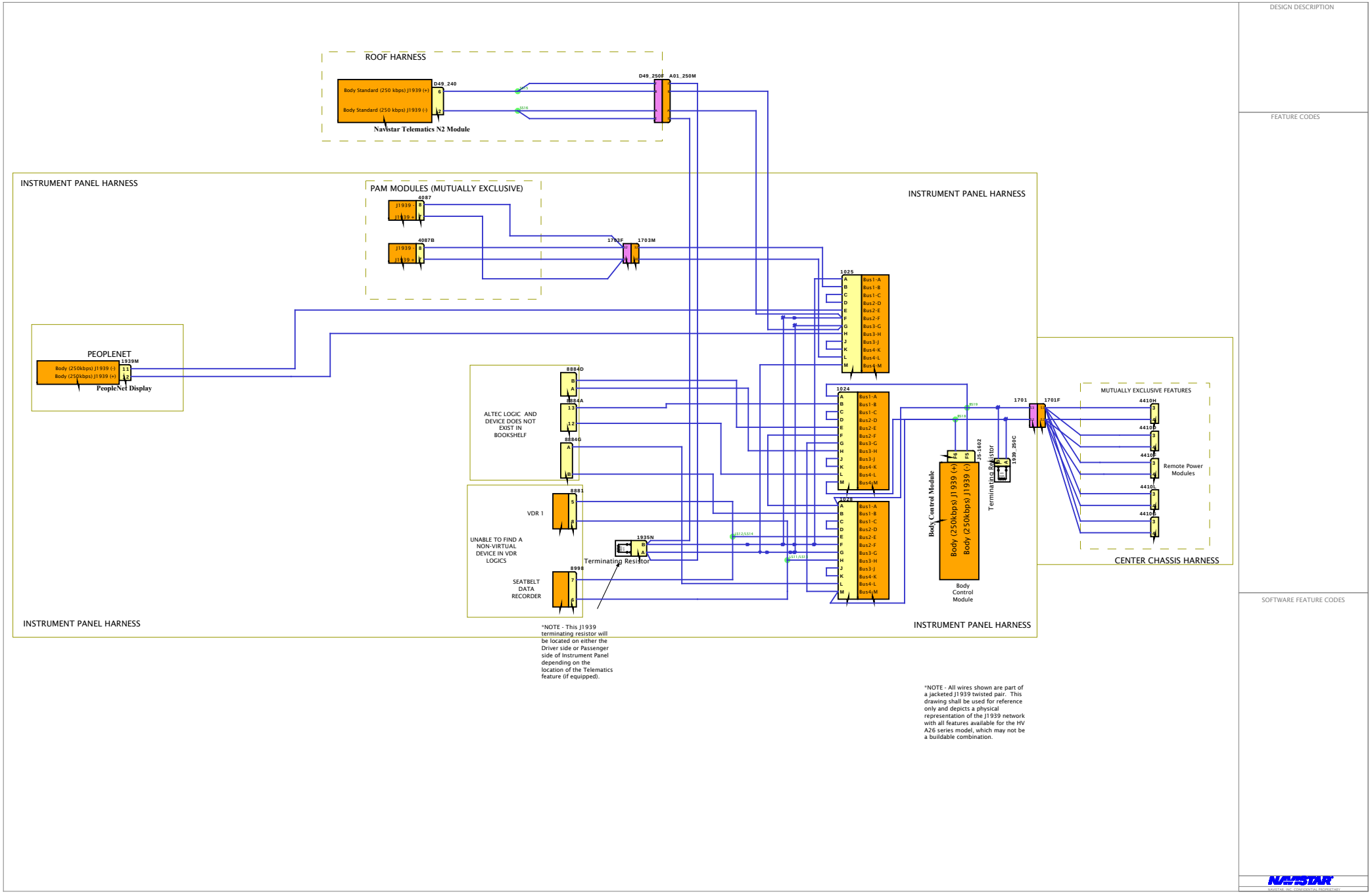

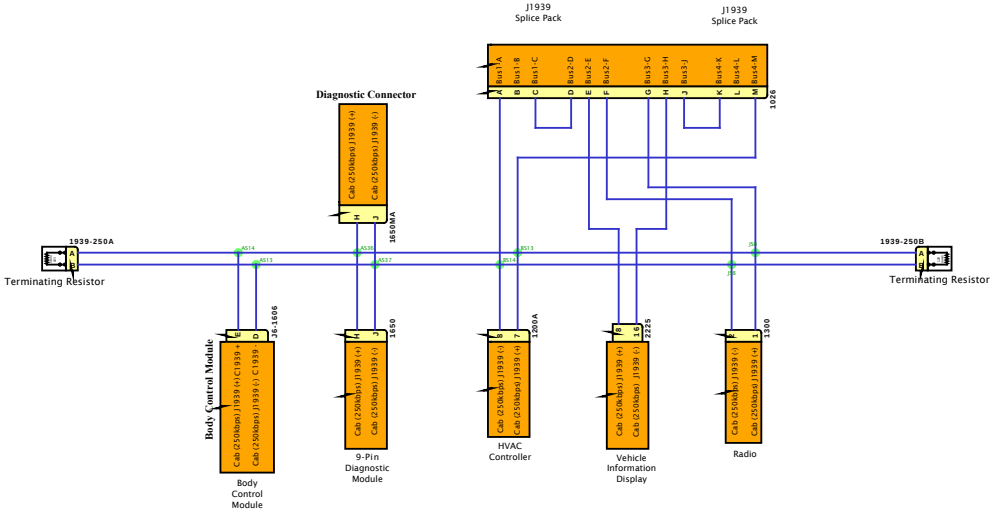

INSTRUMENT PANEL HARNESS

*NOTE - All wires shown are part of a jacketed J1939 twisted pair. This drawing shall be used for reference only and depicts a physical representation of the J1939 network with all features available for the LT series model, which may not be a buildable combination.

DESIGN DESCRIPTION

FEATURE CODES

SOFTWARE FEATURE CODES

NAVISTAR, INC. CONFIDENTIAL PROPRIETARY

DESIGN DESCRIPTION

FEATURE CODES

SOFTWARE FEATURE CODES

CUMMINS ENGINE IMPLEMENTATION

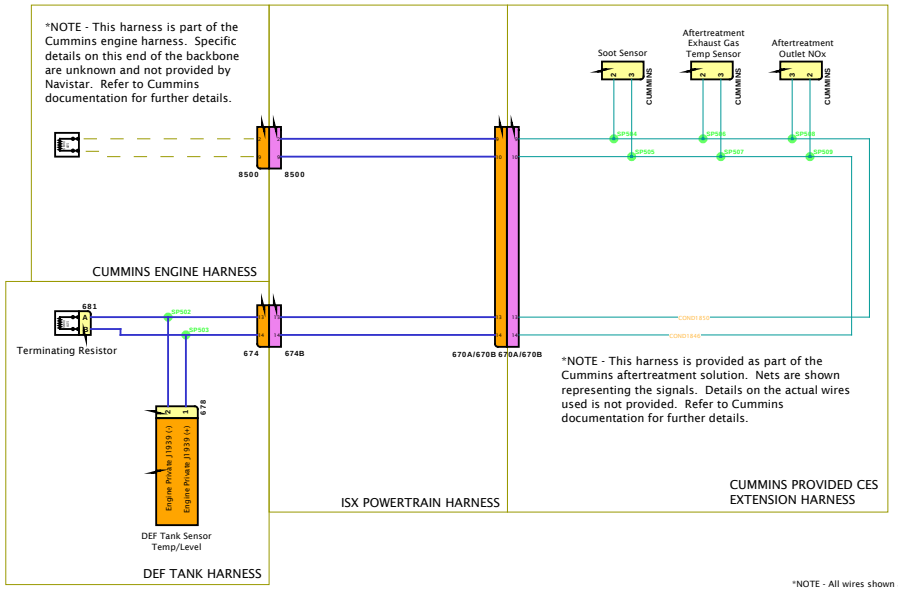

*NOTE - All wires shown are part of a jacketed J1939 twisted pair. This drawing shall be used for reference only and depicts a physical representation of the J1939 network with all features available for the LT series model, which may not be a buildable combination.

NAVISTAR
NAVISTAR, INC. CONFIDENTIAL PROPRIETARY

L9 - Low Speed J1939 (125Kbps)

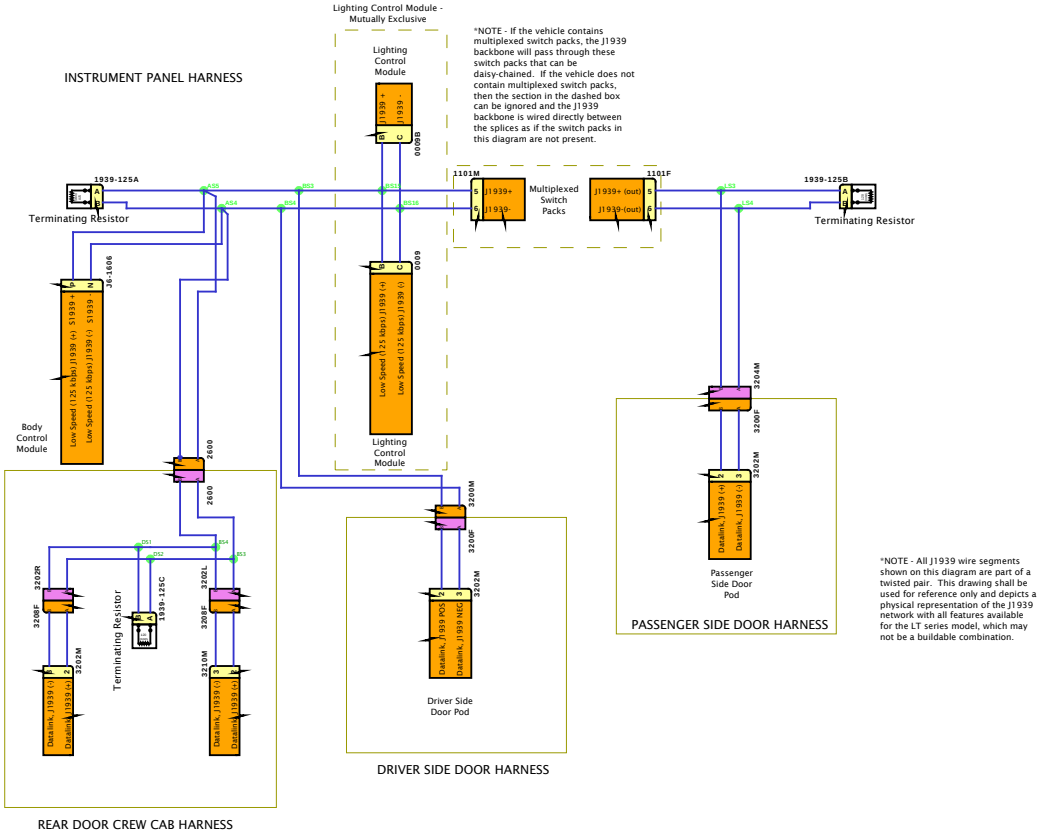

DESIGN DESCRIPTION

FEATURE CODES

SOFTWARE FEATURE CODES

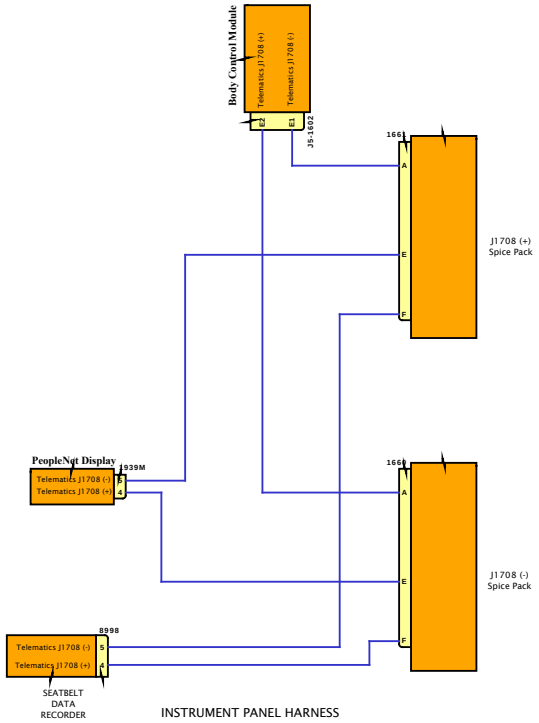

INSTRUMENT PANEL HARNESS

*NOTE - All wires shown are part of a jacketed J1939 twisted pair. This drawing shall be used for reference only and depicts a physical representation of the J1939 network with all features available for the HV series model, which may not be a buildable combination.

DESIGN DESCRIPTION

FEATURE CODES

SOFTWARE FEATURE CODES

NAVISTAR INC. CONFIDENTIAL PROPRIETARY

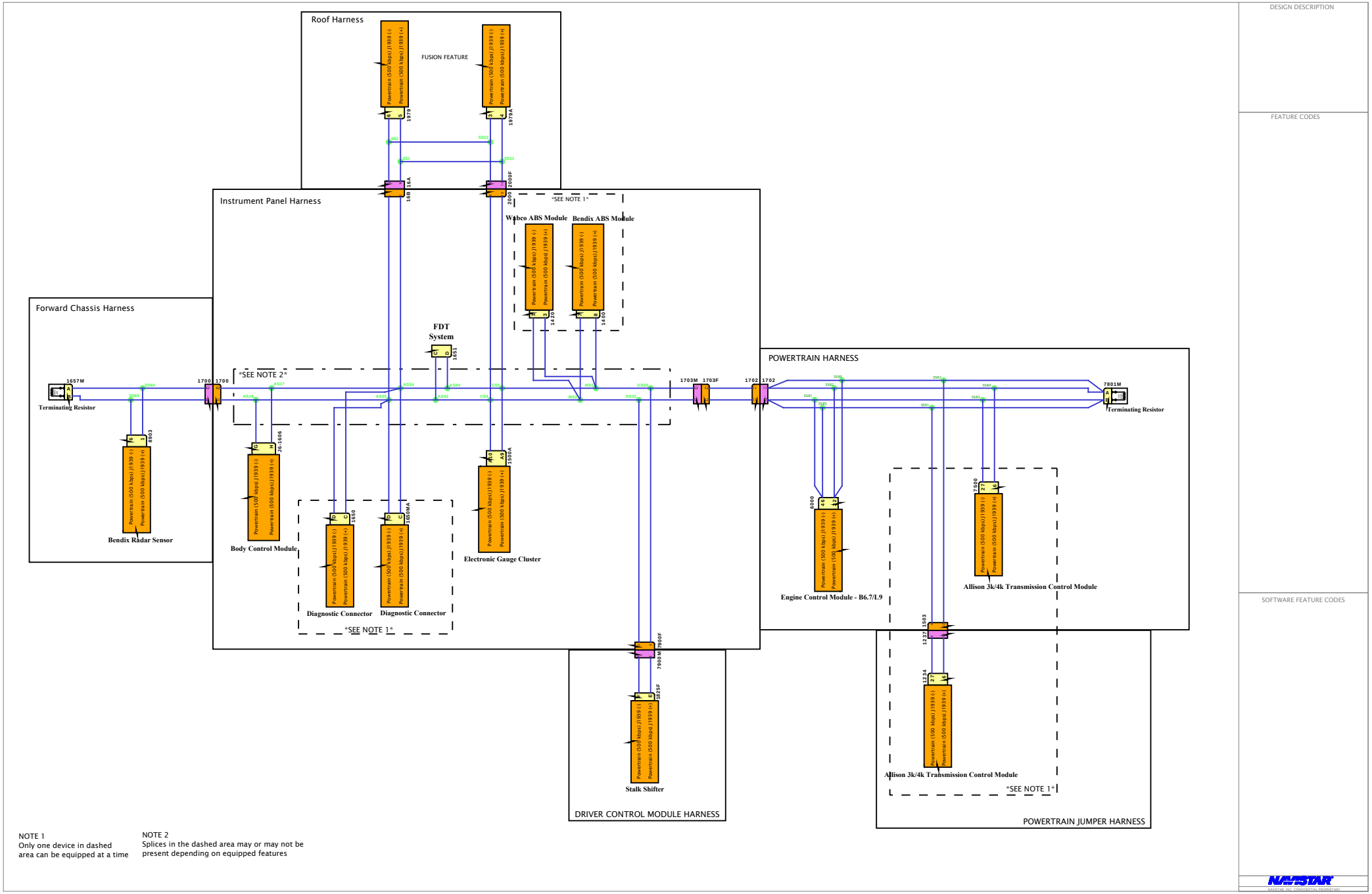
Roof Harness
FUSION FEATURE
Instrument Panel Harness
SEE NOTE 1
Wabco ABS Module
Bendix ABS Module
Forward Chassis Harness
FDT System
SEE NOTE 2
POWERTRAIN HARNESS
Terminating Resistor
Bendix Radar Sensor
Body Control Module
Diagnostic Connector
Diagnostic Connector
SEE NOTE 1
Electronic Gauge Cluster
Engine Control Module - B6.7/L9
Allison 3k/4k Transmission Control Module
Terminating Resistor
Allison 3k/4k Transmission Control Module
SEE NOTE 1
Stalk Shifter
DRIVER CONTROL MODULE HARNESS
POWERTRAIN JUMPER HARNESS
NOTE 1
Only one device in dashed area can be equipped at a time
NOTE 2
Splices in the dashed area may or may not be present depending on equipped features
DESIGN DESCRIPTION
FEATURE CODES
SOFTWARE FEATURE CODES

L9 - Powertrain J1939 Eaton

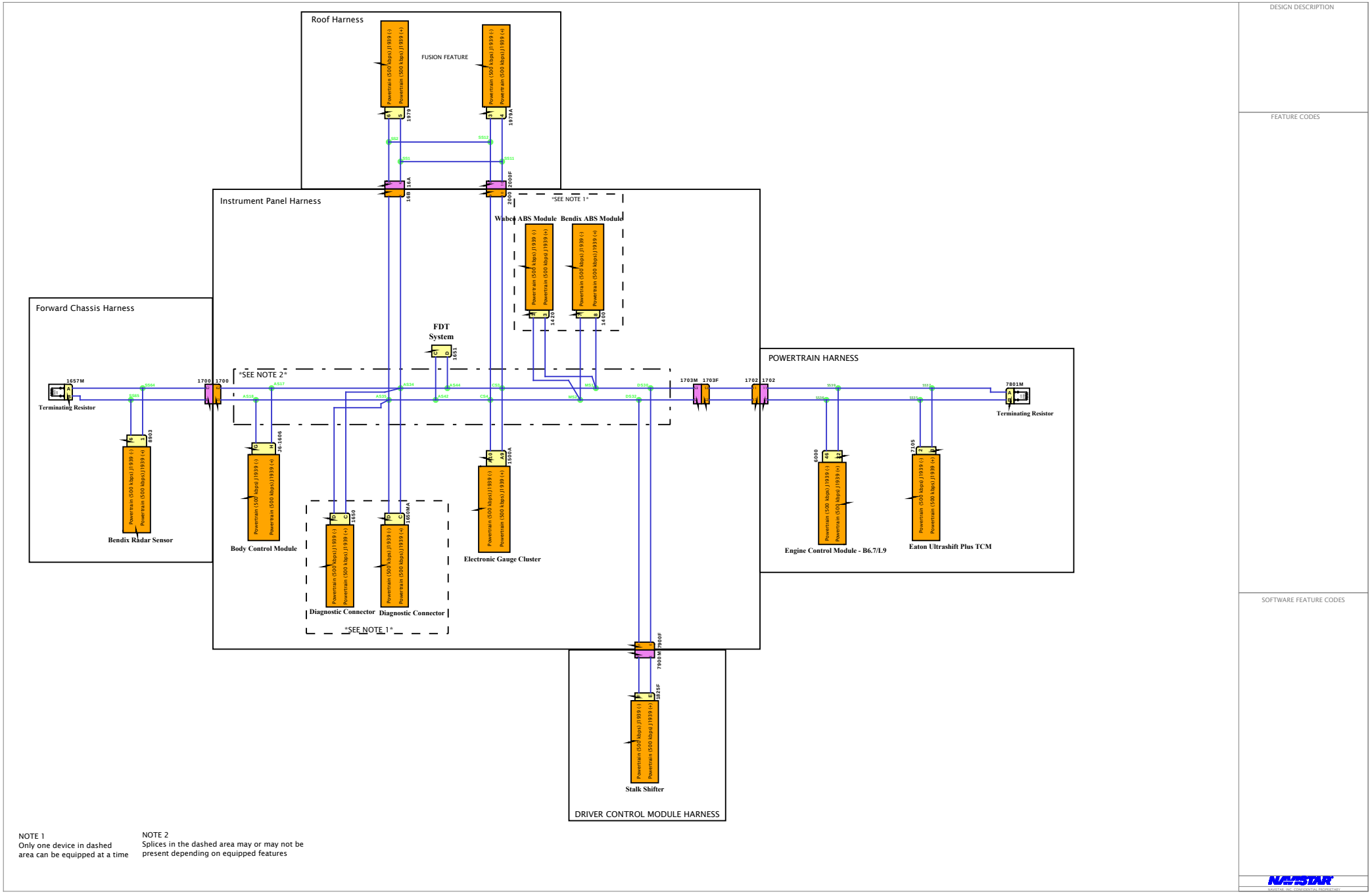

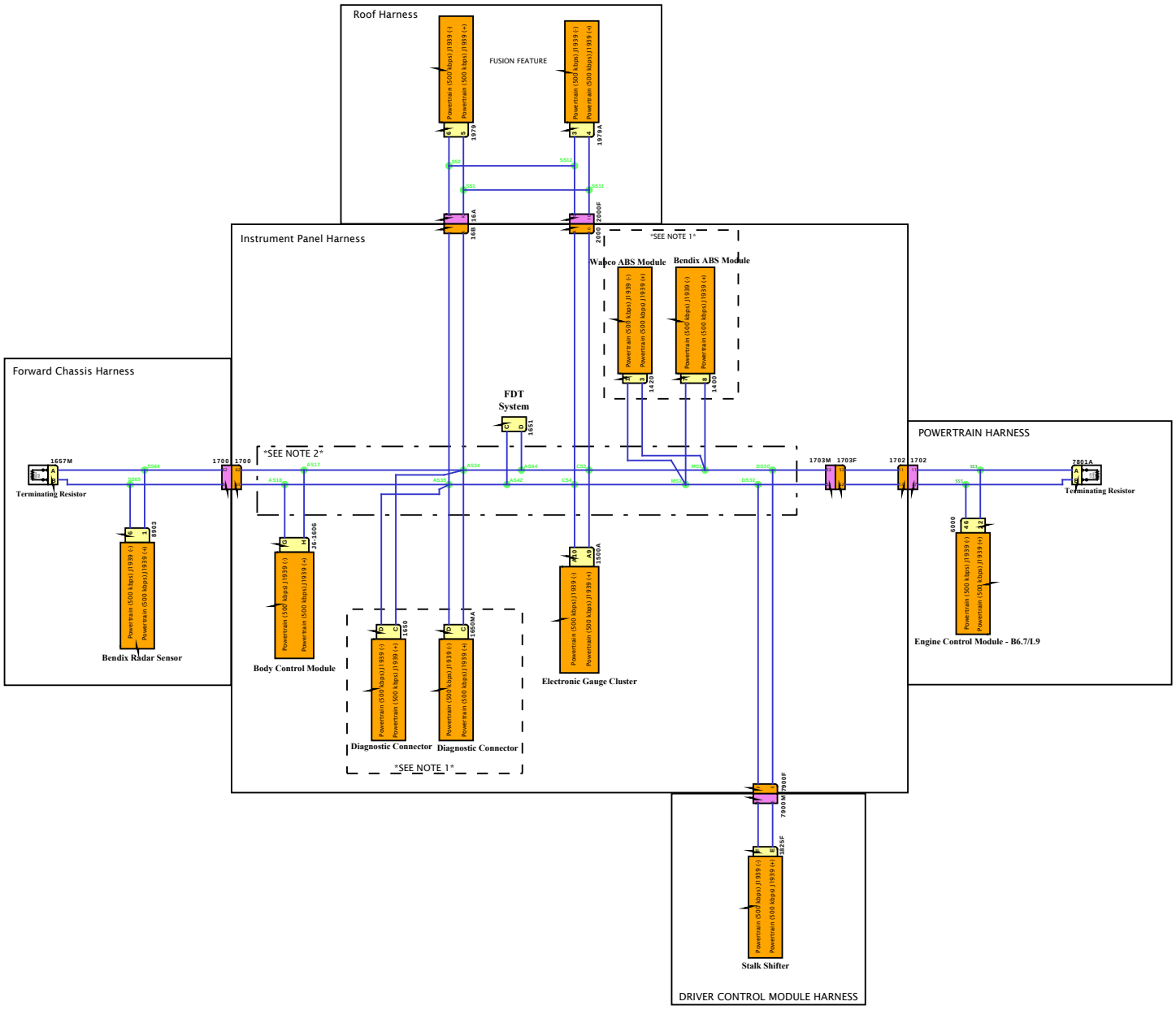

NOTE 1
Only one device in dashed area can be equipped at a time

NOTE 2
Splices in the dashed area may or may not be present depending on equipped features

DESIGN DESCRIPTION

FEATURE CODES

SOFTWARE FEATURE CODES

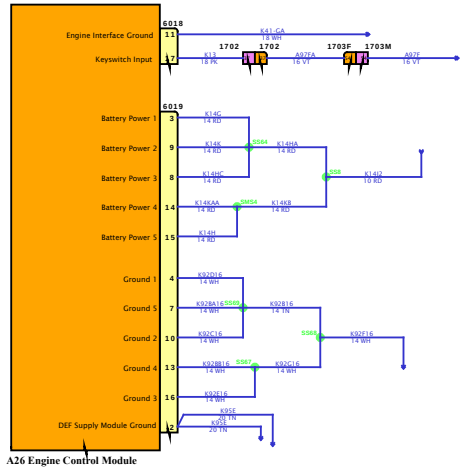

DESIGN DESCRIPTION

FEATURE CODES

SOFTWARE FEATURE CODES

NAVISTAR INC. CONFIDENTIAL PROPRIETARY

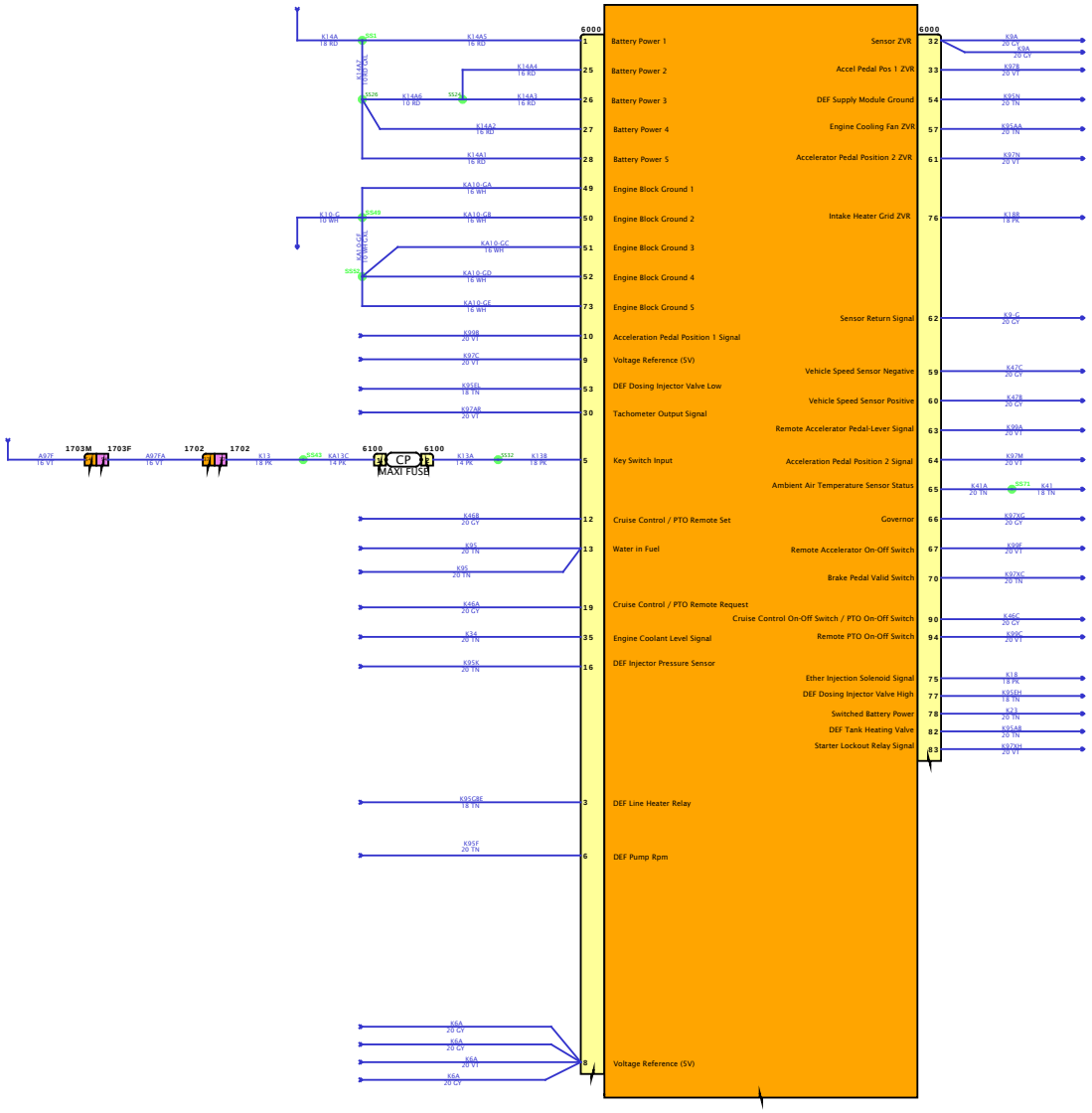

Engine Control Module - B6.7/L9

DESIGN DESCRIPTION

FEATURE CODES

SOFTWARE FEATURE CODES

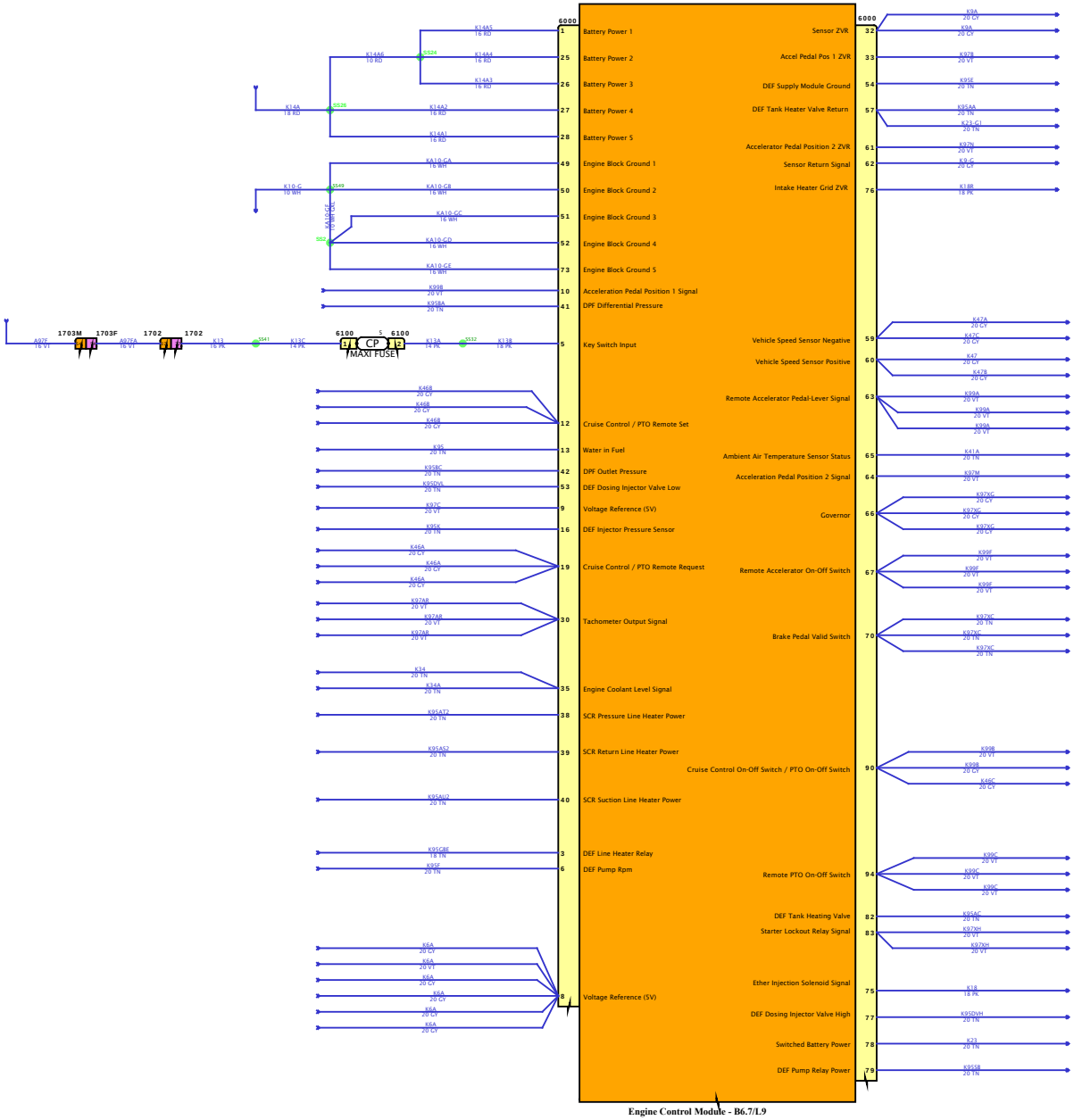

DESIGN DESCRIPTION

FEATURE CODES

SOFTWARE FEATURE CODES

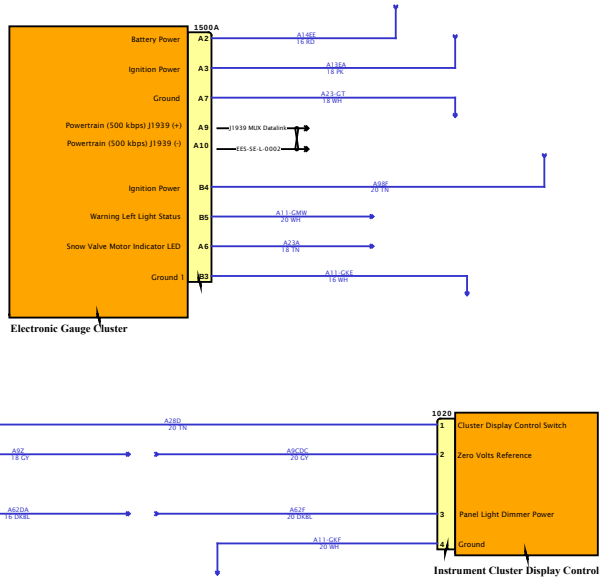

DESIGN DESCRIPTION

FEATURE CODES

SOFTWARE FEATURE CODES

NAVISTAR
NAVISTAR, INC. CONFIDENTIAL PROPRIETARY

DESIGN DESCRIPTION

FEATURE CODES

SOFTWARE FEATURE CODES

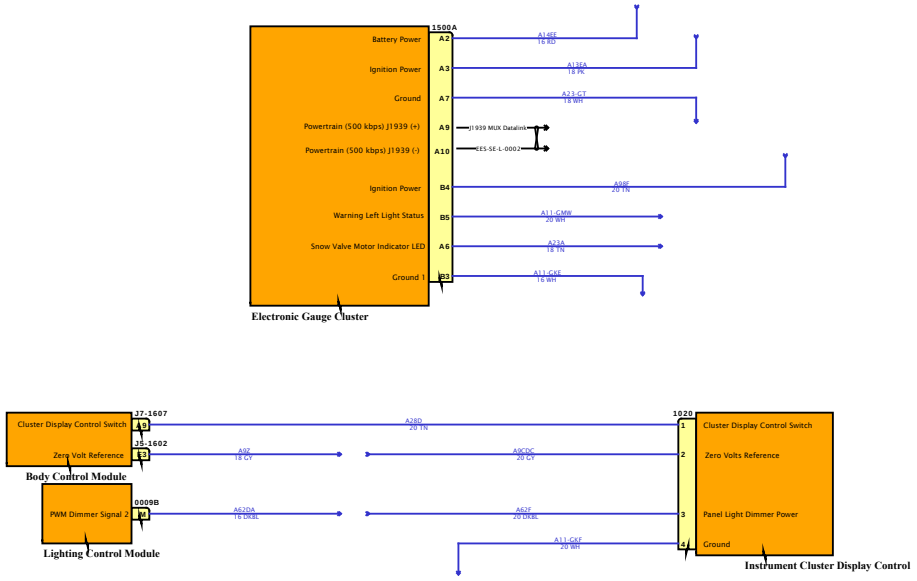

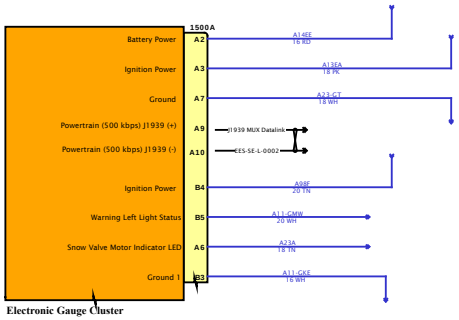

DESIGN DESCRIPTION

FEATURE CODES

SOFTWARE FEATURE CODES

NAVISTAR INC. CONFIDENTIAL PROPRIETARY

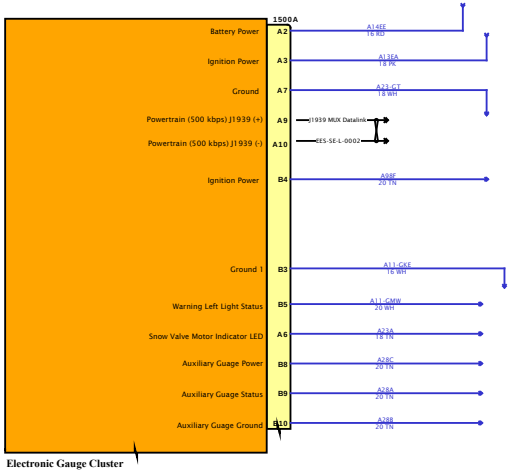

DESIGN DESCRIPTION

FEATURE CODES

SOFTWARE FEATURE CODES

NAVISTAR
NAVISTAR, INC. CONFIDENTIAL PROPRIETARY

Diagram1



DESIGN DESCRIPTION

FEATURE CODES

SOFTWARE FEATURE CODES

NAVISTAR INC. CONFIDENTIAL PROPRIETARY

DESIGN DESCRIPTION

FEATURE CODES

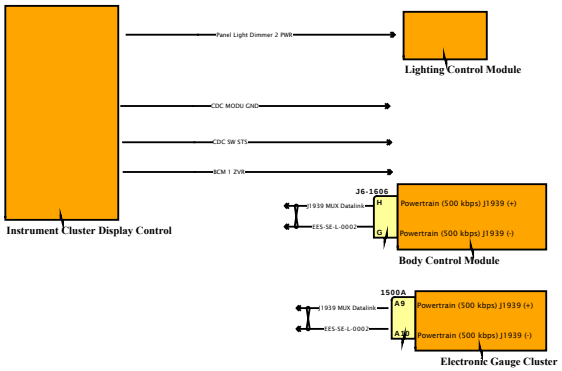

SOFTWARE FEATURE CODES

NAVISTAR

NAVISTAR, INC. CONFIDENTIAL PROPRIETARY

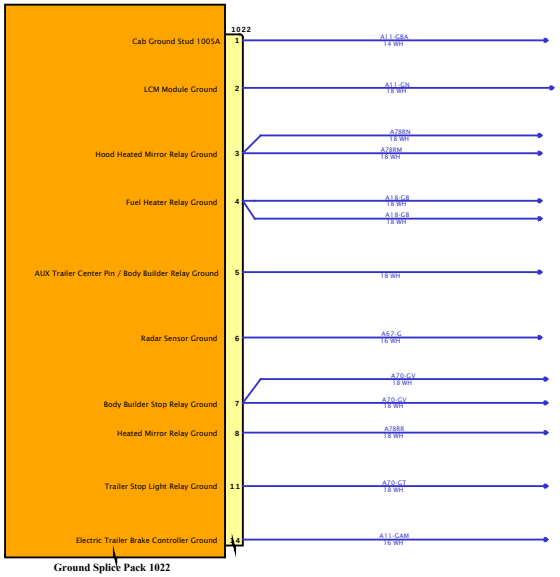

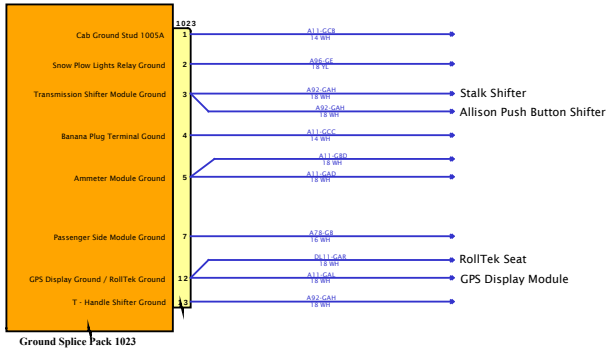

DESIGN DESCRIPTION

FEATURE CODES

SOFTWARE FEATURE CODES

NAVISTAR INC. CONFIDENTIAL PROPRIETARY

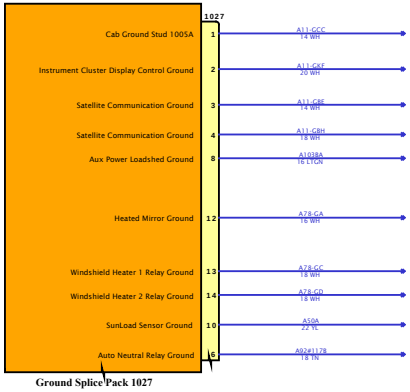

DESIGN DESCRIPTION

FEATURE CODES

SOFTWARE FEATURE CODES

NAVISTAR INC. CONFIDENTIAL PROPRIETARY

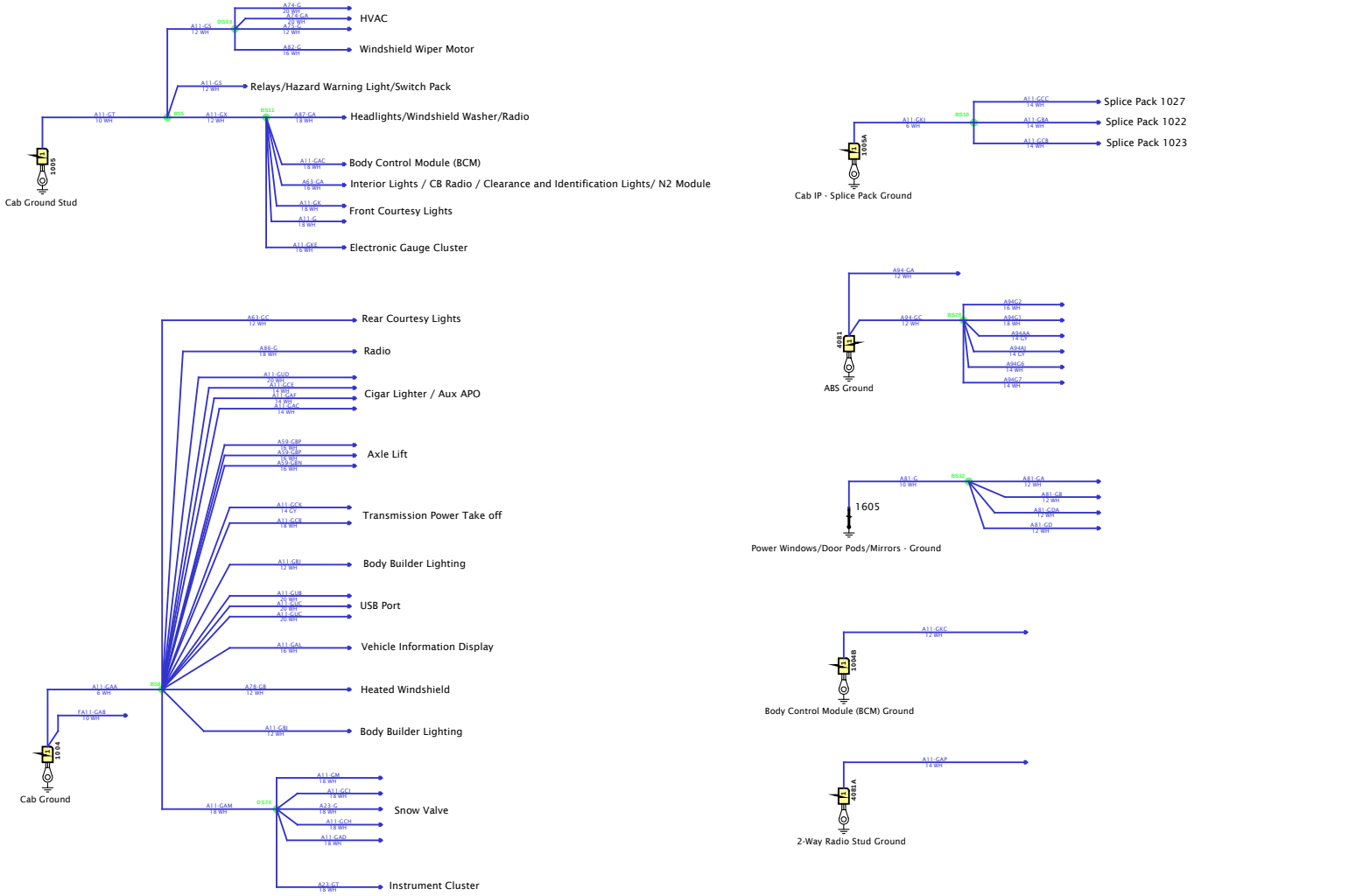

Note: Ground studs are located in the Interior Dual Post Ground Stud-Cowl Wall.

DESIGN DESCRIPTION

FEATURE CODES

SOFTWARE FEATURE CODES

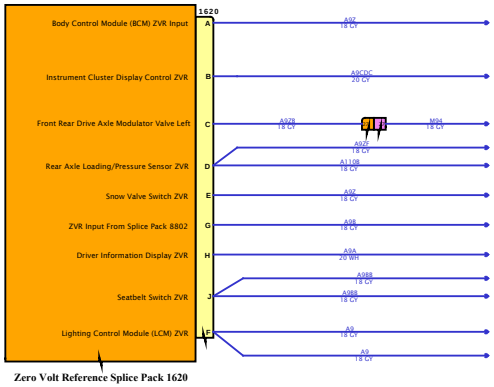

DESIGN DESCRIPTION

FEATURE CODES

SOFTWARE FEATURE CODES

NAVISTAR INC. CONFIDENTIAL PROPRIETARY

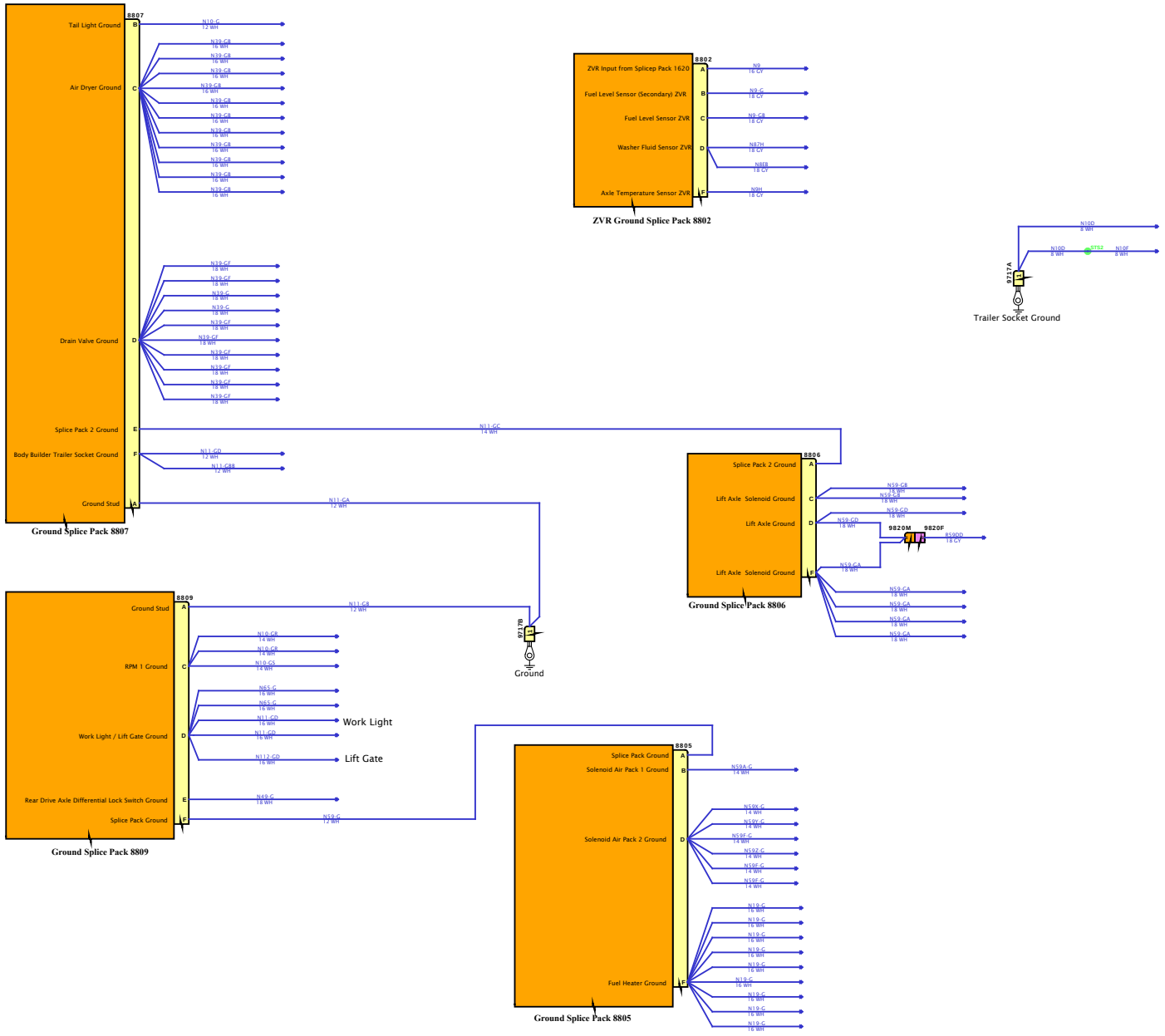

DESIGN DESCRIPTION

FEATURE CODES

SOFTWARE FEATURE CODES

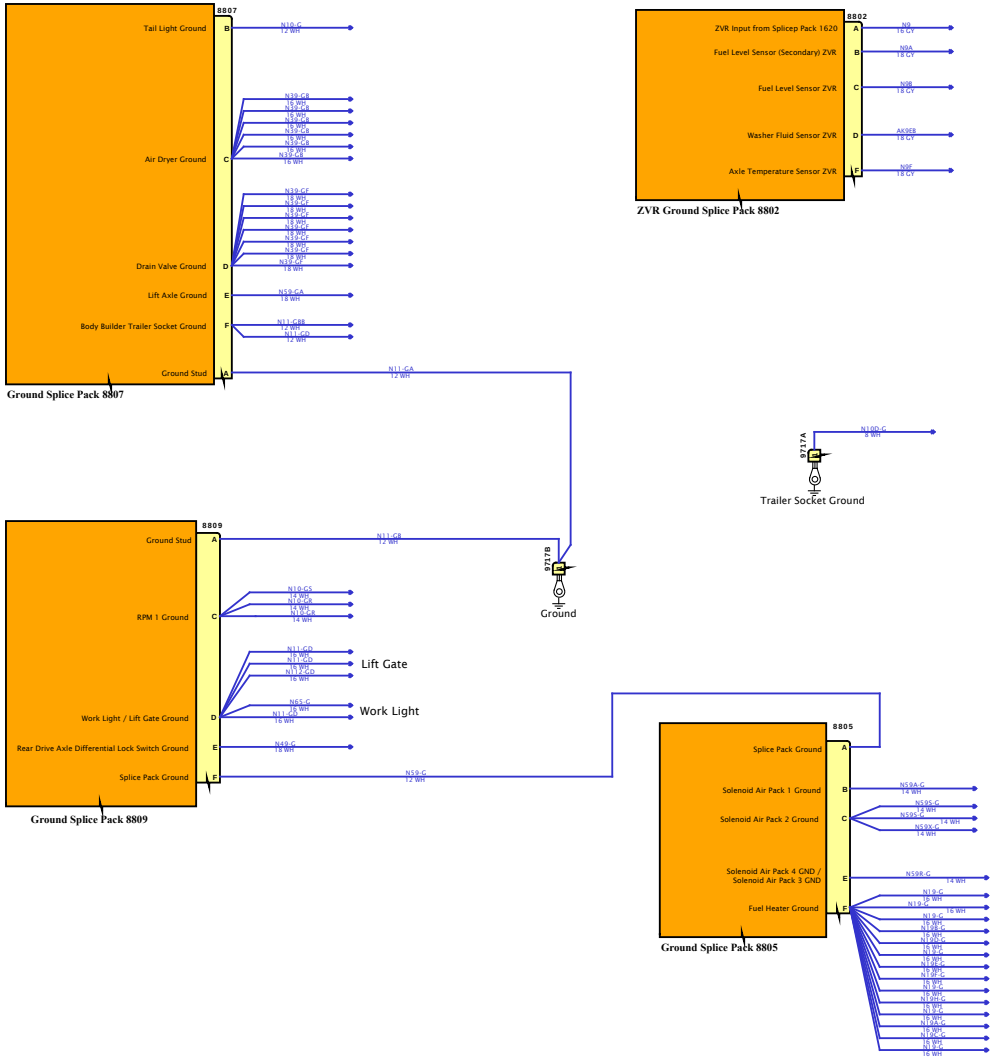

DESIGN DESCRIPTION

FEATURE CODES

SOFTWARE FEATURE CODES

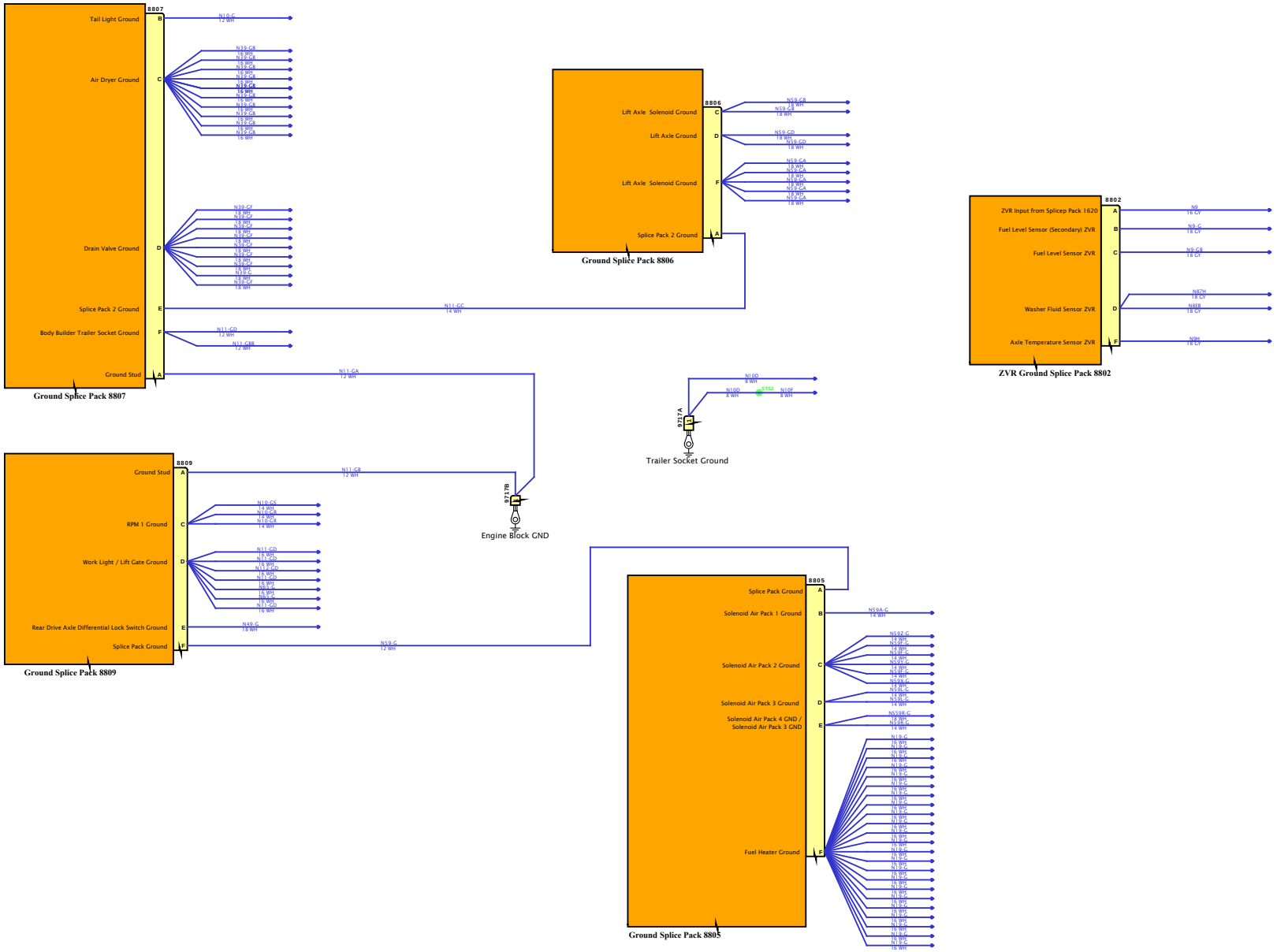

DESIGN DESCRIPTION

FEATURE CODES

SOFTWARE FEATURE CODES

NAVISTAR INC. CONFIDENTIAL PROPRIETARY

Diagram1

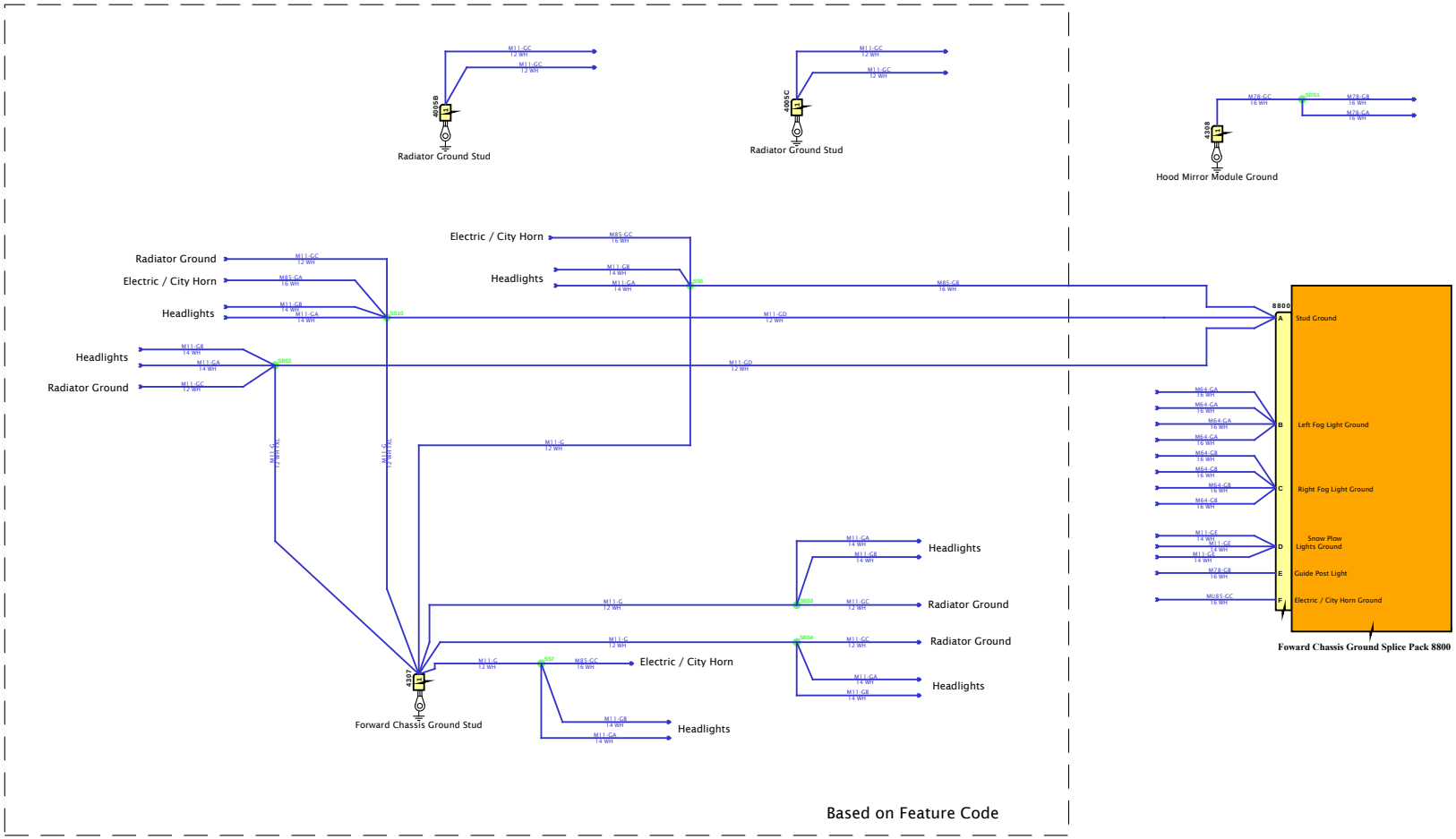

DESIGN DESCRIPTION

FEATURE CODES

SOFTWARE FEATURE CODES

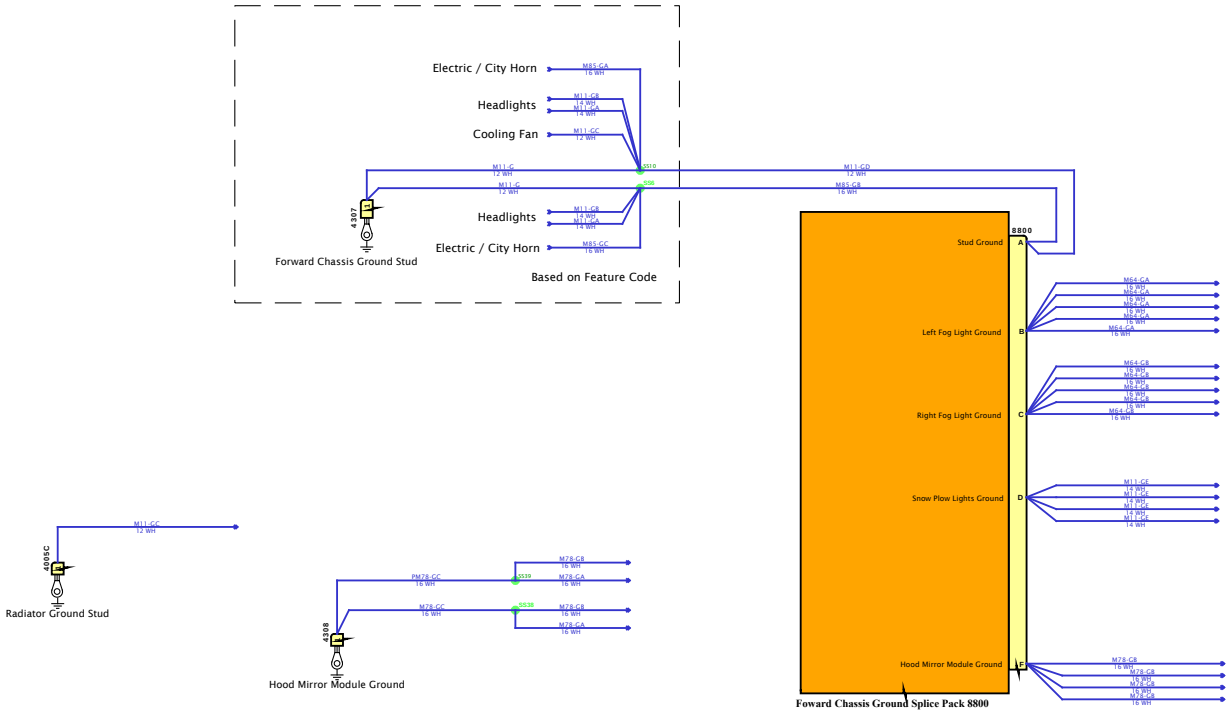

DESIGN DESCRIPTION

FEATURE CODES

SOFTWARE FEATURE CODES

Diagram1

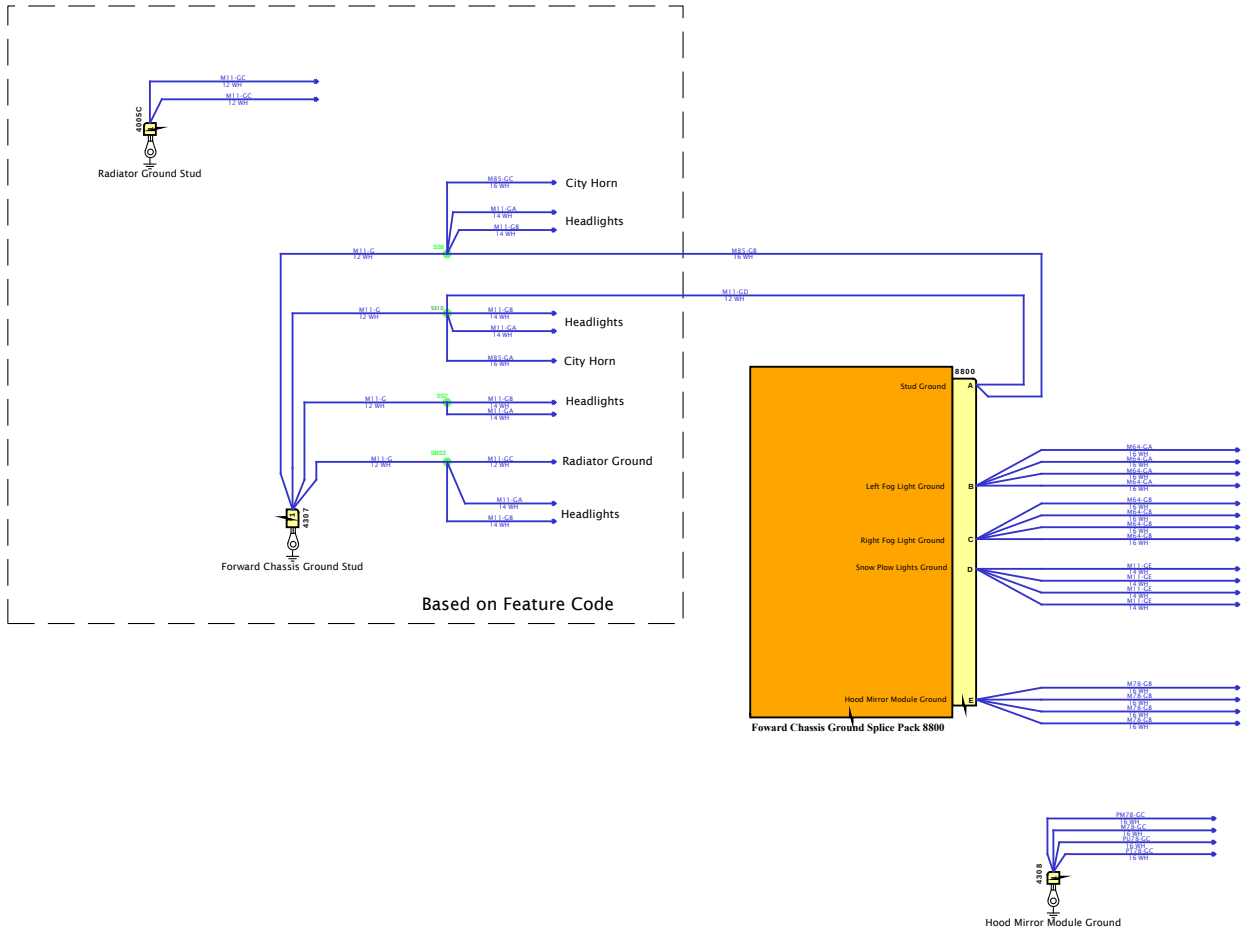

DESIGN DESCRIPTION

FEATURE CODES

SOFTWARE FEATURE CODES

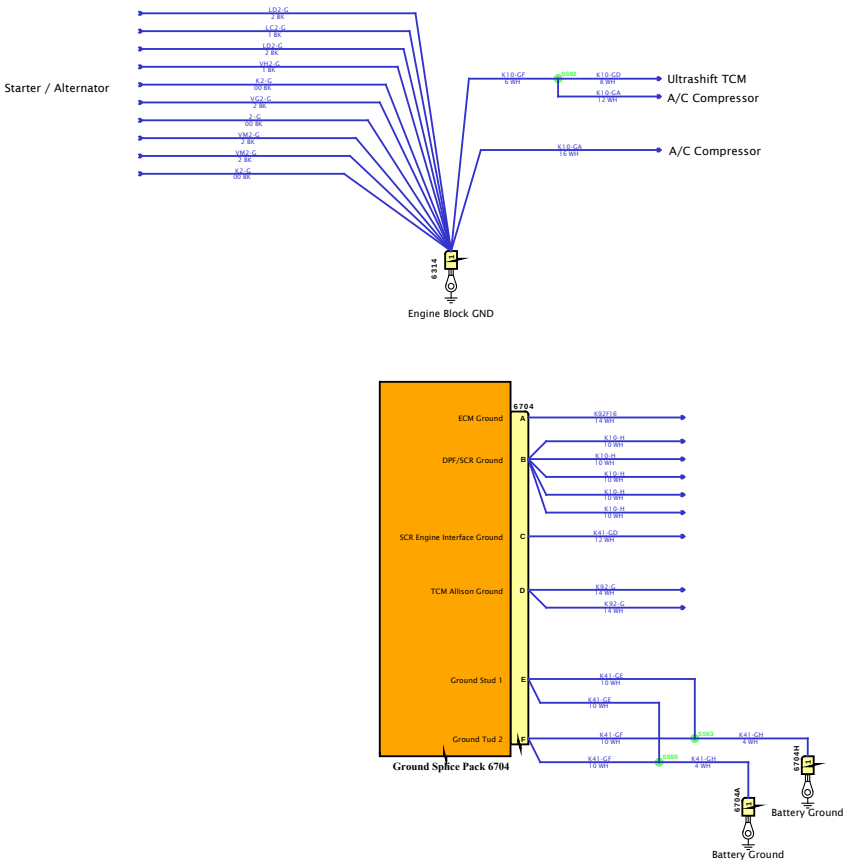

DESIGN DESCRIPTION

FEATURE CODES

SOFTWARE FEATURE CODES

NAVISTAR INC. CONFIDENTIAL PROPRIETARY

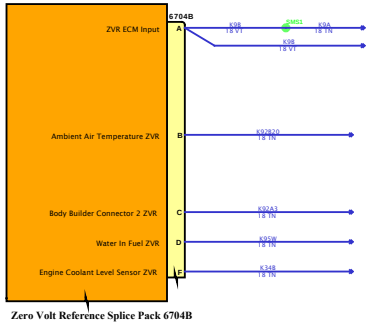

Zero Volt Reference Splice Pack 6704B

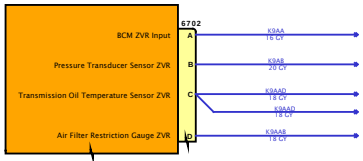

Zero Volt Reference Splice Pack 6702

DESIGN DESCRIPTION

FEATURE CODES

SOFTWARE FEATURE CODES

NAVISTAR INC. CONFIDENTIAL PROPRIETARY

Diagram1

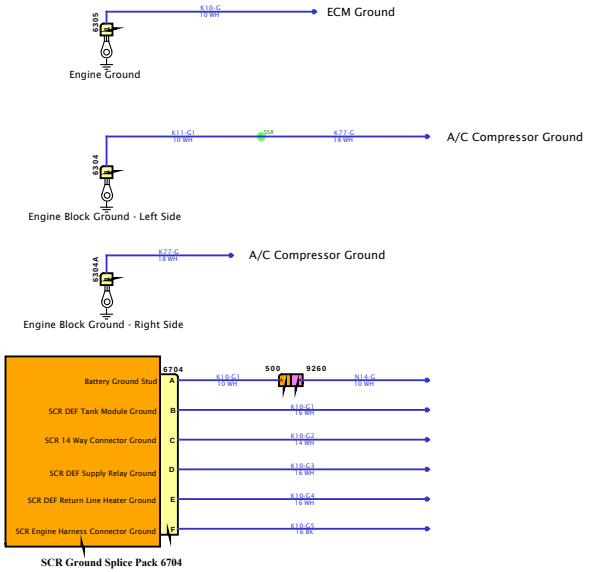

DESIGN DESCRIPTION

FEATURE CODES

SOFTWARE FEATURE CODES

NAVISTAR INC. CONFIDENTIAL PROPRIETARY

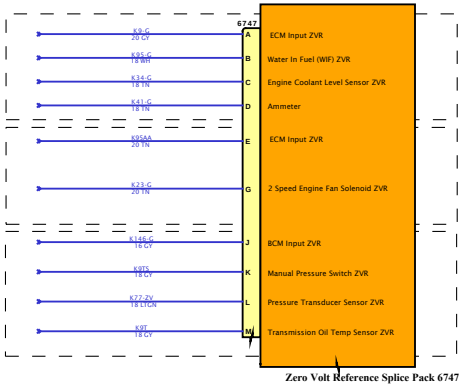

Zero Volt Reference Splice Pack 6747

DESIGN DESCRIPTION

FEATURE CODES

SOFTWARE FEATURE CODES

NAVISTAR INC. CONFIDENTIAL PROPRIETARY

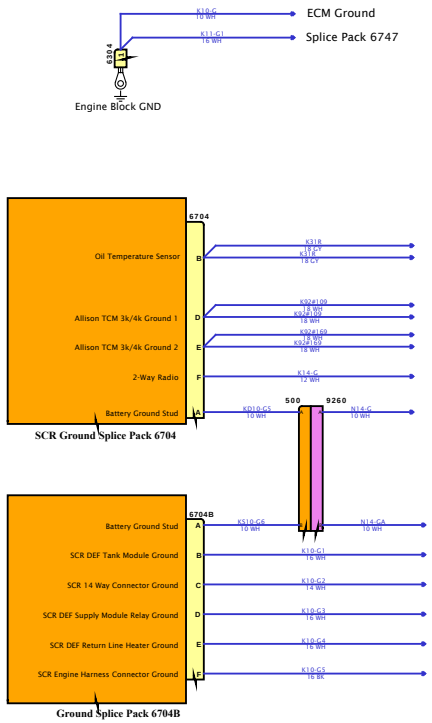

DESIGN DESCRIPTION

FEATURE CODES

SOFTWARE FEATURE CODES

NAVISTAR
NAVISTAR, INC. CONFIDENTIAL PROPRIETARY

DESIGN DESCRIPTION

FEATURE CODES

SOFTWARE FEATURE CODES

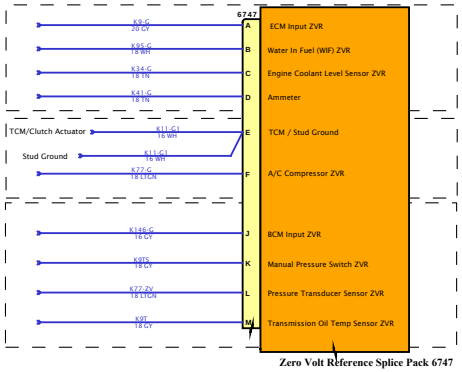

NAVISTAR
NAVISTAR, INC. CONFIDENTIAL PROPRIETARY

Diagram1

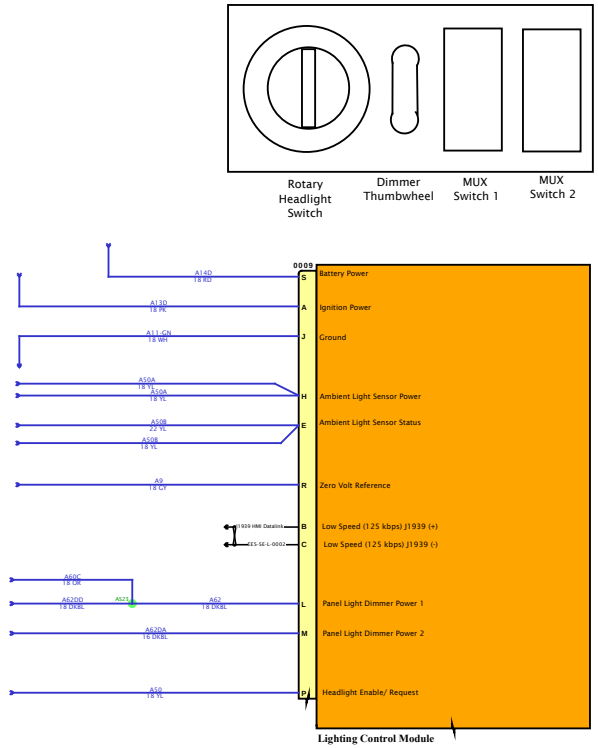

DESIGN DESCRIPTION

FEATURE CODES

SOFTWARE FEATURE CODES

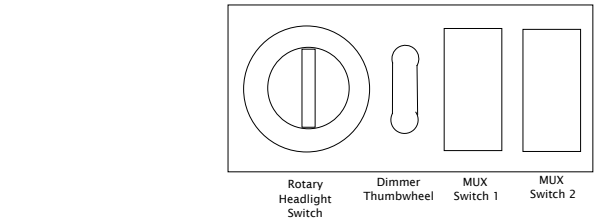

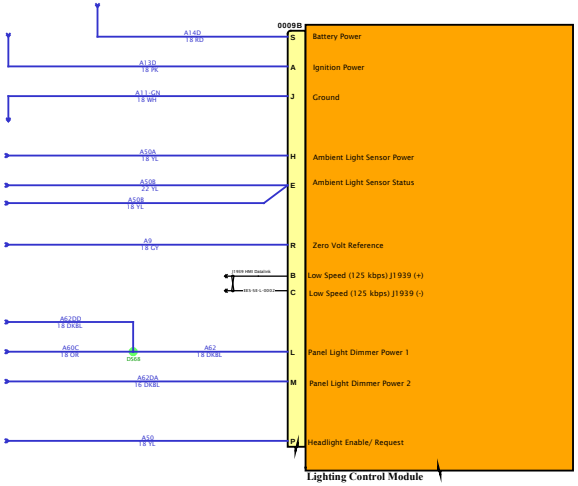

DESIGN DESCRIPTION

FEATURE CODES

SOFTWARE FEATURE CODES

NAVISTAR INC. CONFIDENTIAL PROPRIETARY

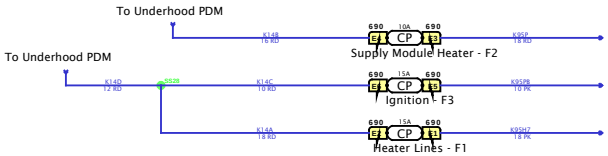

DESIGN DESCRIPTION

FEATURE CODES

SOFTWARE FEATURE CODES

NAVISTAR INC. CONFIDENTIAL PROPRIETARY

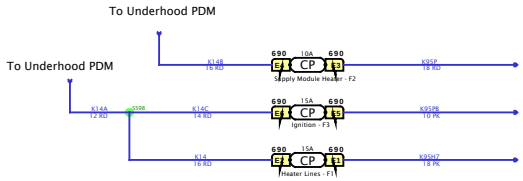

DESIGN DESCRIPTION

FEATURE CODES

SOFTWARE FEATURE CODES

NAVISTAR INC. CONFIDENTIAL PROPRIETARY

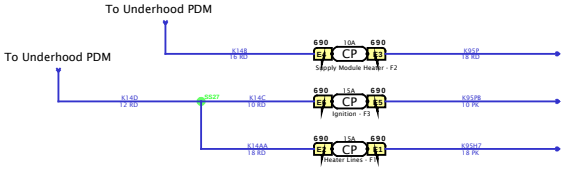

DESIGN DESCRIPTION

FEATURE CODES

SOFTWARE FEATURE CODES

NAVISTAR INC. CONFIDENTIAL PROPRIETARY

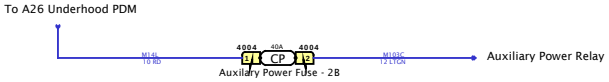

DESIGN DESCRIPTION

FEATURE CODES

SOFTWARE FEATURE CODES

NAVISTAR INC. CONFIDENTIAL PROPRIETARY

Diagram1

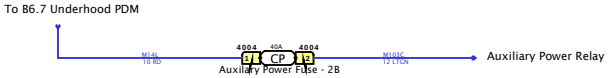

DESIGN DESCRIPTION

FEATURE CODES

SOFTWARE FEATURE CODES

NAVISTAR INC. CONFIDENTIAL PROPRIETARY

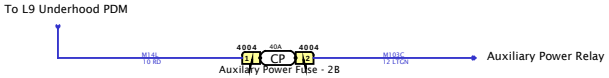

DESIGN DESCRIPTION

FEATURE CODES

SOFTWARE FEATURE CODES

NAVISTAR, INC. CONFIDENTIAL PROPRIETARY

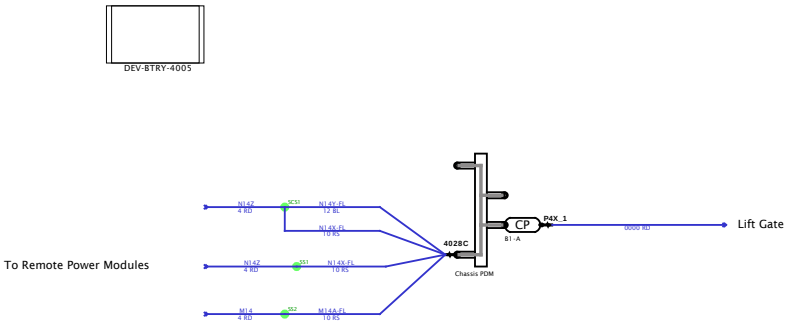

DESIGN DESCRIPTION

FEATURE CODES

SOFTWARE FEATURE CODES

NAVISTAR INC. CONFIDENTIAL PROPRIETARY

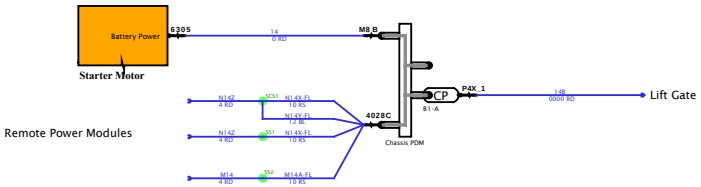

DESIGN DESCRIPTION

FEATURE CODES

SOFTWARE FEATURE CODES

NAVISTAR INC. CONFIDENTIAL PROPRIETARY

Diagram 1

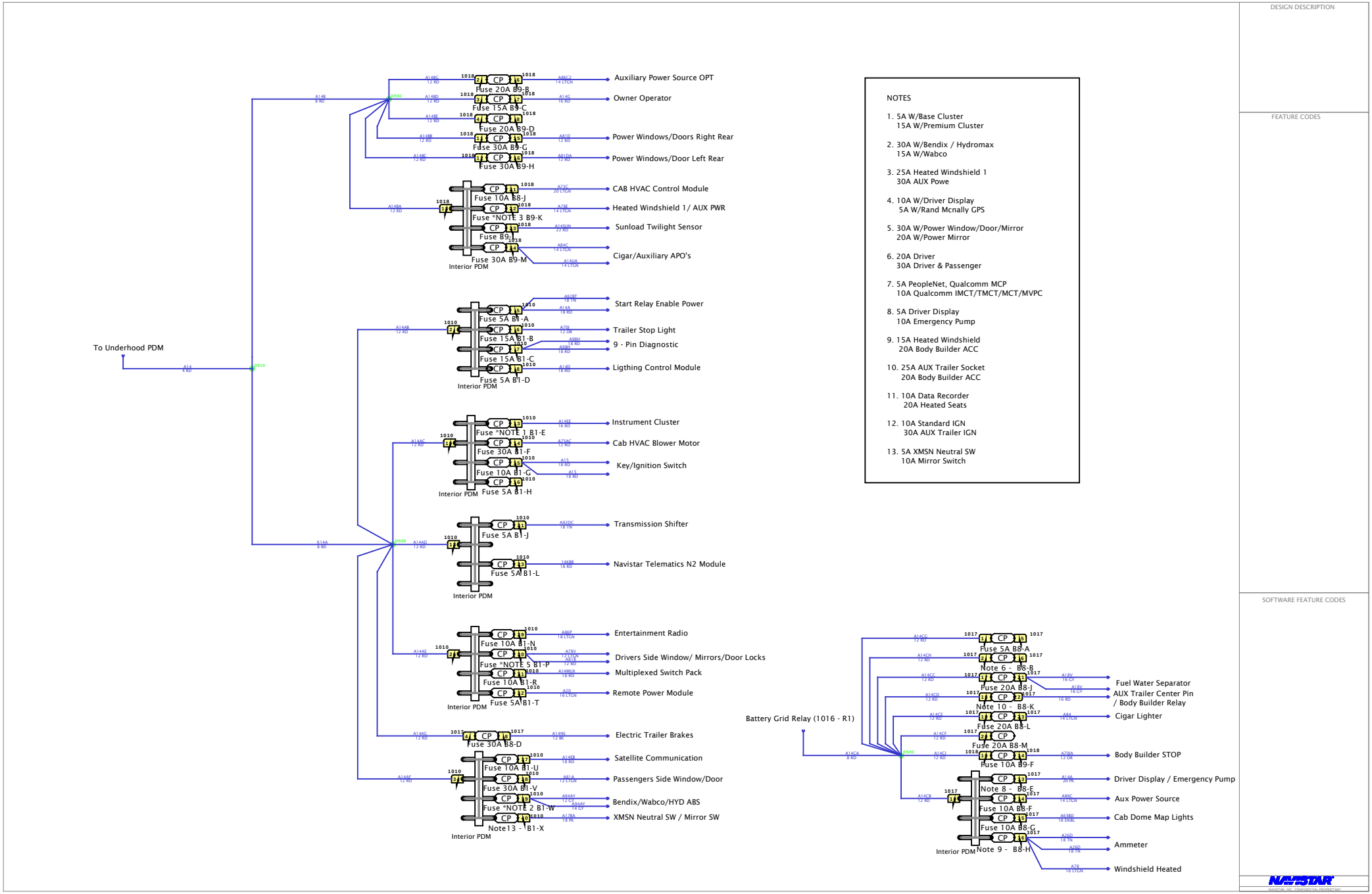
DESIGN DESCRIPTION
FEATURE CODES
SOFTWARE FEATURE CODES
To Underhood PDM
Fuse 20A B9-B
Fuse 15A B9-C
Fuse 20A B9-D
Fuse 30A B9-G
Fuse 30A B9-H
Fuse 10A B8-J
Fuse *NOTE 3 B9-K
Fuse B9
Fuse 30A B9-M
Interior PDM
Auxiliary Power Source OPT
Owner Operator
Power Windows/Doors Right Rear
Power Windows/Door Left Rear
CAB HVAC Control Module
Heated Windshield 1/ AUX PWR
Sunload Twilight Sensor
Cigar/Auxiliary APO's
Fuse 5A B1-A
Fuse 15A B1-B
Fuse 15A B1-C
Fuse 5A B1-D
Start Relay Enable Power
Trailer Stop Light
9 - Pin Diagnostic
Ligthing Control Module
Fuse *NOTE 1 B1-E
Fuse 30A B1-F
Fuse 10A B1-G
Fuse 5A B1-H
Instrument Cluster
Cab HVAC Blower Motor
Key/Ignition Switch
Fuse 5A B1-J
Fuse 5A B1-L
Transmission Shifter
Navistar Telematics N2 Module
Fuse 10A B1-N
Fuse *NOTE 5 B1-P
Fuse 10A B1-R
Fuse 5A B1-T
Entertainment Radio
Drivers Side Window/ Mirrors/Door Locks
Multiplexed Switch Pack
Remote Power Module
Fuse 30A B8-D
Electric Trailer Brakes
Fuse 10A B1-U
Fuse 30A B1-V
Fuse *NOTE 2 B1-W
Note13 - B1-X
Satellite Communication
Passengers Side Window/Door
Bendix/Wabco/HYD ABS
XMSN Neutral SW / Mirror SW
NOTES
1. 5A W/Base Cluster
15A W/Premium Cluster
2. 30A W/Bendix / Hydromax
15A W/Wabco
3. 25A Heated Windshield 1
30A AUX Powe
4. 10A W/Driver Display
5A W/Rand Mcnally GPS
5. 30A W/Power Window/Door/Mirror
20A W/Power Mirror
6. 20A Driver
30A Driver & Passenger
7. 5A PeopleNet, Qualcomm MCP
10A Qualcomm IMCT/TMCT/MCT/MVPC
8. 5A Driver Display
10A Emergency Pump
9. 15A Heated Windshield
20A Body Builder ACC
10. 25A AUX Trailer Socket
20A Body Builder ACC
11. 10A Data Recorder
20A Heated Seats
12. 10A Standard IGN
30A AUX Trailer IGN
13. 5A XMSN Neutral SW
10A Mirror Switch
Battery Grid Relay (1016 - R1)
Fuse 5A B8-A
Note 6 - B8-B
Fuse 20A B8-J
Note 10 - B8-K
Fuse 20A B8-L
Fuse 20A B8-M
Fuse 10A B9-F
Note 8 - B8-E
Fuse 10A B8-F
Fuse 10A B8-G
Note 9 - B8-H
Interior PDM
Fuel Water Separator
AUX Trailer Center Pin / Body Builder Relay
Cigar Lighter
Body Builder STOP
Driver Display / Emergency Pump
Aux Power Source
Cab Dome Map Lights
Ammeter
Windshield Heated
NAVISTAR
NAVISTAR, INC. CONFIDENTIAL PROPRIETARY

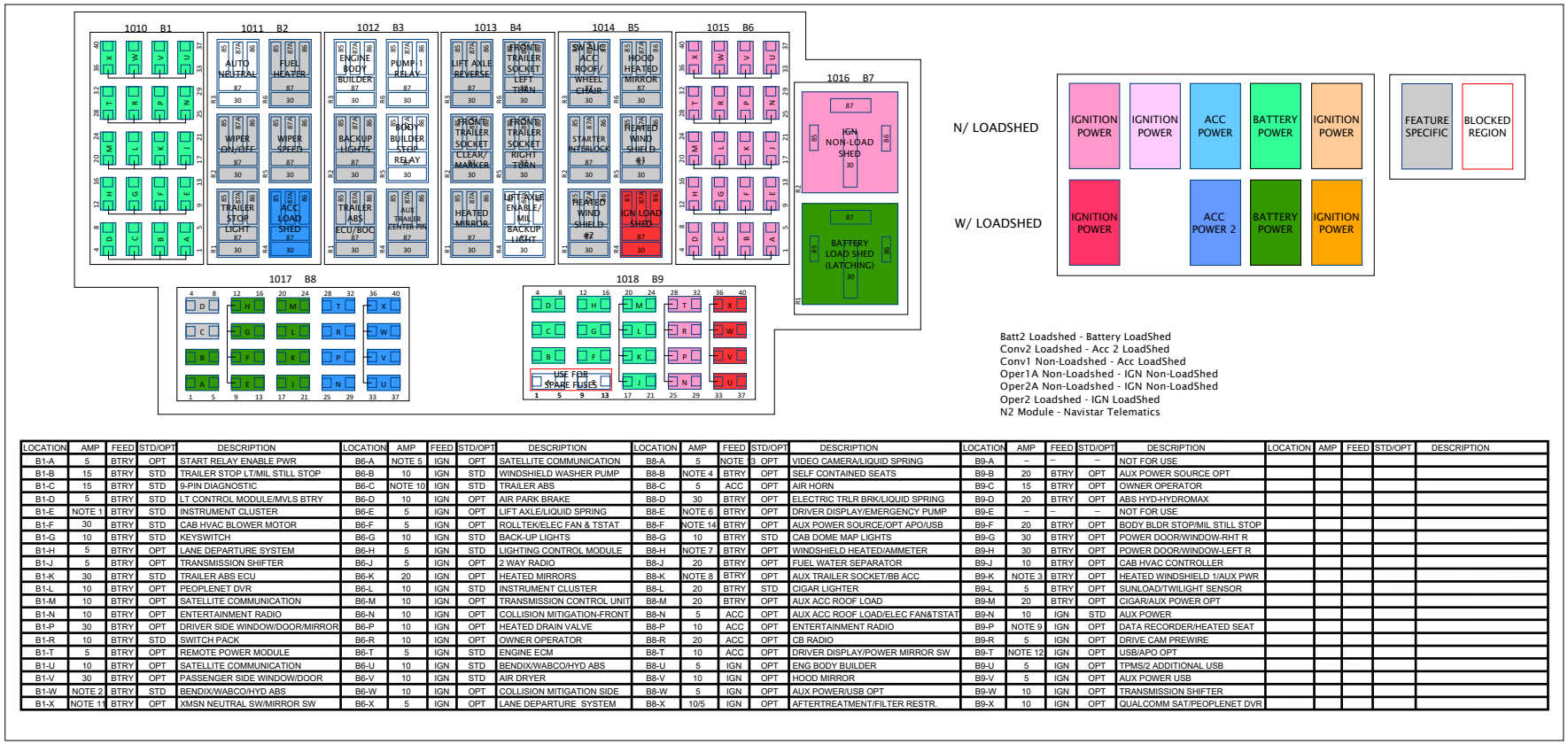

Batt2 Loadshed - Battery LoadShed
Conv2 Loadshed - Acc 2 LoadShed
Conv1 Non-Loadshed - Acc LoadShed
Oper1A Non-Loadshed - IGN Non-LoadShed
Oper2A Non-Loadshed - IGN Non-LoadShed
Oper2 Loadshed - IGN LoadShed
N2 Module - Navistar Telematics

LOCATION	AMP	FEED	STD/OPT	DESCRIPTION	LOCATION	AMP	FEED	STD/OPT	DESCRIPTION	LOCATION	AMP	FEED	STD/OPT	DESCRIPTION	LOCATION	AMP	FEED	STD/OPT	DESCRIPTION	LOCATION	AMP	FEED	STD/OPT	DESCRIPTION
B1-A	5	BTRY	OPT	START RELAY ENABLE PWR	B6-A	NOTE 5	IGN	OPT	SATELLITE COMMUNICATION	B8-A	5	NOTE 13	OPT	VIDEO CAMERA/LIQUID SPRING	B9-A	–	–	–	NOT FOR USE					
B1-B	15	BTRY	STD	TRAILER STOP LT/MIL STILL STOP	B6-B	10	IGN	STD	WINDSHIELD WASHER PUMP	B8-B	NOTE 4	BTRY	OPT	SELF CONTAINED SEATS	B9-B	20	BTRY	OPT	AUX POWER SOURCE OPT					
B1-C	15	BTRY	STD	9-PIN DIAGNOSTIC	B6-C	NOTE 10	IGN	STD	TRAILER ABS	B8-C	5	ACC	OPT	AIR HORN	B9-C	15	BTRY	OPT	OWNER OPERATOR					
B1-D	5	BTRY	STD	LT CONTROL MODULE/MVLS BTRY	B6-D	10	IGN	OPT	AIR PARK BRAKE	B8-D	30	BTRY	OPT	ELECTRIC TRLR BRK/LIQUID SPRING	B9-D	20	BTRY	OPT	ABS HYD-HYDROMAX					
B1-E	NOTE 1	BTRY	STD	INSTRUMENT CLUSTER	B6-E	5	IGN	OPT	LIFT AXLE/LIQUID SPRING	B8-E	NOTE 6	BTRY	OPT	DRIVER DISPLAY/EMERGENCY PUMP	B9-E	–	–	–	NOT FOR USE					
B1-F	30	BTRY	STD	CAB HVAC BLOWER MOTOR	B6-F	5	IGN	OPT	ROLLTEK/ELEC FAN & TSTAT	B8-F	NOTE 14	BTRY	OPT	AUX POWER SOURCE/OPT APO/USB	B9-F	20	BTRY	OPT	BODY BLDR STOP/MIL STILL STOP					
B1-G	10	BTRY	STD	KEYSWITCH	B6-G	10	IGN	STD	BACK-UP LIGHTS	B8-G	10	BTRY	STD	CAB DOME MAP LIGHTS	B9-G	30	BTRY	OPT	POWER DOOR/WINDOW-RHT R					
B1-H	5	BTRY	OPT	LANE DEPARTURE SYSTEM	B6-H	5	IGN	STD	LIGHTING CONTROL MODULE	B8-H	NOTE 7	BTRY	OPT	WINDSHIELD HEATED/AMMETER	B9-H	30	BTRY	OPT	POWER DOOR/WINDOW-LEFT R					
B1-J	5	BTRY	OPT	TRANSMISSION SHIFTER	B6-J	5	IGN	OPT	2 WAY RADIO	B8-J	20	BTRY	OPT	FUEL WATER SEPARATOR	B9-J	10	BTRY	OPT	CAB HVAC CONTROLLER					
B1-K	30	BTRY	STD	TRAILER ABS ECU	B6-K	20	IGN	OPT	HEATED MIRRORS	B8-K	NOTE 8	BTRY	OPT	AUX TRAILER SOCKET/BB ACC	B9-K	NOTE 3	BTRY	OPT	HEATED WINDSHIELD 1/AUX PWR					
B1-L	10	BTRY	OPT	PEOPLENET DVR	B6-L	10	IGN	STD	INSTRUMENT CLUSTER	B8-L	20	BTRY	STD	CIGAR LIGHTER	B9-L	5	BTRY	OPT	SUNLOAD/TWILIGHT SENSOR					
B1-M	10	BTRY	OPT	SATELLITE COMMUNICATION	B6-M	10	IGN	OPT	TRANSMISSION CONTROL UNIT	B8-M	20	BTRY	OPT	AUX ACC ROOF LOAD	B9-M	20	BTRY	OPT	CIGAR/AUX POWER OPT					
B1-N	10	BTRY	OPT	ENTERTAINMENT RADIO	B6-N	10	IGN	OPT	COLLISION MITIGATION-FRONT	B8-N	5	ACC	OPT	AUX ACC ROOF LOAD/ELEC FAN&TSTAT	B9-N	10	IGN	STD	AUX POWER					
B1-P	30	BTRY	OPT	DRIVER SIDE WINDOW/DOOR/MIRROR	B6-P	10	IGN	OPT	HEATED DRAIN VALVE	B8-P	10	ACC	OPT	ENTERTAINMENT RADIO	B9-P	NOTE 9	IGN	OPT	DATA RECORDER/HEATED SEAT					
B1-R	10	BTRY	STD	SWITCH PACK	B6-R	10	IGN	OPT	OWNER OPERATOR	B8-R	20	ACC	OPT	CB RADIO	B9-R	5	IGN	OPT	DRIVE CAM PREWIRE					
B1-T	5	BTRY	OPT	REMOTE POWER MODULE	B6-T	5	IGN	STD	ENGINE ECM	B8-T	10	ACC	OPT	DRIVER DISPLAY/POWER MIRROR SW	B9-T	NOTE 12	IGN	OPT	USB/APO OPT					
B1-U	10	BTRY	OPT	SATELLITE COMMUNICATION	B6-U	10	IGN	STD	BENDIX/WABCO/HYD ABS	B8-U	5	IGN	OPT	ENG BODY BUILDER	B9-U	5	IGN	OPT	TPMS/2 ADDITIONAL USB					
B1-V	30	BTRY	OPT	PASSENGER SIDE WINDOW/DOOR	B6-V	10	IGN	STD	AIR DRYER	B8-V	10	IGN	OPT	HOOD MIRROR	B9-V	5	IGN	OPT	AUX POWER USB					
B1-W	NOTE 2	BTRY	STD	BENDIX/WABCO/HYD ABS	B6-W	10	IGN	OPT	COLLISION MITIGATION SIDE	B8-W	5	IGN	OPT	AUX POWER/USB OPT	B9-W	10	IGN	OPT	TRANSMISSION SHIFTER					
B1-X	NOTE 11	BTRY	OPT	XMSN NEUTRAL SW/MIRROR SW	B6-X	5	IGN	OPT	LANE DEPARTURE SYSTEM	B8-X	10/5	IGN	OPT	AFTERTREATMENT/FILTER RESTR.	B9-X	10	IGN	OPT	QUALCOMM SAT/PEOPLENET DVR					

DESIGN DESCRIPTION

FEATURE CODES

SOFTWARE FEATURE CODES

Diagram 1

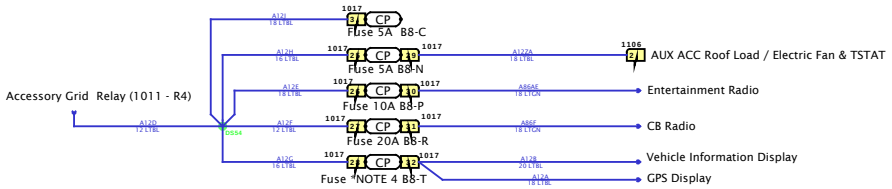

NOTES

1. 5A W/Base Cluster
   15A W/Premium Cluster
2. 30A W/Bendix / Hydromax
   15A W/Wabco
3. 25A Heated Windshield 1
   30A AUX Powe
4. 10A W/Driver Display
   5A W/Rand Mcnally GPS
5. 30A W/Power Window/Door/Mirror
   20A W/Power Mirror
6. 20A Driver
   30A Driver & Passenger
7. 5A PeopleNet, Qualcomm MCP
   10A Qualcomm IMCT/TMCT/MCT/MVPC
8. 5A Driver Display
   10A Emergency Pump
9. 15A Heated Windshield
   20A Body Builder ACC
10. 25A AUX Trailer Socket
    20A Body Builder ACC
11. 10A Data Recorder
    20A Heated Seats
12. 10A Standard IGN
    30A AUX Trailer IGN
13. 5A XMSN Neutral SW
    10A Mirror Switch

DESIGN DESCRIPTION

FEATURE CODES

SOFTWARE FEATURE CODES

NAVISTAR INC. CONFIDENTIAL PROPRIETARY

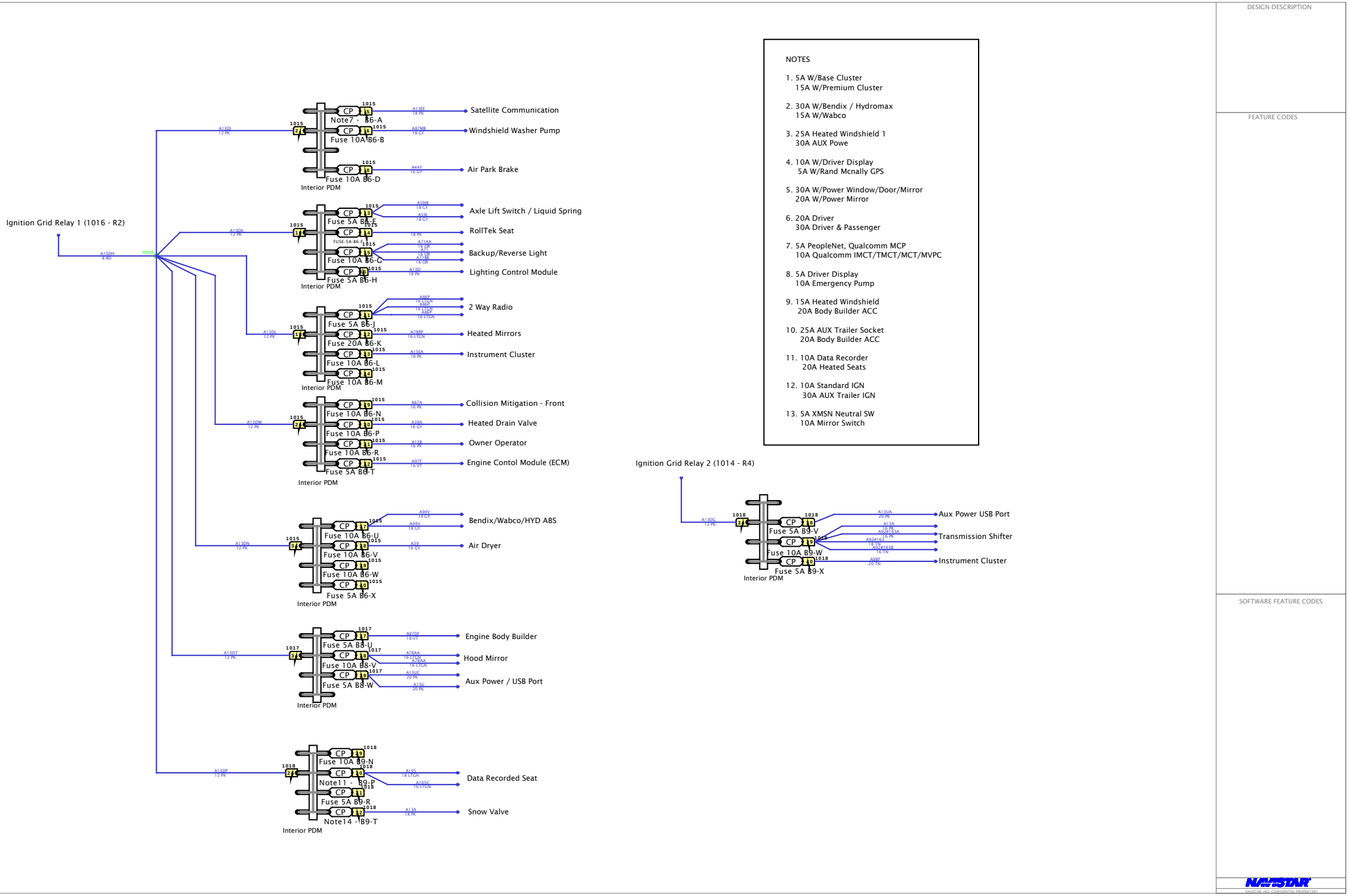
Ignition Grid Relay 1 (1016 - R2)
Interior PDM
Note7 - B6-A
Fuse 10A B6-B
Fuse 10A B6-D
Satellite Communication
Windshield Washer Pump
Air Park Brake
Fuse 5A B6-E
Fuse 5A B6-F
Fuse 10A B6-G
Fuse 5A B6-H
Axle Lift Switch / Liquid Spring
RollTek Seat
Backup/Reverse Light
Lighting Control Module
Fuse 5A B6-J
Fuse 20A B6-K
Fuse 10A B6-L
Fuse 10A B6-M
2 Way Radio
Heated Mirrors
Instrument Cluster
Fuse 10A B6-N
Fuse 10A B6-P
Fuse 10A B6-R
Fuse 5A B6-T
Collision Mitigation - Front
Heated Drain Valve
Owner Operator
Engine Contol Module (ECM)
Fuse 10A B6-U
Fuse 10A B6-V
Fuse 10A B6-W
Fuse 5A B6-X
Bendix/Wabco/HYD ABS
Air Dryer
Fuse 5A B8-U
Fuse 10A B8-V
Fuse 5A B8-W
Engine Body Builder
Hood Mirror
Aux Power / USB Port
Fuse 10A B9-N
Note11 - B9-P
Fuse 5A B9-R
Note14 - B9-T
Data Recorded Seat
Snow Valve
NOTES
1. 5A W/Base Cluster
15A W/Premium Cluster
2. 30A W/Bendix / Hydromax
15A W/Wabco
3. 25A Heated Windshield 1
30A AUX Powe
4. 10A W/Driver Display
5A W/Rand Mcnally GPS
5. 30A W/Power Window/Door/Mirror
20A W/Power Mirror
6. 20A Driver
30A Driver & Passenger
7. 5A PeopleNet, Qualcomm MCP
10A Qualcomm IMCT/TMCT/MCT/MVPC
8. 5A Driver Display
10A Emergency Pump
9. 15A Heated Windshield
20A Body Builder ACC
10. 25A AUX Trailer Socket
20A Body Builder ACC
11. 10A Data Recorder
20A Heated Seats
12. 10A Standard IGN
30A AUX Trailer IGN
13. 5A XMSN Neutral SW
10A Mirror Switch
Ignition Grid Relay 2 (1014 - R4)
Interior PDM
Fuse 5A B9-V
Fuse 10A B9-W
Fuse 5A B9-X
Aux Power USB Port
Transmission Shifter
Instrument Cluster
DESIGN DESCRIPTION
FEATURE CODES
SOFTWARE FEATURE CODES

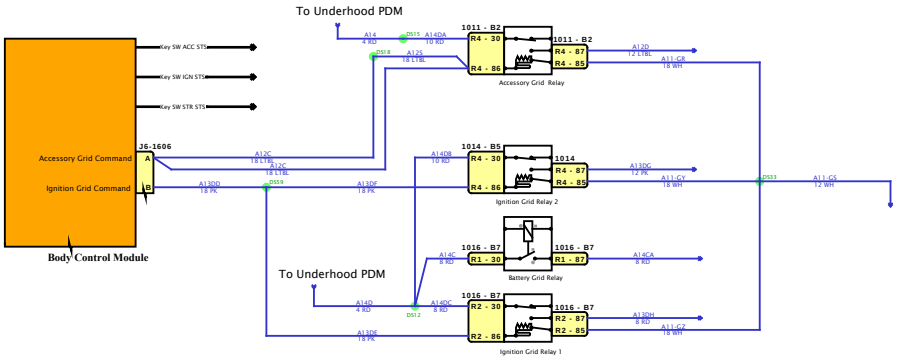

DESIGN DESCRIPTION

FEATURE CODES

SOFTWARE FEATURE CODES

NAVISTAR INC. CONFIDENTIAL PROPRIETARY

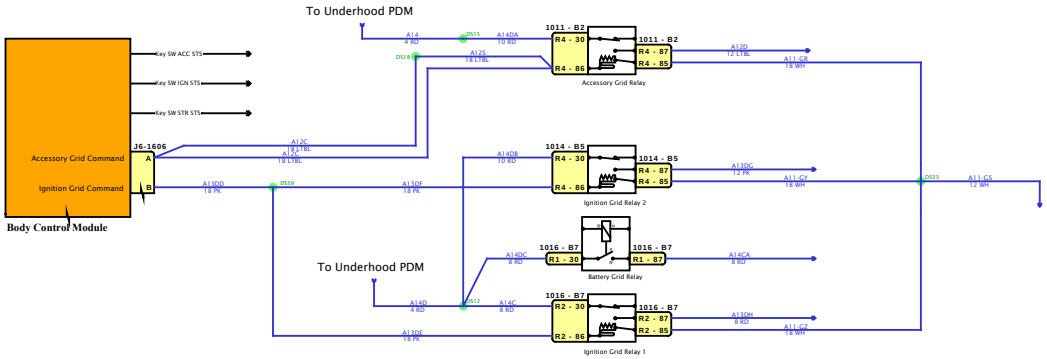

DESIGN DESCRIPTION

FEATURE CODES

SOFTWARE FEATURE CODES

NAVISTAR
NAVISTAR, INC. CONFIDENTIAL PROPRIETARY

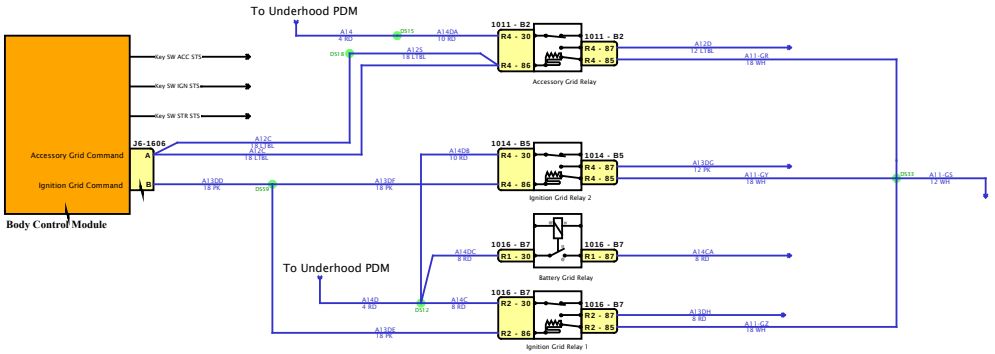

DESIGN DESCRIPTION

FEATURE CODES

SOFTWARE FEATURE CODES

NAVISTAR
NAVISTAR, INC. CONFIDENTIAL PROPRIETARY

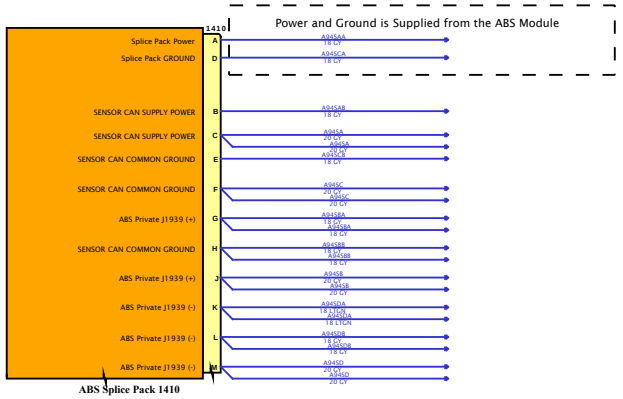

DESIGN DESCRIPTION

FEATURE CODES

SOFTWARE FEATURE CODES

NAVISTAR INC. CONFIDENTIAL PROPRIETARY

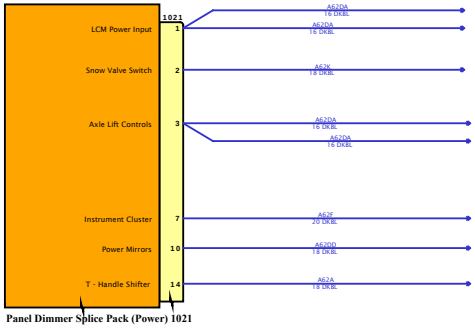

DESIGN DESCRIPTION

FEATURE CODES

SOFTWARE FEATURE CODES

NAVISTAR INC. CONFIDENTIAL PROPRIETARY

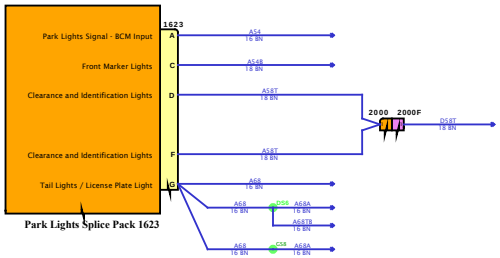

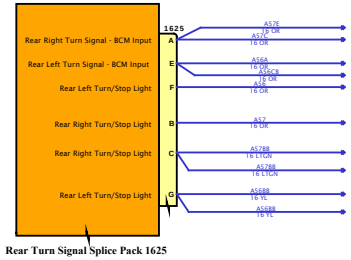

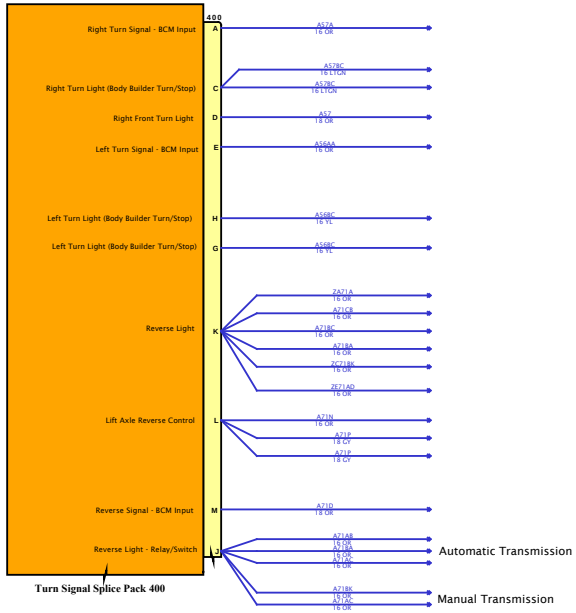

DESIGN DESCRIPTION

FEATURE CODES

SOFTWARE FEATURE CODES

A26 - UNDERHOOD PDM

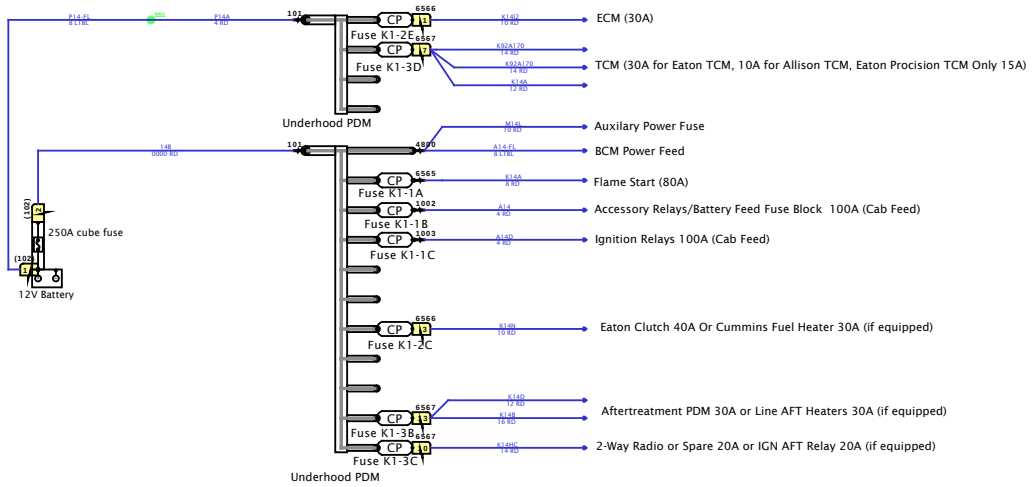

DESIGN DESCRIPTION

FEATURE CODES

SOFTWARE FEATURE CODES

NAVISTAR INC. CONFIDENTIAL PROPRIETARY

PDM - UNDERHOOD

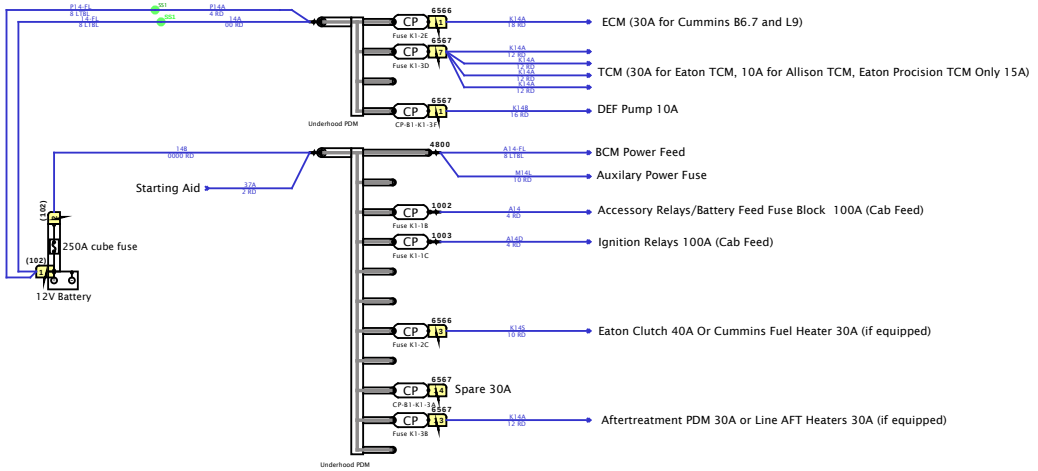

DESIGN DESCRIPTION

FEATURE CODES

SOFTWARE FEATURE CODES

NAVISTAR INC. CONFIDENTIAL PROPRIETARY

Diagram1

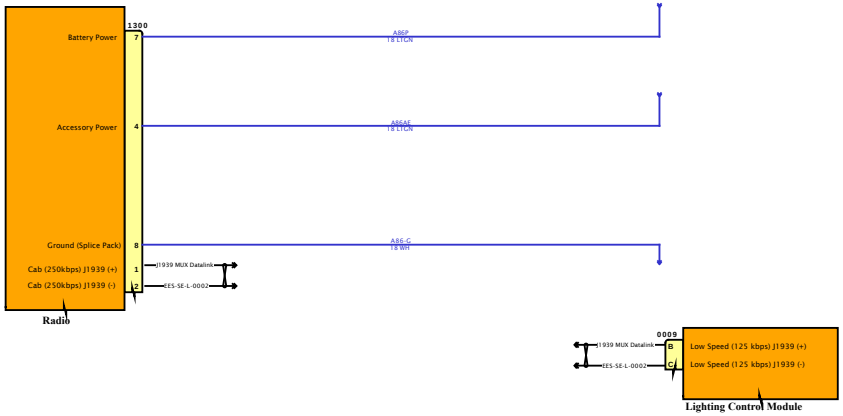

DESIGN DESCRIPTION

FEATURE CODES

SOFTWARE FEATURE CODES

NAVISTAR
NAVISTAR, INC. CONFIDENTIAL PROPRIETARY

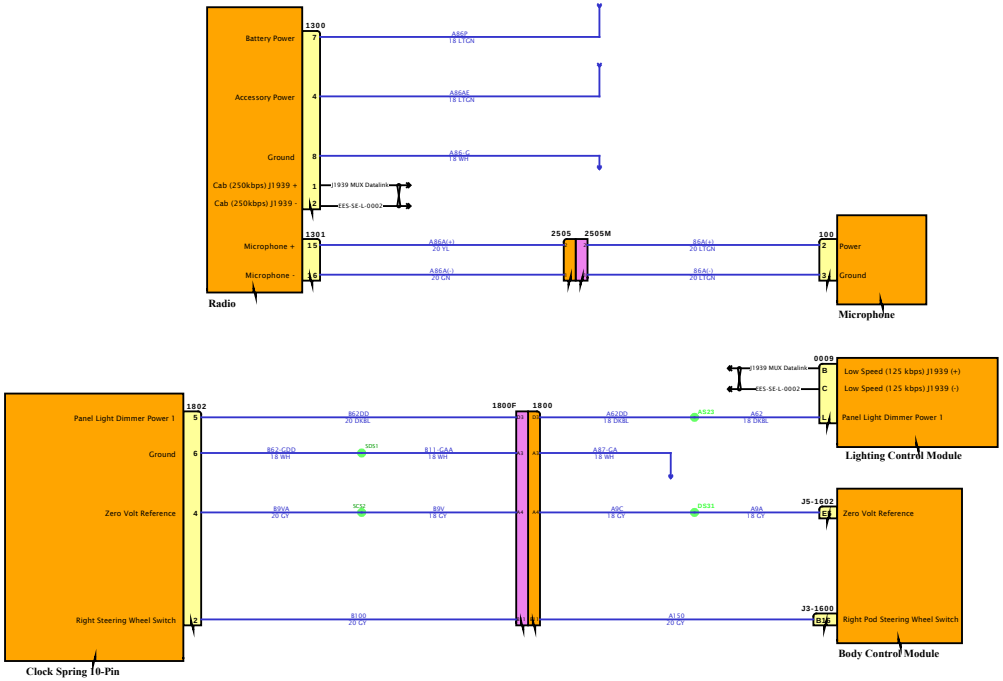

DESIGN DESCRIPTION

FEATURE CODES

SOFTWARE FEATURE CODES

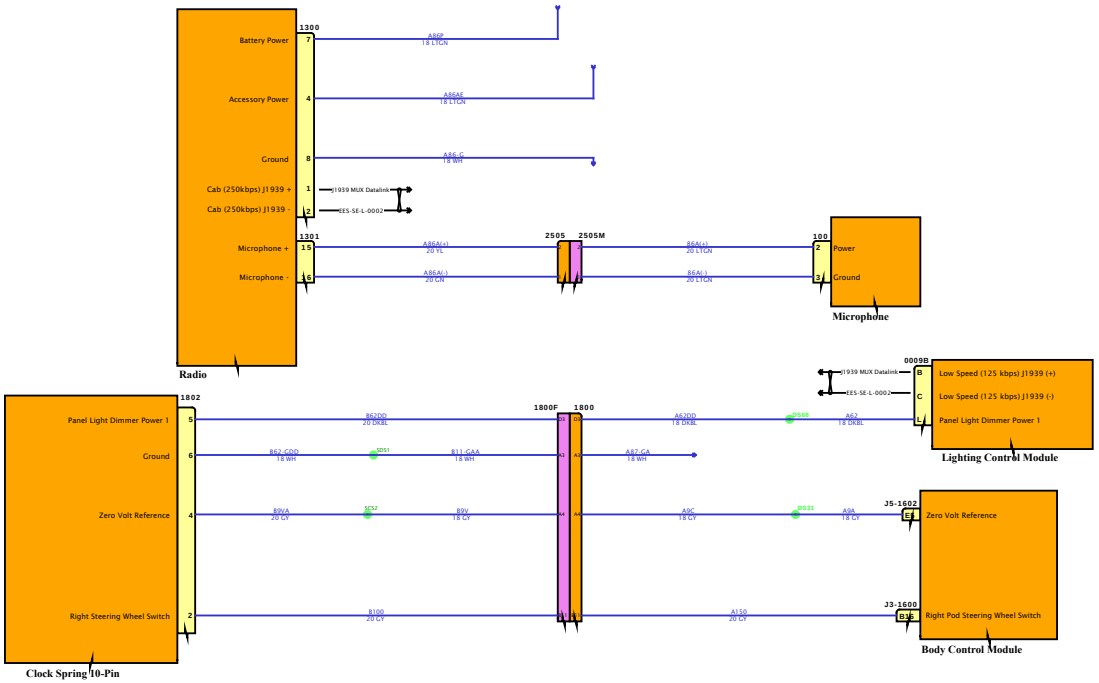

DESIGN DESCRIPTION

FEATURE CODES

SOFTWARE FEATURE CODES

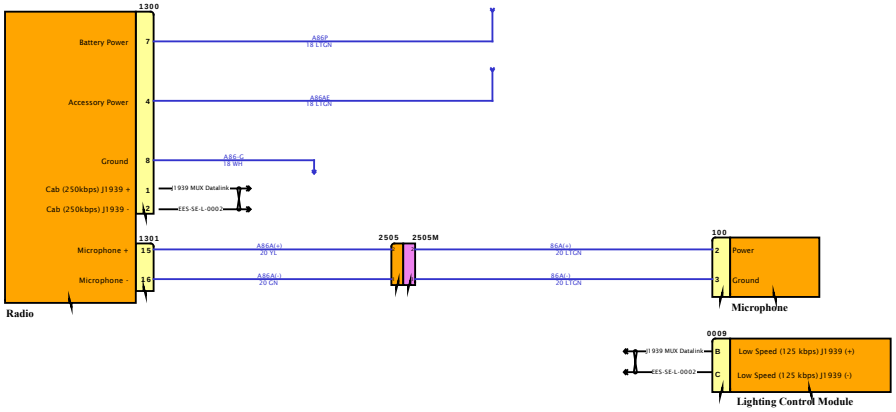

DESIGN DESCRIPTION

FEATURE CODES

SOFTWARE FEATURE CODES

NAVISTAR INC. CONFIDENTIAL PROPRIETARY

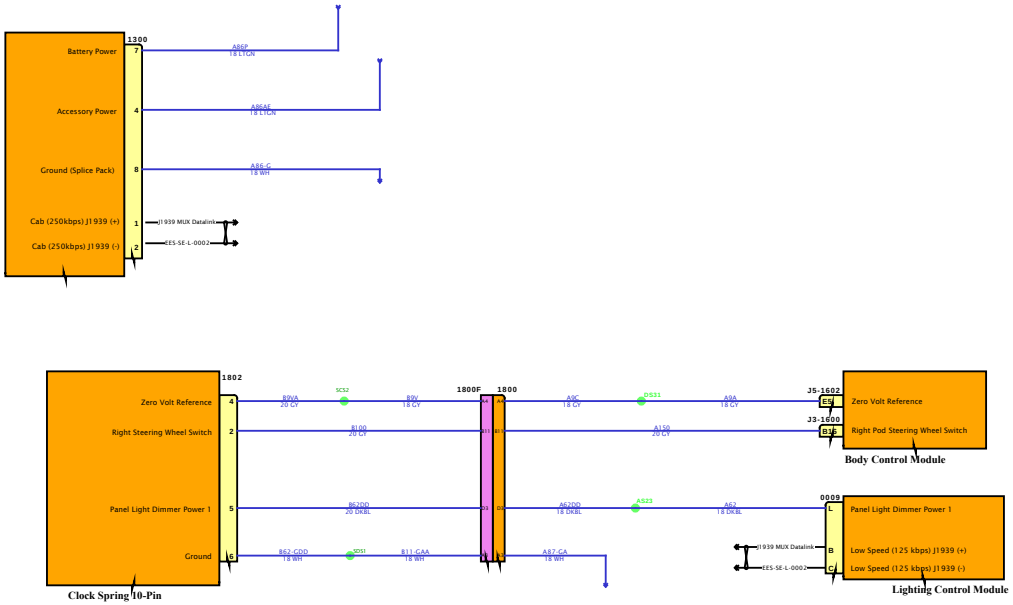

DESIGN DESCRIPTION

FEATURE CODES

SOFTWARE FEATURE CODES

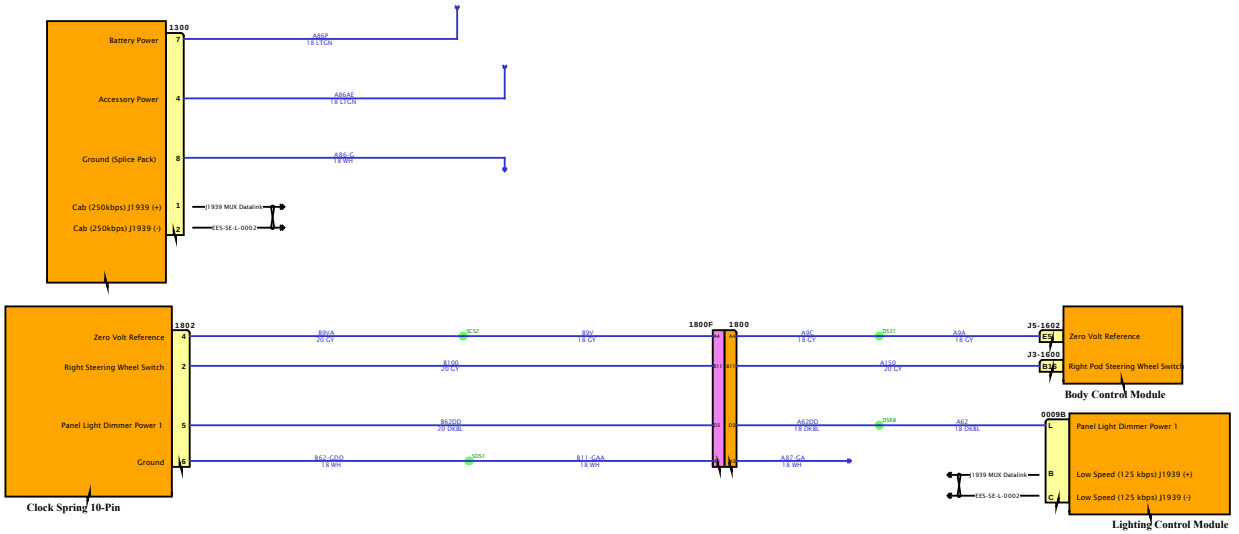

DESIGN DESCRIPTION

FEATURE CODES

SOFTWARE FEATURE CODES

NAVISTAR INC. CONFIDENTIAL PROPRIETARY

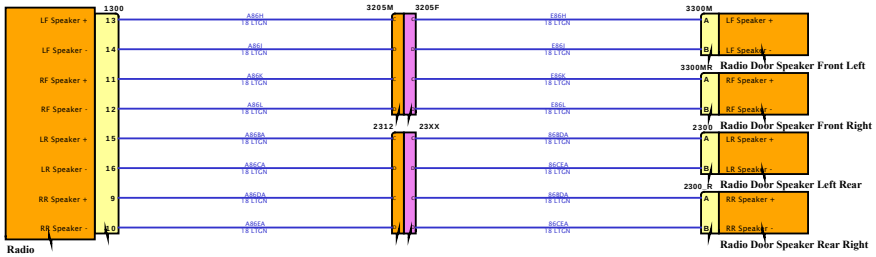

DESIGN DESCRIPTION

FEATURE CODES

SOFTWARE FEATURE CODES

NAVISTAR
NAVISTAR, INC. CONFIDENTIAL PROPRIETARY

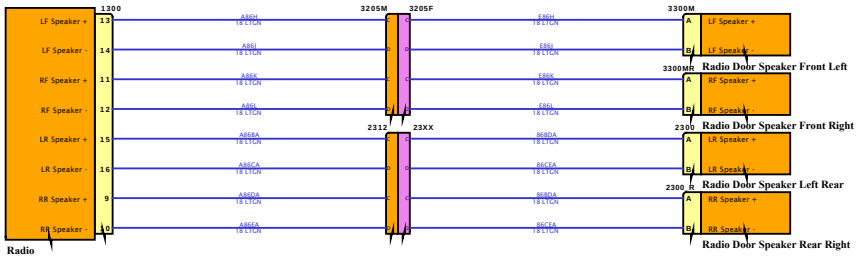

DESIGN DESCRIPTION

FEATURE CODES

SOFTWARE FEATURE CODES

Diagram1

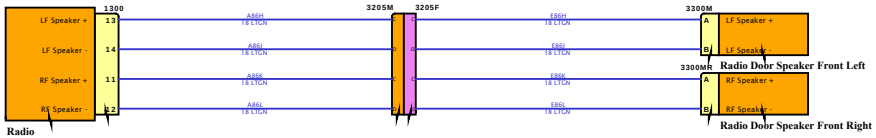

DESIGN DESCRIPTION

FEATURE CODES

SOFTWARE FEATURE CODES

NAVISTAR INC. CONFIDENTIAL PROPRIETARY

Diagram1

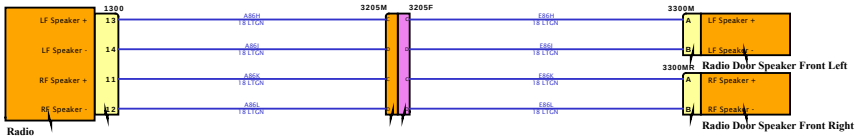

DESIGN DESCRIPTION

FEATURE CODES

SOFTWARE FEATURE CODES

NAVISTAR INC. CONFIDENTIAL PROPRIETARY

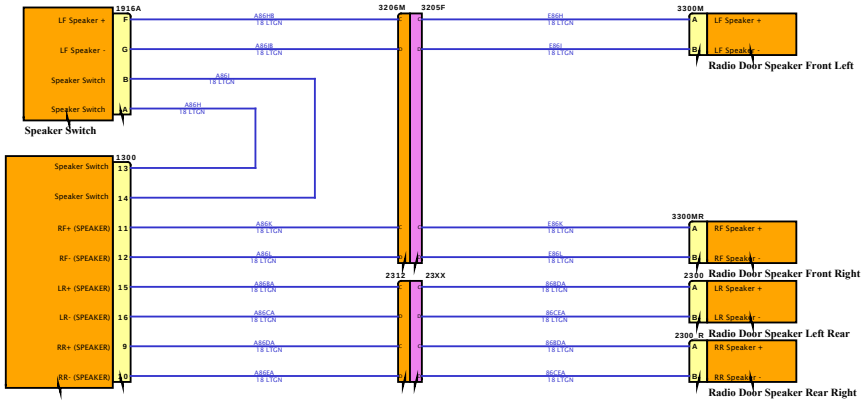

DESIGN DESCRIPTION

FEATURE CODES

SOFTWARE FEATURE CODES

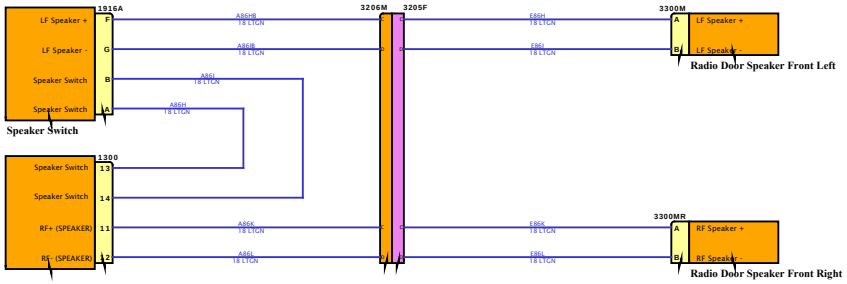

DESIGN DESCRIPTION

FEATURE CODES

SOFTWARE FEATURE CODES

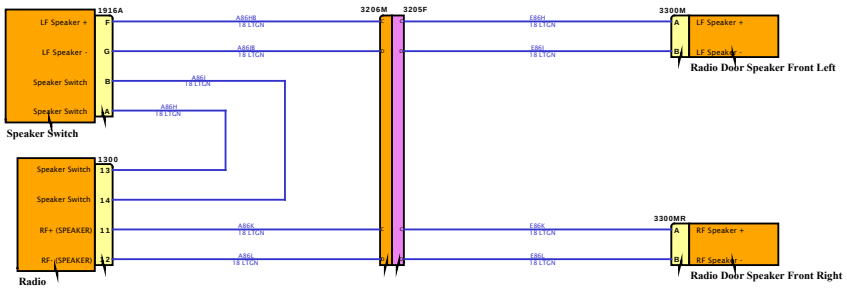

DESIGN DESCRIPTION

FEATURE CODES

SOFTWARE FEATURE CODES

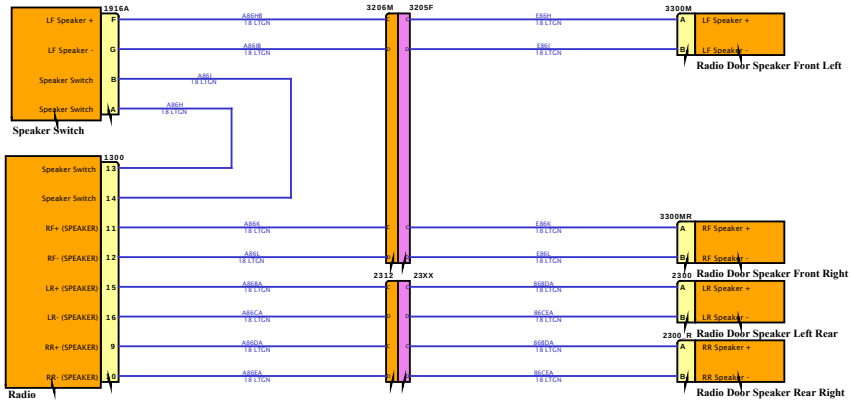

DESIGN DESCRIPTION

FEATURE CODES

SOFTWARE FEATURE CODES

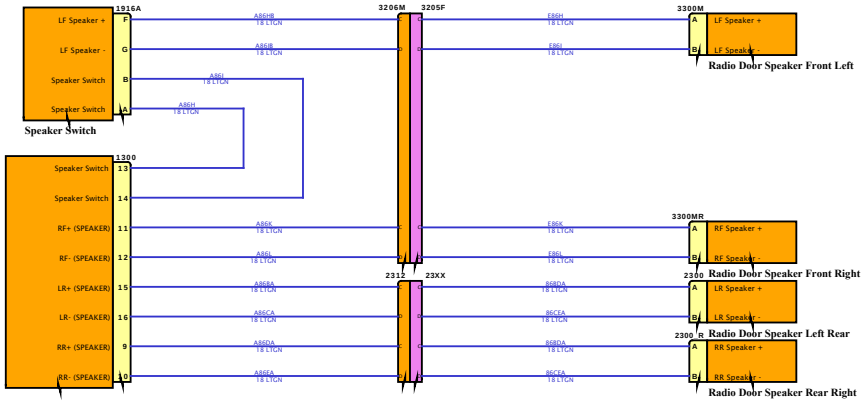

DESIGN DESCRIPTION

FEATURE CODES

SOFTWARE FEATURE CODES

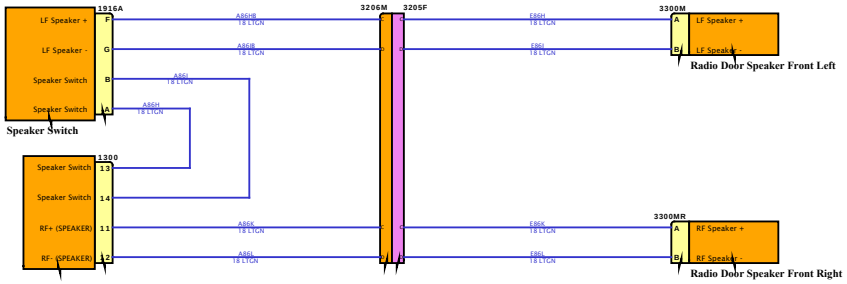

DESIGN DESCRIPTION

FEATURE CODES

SOFTWARE FEATURE CODES

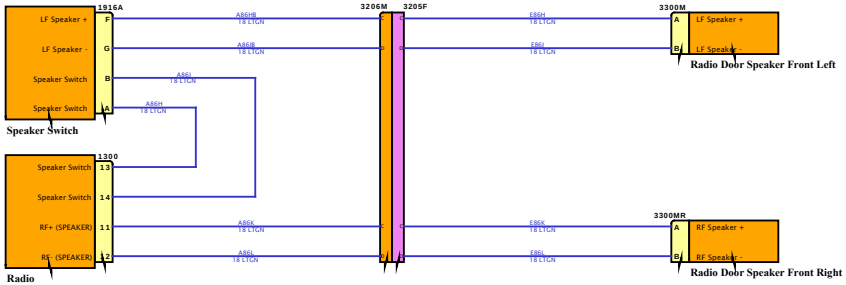

DESIGN DESCRIPTION

FEATURE CODES

SOFTWARE FEATURE CODES

DESIGN DESCRIPTION

FEATURE CODES

SOFTWARE FEATURE CODES

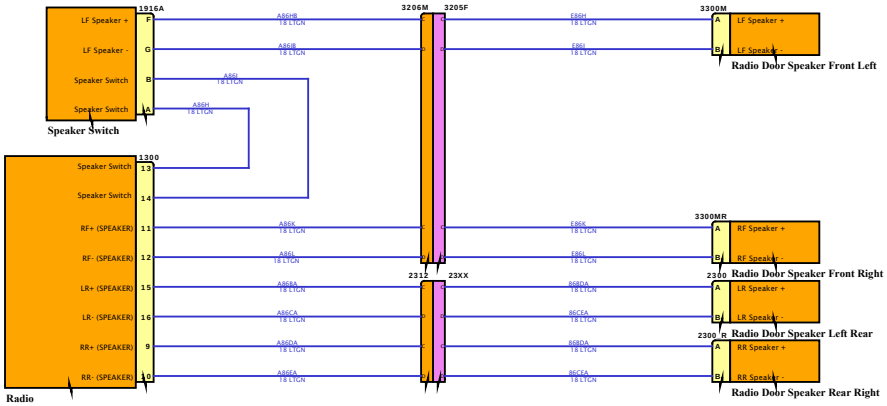

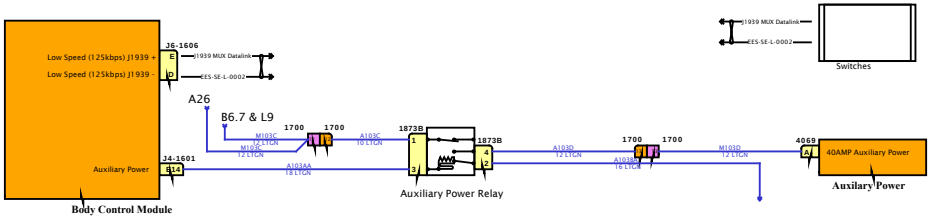

DESIGN DESCRIPTION

FEATURE CODES

SOFTWARE FEATURE CODES

NAVISTAR INC. CONFIDENTIAL PROPRIETARY

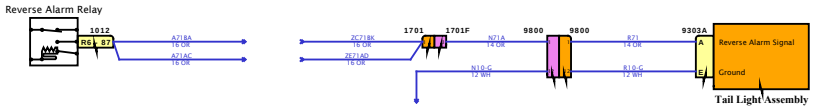

DESIGN DESCRIPTION

FEATURE CODES

SOFTWARE FEATURE CODES

NAVISTAR INC. CONFIDENTIAL PROPRIETARY

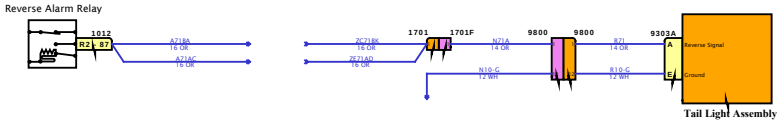

DESIGN DESCRIPTION

FEATURE CODES

SOFTWARE FEATURE CODES

NAVISTAR INC. CONFIDENTIAL PROPRIETARY

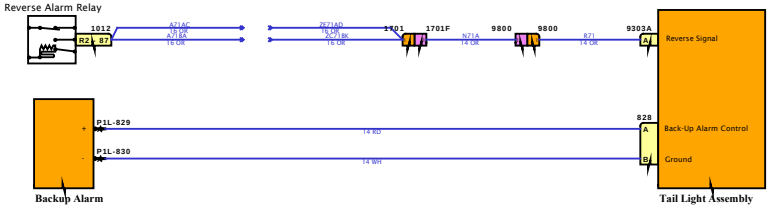

DESIGN DESCRIPTION

FEATURE CODES

SOFTWARE FEATURE CODES

NAVISTAR INC. CONFIDENTIAL PROPRIETARY

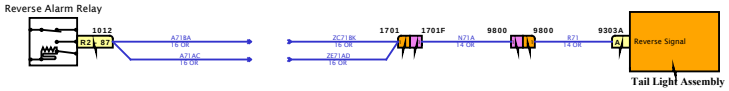

DESIGN DESCRIPTION

FEATURE CODES

SOFTWARE FEATURE CODES

NAVISTAR INC. CONFIDENTIAL PROPRIETARY

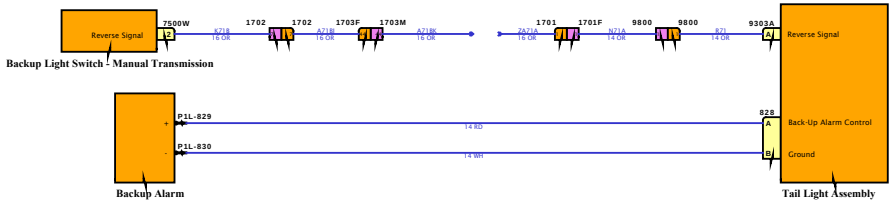

DESIGN DESCRIPTION

FEATURE CODES

SOFTWARE FEATURE CODES

NAVISTAR INC. CONFIDENTIAL PROPRIETARY

Diagram1

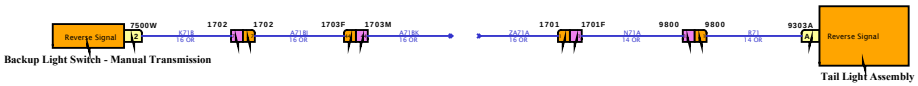

DESIGN DESCRIPTION

FEATURE CODES

SOFTWARE FEATURE CODES

NAVISTAR INC. CONFIDENTIAL PROPRIETARY



DESIGN DESCRIPTION

FEATURE CODES

SOFTWARE FEATURE CODES

NAVISTAR INC. CONFIDENTIAL PROPRIETARY



DESIGN DESCRIPTION

FEATURE CODES

SOFTWARE FEATURE CODES

NAVISTAR INC. CONFIDENTIAL PROPRIETARY

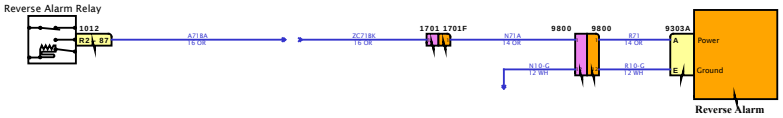

DESIGN DESCRIPTION

FEATURE CODES

SOFTWARE FEATURE CODES

NAVISTAR INC. CONFIDENTIAL PROPRIETARY

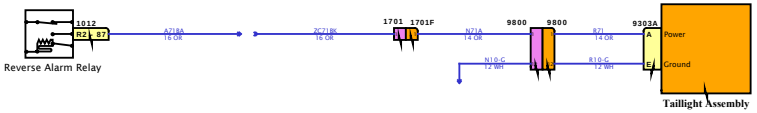

DESIGN DESCRIPTION

FEATURE CODES

SOFTWARE FEATURE CODES

NAVISTAR INC. CONFIDENTIAL PROPRIETARY



DESIGN DESCRIPTION

FEATURE CODES

SOFTWARE FEATURE CODES

NAVISTAR INC. CONFIDENTIAL PROPRIETARY

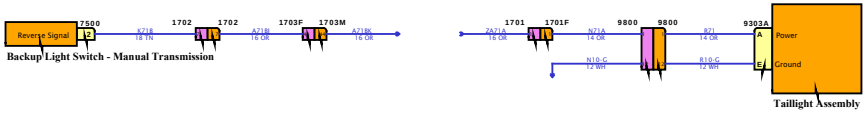

DESIGN DESCRIPTION

FEATURE CODES

SOFTWARE FEATURE CODES

NAVISTAR INC. CONFIDENTIAL PROPRIETARY

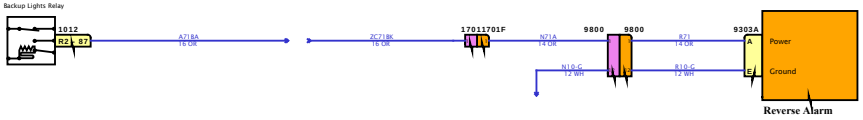

DESIGN DESCRIPTION

FEATURE CODES

SOFTWARE FEATURE CODES

NAVISTAR INC. CONFIDENTIAL PROPRIETARY

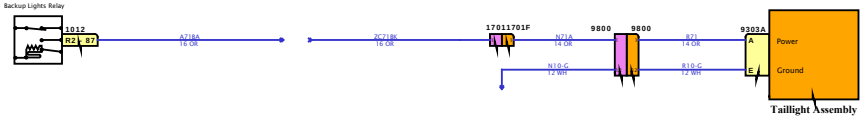

DESIGN DESCRIPTION

FEATURE CODES

SOFTWARE FEATURE CODES

NAVISTAR INC. CONFIDENTIAL PROPRIETARY

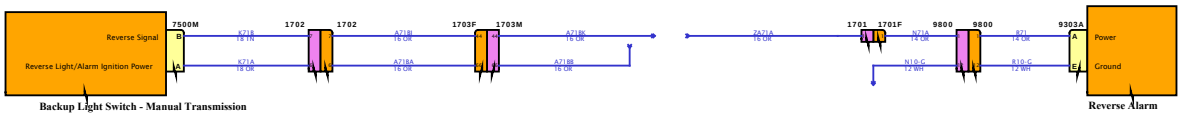

DESIGN DESCRIPTION

FEATURE CODES

SOFTWARE FEATURE CODES

NAVISTAR INC. CONFIDENTIAL PROPRIETARY

Diagram2

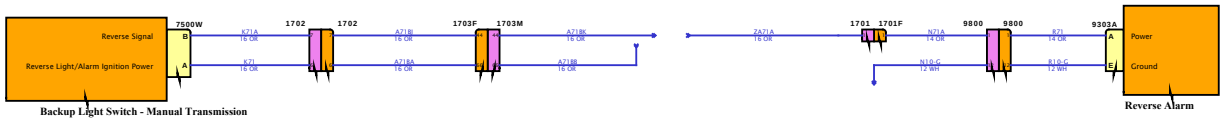

DESIGN DESCRIPTION

FEATURE CODES

SOFTWARE FEATURE CODES

NAVISTAR INC. CONFIDENTIAL PROPRIETARY

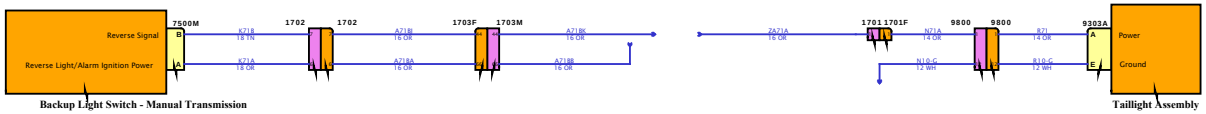

DESIGN DESCRIPTION

FEATURE CODES

SOFTWARE FEATURE CODES

NAVISTAR INC. CONFIDENTIAL PROPRIETARY

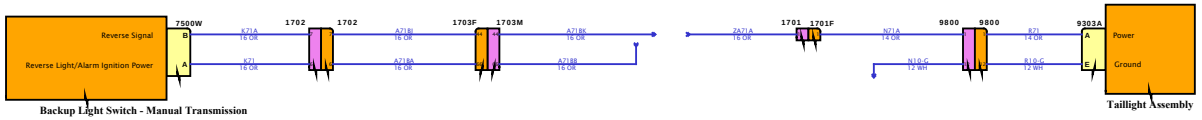

DESIGN DESCRIPTION

FEATURE CODES

SOFTWARE FEATURE CODES

NAVISTAR INC. CONFIDENTIAL PROPRIETARY

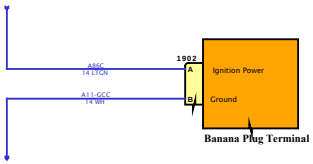

DESIGN DESCRIPTION

FEATURE CODES

SOFTWARE FEATURE CODES

NAVISTAR INC. CONFIDENTIAL PROPRIETARY

Diagram1

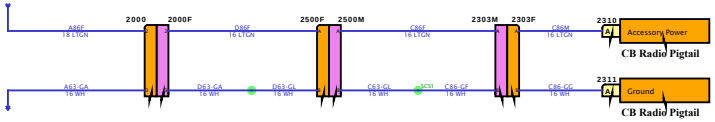

DESIGN DESCRIPTION

FEATURE CODES

SOFTWARE FEATURE CODES

NAVISTAR INC. CONFIDENTIAL PROPRIETARY

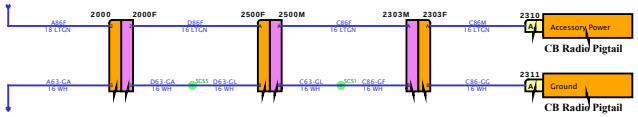

DESIGN DESCRIPTION

FEATURE CODES

SOFTWARE FEATURE CODES

NAVISTAR INC. CONFIDENTIAL PROPRIETARY

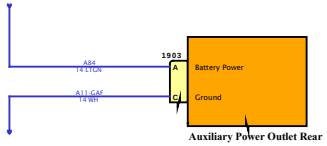

DESIGN DESCRIPTION

FEATURE CODES

SOFTWARE FEATURE CODES

NAVISTAR INC. CONFIDENTIAL PROPRIETARY

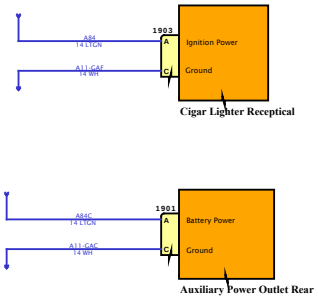

DESIGN DESCRIPTION

FEATURE CODES

SOFTWARE FEATURE CODES

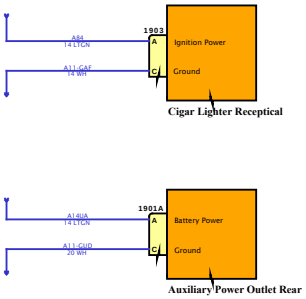

DESIGN DESCRIPTION

FEATURE CODES

SOFTWARE FEATURE CODES

NAVISTAR INC. CONFIDENTIAL PROPRIETARY

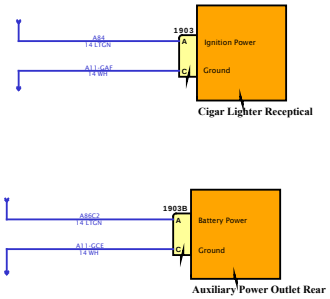

DESIGN DESCRIPTION

FEATURE CODES

SOFTWARE FEATURE CODES

NAVISTAR INC. CONFIDENTIAL PROPRIETARY

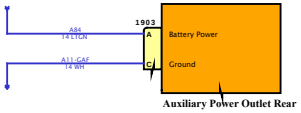

DESIGN DESCRIPTION

FEATURE CODES

SOFTWARE FEATURE CODES

NAVISTAR INC. CONFIDENTIAL PROPRIETARY

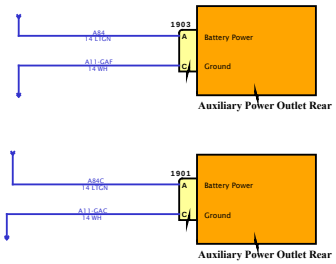

DESIGN DESCRIPTION

FEATURE CODES

SOFTWARE FEATURE CODES

NAVISTAR INC. CONFIDENTIAL PROPRIETARY

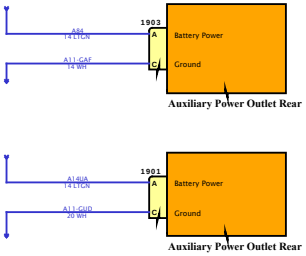

DESIGN DESCRIPTION

FEATURE CODES

SOFTWARE FEATURE CODES

NAVISTAR INC. CONFIDENTIAL PROPRIETARY

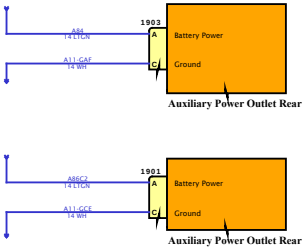

DESIGN DESCRIPTION

FEATURE CODES

SOFTWARE FEATURE CODES

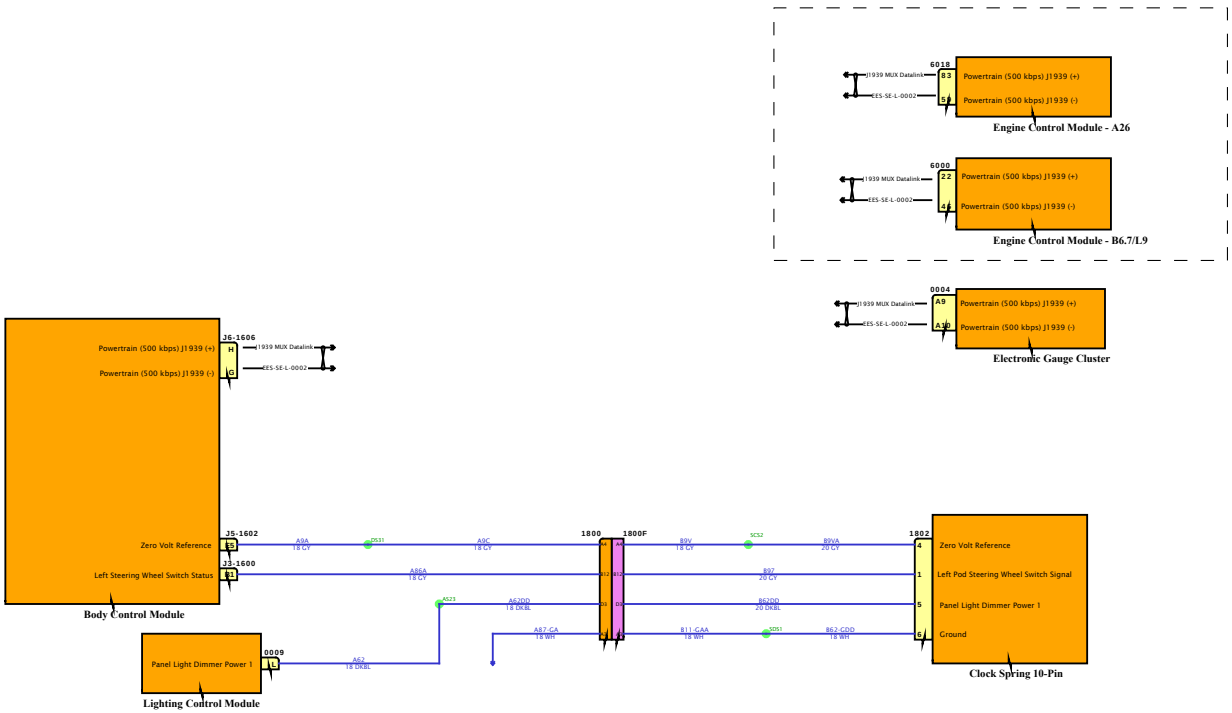

DESIGN DESCRIPTION

FEATURE CODES

SOFTWARE FEATURE CODES

NAVISTAR
NAVISTAR, INC. CONFIDENTIAL PROPRIETARY

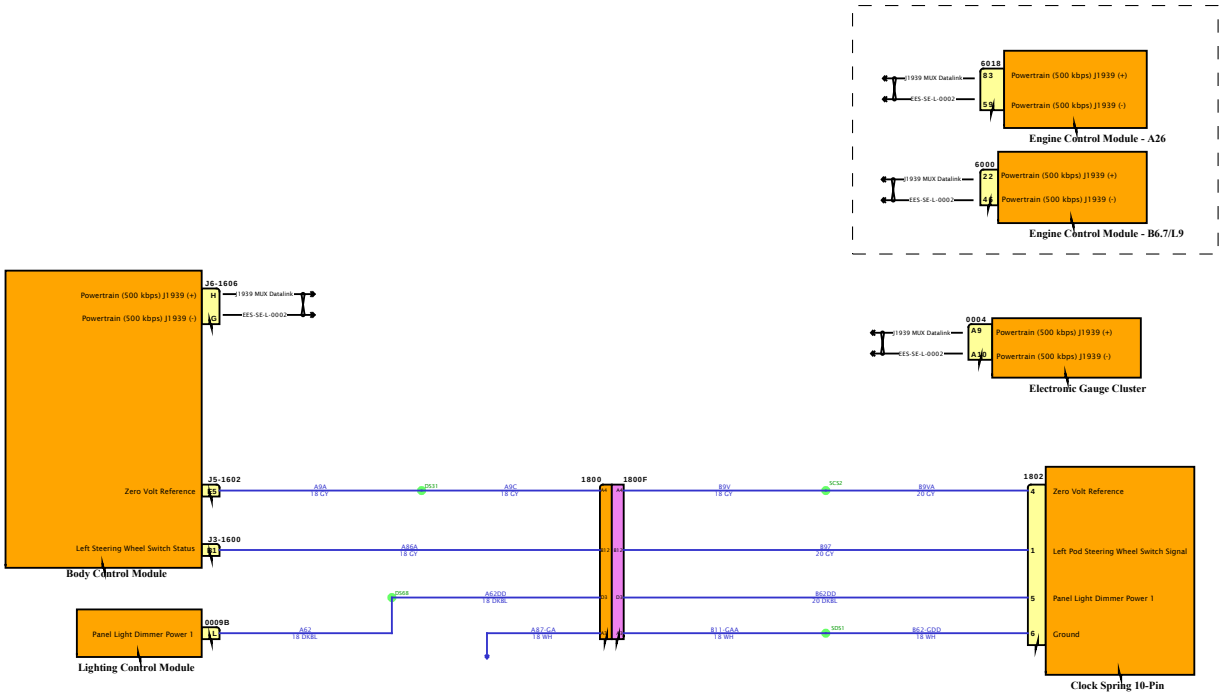

DESIGN DESCRIPTION

FEATURE CODES

SOFTWARE FEATURE CODES

DESIGN DESCRIPTION

FEATURE CODES

SOFTWARE FEATURE CODES

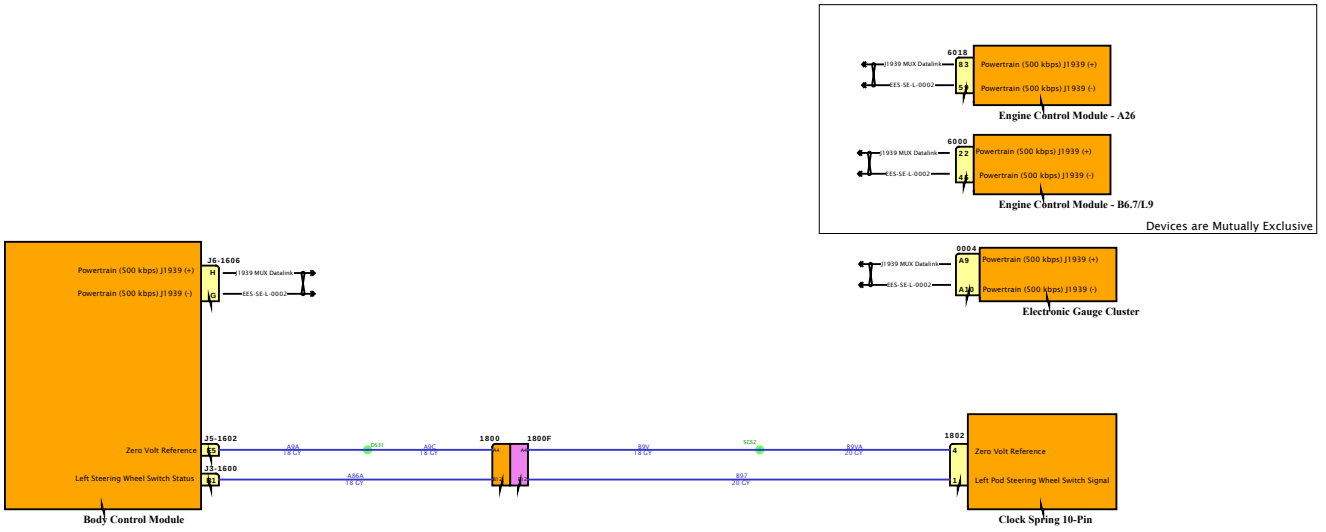

Diagram1

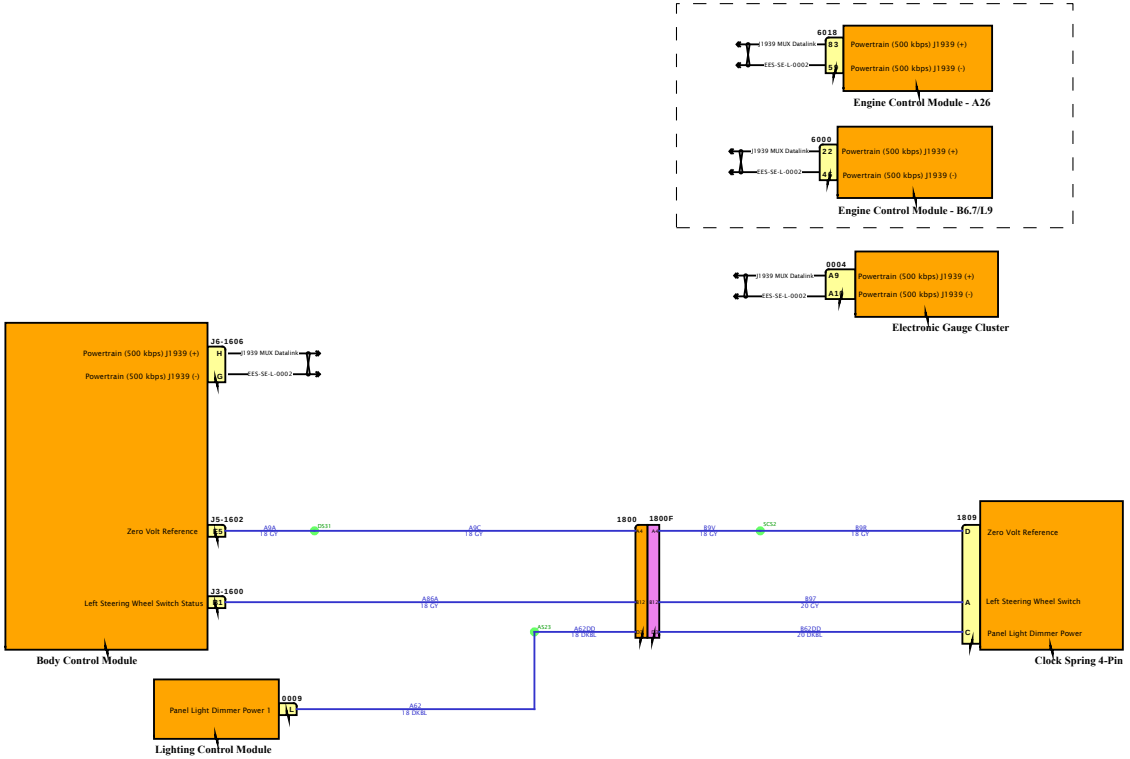

DESIGN DESCRIPTION

FEATURE CODES

SOFTWARE FEATURE CODES

Diagram2

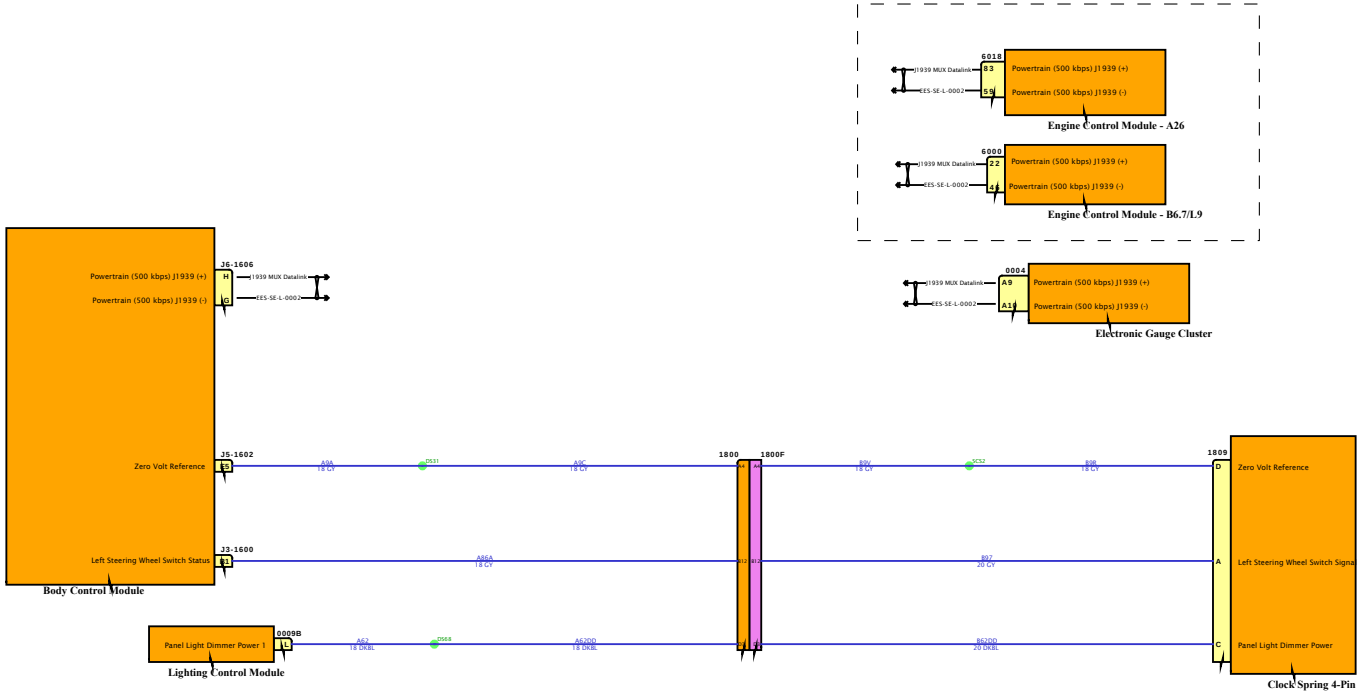

DESIGN DESCRIPTION

FEATURE CODES

SOFTWARE FEATURE CODES

NAVISTAR INC. CONFIDENTIAL PROPRIETARY

Diagram1

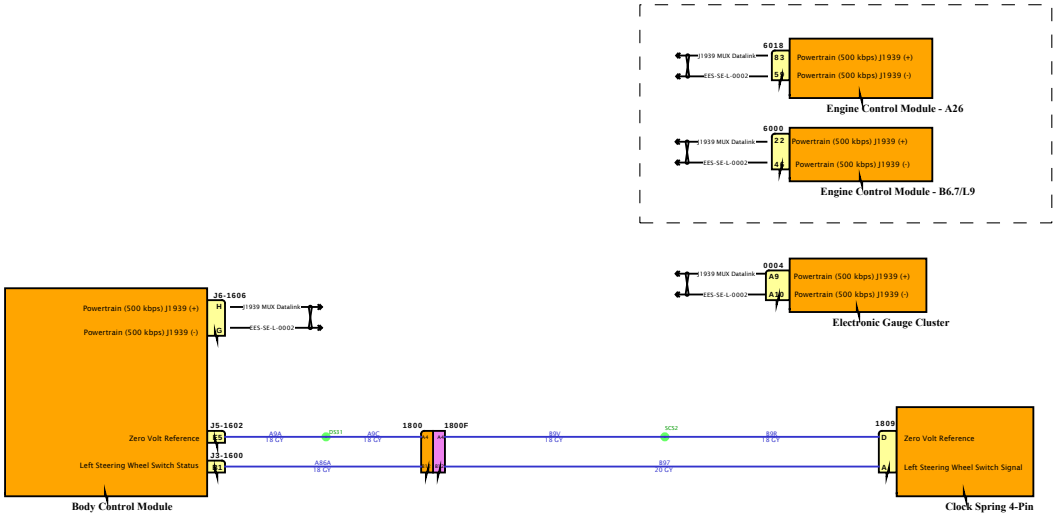

DESIGN DESCRIPTION

FEATURE CODES

SOFTWARE FEATURE CODES

NAVISTAR
NAVISTAR, INC. CONFIDENTIAL PROPRIETARY

Diagram1

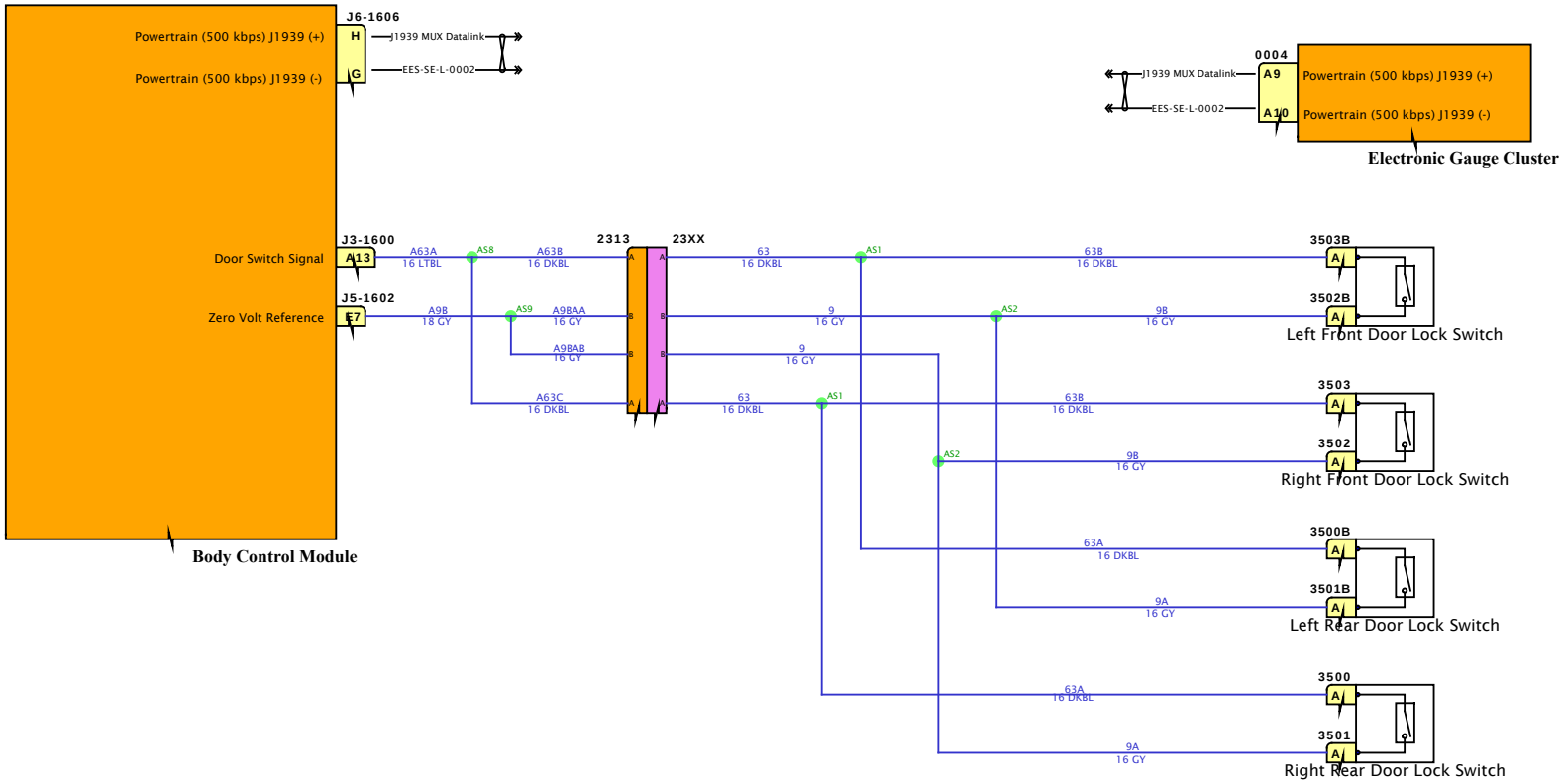

DESIGN DESCRIPTION

FEATURE CODES

SOFTWARE FEATURE CODES

NAVISTAR

NAVISTAR, INC. CONFIDENTIAL PROPRIETARY

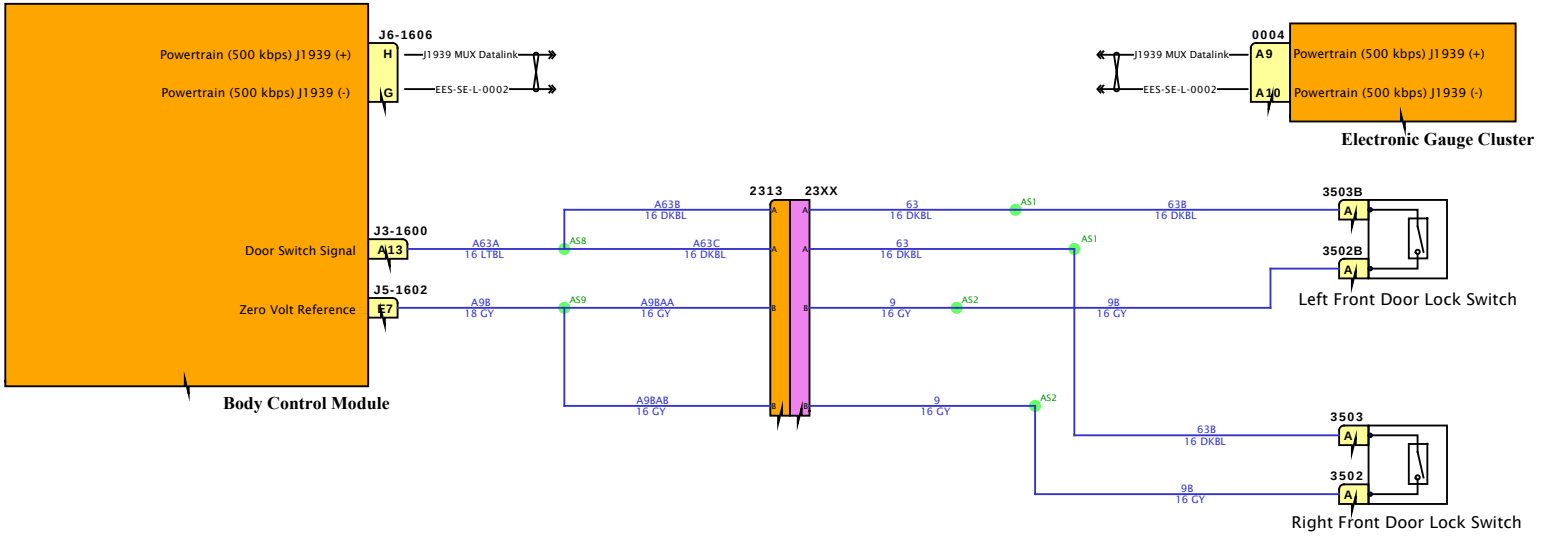

DESIGN DESCRIPTION

FEATURE CODES

SOFTWARE FEATURE CODES

NAVISTAR
NAVISTAR, INC. CONFIDENTIAL PROPRIETARY

Diagram1

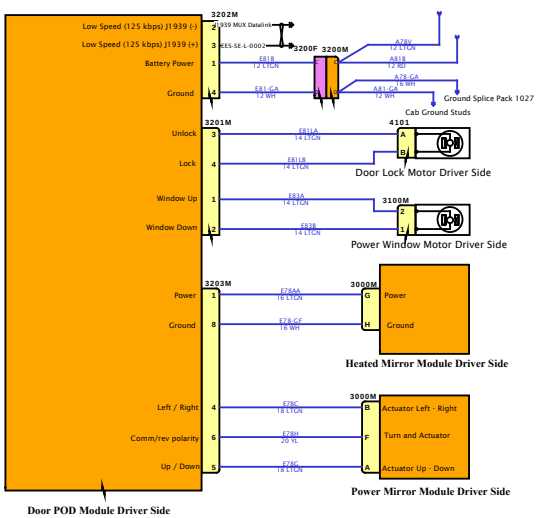

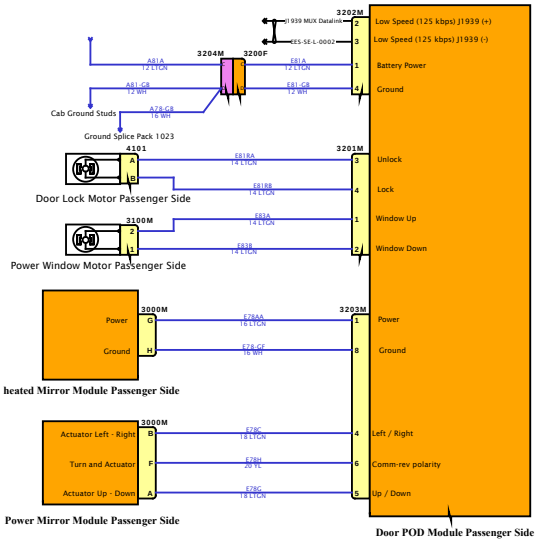

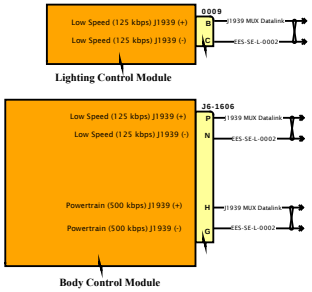

DESIGN DESCRIPTION

FEATURE CODES

SOFTWARE FEATURE CODES

Diagram1

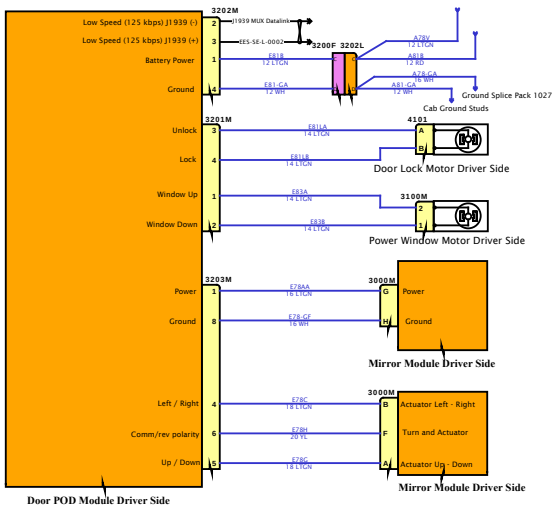

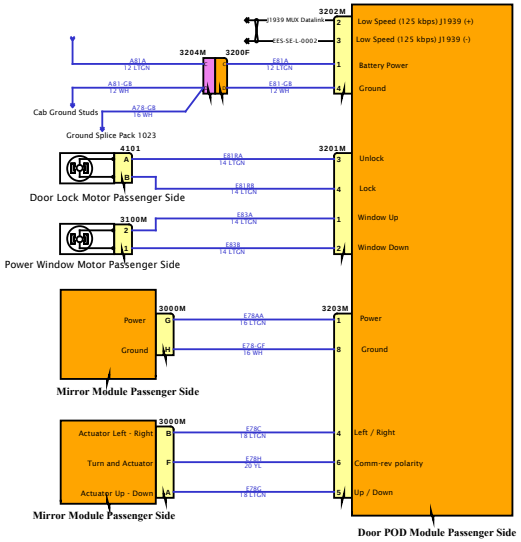

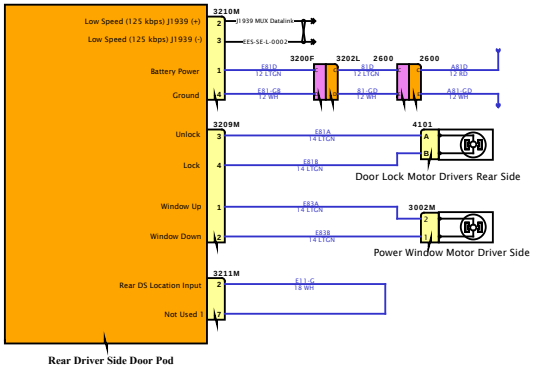

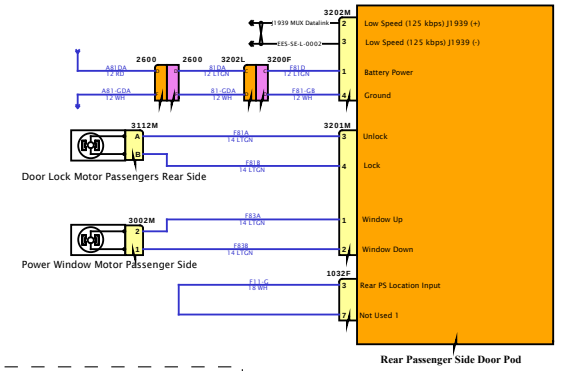

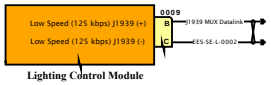

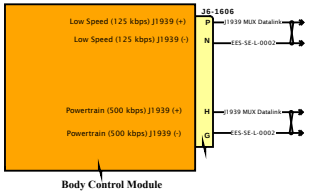

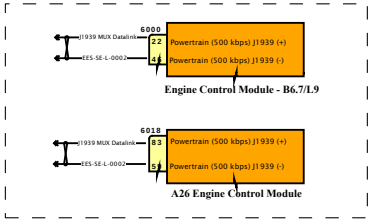

DESIGN DESCRIPTION

FEATURE CODES

SOFTWARE FEATURE CODES

DESIGN DESCRIPTION

FEATURE CODES

SOFTWARE FEATURE CODES

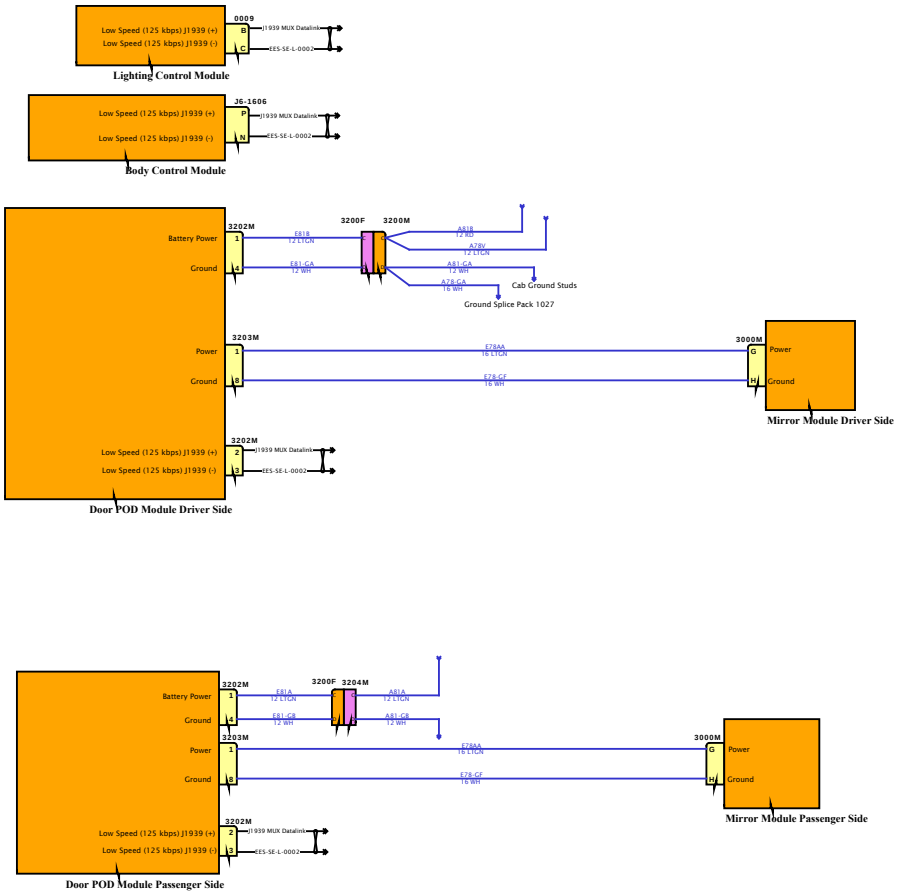

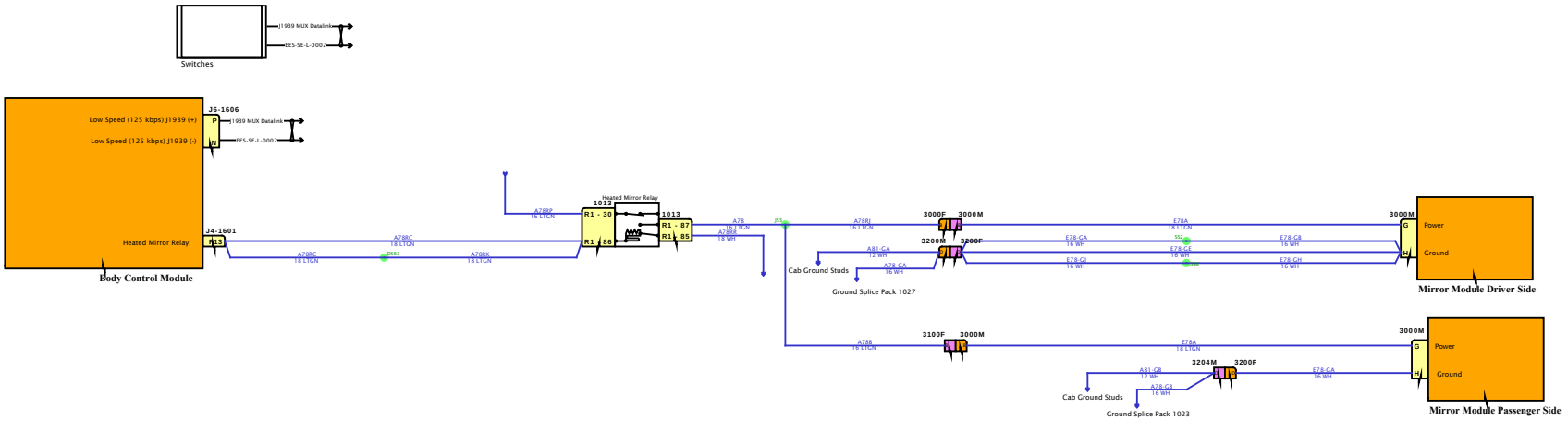

DESIGN DESCRIPTION

FEATURE CODES

SOFTWARE FEATURE CODES

NAVISTAR INC. CONFIDENTIAL PROPRIETARY

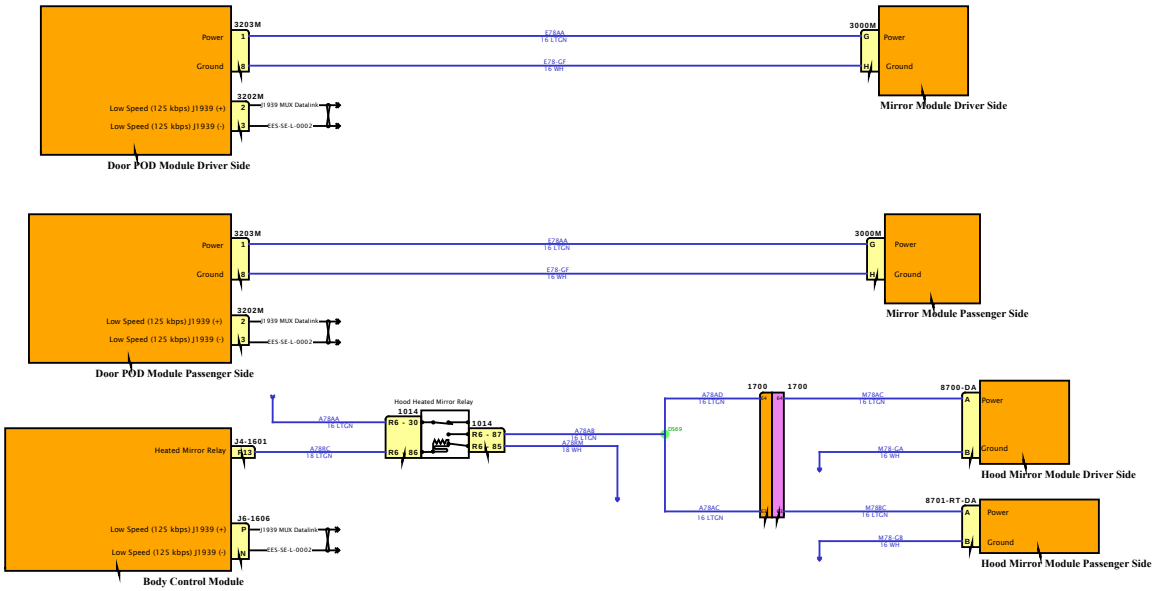

DESIGN DESCRIPTION

FEATURE CODES

SOFTWARE FEATURE CODES

NAVISTAR INC. CONFIDENTIAL PROPRIETARY

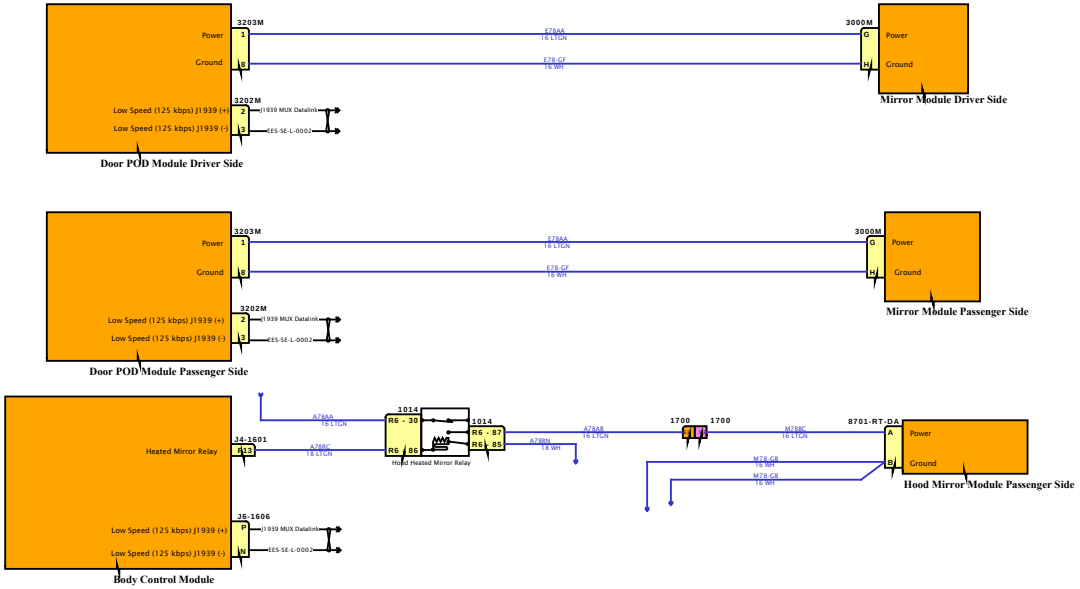

DESIGN DESCRIPTION

FEATURE CODES

SOFTWARE FEATURE CODES

NAVISTAR
NAVISTAR, INC. CONFIDENTIAL PROPRIETARY

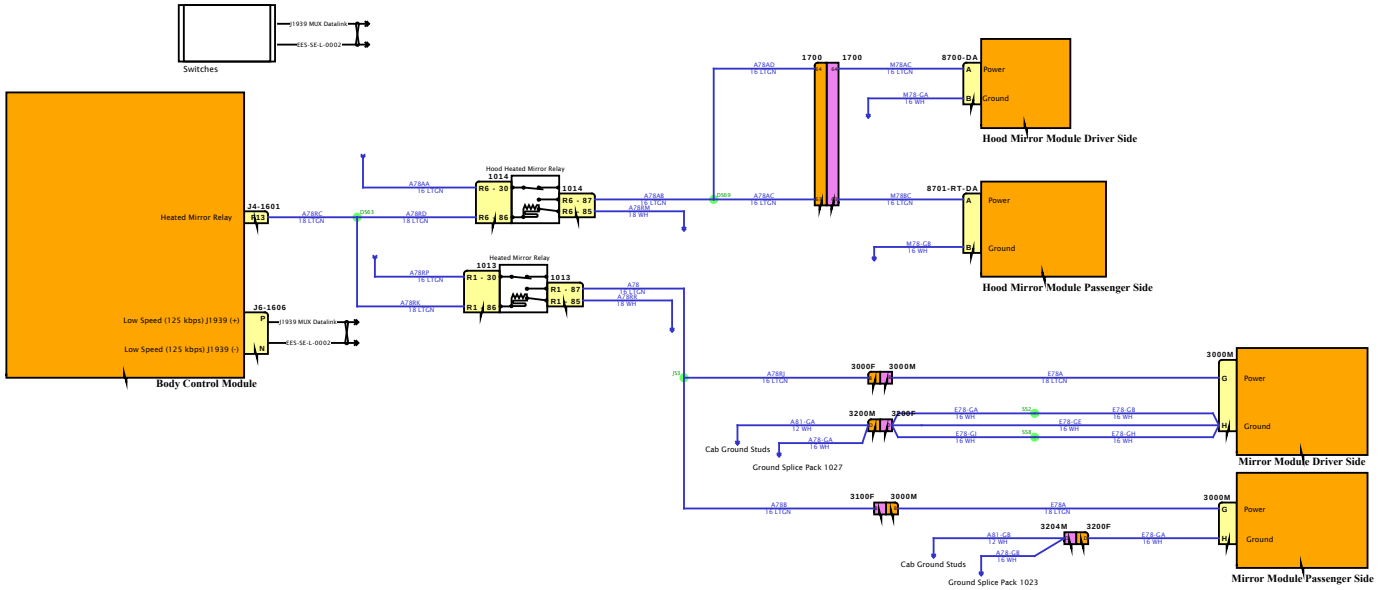

DESIGN DESCRIPTION

FEATURE CODES

SOFTWARE FEATURE CODES

NAVISTAR
NAVISTAR, INC. CONFIDENTIAL PROPRIETARY

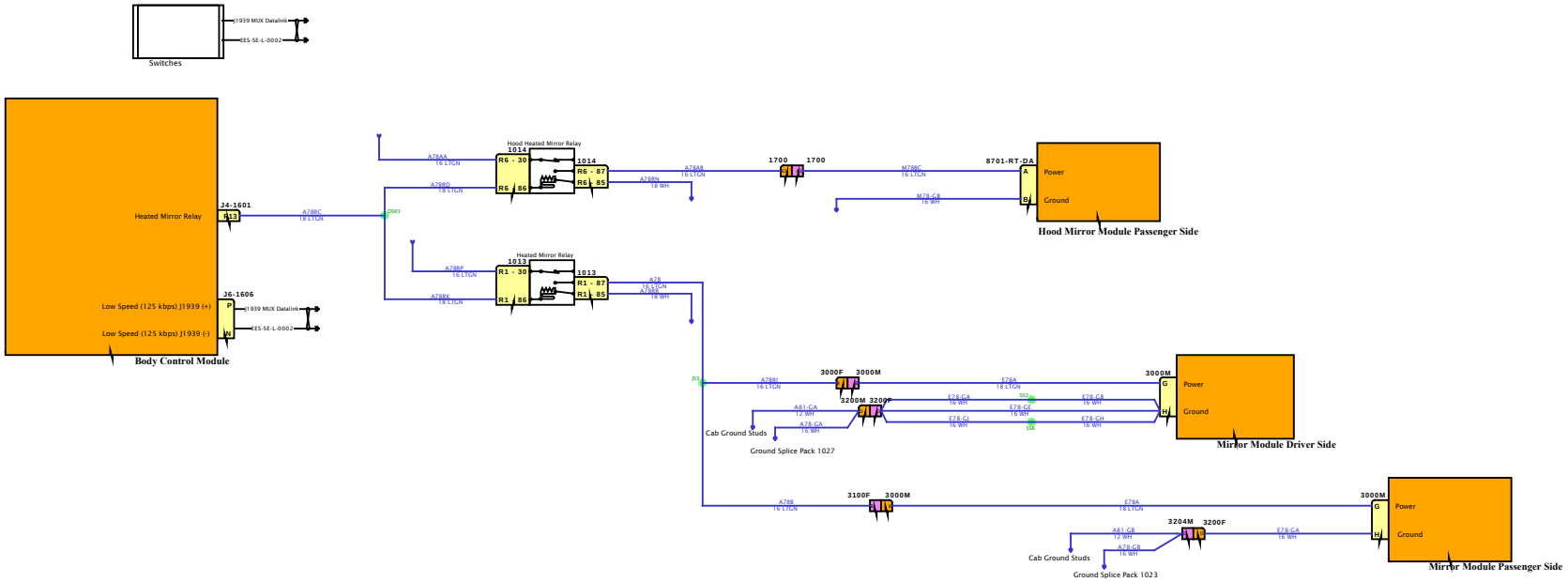

DESIGN DESCRIPTION

FEATURE CODES

SOFTWARE FEATURE CODES

NAVISTAR
NAVISTAR, INC. CONFIDENTIAL PROPRIETARY

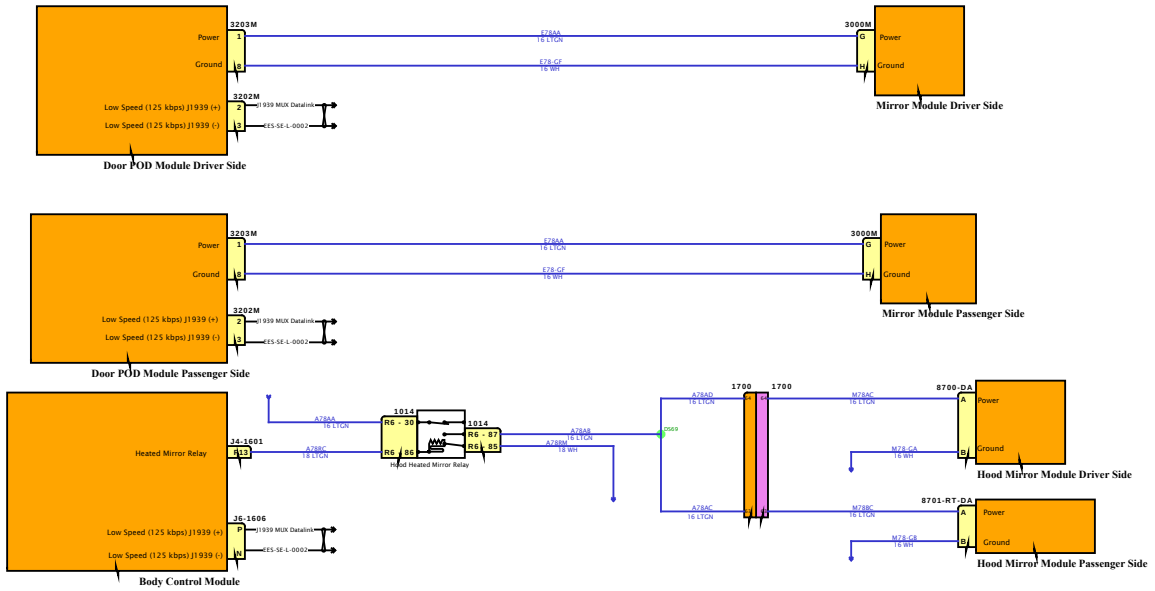

DESIGN DESCRIPTION

FEATURE CODES

SOFTWARE FEATURE CODES

Diagram2

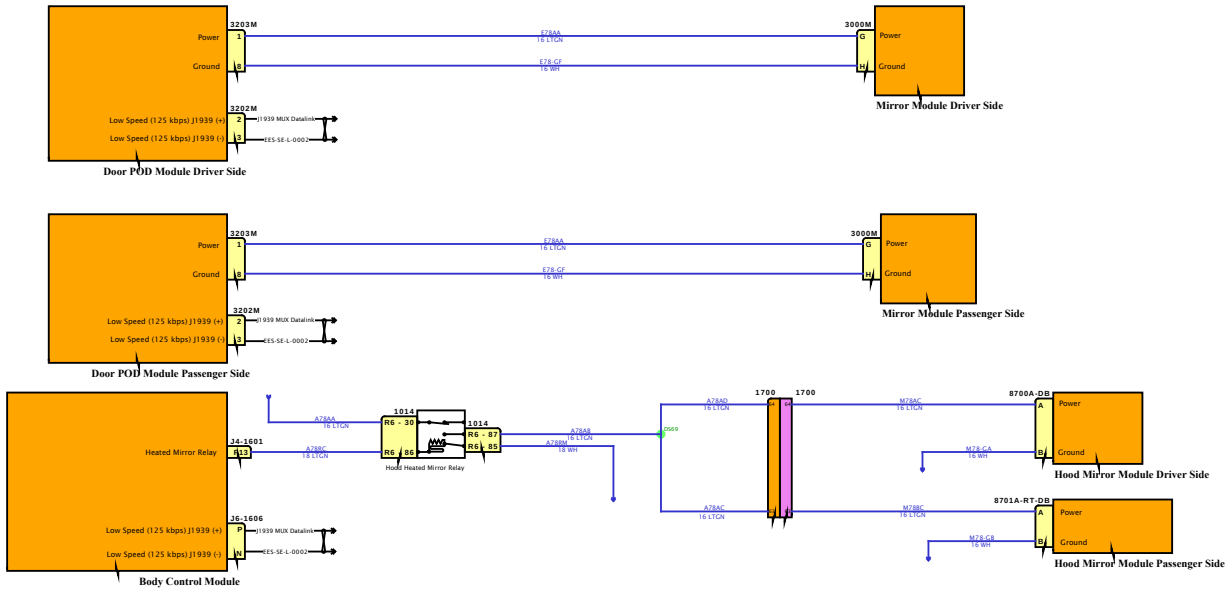

DESIGN DESCRIPTION

FEATURE CODES

SOFTWARE FEATURE CODES

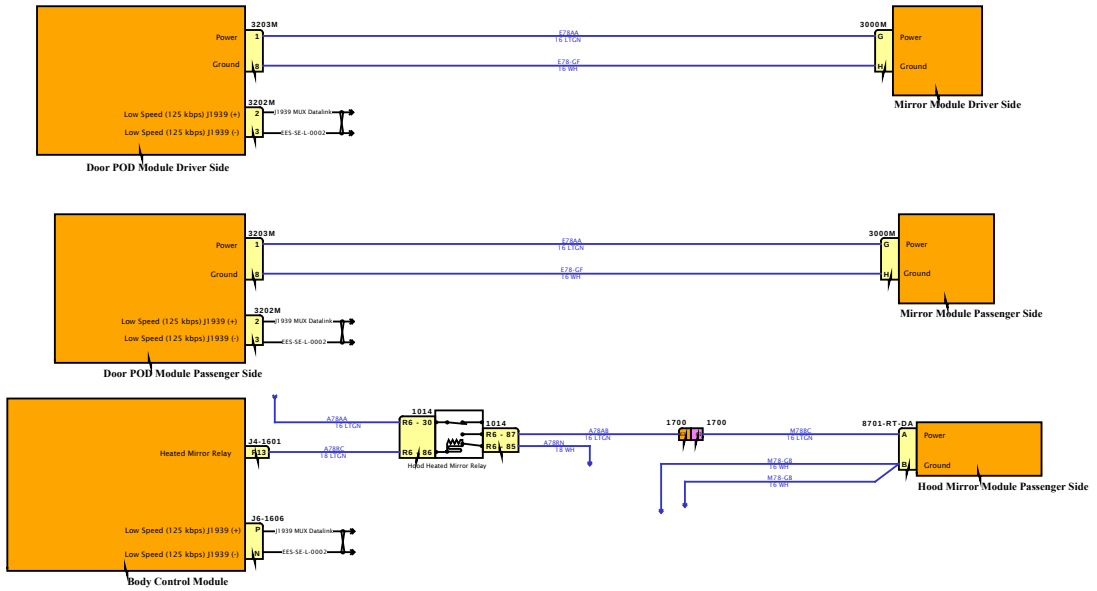

DESIGN DESCRIPTION

FEATURE CODES

SOFTWARE FEATURE CODES

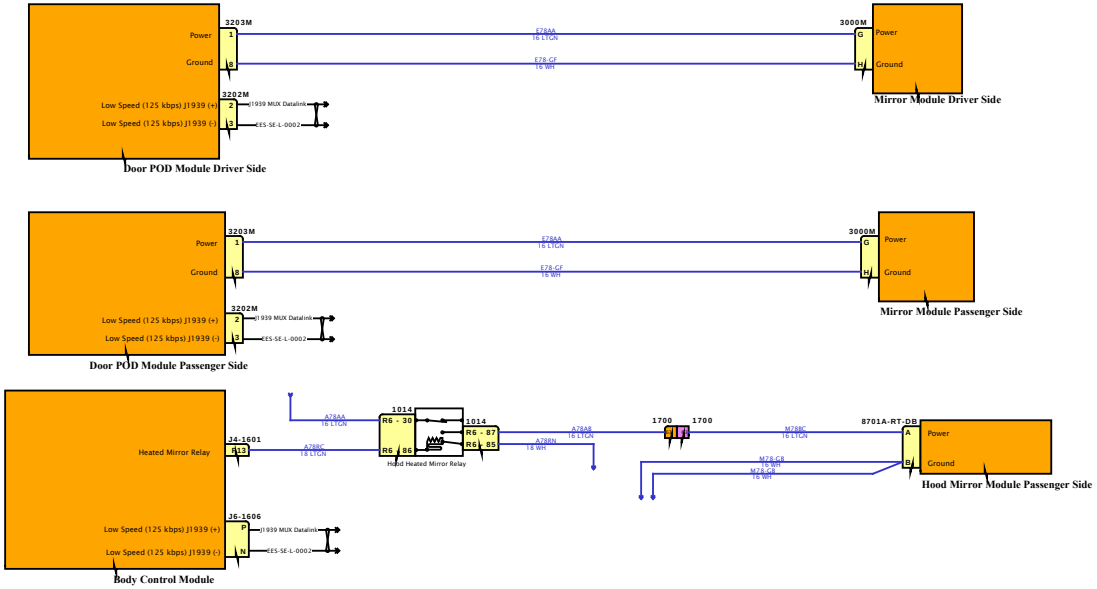

DESIGN DESCRIPTION

FEATURE CODES

SOFTWARE FEATURE CODES

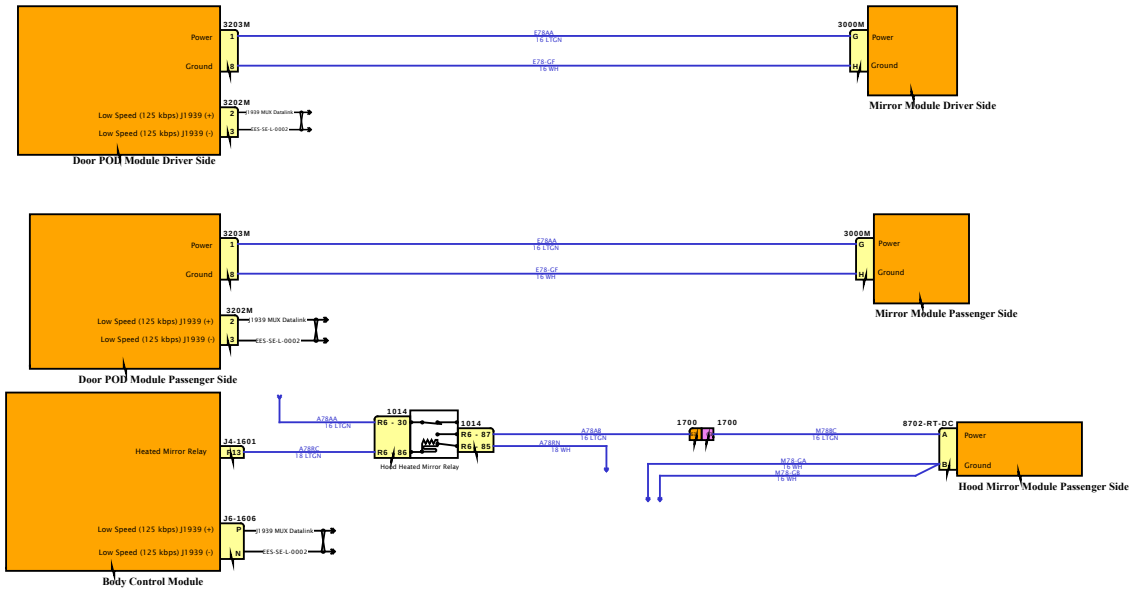

DESIGN DESCRIPTION

FEATURE CODES

SOFTWARE FEATURE CODES

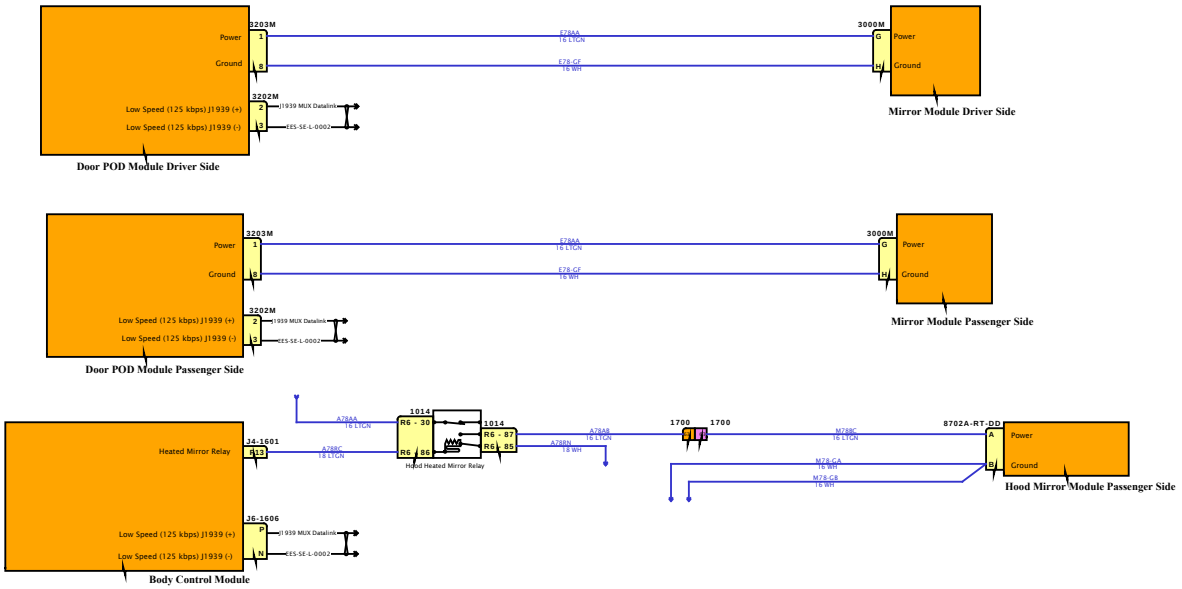

DESIGN DESCRIPTION

FEATURE CODES

SOFTWARE FEATURE CODES

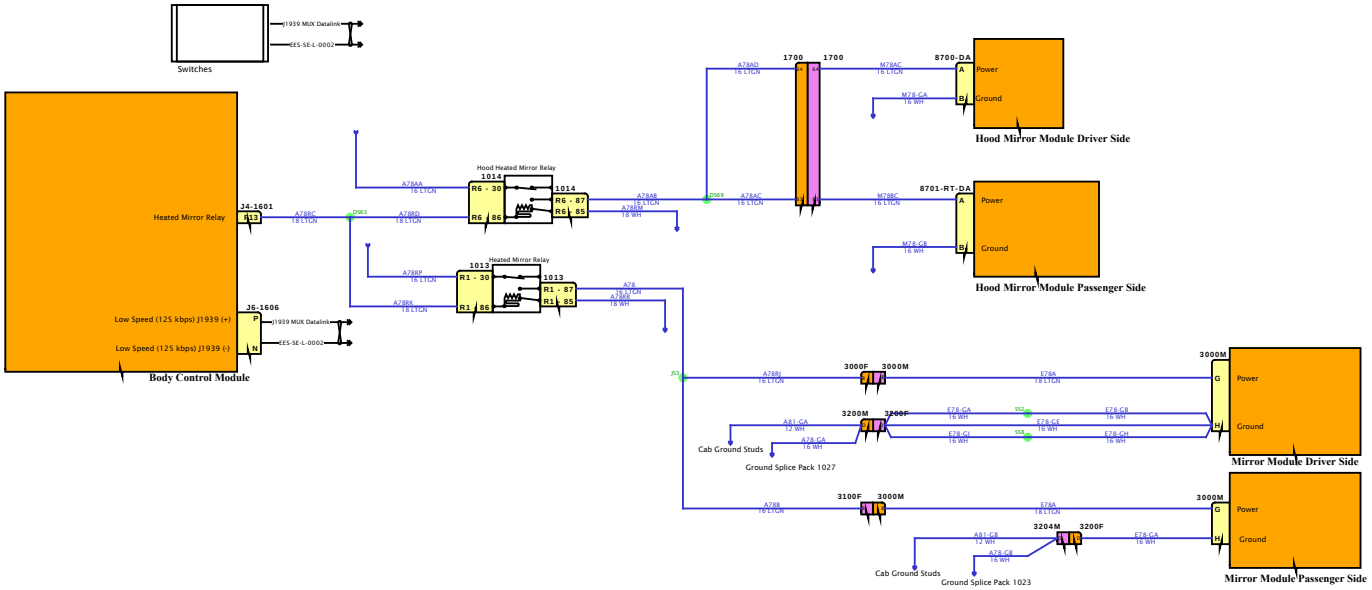

DESIGN DESCRIPTION

FEATURE CODES

SOFTWARE FEATURE CODES

NAVISTAR
NAVISTAR, INC. CONFIDENTIAL PROPRIETARY

Diagram2

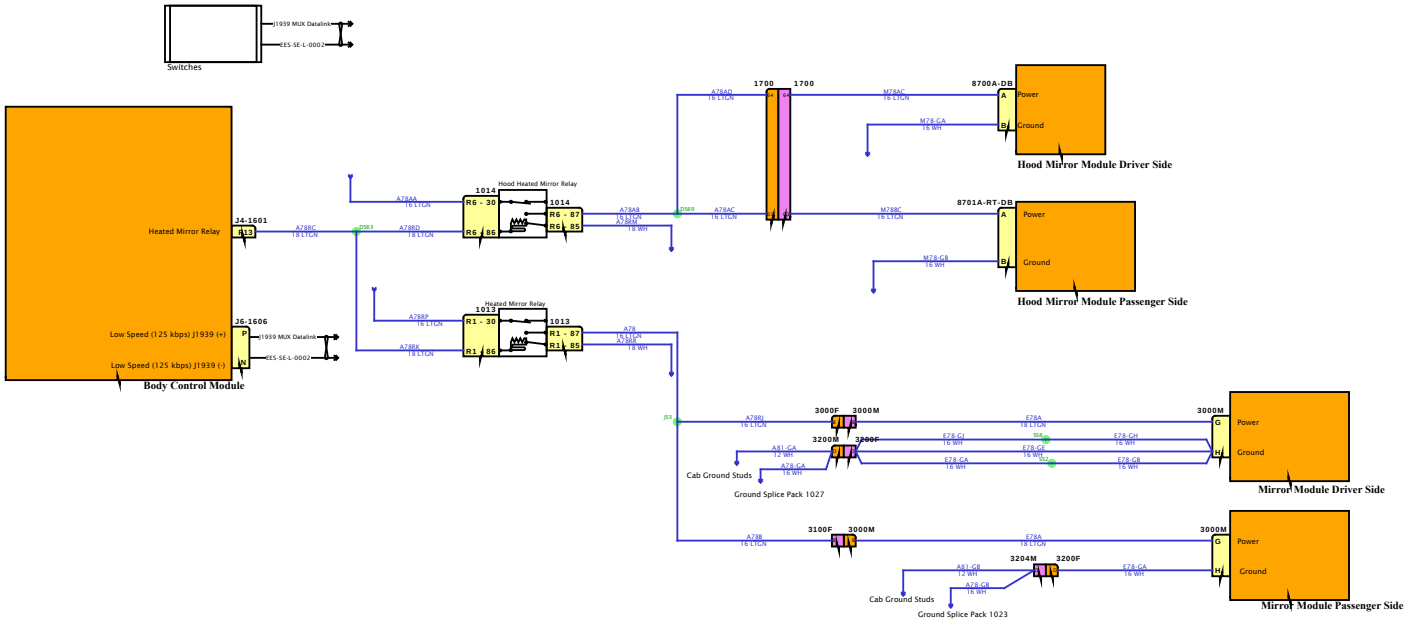

DESIGN DESCRIPTION

FEATURE CODES

SOFTWARE FEATURE CODES

NAVISTAR

NAVISTAR, INC. CONFIDENTIAL PROPRIETARY

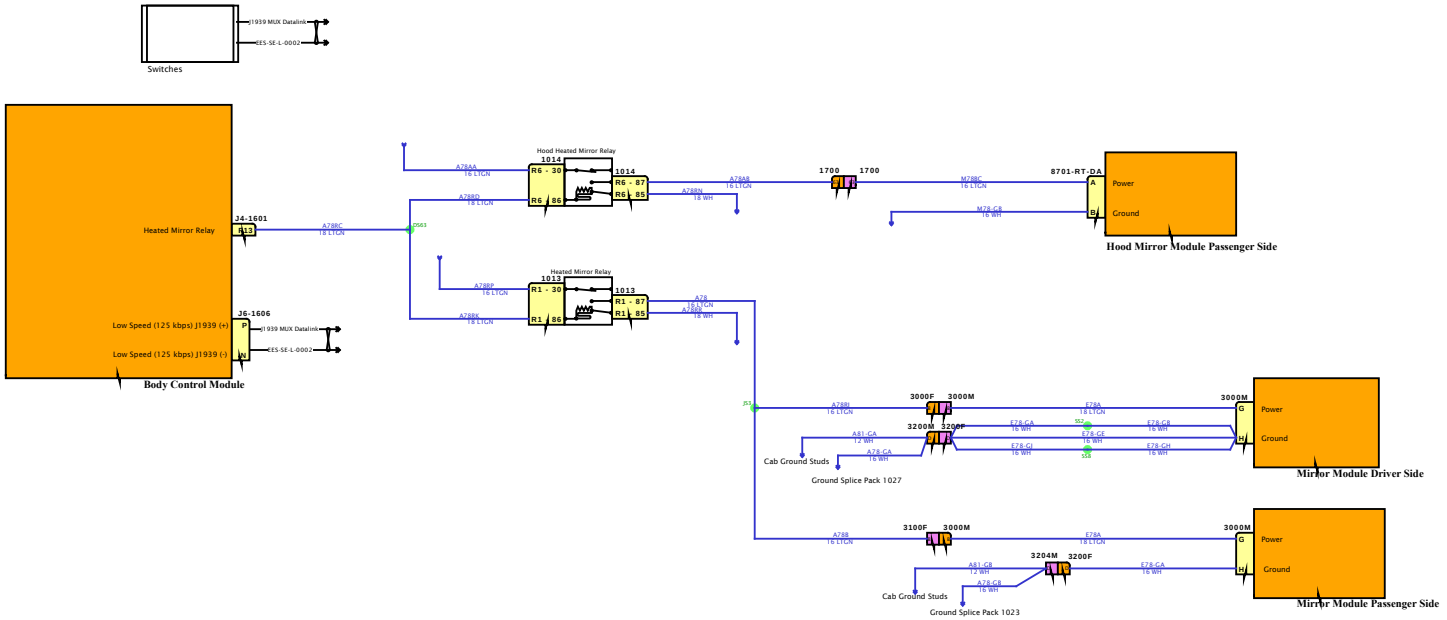

DESIGN DESCRIPTION

FEATURE CODES

SOFTWARE FEATURE CODES

NAVISTAR
NAVISTAR, INC. CONFIDENTIAL PROPRIETARY

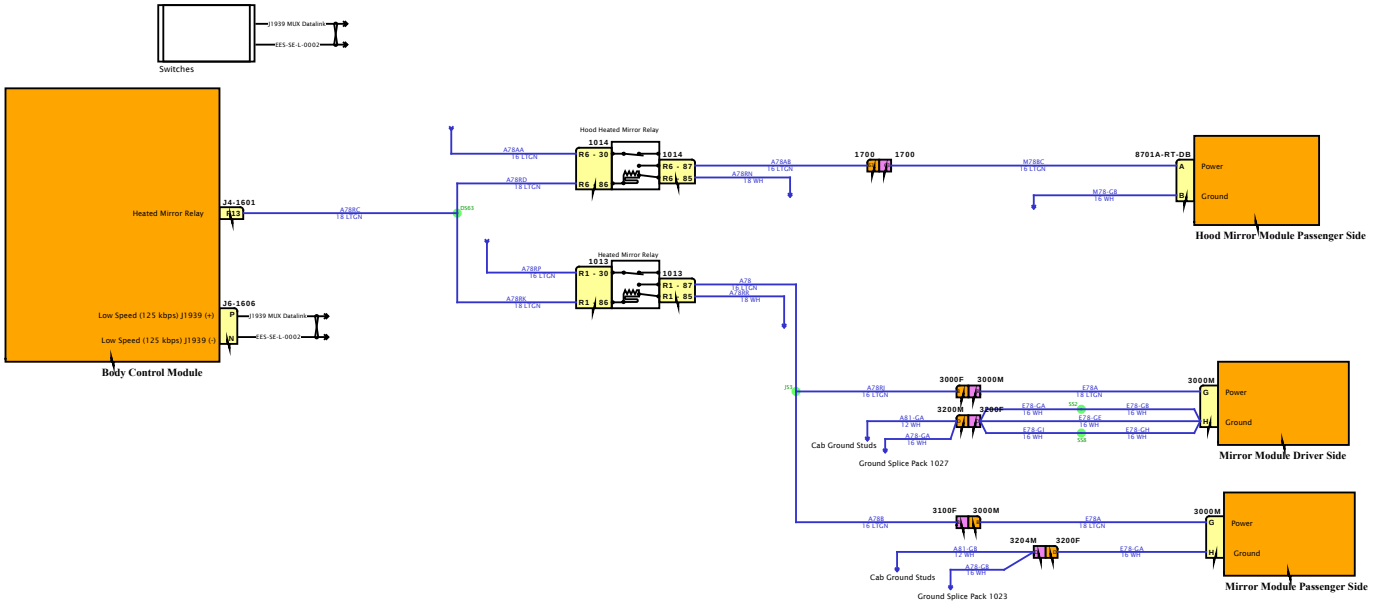

DESIGN DESCRIPTION

FEATURE CODES

SOFTWARE FEATURE CODES

NAVISTAR INC. CONFIDENTIAL PROPRIETARY

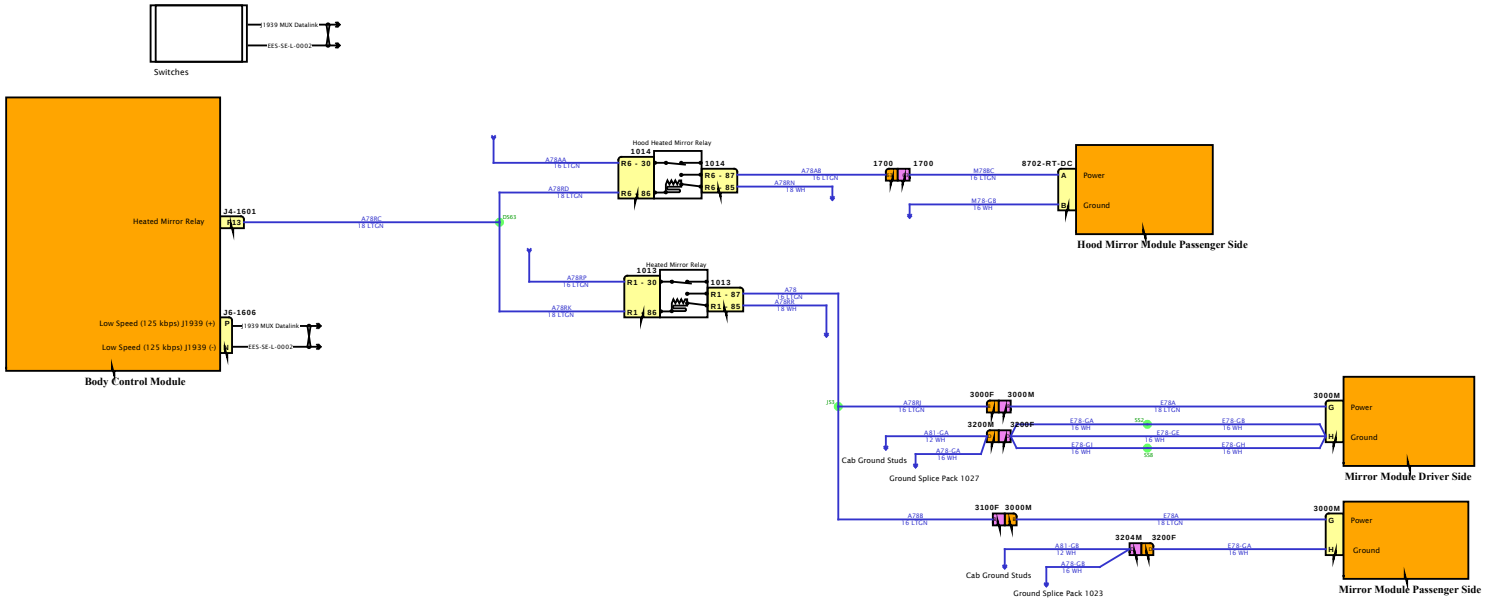

DESIGN DESCRIPTION

FEATURE CODES

SOFTWARE FEATURE CODES

NAVISTAR INC. CONFIDENTIAL PROPRIETARY

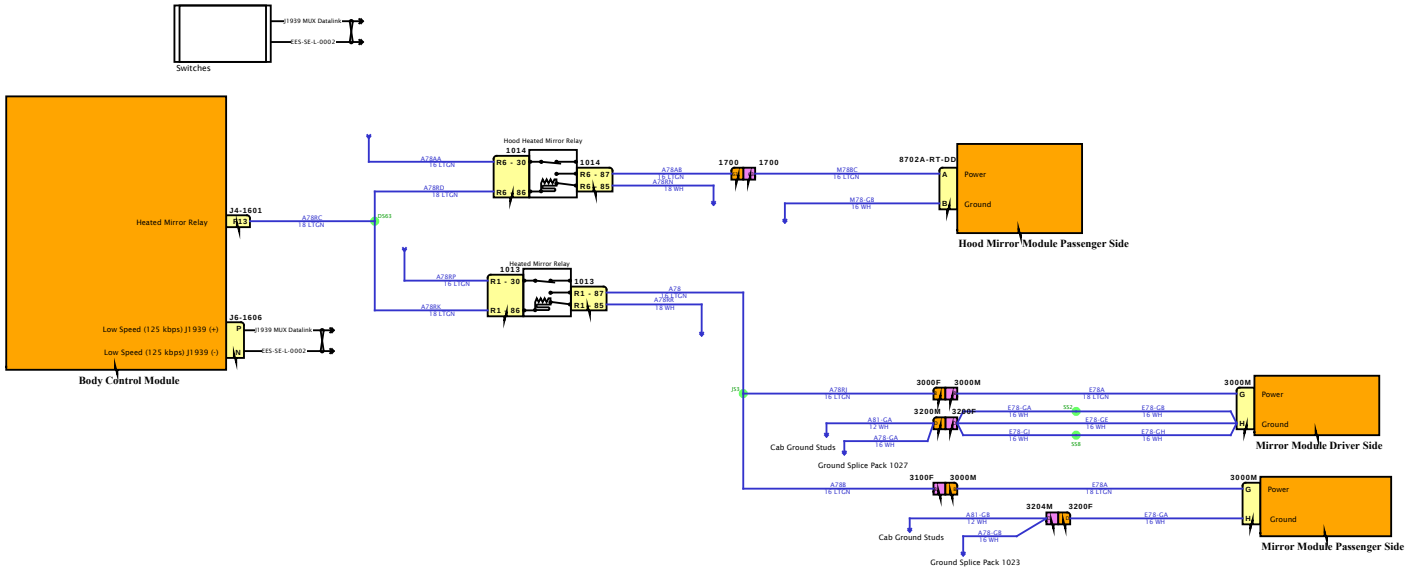

DESIGN DESCRIPTION

FEATURE CODES

SOFTWARE FEATURE CODES

NAVISTAR INC. CONFIDENTIAL PROPRIETARY

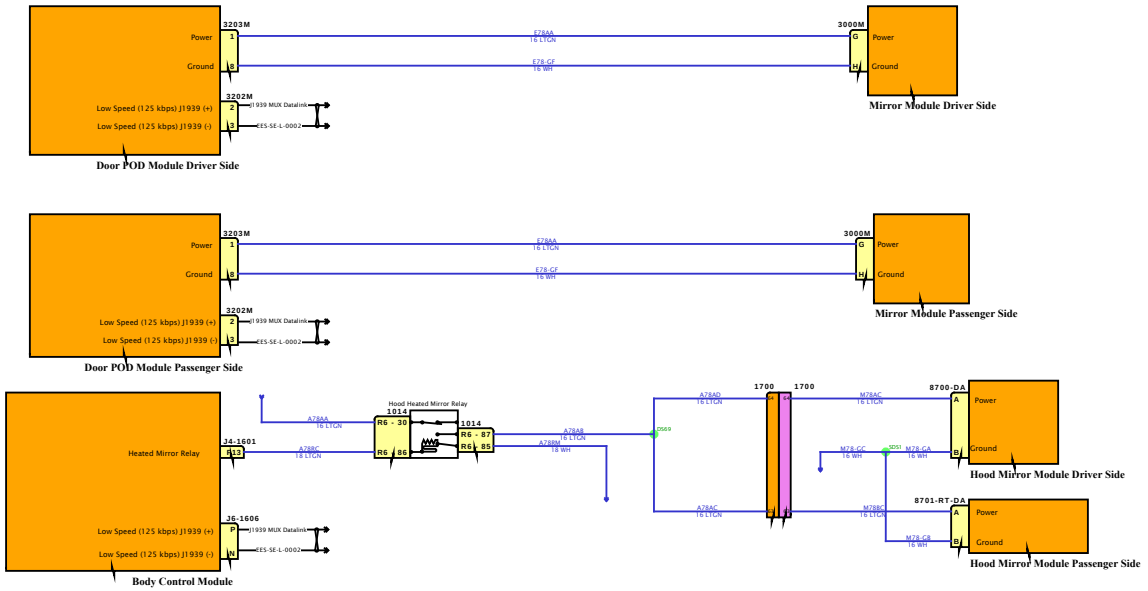

DESIGN DESCRIPTION

FEATURE CODES

SOFTWARE FEATURE CODES

DESIGN DESCRIPTION

FEATURE CODES

SOFTWARE FEATURE CODES

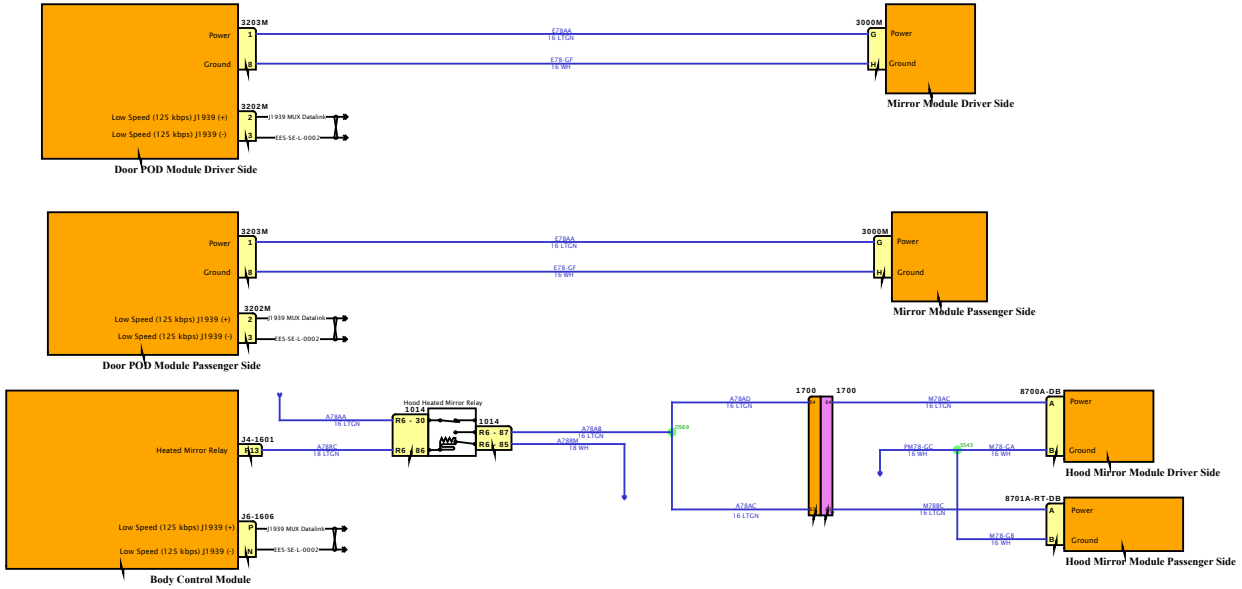

DESIGN DESCRIPTION

FEATURE CODES

SOFTWARE FEATURE CODES

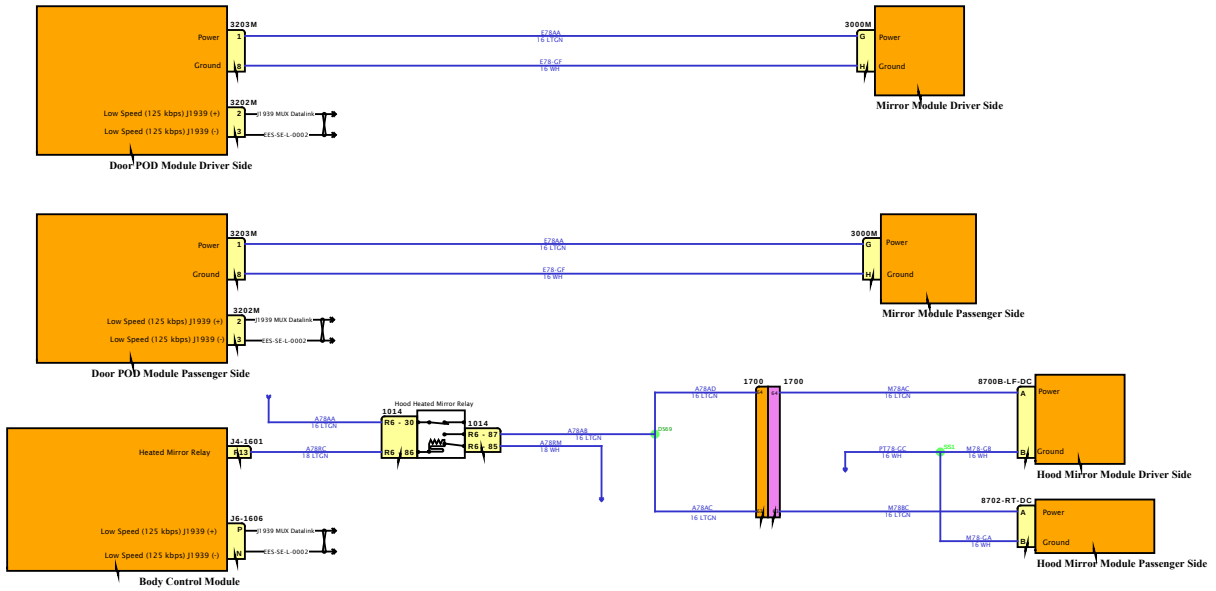

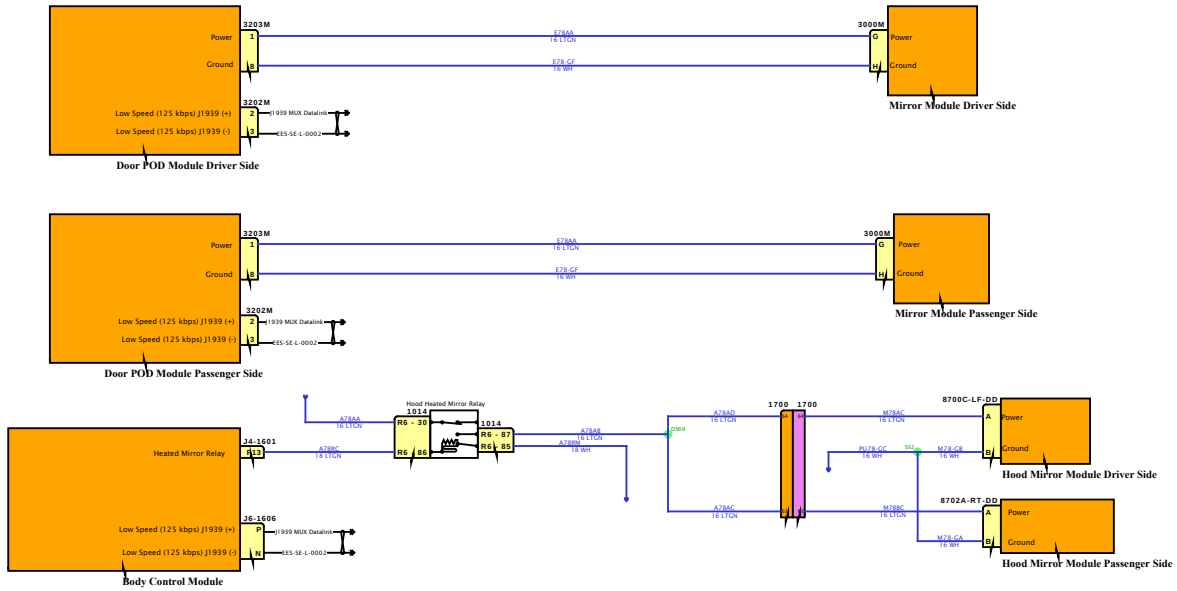

DESIGN DESCRIPTION

FEATURE CODES

SOFTWARE FEATURE CODES

NAVISTAR INC. CONFIDENTIAL PROPRIETARY

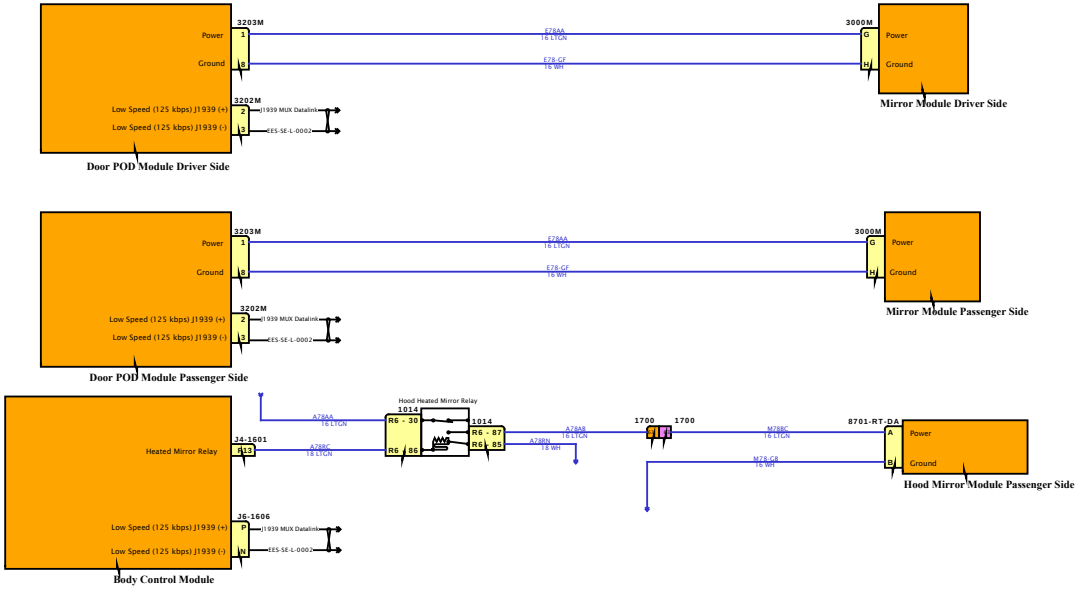

DESIGN DESCRIPTION

FEATURE CODES

SOFTWARE FEATURE CODES

NAVISTAR INC. CONFIDENTIAL PROPRIETARY

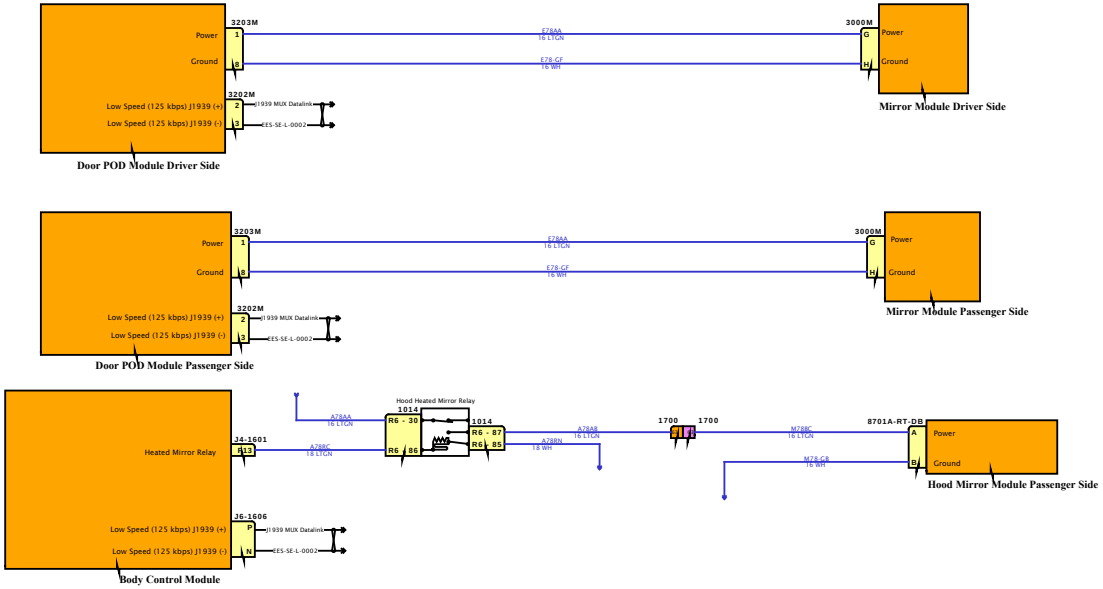

DESIGN DESCRIPTION

FEATURE CODES

SOFTWARE FEATURE CODES

NAVISTAR
NAVISTAR, INC. CONFIDENTIAL PROPRIETARY

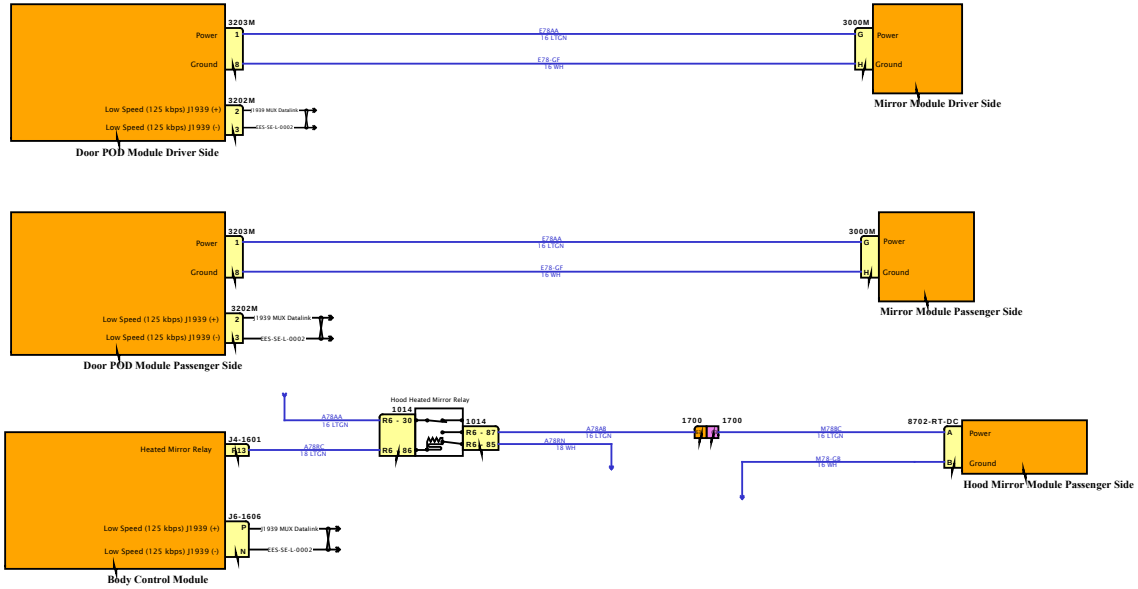

DESIGN DESCRIPTION

FEATURE CODES

SOFTWARE FEATURE CODES

NAVISTAR
NAVISTAR, INC. CONFIDENTIAL PROPRIETARY

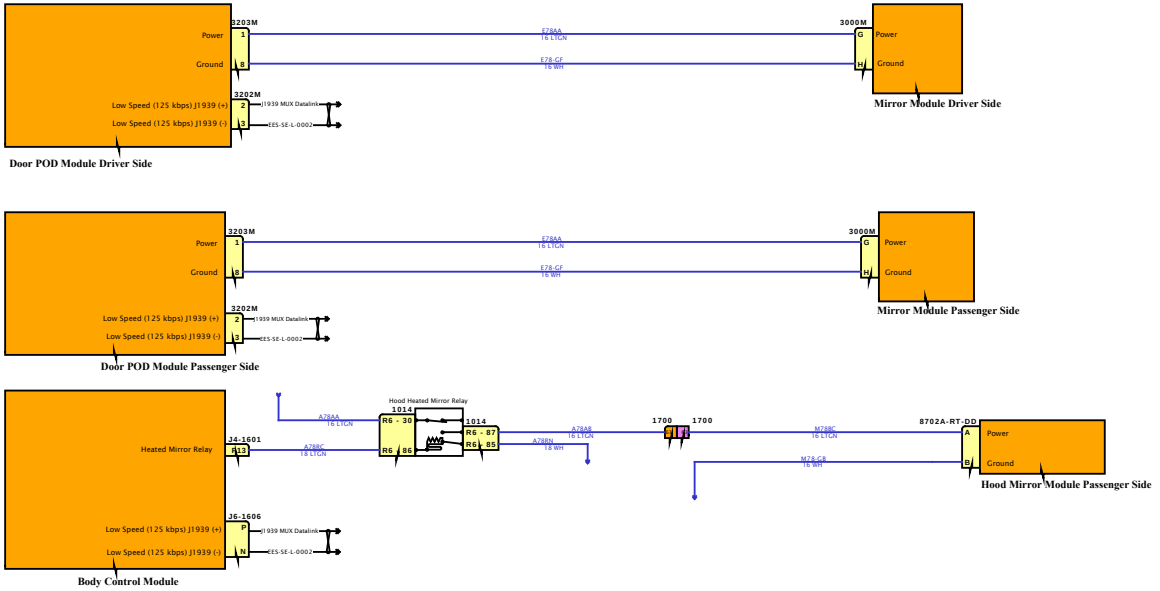

DESIGN DESCRIPTION

FEATURE CODES

SOFTWARE FEATURE CODES

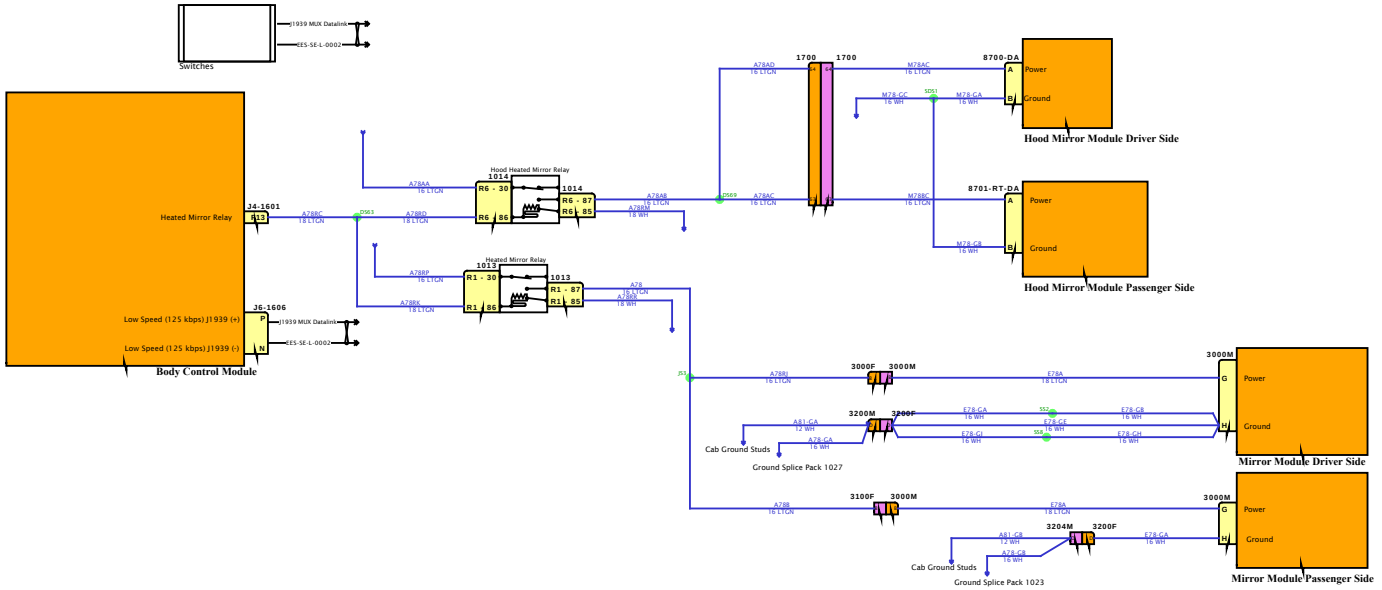

DESIGN DESCRIPTION

FEATURE CODES

SOFTWARE FEATURE CODES

NAVISTAR
NAVISTAR, INC. CONFIDENTIAL PROPRIETARY

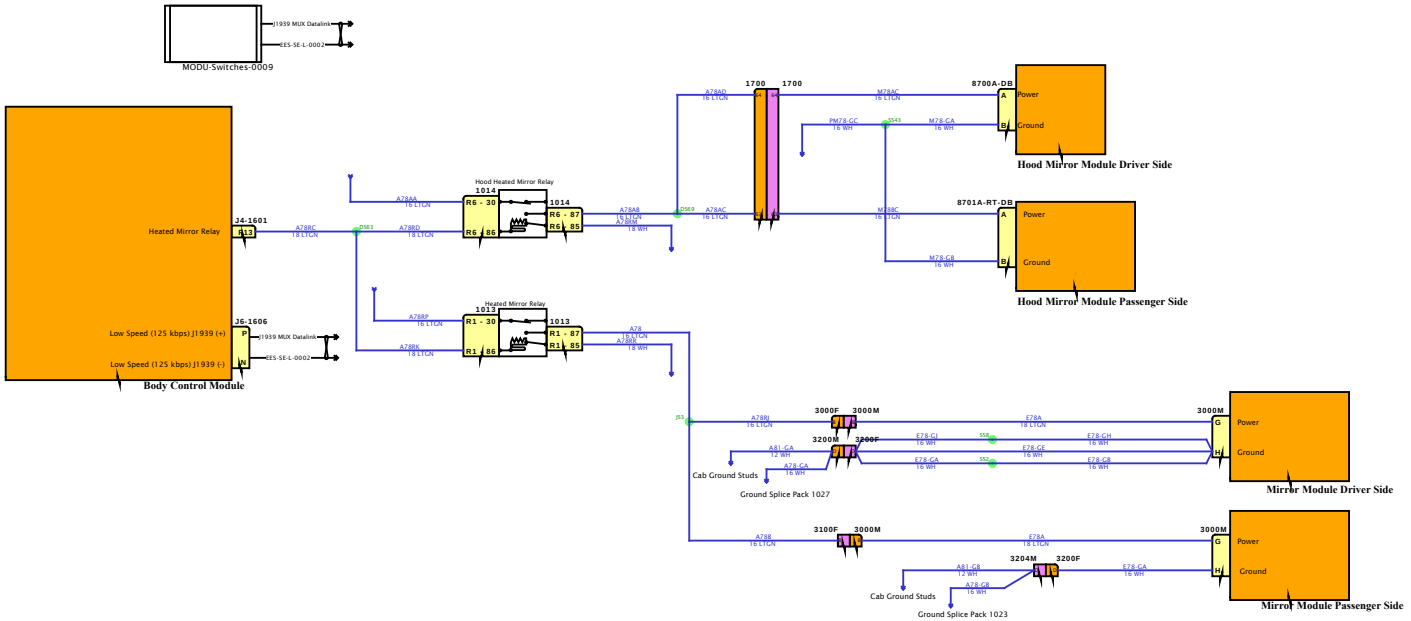

DESIGN DESCRIPTION

FEATURE CODES

SOFTWARE FEATURE CODES

Diagram3

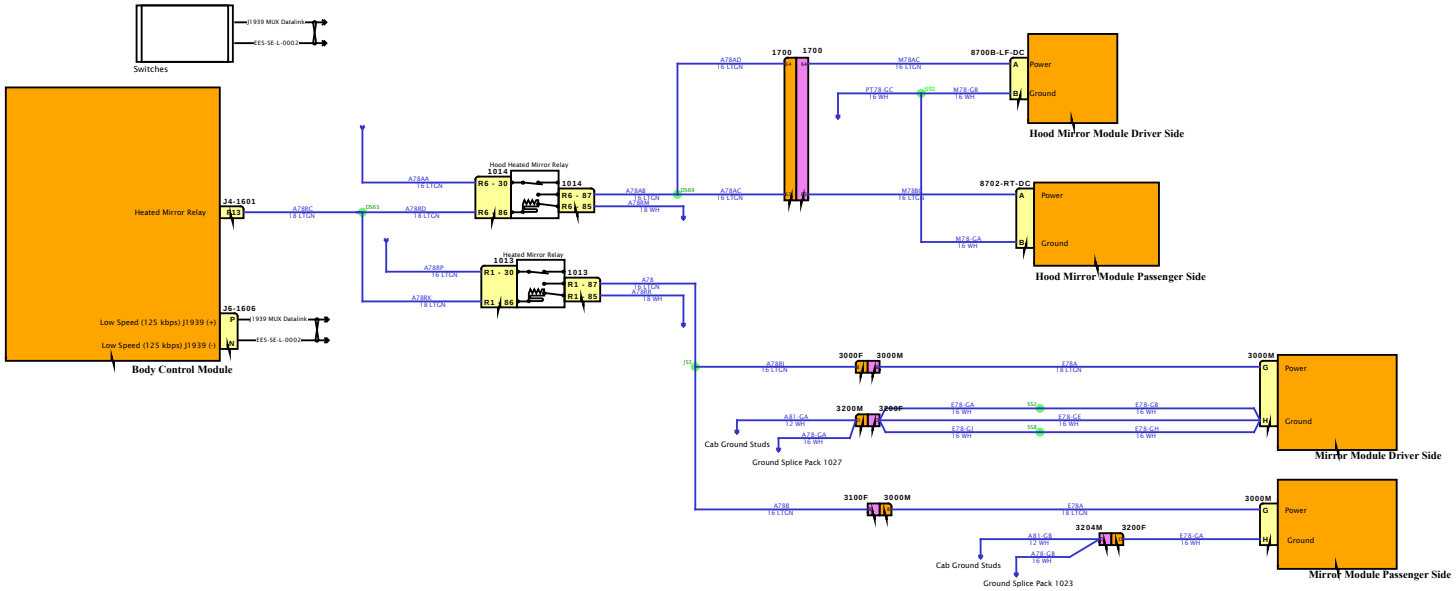

DESIGN DESCRIPTION

FEATURE CODES

SOFTWARE FEATURE CODES

NAVISTAR
NAVISTAR, INC. CONFIDENTIAL PROPRIETARY

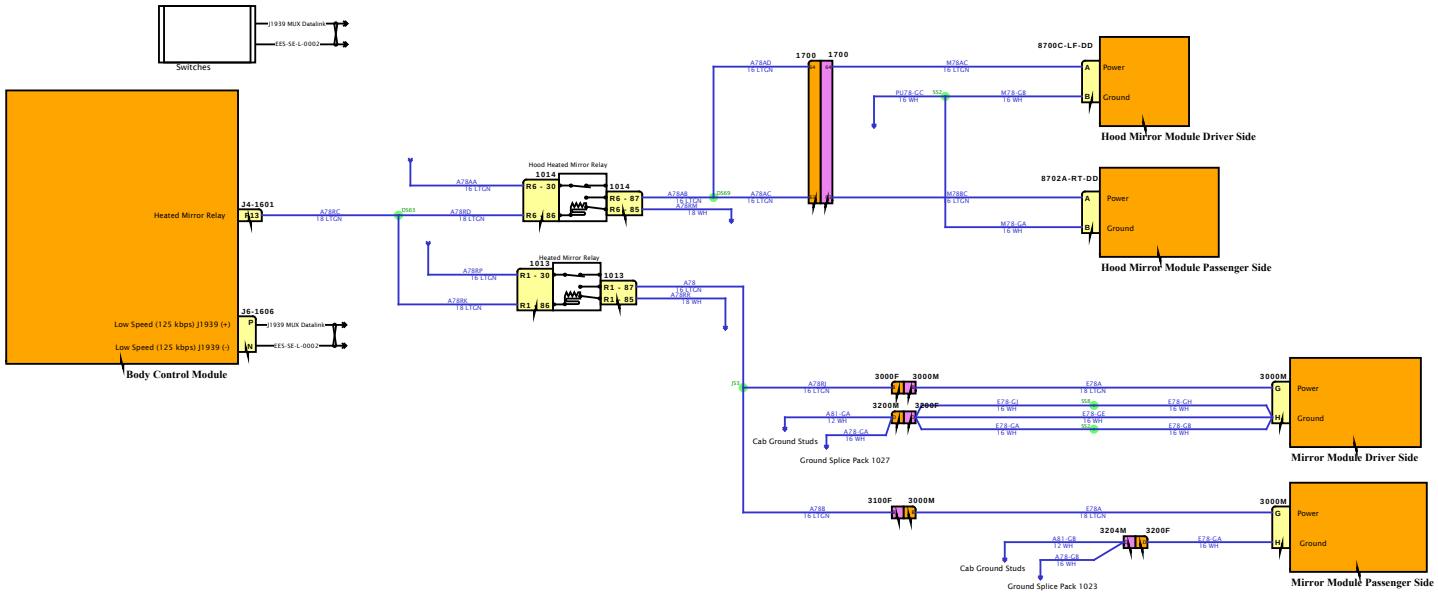

DESIGN DESCRIPTION

FEATURE CODES

SOFTWARE FEATURE CODES

NAVISTAR
NAVISTAR, INC. CONFIDENTIAL PROPRIETARY

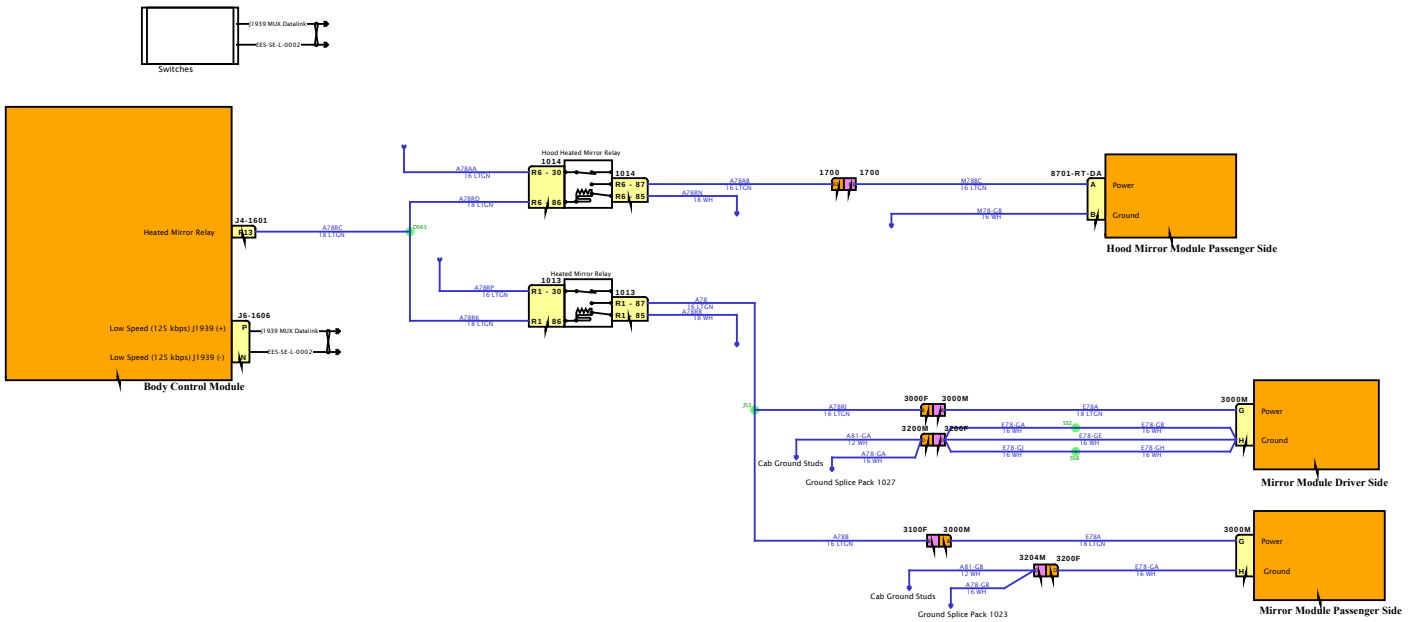

DESIGN DESCRIPTION

FEATURE CODES

SOFTWARE FEATURE CODES

NAVISTAR
NAVISTAR, INC. CONFIDENTIAL PROPRIETARY

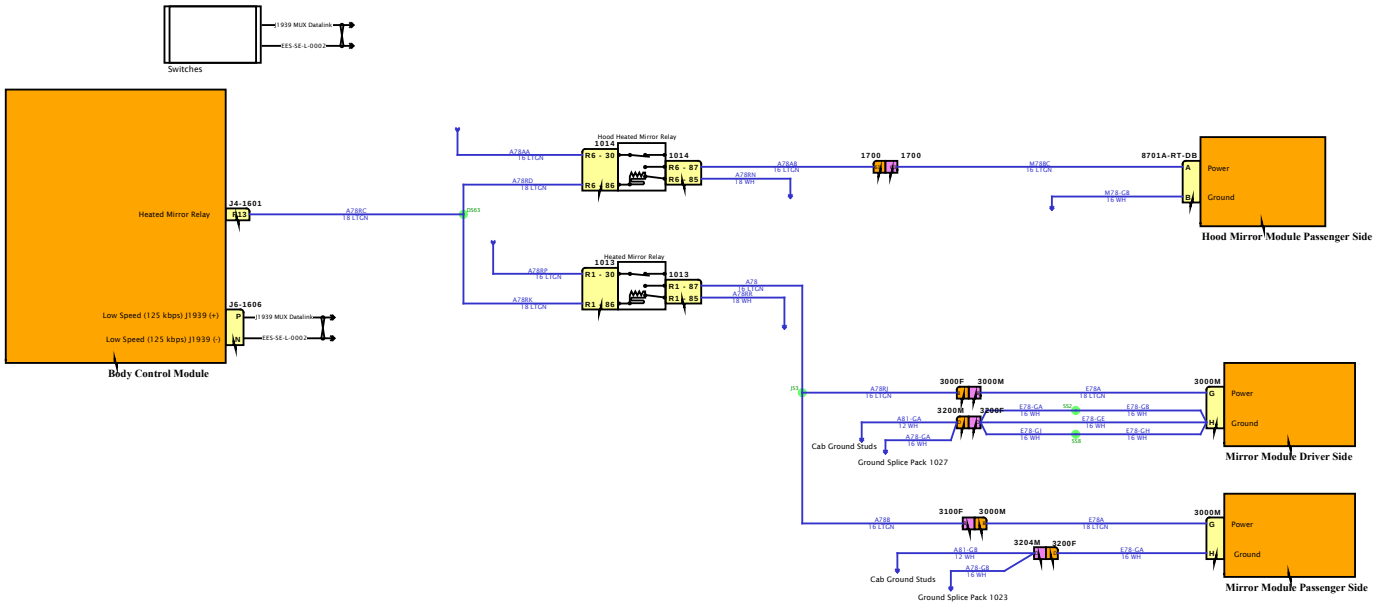

DESIGN DESCRIPTION

FEATURE CODES

SOFTWARE FEATURE CODES

NAVISTAR
NAVISTAR, INC. CONFIDENTIAL PROPRIETARY

Diagram3

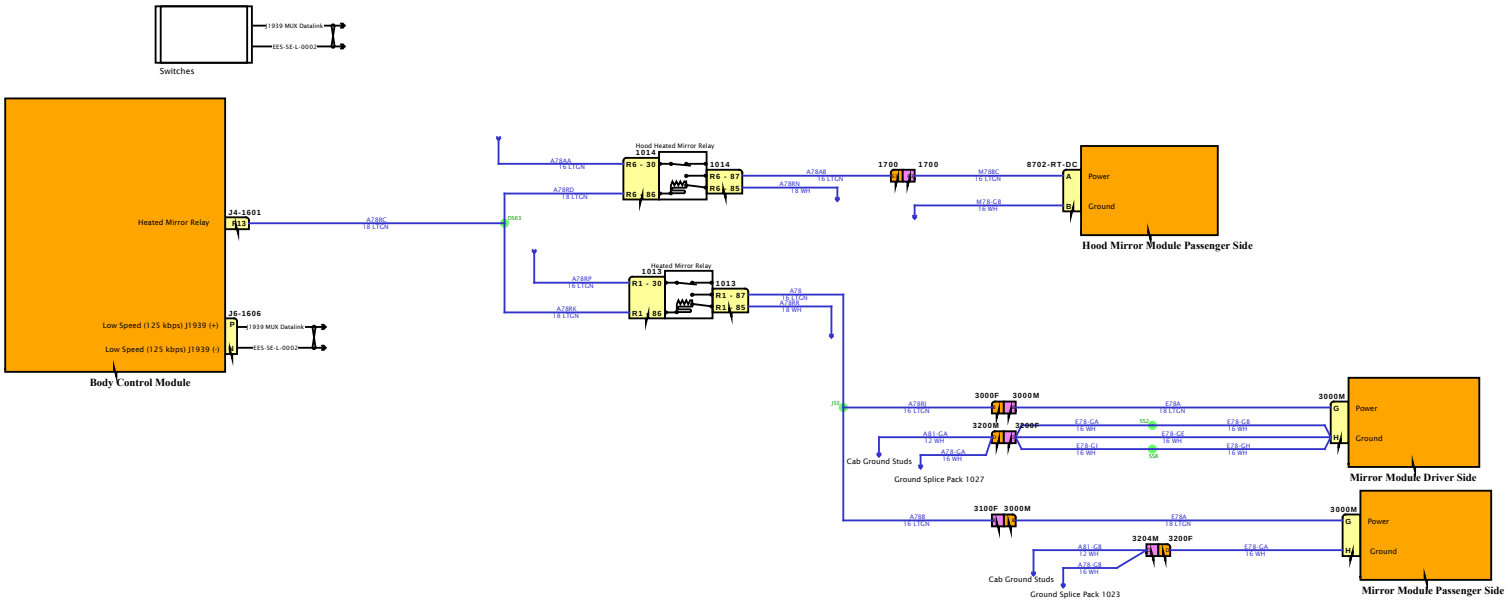

DESIGN DESCRIPTION

FEATURE CODES

SOFTWARE FEATURE CODES

NAVISTAR INC. CONFIDENTIAL PROPRIETARY

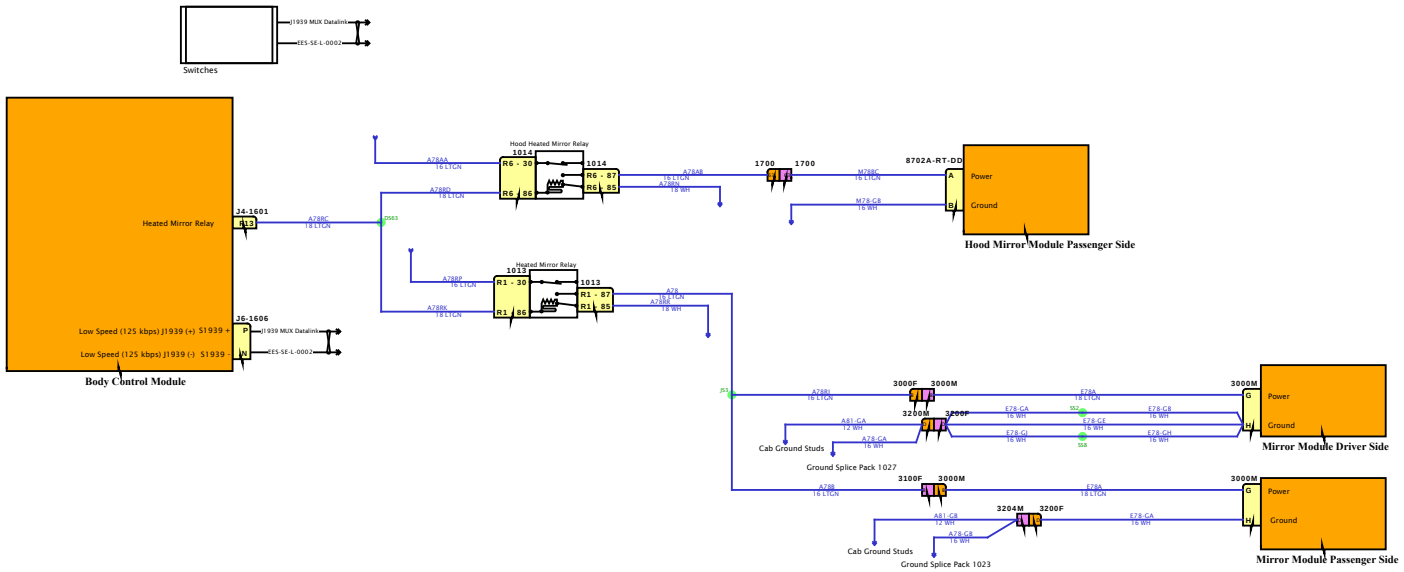

DESIGN DESCRIPTION

FEATURE CODES

SOFTWARE FEATURE CODES

NAVISTAR INC. CONFIDENTIAL PROPRIETARY

Diagram1

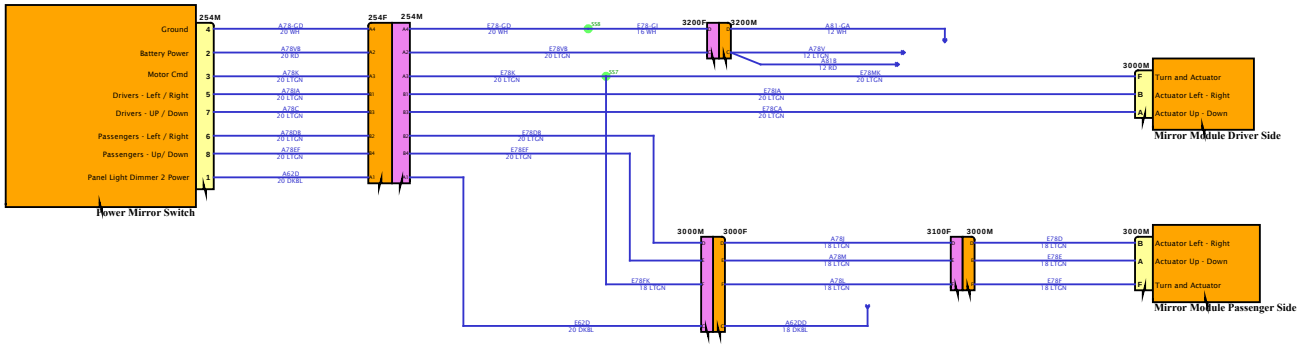

DESIGN DESCRIPTION

FEATURE CODES

SOFTWARE FEATURE CODES

DESIGN DESCRIPTION

FEATURE CODES

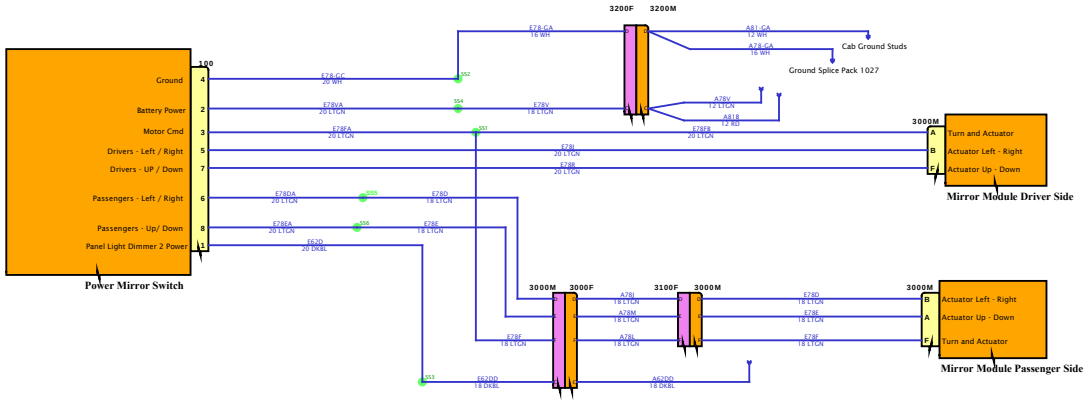

SOFTWARE FEATURE CODES

NAVISTAR
NAVISTAR, INC. CONFIDENTIAL PROPRIETARY

DESIGN DESCRIPTION

FEATURE CODES

SOFTWARE FEATURE CODES

Note that current and future horns will use only disc style horns. This means that we can use the same logic for single and dual horn setups. The connection to the horn is exactly the same for both setups.

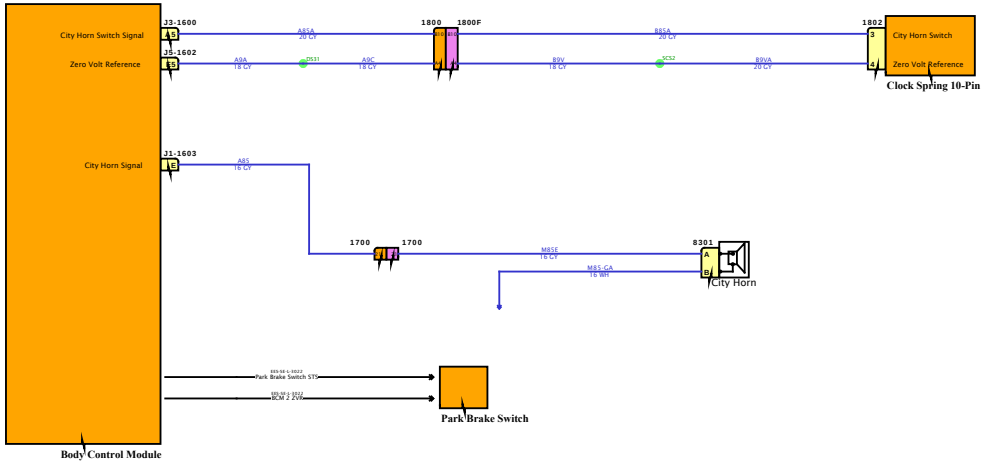

Diagram2

DESIGN DESCRIPTION

FEATURE CODES

SOFTWARE FEATURE CODES

Note that current and future horns will use only disc style horns. This means that we can use the same logic for single and dual horn setups. The connection to the horn is exactly the same for both setups.

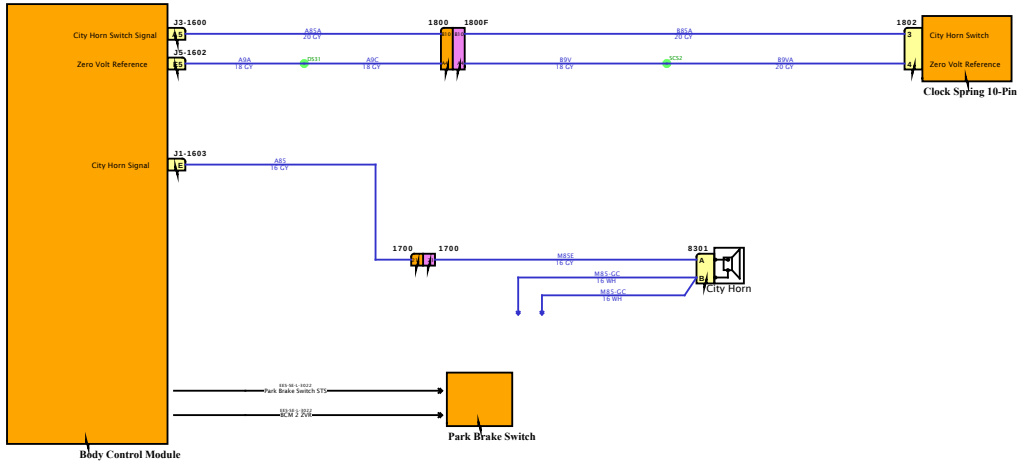

NAVISTAR INC. CONFIDENTIAL PROPRIETARY

DESIGN DESCRIPTION

FEATURE CODES

SOFTWARE FEATURE CODES

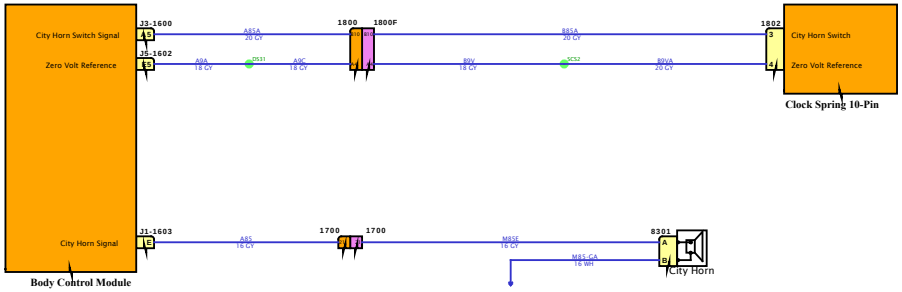

NAVISTAR
NAVISTAR, INC. CONFIDENTIAL PROPRIETARY

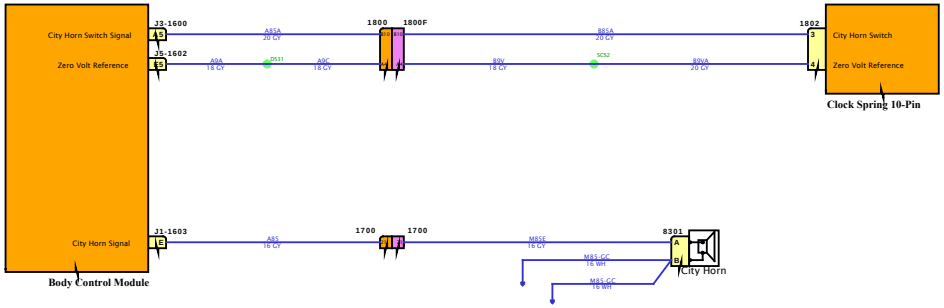

DESIGN DESCRIPTION

FEATURE CODES

SOFTWARE FEATURE CODES

NAVISTAR
NAVISTAR, INC. CONFIDENTIAL PROPRIETARY

Diagram1

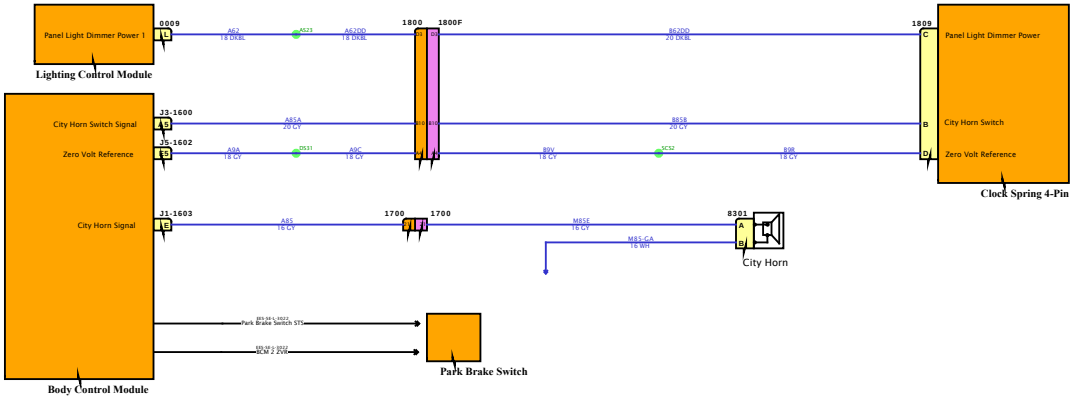

DESIGN DESCRIPTION

FEATURE CODES

SOFTWARE FEATURE CODES

NAVISTAR
NAVISTAR, INC. CONFIDENTIAL PROPRIETARY

Diagram2

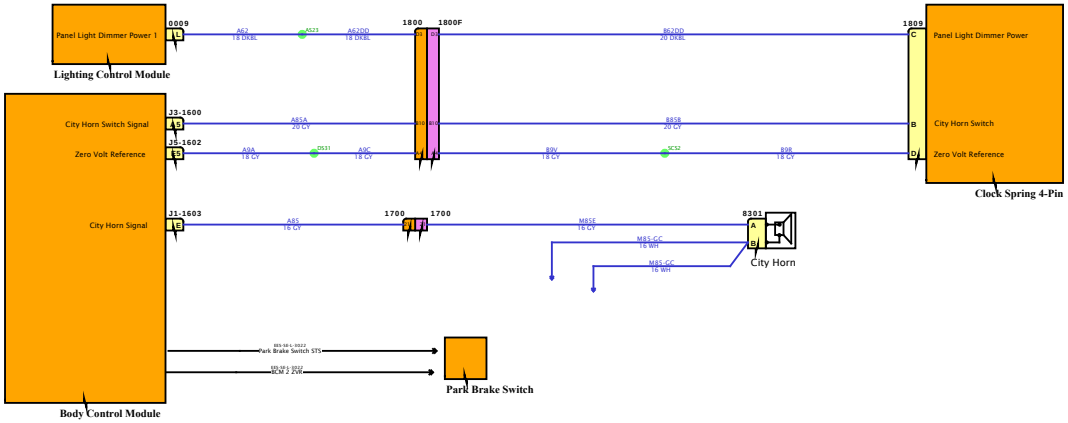

DESIGN DESCRIPTION

FEATURE CODES

SOFTWARE FEATURE CODES

NAVISTAR
NAVISTAR, INC. CONFIDENTIAL PROPRIETARY

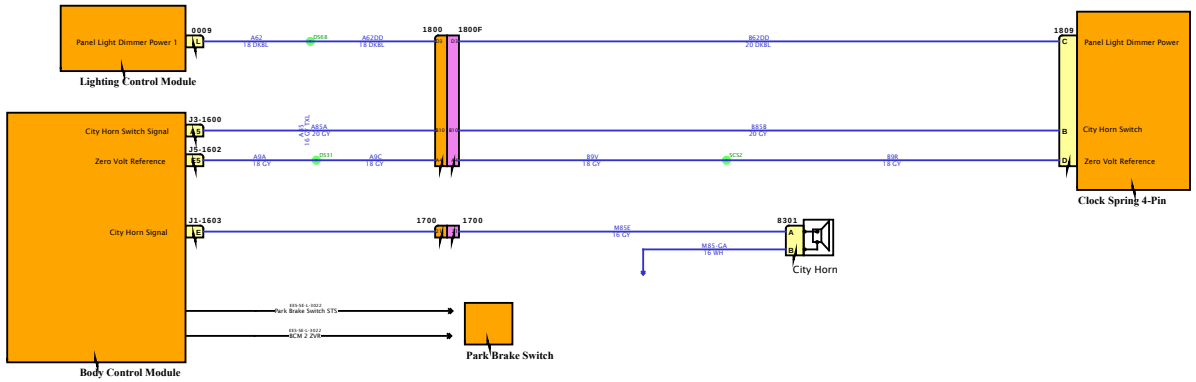

DESIGN DESCRIPTION

FEATURE CODES

SOFTWARE FEATURE CODES

NAVISTAR
NAVISTAR, INC. CONFIDENTIAL PROPRIETARY

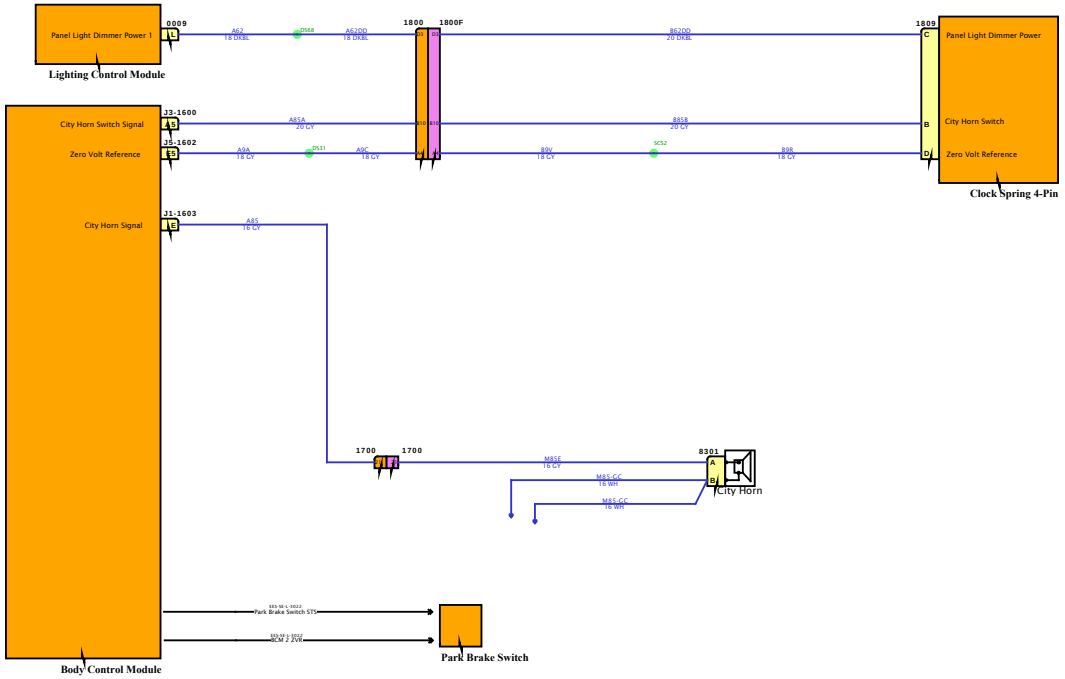

DESIGN DESCRIPTION

FEATURE CODES

SOFTWARE FEATURE CODES

NAVISTAR INC. CONFIDENTIAL PROPRIETARY

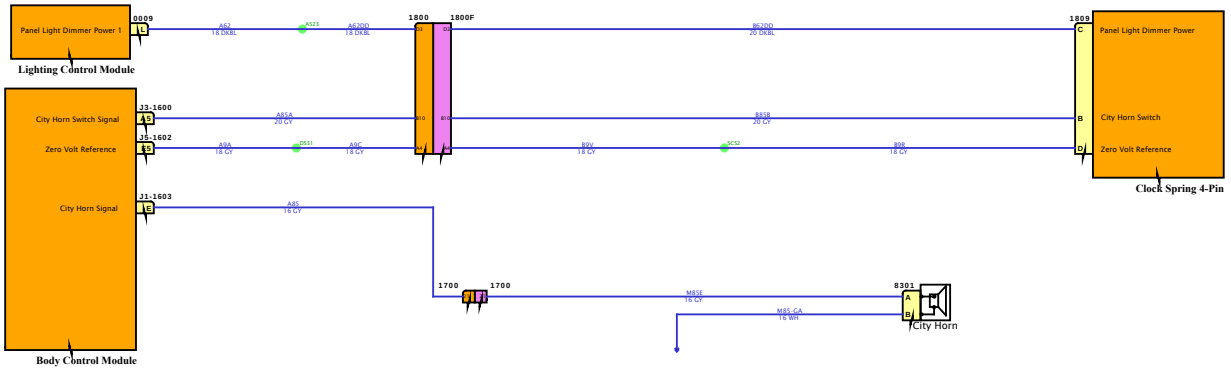

DESIGN DESCRIPTION

FEATURE CODES

SOFTWARE FEATURE CODES

NAVISTAR
NAVISTAR, INC. CONFIDENTIAL PROPRIETARY

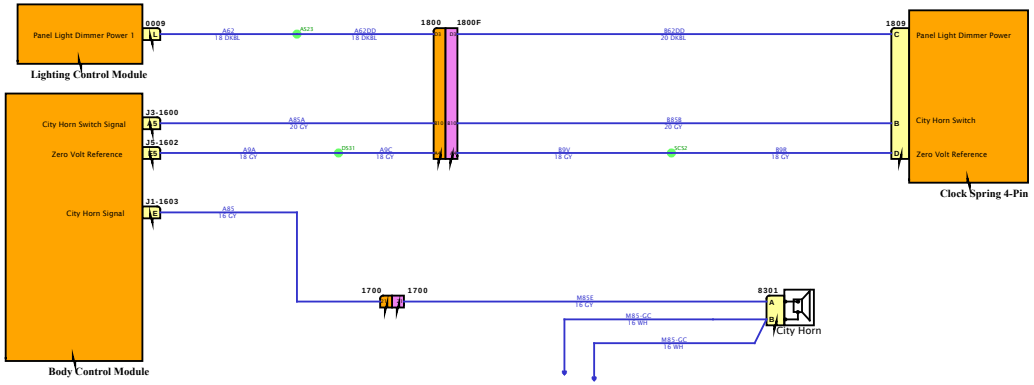

DESIGN DESCRIPTION

FEATURE CODES

SOFTWARE FEATURE CODES

NAVISTAR
NAVISTAR, INC. CONFIDENTIAL PROPRIETARY

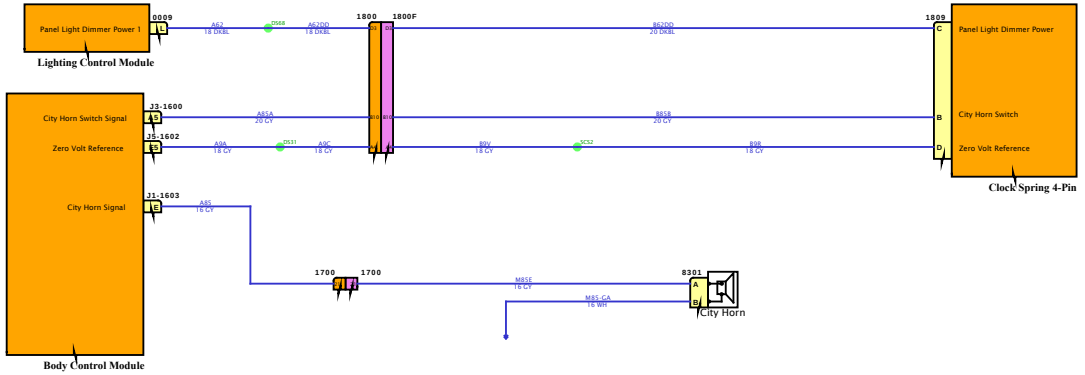

DESIGN DESCRIPTION

FEATURE CODES

SOFTWARE FEATURE CODES

NAVISTAR
NAVISTAR, INC. CONFIDENTIAL PROPRIETARY

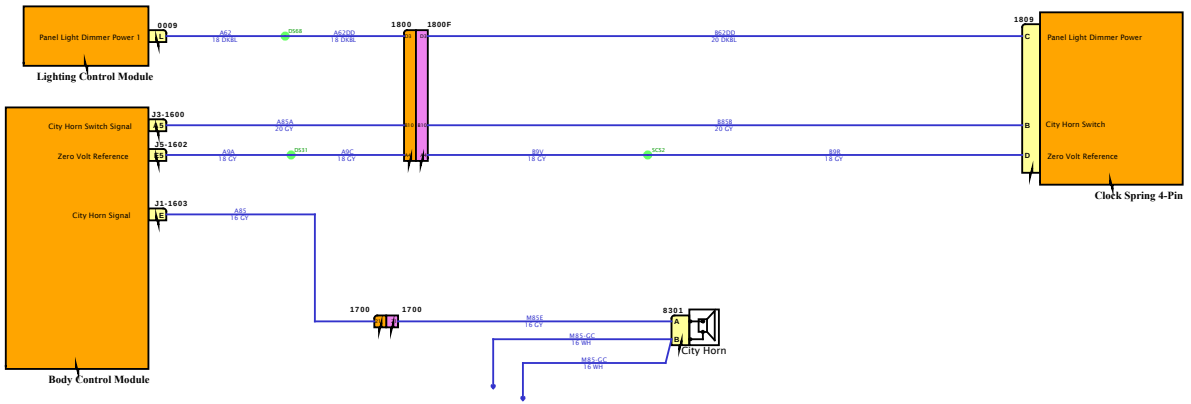

DESIGN DESCRIPTION

FEATURE CODES

SOFTWARE FEATURE CODES

NAVISTAR INC. CONFIDENTIAL PROPRIETARY

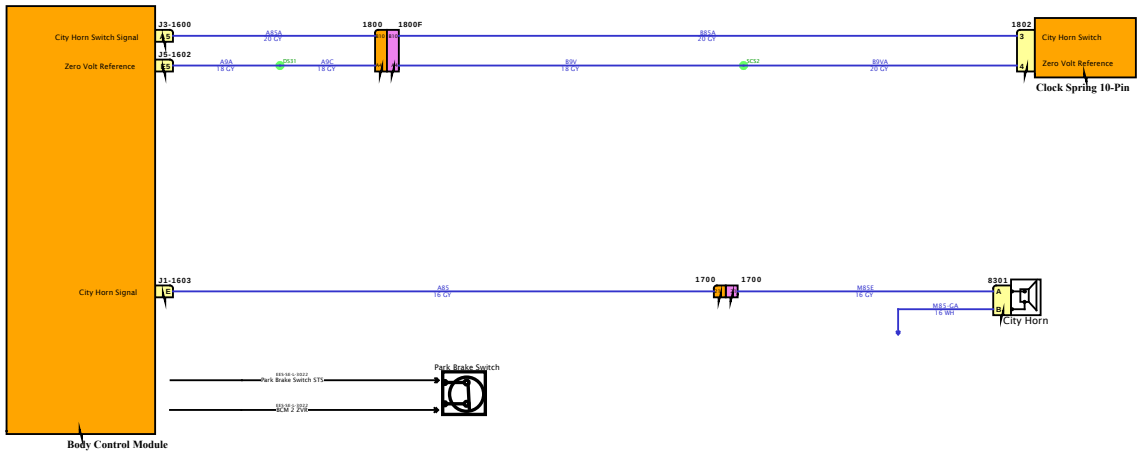

DESIGN DESCRIPTION

FEATURE CODES

SOFTWARE FEATURE CODES

NAVISTAR
NAVISTAR, INC. CONFIDENTIAL PROPRIETARY

DESIGN DESCRIPTION

FEATURE CODES

SOFTWARE FEATURE CODES

Note that current and future horns will use only disc style horns. This means that we can use the same logic for single and dual horn setups. The connection to the horn is exactly the same for both setups.

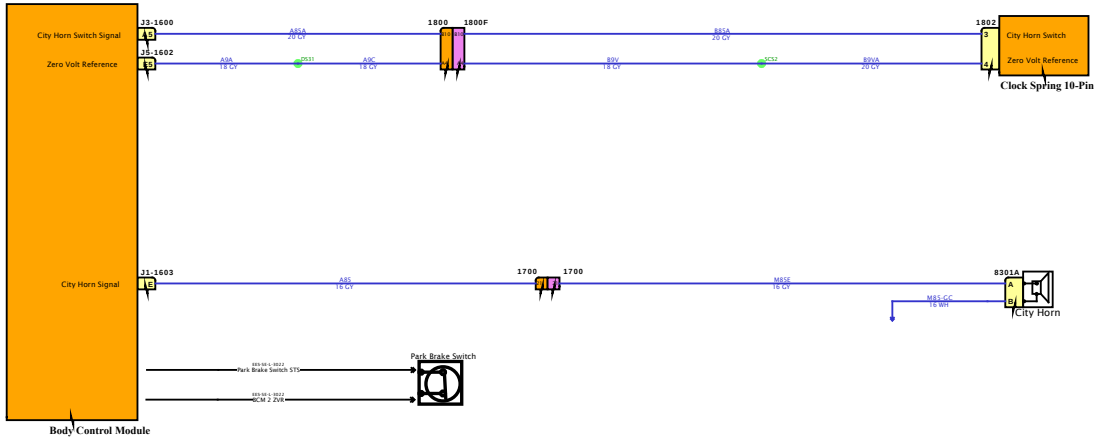

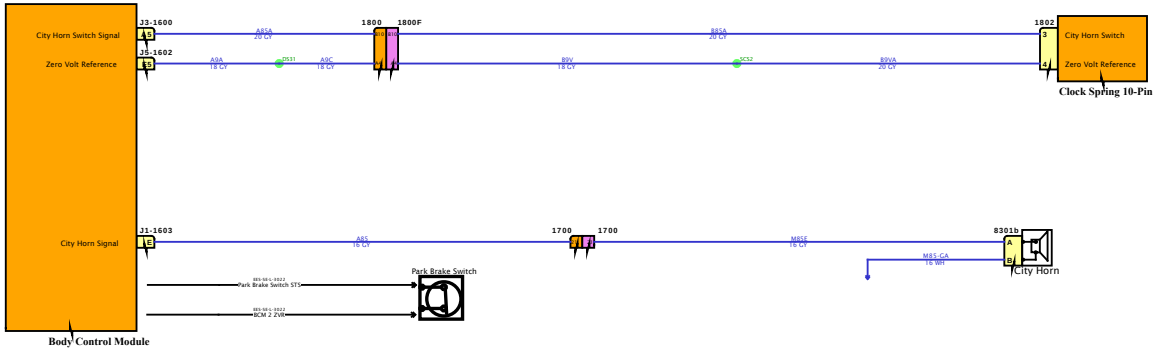

DESIGN DESCRIPTION

FEATURE CODES

SOFTWARE FEATURE CODES

NAVISTAR INC. CONFIDENTIAL PROPRIETARY

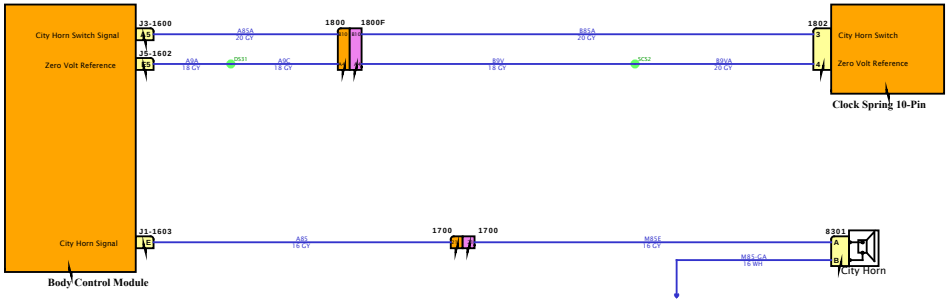

DESIGN DESCRIPTION

FEATURE CODES

SOFTWARE FEATURE CODES

NAVISTAR
NAVISTAR, INC. CONFIDENTIAL PROPRIETARY

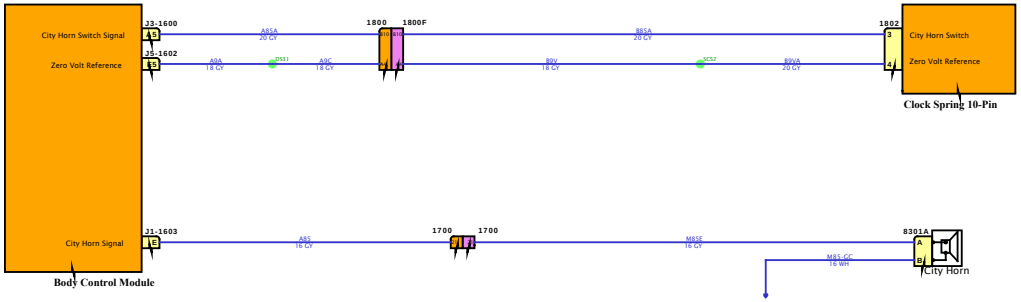

DESIGN DESCRIPTION

FEATURE CODES

SOFTWARE FEATURE CODES

NAVISTAR
NAVISTAR, INC. CONFIDENTIAL PROPRIETARY

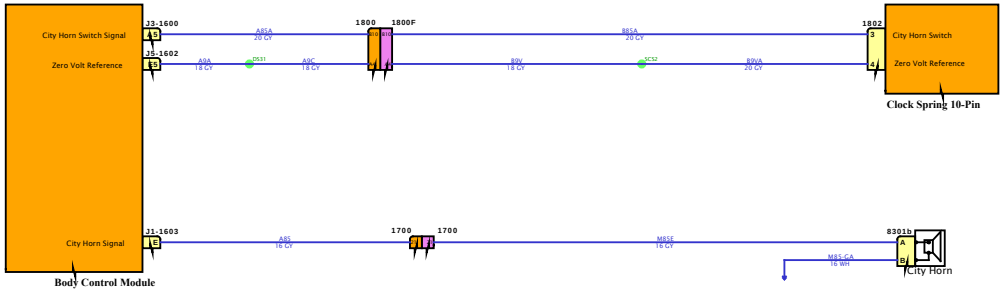

DESIGN DESCRIPTION

FEATURE CODES

SOFTWARE FEATURE CODES

NAVISTAR
NAVISTAR, INC. CONFIDENTIAL PROPRIETARY

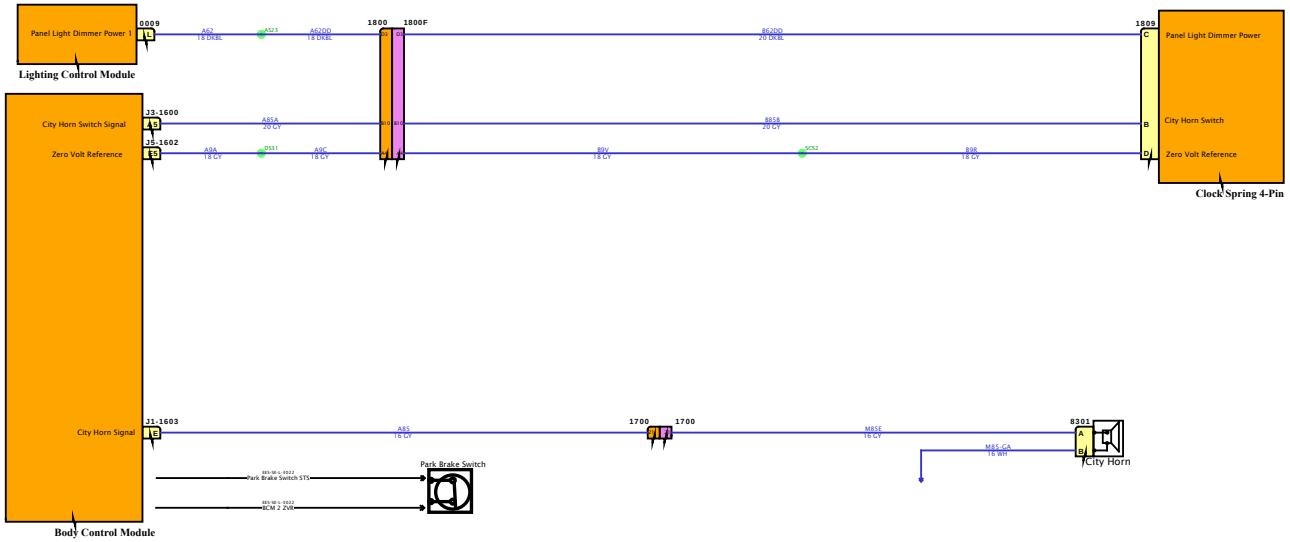

DESIGN DESCRIPTION

FEATURE CODES

SOFTWARE FEATURE CODES

NAVISTAR
NAVISTAR, INC. CONFIDENTIAL PROPRIETARY

Diagram2

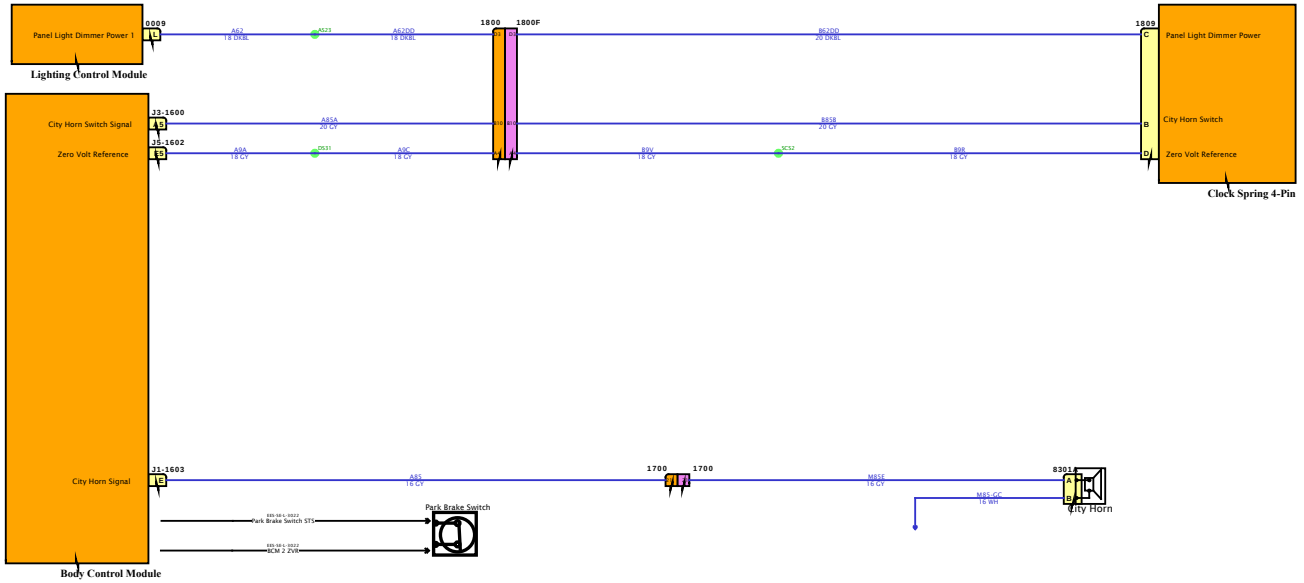

DESIGN DESCRIPTION

FEATURE CODES

SOFTWARE FEATURE CODES

NAVISTAR
NAVISTAR, INC. CONFIDENTIAL PROPRIETARY

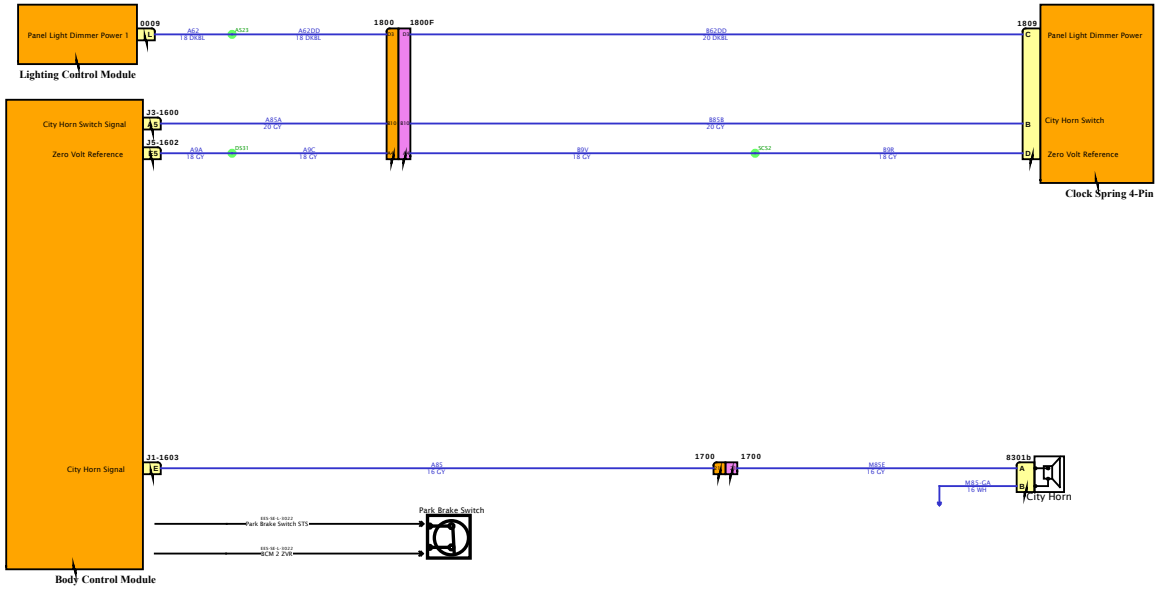

DESIGN DESCRIPTION

FEATURE CODES

SOFTWARE FEATURE CODES

NAVISTAR
NAVISTAR, INC. CONFIDENTIAL PROPRIETARY

Note that current and future horns will use only disc style horns. This means that we can use the same logic for single and dual horn setups. The connection to the horn is exactly the same for both setups.

Since this is deluxe trim, it applies to both ProStar and MD models

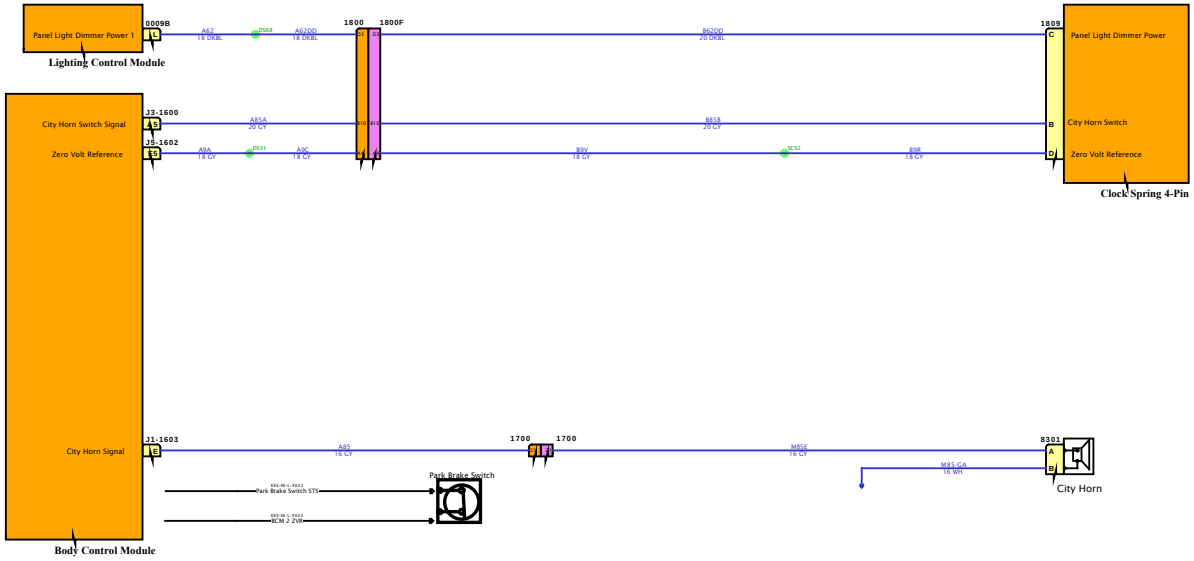

DESIGN DESCRIPTION

FEATURE CODES

SOFTWARE FEATURE CODES

NAVISTAR INC. CONFIDENTIAL PROPRIETARY

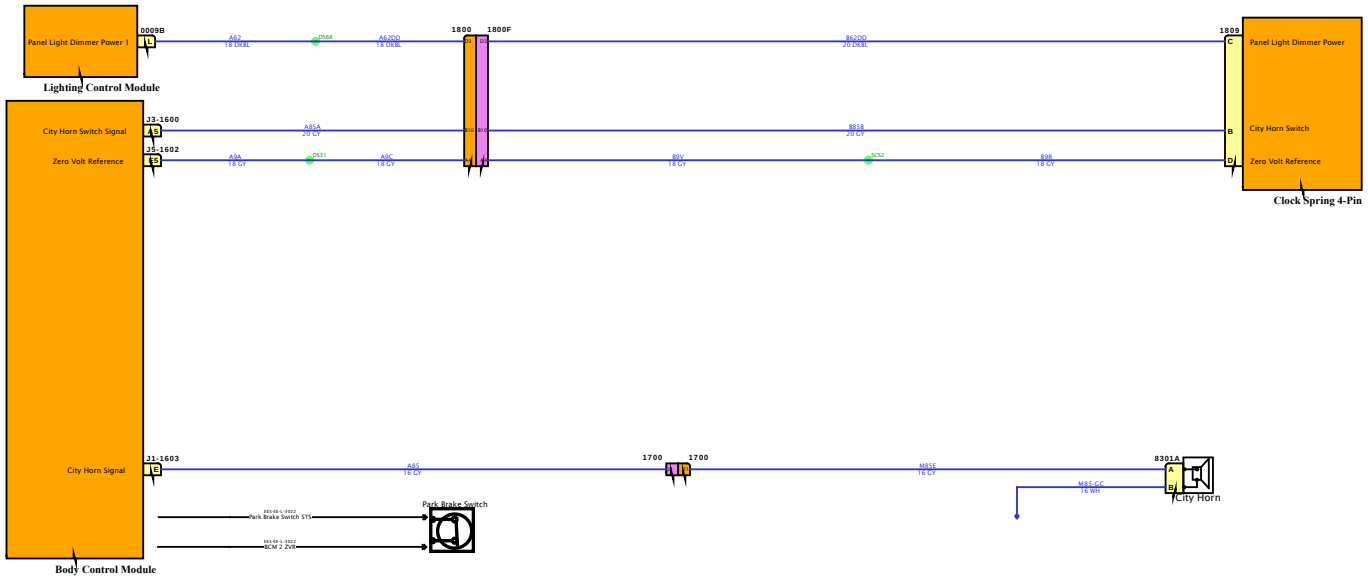

DESIGN DESCRIPTION

FEATURE CODES

SOFTWARE FEATURE CODES

NAVISTAR INC. CONFIDENTIAL PROPRIETARY

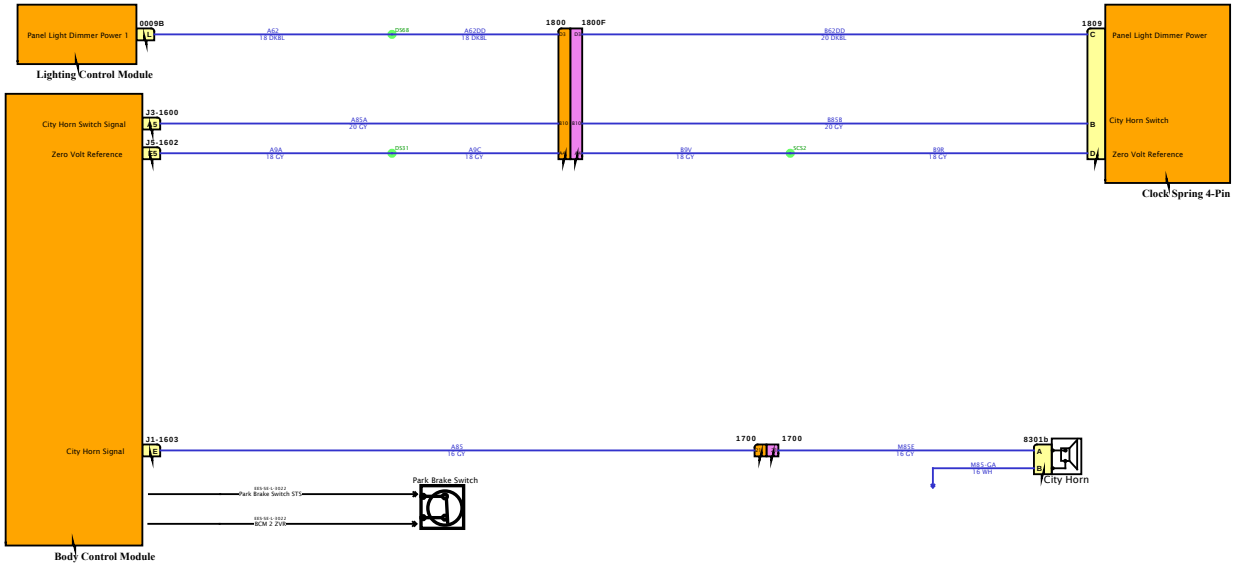

DESIGN DESCRIPTION

FEATURE CODES

SOFTWARE FEATURE CODES

NAVISTAR
NAVISTAR, INC. CONFIDENTIAL PROPRIETARY

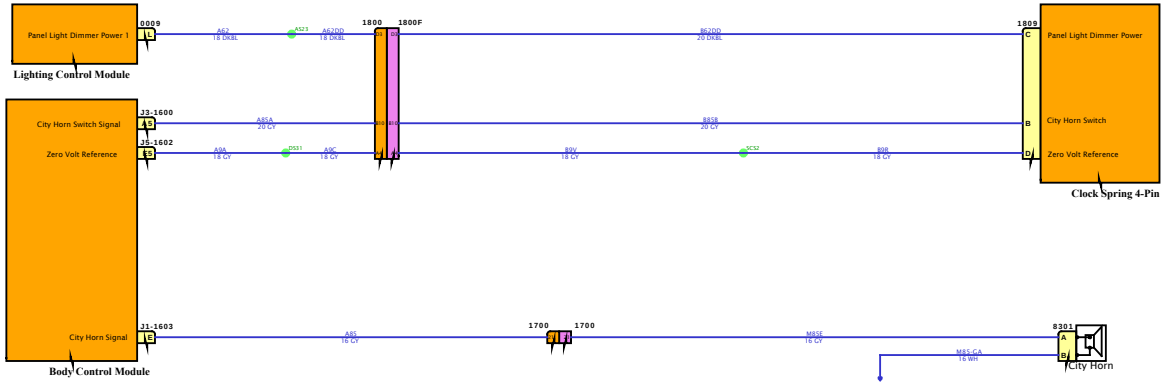

DESIGN DESCRIPTION

FEATURE CODES

SOFTWARE FEATURE CODES

NAVISTAR
NAVISTAR, INC. CONFIDENTIAL PROPRIETARY

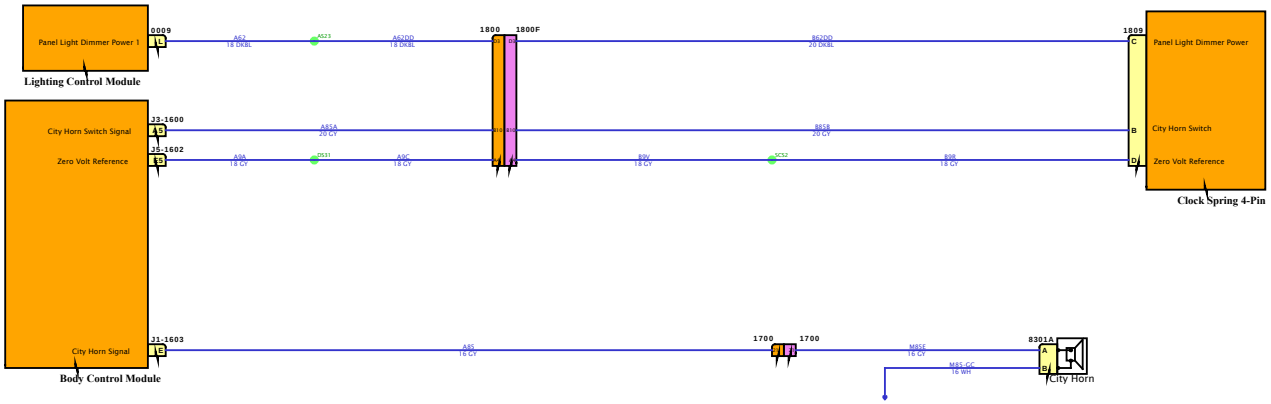

DESIGN DESCRIPTION

FEATURE CODES

SOFTWARE FEATURE CODES

NAVISTAR
NAVISTAR, INC. CONFIDENTIAL PROPRIETARY

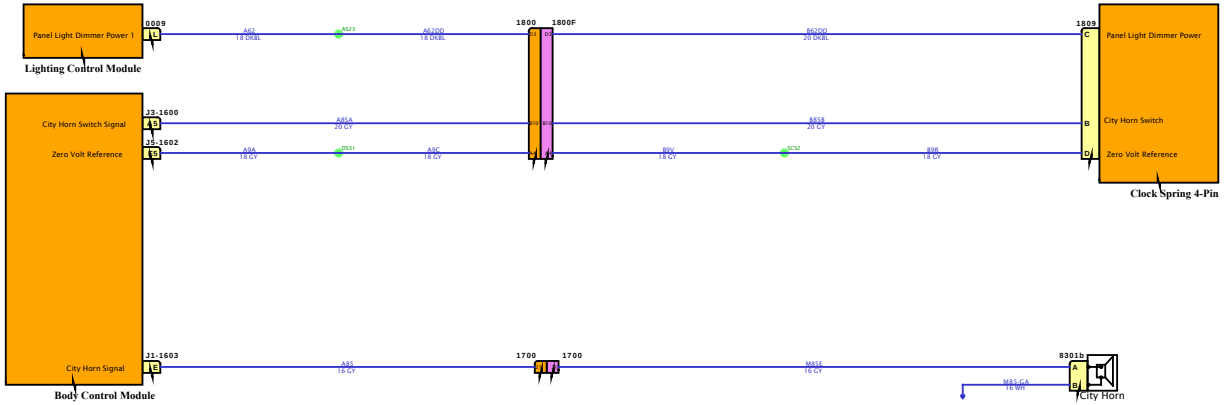

DESIGN DESCRIPTION

FEATURE CODES

SOFTWARE FEATURE CODES

NAVISTAR
NAVISTAR, INC. CONFIDENTIAL PROPRIETARY

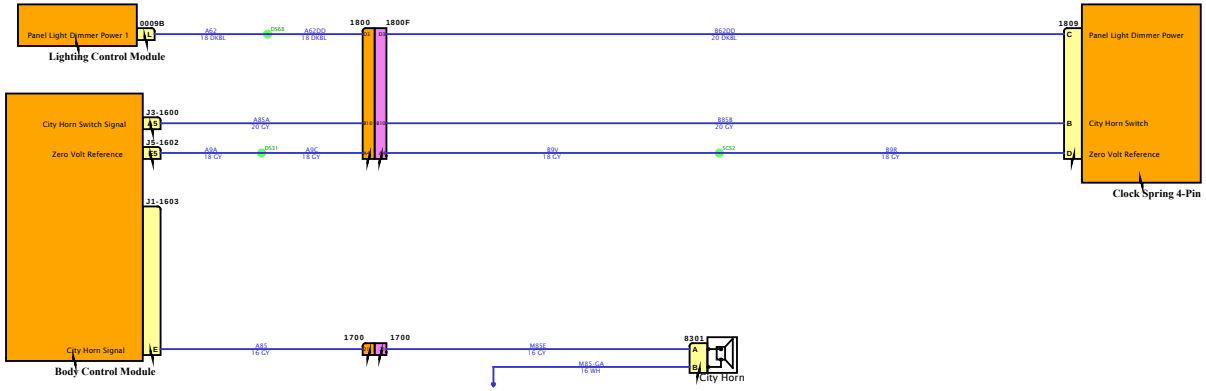

DESIGN DESCRIPTION

FEATURE CODES

SOFTWARE FEATURE CODES

NAVISTAR INC. CONFIDENTIAL PROPRIETARY

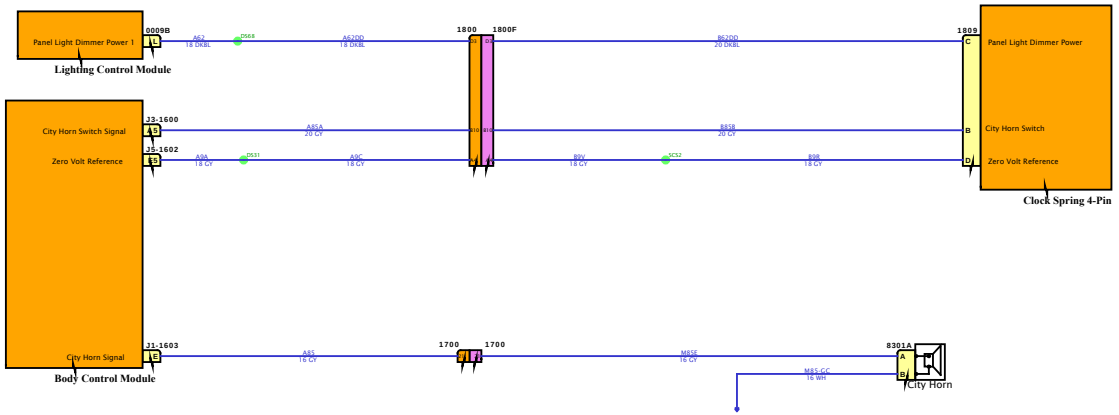

DESIGN DESCRIPTION

FEATURE CODES

SOFTWARE FEATURE CODES

NAVISTAR
NAVISTAR, INC. CONFIDENTIAL PROPRIETARY

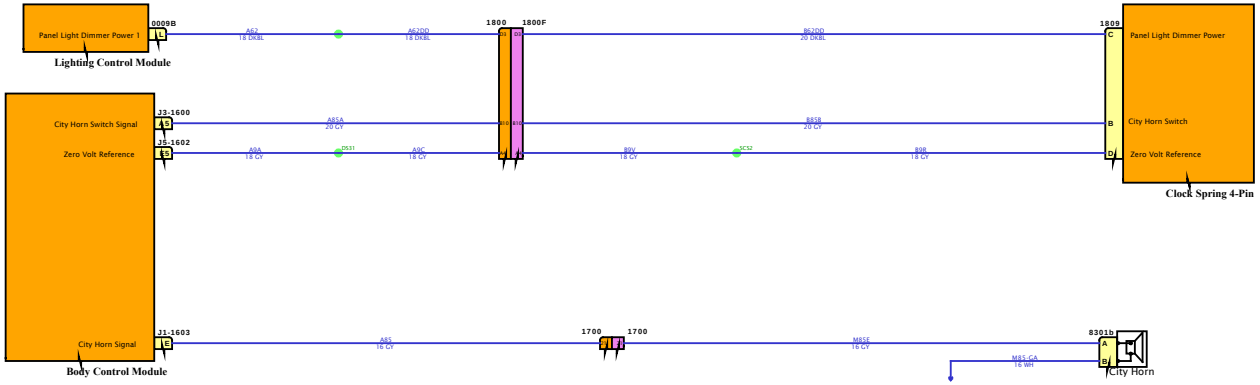

DESIGN DESCRIPTION

FEATURE CODES

SOFTWARE FEATURE CODES

NAVISTAR
NAVISTAR, INC. CONFIDENTIAL PROPRIETARY

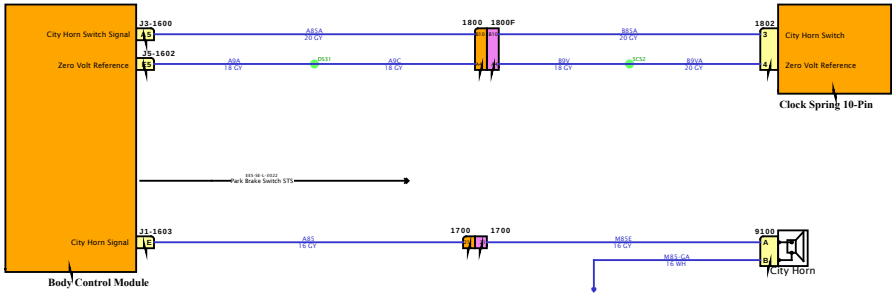

DESIGN DESCRIPTION

FEATURE CODES

SOFTWARE FEATURE CODES

NAVISTAR
NAVISTAR, INC. CONFIDENTIAL PROPRIETARY

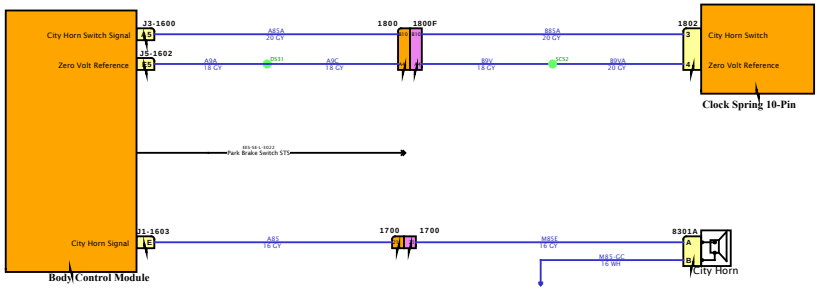

DESIGN DESCRIPTION

FEATURE CODES

SOFTWARE FEATURE CODES

NAVISTAR
NAVISTAR, INC. CONFIDENTIAL PROPRIETARY

Diagram1

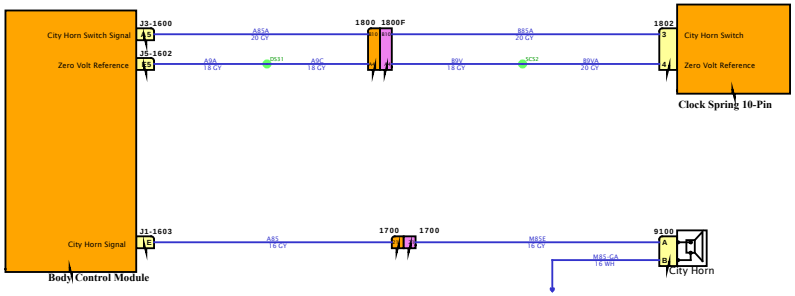

DESIGN DESCRIPTION

FEATURE CODES

SOFTWARE FEATURE CODES

NAVISTAR
NAVISTAR, INC. CONFIDENTIAL PROPRIETARY

Diagram2

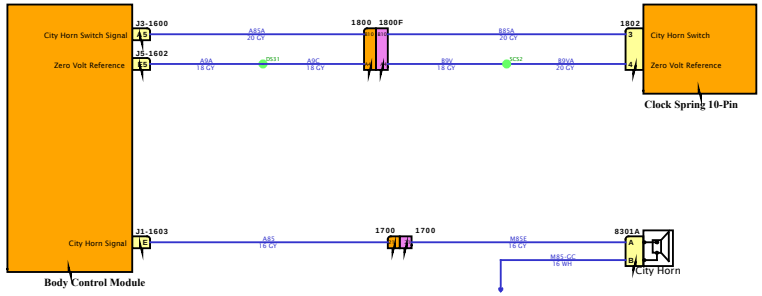

DESIGN DESCRIPTION

FEATURE CODES

SOFTWARE FEATURE CODES

NAVISTAR
NAVISTAR, INC. CONFIDENTIAL PROPRIETARY

Diagram1

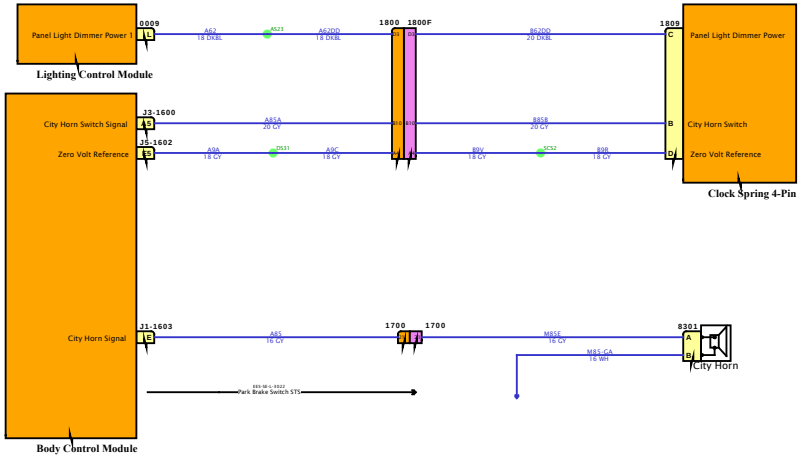

DESIGN DESCRIPTION

FEATURE CODES

SOFTWARE FEATURE CODES

NAVISTAR INC. CONFIDENTIAL PROPRIETARY

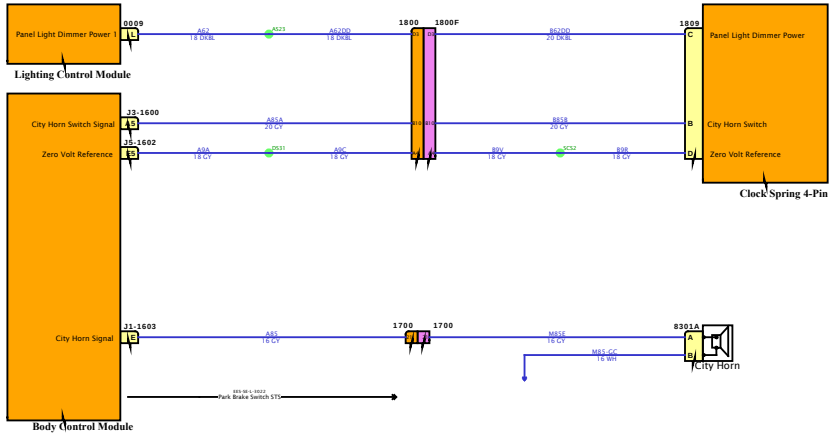

DESIGN DESCRIPTION

FEATURE CODES

SOFTWARE FEATURE CODES

NAVISTAR
NAVISTAR, INC. CONFIDENTIAL PROPRIETARY

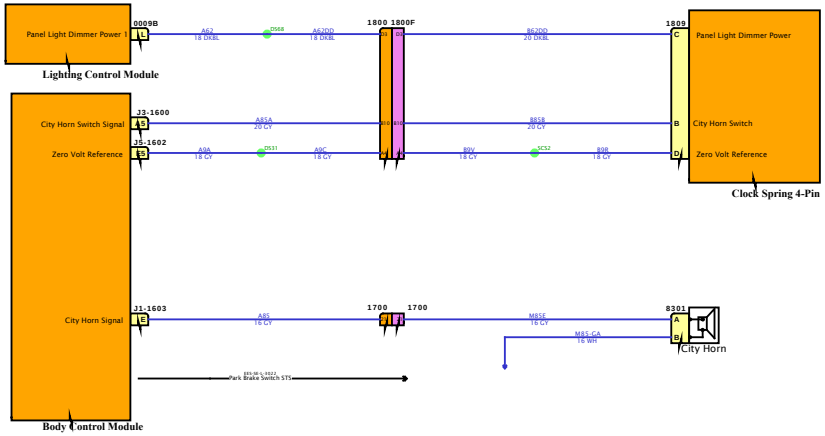

DESIGN DESCRIPTION

FEATURE CODES

SOFTWARE FEATURE CODES

NAVISTAR INC. CONFIDENTIAL PROPRIETARY

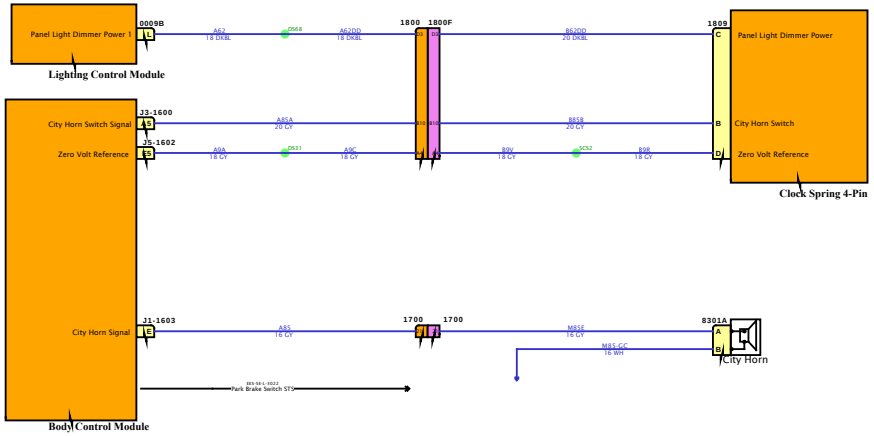

DESIGN DESCRIPTION

FEATURE CODES

SOFTWARE FEATURE CODES

NAVISTAR
NAVISTAR, INC. CONFIDENTIAL PROPRIETARY

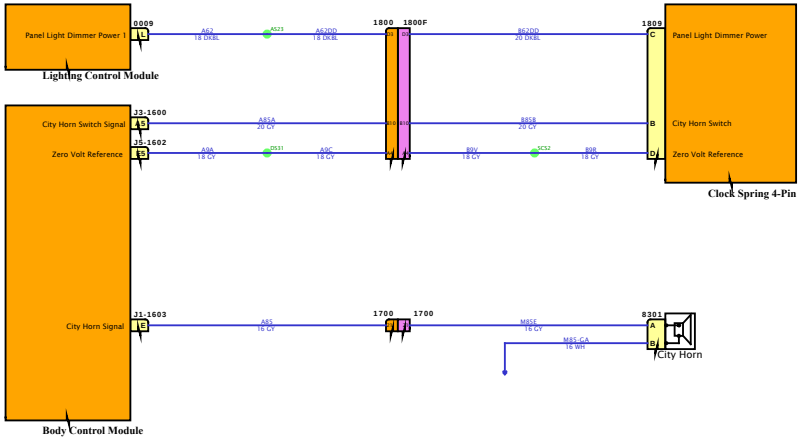

DESIGN DESCRIPTION

FEATURE CODES

SOFTWARE FEATURE CODES

NAVISTAR
NAVISTAR, INC. CONFIDENTIAL PROPRIETARY

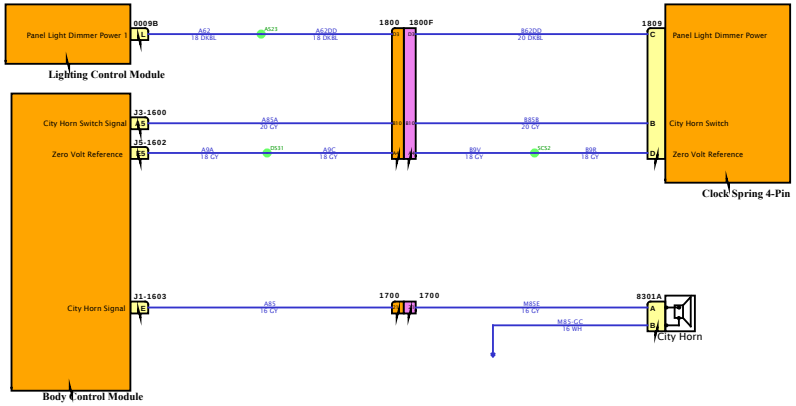

DESIGN DESCRIPTION

FEATURE CODES

SOFTWARE FEATURE CODES

NAVISTAR
NAVISTAR, INC. CONFIDENTIAL PROPRIETARY

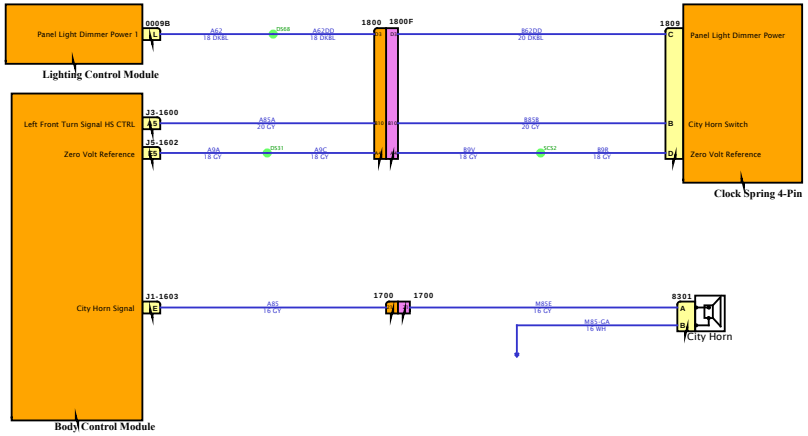

DESIGN DESCRIPTION

FEATURE CODES

SOFTWARE FEATURE CODES

NAVISTAR INC. CONFIDENTIAL PROPRIETARY

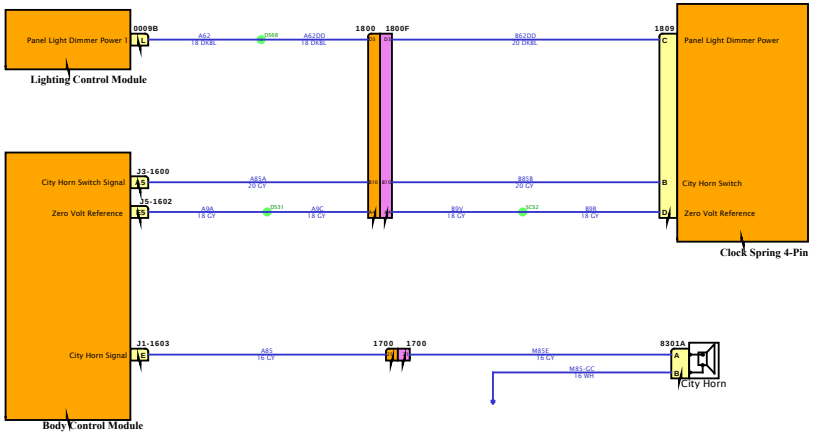

DESIGN DESCRIPTION

FEATURE CODES

SOFTWARE FEATURE CODES

NAVISTAR
NAVISTAR, INC. CONFIDENTIAL PROPRIETARY

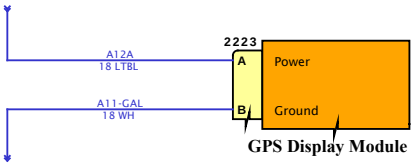

DESIGN DESCRIPTION

FEATURE CODES

SOFTWARE FEATURE CODES

NAVISTAR
NAVISTAR, INC. CONFIDENTIAL PROPRIETARY

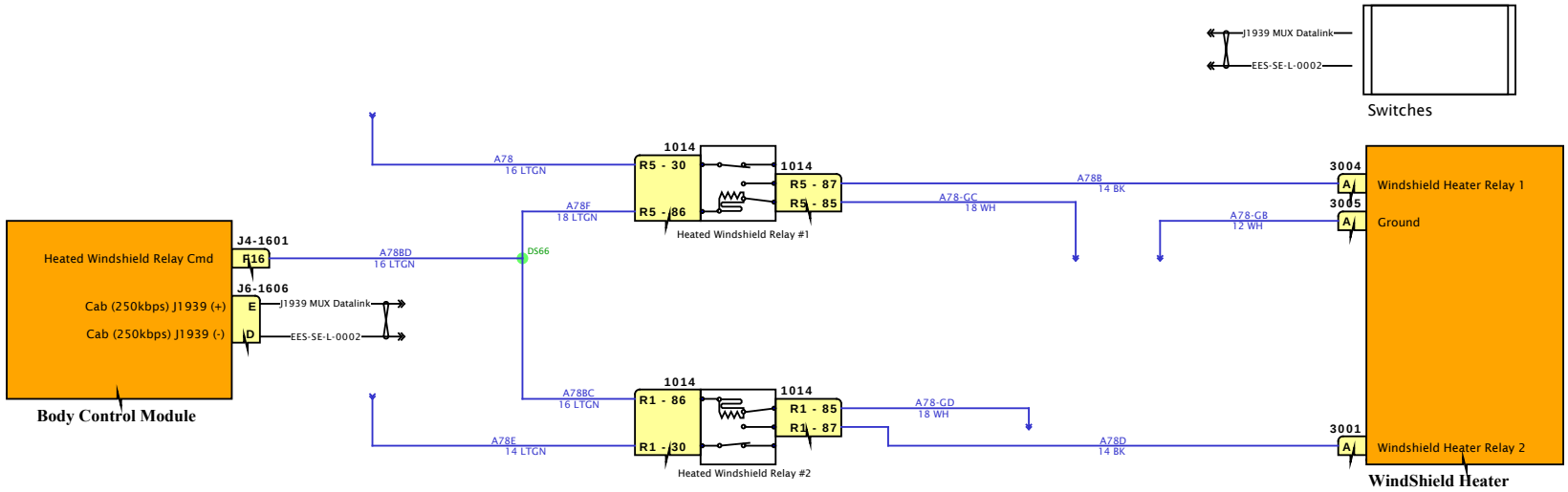

DESIGN DESCRIPTION

FEATURE CODES

SOFTWARE FEATURE CODES

NAVISTAR
NAVISTAR, INC. CONFIDENTIAL PROPRIETARY

DESIGN DESCRIPTION

FEATURE CODES

SOFTWARE FEATURE CODES

* NOTE - The device depicted below is a multiplexed switch pack that includes a pigtail harness that is utilized for "daisy-chaining" with other multiplexed switch packs or to connect back to the Instrument Panel harness for continuation of the HMI Standard (125kbps) J1939 backbone. The below diagram only shows the battery and ground feeds since only those are required to correctly drive the wiring needed in the harnesses.

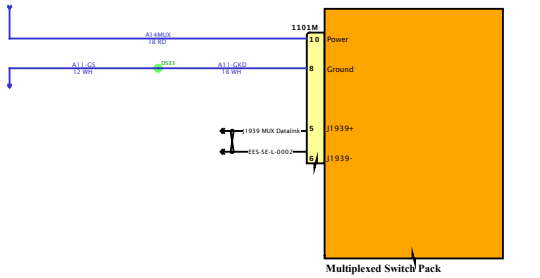

NAVISTAR INC. CONFIDENTIAL PROPRIETARY

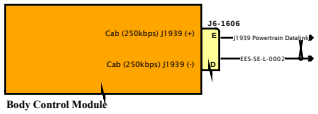

DESIGN DESCRIPTION

FEATURE CODES

SOFTWARE FEATURE CODES

NAVISTAR INC. CONFIDENTIAL PROPRIETARY

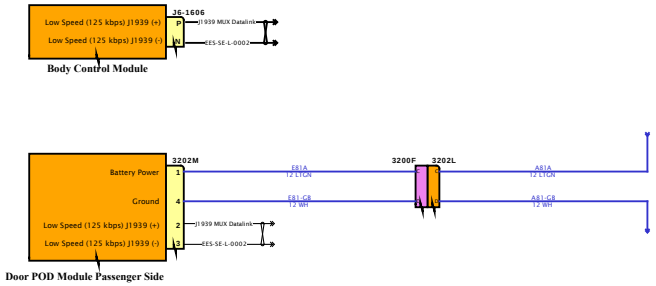

DESIGN DESCRIPTION

FEATURE CODES

SOFTWARE FEATURE CODES

NAVISTAR INC. CONFIDENTIAL PROPRIETARY

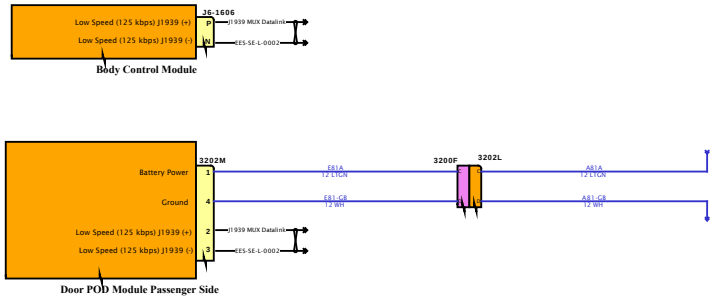

DESIGN DESCRIPTION

FEATURE CODES

SOFTWARE FEATURE CODES

NAVISTAR
NAVISTAR, INC. CONFIDENTIAL PROPRIETARY

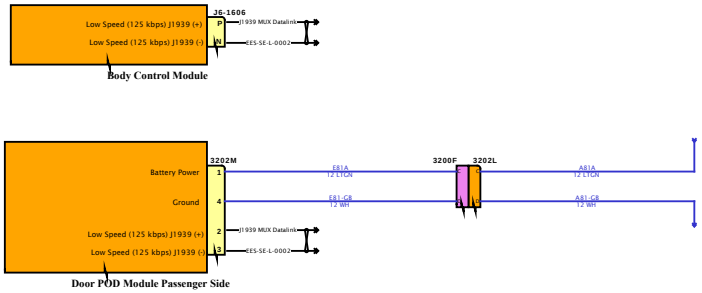

DESIGN DESCRIPTION

FEATURE CODES

SOFTWARE FEATURE CODES

NAVISTAR INC. CONFIDENTIAL PROPRIETARY

Diagram1

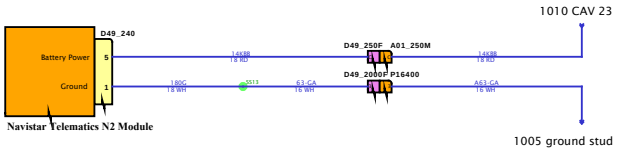

DESIGN DESCRIPTION

FEATURE CODES

SOFTWARE FEATURE CODES

NAVISTAR INC. CONFIDENTIAL PROPRIETARY

Diagram1

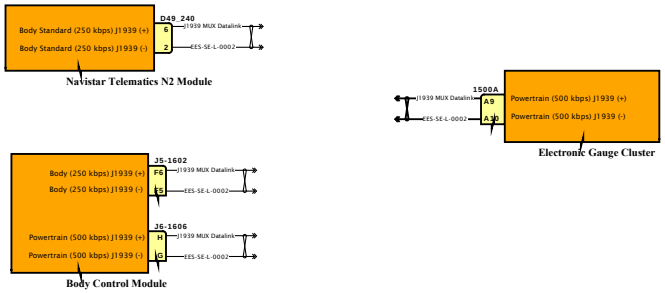

DESIGN DESCRIPTION

FEATURE CODES

SOFTWARE FEATURE CODES

NAVISTAR INC. CONFIDENTIAL PROPRIETARY

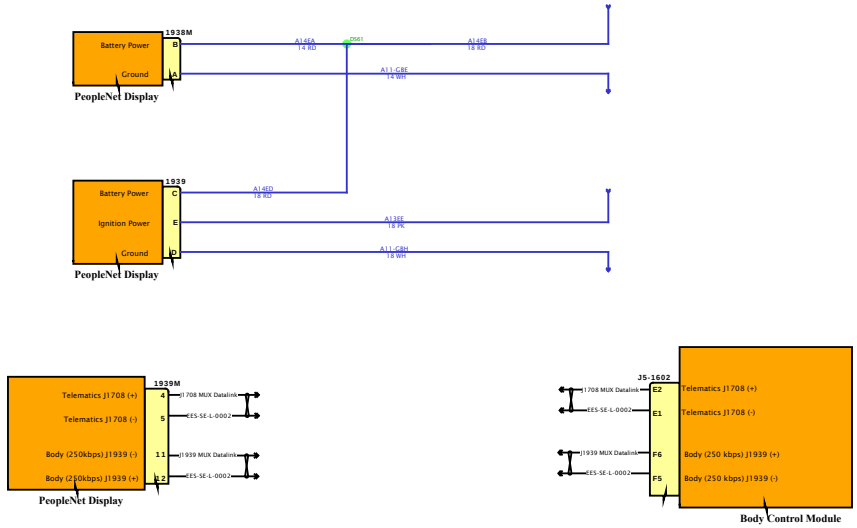

DESIGN DESCRIPTION

FEATURE CODES

SOFTWARE FEATURE CODES

NAVISTAR INC. CONFIDENTIAL PROPRIETARY

Diagram1

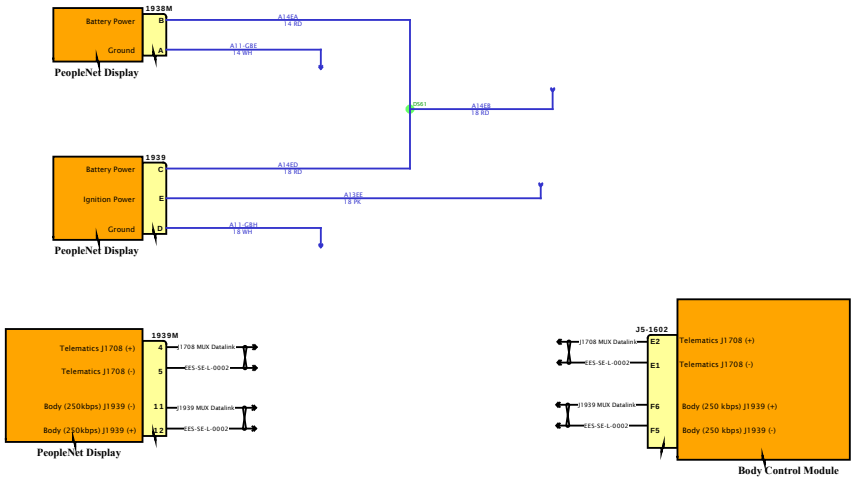

DESIGN DESCRIPTION

FEATURE CODES

SOFTWARE FEATURE CODES

NAVISTAR
NAVISTAR, INC. CONFIDENTIAL PROPRIETARY

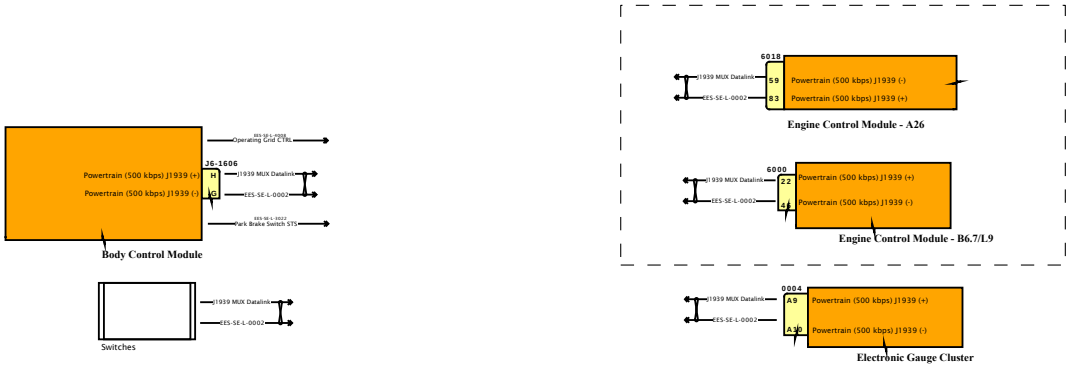

DESIGN DESCRIPTION

FEATURE CODES

SOFTWARE FEATURE CODES

NAVISTAR INC. CONFIDENTIAL PROPRIETARY

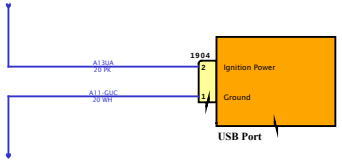

DESIGN DESCRIPTION

FEATURE CODES

SOFTWARE FEATURE CODES

NAVISTAR INC. CONFIDENTIAL PROPRIETARY

Diagram1

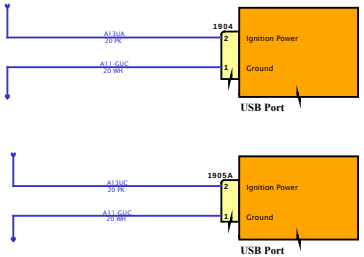

DESIGN DESCRIPTION

FEATURE CODES

SOFTWARE FEATURE CODES

NAVISTAR INC. CONFIDENTIAL PROPRIETARY

Diagram2

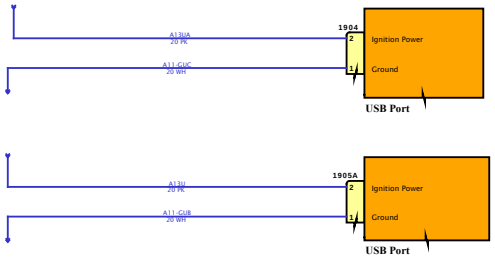

DESIGN DESCRIPTION

FEATURE CODES

SOFTWARE FEATURE CODES

NAVISTAR INC. CONFIDENTIAL PROPRIETARY

DESIGN DESCRIPTION

FEATURE CODES

SOFTWARE FEATURE CODES

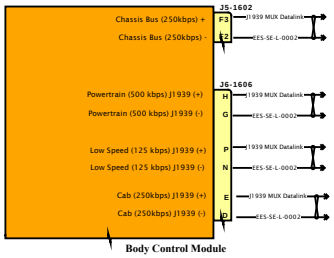

NAVISTAR INC. CONFIDENTIAL PROPRIETARY

Diagram1

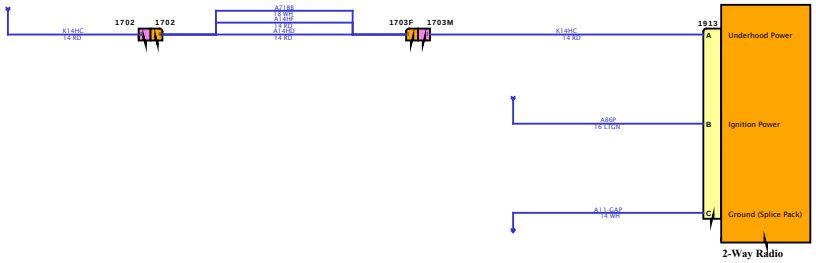

DESIGN DESCRIPTION

FEATURE CODES

SOFTWARE FEATURE CODES

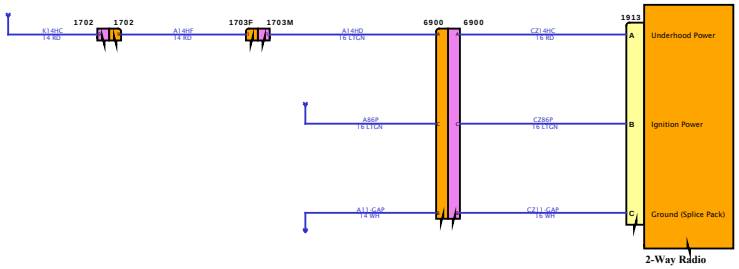

DESIGN DESCRIPTION

FEATURE CODES

SOFTWARE FEATURE CODES

NAVISTAR INC. CONFIDENTIAL PROPRIETARY

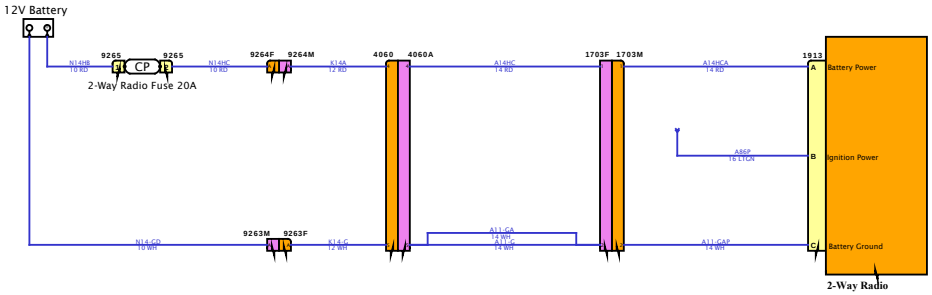

DESIGN DESCRIPTION

FEATURE CODES

SOFTWARE FEATURE CODES

Diagram2

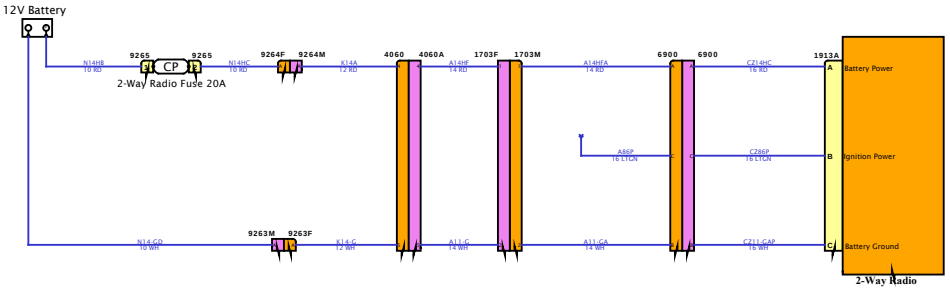

DESIGN DESCRIPTION

FEATURE CODES

SOFTWARE FEATURE CODES

NAVISTAR INC. CONFIDENTIAL PROPRIETARY

Diagram1

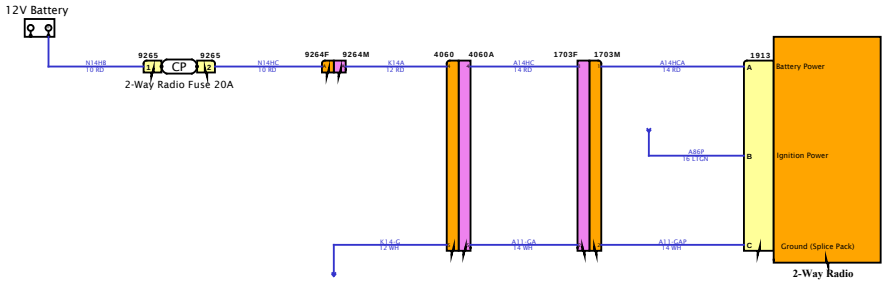

DESIGN DESCRIPTION

FEATURE CODES

SOFTWARE FEATURE CODES

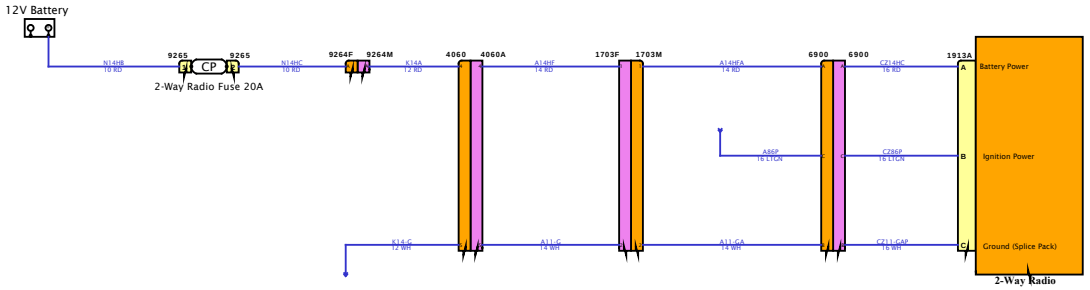

DESIGN DESCRIPTION

FEATURE CODES

SOFTWARE FEATURE CODES

NAVISTAR INC. CONFIDENTIAL PROPRIETARY

Diagram1

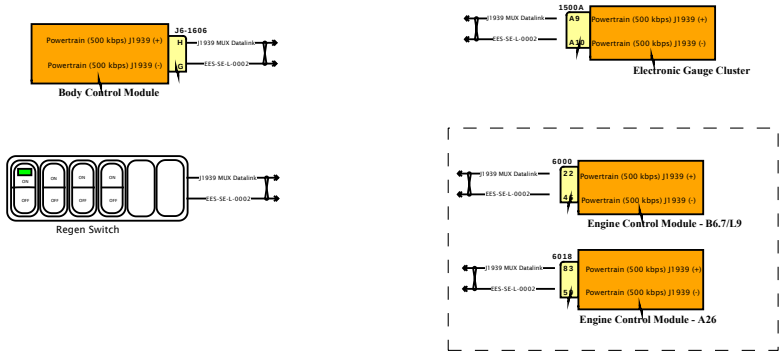

DESIGN DESCRIPTION

FEATURE CODES

SOFTWARE FEATURE CODES

NAVISTAR INC. CONFIDENTIAL PROPRIETARY

Diagram1

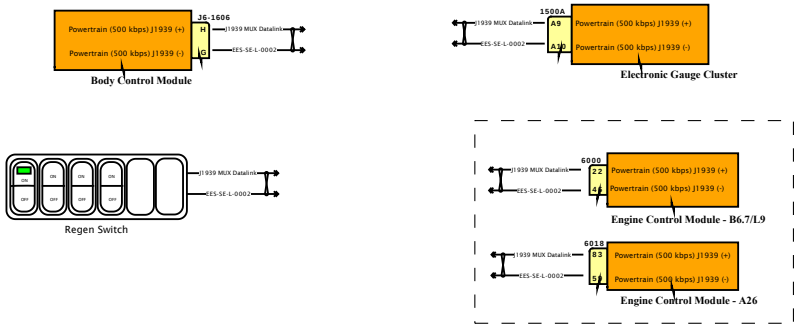

DESIGN DESCRIPTION

FEATURE CODES

SOFTWARE FEATURE CODES

NAVISTAR INC. CONFIDENTIAL PROPRIETARY

Diagram1

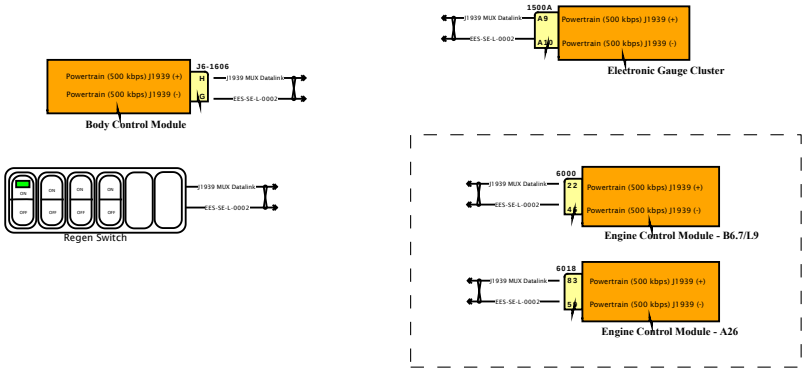

DESIGN DESCRIPTION

FEATURE CODES

SOFTWARE FEATURE CODES

NAVISTAR INC. CONFIDENTIAL PROPRIETARY

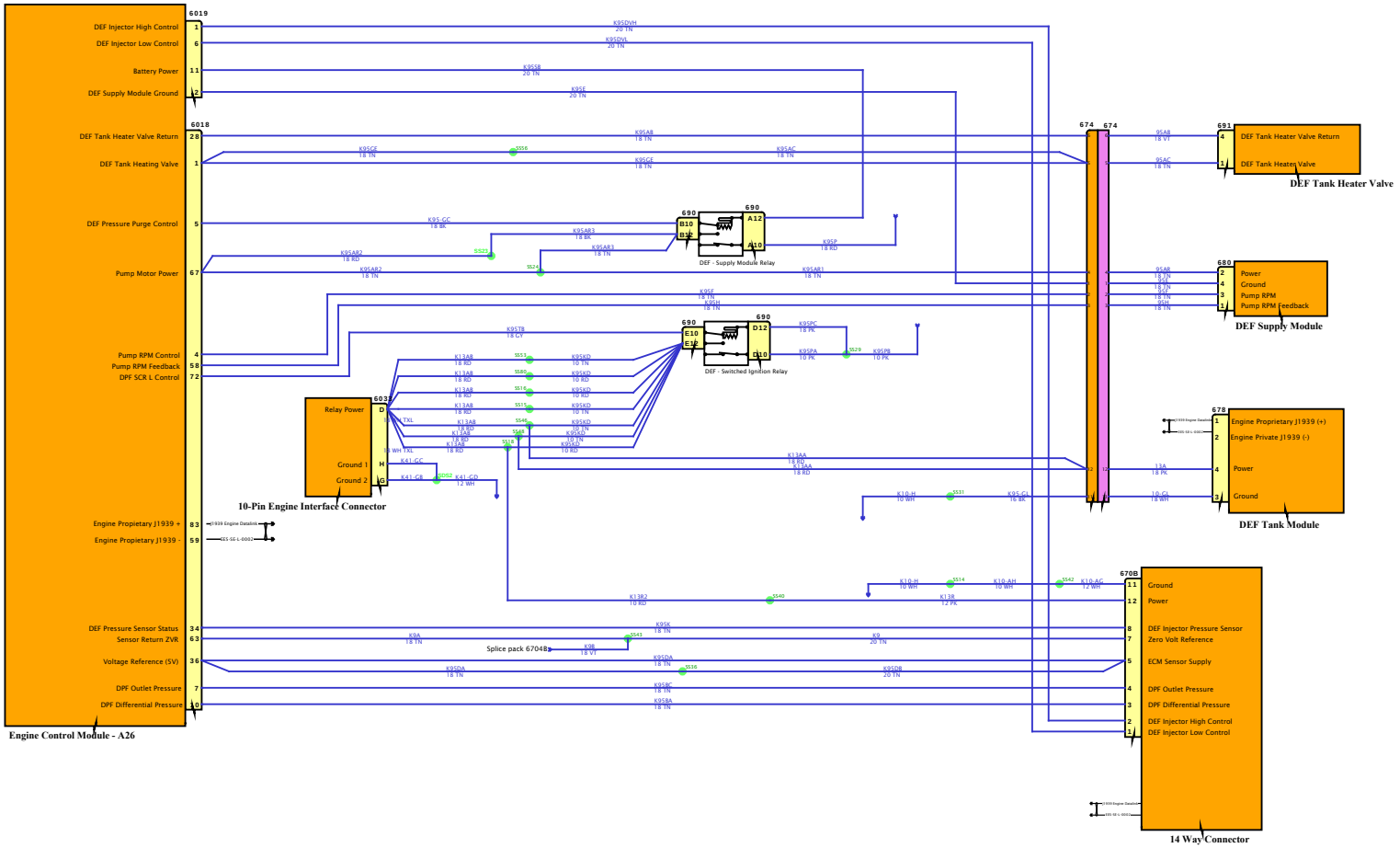

DESIGN DESCRIPTION

FEATURE CODES

SOFTWARE FEATURE CODES

NAVISTAR INC. CONFIDENTIAL PROPRIETARY

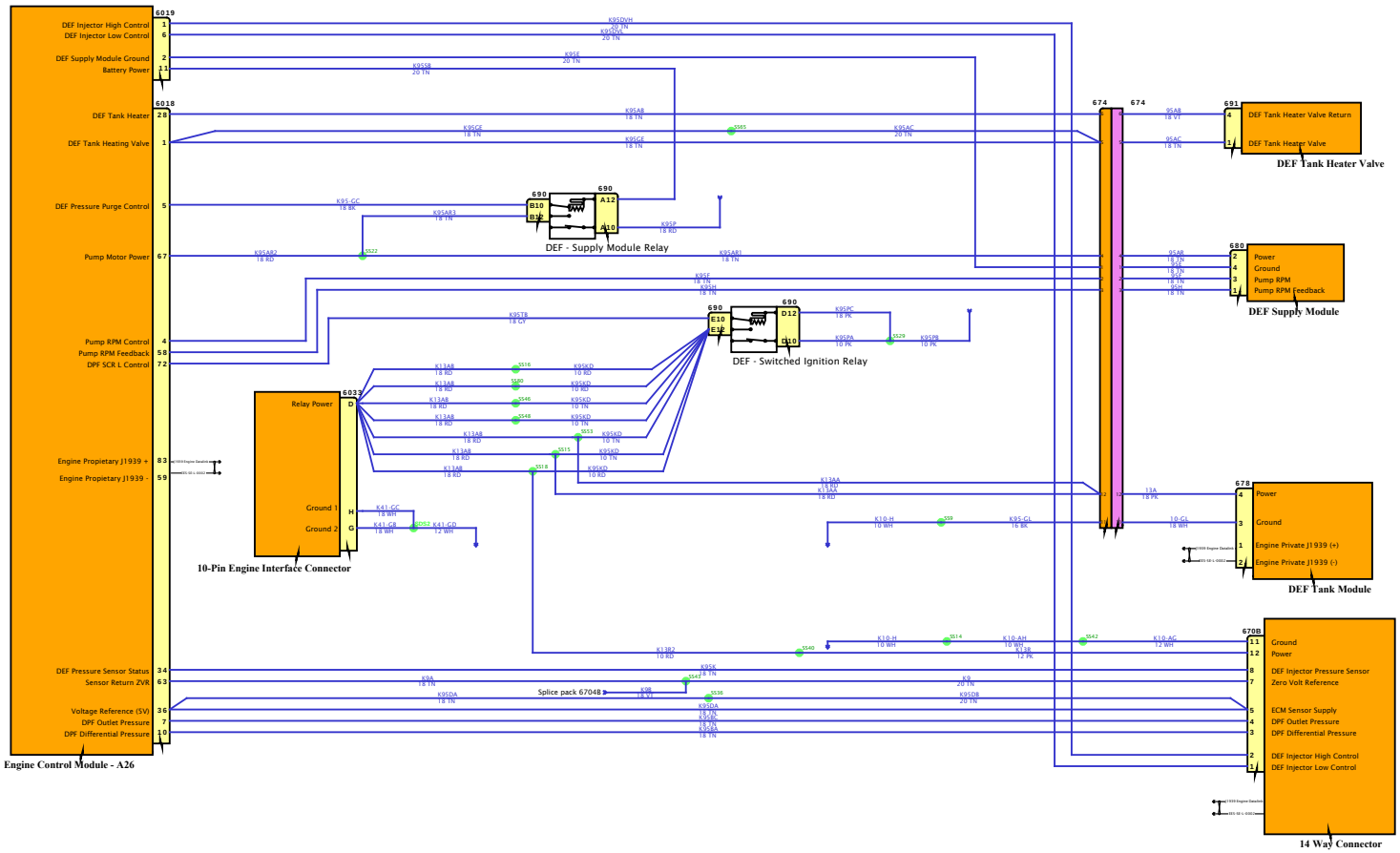

DESIGN DESCRIPTION

FEATURE CODES

SOFTWARE FEATURE CODES

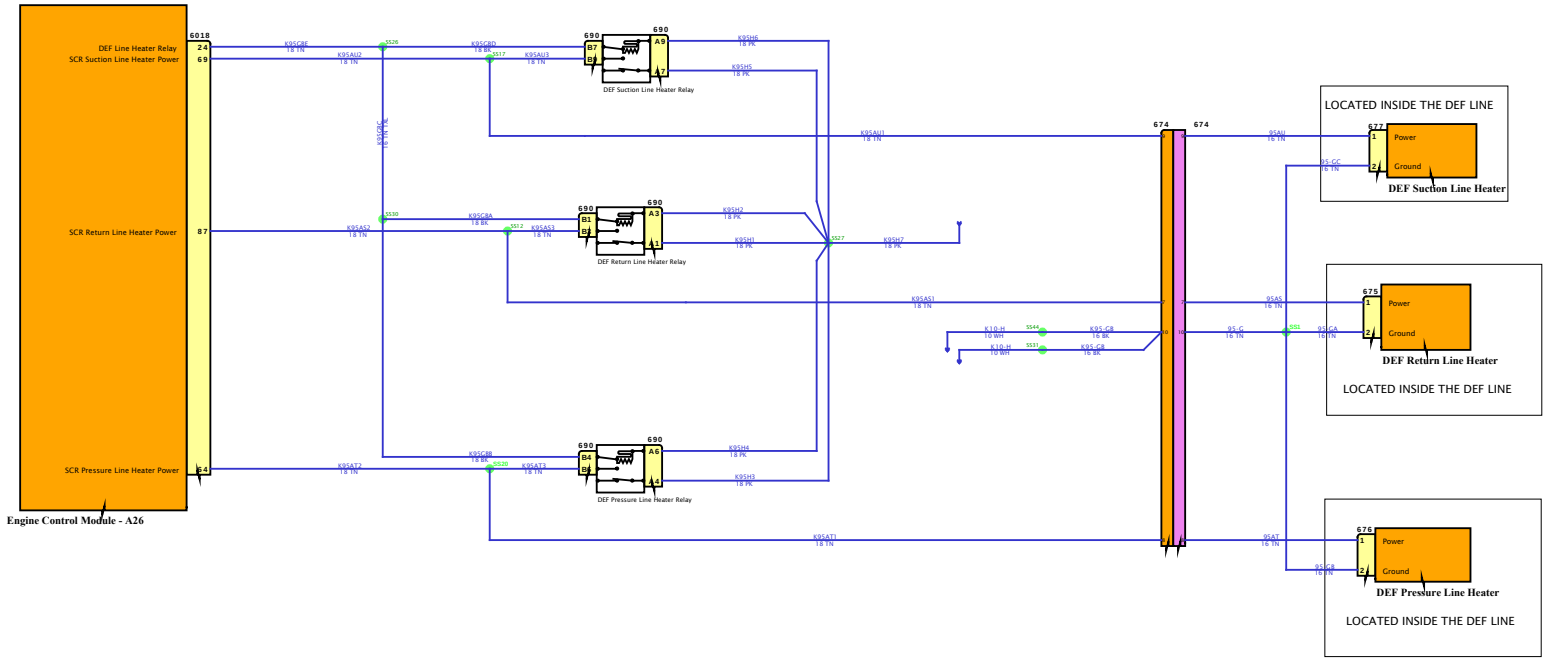

DESIGN DESCRIPTION

FEATURE CODES

SOFTWARE FEATURE CODES

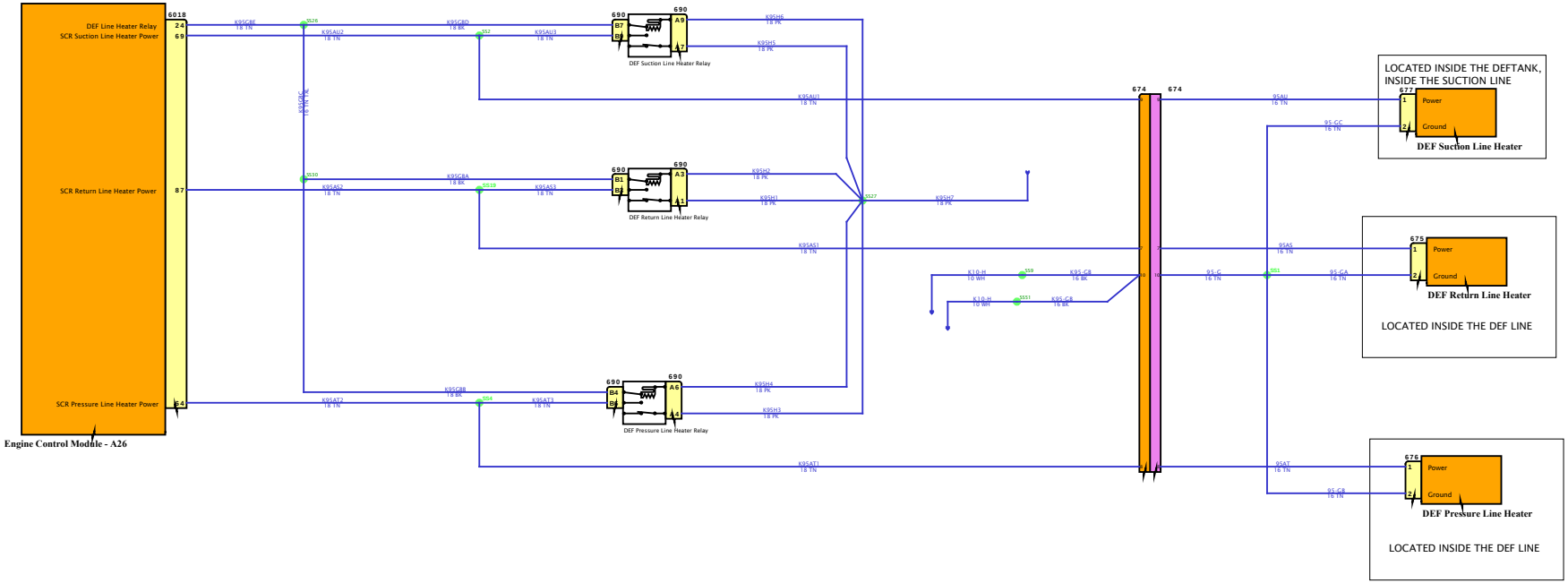

DESIGN DESCRIPTION

FEATURE CODES

SOFTWARE FEATURE CODES

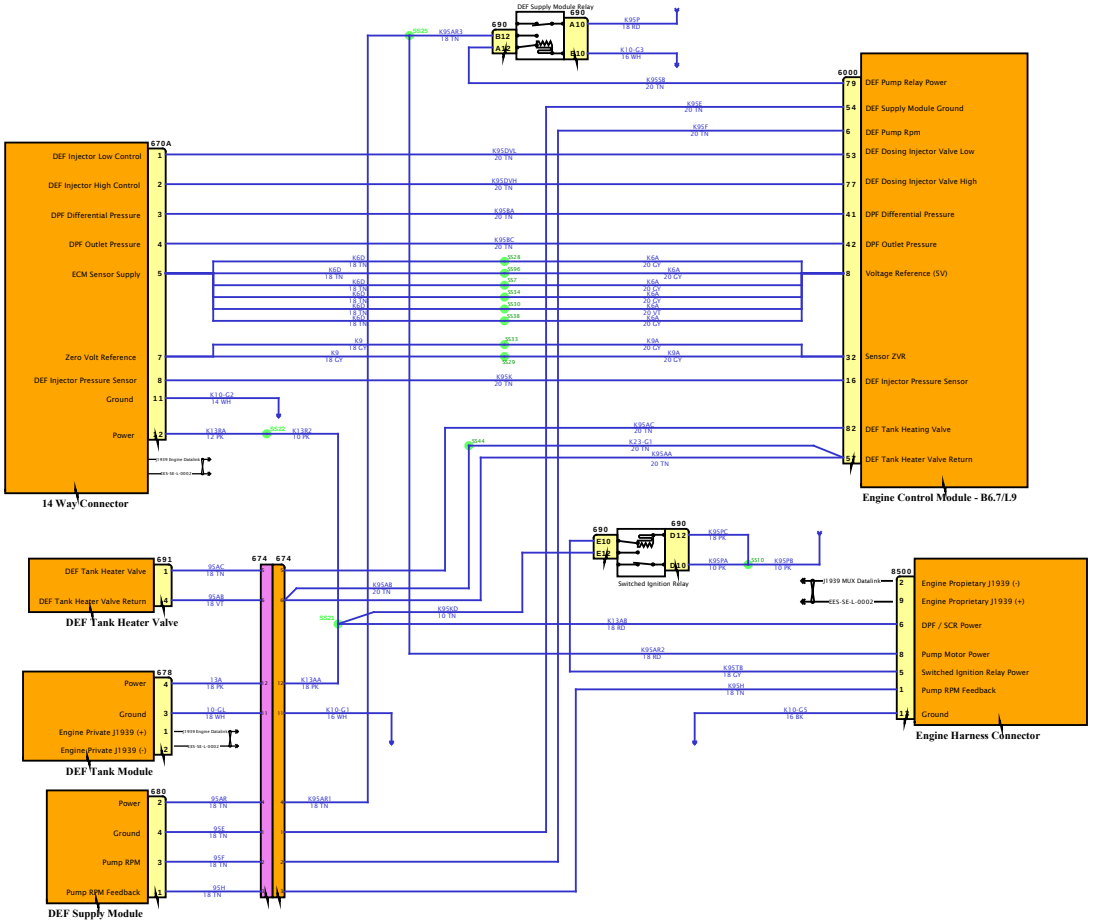

DESIGN DESCRIPTION

FEATURE CODES

SOFTWARE FEATURE CODES

NAVISTAR INC. CONFIDENTIAL PROPRIETARY

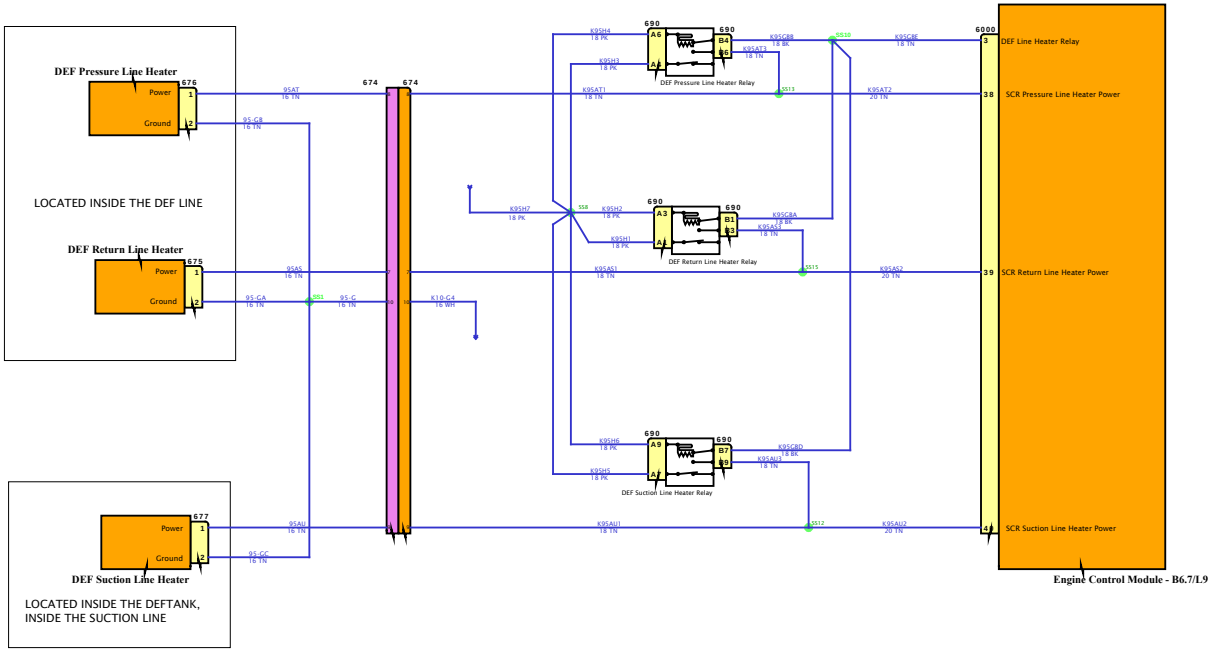

DESIGN DESCRIPTION

FEATURE CODES

SOFTWARE FEATURE CODES

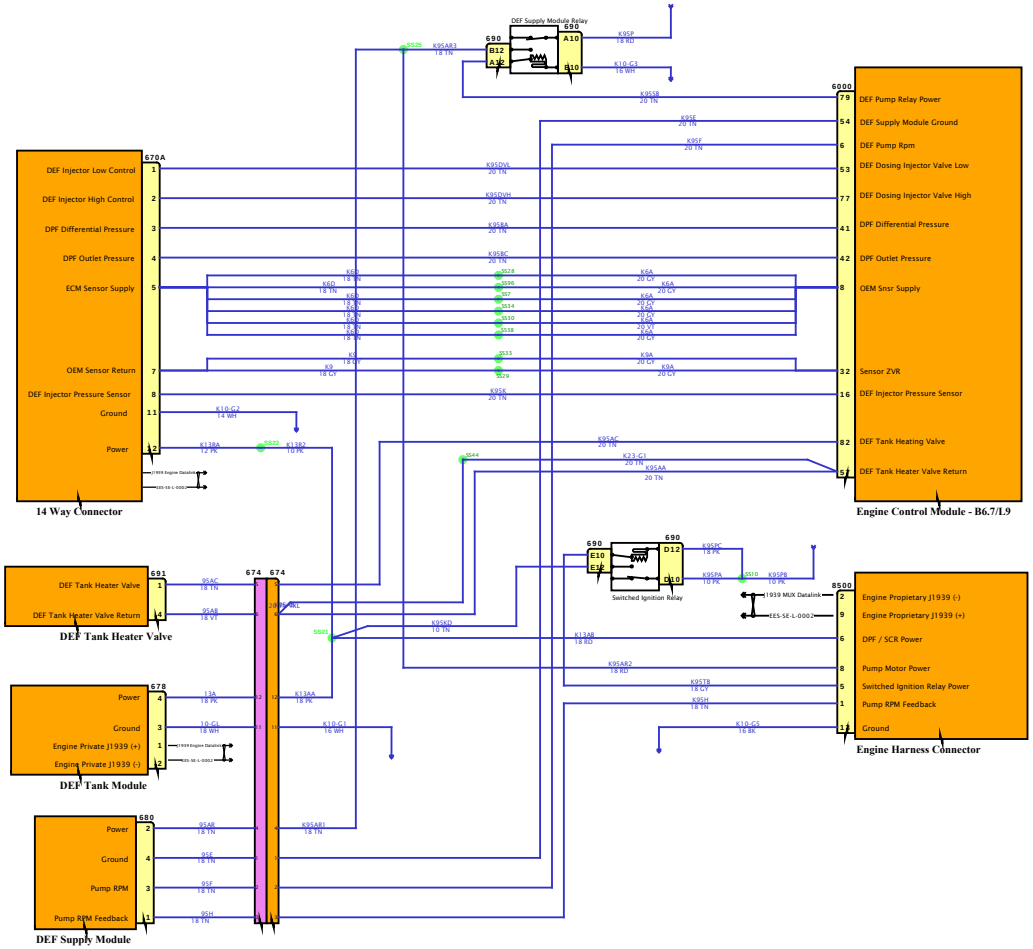

DESIGN DESCRIPTION

FEATURE CODES

SOFTWARE FEATURE CODES

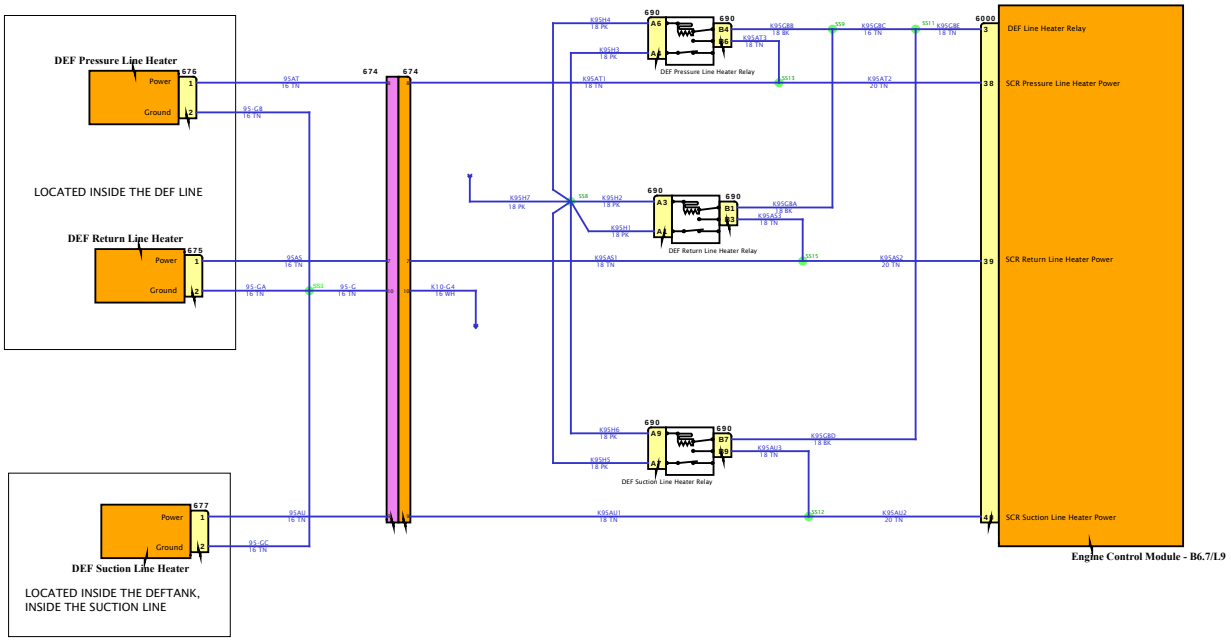

DESIGN DESCRIPTION

FEATURE CODES

SOFTWARE FEATURE CODES

DESIGN DESCRIPTION

FEATURE CODES

SOFTWARE FEATURE CODES

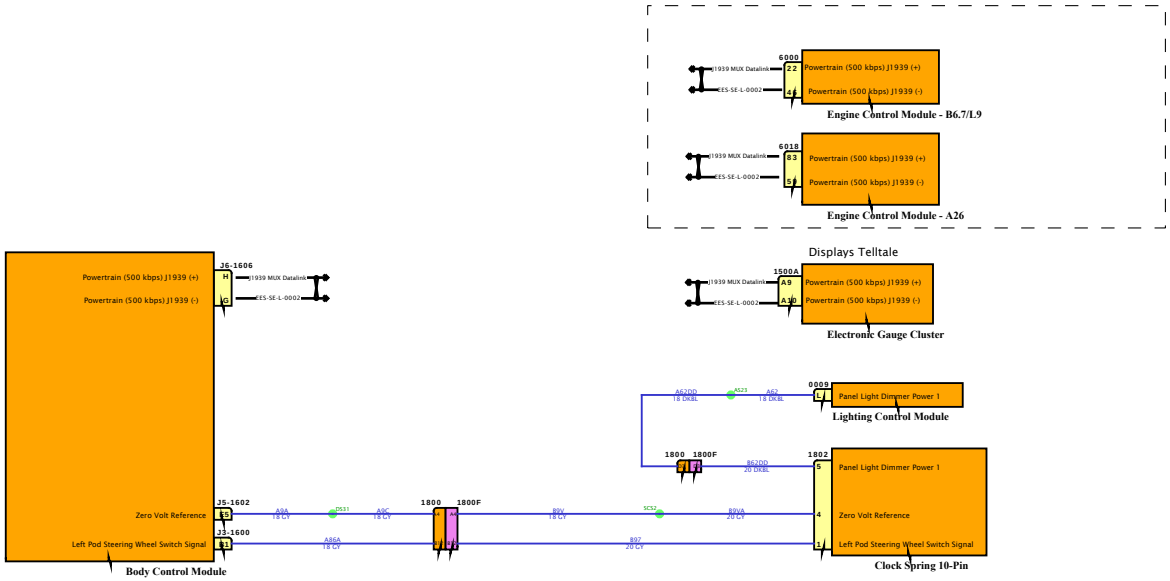

DESIGN DESCRIPTION

FEATURE CODES

SOFTWARE FEATURE CODES

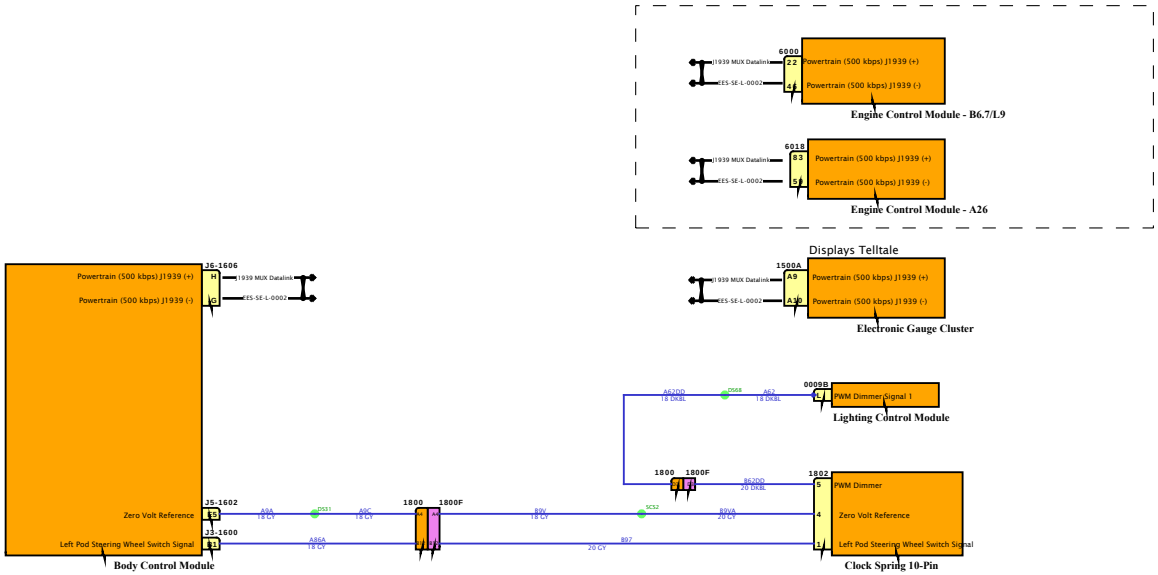

Diagram1

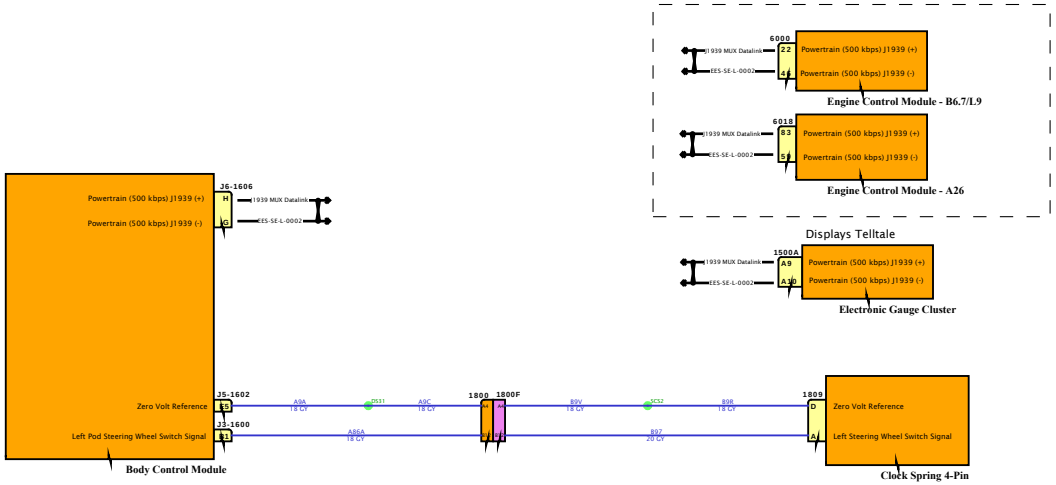

DESIGN DESCRIPTION

FEATURE CODES

SOFTWARE FEATURE CODES

NAVISTAR
NAVISTAR, INC. CONFIDENTIAL PROPRIETARY

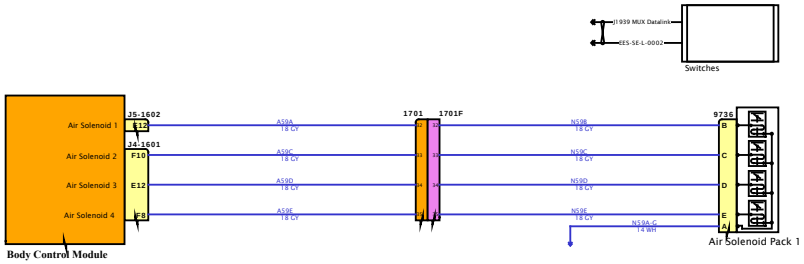

DESIGN DESCRIPTION

FEATURE CODES

SOFTWARE FEATURE CODES

NAVISTAR INC. CONFIDENTIAL PROPRIETARY

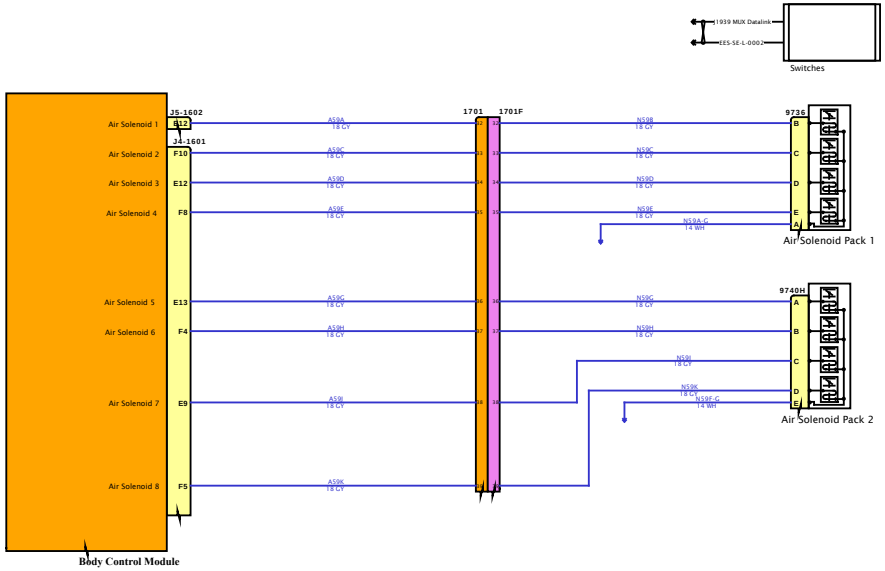

DESIGN DESCRIPTION

FEATURE CODES

SOFTWARE FEATURE CODES

NAVISTAR INC. CONFIDENTIAL PROPRIETARY

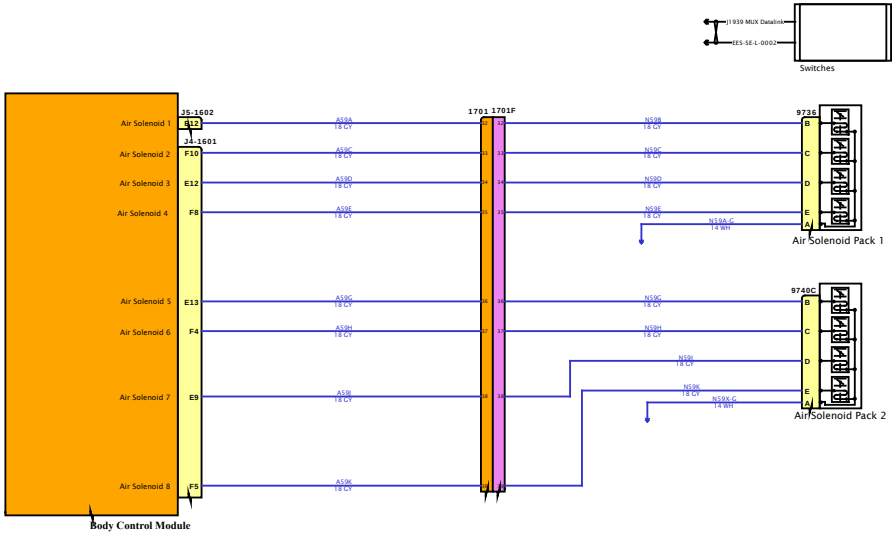

DESIGN DESCRIPTION

FEATURE CODES

SOFTWARE FEATURE CODES

NAVISTAR INC. CONFIDENTIAL PROPRIETARY

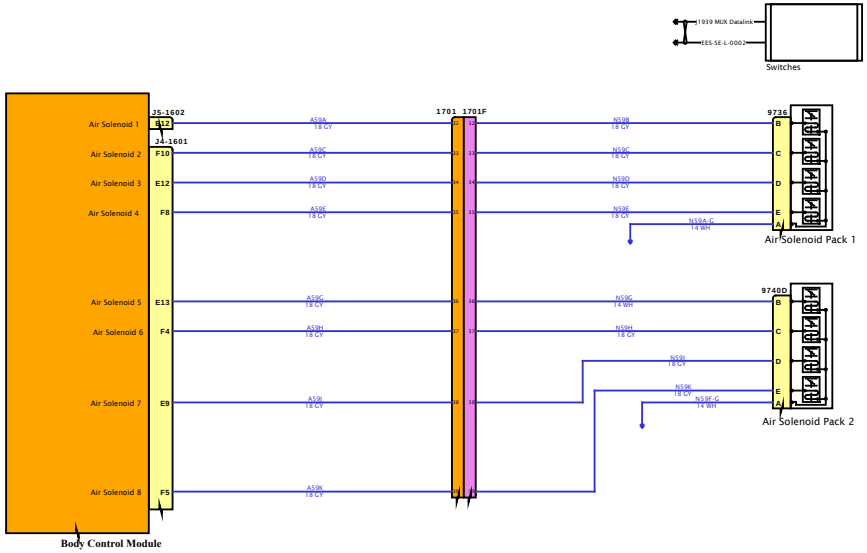

DESIGN DESCRIPTION

FEATURE CODES

SOFTWARE FEATURE CODES

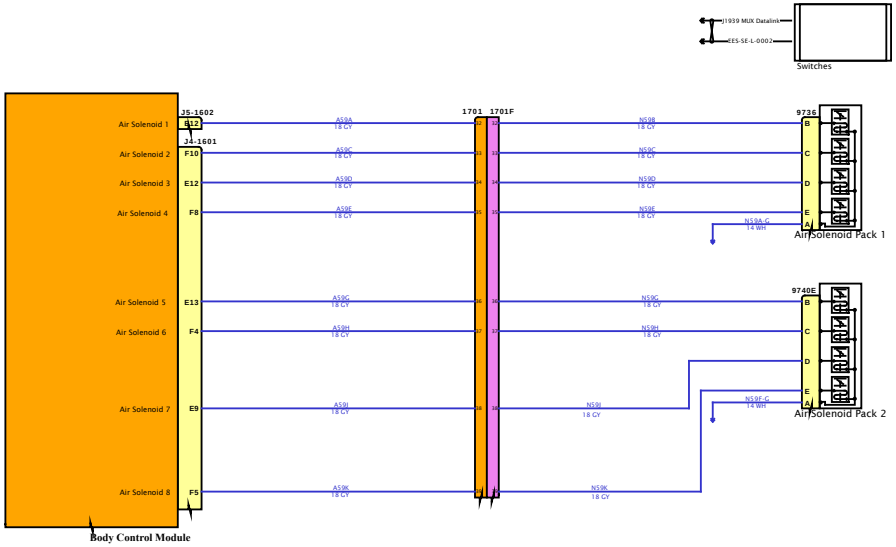

DESIGN DESCRIPTION

FEATURE CODES

SOFTWARE FEATURE CODES

NAVISTAR INC. CONFIDENTIAL PROPRIETARY

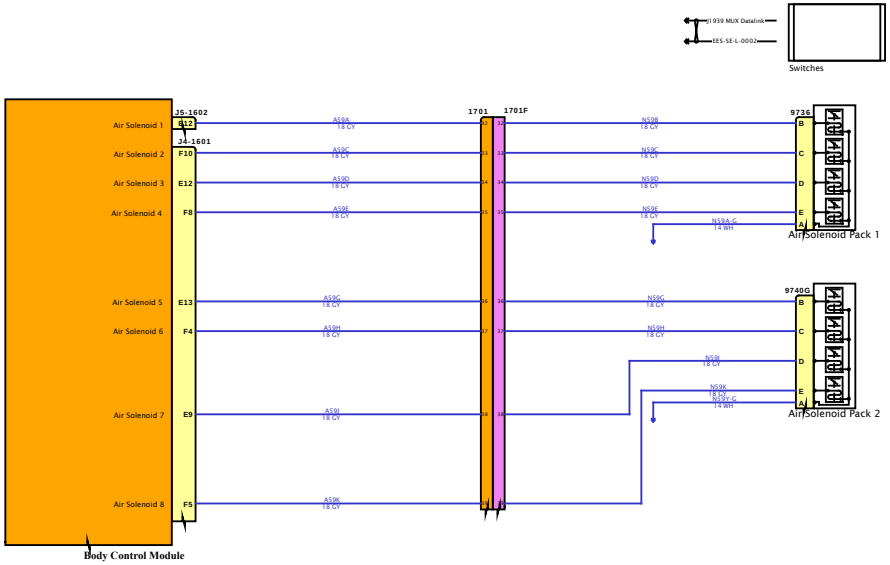

DESIGN DESCRIPTION

FEATURE CODES

SOFTWARE FEATURE CODES

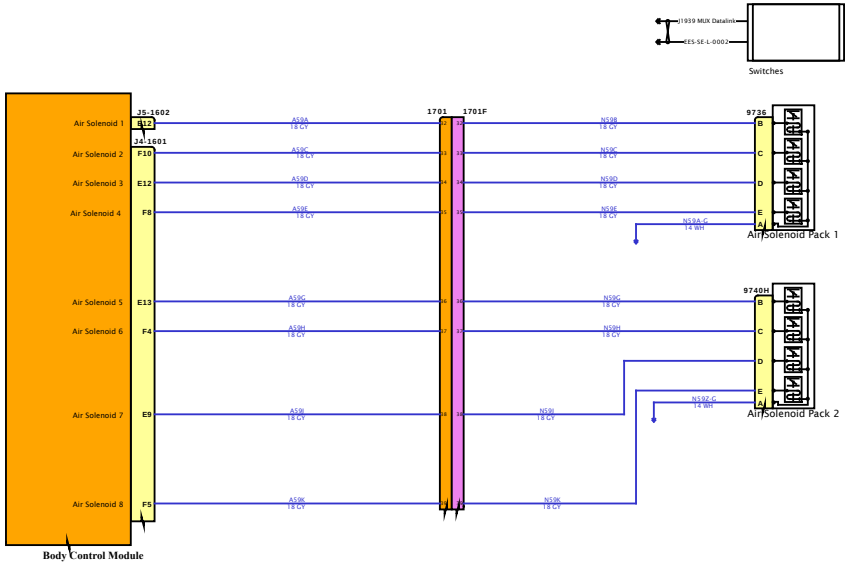

DESIGN DESCRIPTION

FEATURE CODES

SOFTWARE FEATURE CODES

NAVISTAR INC. CONFIDENTIAL PROPRIETARY

Diagram1

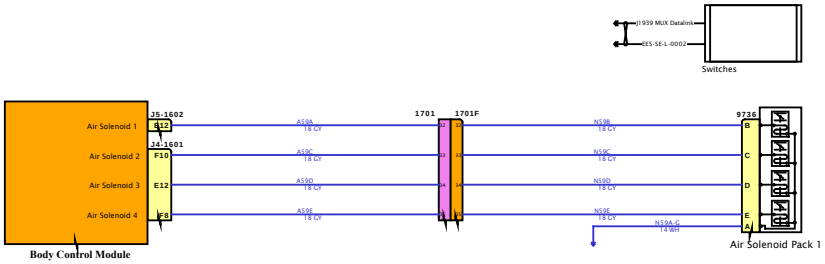

DESIGN DESCRIPTION

FEATURE CODES

SOFTWARE FEATURE CODES

NAVISTAR INC. CONFIDENTIAL PROPRIETARY

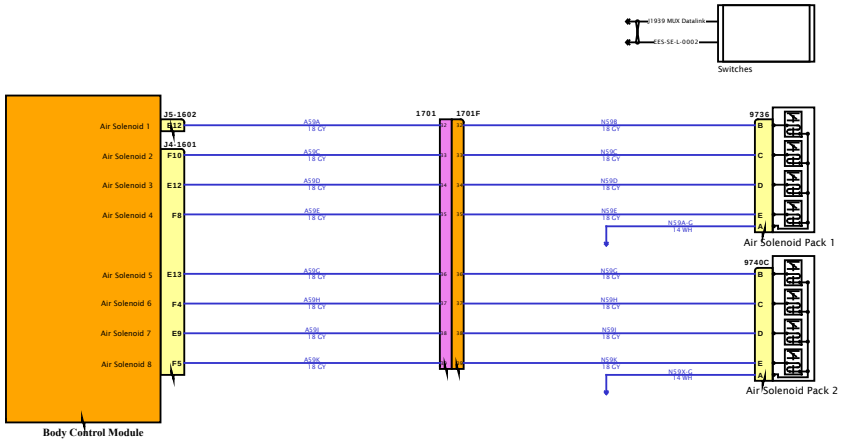

DESIGN DESCRIPTION

FEATURE CODES

SOFTWARE FEATURE CODES

NAVISTAR INC. CONFIDENTIAL PROPRIETARY

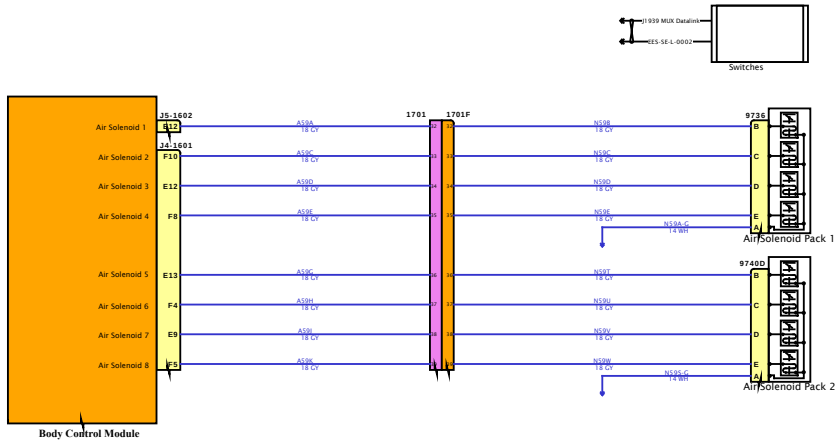

DESIGN DESCRIPTION

FEATURE CODES

SOFTWARE FEATURE CODES

NAVISTAR
NAVISTAR, INC. CONFIDENTIAL PROPRIETARY

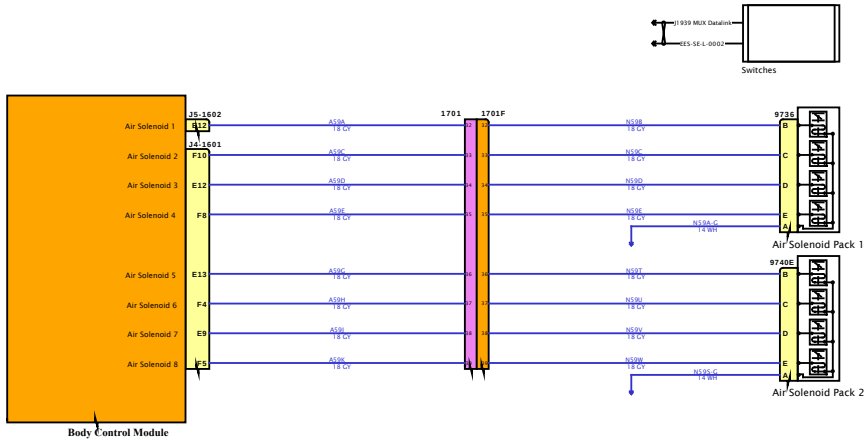

DESIGN DESCRIPTION

FEATURE CODES

SOFTWARE FEATURE CODES

NAVISTAR INC. CONFIDENTIAL PROPRIETARY

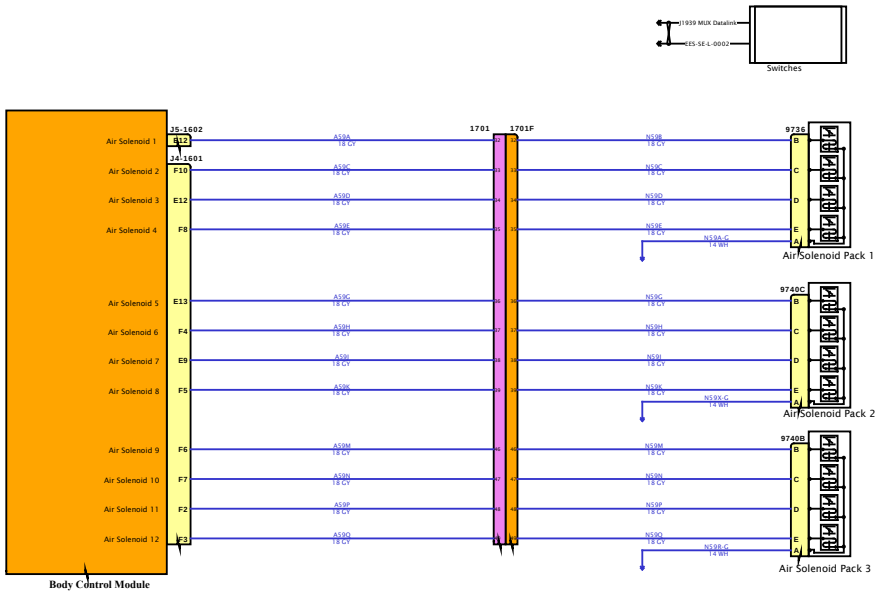

DESIGN DESCRIPTION

FEATURE CODES

SOFTWARE FEATURE CODES

NAVISTAR INC. CONFIDENTIAL PROPRIETARY

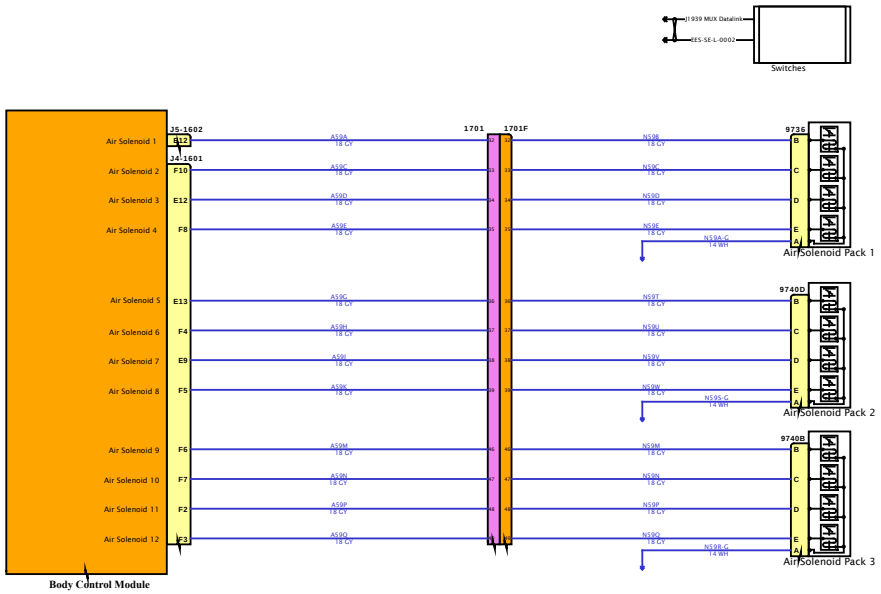

DESIGN DESCRIPTION

FEATURE CODES

SOFTWARE FEATURE CODES

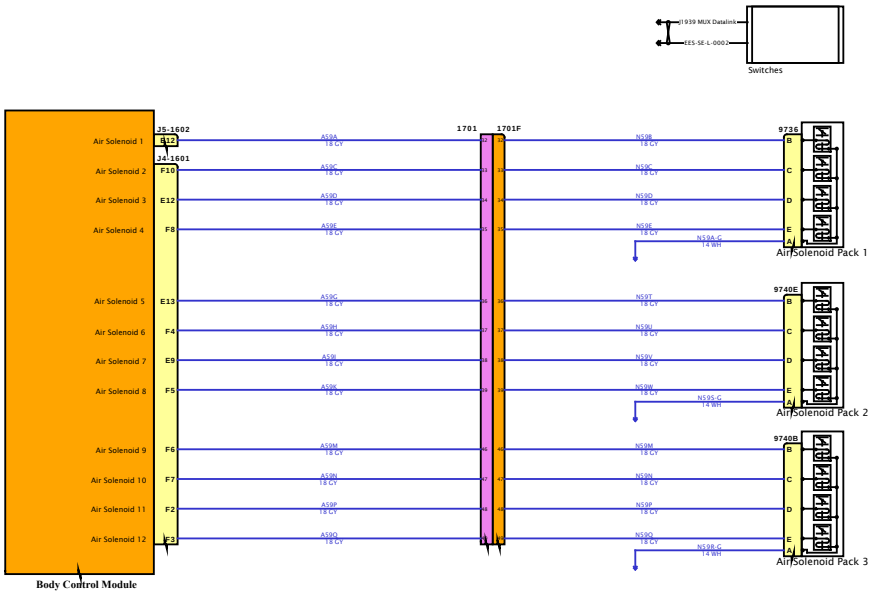

DESIGN DESCRIPTION

FEATURE CODES

SOFTWARE FEATURE CODES

NAVISTAR INC. CONFIDENTIAL PROPRIETARY

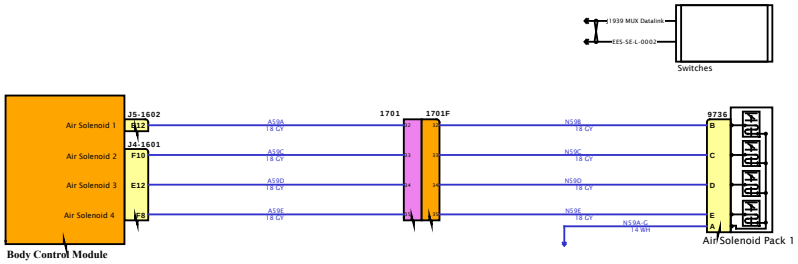

DESIGN DESCRIPTION

FEATURE CODES

SOFTWARE FEATURE CODES

NAVISTAR INC. CONFIDENTIAL PROPRIETARY

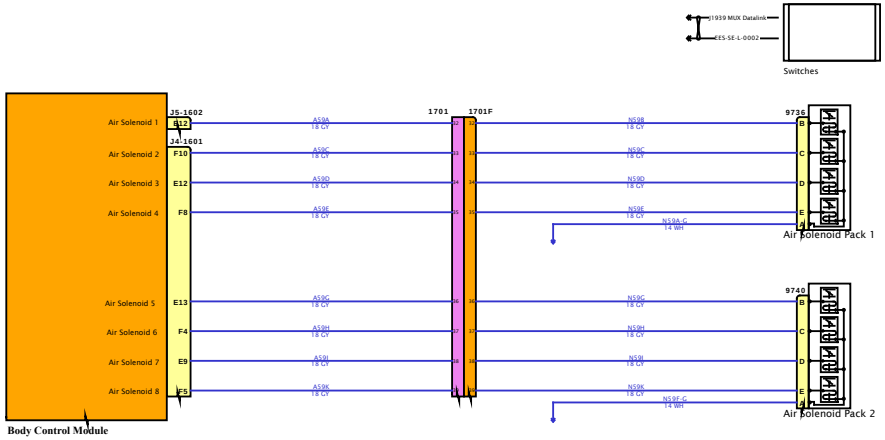

DESIGN DESCRIPTION

FEATURE CODES

SOFTWARE FEATURE CODES

NAVISTAR INC. CONFIDENTIAL PROPRIETARY

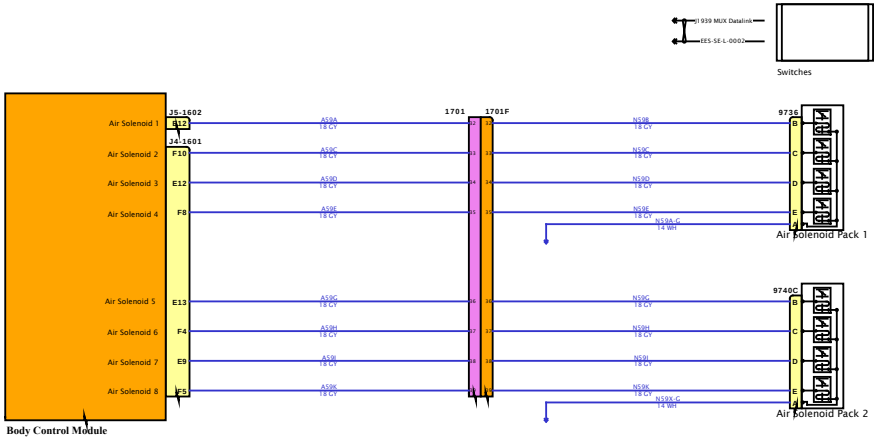

DESIGN DESCRIPTION

FEATURE CODES

SOFTWARE FEATURE CODES

NAVISTAR INC. CONFIDENTIAL PROPRIETARY

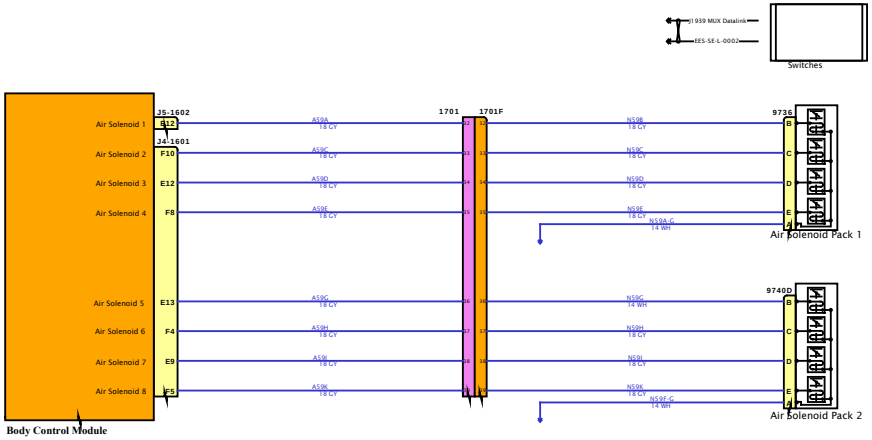

DESIGN DESCRIPTION

FEATURE CODES

SOFTWARE FEATURE CODES

NAVISTAR INC. CONFIDENTIAL PROPRIETARY

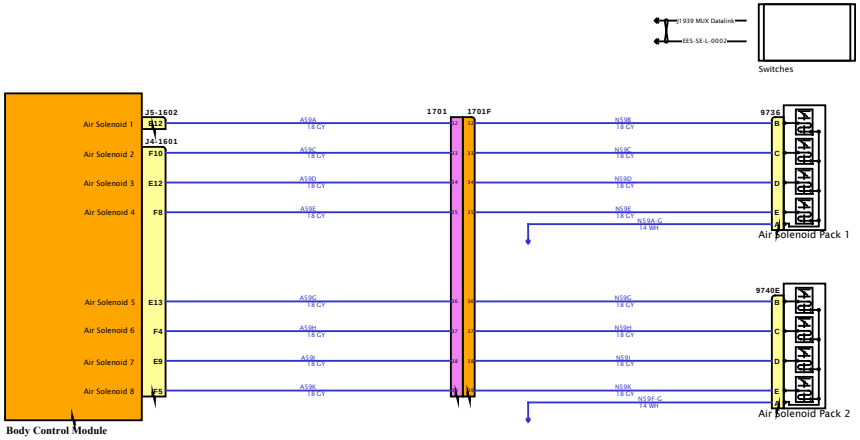

DESIGN DESCRIPTION

FEATURE CODES

SOFTWARE FEATURE CODES

NAVISTAR INC. CONFIDENTIAL PROPRIETARY

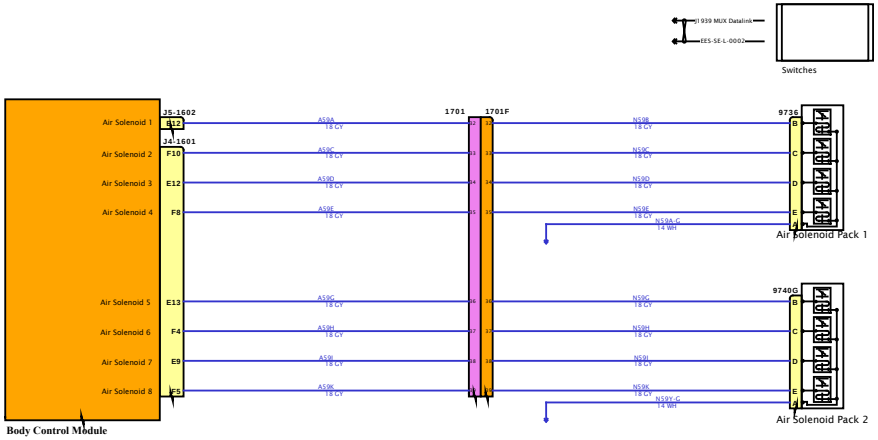

DESIGN DESCRIPTION

FEATURE CODES

SOFTWARE FEATURE CODES

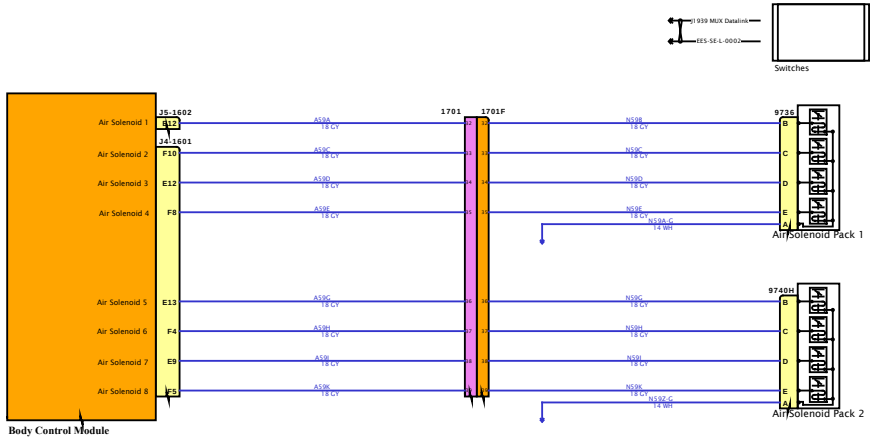

DESIGN DESCRIPTION

FEATURE CODES

SOFTWARE FEATURE CODES

NAVISTAR INC. CONFIDENTIAL PROPRIETARY

Diagram1

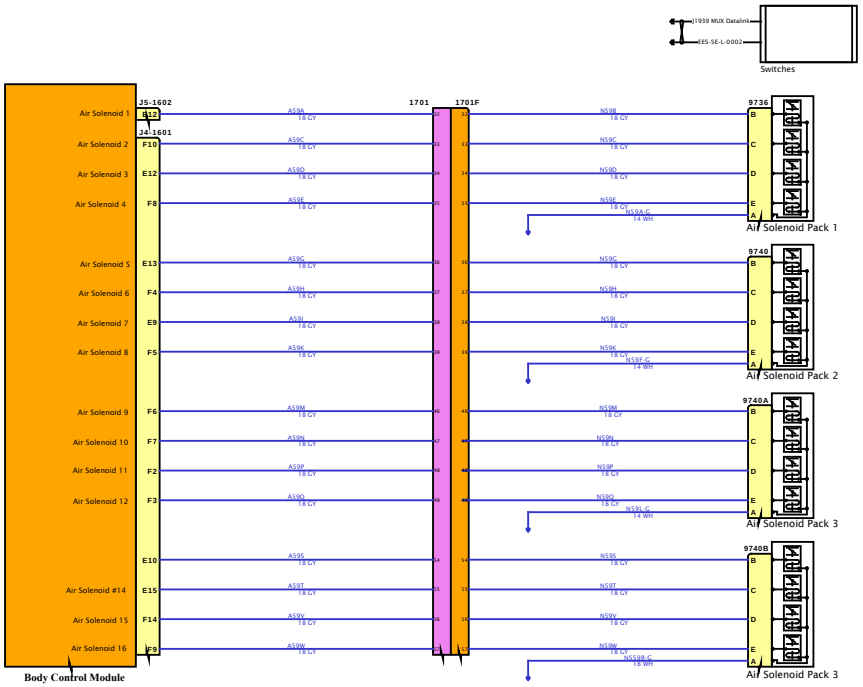

DESIGN DESCRIPTION

FEATURE CODES

SOFTWARE FEATURE CODES

NAVISTAR
NAVISTAR, INC. CONFIDENTIAL PROPRIETARY

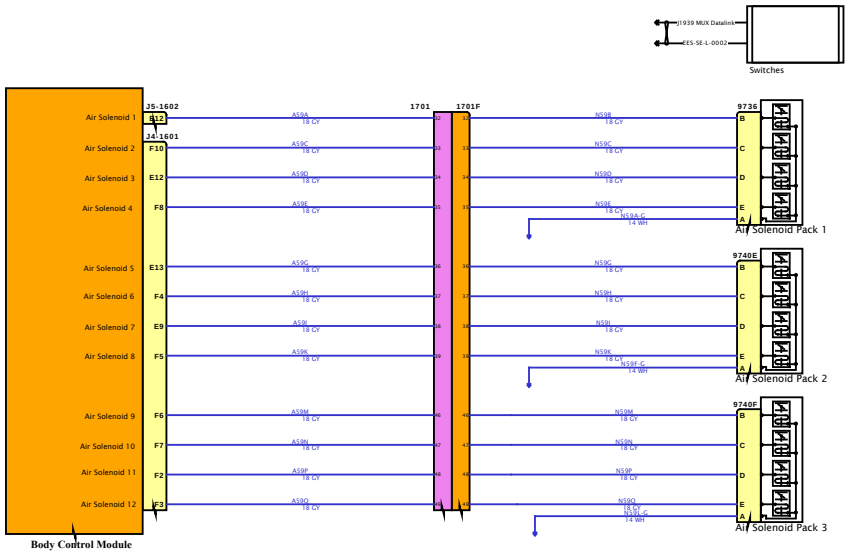

DESIGN DESCRIPTION

FEATURE CODES

SOFTWARE FEATURE CODES

NAVISTAR
NAVISTAR, INC. CONFIDENTIAL PROPRIETARY

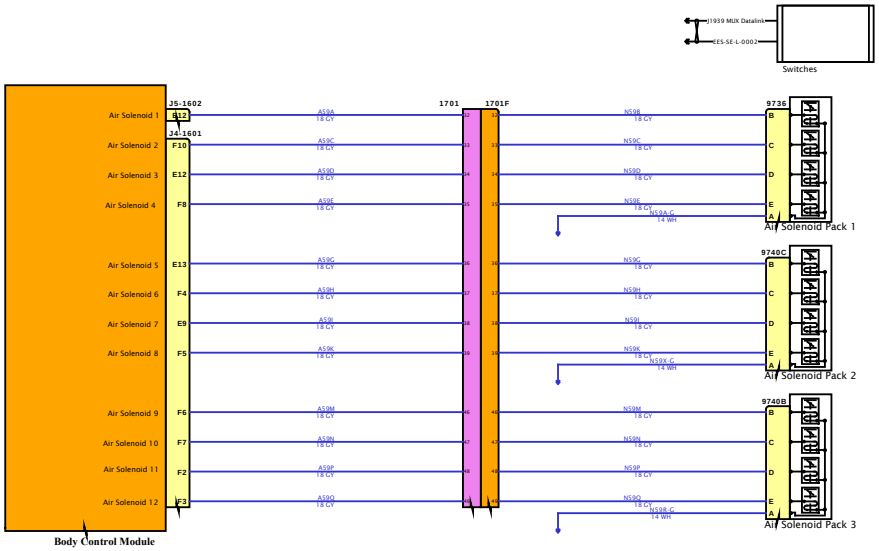

DESIGN DESCRIPTION

FEATURE CODES

SOFTWARE FEATURE CODES

NAVISTAR
NAVISTAR, INC. CONFIDENTIAL PROPRIETARY

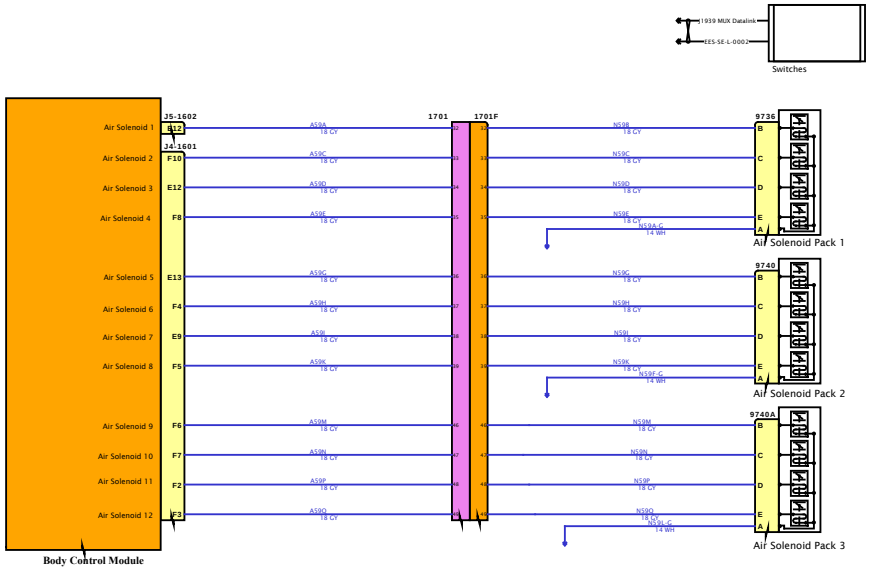

DESIGN DESCRIPTION

FEATURE CODES

SOFTWARE FEATURE CODES

NAVISTAR INC. CONFIDENTIAL PROPRIETARY

Diagram1-Option 1 (In Cab, W/08HAU)

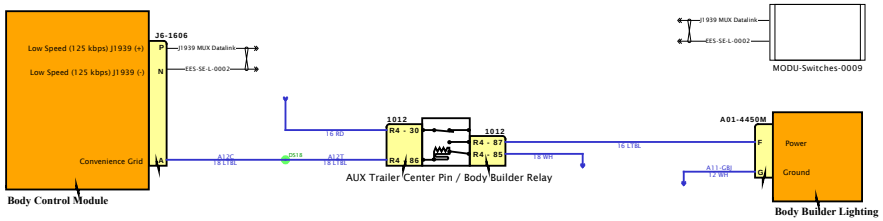

DESIGN DESCRIPTION

FEATURE CODES

SOFTWARE FEATURE CODES

NAVISTAR
NAVISTAR, INC. CONFIDENTIAL PROPRIETARY

Diagram1-Option 2 (Back-of-Cab, W/08HAB)

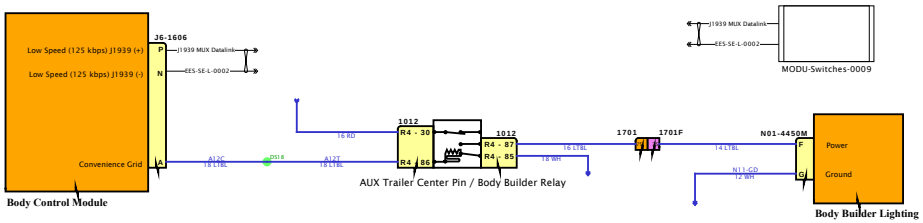

DESIGN DESCRIPTION

FEATURE CODES

SOFTWARE FEATURE CODES

NAVISTAR
NAVISTAR, INC. CONFIDENTIAL PROPRIETARY

Diagram1-Option 3 (End-of-Frame, W/08HAE)

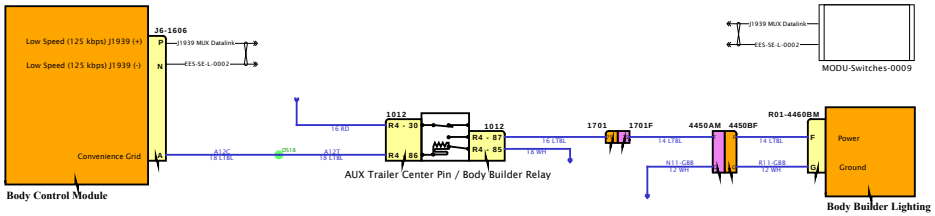

DESIGN DESCRIPTION

FEATURE CODES

SOFTWARE FEATURE CODES

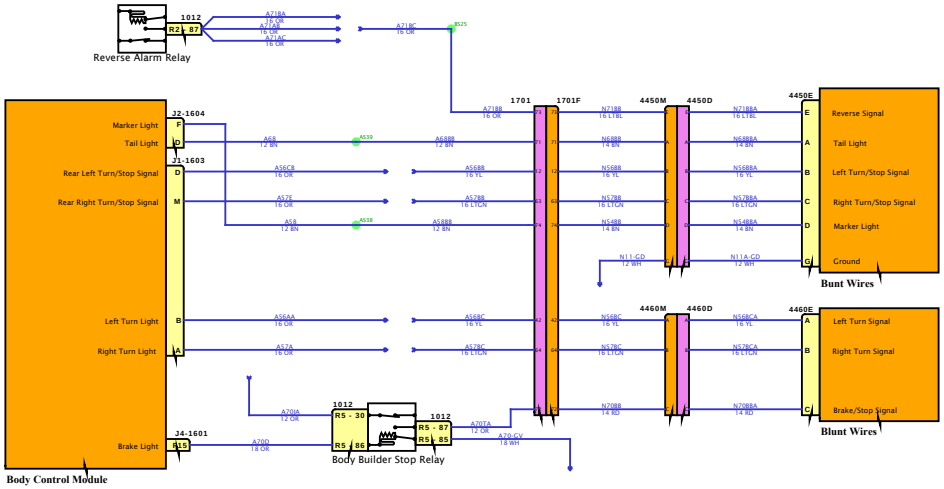

DESIGN DESCRIPTION

FEATURE CODES

SOFTWARE FEATURE CODES

NAVISTAR
NAVISTAR, INC. CONFIDENTIAL PROPRIETARY

DESIGN DESCRIPTION

FEATURE CODES

SOFTWARE FEATURE CODES

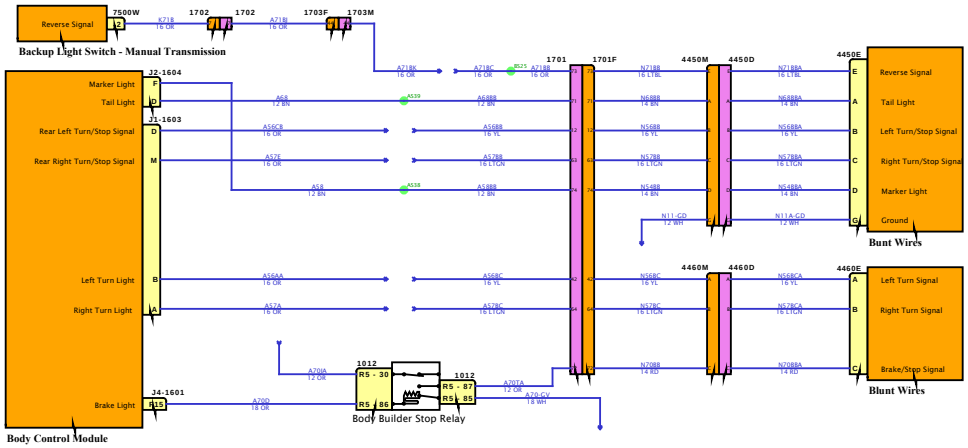

Diagram1-Option 1 (In Cab, W/08HAU)

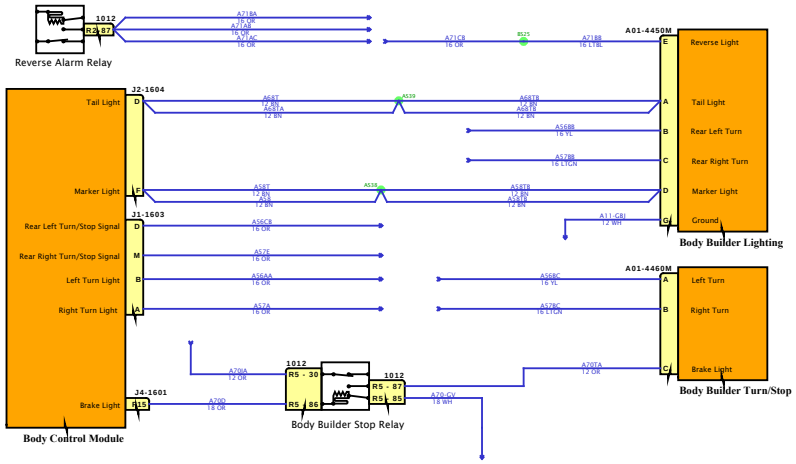

DESIGN DESCRIPTION

FEATURE CODES

SOFTWARE FEATURE CODES

NAVISTAR
NAVISTAR, INC. CONFIDENTIAL PROPRIETARY

Diagram1-Option 2 (Back-of-Cab, W/08HAB)

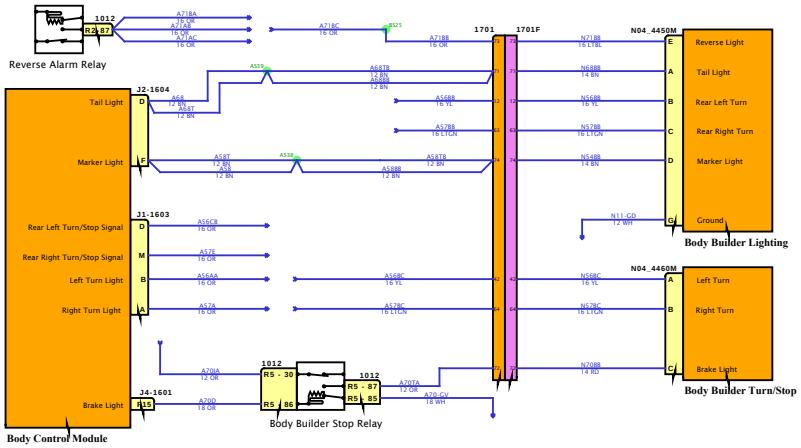

DESIGN DESCRIPTION

FEATURE CODES

SOFTWARE FEATURE CODES

Diagram1-Option 3 (End-of-Frame, W/08HAE)

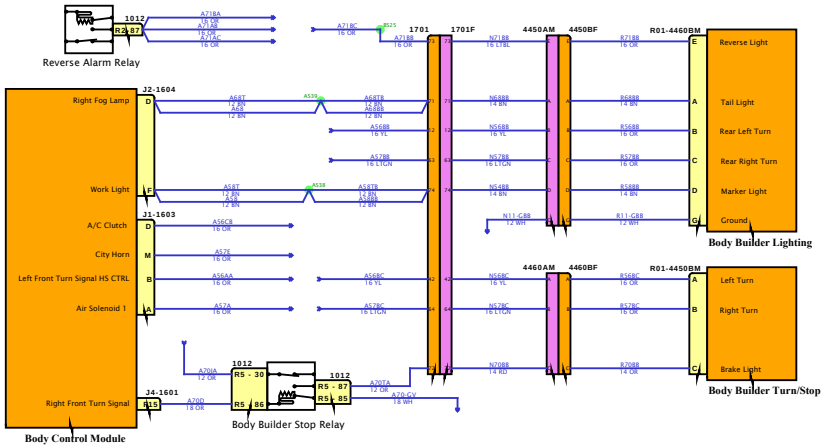

DESIGN DESCRIPTION

FEATURE CODES

SOFTWARE FEATURE CODES

Diagram1-Option 1 (In Cab, W/08HAU)

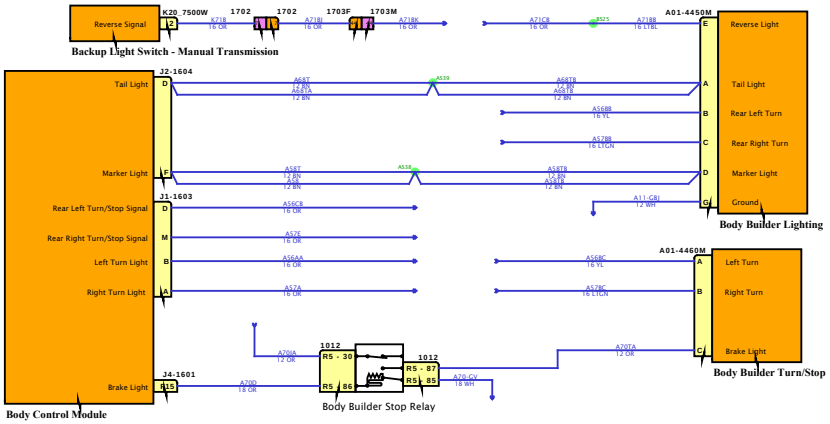

DESIGN DESCRIPTION

FEATURE CODES

SOFTWARE FEATURE CODES

NAVISTAR INC. CONFIDENTIAL PROPRIETARY

Diagram1-Option 2 (Back-of-Cab, W/08HAB)

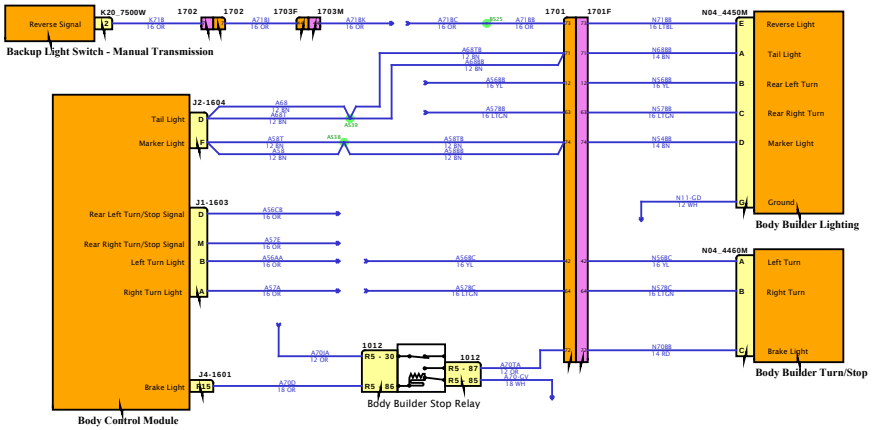

DESIGN DESCRIPTION

FEATURE CODES

SOFTWARE FEATURE CODES

NAVISTAR
NAVISTAR, INC. CONFIDENTIAL PROPRIETARY

Diagram1-Option 3 (End-of-Frame, W/08HAE)

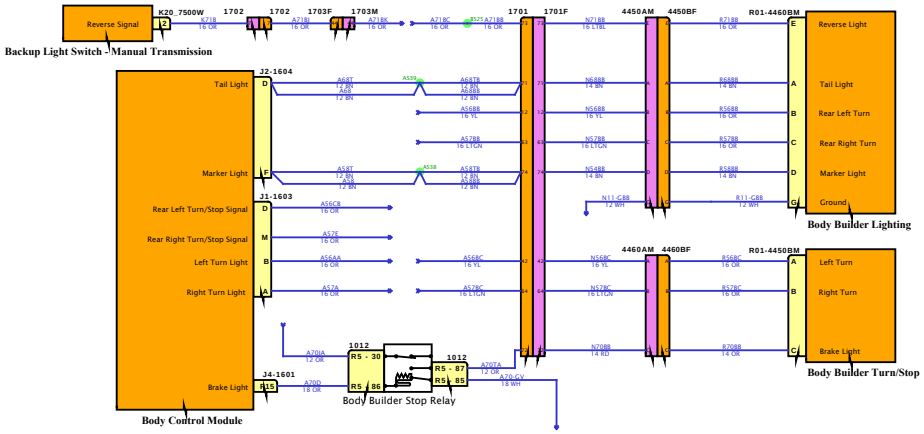

DESIGN DESCRIPTION

FEATURE CODES

SOFTWARE FEATURE CODES

Diagram1-Option1 (R/D 9724)

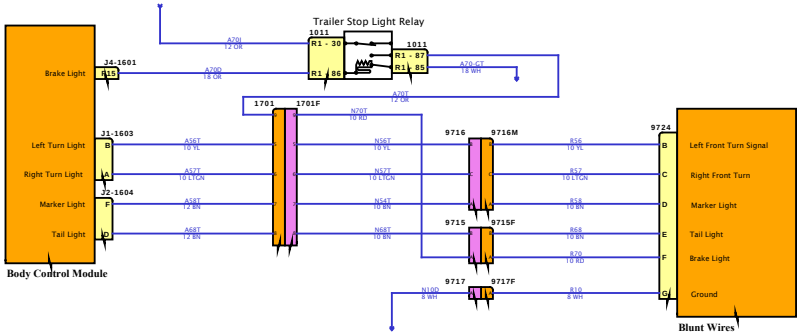

DESIGN DESCRIPTION

FEATURE CODES

SOFTWARE FEATURE CODES

NAVISTAR
NAVISTAR, INC. CONFIDENTIAL PROPRIETARY

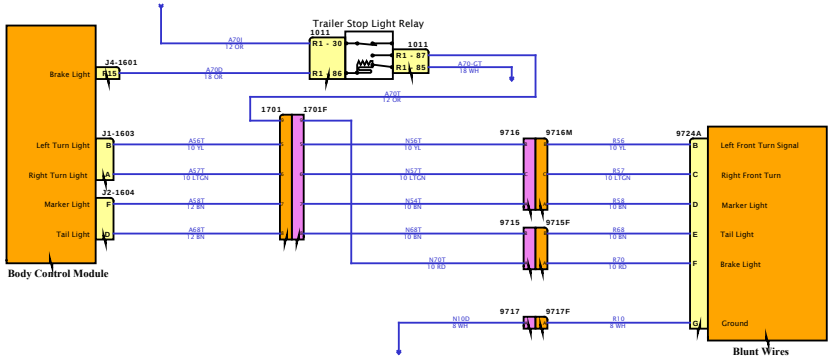

DESIGN DESCRIPTION

FEATURE CODES

SOFTWARE FEATURE CODES

NAVISTAR
NAVISTAR, INC. CONFIDENTIAL PROPRIETARY

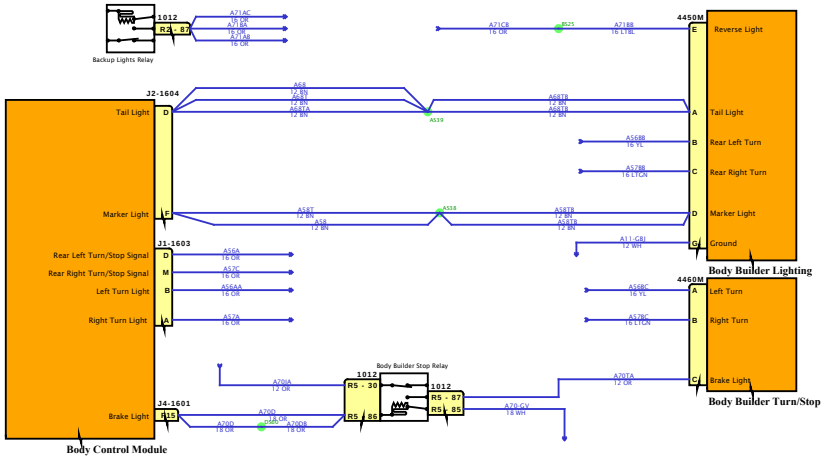

DESIGN DESCRIPTION

FEATURE CODES

SOFTWARE FEATURE CODES

NAVISTAR
NAVISTAR, INC. CONFIDENTIAL PROPRIETARY

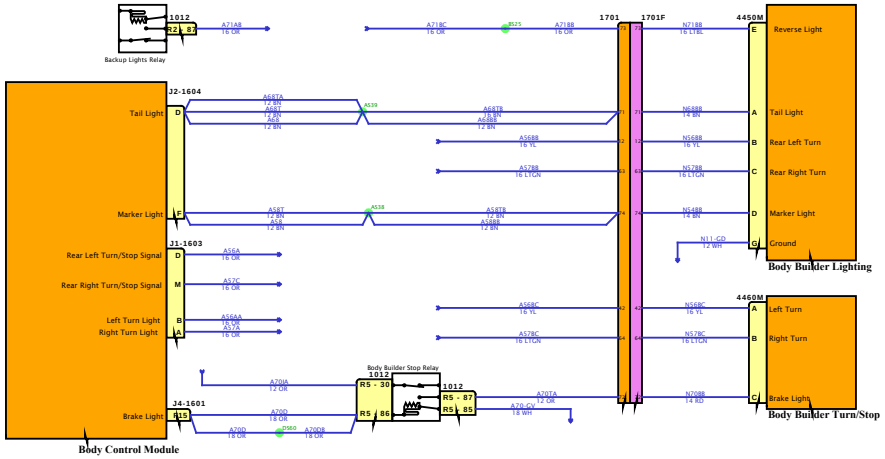

DESIGN DESCRIPTION

FEATURE CODES

SOFTWARE FEATURE CODES

NAVISTAR
NAVISTAR, INC. CONFIDENTIAL PROPRIETARY

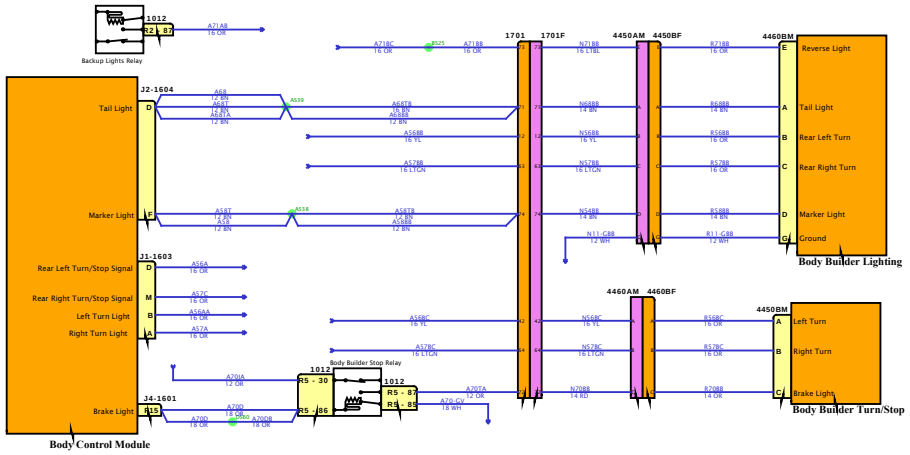

DESIGN DESCRIPTION

FEATURE CODES

SOFTWARE FEATURE CODES

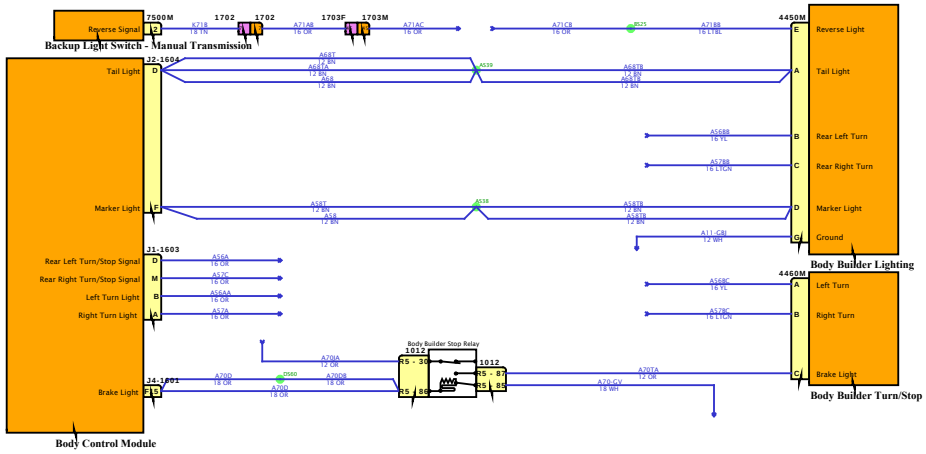

DESIGN DESCRIPTION

FEATURE CODES

SOFTWARE FEATURE CODES

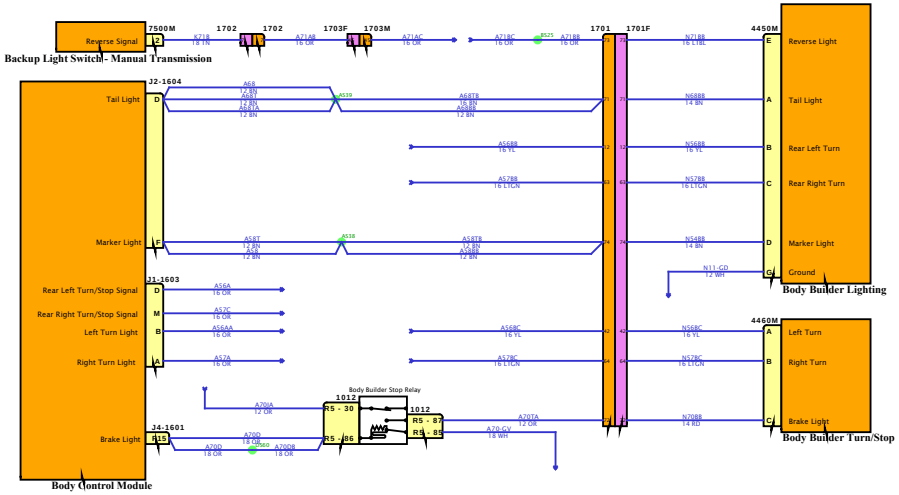

DESIGN DESCRIPTION

FEATURE CODES

SOFTWARE FEATURE CODES

Diagram3

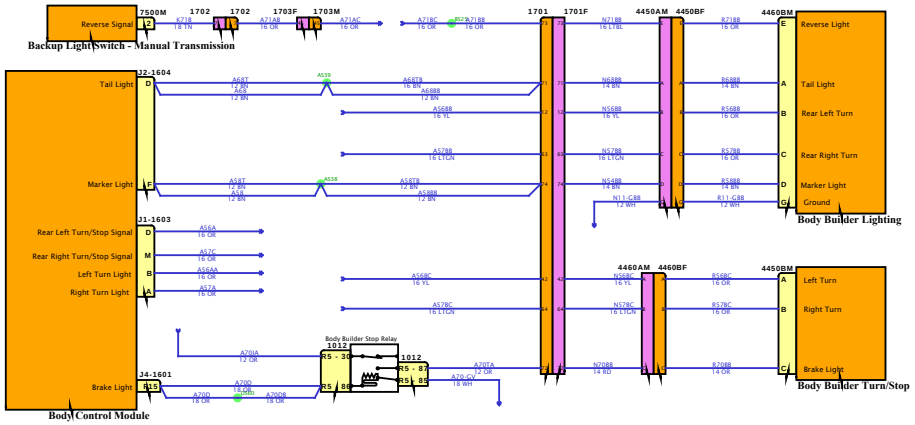

DESIGN DESCRIPTION

FEATURE CODES

SOFTWARE FEATURE CODES

NAVISTAR
NAVISTAR, INC. CONFIDENTIAL PROPRIETARY

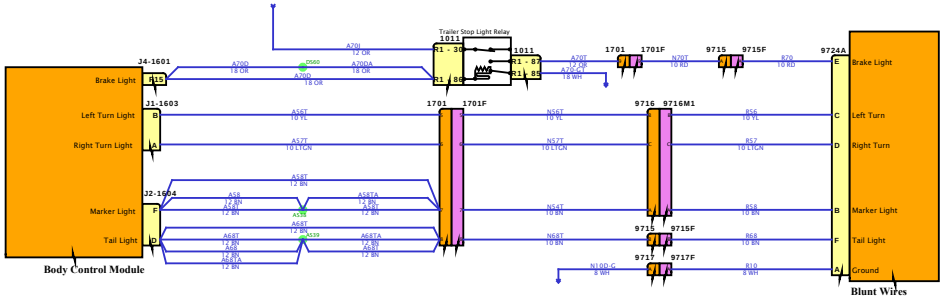

DESIGN DESCRIPTION

FEATURE CODES

SOFTWARE FEATURE CODES

NAVISTAR INC. CONFIDENTIAL PROPRIETARY

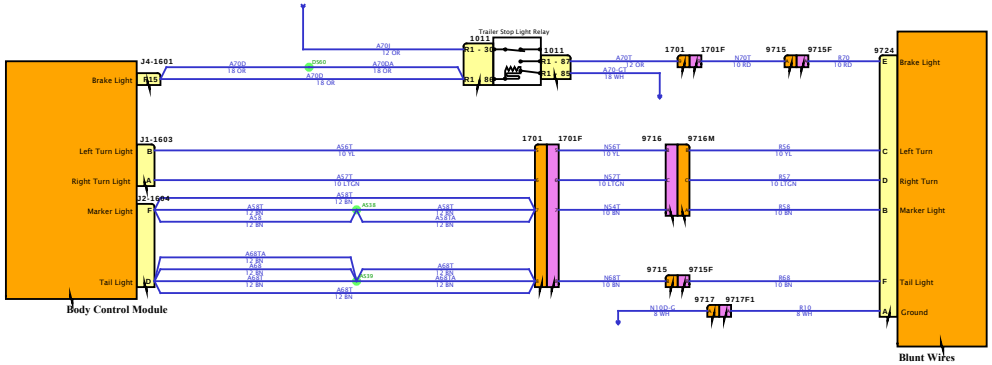

DESIGN DESCRIPTION

FEATURE CODES

SOFTWARE FEATURE CODES

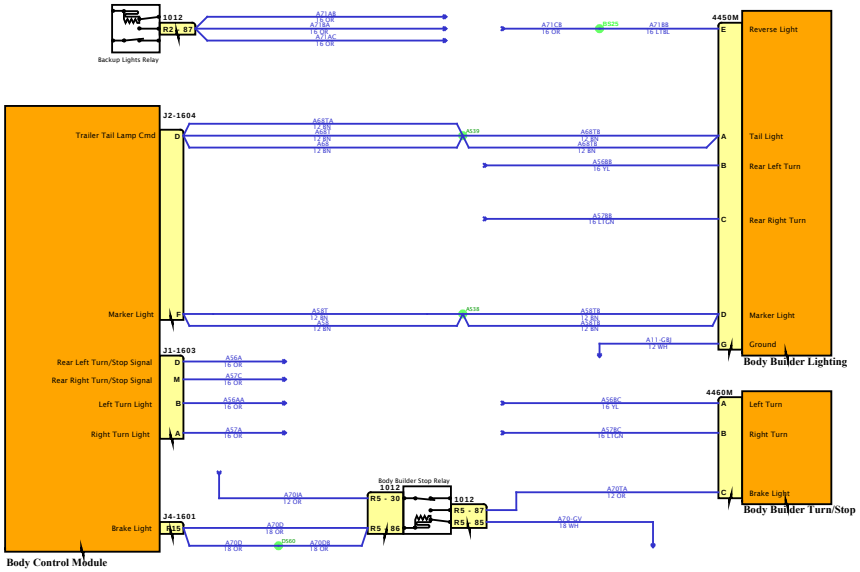

DESIGN DESCRIPTION

FEATURE CODES

SOFTWARE FEATURE CODES

NAVISTAR
NAVISTAR, INC. CONFIDENTIAL PROPRIETARY

DESIGN DESCRIPTION

FEATURE CODES

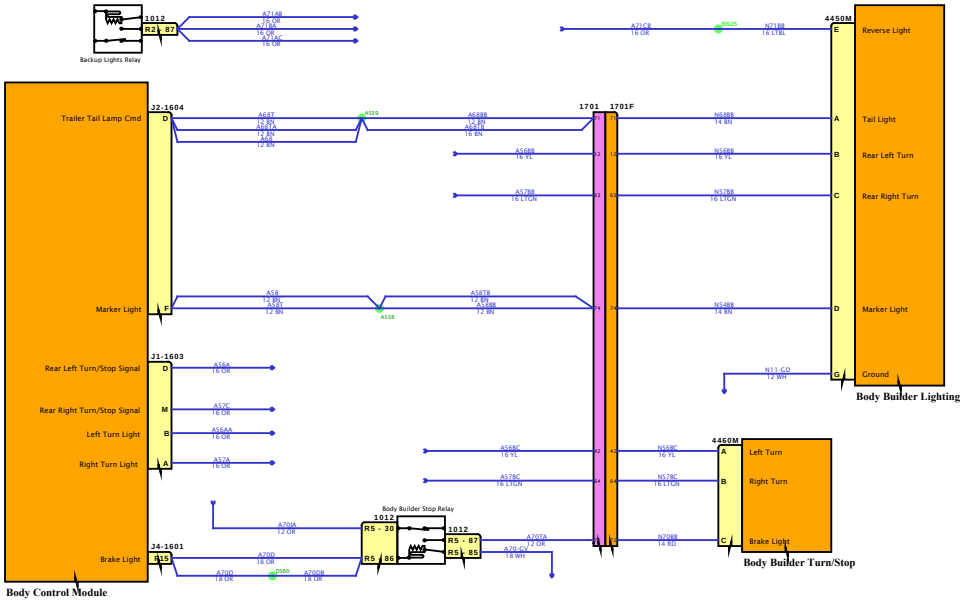

SOFTWARE FEATURE CODES

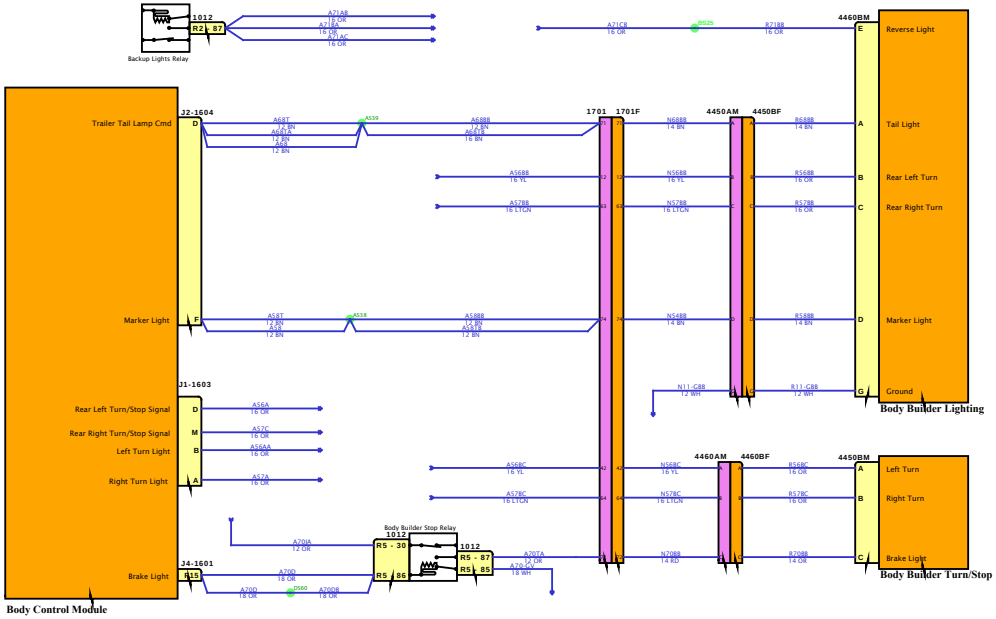

DESIGN DESCRIPTION

FEATURE CODES

SOFTWARE FEATURE CODES

DESIGN DESCRIPTION

FEATURE CODES

SOFTWARE FEATURE CODES

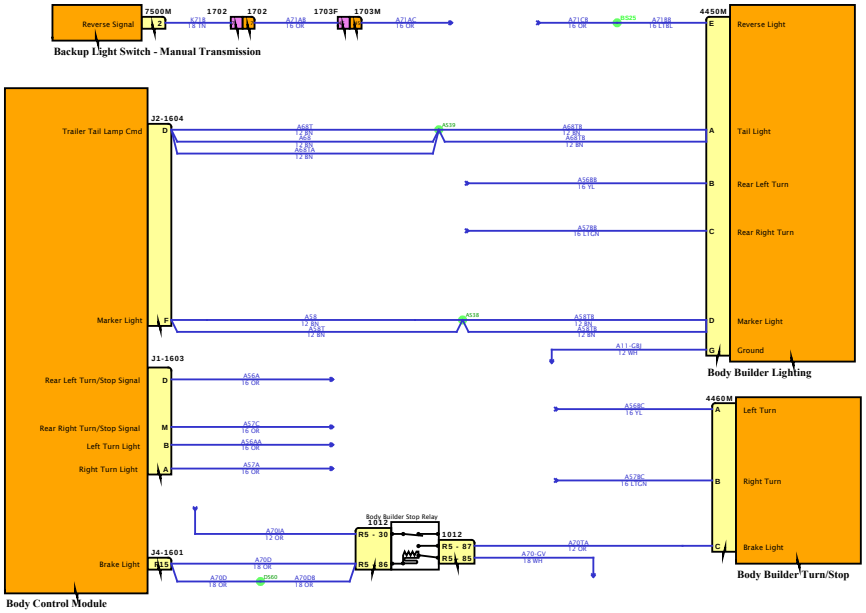

DESIGN DESCRIPTION

FEATURE CODES

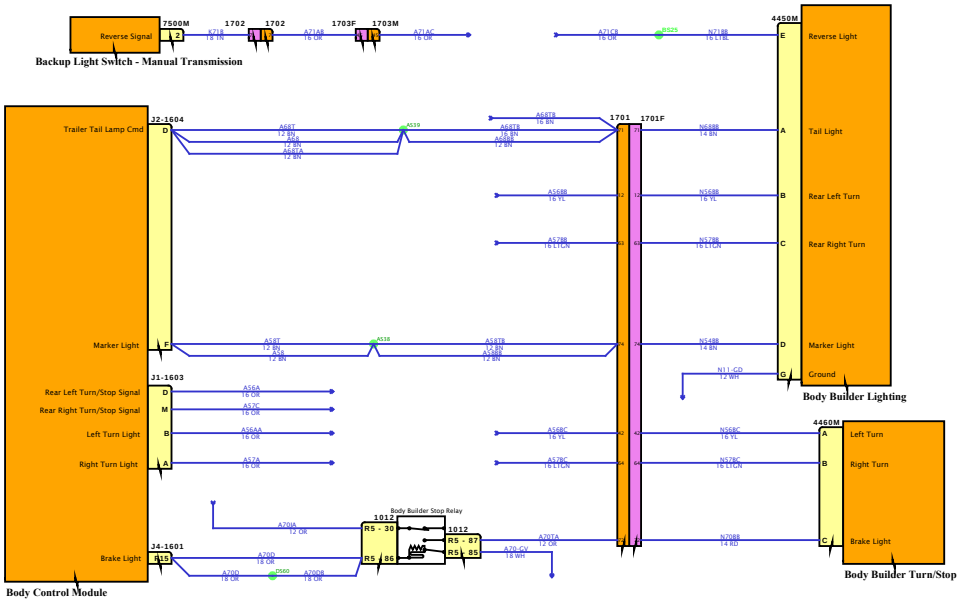

SOFTWARE FEATURE CODES

DESIGN DESCRIPTION

FEATURE CODES

SOFTWARE FEATURE CODES

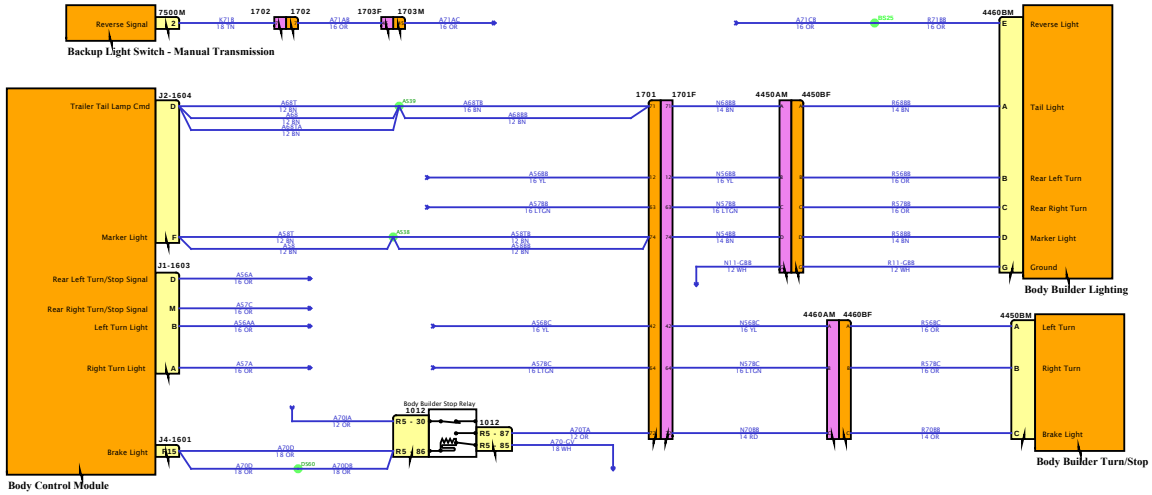

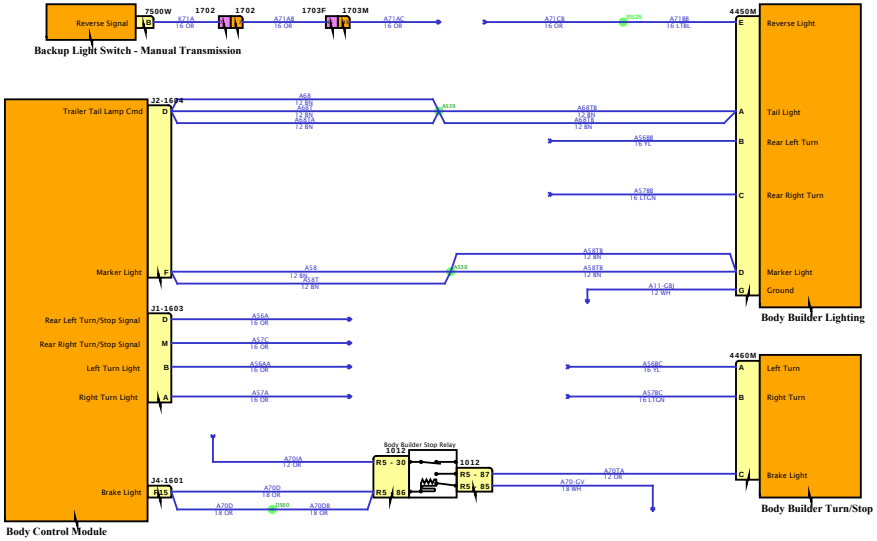

DESIGN DESCRIPTION

FEATURE CODES

SOFTWARE FEATURE CODES

NAVISTAR
NAVISTAR, INC. CONFIDENTIAL PROPRIETARY

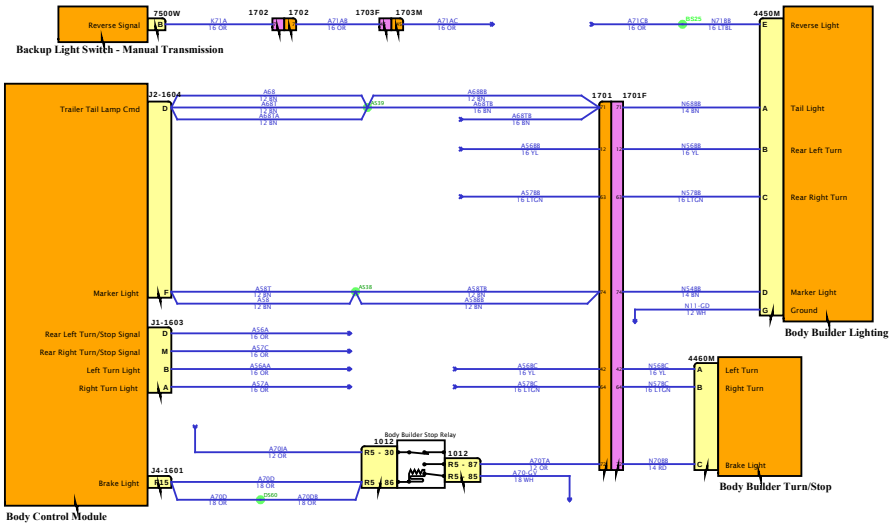

DESIGN DESCRIPTION

FEATURE CODES

SOFTWARE FEATURE CODES

DESIGN DESCRIPTION

FEATURE CODES

SOFTWARE FEATURE CODES

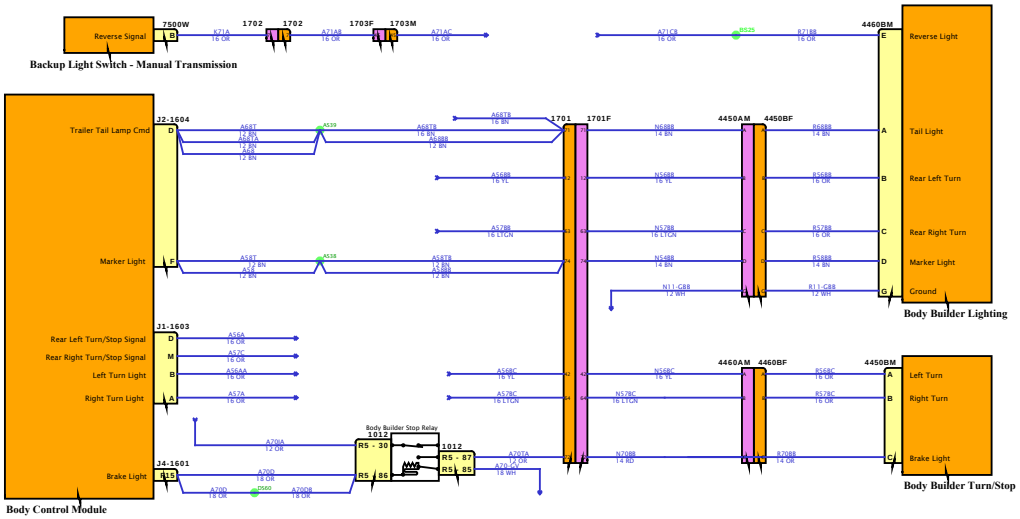

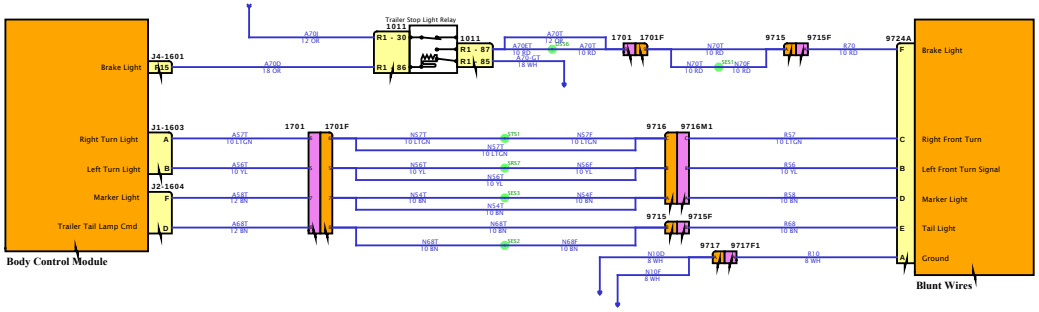

DESIGN DESCRIPTION

FEATURE CODES

SOFTWARE FEATURE CODES

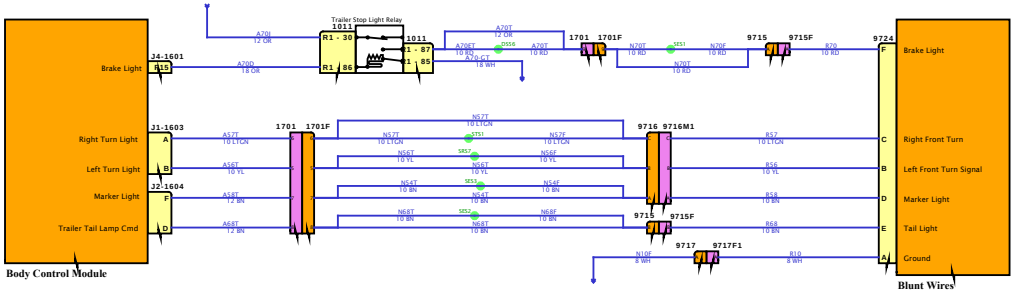

DESIGN DESCRIPTION

FEATURE CODES

SOFTWARE FEATURE CODES

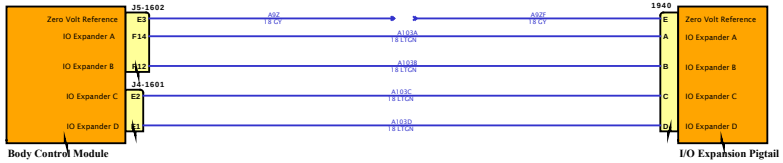

DESIGN DESCRIPTION

FEATURE CODES

SOFTWARE FEATURE CODES

NAVISTAR INC. CONFIDENTIAL PROPRIETARY

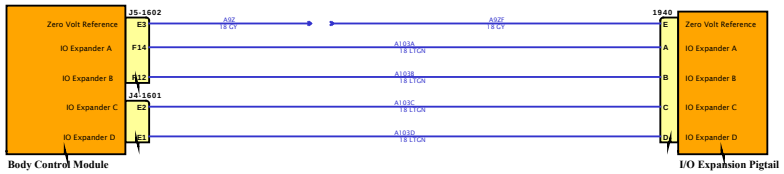

DESIGN DESCRIPTION

FEATURE CODES

SOFTWARE FEATURE CODES

NAVISTAR
NAVISTAR, INC. CONFIDENTIAL PROPRIETARY

Diagram1

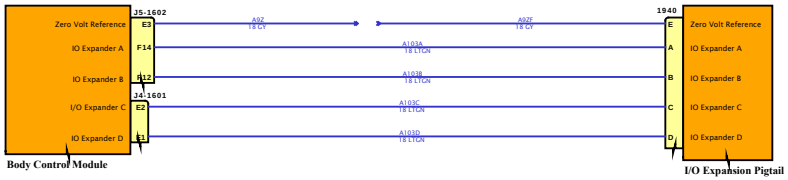

DESIGN DESCRIPTION

FEATURE CODES

SOFTWARE FEATURE CODES

NAVISTAR
NAVISTAR, INC. CONFIDENTIAL PROPRIETARY

Diagram1

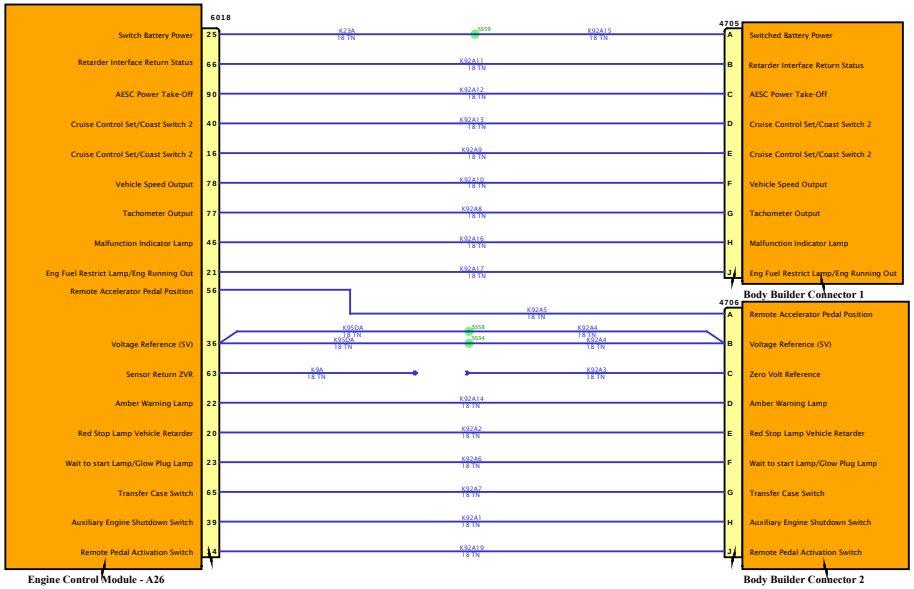

DESIGN DESCRIPTION

FEATURE CODES

SOFTWARE FEATURE CODES

NAVISTAR
NAVISTAR, INC. CONFIDENTIAL PROPRIETARY

Diagram1

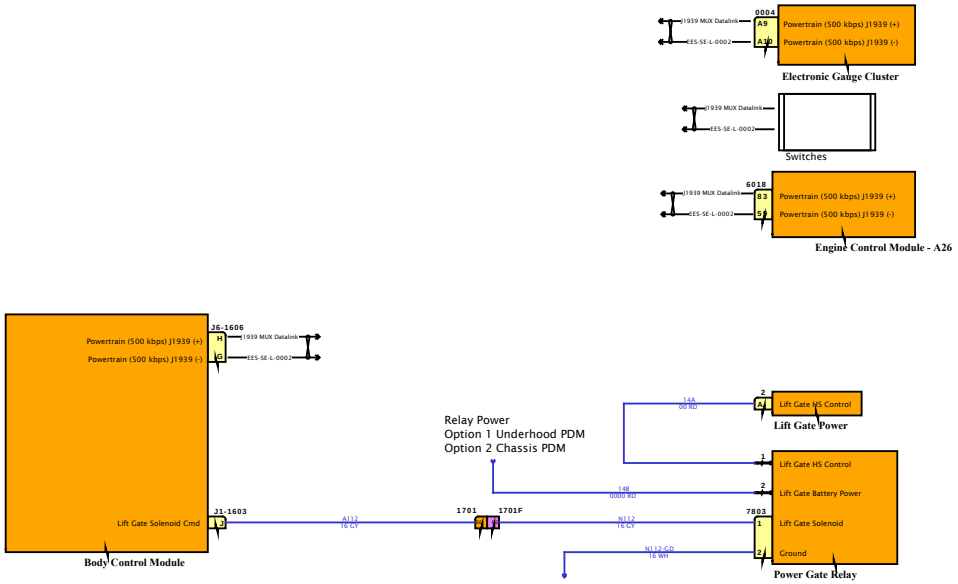

DESIGN DESCRIPTION

FEATURE CODES

SOFTWARE FEATURE CODES

NAVISTAR INC. CONFIDENTIAL PROPRIETARY

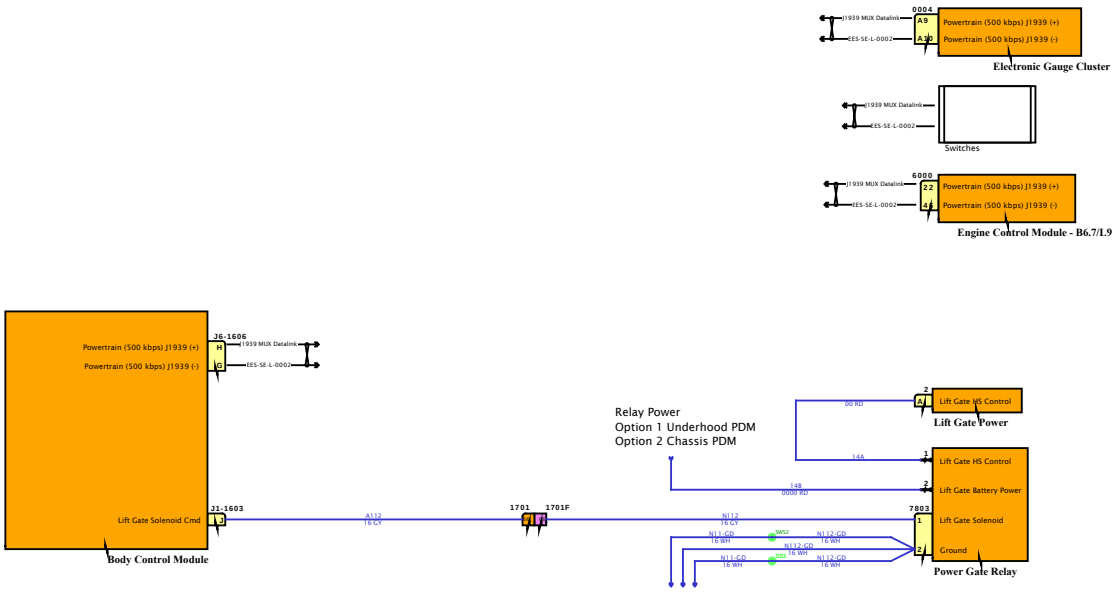

DESIGN DESCRIPTION

FEATURE CODES

SOFTWARE FEATURE CODES

DESIGN DESCRIPTION

FEATURE CODES

SOFTWARE FEATURE CODES

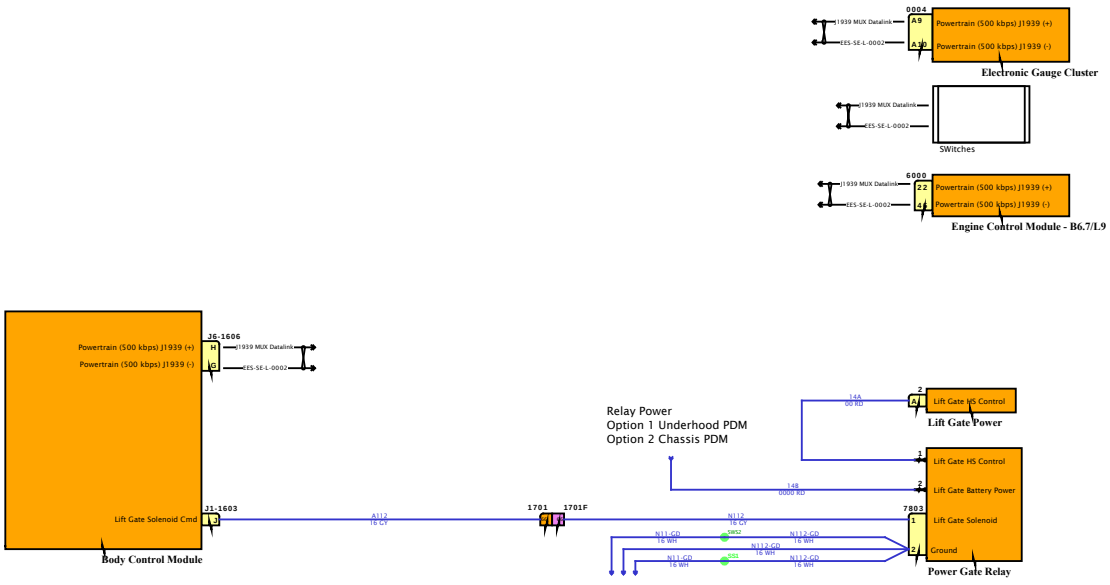

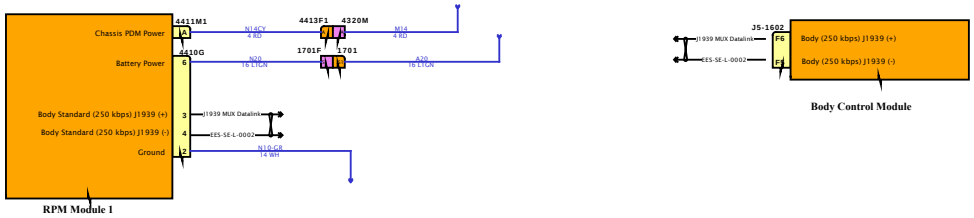

DESIGN DESCRIPTION

FEATURE CODES

SOFTWARE FEATURE CODES

NAVISTAR INC. CONFIDENTIAL PROPRIETARY

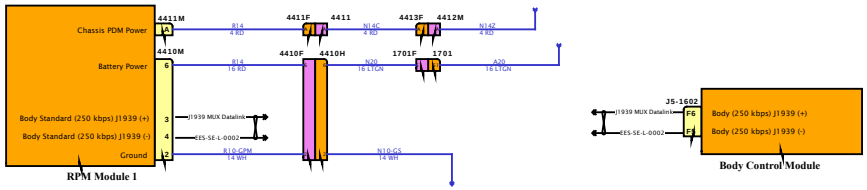

DESIGN DESCRIPTION

FEATURE CODES

SOFTWARE FEATURE CODES

NAVISTAR INC. CONFIDENTIAL PROPRIETARY

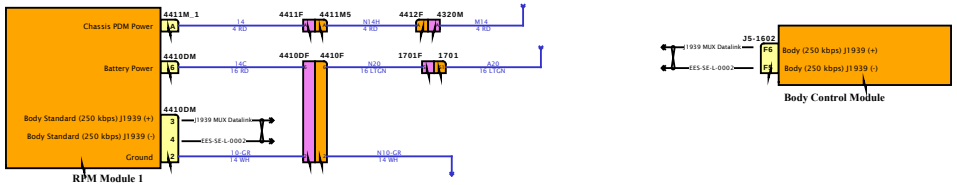

DESIGN DESCRIPTION

FEATURE CODES

SOFTWARE FEATURE CODES

NAVISTAR INC. CONFIDENTIAL PROPRIETARY

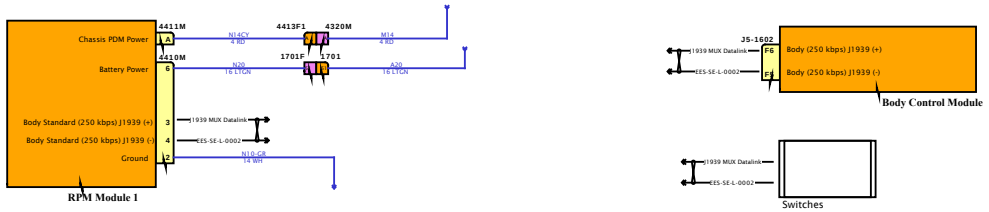

DESIGN DESCRIPTION

FEATURE CODES

SOFTWARE FEATURE CODES

NAVISTAR INC. CONFIDENTIAL PROPRIETARY

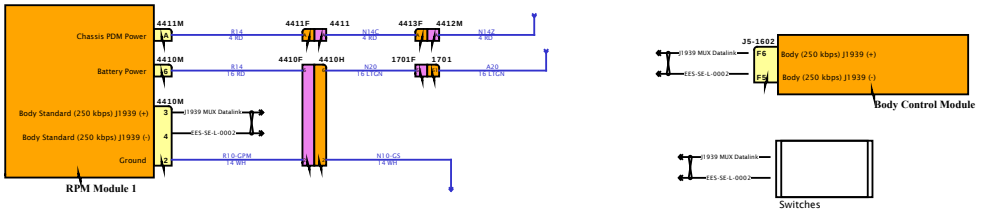

DESIGN DESCRIPTION

FEATURE CODES

SOFTWARE FEATURE CODES

NAVISTAR INC. CONFIDENTIAL PROPRIETARY

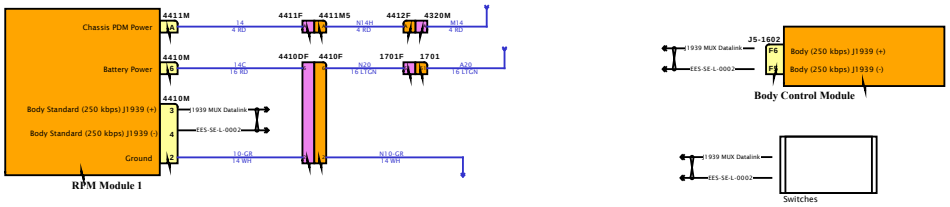

DESIGN DESCRIPTION

FEATURE CODES

SOFTWARE FEATURE CODES

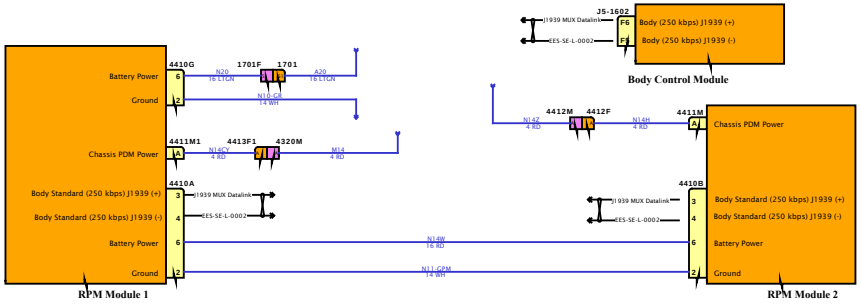

DESIGN DESCRIPTION

FEATURE CODES

SOFTWARE FEATURE CODES

NAVISTAR
NAVISTAR, INC. CONFIDENTIAL PROPRIETARY

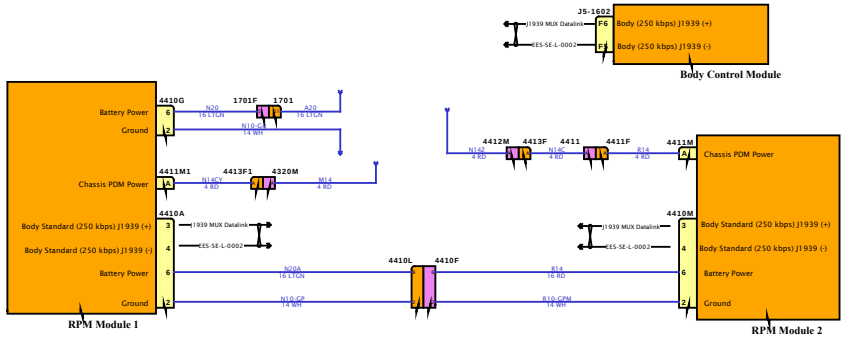

DESIGN DESCRIPTION

FEATURE CODES

SOFTWARE FEATURE CODES

NAVISTAR
NAVISTAR, INC. CONFIDENTIAL PROPRIETARY

DESIGN DESCRIPTION

FEATURE CODES

SOFTWARE FEATURE CODES

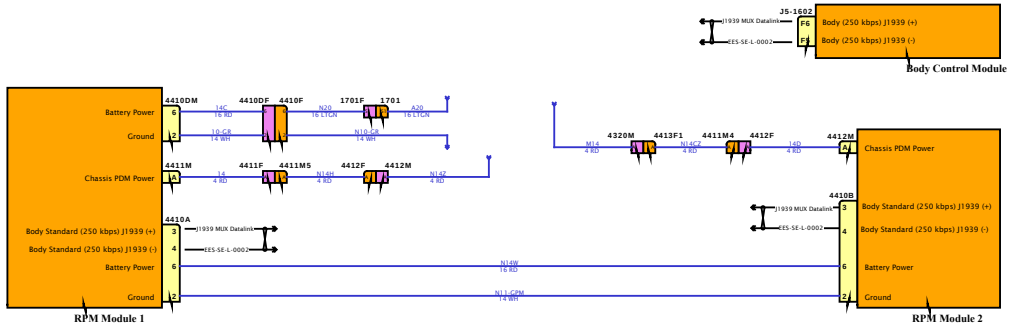

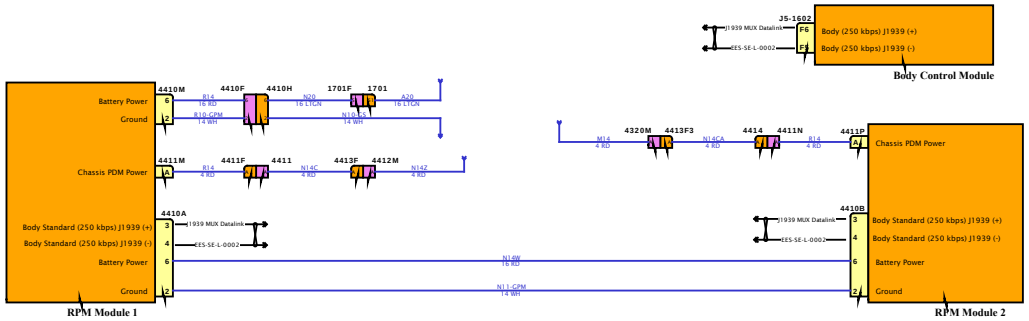

DESIGN DESCRIPTION

FEATURE CODES

SOFTWARE FEATURE CODES

NAVISTAR
NAVISTAR, INC. CONFIDENTIAL PROPRIETARY

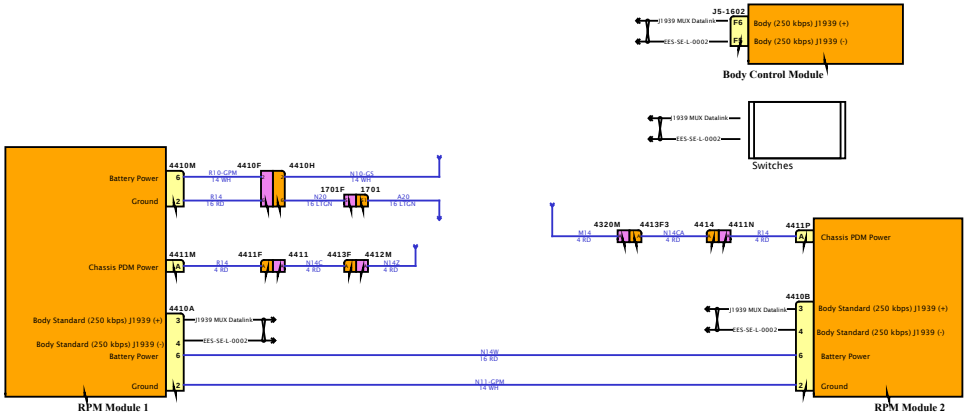

DESIGN DESCRIPTION

FEATURE CODES

SOFTWARE FEATURE CODES

NAVISTAR
NAVISTAR, INC. CONFIDENTIAL PROPRIETARY

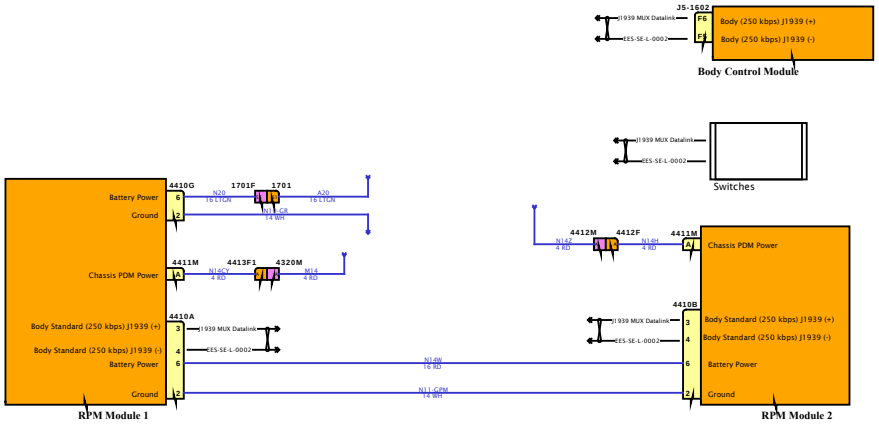

DESIGN DESCRIPTION

FEATURE CODES

SOFTWARE FEATURE CODES

NAVISTAR INC. CONFIDENTIAL PROPRIETARY

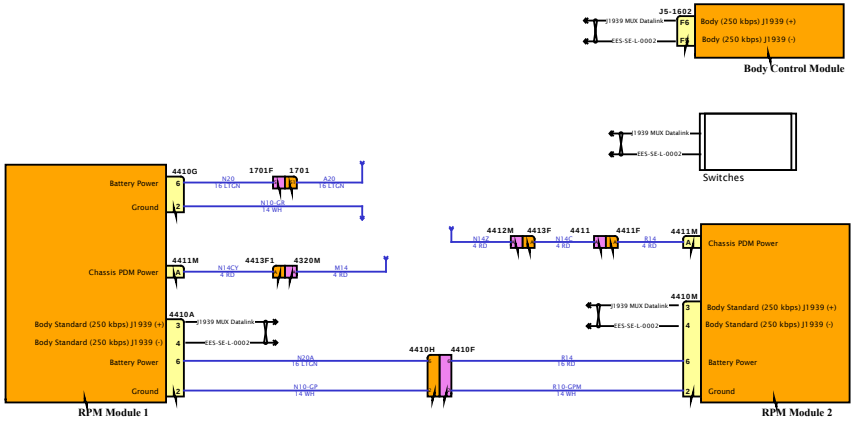

DESIGN DESCRIPTION

FEATURE CODES

SOFTWARE FEATURE CODES

NAVISTAR
NAVISTAR, INC. CONFIDENTIAL PROPRIETARY

DESIGN DESCRIPTION

FEATURE CODES

SOFTWARE FEATURE CODES

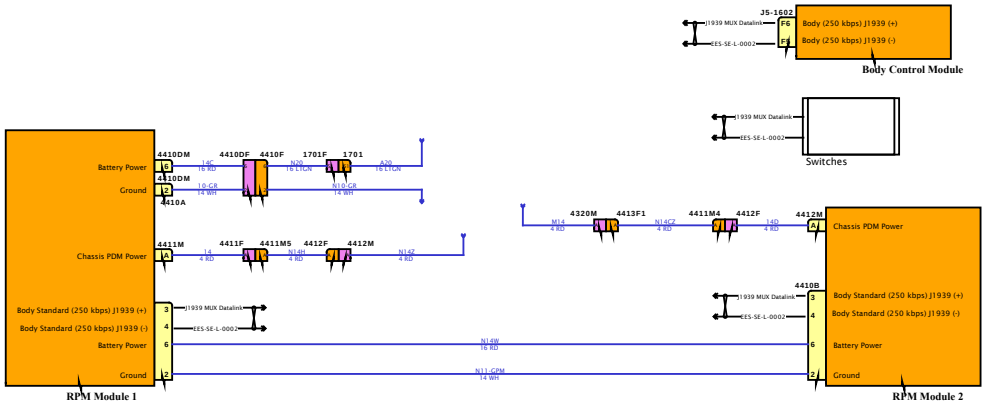

Diagram1

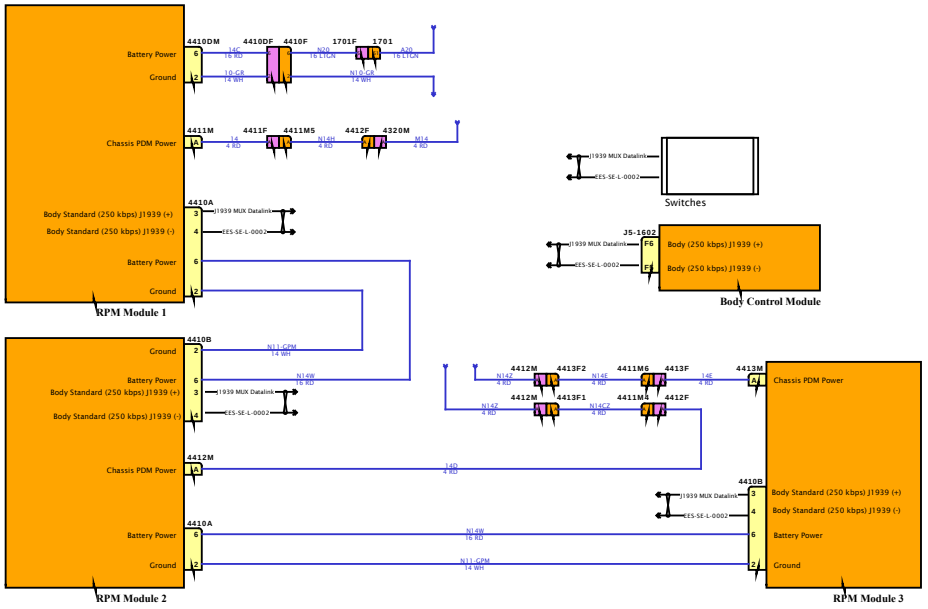

DESIGN DESCRIPTION

FEATURE CODES

SOFTWARE FEATURE CODES

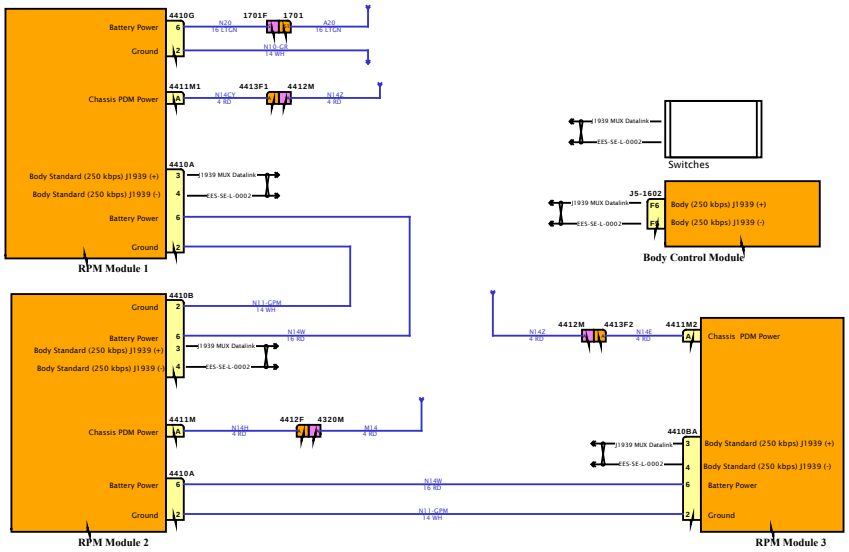

DESIGN DESCRIPTION

FEATURE CODES

SOFTWARE FEATURE CODES

NAVISTAR
NAVISTAR, INC. CONFIDENTIAL PROPRIETARY

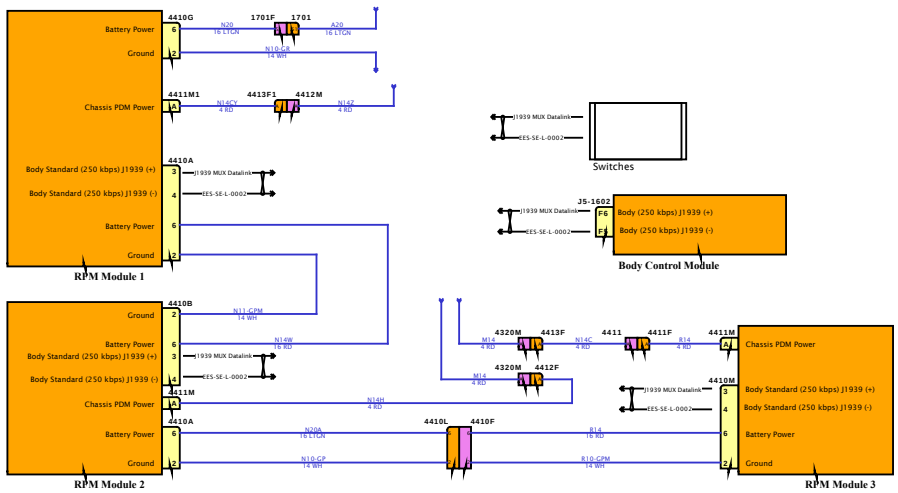

DESIGN DESCRIPTION

FEATURE CODES

SOFTWARE FEATURE CODES

NAVISTAR INC. CONFIDENTIAL PROPRIETARY

Diagram1

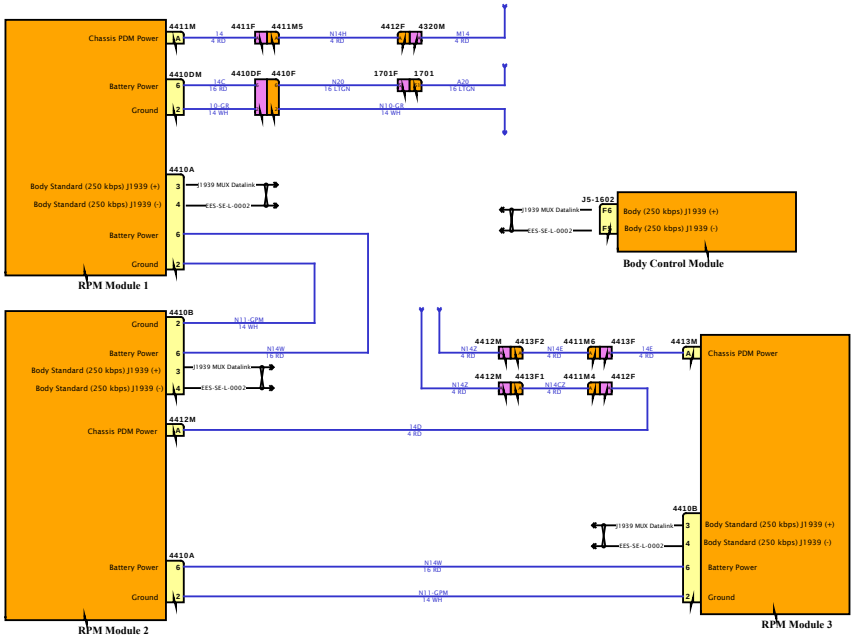

DESIGN DESCRIPTION

FEATURE CODES

SOFTWARE FEATURE CODES

NAVISTAR
NAVISTAR, INC. CONFIDENTIAL PROPRIETARY

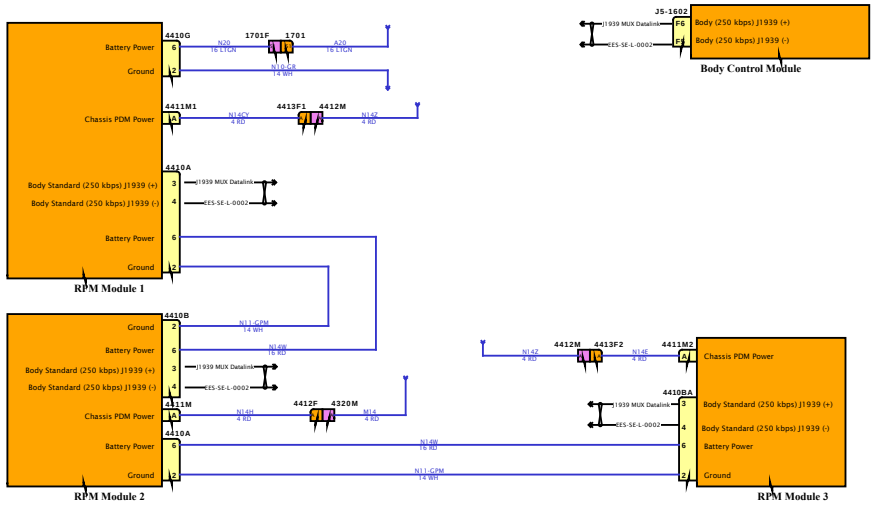

DESIGN DESCRIPTION

FEATURE CODES

SOFTWARE FEATURE CODES

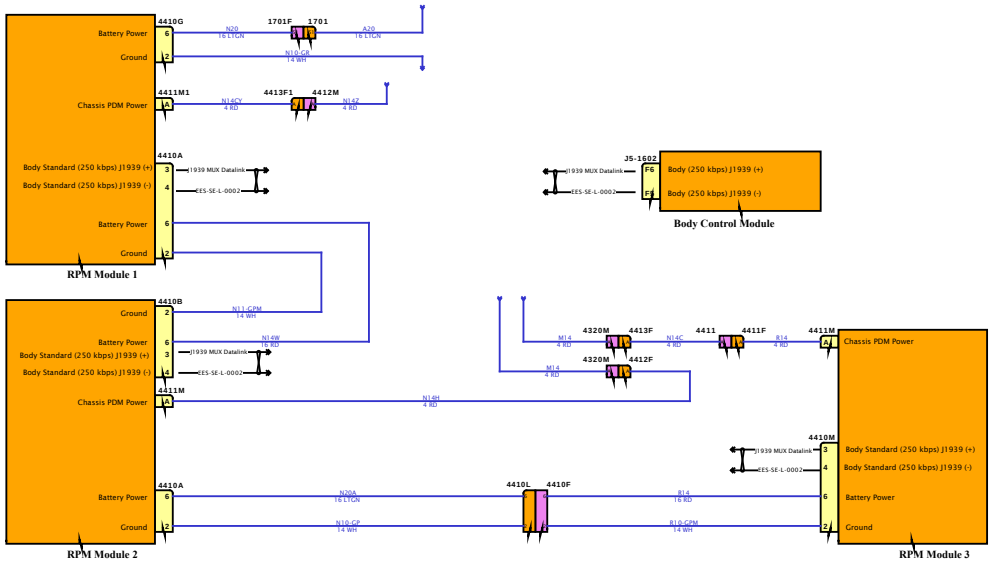
4410G
Battery Power
Ground
1701F
1701
N20
16 LTGN
A20
16 LTGN
N10-GR
14 WH
4411M1
Chassis PDM Power
4413F1
4412M
N14CY
4 RD
N14Z
4 RD
4410A
Body Standard (250 kbps) J1939 (+)
Body Standard (250 kbps) J1939 (-)
Battery Power
Ground
J1939 MUX Datalink
CES-SE-L-0002
RPM Module 1
J5-1602
F6
F4
Body (250 kbps) J1939 (+)
Body (250 kbps) J1939 (-)
Body Control Module
4410B
N11-GPM
14 WH
N14W
4 WH
4320M
4413F
4411
4411F
4411M
4412F
M14
4 RD
N14C
4 RD
R14
4 RD
N14H
4 RD
Chassis PDM Power
4410M
4410L
4410F
N20A
16 LTGN
N10-GP
14 WH
R14
16 RD
R10-GPM
14 WH
RPM Module 2
RPM Module 3
DESIGN DESCRIPTION
FEATURE CODES
SOFTWARE FEATURE CODES
NAVISTAR
NAVISTAR, INC. CONFIDENTIAL PROPRIETARY

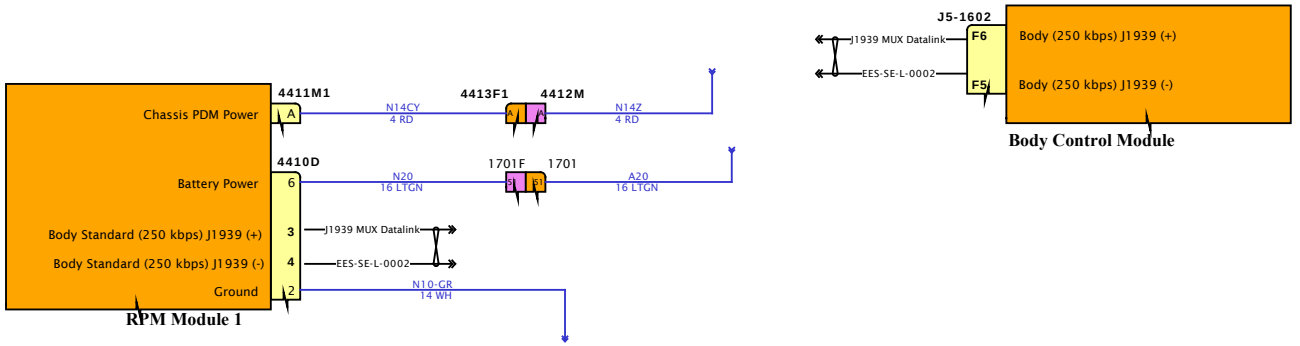

DESIGN DESCRIPTION

FEATURE CODES

SOFTWARE FEATURE CODES

NAVISTAR
NAVISTAR, INC. CONFIDENTIAL PROPRIETARY

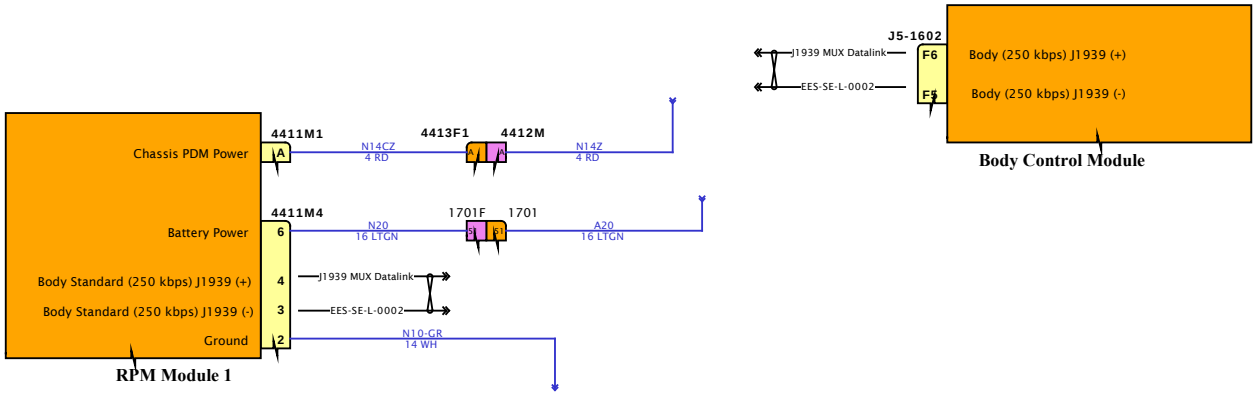

DESIGN DESCRIPTION

FEATURE CODES

SOFTWARE FEATURE CODES

NAVISTAR
NAVISTAR, INC. CONFIDENTIAL PROPRIETARY

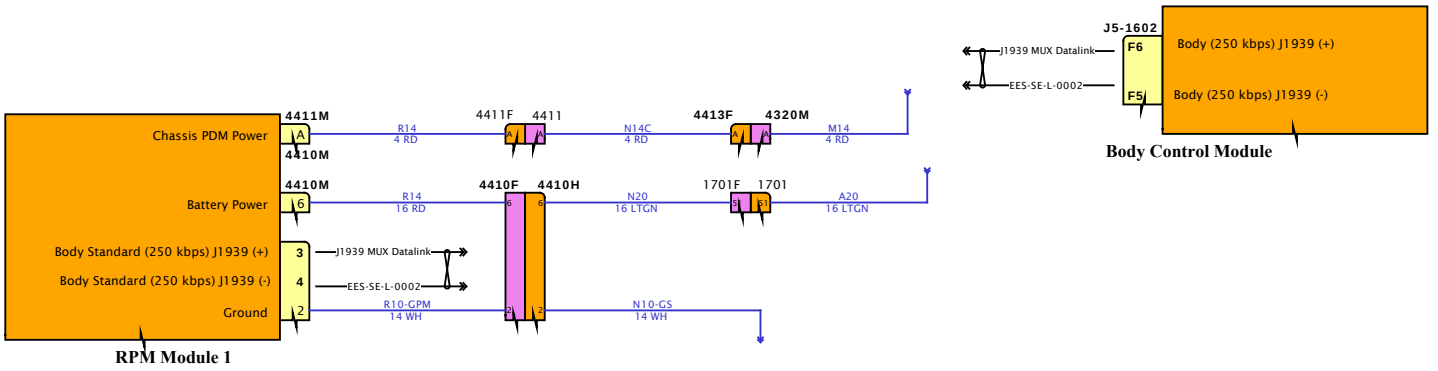

DESIGN DESCRIPTION

FEATURE CODES

SOFTWARE FEATURE CODES

NAVISTAR
NAVISTAR, INC. CONFIDENTIAL PROPRIETARY

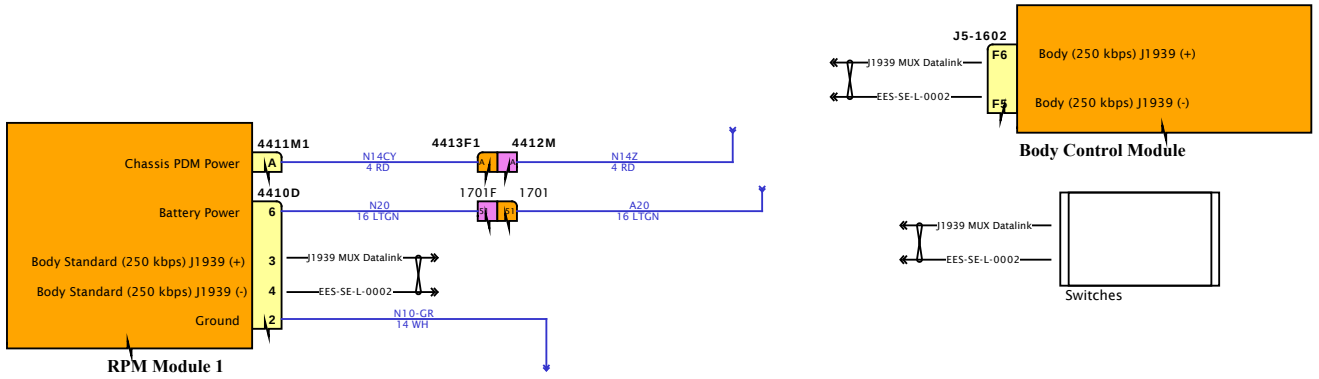

DESIGN DESCRIPTION

FEATURE CODES

SOFTWARE FEATURE CODES

NAVISTAR
NAVISTAR, INC. CONFIDENTIAL PROPRIETARY

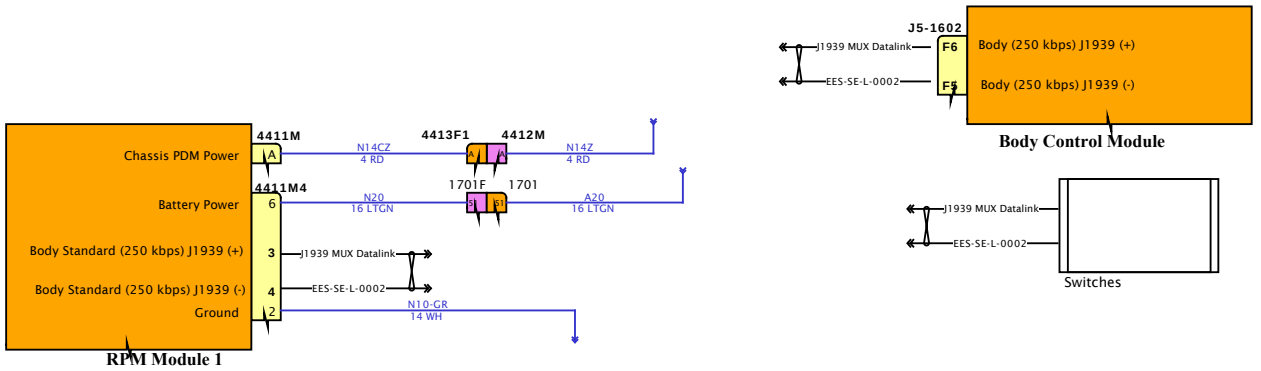

DESIGN DESCRIPTION

FEATURE CODES

SOFTWARE FEATURE CODES

NAVISTAR
NAVISTAR, INC. CONFIDENTIAL PROPRIETARY

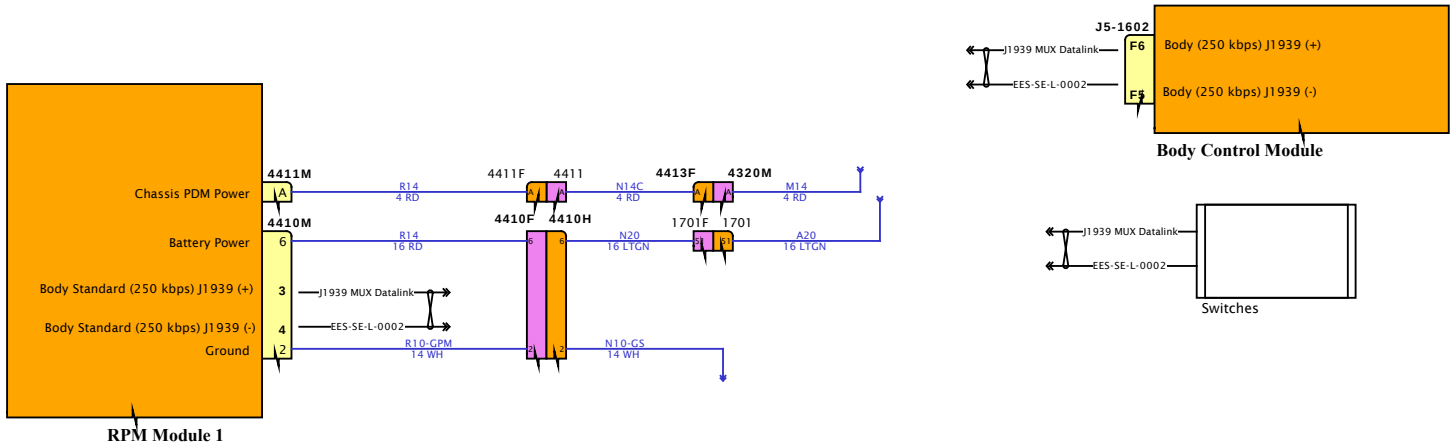

DESIGN DESCRIPTION

FEATURE CODES

SOFTWARE FEATURE CODES

NAVISTAR
NAVISTAR, INC. CONFIDENTIAL PROPRIETARY

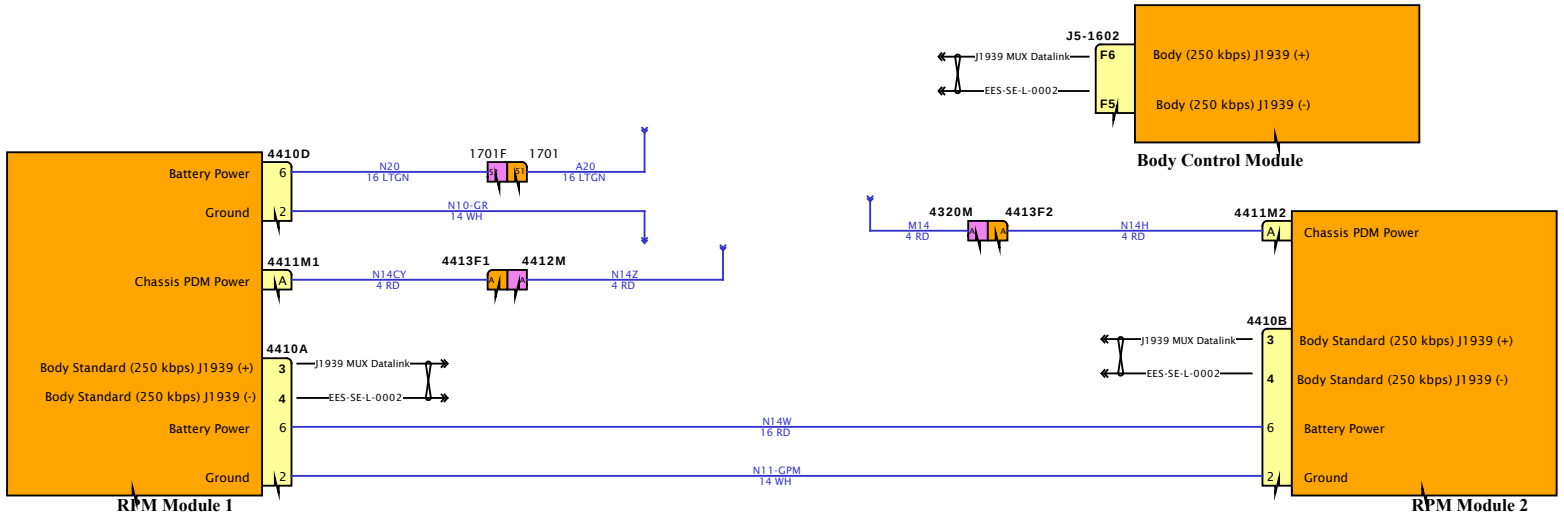

DESIGN DESCRIPTION

FEATURE CODES

SOFTWARE FEATURE CODES

NAVISTAR
NAVISTAR, INC. CONFIDENTIAL PROPRIETARY

DESIGN DESCRIPTION

FEATURE CODES

SOFTWARE FEATURE CODES

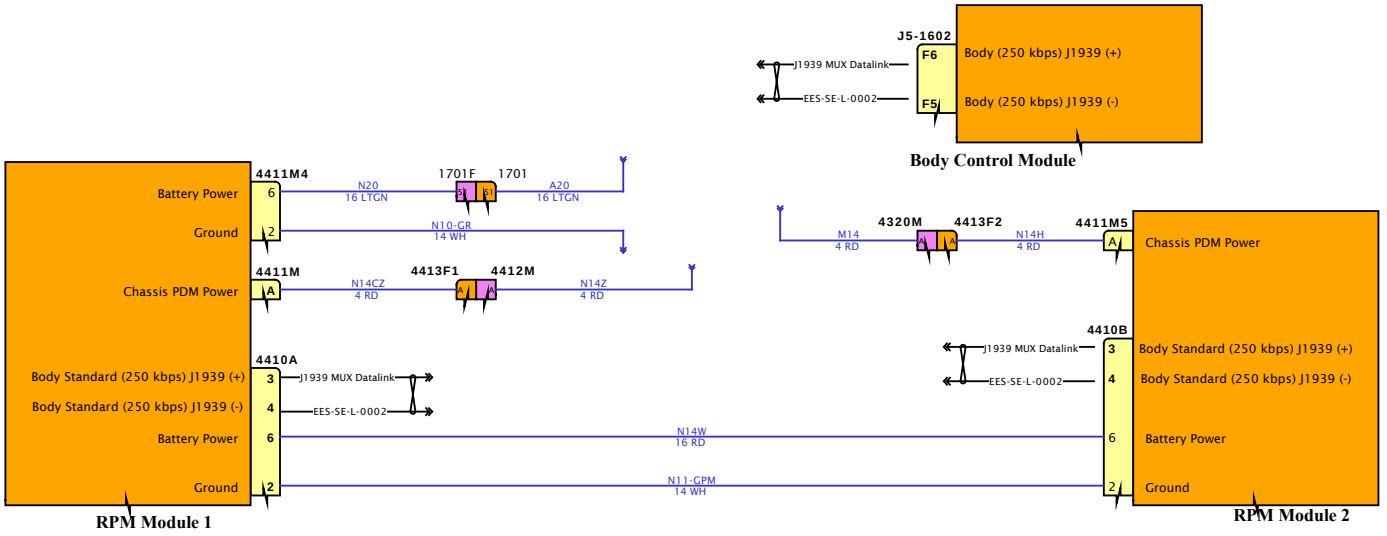

NAVISTAR
NAVISTAR, INC. CONFIDENTIAL PROPRIETARY

Diagram3

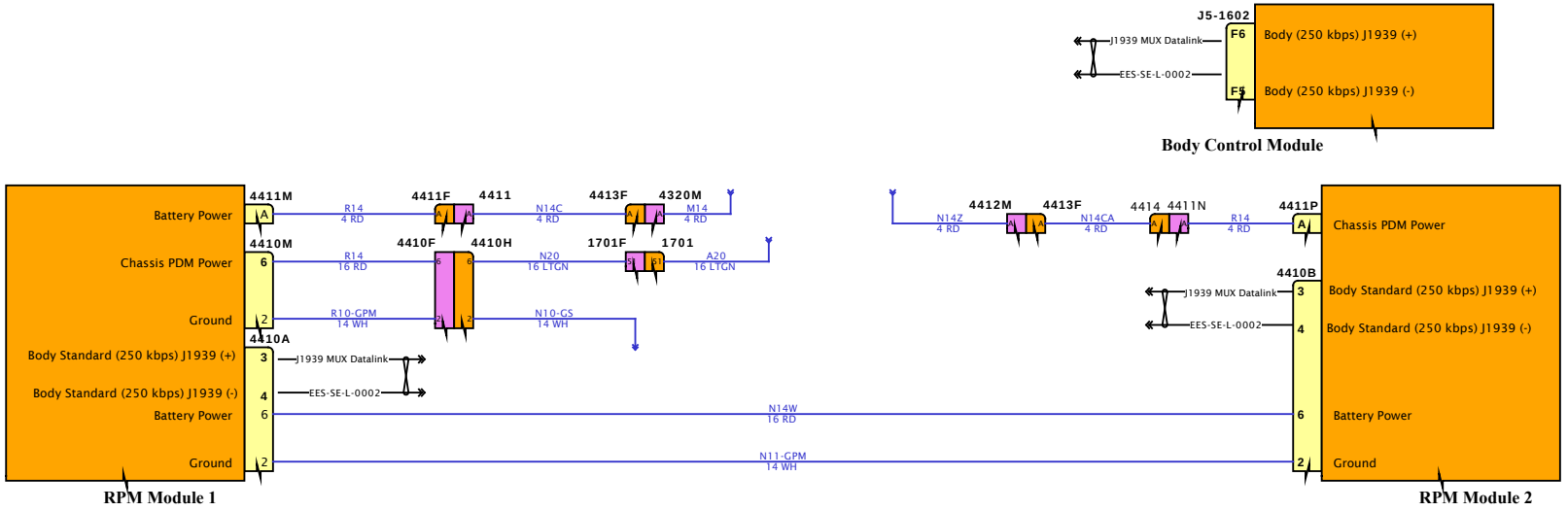

DESIGN DESCRIPTION

FEATURE CODES

SOFTWARE FEATURE CODES

NAVISTAR
NAVISTAR, INC. CONFIDENTIAL PROPRIETARY

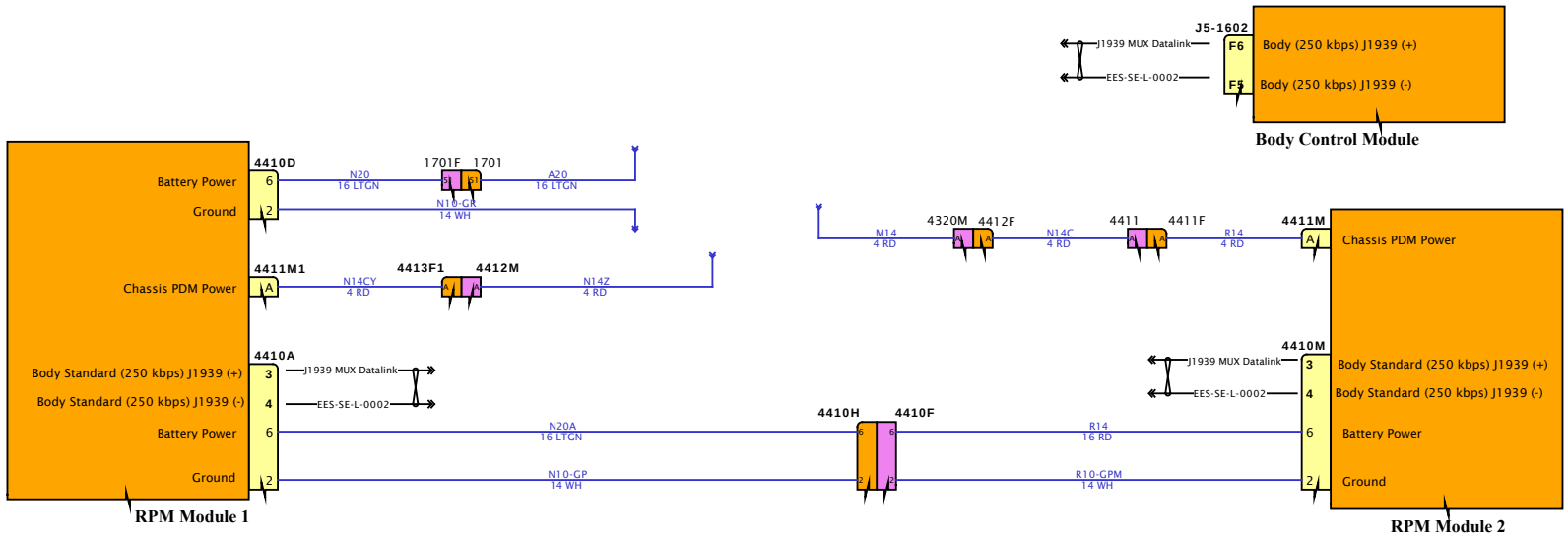

DESIGN DESCRIPTION

FEATURE CODES

SOFTWARE FEATURE CODES

NAVISTAR

NAVISTAR, INC. CONFIDENTIAL PROPRIETARY

Diagram1

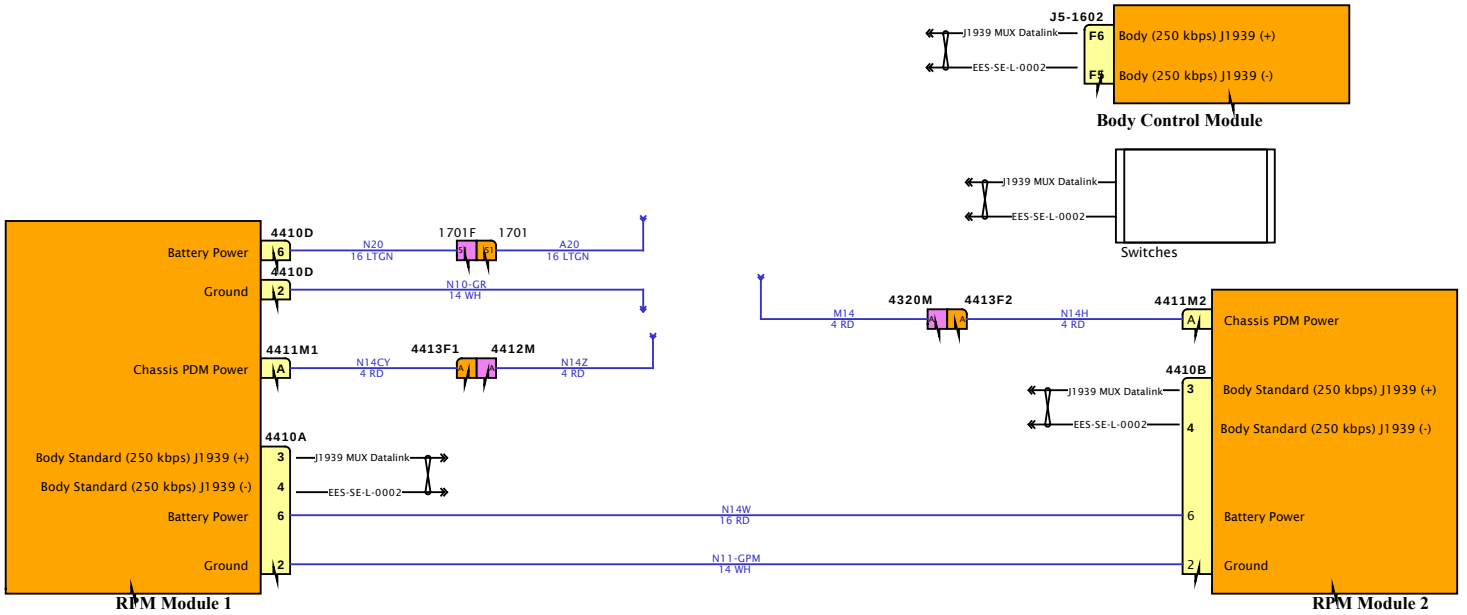

DESIGN DESCRIPTION

FEATURE CODES

SOFTWARE FEATURE CODES

NAVISTAR
NAVISTAR, INC. CONFIDENTIAL PROPRIETARY

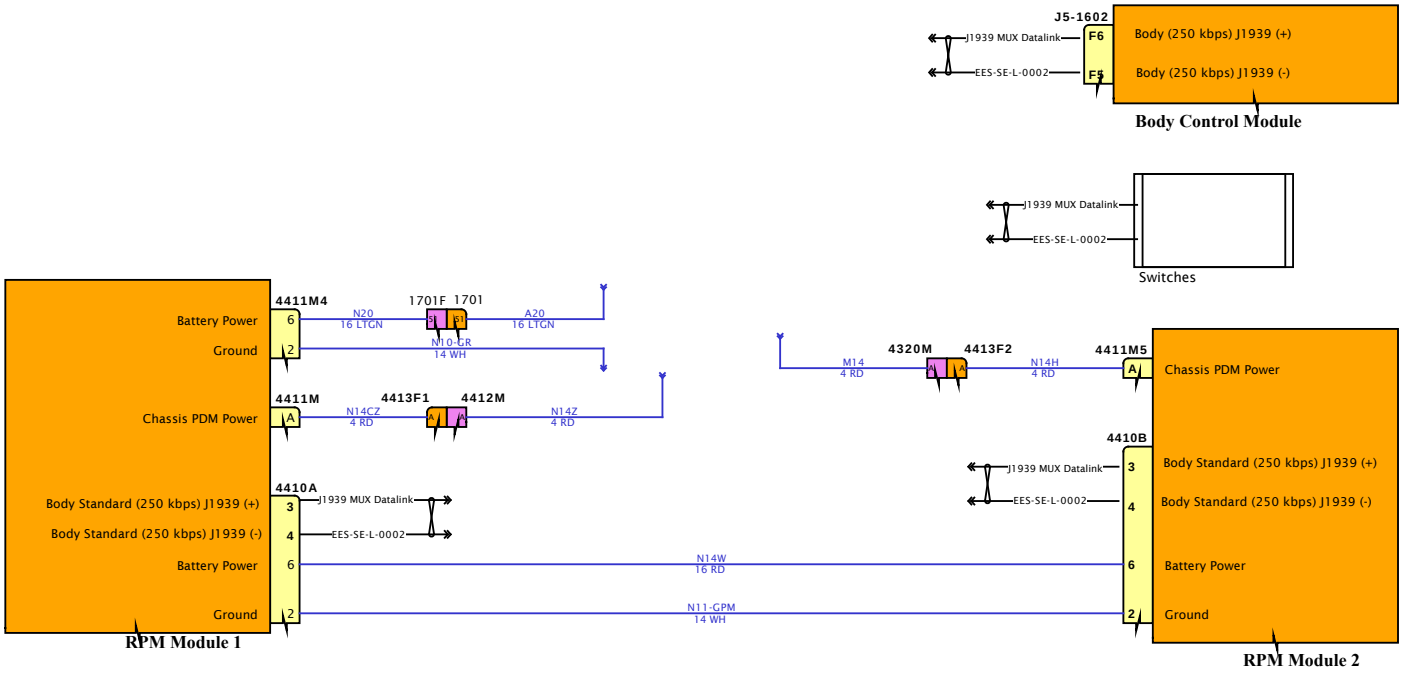

DESIGN DESCRIPTION

FEATURE CODES

SOFTWARE FEATURE CODES

NAVISTAR
NAVISTAR, INC. CONFIDENTIAL PROPRIETARY

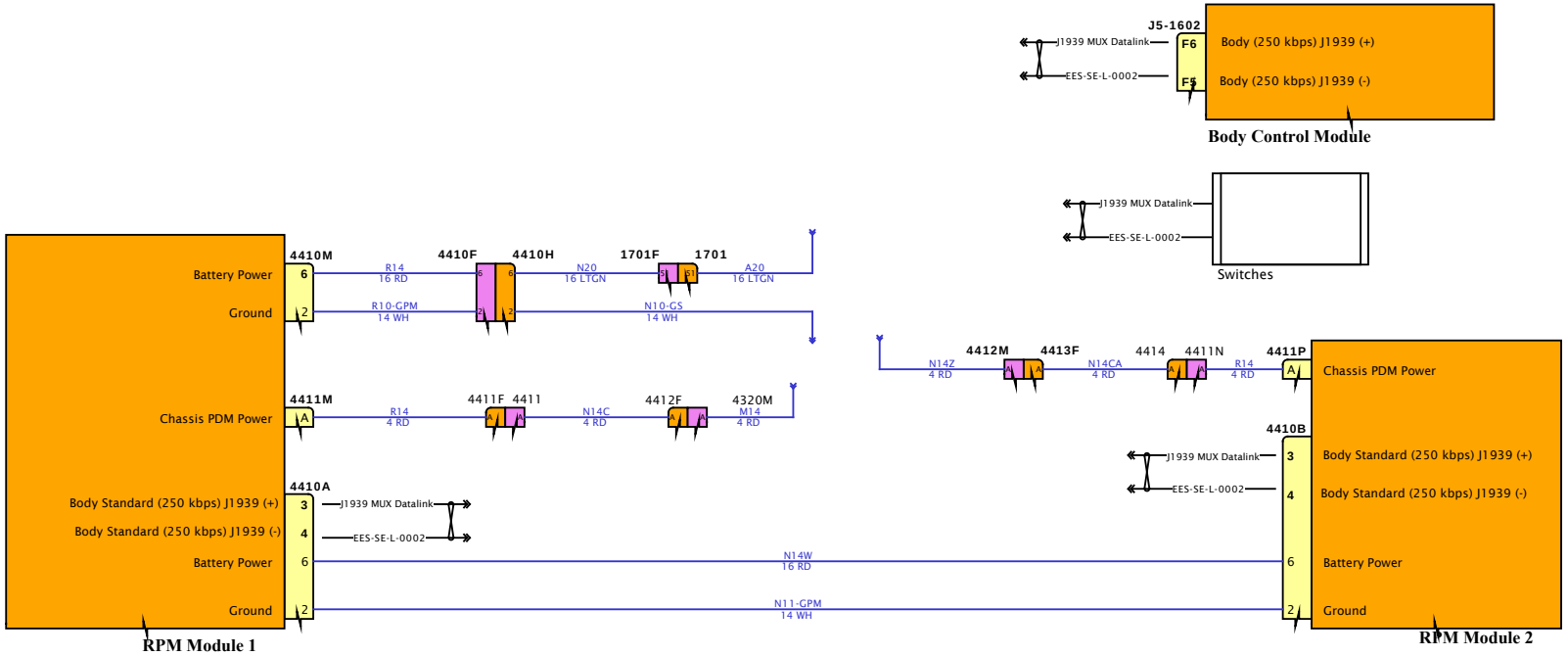

DESIGN DESCRIPTION

FEATURE CODES

SOFTWARE FEATURE CODES

NAVISTAR
NAVISTAR, INC. CONFIDENTIAL PROPRIETARY

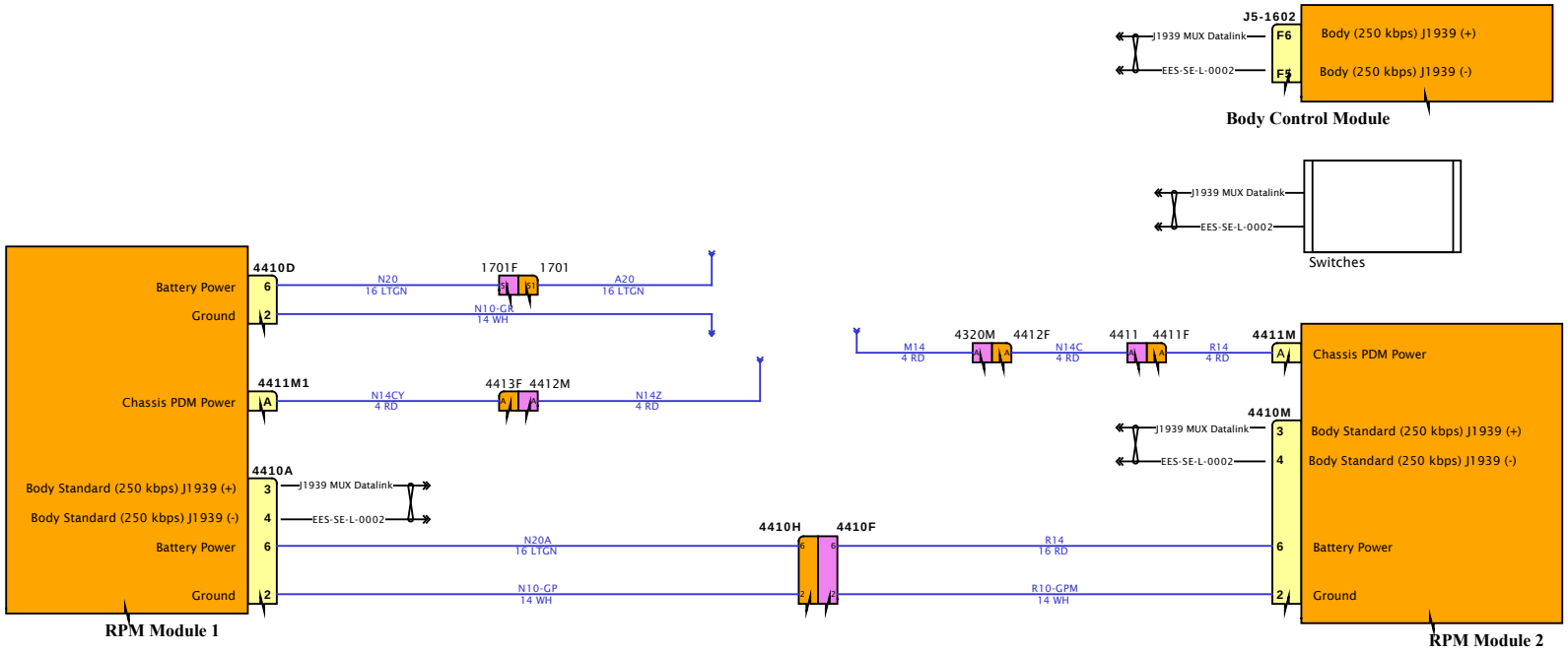

DESIGN DESCRIPTION

FEATURE CODES

SOFTWARE FEATURE CODES

NAVISTAR
NAVISTAR, INC. CONFIDENTIAL PROPRIETARY

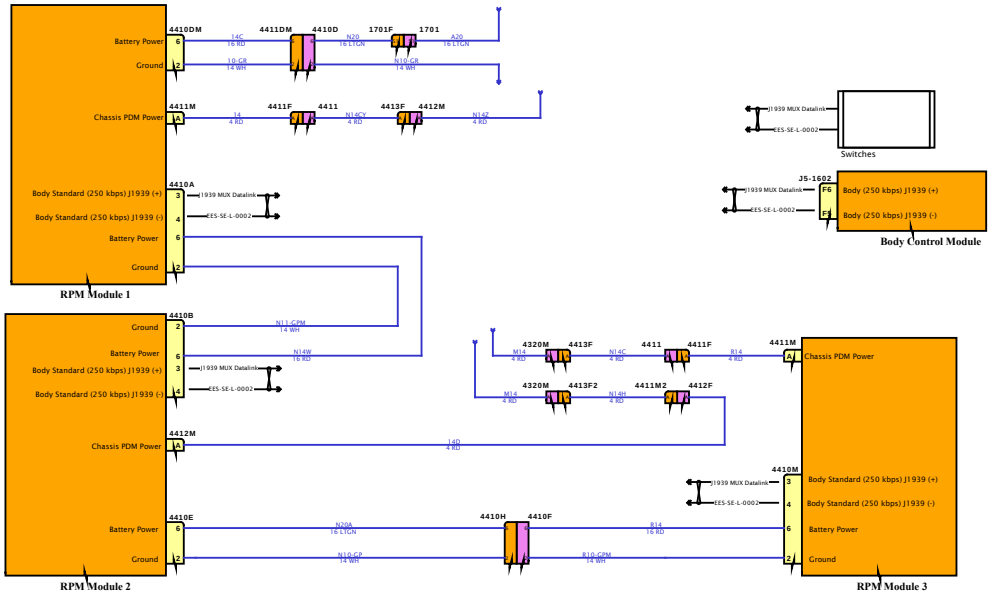

DESIGN DESCRIPTION

FEATURE CODES

SOFTWARE FEATURE CODES

DESIGN DESCRIPTION

FEATURE CODES

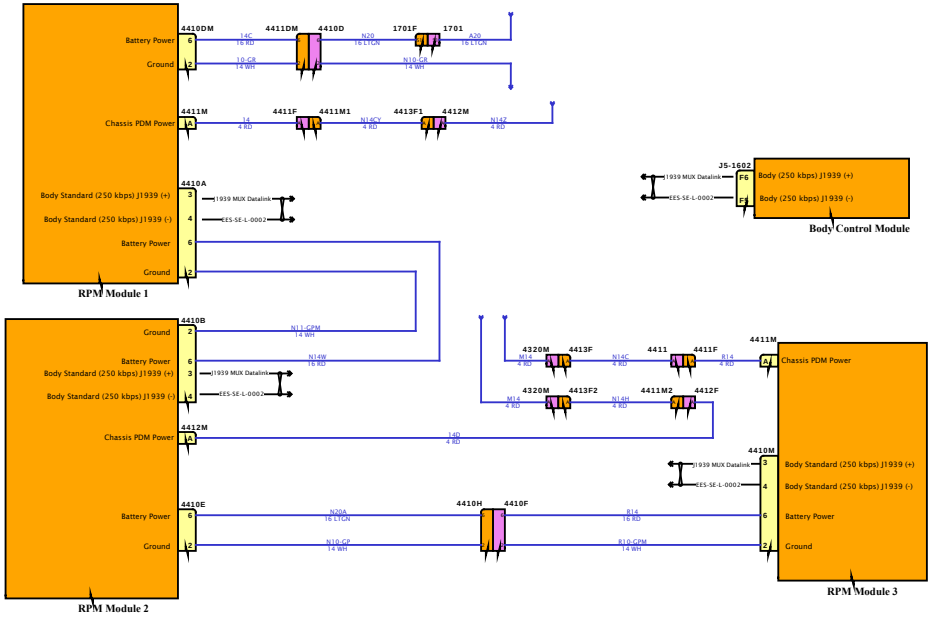

SOFTWARE FEATURE CODES

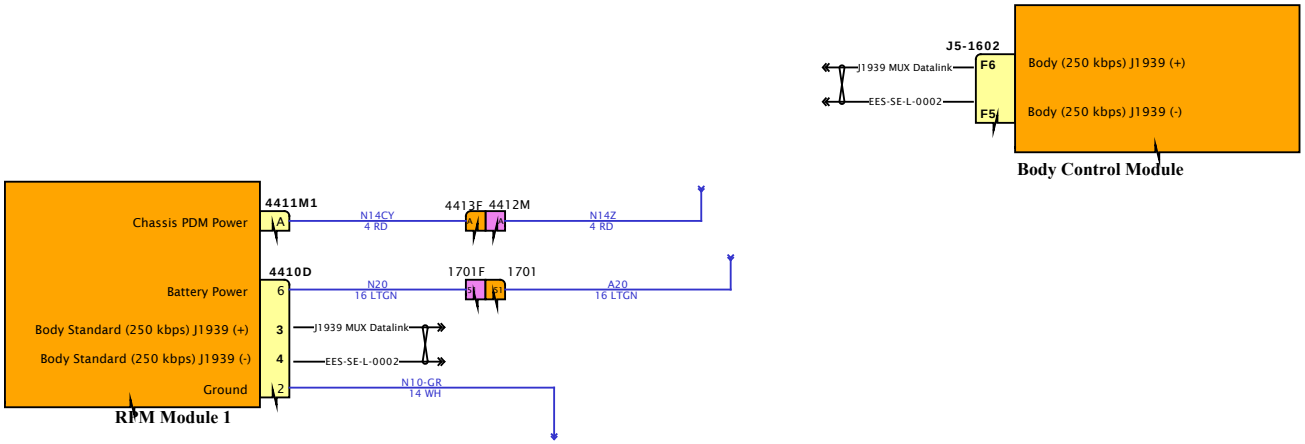

DESIGN DESCRIPTION

FEATURE CODES

SOFTWARE FEATURE CODES

NAVISTAR
NAVISTAR, INC. CONFIDENTIAL PROPRIETARY

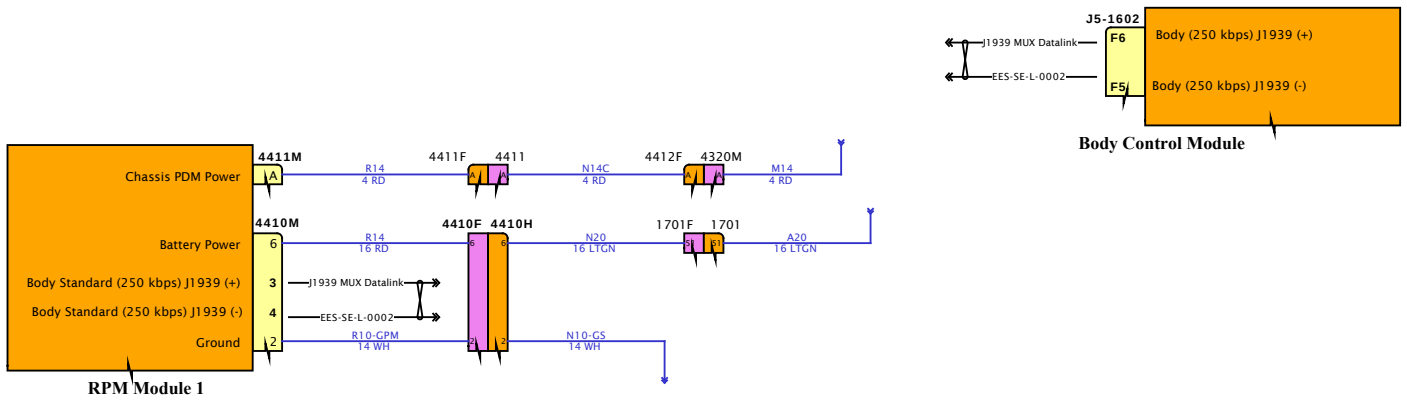

DESIGN DESCRIPTION

FEATURE CODES

SOFTWARE FEATURE CODES

NAVISTAR

NAVISTAR, INC. CONFIDENTIAL PROPRIETARY

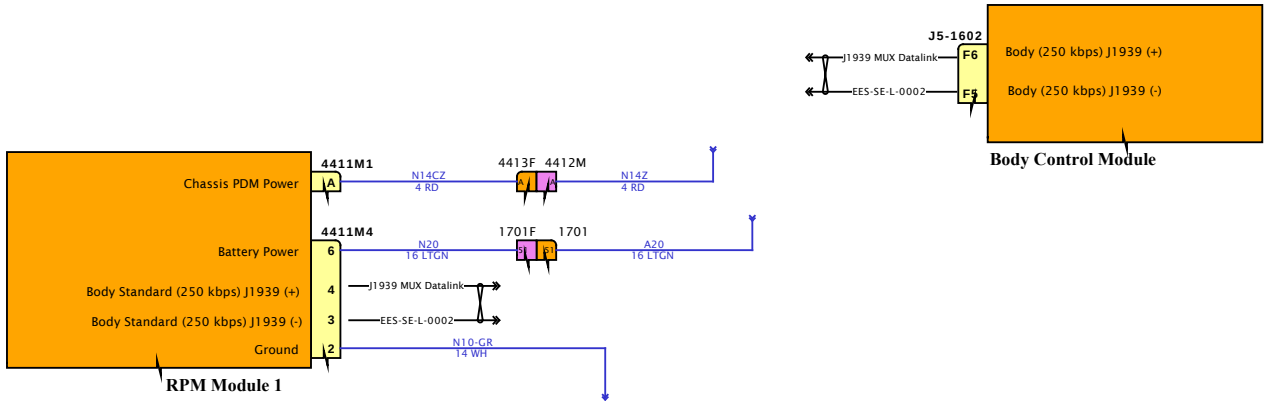

DESIGN DESCRIPTION

FEATURE CODES

SOFTWARE FEATURE CODES

NAVISTAR
NAVISTAR, INC. CONFIDENTIAL PROPRIETARY

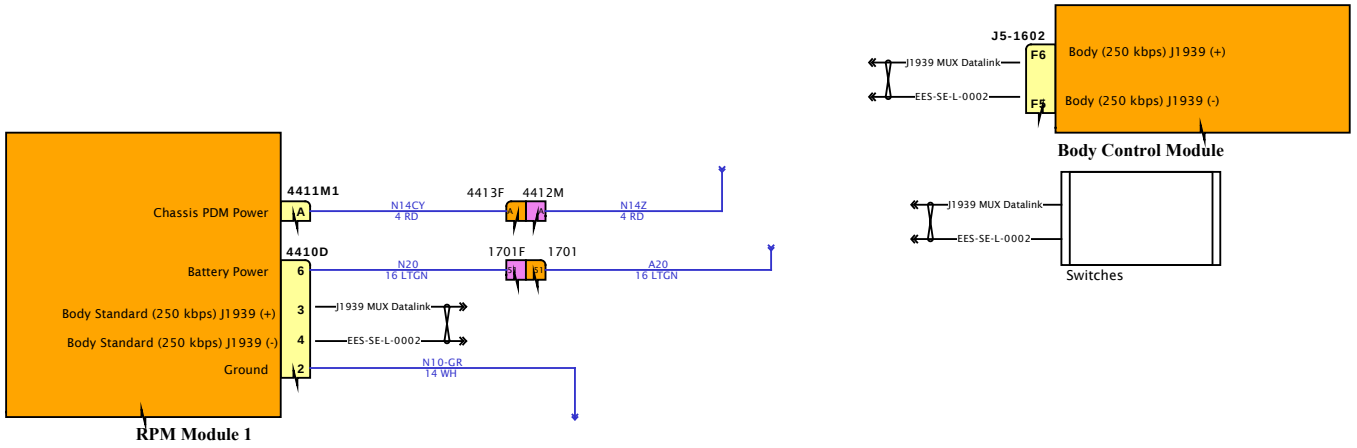

DESIGN DESCRIPTION

FEATURE CODES

SOFTWARE FEATURE CODES

NAVISTAR
NAVISTAR, INC. CONFIDENTIAL PROPRIETARY

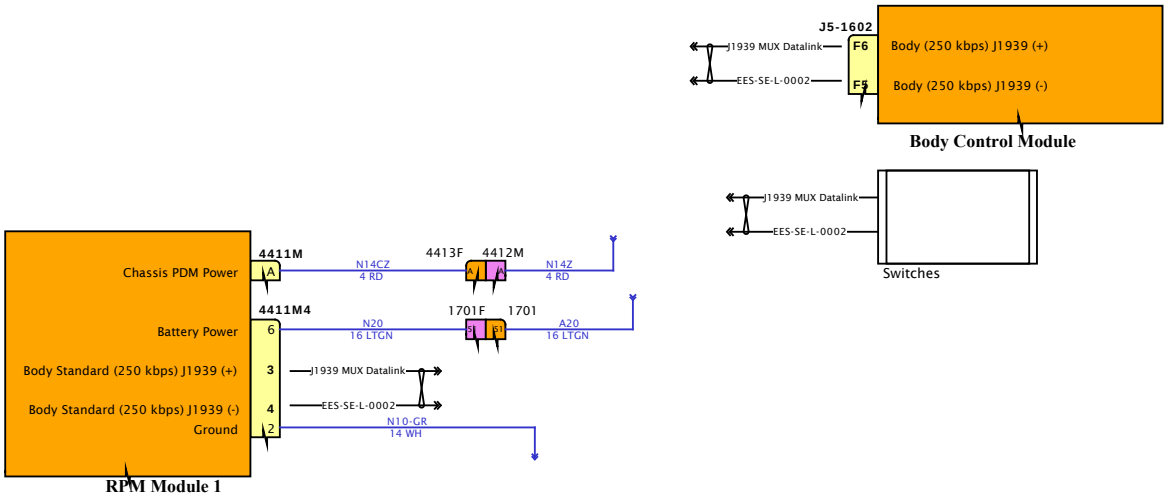

DESIGN DESCRIPTION

FEATURE CODES

SOFTWARE FEATURE CODES

NAVISTAR
NAVISTAR, INC. CONFIDENTIAL PROPRIETARY

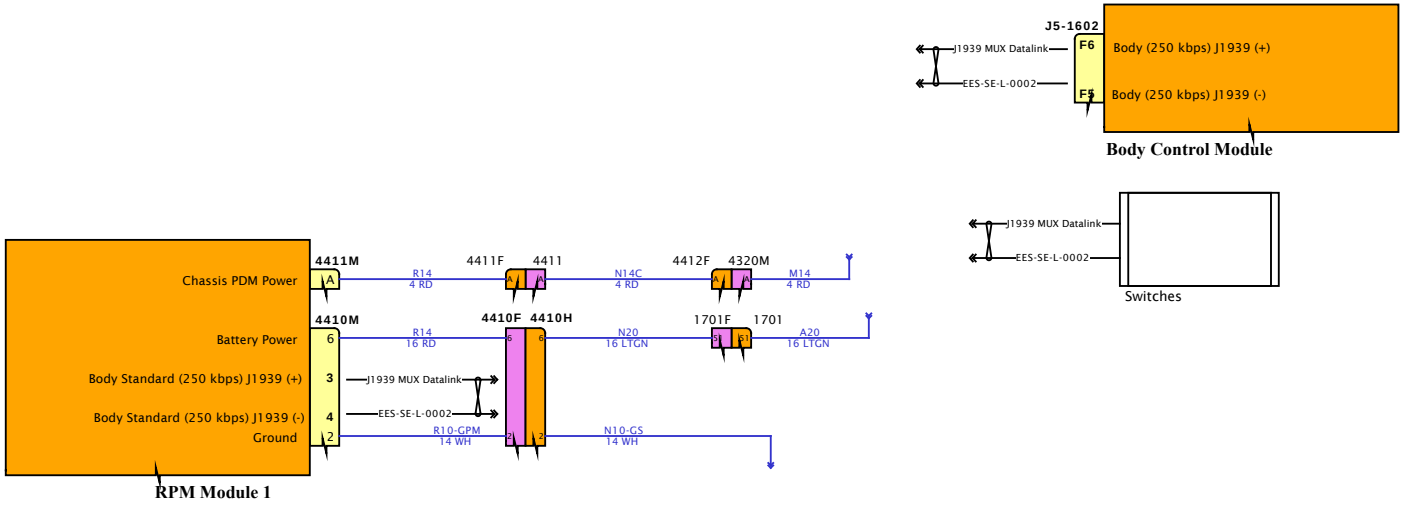

DESIGN DESCRIPTION

FEATURE CODES

SOFTWARE FEATURE CODES

NAVISTAR
NAVISTAR, INC. CONFIDENTIAL PROPRIETARY

Diagram1

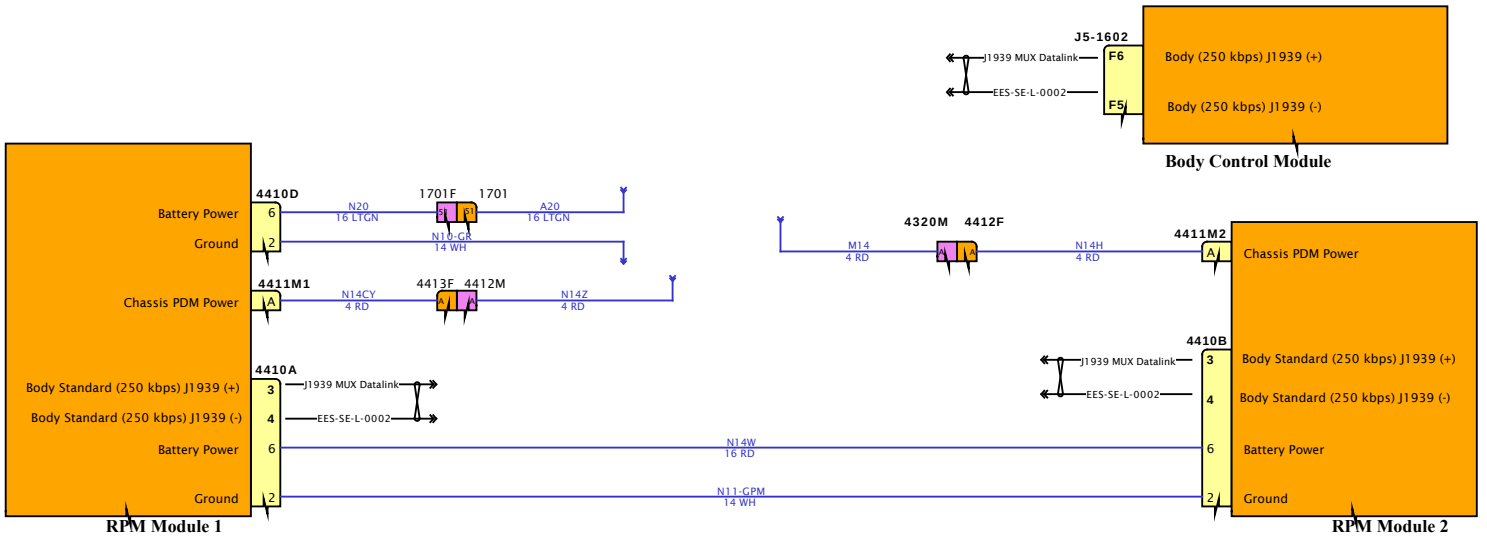

DESIGN DESCRIPTION

FEATURE CODES

SOFTWARE FEATURE CODES

NAVISTAR
NAVISTAR, INC. CONFIDENTIAL PROPRIETARY

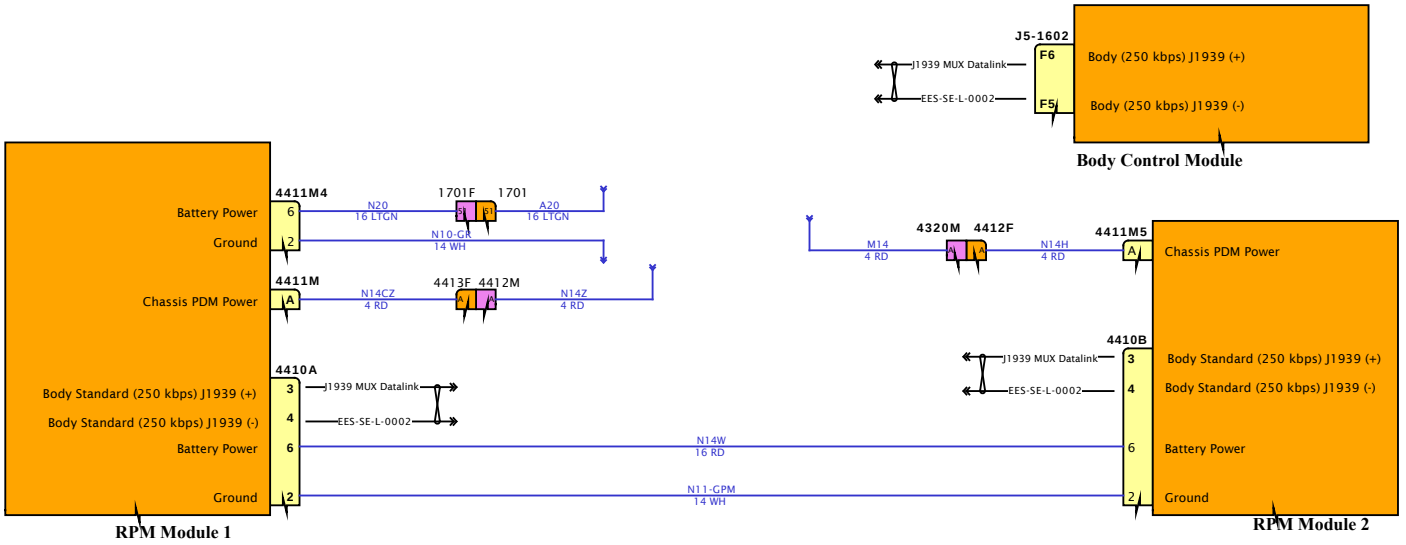

DESIGN DESCRIPTION

FEATURE CODES

SOFTWARE FEATURE CODES

NAVISTAR
NAVISTAR, INC. CONFIDENTIAL PROPRIETARY

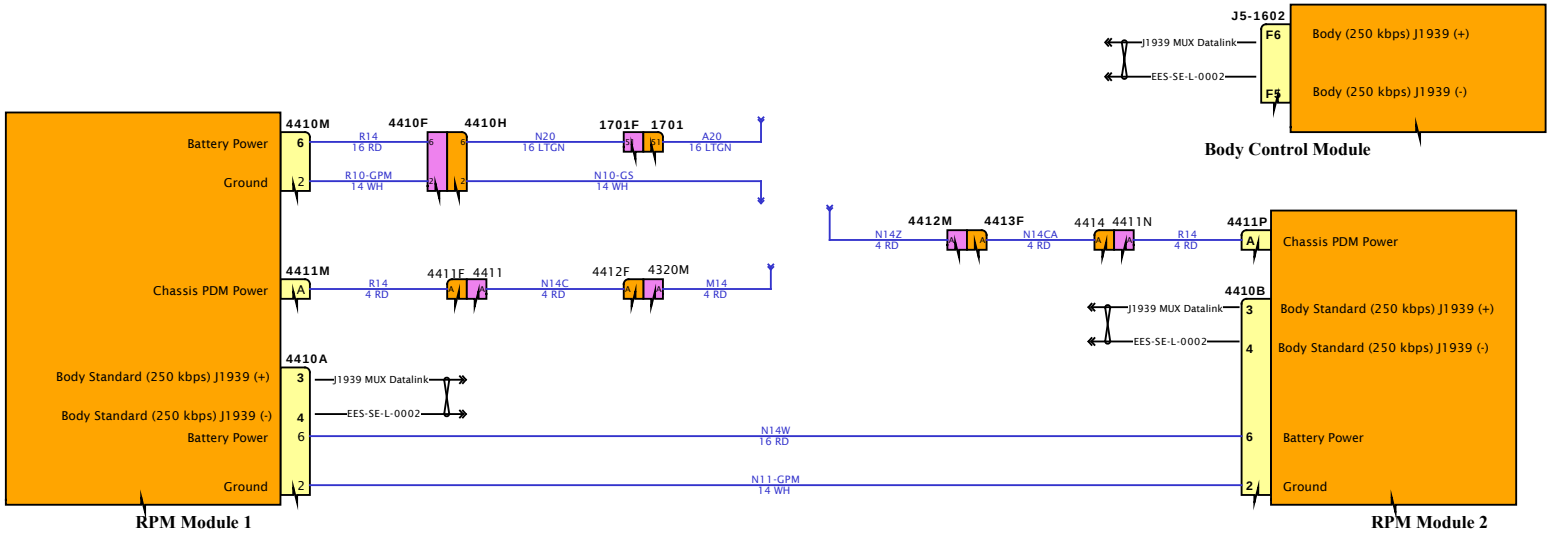

DESIGN DESCRIPTION

FEATURE CODES

SOFTWARE FEATURE CODES

NAVISTAR
NAVISTAR, INC. CONFIDENTIAL PROPRIETARY

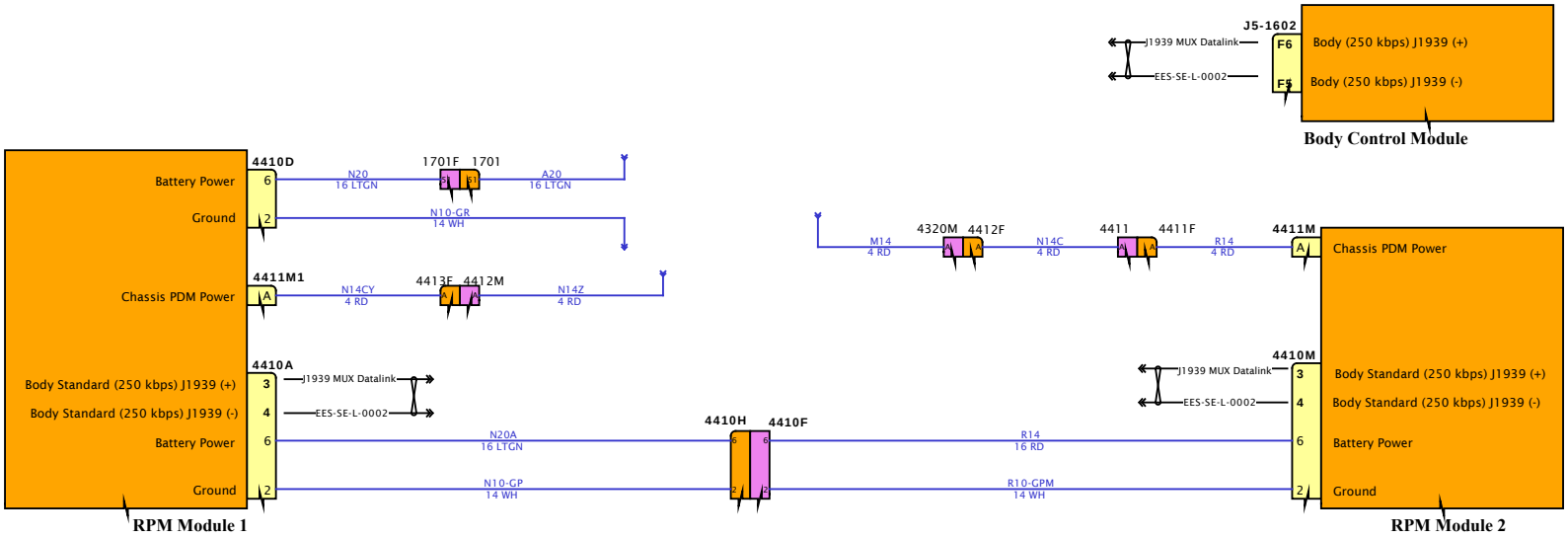

DESIGN DESCRIPTION

FEATURE CODES

SOFTWARE FEATURE CODES

NAVISTAR
NAVISTAR, INC. CONFIDENTIAL PROPRIETARY

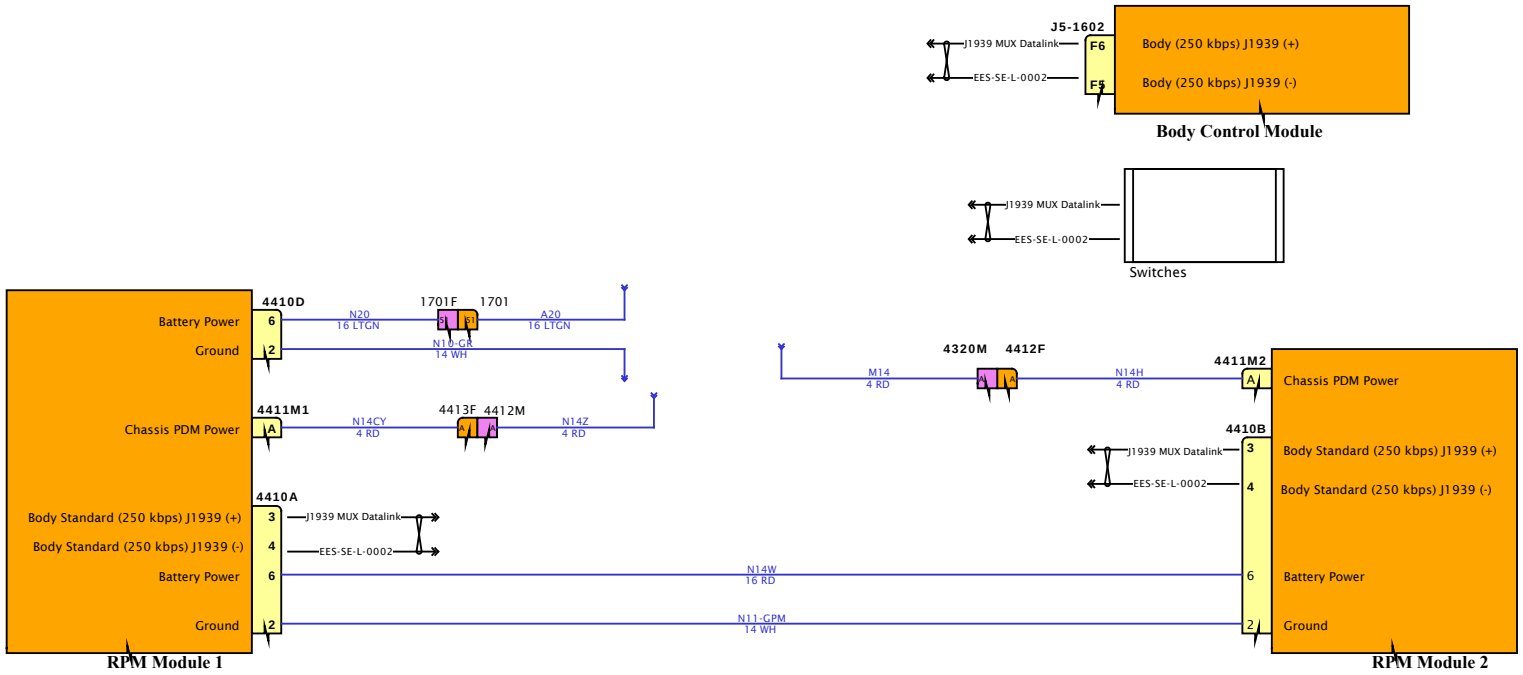

DESIGN DESCRIPTION

FEATURE CODES

SOFTWARE FEATURE CODES

NAVISTAR
NAVISTAR, INC. CONFIDENTIAL PROPRIETARY

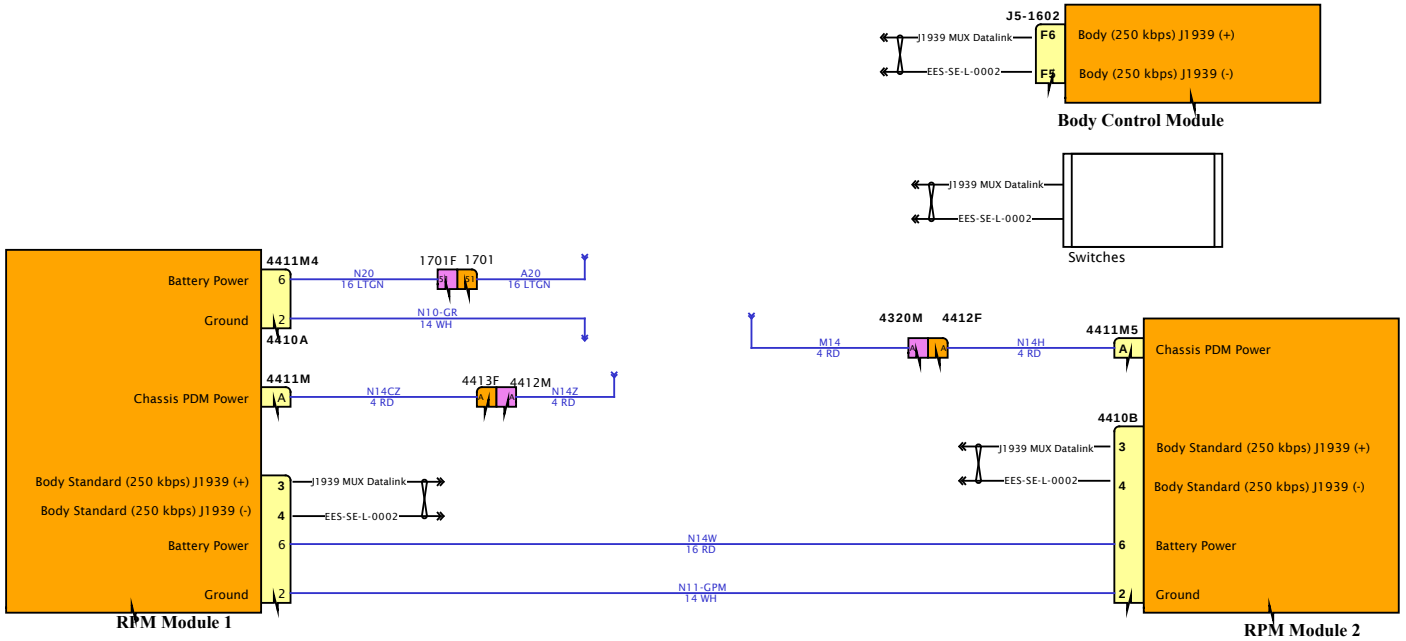

DESIGN DESCRIPTION

FEATURE CODES

SOFTWARE FEATURE CODES

NAVISTAR
NAVISTAR, INC. CONFIDENTIAL PROPRIETARY

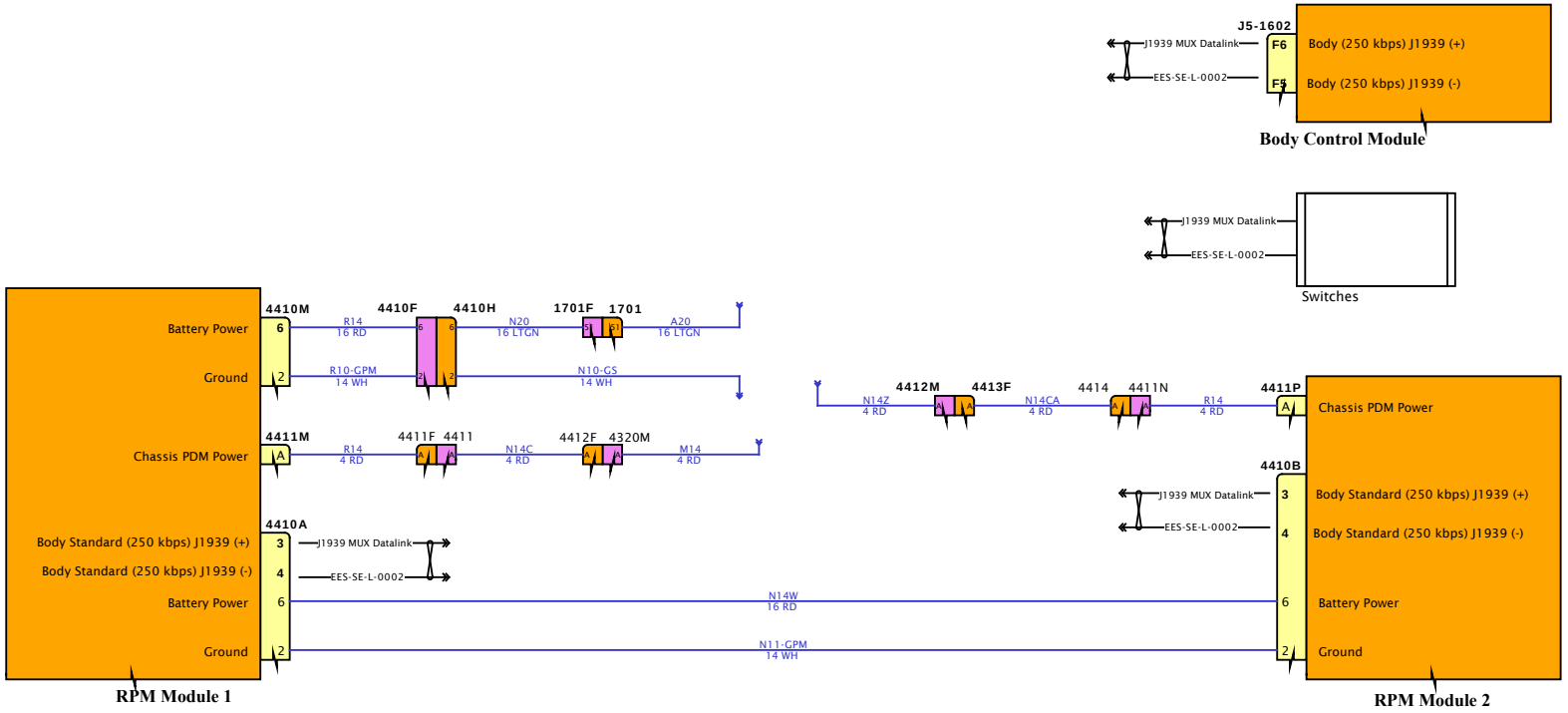

DESIGN DESCRIPTION

FEATURE CODES

SOFTWARE FEATURE CODES

NAVISTAR
NAVISTAR, INC. CONFIDENTIAL PROPRIETARY

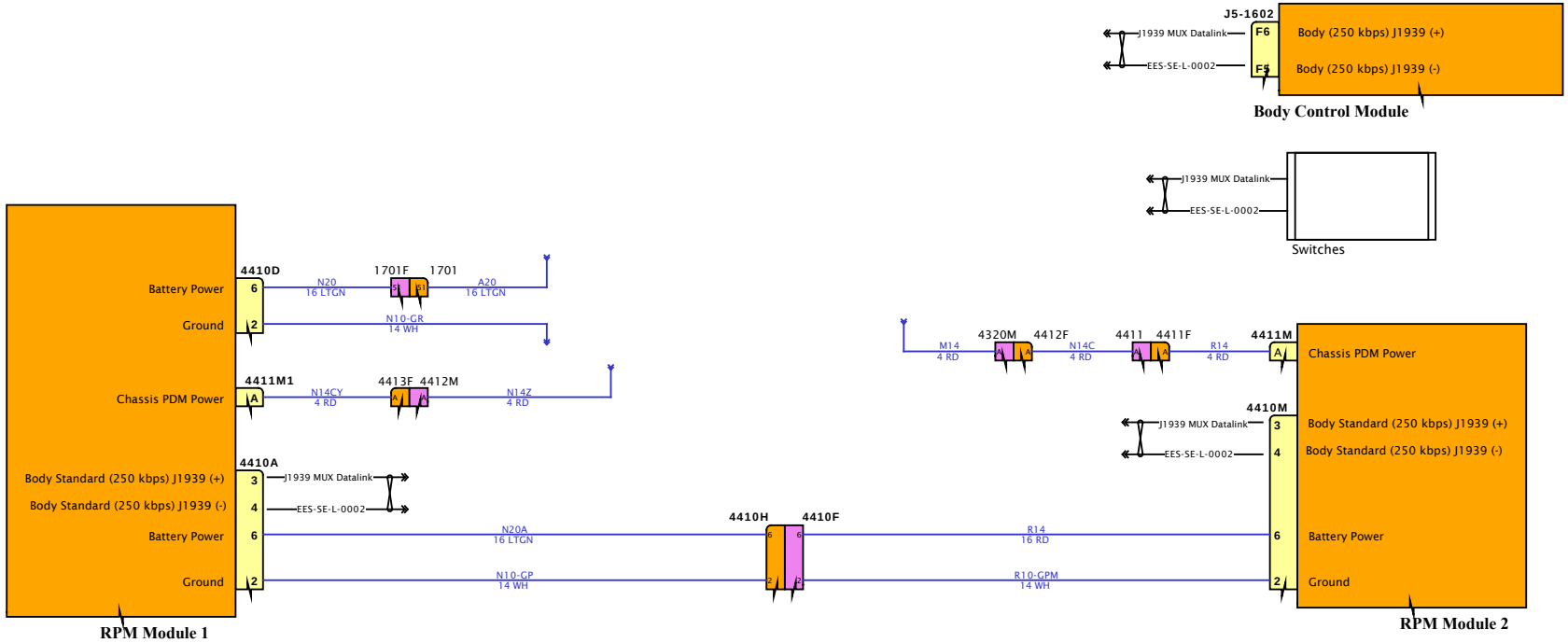

DESIGN DESCRIPTION

FEATURE CODES

SOFTWARE FEATURE CODES

NAVISTAR
NAVISTAR, INC. CONFIDENTIAL PROPRIETARY

DESIGN DESCRIPTION

FEATURE CODES

SOFTWARE FEATURE CODES

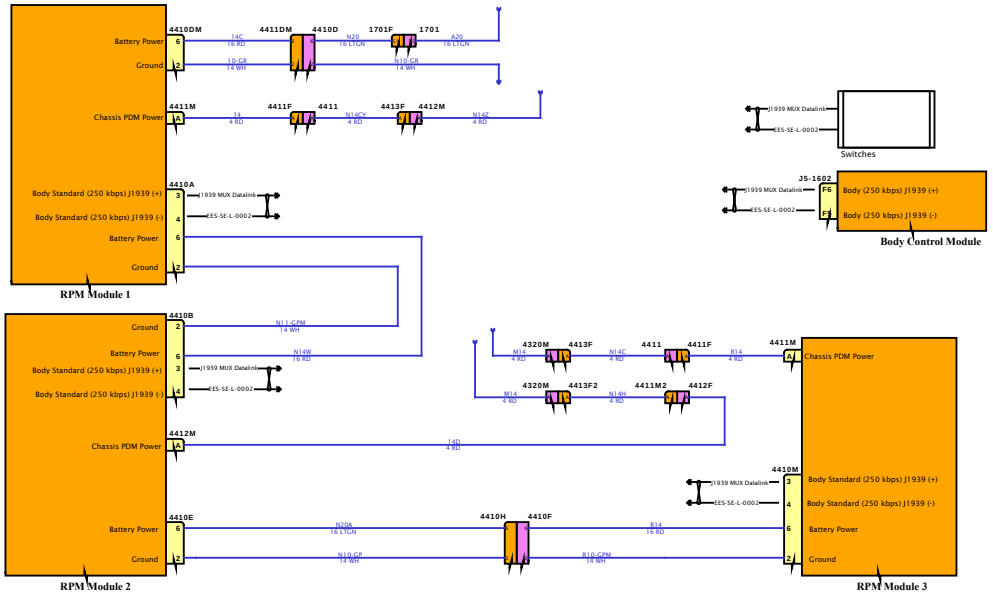

DESIGN DESCRIPTION

FEATURE CODES

SOFTWARE FEATURE CODES

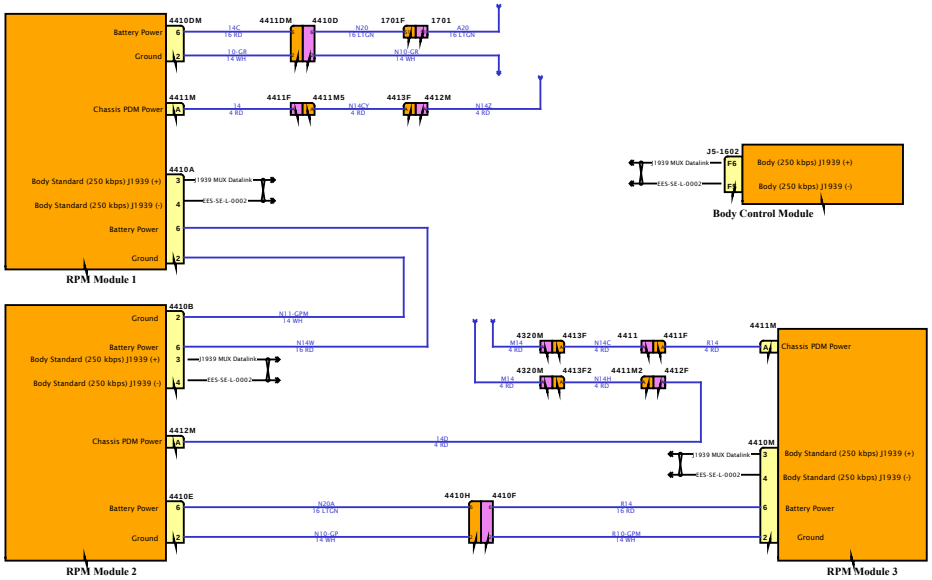

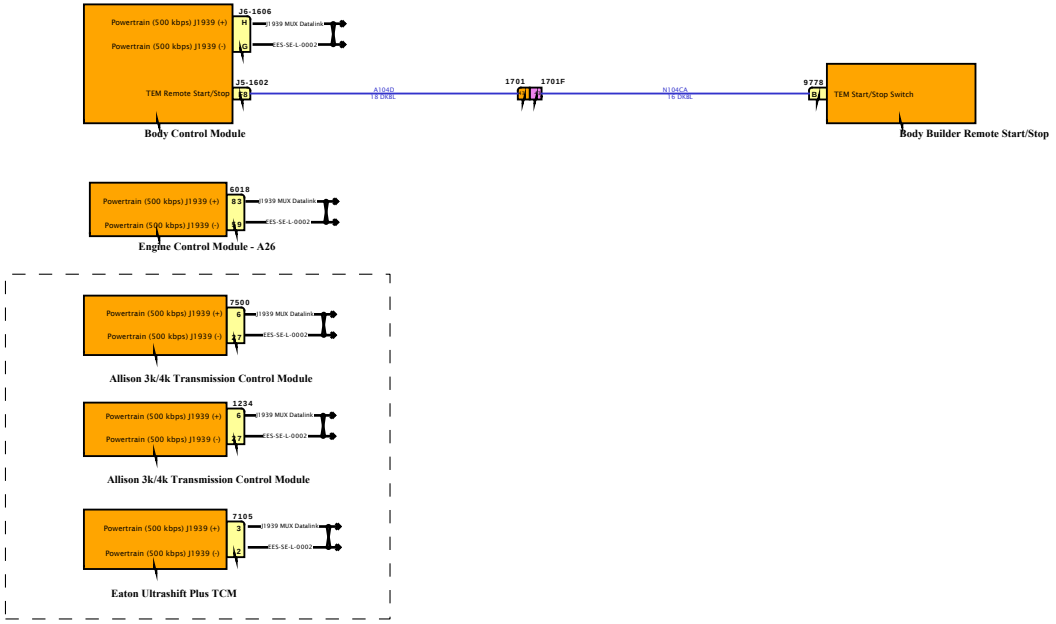

DESIGN DESCRIPTION

FEATURE CODES

SOFTWARE FEATURE CODES

NAVISTAR INC. CONFIDENTIAL PROPRIETARY

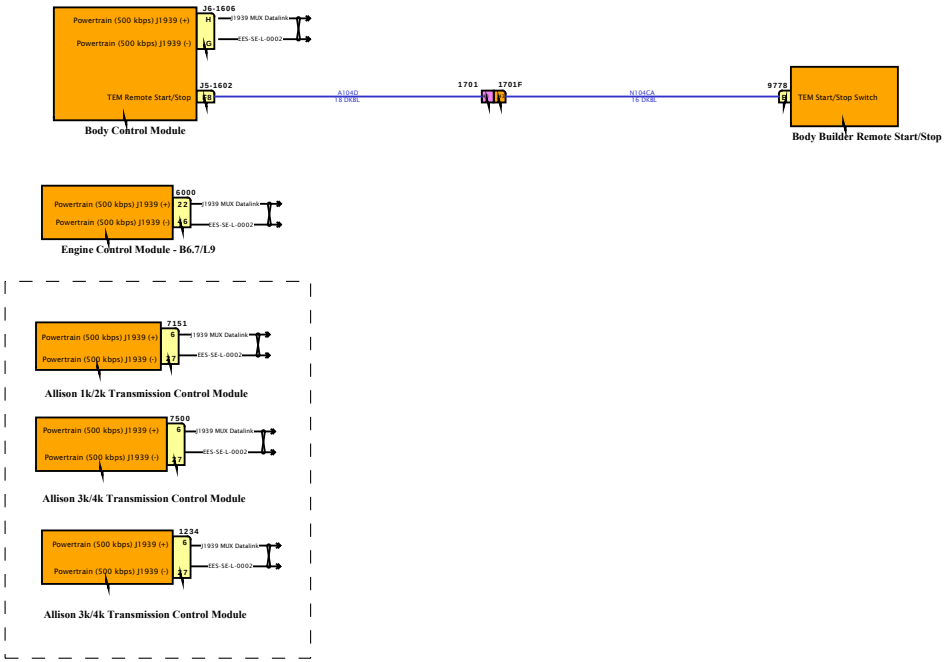

DESIGN DESCRIPTION

FEATURE CODES

SOFTWARE FEATURE CODES

NAVISTAR INC. CONFIDENTIAL PROPRIETARY

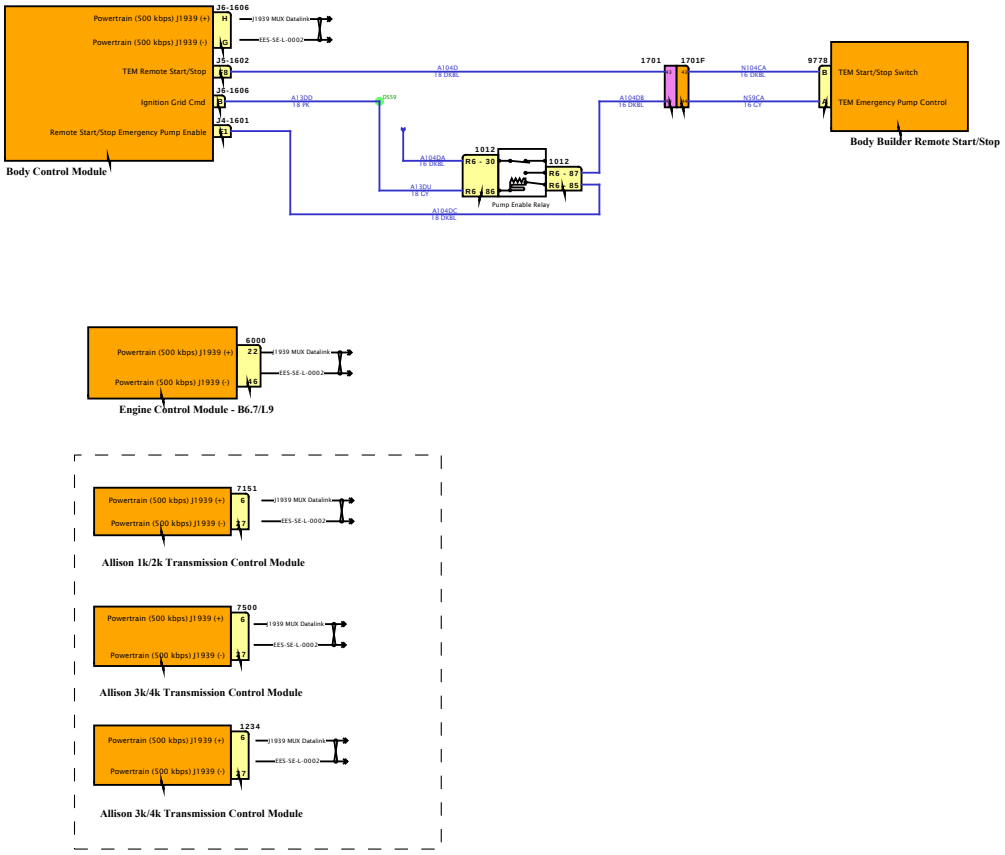

DESIGN DESCRIPTION

FEATURE CODES

SOFTWARE FEATURE CODES

NAVISTAR
NAVISTAR, INC. CONFIDENTIAL PROPRIETARY

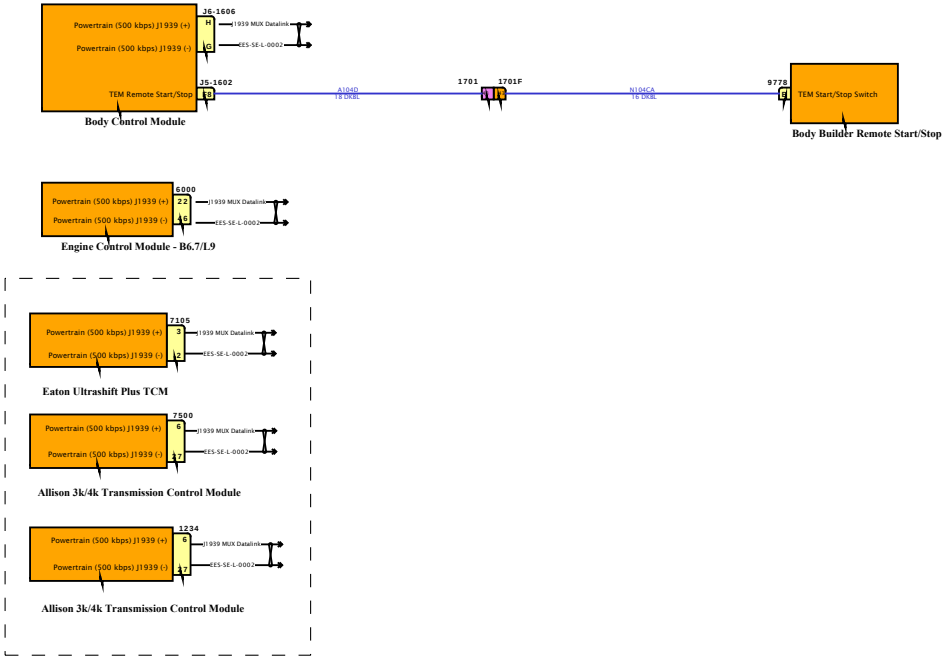

DESIGN DESCRIPTION

FEATURE CODES

SOFTWARE FEATURE CODES

NAVISTAR
NAVISTAR, INC. CONFIDENTIAL PROPRIETARY

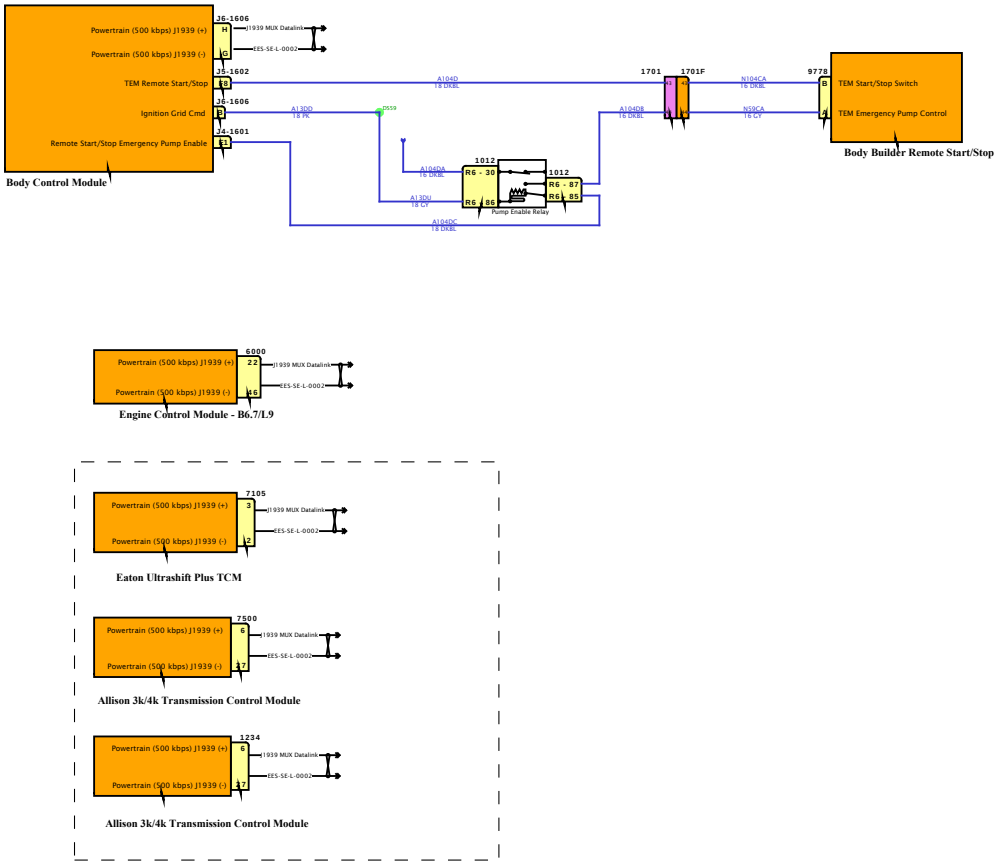

DESIGN DESCRIPTION

FEATURE CODES

SOFTWARE FEATURE CODES

NAVISTAR INC. CONFIDENTIAL PROPRIETARY

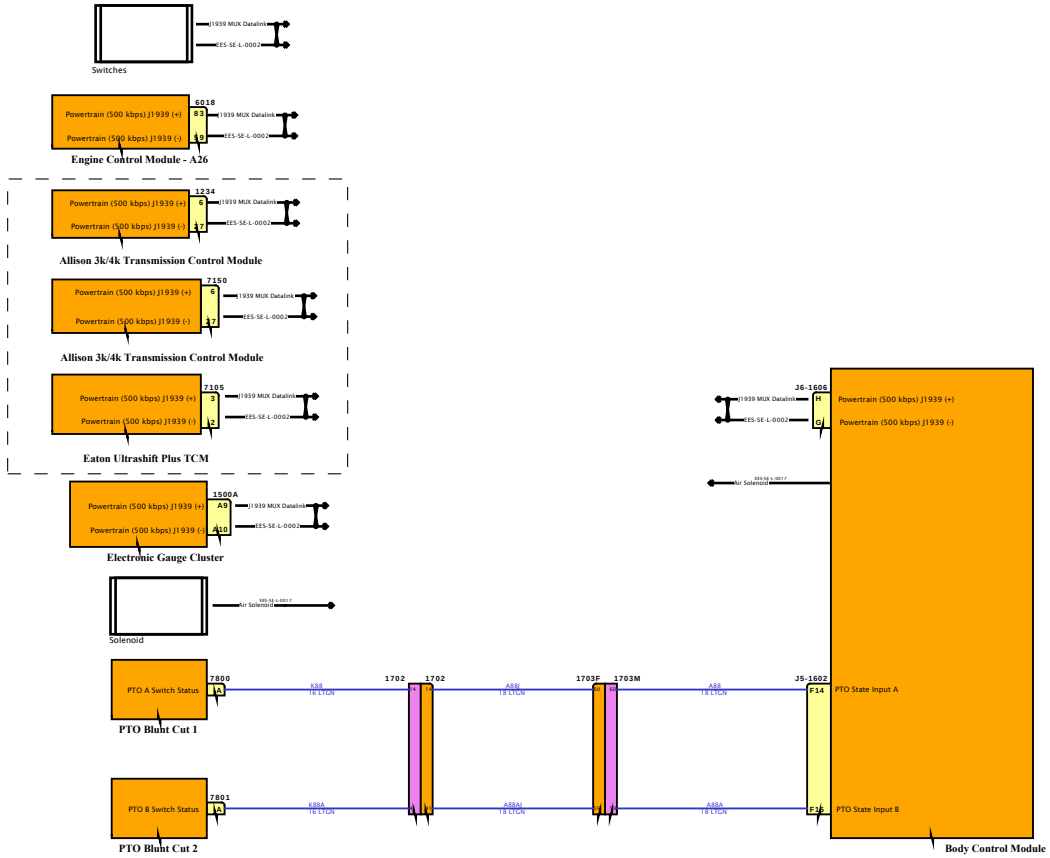

DESIGN DESCRIPTION

FEATURE CODES

SOFTWARE FEATURE CODES

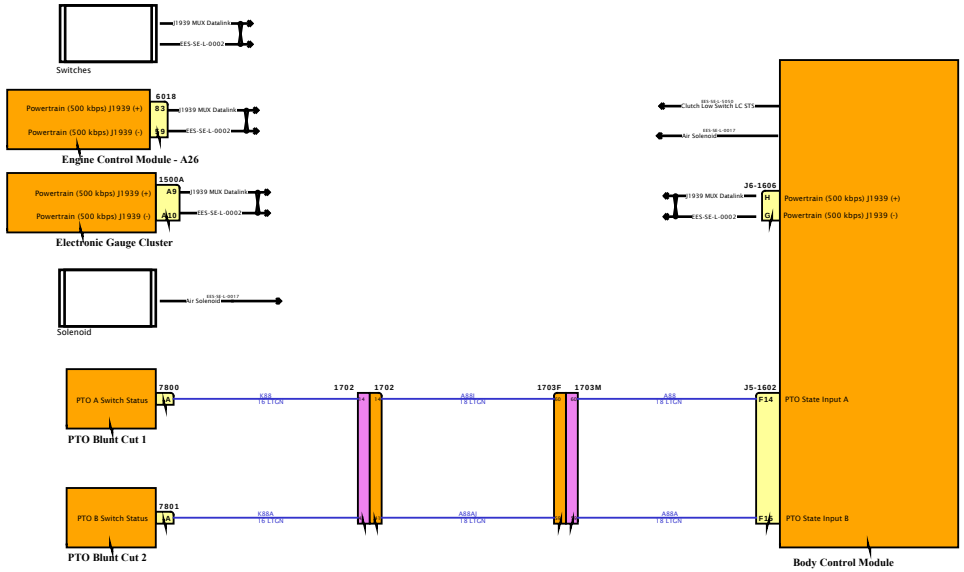

DESIGN DESCRIPTION

FEATURE CODES

SOFTWARE FEATURE CODES

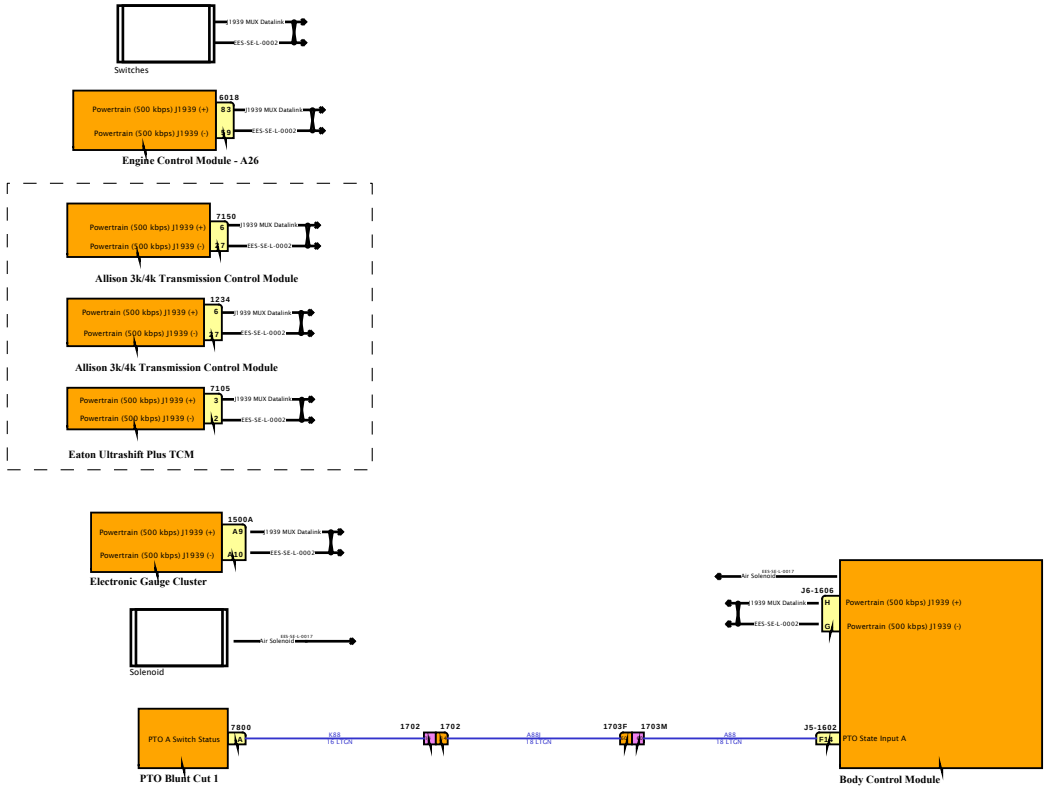

DESIGN DESCRIPTION

FEATURE CODES

SOFTWARE FEATURE CODES

Diagram1

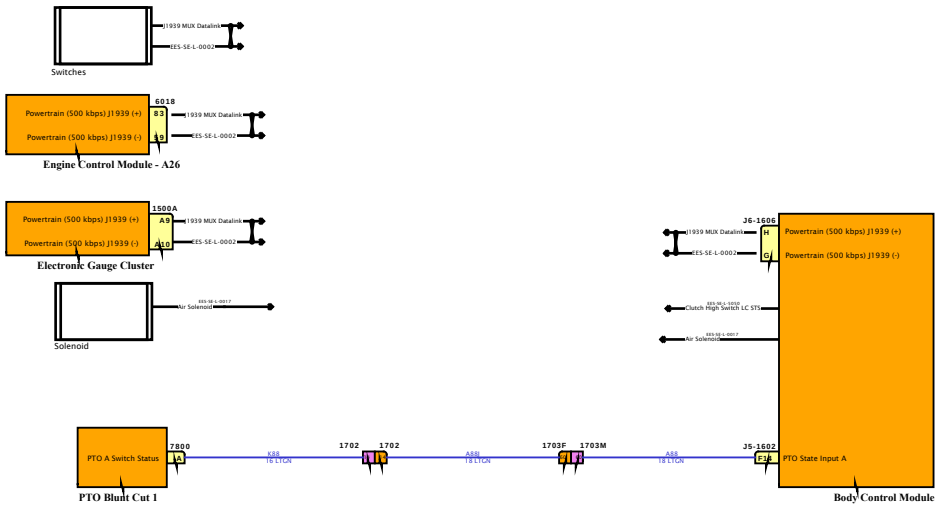

DESIGN DESCRIPTION

FEATURE CODES

SOFTWARE FEATURE CODES

NAVISTAR INC. CONFIDENTIAL PROPRIETARY

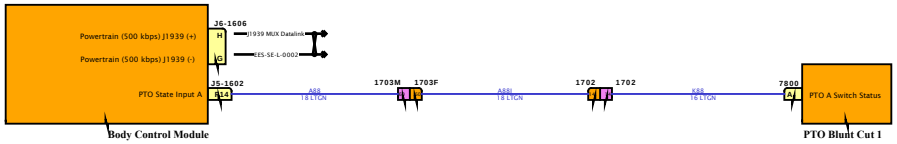

DESIGN DESCRIPTION

FEATURE CODES

SOFTWARE FEATURE CODES

NAVISTAR INC. CONFIDENTIAL PROPRIETARY

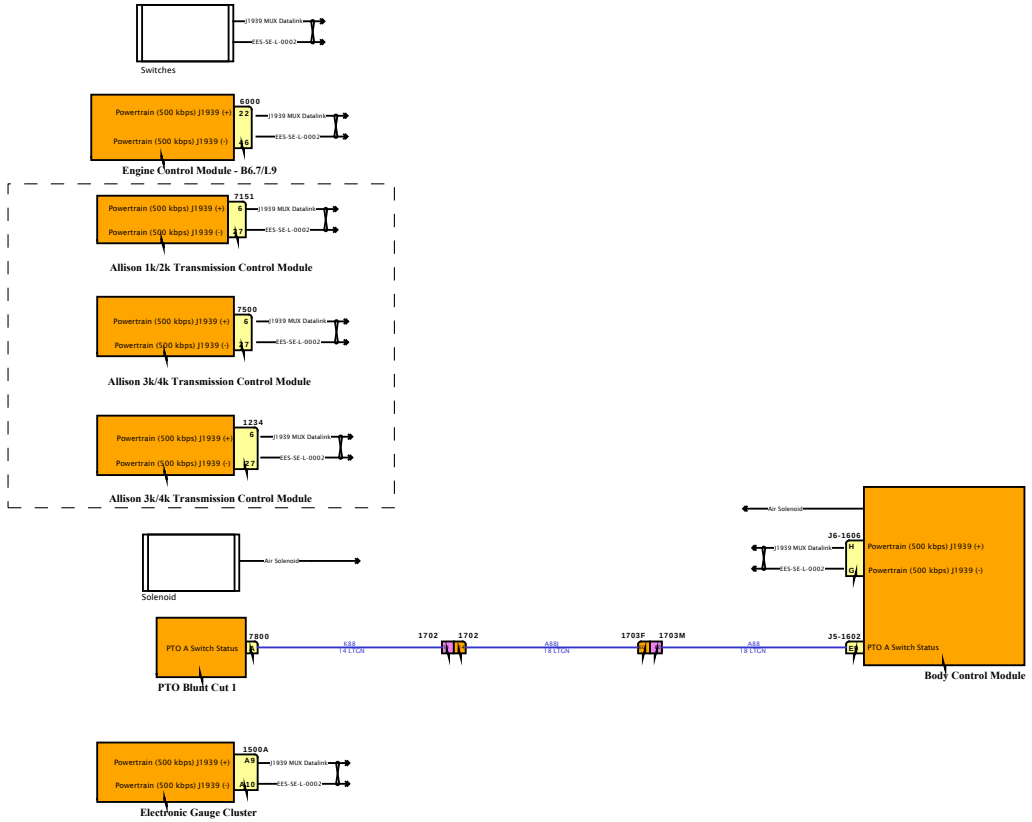

DESIGN DESCRIPTION

FEATURE CODES

SOFTWARE FEATURE CODES

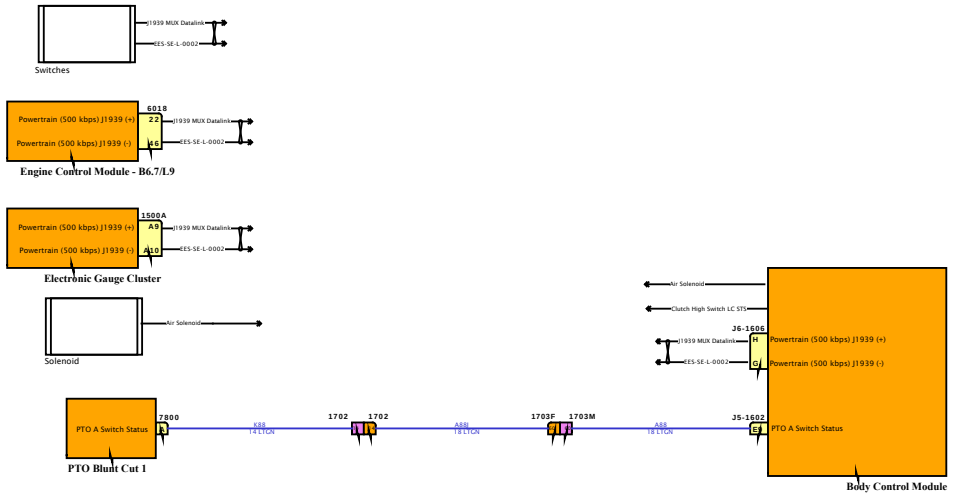

DESIGN DESCRIPTION

FEATURE CODES

SOFTWARE FEATURE CODES

NAVISTAR
NAVISTAR, INC. CONFIDENTIAL PROPRIETARY

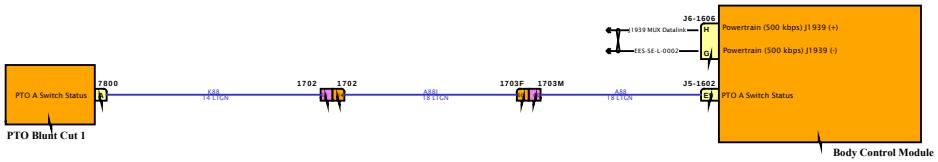

DESIGN DESCRIPTION

FEATURE CODES

SOFTWARE FEATURE CODES

NAVISTAR INC. CONFIDENTIAL PROPRIETARY

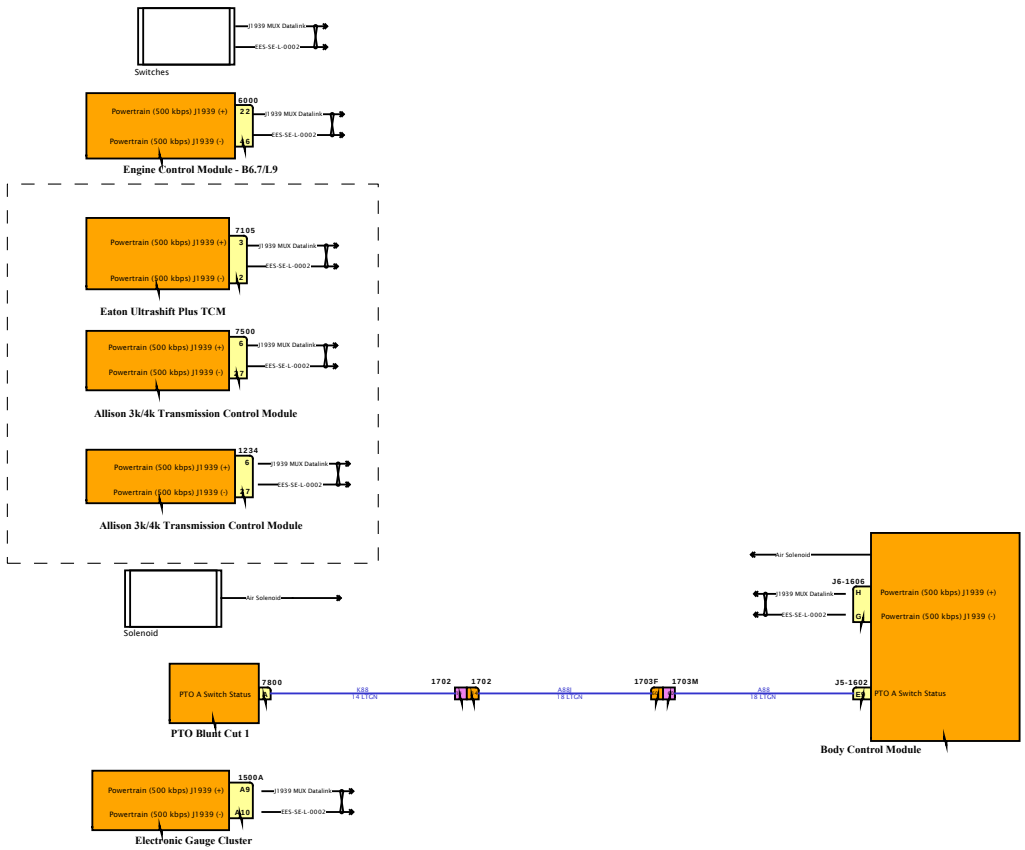

DESIGN DESCRIPTION

FEATURE CODES

SOFTWARE FEATURE CODES

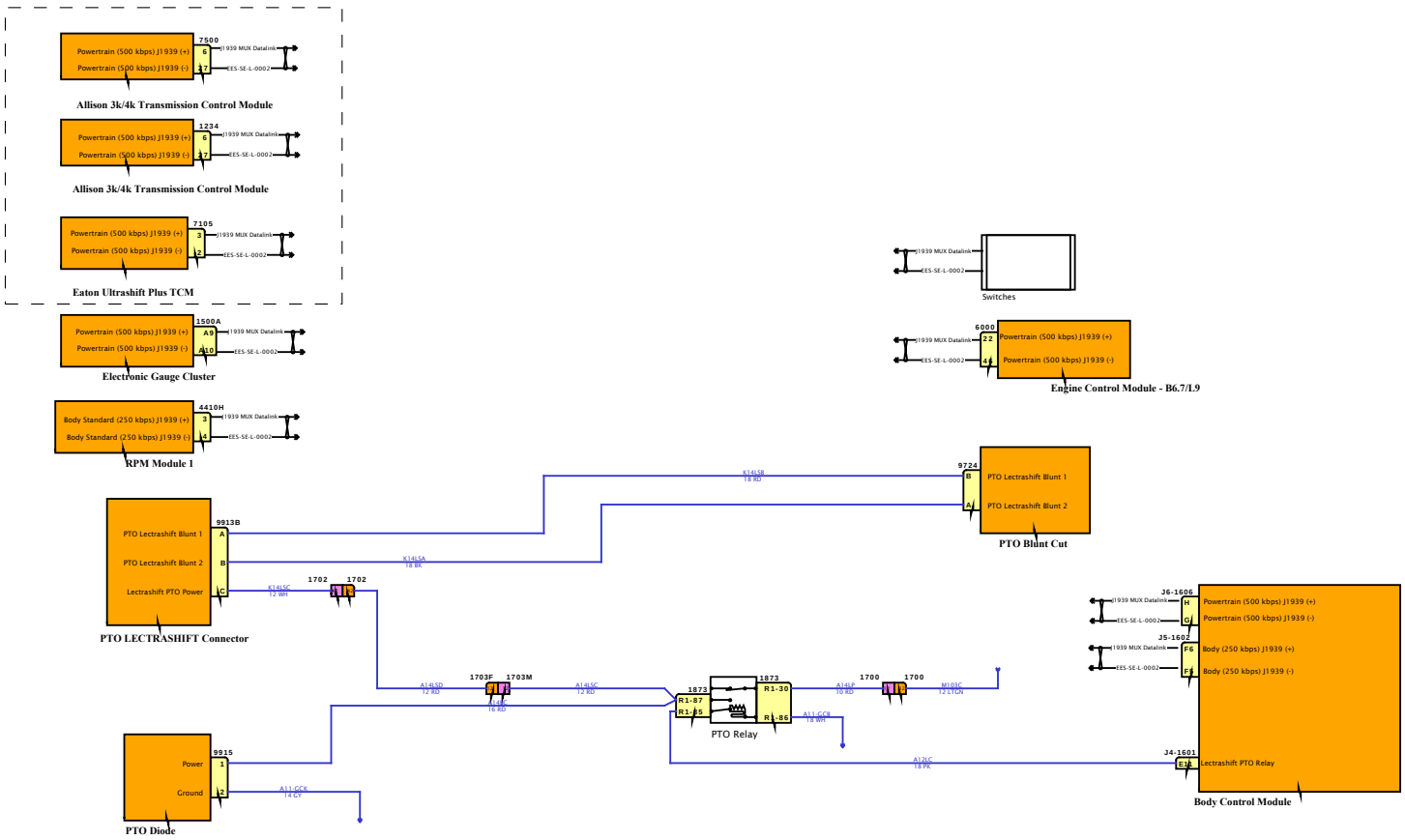

DESIGN DESCRIPTION

FEATURE CODES

SOFTWARE FEATURE CODES

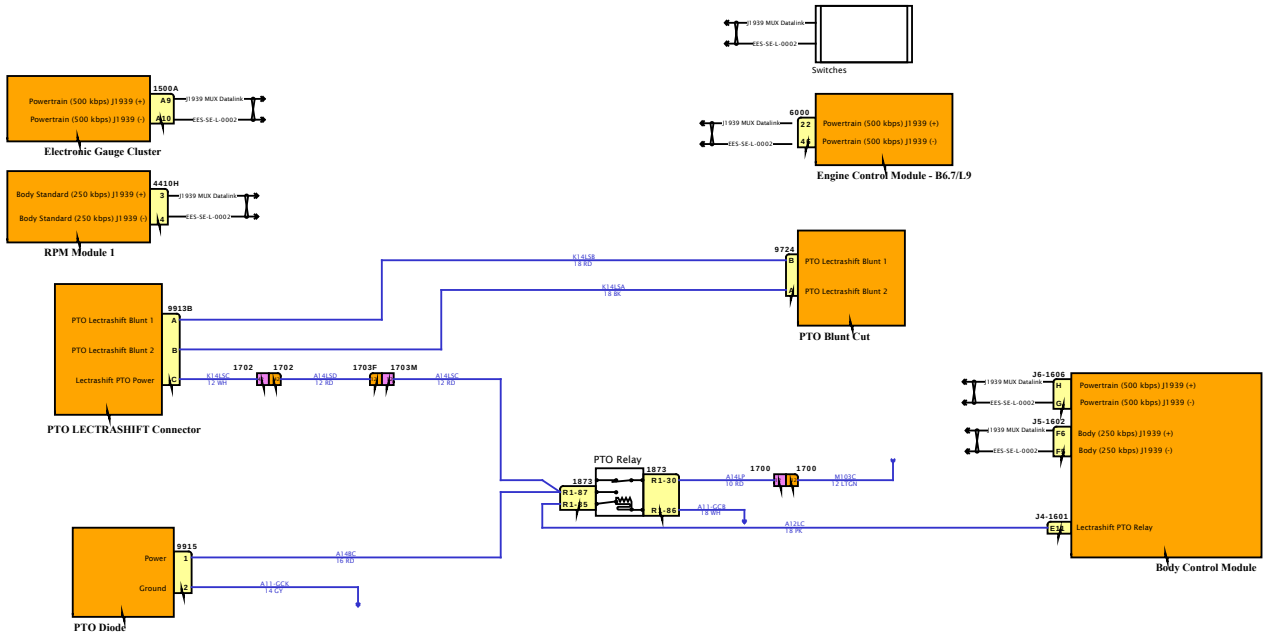

DESIGN DESCRIPTION

FEATURE CODES

SOFTWARE FEATURE CODES

Diagram1

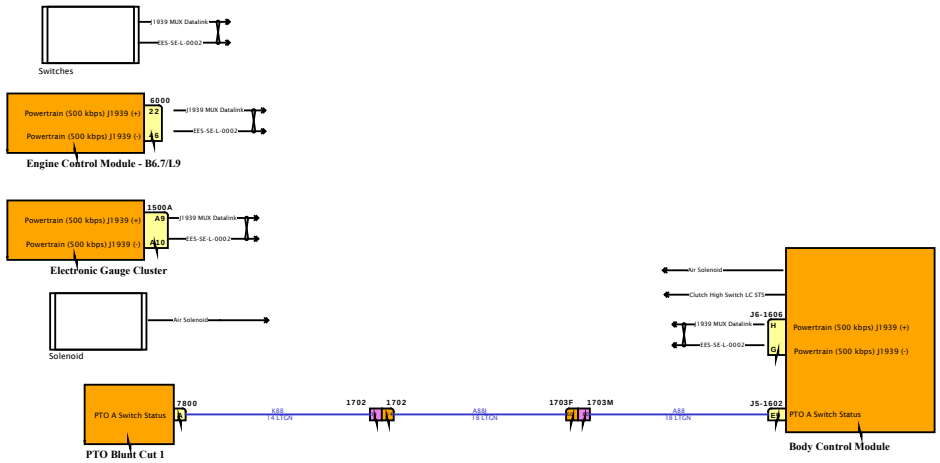

DESIGN DESCRIPTION

FEATURE CODES

SOFTWARE FEATURE CODES

NAVISTAR
NAVISTAR, INC. CONFIDENTIAL PROPRIETARY

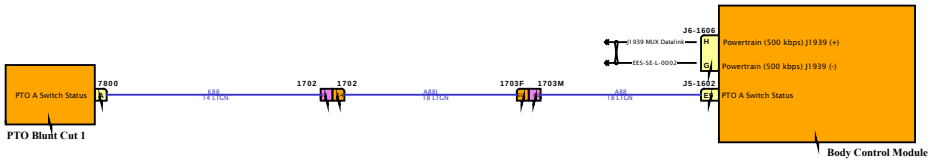

DESIGN DESCRIPTION

FEATURE CODES

SOFTWARE FEATURE CODES

NAVISTAR INC. CONFIDENTIAL PROPRIETARY

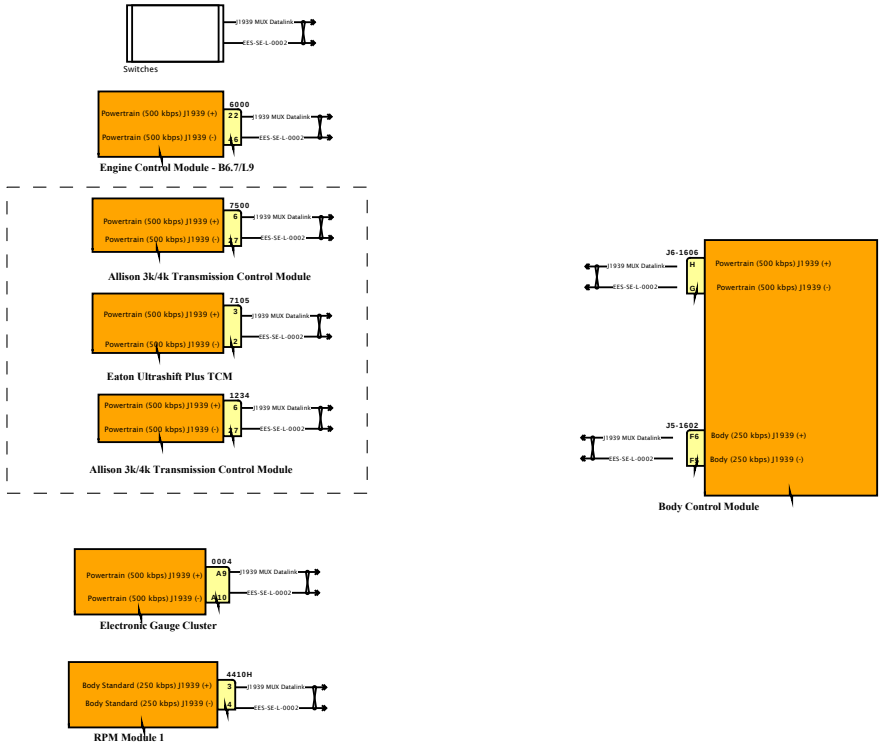

DESIGN DESCRIPTION

FEATURE CODES

SOFTWARE FEATURE CODES

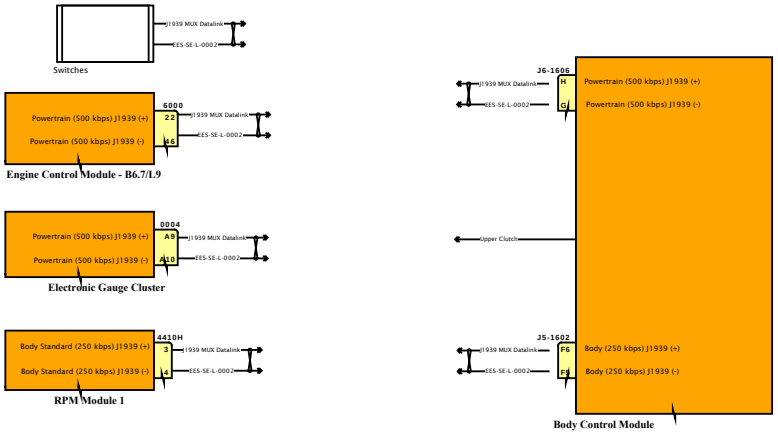

DESIGN DESCRIPTION

FEATURE CODES

SOFTWARE FEATURE CODES

NAVISTAR INC. CONFIDENTIAL PROPRIETARY

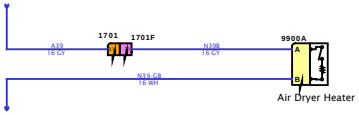

DESIGN DESCRIPTION

FEATURE CODES

SOFTWARE FEATURE CODES

NAVISTAR INC. CONFIDENTIAL PROPRIETARY

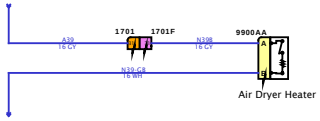

DESIGN DESCRIPTION

FEATURE CODES

SOFTWARE FEATURE CODES

NAVISTAR INC. CONFIDENTIAL PROPRIETARY

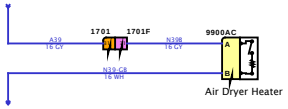

DESIGN DESCRIPTION

FEATURE CODES

SOFTWARE FEATURE CODES

NAVISTAR INC. CONFIDENTIAL PROPRIETARY

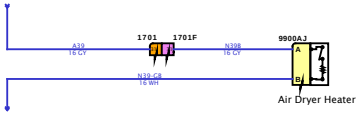

DESIGN DESCRIPTION

FEATURE CODES

SOFTWARE FEATURE CODES

NAVISTAR INC. CONFIDENTIAL PROPRIETARY

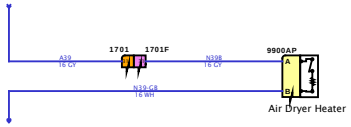

DESIGN DESCRIPTION

FEATURE CODES

SOFTWARE FEATURE CODES

NAVISTAR INC. CONFIDENTIAL PROPRIETARY

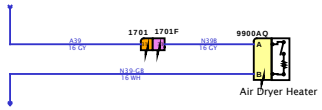

DESIGN DESCRIPTION

FEATURE CODES

SOFTWARE FEATURE CODES

NAVISTAR INC. CONFIDENTIAL PROPRIETARY

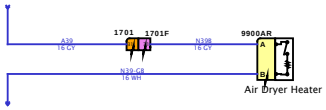

DESIGN DESCRIPTION

FEATURE CODES

SOFTWARE FEATURE CODES

NAVISTAR INC. CONFIDENTIAL PROPRIETARY

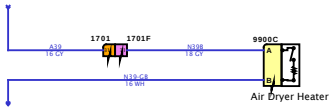

DESIGN DESCRIPTION

FEATURE CODES

SOFTWARE FEATURE CODES

NAVISTAR INC. CONFIDENTIAL PROPRIETARY

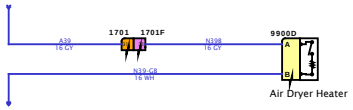

DESIGN DESCRIPTION

FEATURE CODES

SOFTWARE FEATURE CODES

NAVISTAR INC. CONFIDENTIAL PROPRIETARY

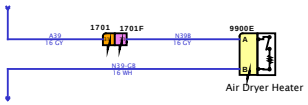

DESIGN DESCRIPTION

FEATURE CODES

SOFTWARE FEATURE CODES

NAVISTAR INC. CONFIDENTIAL PROPRIETARY

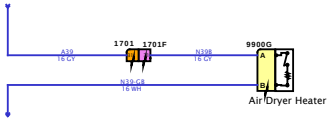

DESIGN DESCRIPTION

FEATURE CODES

SOFTWARE FEATURE CODES

NAVISTAR INC. CONFIDENTIAL PROPRIETARY

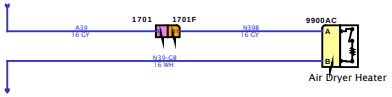

DESIGN DESCRIPTION

FEATURE CODES

SOFTWARE FEATURE CODES

NAVISTAR INC. CONFIDENTIAL PROPRIETARY

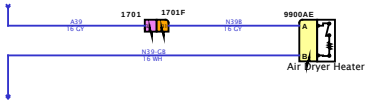

DESIGN DESCRIPTION

FEATURE CODES

SOFTWARE FEATURE CODES

NAVISTAR INC. CONFIDENTIAL PROPRIETARY

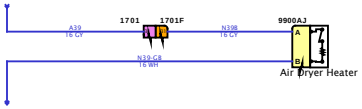

DESIGN DESCRIPTION

FEATURE CODES

SOFTWARE FEATURE CODES

NAVISTAR INC. CONFIDENTIAL PROPRIETARY

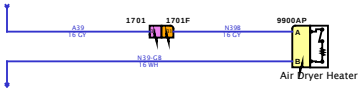

DESIGN DESCRIPTION

FEATURE CODES

SOFTWARE FEATURE CODES

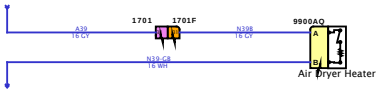

DESIGN DESCRIPTION

FEATURE CODES

SOFTWARE FEATURE CODES

NAVISTAR INC. CONFIDENTIAL PROPRIETARY

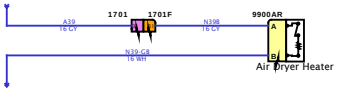

DESIGN DESCRIPTION

FEATURE CODES

SOFTWARE FEATURE CODES

NAVISTAR INC. CONFIDENTIAL PROPRIETARY

Diagram1

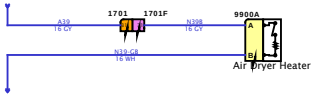

DESIGN DESCRIPTION

FEATURE CODES

SOFTWARE FEATURE CODES

NAVISTAR

NAVISTAR, INC. CONFIDENTIAL PROPRIETARY

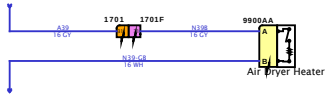

DESIGN DESCRIPTION

FEATURE CODES

SOFTWARE FEATURE CODES

NAVISTAR INC. CONFIDENTIAL PROPRIETARY

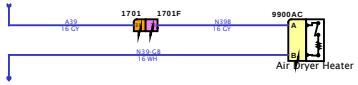

DESIGN DESCRIPTION

FEATURE CODES

SOFTWARE FEATURE CODES

NAVISTAR INC. CONFIDENTIAL PROPRIETARY

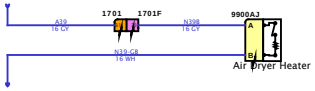

DESIGN DESCRIPTION

FEATURE CODES

SOFTWARE FEATURE CODES

NAVISTAR INC. CONFIDENTIAL PROPRIETARY

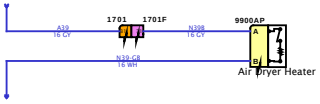

DESIGN DESCRIPTION

FEATURE CODES

SOFTWARE FEATURE CODES

NAVISTAR INC. CONFIDENTIAL PROPRIETARY

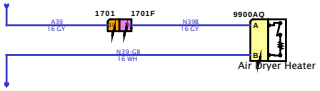

DESIGN DESCRIPTION

FEATURE CODES

SOFTWARE FEATURE CODES

NAVISTAR INC. CONFIDENTIAL PROPRIETARY

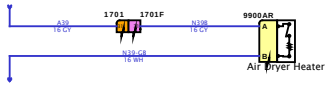

DESIGN DESCRIPTION

FEATURE CODES

SOFTWARE FEATURE CODES

NAVISTAR INC. CONFIDENTIAL PROPRIETARY

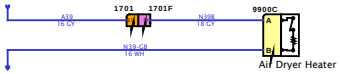

DESIGN DESCRIPTION

FEATURE CODES

SOFTWARE FEATURE CODES

NAVISTAR INC. CONFIDENTIAL PROPRIETARY

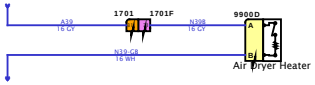

DESIGN DESCRIPTION

FEATURE CODES

SOFTWARE FEATURE CODES

NAVISTAR INC. CONFIDENTIAL PROPRIETARY

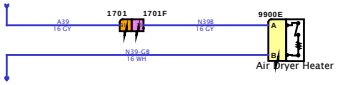

DESIGN DESCRIPTION

FEATURE CODES

SOFTWARE FEATURE CODES

NAVISTAR INC. CONFIDENTIAL PROPRIETARY

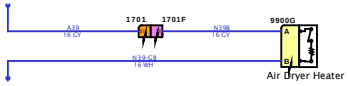

DESIGN DESCRIPTION

FEATURE CODES

SOFTWARE FEATURE CODES

NAVISTAR INC. CONFIDENTIAL PROPRIETARY

Diagram1

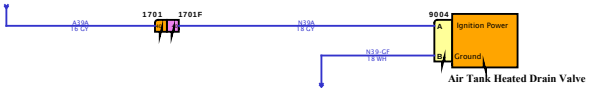

DESIGN DESCRIPTION

FEATURE CODES

SOFTWARE FEATURE CODES

NAVISTAR INC. CONFIDENTIAL PROPRIETARY

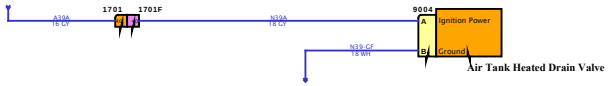

DESIGN DESCRIPTION

FEATURE CODES

SOFTWARE FEATURE CODES

NAVISTAR INC. CONFIDENTIAL PROPRIETARY

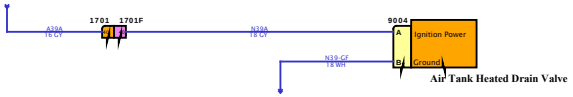

DESIGN DESCRIPTION

FEATURE CODES

SOFTWARE FEATURE CODES

NAVISTAR INC. CONFIDENTIAL PROPRIETARY

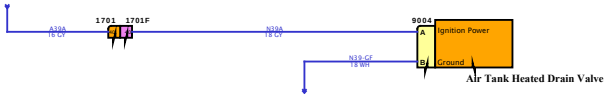

DESIGN DESCRIPTION

FEATURE CODES

SOFTWARE FEATURE CODES

NAVISTAR INC. CONFIDENTIAL PROPRIETARY

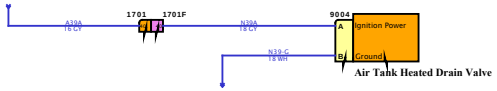

DESIGN DESCRIPTION

FEATURE CODES

SOFTWARE FEATURE CODES

NAVISTAR INC. CONFIDENTIAL PROPRIETARY

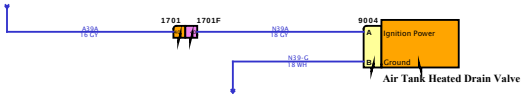

DESIGN DESCRIPTION

FEATURE CODES

SOFTWARE FEATURE CODES

NAVISTAR INC. CONFIDENTIAL PROPRIETARY

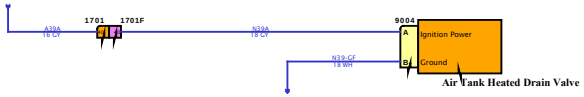

DESIGN DESCRIPTION

FEATURE CODES

SOFTWARE FEATURE CODES

NAVISTAR INC. CONFIDENTIAL PROPRIETARY

Diagram8

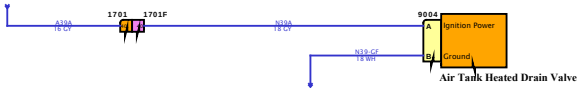

DESIGN DESCRIPTION

FEATURE CODES

SOFTWARE FEATURE CODES

NAVISTAR INC. CONFIDENTIAL PROPRIETARY

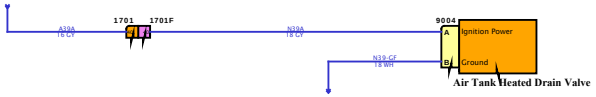

DESIGN DESCRIPTION

FEATURE CODES

SOFTWARE FEATURE CODES

NAVISTAR INC. CONFIDENTIAL PROPRIETARY

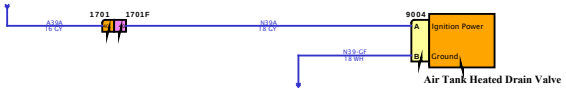

DESIGN DESCRIPTION

FEATURE CODES

SOFTWARE FEATURE CODES

NAVISTAR INC. CONFIDENTIAL PROPRIETARY

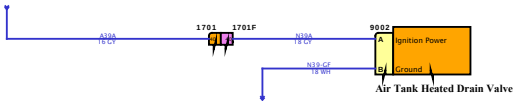

DESIGN DESCRIPTION

FEATURE CODES

SOFTWARE FEATURE CODES

NAVISTAR INC. CONFIDENTIAL PROPRIETARY

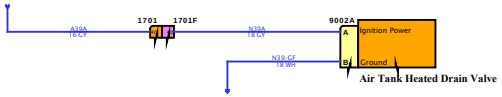

DESIGN DESCRIPTION

FEATURE CODES

SOFTWARE FEATURE CODES

NAVISTAR INC. CONFIDENTIAL PROPRIETARY

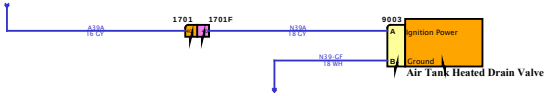

DESIGN DESCRIPTION

FEATURE CODES

SOFTWARE FEATURE CODES

NAVISTAR INC. CONFIDENTIAL PROPRIETARY

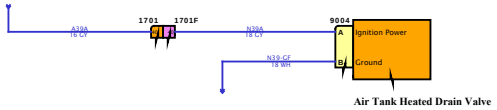

DESIGN DESCRIPTION

FEATURE CODES

SOFTWARE FEATURE CODES

NAVISTAR INC. CONFIDENTIAL PROPRIETARY

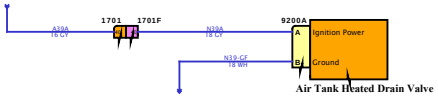

DESIGN DESCRIPTION

FEATURE CODES

SOFTWARE FEATURE CODES

NAVISTAR INC. CONFIDENTIAL PROPRIETARY

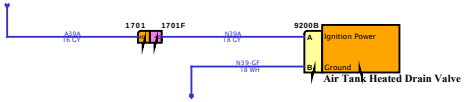

DESIGN DESCRIPTION

FEATURE CODES

SOFTWARE FEATURE CODES

NAVISTAR INC. CONFIDENTIAL PROPRIETARY

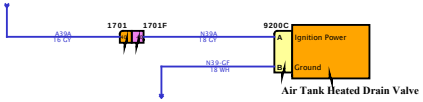

DESIGN DESCRIPTION

FEATURE CODES

SOFTWARE FEATURE CODES

NAVISTAR INC. CONFIDENTIAL PROPRIETARY

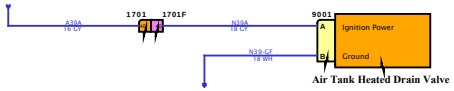

DESIGN DESCRIPTION

FEATURE CODES

SOFTWARE FEATURE CODES

NAVISTAR INC. CONFIDENTIAL PROPRIETARY



DESIGN DESCRIPTION

FEATURE CODES

SOFTWARE FEATURE CODES

NAVISTAR INC. CONFIDENTIAL PROPRIETARY

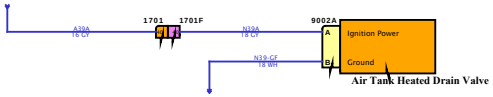

DESIGN DESCRIPTION

FEATURE CODES

SOFTWARE FEATURE CODES

NAVISTAR INC. CONFIDENTIAL PROPRIETARY

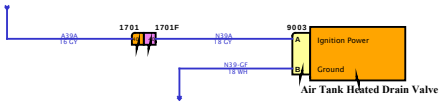

DESIGN DESCRIPTION

FEATURE CODES

SOFTWARE FEATURE CODES

NAVISTAR INC. CONFIDENTIAL PROPRIETARY

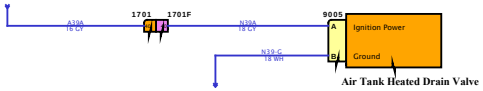

DESIGN DESCRIPTION

FEATURE CODES

SOFTWARE FEATURE CODES

NAVISTAR INC. CONFIDENTIAL PROPRIETARY

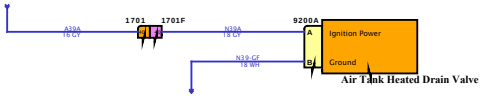

DESIGN DESCRIPTION

FEATURE CODES

SOFTWARE FEATURE CODES

NAVISTAR INC. CONFIDENTIAL PROPRIETARY

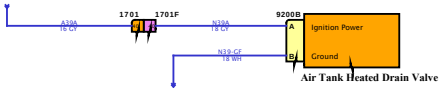

DESIGN DESCRIPTION

FEATURE CODES

SOFTWARE FEATURE CODES

NAVISTAR INC. CONFIDENTIAL PROPRIETARY

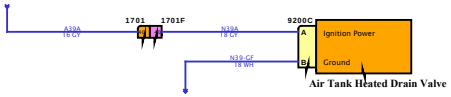

DESIGN DESCRIPTION

FEATURE CODES

SOFTWARE FEATURE CODES

NAVISTAR INC. CONFIDENTIAL PROPRIETARY

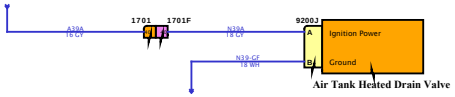

DESIGN DESCRIPTION

FEATURE CODES

SOFTWARE FEATURE CODES

NAVISTAR INC. CONFIDENTIAL PROPRIETARY

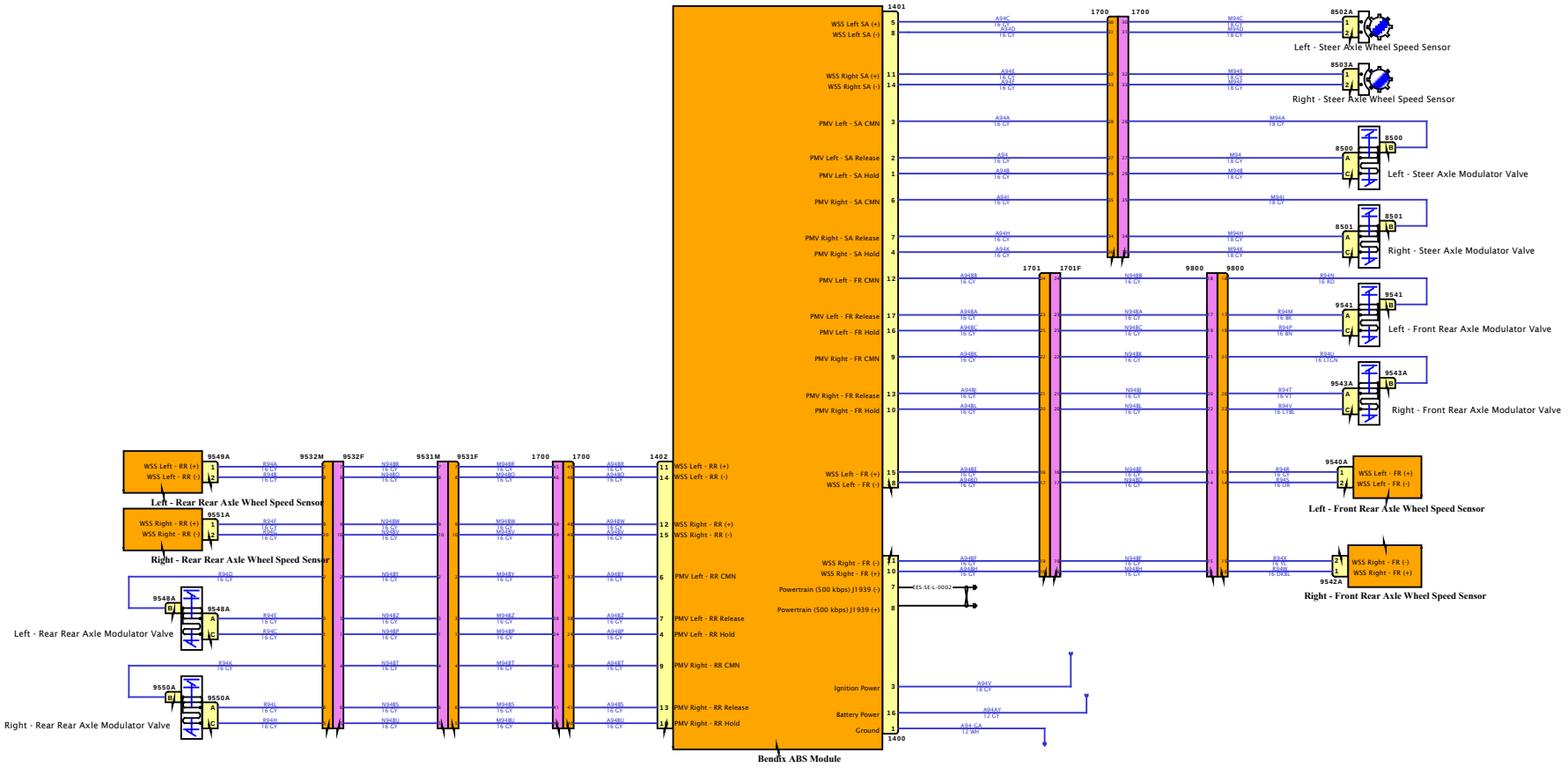

DESIGN DESCRIPTION

FEATURE CODES

SOFTWARE FEATURE CODES

NAVISTAR
NAVISTAR, INC. CONFIDENTIAL PROPRIETARY

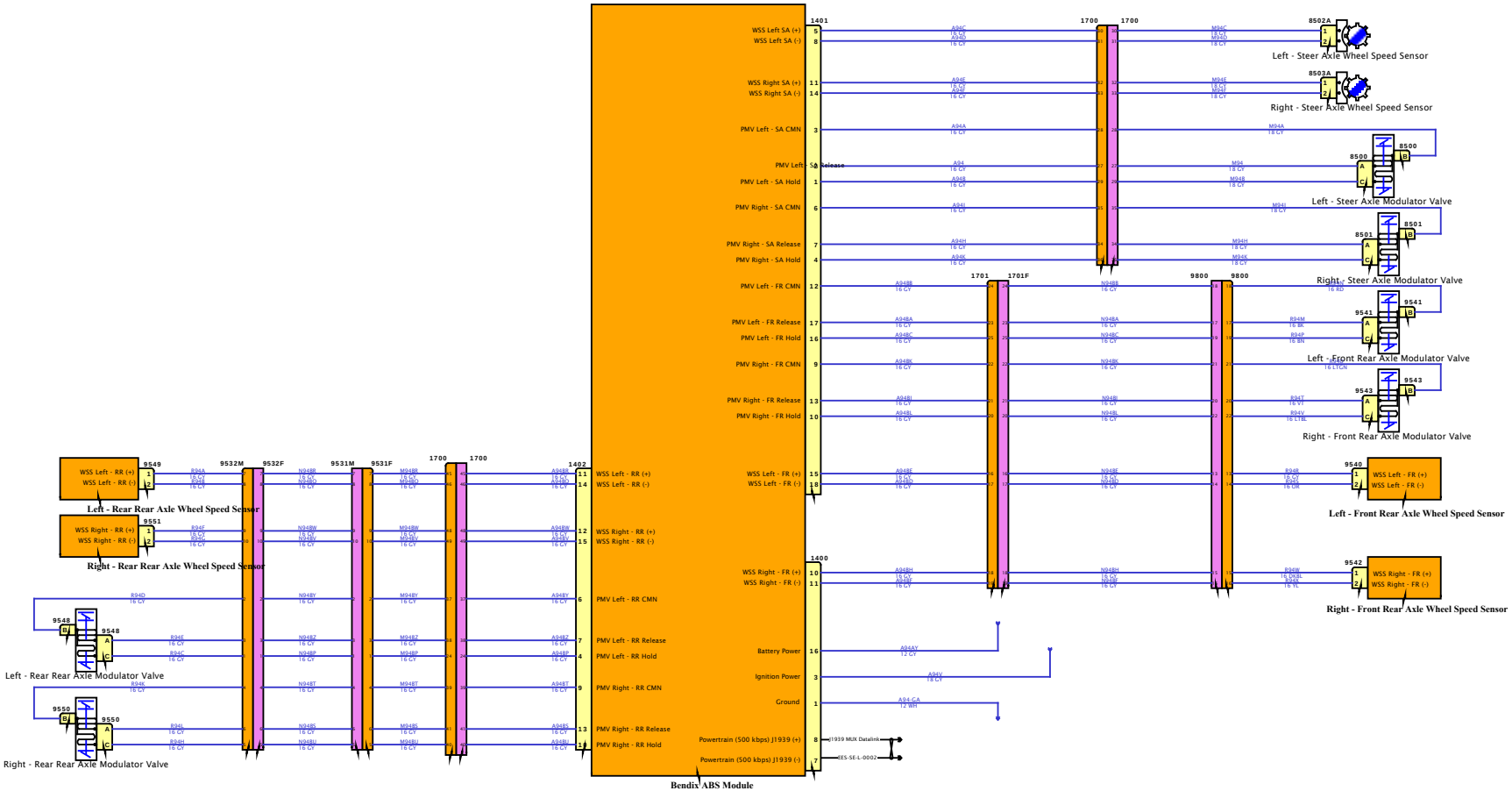

DESIGN DESCRIPTION

FEATURE CODES

SOFTWARE FEATURE CODES

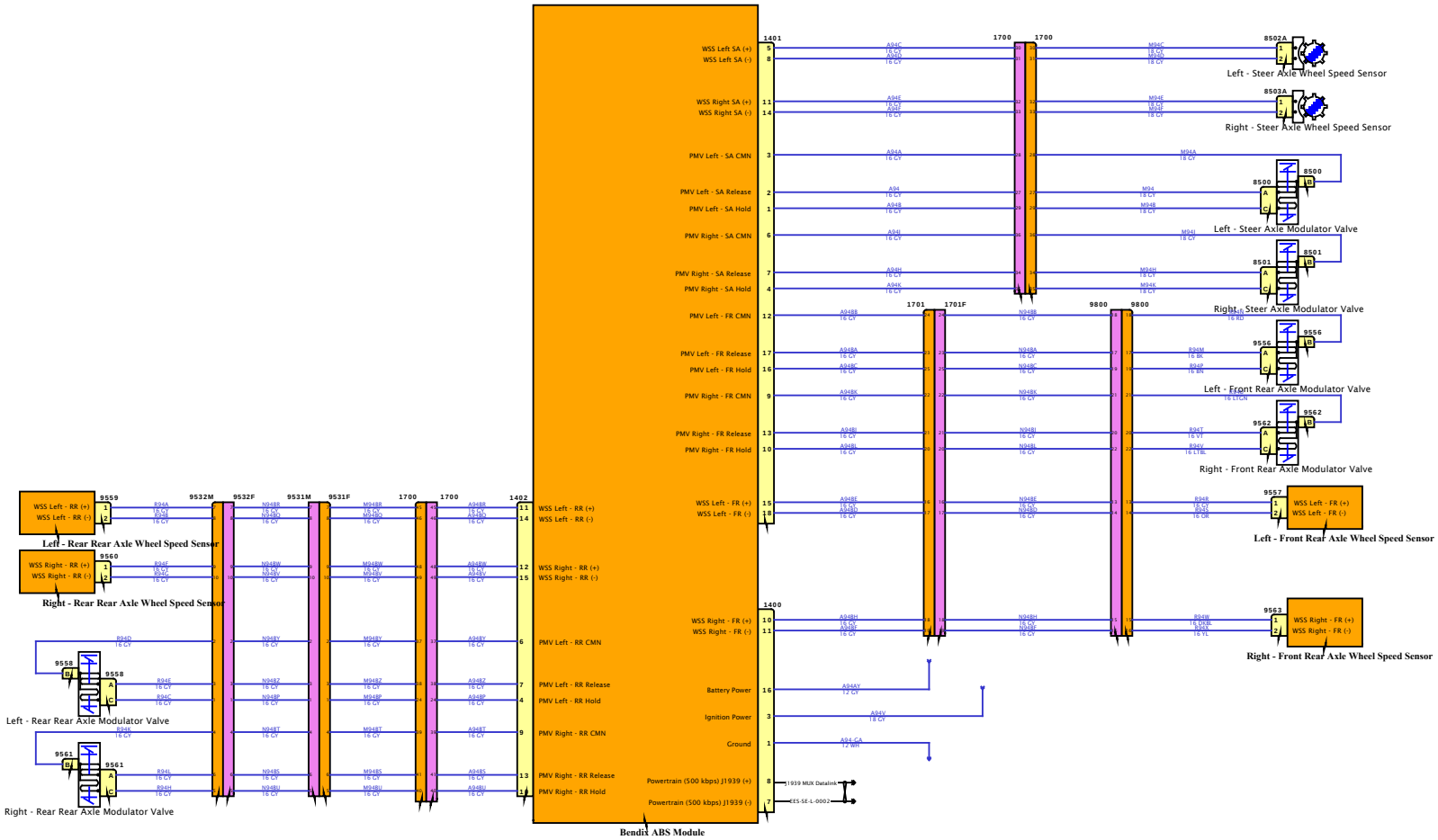

DESIGN DESCRIPTION

FEATURE CODES

SOFTWARE FEATURE CODES

DESIGN DESCRIPTION

FEATURE CODES

SOFTWARE FEATURE CODES

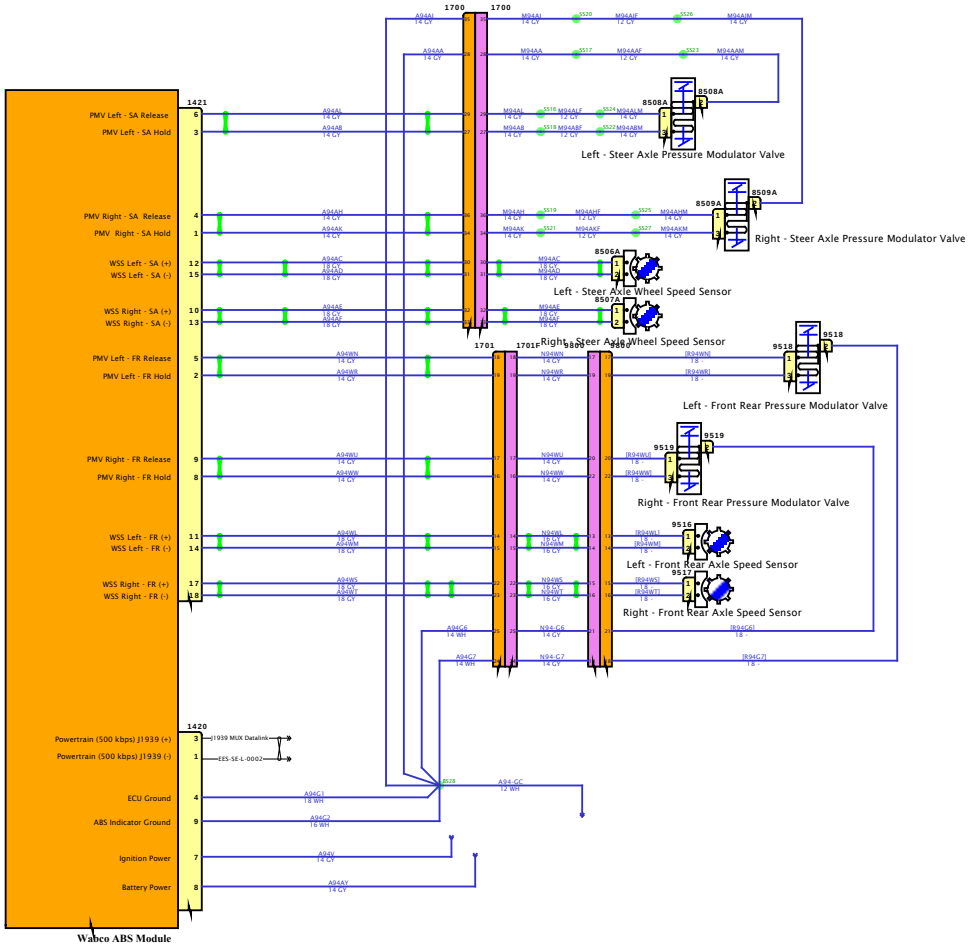

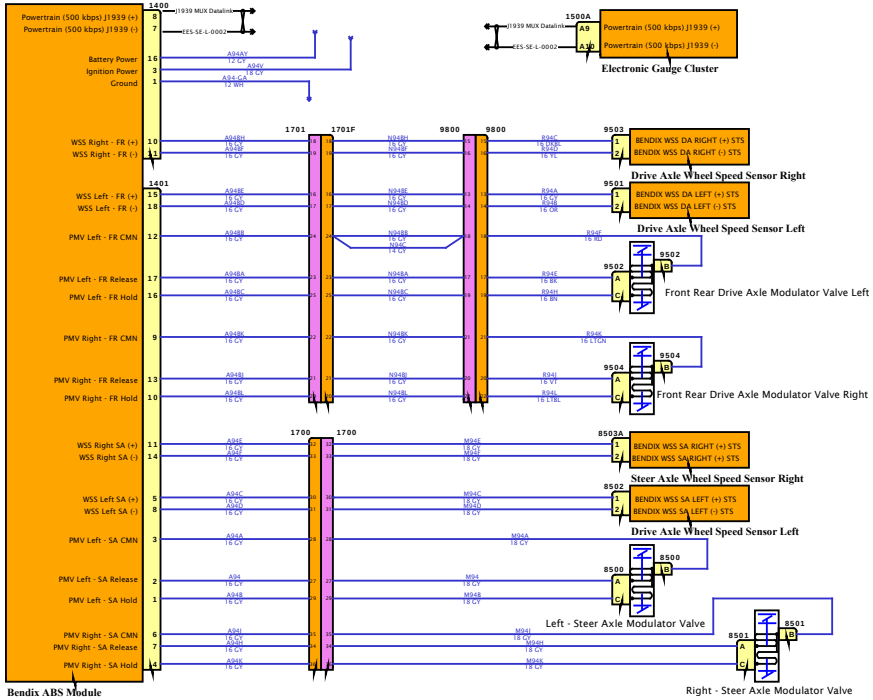

DESIGN DESCRIPTION

FEATURE CODES

SOFTWARE FEATURE CODES

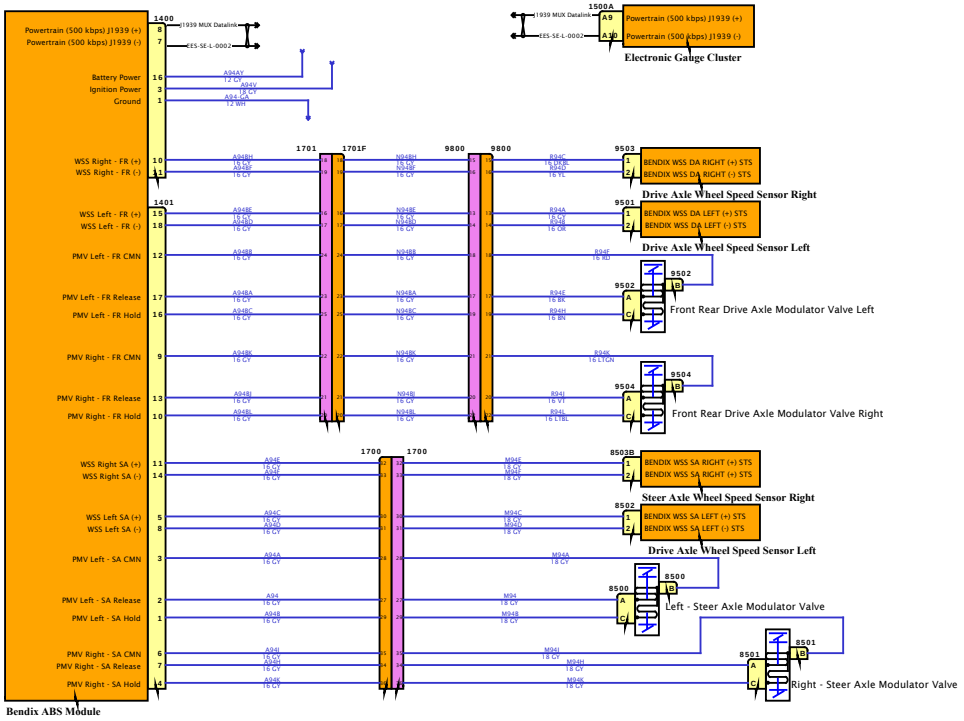

DESIGN DESCRIPTION

FEATURE CODES

SOFTWARE FEATURE CODES

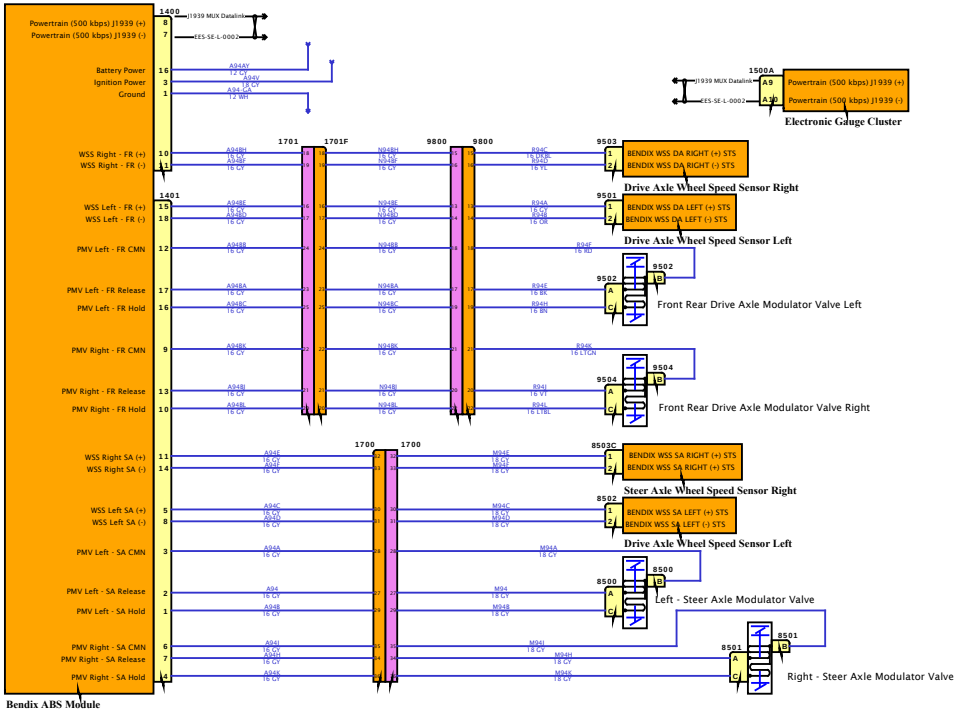

DESIGN DESCRIPTION

FEATURE CODES

SOFTWARE FEATURE CODES

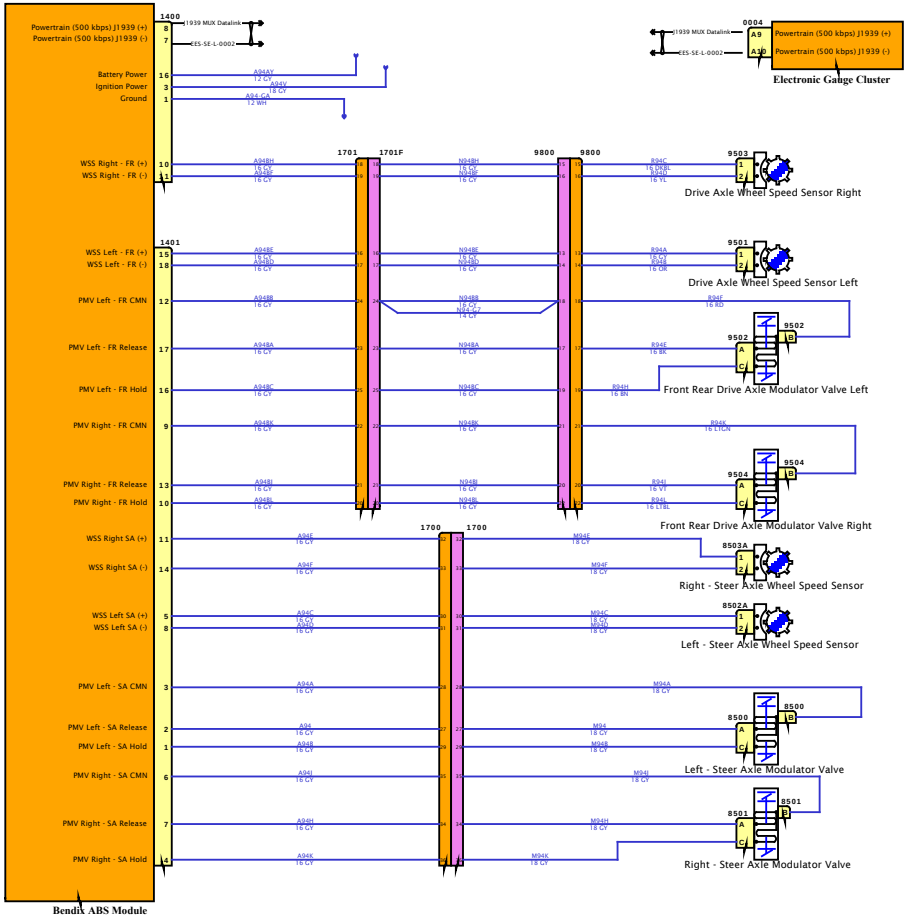

DESIGN DESCRIPTION

FEATURE CODES

SOFTWARE FEATURE CODES

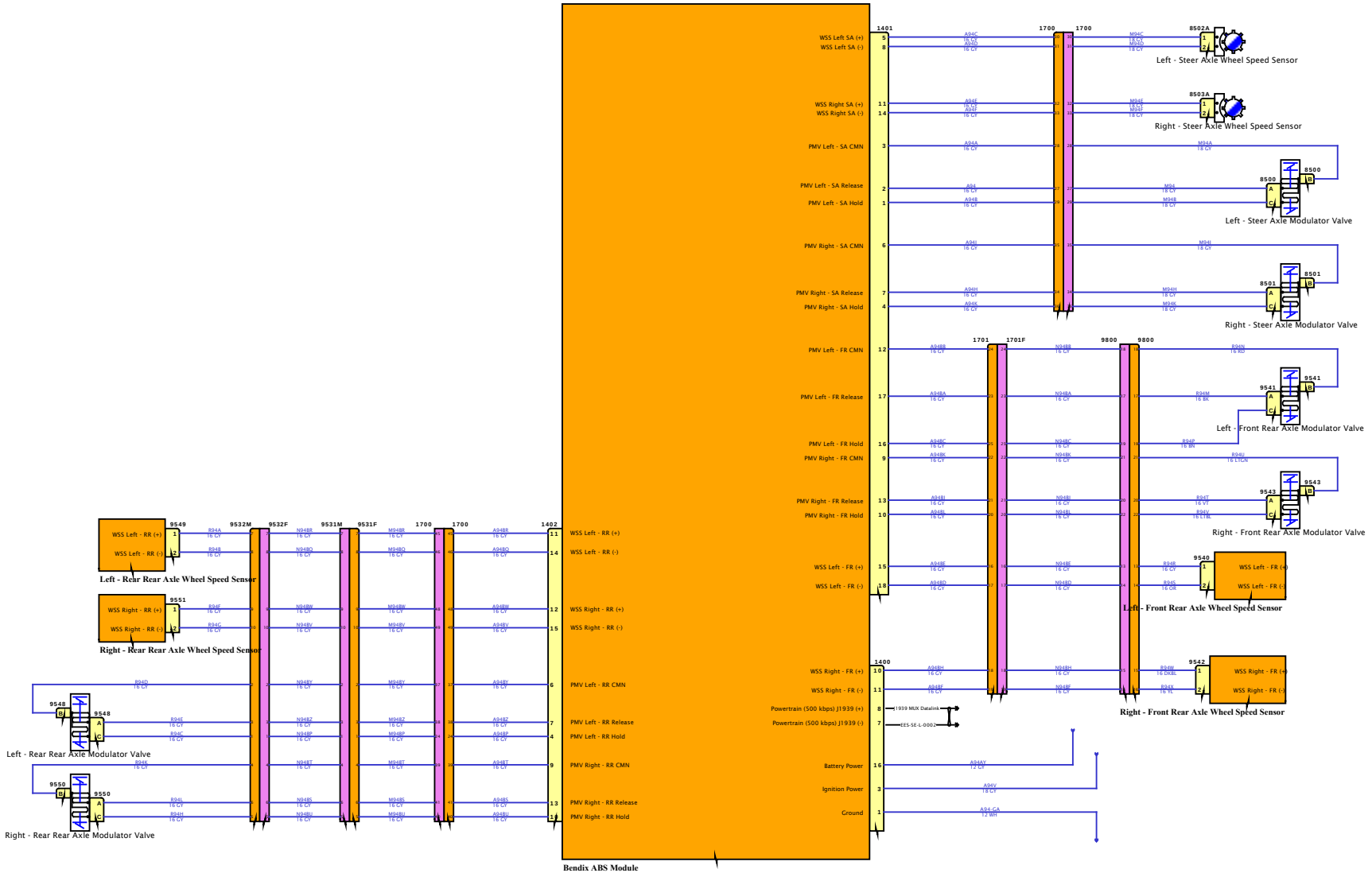

DESIGN DESCRIPTION

FEATURE CODES

SOFTWARE FEATURE CODES

Diagram2

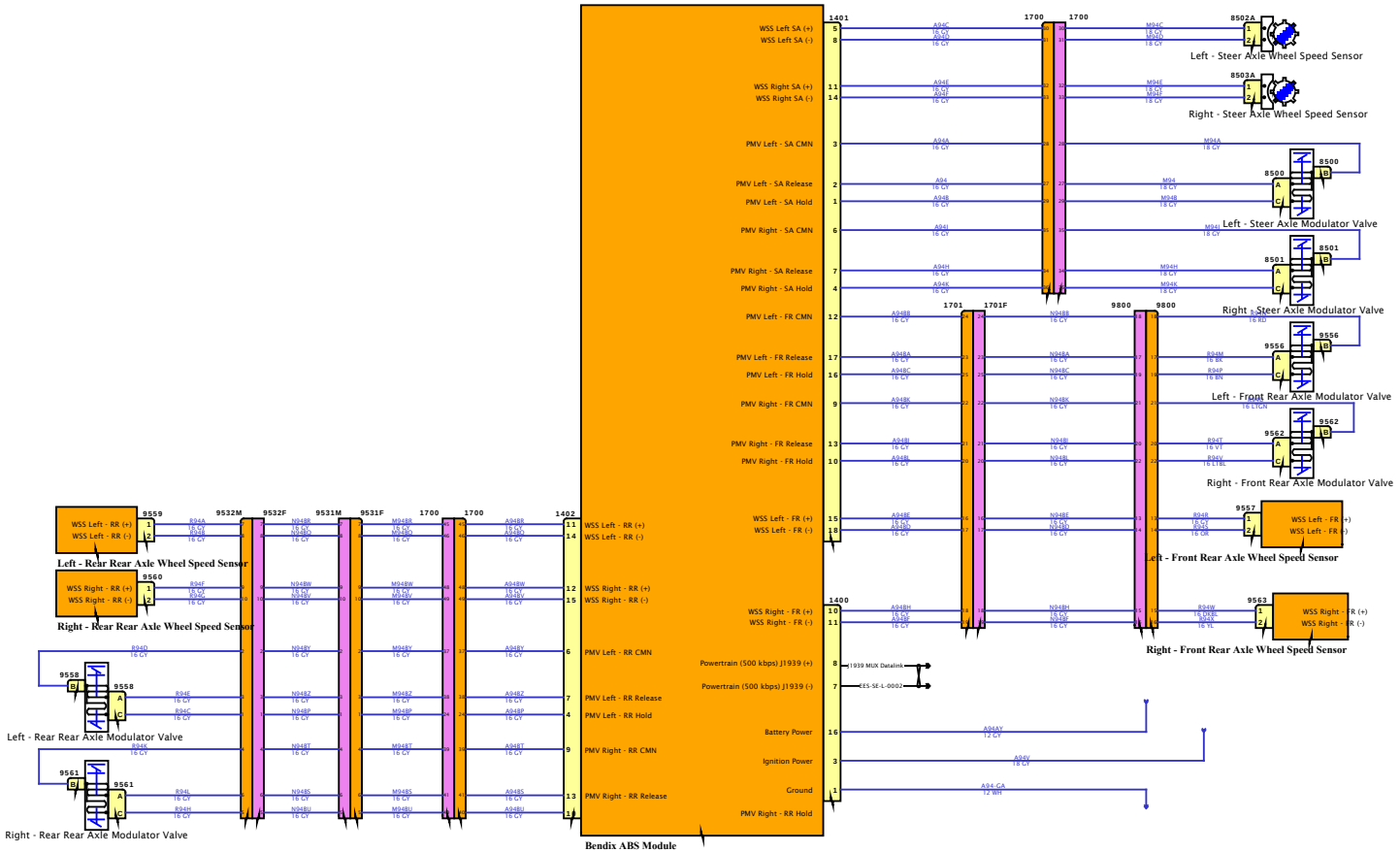

DESIGN DESCRIPTION

FEATURE CODES

SOFTWARE FEATURE CODES

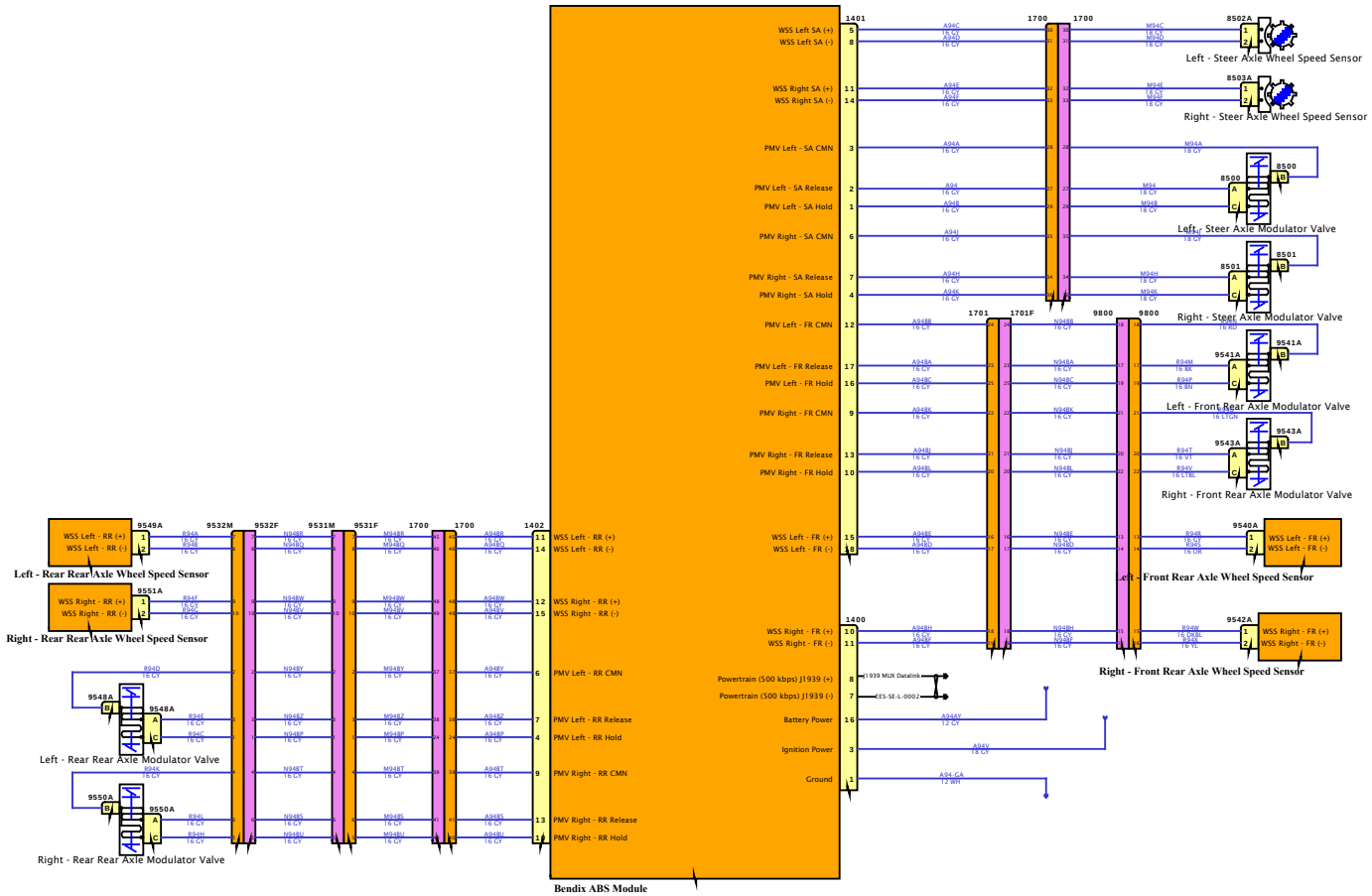

DESIGN DESCRIPTION

FEATURE CODES

SOFTWARE FEATURE CODES

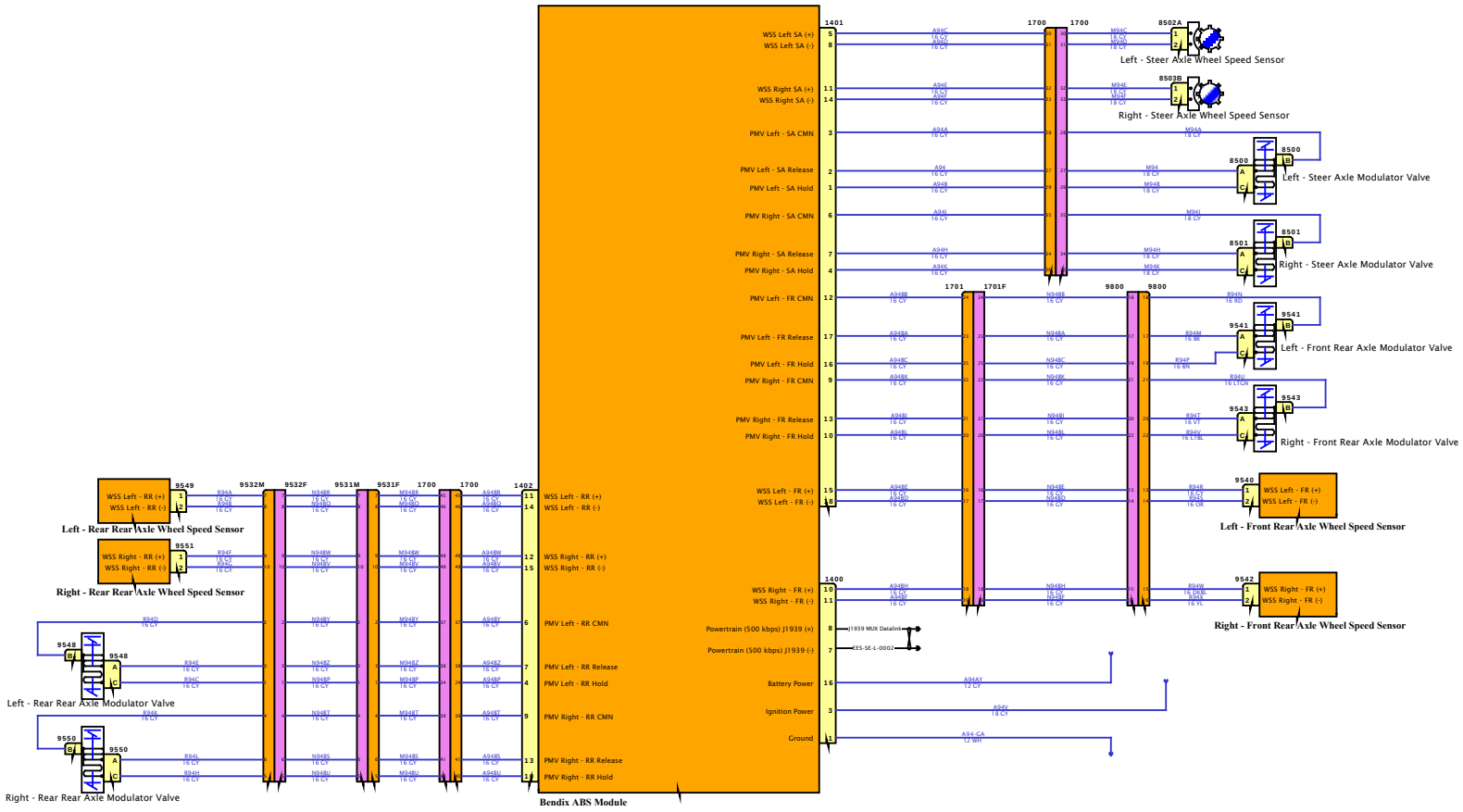

DESIGN DESCRIPTION

FEATURE CODES

SOFTWARE FEATURE CODES

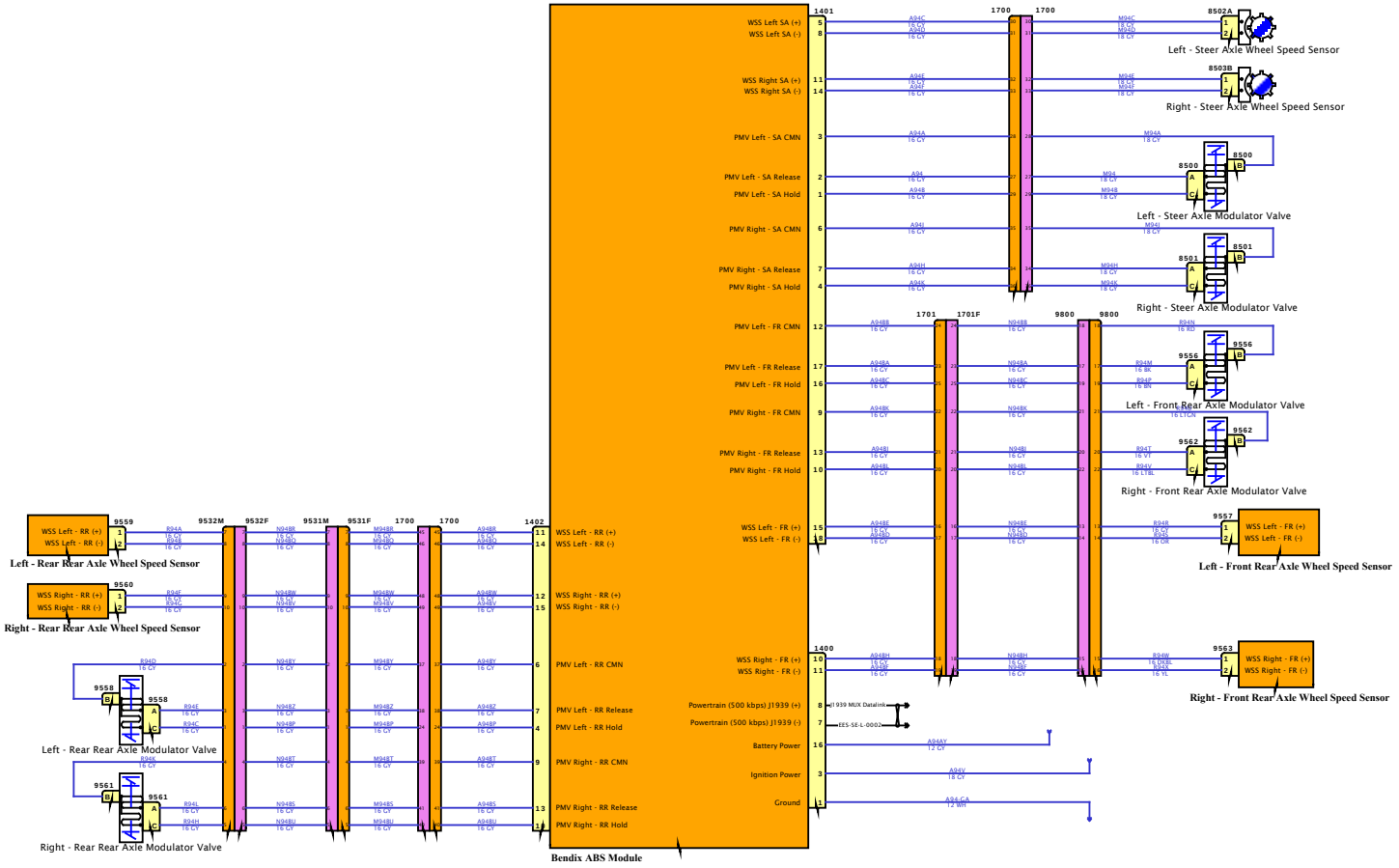

DESIGN DESCRIPTION

FEATURE CODES

SOFTWARE FEATURE CODES

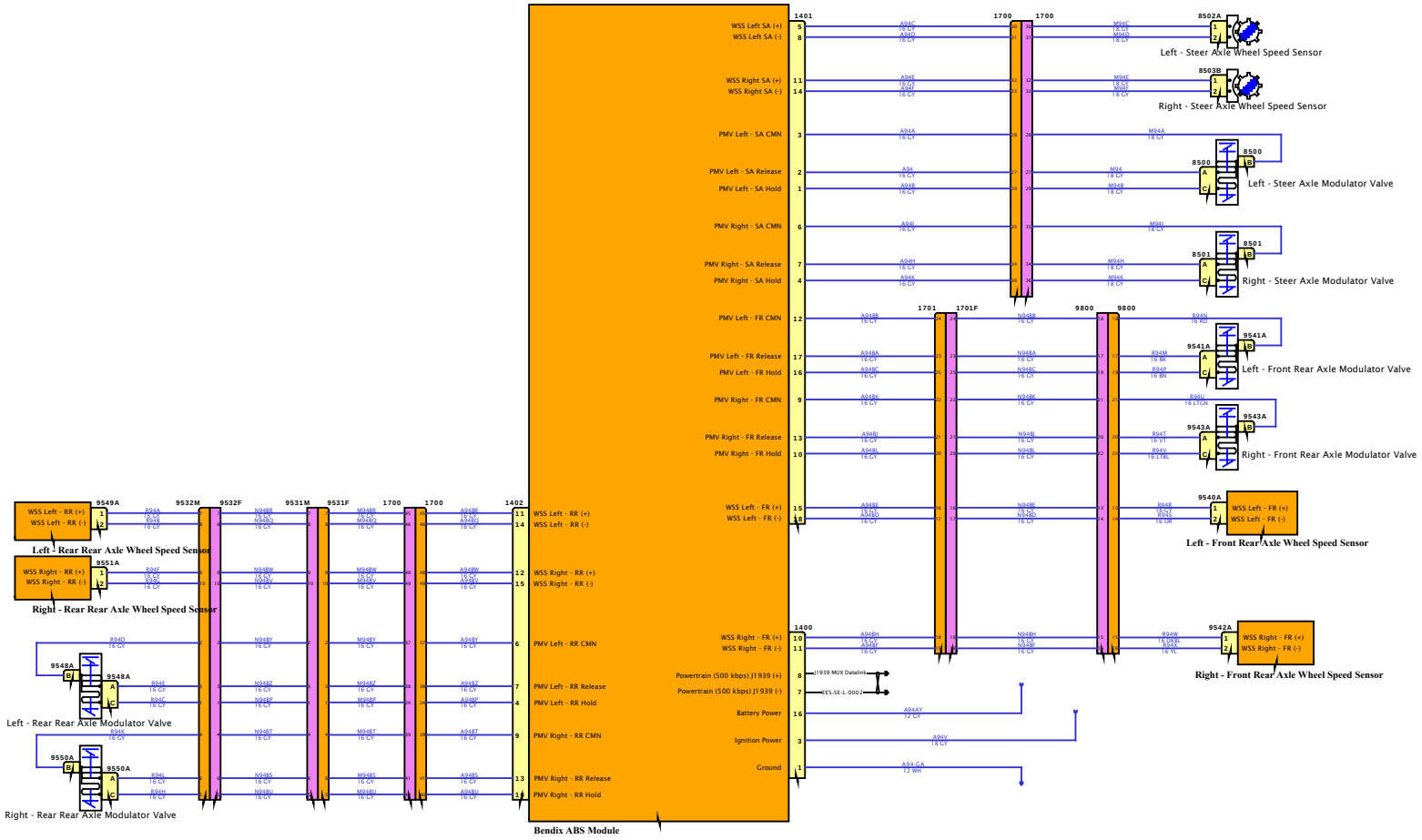

DESIGN DESCRIPTION

FEATURE CODES

SOFTWARE FEATURE CODES

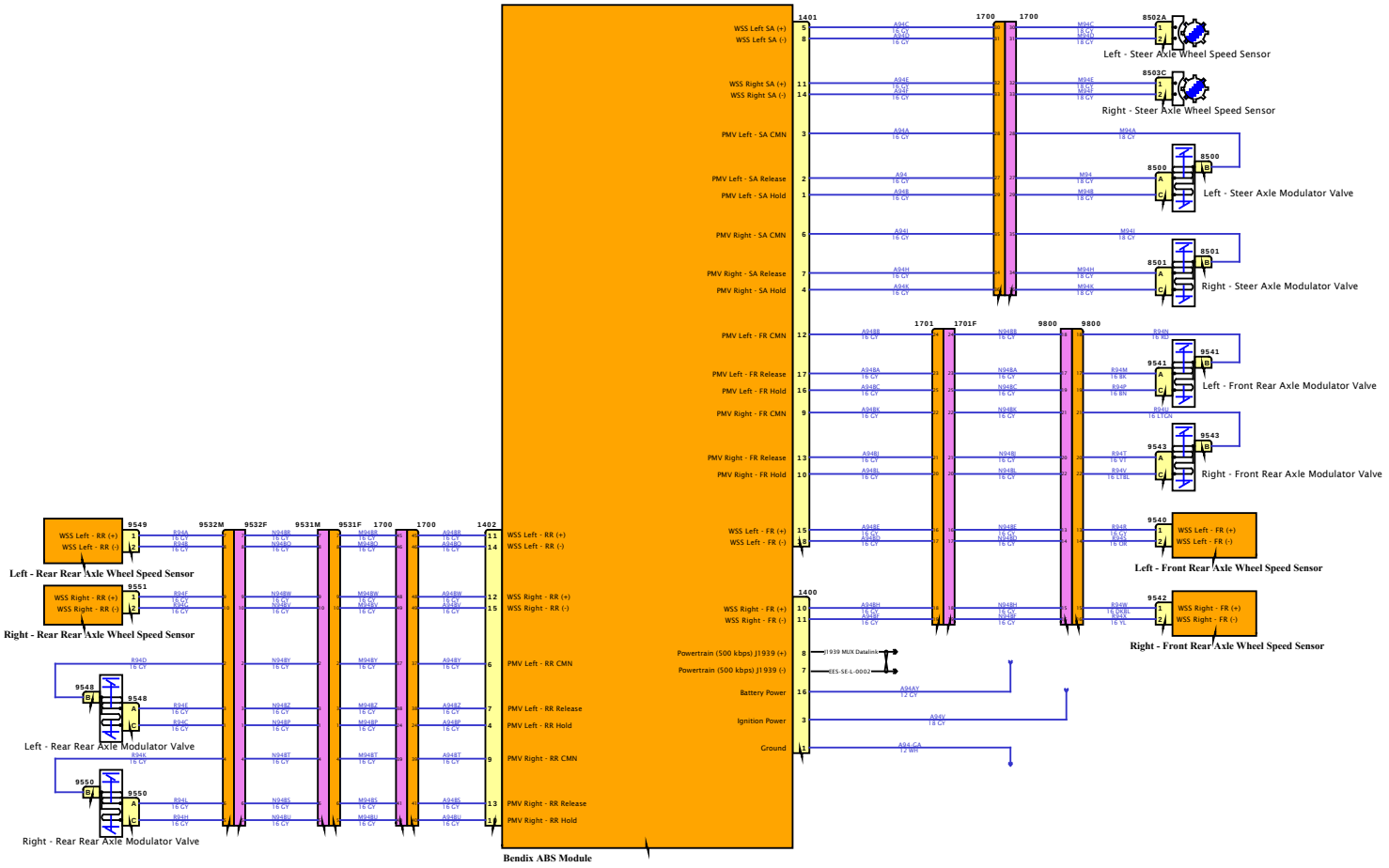

DESIGN DESCRIPTION

FEATURE CODES

SOFTWARE FEATURE CODES

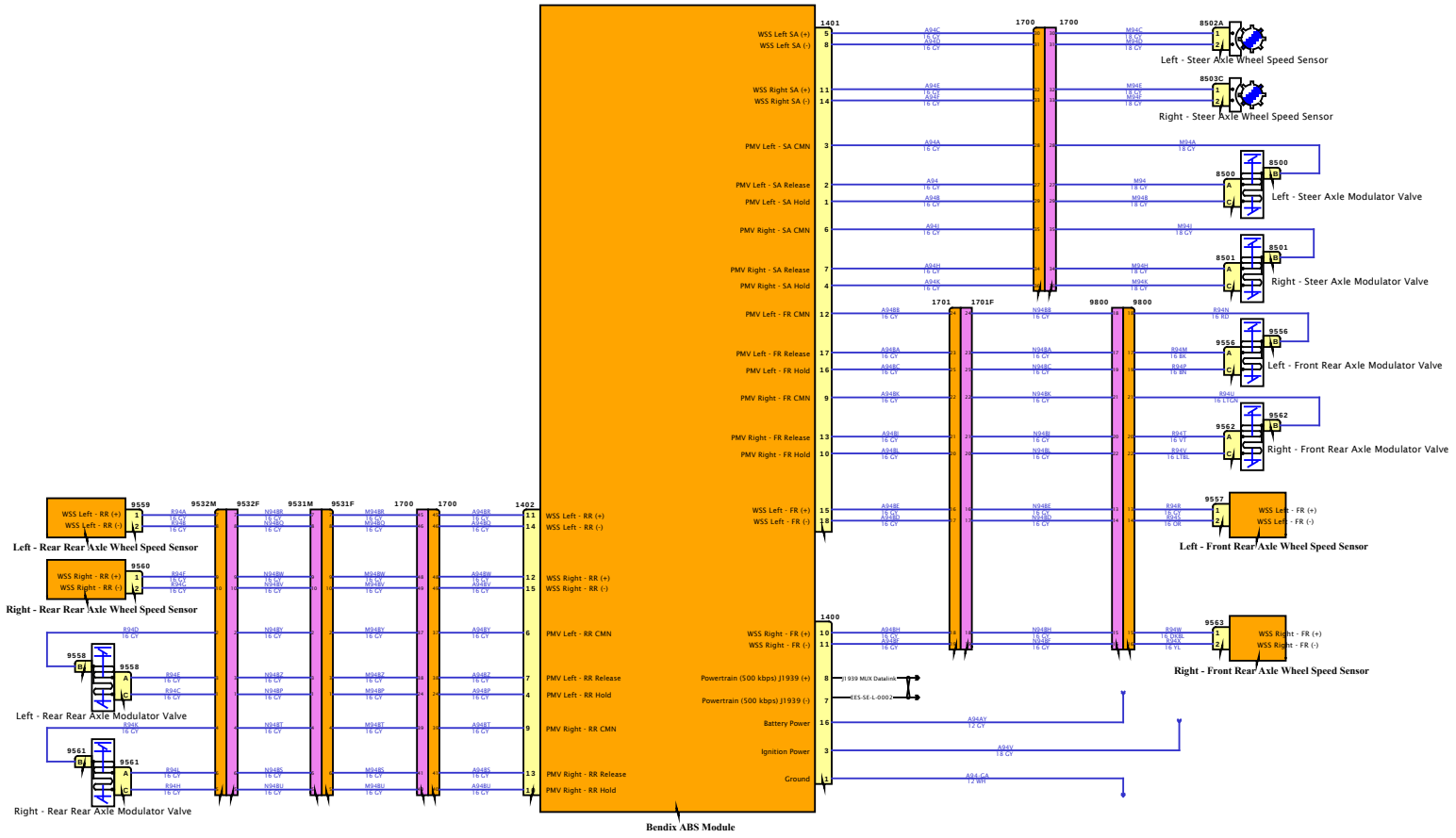

DESIGN DESCRIPTION

FEATURE CODES

SOFTWARE FEATURE CODES

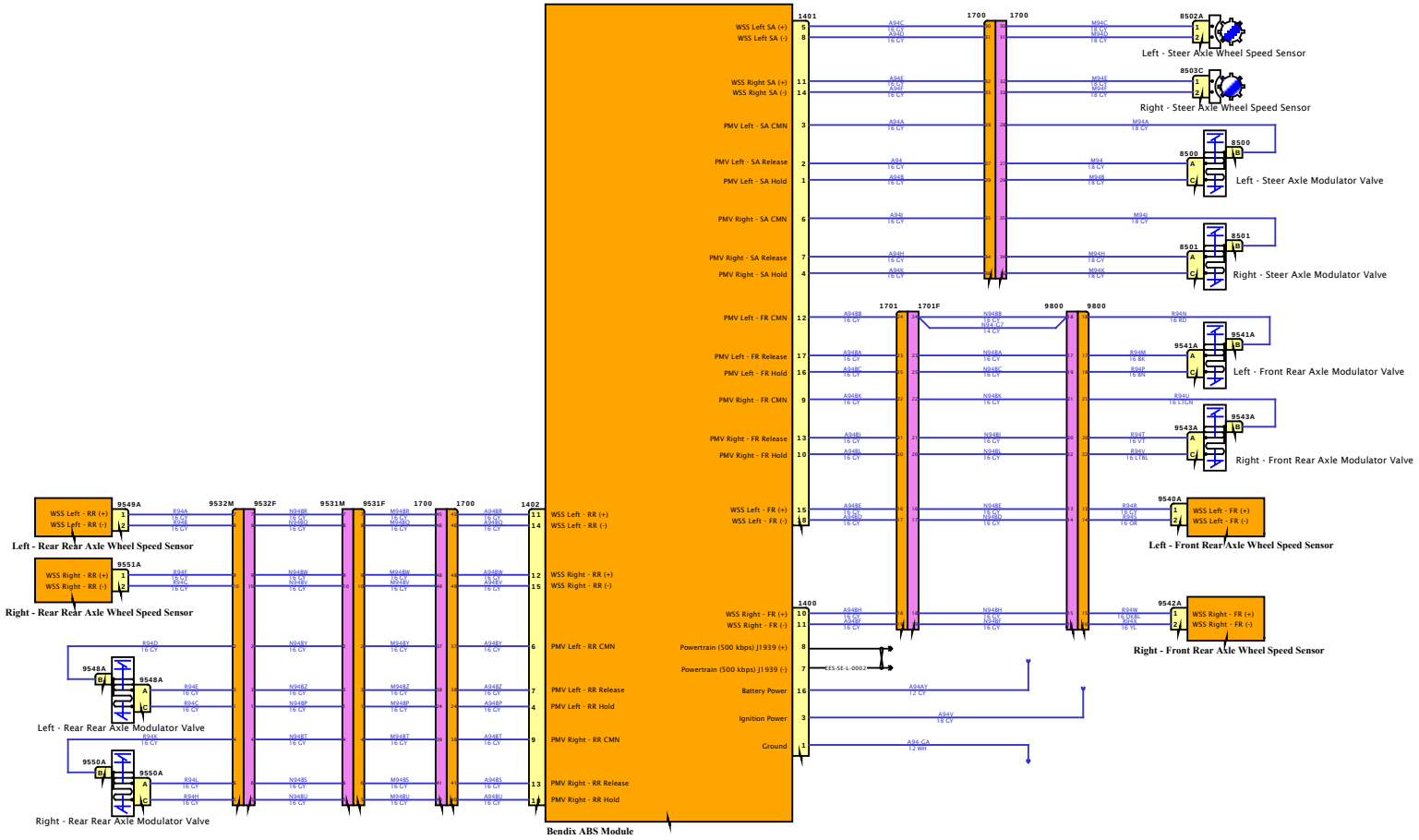

DESIGN DESCRIPTION

FEATURE CODES

SOFTWARE FEATURE CODES

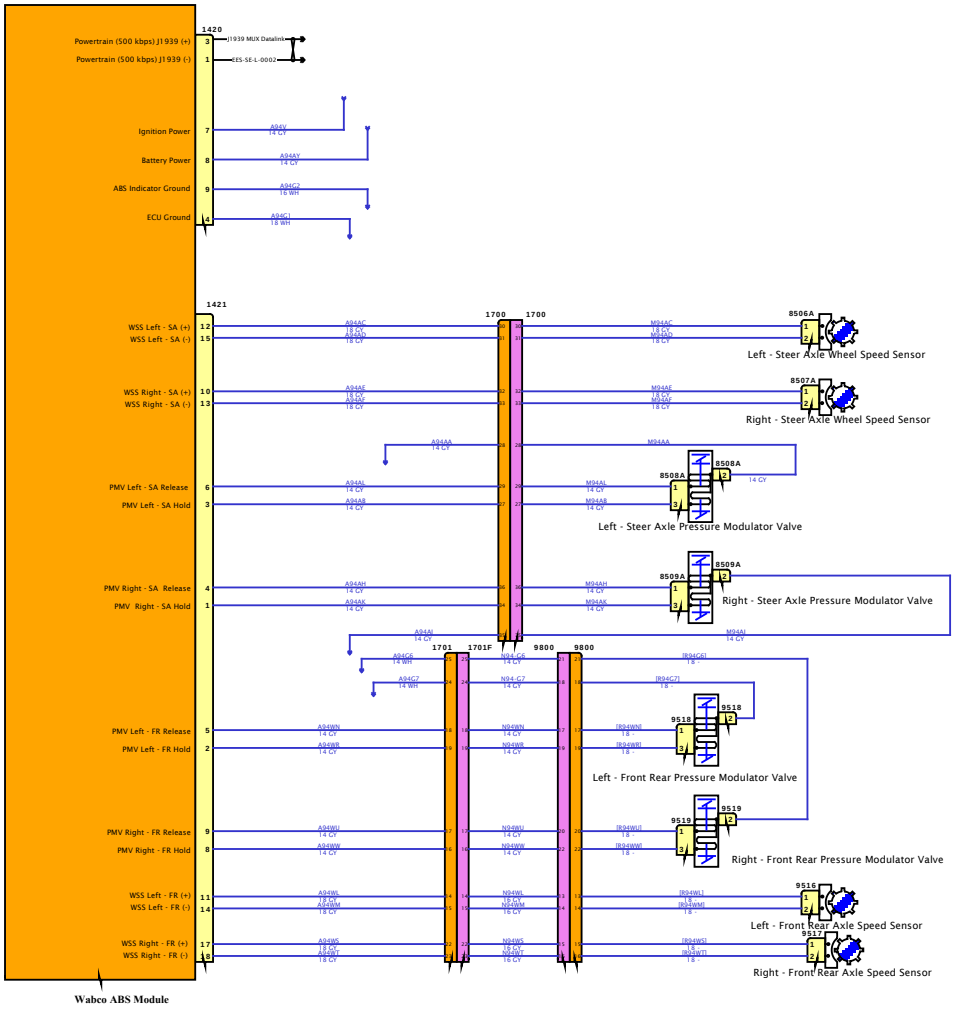

DESIGN DESCRIPTION

FEATURE CODES

SOFTWARE FEATURE CODES

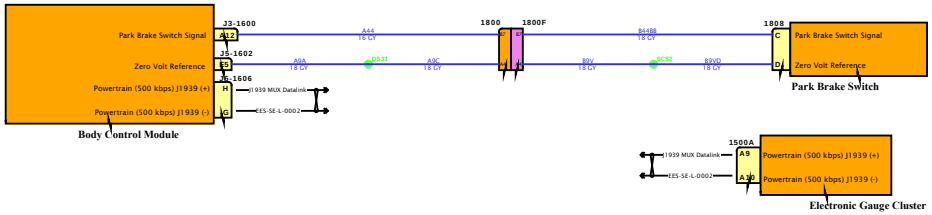

DESIGN DESCRIPTION

FEATURE CODES

SOFTWARE FEATURE CODES

NAVISTAR INC. CONFIDENTIAL PROPRIETARY

DESIGN DESCRIPTION

FEATURE CODES

SOFTWARE FEATURE CODES

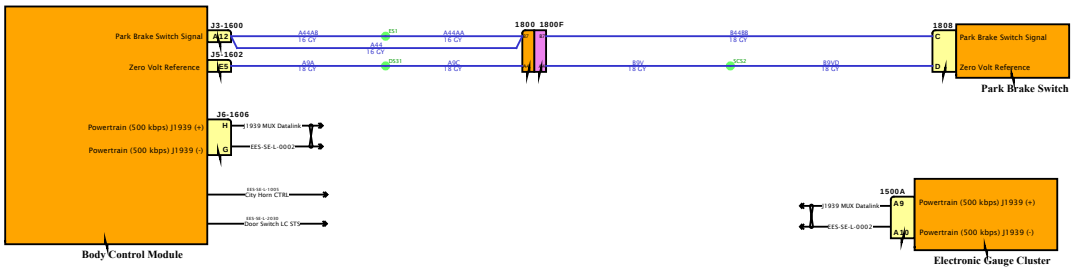

DESIGN DESCRIPTION

FEATURE CODES

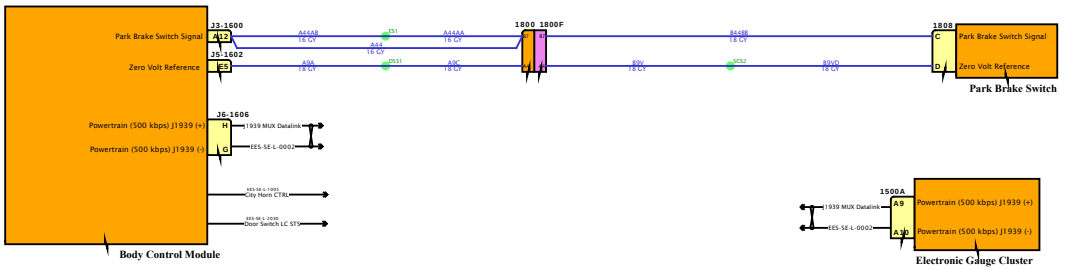

SOFTWARE FEATURE CODES

NAVISTAR
NAVISTAR, INC. CONFIDENTIAL PROPRIETARY

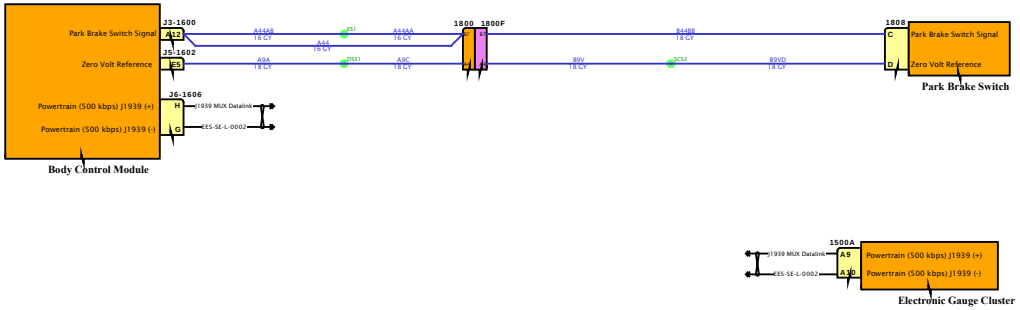

DESIGN DESCRIPTION

FEATURE CODES

SOFTWARE FEATURE CODES

NAVISTAR INC. CONFIDENTIAL PROPRIETARY

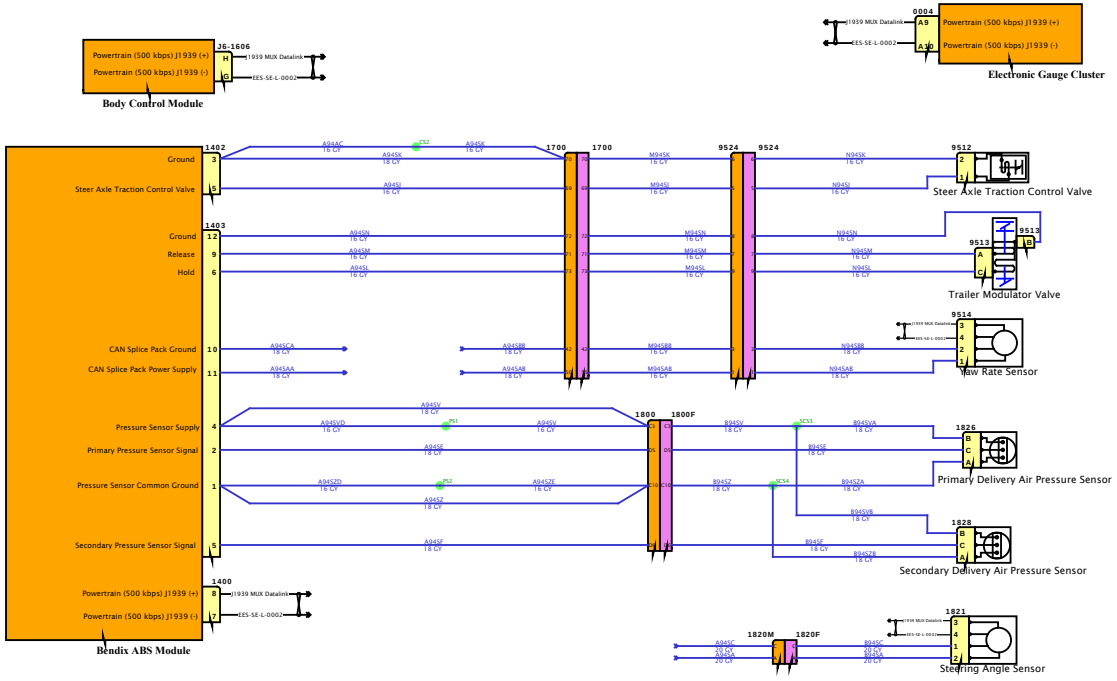

DESIGN DESCRIPTION

FEATURE CODES

SOFTWARE FEATURE CODES

NAVISTAR
NAVISTAR, INC. CONFIDENTIAL PROPRIETARY

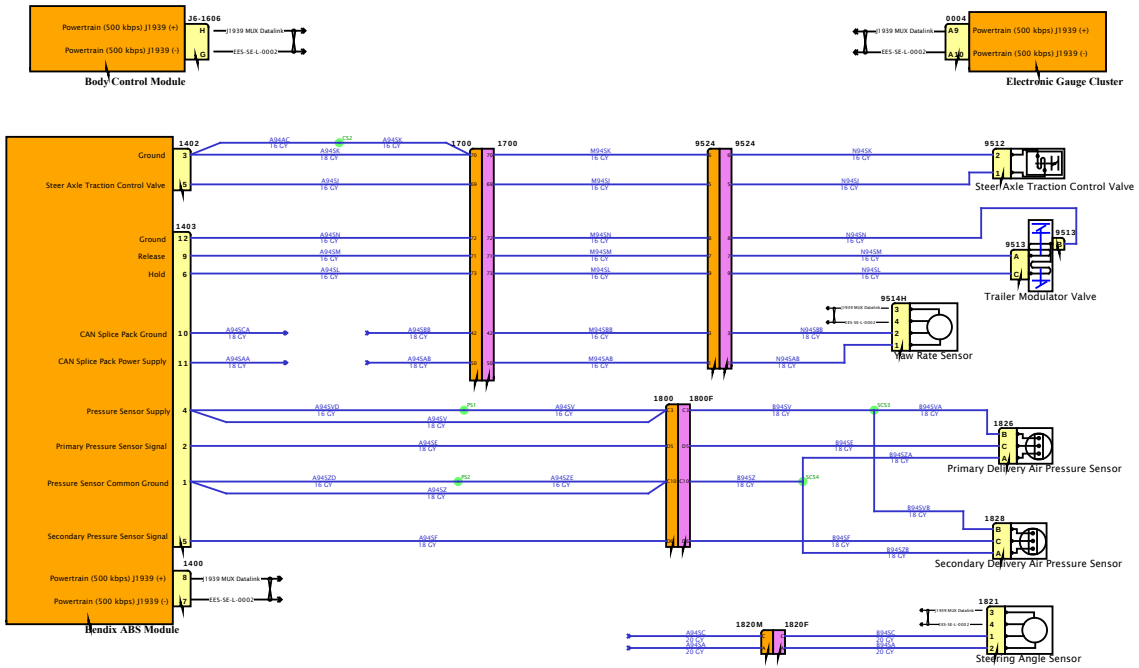

DESIGN DESCRIPTION

FEATURE CODES

SOFTWARE FEATURE CODES

Diagram3

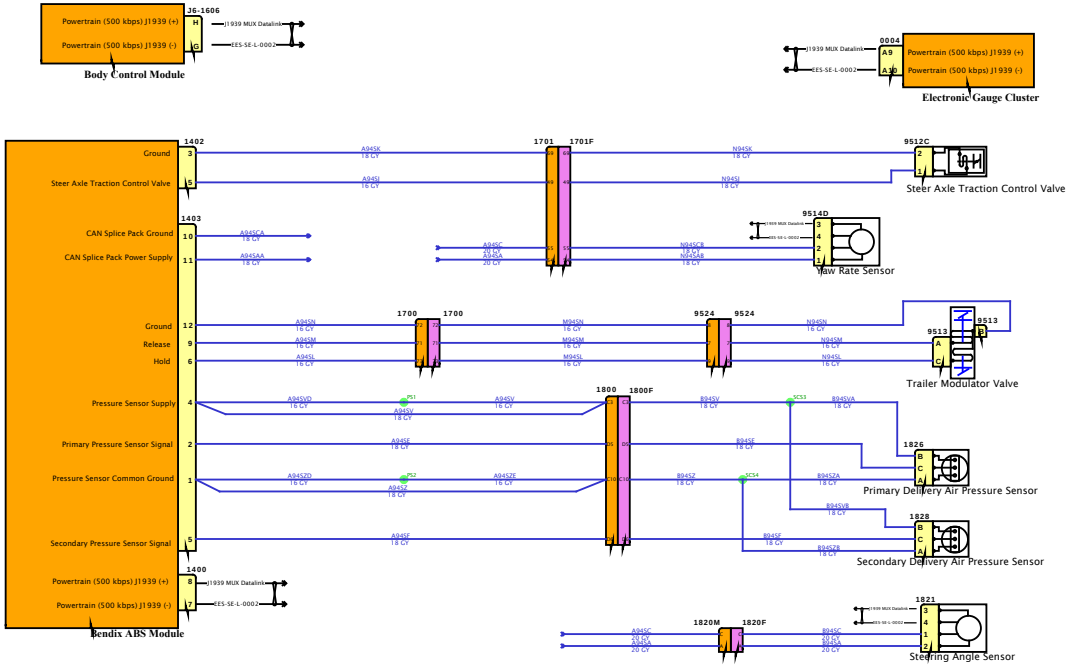

DESIGN DESCRIPTION

FEATURE CODES

SOFTWARE FEATURE CODES

NAVISTAR INC. CONFIDENTIAL PROPRIETARY

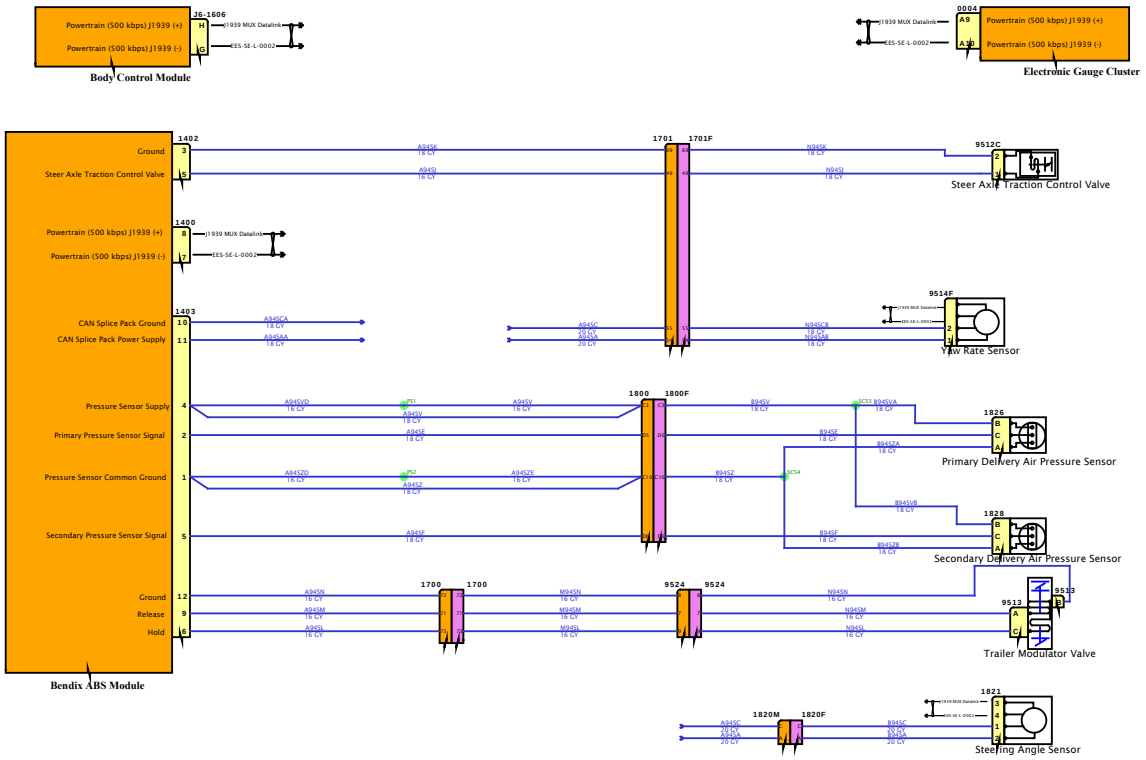

DESIGN DESCRIPTION

FEATURE CODES

SOFTWARE FEATURE CODES

NAVISTAR INC. CONFIDENTIAL PROPRIETARY

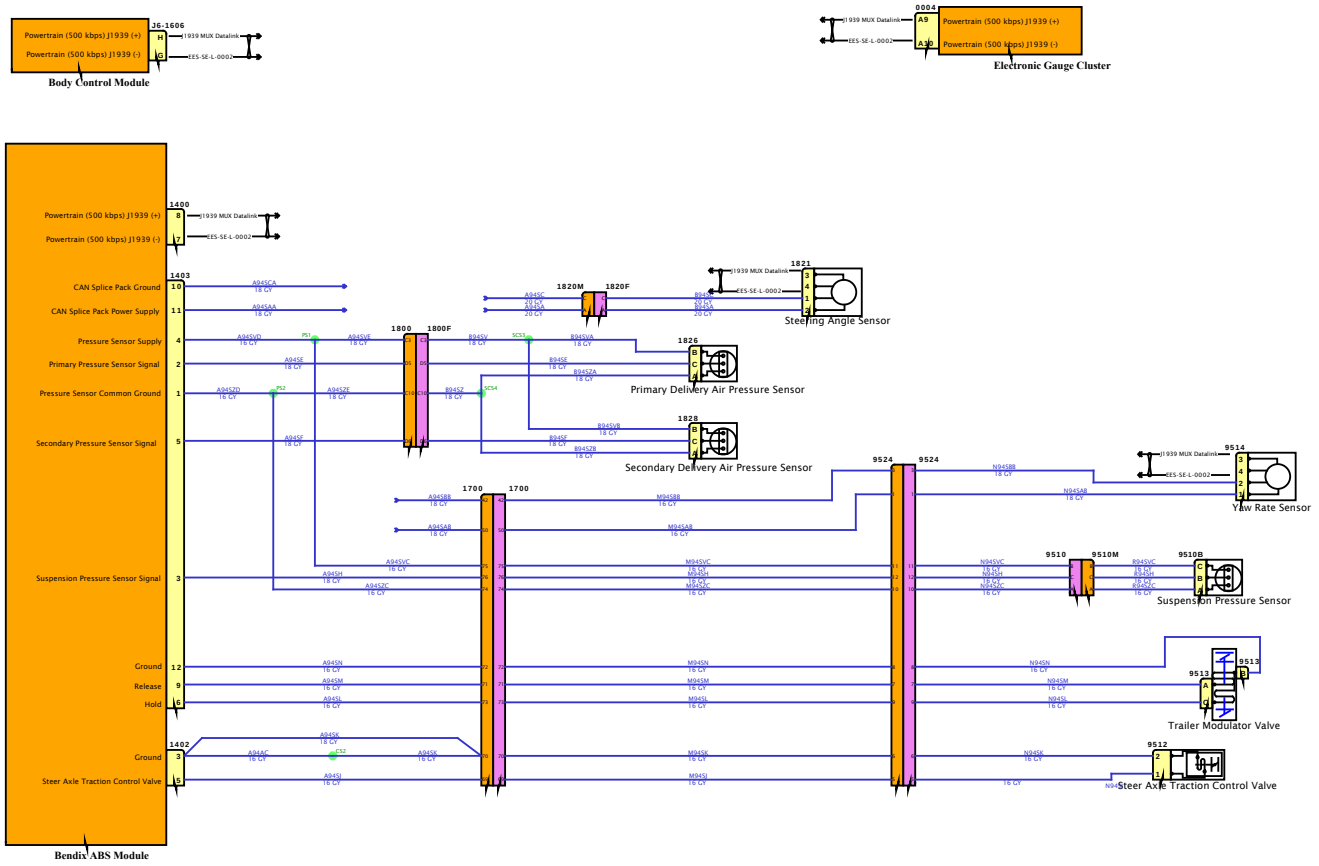

DESIGN DESCRIPTION

FEATURE CODES

SOFTWARE FEATURE CODES

NAVISTAR

NAVISTAR, INC. CONFIDENTIAL PROPRIETARY

Diagram2

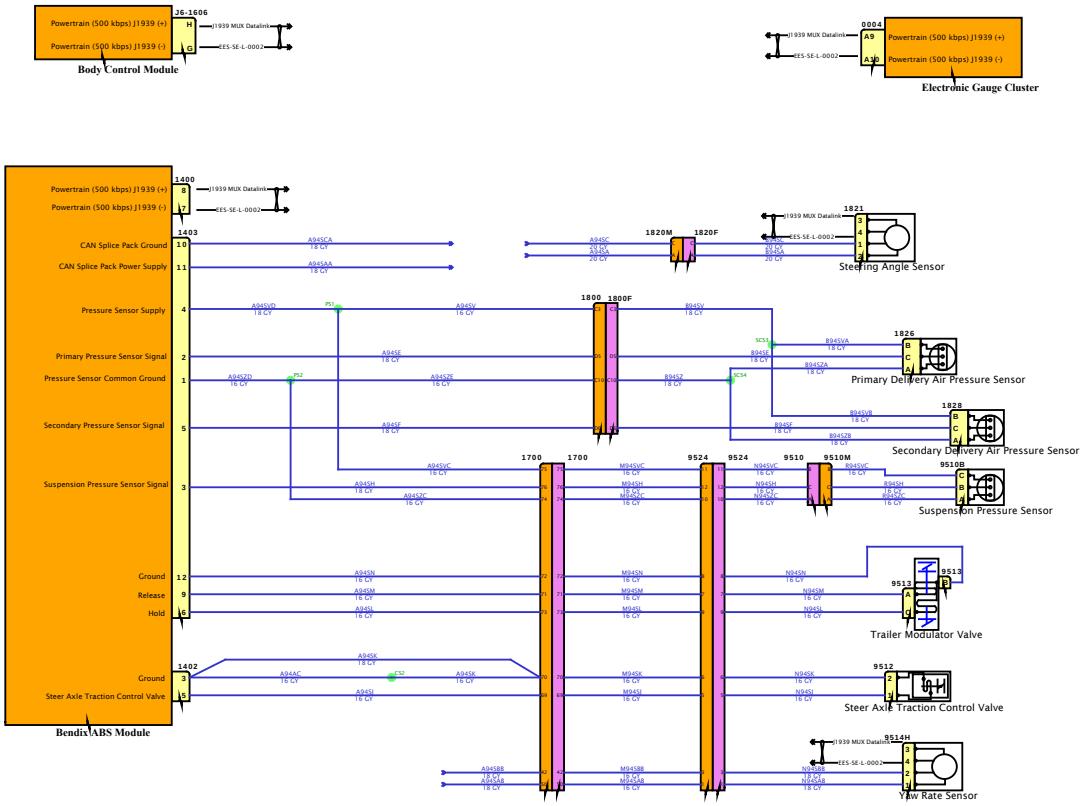

DESIGN DESCRIPTION

FEATURE CODES

SOFTWARE FEATURE CODES

NAVISTAR
NAVISTAR, INC. CONFIDENTIAL PROPRIETARY

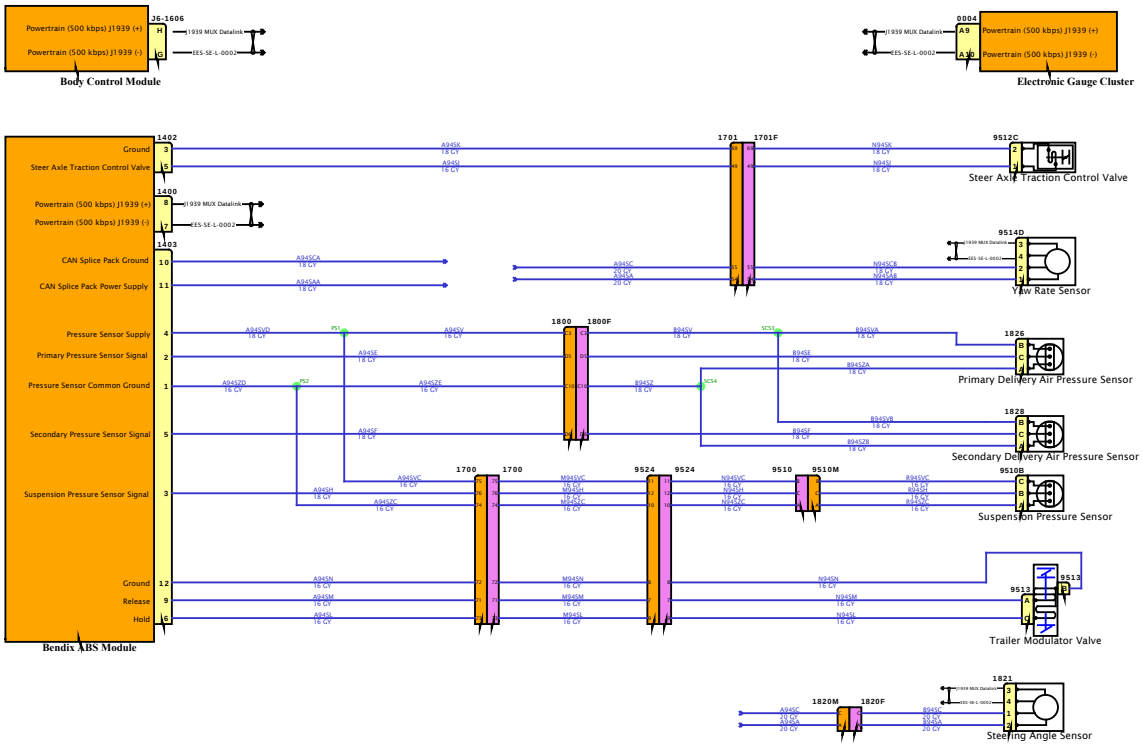

DESIGN DESCRIPTION

FEATURE CODES

SOFTWARE FEATURE CODES

NAVISTAR
NAVISTAR, INC. CONFIDENTIAL PROPRIETARY

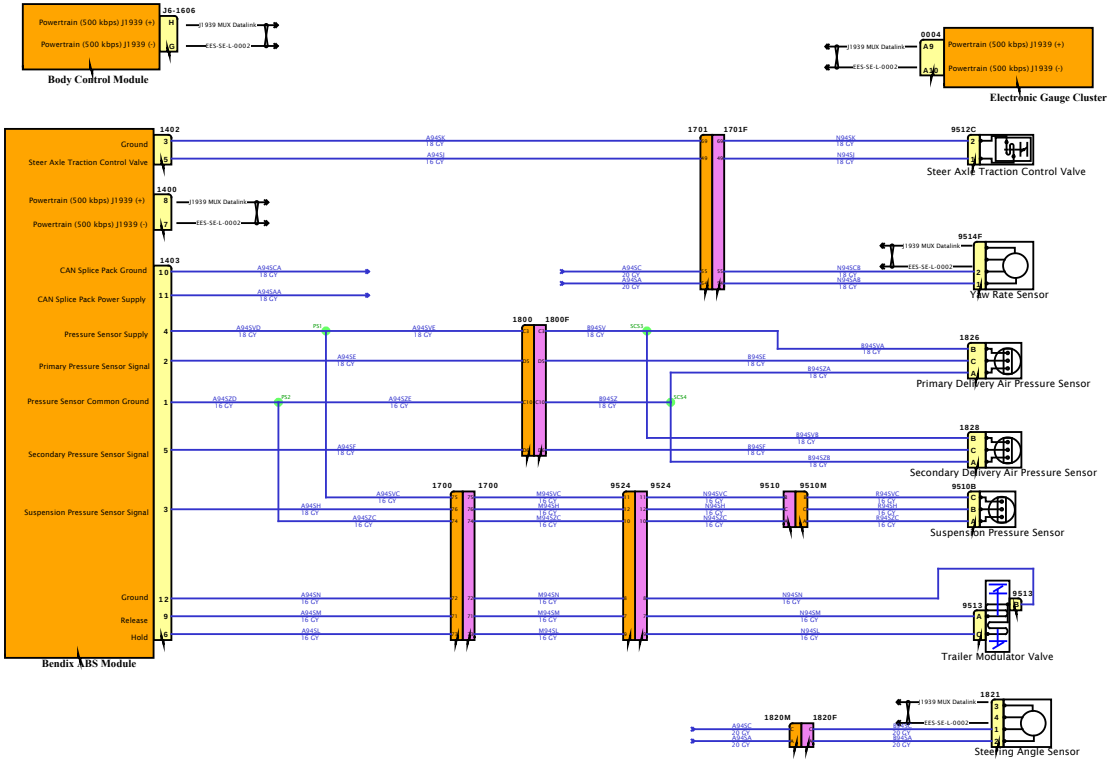

DESIGN DESCRIPTION

FEATURE CODES

SOFTWARE FEATURE CODES

NAVISTAR INC. CONFIDENTIAL PROPRIETARY

Diagram1

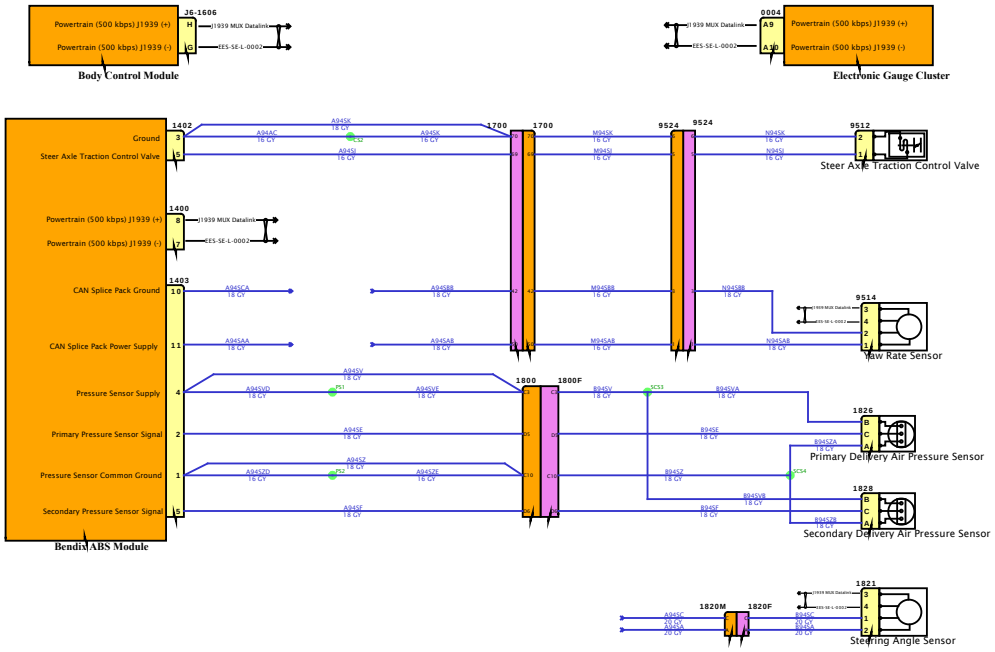

DESIGN DESCRIPTION

FEATURE CODES

SOFTWARE FEATURE CODES

NAVISTAR
NAVISTAR, INC. CONFIDENTIAL PROPRIETARY

Diagram2

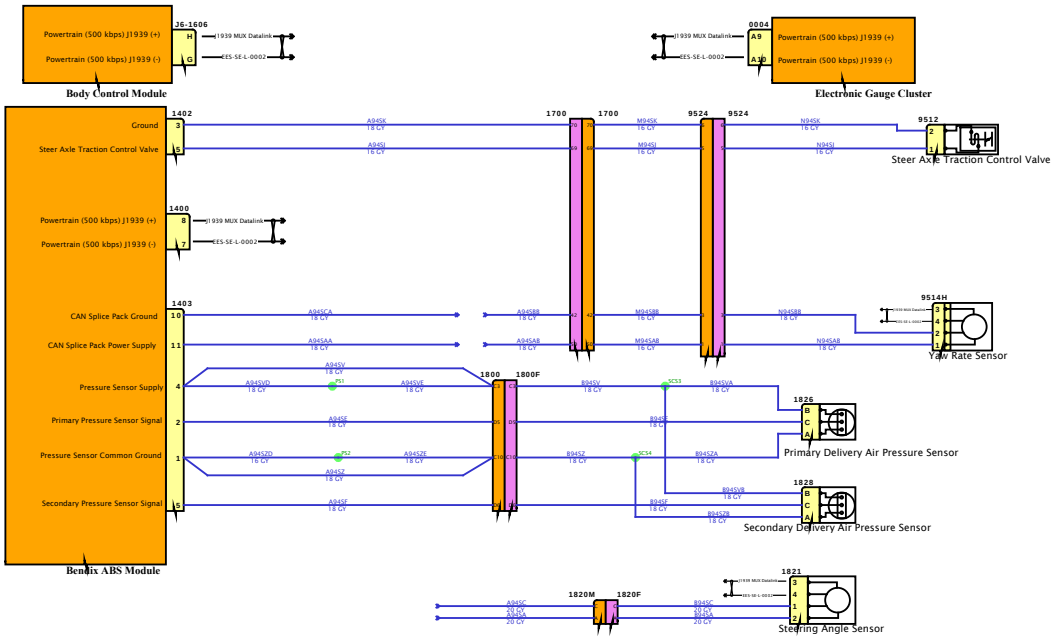

DESIGN DESCRIPTION

FEATURE CODES

SOFTWARE FEATURE CODES

NAVISTAR INC. CONFIDENTIAL PROPRIETARY

Diagram3

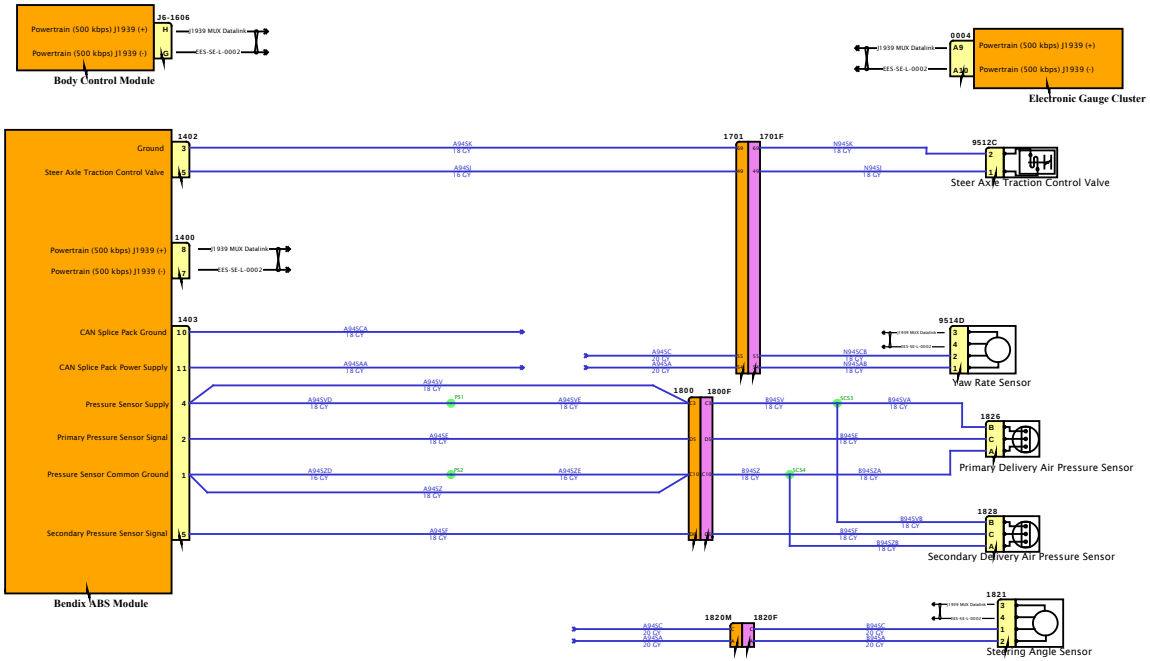

DESIGN DESCRIPTION

FEATURE CODES

SOFTWARE FEATURE CODES

NAVISTAR
NAVISTAR, INC. CONFIDENTIAL PROPRIETARY

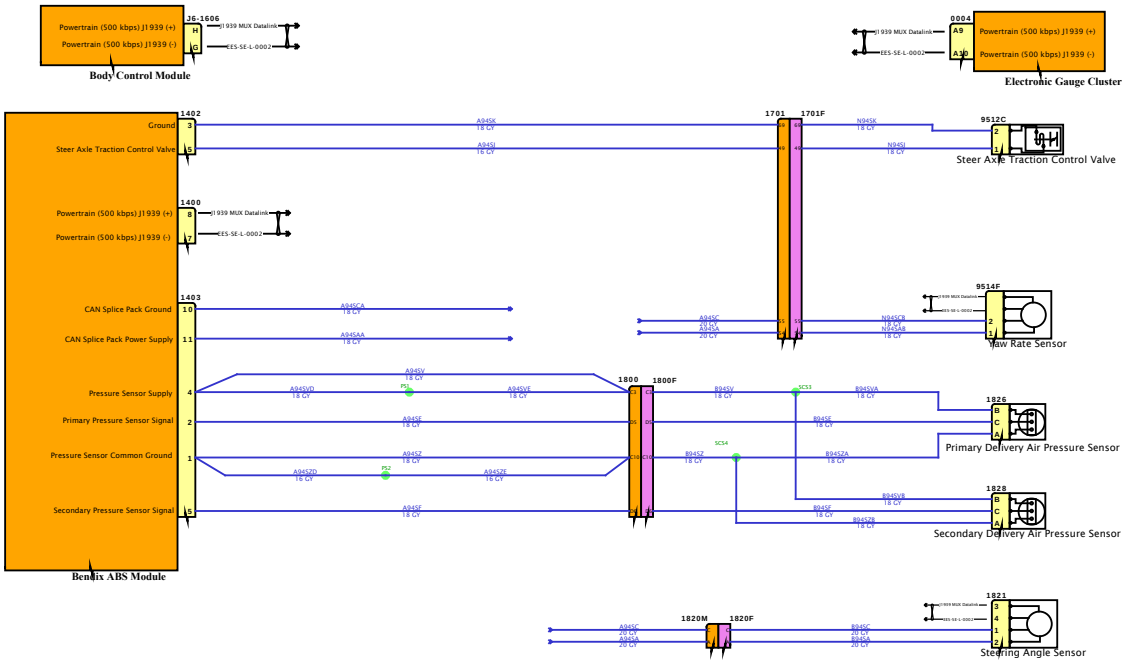

DESIGN DESCRIPTION

FEATURE CODES

SOFTWARE FEATURE CODES

NAVISTAR
NAVISTAR, INC. CONFIDENTIAL PROPRIETARY

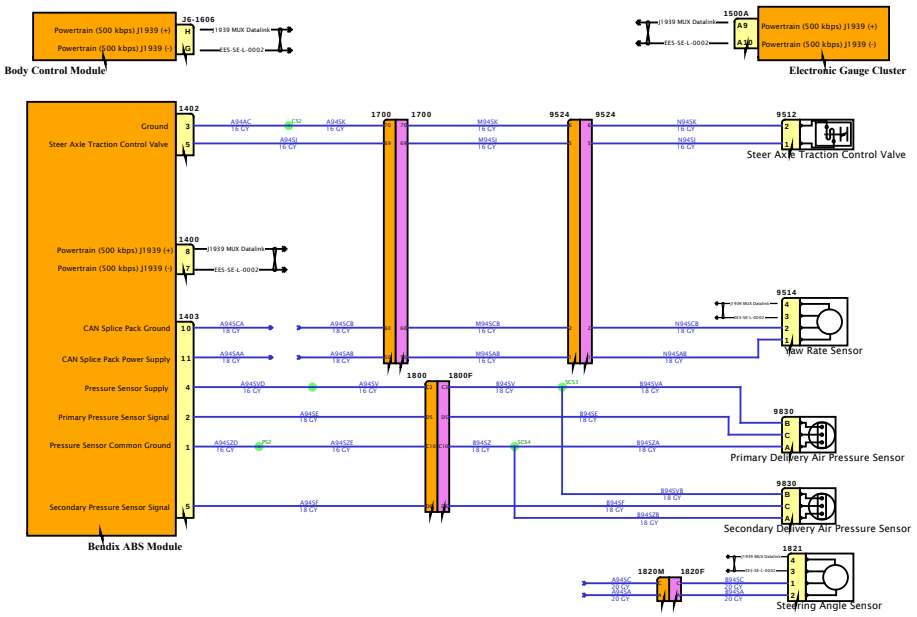

DESIGN DESCRIPTION

FEATURE CODES

SOFTWARE FEATURE CODES

NAVISTAR
NAVISTAR, INC. CONFIDENTIAL PROPRIETARY

Diagram2

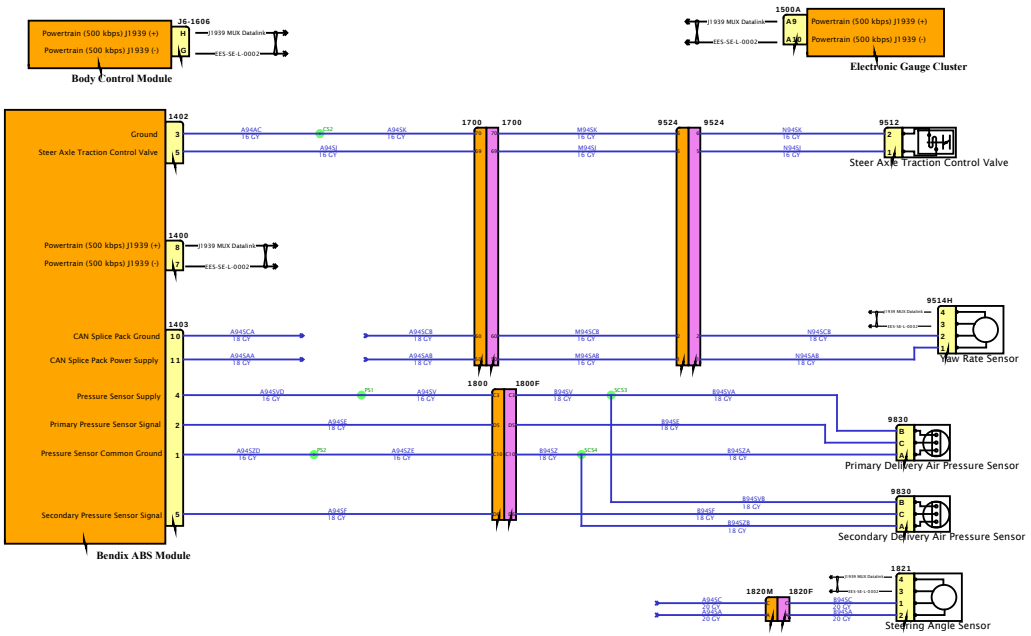

DESIGN DESCRIPTION

FEATURE CODES

SOFTWARE FEATURE CODES

NAVISTAR INC. CONFIDENTIAL PROPRIETARY

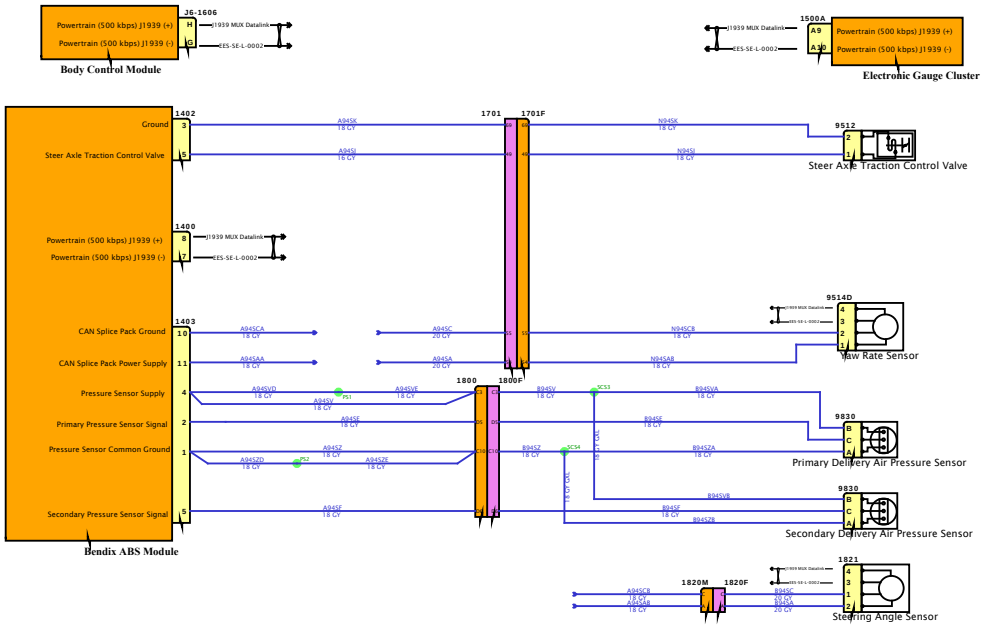

DESIGN DESCRIPTION

FEATURE CODES

SOFTWARE FEATURE CODES

NAVISTAR
NAVISTAR, INC. CONFIDENTIAL PROPRIETARY

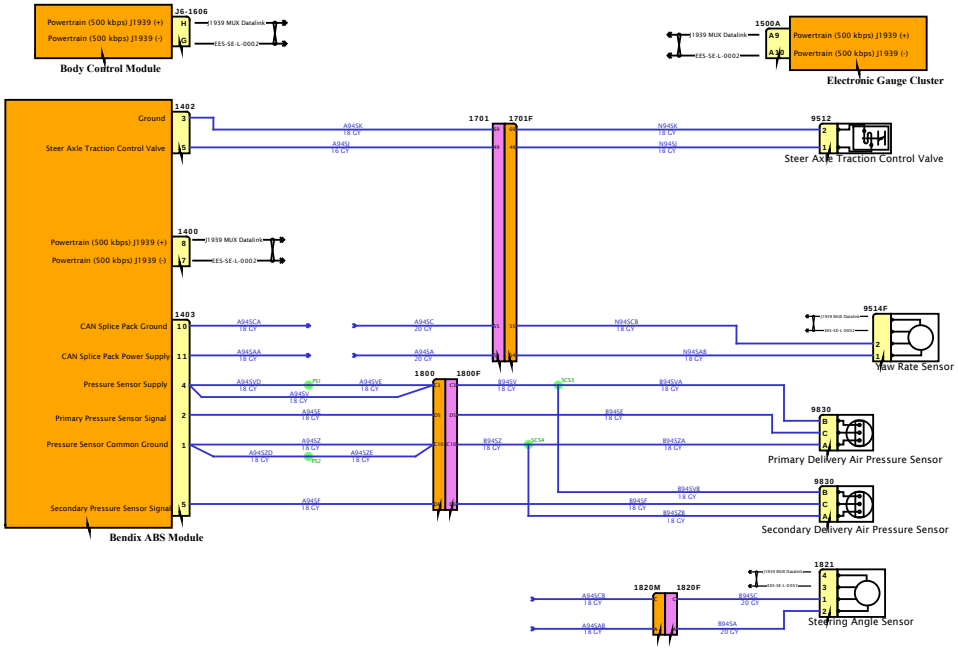

DESIGN DESCRIPTION

FEATURE CODES

SOFTWARE FEATURE CODES

NAVISTAR INC. CONFIDENTIAL PROPRIETARY

Diagram1

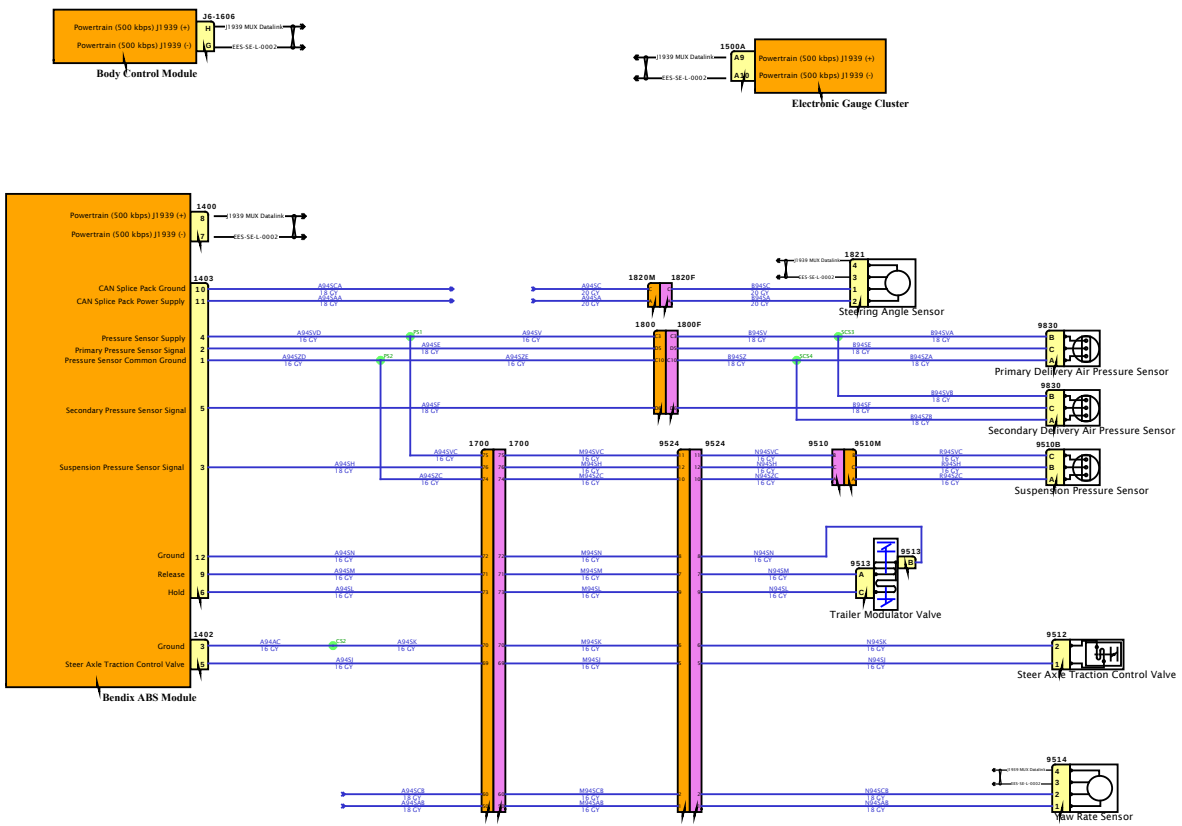

DESIGN DESCRIPTION

FEATURE CODES

SOFTWARE FEATURE CODES

NAVISTAR INC. CONFIDENTIAL PROPRIETARY

Diagram2

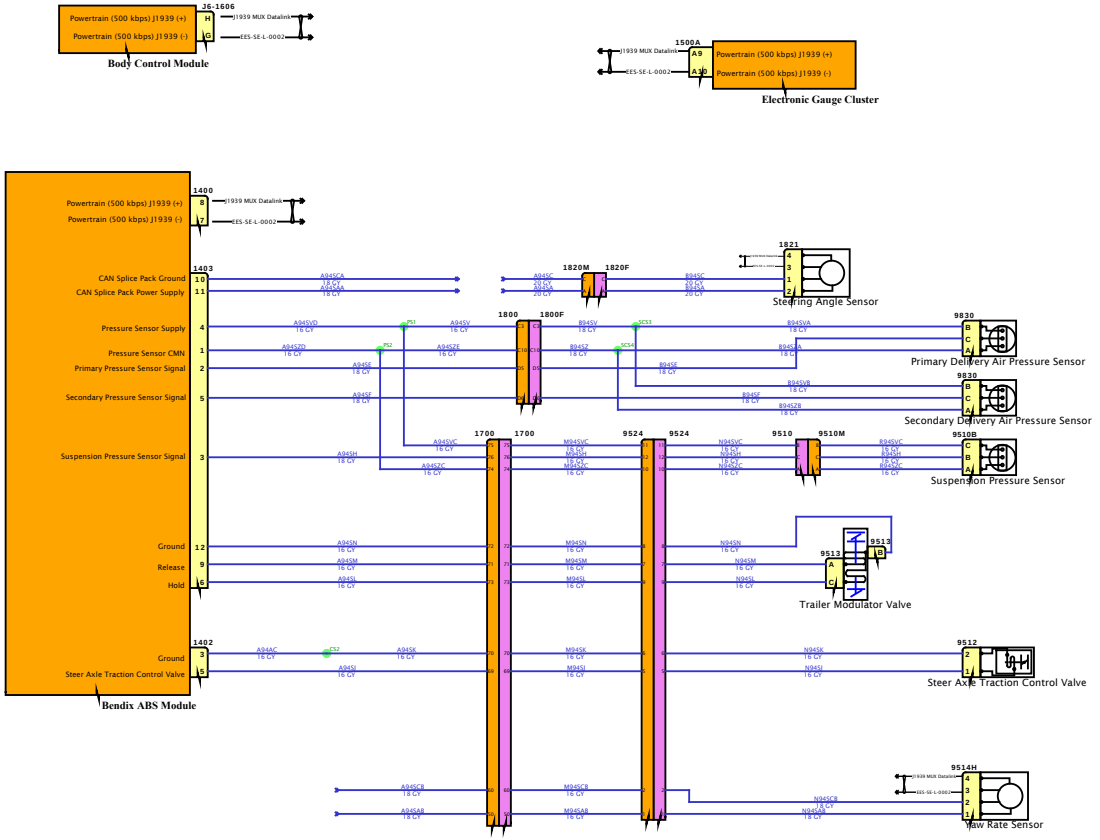

DESIGN DESCRIPTION

FEATURE CODES

SOFTWARE FEATURE CODES

NAVISTAR
NAVISTAR, INC. CONFIDENTIAL PROPRIETARY

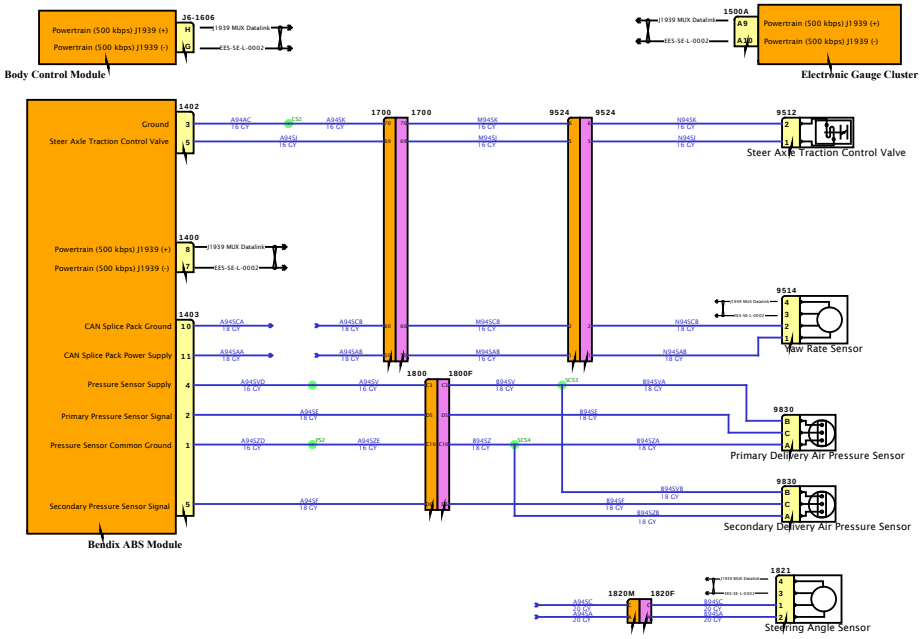

DESIGN DESCRIPTION

FEATURE CODES

SOFTWARE FEATURE CODES

NAVISTAR
NAVISTAR, INC. CONFIDENTIAL PROPRIETARY

Diagram2

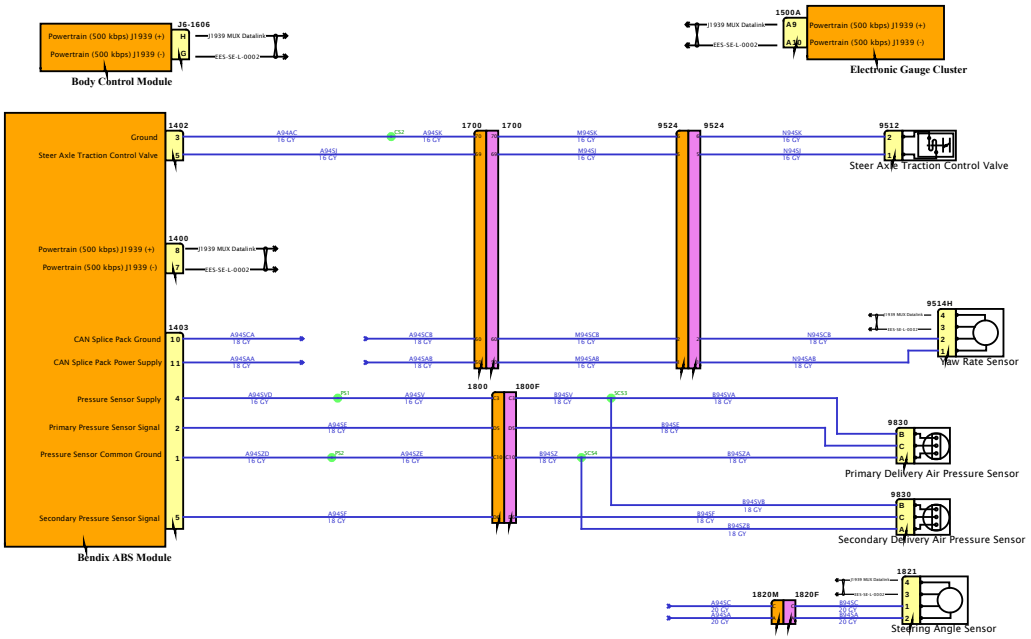

DESIGN DESCRIPTION

FEATURE CODES

SOFTWARE FEATURE CODES

NAVISTAR
NAVISTAR, INC. CONFIDENTIAL PROPRIETARY

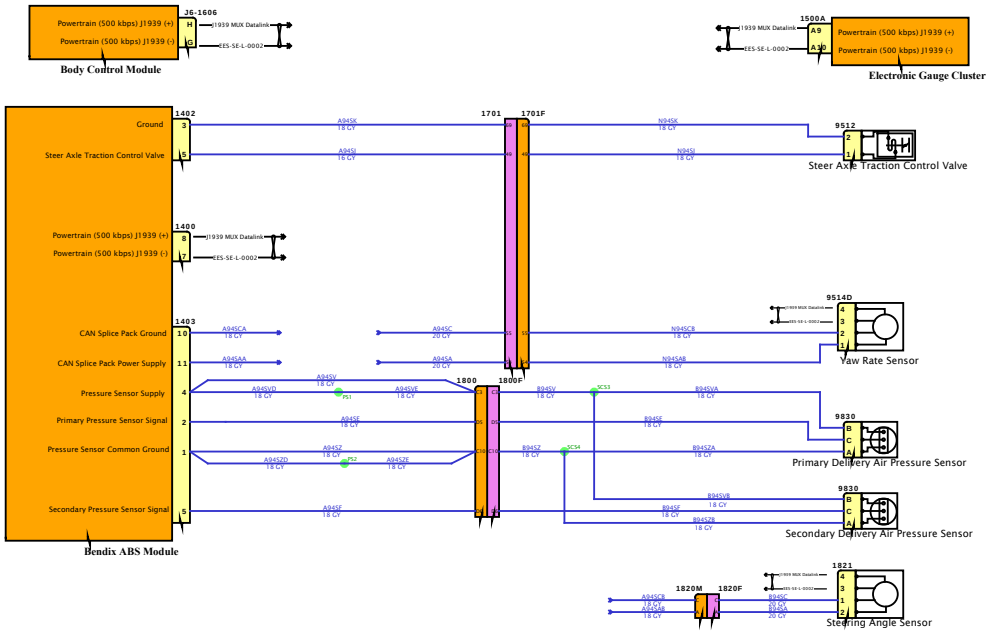

DESIGN DESCRIPTION

FEATURE CODES

SOFTWARE FEATURE CODES

NAVISTAR INC. CONFIDENTIAL PROPRIETARY

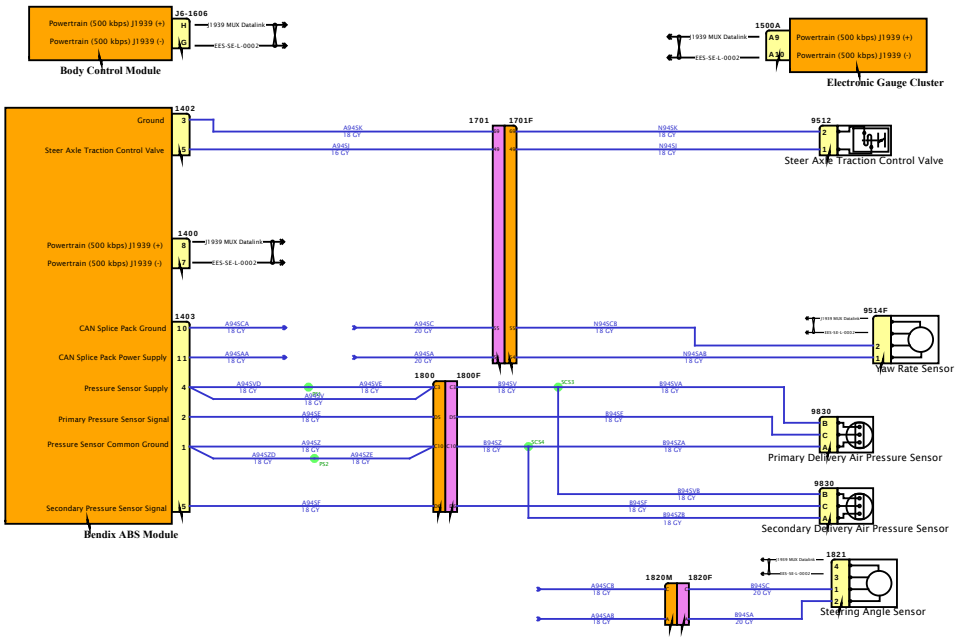

DESIGN DESCRIPTION

FEATURE CODES

SOFTWARE FEATURE CODES

NAVISTAR
NAVISTAR, INC. CONFIDENTIAL PROPRIETARY

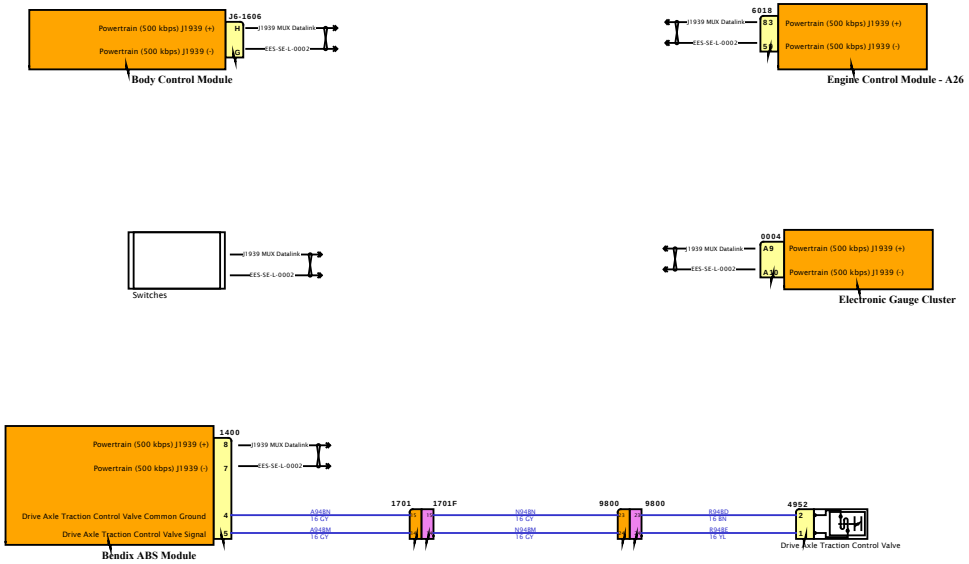

DESIGN DESCRIPTION

FEATURE CODES

SOFTWARE FEATURE CODES

NAVISTAR INC. CONFIDENTIAL PROPRIETARY

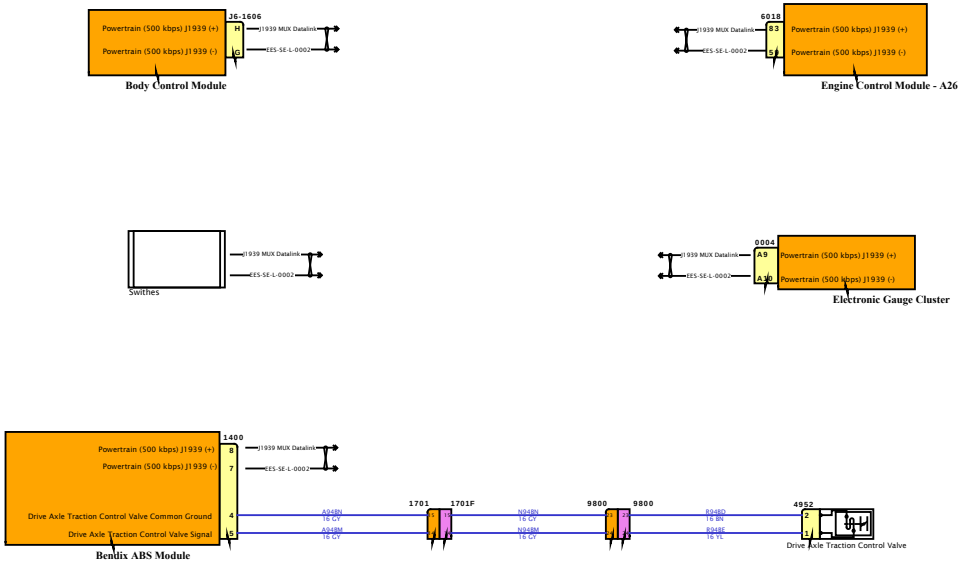

DESIGN DESCRIPTION

FEATURE CODES

SOFTWARE FEATURE CODES

NAVISTAR
NAVISTAR, INC. CONFIDENTIAL PROPRIETARY

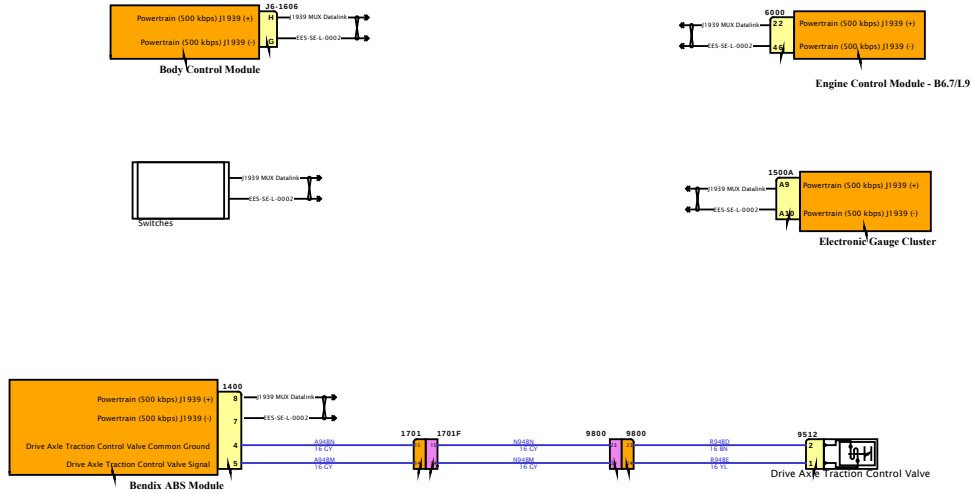

DESIGN DESCRIPTION

FEATURE CODES

SOFTWARE FEATURE CODES

NAVISTAR INC. CONFIDENTIAL PROPRIETARY

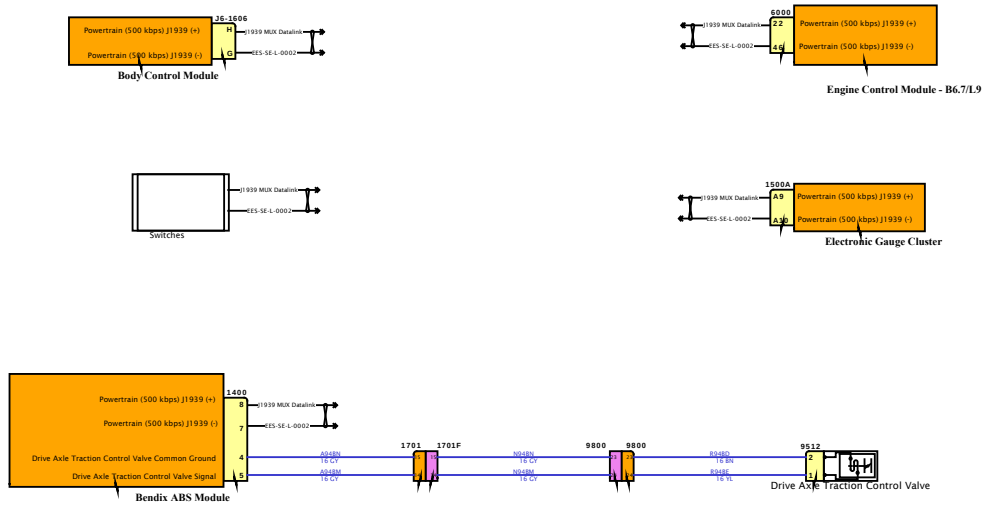

DESIGN DESCRIPTION

FEATURE CODES

SOFTWARE FEATURE CODES

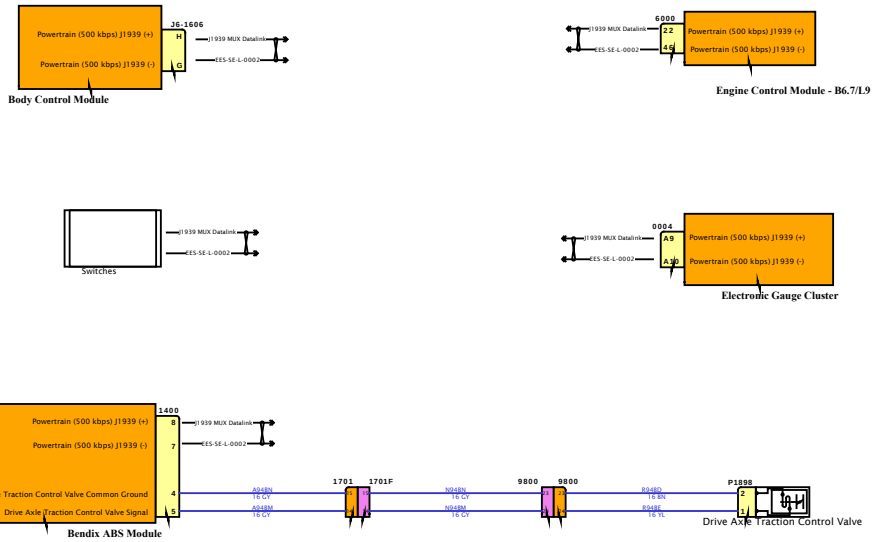

DESIGN DESCRIPTION

FEATURE CODES

SOFTWARE FEATURE CODES

NAVISTAR INC. CONFIDENTIAL PROPRIETARY

Diagram1

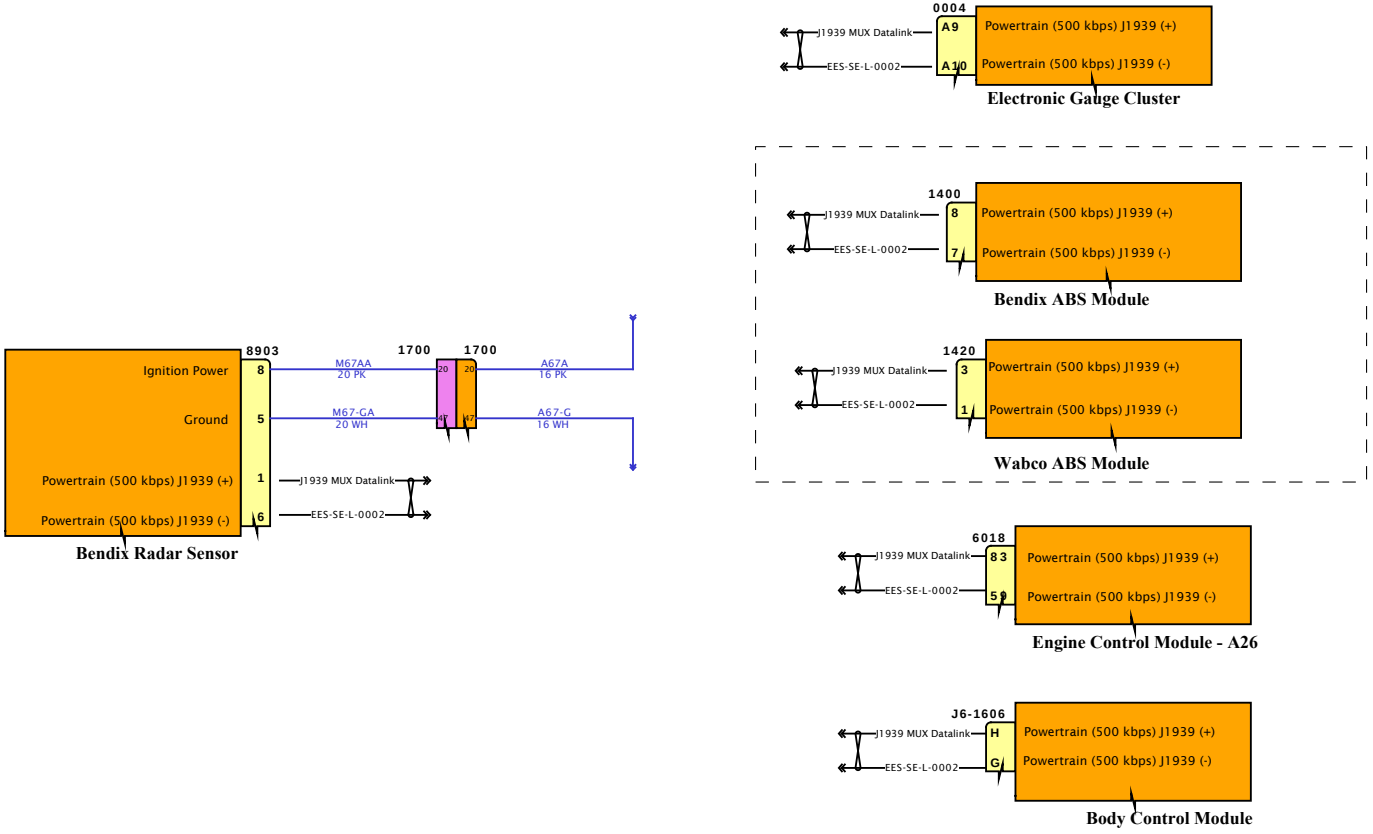

DESIGN DESCRIPTION

FEATURE CODES

SOFTWARE FEATURE CODES

NAVISTAR
NAVISTAR, INC. CONFIDENTIAL PROPRIETARY

DESIGN DESCRIPTION

FEATURE CODES

SOFTWARE FEATURE CODES

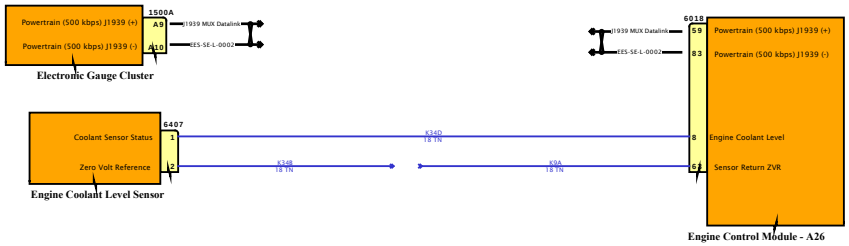

NAVISTAR INC. CONFIDENTIAL PROPRIETARY

Diagram1

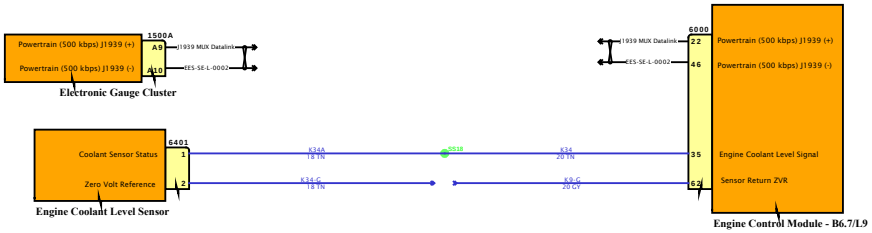

DESIGN DESCRIPTION

FEATURE CODES

SOFTWARE FEATURE CODES

NAVISTAR INC. CONFIDENTIAL PROPRIETARY

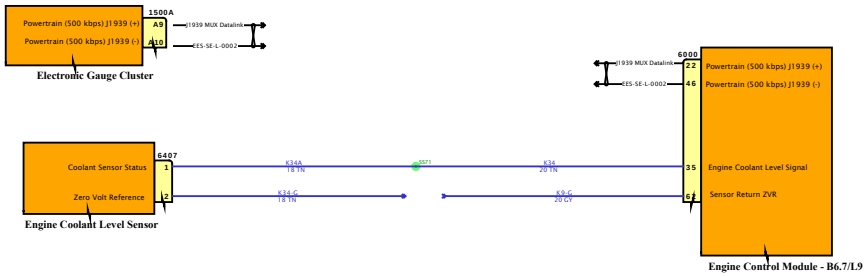

DESIGN DESCRIPTION

FEATURE CODES

SOFTWARE FEATURE CODES

NAVISTAR
NAVISTAR, INC. CONFIDENTIAL PROPRIETARY

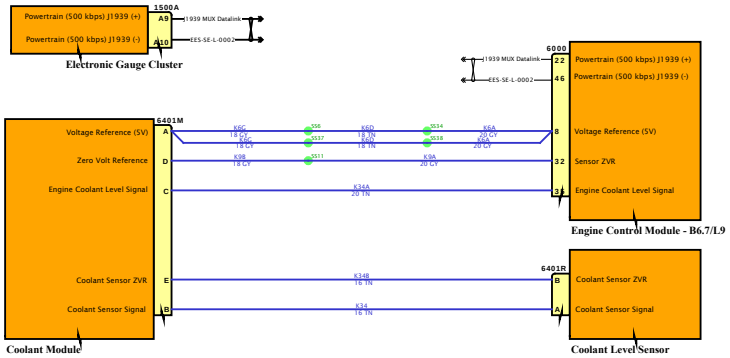

DESIGN DESCRIPTION

FEATURE CODES

SOFTWARE FEATURE CODES

Diagram1

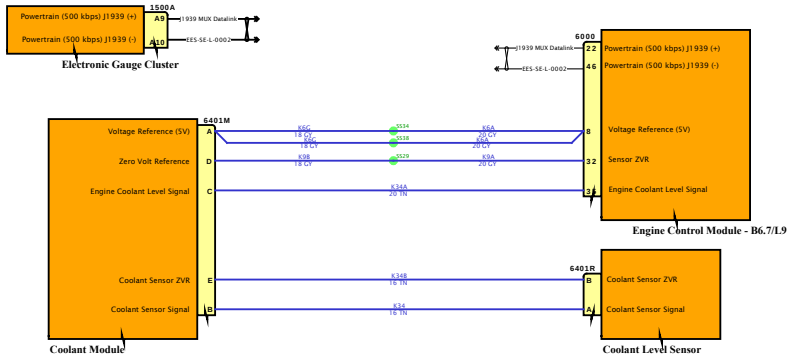

DESIGN DESCRIPTION

FEATURE CODES

SOFTWARE FEATURE CODES

NAVISTAR INC. CONFIDENTIAL PROPRIETARY

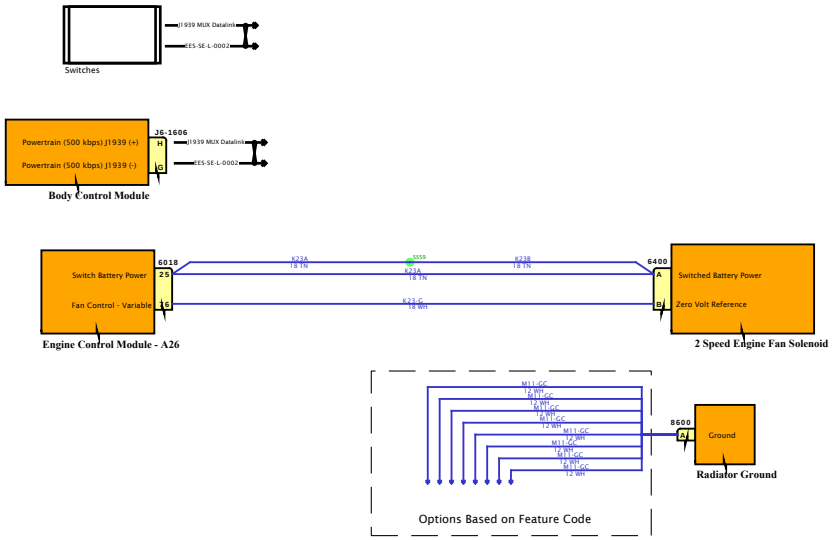

DESIGN DESCRIPTION

FEATURE CODES

SOFTWARE FEATURE CODES

NAVISTAR INC. CONFIDENTIAL PROPRIETARY

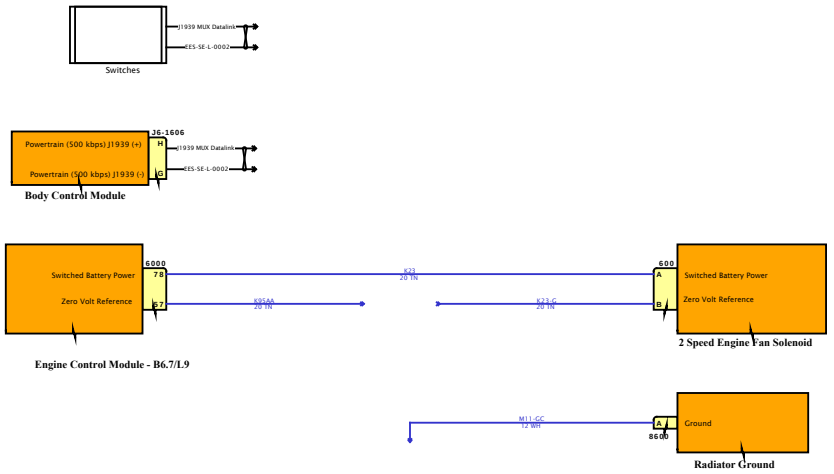

DESIGN DESCRIPTION

FEATURE CODES

SOFTWARE FEATURE CODES

NAVISTAR INC. CONFIDENTIAL PROPRIETARY

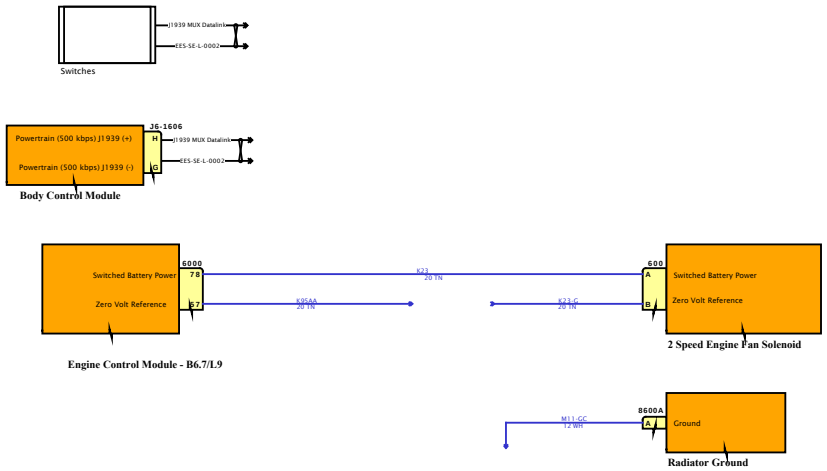

DESIGN DESCRIPTION

FEATURE CODES

SOFTWARE FEATURE CODES

NAVISTAR
NAVISTAR, INC. CONFIDENTIAL PROPRIETARY



DESIGN DESCRIPTION

FEATURE CODES

SOFTWARE FEATURE CODES

NAVISTAR INC. CONFIDENTIAL PROPRIETARY

Diagram1

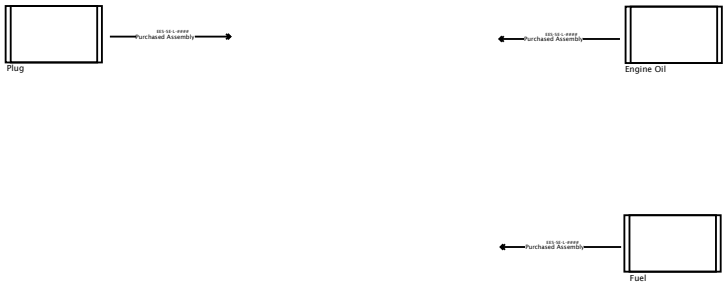

DESIGN DESCRIPTION

FEATURE CODES

SOFTWARE FEATURE CODES

NAVISTAR, INC. CONFIDENTIAL PROPRIETARY

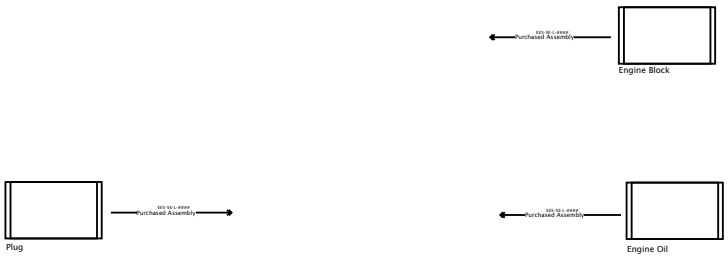

DESIGN DESCRIPTION

FEATURE CODES

SOFTWARE FEATURE CODES

NAVISTAR INC. CONFIDENTIAL PROPRIETARY

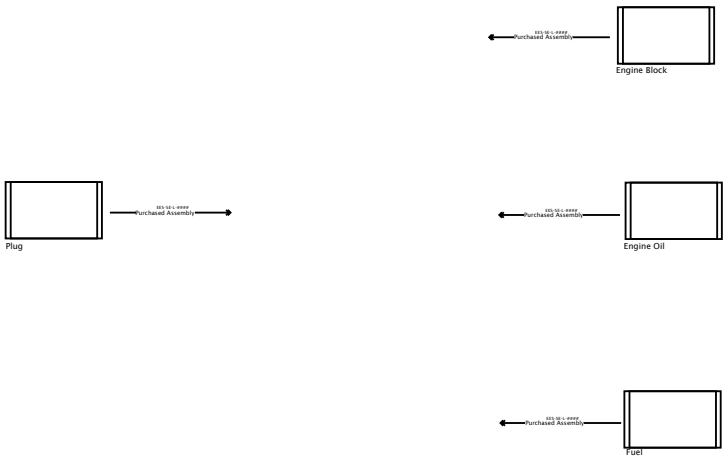

DESIGN DESCRIPTION

FEATURE CODES

SOFTWARE FEATURE CODES

NAVISTAR INC. CONFIDENTIAL PROPRIETARY

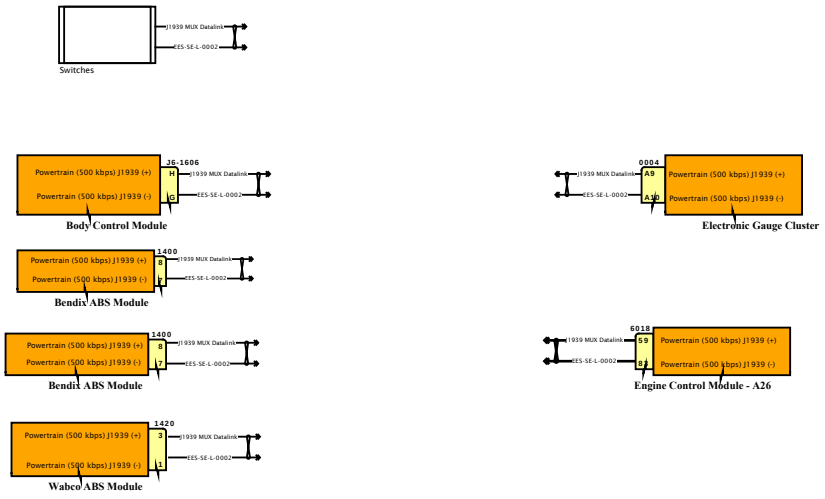

DESIGN DESCRIPTION

FEATURE CODES

SOFTWARE FEATURE CODES

NAVISTAR INC. CONFIDENTIAL PROPRIETARY

Diagram1

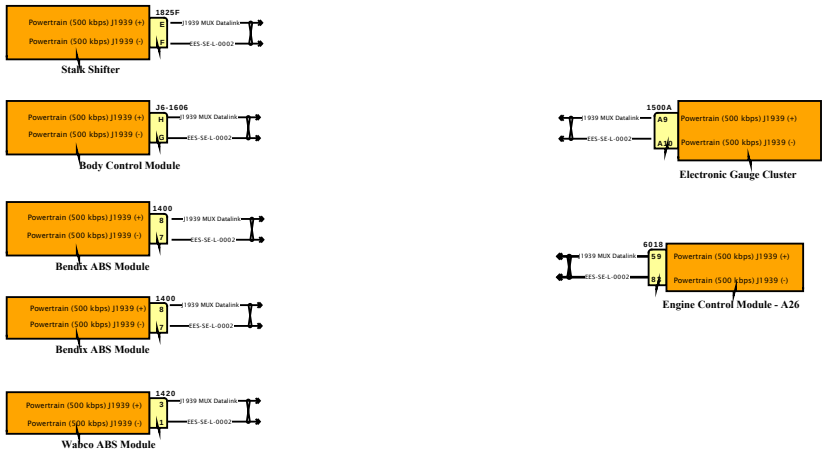

DESIGN DESCRIPTION

FEATURE CODES

SOFTWARE FEATURE CODES

NAVISTAR INC. CONFIDENTIAL PROPRIETARY

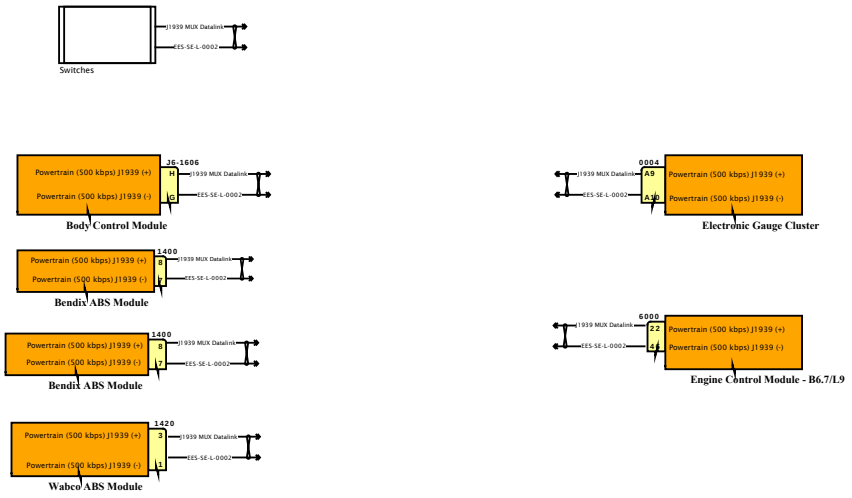

DESIGN DESCRIPTION

FEATURE CODES

SOFTWARE FEATURE CODES

NAVISTAR INC. CONFIDENTIAL PROPRIETARY

Diagram1

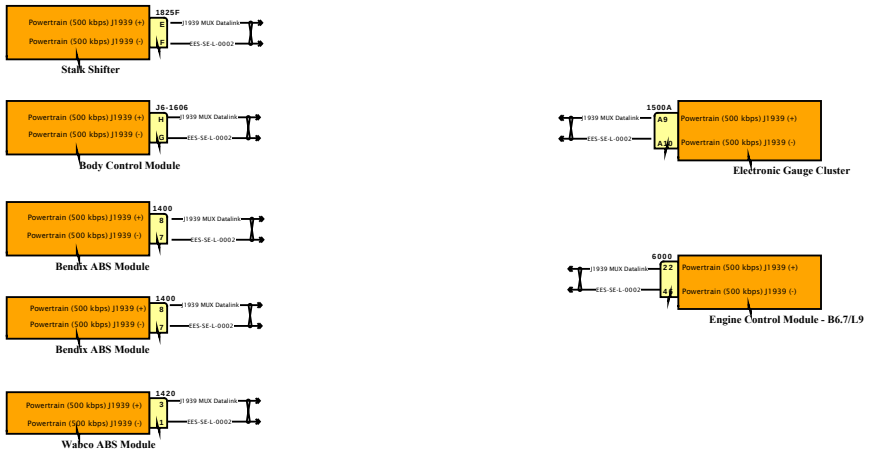

DESIGN DESCRIPTION

FEATURE CODES

SOFTWARE FEATURE CODES

NAVISTAR
NAVISTAR, INC. CONFIDENTIAL PROPRIETARY

Diagram1

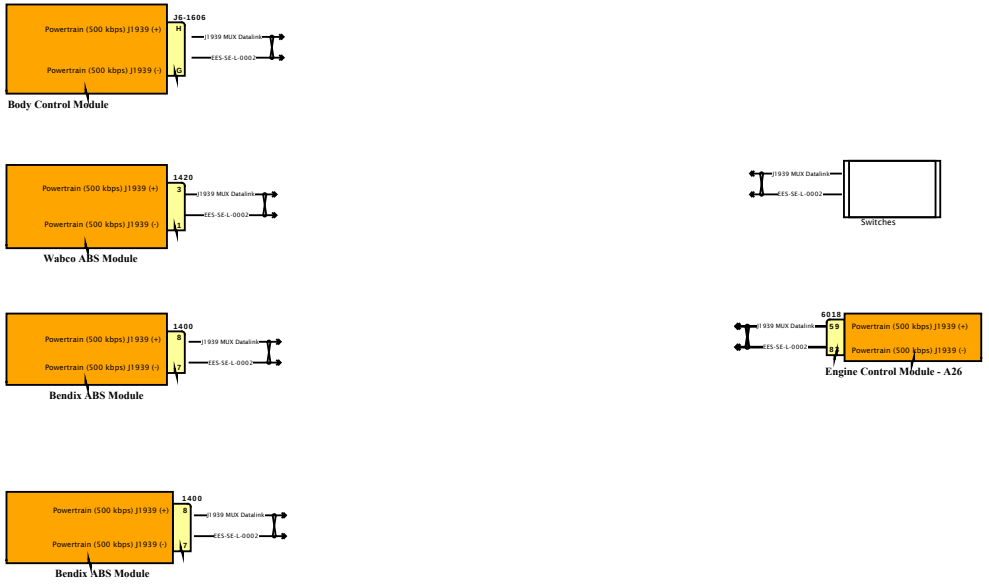

DESIGN DESCRIPTION

FEATURE CODES

SOFTWARE FEATURE CODES

NAVISTAR INC. CONFIDENTIAL PROPRIETARY

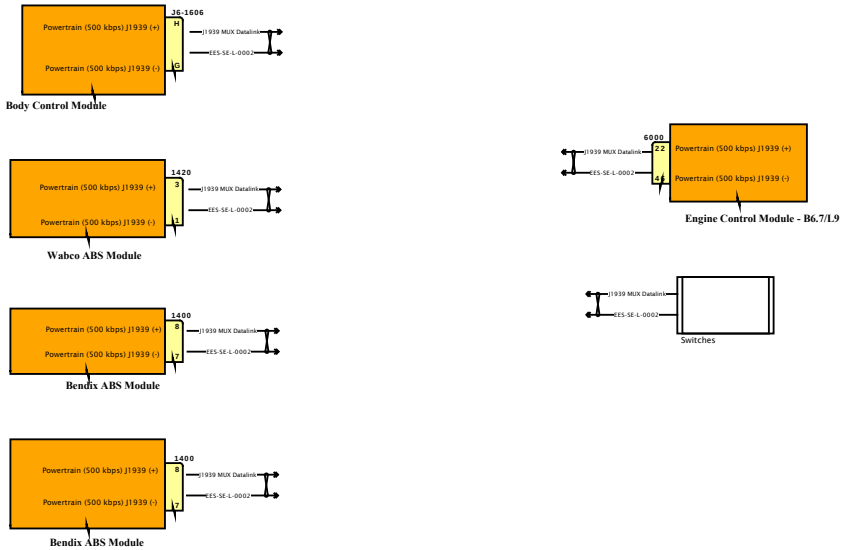

DESIGN DESCRIPTION

FEATURE CODES

SOFTWARE FEATURE CODES

NAVISTAR INC. CONFIDENTIAL PROPRIETARY

Diagram1

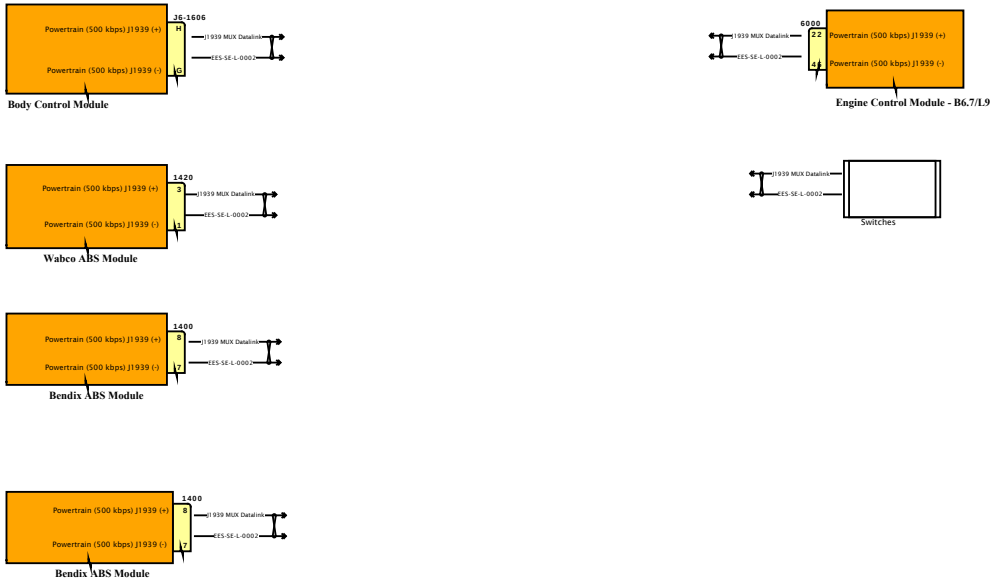

DESIGN DESCRIPTION

FEATURE CODES

SOFTWARE FEATURE CODES

NAVISTAR INC. CONFIDENTIAL PROPRIETARY

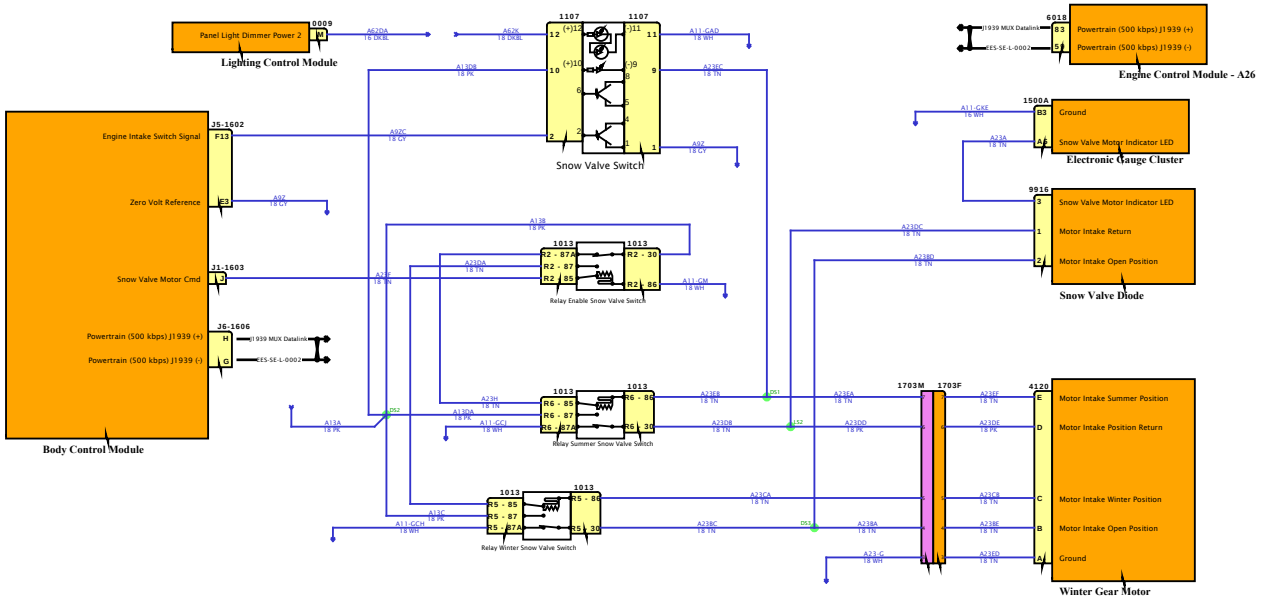

DESIGN DESCRIPTION

FEATURE CODES

SOFTWARE FEATURE CODES

Diagram2

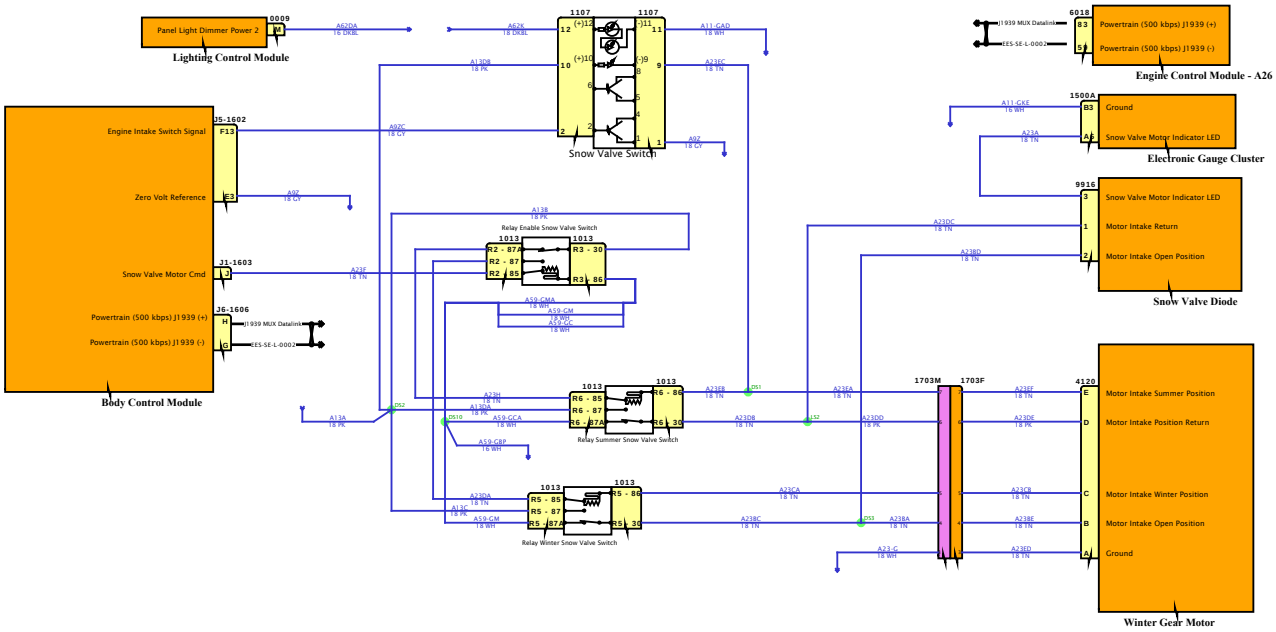

DESIGN DESCRIPTION

FEATURE CODES

SOFTWARE FEATURE CODES

Diagram1

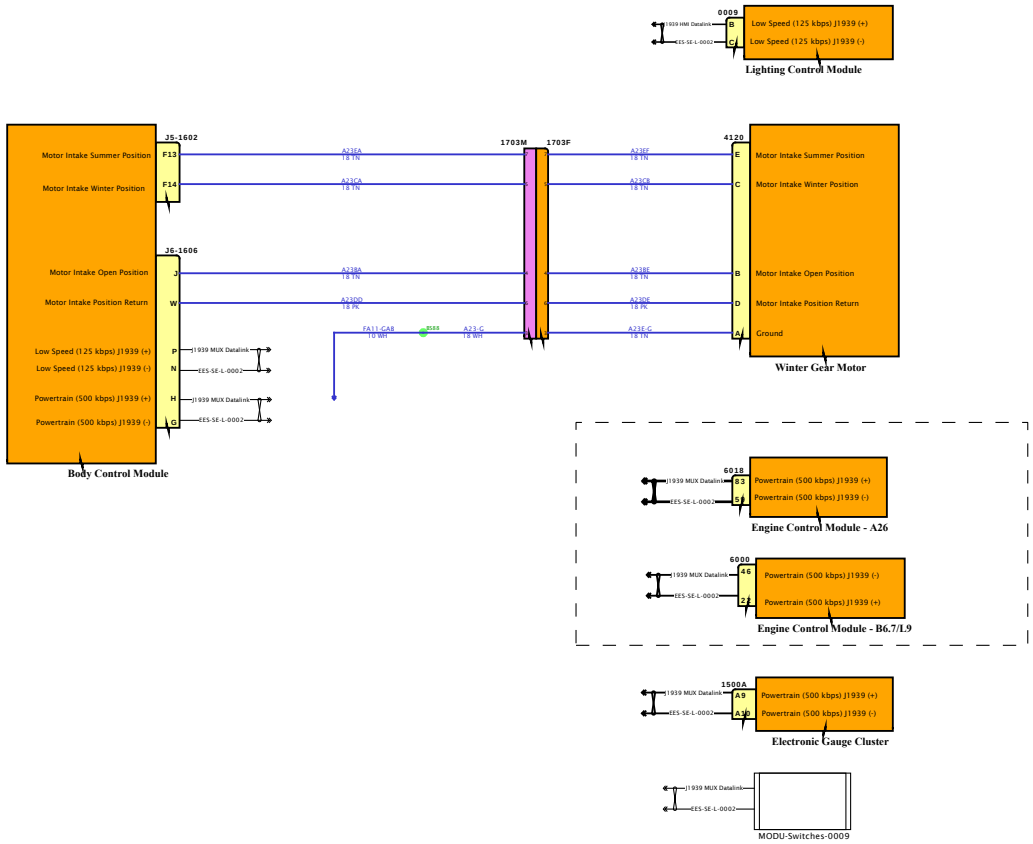

DESIGN DESCRIPTION

FEATURE CODES

SOFTWARE FEATURE CODES

NAVISTAR
NAVISTAR, INC. CONFIDENTIAL PROPRIETARY

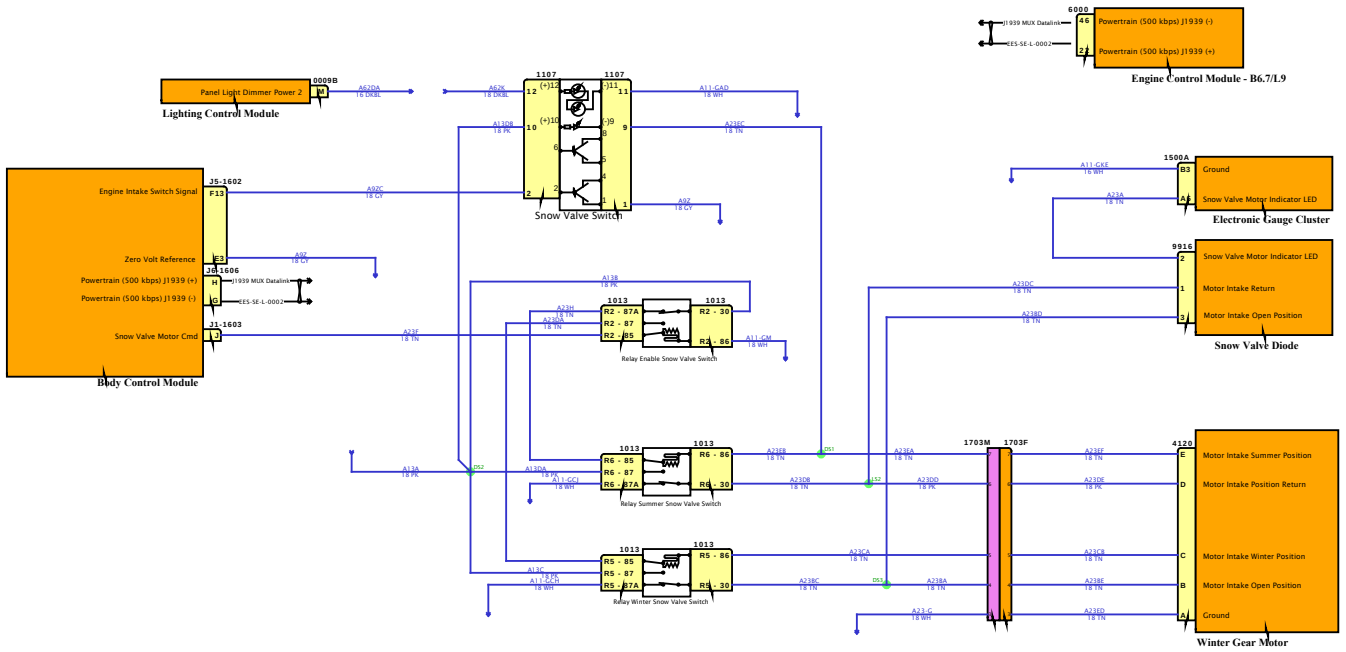

DESIGN DESCRIPTION

FEATURE CODES

SOFTWARE FEATURE CODES

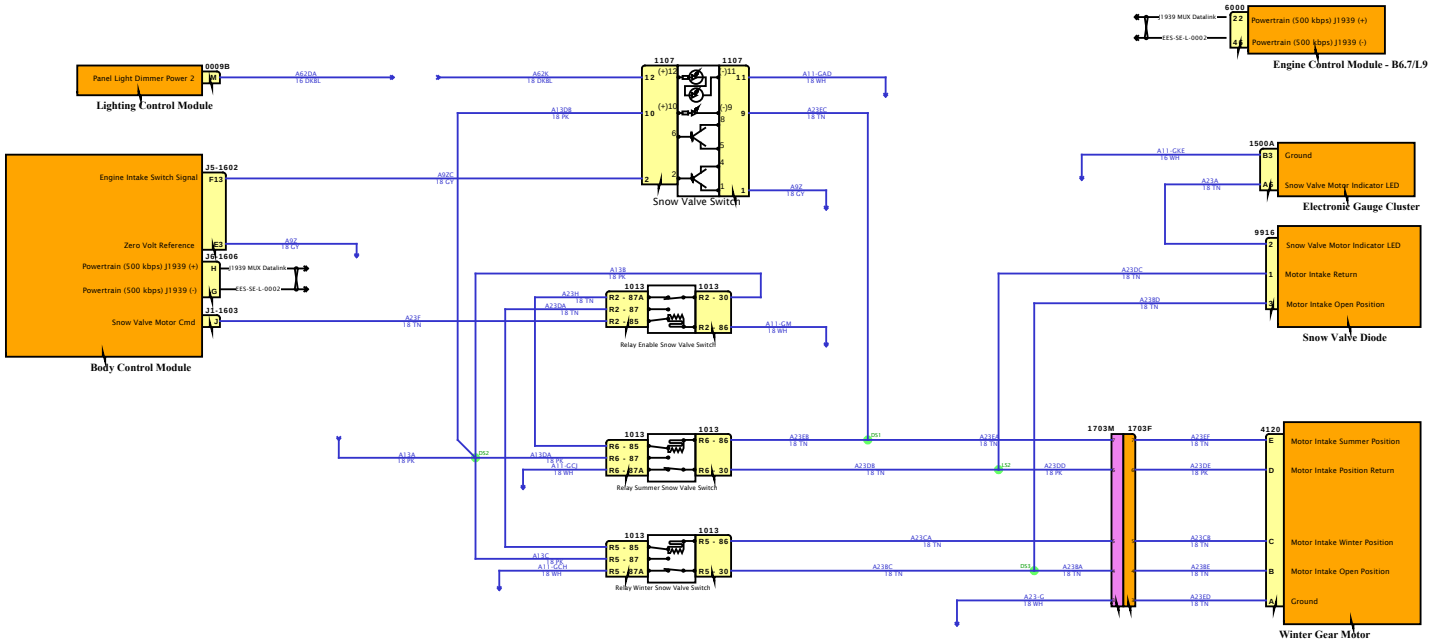

DESIGN DESCRIPTION

FEATURE CODES

SOFTWARE FEATURE CODES

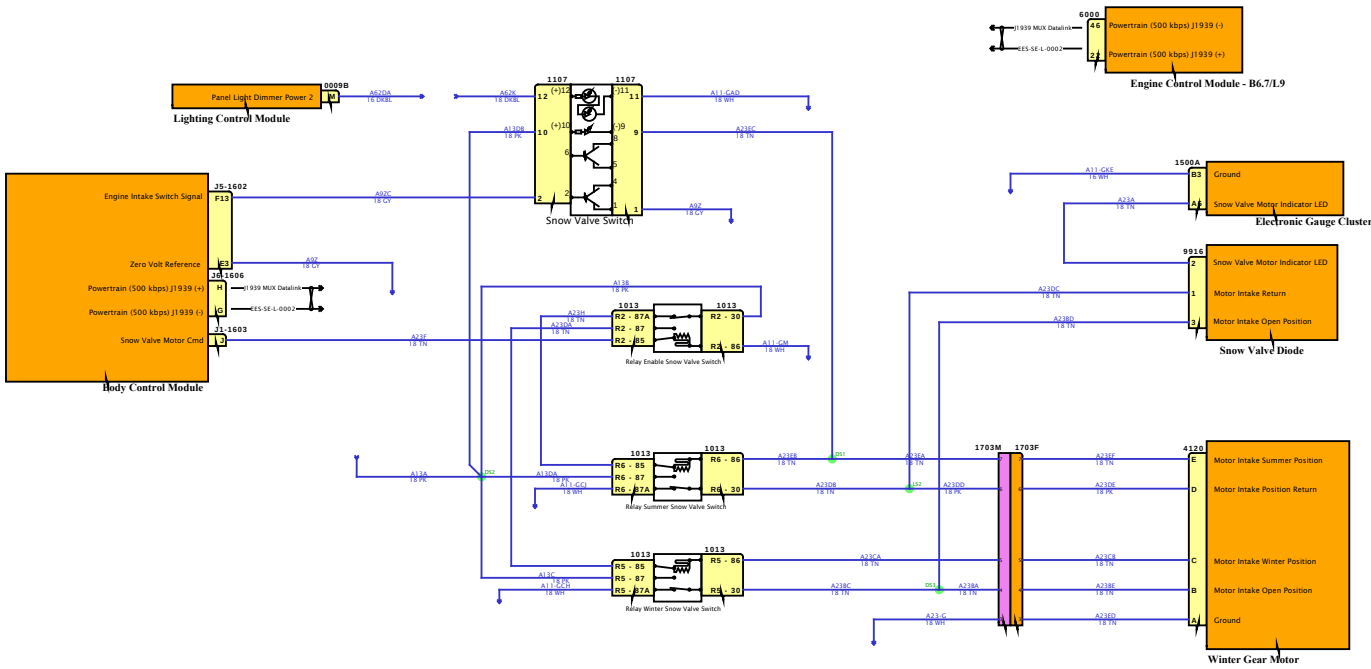

DESIGN DESCRIPTION

FEATURE CODES

SOFTWARE FEATURE CODES

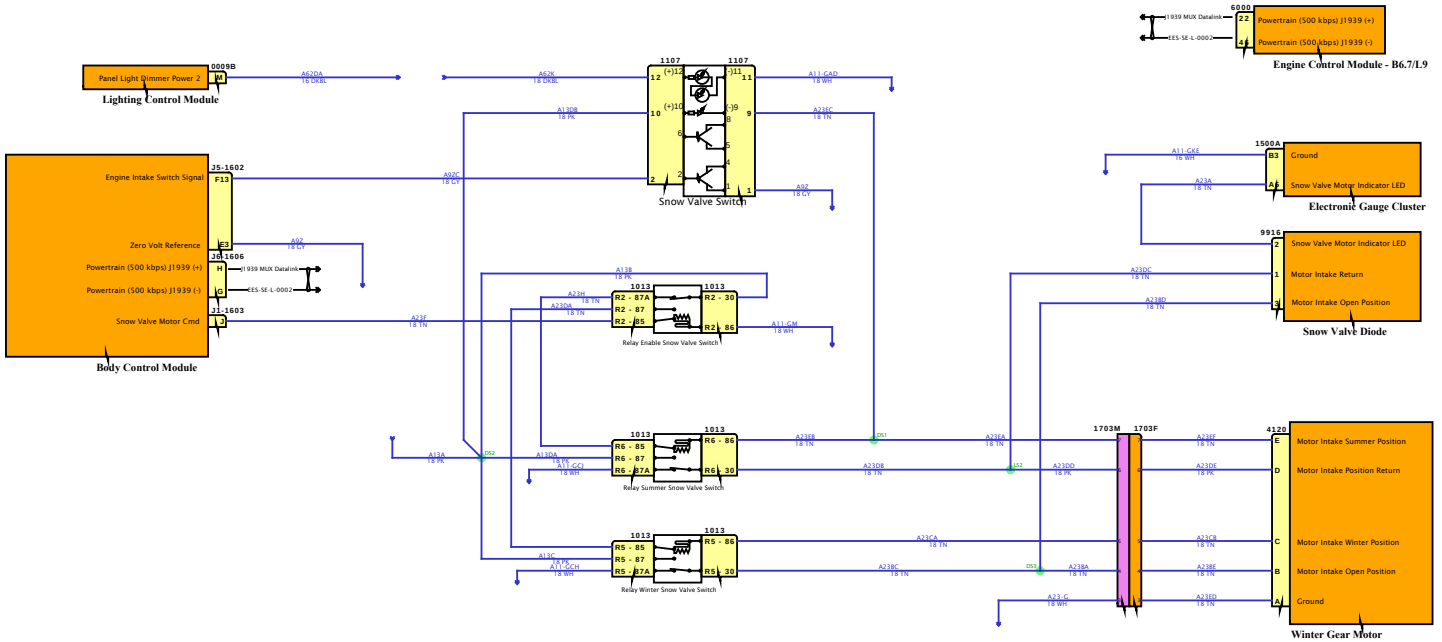

DESIGN DESCRIPTION

FEATURE CODES

SOFTWARE FEATURE CODES

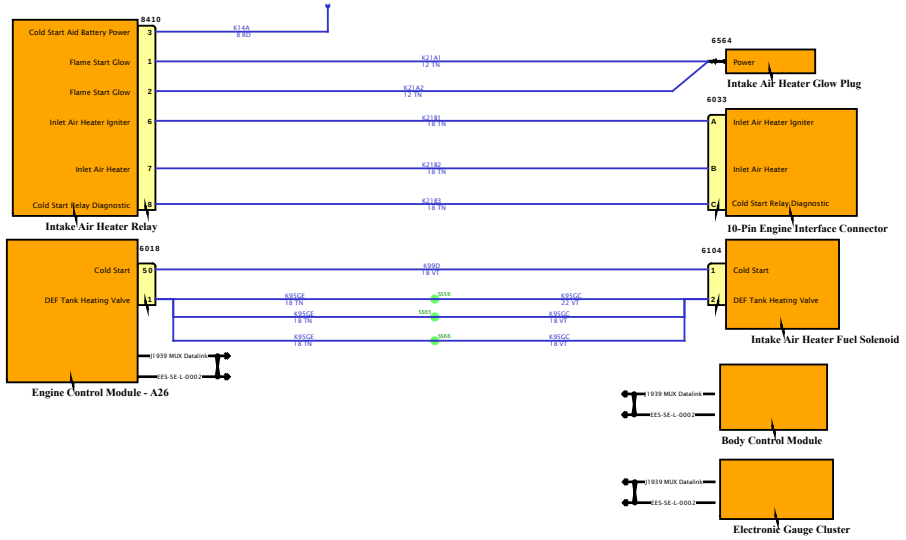

DESIGN DESCRIPTION

FEATURE CODES

SOFTWARE FEATURE CODES

NAVISTAR INC. CONFIDENTIAL PROPRIETARY

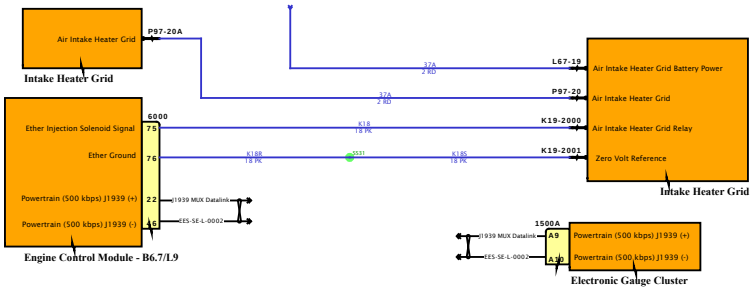

DESIGN DESCRIPTION

FEATURE CODES

SOFTWARE FEATURE CODES

NAVISTAR
NAVISTAR, INC. CONFIDENTIAL PROPRIETARY

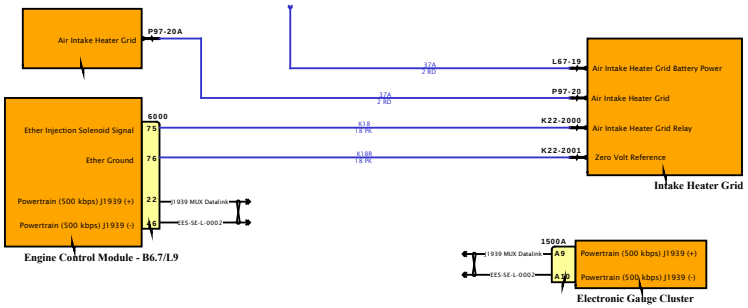

DESIGN DESCRIPTION

FEATURE CODES

SOFTWARE FEATURE CODES

NAVISTAR INC. CONFIDENTIAL PROPRIETARY

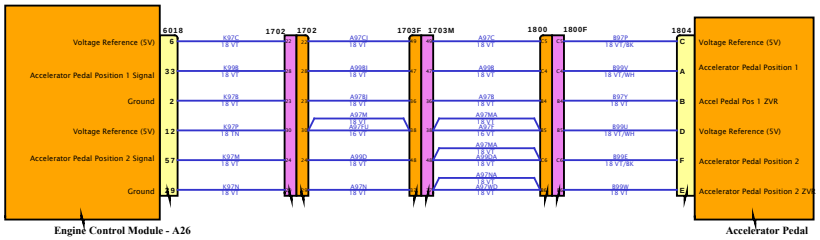

DESIGN DESCRIPTION

FEATURE CODES

SOFTWARE FEATURE CODES

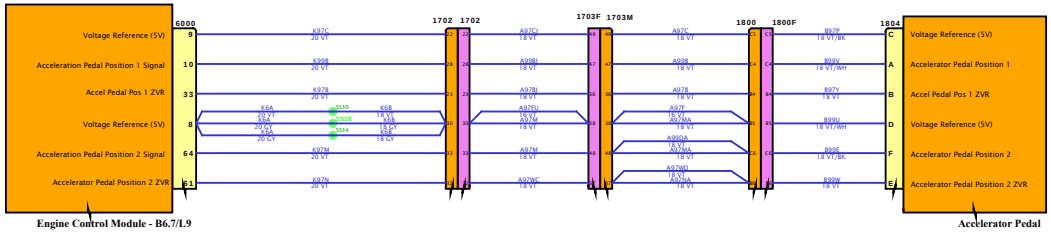

DESIGN DESCRIPTION

FEATURE CODES

SOFTWARE FEATURE CODES

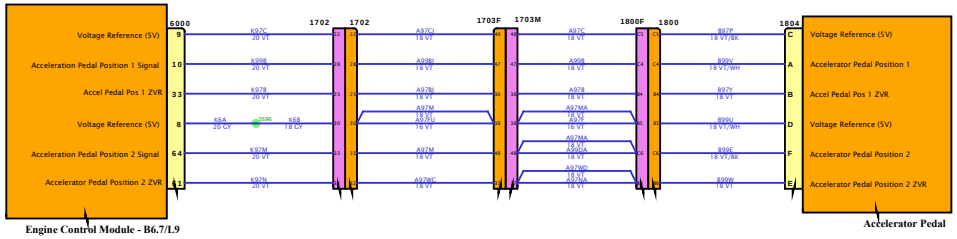

DESIGN DESCRIPTION

FEATURE CODES

SOFTWARE FEATURE CODES

NAVISTAR
NAVISTAR, INC. CONFIDENTIAL PROPRIETARY

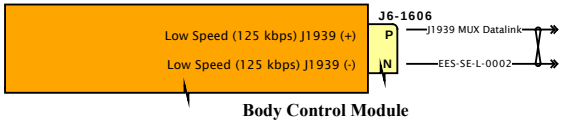

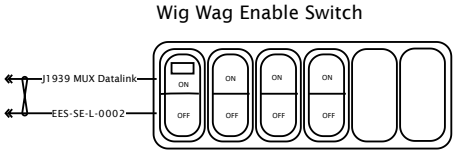

DESIGN DESCRIPTION

FEATURE CODES

SOFTWARE FEATURE CODES

NAVISTAR
NAVISTAR, INC. CONFIDENTIAL PROPRIETARY

DESIGN DESCRIPTION

FEATURE CODES

SOFTWARE FEATURE CODES

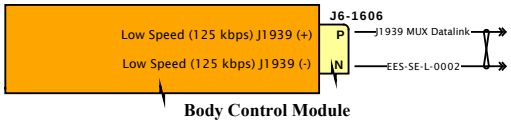

Wig Wag Enable Switch

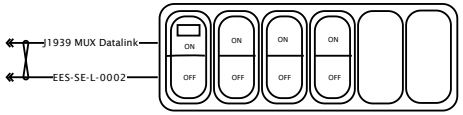

NAVISTAR

NAVISTAR, INC. CONFIDENTIAL PROPRIETARY

Diagram1

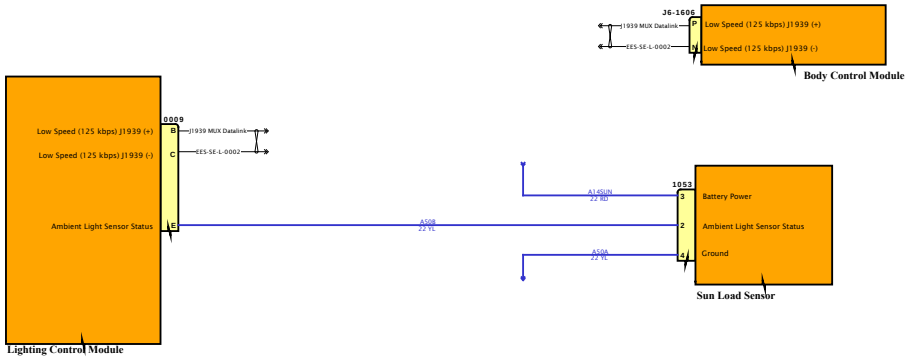

DESIGN DESCRIPTION

FEATURE CODES

SOFTWARE FEATURE CODES

NAVISTAR
NAVISTAR, INC. CONFIDENTIAL PROPRIETARY

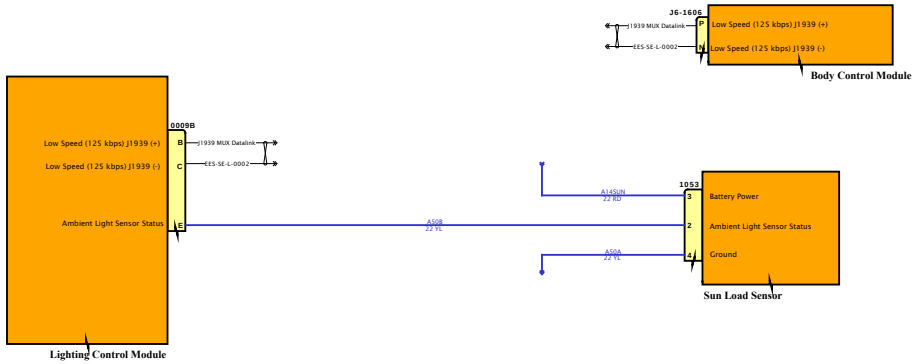

DESIGN DESCRIPTION

FEATURE CODES

SOFTWARE FEATURE CODES

NAVISTAR
NAVISTAR, INC. CONFIDENTIAL PROPRIETARY

Diagram1

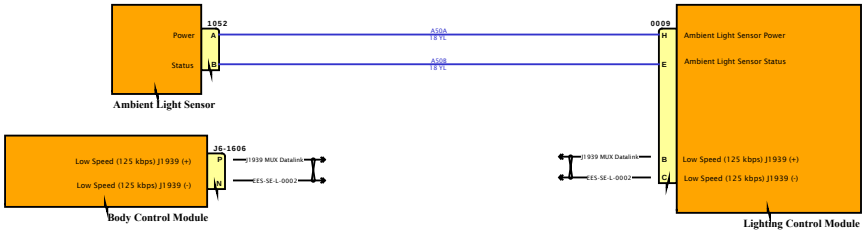

DESIGN DESCRIPTION

FEATURE CODES

SOFTWARE FEATURE CODES

NAVISTAR INC. CONFIDENTIAL PROPRIETARY

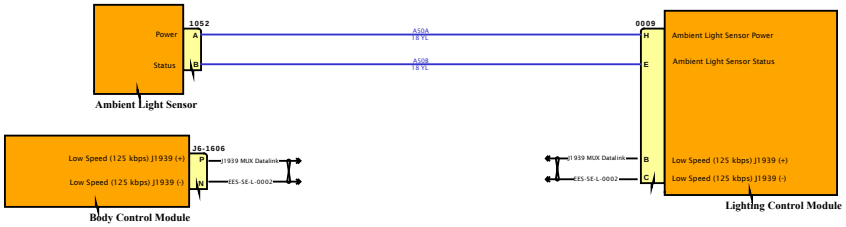

DESIGN DESCRIPTION

FEATURE CODES

SOFTWARE FEATURE CODES

NAVISTAR INC. CONFIDENTIAL PROPRIETARY

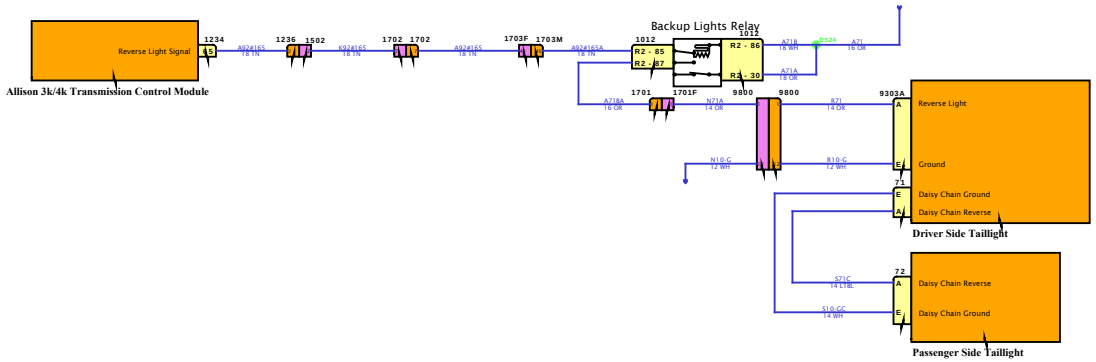

DESIGN DESCRIPTION

FEATURE CODES

SOFTWARE FEATURE CODES

NAVISTAR
NAVISTAR, INC. CONFIDENTIAL PROPRIETARY

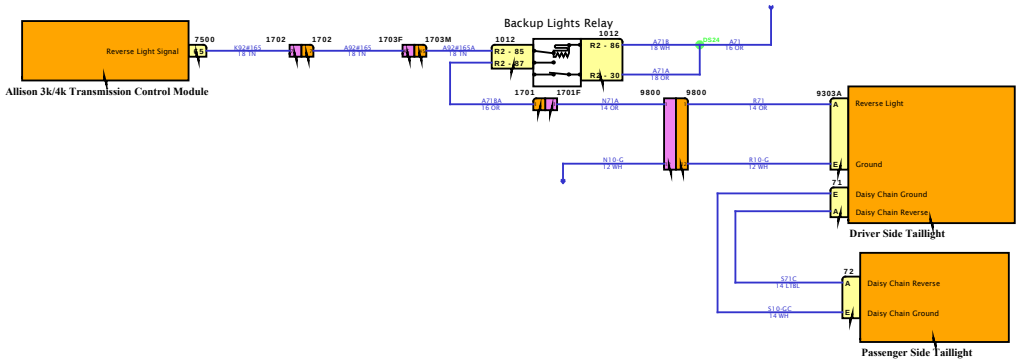

DESIGN DESCRIPTION

FEATURE CODES

SOFTWARE FEATURE CODES

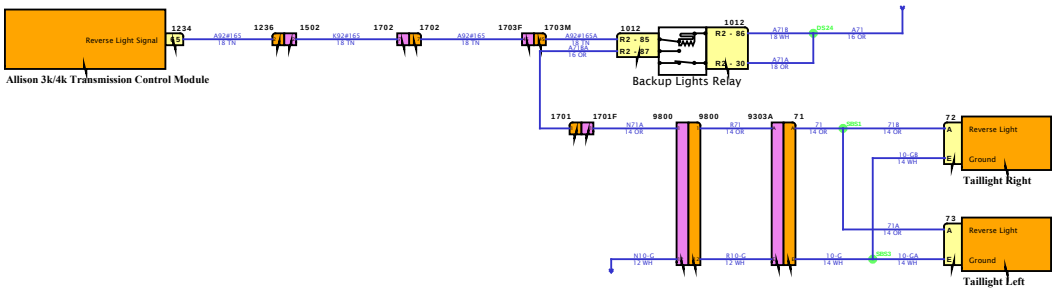

DESIGN DESCRIPTION

FEATURE CODES

SOFTWARE FEATURE CODES

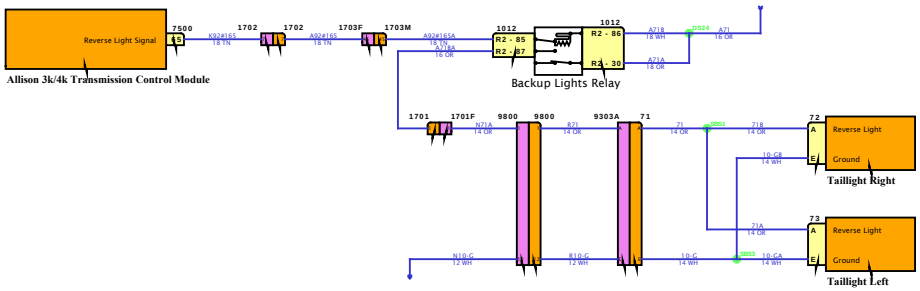

DESIGN DESCRIPTION

FEATURE CODES

SOFTWARE FEATURE CODES

NAVISTAR
NAVISTAR, INC. CONFIDENTIAL PROPRIETARY

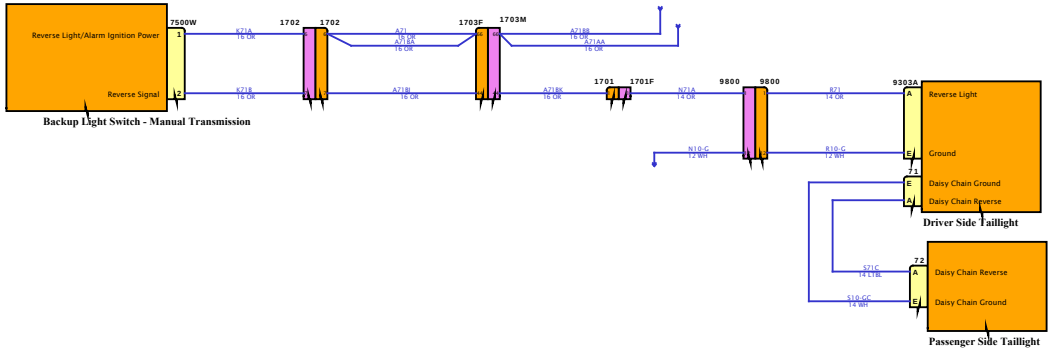

DESIGN DESCRIPTION

FEATURE CODES

SOFTWARE FEATURE CODES

NAVISTAR INC. CONFIDENTIAL PROPRIETARY

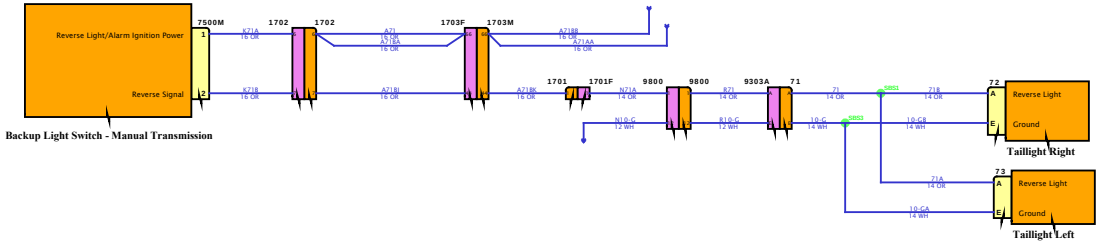

DESIGN DESCRIPTION

FEATURE CODES

SOFTWARE FEATURE CODES

NAVISTAR INC. CONFIDENTIAL PROPRIETARY

Diagram1

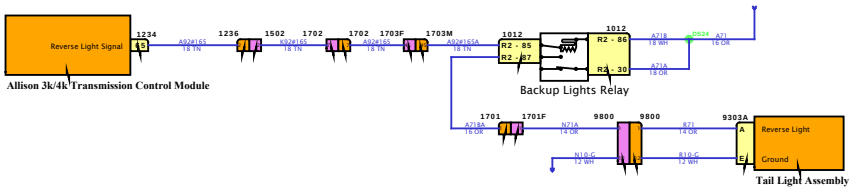

DESIGN DESCRIPTION

FEATURE CODES

SOFTWARE FEATURE CODES

NAVISTAR
NAVISTAR, INC. CONFIDENTIAL PROPRIETARY

Diagram2

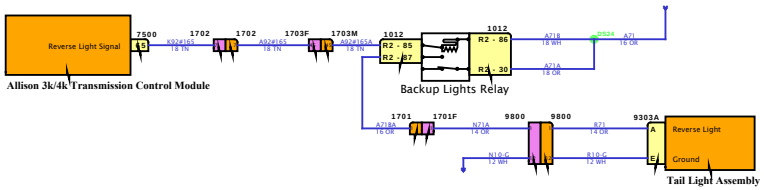

DESIGN DESCRIPTION

FEATURE CODES

SOFTWARE FEATURE CODES

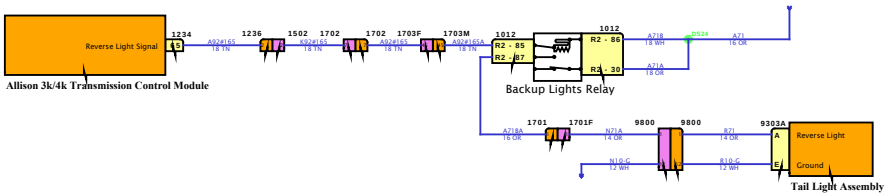

DESIGN DESCRIPTION

FEATURE CODES

SOFTWARE FEATURE CODES

NAVISTAR
NAVISTAR, INC. CONFIDENTIAL PROPRIETARY

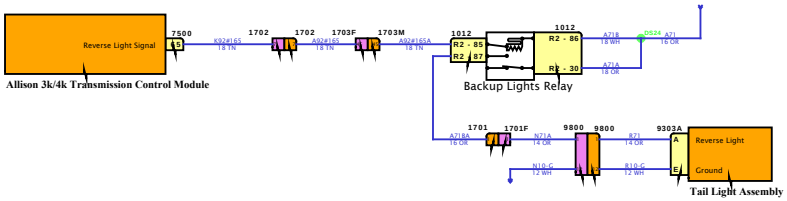

DESIGN DESCRIPTION

FEATURE CODES

SOFTWARE FEATURE CODES

NAVISTAR INC. CONFIDENTIAL PROPRIETARY

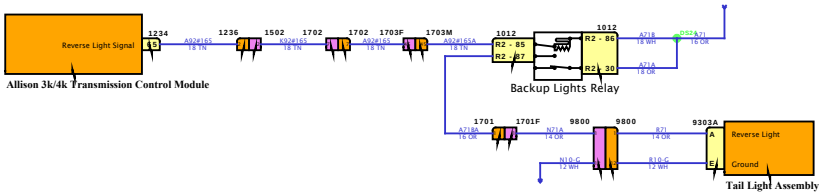

DESIGN DESCRIPTION

FEATURE CODES

SOFTWARE FEATURE CODES

NAVISTAR INC. CONFIDENTIAL PROPRIETARY

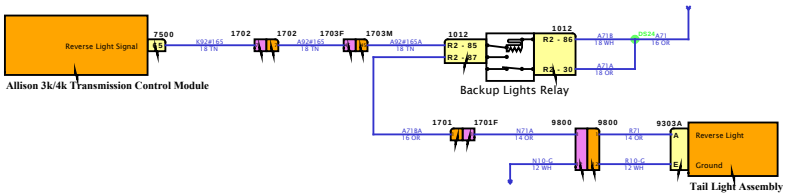

DESIGN DESCRIPTION

FEATURE CODES

SOFTWARE FEATURE CODES

NAVISTAR INC. CONFIDENTIAL PROPRIETARY

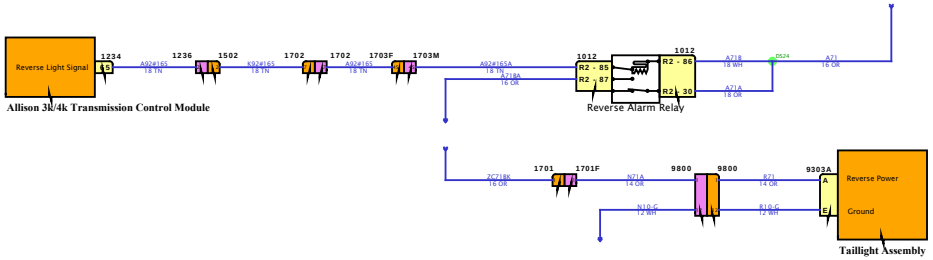

DESIGN DESCRIPTION

FEATURE CODES

SOFTWARE FEATURE CODES

NAVISTAR
NAVISTAR, INC. CONFIDENTIAL PROPRIETARY

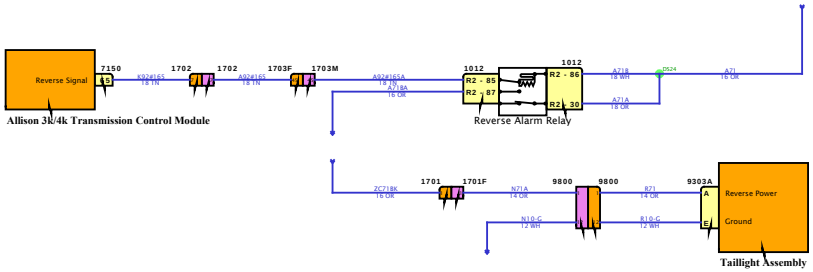

DESIGN DESCRIPTION

FEATURE CODES

SOFTWARE FEATURE CODES

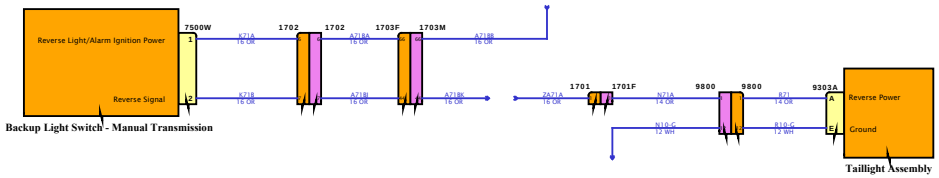

DESIGN DESCRIPTION

FEATURE CODES

SOFTWARE FEATURE CODES

NAVISTAR
NAVISTAR, INC. CONFIDENTIAL PROPRIETARY

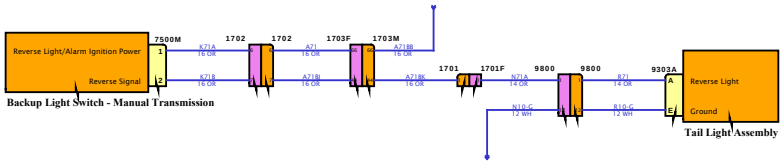

DESIGN DESCRIPTION

FEATURE CODES

SOFTWARE FEATURE CODES

NAVISTAR INC. CONFIDENTIAL PROPRIETARY

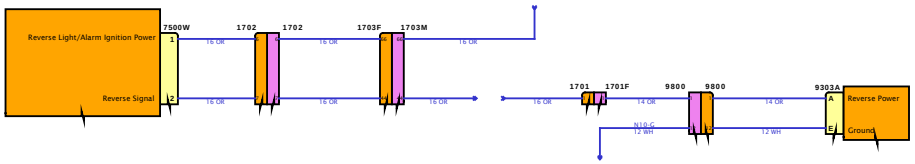

DESIGN DESCRIPTION

FEATURE CODES

SOFTWARE FEATURE CODES

NAVISTAR INC. CONFIDENTIAL PROPRIETARY

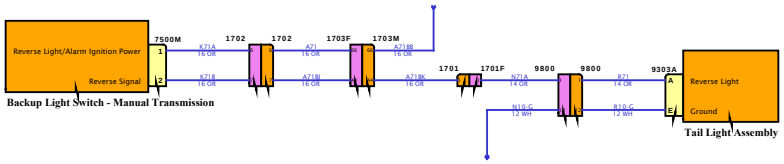

DESIGN DESCRIPTION

FEATURE CODES

SOFTWARE FEATURE CODES

NAVISTAR INC. CONFIDENTIAL PROPRIETARY

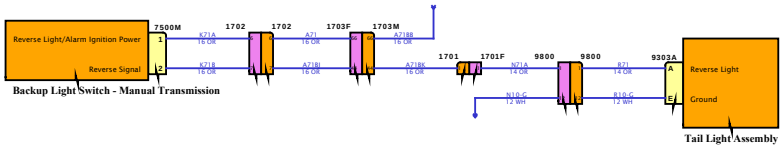

DESIGN DESCRIPTION

FEATURE CODES

SOFTWARE FEATURE CODES

NAVISTAR
NAVISTAR, INC. CONFIDENTIAL PROPRIETARY

Diagram1

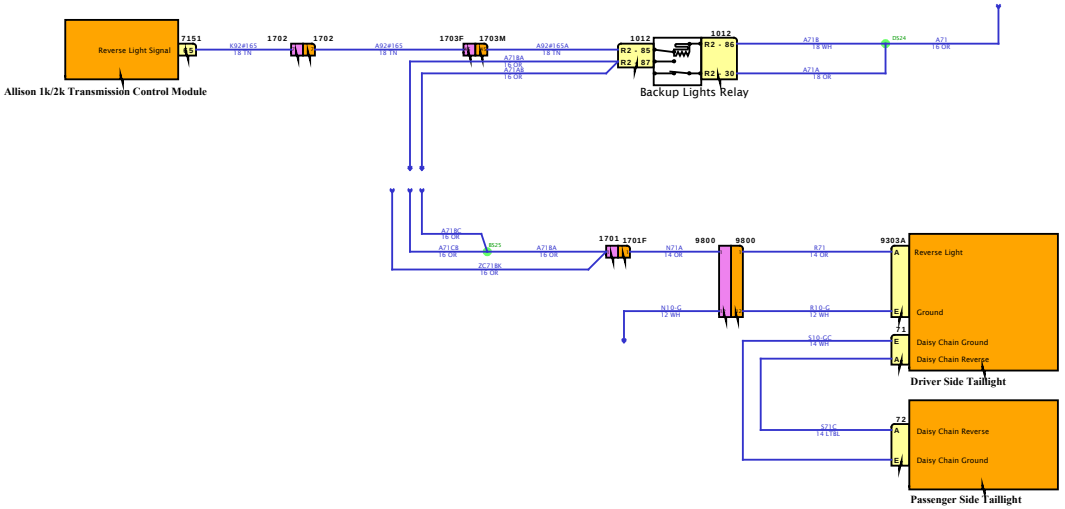

DESIGN DESCRIPTION

FEATURE CODES

SOFTWARE FEATURE CODES

NAVISTAR INC. CONFIDENTIAL PROPRIETARY

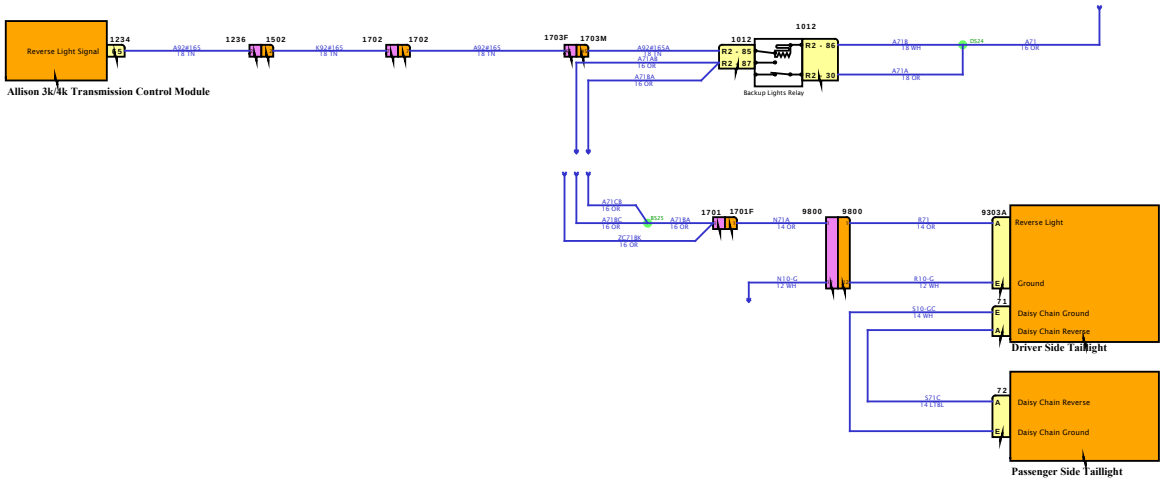

DESIGN DESCRIPTION

FEATURE CODES

SOFTWARE FEATURE CODES

NAVISTAR
NAVISTAR, INC. CONFIDENTIAL PROPRIETARY

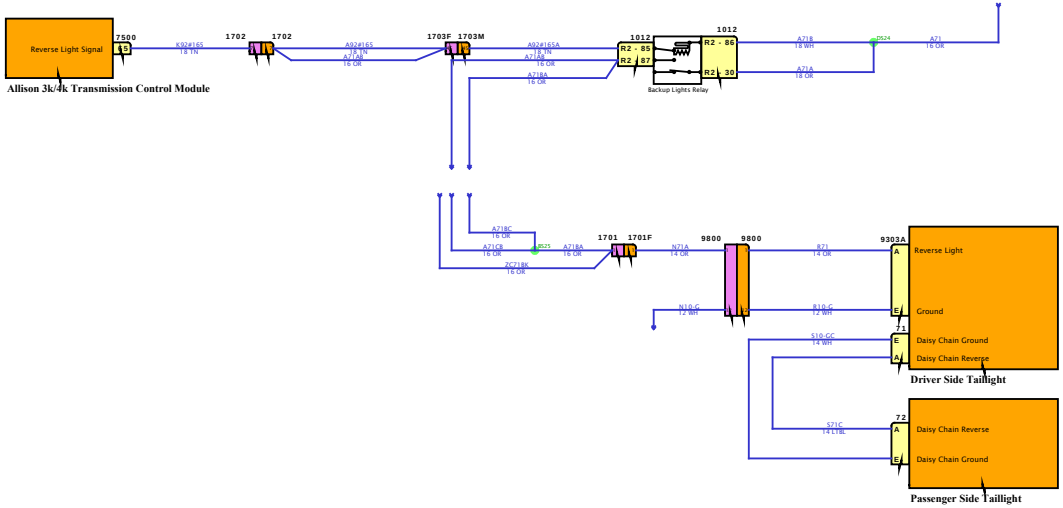

DESIGN DESCRIPTION

FEATURE CODES

SOFTWARE FEATURE CODES

Diagram1

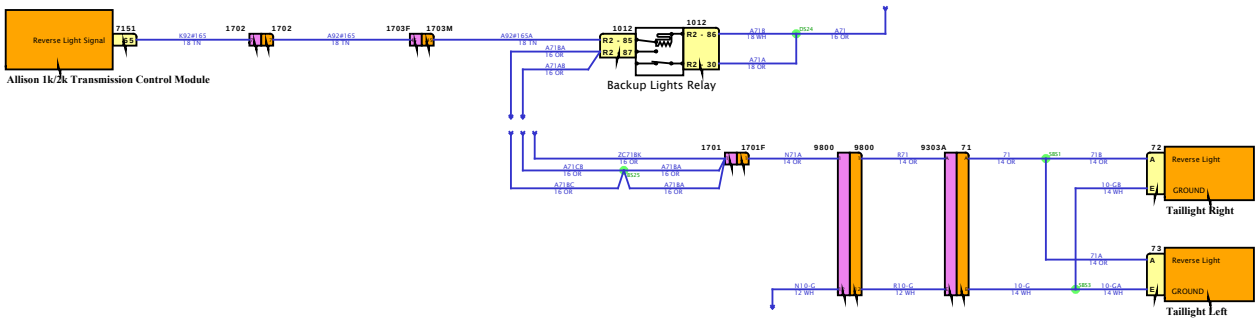

DESIGN DESCRIPTION

FEATURE CODES

SOFTWARE FEATURE CODES

NAVISTAR INC. CONFIDENTIAL PROPRIETARY

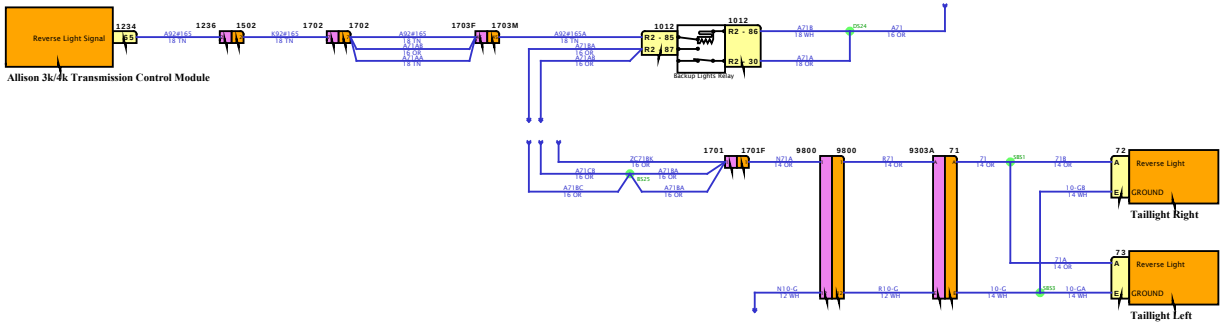

DESIGN DESCRIPTION

FEATURE CODES

SOFTWARE FEATURE CODES

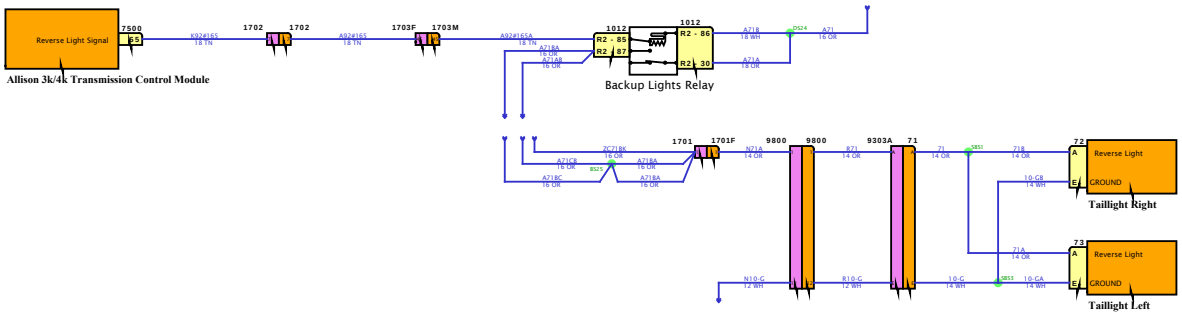

DESIGN DESCRIPTION

FEATURE CODES

SOFTWARE FEATURE CODES

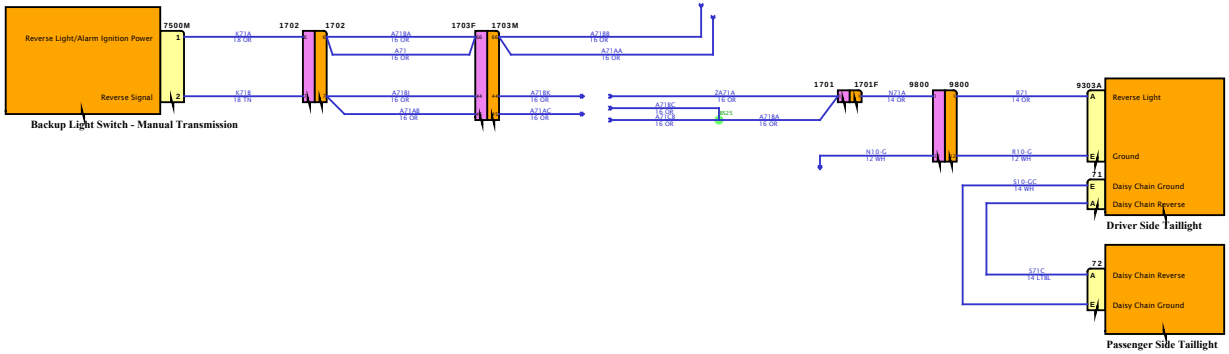

DESIGN DESCRIPTION

FEATURE CODES

SOFTWARE FEATURE CODES

NAVISTAR
NAVISTAR, INC. CONFIDENTIAL PROPRIETARY

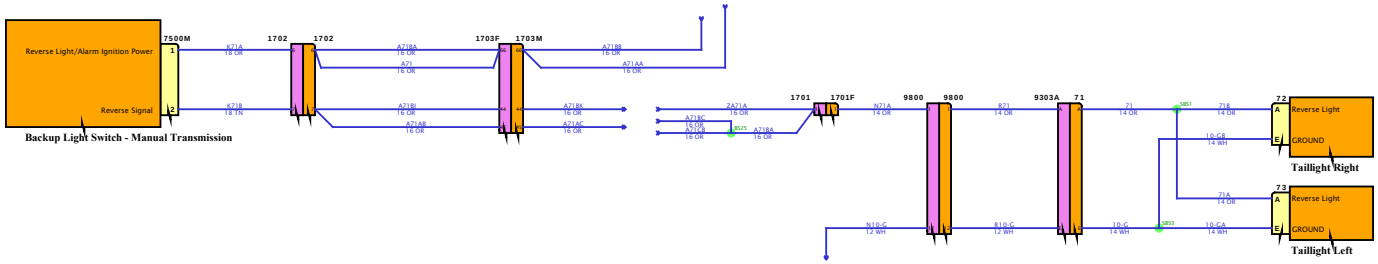

DESIGN DESCRIPTION

FEATURE CODES

SOFTWARE FEATURE CODES

NAVISTAR
NAVISTAR, INC. CONFIDENTIAL PROPRIETARY

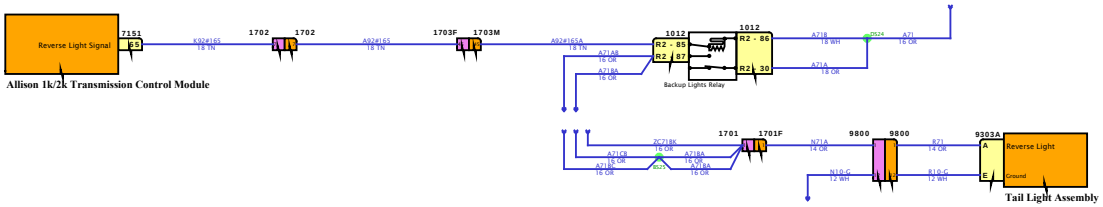

DESIGN DESCRIPTION

FEATURE CODES

SOFTWARE FEATURE CODES

NAVISTAR INC. CONFIDENTIAL PROPRIETARY

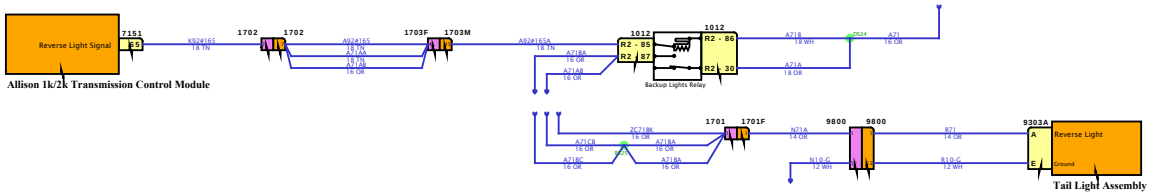

DESIGN DESCRIPTION

FEATURE CODES

SOFTWARE FEATURE CODES

NAVISTAR INC. CONFIDENTIAL PROPRIETARY

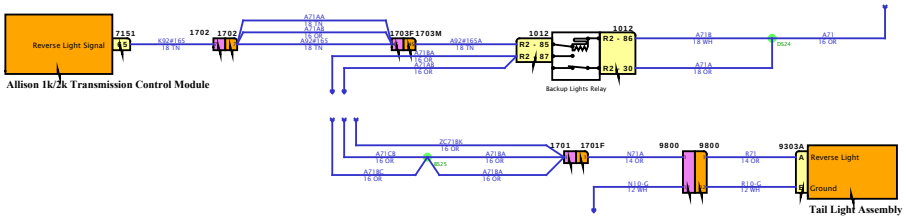

DESIGN DESCRIPTION

FEATURE CODES

SOFTWARE FEATURE CODES

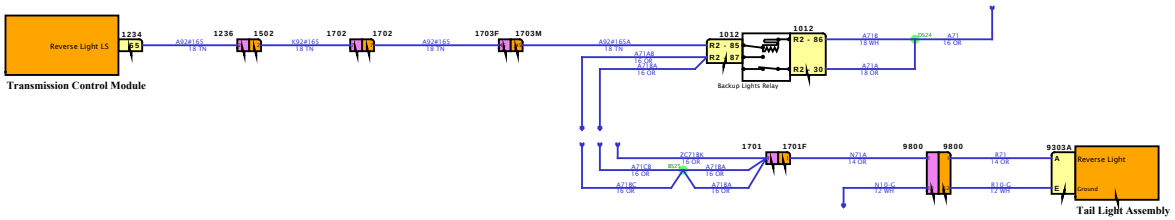

DESIGN DESCRIPTION

FEATURE CODES

SOFTWARE FEATURE CODES

NAVISTAR INC. CONFIDENTIAL PROPRIETARY

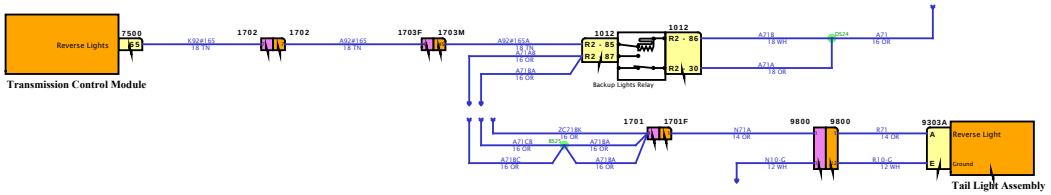

DESIGN DESCRIPTION

FEATURE CODES

SOFTWARE FEATURE CODES

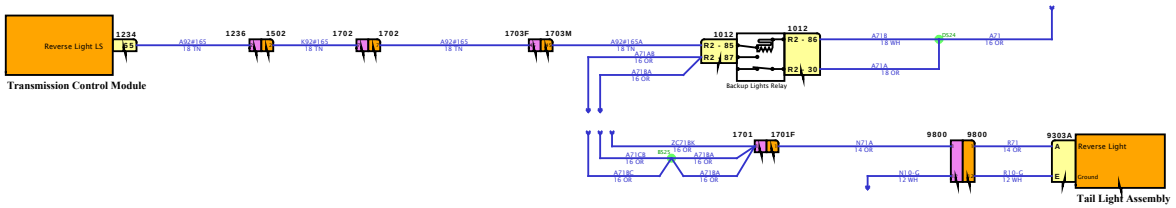

DESIGN DESCRIPTION

FEATURE CODES

SOFTWARE FEATURE CODES

NAVISTAR INC. CONFIDENTIAL PROPRIETARY

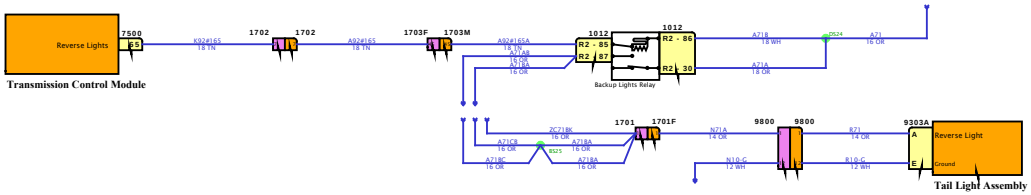

DESIGN DESCRIPTION

FEATURE CODES

SOFTWARE FEATURE CODES

NAVISTAR INC. CONFIDENTIAL PROPRIETARY

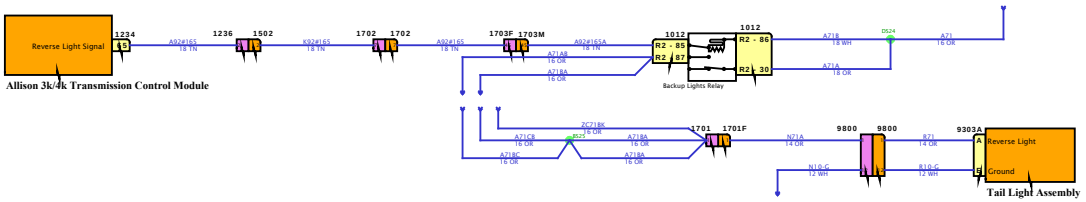

DESIGN DESCRIPTION

FEATURE CODES

SOFTWARE FEATURE CODES

NAVISTAR
NAVISTAR, INC. CONFIDENTIAL PROPRIETARY

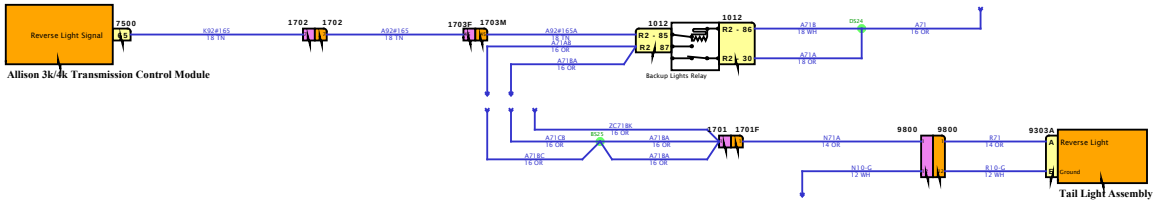

DESIGN DESCRIPTION

FEATURE CODES

SOFTWARE FEATURE CODES

NAVISTAR
NAVISTAR, INC. CONFIDENTIAL PROPRIETARY

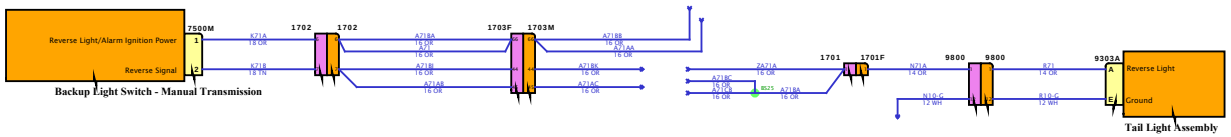

DESIGN DESCRIPTION

FEATURE CODES

SOFTWARE FEATURE CODES

NAVISTAR INC. CONFIDENTIAL PROPRIETARY

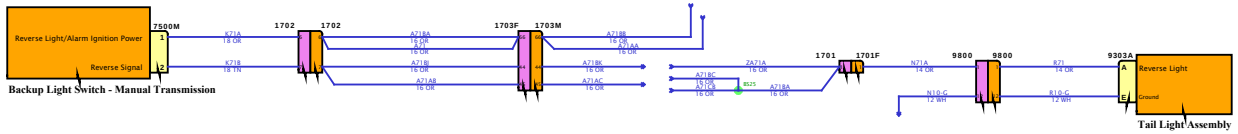

DESIGN DESCRIPTION

FEATURE CODES

SOFTWARE FEATURE CODES

NAVISTAR INC. CONFIDENTIAL PROPRIETARY

Diagram1

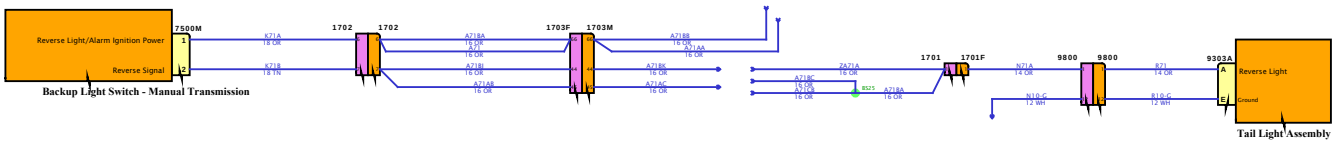

DESIGN DESCRIPTION

FEATURE CODES

SOFTWARE FEATURE CODES

NAVISTAR INC. CONFIDENTIAL PROPRIETARY

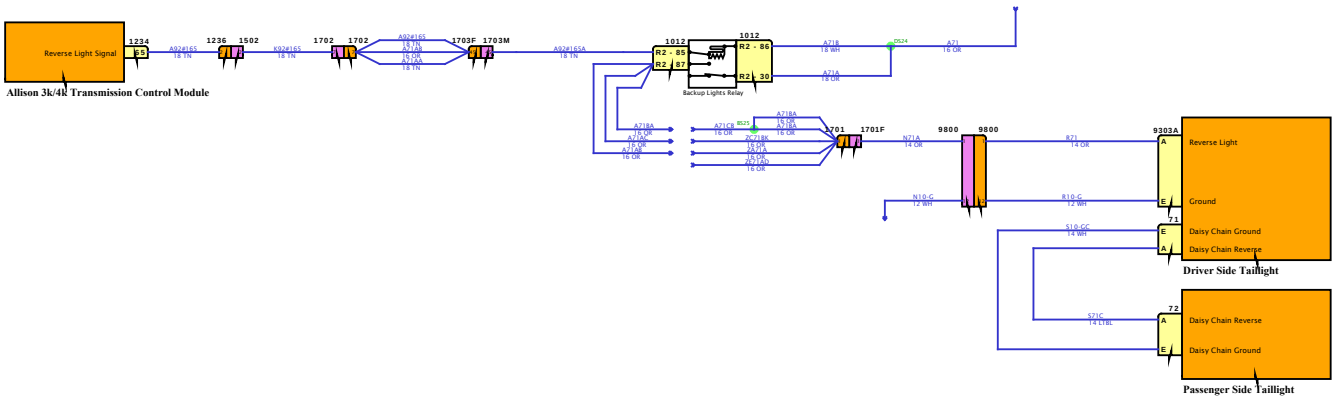

DESIGN DESCRIPTION

FEATURE CODES

SOFTWARE FEATURE CODES

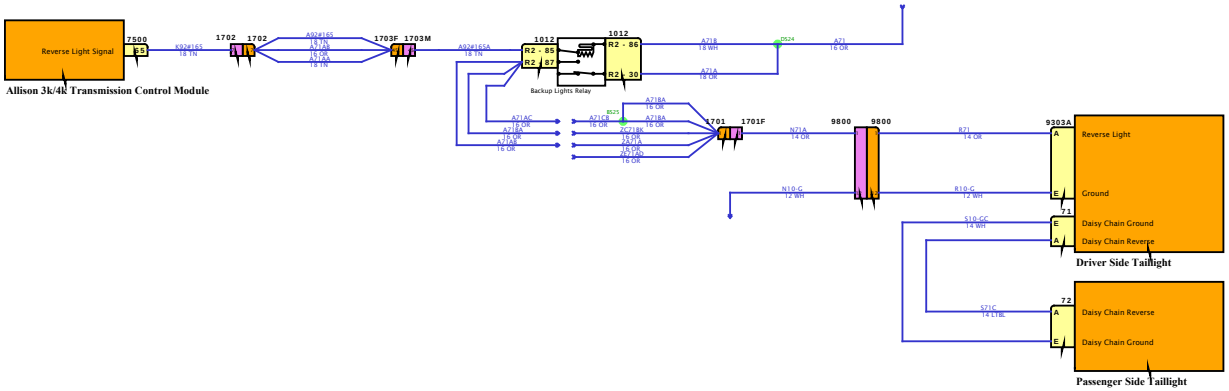

DESIGN DESCRIPTION

FEATURE CODES

SOFTWARE FEATURE CODES

NAVISTAR INC. CONFIDENTIAL PROPRIETARY

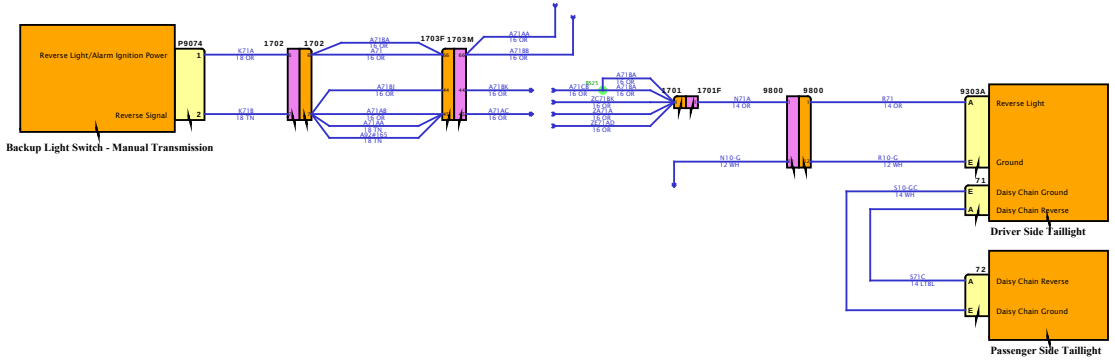

DESIGN DESCRIPTION

FEATURE CODES

SOFTWARE FEATURE CODES

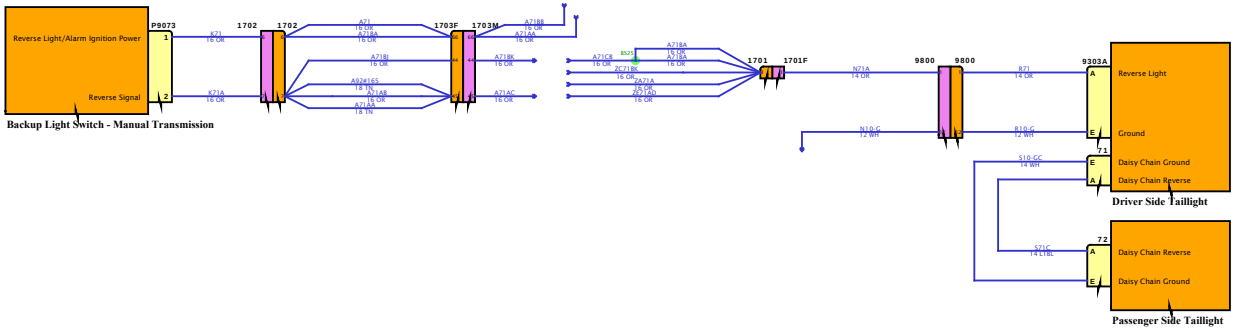

DESIGN DESCRIPTION

FEATURE CODES

SOFTWARE FEATURE CODES

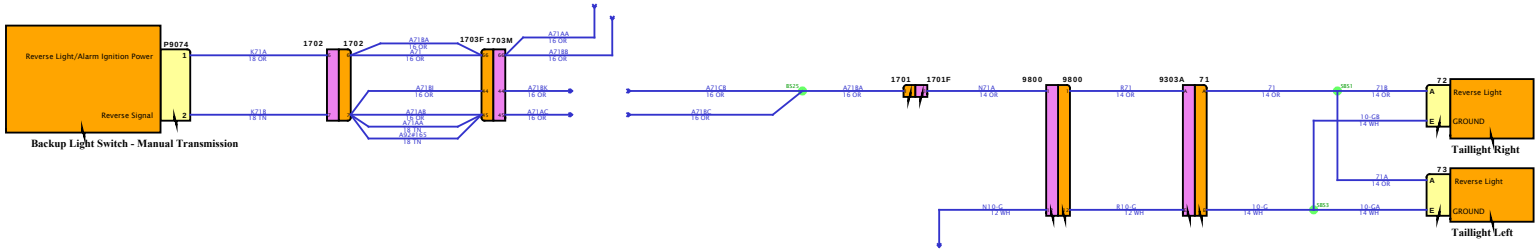

DESIGN DESCRIPTION

FEATURE CODES

SOFTWARE FEATURE CODES

NAVISTAR INC. CONFIDENTIAL PROPRIETARY

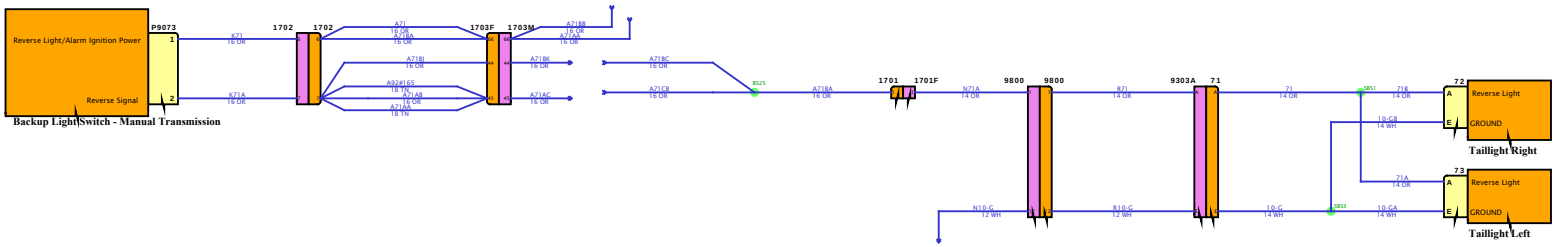

DESIGN DESCRIPTION

FEATURE CODES

SOFTWARE FEATURE CODES

NAVISTAR

NAVISTAR, INC. CONFIDENTIAL PROPRIETARY

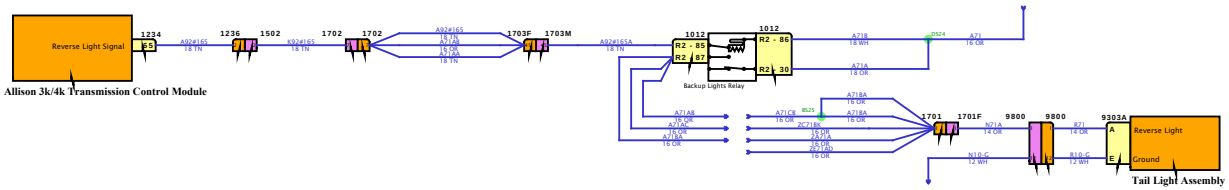

DESIGN DESCRIPTION

FEATURE CODES

SOFTWARE FEATURE CODES

Diagram2

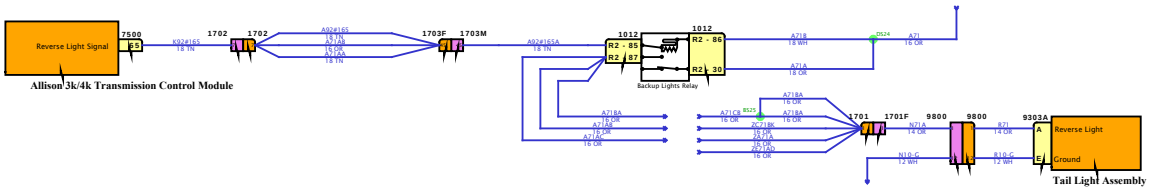

DESIGN DESCRIPTION

FEATURE CODES

SOFTWARE FEATURE CODES

NAVISTAR INC. CONFIDENTIAL PROPRIETARY

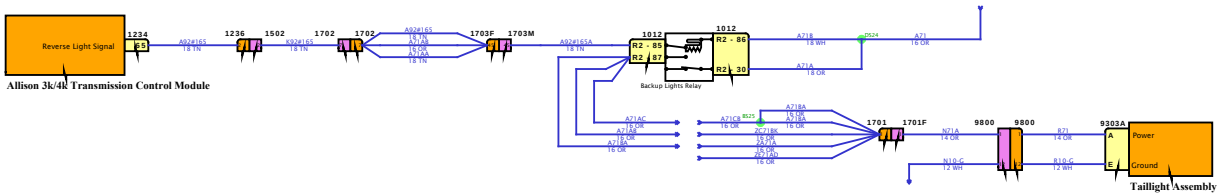

DESIGN DESCRIPTION

FEATURE CODES

SOFTWARE FEATURE CODES

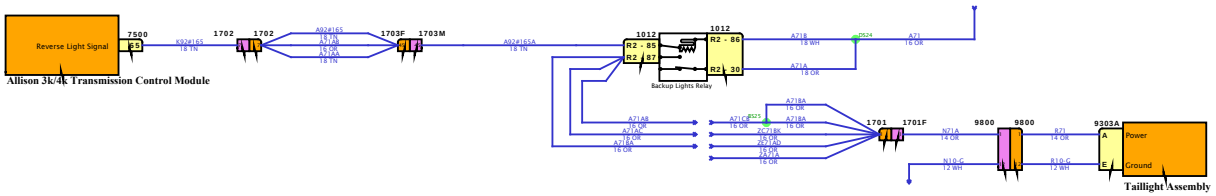

DESIGN DESCRIPTION

FEATURE CODES

SOFTWARE FEATURE CODES

NAVISTAR INC. CONFIDENTIAL PROPRIETARY

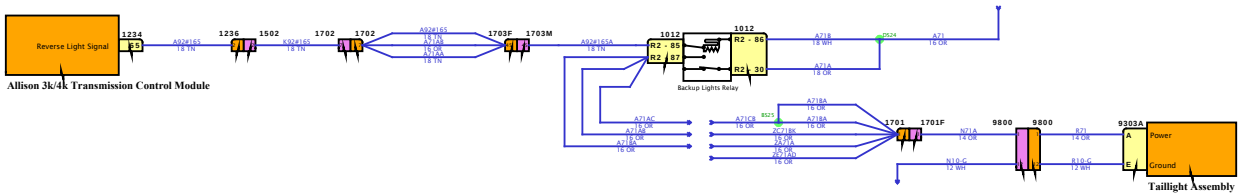

DESIGN DESCRIPTION

FEATURE CODES

SOFTWARE FEATURE CODES

NAVISTAR INC. CONFIDENTIAL PROPRIETARY

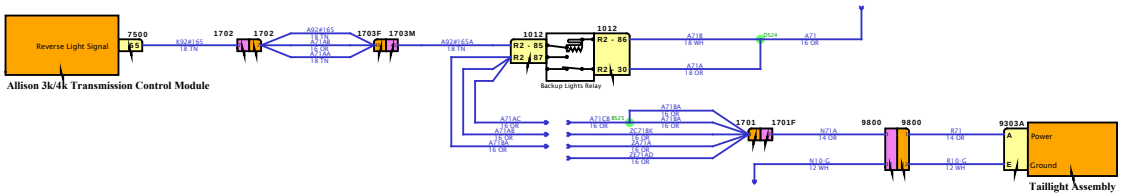

DESIGN DESCRIPTION

FEATURE CODES

SOFTWARE FEATURE CODES

NAVISTAR INC. CONFIDENTIAL PROPRIETARY

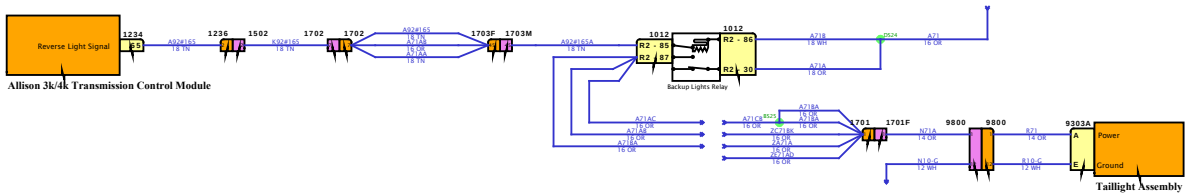

DESIGN DESCRIPTION

FEATURE CODES

SOFTWARE FEATURE CODES

NAVISTAR
NAVISTAR, INC. CONFIDENTIAL PROPRIETARY

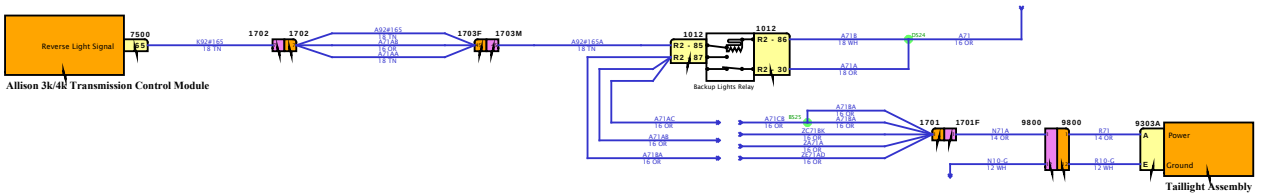

DESIGN DESCRIPTION

FEATURE CODES

SOFTWARE FEATURE CODES

NAVISTAR INC. CONFIDENTIAL PROPRIETARY

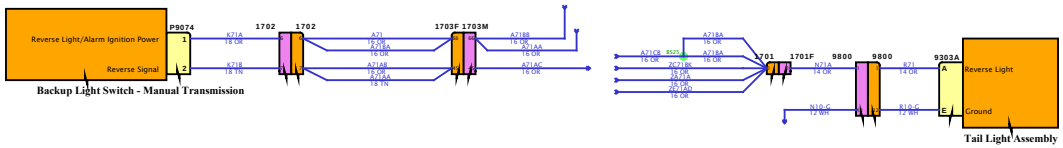

DESIGN DESCRIPTION

FEATURE CODES

SOFTWARE FEATURE CODES

NAVISTAR
NAVISTAR, INC. CONFIDENTIAL PROPRIETARY

DESIGN DESCRIPTION

FEATURE CODES

SOFTWARE FEATURE CODES

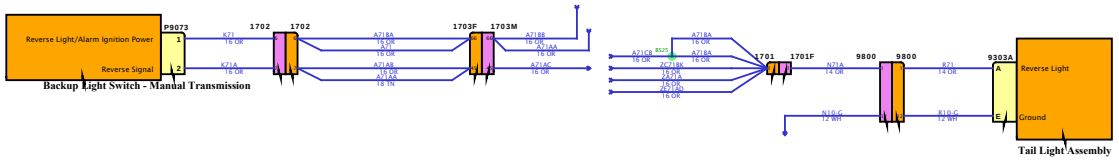

Diagram1

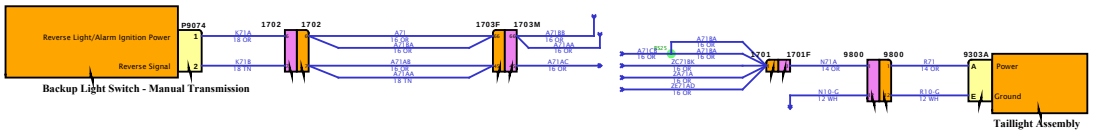

DESIGN DESCRIPTION

FEATURE CODES

SOFTWARE FEATURE CODES

NAVISTAR INC. CONFIDENTIAL PROPRIETARY

Diagram2

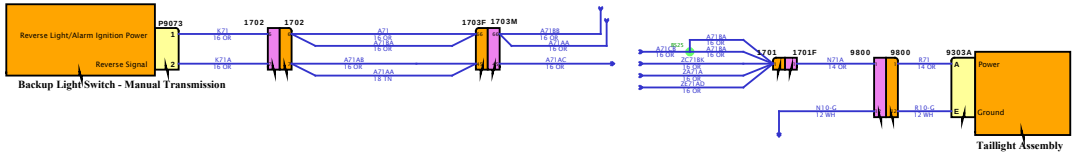

DESIGN DESCRIPTION

FEATURE CODES

SOFTWARE FEATURE CODES

NAVISTAR INC. CONFIDENTIAL PROPRIETARY

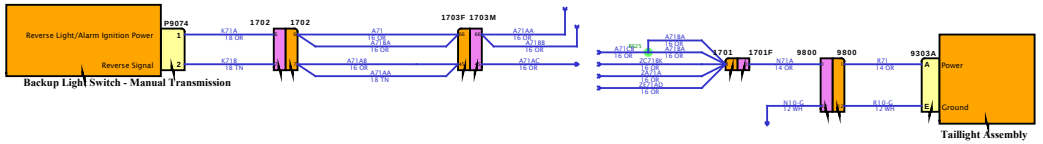

DESIGN DESCRIPTION

FEATURE CODES

SOFTWARE FEATURE CODES

NAVISTAR
NAVISTAR, INC. CONFIDENTIAL PROPRIETARY

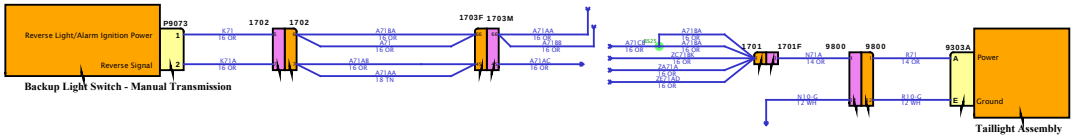

DESIGN DESCRIPTION

FEATURE CODES

SOFTWARE FEATURE CODES

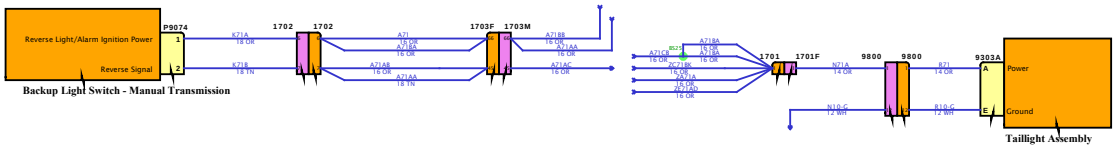

DESIGN DESCRIPTION

FEATURE CODES

SOFTWARE FEATURE CODES

NAVISTAR INC. CONFIDENTIAL PROPRIETARY

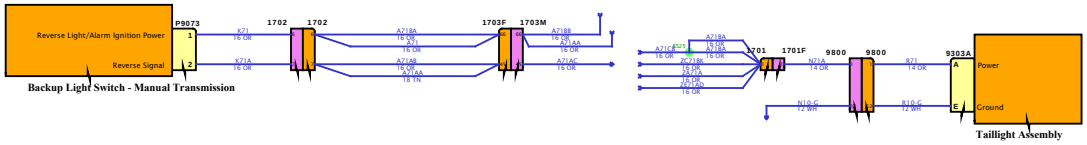

DESIGN DESCRIPTION

FEATURE CODES

SOFTWARE FEATURE CODES

NAVISTAR INC. CONFIDENTIAL PROPRIETARY

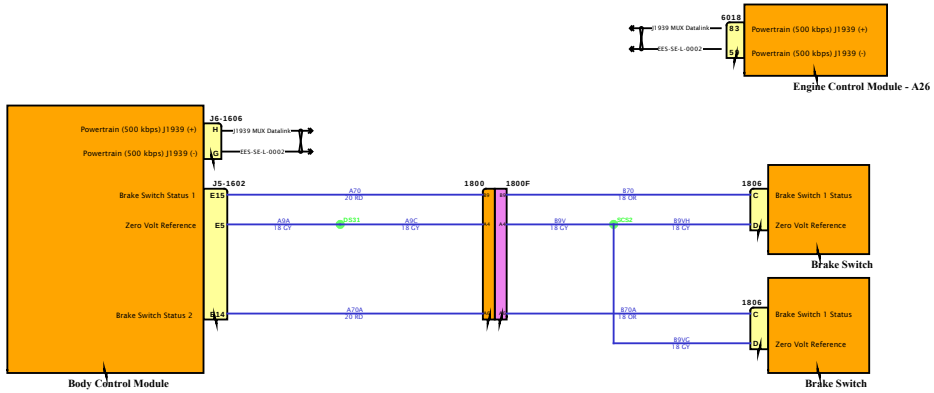

DESIGN DESCRIPTION

FEATURE CODES

SOFTWARE FEATURE CODES

NAVISTAR
NAVISTAR, INC. CONFIDENTIAL PROPRIETARY

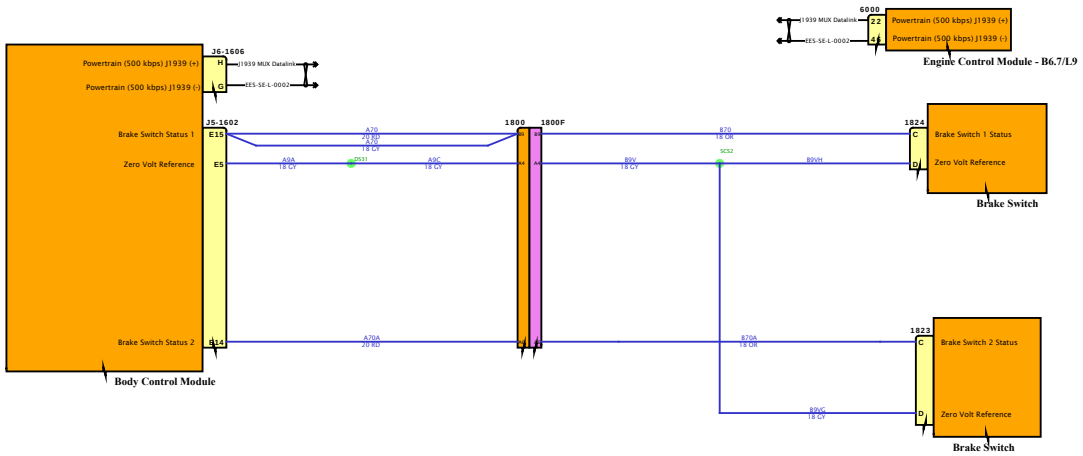

DESIGN DESCRIPTION

FEATURE CODES

SOFTWARE FEATURE CODES

NAVISTAR INC. CONFIDENTIAL PROPRIETARY

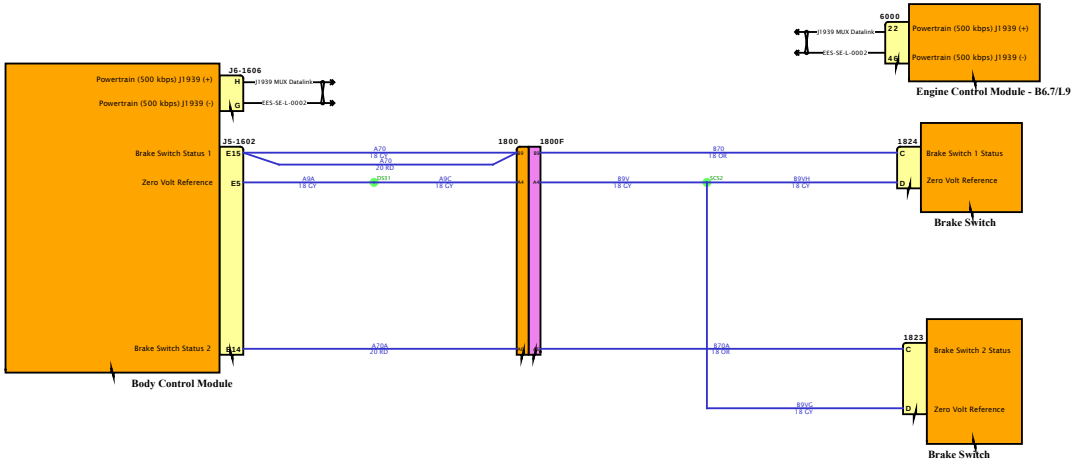

DESIGN DESCRIPTION

FEATURE CODES

SOFTWARE FEATURE CODES

NAVISTAR INC. CONFIDENTIAL PROPRIETARY

DESIGN DESCRIPTION

FEATURE CODES

SOFTWARE FEATURE CODES

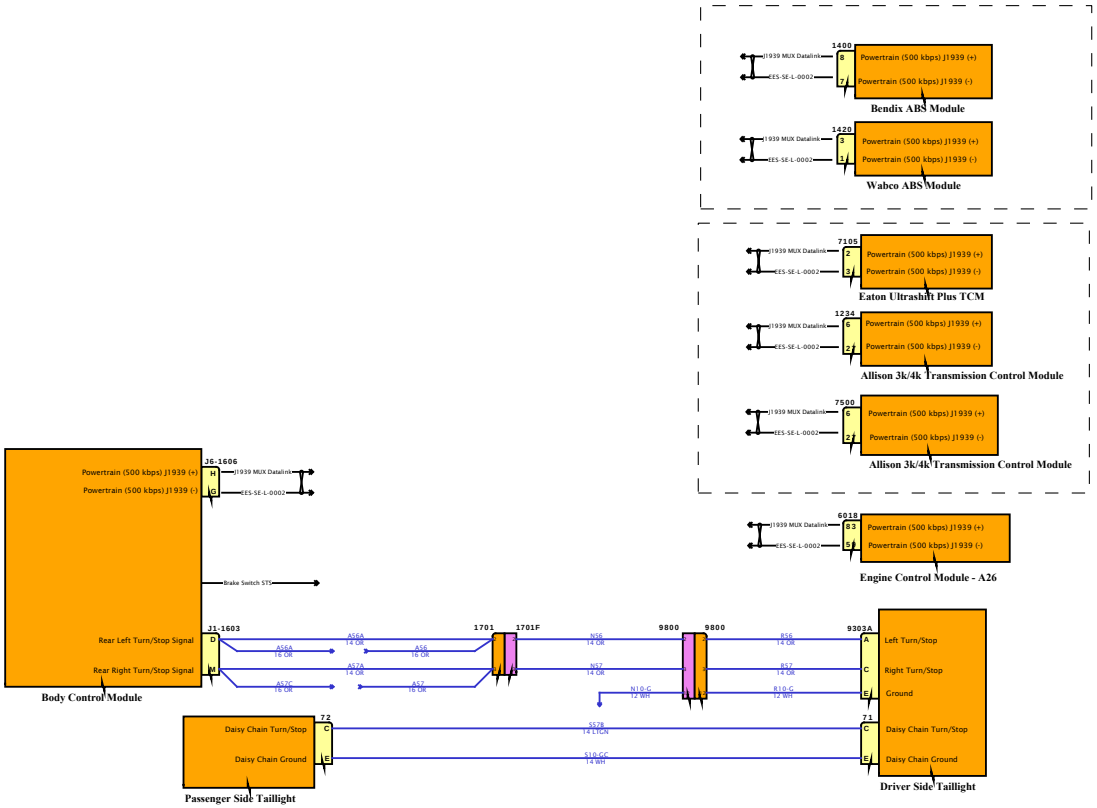

DESIGN DESCRIPTION

FEATURE CODES

SOFTWARE FEATURE CODES

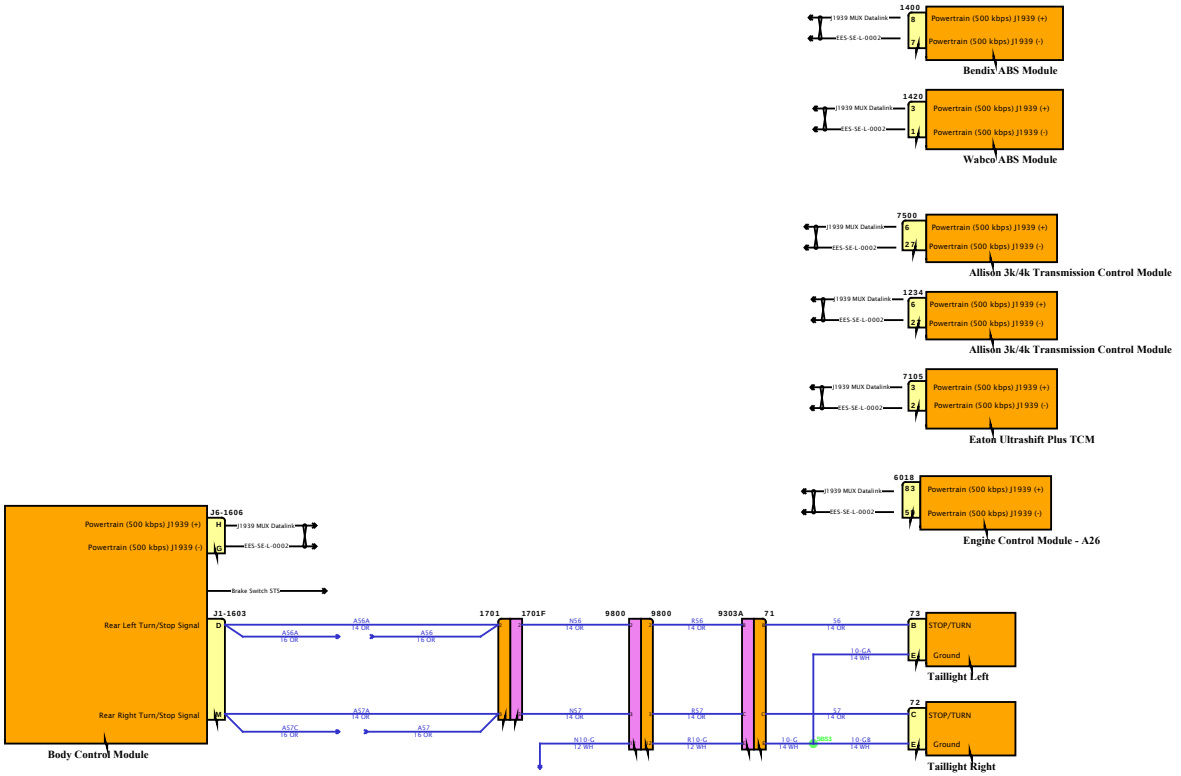

Diagram1

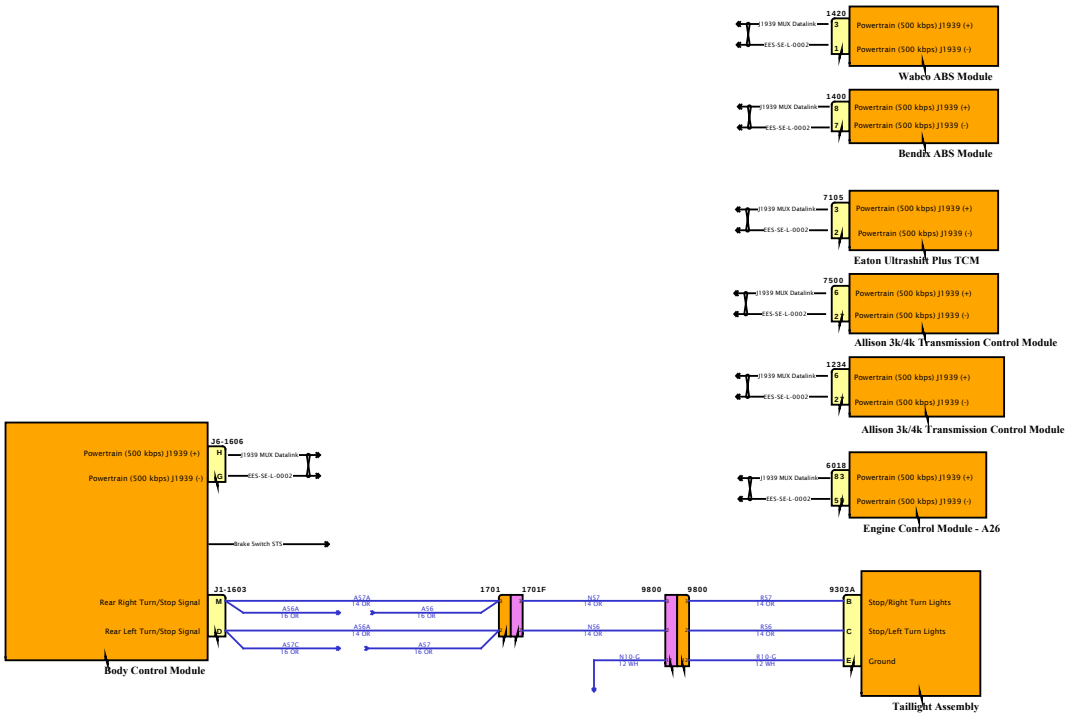

DESIGN DESCRIPTION

FEATURE CODES

SOFTWARE FEATURE CODES

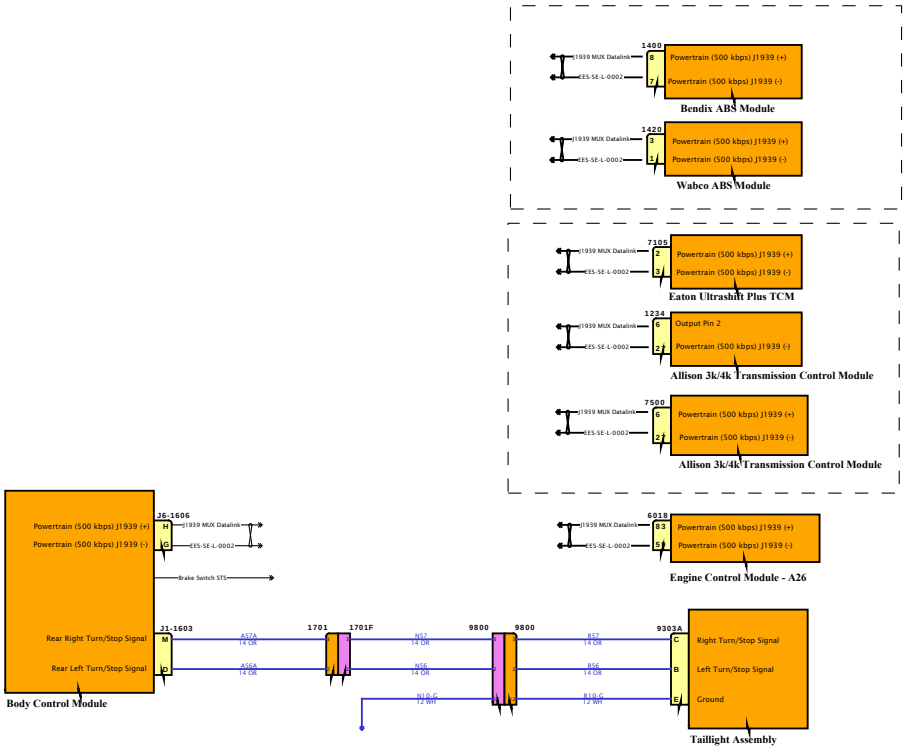

DESIGN DESCRIPTION

FEATURE CODES

SOFTWARE FEATURE CODES

Diagram1

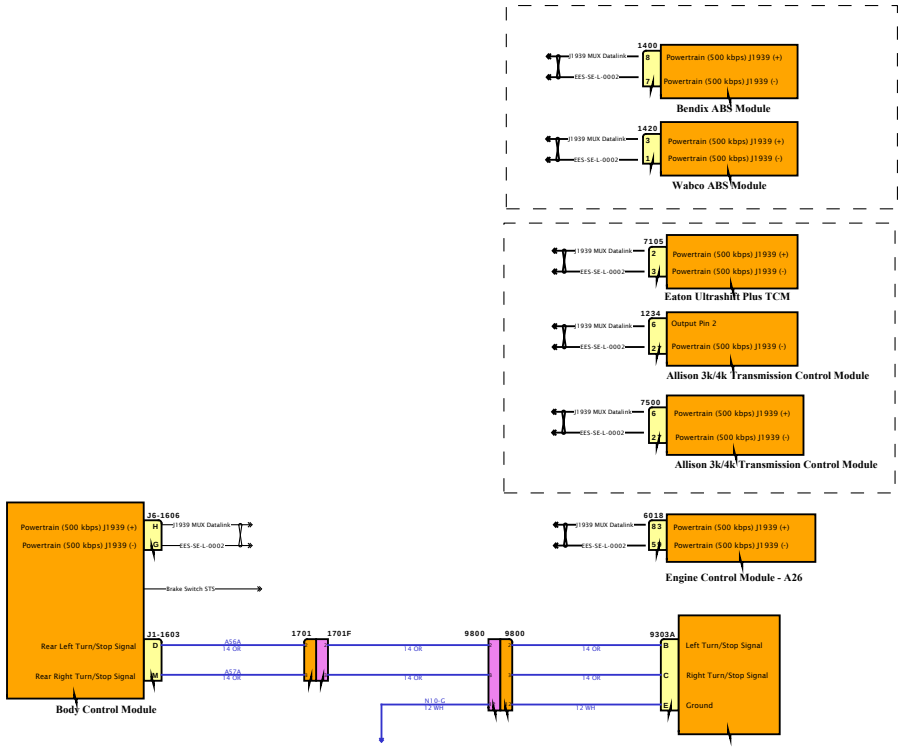

DESIGN DESCRIPTION

FEATURE CODES

SOFTWARE FEATURE CODES

NAVISTAR
NAVISTAR, INC. CONFIDENTIAL PROPRIETARY

Diagram1

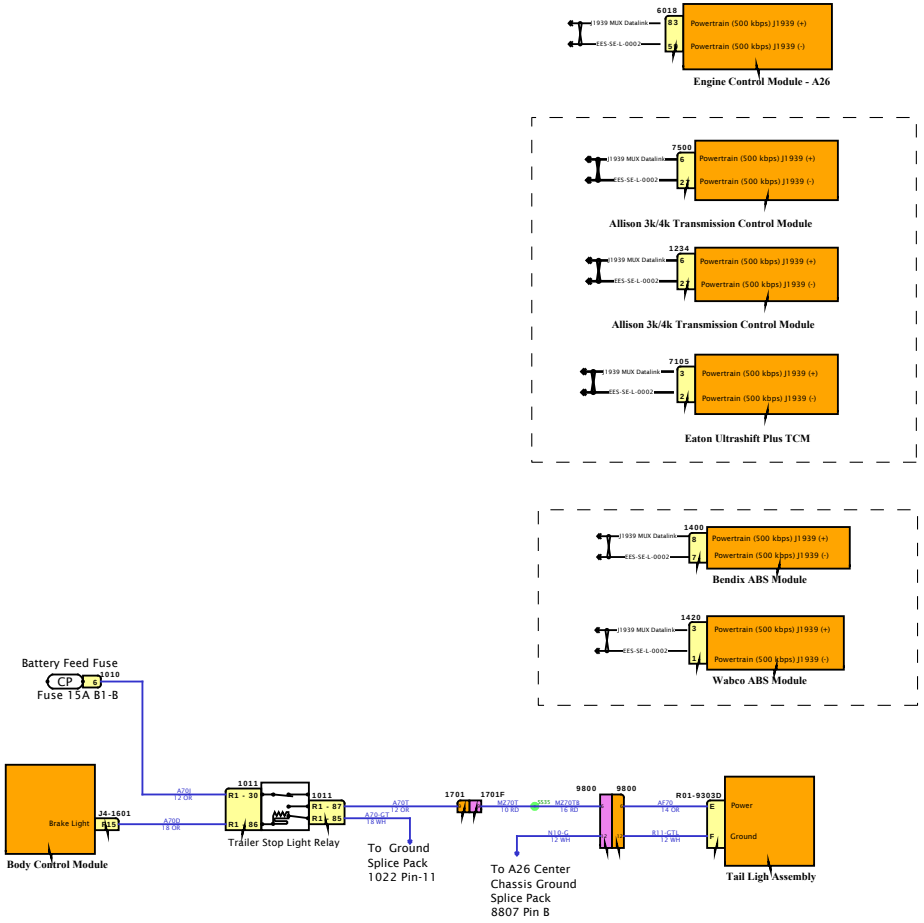

DESIGN DESCRIPTION

FEATURE CODES

SOFTWARE FEATURE CODES

NAVISTAR INC. CONFIDENTIAL PROPRIETARY

DESIGN DESCRIPTION

FEATURE CODES

SOFTWARE FEATURE CODES

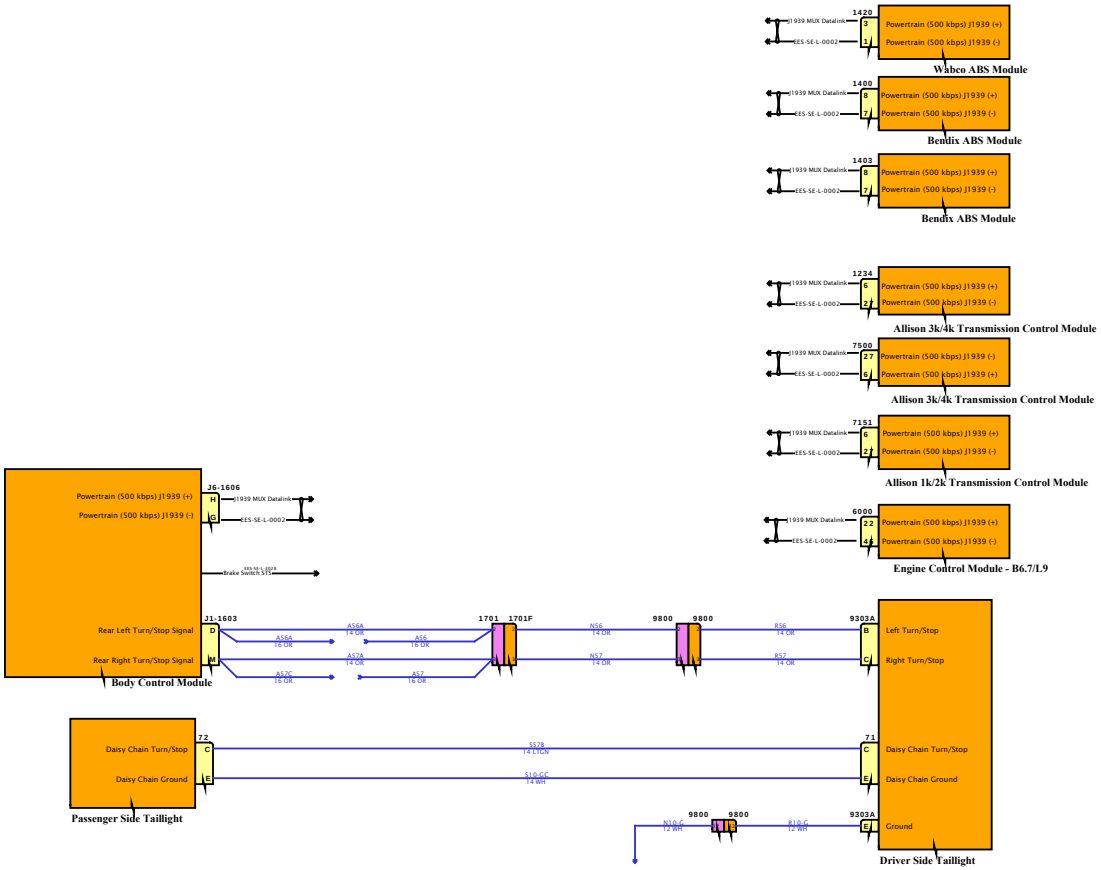

DESIGN DESCRIPTION

FEATURE CODES

SOFTWARE FEATURE CODES

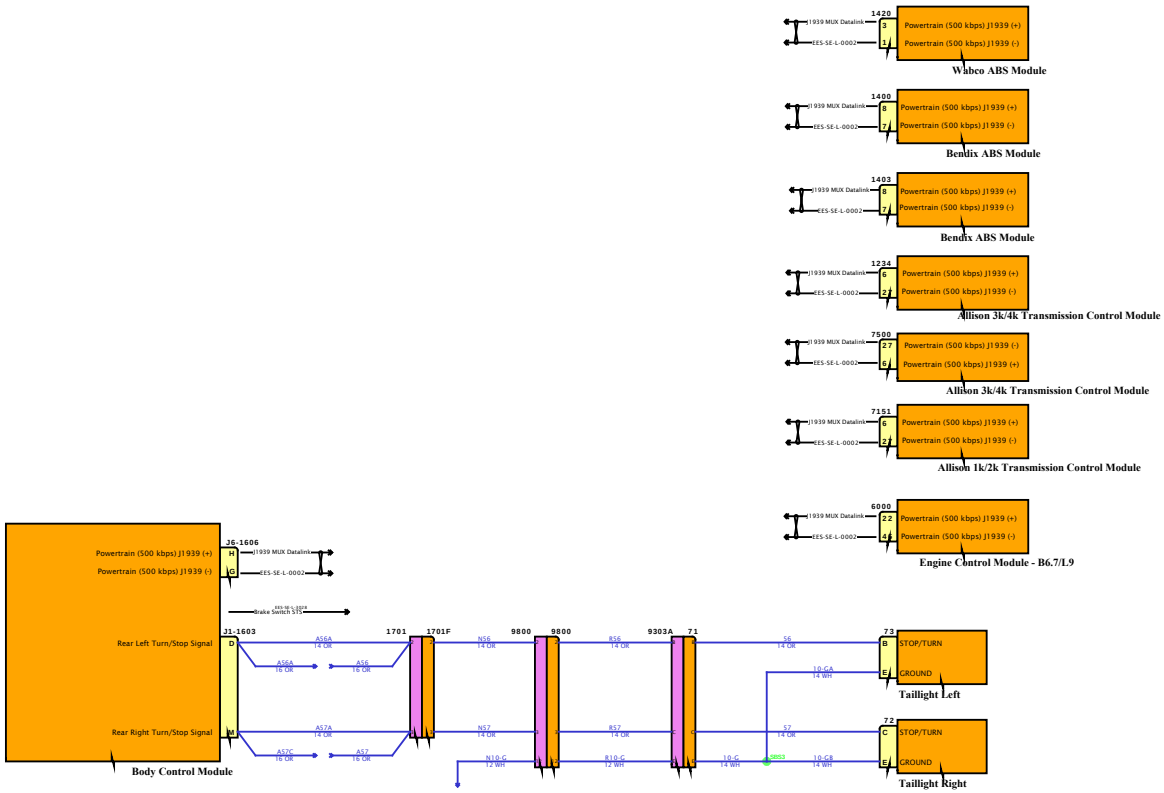

DESIGN DESCRIPTION

FEATURE CODES

SOFTWARE FEATURE CODES

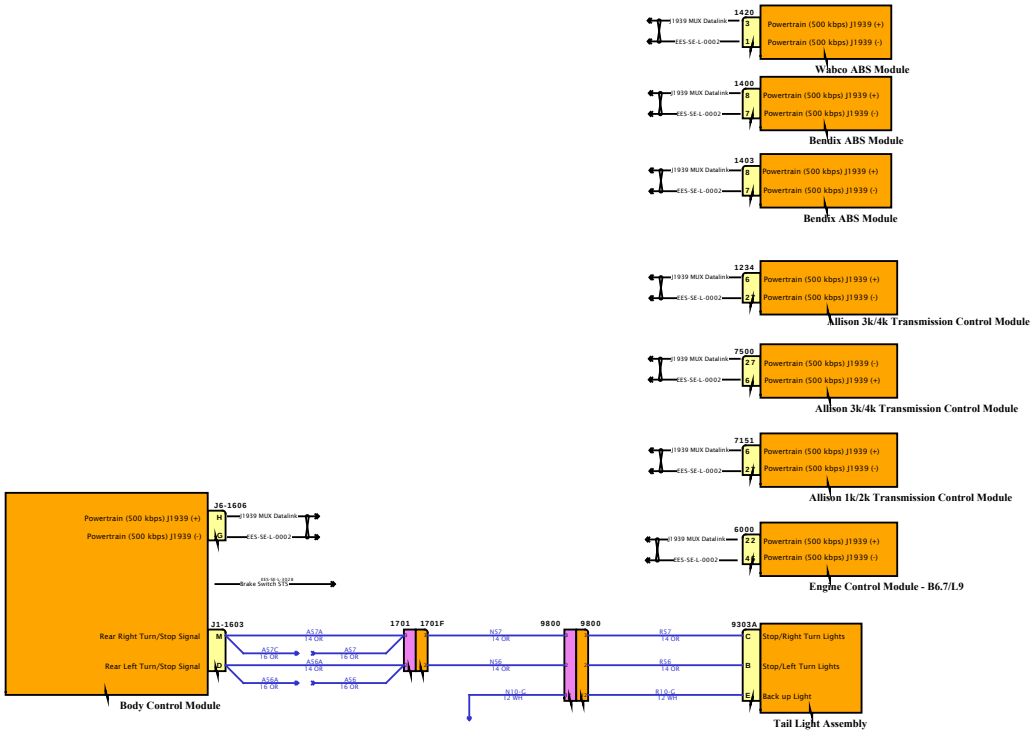

DESIGN DESCRIPTION

FEATURE CODES

SOFTWARE FEATURE CODES

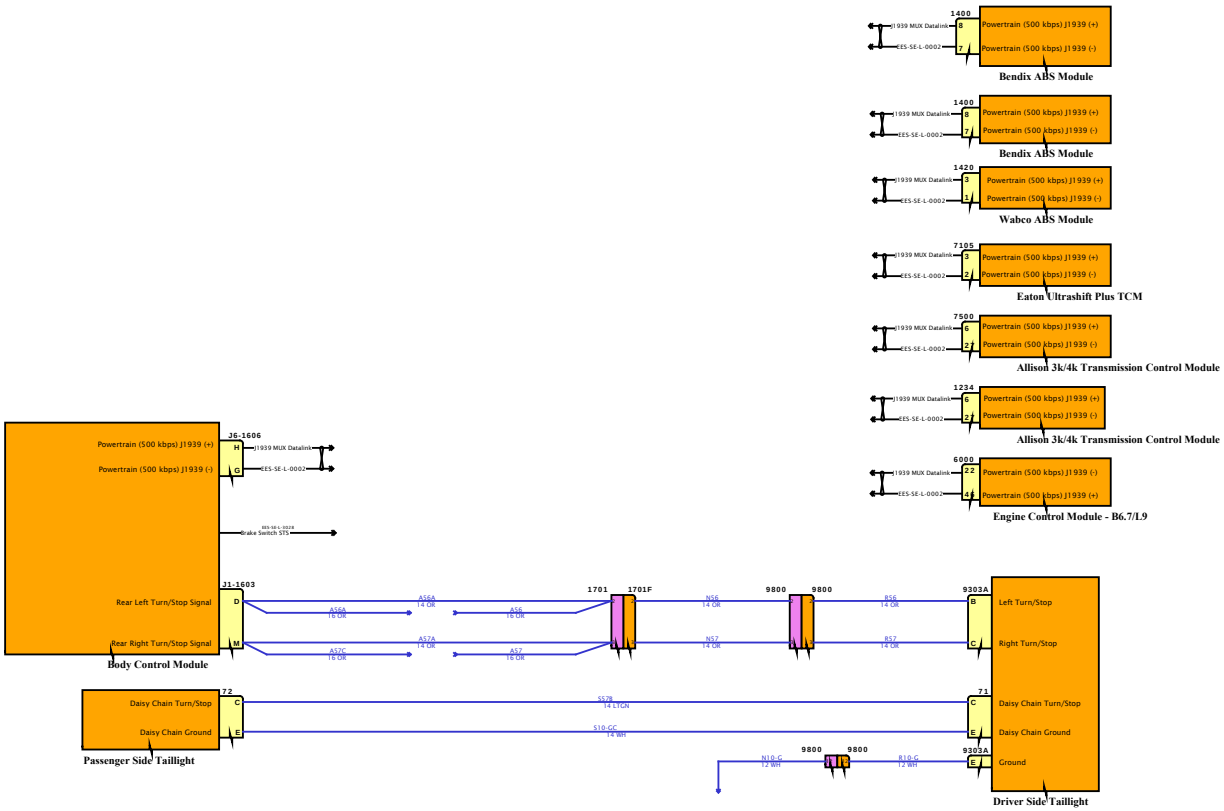

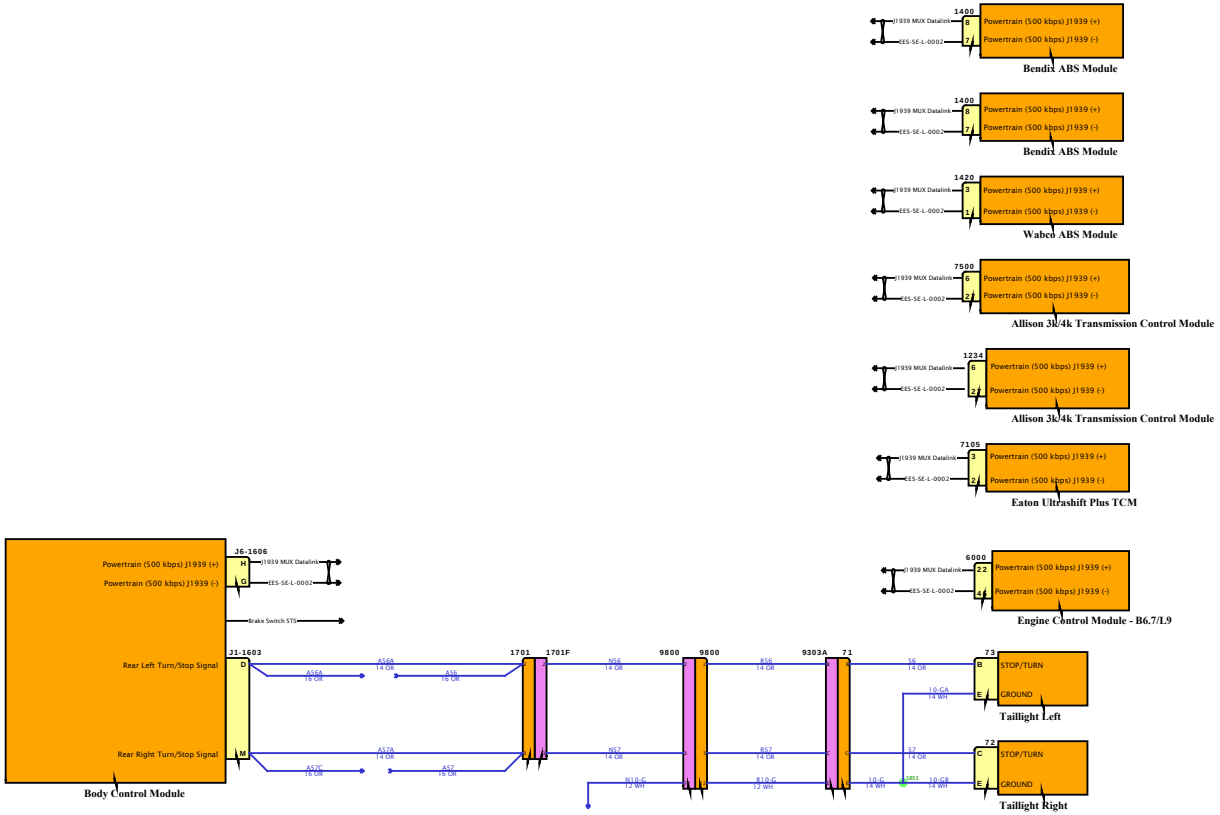

DESIGN DESCRIPTION

FEATURE CODES

SOFTWARE FEATURE CODES

NAVISTAR
NAVISTAR, INC. CONFIDENTIAL PROPRIETARY

DESIGN DESCRIPTION

FEATURE CODES

SOFTWARE FEATURE CODES

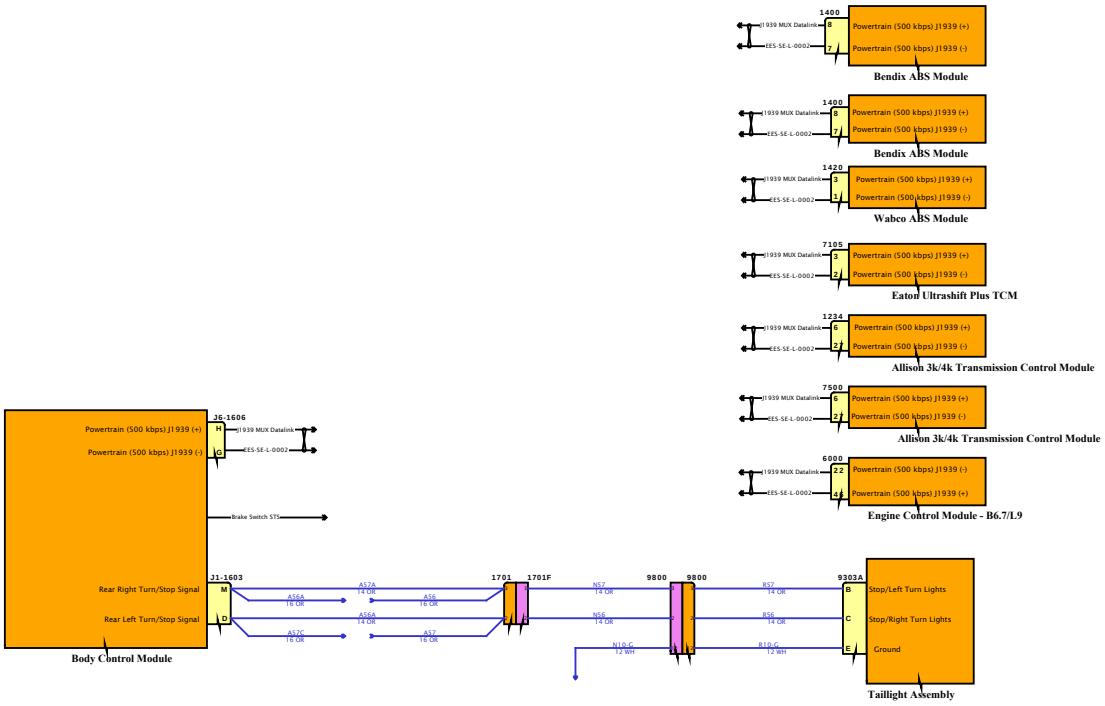

Diagram1

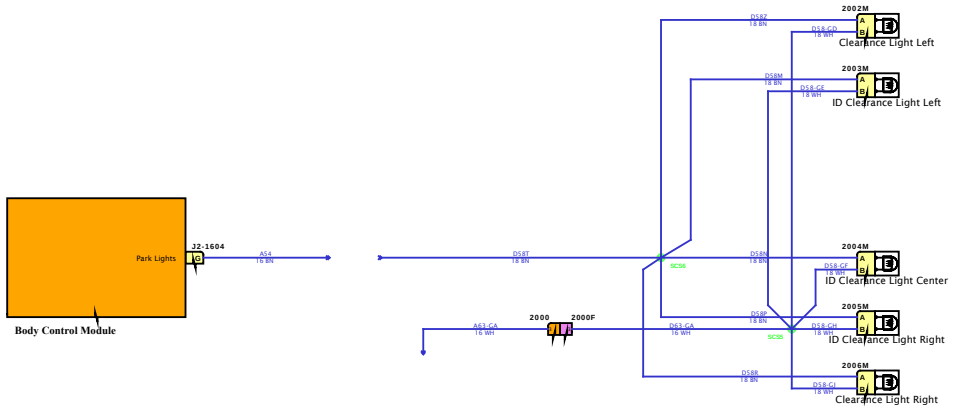

DESIGN DESCRIPTION

FEATURE CODES

SOFTWARE FEATURE CODES

NAVISTAR INC. CONFIDENTIAL PROPRIETARY

Diagram1

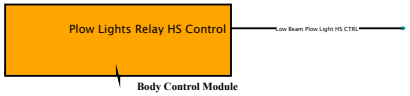

DESIGN DESCRIPTION

FEATURE CODES

SOFTWARE FEATURE CODES

NAVISTAR

NAVISTAR, INC. CONFIDENTIAL PROPRIETARY

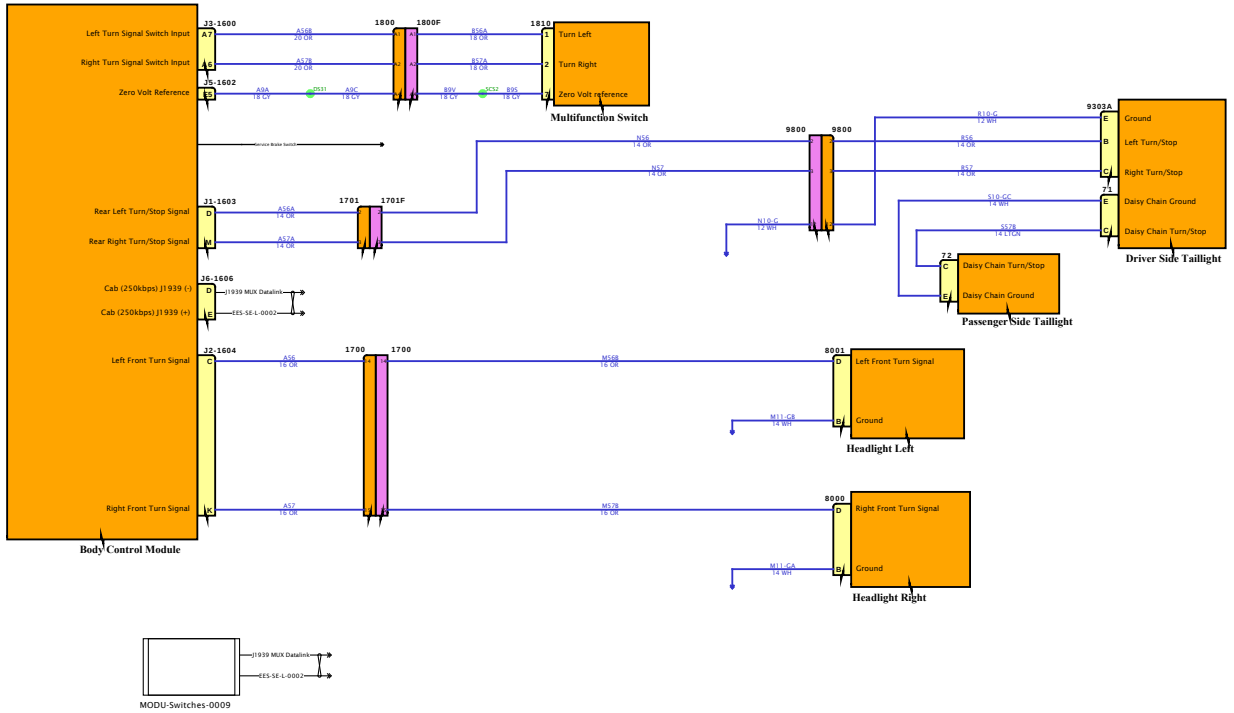

DESIGN DESCRIPTION

FEATURE CODES

SOFTWARE FEATURE CODES

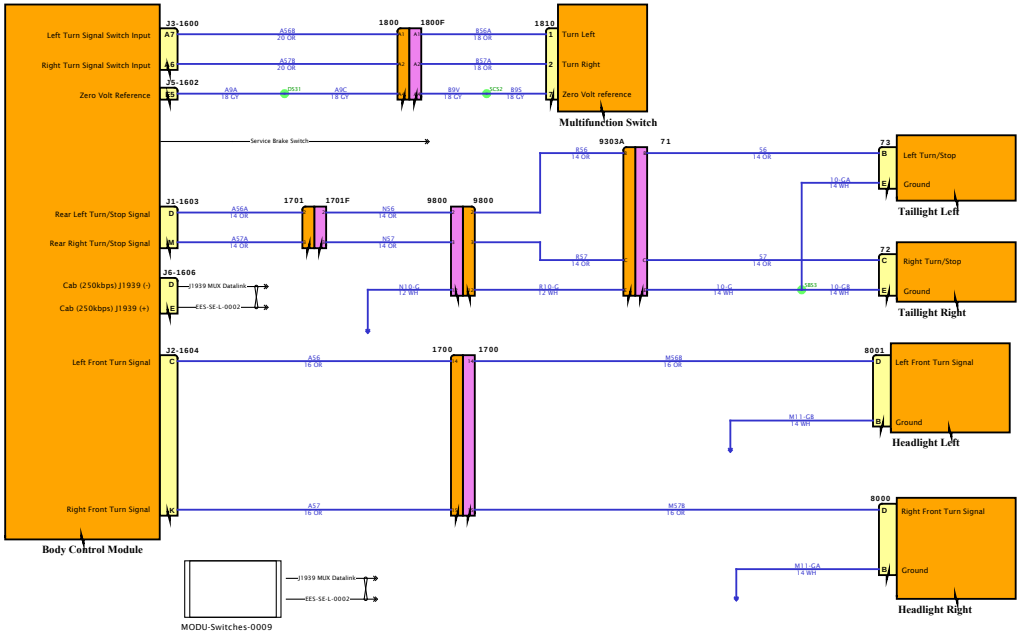

DESIGN DESCRIPTION

FEATURE CODES

SOFTWARE FEATURE CODES

NAVISTAR INC. CONFIDENTIAL PROPRIETARY

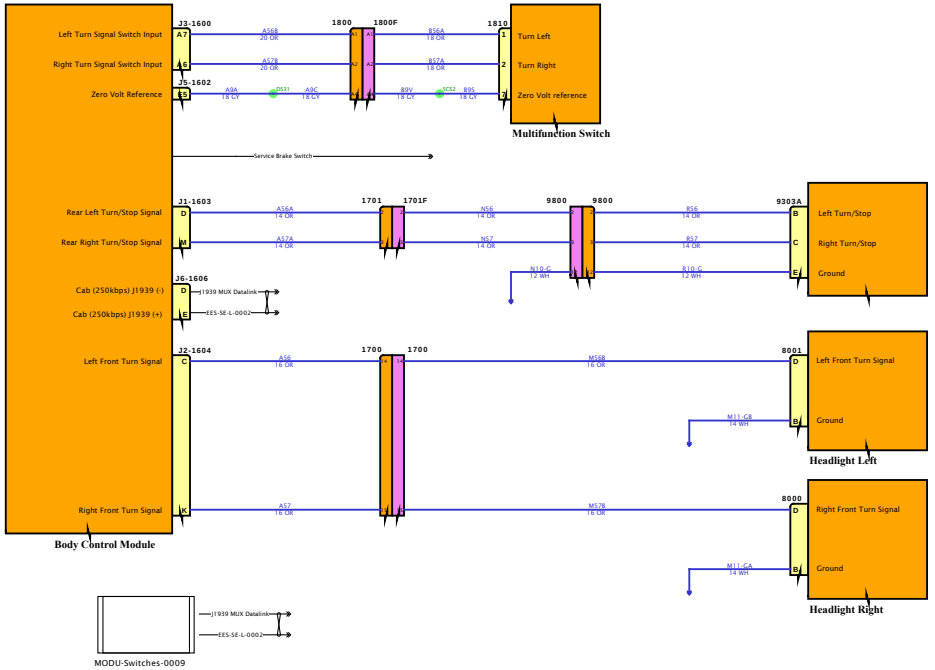

DESIGN DESCRIPTION

FEATURE CODES

SOFTWARE FEATURE CODES

NAVISTAR INC. CONFIDENTIAL PROPRIETARY

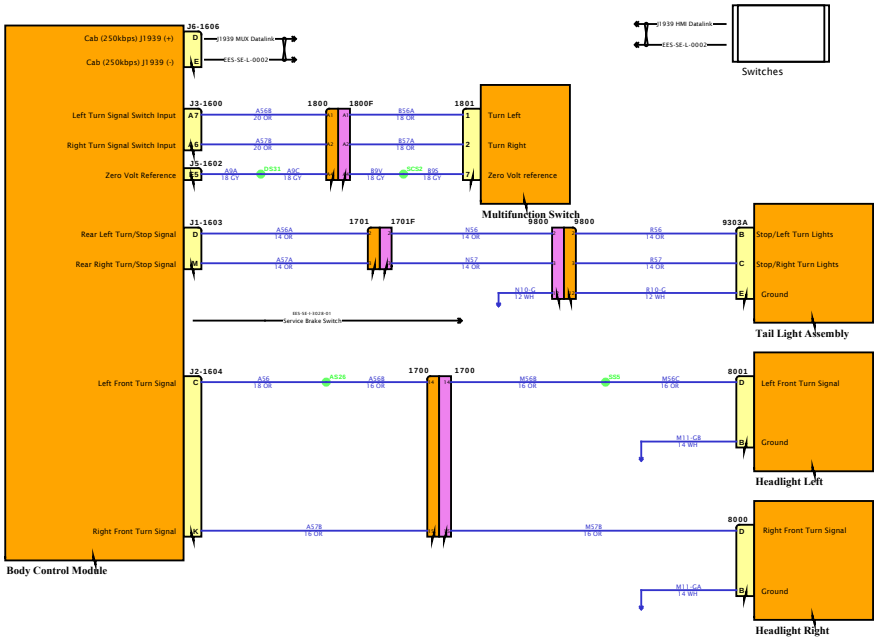

DESIGN DESCRIPTION

FEATURE CODES

SOFTWARE FEATURE CODES

NAVISTAR
NAVISTAR, INC. CONFIDENTIAL PROPRIETARY

Diagram1-Option 1 (Snow Plow #1)

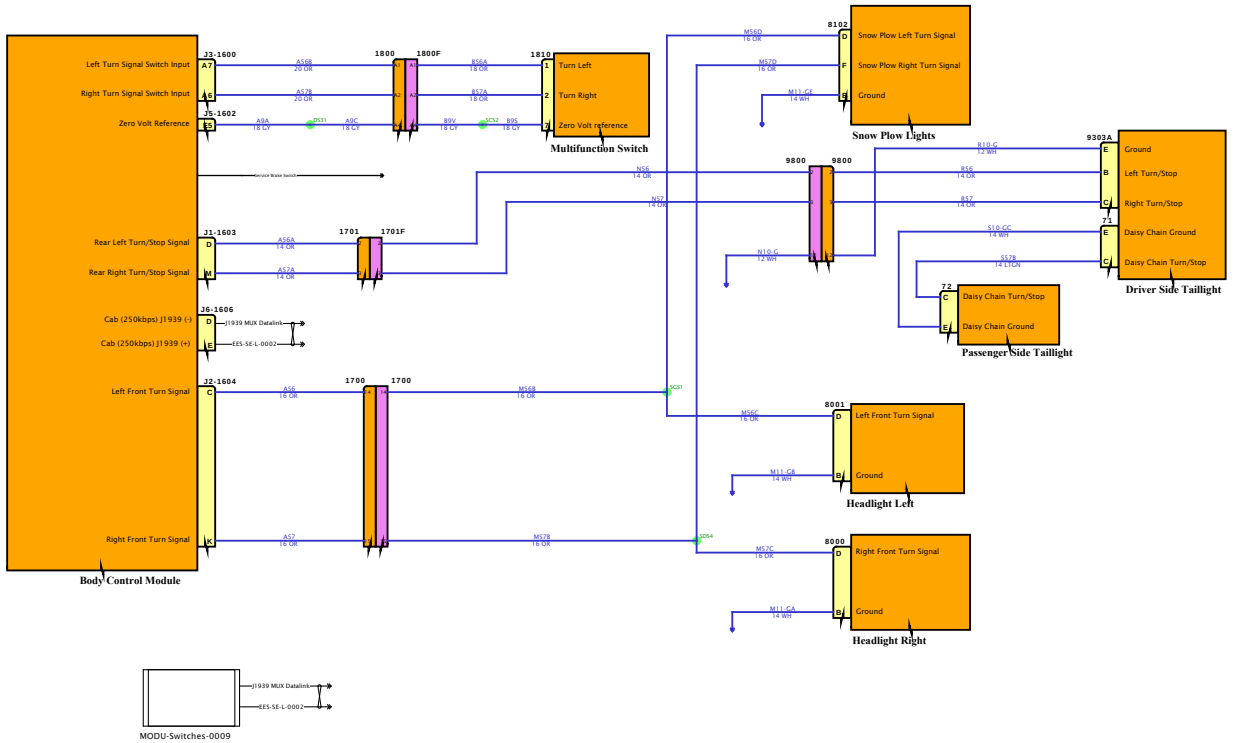

DESIGN DESCRIPTION

FEATURE CODES

SOFTWARE FEATURE CODES

Diagram1-Option 2 (Snow Plow #2)

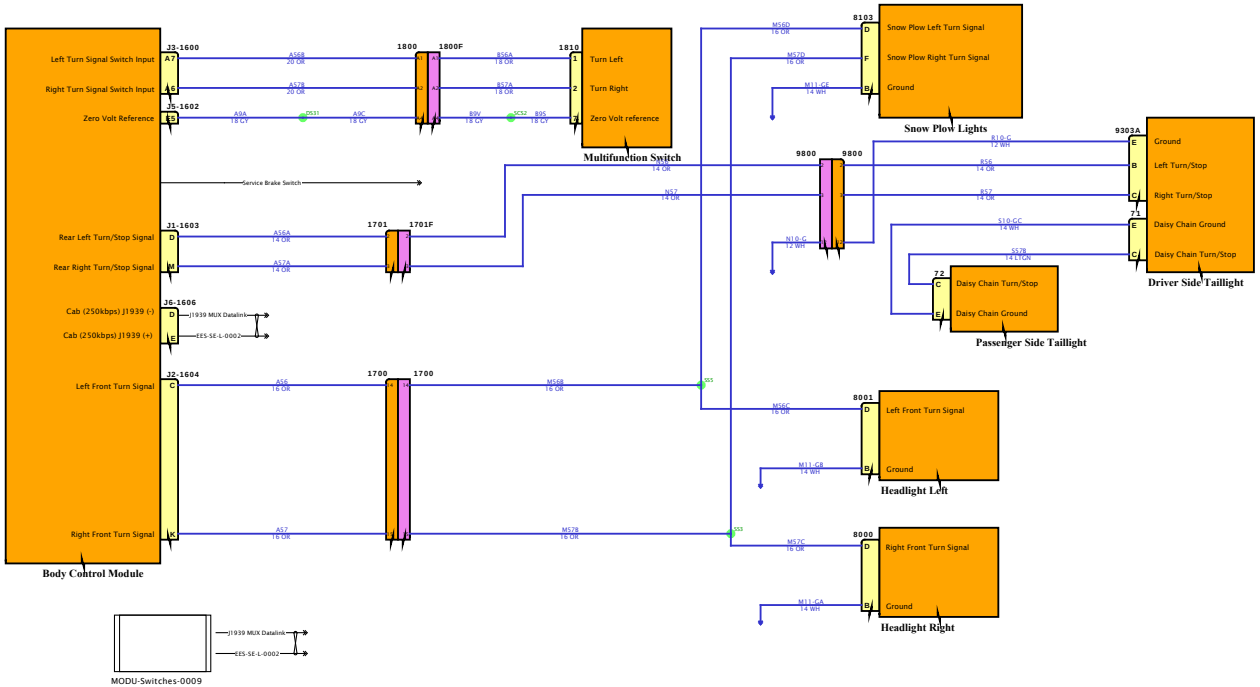

DESIGN DESCRIPTION

FEATURE CODES

SOFTWARE FEATURE CODES

NAVISTAR INC. CONFIDENTIAL PROPRIETARY

Diagram1-Option 1 (Snow Plow #1)

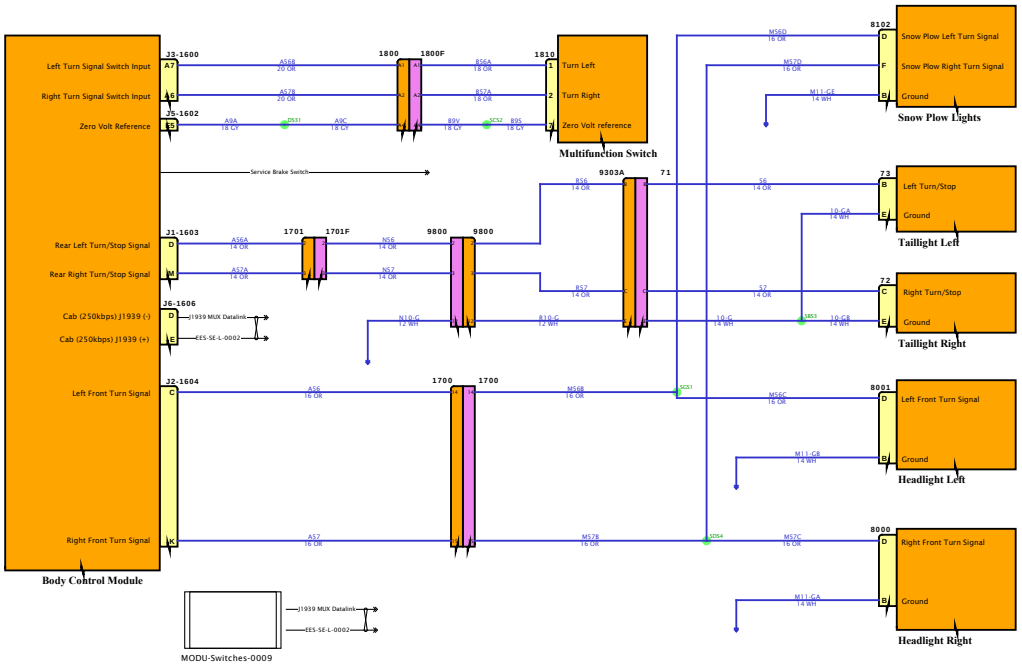

DESIGN DESCRIPTION

FEATURE CODES

SOFTWARE FEATURE CODES

NAVISTAR
NAVISTAR, INC. CONFIDENTIAL PROPRIETARY

Diagram1-Option 2 (Snow Plow #2)

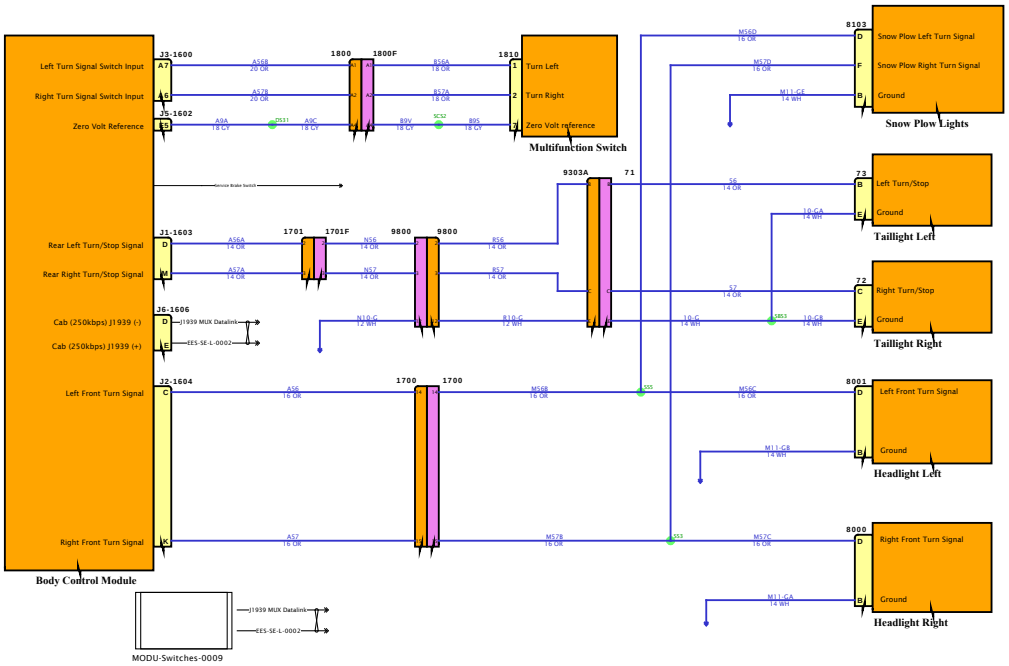

DESIGN DESCRIPTION

FEATURE CODES

SOFTWARE FEATURE CODES

Diagram1-Option 1 (Snow Plow #1)

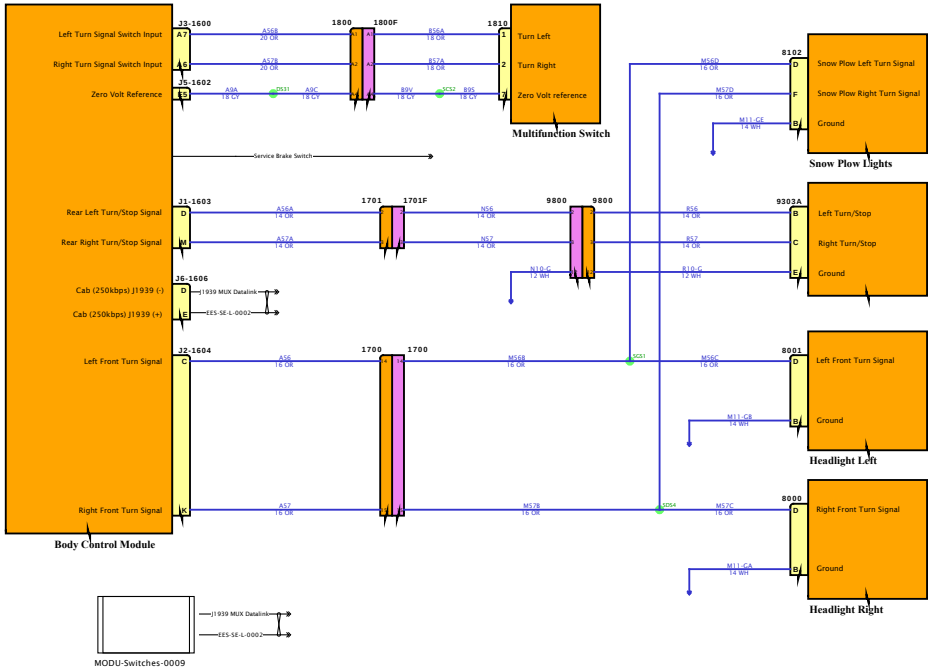

DESIGN DESCRIPTION

FEATURE CODES

SOFTWARE FEATURE CODES

NAVISTAR INC. CONFIDENTIAL PROPRIETARY

Diagram1-Option 2 (Snow Plow #2)

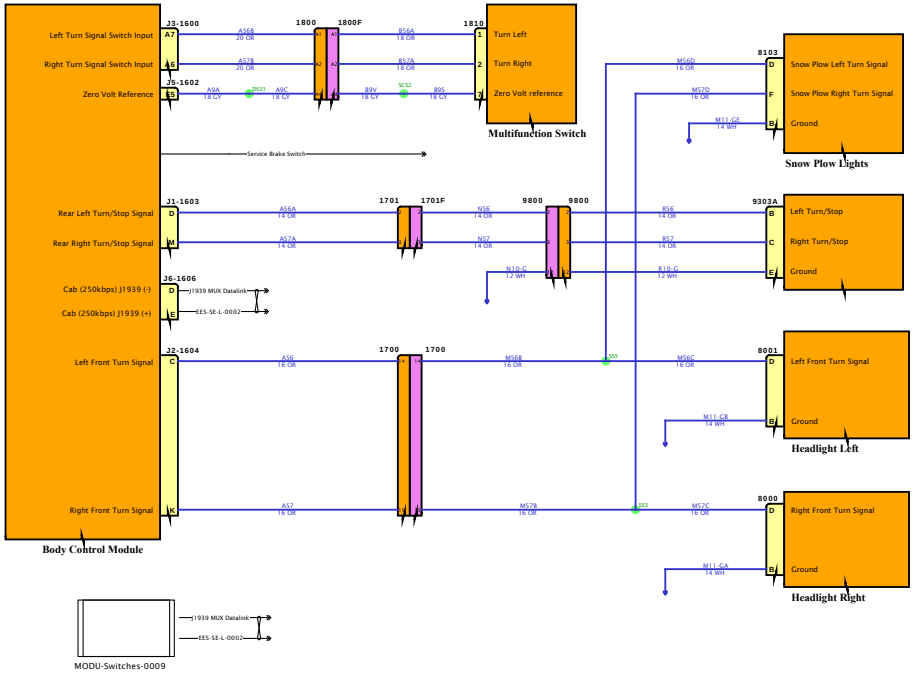

DESIGN DESCRIPTION

FEATURE CODES

SOFTWARE FEATURE CODES

Diagram1-Option 1 (Snow Plow #1)

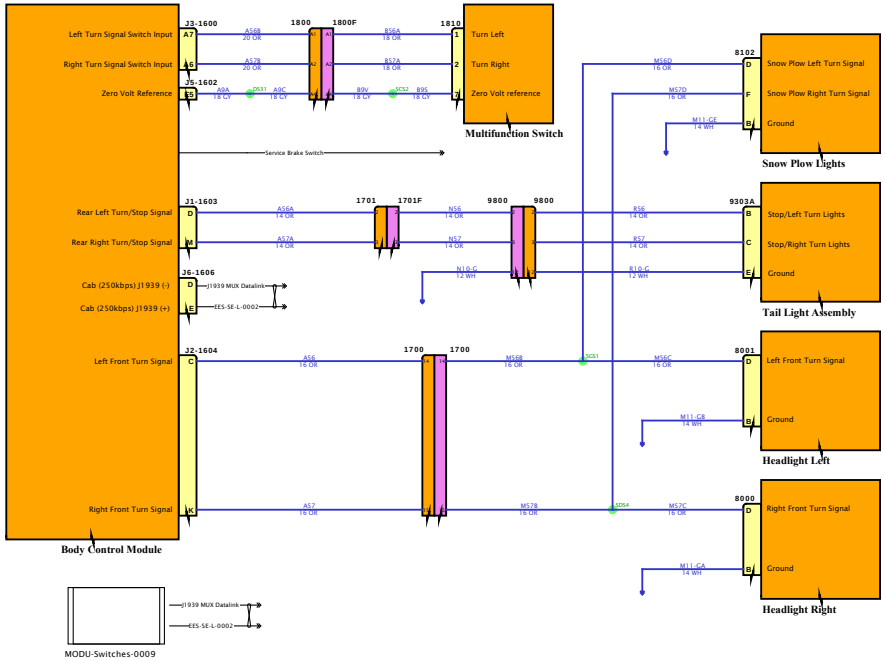

DESIGN DESCRIPTION

FEATURE CODES

SOFTWARE FEATURE CODES

NAVISTAR INC. CONFIDENTIAL PROPRIETARY

Diagram1-Option 2 (Snow Plow #2)

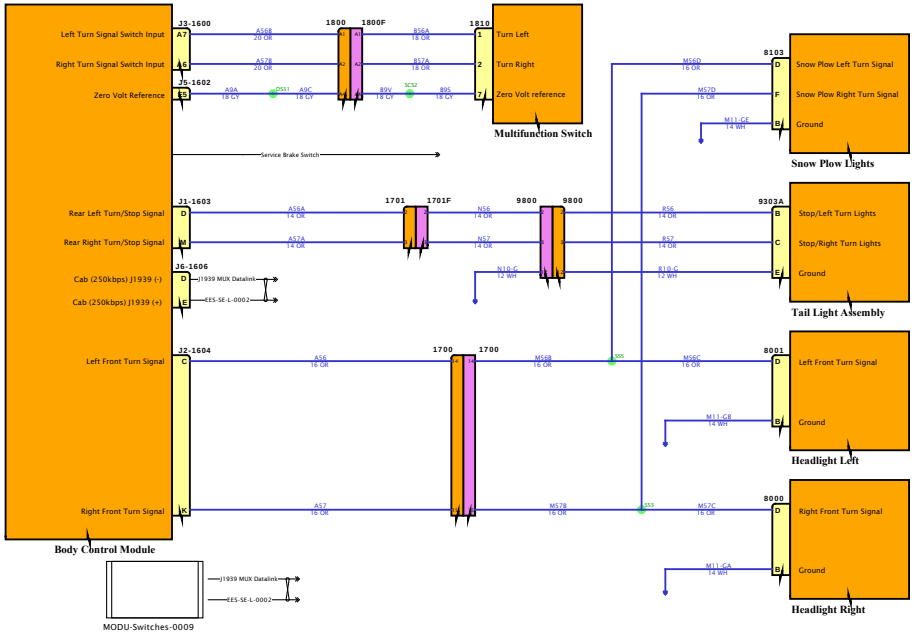

DESIGN DESCRIPTION

FEATURE CODES

SOFTWARE FEATURE CODES

NAVISTAR INC. CONFIDENTIAL PROPRIETARY

DESIGN DESCRIPTION

FEATURE CODES

SOFTWARE FEATURE CODES

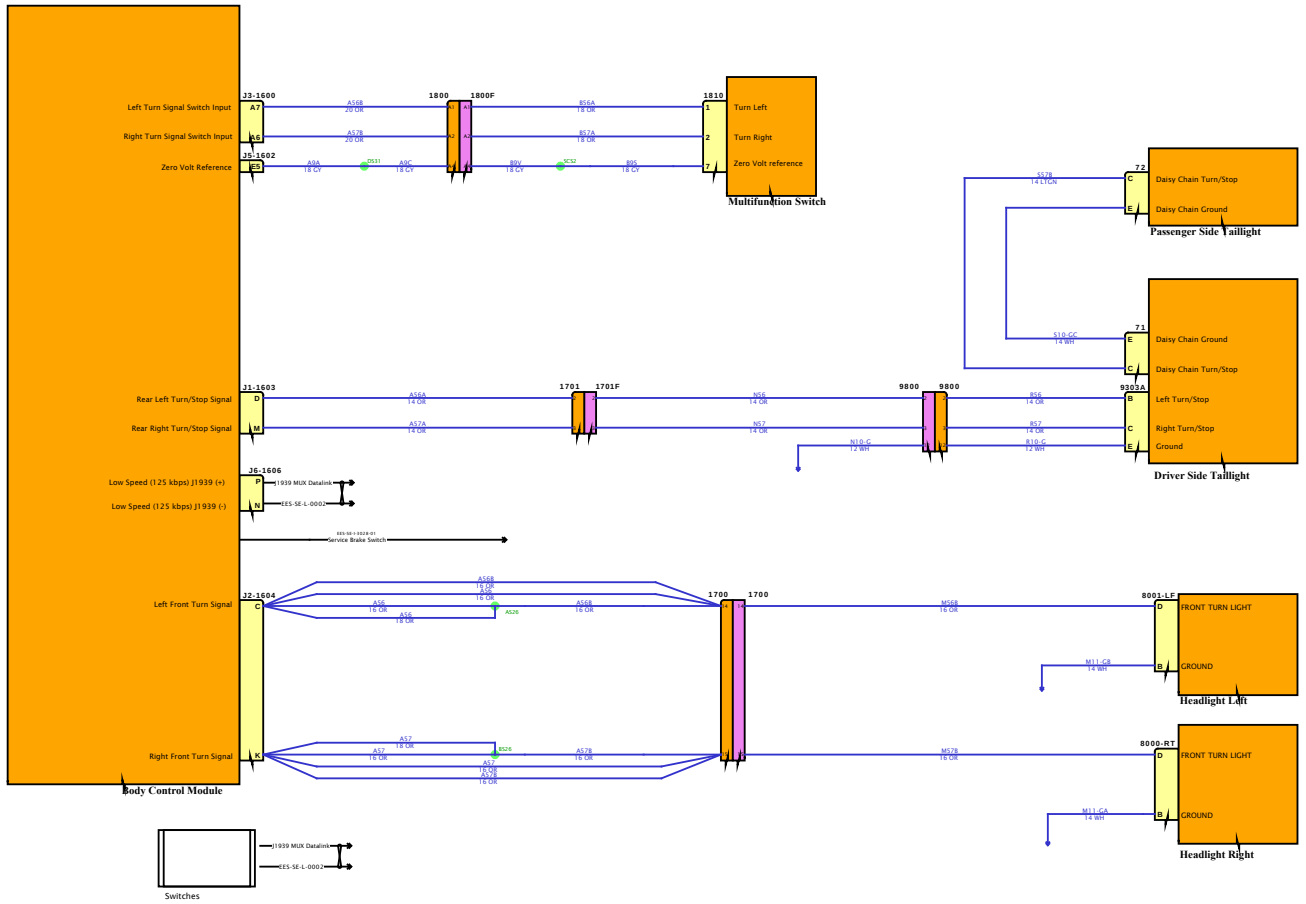
Left Turn Signal Switch Input
Right Turn Signal Switch Input
Zero Volt Reference
J3-1600
A7
A6
J5-1602
E5
A56B 20 OR
A57B 20 OR
A9A 18 GY
DS31
A9C 18 GY
1800
1800F
B56A 18 OR
B57A 18 OR
B9V 18 GY
SCS2
B9S 18 GY
1810
1 Turn Left
2 Turn Right
7 Zero Volt reference
Multifunction Switch
S57B 14 LTGN
72
C Daisy Chain Turn/Stop
E Daisy Chain Ground
Passenger Side Taillight
S10-GC 14 WH
71
E Daisy Chain Ground
C Daisy Chain Turn/Stop
Rear Left Turn/Stop Signal
Rear Right Turn/Stop Signal
J1-1603
D
M
A56A 14 OR
A57A 14 OR
1701
1701F
N56 14 OR
N57 14 OR
9800
9800
N10-G 12 WH
B56 14 OR
B57 14 OR
S10-GC 12 WH
9303A
B Left Turn/Stop
C Right Turn/Stop
E Ground
Driver Side Taillight
Low Speed (125 kbps) J1939 (+)
Low Speed (125 kbps) J1939 (-)
J6-1606
P
N
J1939 MUX Datalink
EES-SE-L-0002
EES-SE-I-3028-01
Service Brake Switch
Left Front Turn Signal
Right Front Turn Signal
J2-1604
C
K
A56B 16 OR
A56 16 OR
A56 16 OR
A56 16 OR
A56B 16 OR
A56B 16 OR
A52B 16 OR
A52B 16 OR
A52

Diagram2

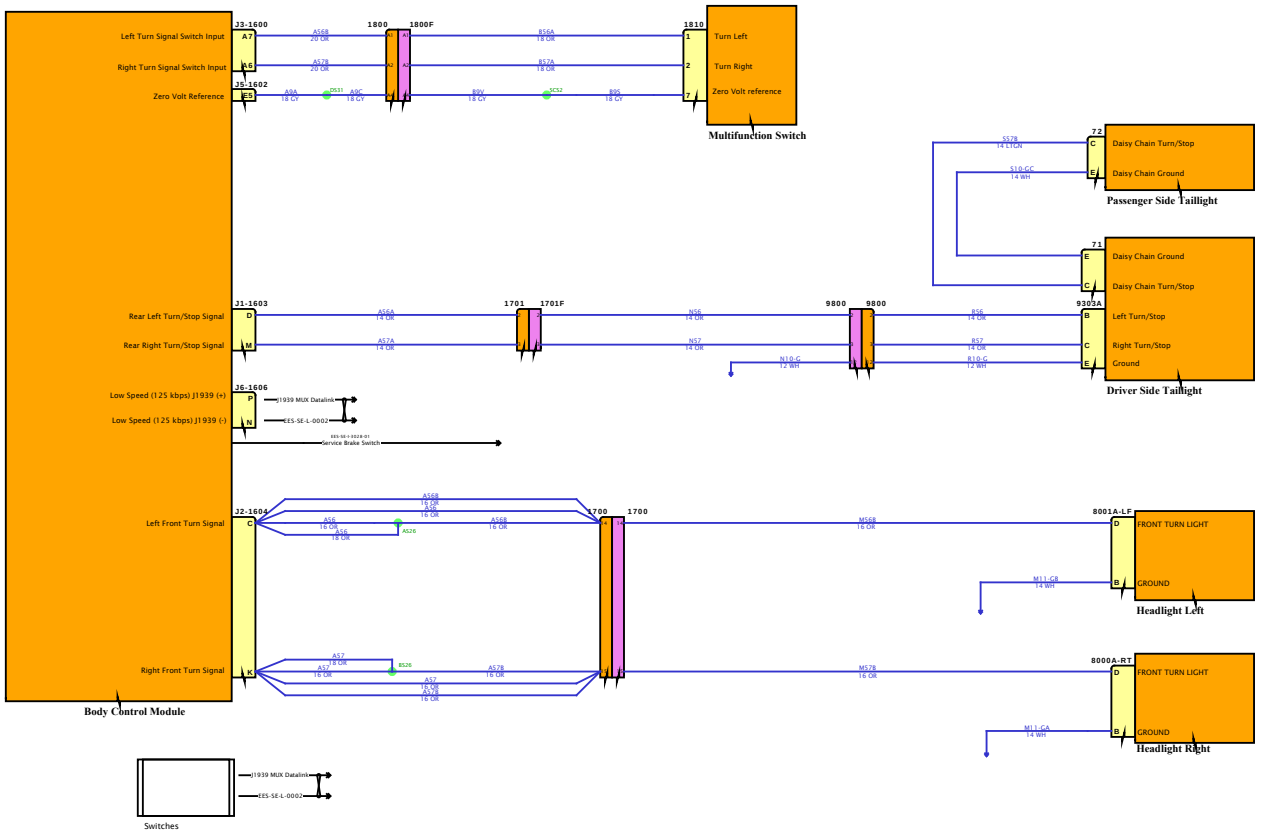

DESIGN DESCRIPTION

FEATURE CODES

SOFTWARE FEATURE CODES

NAVISTAR INC. CONFIDENTIAL PROPRIETARY

DESIGN DESCRIPTION

FEATURE CODES

SOFTWARE FEATURE CODES

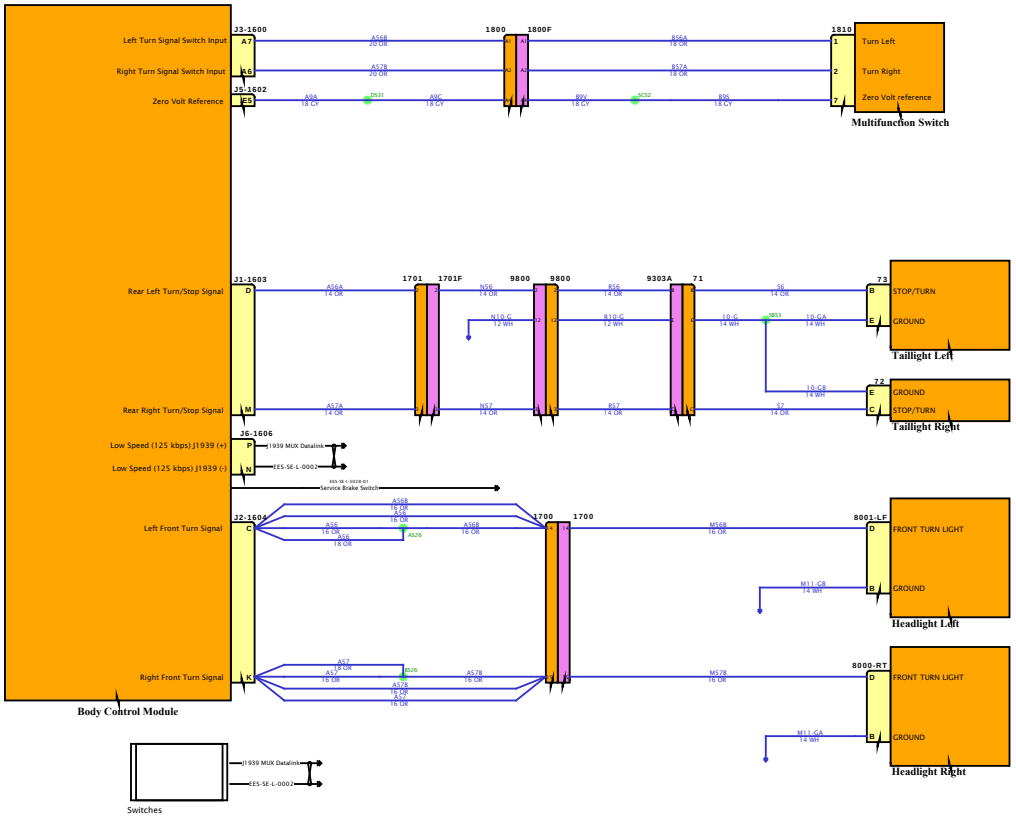

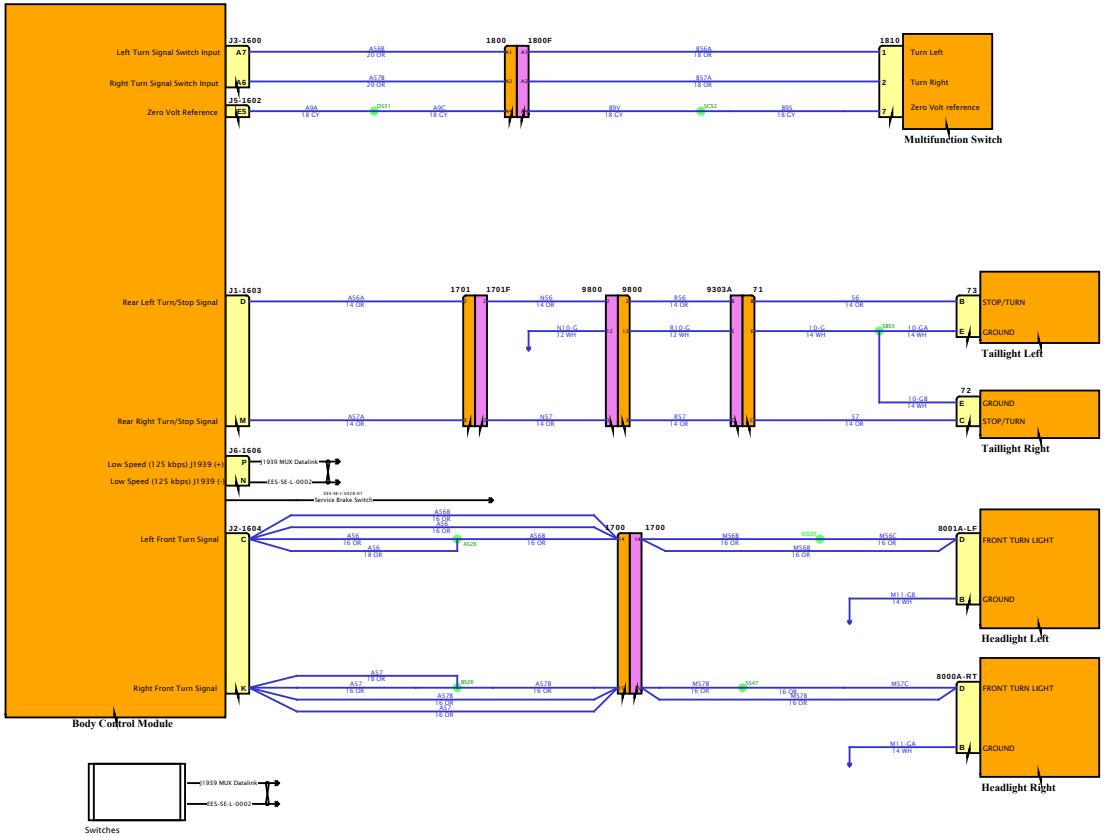

DESIGN DESCRIPTION

FEATURE CODES

SOFTWARE FEATURE CODES

Diagram1

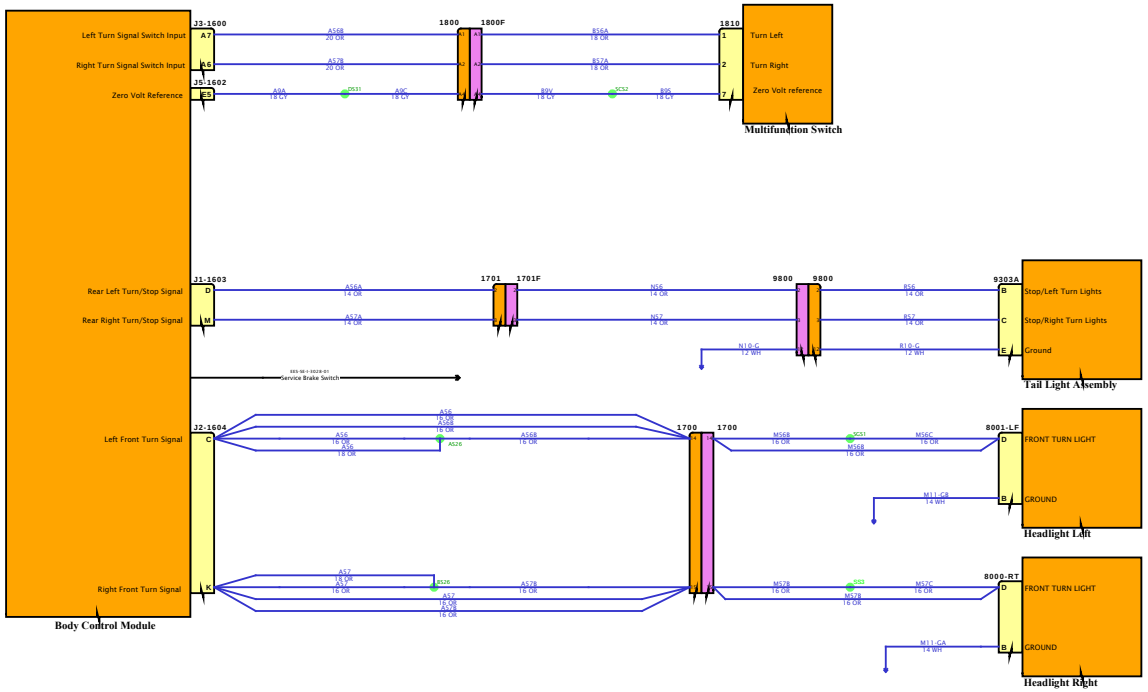

DESIGN DESCRIPTION

FEATURE CODES

SOFTWARE FEATURE CODES

NAVISTAR INC. CONFIDENTIAL PROPRIETARY

Diagram2

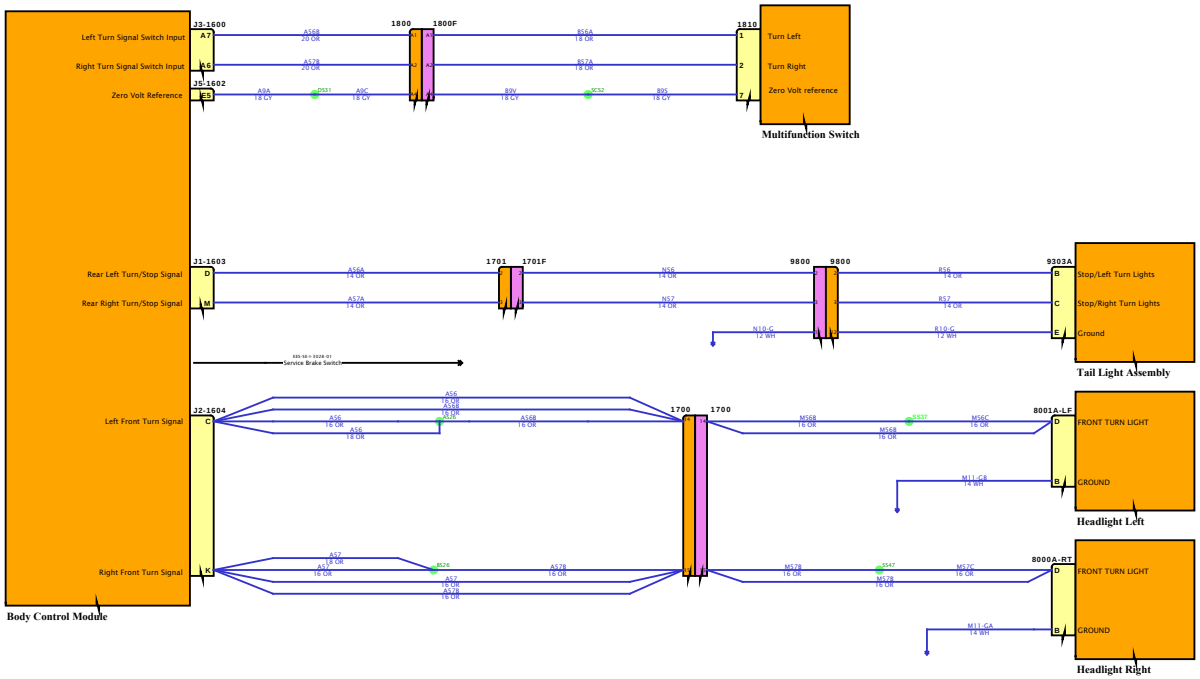

DESIGN DESCRIPTION

FEATURE CODES

SOFTWARE FEATURE CODES

NAVISTAR
NAVISTAR, INC. CONFIDENTIAL PROPRIETARY

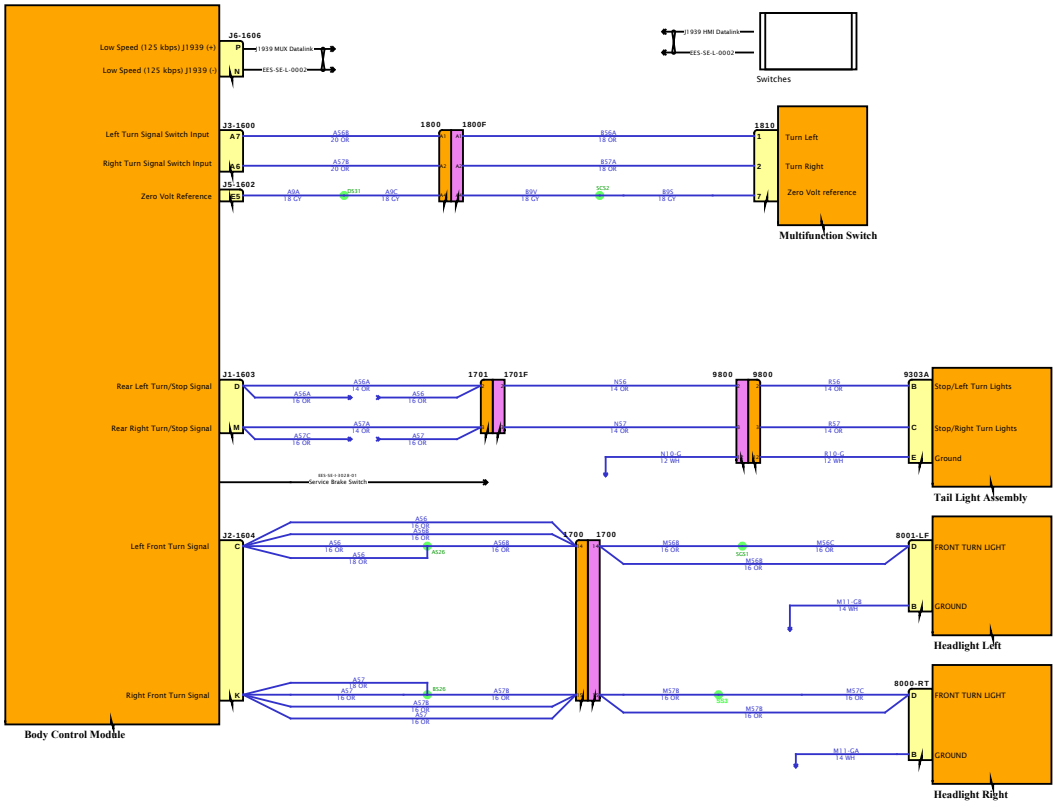

DESIGN DESCRIPTION

FEATURE CODES

SOFTWARE FEATURE CODES

NAVISTAR INC. CONFIDENTIAL PROPRIETARY

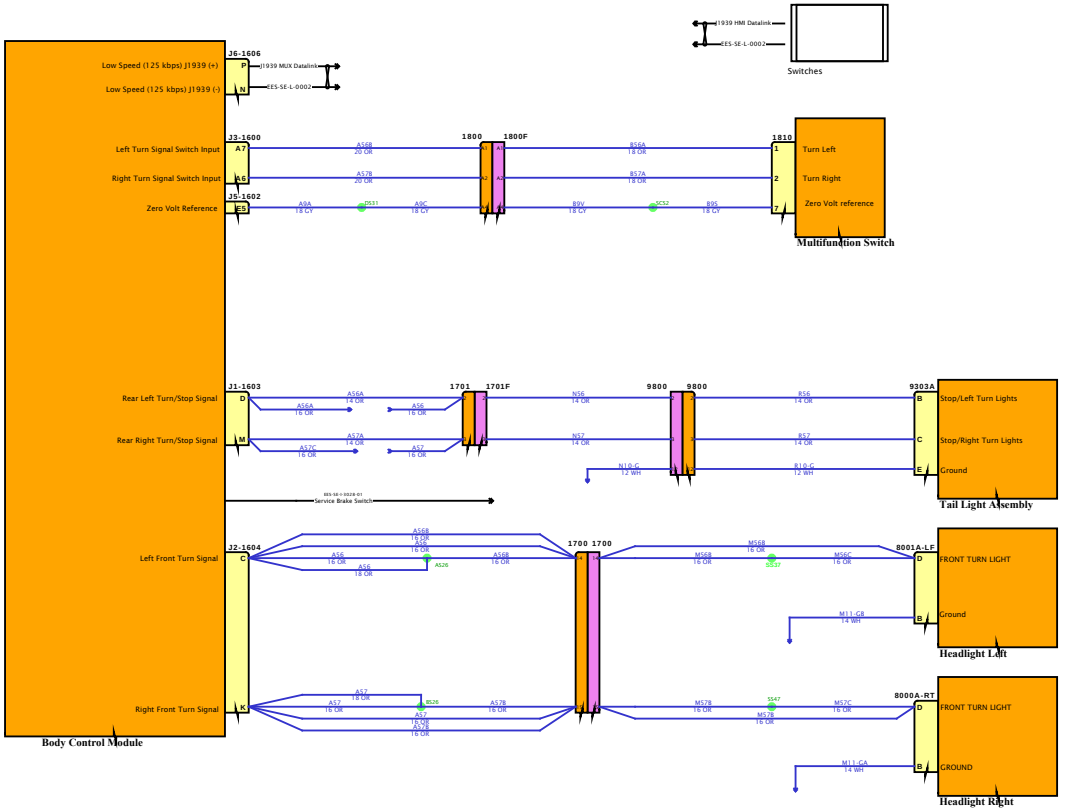

DESIGN DESCRIPTION

FEATURE CODES

SOFTWARE FEATURE CODES

NAVISTAR INC. CONFIDENTIAL PROPRIETARY

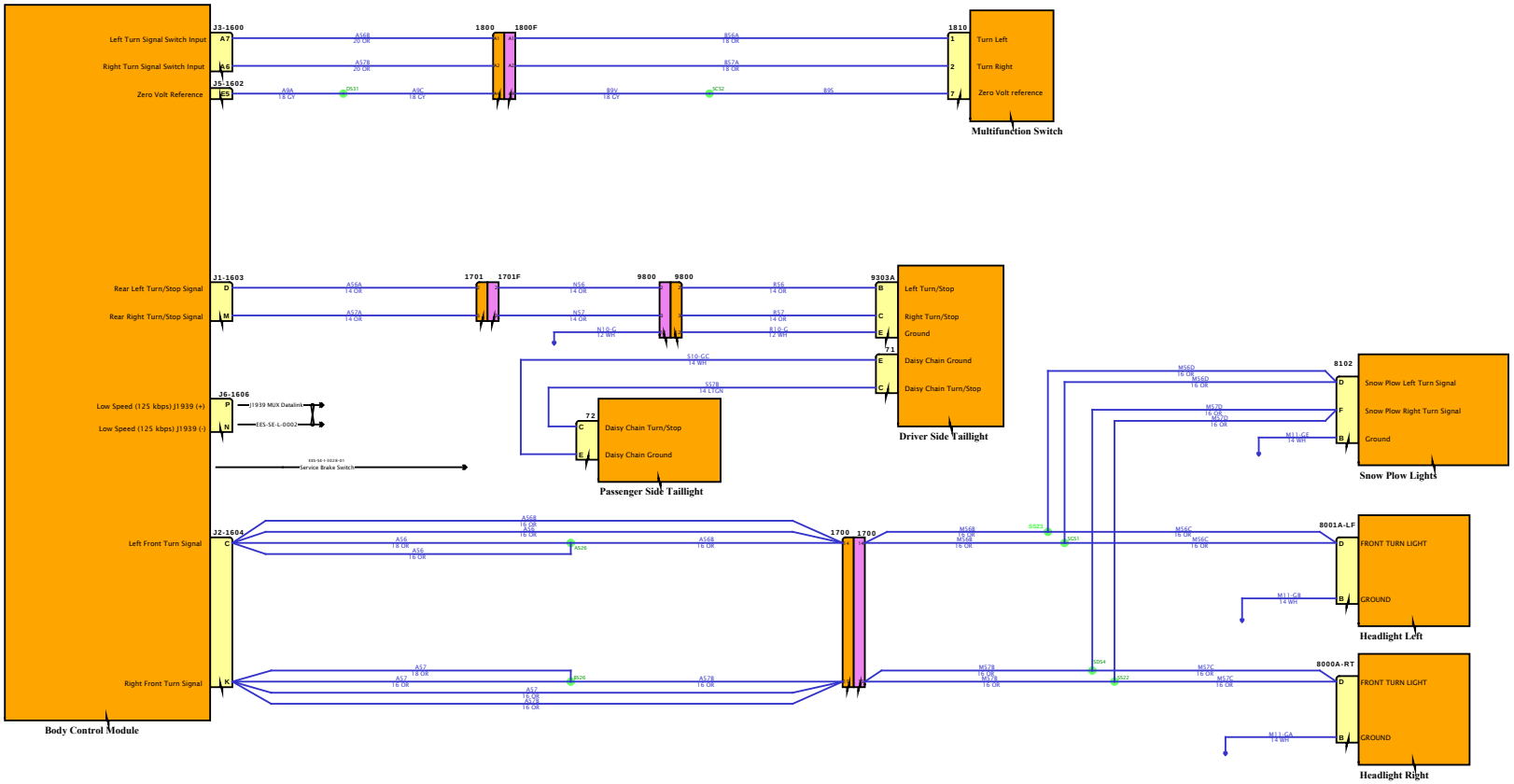

DESIGN DESCRIPTION

FEATURE CODES

SOFTWARE FEATURE CODES

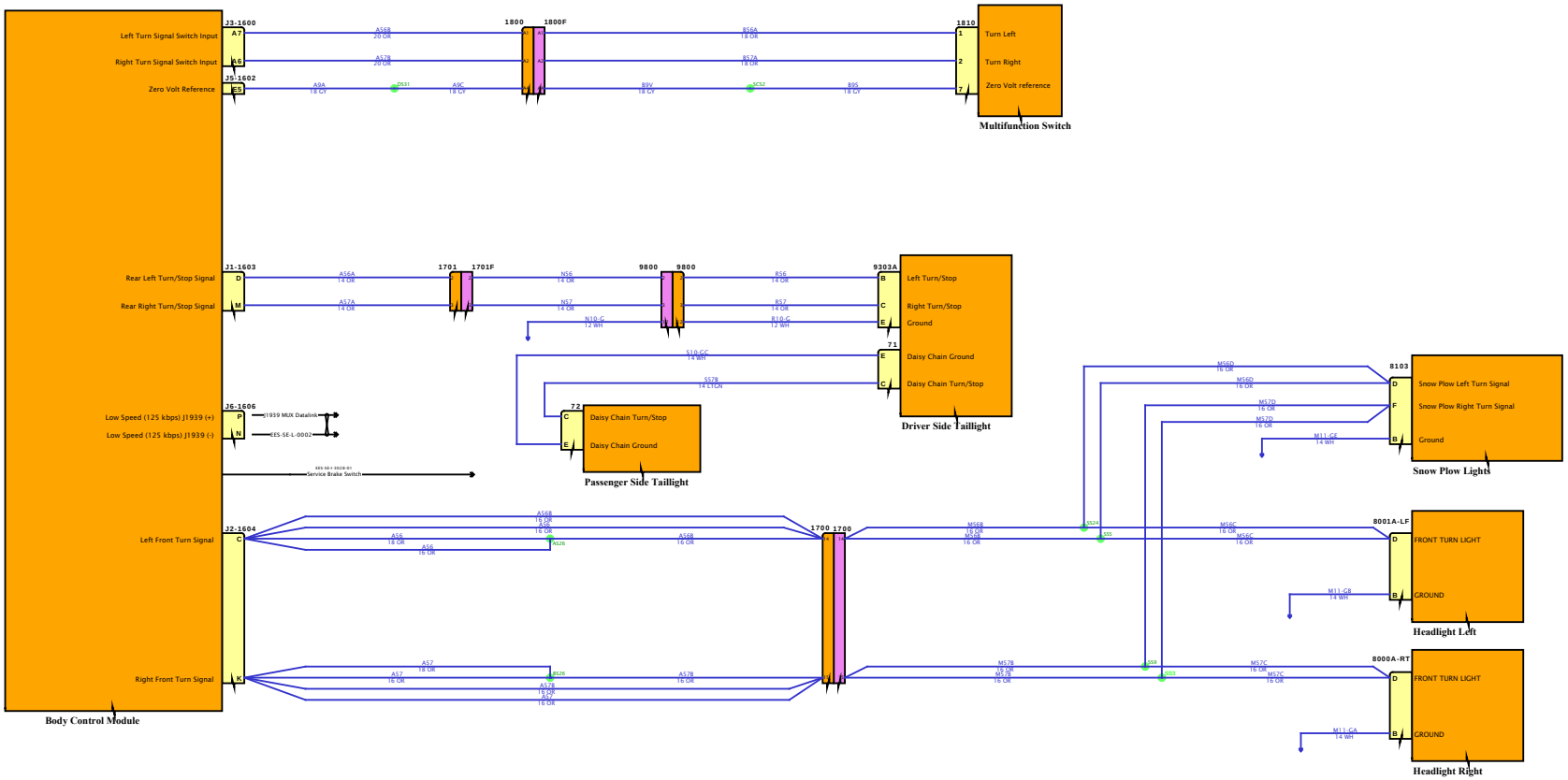

DESIGN DESCRIPTION

FEATURE CODES

SOFTWARE FEATURE CODES

Diagram3

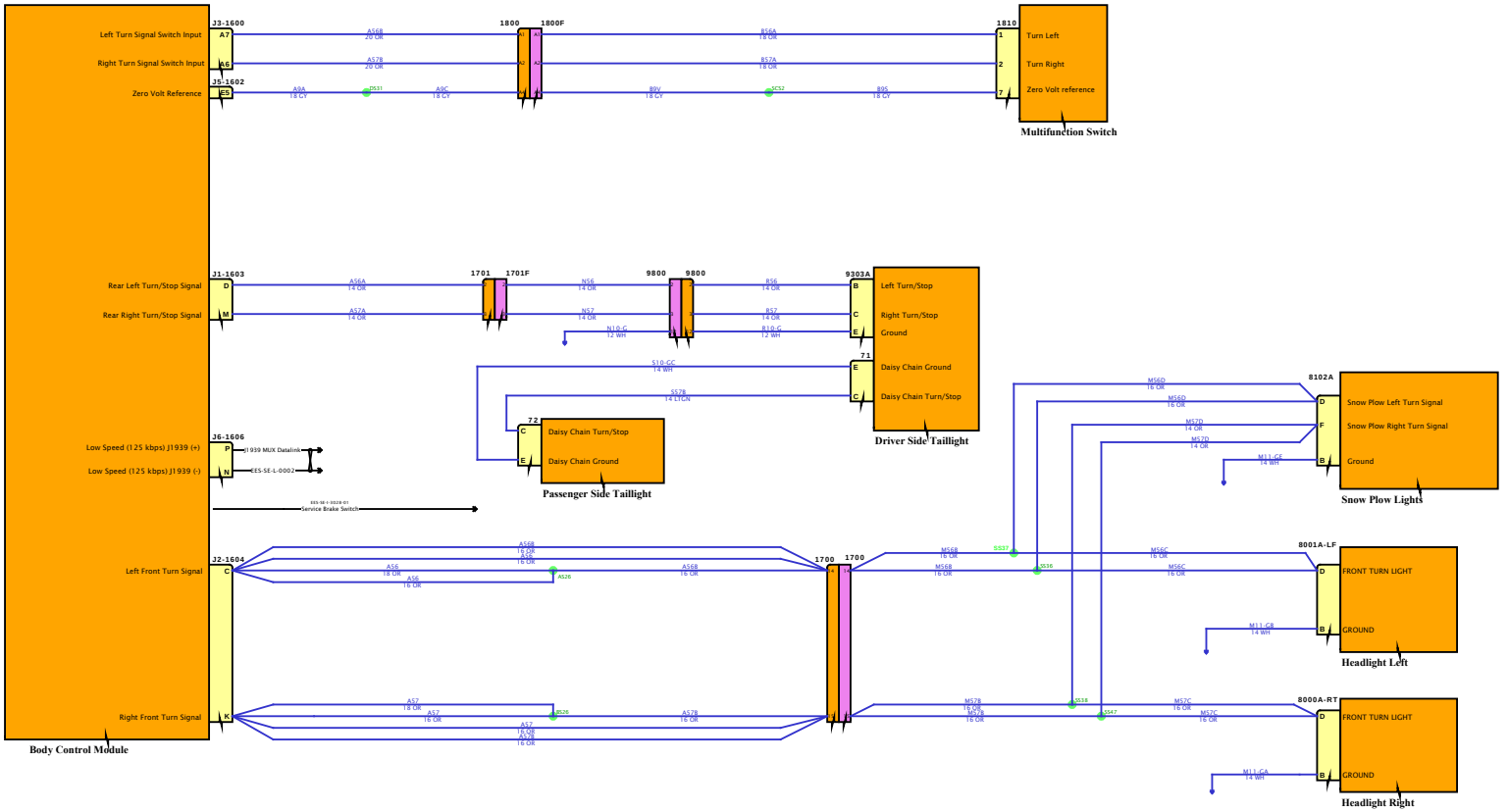

DESIGN DESCRIPTION

FEATURE CODES

SOFTWARE FEATURE CODES

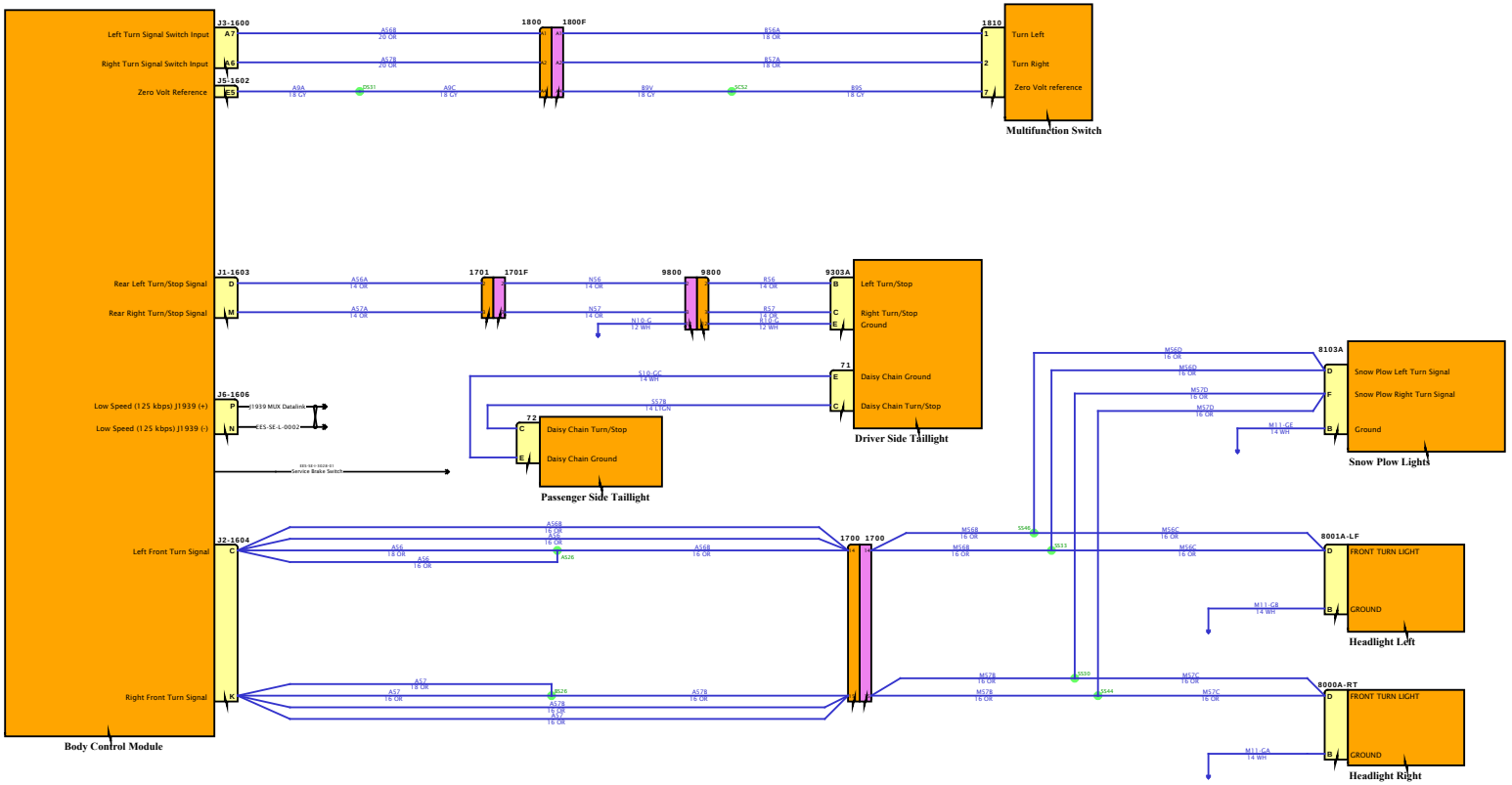

DESIGN DESCRIPTION

FEATURE CODES

SOFTWARE FEATURE CODES

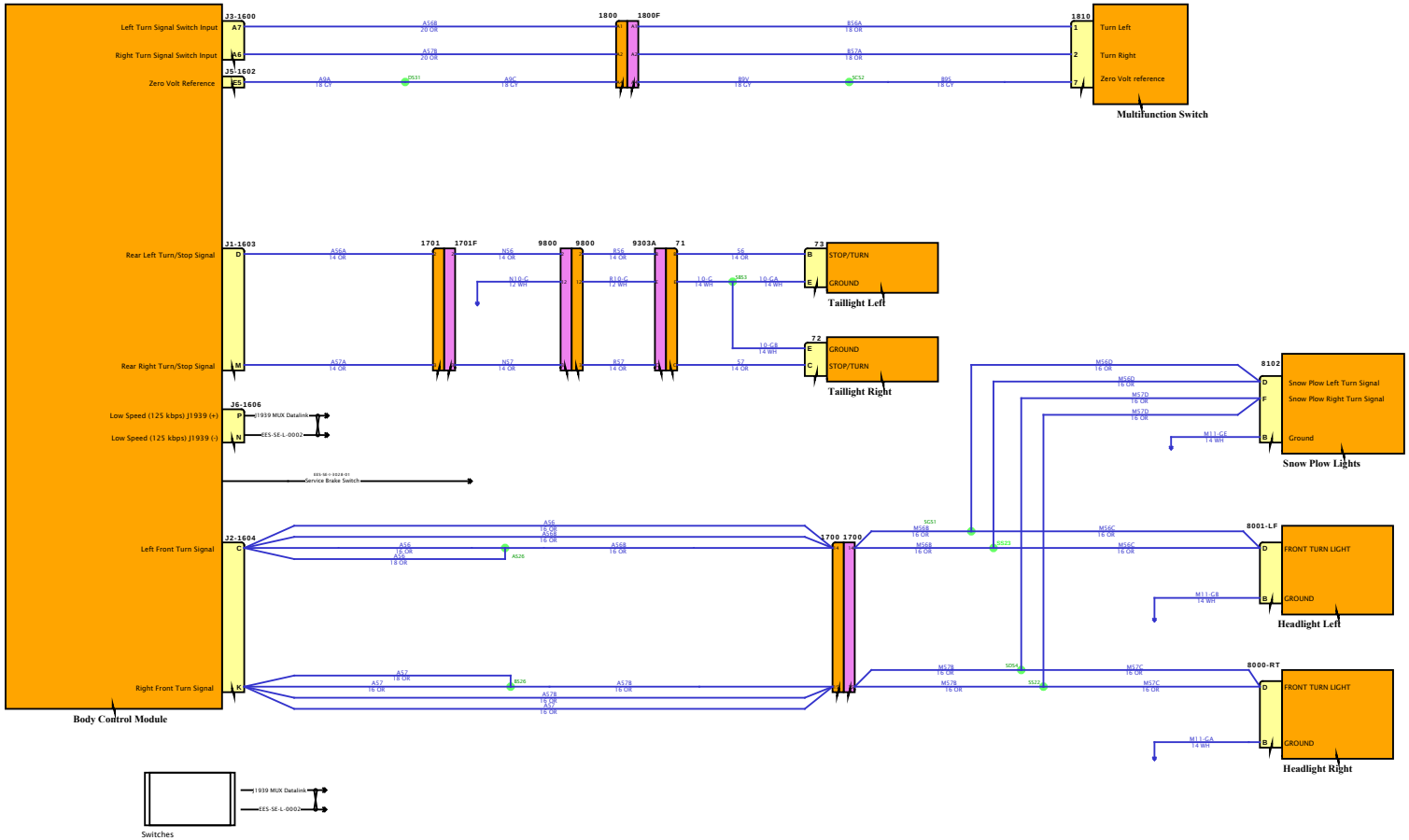

DESIGN DESCRIPTION

FEATURE CODES

SOFTWARE FEATURE CODES

Diagram2

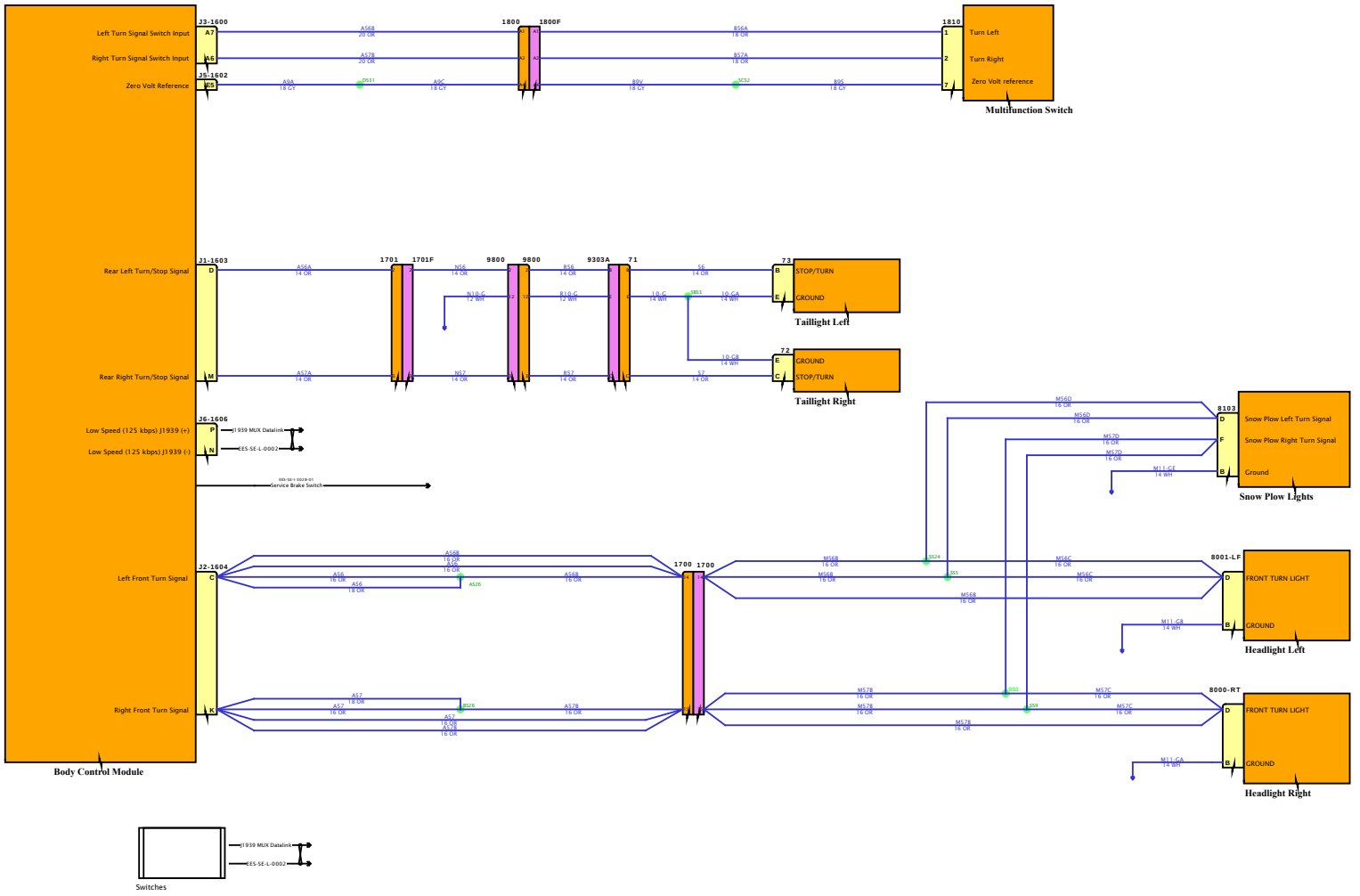

DESIGN DESCRIPTION

FEATURE CODES

SOFTWARE FEATURE CODES

Diagram3

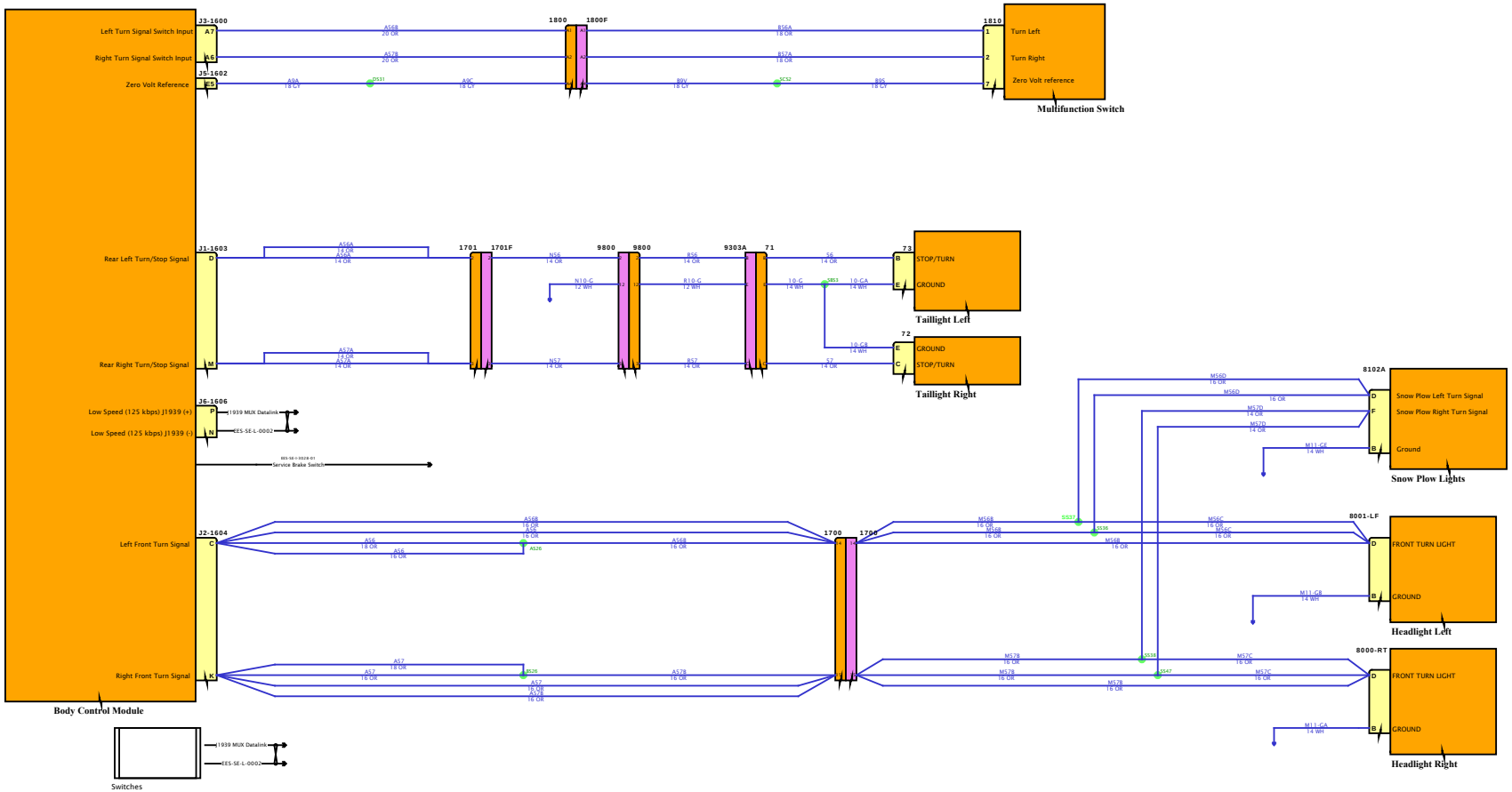

DESIGN DESCRIPTION

FEATURE CODES

SOFTWARE FEATURE CODES

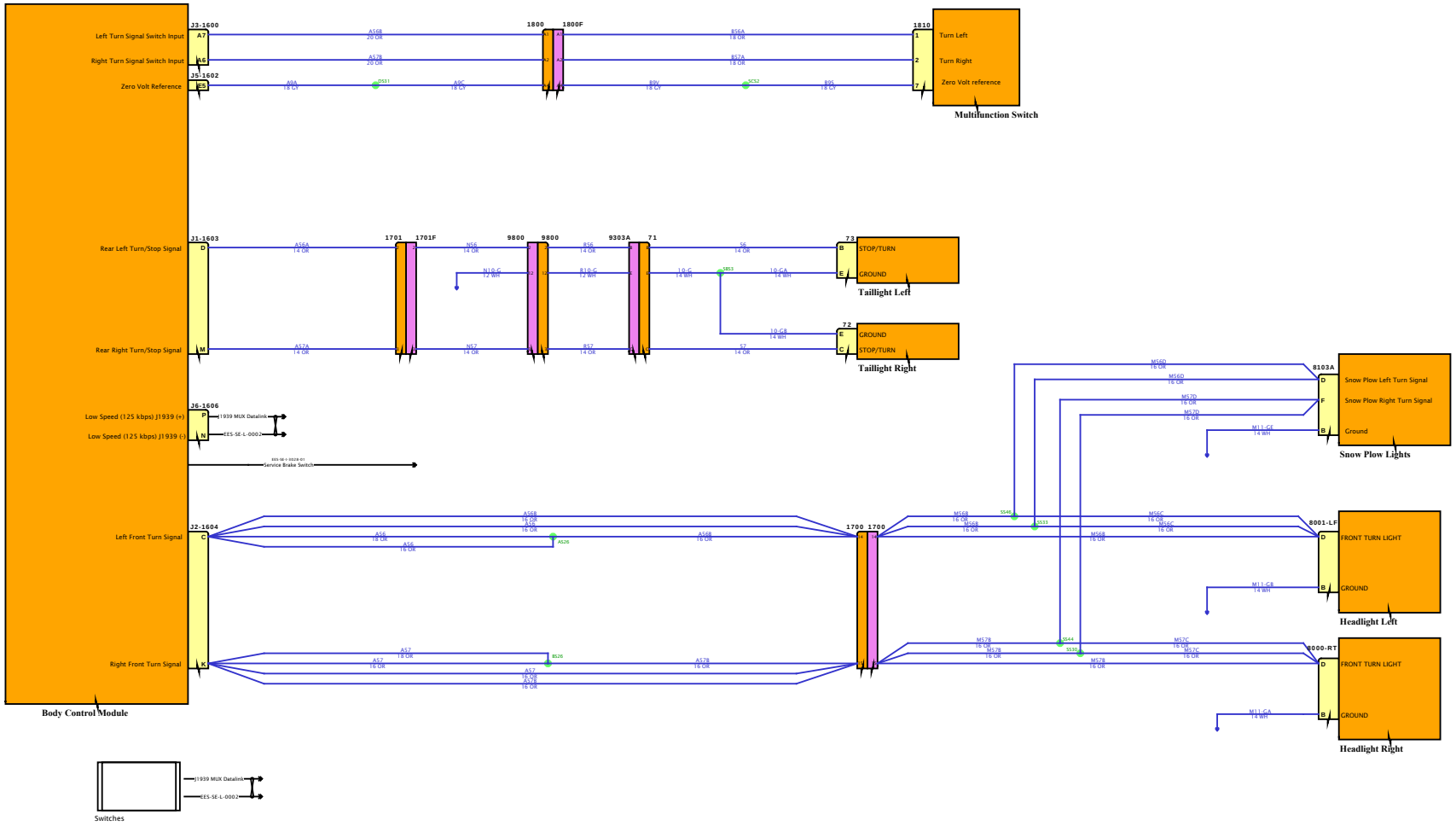
Body Control Module
J3-1600
Left Turn Signal Switch Input
A7
Right Turn Signal Switch Input
A6
J5-1602
Zero Volt Reference
E5
A56B 20 OR
A57B 20 OR
A9A 18 GY
DS31
A9C 18 GY
1800
1800F
B56A 18 OR
B57A 18 OR
B9V 18 GY
SCS2
B9S 18 GY
1810
1 Turn Left
2 Turn Right
7 Zero Volt reference
Multifunction Switch
J1-1603
Rear Left Turn/Stop Signal
D
A56A 14 OR
1701
1701F
N56 14 OR
9800
9800
B56 14 OR
9303A
71
S6 14 OR
N10-G 12 WH
B10-G 12 WH
10-G 14 WH
SBS3
10-GA 14 WH
73
B STOP/TURN
E GROUND
Taillight Left
Rear Right Turn/Stop Signal
M
A57A 14 OR
N57 14 OR
B57 14 OR
S7 14 OR
10-G8 14 WH
72
E GROUND
C STOP/TURN
Taillight Right
J6-1606
Low Speed (125 kbps) J1939 (+)
P
Low Speed (125 kbps) J1939 (-)
N
J1939 MUX Datalink
EES-SE-L-0002
Service Brake Switch
J2-1604
Left Front Turn Signal
C
A56B 16 OR
A56 18 OR
A56 16 OR
A526
1700
1700
M56B 16 OR
M56C 16 OR
S546
S531
M56D 16 OR
8103A
D Snow Plow Left Turn Signal
F Snow Plow Right Turn Signal
B Ground
Snow Plow Lights
M11-GE 14 WH
8001-LF
D FRONT TURN LIGHT
B GROUND
Headlight Left
M11-GR 14 WH
Right Front Turn Signal
K
A57 18 OR
A57 16 OR
B526
A57B 16 OR
M57B 16 OR
M57C 16 OR
S544
S550
8000-RT
D FRONT TURN LIGHT
B GROUND
Headlight Right
M11-GA 14 WH
Switches
J1939 MUX Datalink
EES-SE-L-0002
DESIGN DESCRIPTION
FEATURE CODES
SOFTWARE FEATURE CODES
NAVISTAR
NAVISTAR, INC. CONFIDENTIAL PROPRIETARY

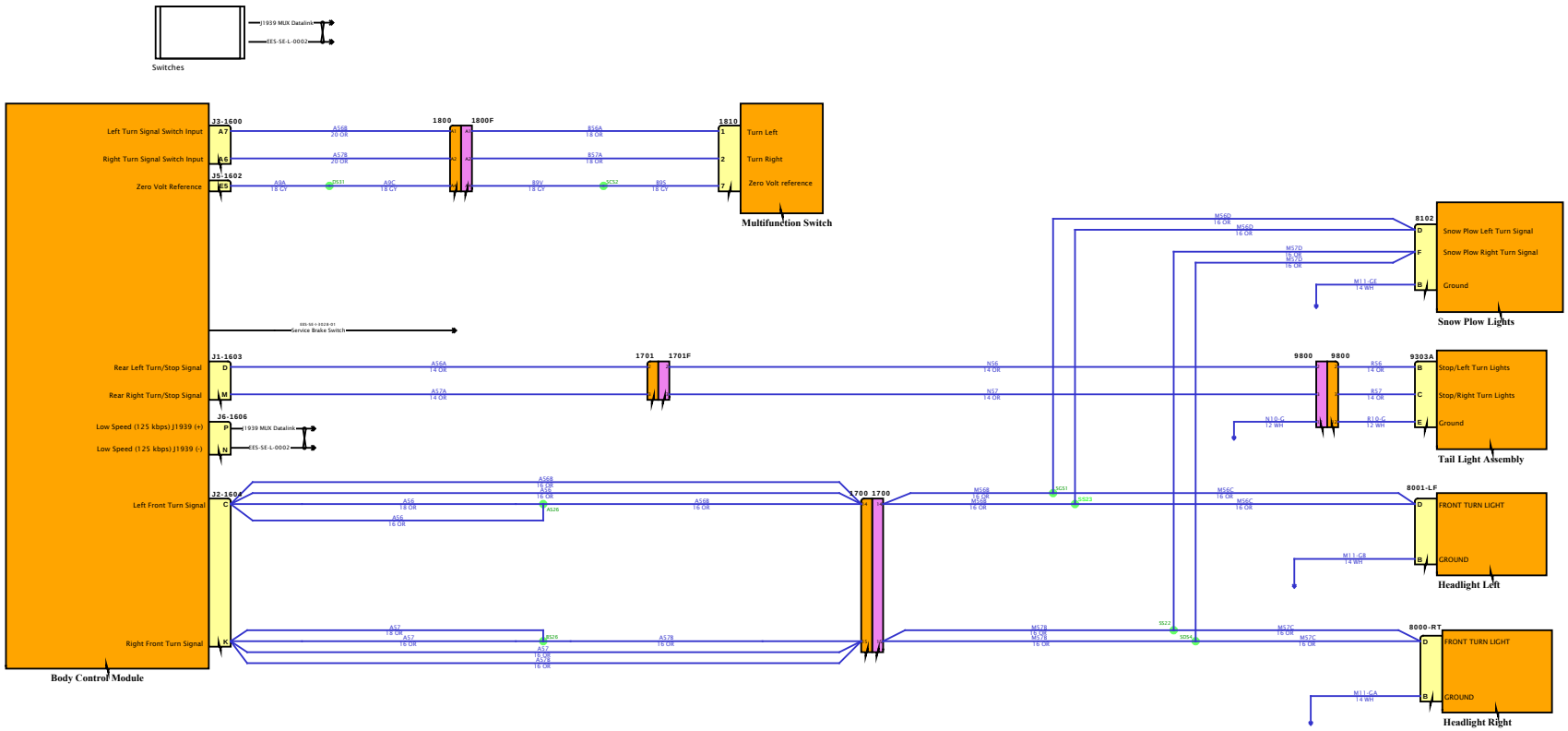

DESIGN DESCRIPTION

FEATURE CODES

SOFTWARE FEATURE CODES

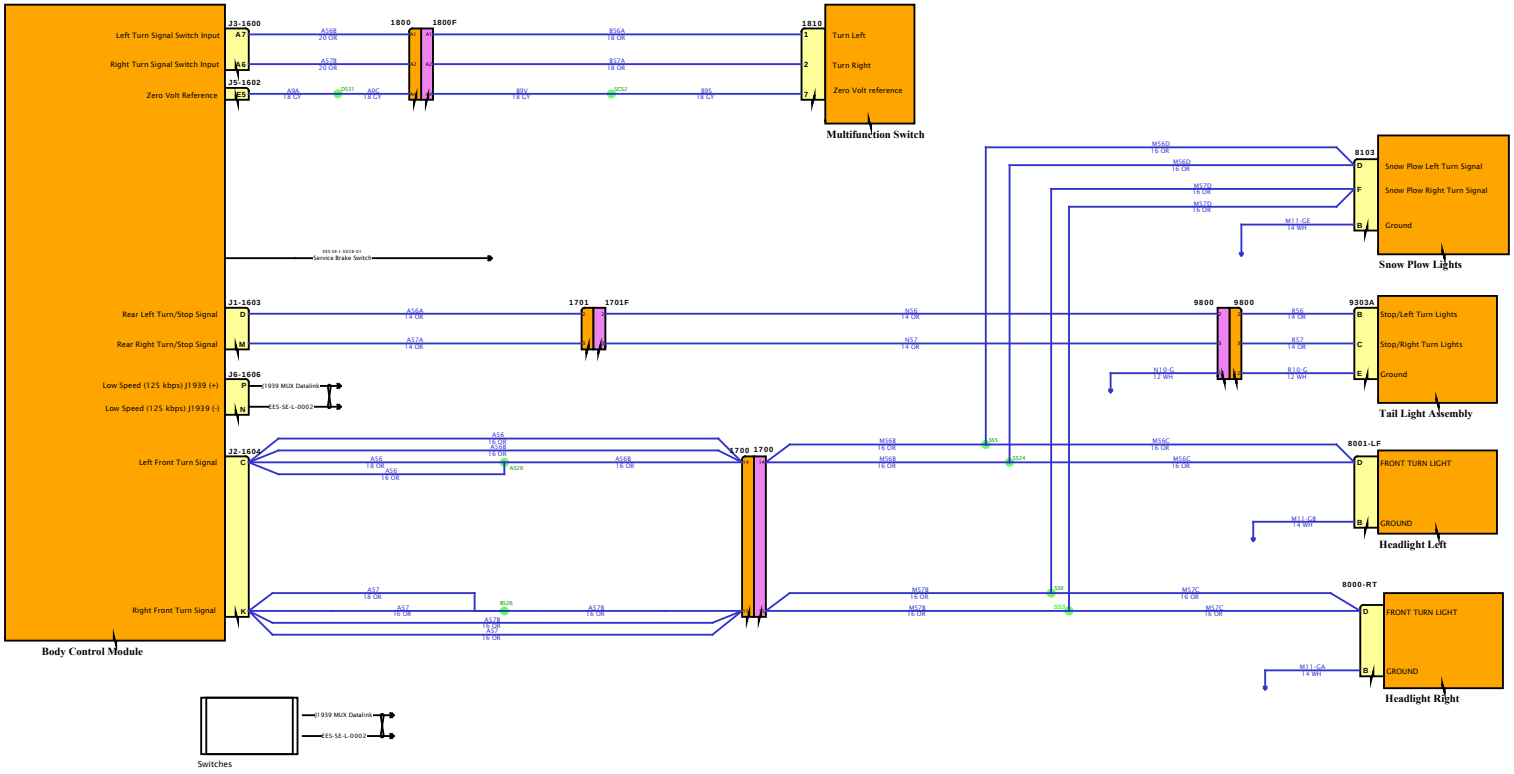

DESIGN DESCRIPTION

FEATURE CODES

SOFTWARE FEATURE CODES

NAVISTAR
NAVISTAR, INC. CONFIDENTIAL PROPRIETARY

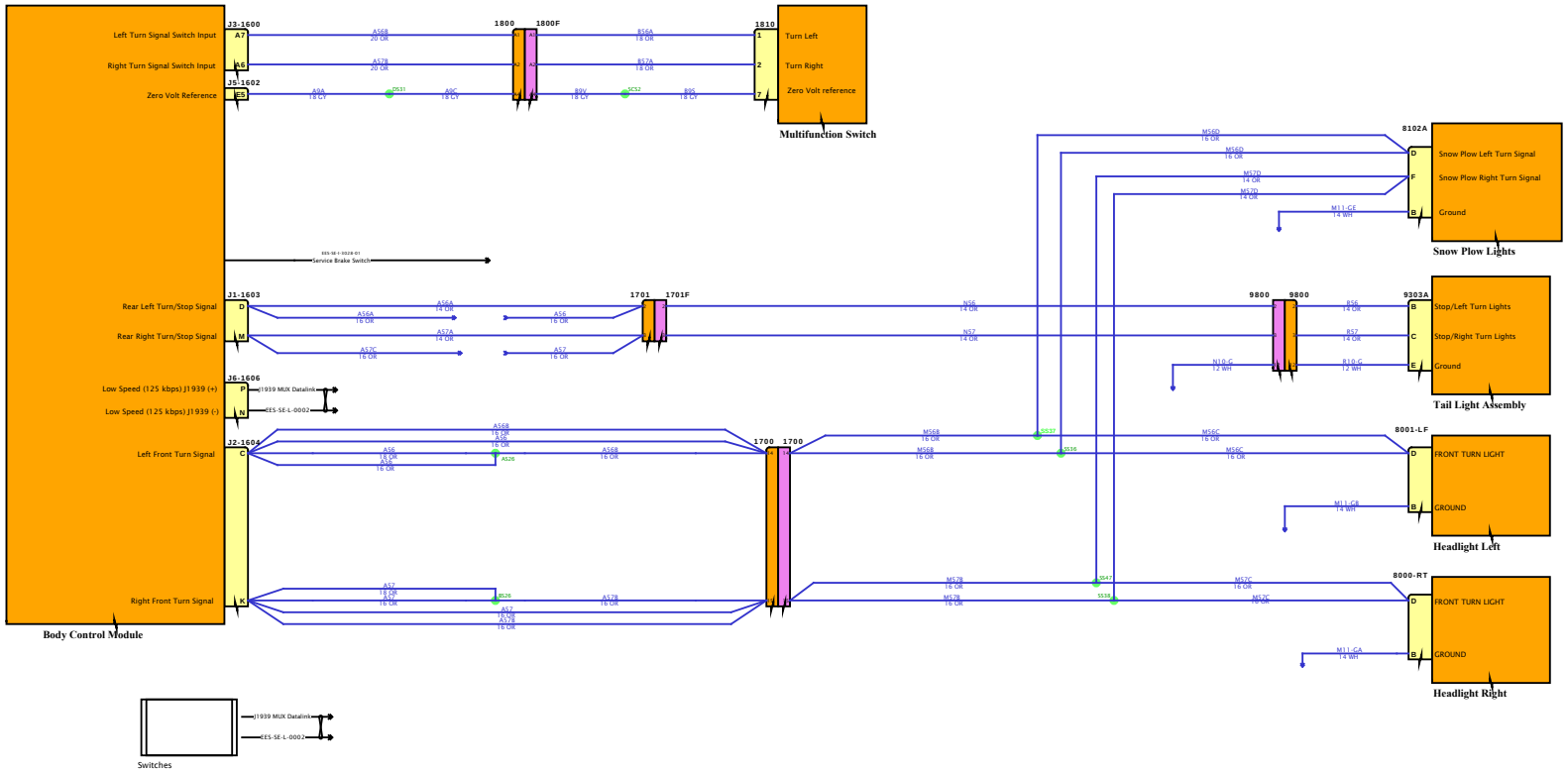

DESIGN DESCRIPTION

FEATURE CODES

SOFTWARE FEATURE CODES

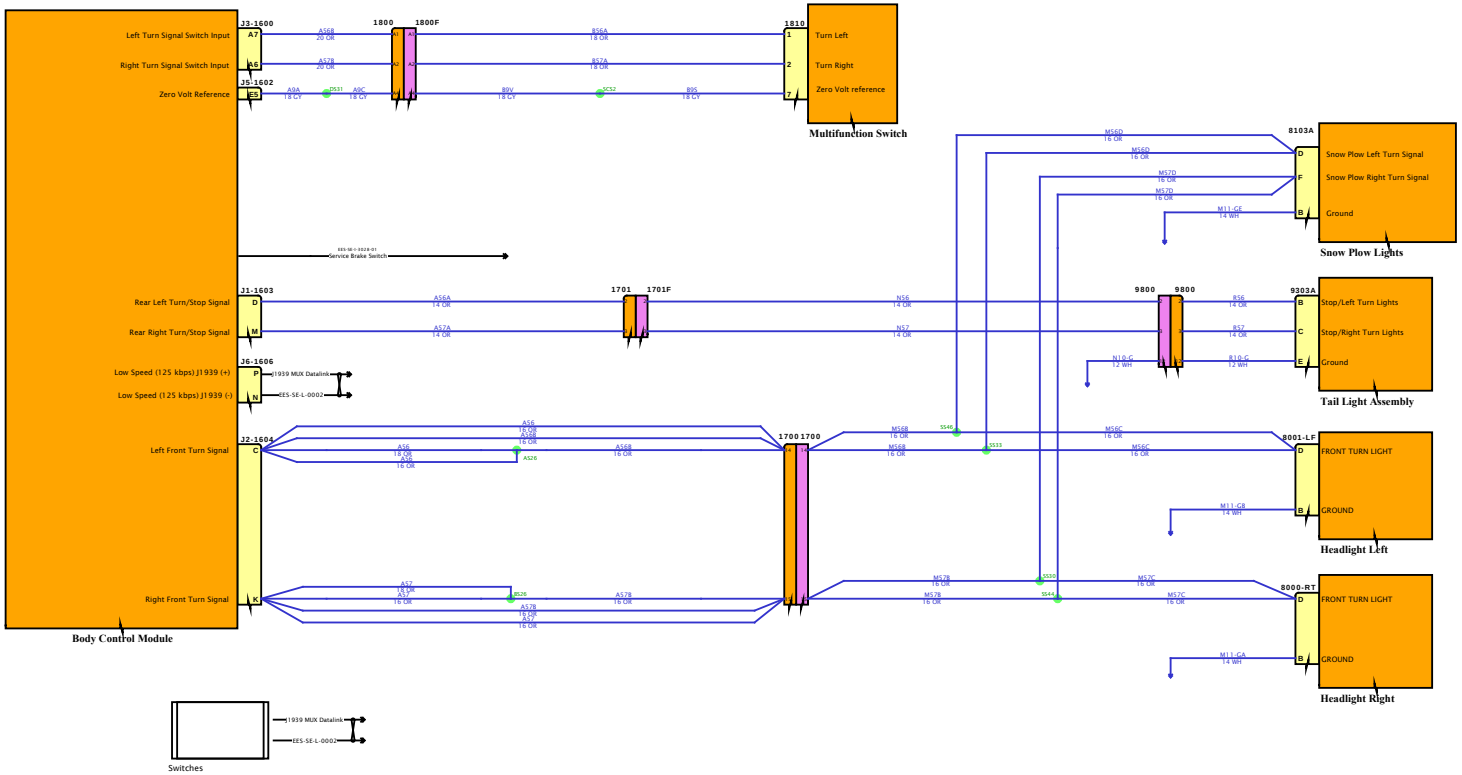

DESIGN DESCRIPTION

FEATURE CODES

SOFTWARE FEATURE CODES

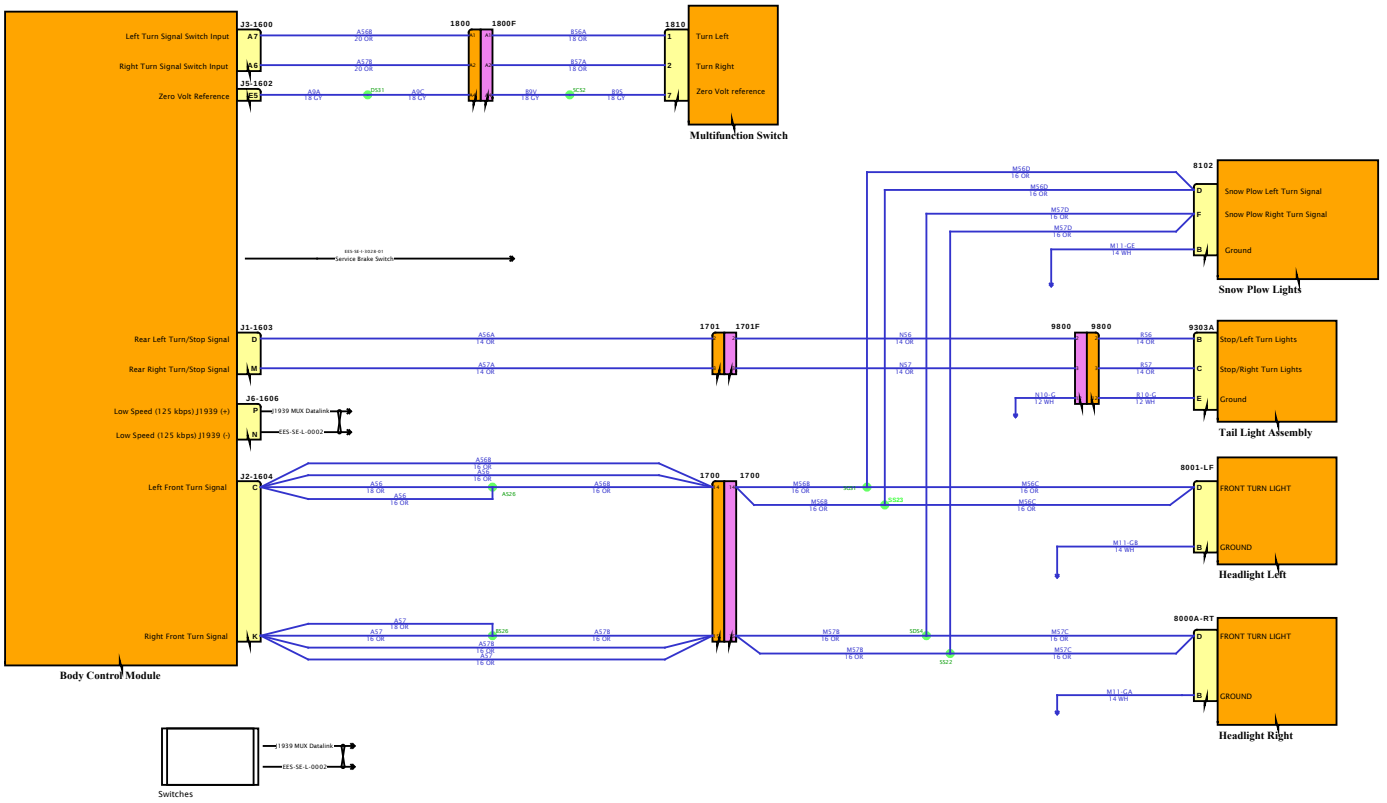

DESIGN DESCRIPTION

FEATURE CODES

SOFTWARE FEATURE CODES

NAVISTAR
NAVISTAR, INC. CONFIDENTIAL PROPRIETARY

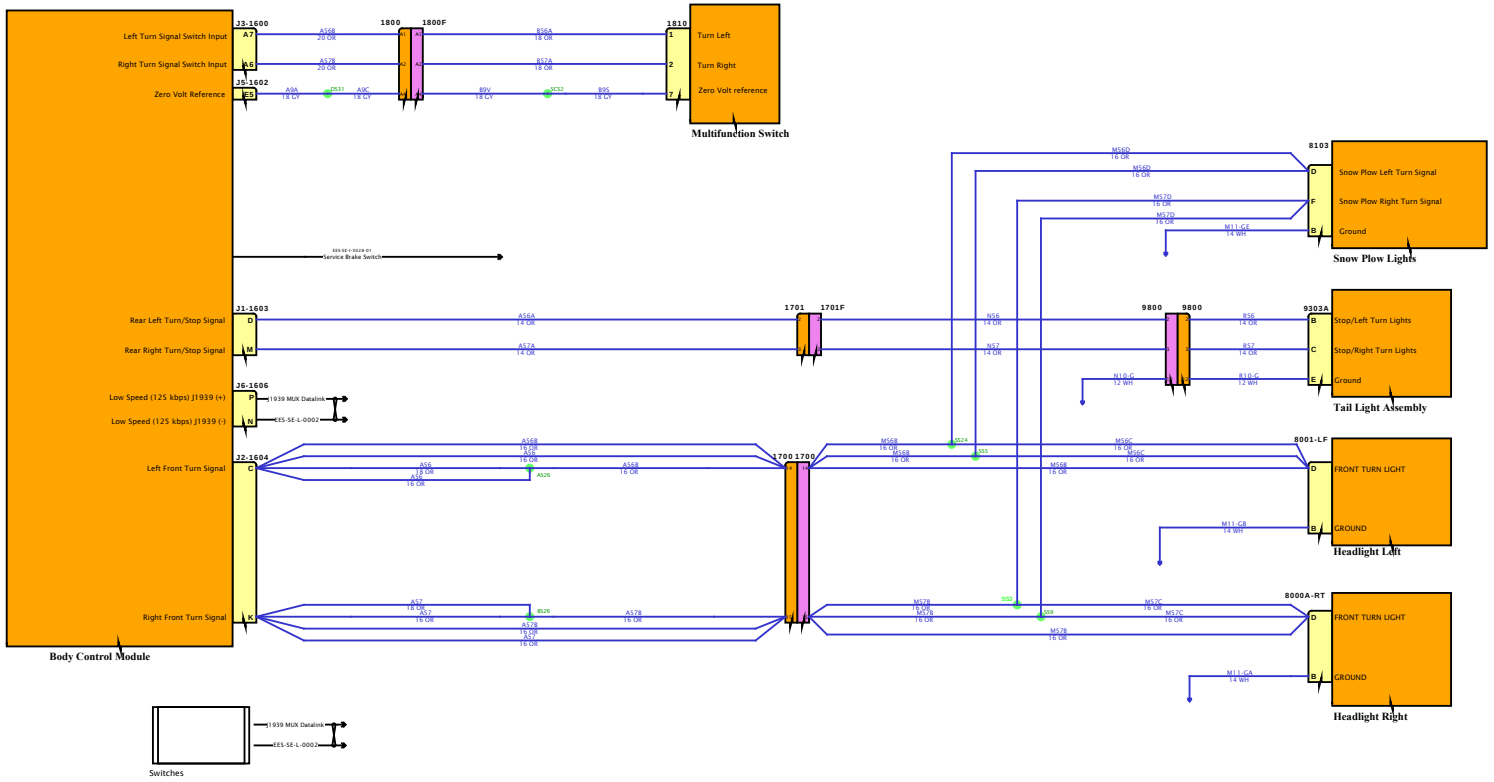

DESIGN DESCRIPTION

FEATURE CODES

SOFTWARE FEATURE CODES

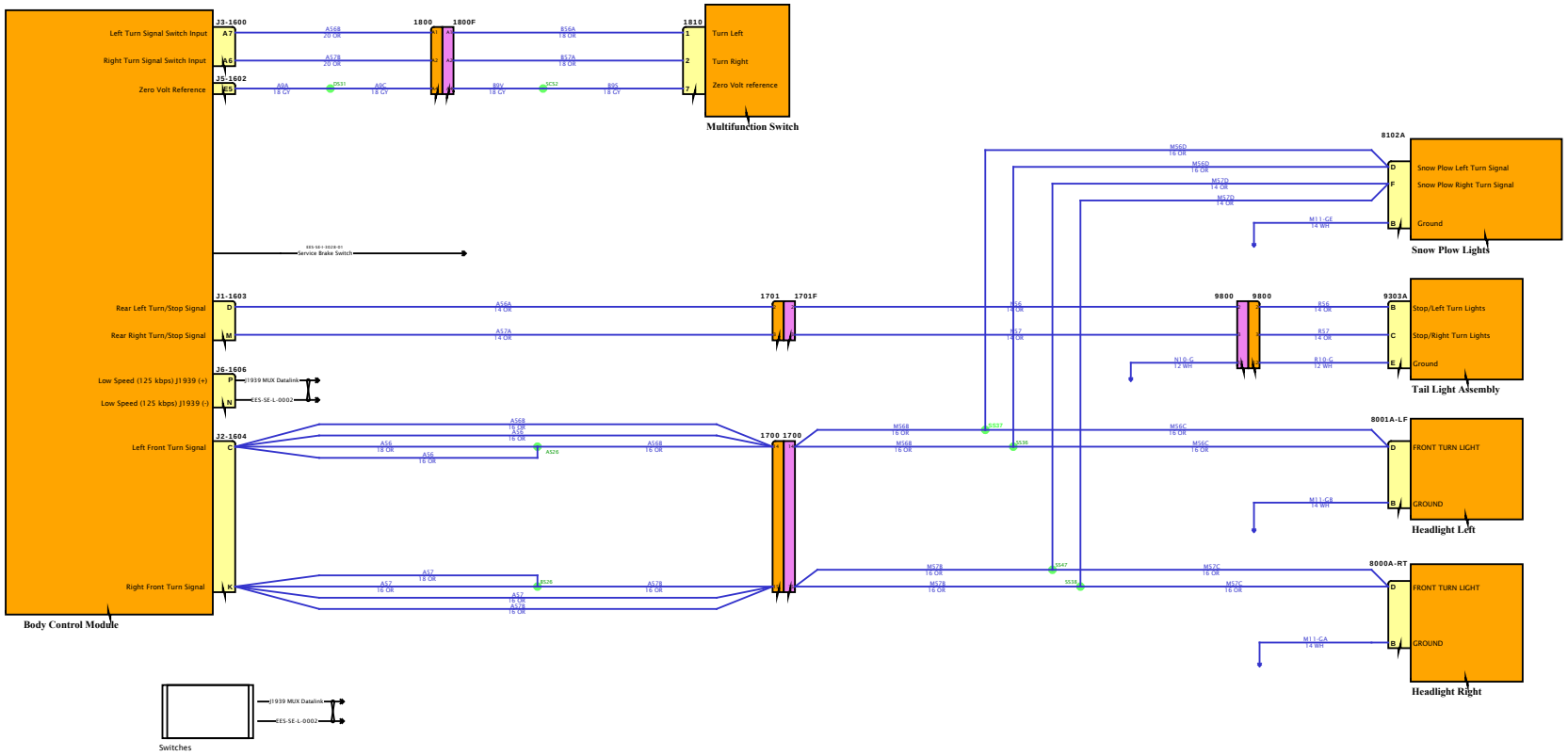

DESIGN DESCRIPTION

FEATURE CODES

SOFTWARE FEATURE CODES

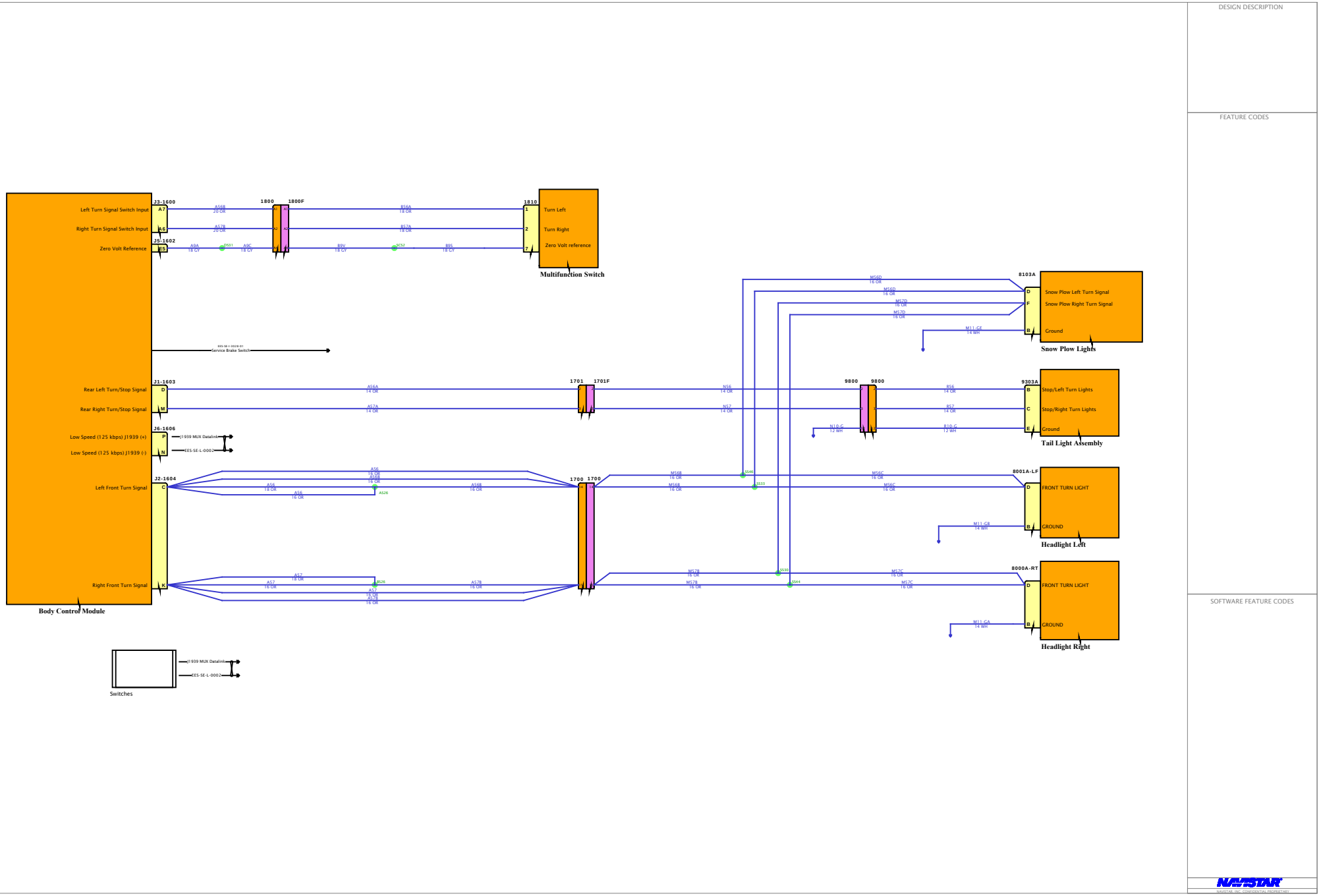
DESIGN DESCRIPTION
FEATURE CODES
SOFTWARE FEATURE CODES
Body Control Module
J3-1600
Left Turn Signal Switch Input
A7
Right Turn Signal Switch Input
B6
J5-1602
Zero Volt Reference
E5
AS6B 20 OR
AS7B 20 OR
A9A 18 GY
A9C 18 GY
1800
1800F
DS51
DS52
BS6A 18 OR
BS7A 18 OR
B9V 18 GY
B9S 18 GY
1810
Turn Left
Turn Right
Zero Volt reference
Multifunction Switch
Service Brake Switch
J1-1603
Rear Left Turn/Stop Signal
D
Rear Right Turn/Stop Signal
M
AS6A 14 OR
AS7A 14 OR
1701
1701F
NS6 14 OR
NS7 14 OR
9800
9800
BS6 14 OR
BS7 14 OR
N10-G 12 WH
R10-G 12 WH
9303A
Stop/Left Turn Lights
Stop/Right Turn Lights
Ground
Tail Light Assembly
J6-1606
Low Speed (125 kbps) J1939 (+)
P
Low Speed (125 kbps) J1939 (-)
N
J1939 MUX Datalink+
J1939 MUX Datalink-
EES-SE-L-0002
J2-1604
Left Front Turn Signal
C
AS6 16 OR
AS6 18 OR
AS6 16 OR
AS26
AS6B 16 OR
1700
1700
MS6B 16 OR
MS6B 16 OR
SS40
SS33
MS6C 16 OR
MS6C 16 OR
8001A-LF
FRONT TURN LIGHT
GROUND
M11-GB 14 WH
Headlight Left
Right Front Turn Signal
K
AS7 18 OR
AS7 16 OR
AS26
AS7 16 OR
AS7B 16 OR
AS7B 16 OR
MS7B 16 OR
MS7B 16 OR
SS39
SS44
MS7C 16 OR
MS7C 16 OR
8000A-RT
FRONT TURN LIGHT
GROUND
M11-GA 14 WH
Headlight Right
Switches
J1939 MUX Datalink+
J1939 MUX Datalink-
EES-SE-L-0002
8103A
Snow Plow Left Turn Signal
Snow Plow Right Turn Signal
Ground
MS6D 16 OR
MS6D 16 OR
MS7D 16 OR
MS7D 16 OR
M11-GE 14 WH
Snow Plow Lights
NAVISTAR
NAVISTAR, INC. CONFIDENTIAL PROPRIETARY

Diagram1

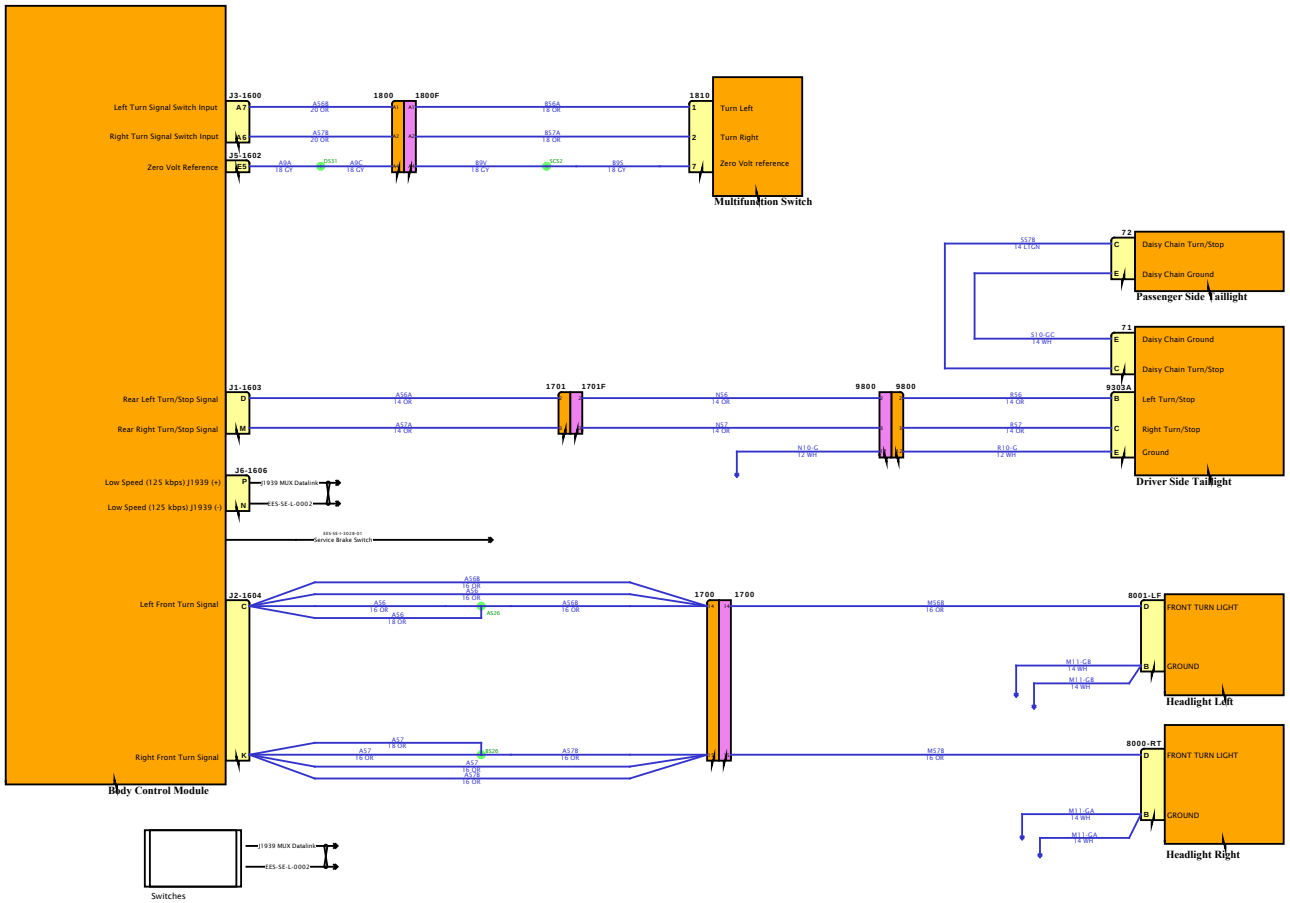

DESIGN DESCRIPTION

FEATURE CODES

SOFTWARE FEATURE CODES

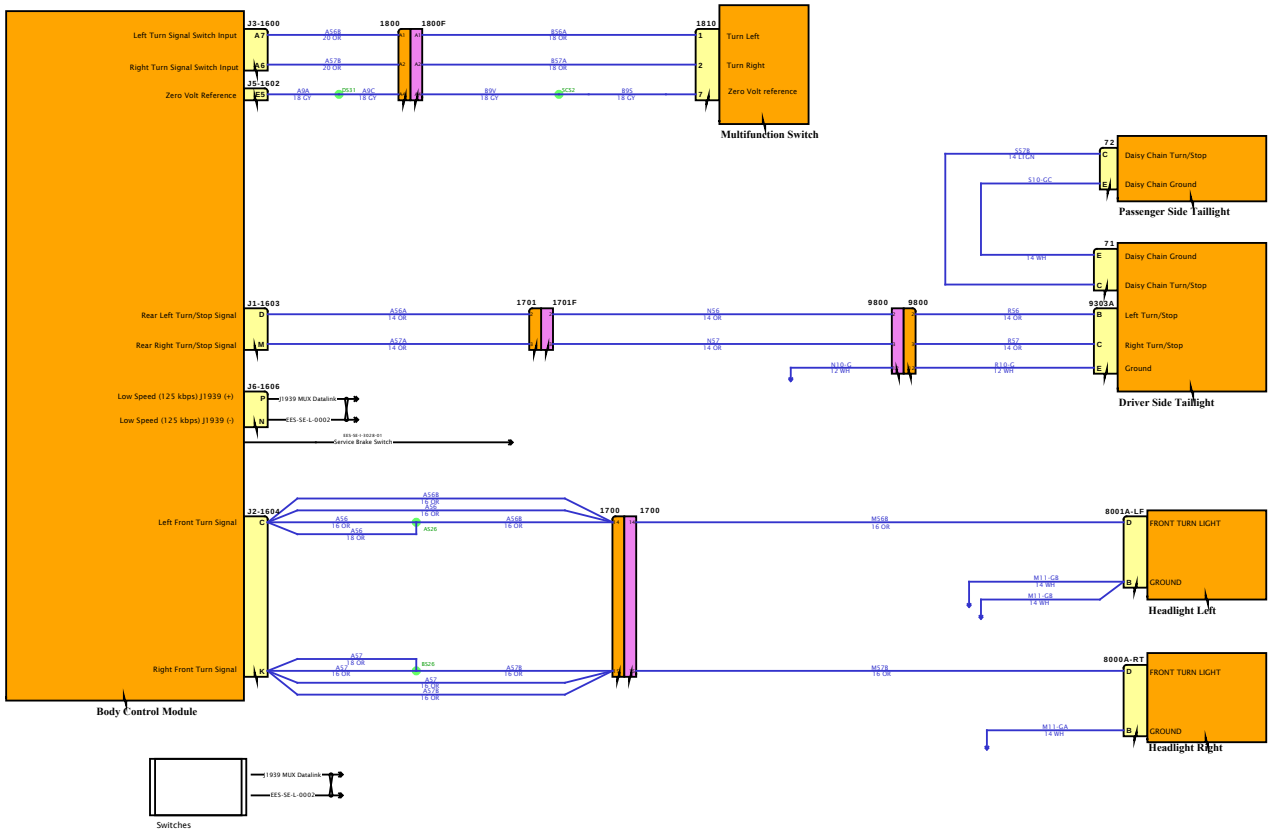

DESIGN DESCRIPTION

FEATURE CODES

SOFTWARE FEATURE CODES

DESIGN DESCRIPTION

FEATURE CODES

SOFTWARE FEATURE CODES

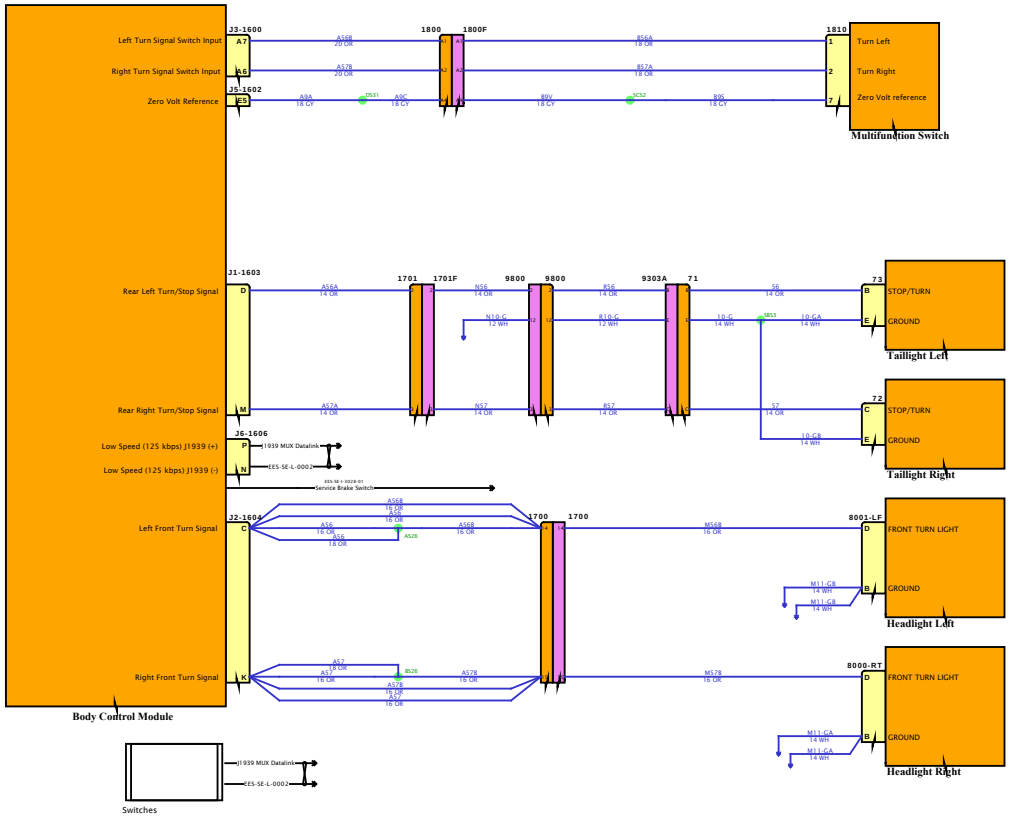

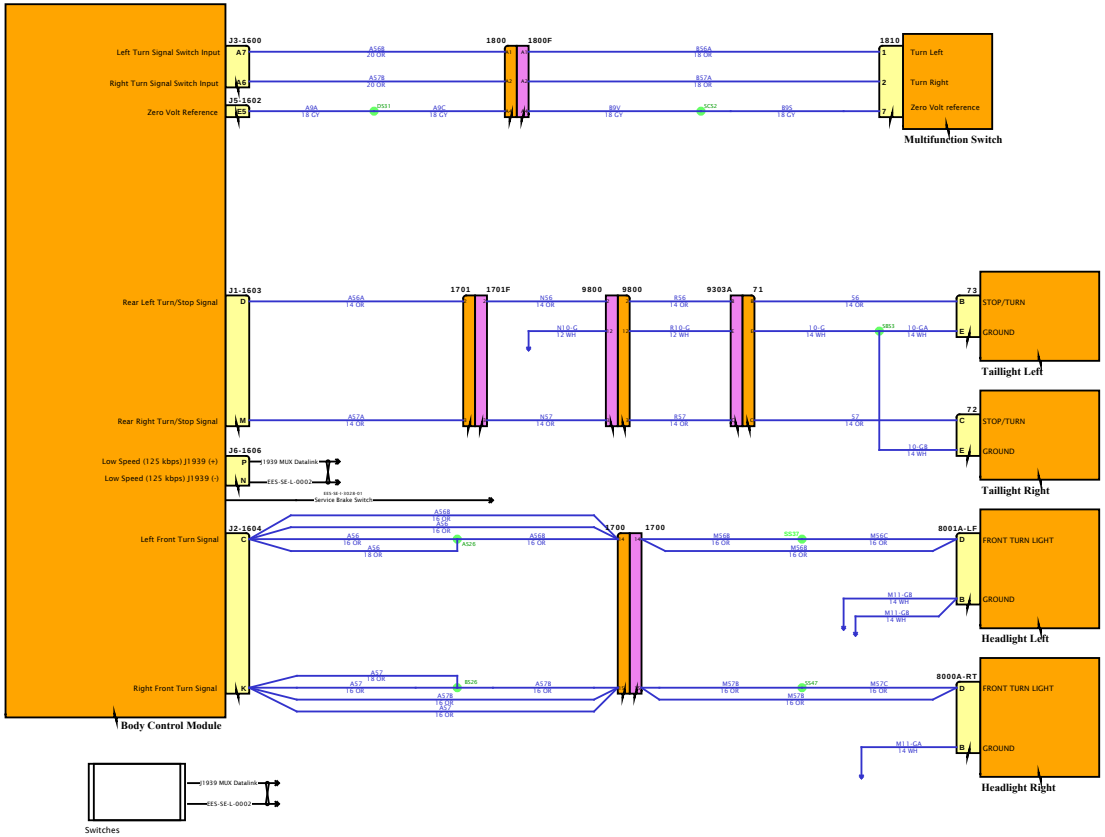

DESIGN DESCRIPTION

FEATURE CODES

SOFTWARE FEATURE CODES

Diagram1

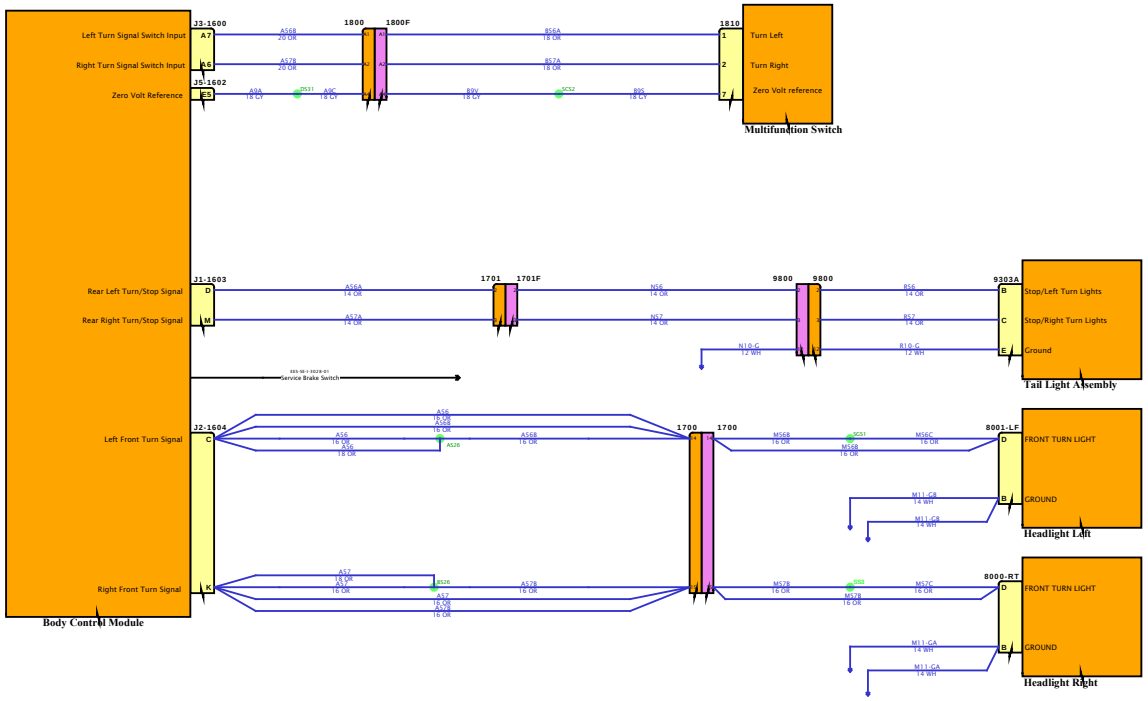

DESIGN DESCRIPTION

FEATURE CODES

SOFTWARE FEATURE CODES

NAVISTAR INC. CONFIDENTIAL PROPRIETARY

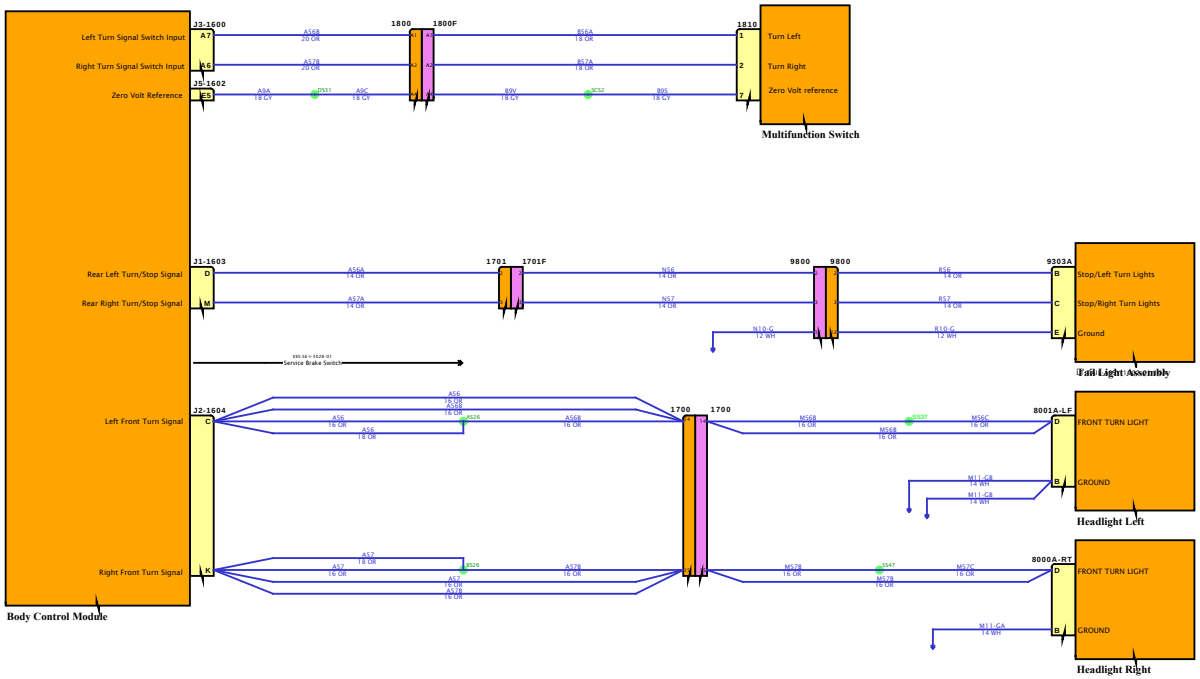

DESIGN DESCRIPTION

FEATURE CODES

SOFTWARE FEATURE CODES

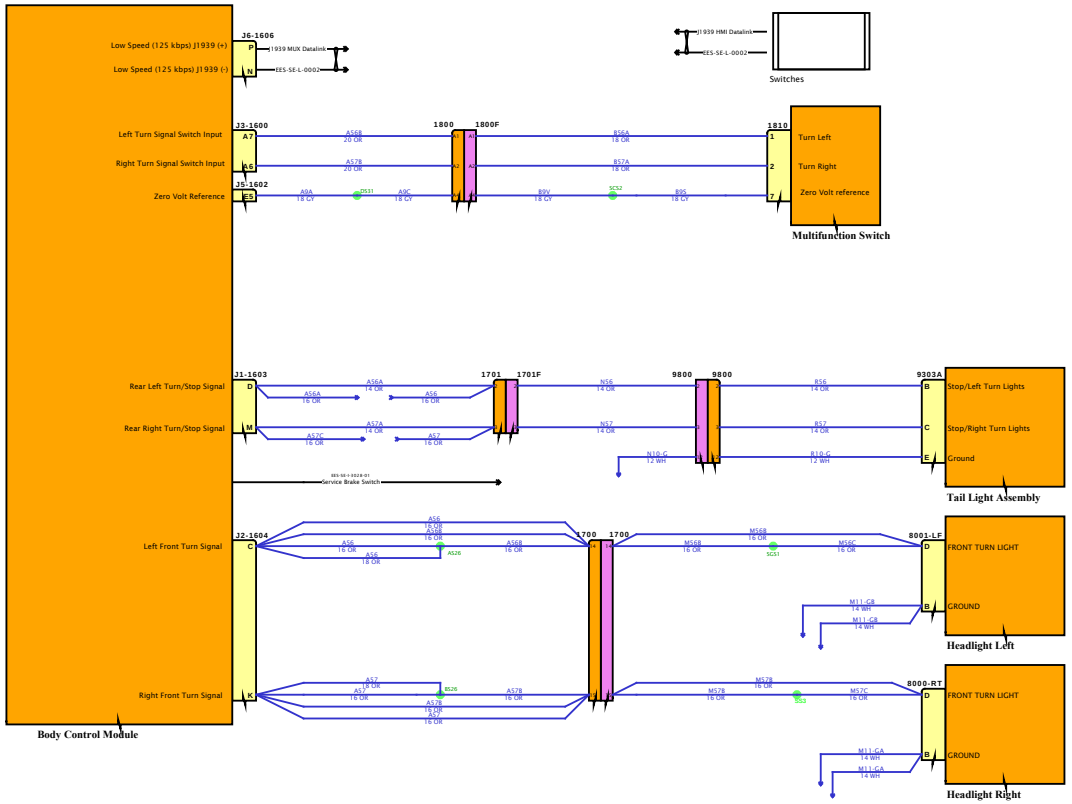

DESIGN DESCRIPTION

FEATURE CODES

SOFTWARE FEATURE CODES

NAVISTAR INC. CONFIDENTIAL PROPRIETARY

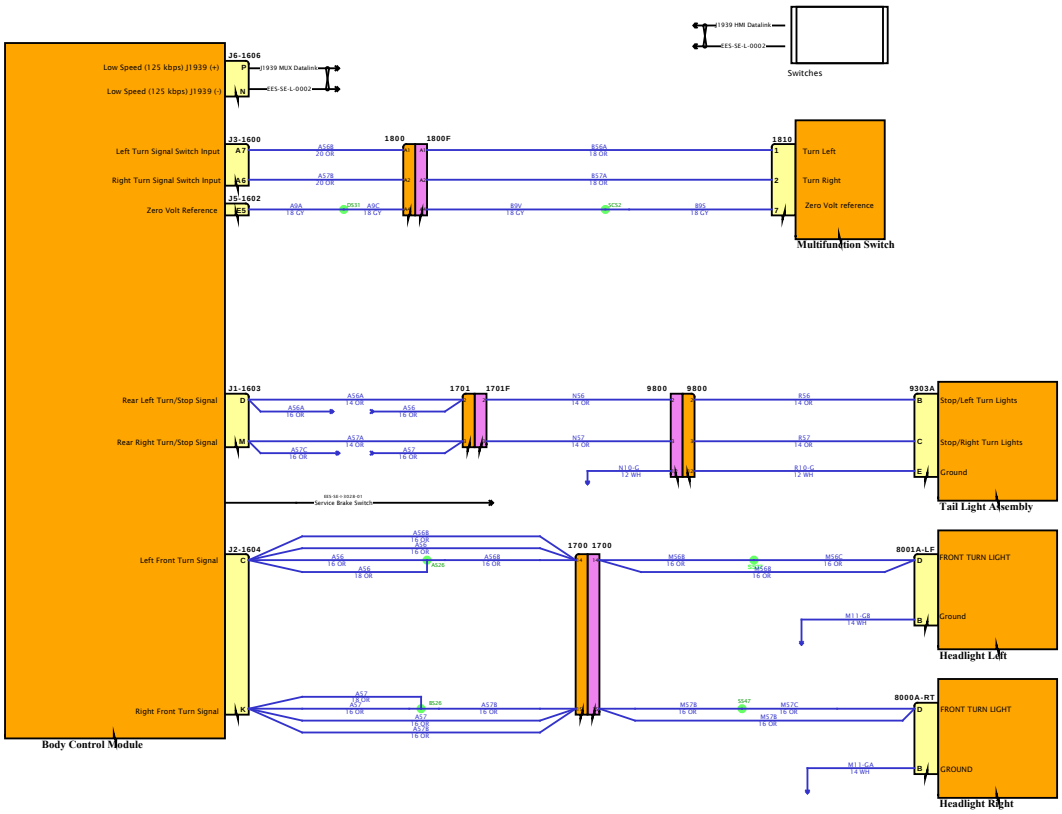

DESIGN DESCRIPTION

FEATURE CODES

SOFTWARE FEATURE CODES

Diagram1

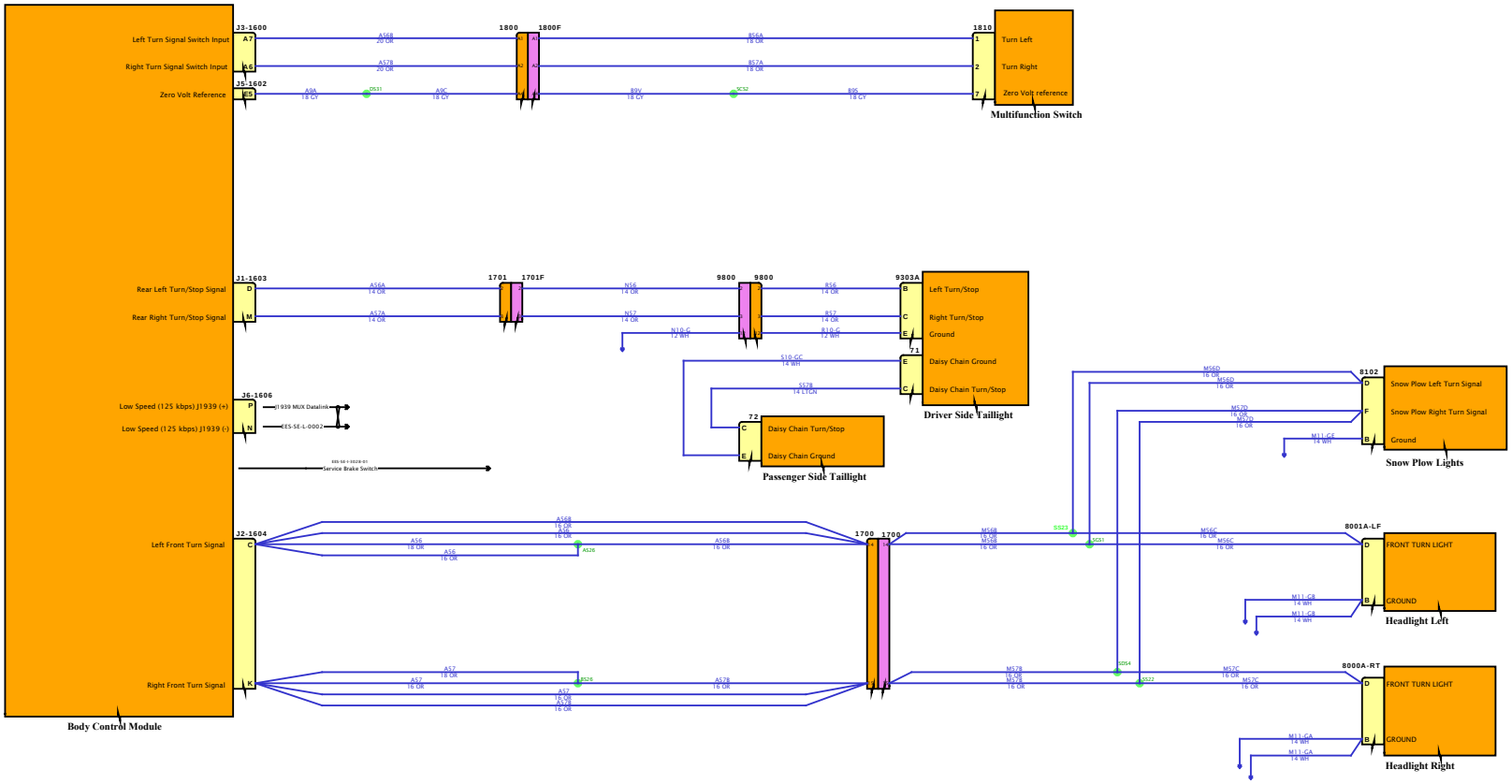

DESIGN DESCRIPTION

FEATURE CODES

SOFTWARE FEATURE CODES

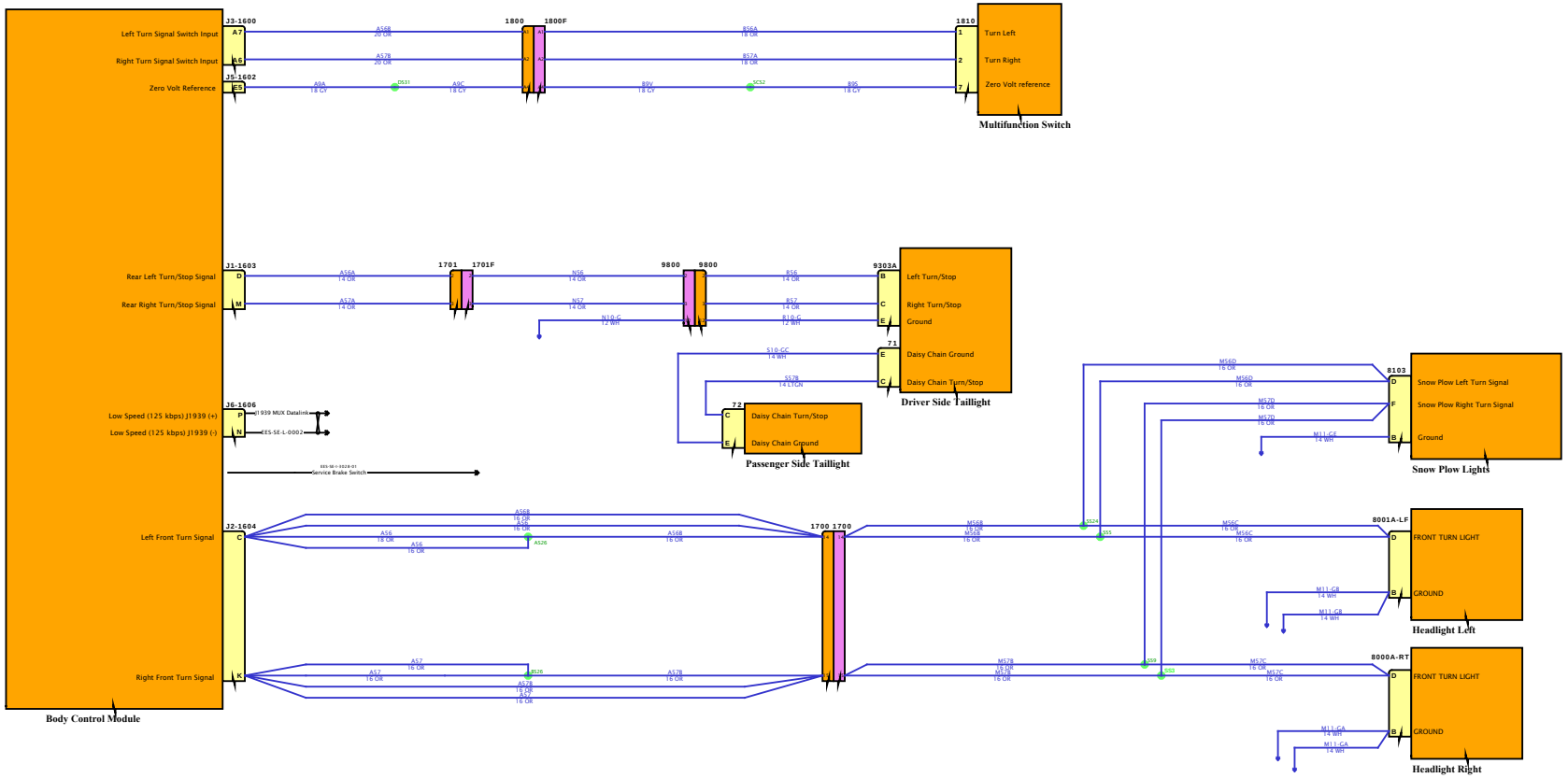

DESIGN DESCRIPTION

FEATURE CODES

SOFTWARE FEATURE CODES

Diagram3

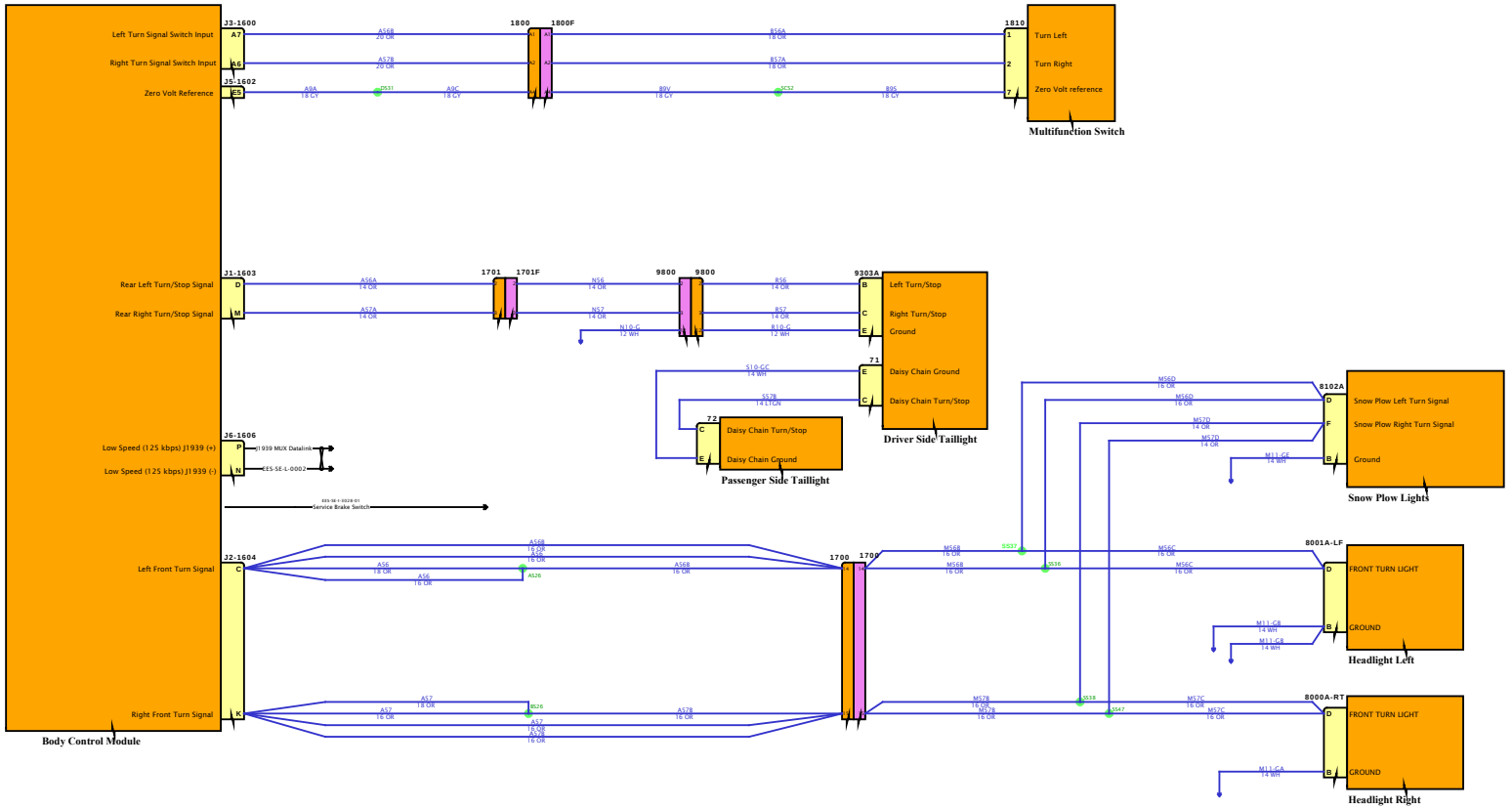

DESIGN DESCRIPTION

FEATURE CODES

SOFTWARE FEATURE CODES

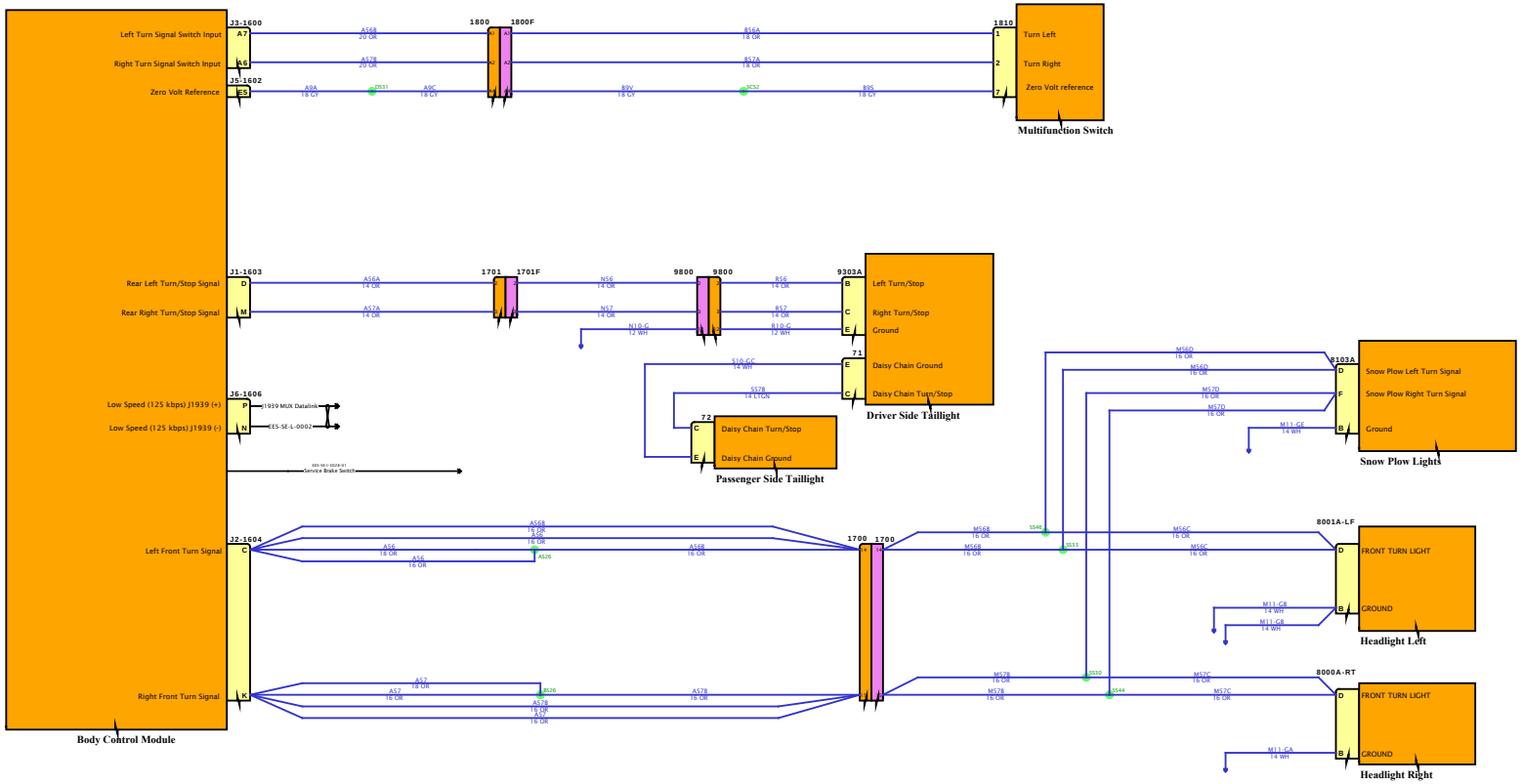

DESIGN DESCRIPTION

FEATURE CODES

SOFTWARE FEATURE CODES

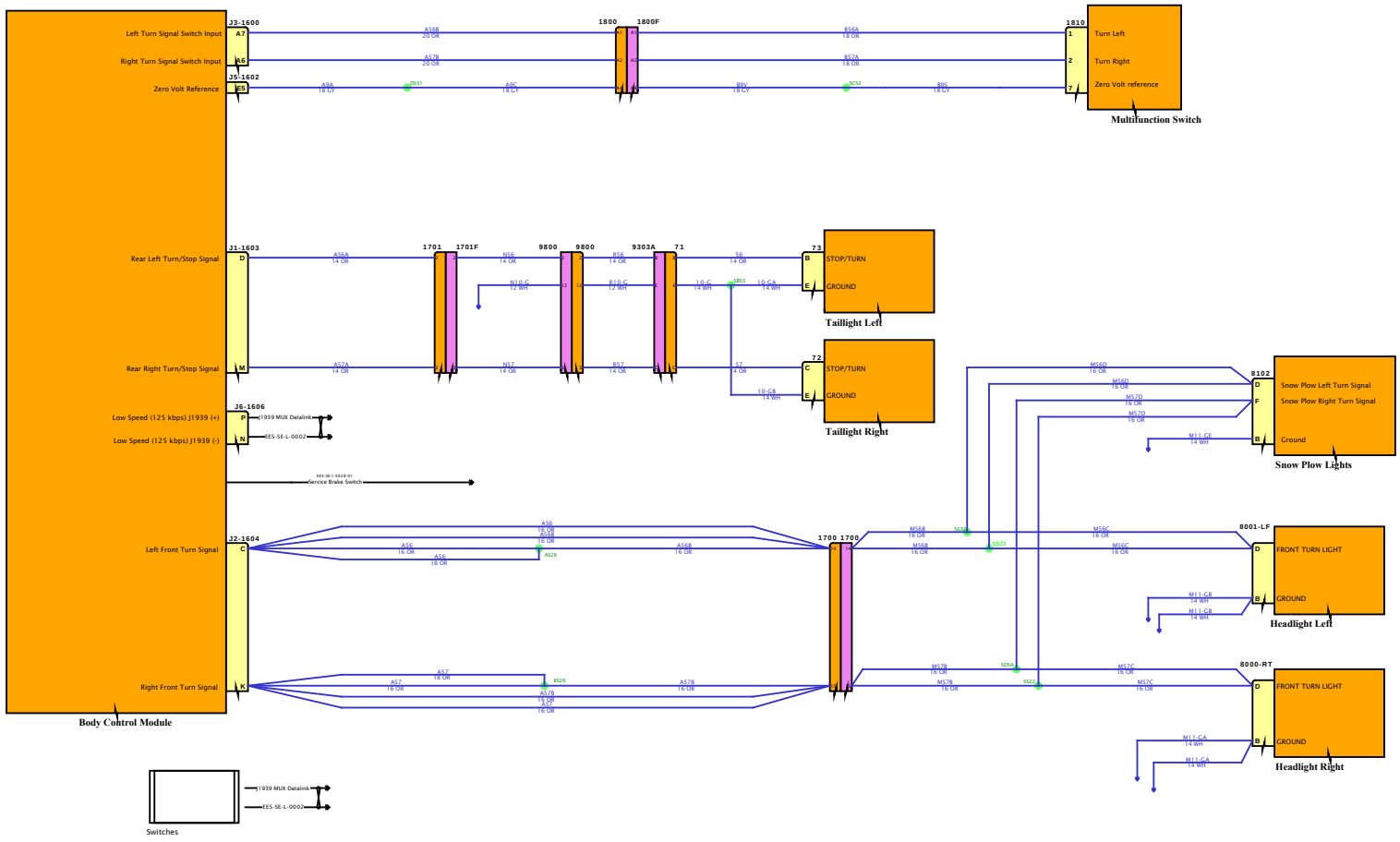

DESIGN DESCRIPTION

FEATURE CODES

SOFTWARE FEATURE CODES

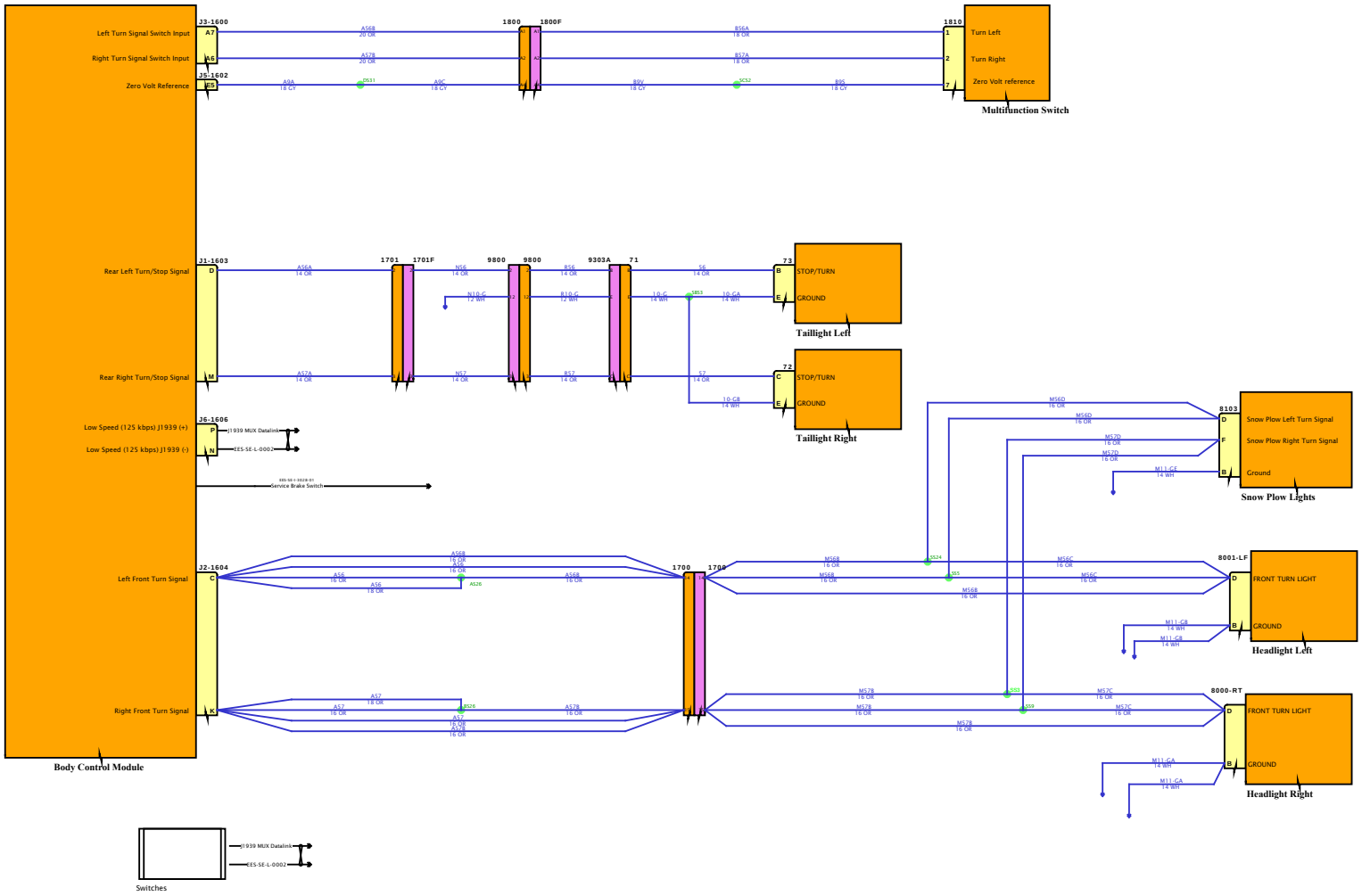

DESIGN DESCRIPTION

FEATURE CODES

SOFTWARE FEATURE CODES

Diagram3

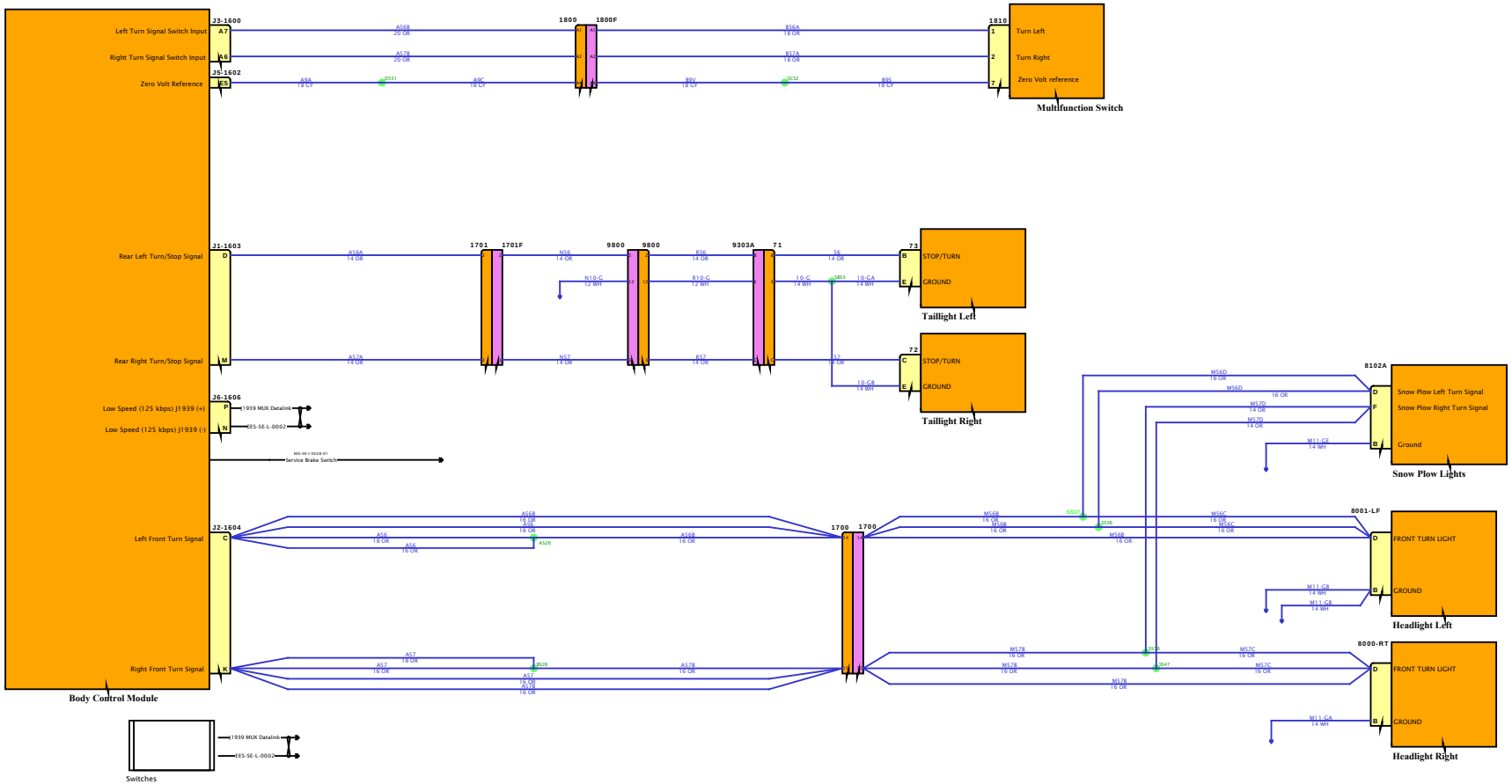

DESIGN DESCRIPTION

FEATURE CODES

SOFTWARE FEATURE CODES

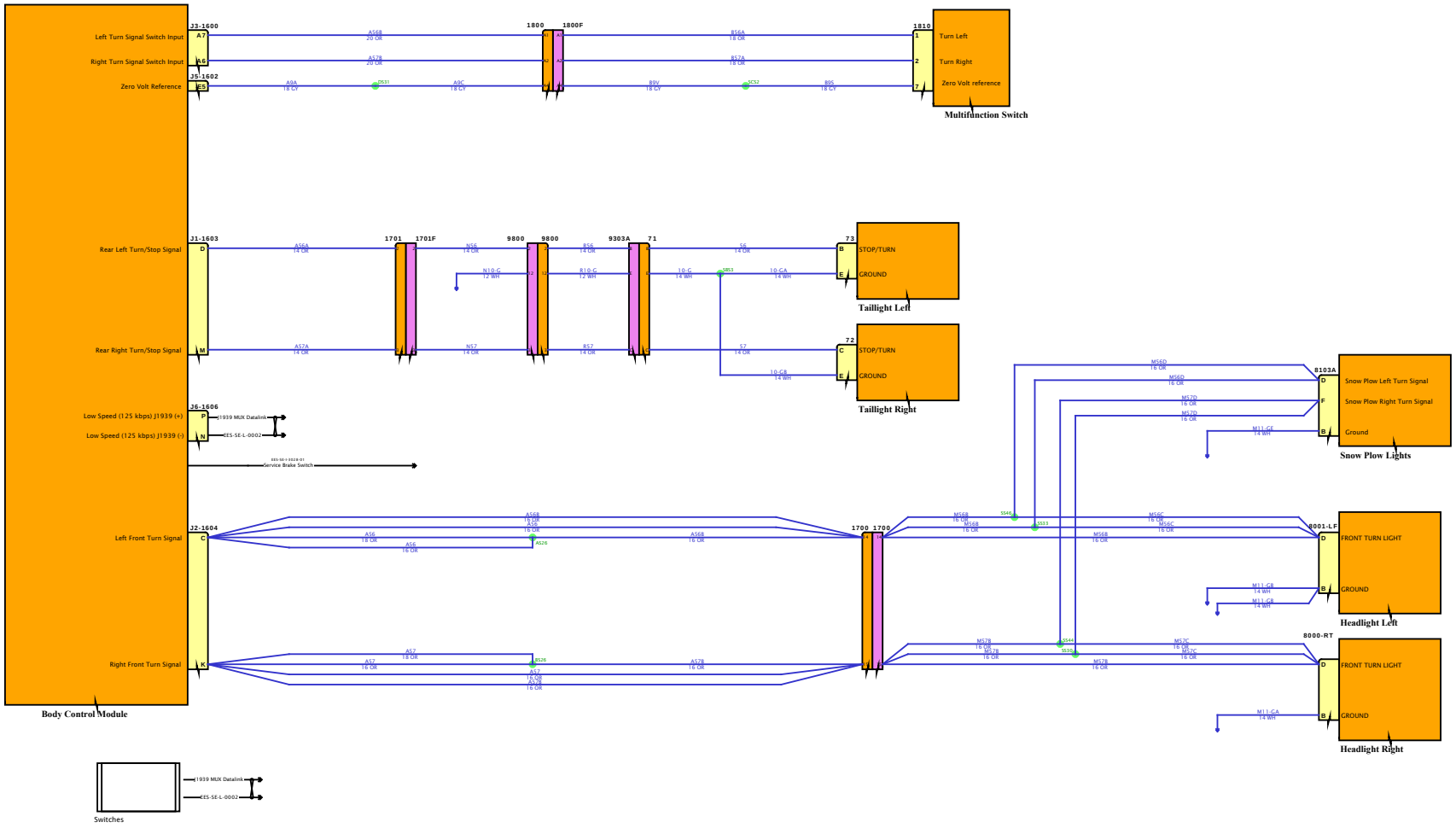

DESIGN DESCRIPTION

FEATURE CODES

SOFTWARE FEATURE CODES

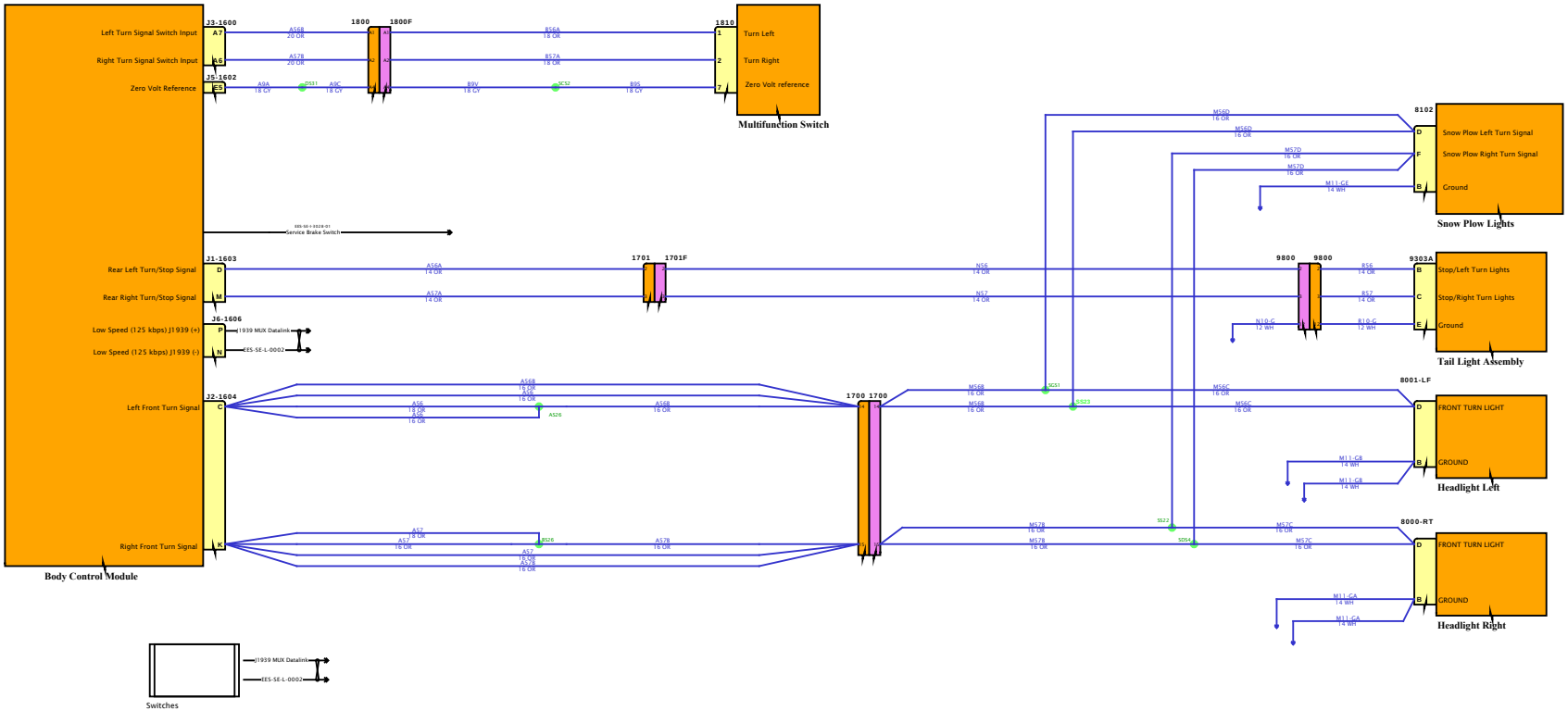

DESIGN DESCRIPTION

FEATURE CODES

SOFTWARE FEATURE CODES

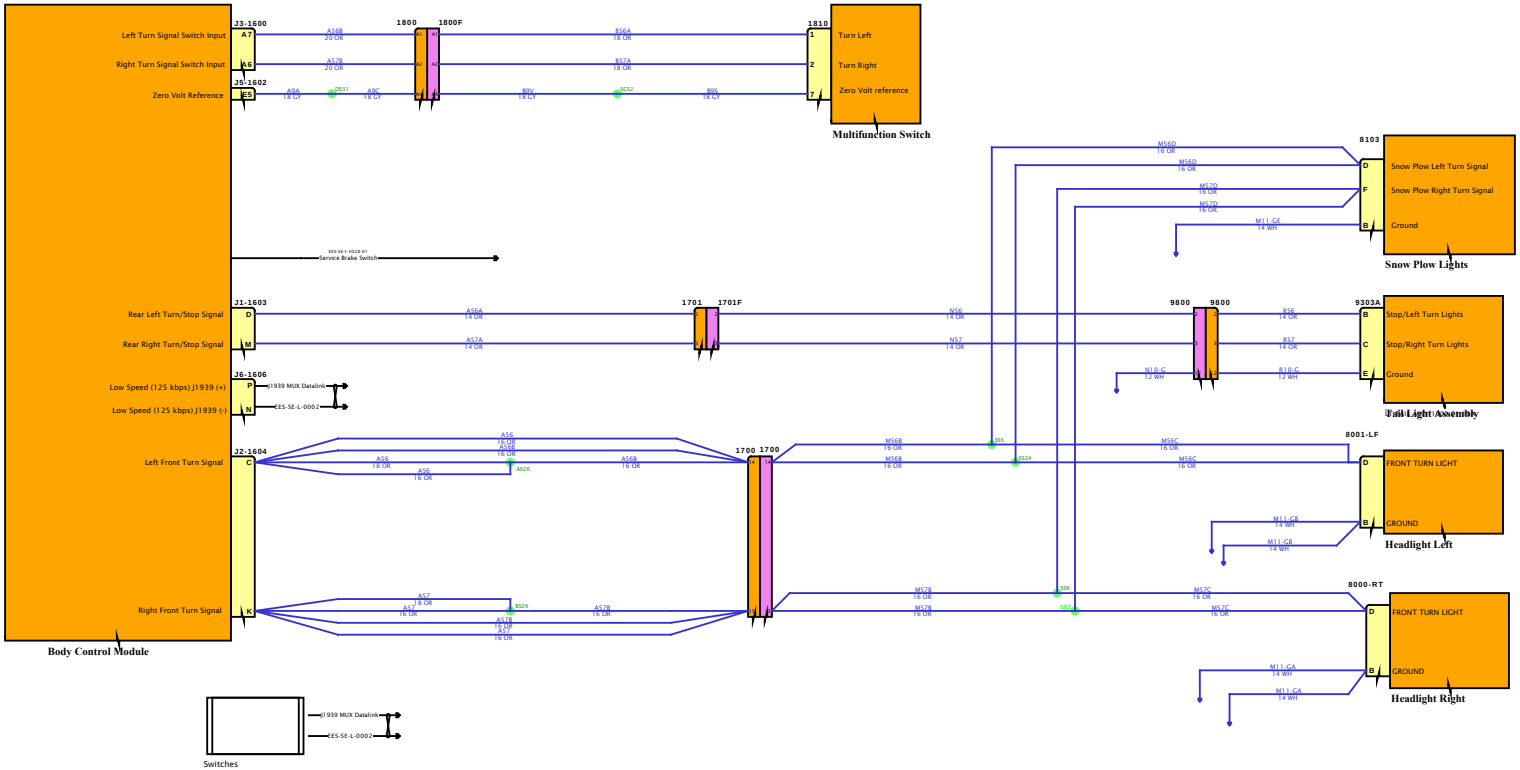

DESIGN DESCRIPTION

FEATURE CODES

SOFTWARE FEATURE CODES

NAVISTAR
NAVISTAR, INC. CONFIDENTIAL PROPRIETARY

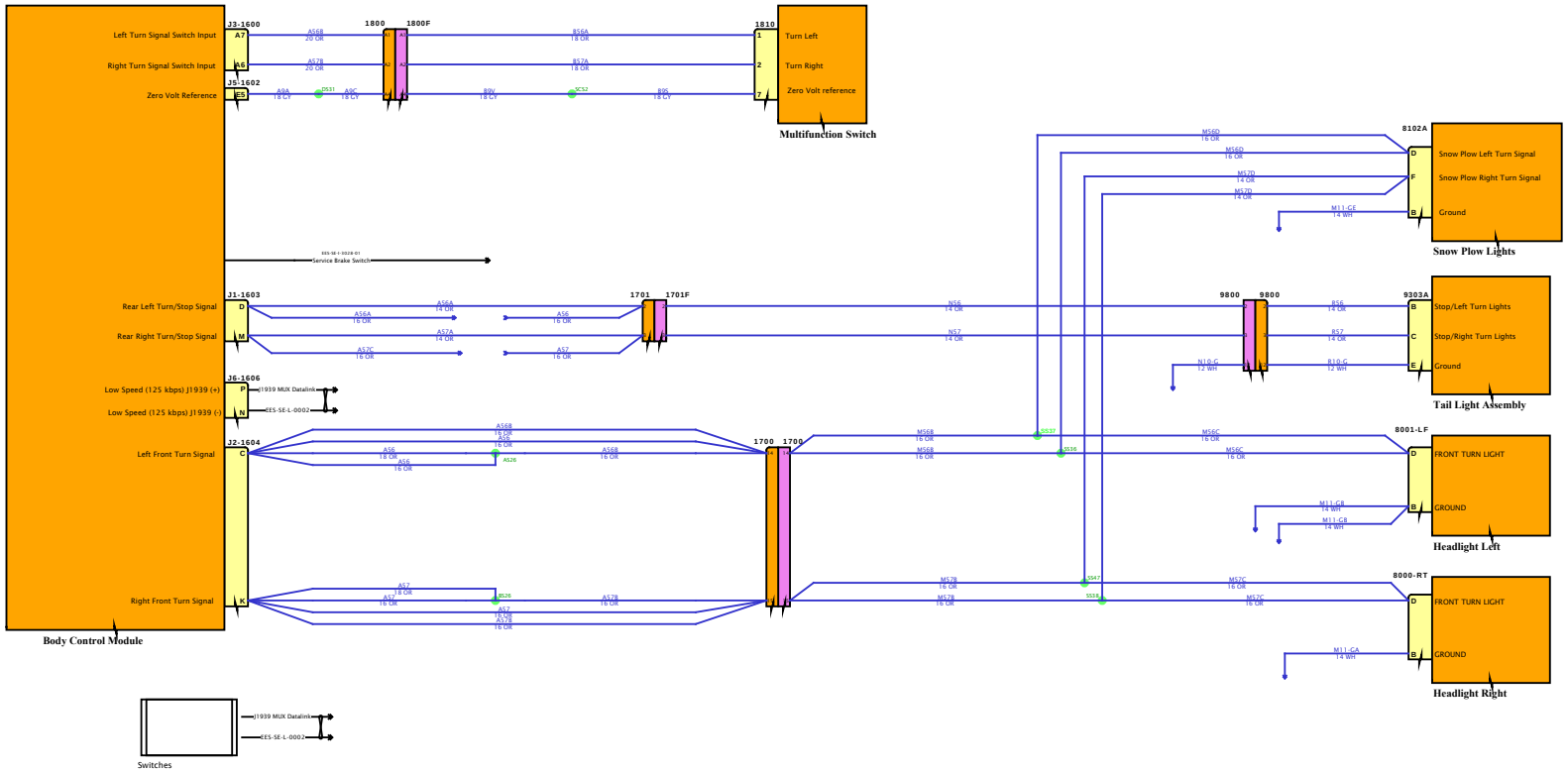

DESIGN DESCRIPTION

FEATURE CODES

SOFTWARE FEATURE CODES

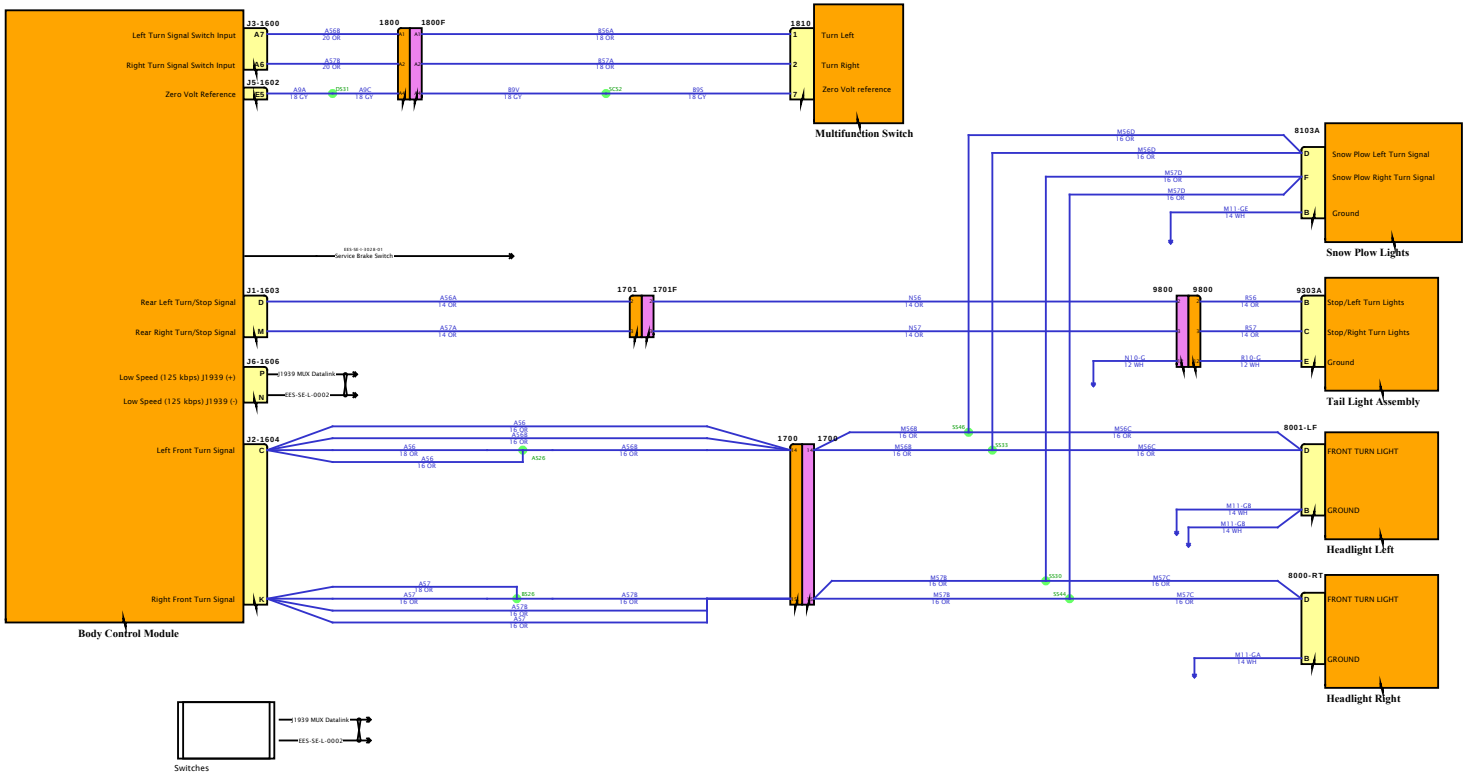

DESIGN DESCRIPTION

FEATURE CODES

SOFTWARE FEATURE CODES

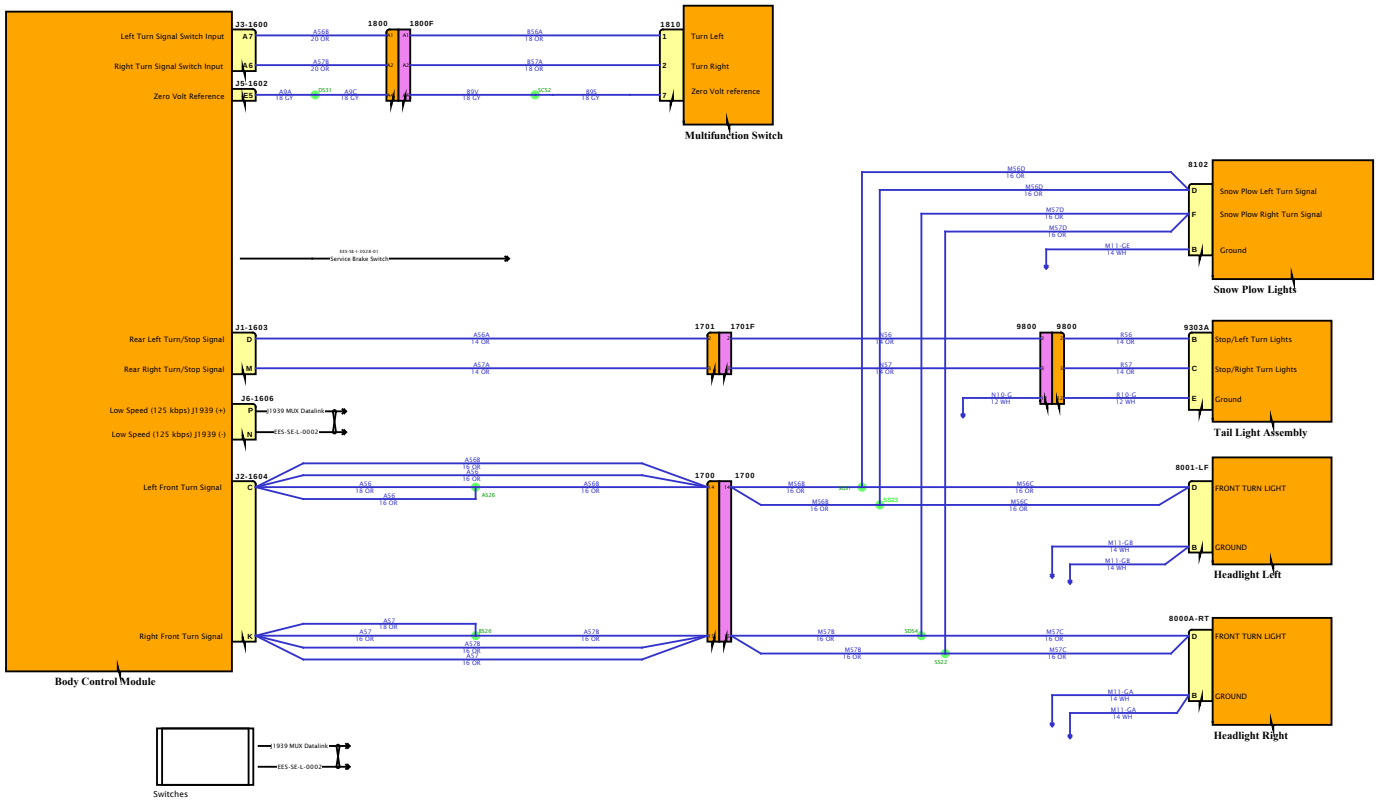

DESIGN DESCRIPTION

FEATURE CODES

SOFTWARE FEATURE CODES

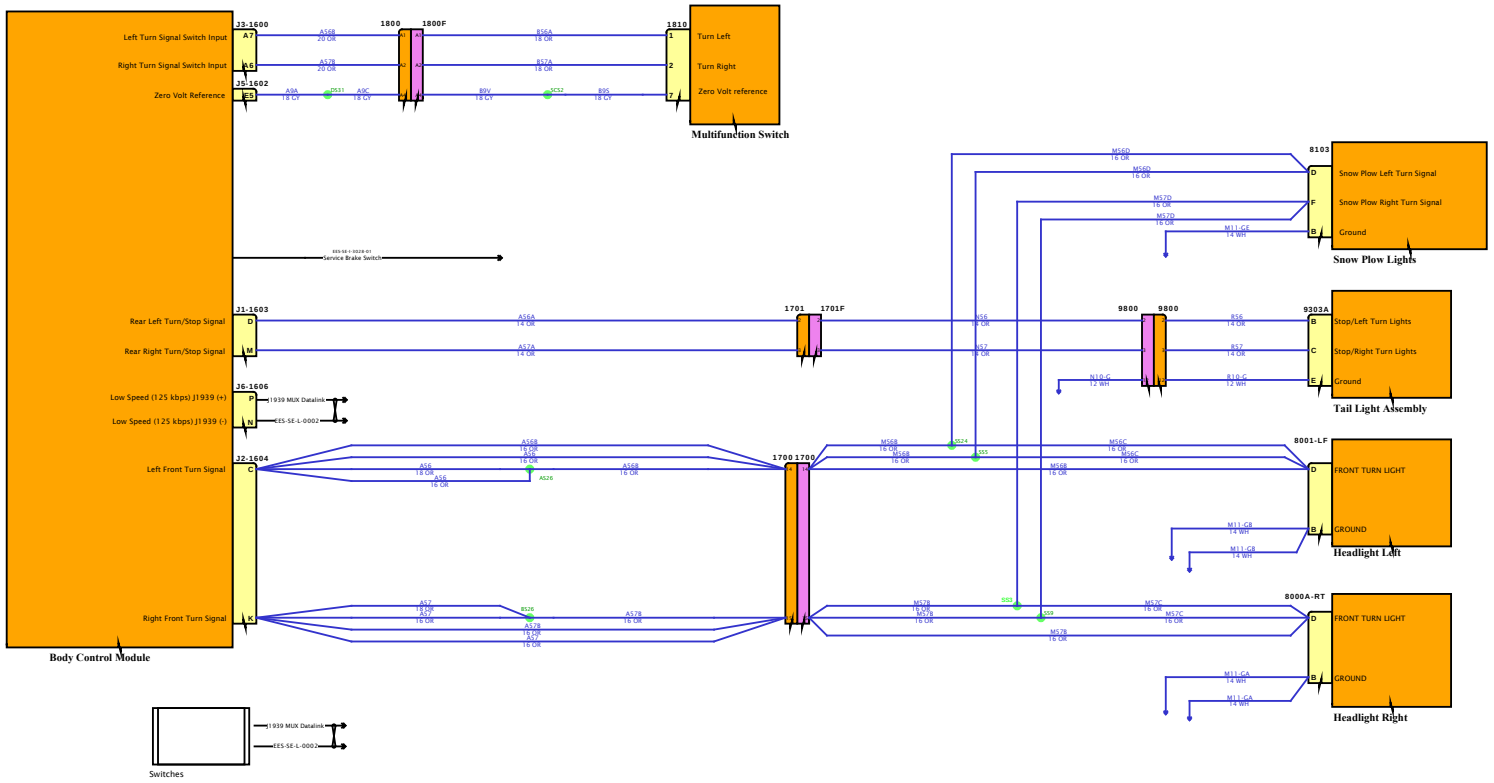

DESIGN DESCRIPTION

FEATURE CODES

SOFTWARE FEATURE CODES

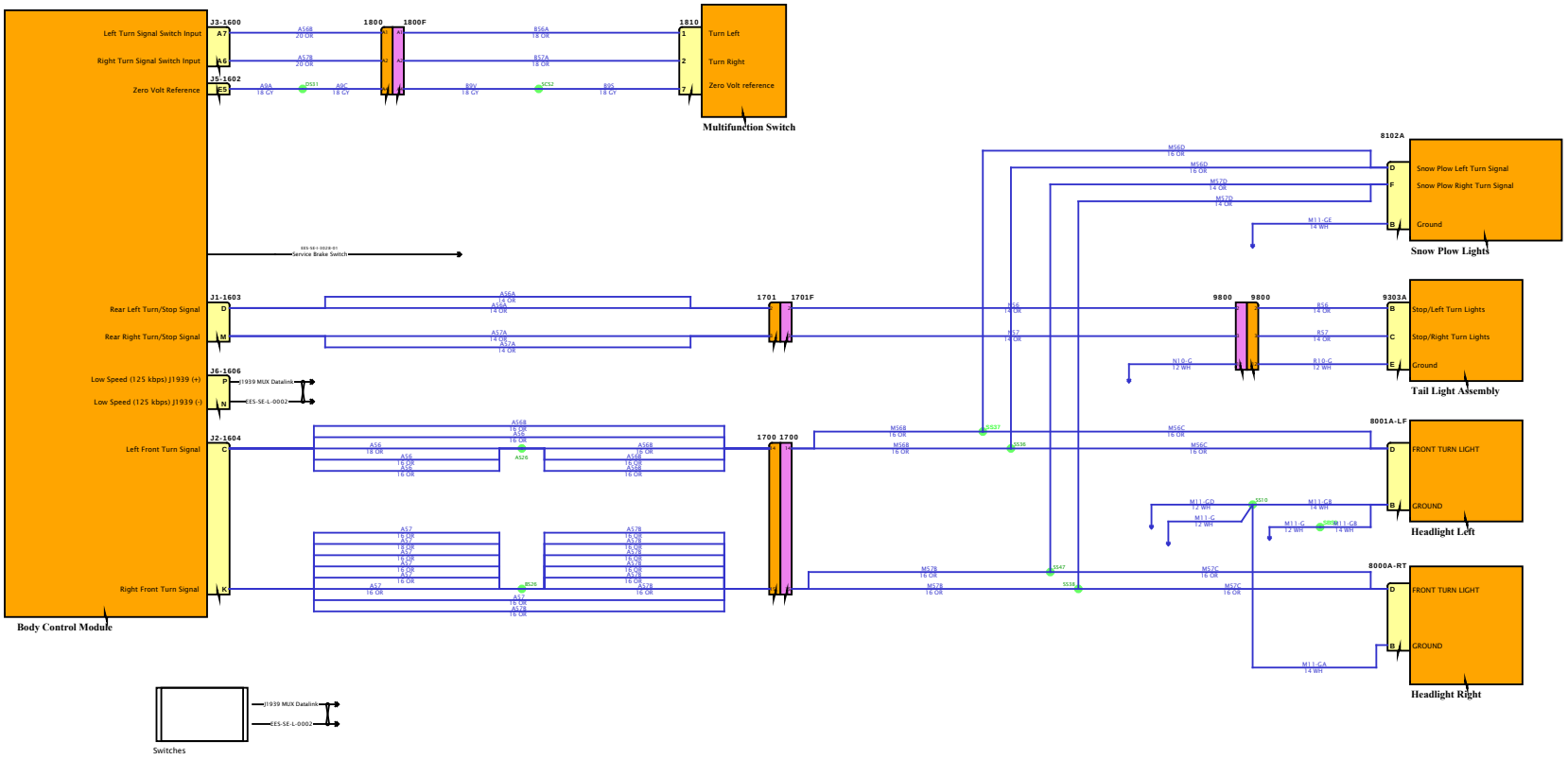

DESIGN DESCRIPTION

FEATURE CODES

SOFTWARE FEATURE CODES

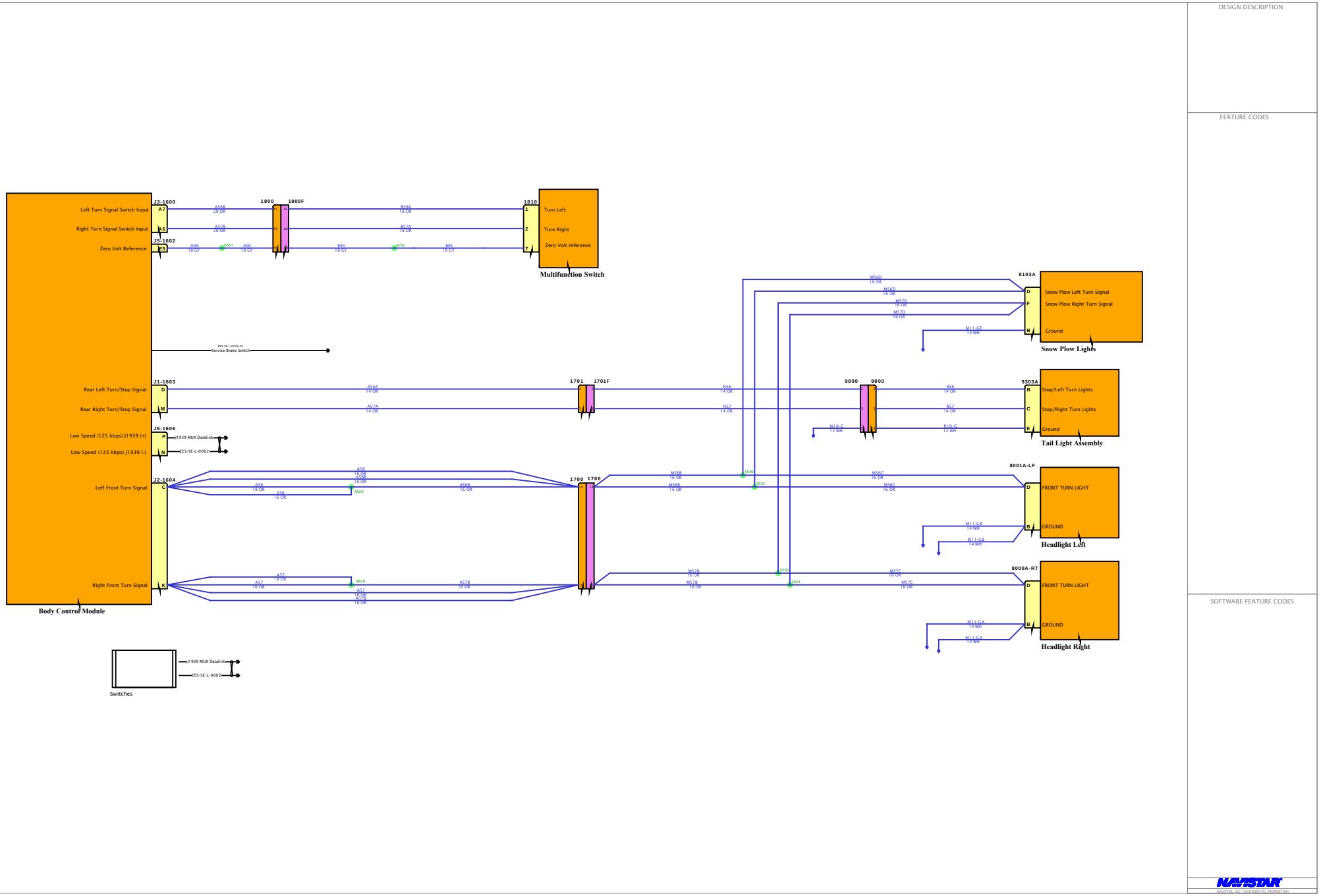
DESIGN DESCRIPTION
FEATURE CODES
SOFTWARE FEATURE CODES
Body Control Module
J3-1600
Left Turn Signal Switch Input
A7
Right Turn Signal Switch Input
B6
J5-1602
Zero Volt Reference
E5
1800
1800F
1810
Turn Left
Turn Right
Zero Volt reference
Multifunction Switch
Service Brake Switch
J1-1603
Rear Left Turn/Stop Signal
D
Rear Right Turn/Stop Signal
M
J6-1606
Low Speed (125 kbps) J1939 (+)
P
Low Speed (125 kbps) J1939 (-)
N
J1939 MUX Datalink
CES-SE-L-0002
J2-1604
Left Front Turn Signal
C
Right Front Turn Signal
K
1701
1701F
1700
1700
9800
9800
8103A
Snow Plow Left Turn Signal
Snow Plow Right Turn Signal
Ground
Snow Plow Lights
9303A
Stop/Left Turn Lights
Stop/Right Turn Lights
Ground
Tail Light Assembly
8001A-LF
FRONT TURN LIGHT
GROUND
Headlight Left
8000A-RT
FRONT TURN LIGHT
GROUND
Headlight Right
Switches
J1939 MUX Datalink
CES-SE-L-0002
NAVISTAR

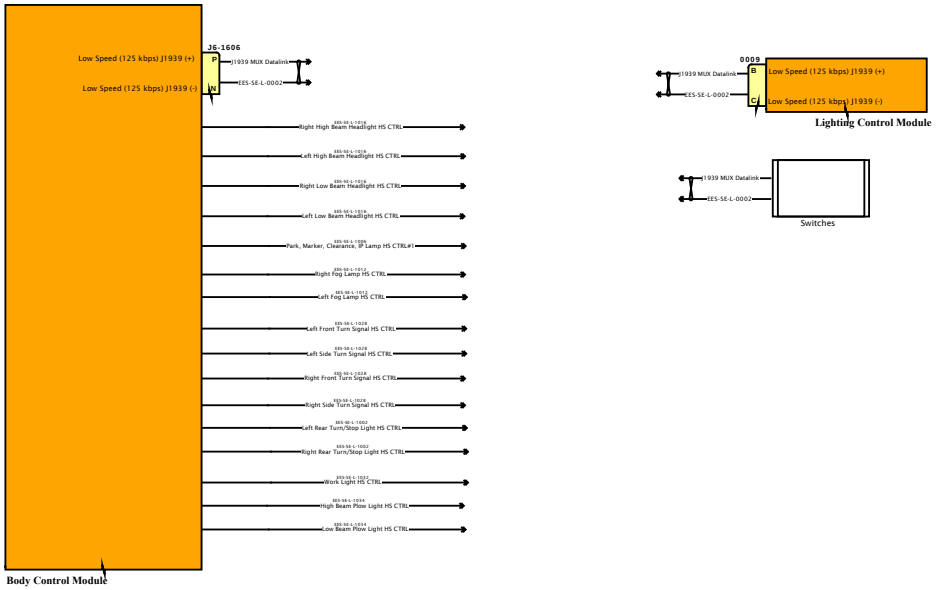

DESIGN DESCRIPTION

FEATURE CODES

SOFTWARE FEATURE CODES

NAVISTAR
NAVISTAR, INC. CONFIDENTIAL PROPRIETARY

Diagram1

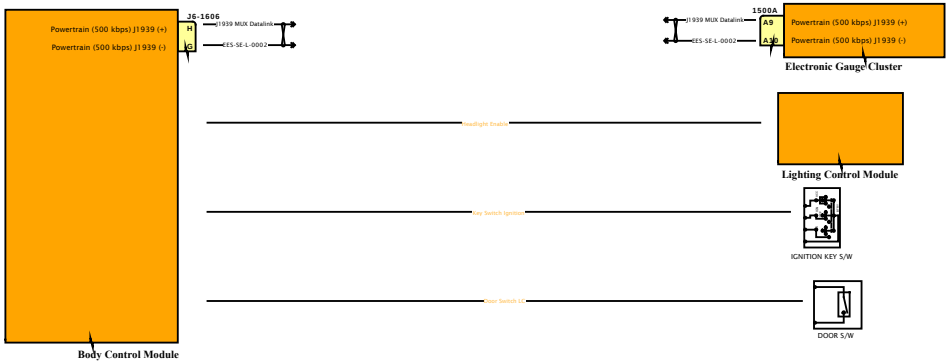

DESIGN DESCRIPTION

FEATURE CODES

SOFTWARE FEATURE CODES

NAVISTAR INC. CONFIDENTIAL PROPRIETARY

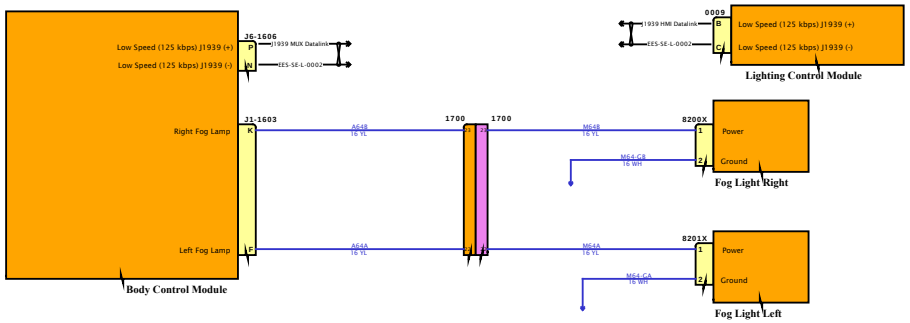

DESIGN DESCRIPTION

FEATURE CODES

SOFTWARE FEATURE CODES

NAVISTAR
NAVISTAR, INC. CONFIDENTIAL PROPRIETARY

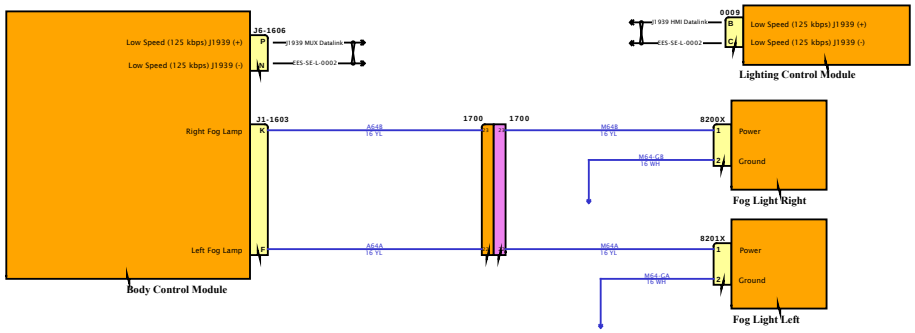

DESIGN DESCRIPTION

FEATURE CODES

SOFTWARE FEATURE CODES

NAVISTAR
NAVISTAR, INC. CONFIDENTIAL PROPRIETARY

Diagram1

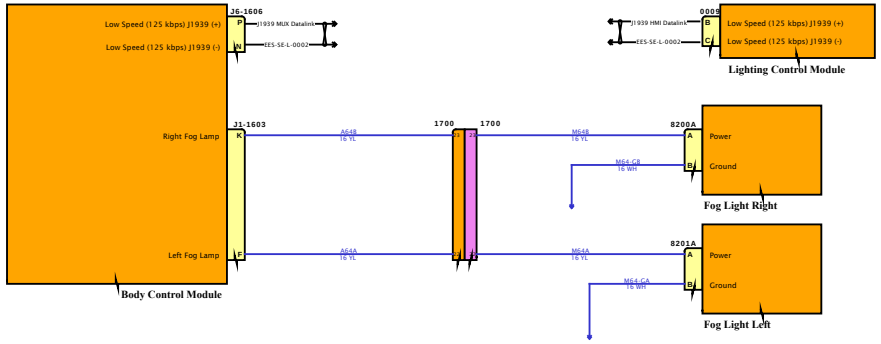

DESIGN DESCRIPTION

FEATURE CODES

SOFTWARE FEATURE CODES

NAVISTAR
NAVISTAR, INC. CONFIDENTIAL PROPRIETARY

Diagram2

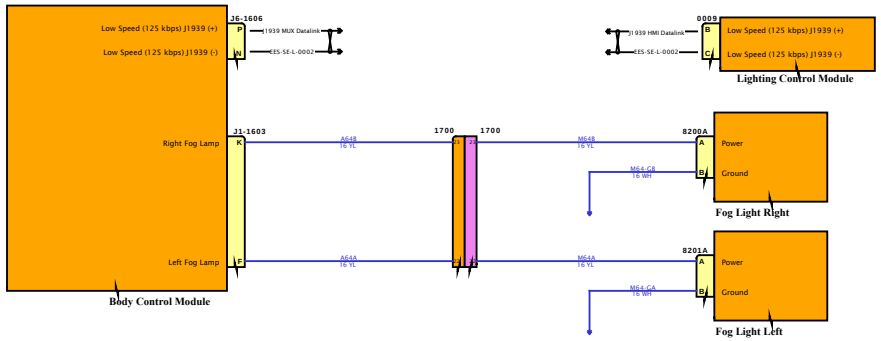

DESIGN DESCRIPTION

FEATURE CODES

SOFTWARE FEATURE CODES

NAVISTAR
NAVISTAR, INC. CONFIDENTIAL PROPRIETARY

Diagram1

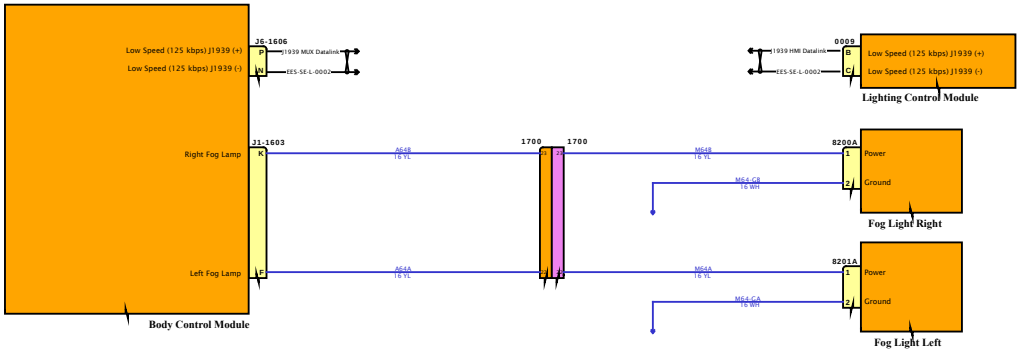

DESIGN DESCRIPTION

FEATURE CODES

SOFTWARE FEATURE CODES

NAVISTAR INC. CONFIDENTIAL PROPRIETARY

Diagram2

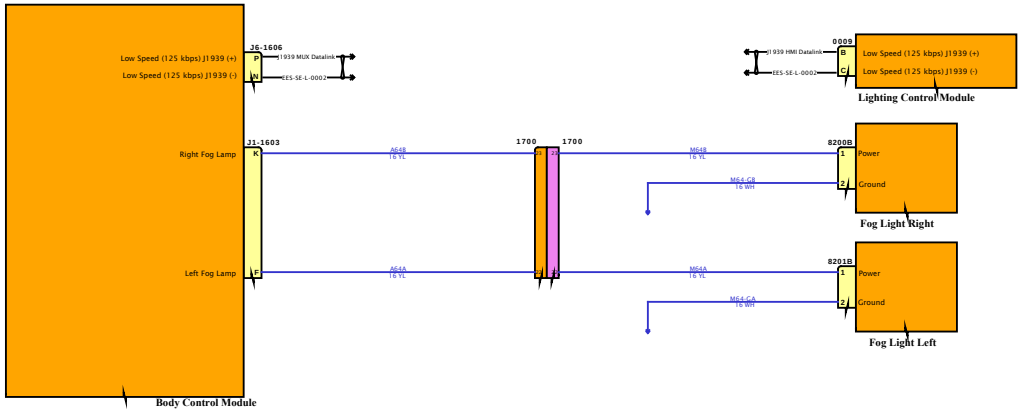

DESIGN DESCRIPTION

FEATURE CODES

SOFTWARE FEATURE CODES

NAVISTAR INC. CONFIDENTIAL PROPRIETARY

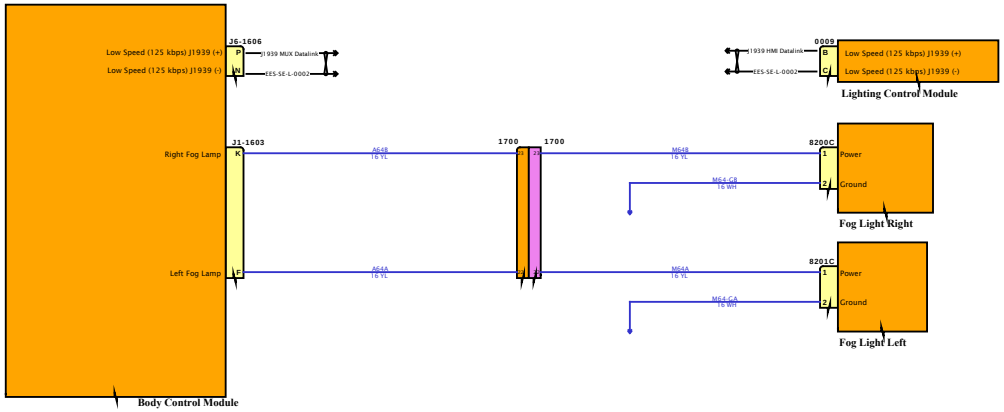

DESIGN DESCRIPTION

FEATURE CODES

SOFTWARE FEATURE CODES

NAVISTAR INC. CONFIDENTIAL PROPRIETARY

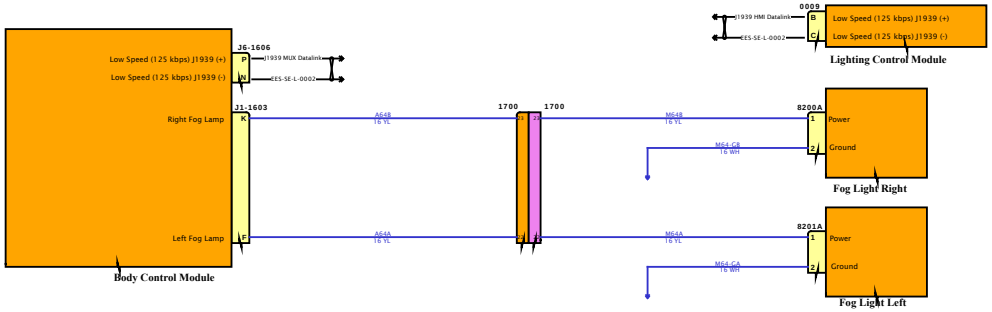

DESIGN DESCRIPTION

FEATURE CODES

SOFTWARE FEATURE CODES

NAVISTAR INC. CONFIDENTIAL PROPRIETARY

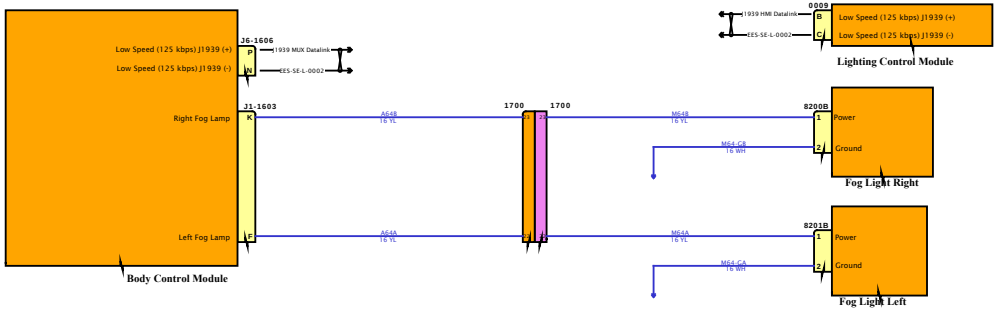

DESIGN DESCRIPTION

FEATURE CODES

SOFTWARE FEATURE CODES

NAVISTAR
NAVISTAR, INC. CONFIDENTIAL PROPRIETARY

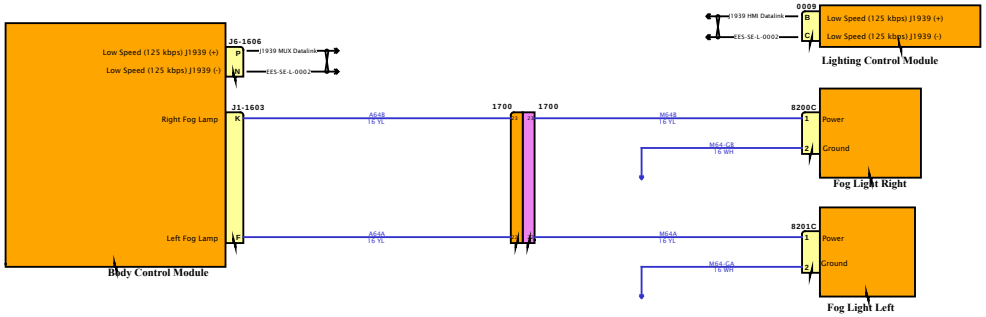

DESIGN DESCRIPTION

FEATURE CODES

SOFTWARE FEATURE CODES

NAVISTAR INC. CONFIDENTIAL PROPRIETARY

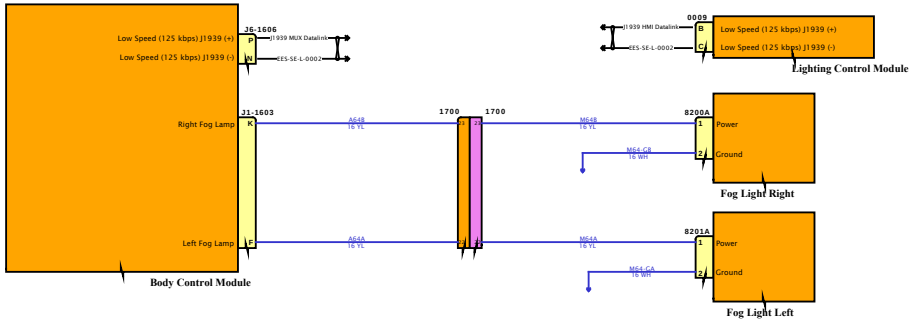

DESIGN DESCRIPTION

FEATURE CODES

SOFTWARE FEATURE CODES

NAVISTAR
NAVISTAR, INC. CONFIDENTIAL PROPRIETARY

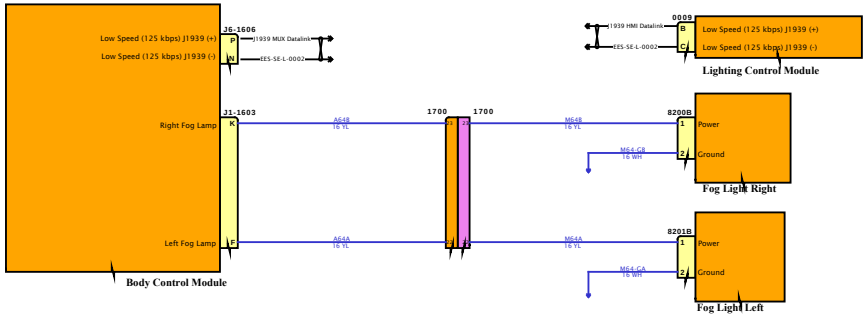

DESIGN DESCRIPTION

FEATURE CODES

SOFTWARE FEATURE CODES

NAVISTAR
NAVISTAR, INC. CONFIDENTIAL PROPRIETARY

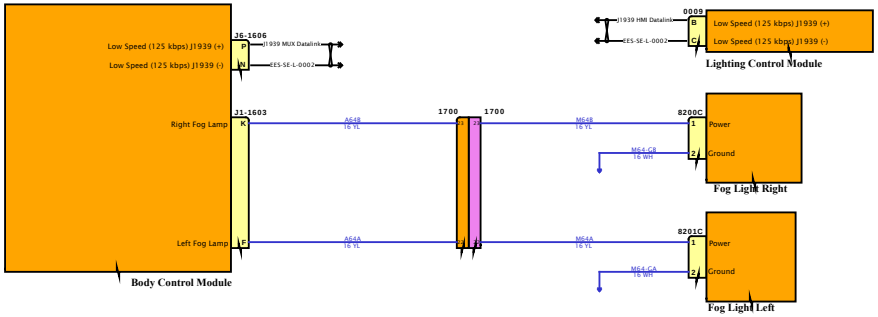

DESIGN DESCRIPTION

FEATURE CODES

SOFTWARE FEATURE CODES

NAVISTAR
NAVISTAR, INC. CONFIDENTIAL PROPRIETARY

Diagram1

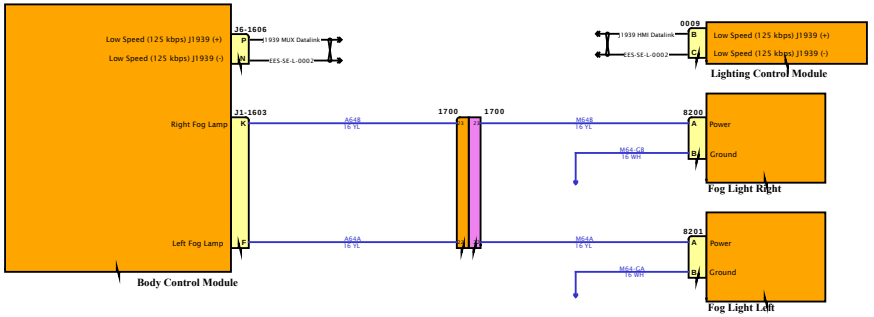

DESIGN DESCRIPTION

FEATURE CODES

SOFTWARE FEATURE CODES

NAVISTAR
NAVISTAR, INC. CONFIDENTIAL PROPRIETARY

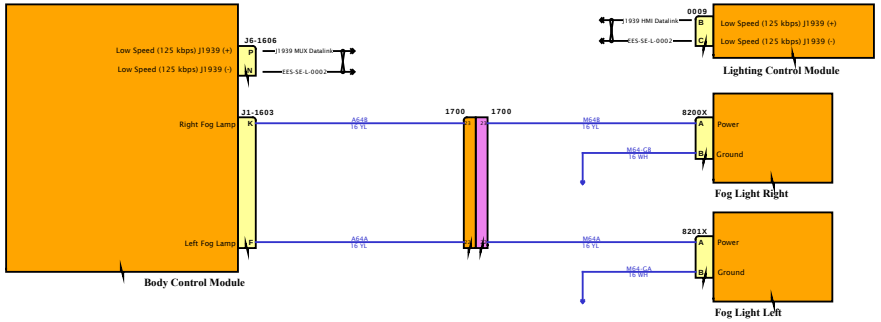

DESIGN DESCRIPTION

FEATURE CODES

SOFTWARE FEATURE CODES

NAVISTAR
NAVISTAR, INC. CONFIDENTIAL PROPRIETARY

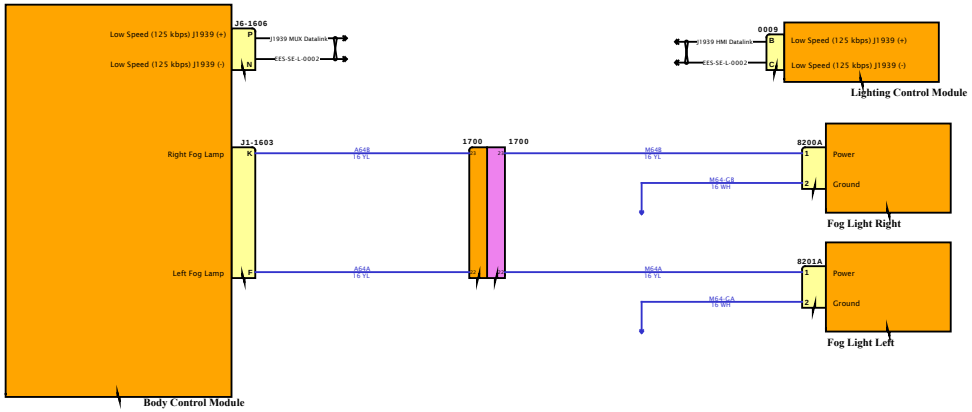

DESIGN DESCRIPTION

FEATURE CODES

SOFTWARE FEATURE CODES

NAVISTAR INC. CONFIDENTIAL PROPRIETARY

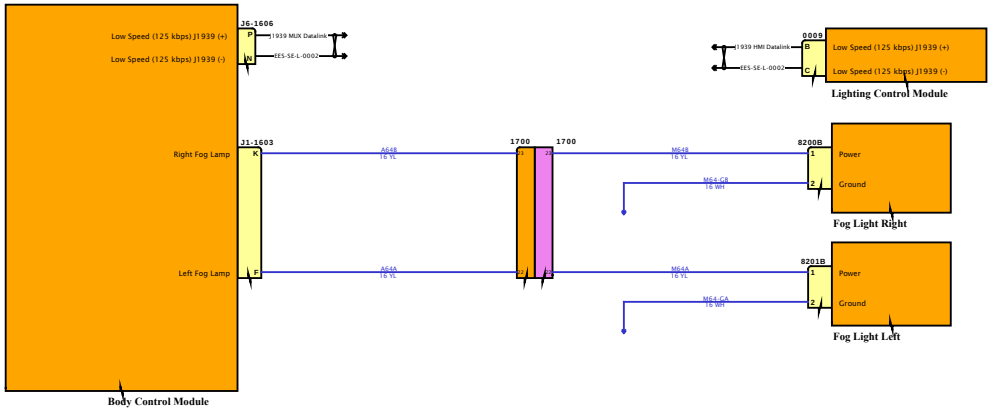

DESIGN DESCRIPTION

FEATURE CODES

SOFTWARE FEATURE CODES

NAVISTAR INC. CONFIDENTIAL PROPRIETARY

Diagram1

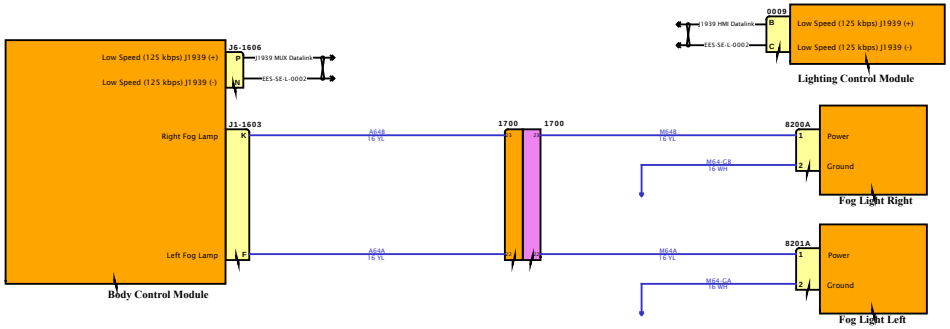

DESIGN DESCRIPTION

FEATURE CODES

SOFTWARE FEATURE CODES

NAVISTAR INC. CONFIDENTIAL PROPRIETARY

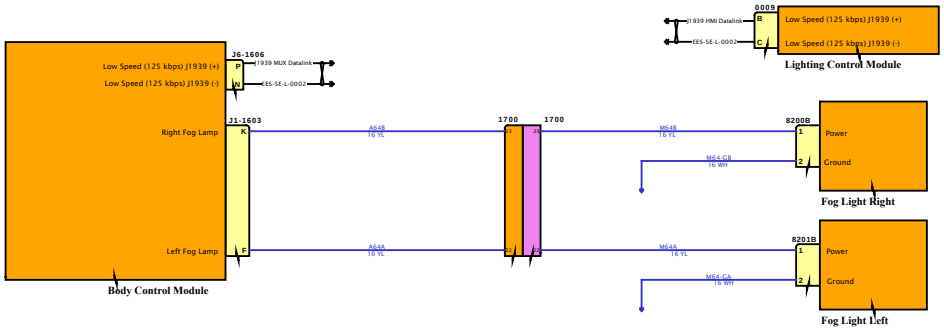

DESIGN DESCRIPTION

FEATURE CODES

SOFTWARE FEATURE CODES

NAVISTAR INC. CONFIDENTIAL PROPRIETARY

Diagram1

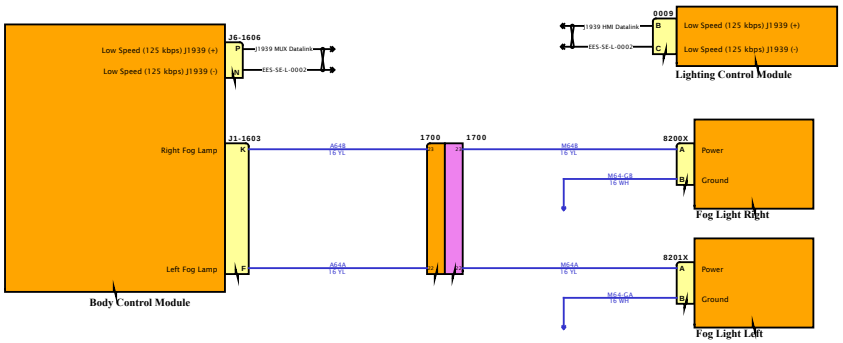

DESIGN DESCRIPTION

FEATURE CODES

SOFTWARE FEATURE CODES

NAVISTAR INC. CONFIDENTIAL PROPRIETARY

Diagram2

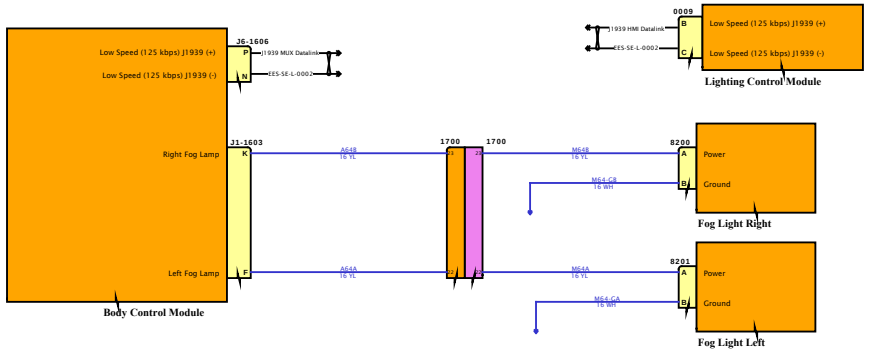

DESIGN DESCRIPTION

FEATURE CODES

SOFTWARE FEATURE CODES

NAVISTAR INC. CONFIDENTIAL PROPRIETARY

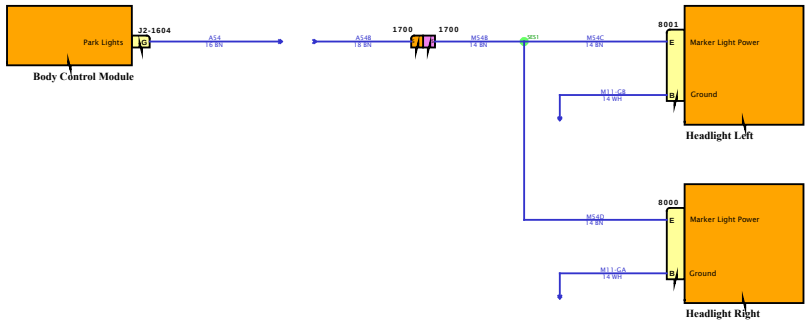

DESIGN DESCRIPTION

FEATURE CODES

SOFTWARE FEATURE CODES

NAVISTAR INC. CONFIDENTIAL PROPRIETARY

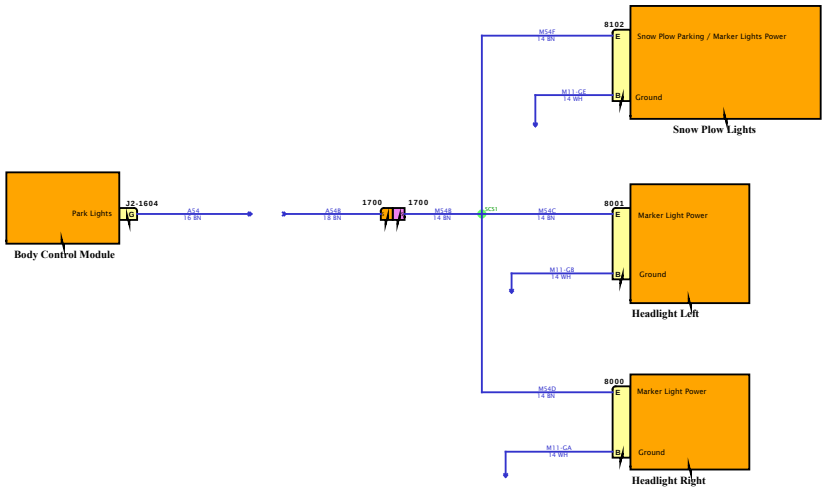

DESIGN DESCRIPTION

FEATURE CODES

SOFTWARE FEATURE CODES

NAVISTAR INC. CONFIDENTIAL PROPRIETARY

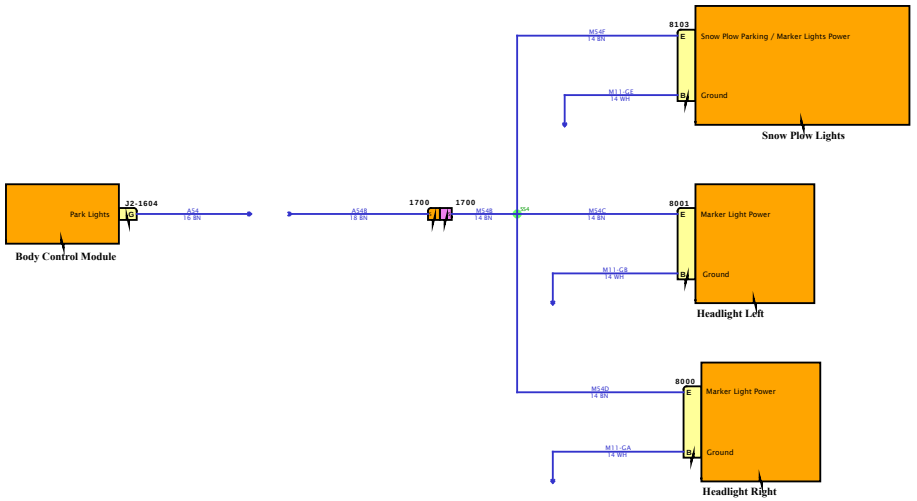

DESIGN DESCRIPTION

FEATURE CODES

SOFTWARE FEATURE CODES

NAVISTAR INC. CONFIDENTIAL PROPRIETARY

Diagram1

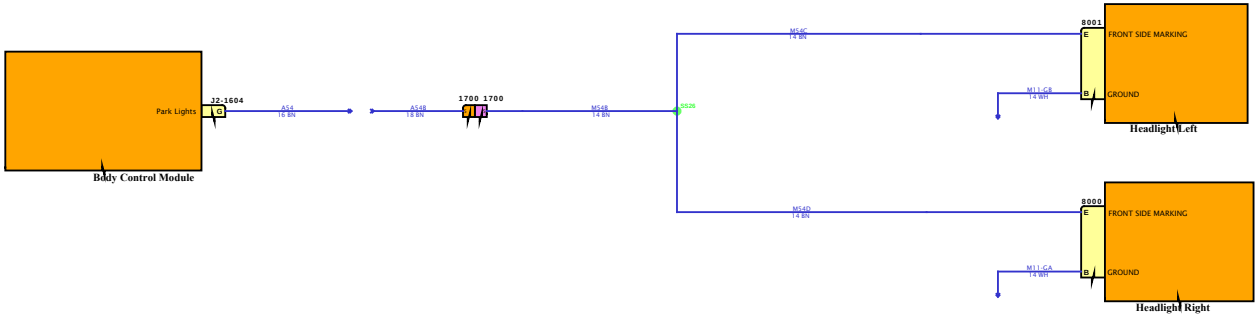

DESIGN DESCRIPTION

FEATURE CODES

SOFTWARE FEATURE CODES

NAVISTAR INC. CONFIDENTIAL PROPRIETARY

Diagram2

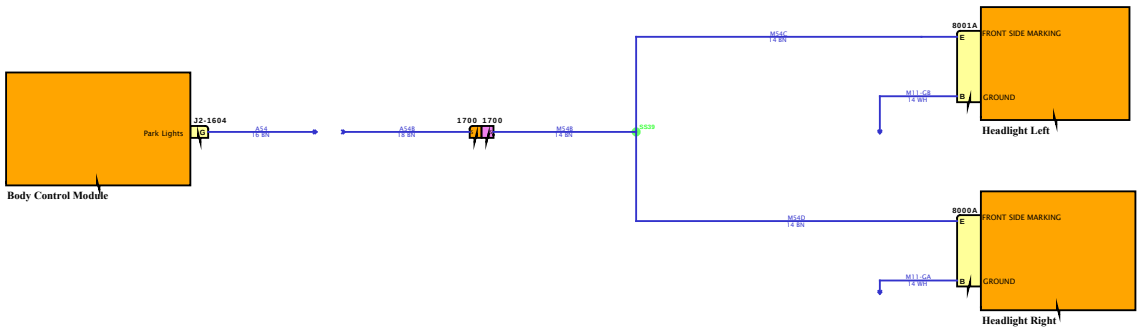

DESIGN DESCRIPTION

FEATURE CODES

SOFTWARE FEATURE CODES

NAVISTAR INC. CONFIDENTIAL PROPRIETARY

Diagram1

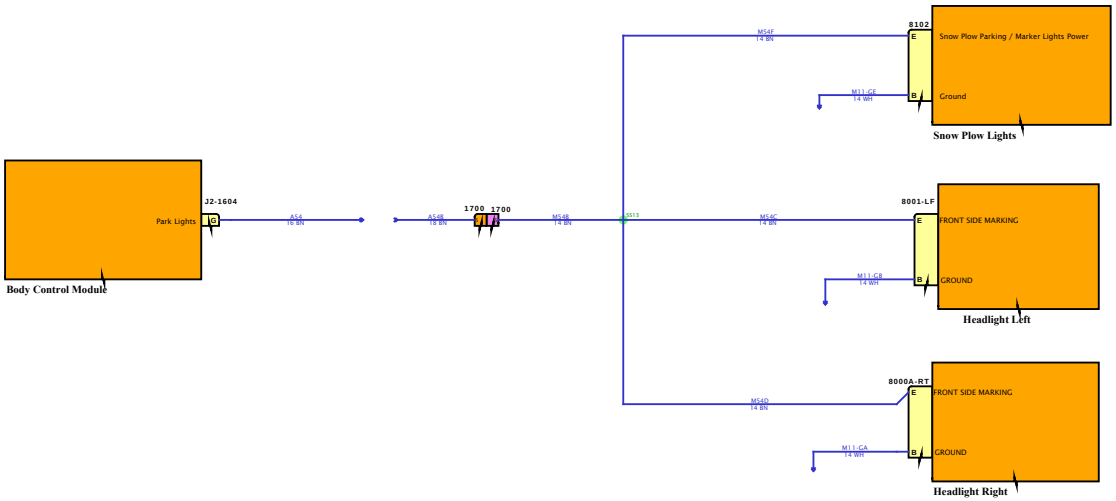

DESIGN DESCRIPTION

FEATURE CODES

SOFTWARE FEATURE CODES

NAVISTAR INC. CONFIDENTIAL PROPRIETARY

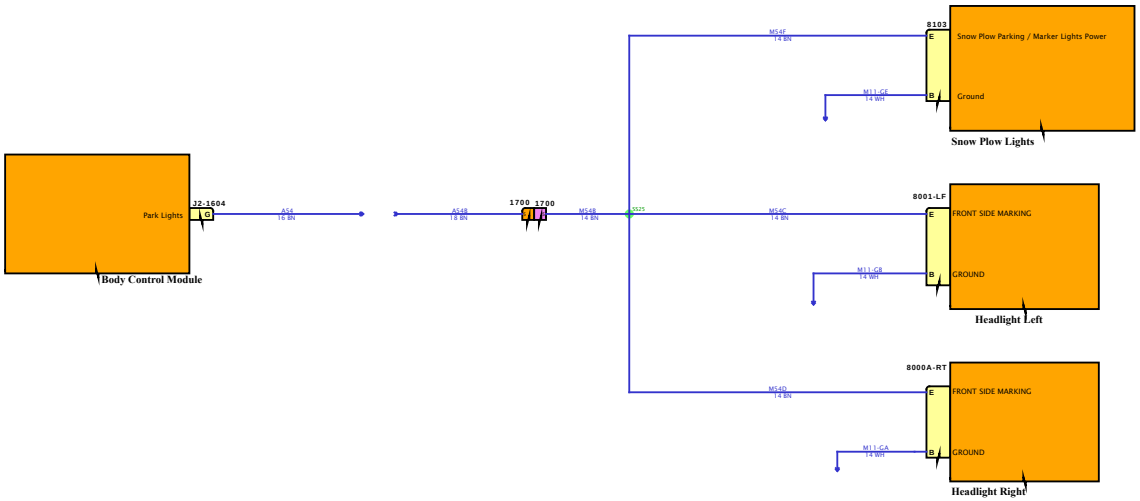

DESIGN DESCRIPTION

FEATURE CODES

SOFTWARE FEATURE CODES

NAVISTAR
NAVISTAR, INC. CONFIDENTIAL PROPRIETARY

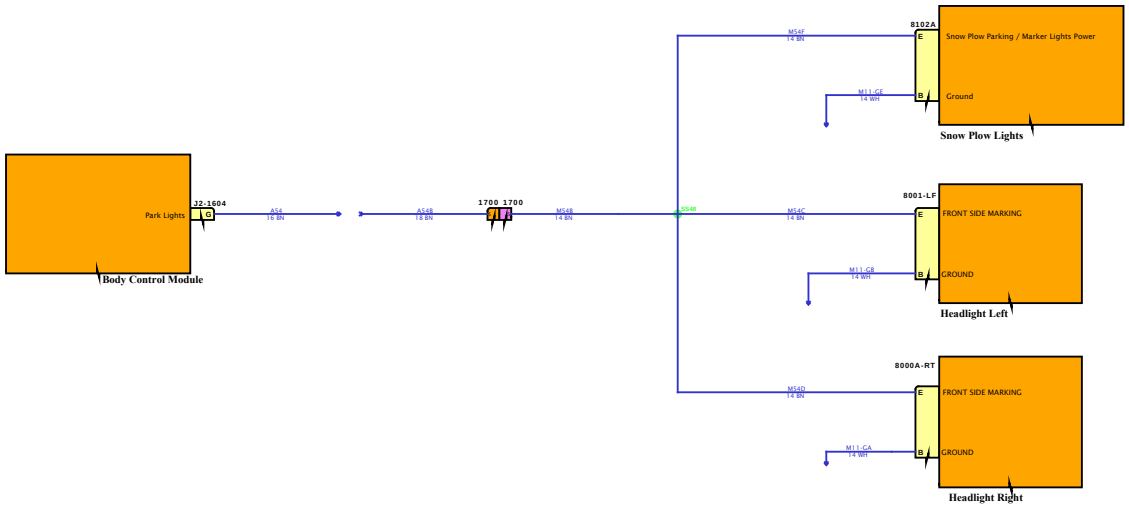

DESIGN DESCRIPTION

FEATURE CODES

SOFTWARE FEATURE CODES

NAVISTAR
NAVISTAR, INC. CONFIDENTIAL PROPRIETARY

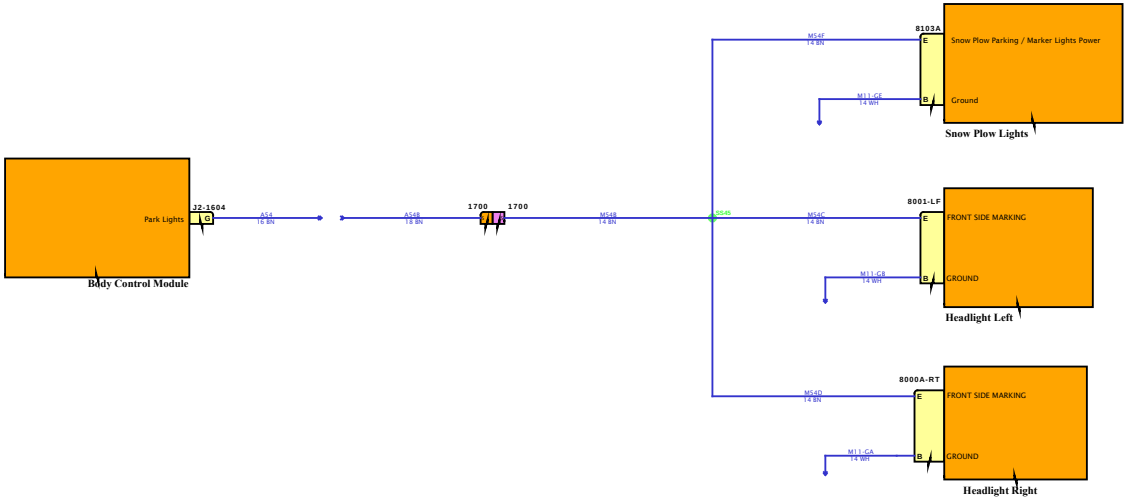

DESIGN DESCRIPTION

FEATURE CODES

SOFTWARE FEATURE CODES

NAVISTAR
NAVISTAR, INC. CONFIDENTIAL PROPRIETARY

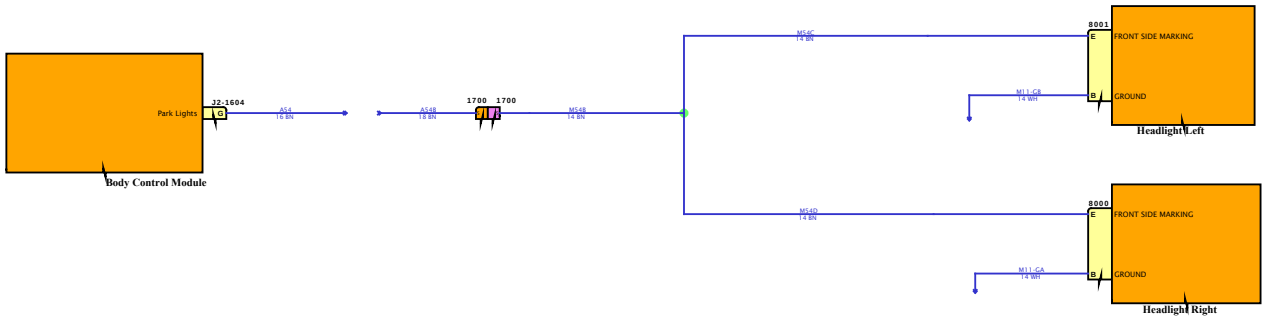

DESIGN DESCRIPTION

FEATURE CODES

SOFTWARE FEATURE CODES

NAVISTAR INC. CONFIDENTIAL PROPRIETARY

Diagram2

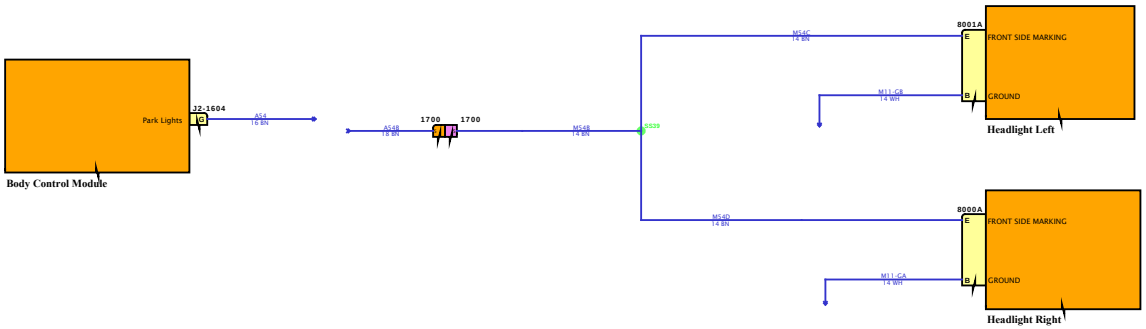

DESIGN DESCRIPTION

FEATURE CODES

SOFTWARE FEATURE CODES

NAVISTAR

NAVISTAR, INC. CONFIDENTIAL PROPRIETARY

Diagram1

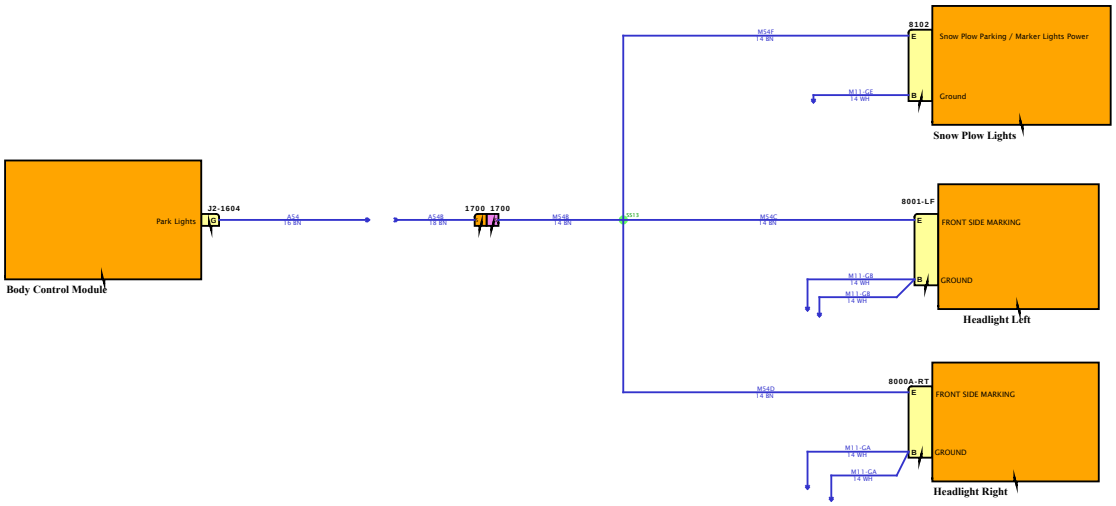

DESIGN DESCRIPTION

FEATURE CODES

SOFTWARE FEATURE CODES

NAVISTAR
NAVISTAR, INC. CONFIDENTIAL PROPRIETARY

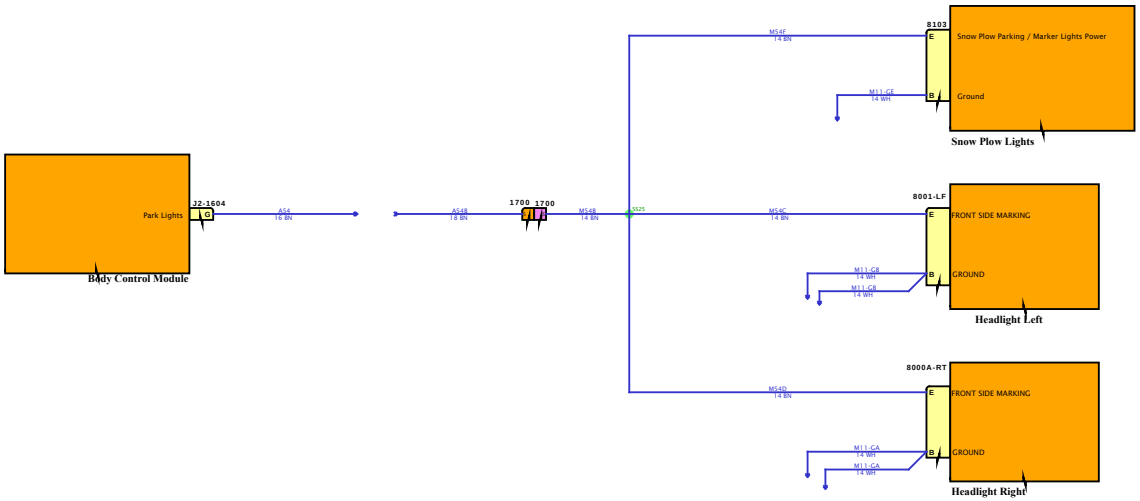

DESIGN DESCRIPTION

FEATURE CODES

SOFTWARE FEATURE CODES

NAVISTAR
NAVISTAR, INC. CONFIDENTIAL PROPRIETARY

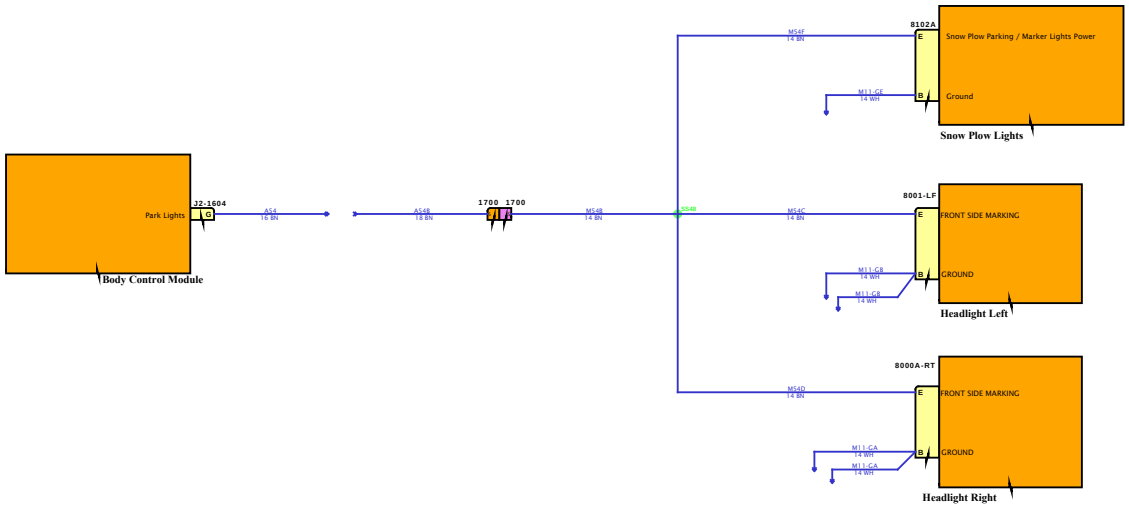

DESIGN DESCRIPTION

FEATURE CODES

SOFTWARE FEATURE CODES

NAVISTAR
NAVISTAR, INC. CONFIDENTIAL PROPRIETARY

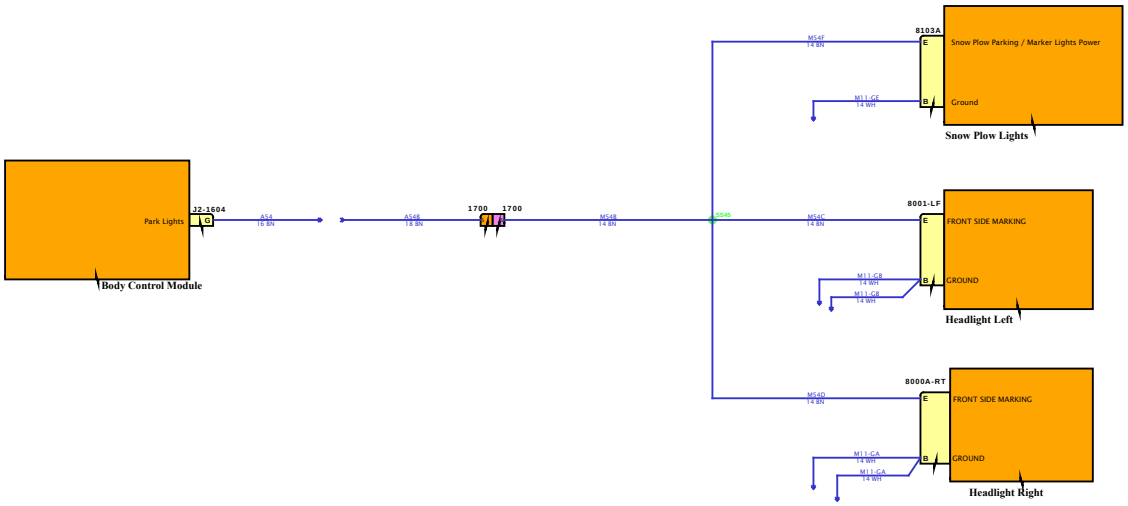

DESIGN DESCRIPTION

FEATURE CODES

SOFTWARE FEATURE CODES

NAVISTAR
NAVISTAR, INC. CONFIDENTIAL PROPRIETARY

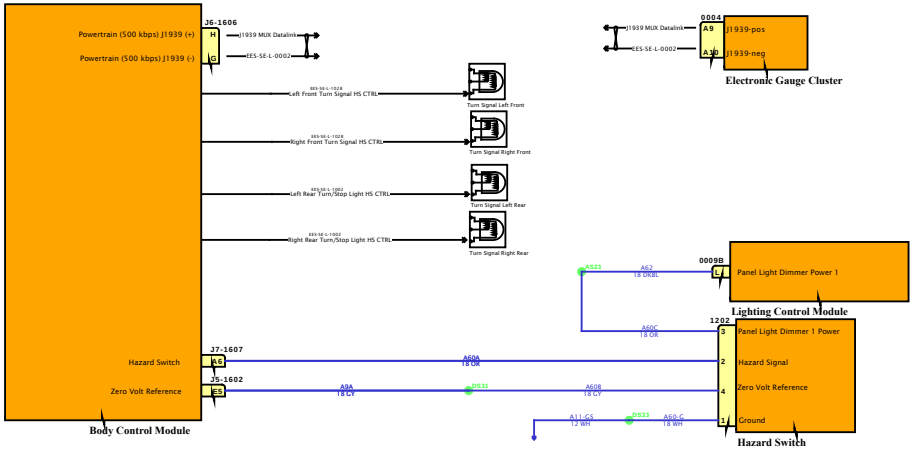

DESIGN DESCRIPTION

FEATURE CODES

SOFTWARE FEATURE CODES

NAVISTAR
NAVISTAR, INC. CONFIDENTIAL PROPRIETARY

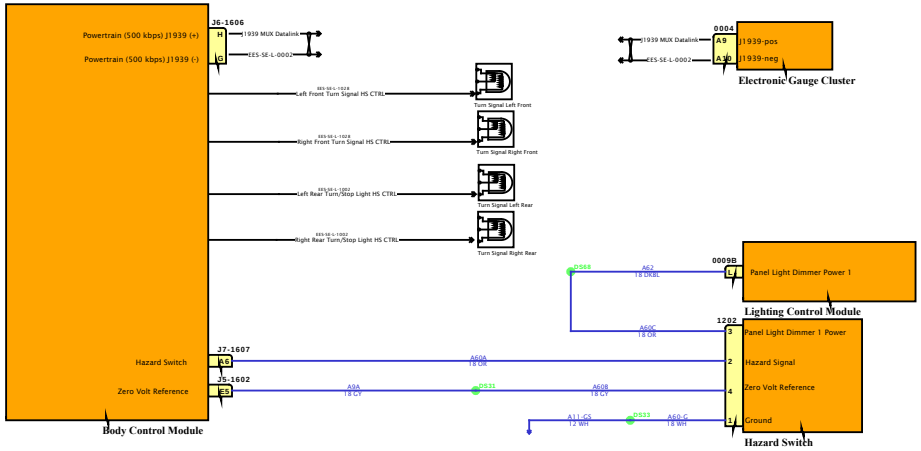

DESIGN DESCRIPTION

FEATURE CODES

SOFTWARE FEATURE CODES

NAVISTAR
NAVISTAR, INC. CONFIDENTIAL PROPRIETARY

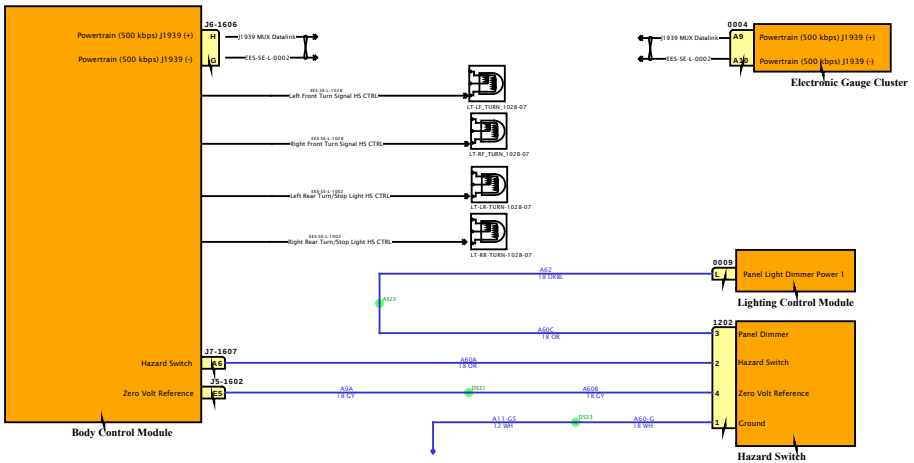

DESIGN DESCRIPTION

FEATURE CODES

SOFTWARE FEATURE CODES

NAVISTAR
NAVISTAR, INC. CONFIDENTIAL PROPRIETARY

DESIGN DESCRIPTION

FEATURE CODES

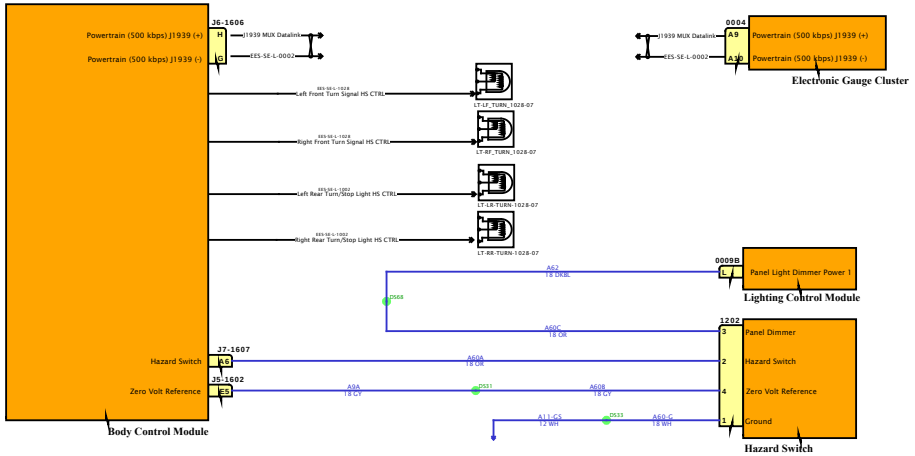

SOFTWARE FEATURE CODES

DESIGN DESCRIPTION

FEATURE CODES

SOFTWARE FEATURE CODES

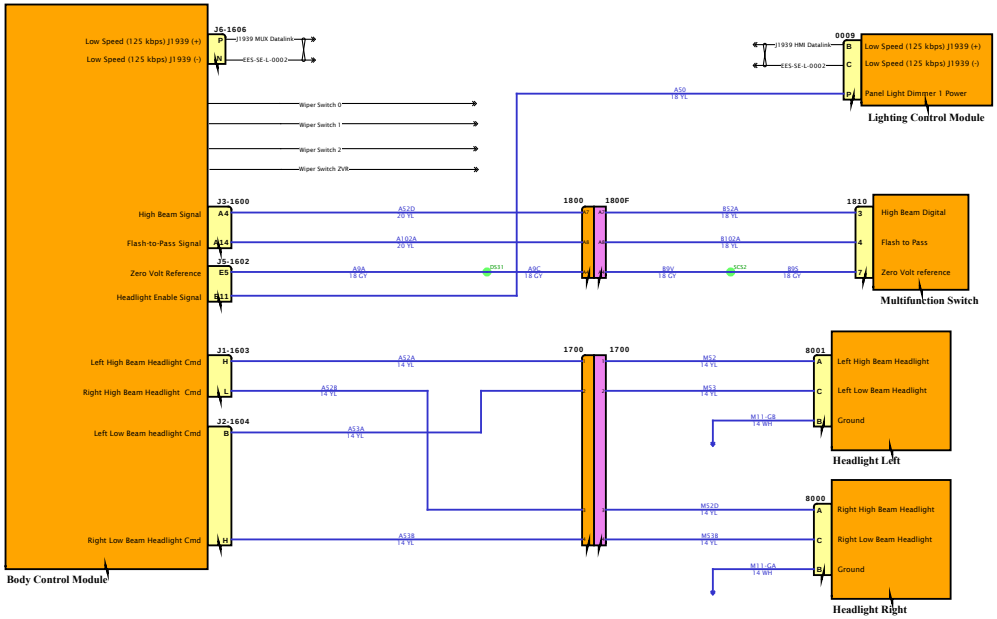

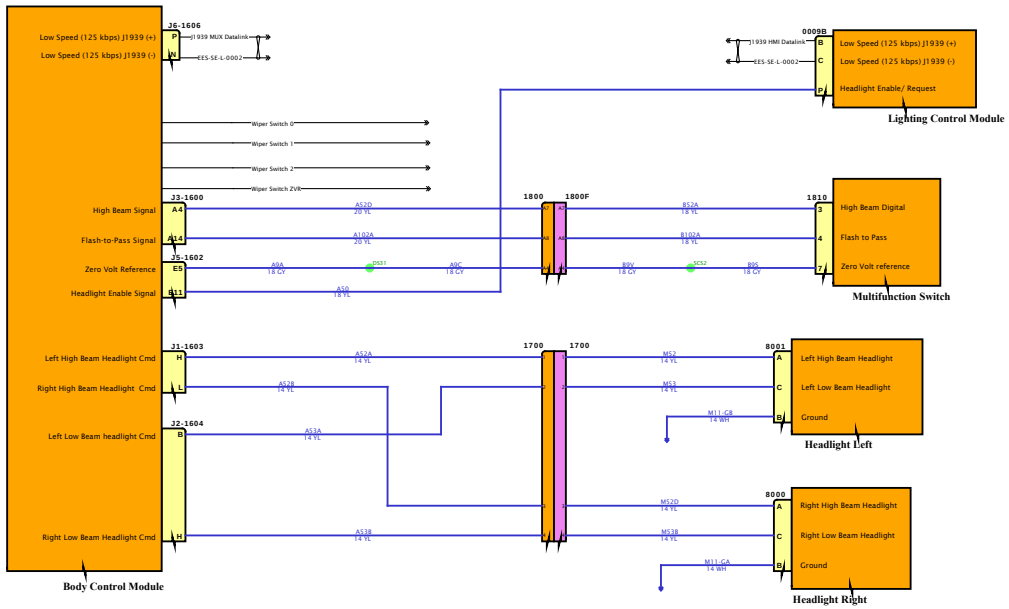

DESIGN DESCRIPTION

FEATURE CODES

SOFTWARE FEATURE CODES

NAVISTAR
NAVISTAR, INC. CONFIDENTIAL PROPRIETARY

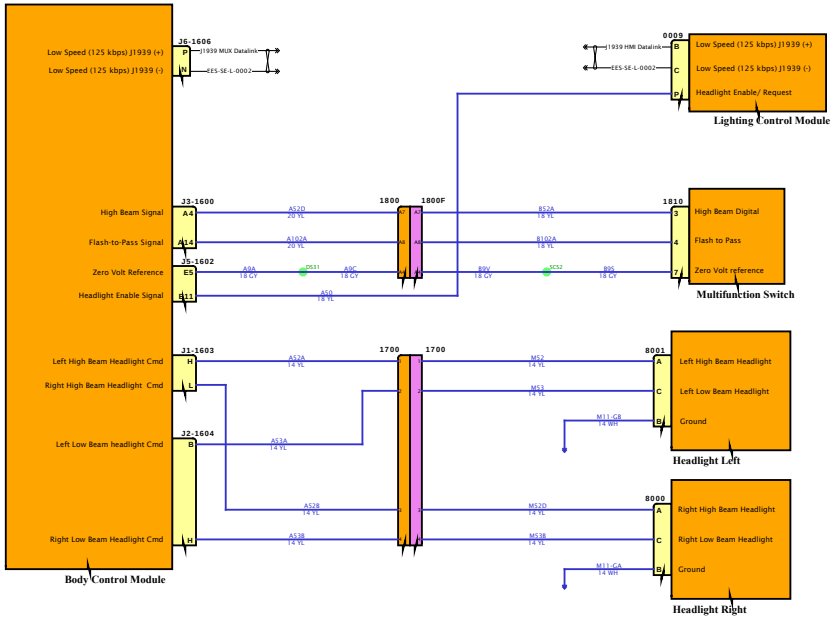

DESIGN DESCRIPTION

FEATURE CODES

SOFTWARE FEATURE CODES

NAVISTAR
NAVISTAR, INC. CONFIDENTIAL PROPRIETARY

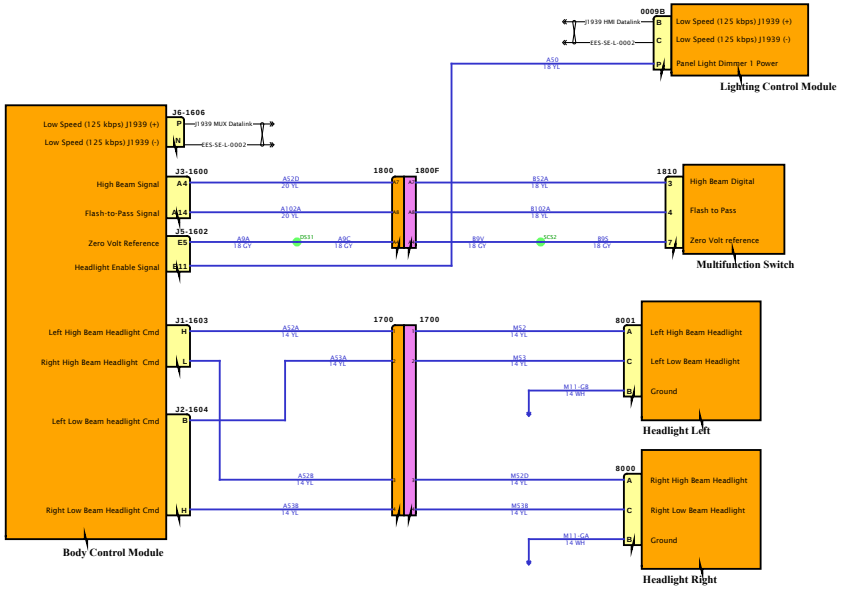

DESIGN DESCRIPTION

FEATURE CODES

SOFTWARE FEATURE CODES

NAVISTAR
NAVISTAR, INC. CONFIDENTIAL PROPRIETARY

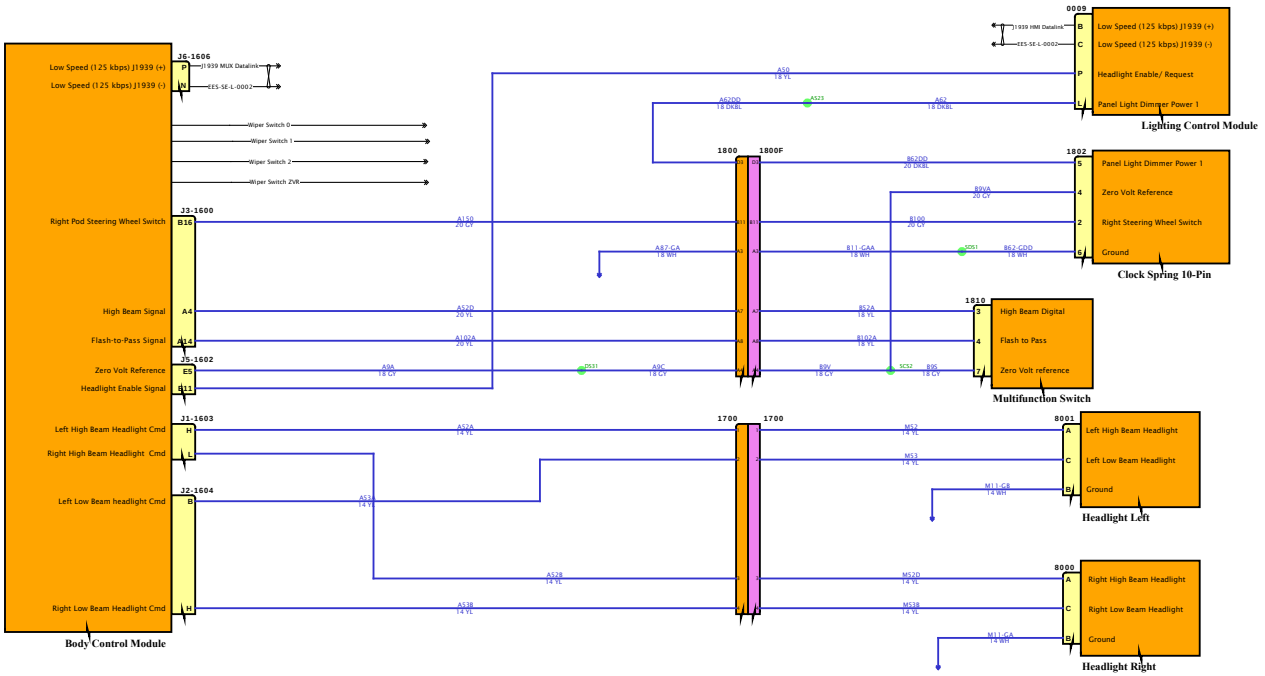

DESIGN DESCRIPTION

FEATURE CODES

SOFTWARE FEATURE CODES

NAVISTAR INC. CONFIDENTIAL PROPRIETARY

Diagram1-Combination2

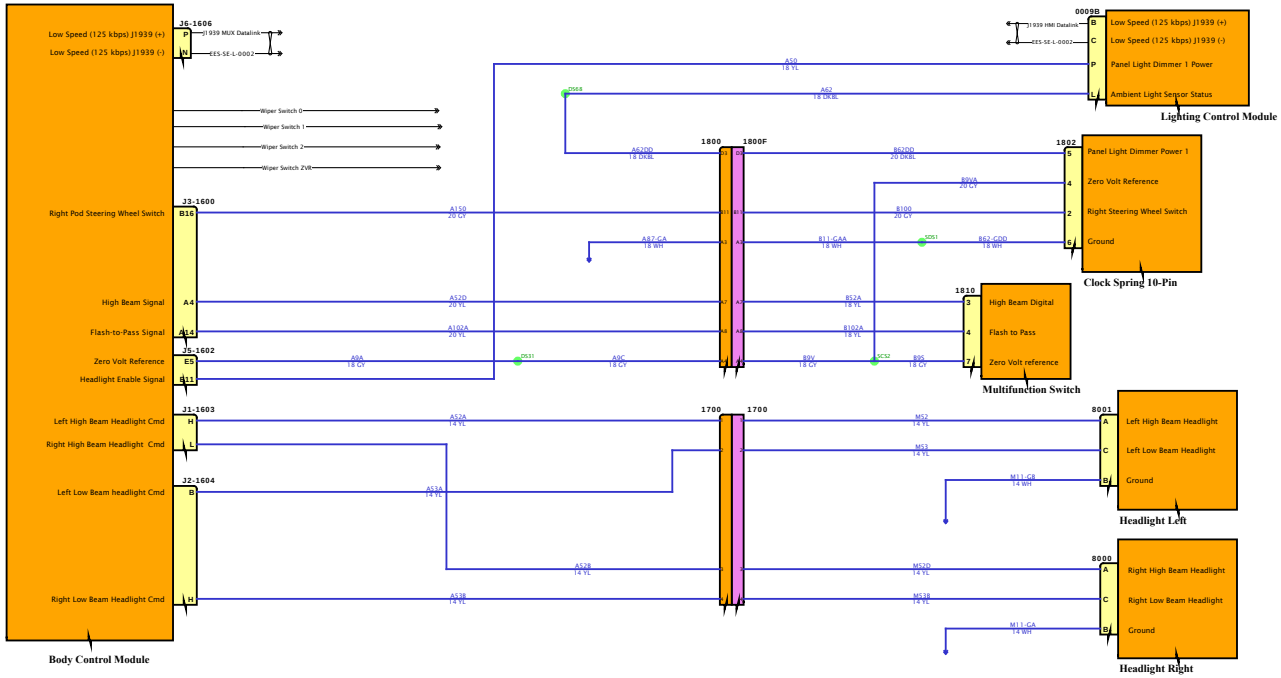

DESIGN DESCRIPTION

FEATURE CODES

SOFTWARE FEATURE CODES

NAVISTAR INC. CONFIDENTIAL PROPRIETARY

Diagram1-Combination1

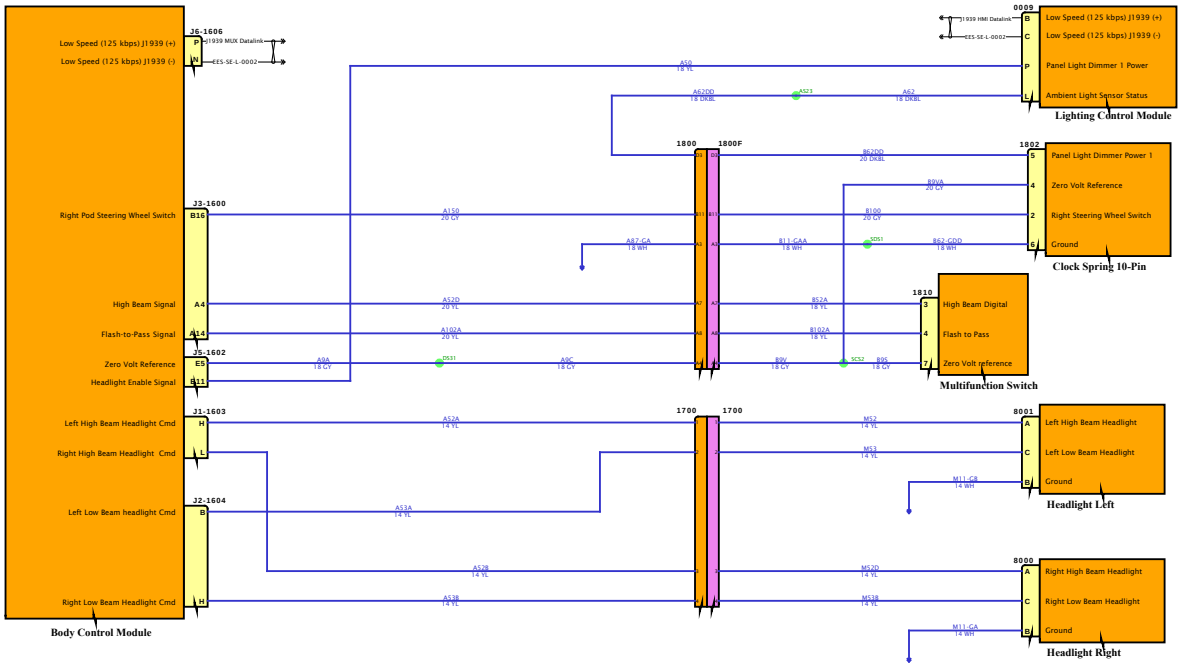

DESIGN DESCRIPTION

FEATURE CODES

SOFTWARE FEATURE CODES

NAVISTAR INC. CONFIDENTIAL PROPRIETARY

Diagram1-Combination2

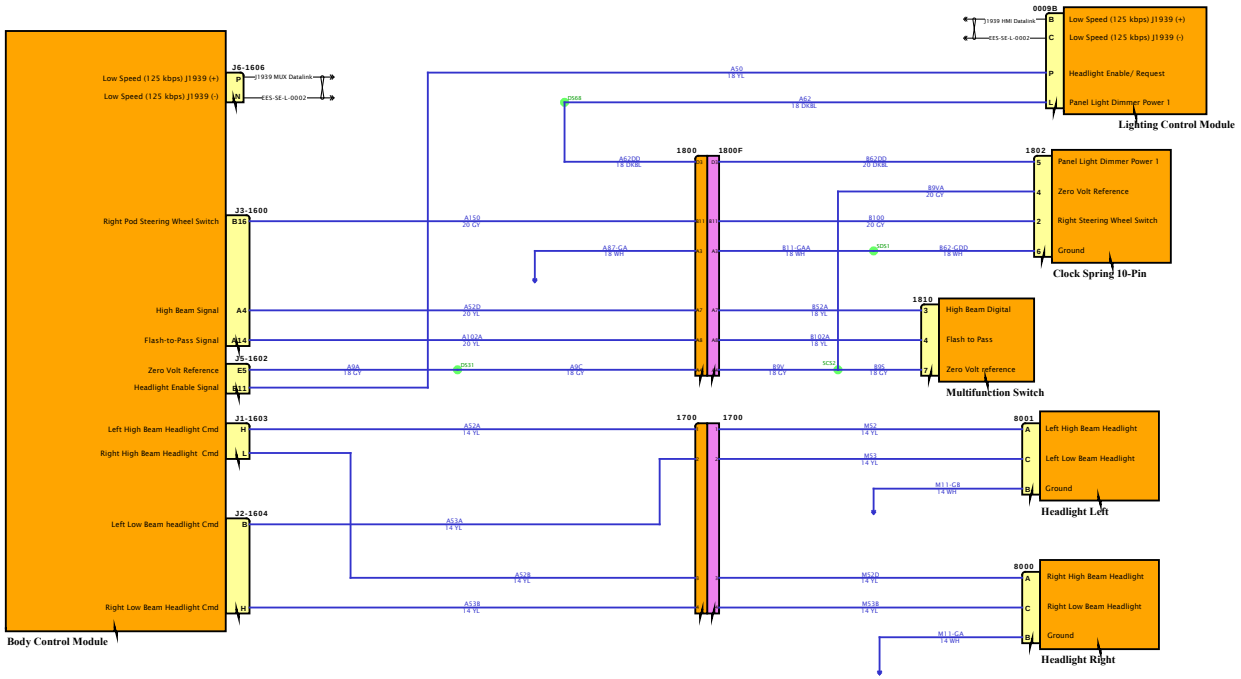

DESIGN DESCRIPTION

FEATURE CODES

SOFTWARE FEATURE CODES

NAVISTAR INC. CONFIDENTIAL PROPRIETARY

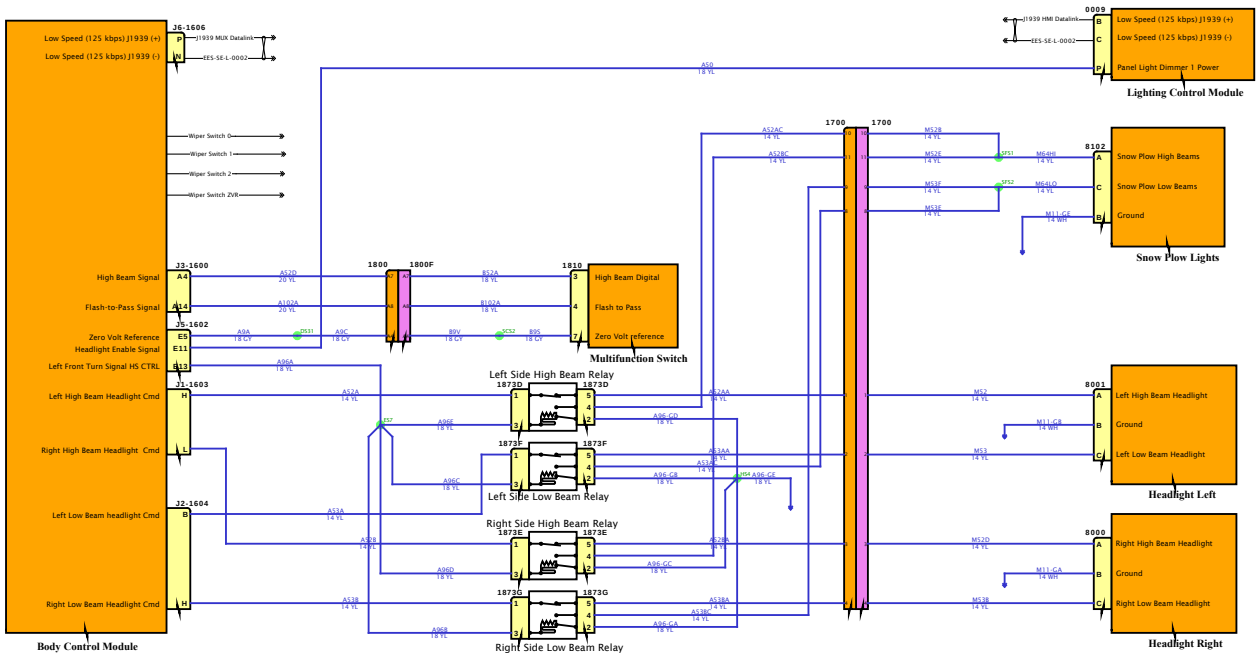

DESIGN DESCRIPTION

FEATURE CODES

SOFTWARE FEATURE CODES

NAVISTAR INC. CONFIDENTIAL PROPRIETARY

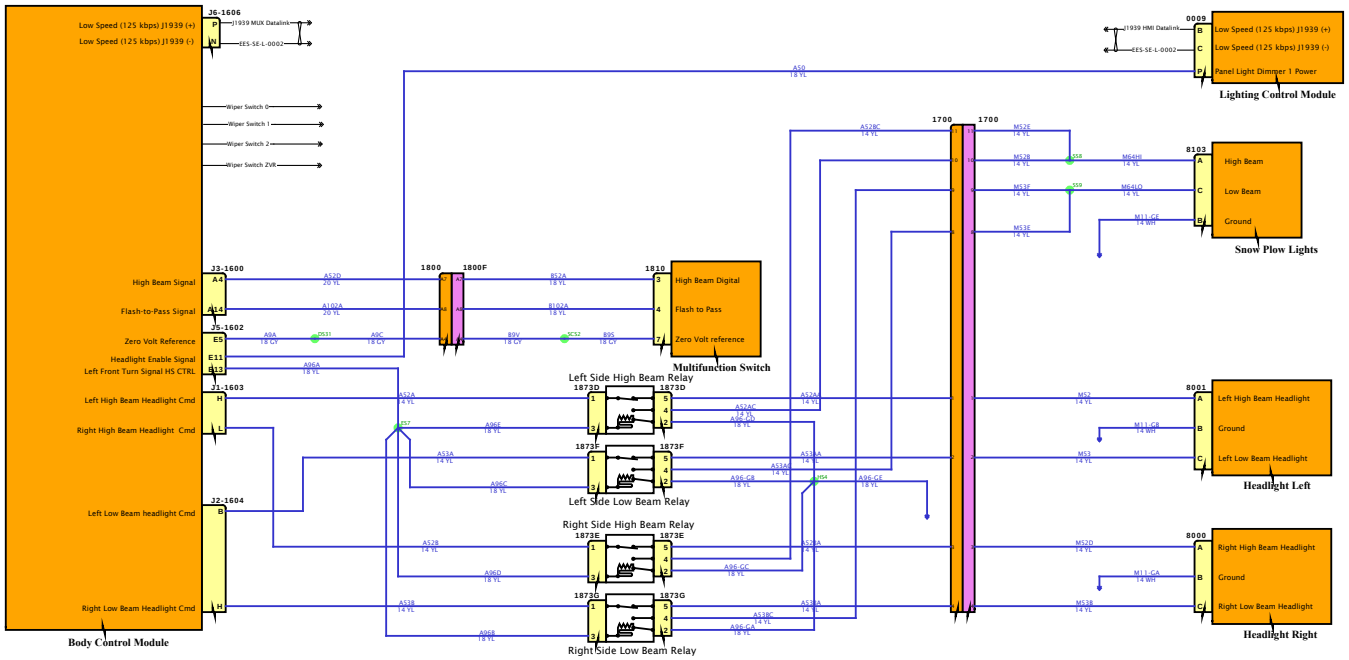

DESIGN DESCRIPTION

FEATURE CODES

SOFTWARE FEATURE CODES

Diagram1-Combination3

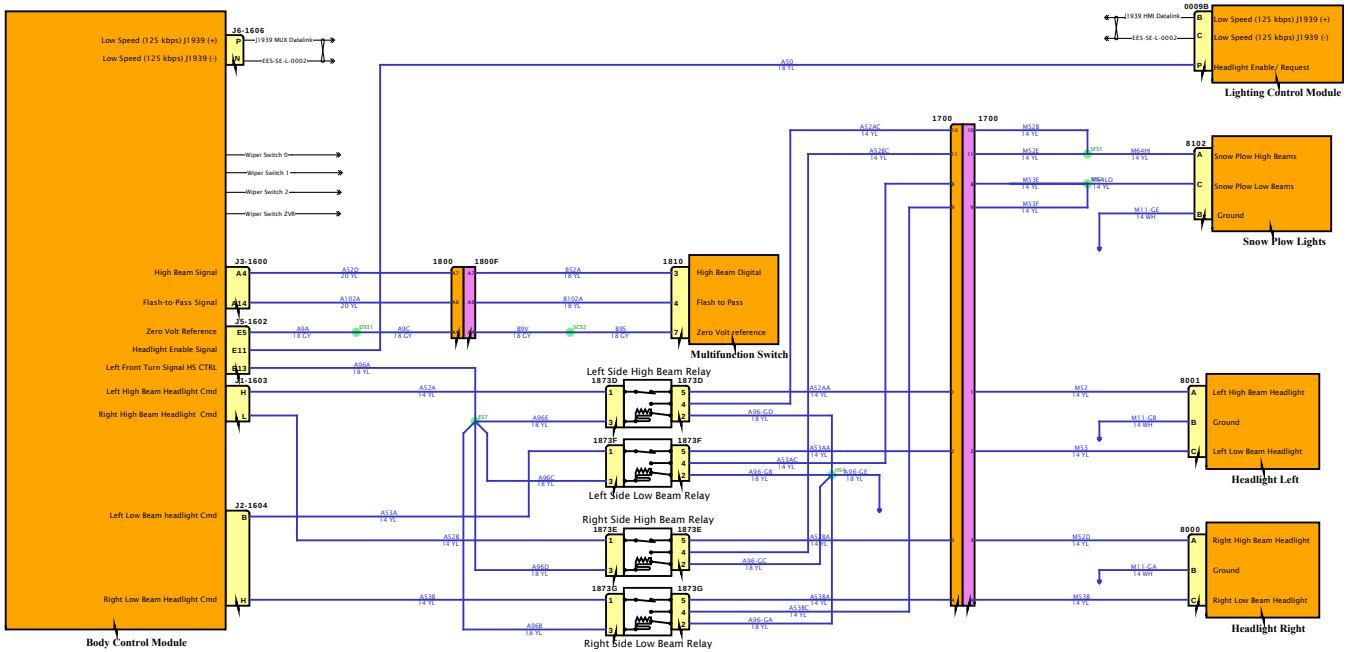

DESIGN DESCRIPTION

FEATURE CODES

SOFTWARE FEATURE CODES

NAVISTAR INC. CONFIDENTIAL PROPRIETARY

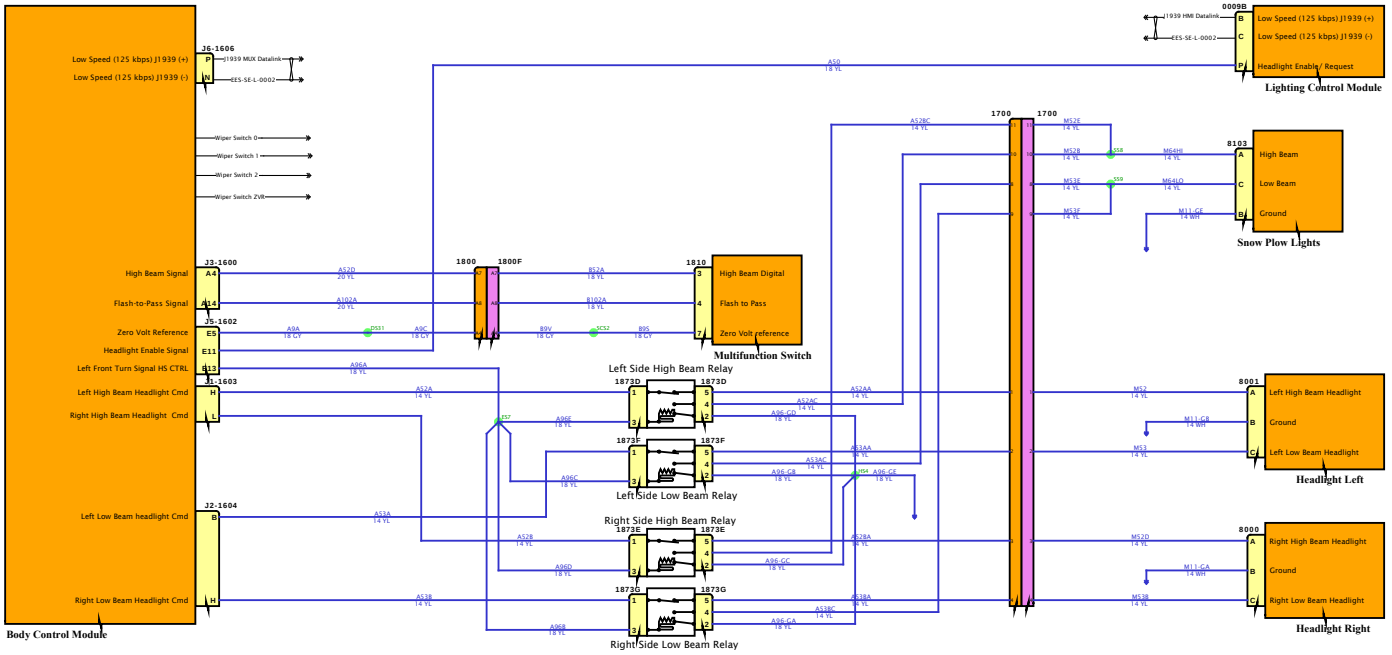

DESIGN DESCRIPTION

FEATURE CODES

SOFTWARE FEATURE CODES

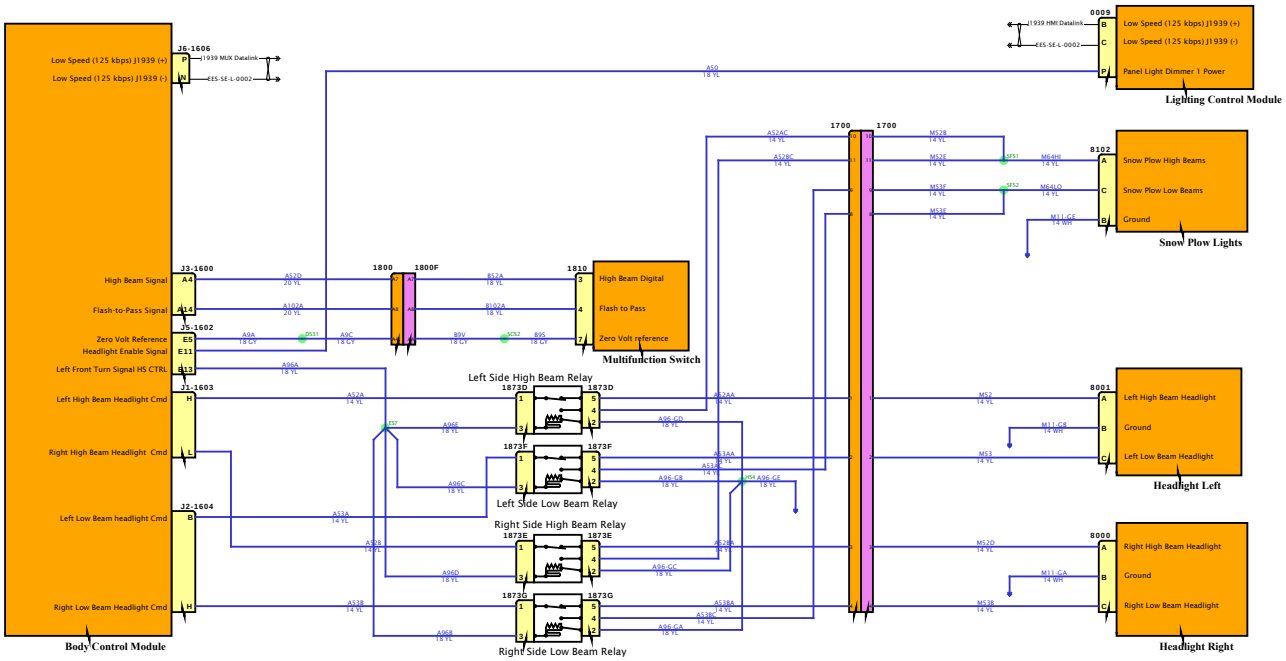

DESIGN DESCRIPTION

FEATURE CODES

SOFTWARE FEATURE CODES

NAVISTAR INC. CONFIDENTIAL PROPRIETARY

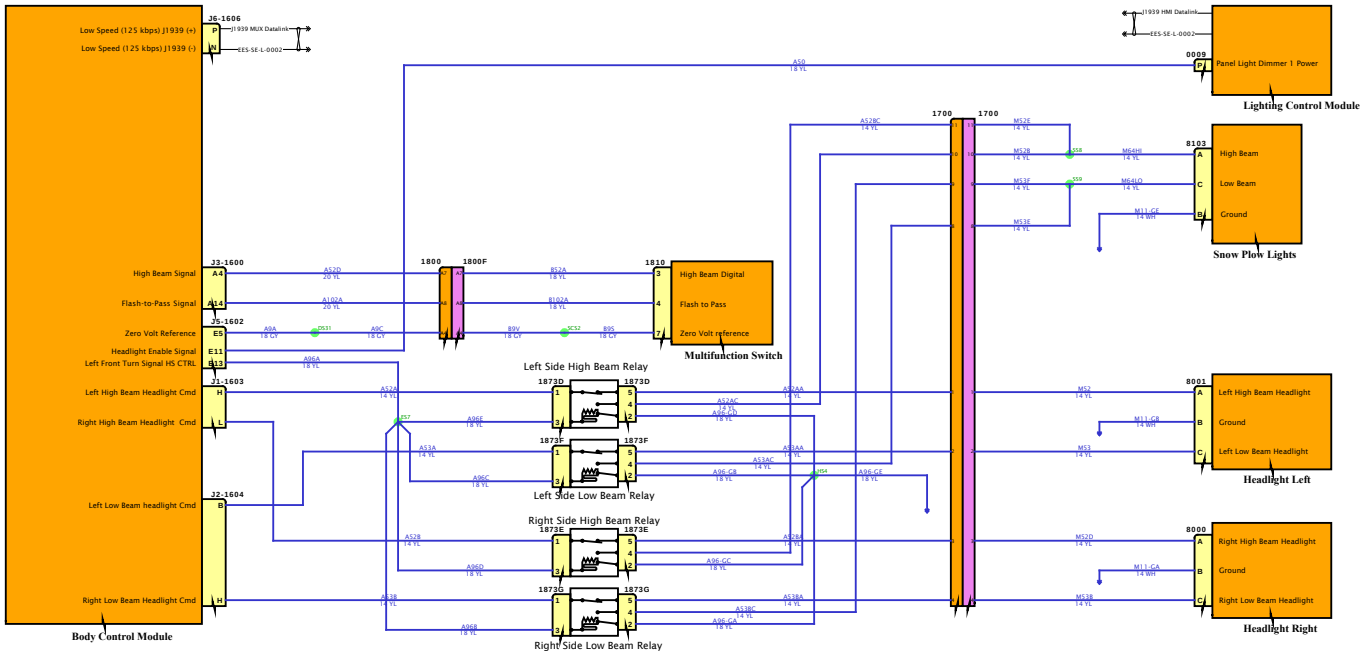

DESIGN DESCRIPTION

FEATURE CODES

SOFTWARE FEATURE CODES

NAVISTAR INC. CONFIDENTIAL PROPRIETARY

Diagram1-Combination3

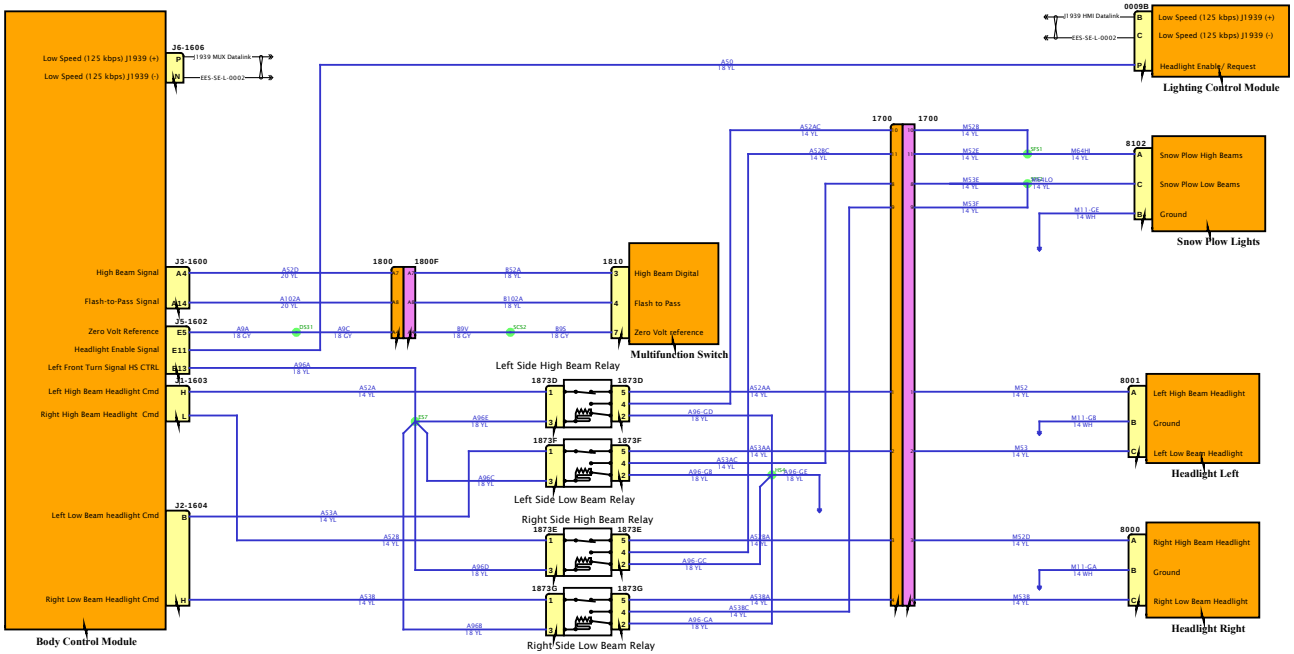

DESIGN DESCRIPTION

FEATURE CODES

SOFTWARE FEATURE CODES

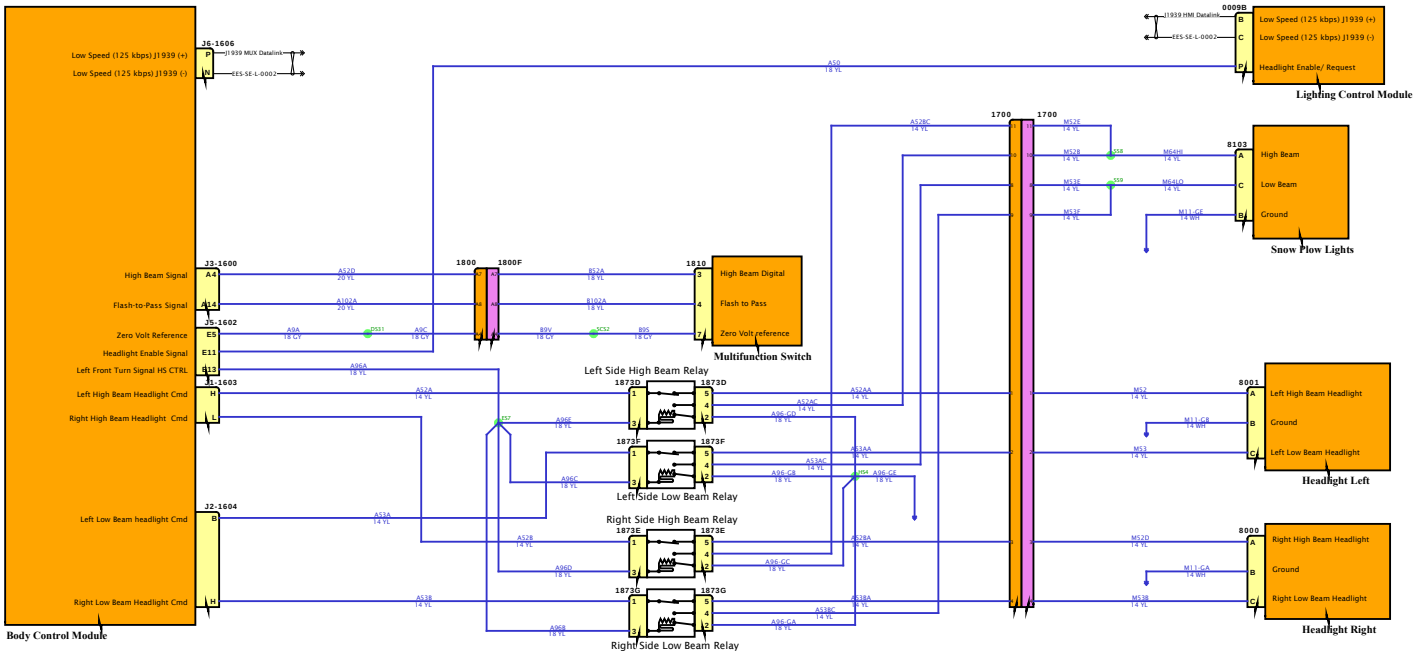

DESIGN DESCRIPTION

FEATURE CODES

SOFTWARE FEATURE CODES

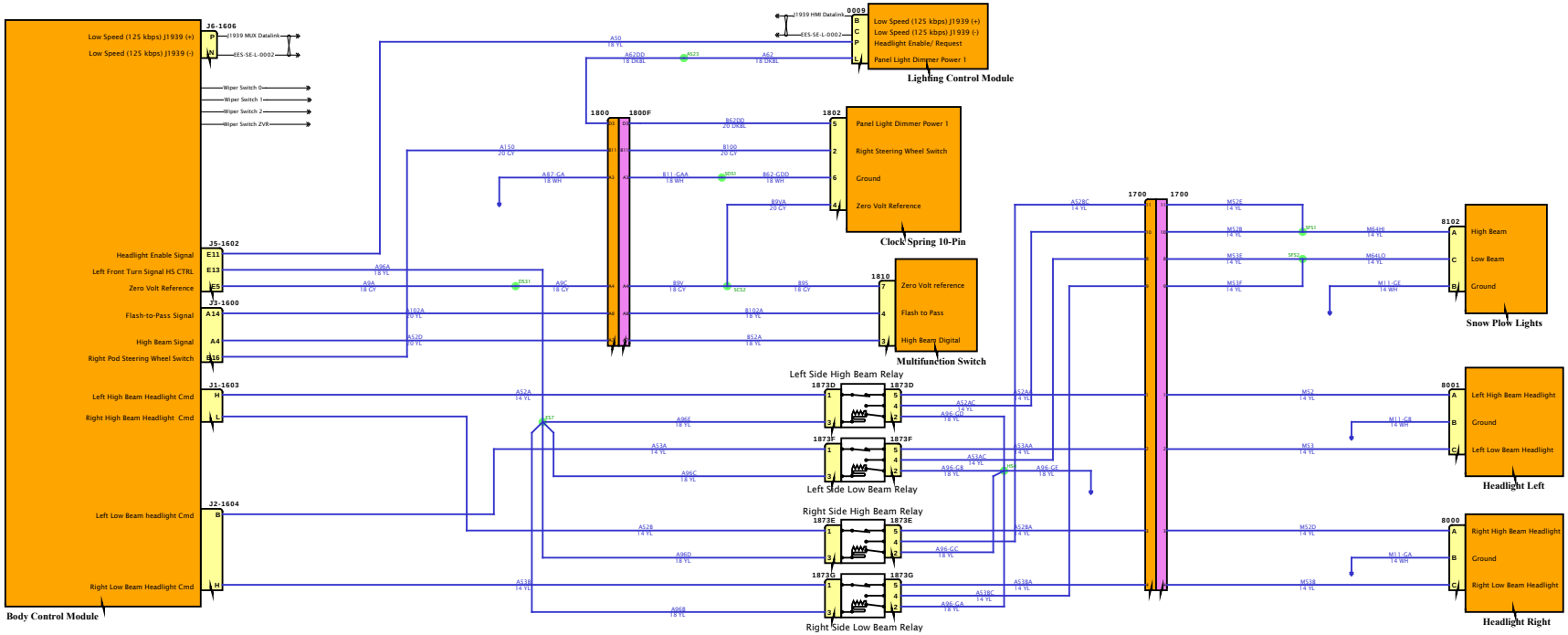

DESIGN DESCRIPTION

FEATURE CODES

SOFTWARE FEATURE CODES

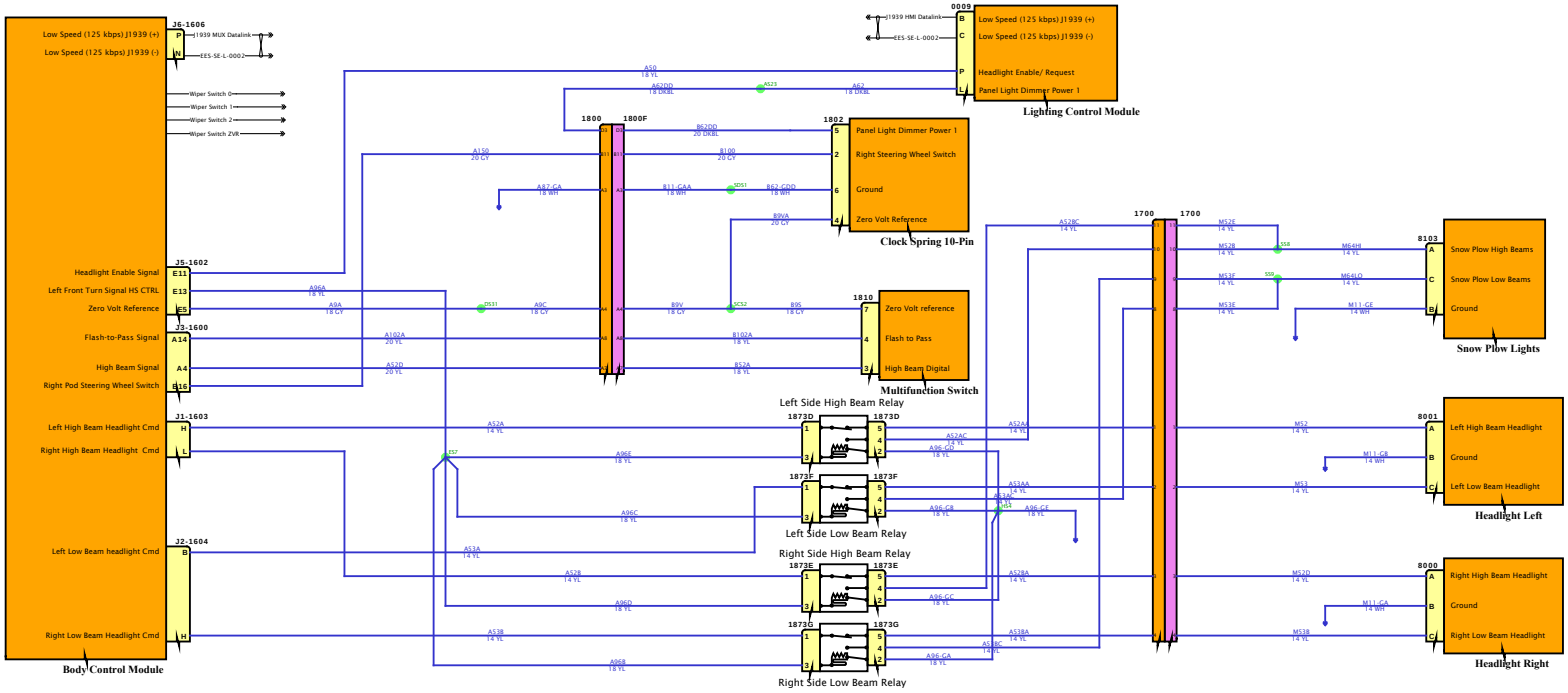

DESIGN DESCRIPTION

FEATURE CODES

SOFTWARE FEATURE CODES

NAVISTAR INC. CONFIDENTIAL PROPRIETARY

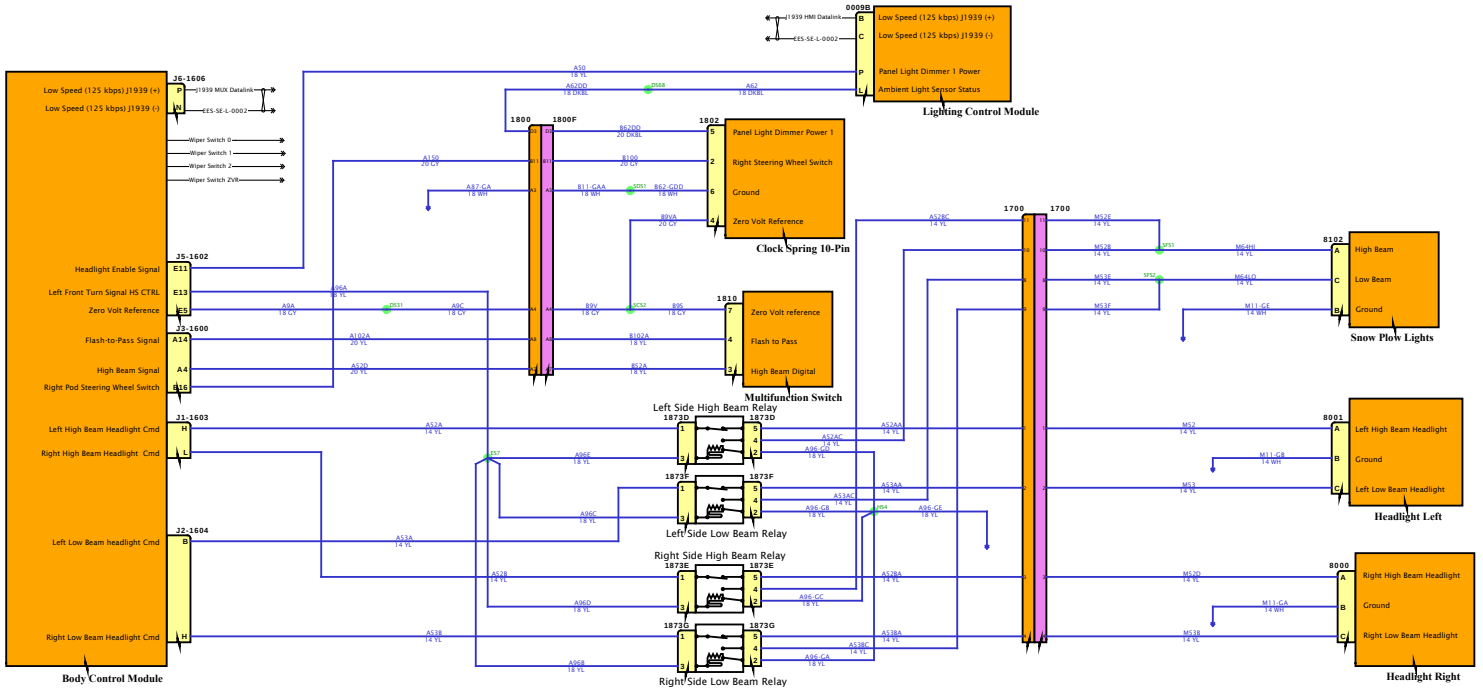

DESIGN DESCRIPTION

FEATURE CODES

SOFTWARE FEATURE CODES

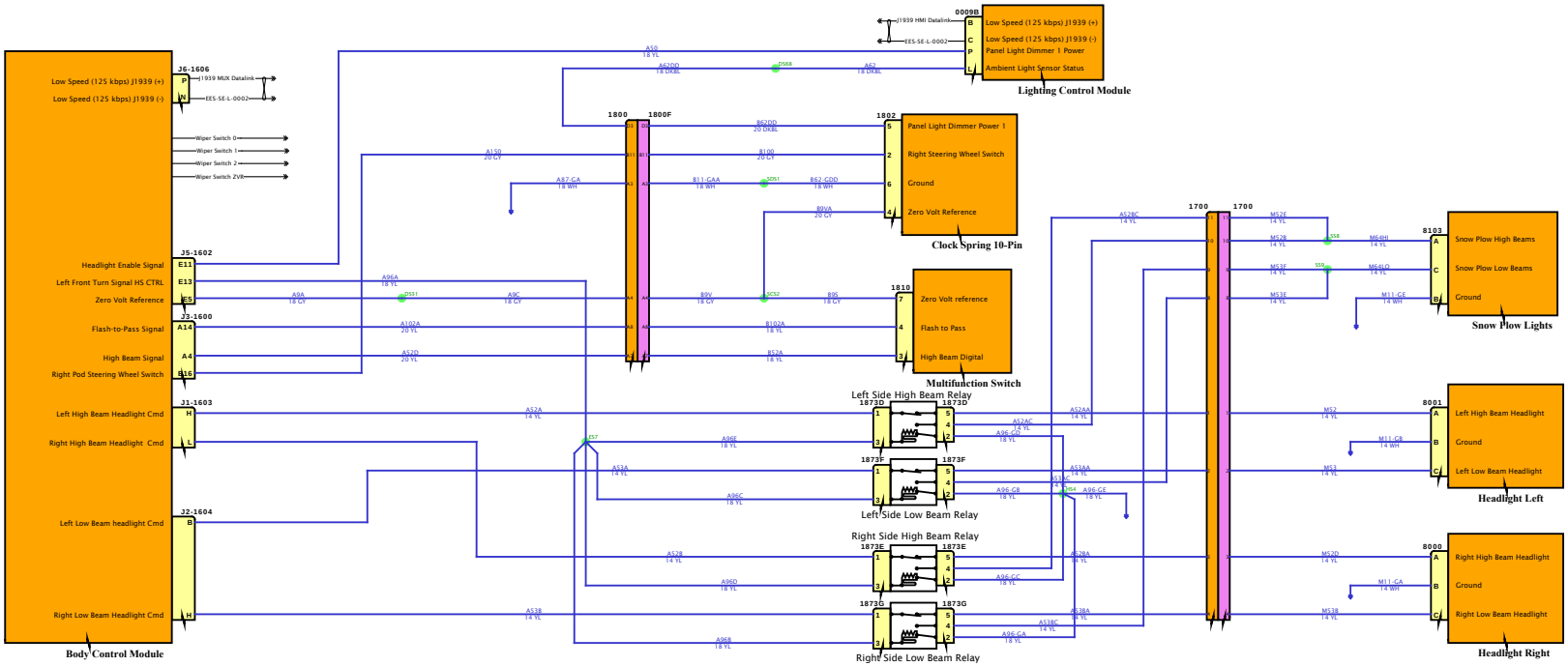

DESIGN DESCRIPTION

FEATURE CODES

SOFTWARE FEATURE CODES

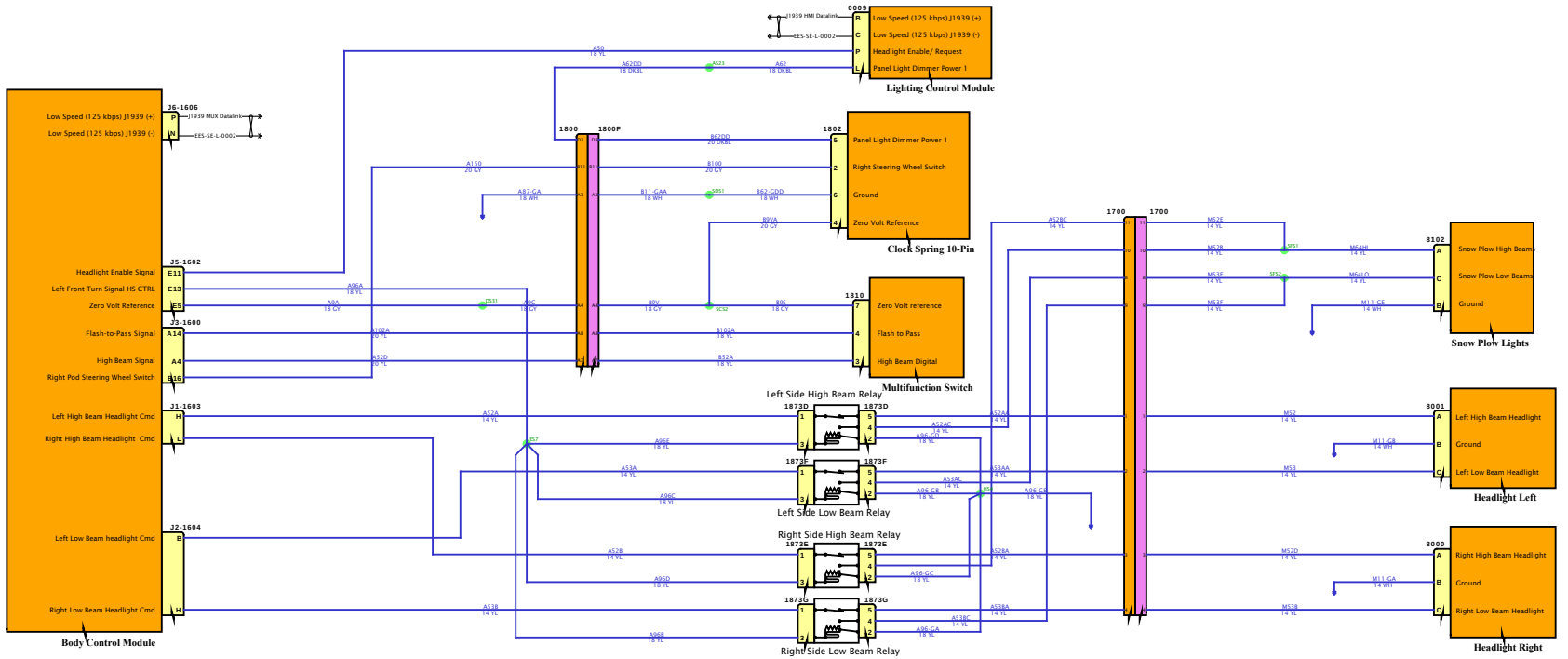

DESIGN DESCRIPTION

FEATURE CODES

SOFTWARE FEATURE CODES

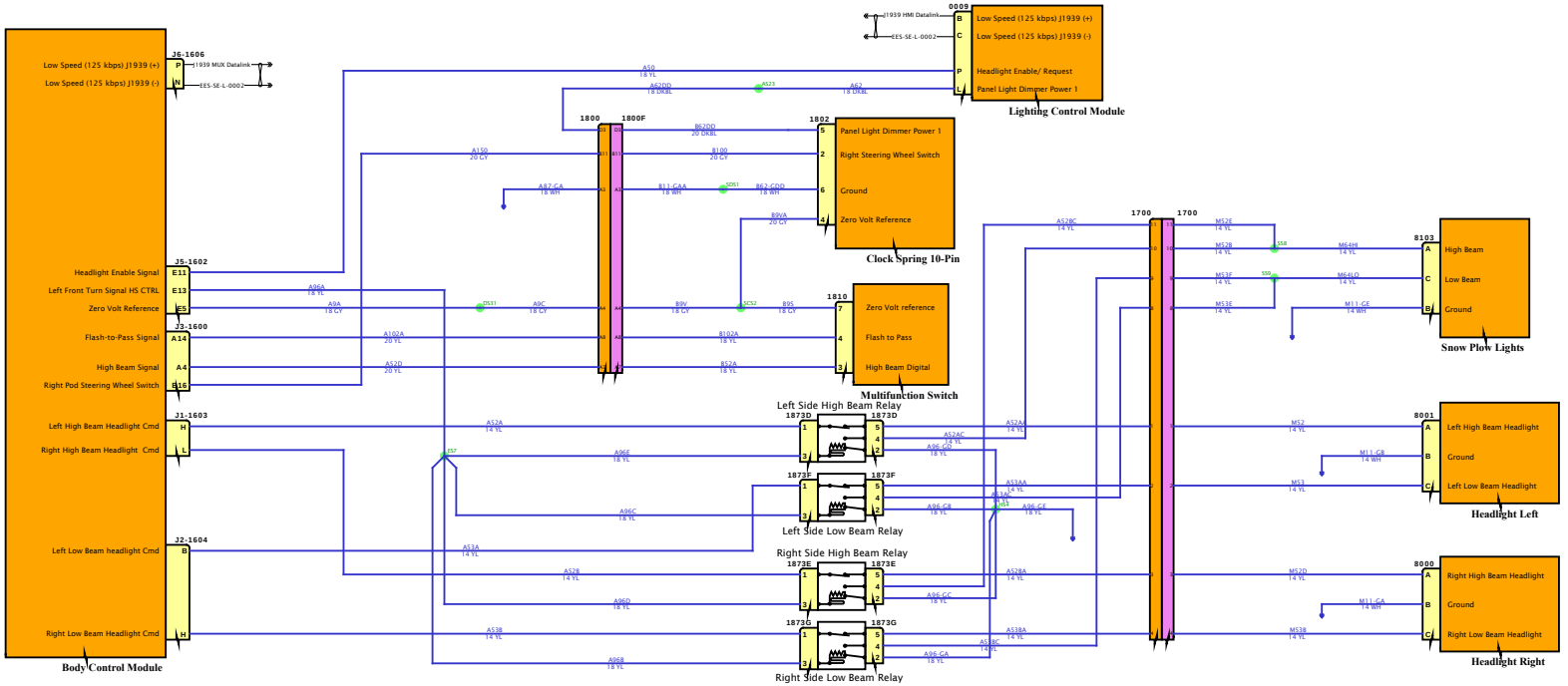

DESIGN DESCRIPTION

FEATURE CODES

SOFTWARE FEATURE CODES

NAVISTAR INC. CONFIDENTIAL PROPRIETARY

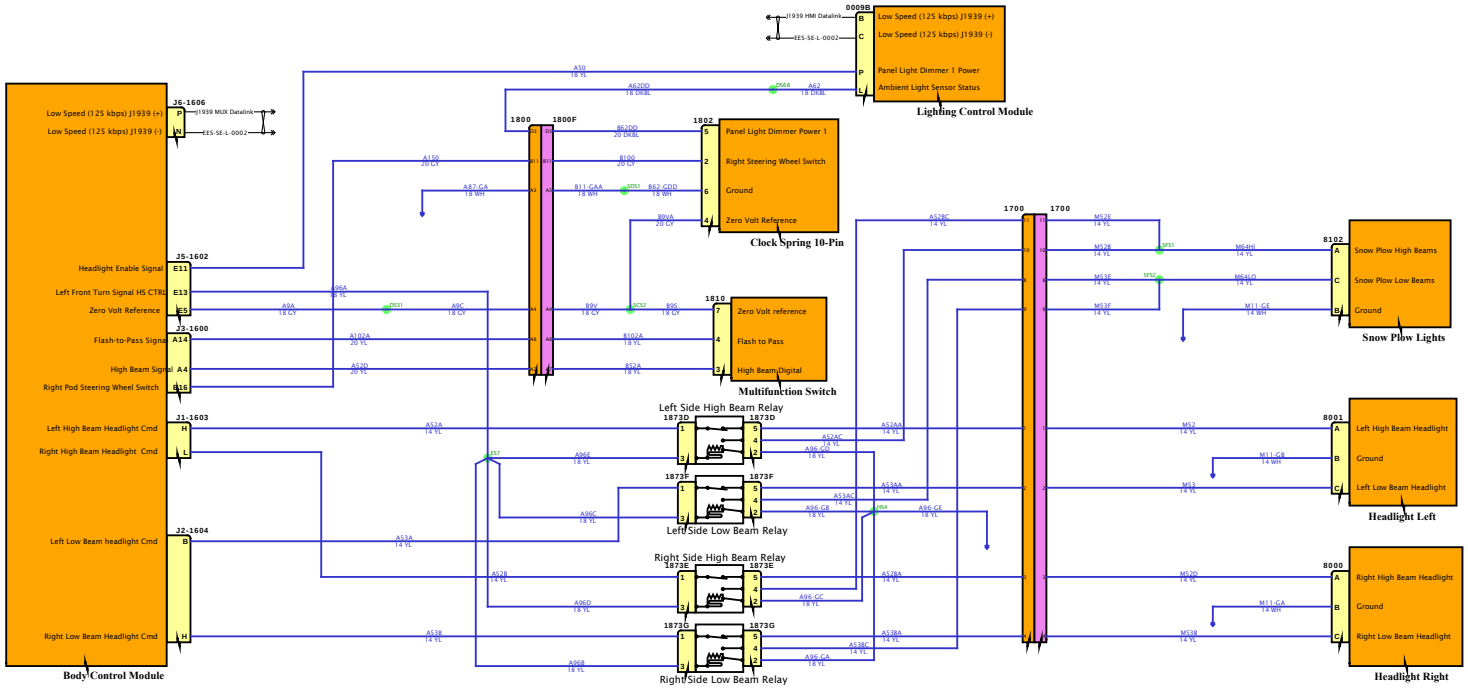

DESIGN DESCRIPTION

FEATURE CODES

SOFTWARE FEATURE CODES

NAVISTAR INC. CONFIDENTIAL PROPRIETARY

Diagram1-Combination4

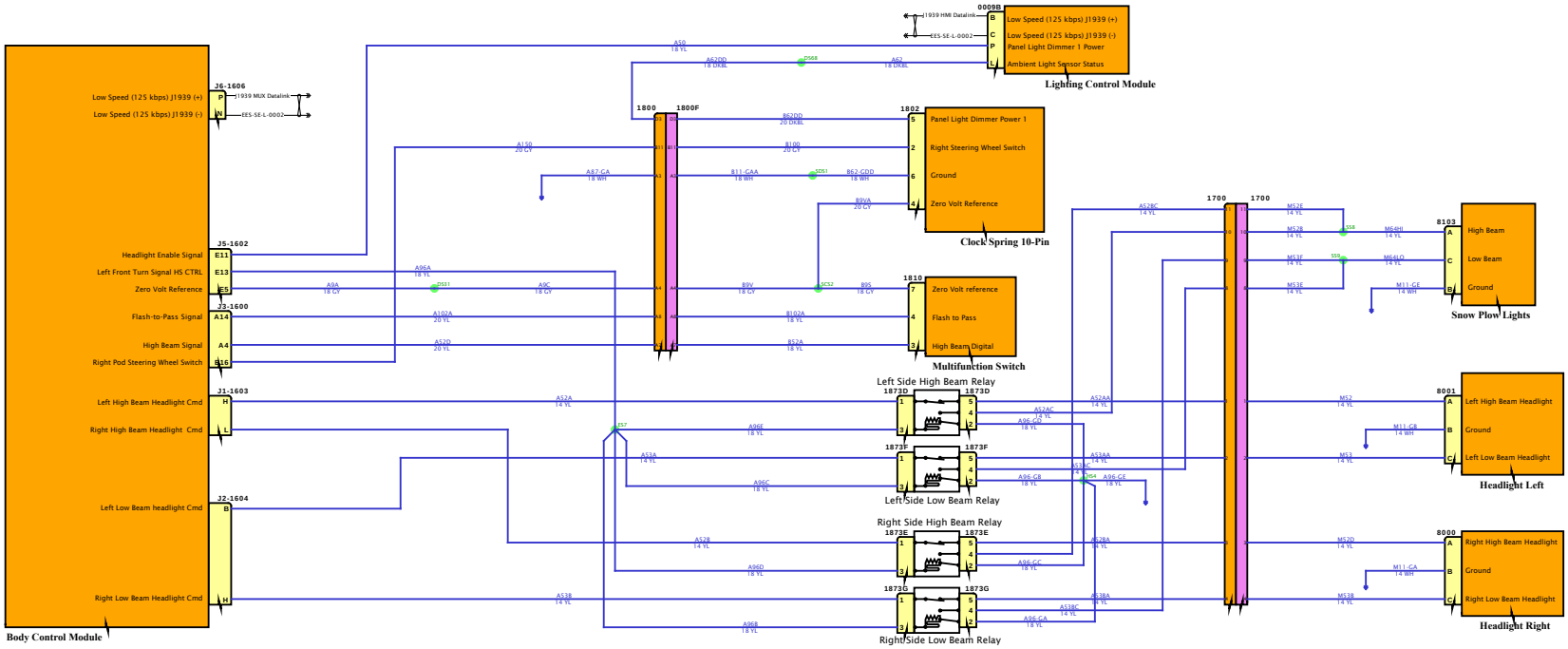

DESIGN DESCRIPTION

FEATURE CODES

SOFTWARE FEATURE CODES

NAVISTAR
NAVISTAR, INC. CONFIDENTIAL PROPRIETARY

Diagram1

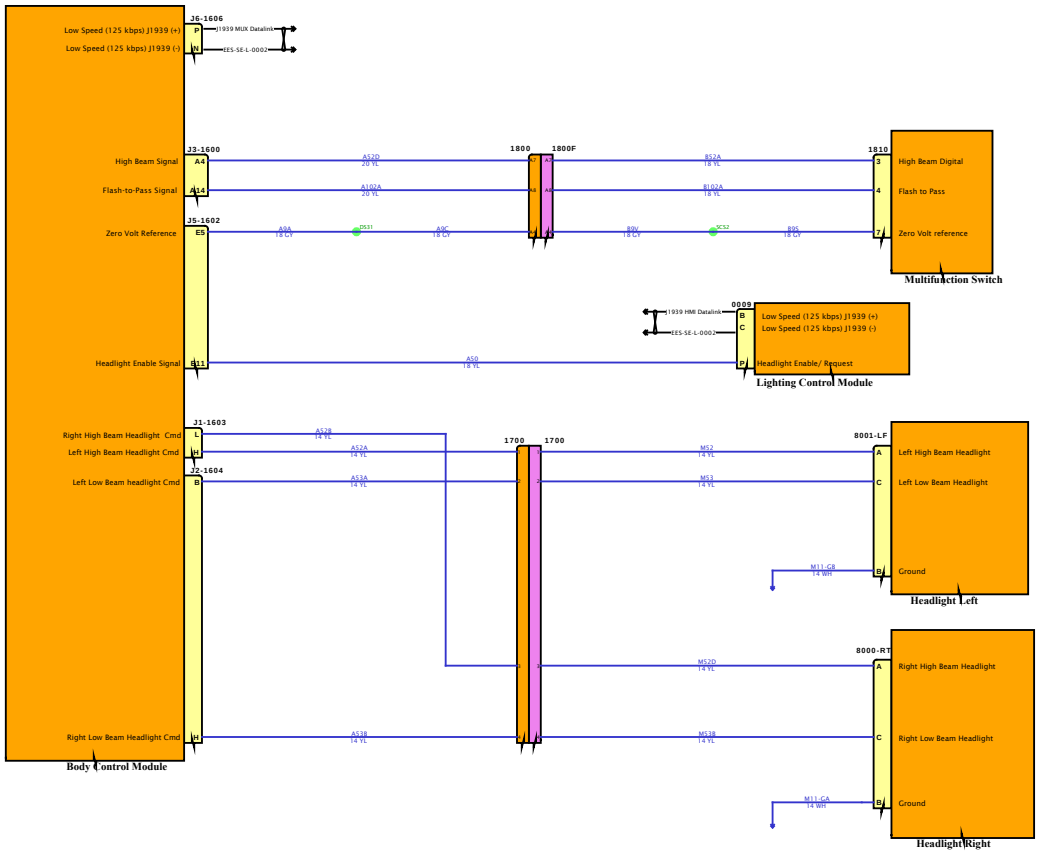

DESIGN DESCRIPTION

FEATURE CODES

SOFTWARE FEATURE CODES

NAVISTAR INC. CONFIDENTIAL PROPRIETARY

Diagram2

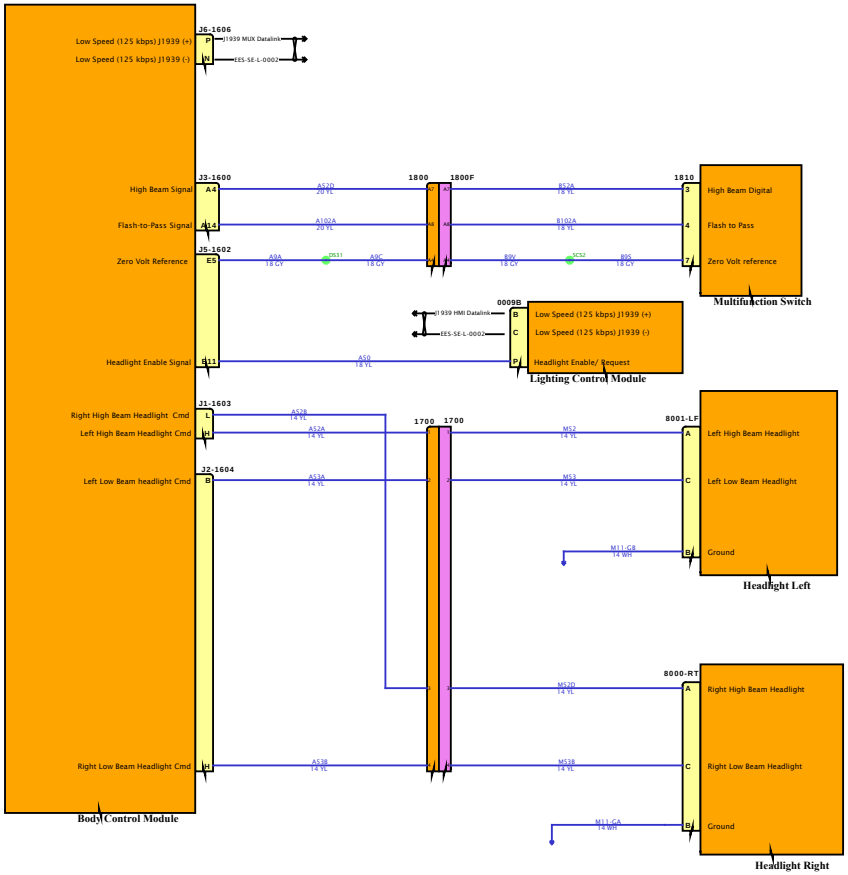

DESIGN DESCRIPTION

FEATURE CODES

SOFTWARE FEATURE CODES

NAVISTAR INC. CONFIDENTIAL PROPRIETARY

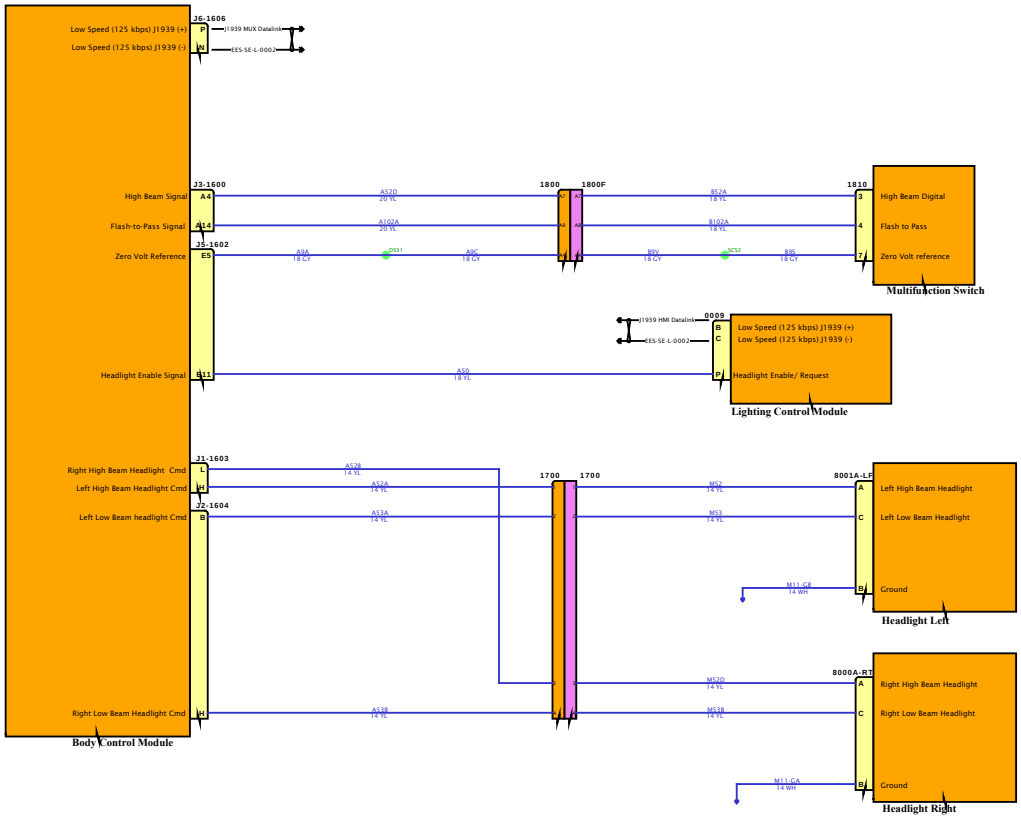

DESIGN DESCRIPTION

FEATURE CODES

SOFTWARE FEATURE CODES

NAVISTAR
NAVISTAR, INC. CONFIDENTIAL PROPRIETARY

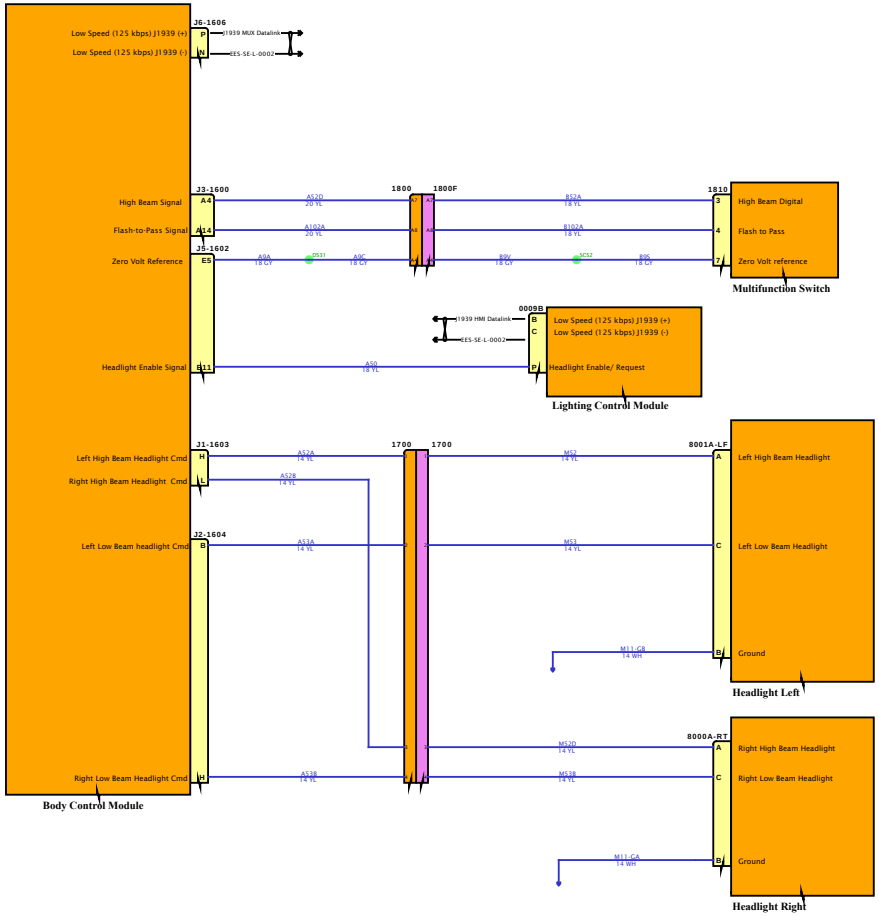

DESIGN DESCRIPTION

FEATURE CODES

SOFTWARE FEATURE CODES

NAVISTAR
NAVISTAR, INC. CONFIDENTIAL PROPRIETARY

Diagram1

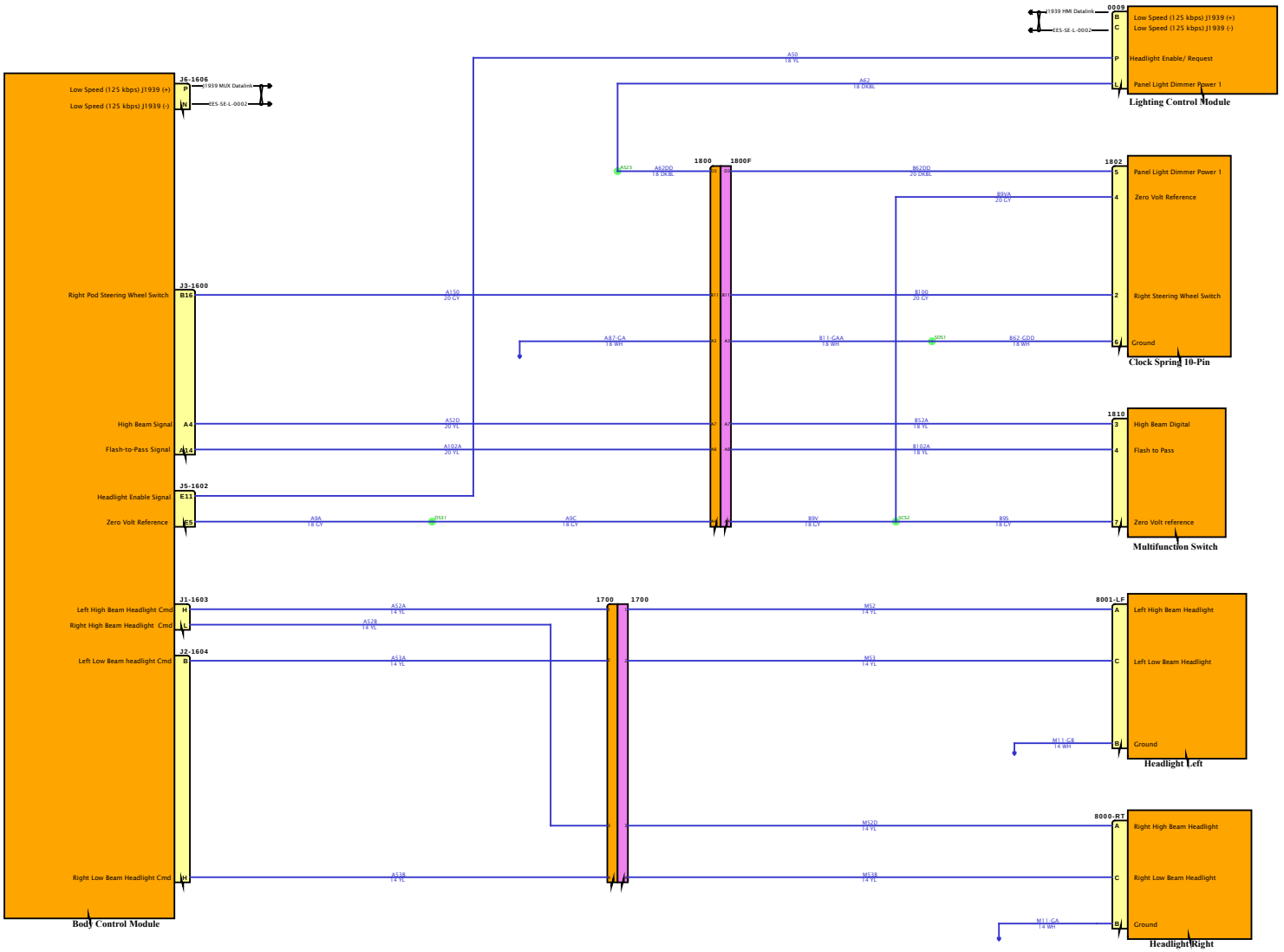
Low Speed (125 kbps) J1939 (+)
Low Speed (125 kbps) J1939 (-)
J6-1606
1939 MUX Datalink
EES-SE-L-0002
Body Control Module
1939 HMI Datalink
0009
Low Speed (125 kbps) J1939 (+)
Low Speed (125 kbps) J1939 (-)
Headlight Enable/ Request
Panel Light Dimmer Power 1
Lighting Control Module
A50 18 YL
A62 18 DKBL
1800
1800F
A523
A62DD 18 DKBL
B62DD 20 DKBL
1802
Panel Light Dimmer Power 1
Zero Volt Reference
B8VA 20 GY
Right Pod Steering Wheel Switch
J3-1600
B16
A150 20 GY
B100 20 GY
Right Steering Wheel Switch
A87-GA 18 WH
B11-GAA 18 WH
G551
B62-GDD 18 WH
Ground
Clock Spring 10-Pin
High Beam Signal
A4
A52D 20 YL
B52A 18 YL
1810
High Beam Digital
Flash-to-Pass Signal
A14
A102A 20 YL
B102A 18 YL
Flash to Pass
Headlight Enable Signal
J5-1602
E11
Zero Volt Reference
E5
A9A 18 GY
G551
A9C 18 GY
B9V 18 GY
C52
B95 18 GY
Zero Volt reference
Multifunction Switch
Left High Beam Headlight Cmd
J1-1603
H
Right High Beam Headlight Cmd
L
A52A 14 YL
A52B 14 YL
1700
1700
M52 14 YL
8001-LF
A
Left High Beam Headlight
Left Low Beam headlight Cmd
J2-1604
D
A53A 14 YL
M53 14 YL
C
Left Low Beam Headlight
M11-GB 14 WH
B
Ground
Headlight Left
M52D 14 YL
8000-RT
A
Right High Beam Headlight
Right Low Beam Headlight Cmd
H
A53B 14 YL
M53B 14 YL
C
Right Low Beam Headlight
M11-GA 14 WH
B
Ground
Headlight Right
DESIGN DESCRIPTION
FEATURE CODES
SOFTWARE FEATURE CODES
NAVISTAR
NAVISTAR, INC. CONFIDENTIAL PROPRIETARY

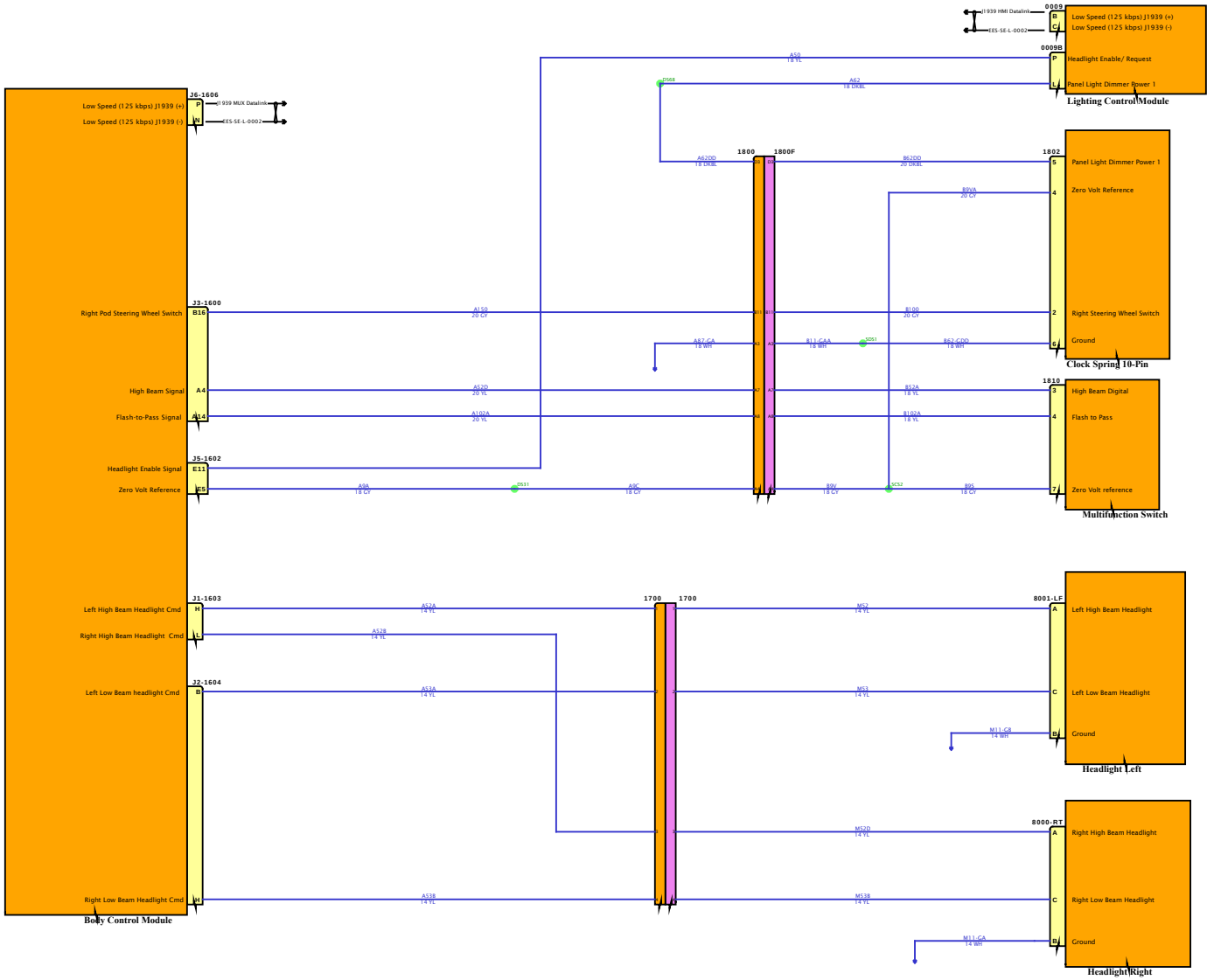

DESIGN DESCRIPTION

FEATURE CODES

SOFTWARE FEATURE CODES

NAVISTAR
NAVISTAR, INC. CONFIDENTIAL PROPRIETARY

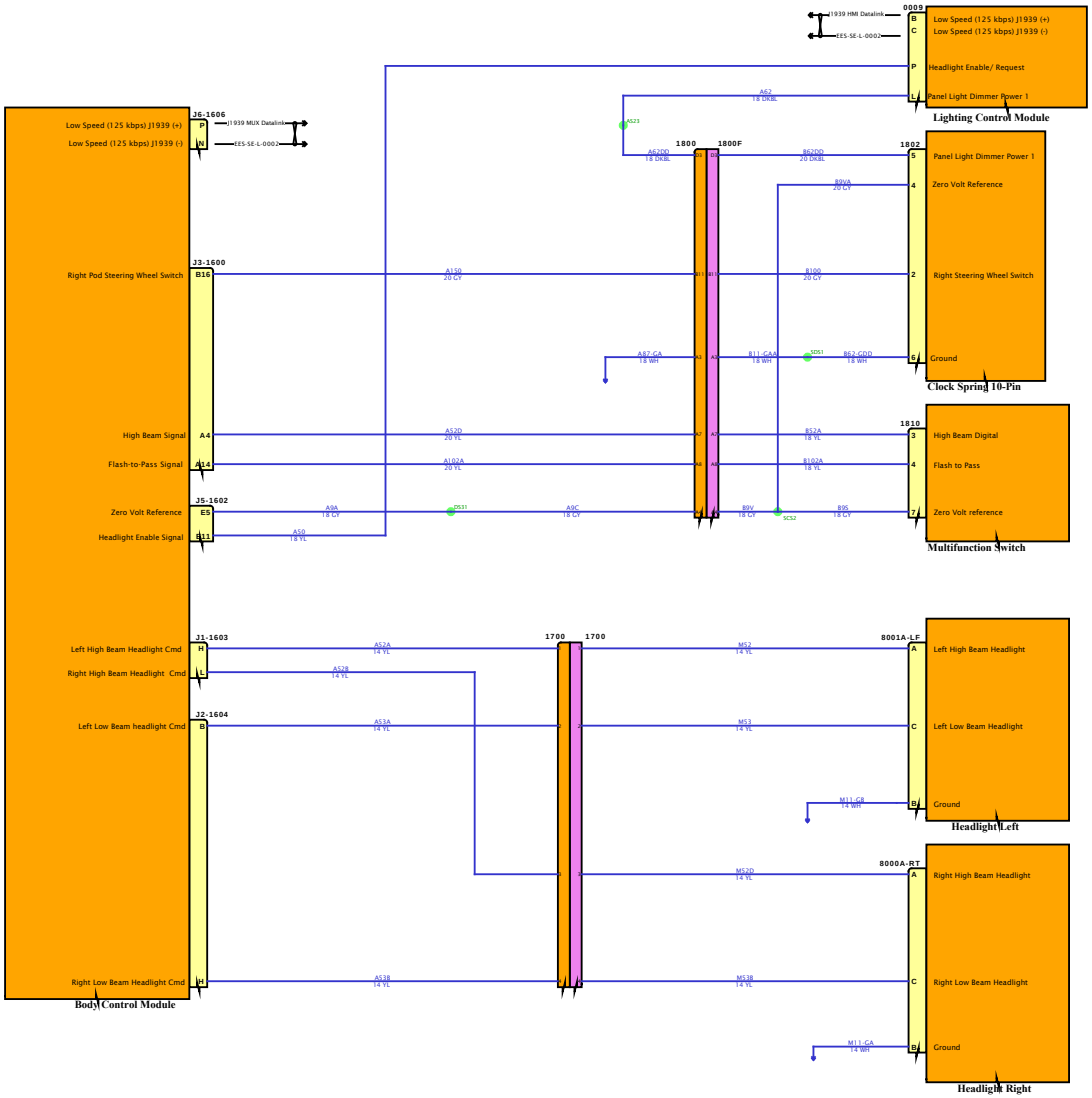

DESIGN DESCRIPTION

FEATURE CODES

SOFTWARE FEATURE CODES

NAVISTAR
NAVISTAR, INC. CONFIDENTIAL PROPRIETARY

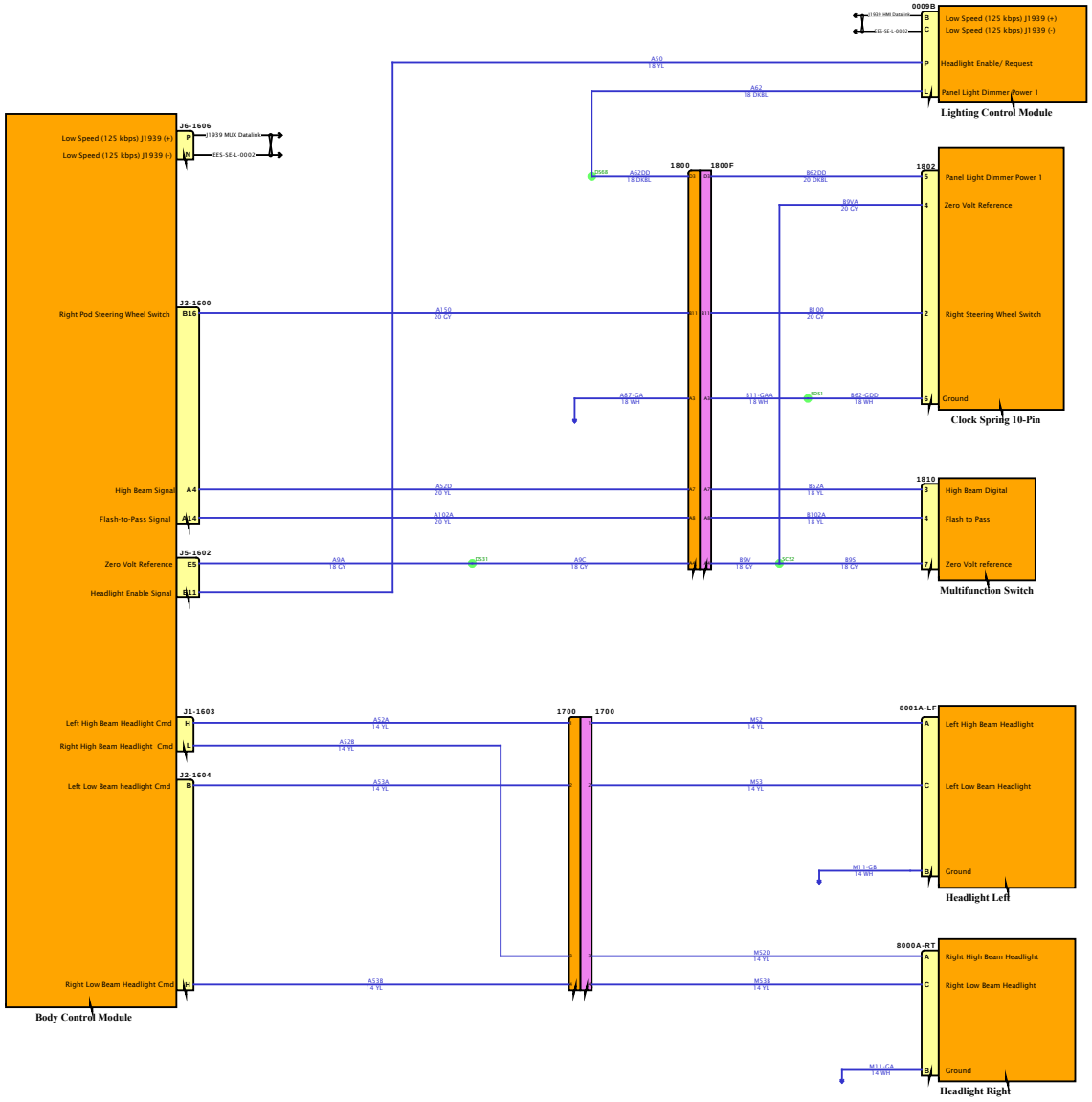

DESIGN DESCRIPTION

FEATURE CODES

SOFTWARE FEATURE CODES

NAVISTAR INC. CONFIDENTIAL PROPRIETARY

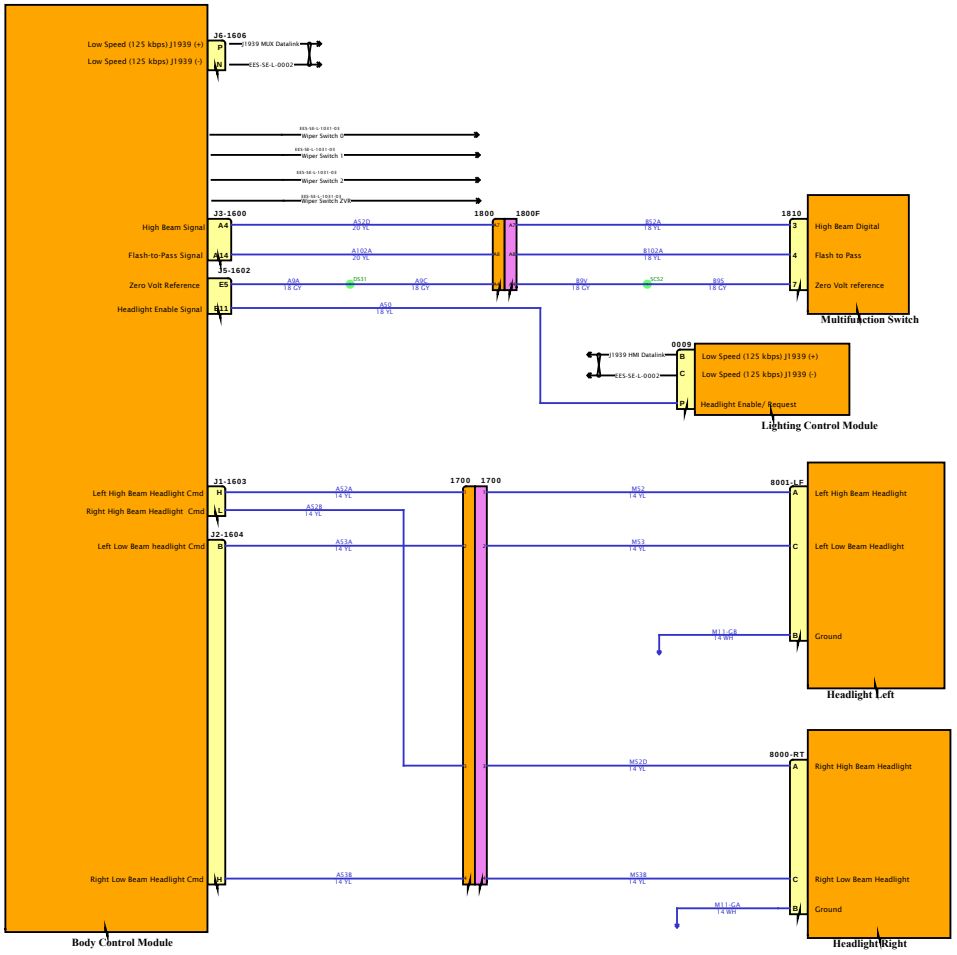

DESIGN DESCRIPTION

FEATURE CODES

SOFTWARE FEATURE CODES

NAVISTAR INC. CONFIDENTIAL PROPRIETARY

Diagram2

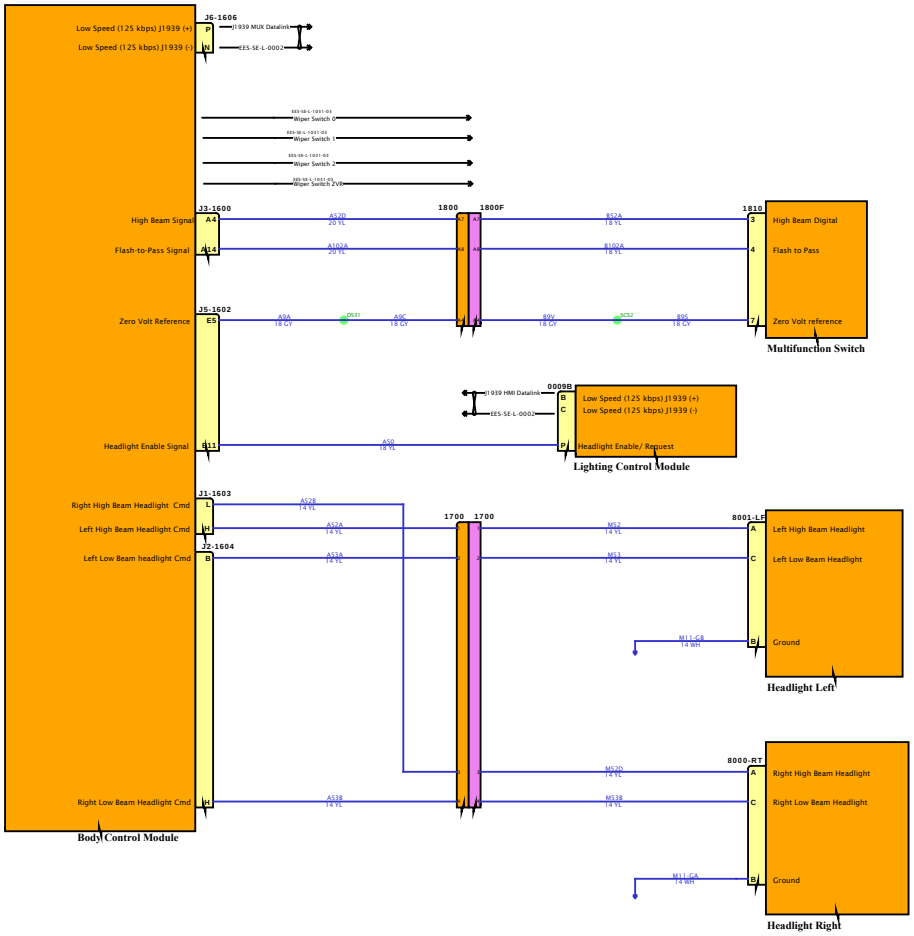

DESIGN DESCRIPTION

FEATURE CODES

SOFTWARE FEATURE CODES

NAVISTAR INC. CONFIDENTIAL PROPRIETARY

Diagram3

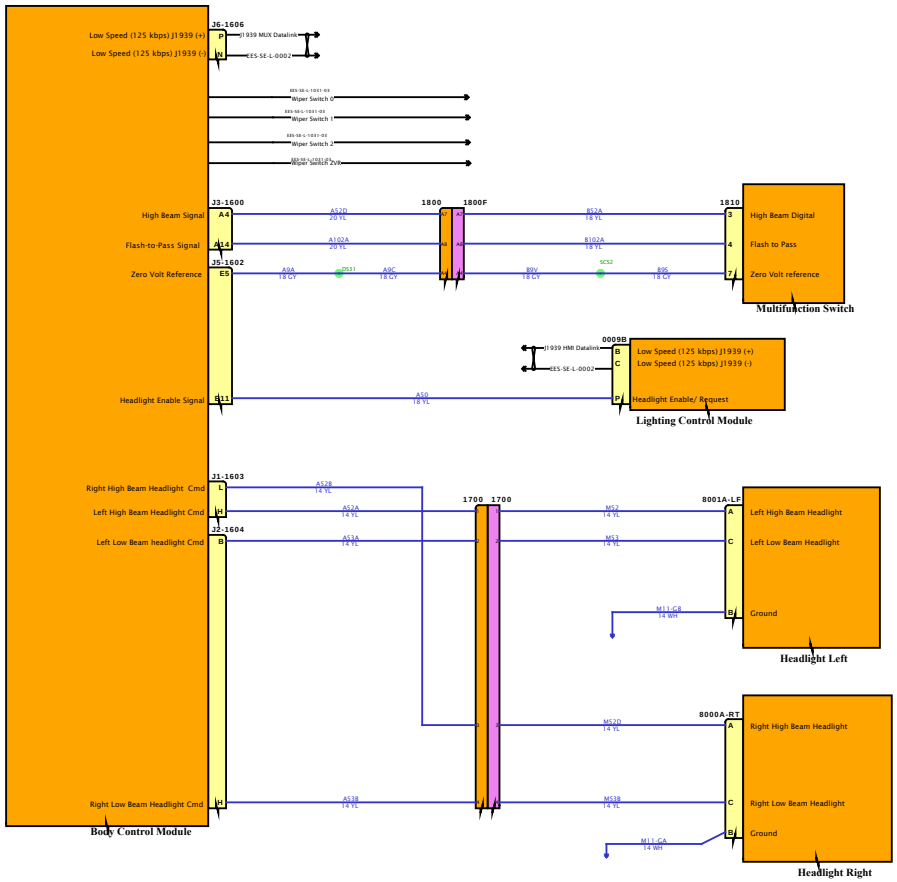

DESIGN DESCRIPTION

FEATURE CODES

SOFTWARE FEATURE CODES

NAVISTAR INC. CONFIDENTIAL PROPRIETARY

DESIGN DESCRIPTION

FEATURE CODES

SOFTWARE FEATURE CODES

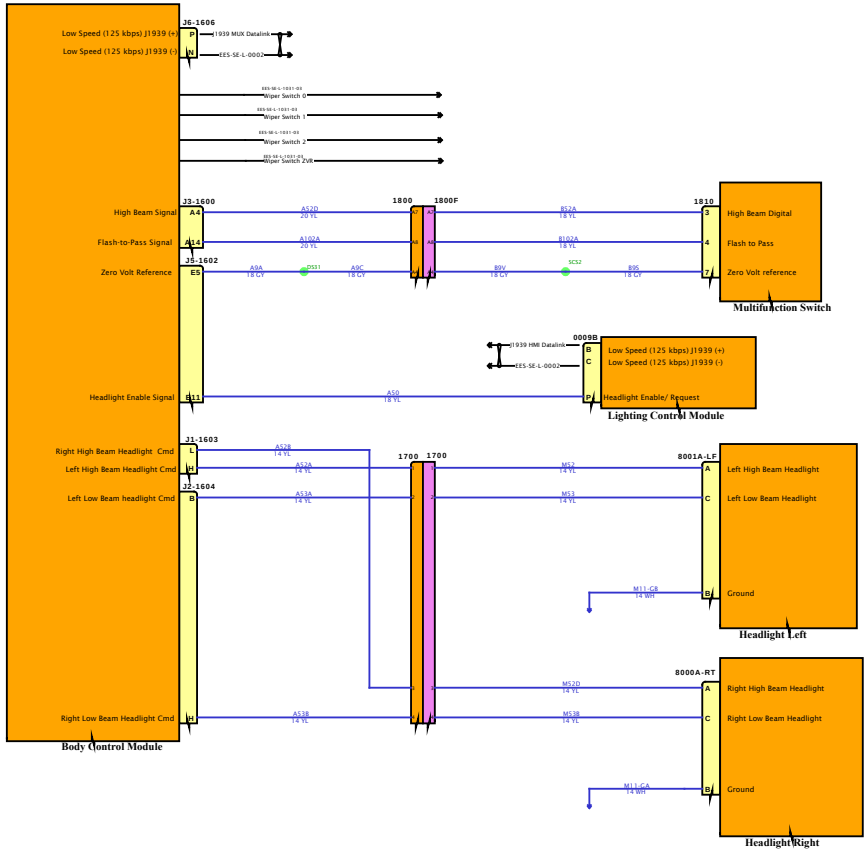

NAVISTAR
NAVISTAR, INC. CONFIDENTIAL PROPRIETARY

Diagram1

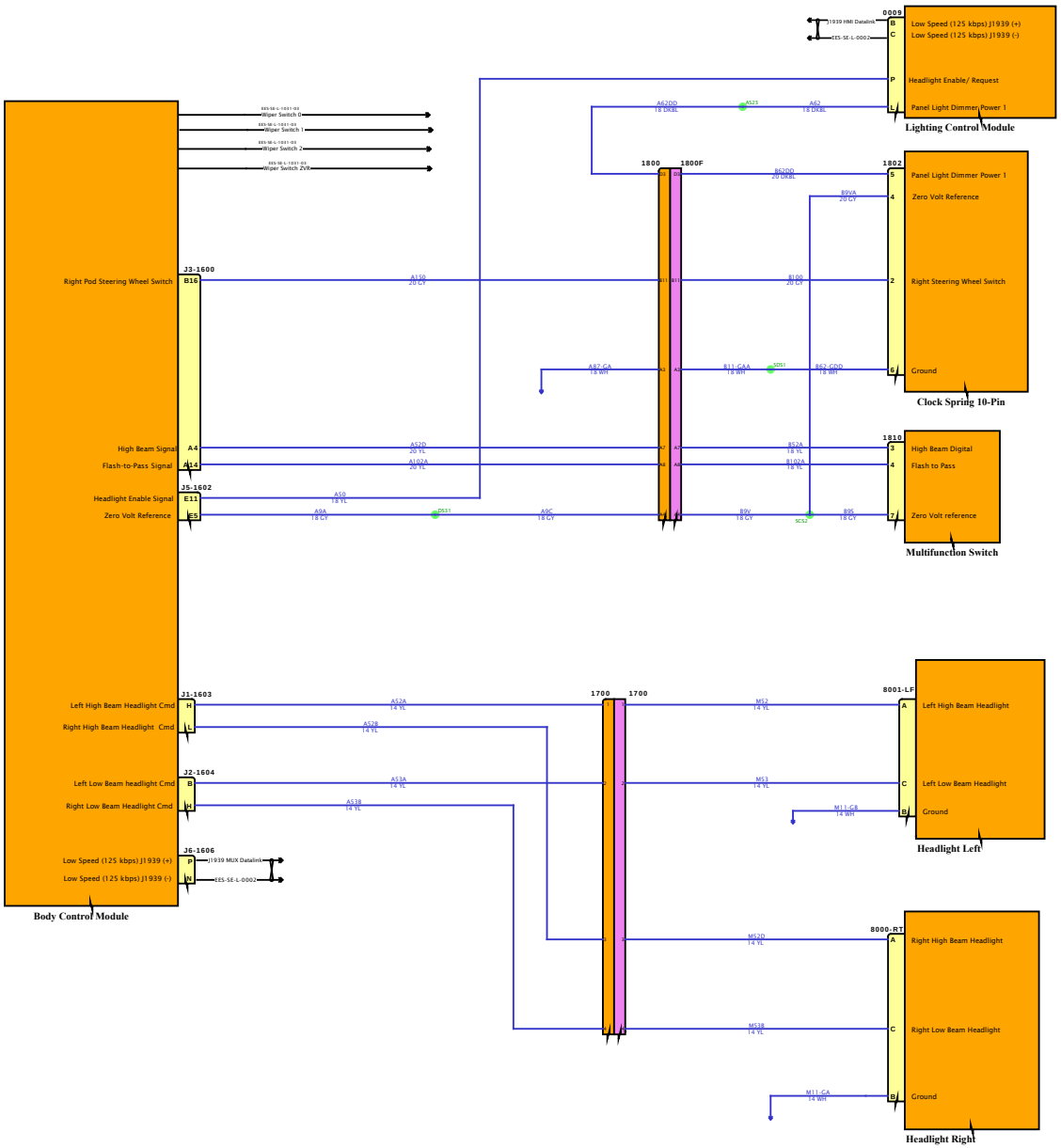

DESIGN DESCRIPTION

FEATURE CODES

SOFTWARE FEATURE CODES

Diagram2

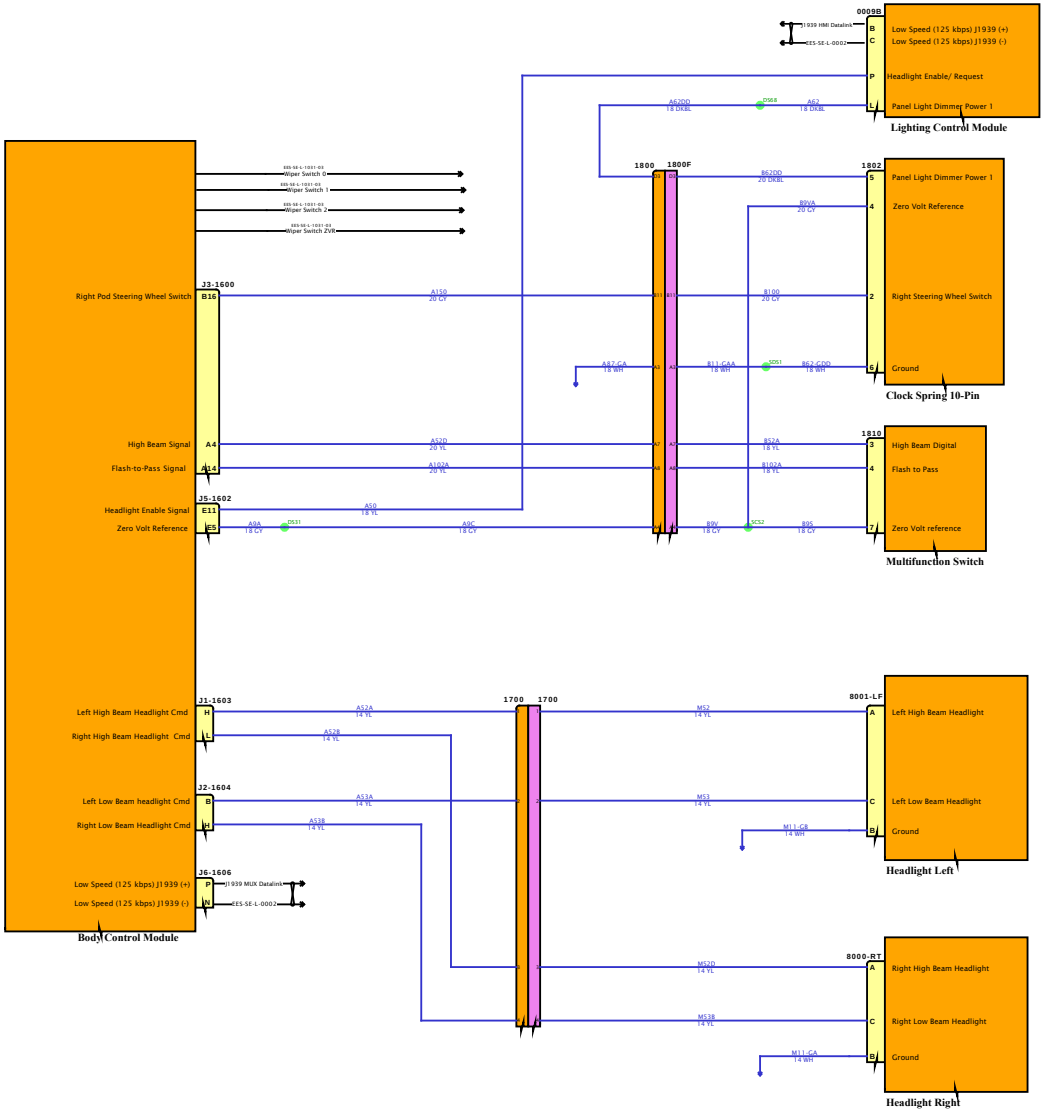

DESIGN DESCRIPTION

FEATURE CODES

SOFTWARE FEATURE CODES

Diagram3

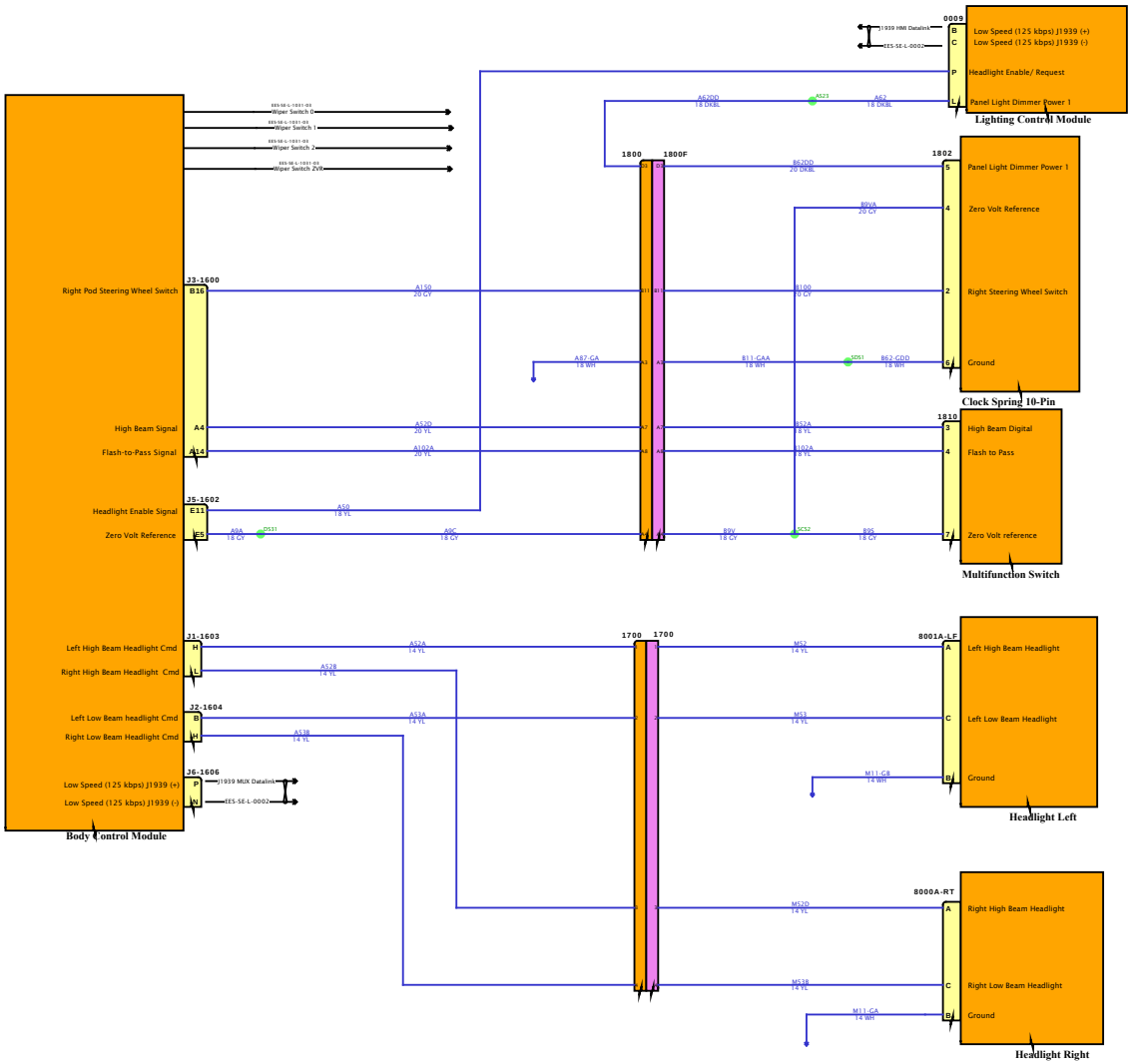

DESIGN DESCRIPTION

FEATURE CODES

SOFTWARE FEATURE CODES

NAVISTAR
NAVISTAR, INC. CONFIDENTIAL PROPRIETARY

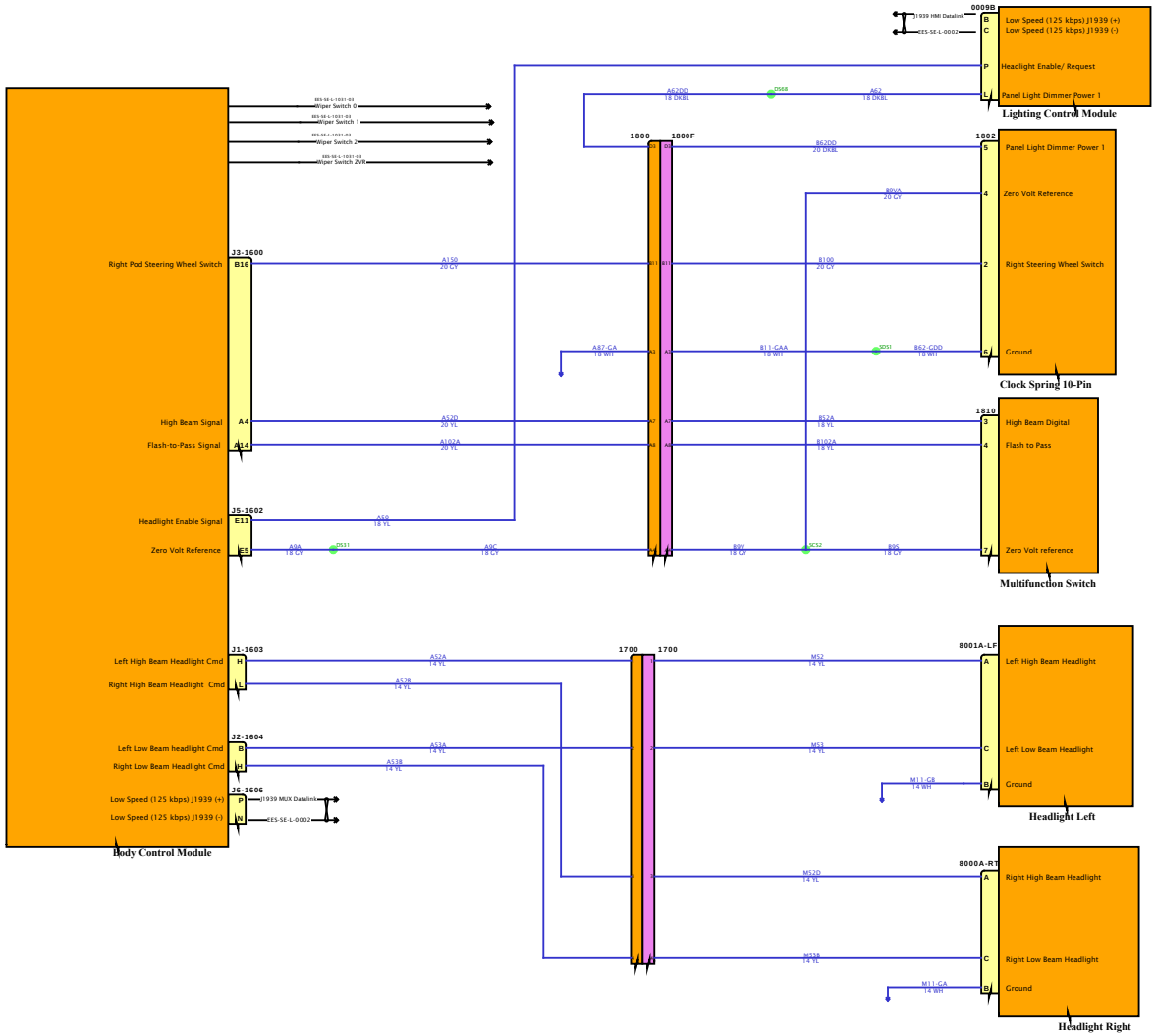
Body Control Module
J3-1600
B16
Right Pod Steering Wheel Switch
A4
High Beam Signal
A14
Flash-to-Pass Signal
J5-1602
E11
Headlight Enable Signal
E5
Zero Volt Reference
J1-1603
H
Left High Beam Headlight Cmd
L
Right High Beam Headlight Cmd
J2-1604
B
Left Low Beam headlight Cmd
H
Right Low Beam Headlight Cmd
J6-1606
P
Low Speed (125 kbps) J1939 (+)
N
Low Speed (125 kbps) J1939 (-)
J1939 MUX Datalink
CES-SE-L-0002
J1939 HMI Datalink
0009B
Low Speed (125 kbps) J1939 (+)
Low Speed (125 kbps) J1939 (-)
Headlight Enable/ Request
Panel Light Dimmer Power 1
Lighting Control Module
1800
1800F
1802
Panel Light Dimmer Power 1
Zero Volt Reference
Right Steering Wheel Switch
Ground
Clock Spring 10-Pin
1810
High Beam Digital
Flash to Pass
Zero Volt reference
Multifunction Switch
1700
1700
8001A-LF
Left High Beam Headlight
Left Low Beam Headlight
Ground
Headlight Left
8000A-RT
Right High Beam Headlight
Right Low Beam Headlight
Ground
Headlight Right
DESIGN DESCRIPTION
FEATURE CODES
SOFTWARE FEATURE CODES
NAVISTAR
NAVISTAR, INC. CONFIDENTIAL PROPRIETARY

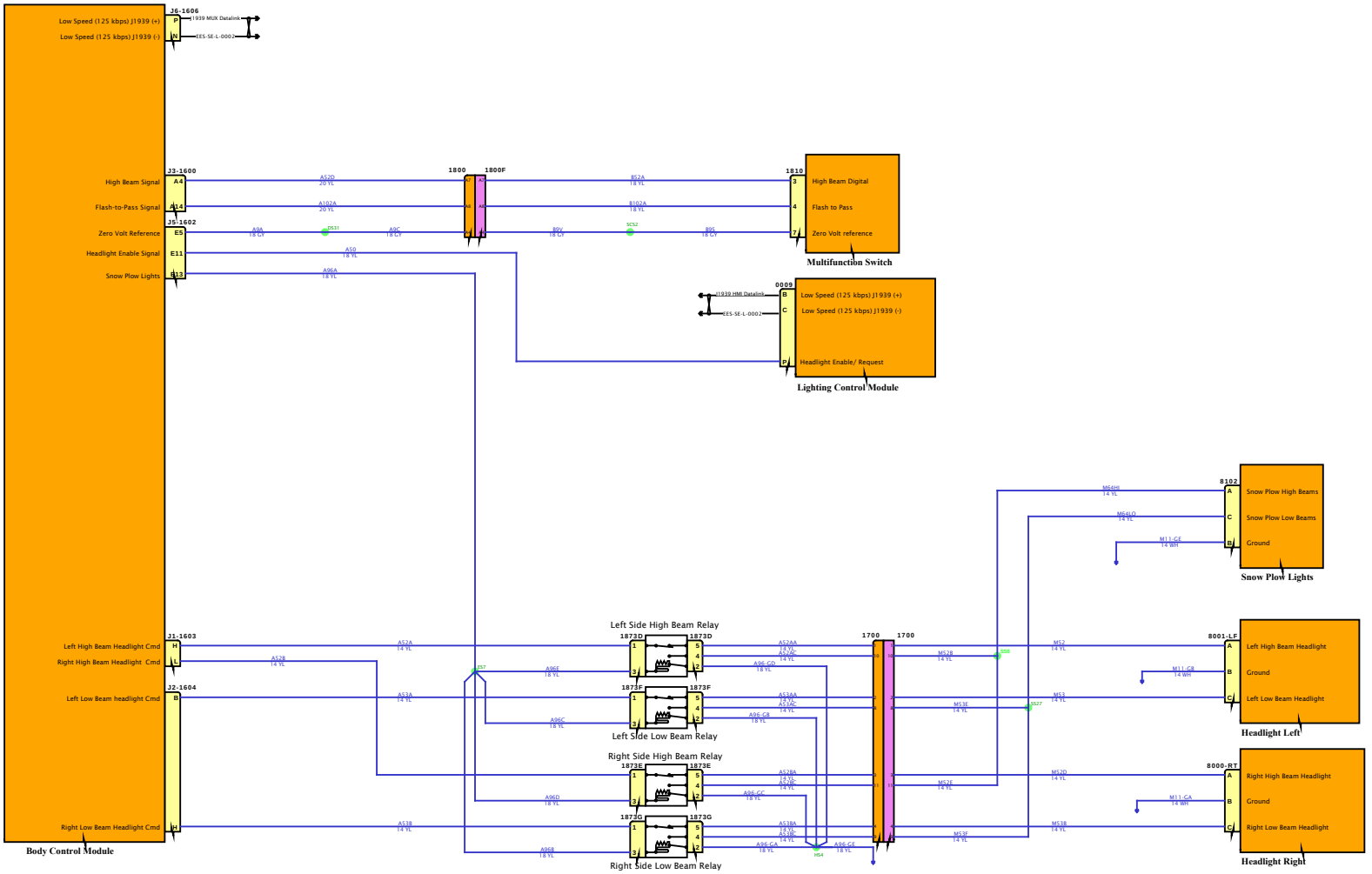

DESIGN DESCRIPTION

FEATURE CODES

SOFTWARE FEATURE CODES

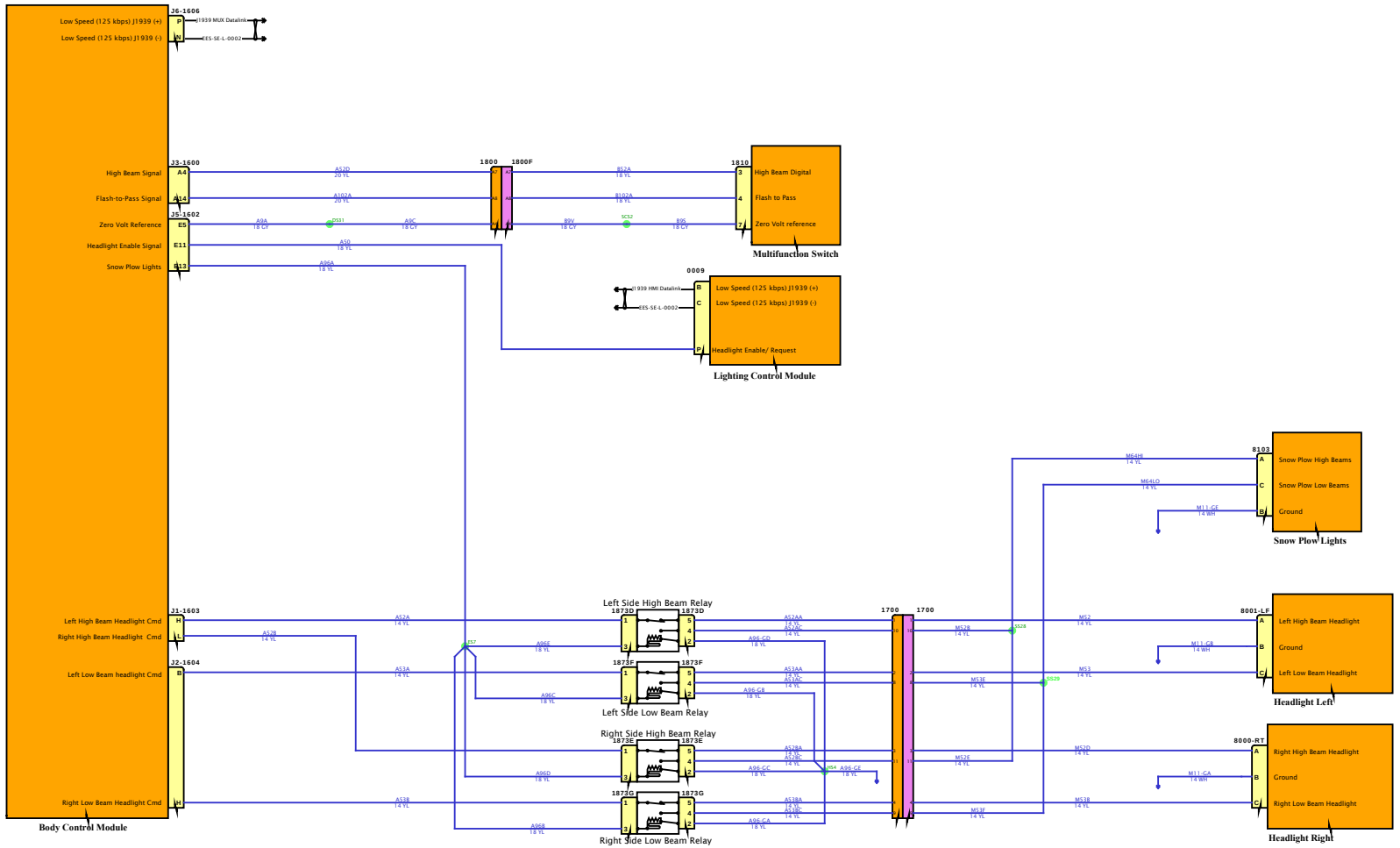

DESIGN DESCRIPTION

FEATURE CODES

SOFTWARE FEATURE CODES

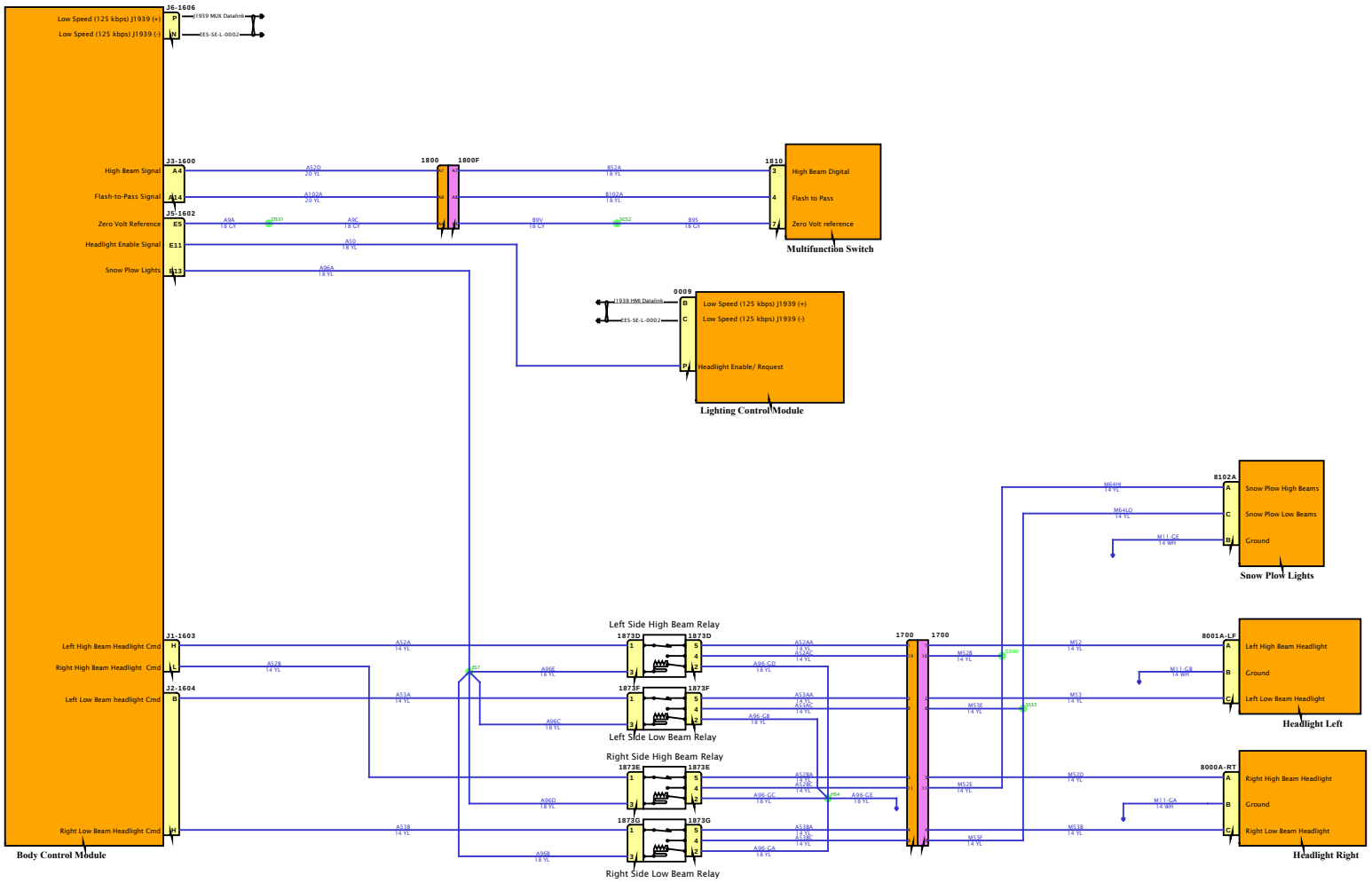

DESIGN DESCRIPTION

FEATURE CODES

SOFTWARE FEATURE CODES

NAVISTAR INC. CONFIDENTIAL PROPRIETARY

Diagram4

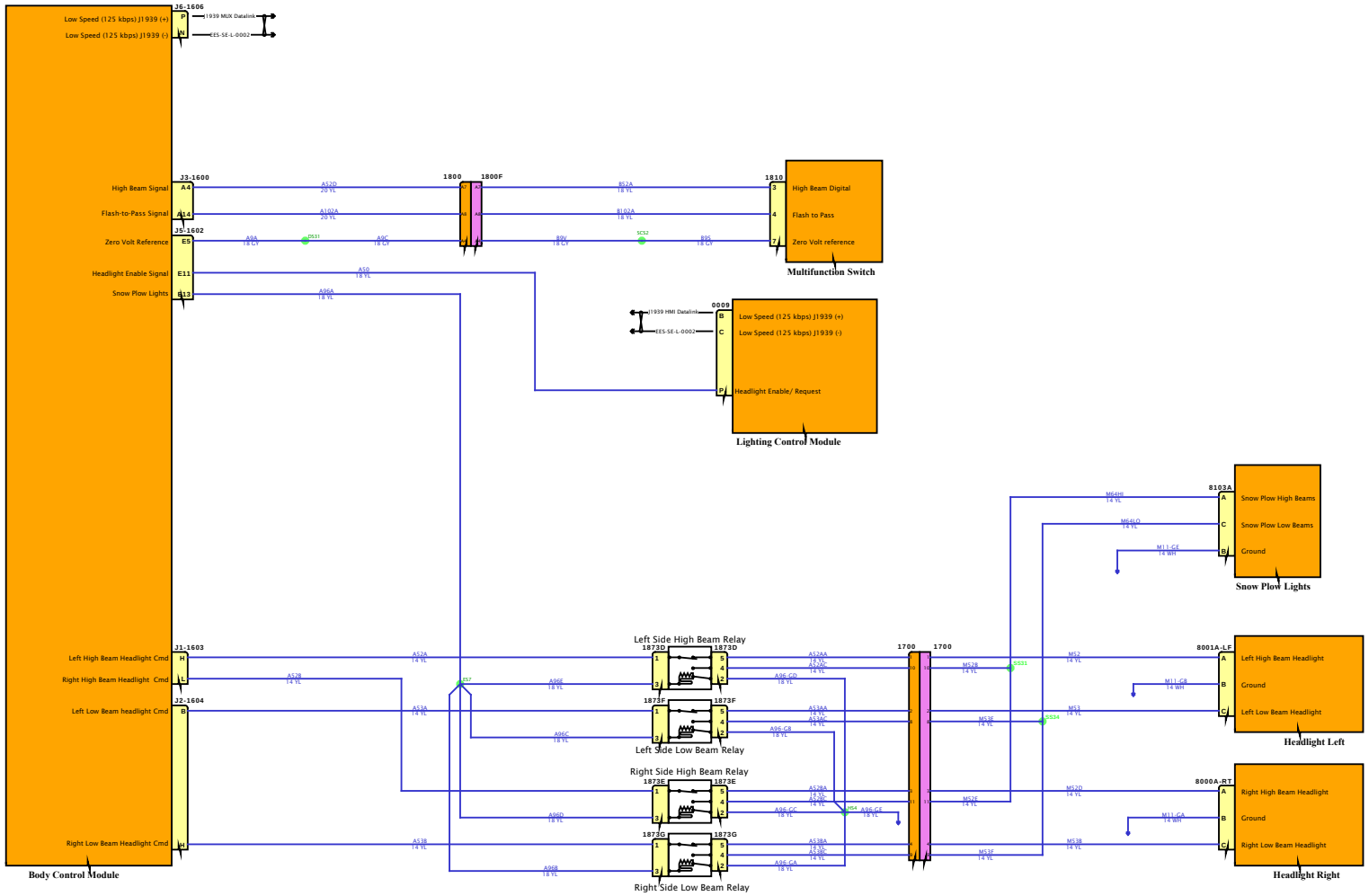

DESIGN DESCRIPTION

FEATURE CODES

SOFTWARE FEATURE CODES

NAVISTAR
NAVISTAR, INC. CONFIDENTIAL PROPRIETARY

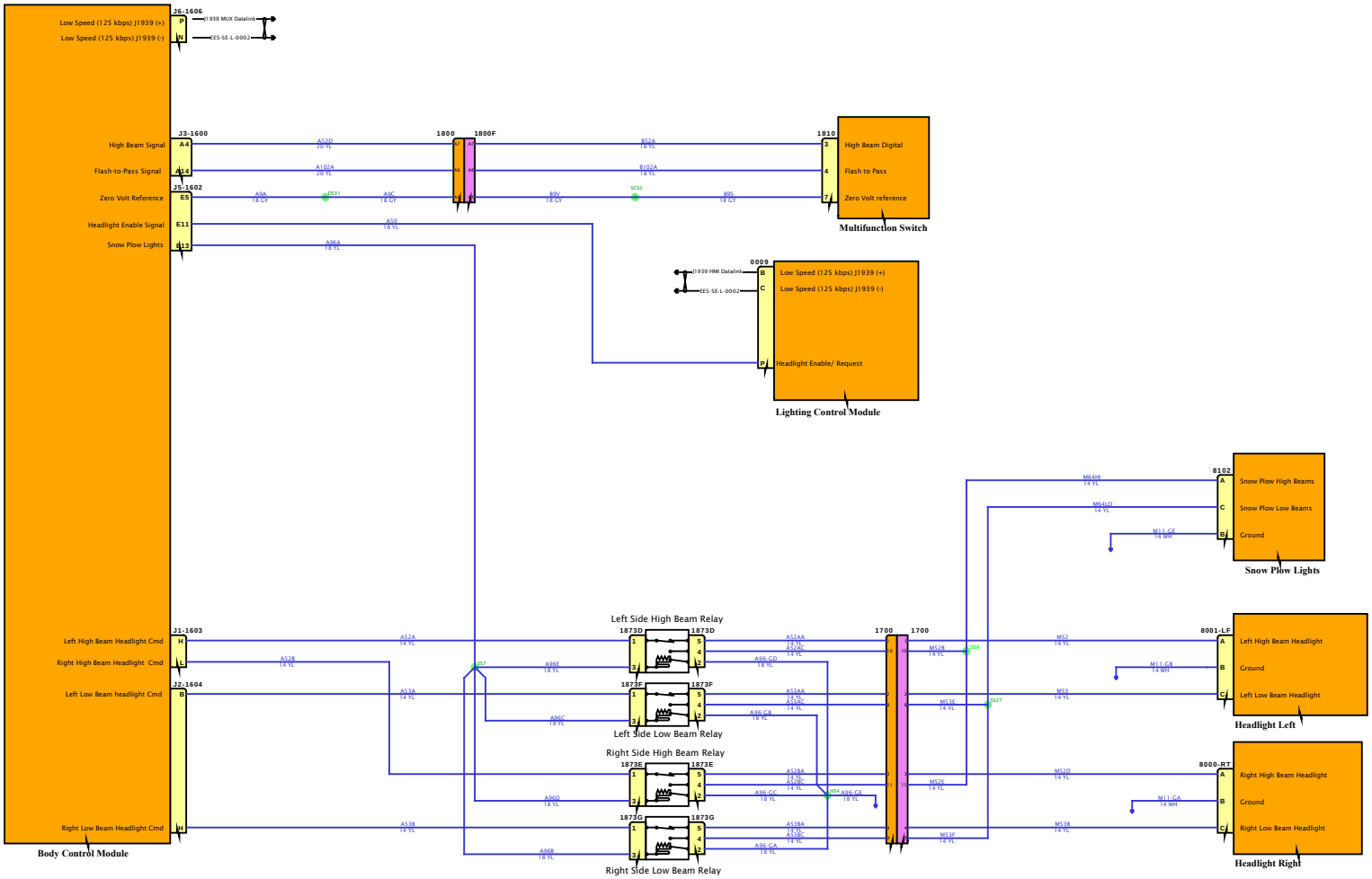

DESIGN DESCRIPTION

FEATURE CODES

SOFTWARE FEATURE CODES

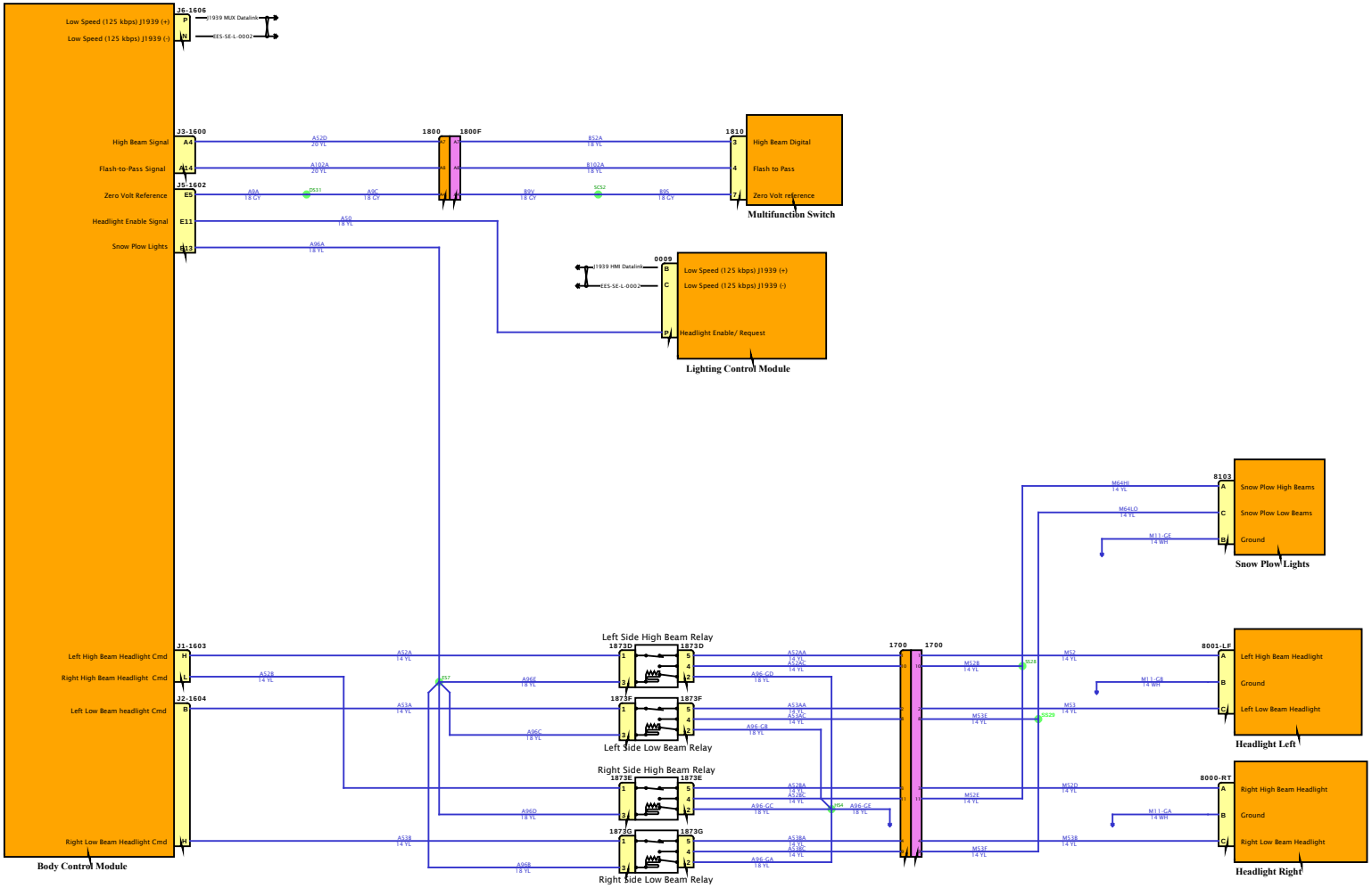

DESIGN DESCRIPTION

FEATURE CODES

SOFTWARE FEATURE CODES

NAVISTAR INC. CONFIDENTIAL PROPRIETARY

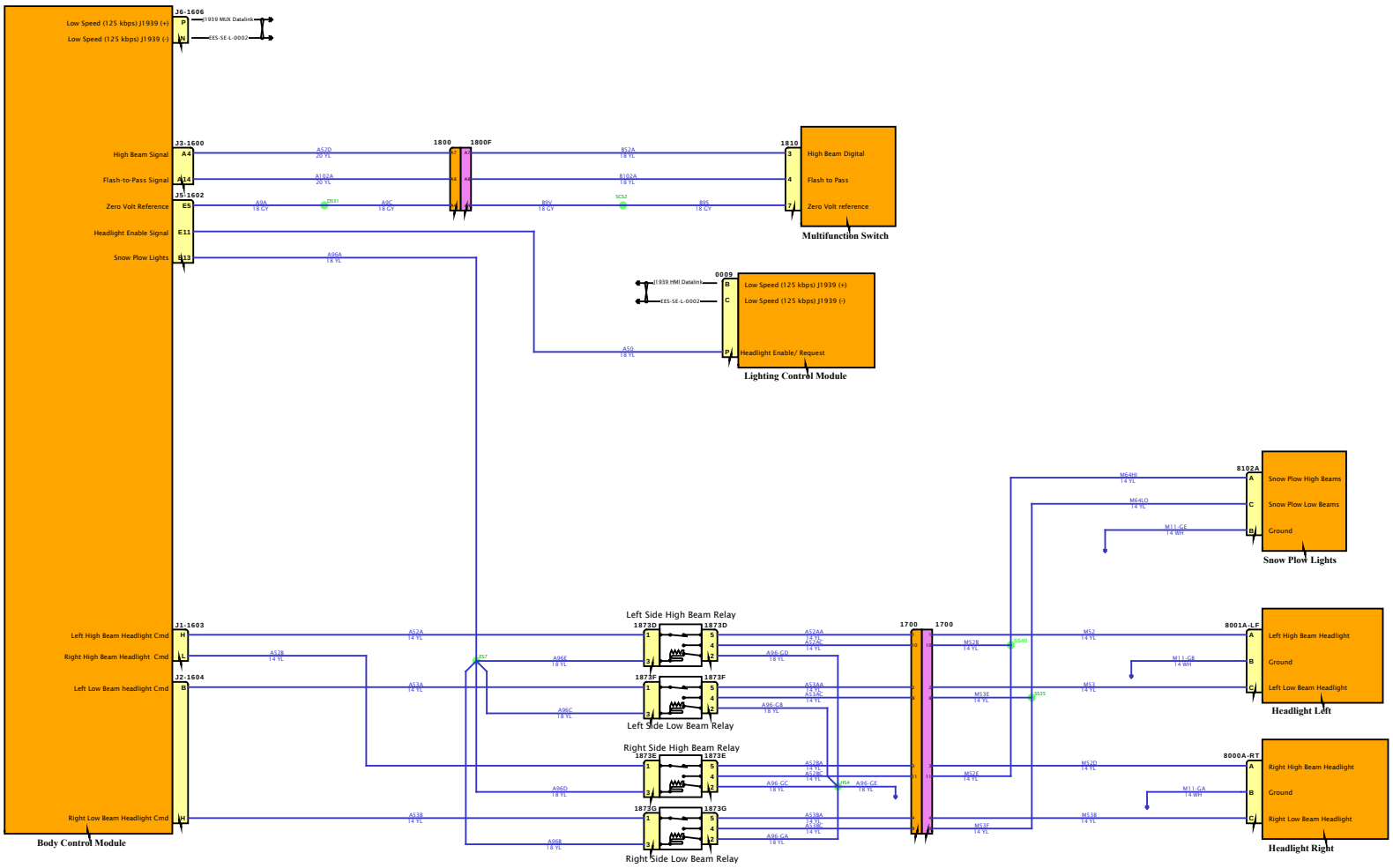

DESIGN DESCRIPTION

FEATURE CODES

SOFTWARE FEATURE CODES

NAVISTAR INC. CONFIDENTIAL PROPRIETARY

Diagram8

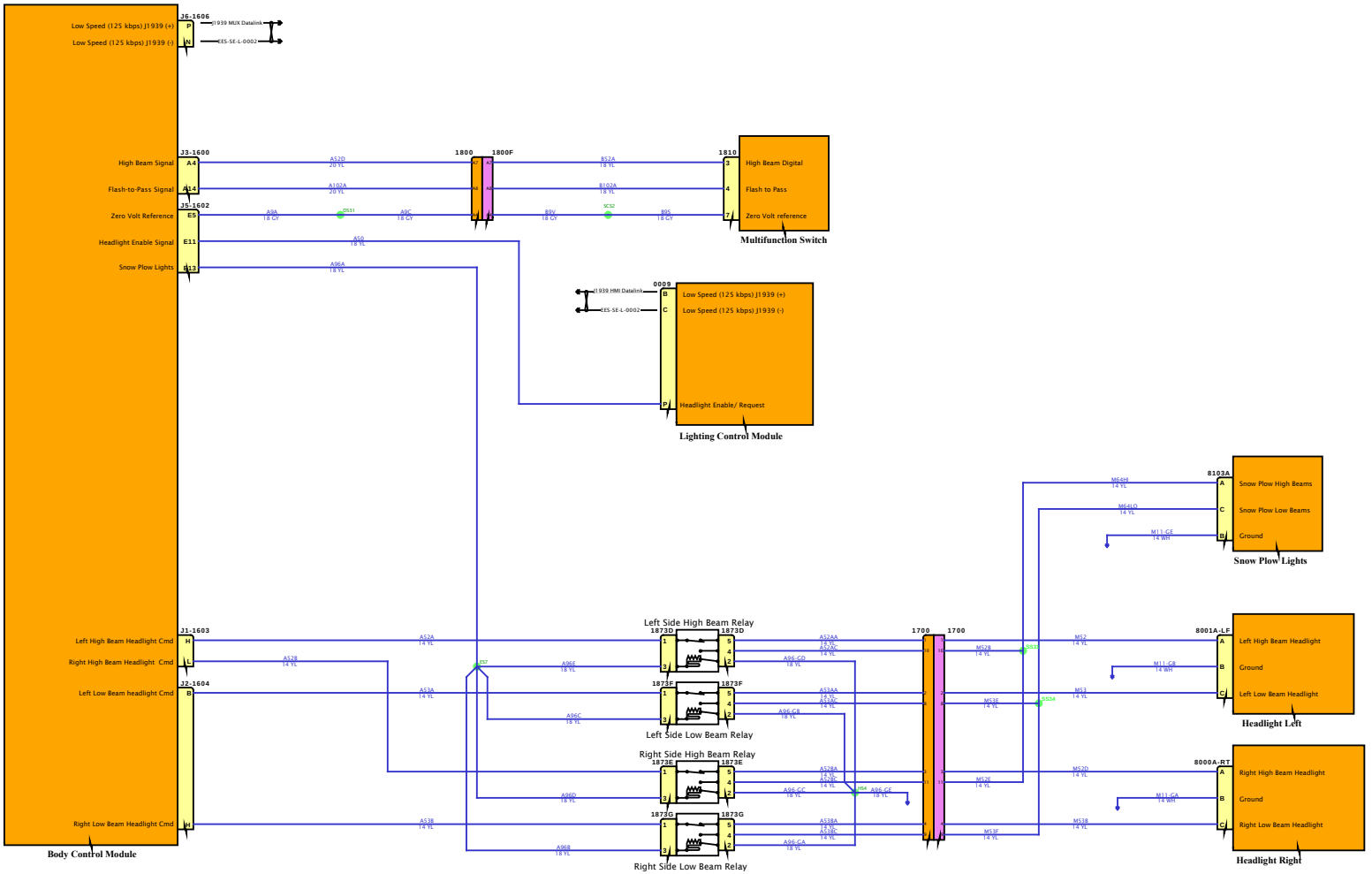

DESIGN DESCRIPTION

FEATURE CODES

SOFTWARE FEATURE CODES

NAVISTAR INC. CONFIDENTIAL PROPRIETARY

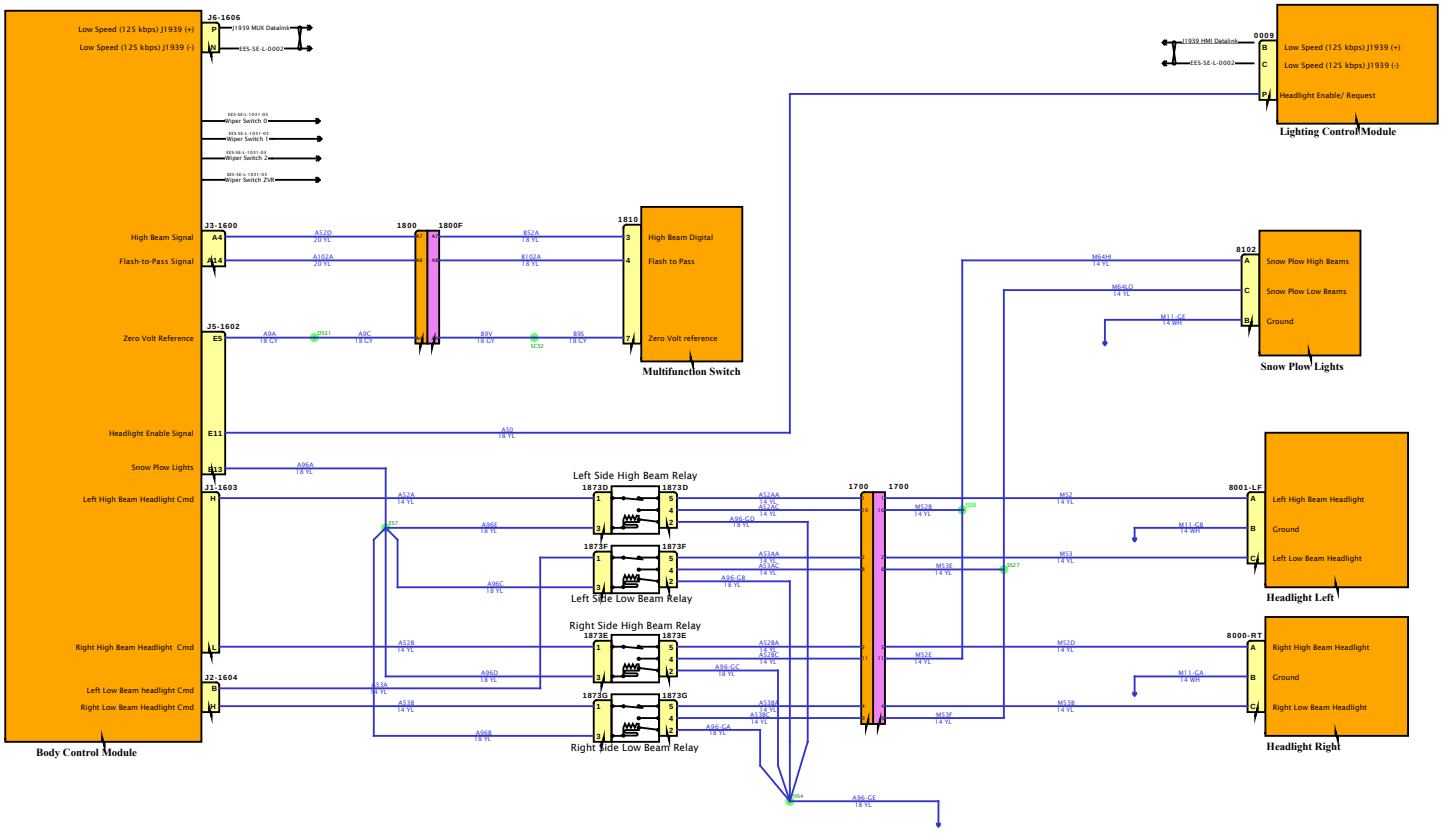

DESIGN DESCRIPTION

FEATURE CODES

SOFTWARE FEATURE CODES

NAVISTAR INC. CONFIDENTIAL PROPRIETARY

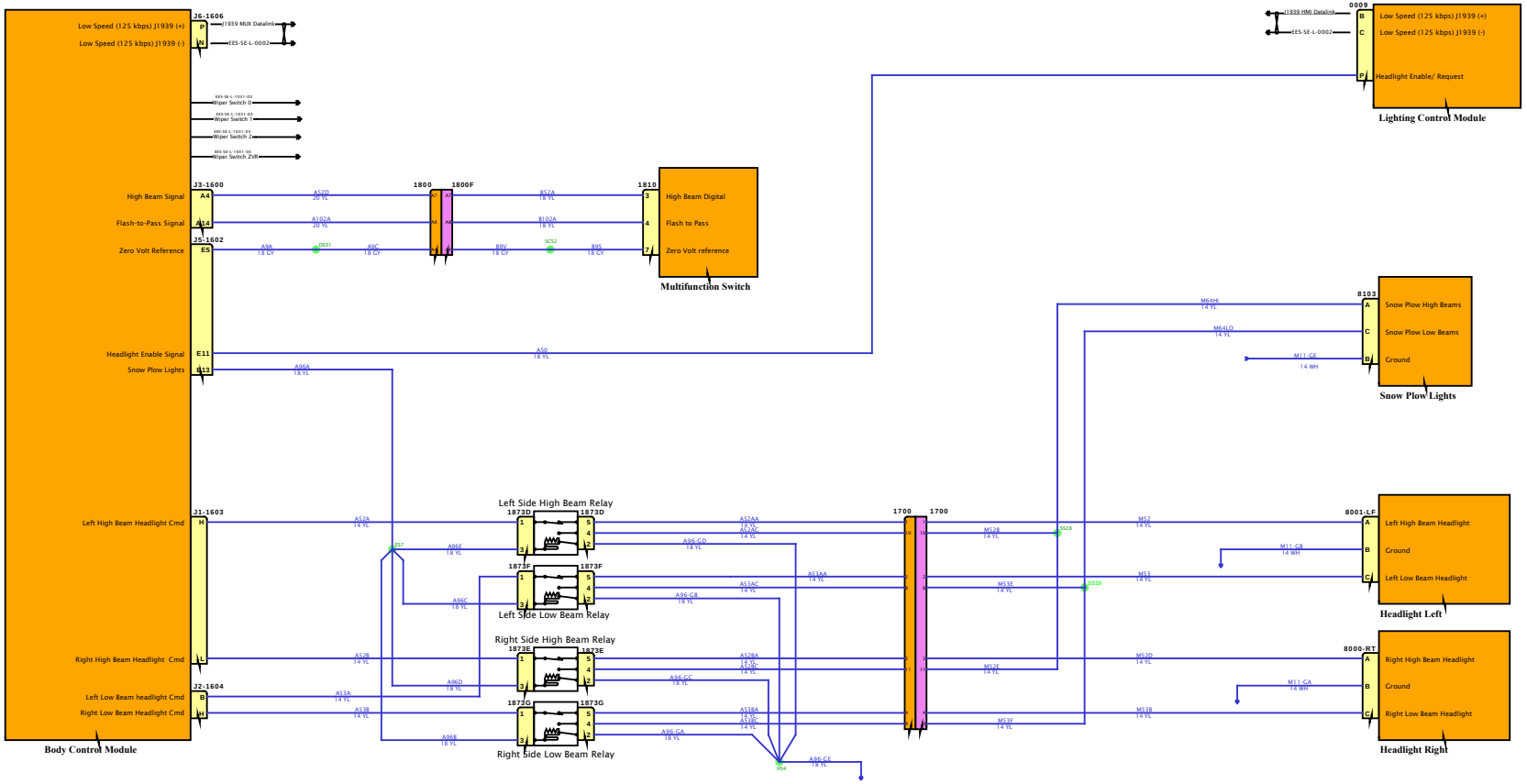

DESIGN DESCRIPTION

FEATURE CODES

SOFTWARE FEATURE CODES

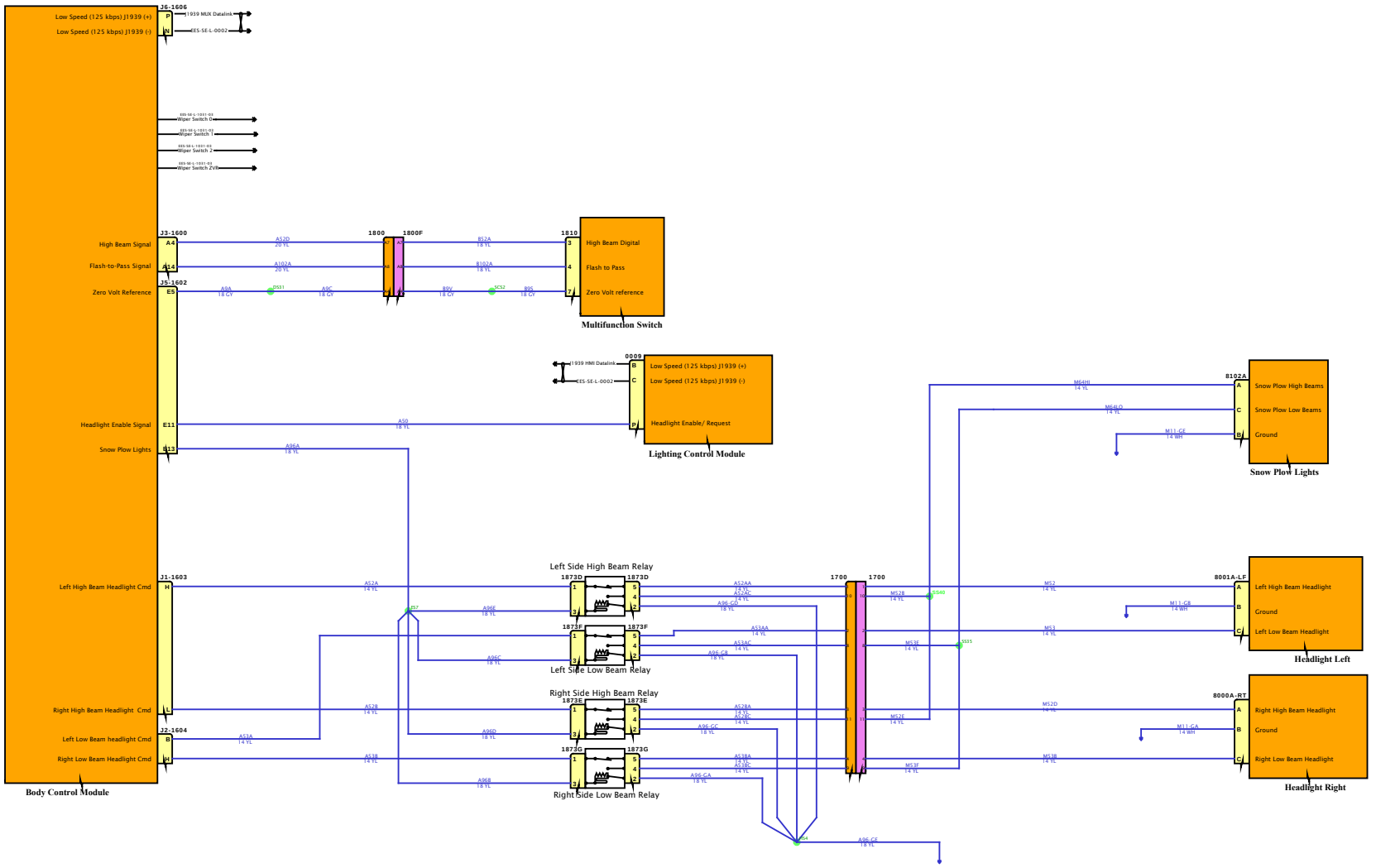

DESIGN DESCRIPTION

FEATURE CODES

SOFTWARE FEATURE CODES

NAVISTAR INC. CONFIDENTIAL PROPRIETARY

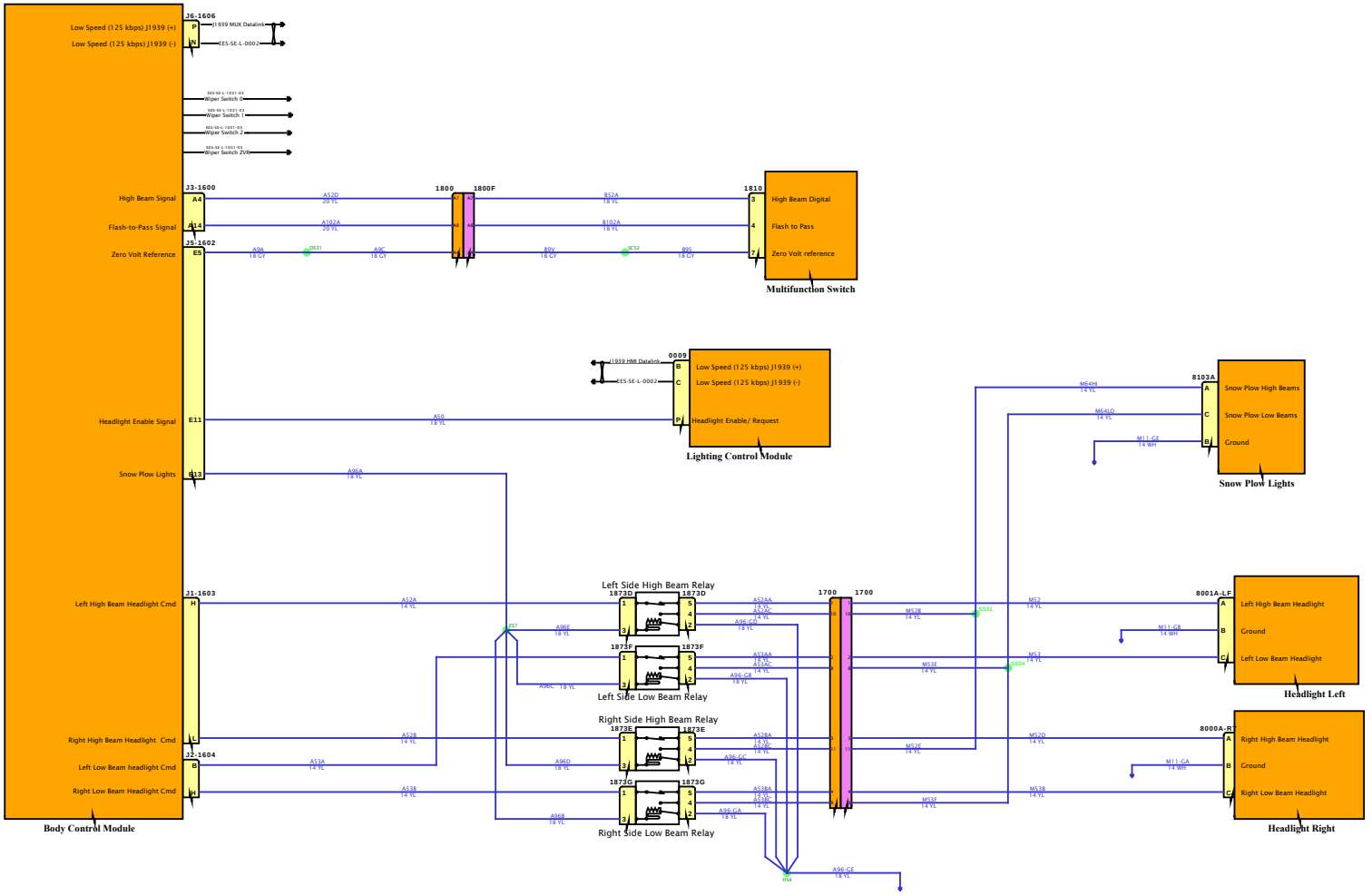

DESIGN DESCRIPTION

FEATURE CODES

SOFTWARE FEATURE CODES

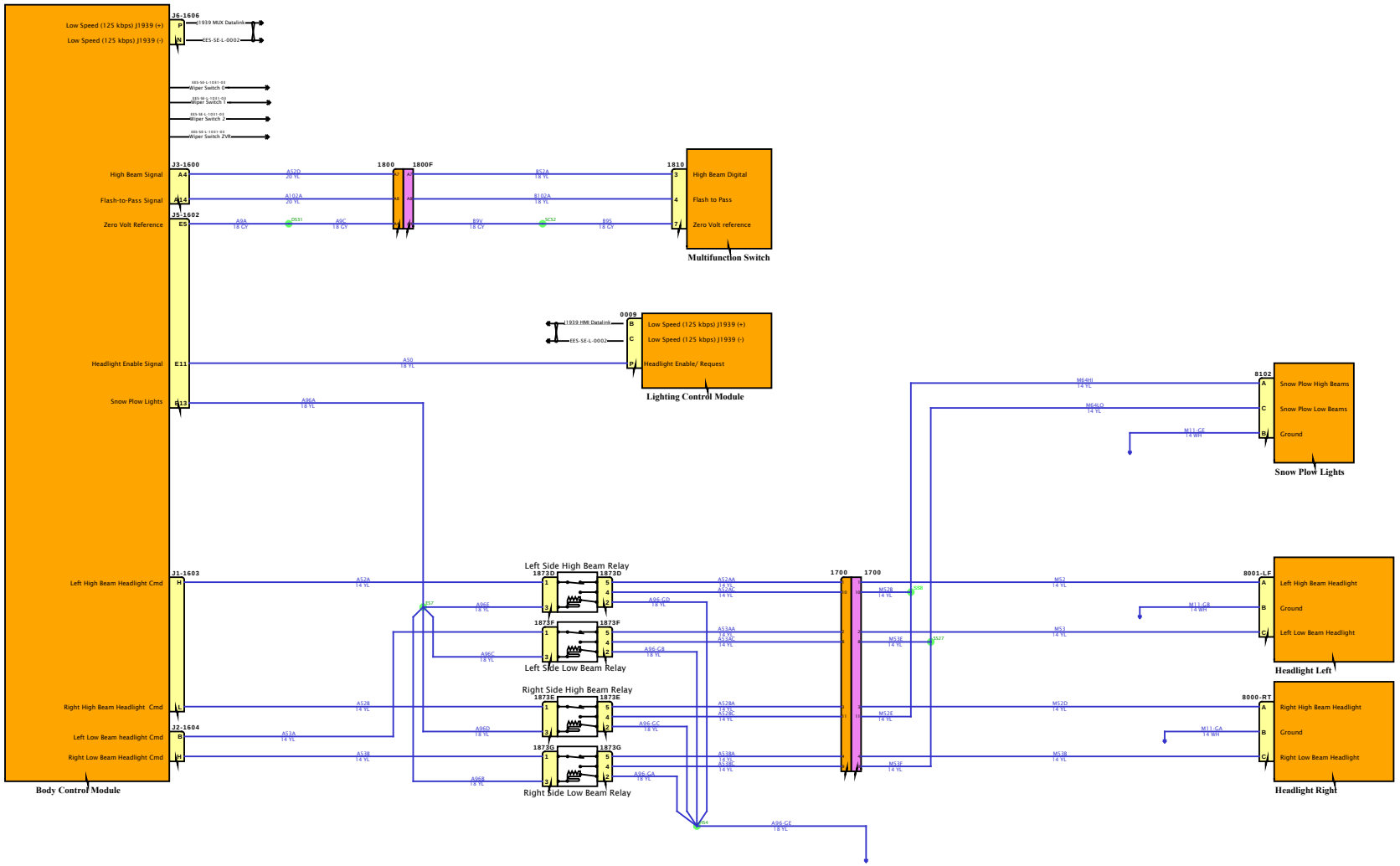

DESIGN DESCRIPTION

FEATURE CODES

SOFTWARE FEATURE CODES

Diagram6

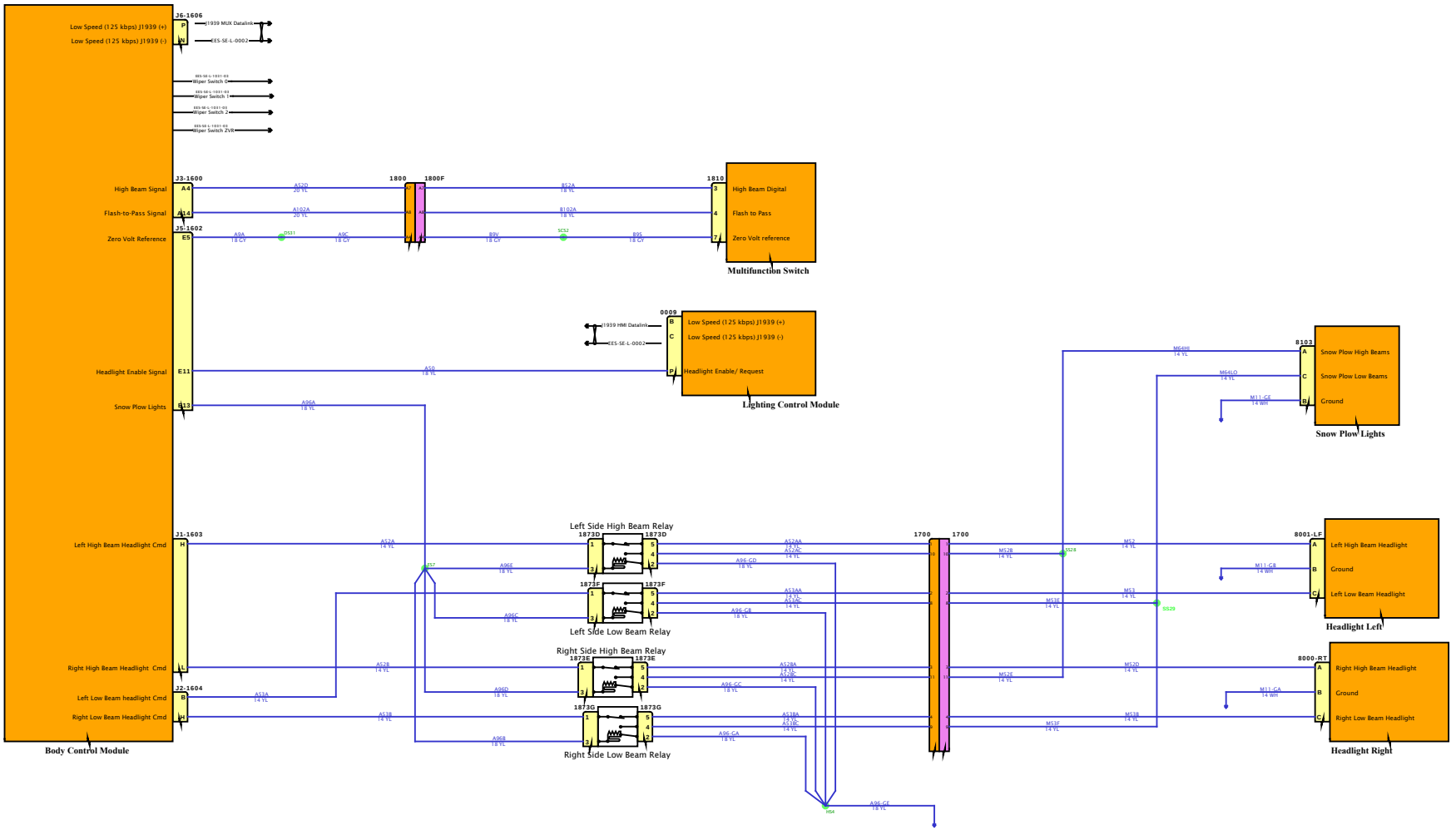

DESIGN DESCRIPTION

FEATURE CODES

SOFTWARE FEATURE CODES

NAVISTAR INC. CONFIDENTIAL PROPRIETARY

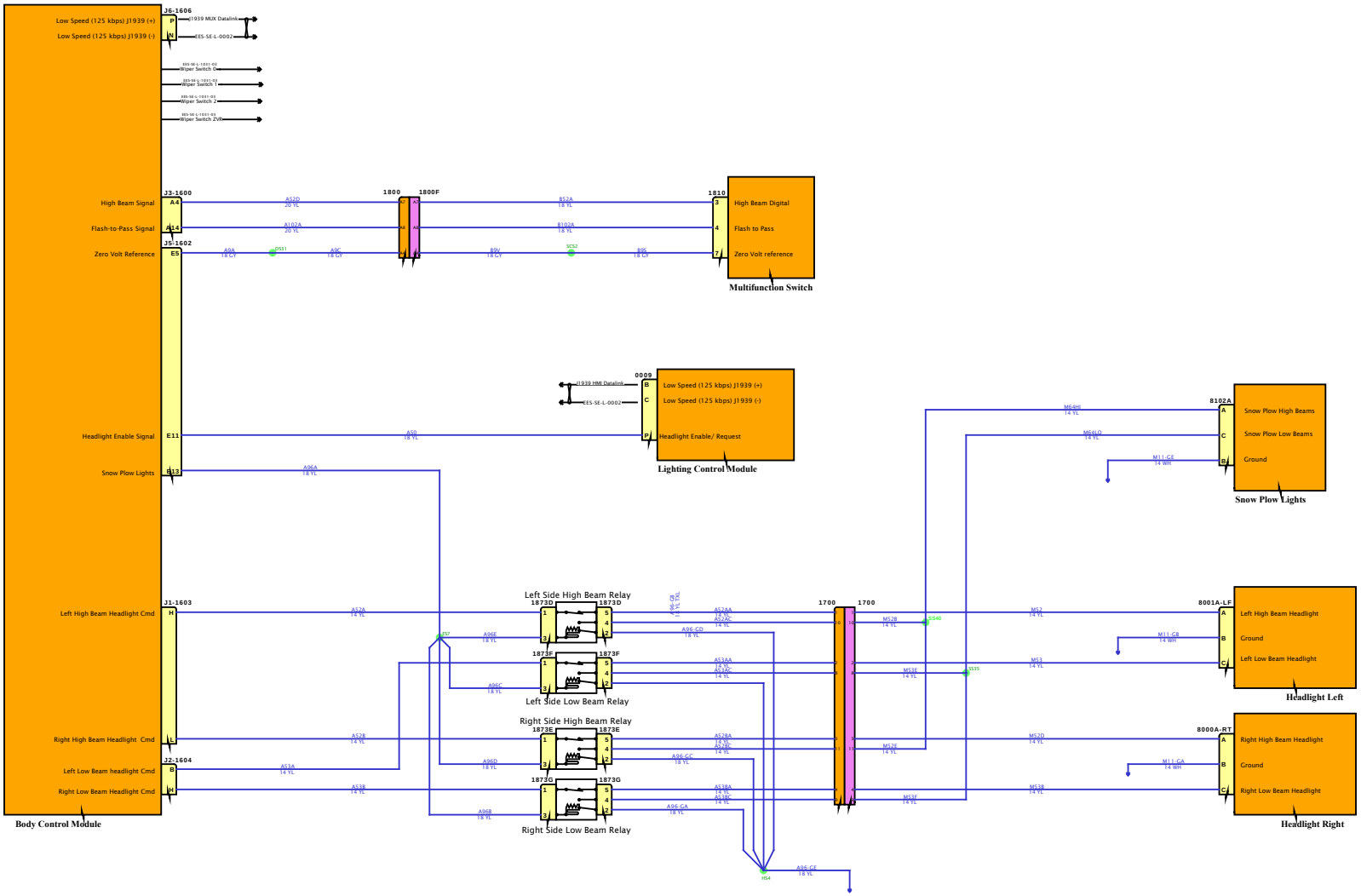

DESIGN DESCRIPTION

FEATURE CODES

SOFTWARE FEATURE CODES

Diagram8

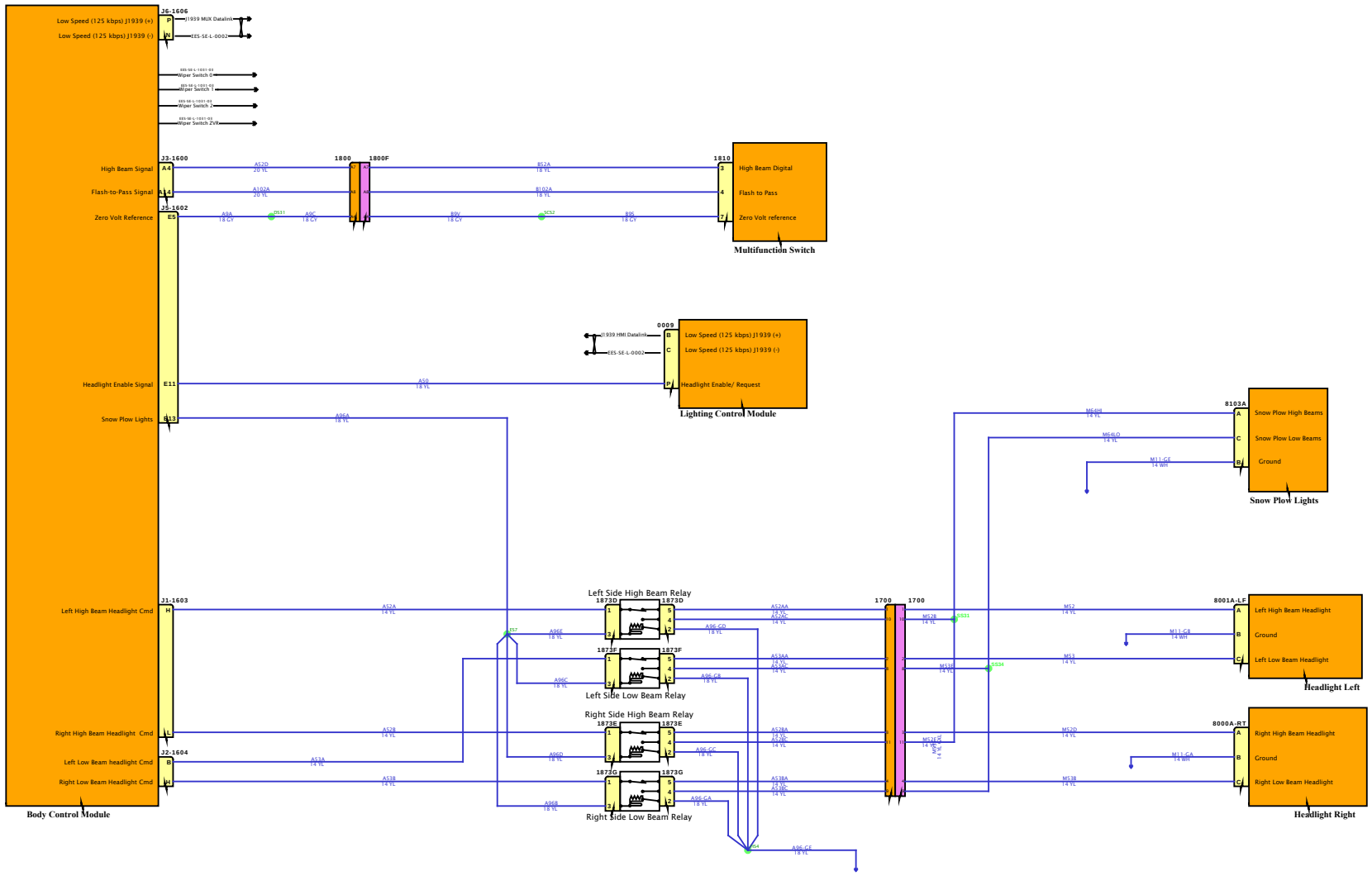
Low Speed (125 kbps) J1939 (+)
Low Speed (125 kbps) J1939 (-)
J1939 MUX Datalink
TES-SE-L-0002
Wiper Switch 0
Wiper Switch 1
Wiper Switch 2
Wiper Switch ZVR
J3-1600
High Beam Signal
Flash-to-Pass Signal
J5-1602
Zero Volt Reference
1800
1800F
1810
High Beam Digital
Flash to Pass
Zero Volt reference
Multifunction Switch
J1939 HMI Datalink
0009
Low Speed (125 kbps) J1939 (+)
Low Speed (125 kbps) J1939 (-)
Headlight Enable/ Request
Lighting Control Module
Headlight Enable Signal
Snow Plow Lights
8103A
Snow Plow High Beams
Snow Plow Low Beams
Ground
Snow Plow Lights
J1-1603
Left High Beam Headlight Cmd
Left Side High Beam Relay
1873D
Left Side Low Beam Relay
1873F
Right Side High Beam Relay
1873E
Right Side Low Beam Relay
1873G
1700
8001A-LF
Left High Beam Headlight
Ground
Left Low Beam Headlight
Headlight Left
Right High Beam Headlight Cmd
J2-1604
Left Low Beam headlight Cmd
Right Low Beam Headlight Cmd
8000A-RT
Right High Beam Headlight
Ground
Right Low Beam Headlight
Headlight Right
Body Control Module
DESIGN DESCRIPTION
FEATURE CODES
SOFTWARE FEATURE CODES
NAVISTAR
NAVISTAR, INC. CONFIDENTIAL PROPRIETARY

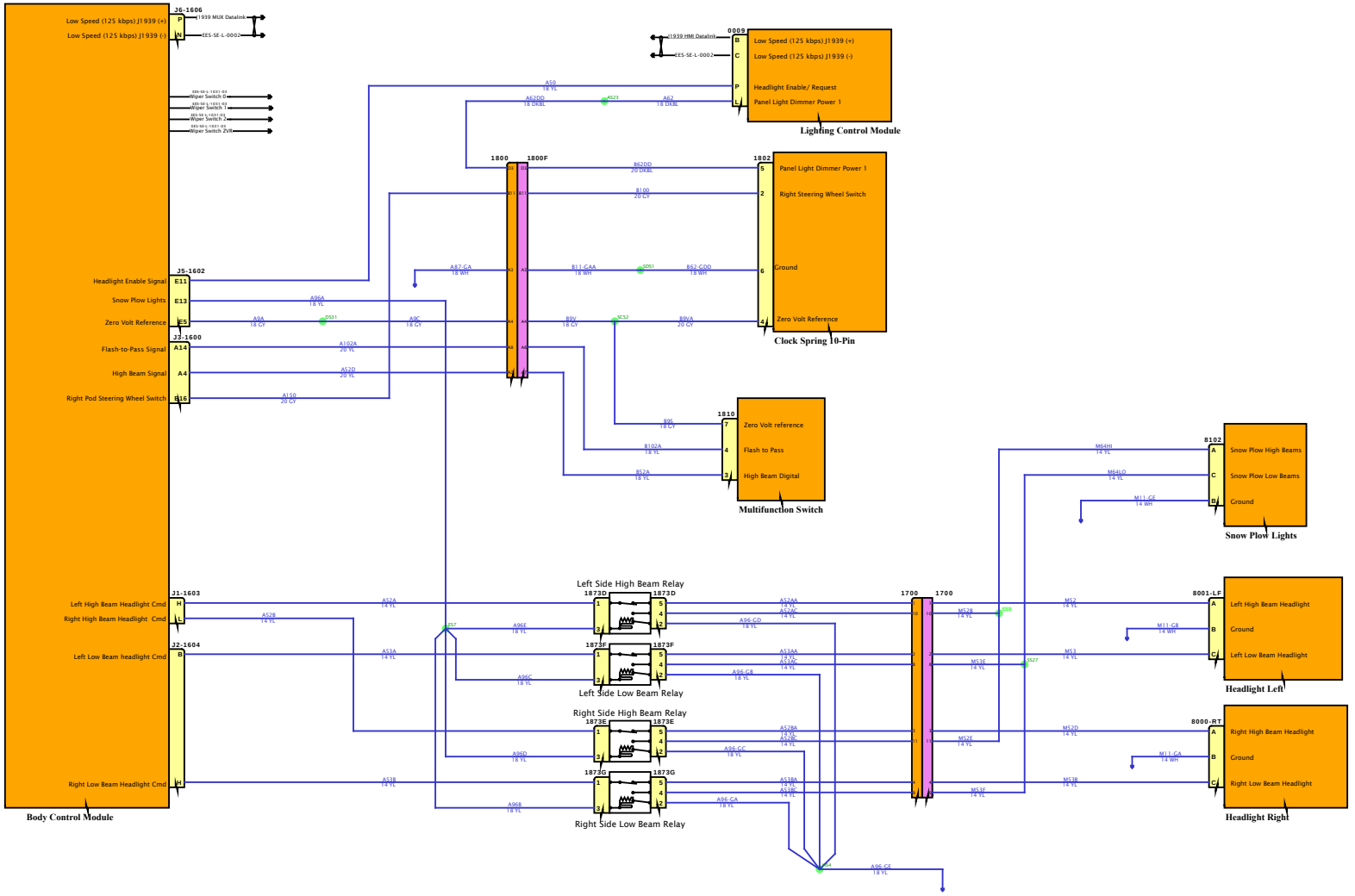

DESIGN DESCRIPTION

FEATURE CODES

SOFTWARE FEATURE CODES

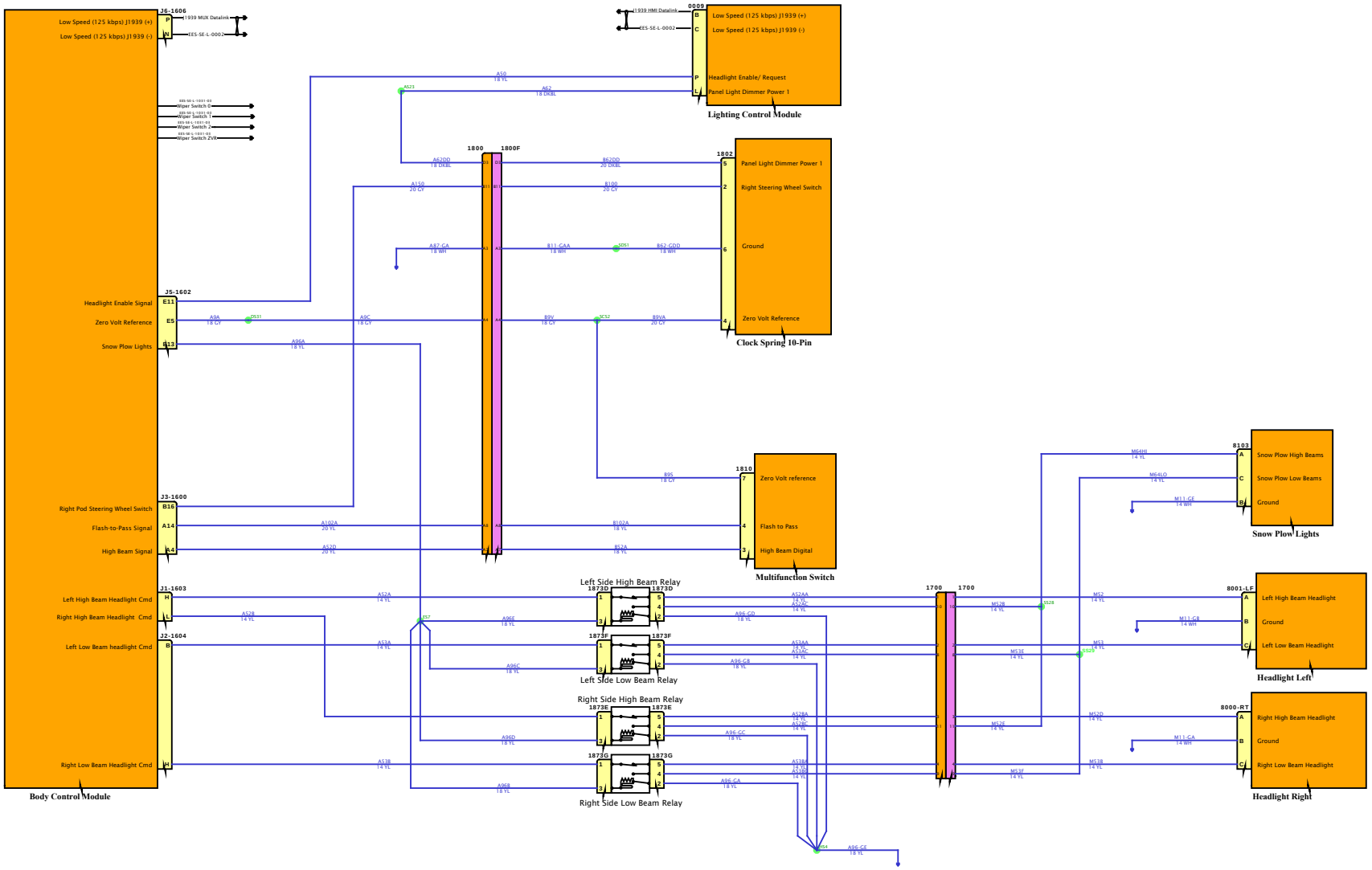

DESIGN DESCRIPTION

FEATURE CODES

SOFTWARE FEATURE CODES

NAVISTAR INC. CONFIDENTIAL PROPRIETARY

Diagram3

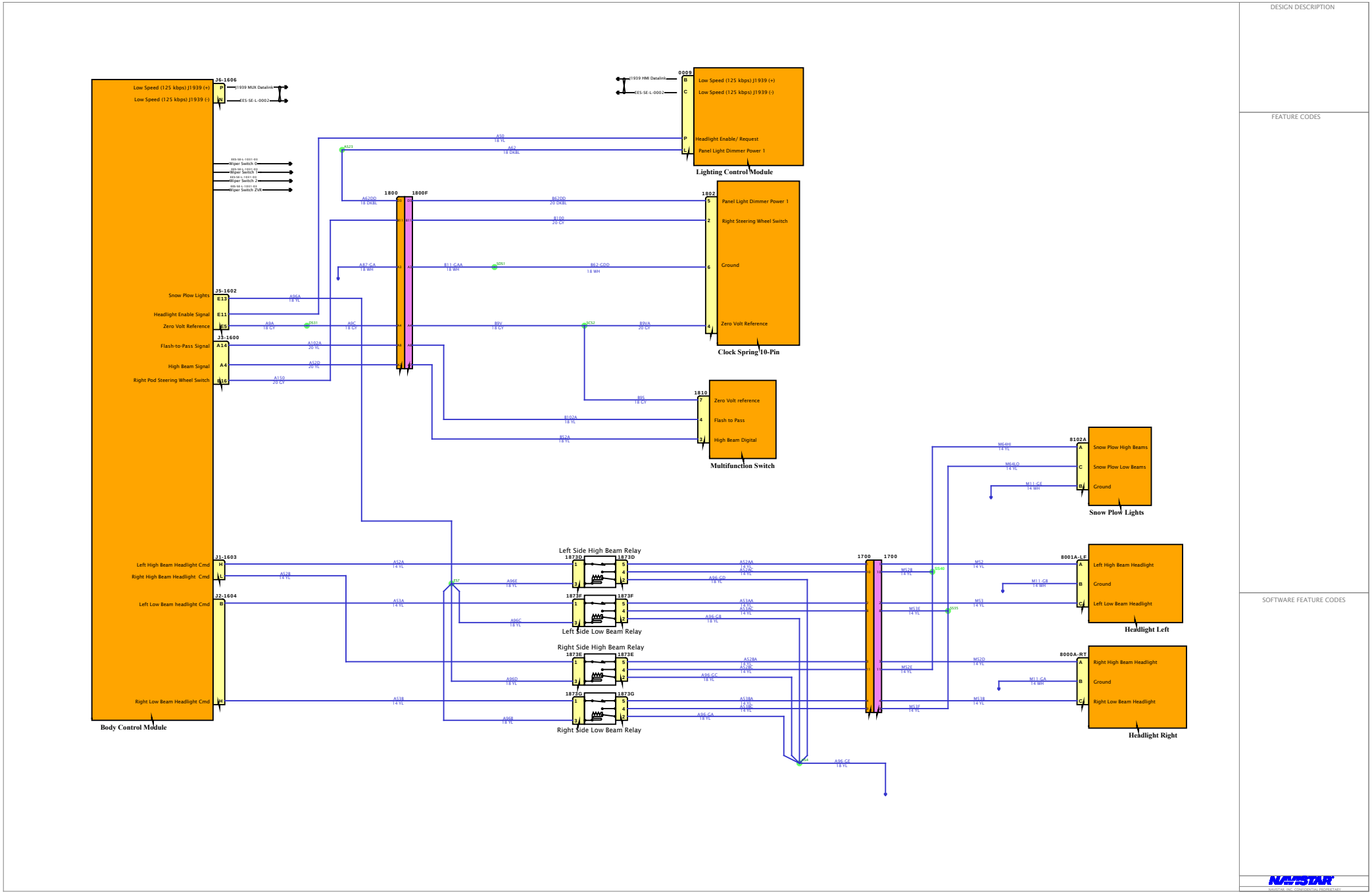
DESIGN DESCRIPTION
FEATURE CODES
SOFTWARE FEATURE CODES
Body Control Module
Lighting Control Module
Clock Spring 10-Pin
Multifunction Switch
Snow Plow Lights
Headlight Left
Headlight Right
Left Side High Beam Relay
Left Side Low Beam Relay
Right Side High Beam Relay
Right Side Low Beam Relay
Low Speed (125 kbps) J1939 (+)
Low Speed (125 kbps) J1939 (-)
Headlight Enable/ Request
Panel Light Dimmer Power 1
Right Steering Wheel Switch
Ground
Zero Volt Reference
Zero Volt reference
Flash to Pass
High Beam Digital
Snow Plow High Beams
Snow Plow Low Beams
Left High Beam Headlight
Left Low Beam Headlight
Right High Beam Headlight
Right Low Beam Headlight
Flash-to-Pass Signal
High Beam Signal
Right Pod Steering Wheel Switch
Snow Plow Lights
Headlight Enable Signal
Left High Beam Headlight Cmd
Right High Beam Headlight Cmd
Left Low Beam headlight Cmd
Right Low Beam Headlight Cmd
NAVISTAR
NAVISTAR, INC. CONFIDENTIAL PROPRIETARY

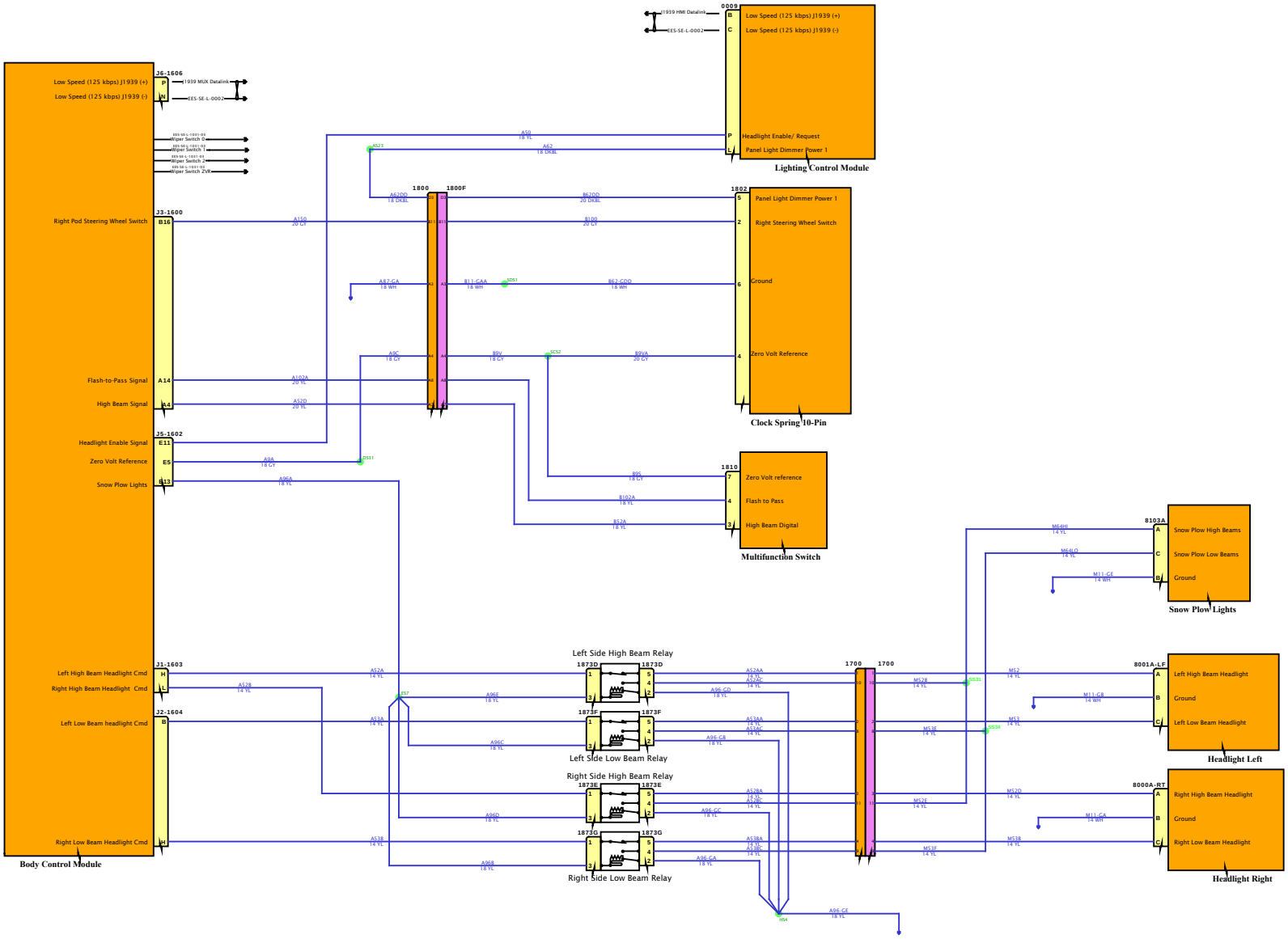

DESIGN DESCRIPTION

FEATURE CODES

SOFTWARE FEATURE CODES

NAVISTAR INC. CONFIDENTIAL PROPRIETARY

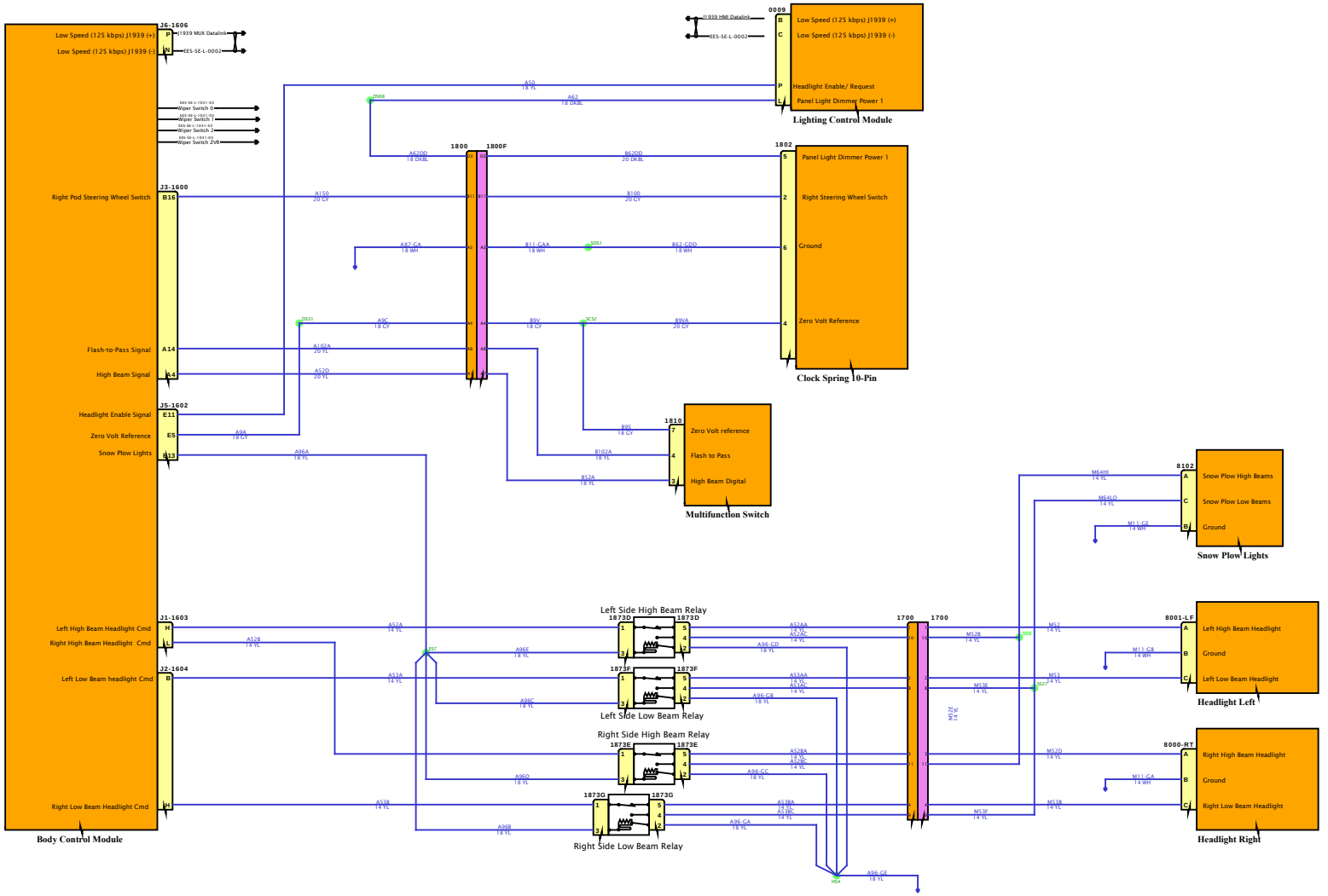

DESIGN DESCRIPTION

FEATURE CODES

SOFTWARE FEATURE CODES

NAVISTAR
NAVISTAR, INC. CONFIDENTIAL PROPRIETARY

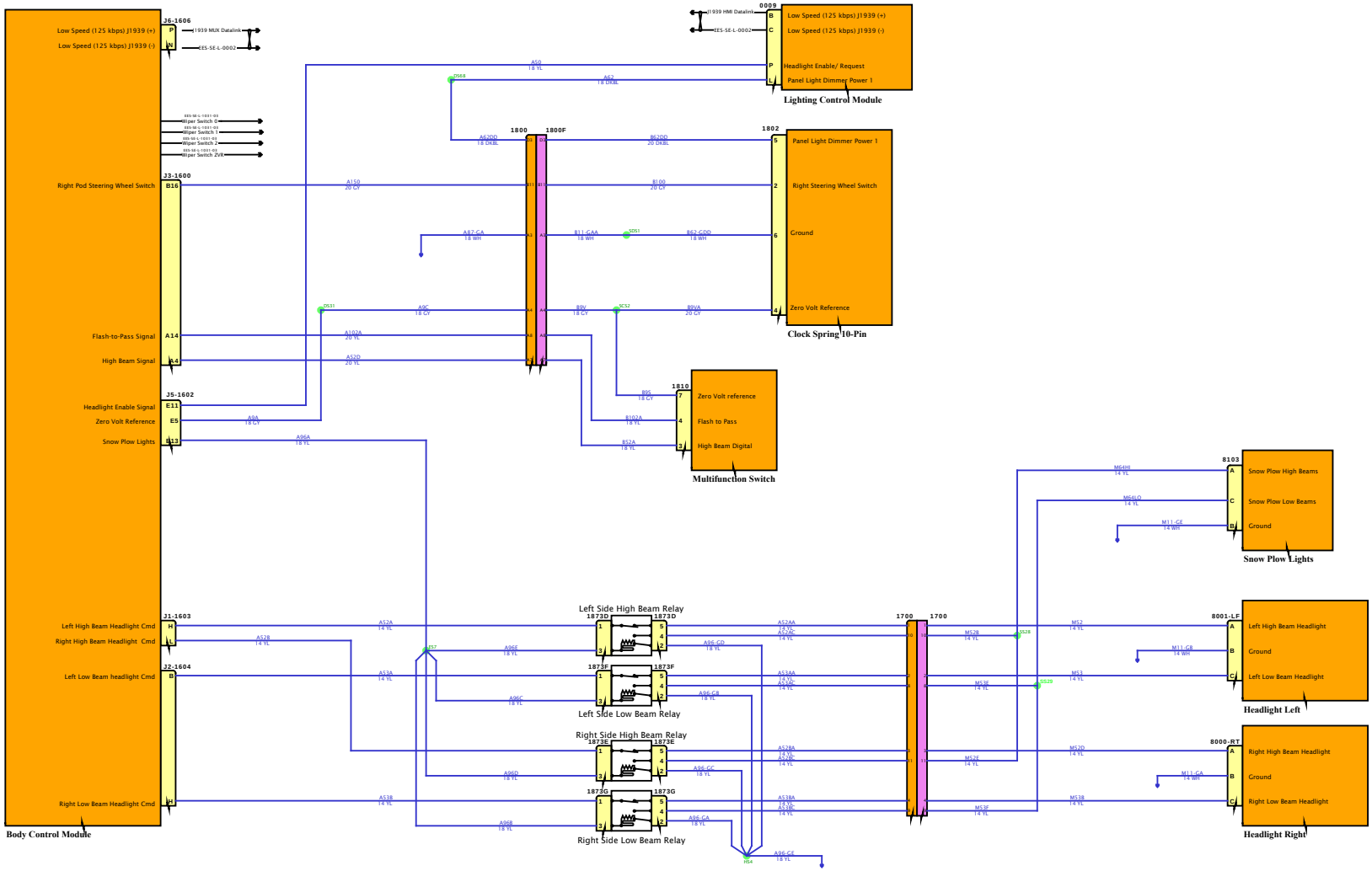

DESIGN DESCRIPTION

FEATURE CODES

SOFTWARE FEATURE CODES

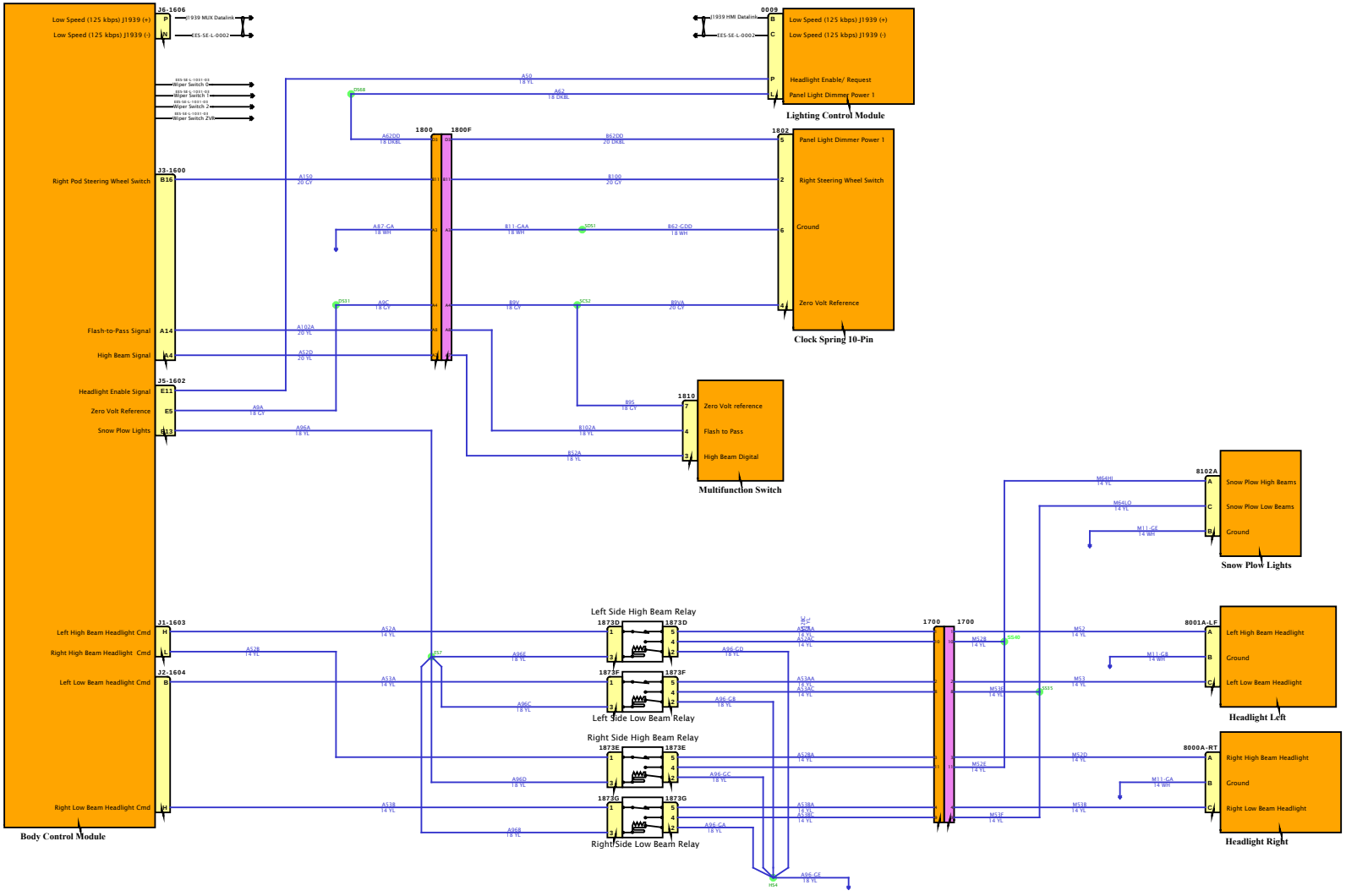

DESIGN DESCRIPTION

FEATURE CODES

SOFTWARE FEATURE CODES

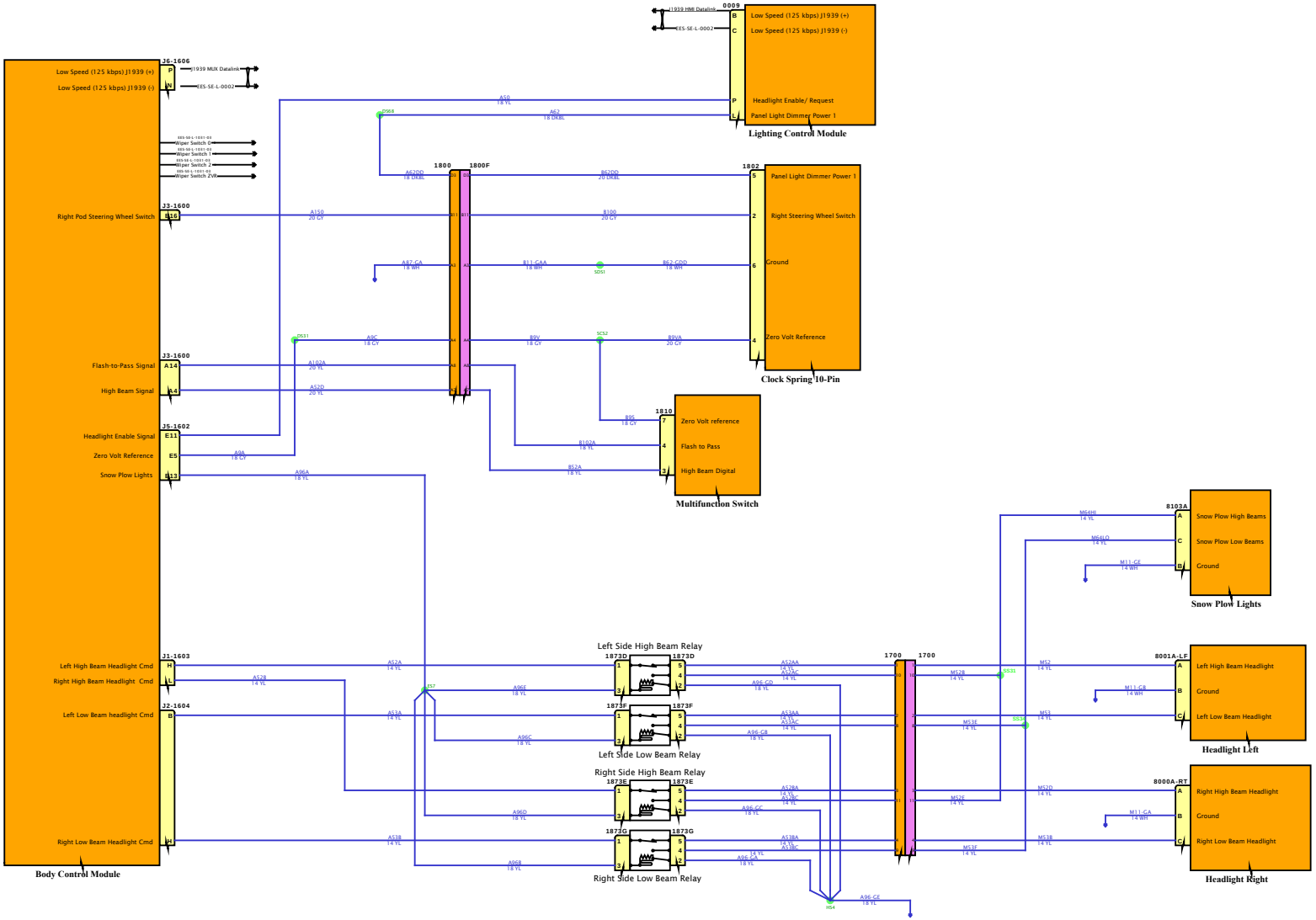

DESIGN DESCRIPTION

FEATURE CODES

SOFTWARE FEATURE CODES

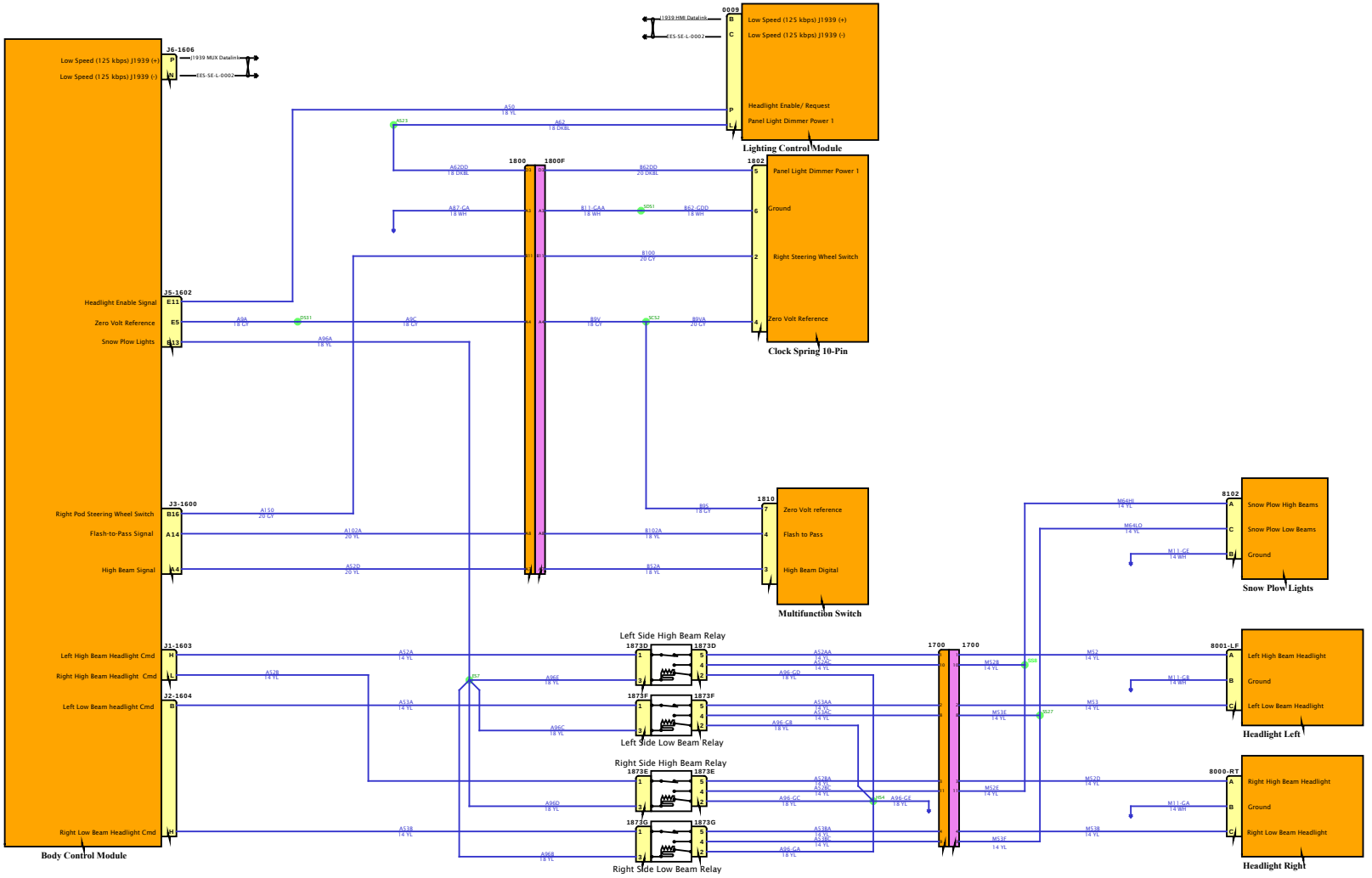

DESIGN DESCRIPTION

FEATURE CODES

SOFTWARE FEATURE CODES

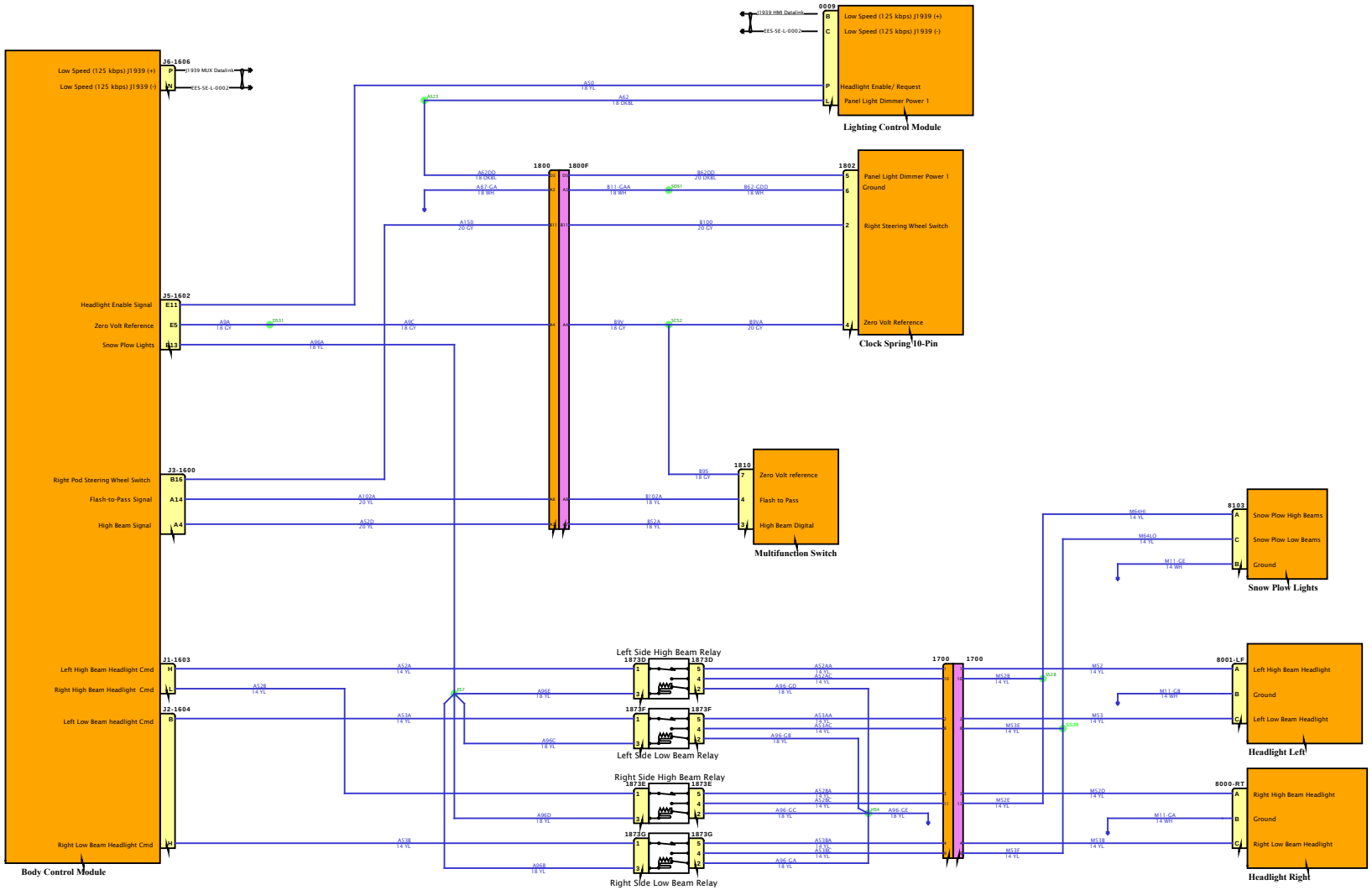

DESIGN DESCRIPTION

FEATURE CODES

SOFTWARE FEATURE CODES

NAVISTAR INC. CONFIDENTIAL PROPRIETARY

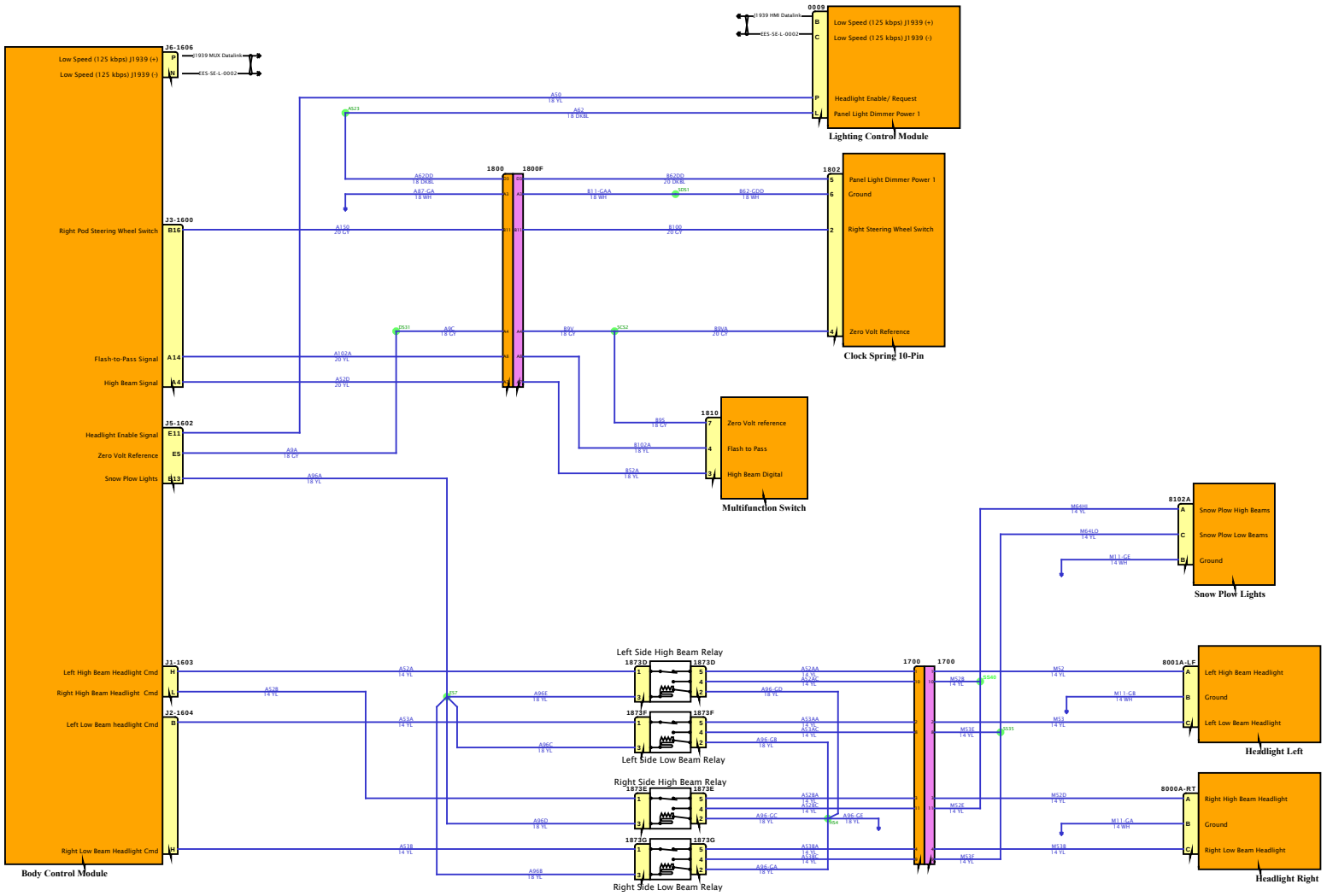

DESIGN DESCRIPTION

FEATURE CODES

SOFTWARE FEATURE CODES

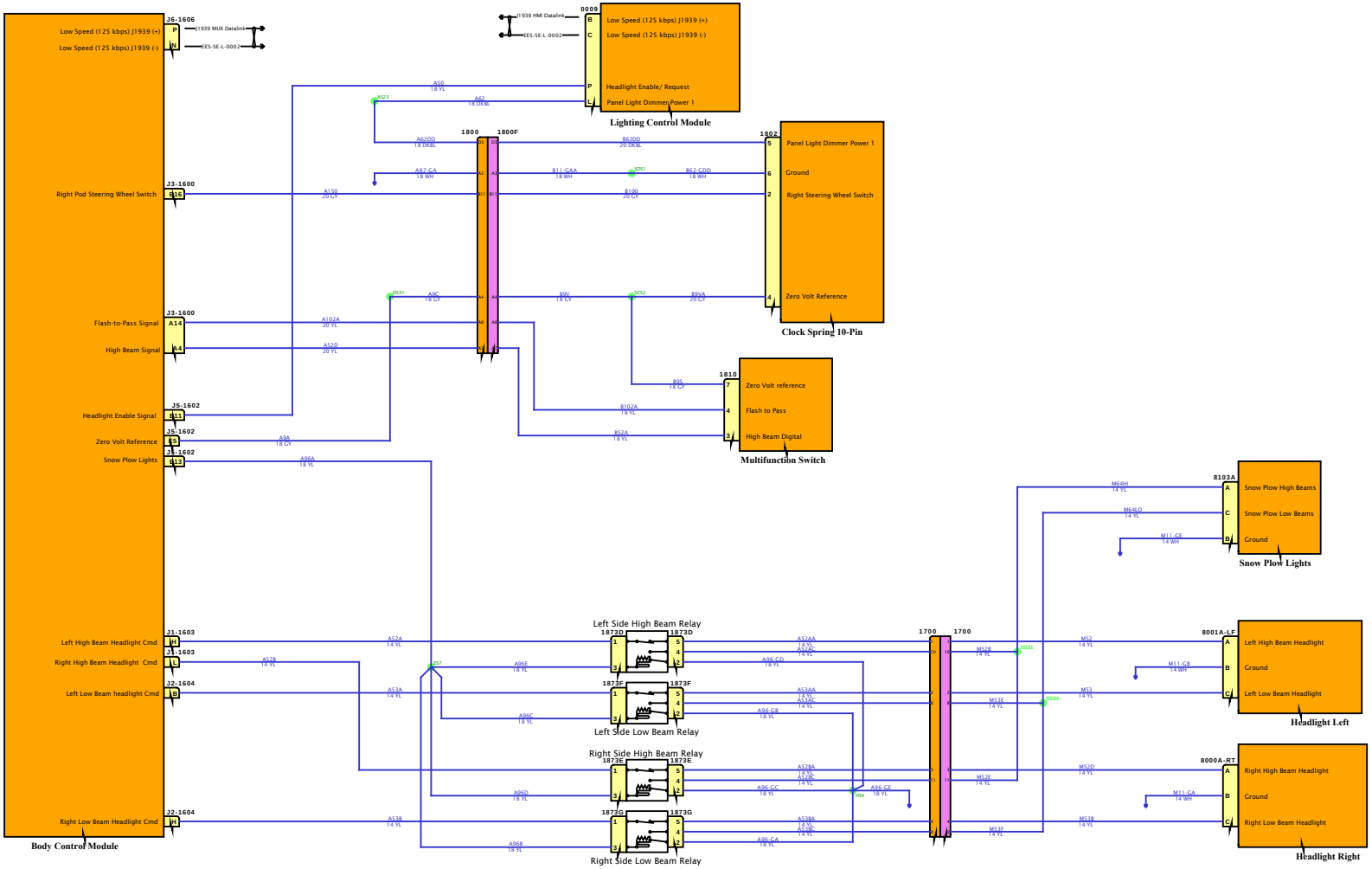

DESIGN DESCRIPTION

FEATURE CODES

SOFTWARE FEATURE CODES

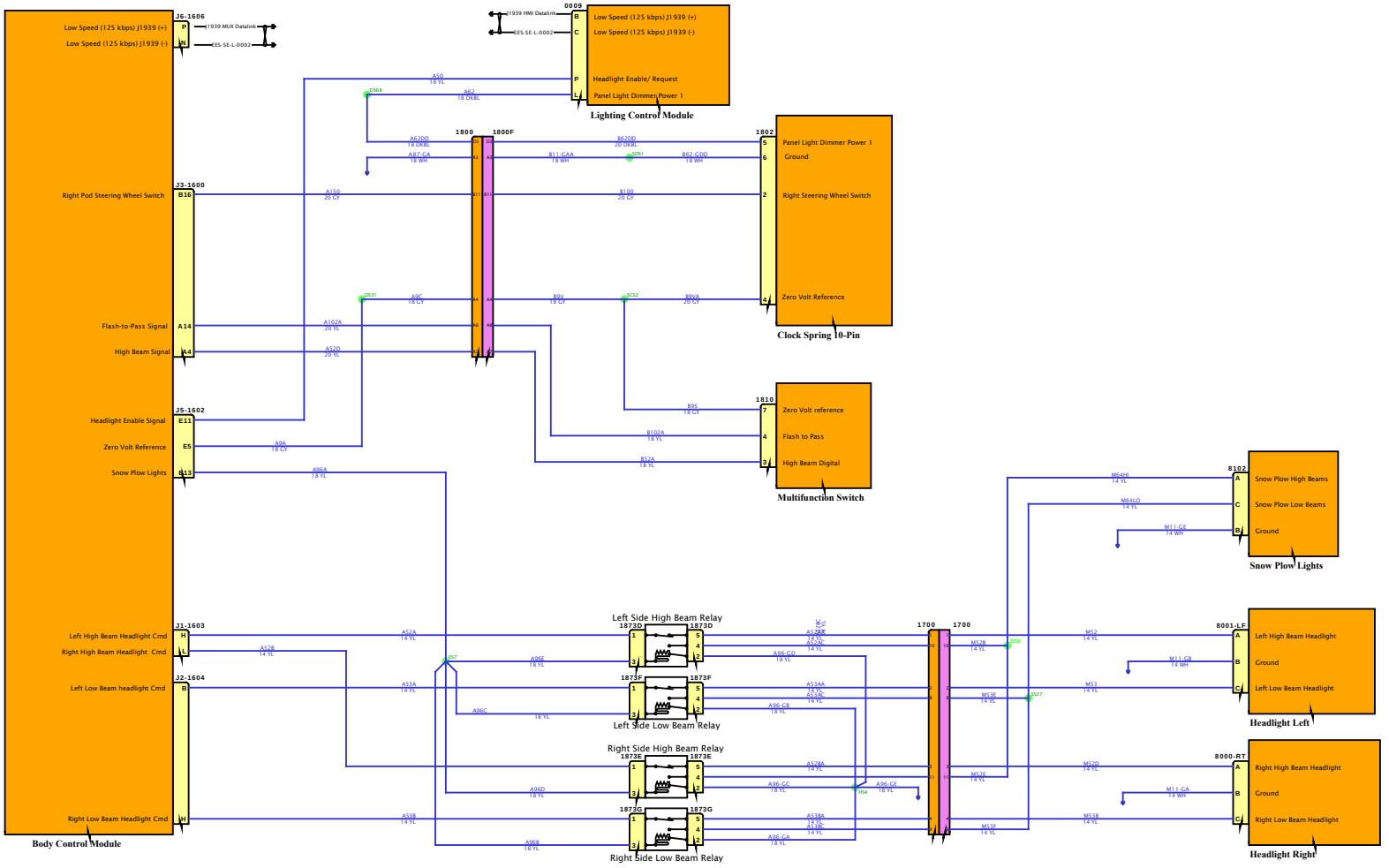

DESIGN DESCRIPTION

FEATURE CODES

SOFTWARE FEATURE CODES

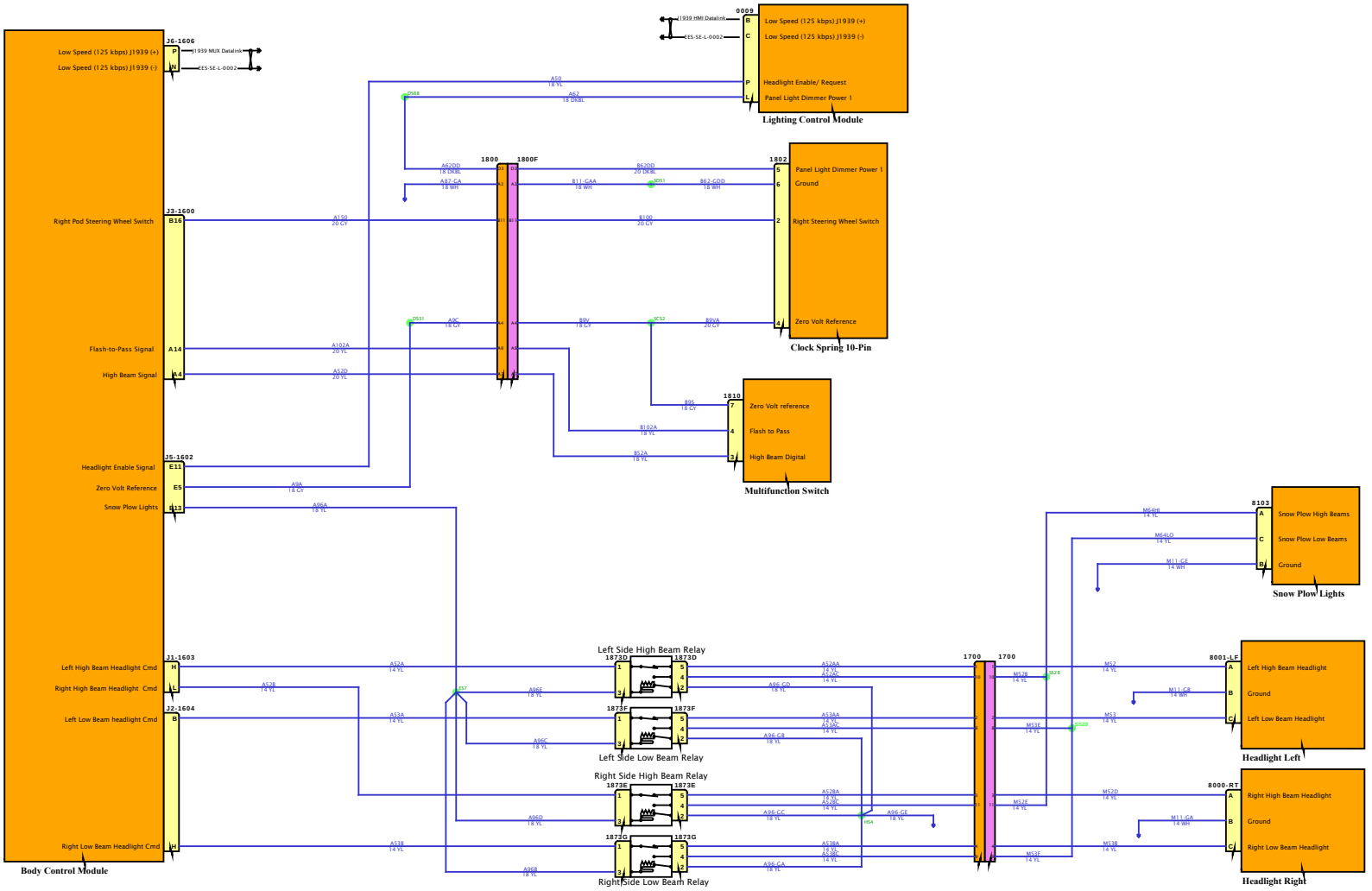
DESIGN DESCRIPTION
FEATURE CODES
SOFTWARE FEATURE CODES
Body Control Module
Lighting Control Module
Clock Spring 10-Pin
Multifunction Switch
Snow Plow Lights
Headlight Left
Headlight Right
Left Side High Beam Relay
Left Side Low Beam Relay
Right Side High Beam Relay
Right Side Low Beam Relay
Low Speed (125 kbps) J1939 (+)
Low Speed (125 kbps) J1939 (-)
Headlight Enable/ Request
Panel Light Dimmer Power 1
Ground
Right Steering Wheel Switch
Zero Volt Reference
Flash to Pass
High Beam Digital
Snow Plow High Beams
Snow Plow Low Beams
Left High Beam Headlight
Left Low Beam Headlight
Right High Beam Headlight
Right Low Beam Headlight
Right Pod Steering Wheel Switch
Flash-to-Pass Signal
High Beam Signal
Headlight Enable Signal
Snow Plow Lights
Left High Beam Headlight Cmd
Right High Beam Headlight Cmd
Left Low Beam headlight Cmd
Right Low Beam Headlight Cmd

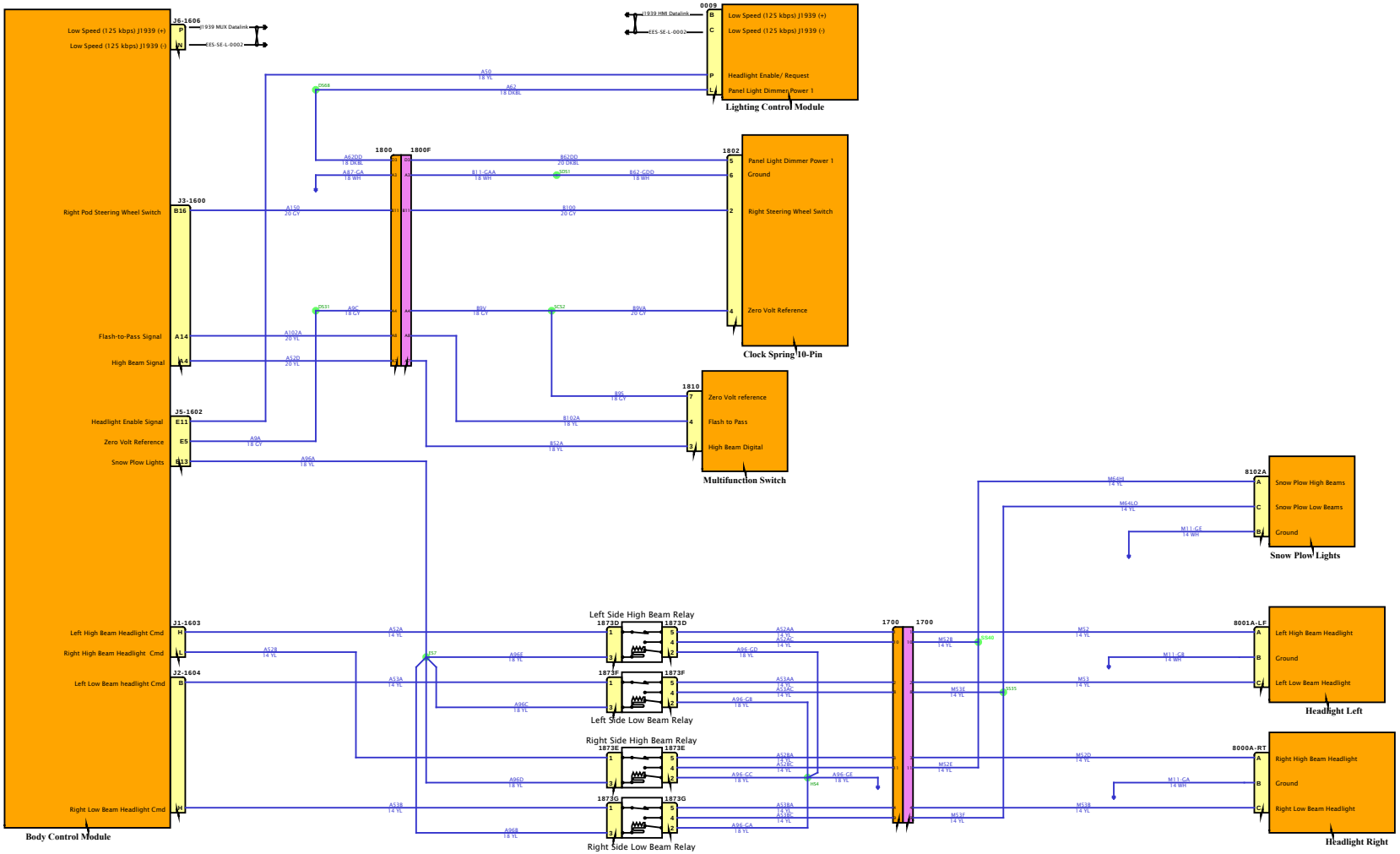
J5-1606
Low Speed (125 kbps) J1939 (+)
Low Speed (125 kbps) J1939 (-)
J1939 MUX Datalink
CES-SE-L-0002
0009
J1939 HMI Datalink
CES-SE-L-0002
Low Speed (125 kbps) J1939 (+)
Low Speed (125 kbps) J1939 (-)
Headlight Enable/ Request
Panel Light Dimmer Power 1
Lighting Control Module
1800
1800F
1802
Panel Light Dimmer Power 1
Ground
Right Steering Wheel Switch
Zero Volt Reference
Clock Spring 10-Pin
J3-1600
B16
Right Pod Steering Wheel Switch
Flash-to-Pass Signal
High Beam Signal
J5-1602
E11
Headlight Enable Signal
E5
Zero Volt Reference
G13
Snow Plow Lights
1810
Zero Volt reference
Flash to Pass
High Beam Digital
Multifunction Switch
8102A
Snow Plow High Beams
Snow Plow Low Beams
Ground
Snow Plow Lights
J1-1603
Left High Beam Headlight Cmd
Right High Beam Headlight Cmd
J2-1604
Left Low Beam headlight Cmd
Right Low Beam Headlight Cmd
Body Control Module
Left Side High Beam Relay
1873D
Left Side Low Beam Relay
1873F
Right Side High Beam Relay
1873E
Right Side Low Beam Relay
1873G
1700
1700
8001A-LF
Left High Beam Headlight
Ground
Left Low Beam Headlight
Headlight Left
8000A-RT
Right High Beam Headlight
Ground
Right Low Beam Headlight
Headlight Right
DESIGN DESCRIPTION
FEATURE CODES
SOFTWARE FEATURE CODES

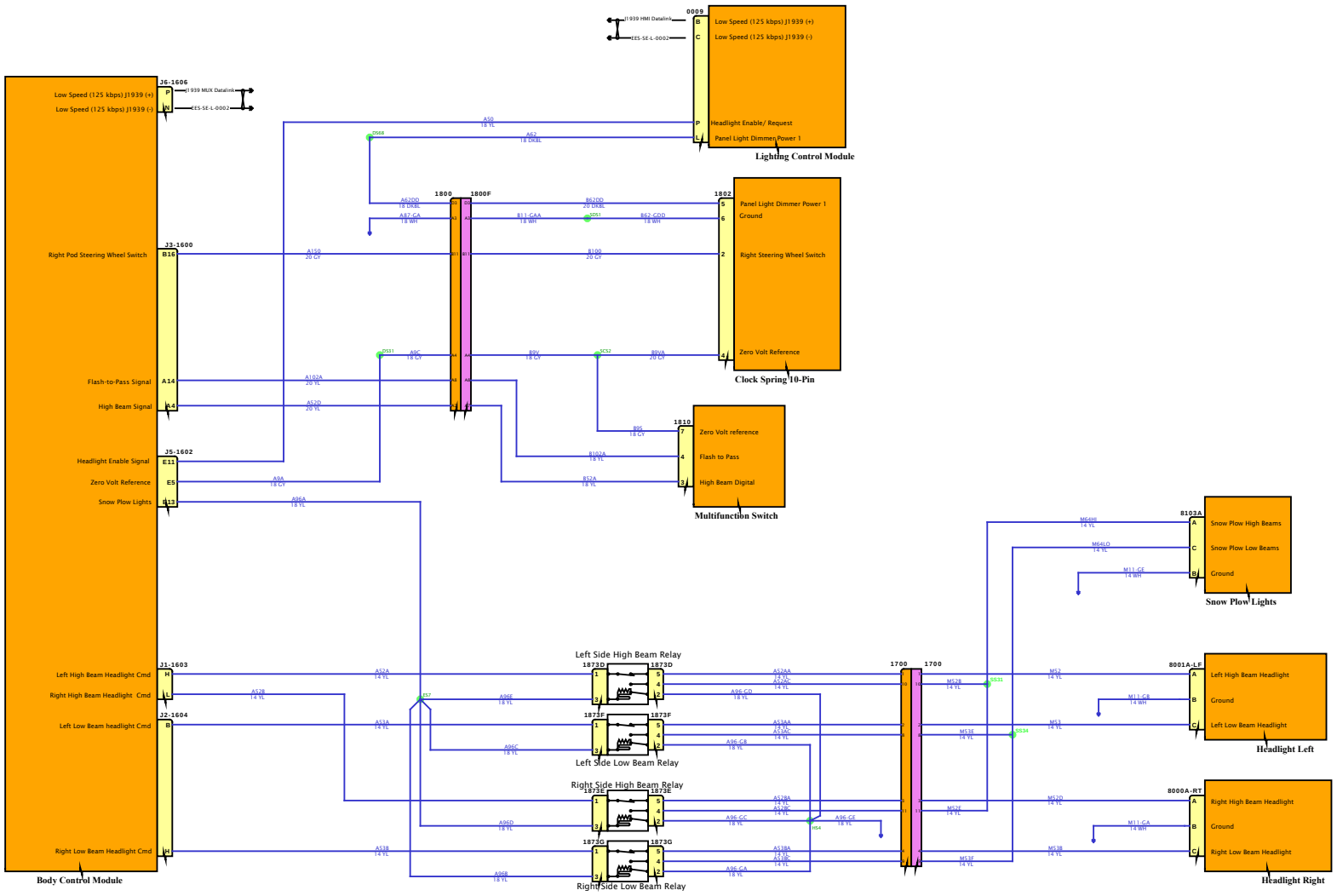

DESIGN DESCRIPTION

FEATURE CODES

SOFTWARE FEATURE CODES

NAVISTAR INC. CONFIDENTIAL PROPRIETARY

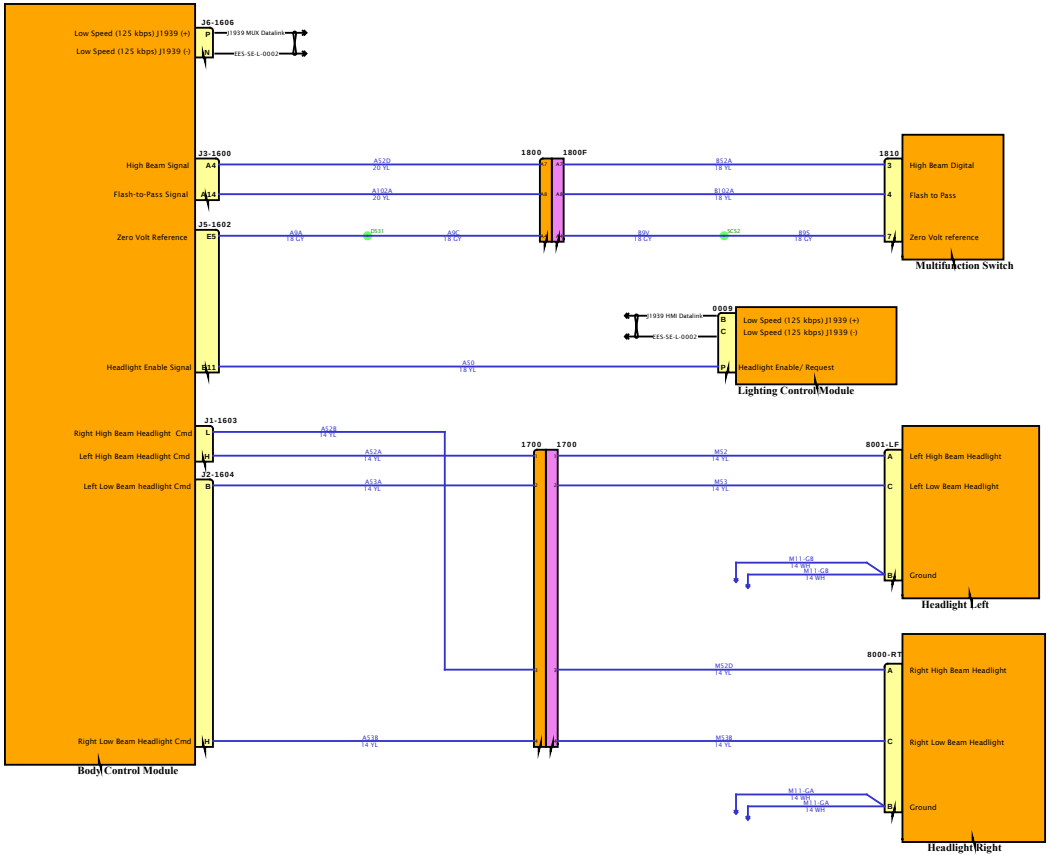

DESIGN DESCRIPTION

FEATURE CODES

SOFTWARE FEATURE CODES

NAVISTAR INC. CONFIDENTIAL PROPRIETARY

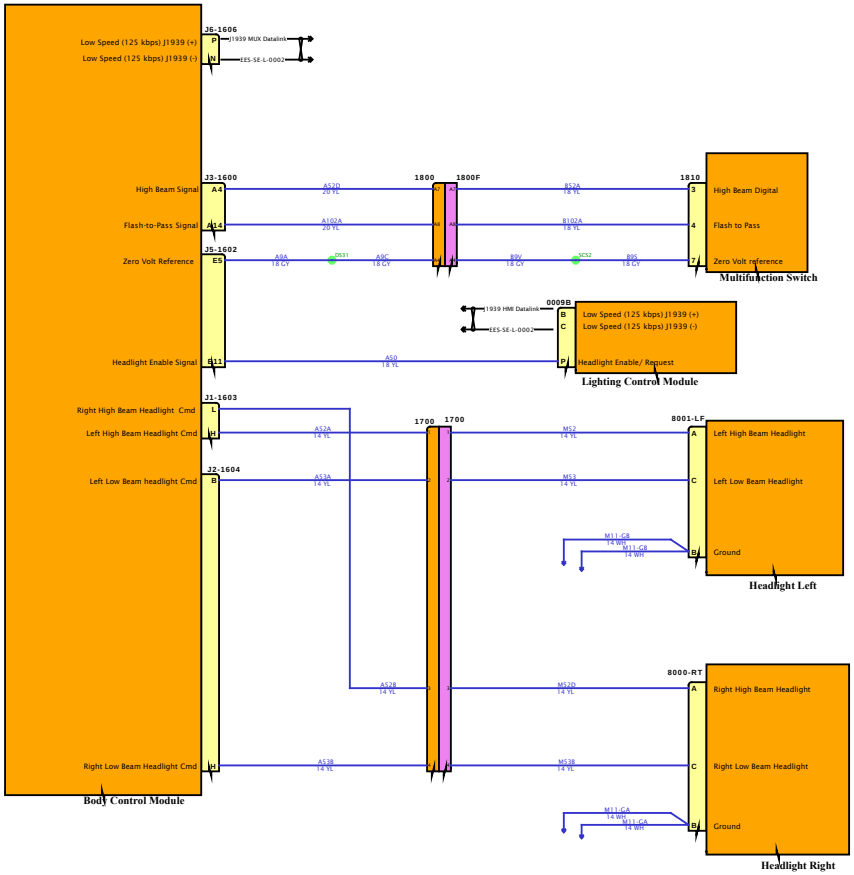

DESIGN DESCRIPTION

FEATURE CODES

SOFTWARE FEATURE CODES

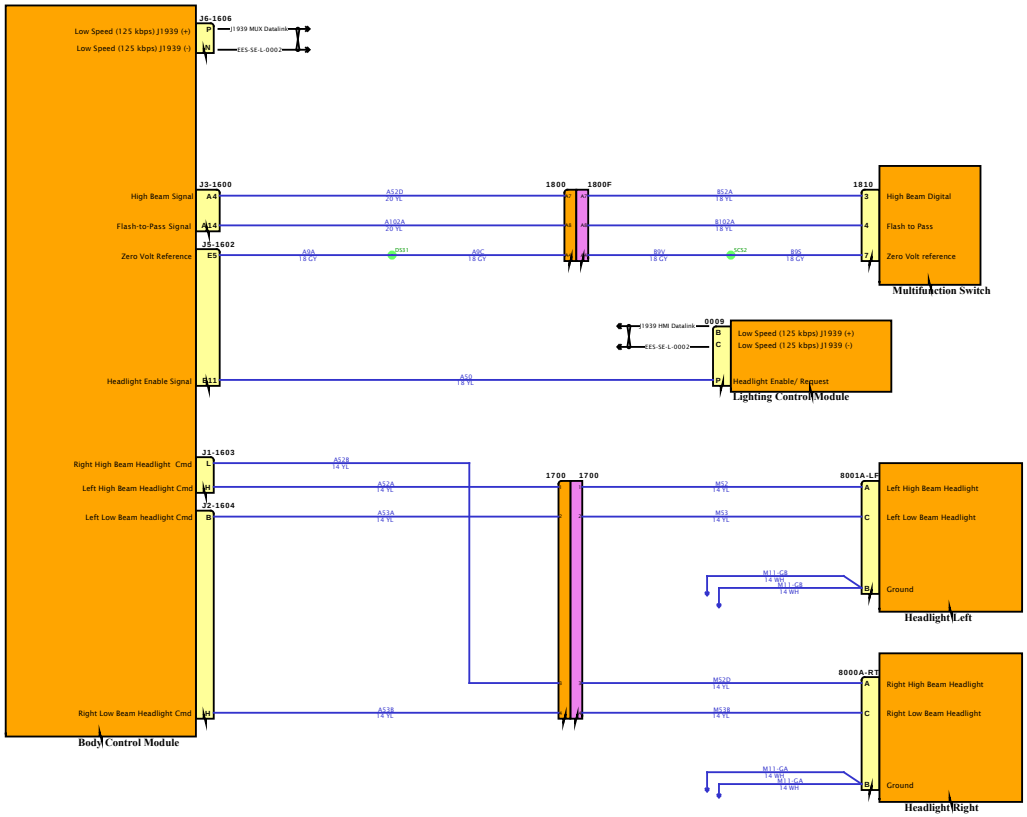

DESIGN DESCRIPTION

FEATURE CODES

SOFTWARE FEATURE CODES

NAVISTAR
NAVISTAR, INC. CONFIDENTIAL PROPRIETARY

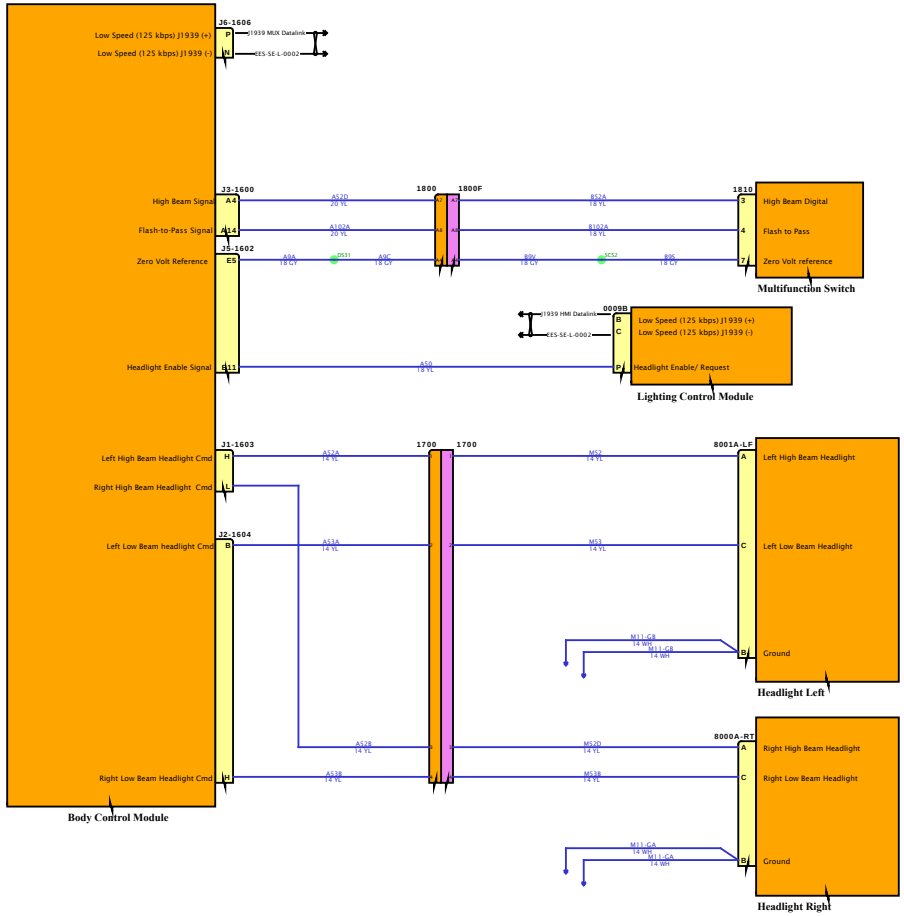

DESIGN DESCRIPTION

FEATURE CODES

SOFTWARE FEATURE CODES

NAVISTAR INC. CONFIDENTIAL PROPRIETARY

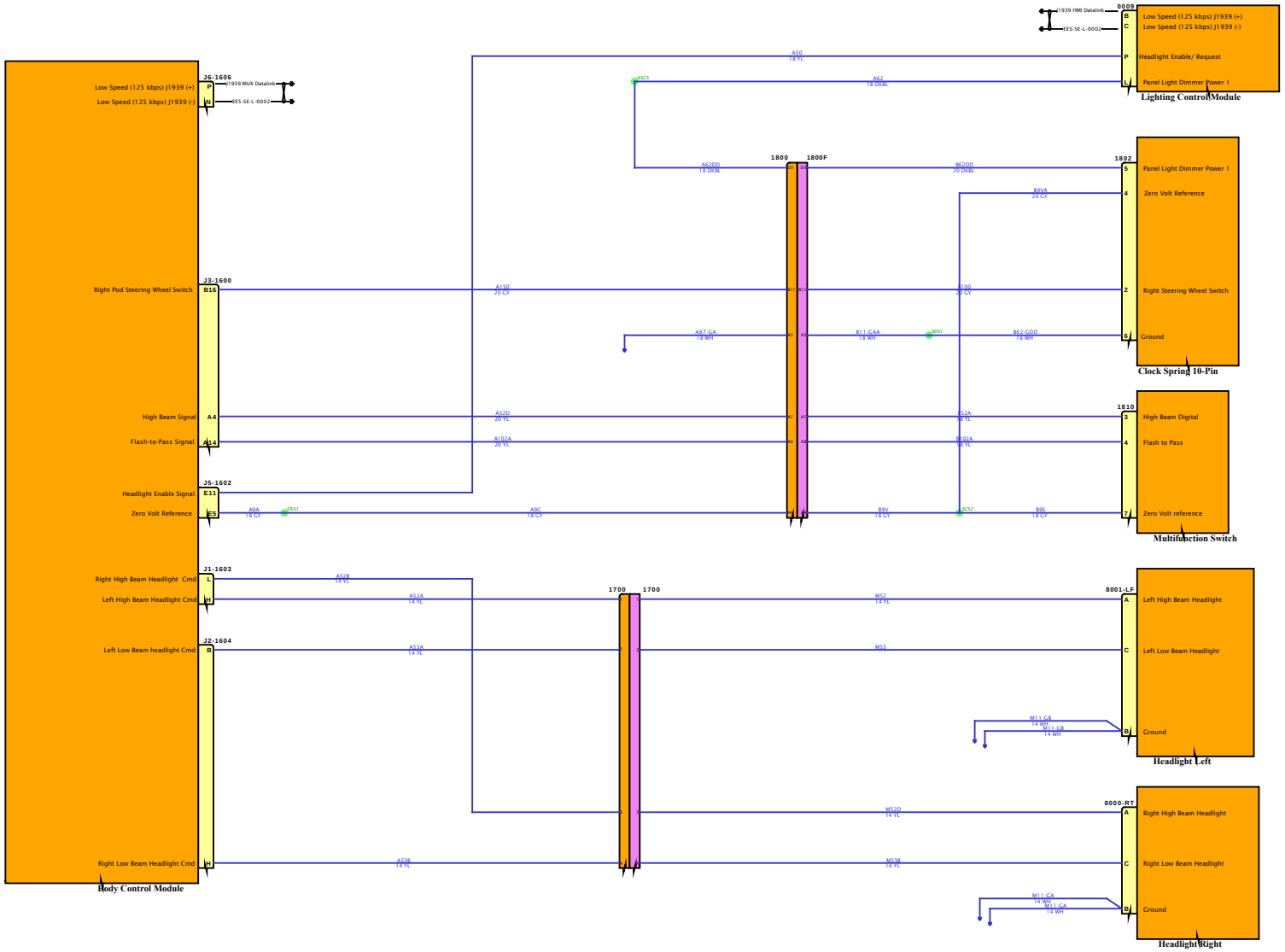

DESIGN DESCRIPTION

FEATURE CODES

SOFTWARE FEATURE CODES

NAVISTAR
NAVISTAR, INC. CONFIDENTIAL PROPRIETARY

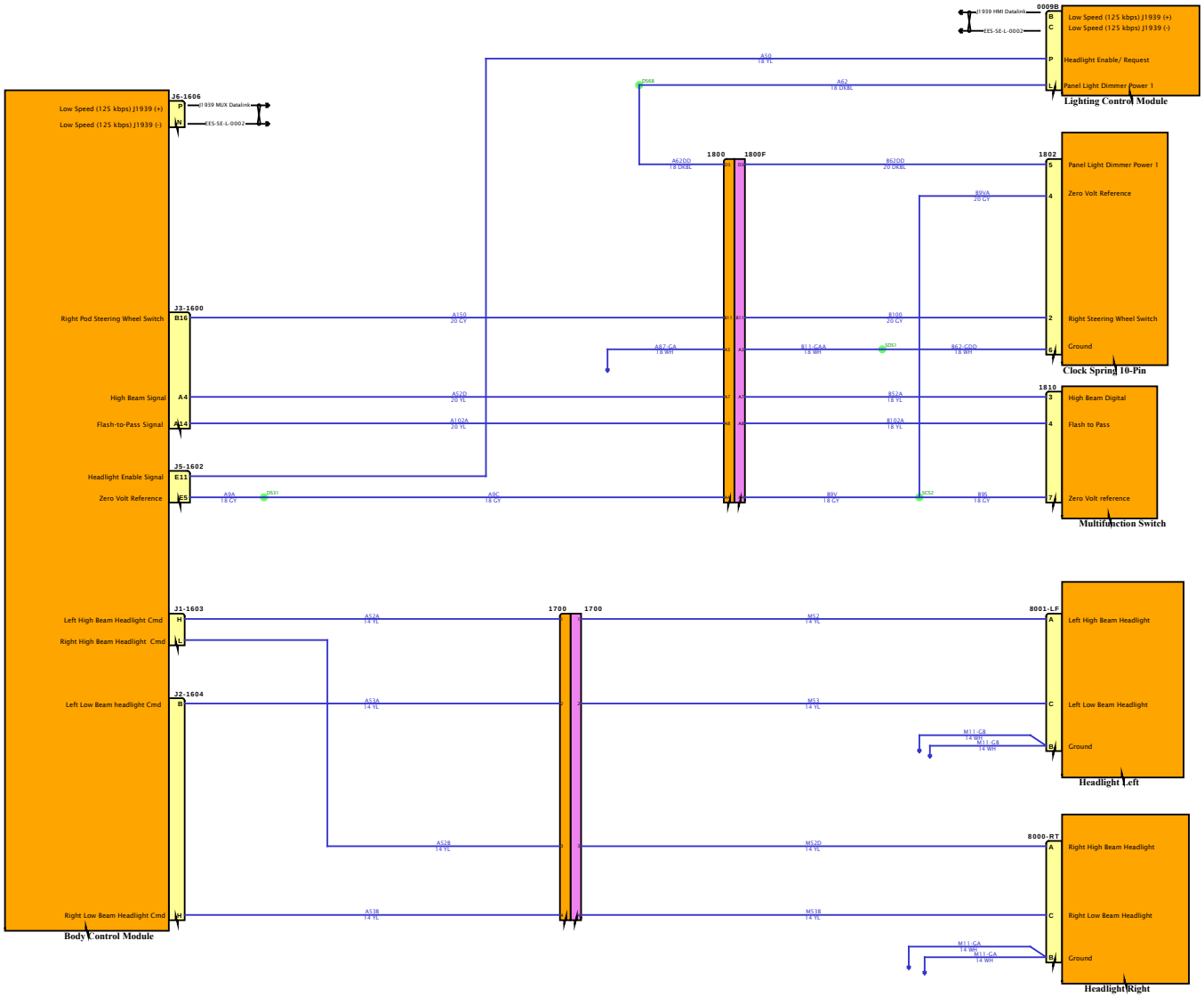

DESIGN DESCRIPTION

FEATURE CODES

SOFTWARE FEATURE CODES

NAVISTAR
NAVISTAR, INC. CONFIDENTIAL PROPRIETARY

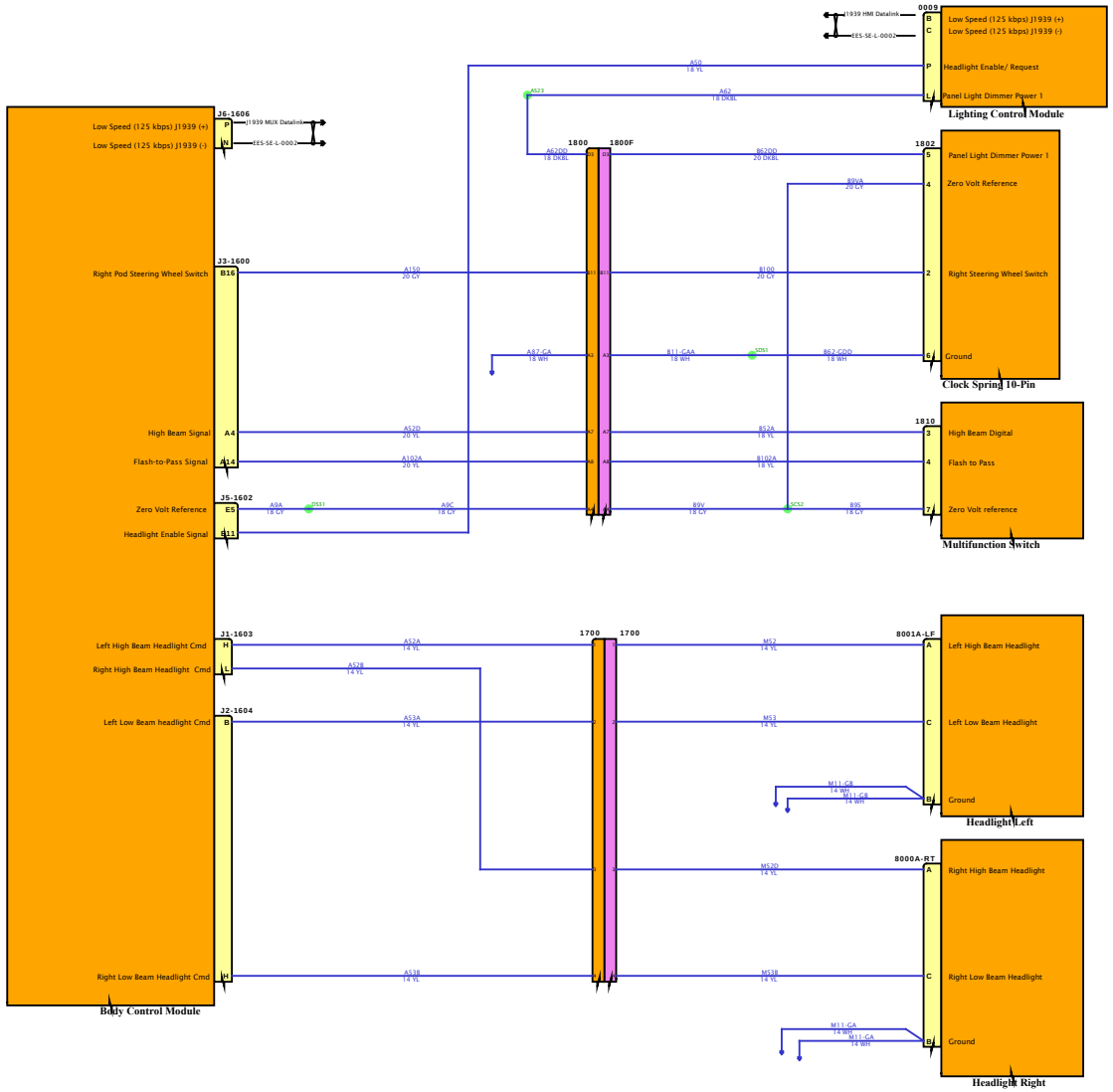

DESIGN DESCRIPTION

FEATURE CODES

SOFTWARE FEATURE CODES

NAVISTAR
NAVISTAR, INC. CONFIDENTIAL PROPRIETARY

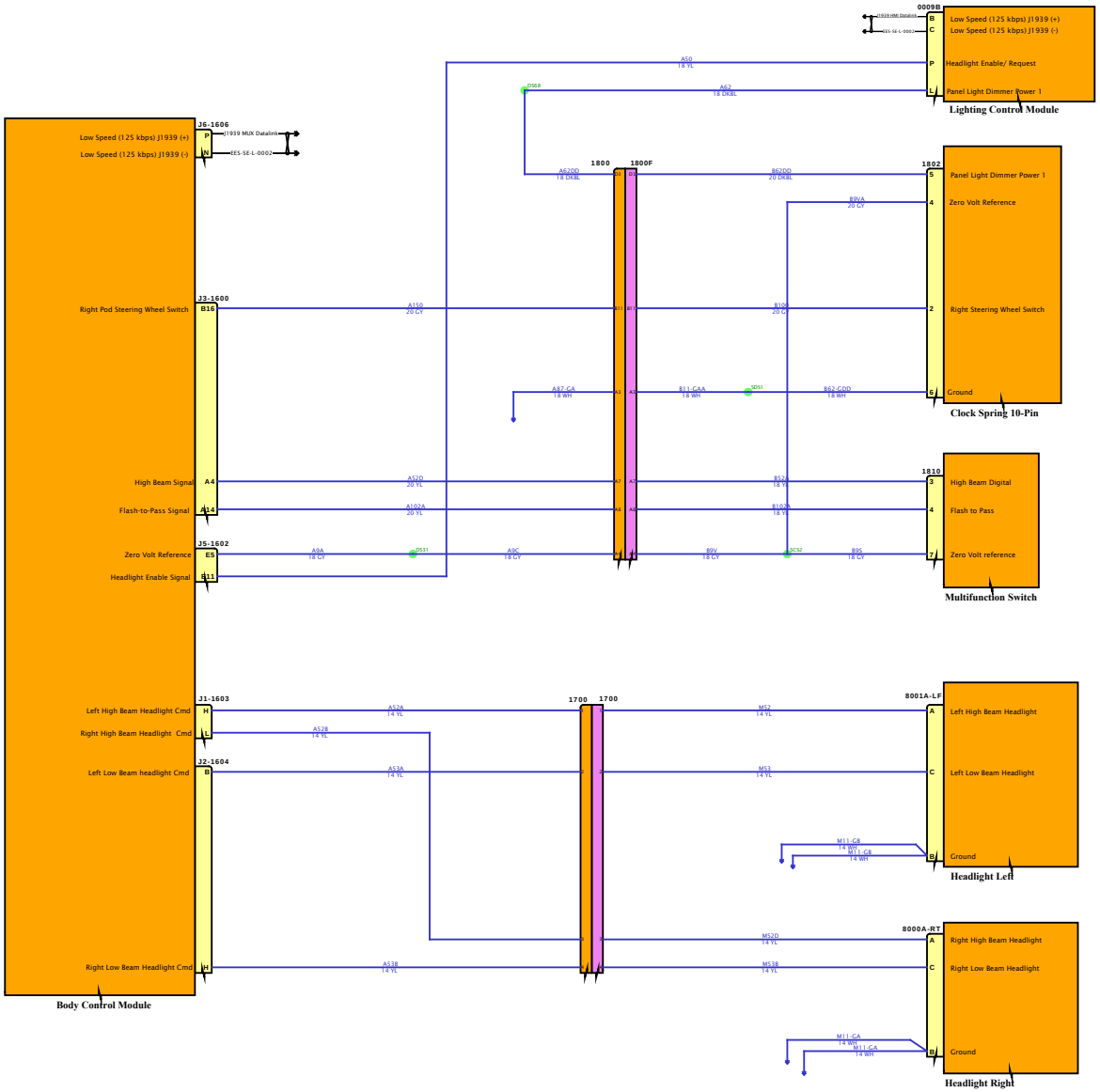
0009B
Low Speed (125 kbps) J1939 (+)
Low Speed (125 kbps) J1939 (-)
Headlight Enable/ Request
Panel Light Dimmer Power 1
Lighting Control Module
J6-1606
Low Speed (125 kbps) J1939 (+)
Low Speed (125 kbps) J1939 (-)
J1939 MUX Datalink
J3-1600
Right Pod Steering Wheel Switch
J5-1602
Zero Volt Reference
Headlight Enable Signal
1800
1800F
1802
Panel Light Dimmer Power 1
Zero Volt Reference
Right Steering Wheel Switch
Ground
Clock Spring 10-Pin
High Beam Signal
Flash-to-Pass Signal
1810
High Beam Digital
Flash to Pass
Zero Volt reference
Multifunction Switch
J1-1603
Left High Beam Headlight Cmd
Right High Beam Headlight Cmd
J2-1604
Left Low Beam headlight Cmd
Right Low Beam Headlight Cmd
1700
1700
8001A-LF
Left High Beam Headlight
Left Low Beam Headlight
Ground
Headlight Left
8000A-RT
Right High Beam Headlight
Right Low Beam Headlight
Ground
Headlight Right
Body Control Module
DESIGN DESCRIPTION
FEATURE CODES
SOFTWARE FEATURE CODES
NAVISTAR
NAVISTAR, INC. CONFIDENTIAL PROPRIETARY

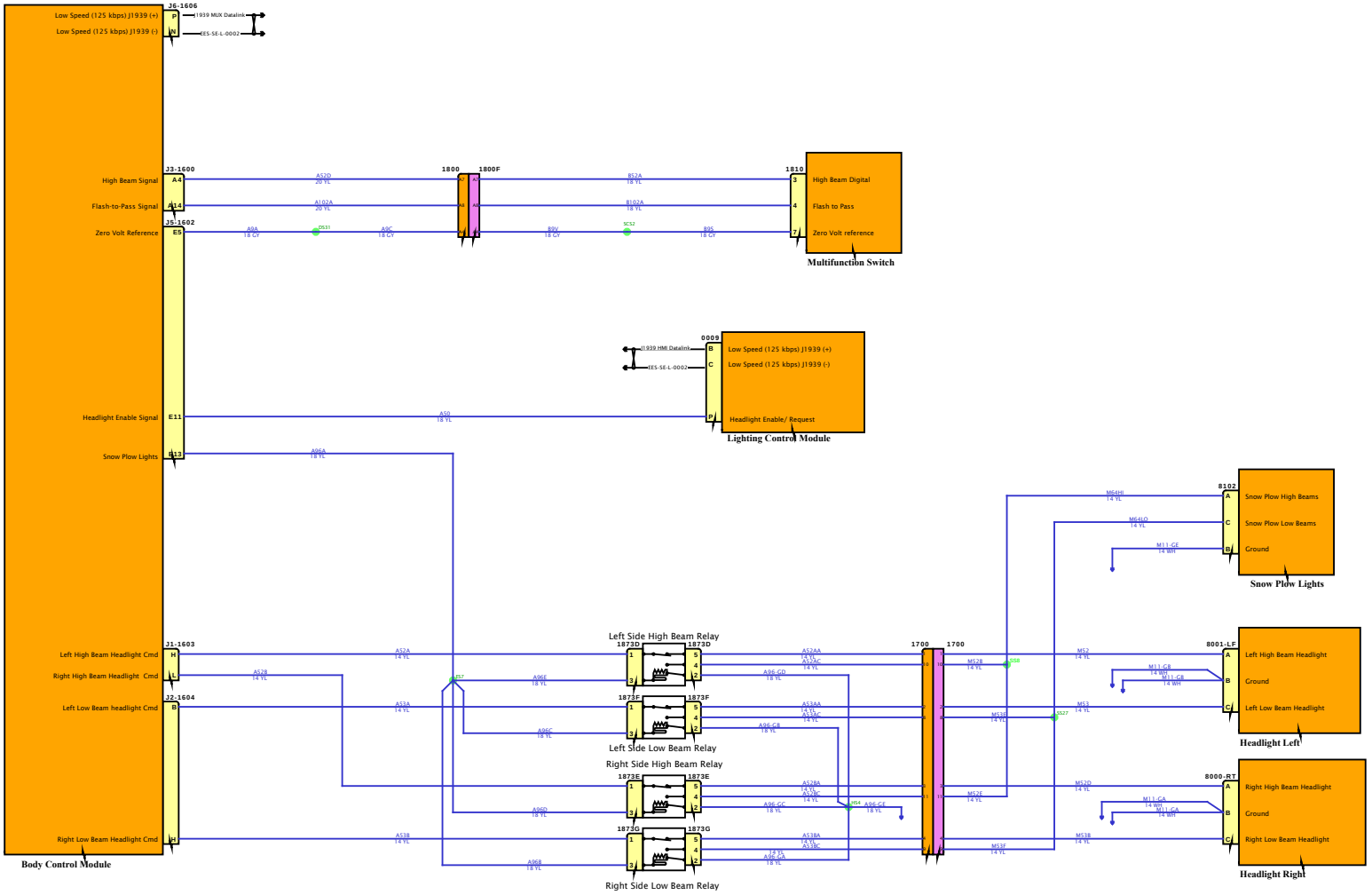

DESIGN DESCRIPTION

FEATURE CODES

SOFTWARE FEATURE CODES

Diagram2

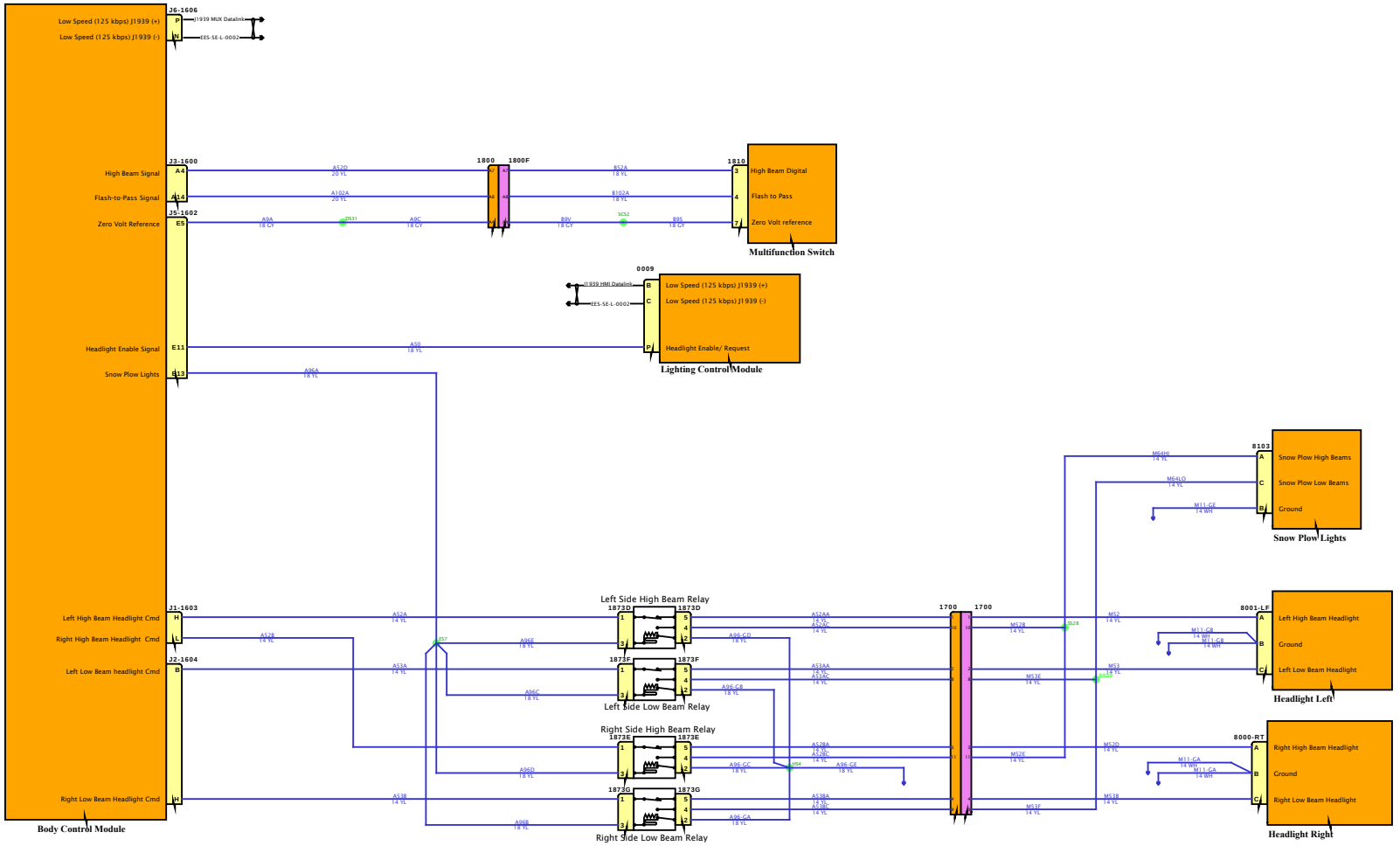

DESIGN DESCRIPTION

FEATURE CODES

SOFTWARE FEATURE CODES

NAVISTAR INC. CONFIDENTIAL PROPRIETARY

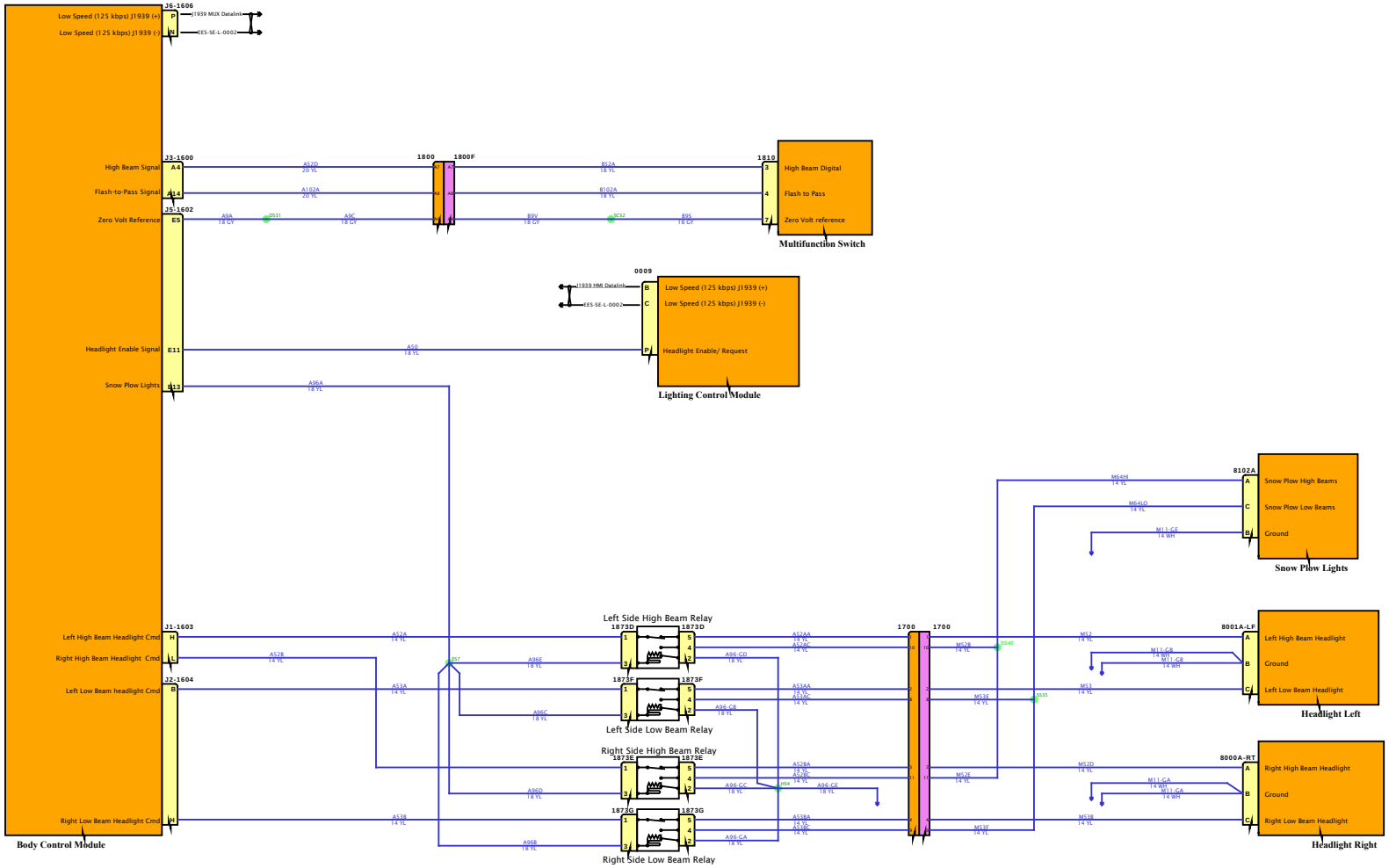

DESIGN DESCRIPTION

FEATURE CODES

SOFTWARE FEATURE CODES

Diagram4

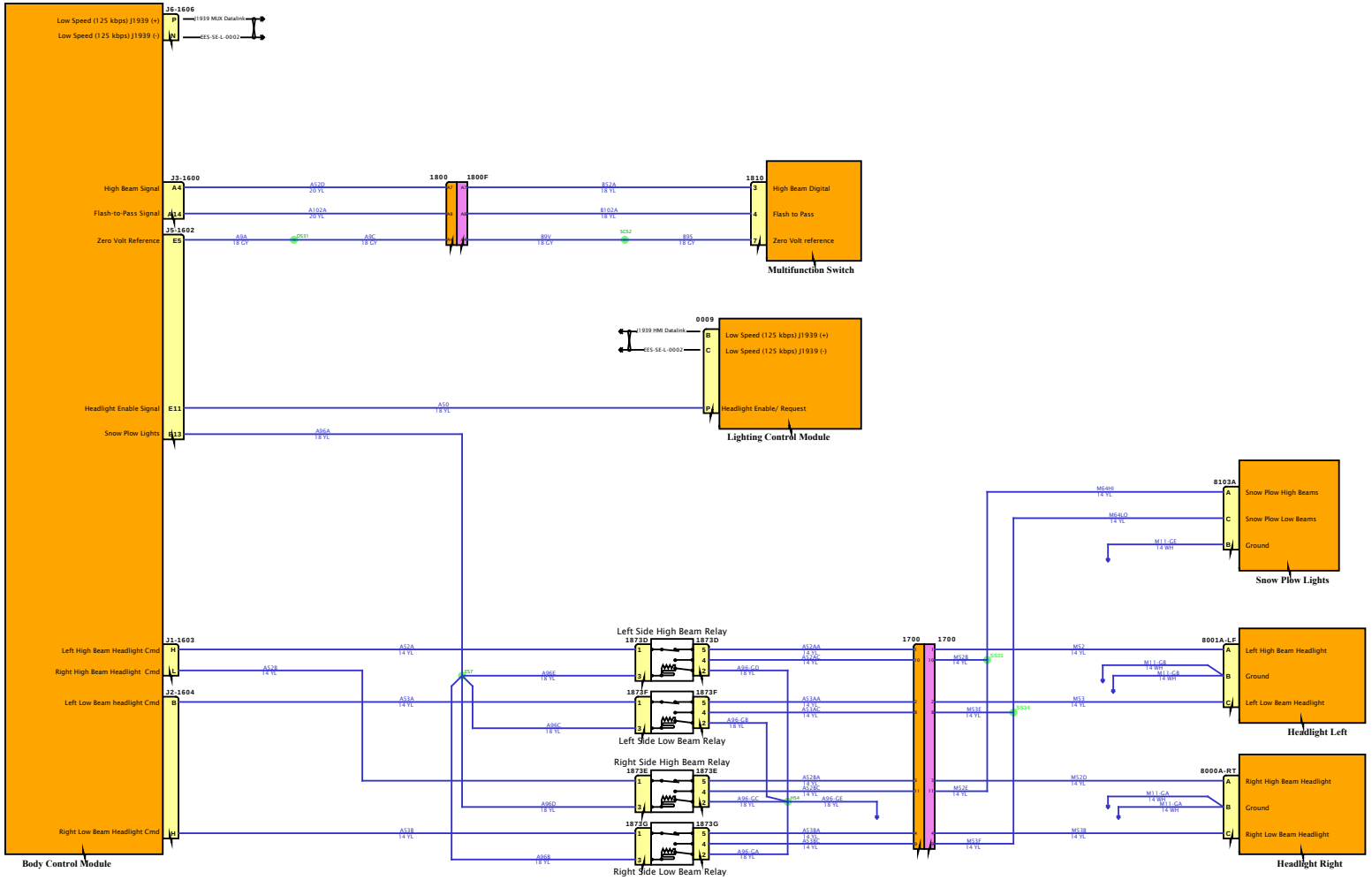

DESIGN DESCRIPTION

FEATURE CODES

SOFTWARE FEATURE CODES

NAVISTAR
NAVISTAR, INC. CONFIDENTIAL PROPRIETARY

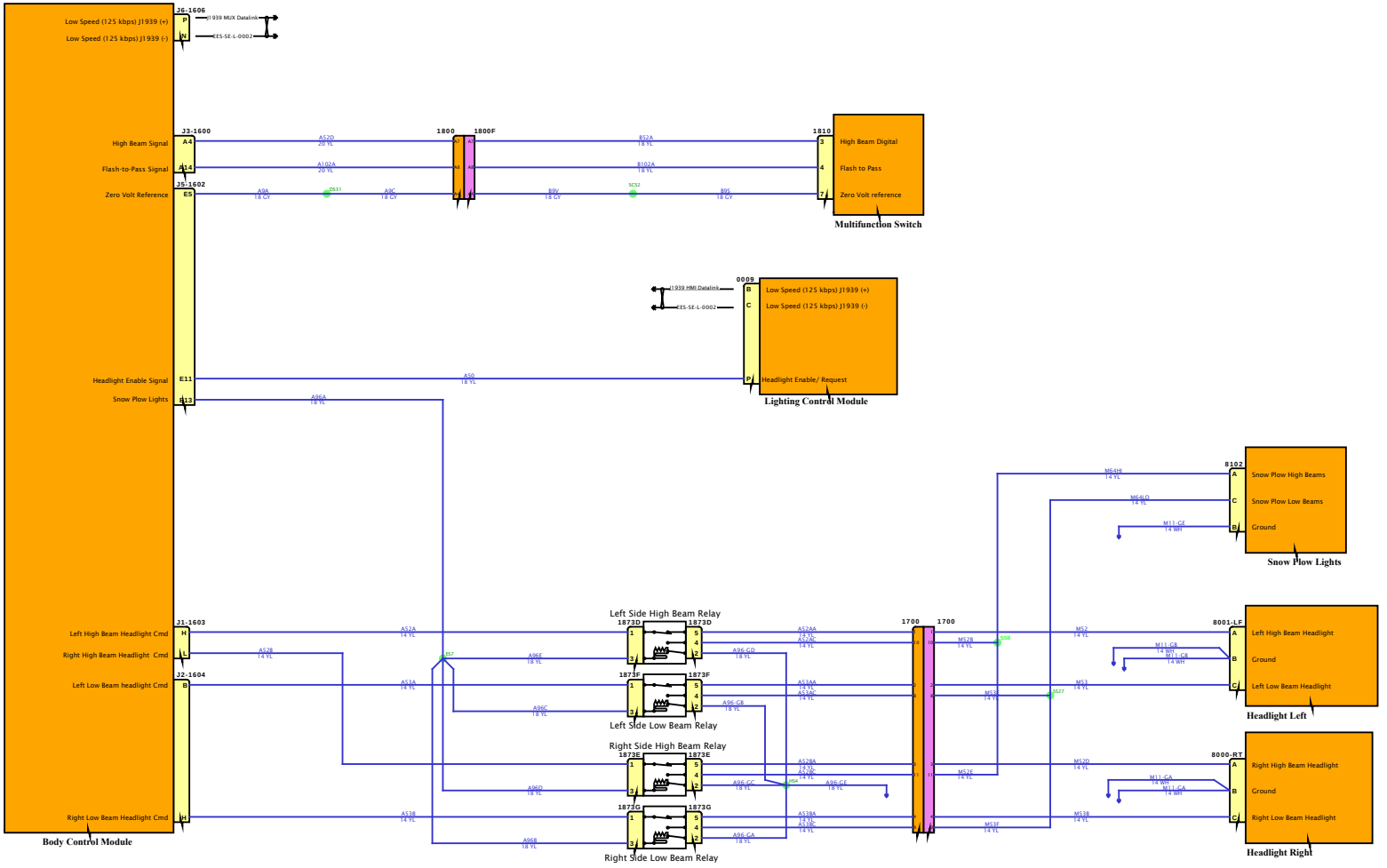

DESIGN DESCRIPTION

FEATURE CODES

SOFTWARE FEATURE CODES

NAVISTAR INC. CONFIDENTIAL PROPRIETARY

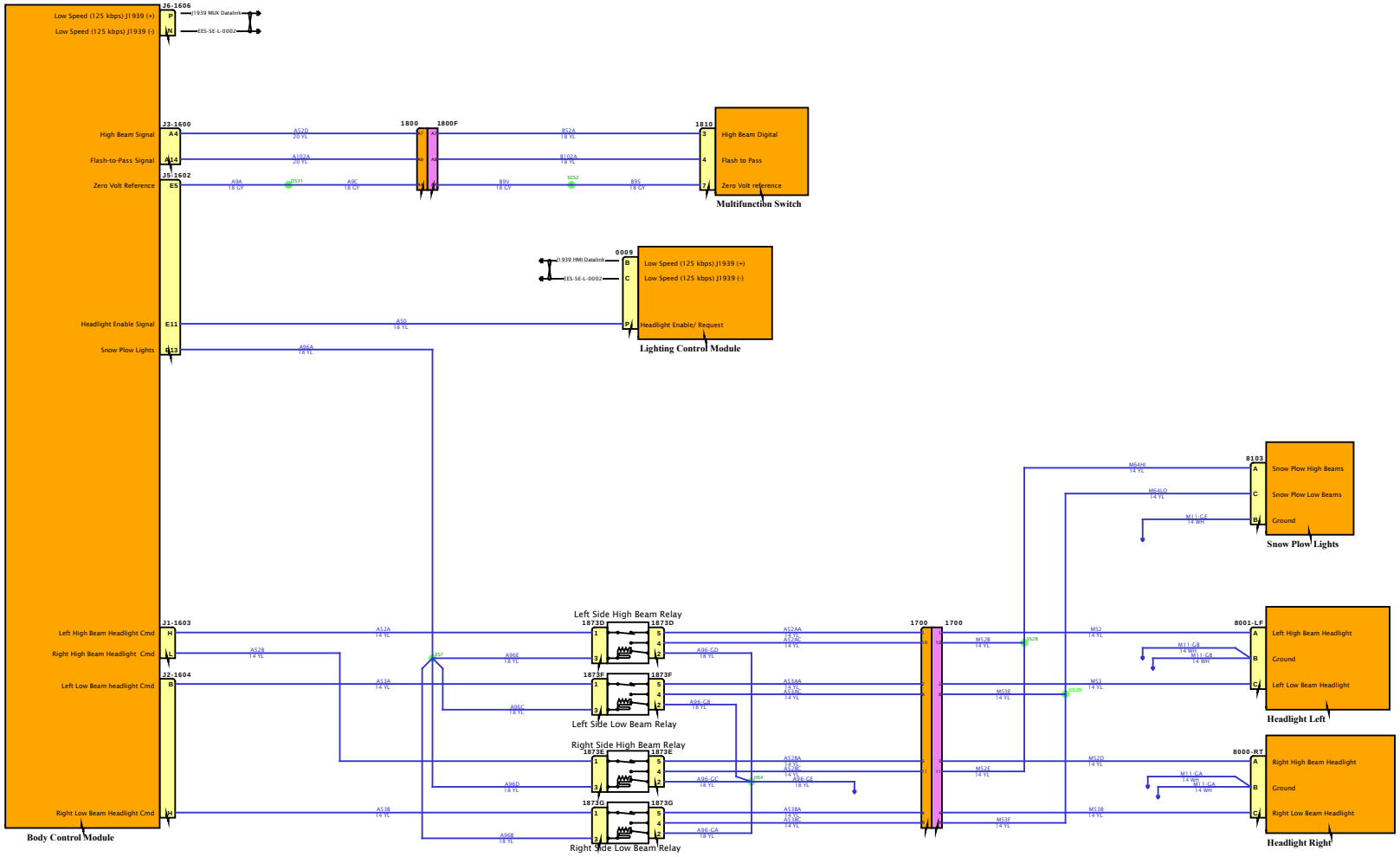
J6-1606
Low Speed (125 kbps) J1939 (+)
Low Speed (125 kbps) J1939 (-)
P
N
J1939 MUX Datalink
EES-SE-L-0002
J3-1600
High Beam Signal
Flash-to-Pass Signal
A4
A14
J5-1602
Zero Volt Reference
E5
A52D 20 YL
A102A 20 YL
A9A 18 GY
A9C 18 GY
1800
1800F
B52A 18 YL
B102A 18 YL
B9V 18 GY
B9S 18 GY
1810
3
4
7
High Beam Digital
Flash to Pass
Zero Volt reference
Multifunction Switch
0009
B
C
J1939 HMI Datalink
EES-SE-L-0002
Low Speed (125 kbps) J1939 (+)
Low Speed (125 kbps) J1939 (-)
P
Headlight Enable/ Request
Lighting Control Module
Headlight Enable Signal
E11
A50 18 YL
Snow Plow Lights
H13
A96A 18 YL
8103
A
C
B
Snow Plow High Beams
Snow Plow Low Beams
Ground
M64HI 14 YL
M64LO 14 YL
M11-GE 14 WH
Snow Plow Lights
J1-1603
Left High Beam Headlight Cmd
Right High Beam Headlight Cmd
H
L
J2-1604
Left Low Beam headlight Cmd
B
A52A 14 YL
A52B 14 YL
A53A 14 YL
Left Side High Beam Relay
1873D
Left Side Low Beam Relay
1873F
Right Side High Beam Relay
1873E
Right Side Low Beam Relay
1873G
A96E 18 YL
A96C 18 YL
A96D 18 YL
A96B 18 YL
A96-GD 18 YL
A96-GB 18 YL
A96-GC 18 YL
A96-GA 18 YL
A52AA 14 YL
A52AC 14 YL
A53AA 14 YL
A53AC 14 YL
A52BA 14 YL
A52BC 14 YL
A53BA 14 YL
A53BC 14 YL
1700
1700
M52B 14 YL
M53E 14 YL
M52E 14 YL
M53F 14 YL
M52 14 YL
M53 14 YL
M52D 14 YL
M53B 14 YL
8001-LF
A
B
C
Left High Beam Headlight
Ground
Left Low Beam Headlight
M11-GB 14 WH
Headlight Left
8000-RT
Right High Beam Headlight
Ground
Right Low Beam Headlight
M11-GA 14 WH
Headlight Right
Body Control Module
DESIGN DESCRIPTION
FEATURE CODES
SOFTWARE FEATURE CODES
NAVISTAR
NAVISTAR, INC. CONFIDENTIAL PROPRIETARY

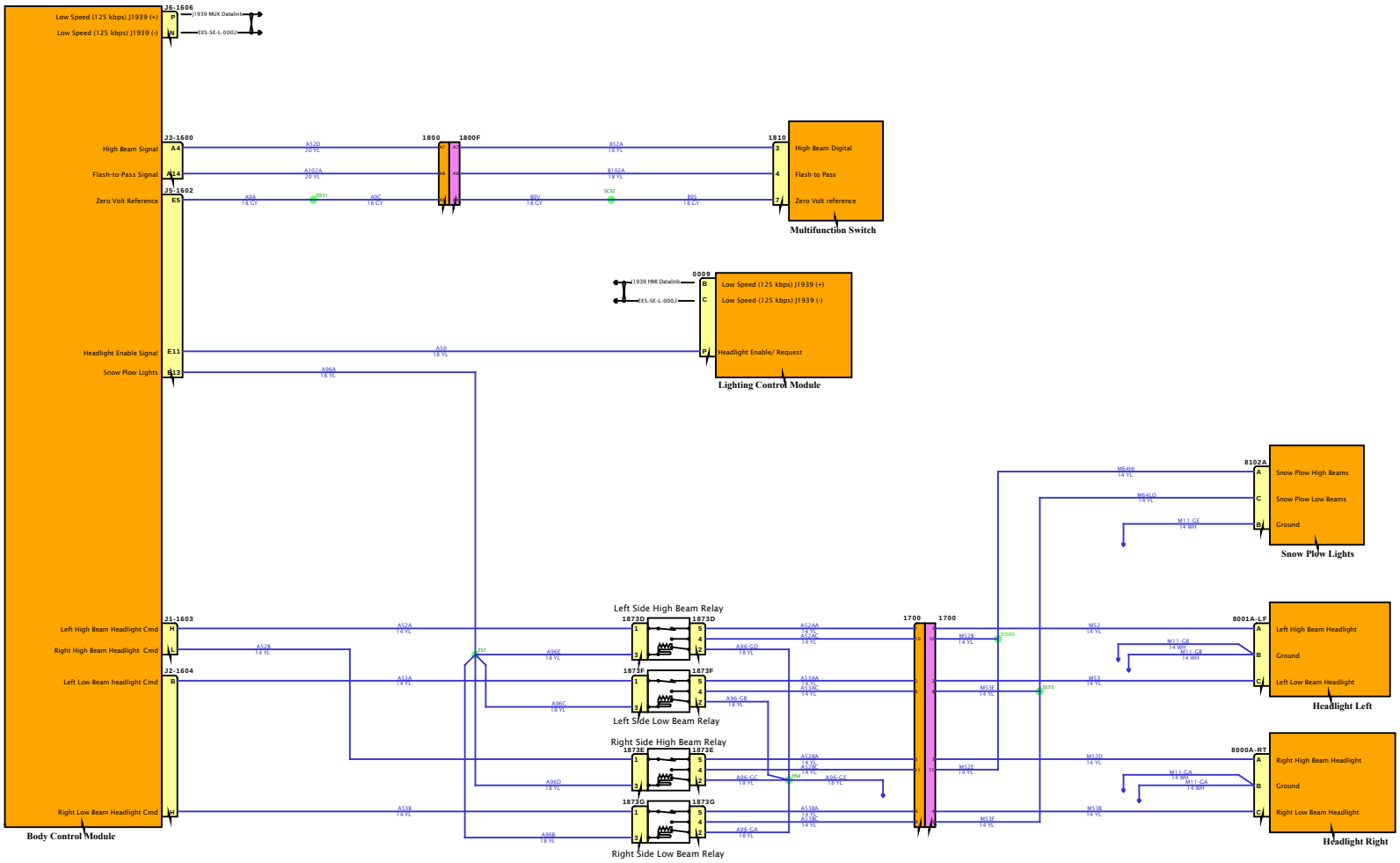

DESIGN DESCRIPTION

FEATURE CODES

SOFTWARE FEATURE CODES

NAVISTAR
NAVISTAR, INC. CONFIDENTIAL PROPRIETARY

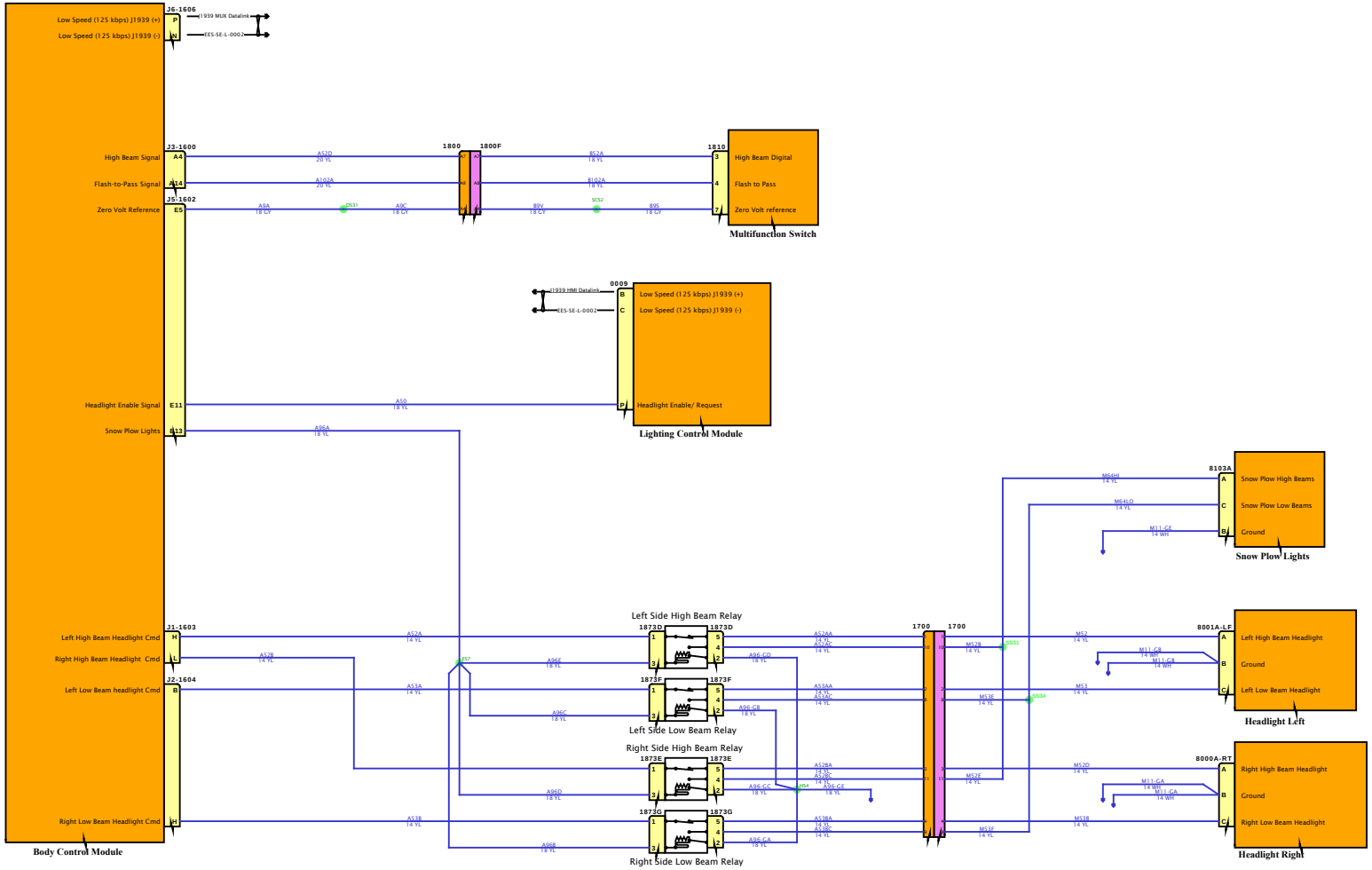
Low Speed (125 kbps) J1939 (+)
Low Speed (125 kbps) J1939 (-)
J6-1606
P
N
J1939 MUX Datalink
EES-SE-L-0002
High Beam Signal
Flash-to-Pass Signal
Zero Volt Reference
J3-1600
A4
A14
J5-1602
E5
AS2D 20 YL
A102A 20 YL
A9A 18 GY
A9C 18 GY
1800
1800F
B9V 18 GY
B9S 18 GY
B52A 18 YL
B102A 18 YL
1810
3
4
7
High Beam Digital
Flash to Pass
Zero Volt reference
Multifunction Switch
J1939 HMI Datalink
EES-SE-L-0002
0009
B
C
Low Speed (125 kbps) J1939 (+)
Low Speed (125 kbps) J1939 (-)
Headlight Enable Signal
E11
AS0 18 YL
Headlight Enable/ Request
Lighting Control Module
Snow Plow Lights
E13
A96A 18 YL
8103A
A
C
B
Snow Plow High Beams
Snow Plow Low Beams
Ground
M64HI 14 YL
M64LO 14 YL
M11-GE 14 WH
Snow Plow Lights
Left High Beam Headlight Cmd
Right High Beam Headlight Cmd
Left Low Beam headlight Cmd
Right Low Beam Headlight Cmd
J1-1603
H
L
J2-1604
B
H
AS2A 14 YL
AS2B 14 YL
AS3A 14 YL
AS3B 14 YL
Body Control Module
Left Side High Beam Relay
1873D
A96F 18 YL
A96-CD 18 YL
Left Side Low Beam Relay
1873F
A96C 18 YL
A96-GB 18 YL
Right Side High Beam Relay
1873E
A96D 18 YL
A96-CC 18 YL
Right Side Low Beam Relay
1873G
A96B 18 YL
A96-GA 18 YL
AS2AA 14 YL
AS2AC 14 YL
AS3AA 14 YL
AS3AC 14 YL
AS2BA 14 YL
AS2BC 14 YL
AS3BA 14 YL
AS3BC 14 YL
1700
1700
MS2B 14 YL
MS3E 14 YL
MS2E 14 YL
MS3F 14 YL
MS2 14 YL
MS3 14 YL
MS2D 14 YL
MS3B 14 YL
8001A-LF
A
B
C
Left High Beam Headlight
Ground
Left Low Beam Headlight
M11-GR 14 WH
M11-GR 14 WH
Headlight Left
8000A-RT
A
B
C
Right High Beam Headlight
Ground
Right Low Beam Headlight
M11-GA 14 WH
M11-GA 14 WH
Headlight Right
DESIGN DESCRIPTION
FEATURE CODES
SOFTWARE FEATURE CODES
NAVISTAR
NAVISTAR, INC. CONFIDENTIAL PROPRIETARY

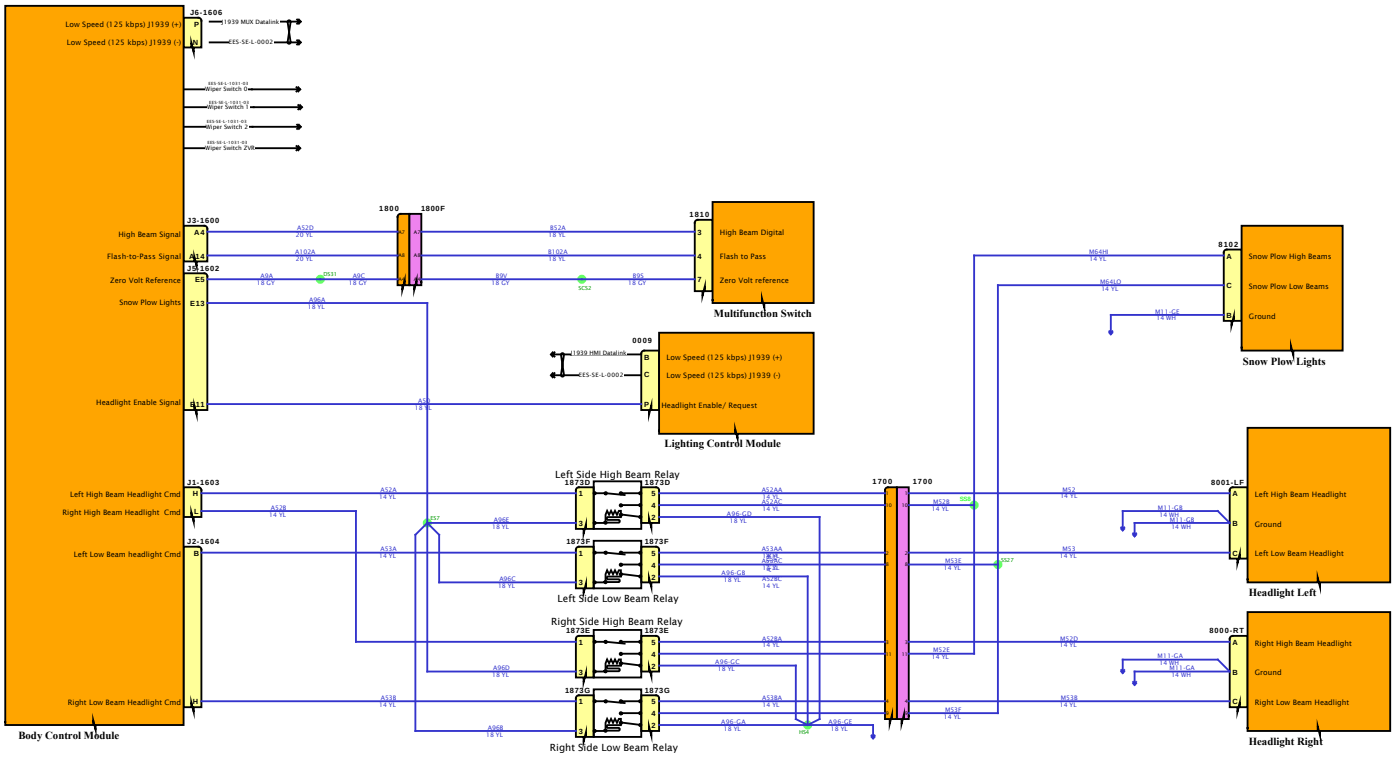

DESIGN DESCRIPTION

FEATURE CODES

SOFTWARE FEATURE CODES

NAVISTAR INC. CONFIDENTIAL PROPRIETARY

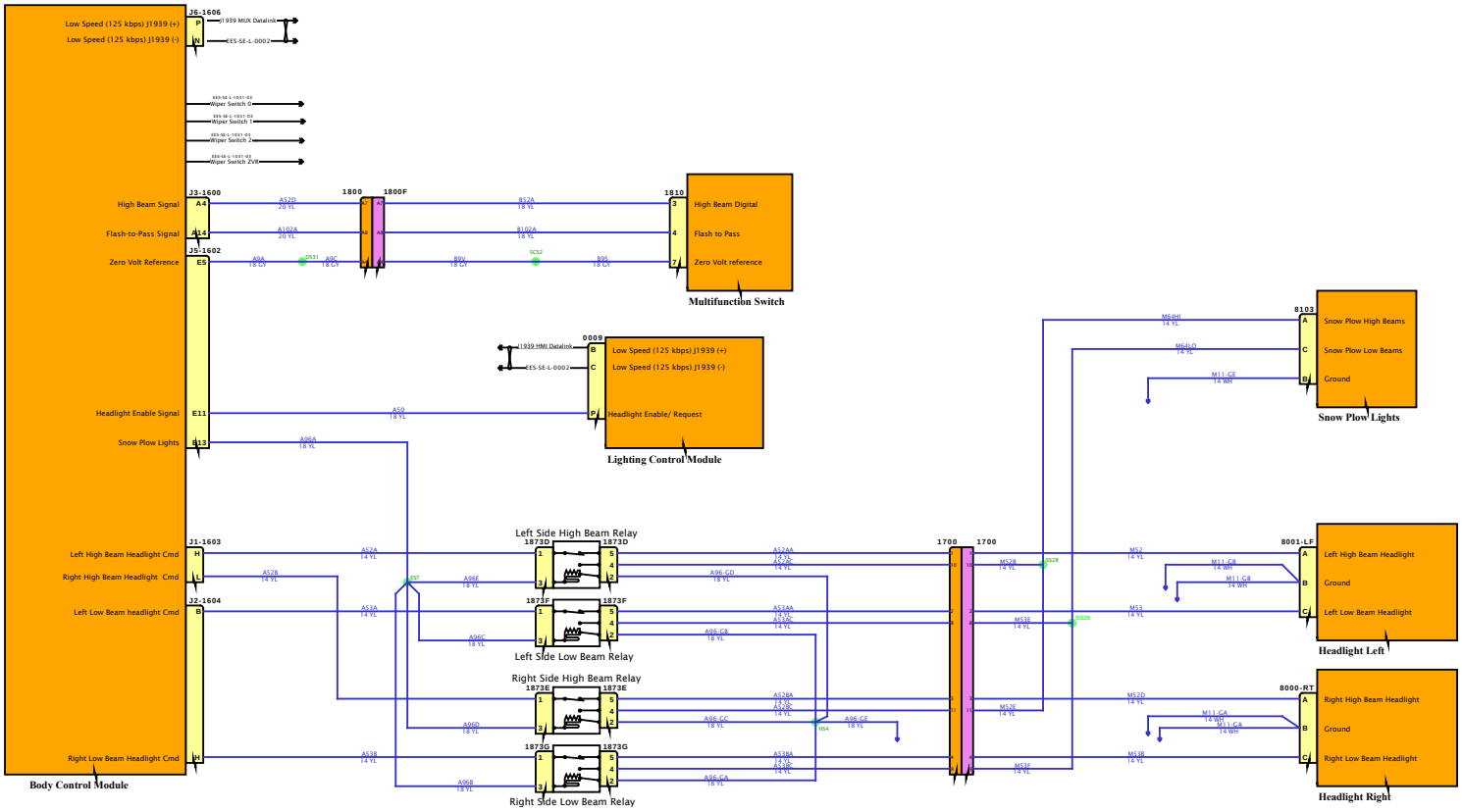

DESIGN DESCRIPTION

FEATURE CODES

SOFTWARE FEATURE CODES

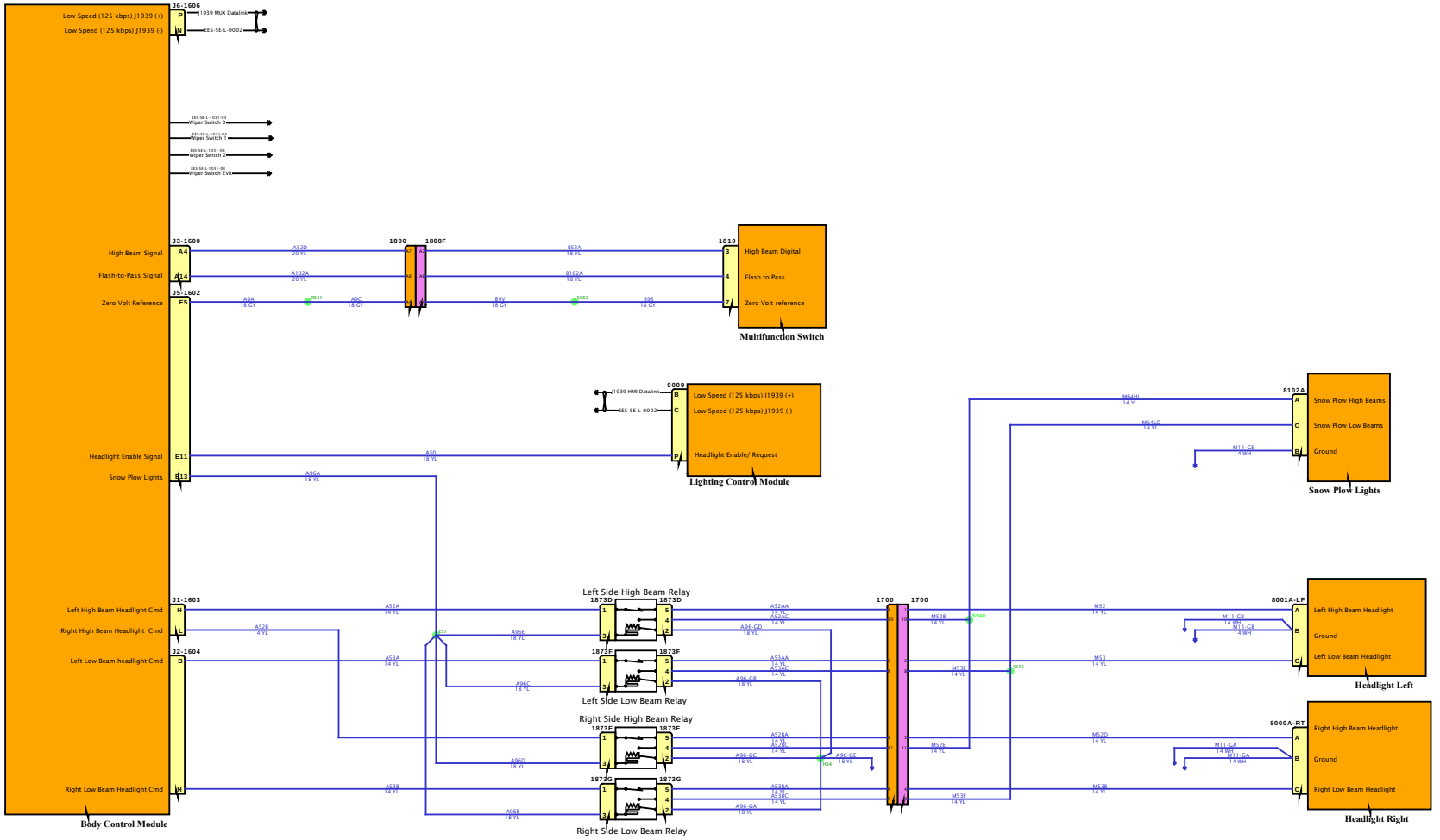

DESIGN DESCRIPTION

FEATURE CODES

SOFTWARE FEATURE CODES

NAVISTAR INC. CONFIDENTIAL PROPRIETARY

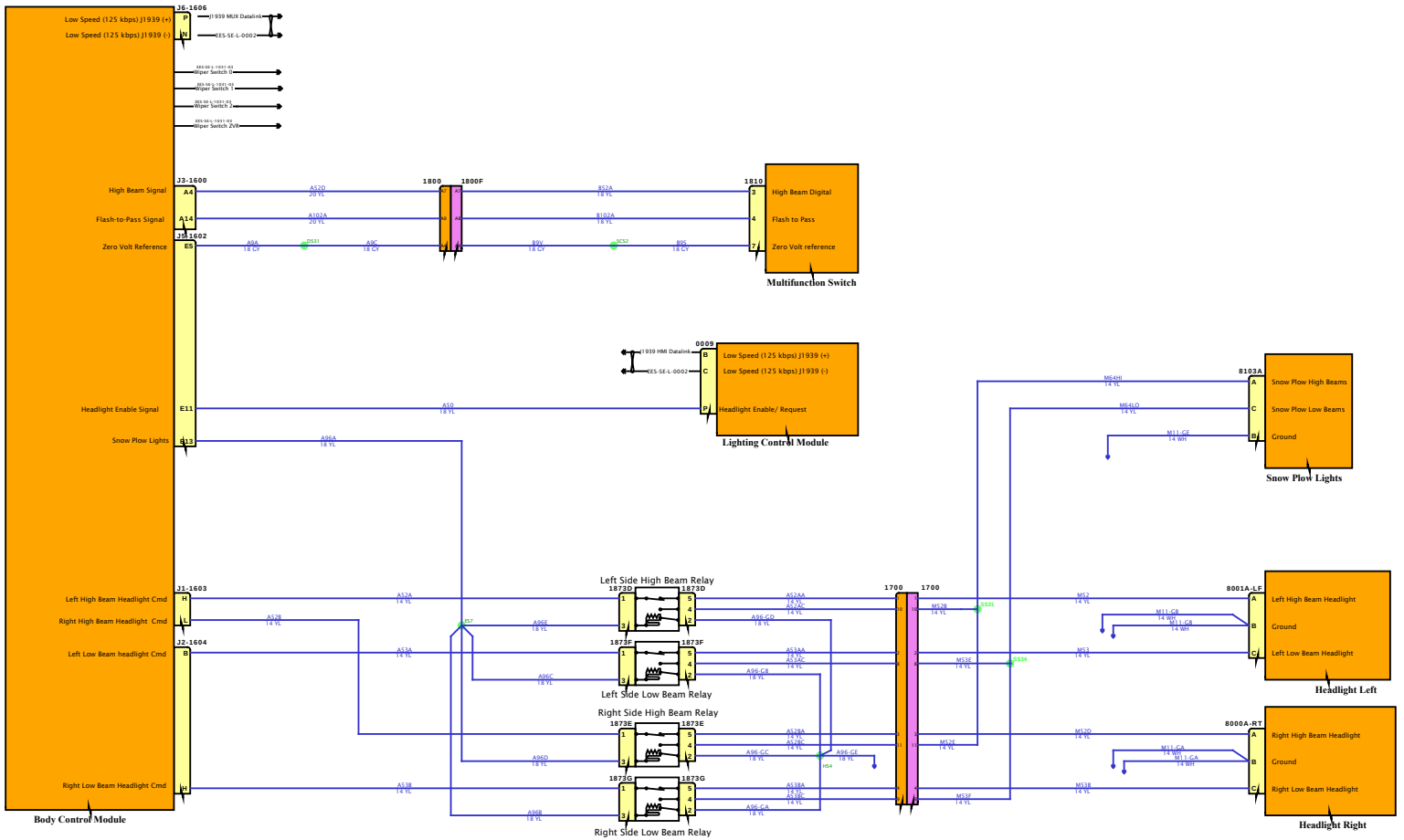

DESIGN DESCRIPTION

FEATURE CODES

SOFTWARE FEATURE CODES

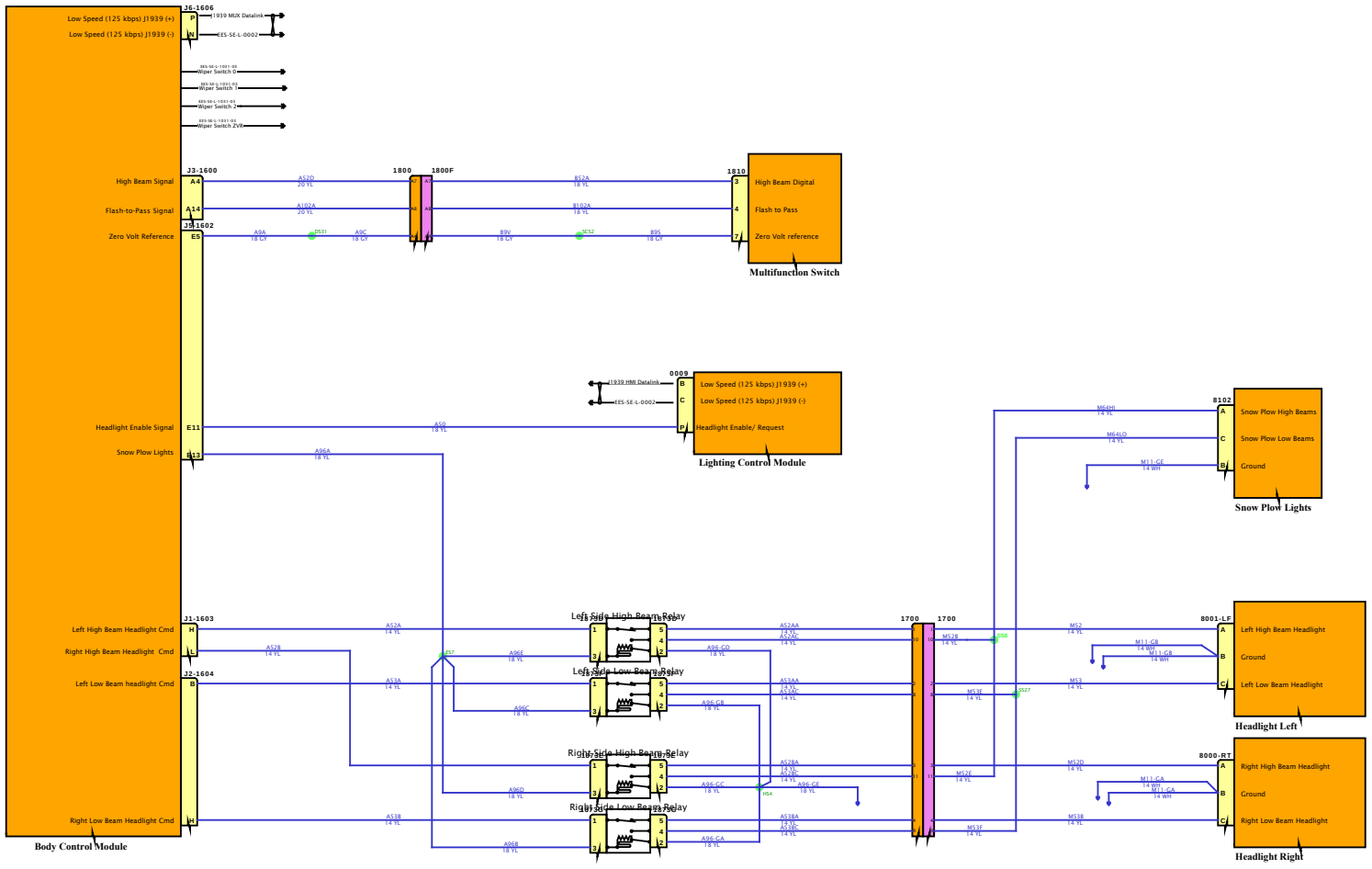

DESIGN DESCRIPTION

FEATURE CODES

SOFTWARE FEATURE CODES

NAVISTAR
NAVISTAR, INC. CONFIDENTIAL PROPRIETARY

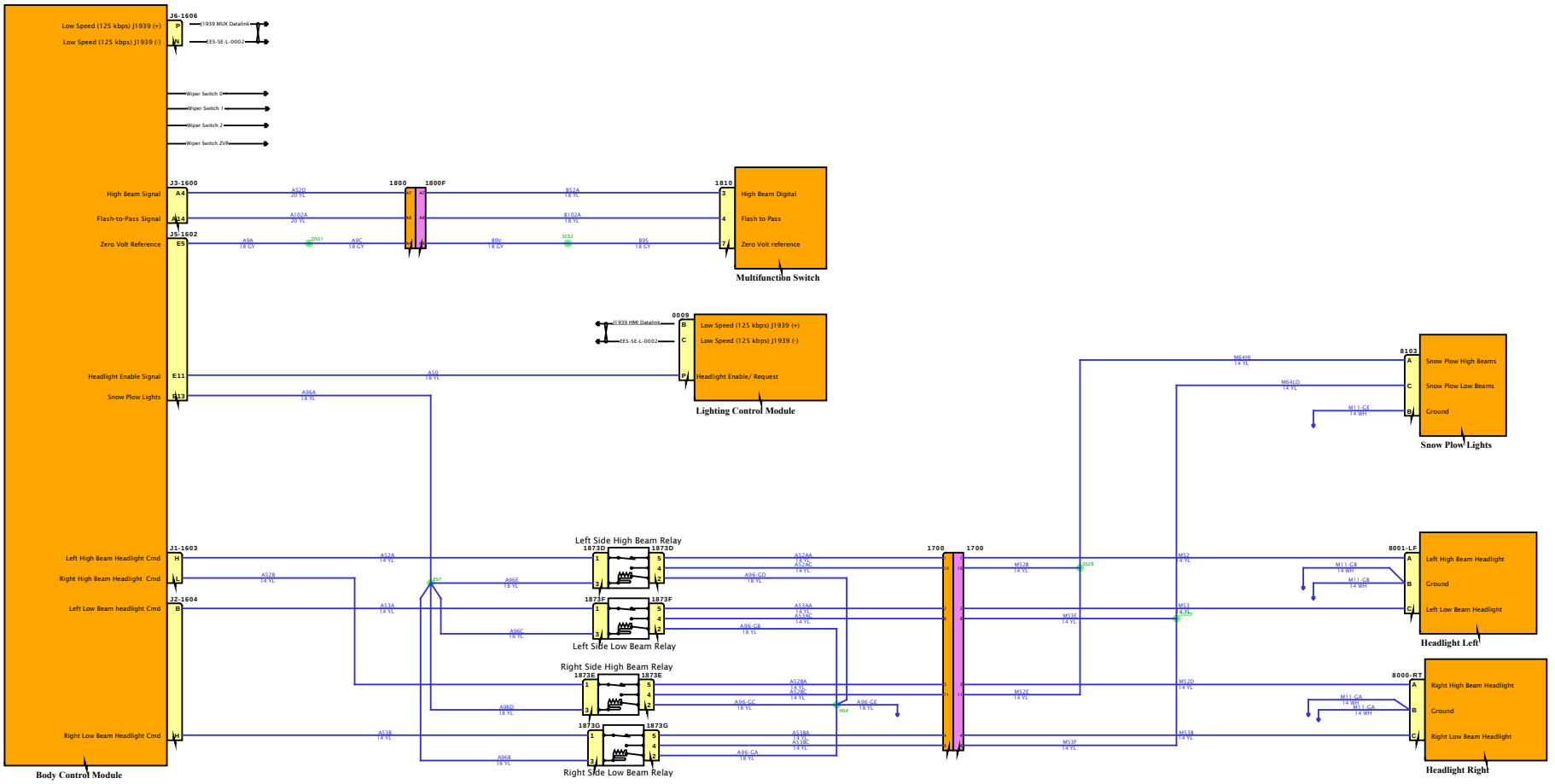

DESIGN DESCRIPTION

FEATURE CODES

SOFTWARE FEATURE CODES

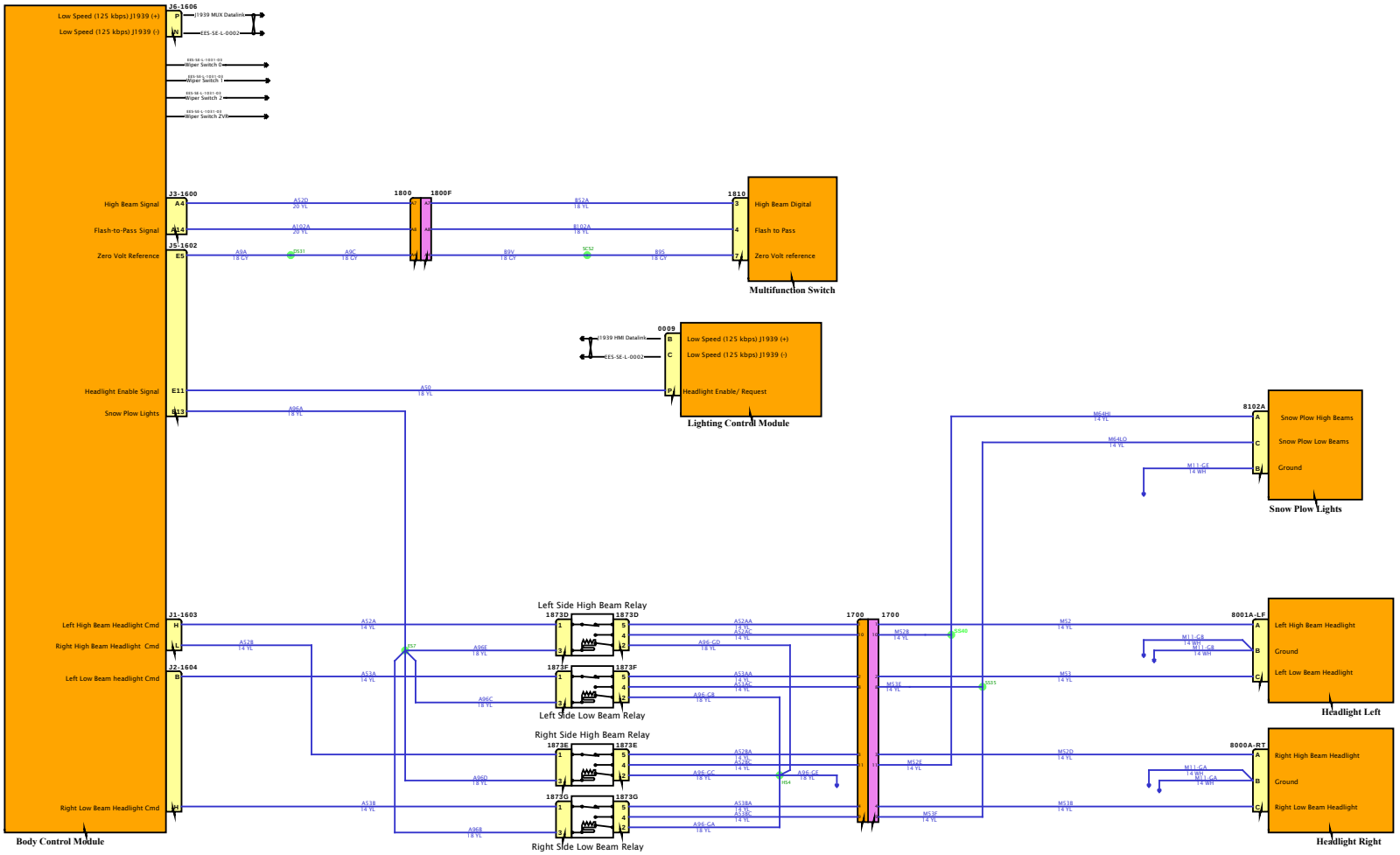

DESIGN DESCRIPTION

FEATURE CODES

SOFTWARE FEATURE CODES

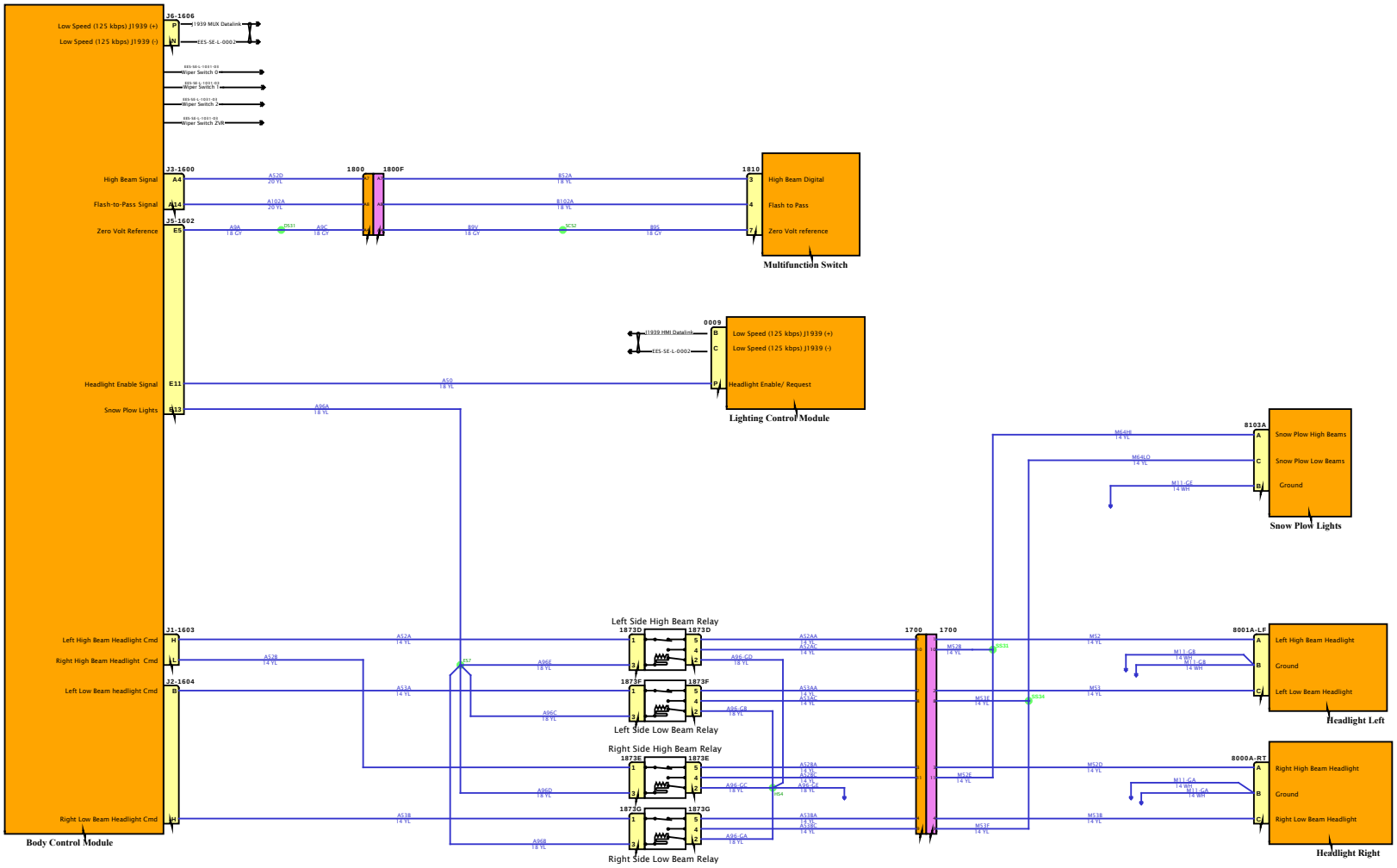

DESIGN DESCRIPTION

FEATURE CODES

SOFTWARE FEATURE CODES

NAVISTAR INC. CONFIDENTIAL PROPRIETARY

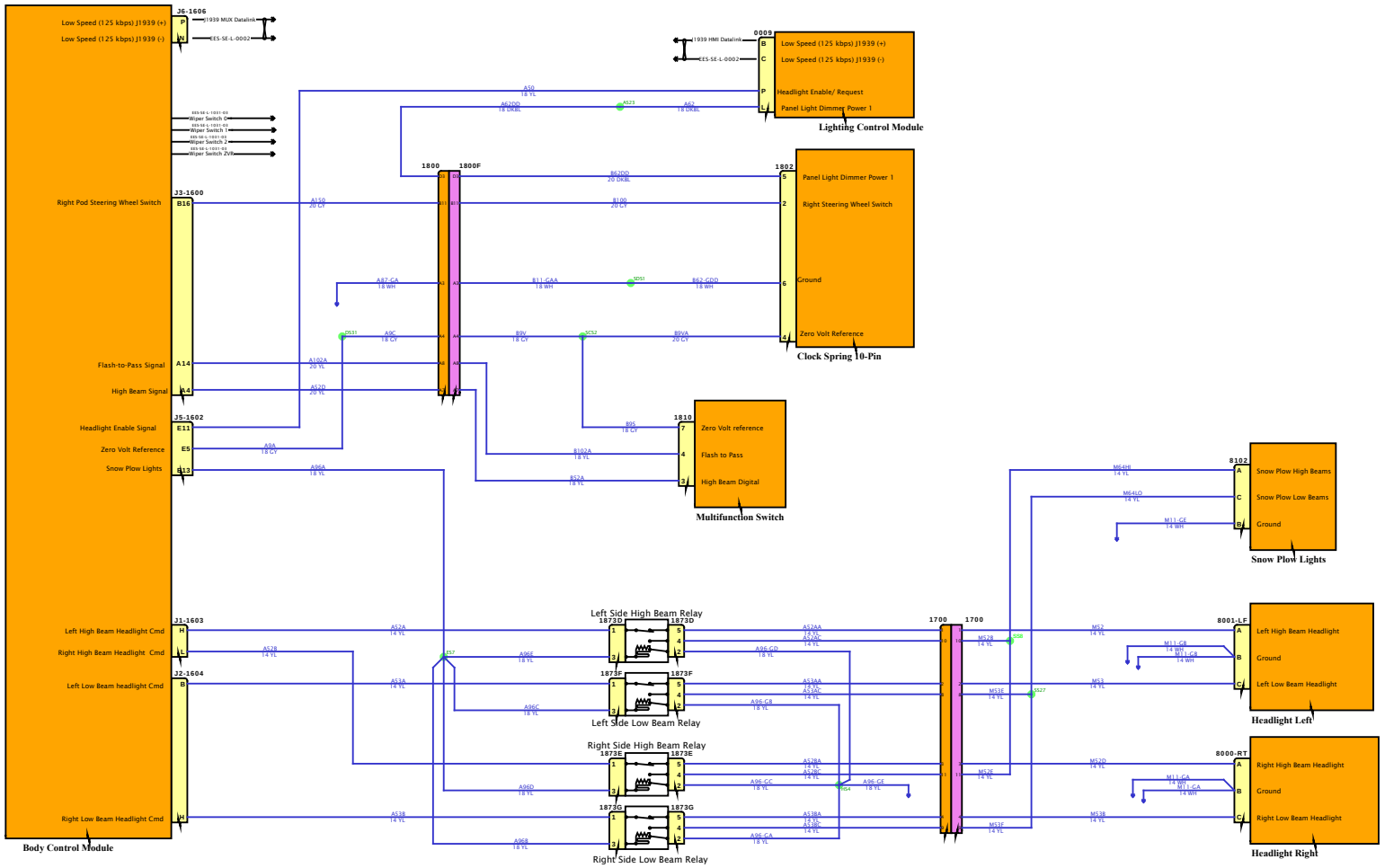

DESIGN DESCRIPTION

FEATURE CODES

SOFTWARE FEATURE CODES

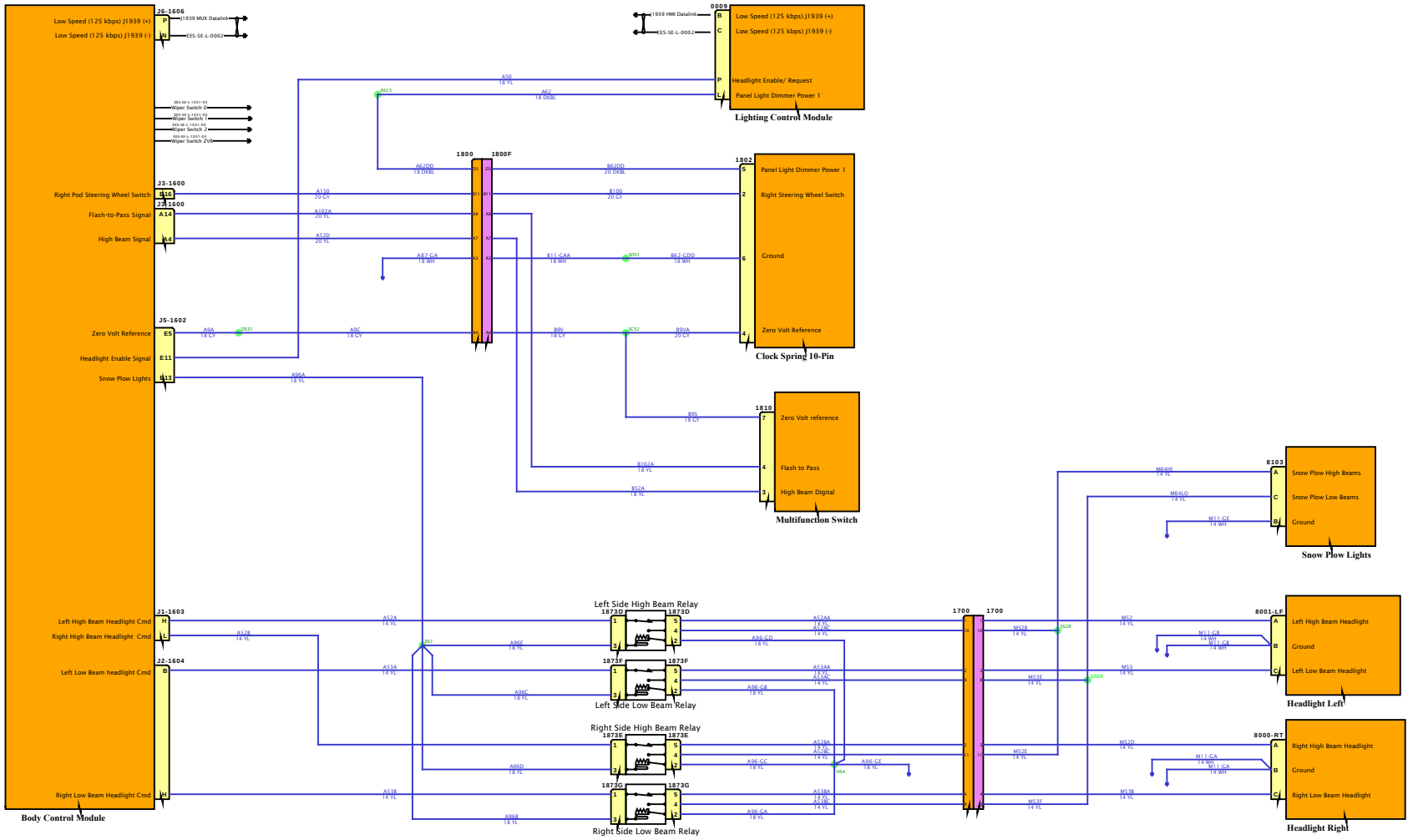

DESIGN DESCRIPTION

FEATURE CODES

SOFTWARE FEATURE CODES

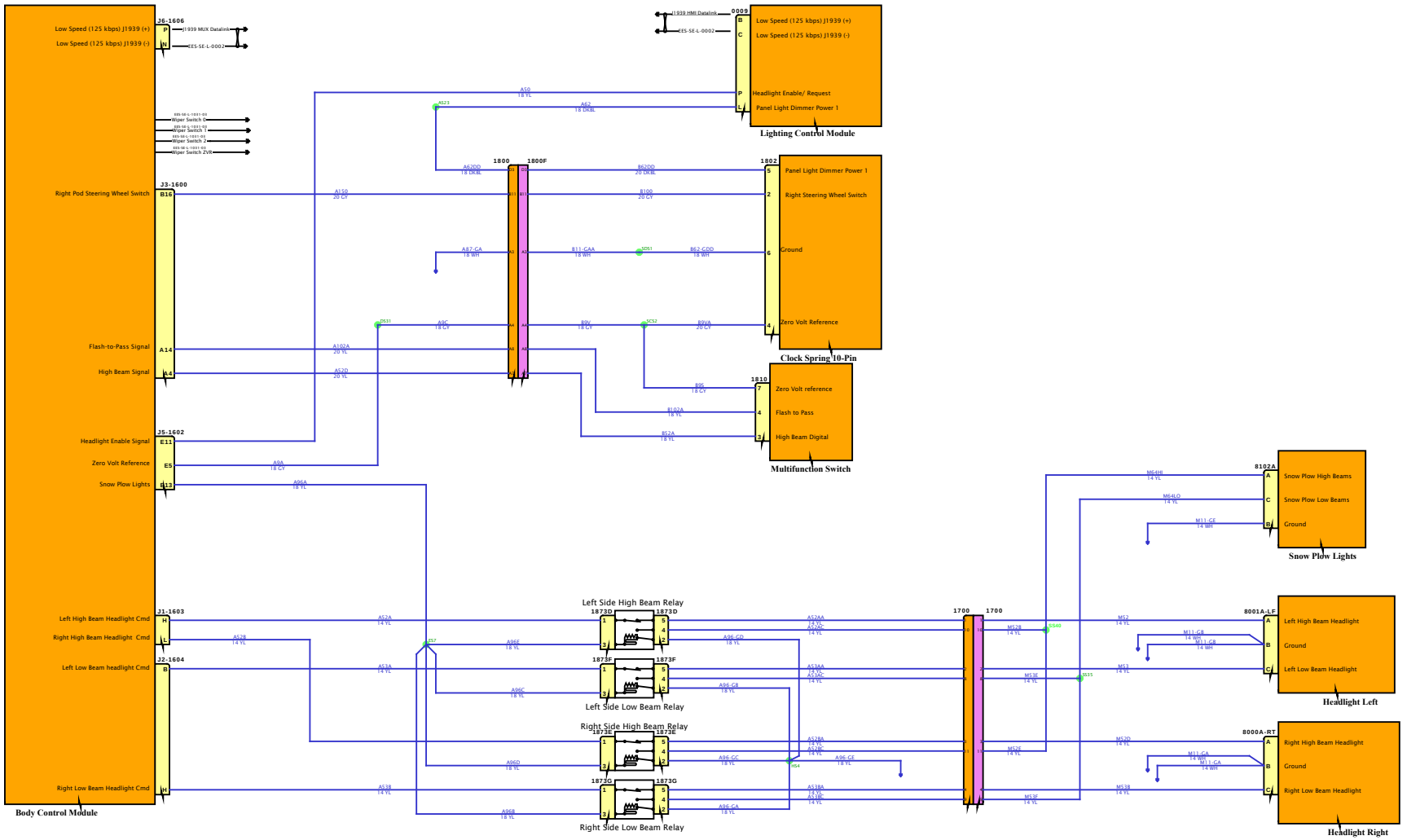

DESIGN DESCRIPTION

FEATURE CODES

SOFTWARE FEATURE CODES

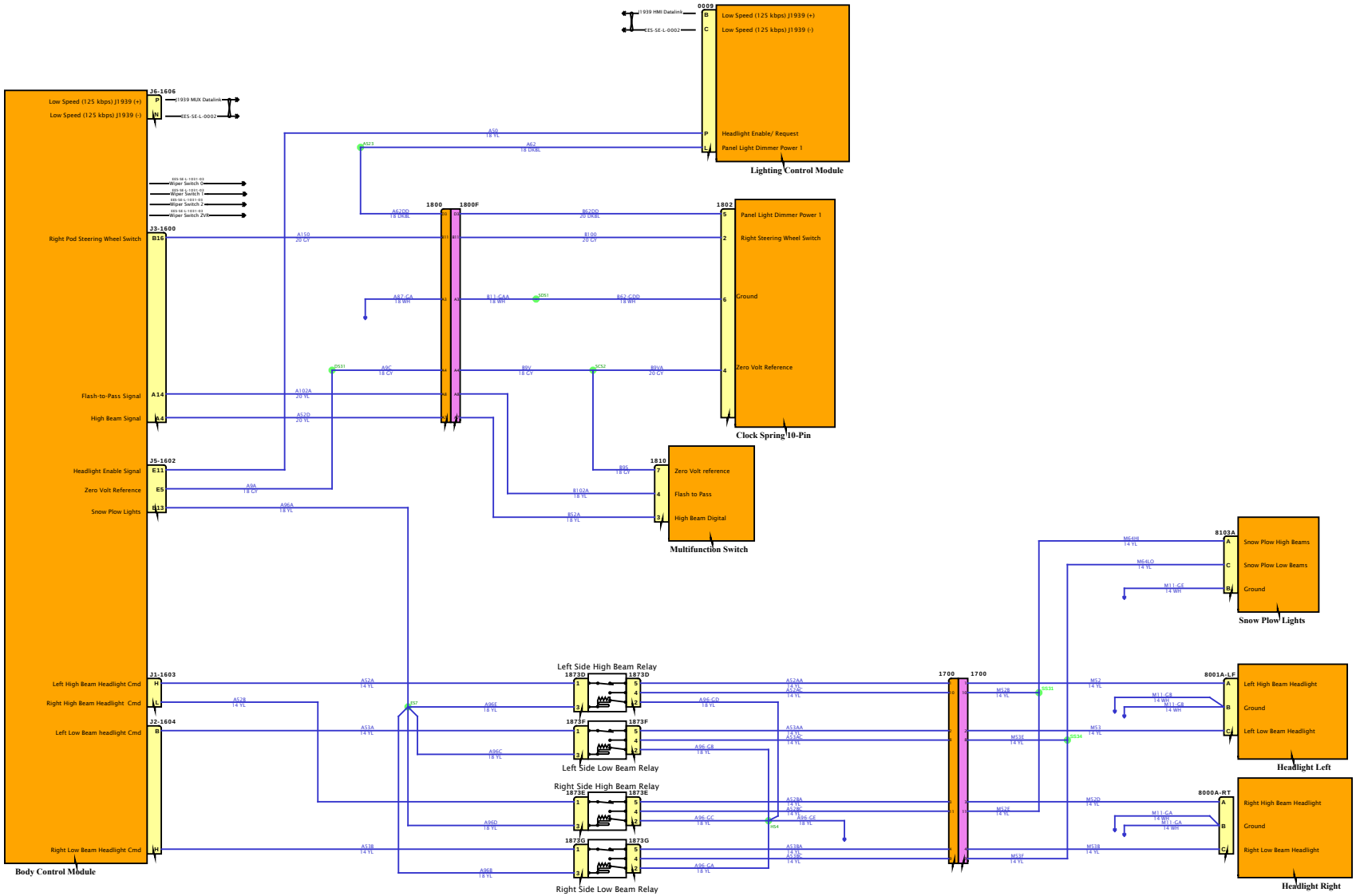

DESIGN DESCRIPTION

FEATURE CODES

SOFTWARE FEATURE CODES

NAVISTAR
NAVISTAR, INC. CONFIDENTIAL PROPRIETARY

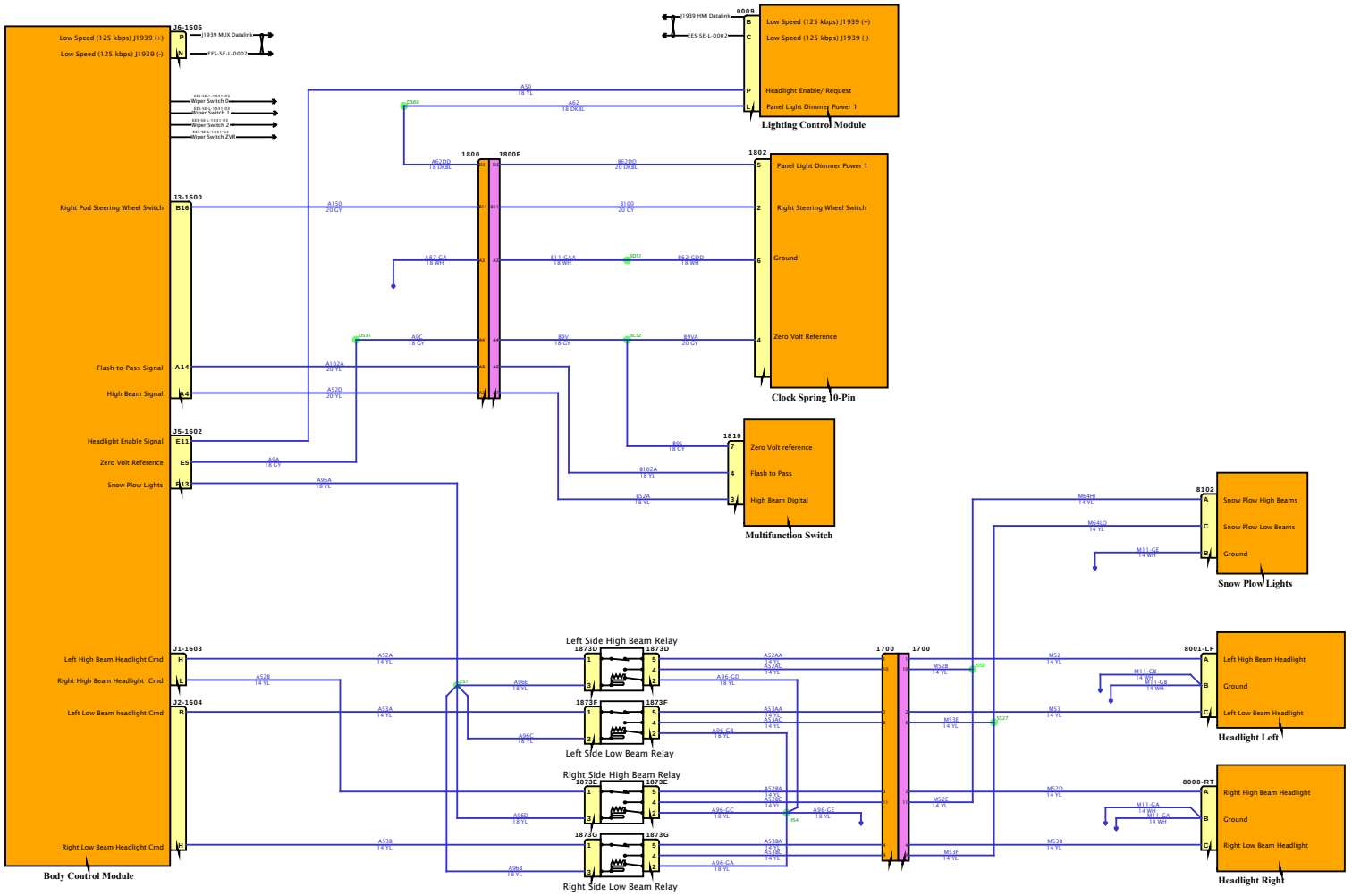

DESIGN DESCRIPTION

FEATURE CODES

SOFTWARE FEATURE CODES

NAVISTAR INC. CONFIDENTIAL PROPRIETARY

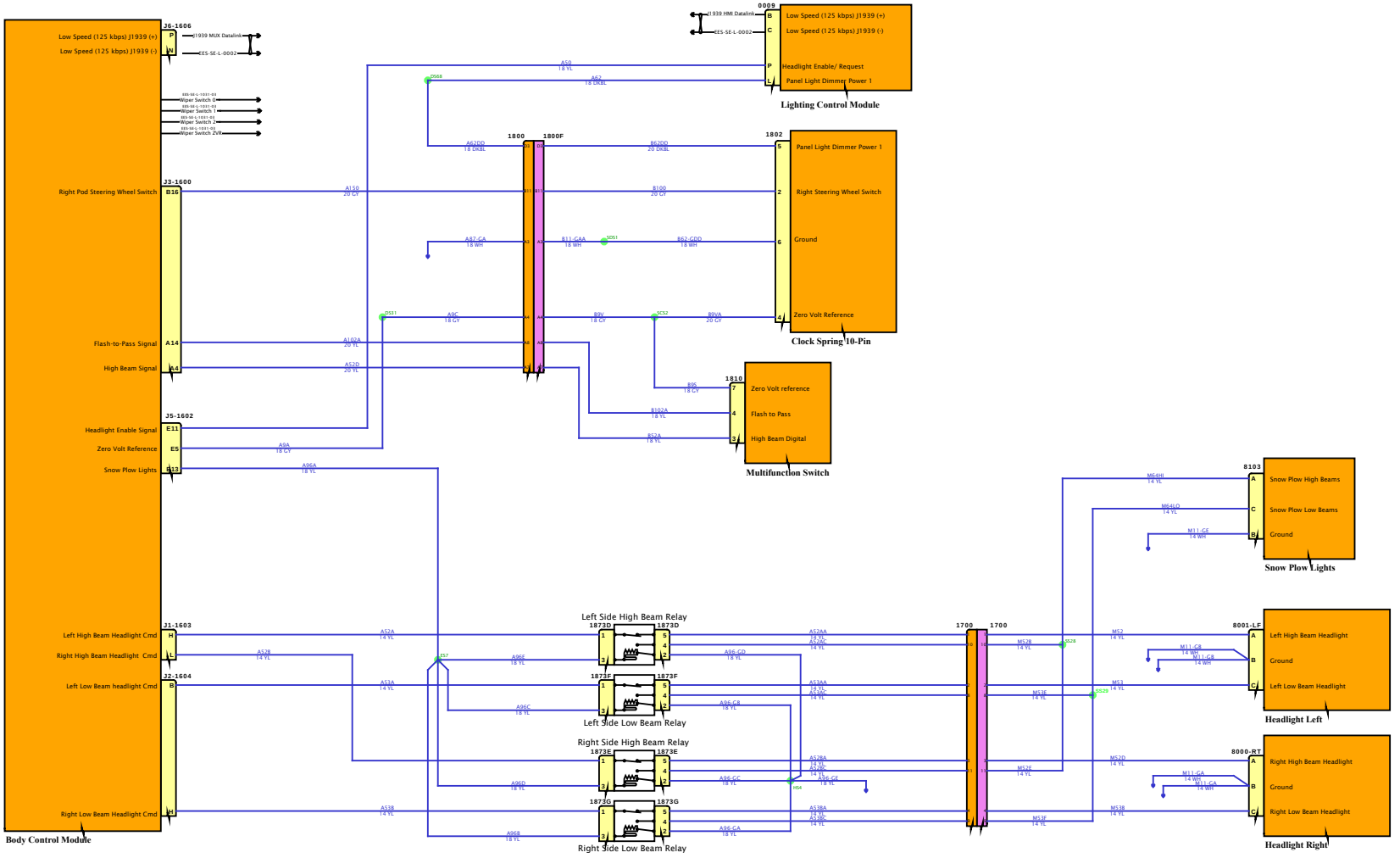

DESIGN DESCRIPTION

FEATURE CODES

SOFTWARE FEATURE CODES

NAVISTAR INC. CONFIDENTIAL PROPRIETARY

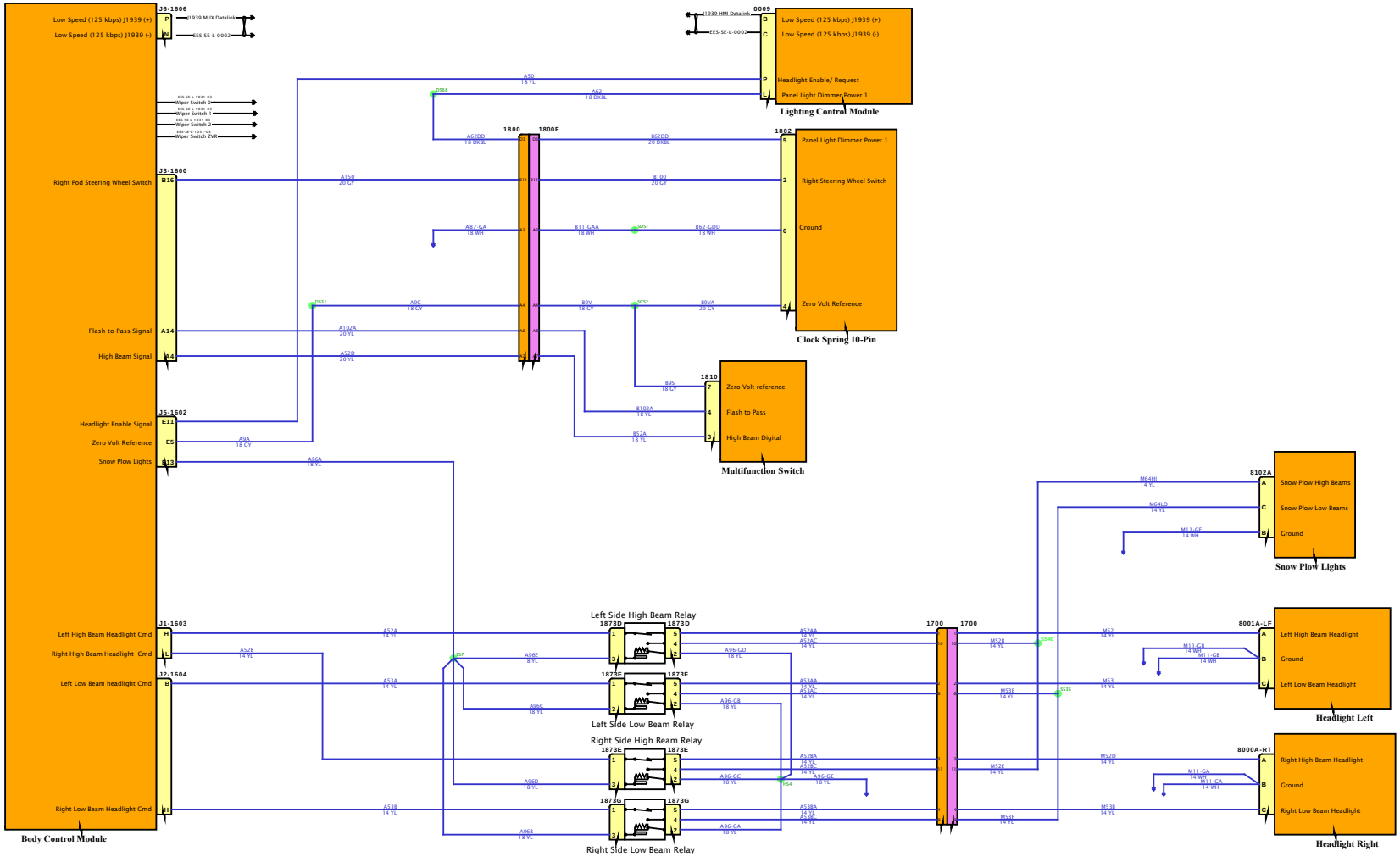

DESIGN DESCRIPTION

FEATURE CODES

SOFTWARE FEATURE CODES

NAVISTAR
NAVISTAR, INC. CONFIDENTIAL PROPRIETARY

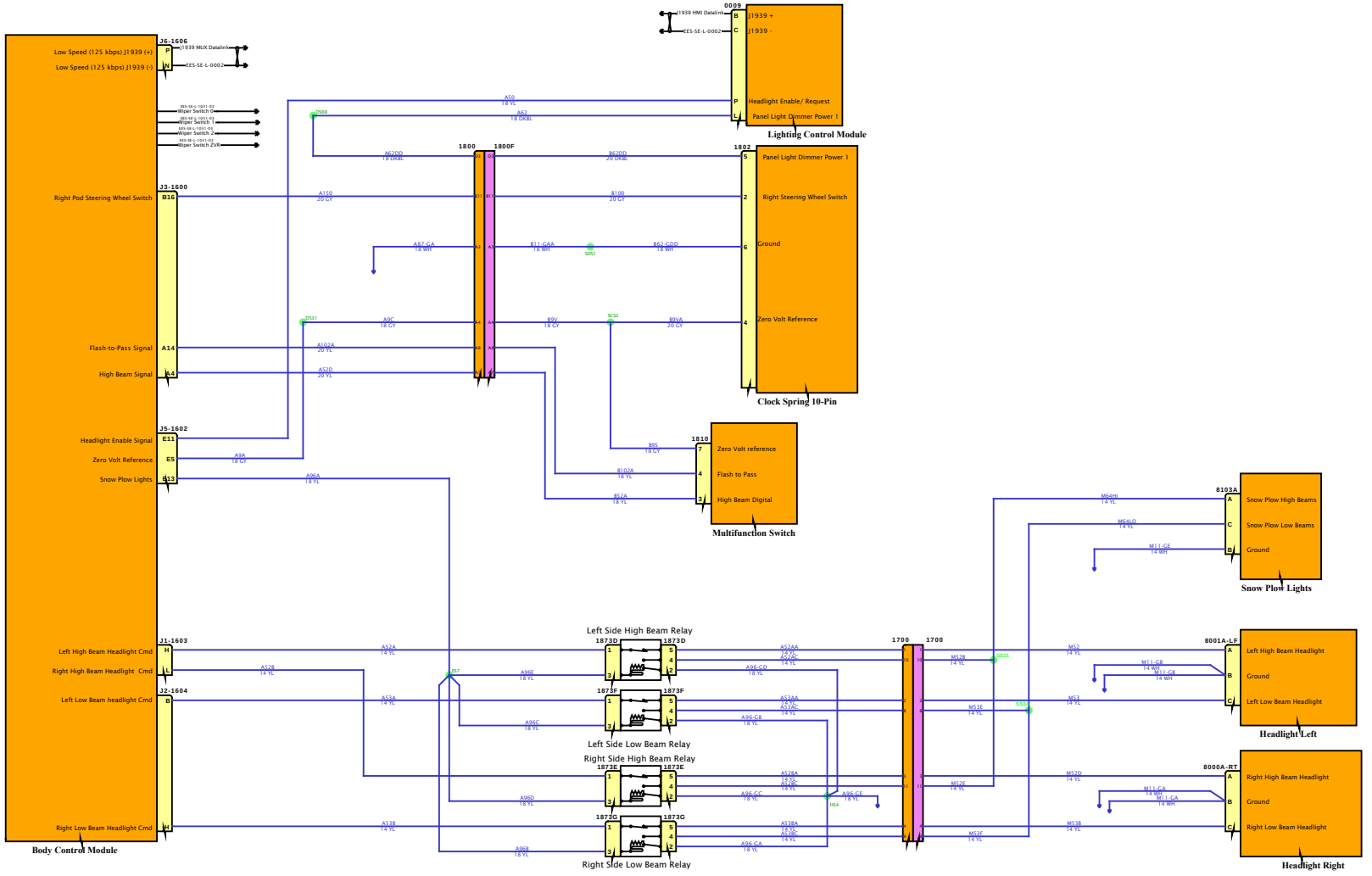

DESIGN DESCRIPTION

FEATURE CODES

SOFTWARE FEATURE CODES

NAVISTAR INC. CONFIDENTIAL PROPRIETARY

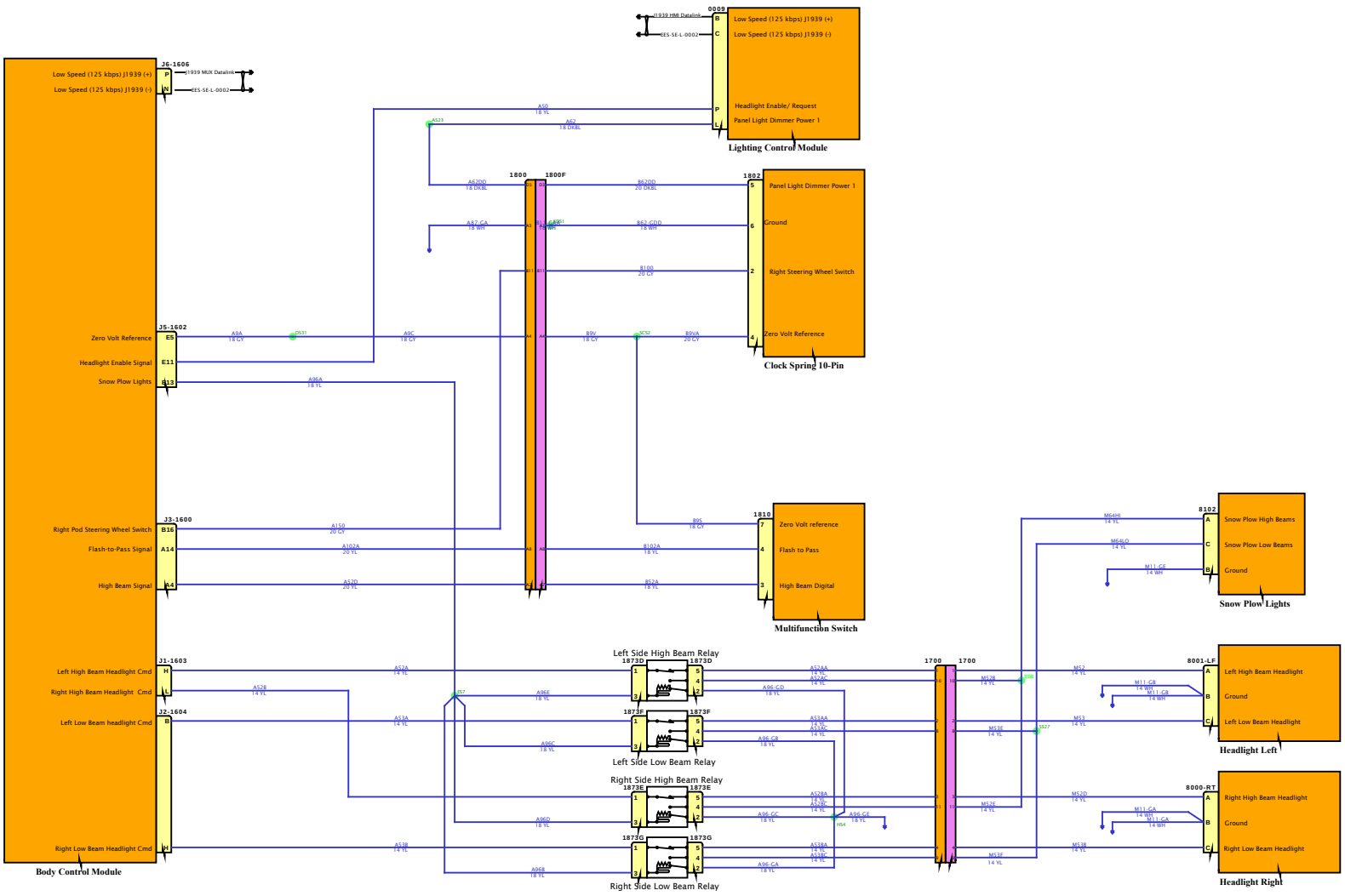

DESIGN DESCRIPTION

FEATURE CODES

SOFTWARE FEATURE CODES

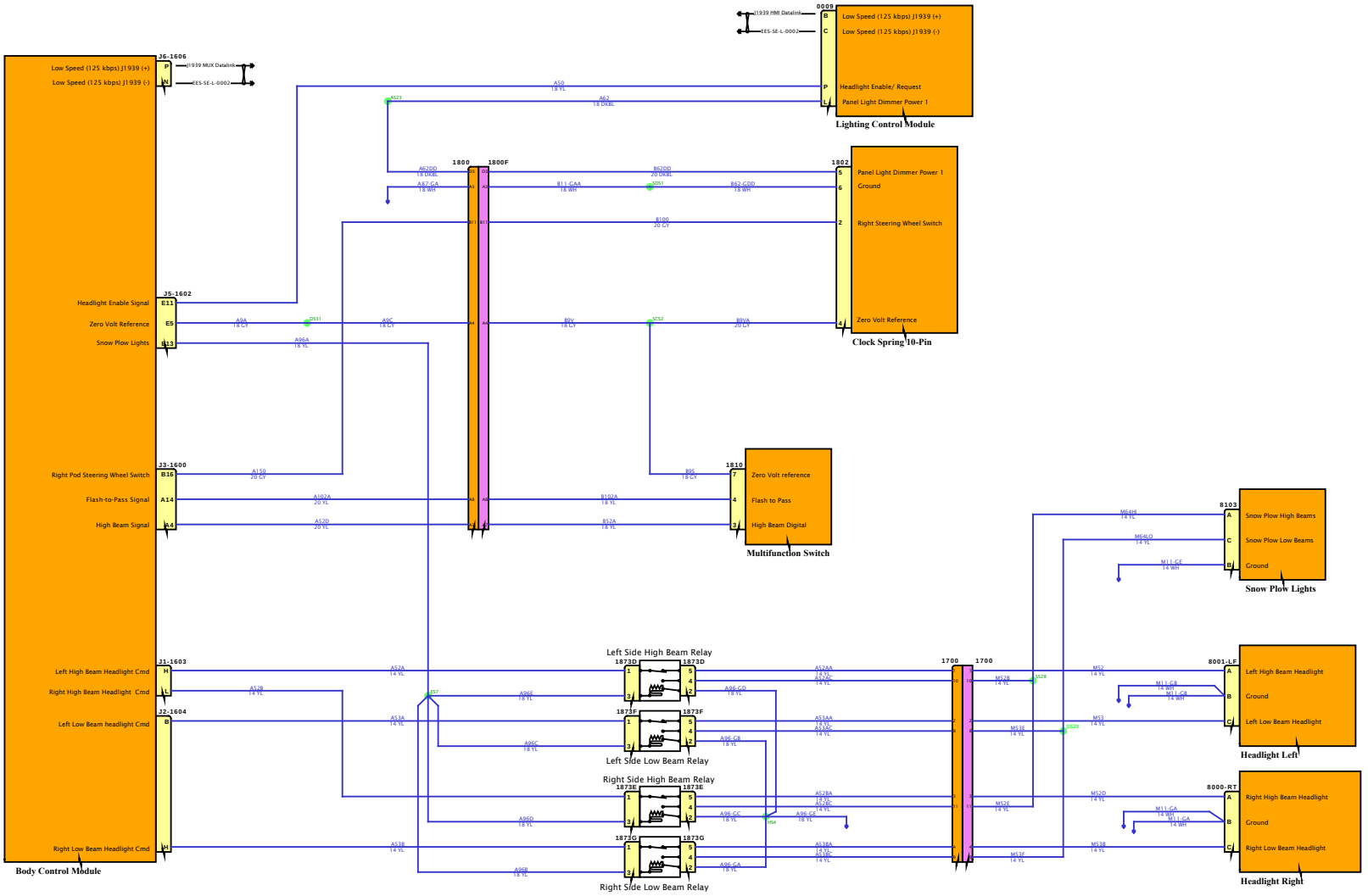

DESIGN DESCRIPTION

FEATURE CODES

SOFTWARE FEATURE CODES

NAVISTAR
NAVISTAR, INC. CONFIDENTIAL PROPRIETARY

Diagram3

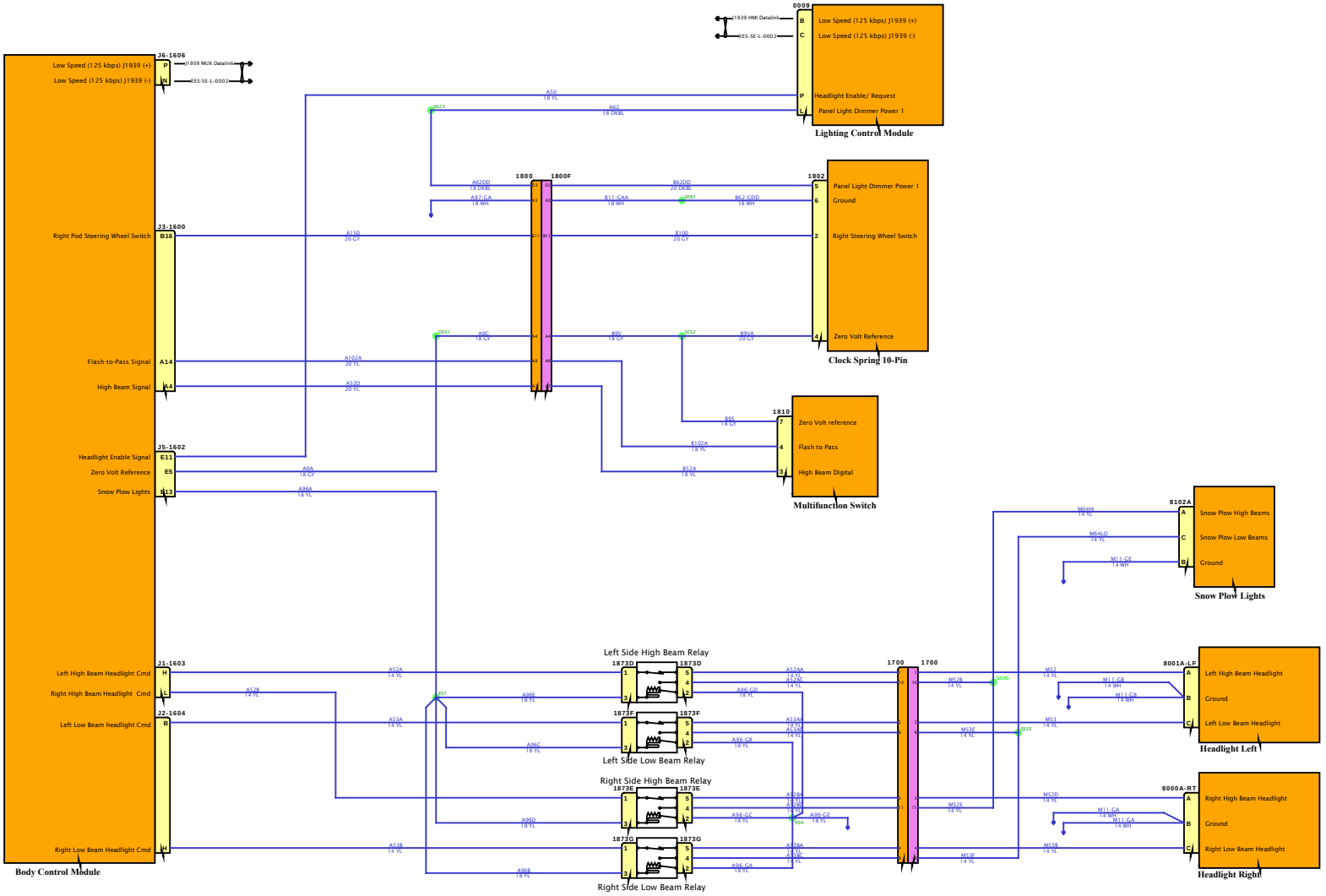

DESIGN DESCRIPTION

FEATURE CODES

SOFTWARE FEATURE CODES

NAVISTAR
NAVISTAR, INC. CONFIDENTIAL PROPRIETARY

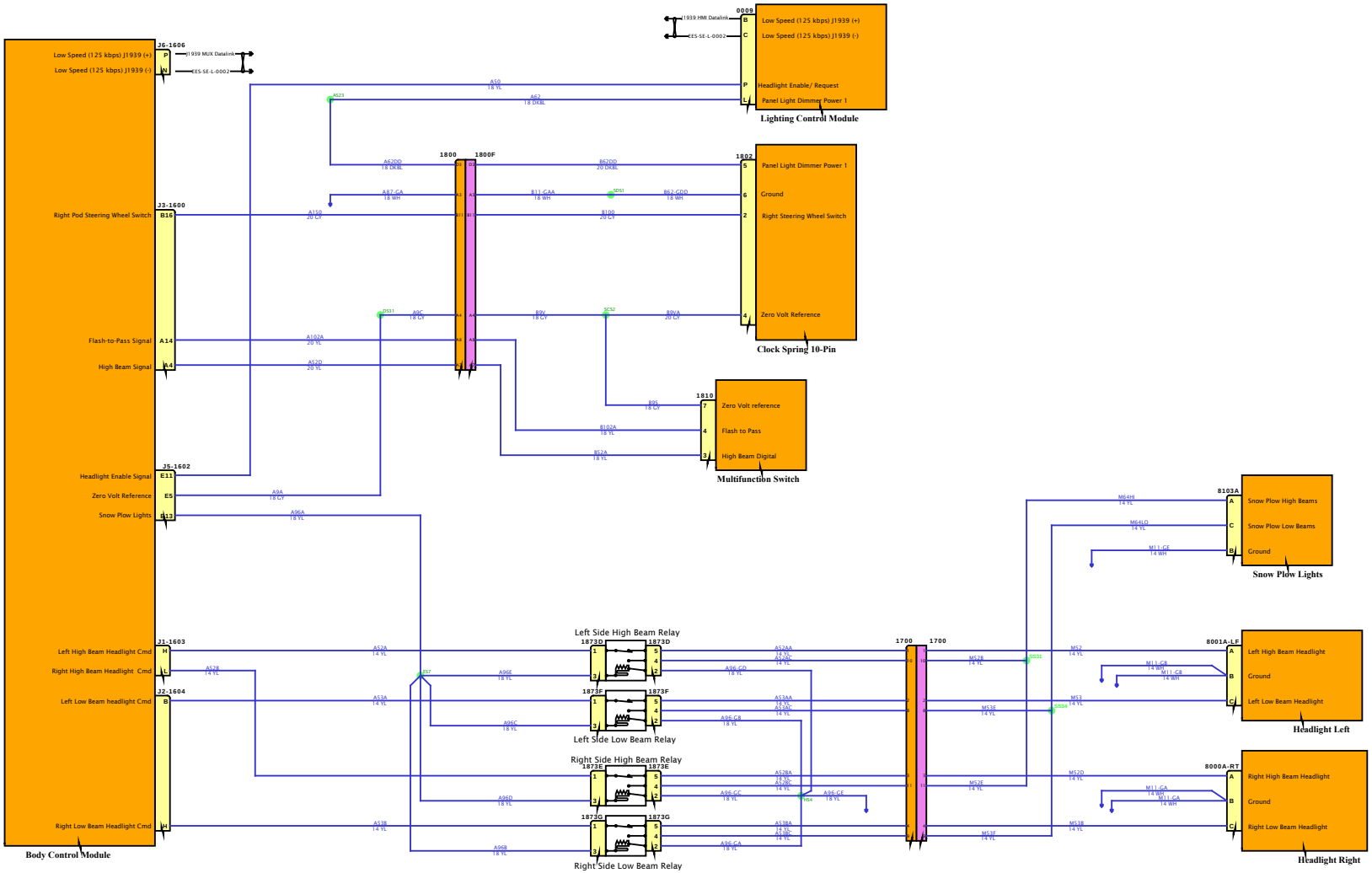

DESIGN DESCRIPTION

FEATURE CODES

SOFTWARE FEATURE CODES

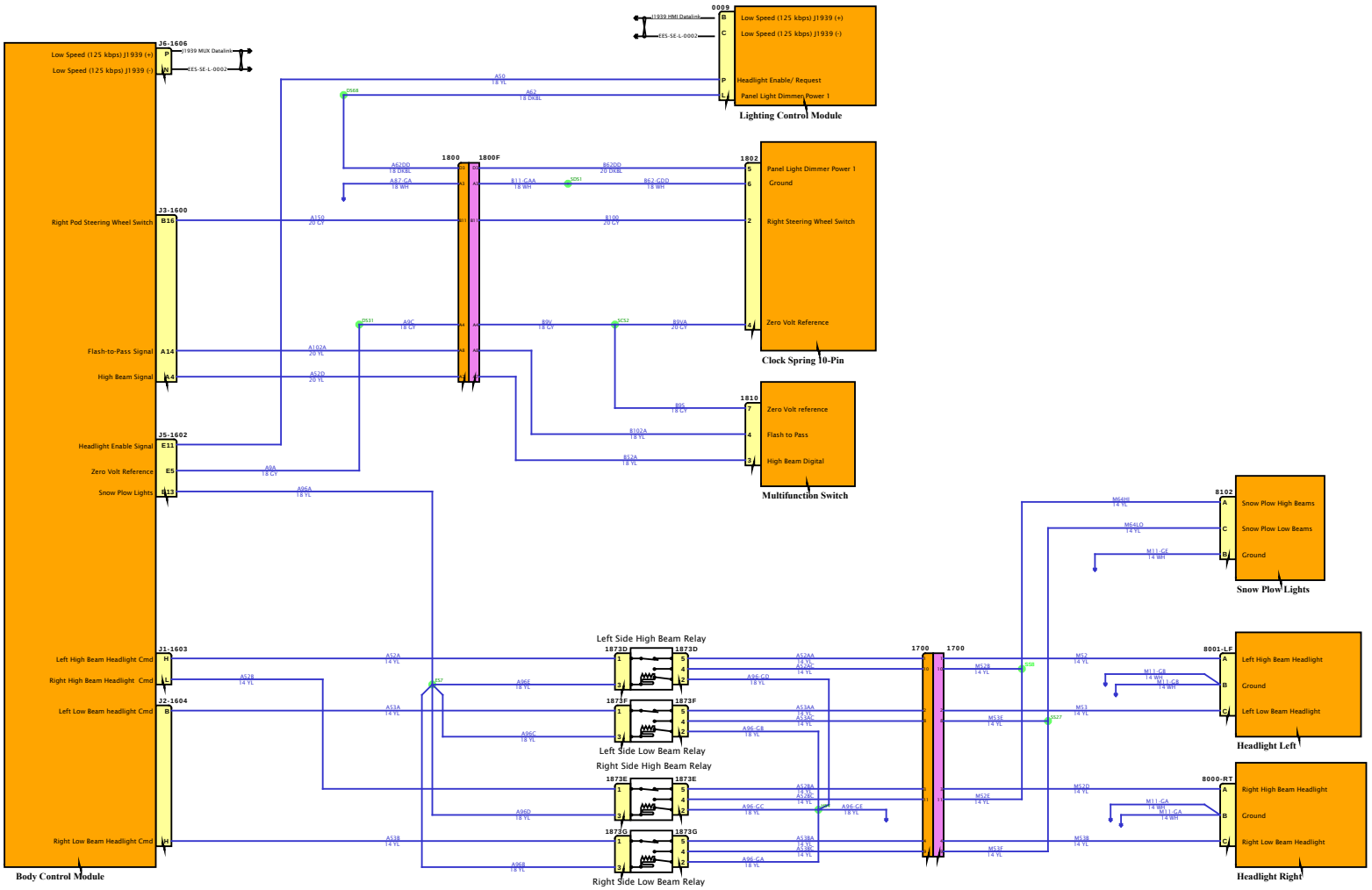

DESIGN DESCRIPTION

FEATURE CODES

SOFTWARE FEATURE CODES

NAVISTAR
NAVISTAR, INC. CONFIDENTIAL PROPRIETARY

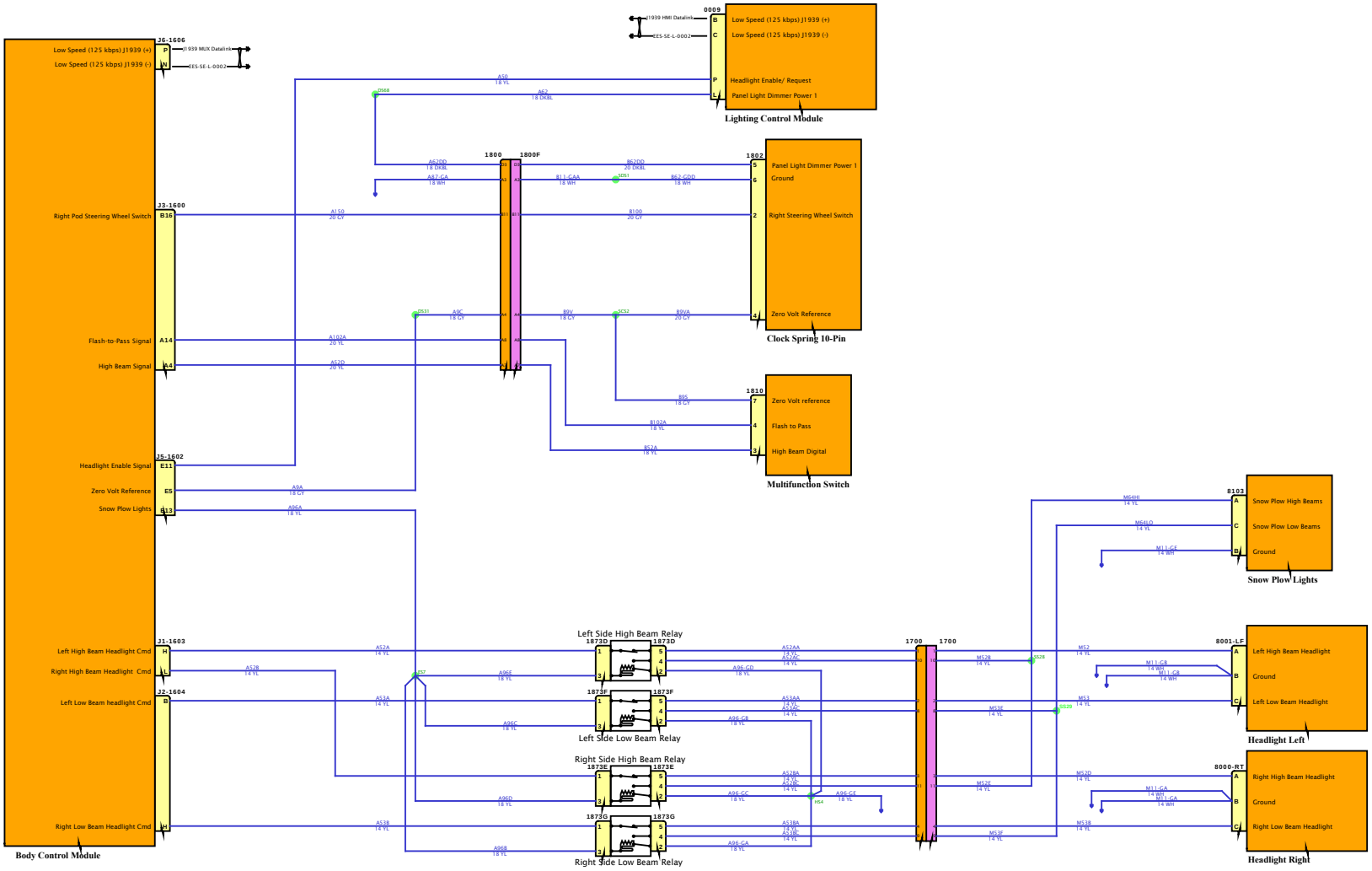

DESIGN DESCRIPTION

FEATURE CODES

SOFTWARE FEATURE CODES

Diagram7

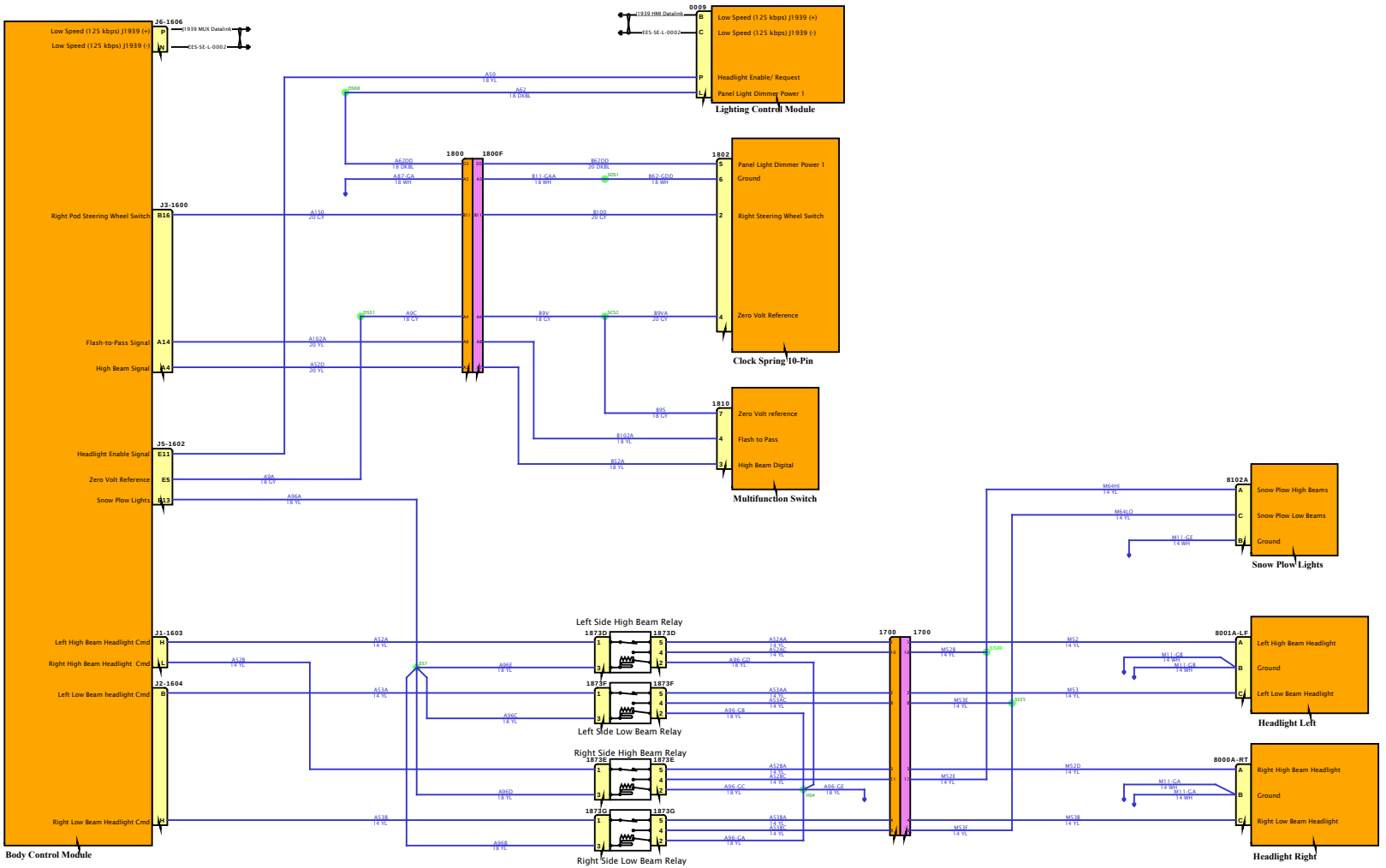

DESIGN DESCRIPTION

FEATURE CODES

SOFTWARE FEATURE CODES

NAVISTAR INC. CONFIDENTIAL PROPRIETARY

Diagram8

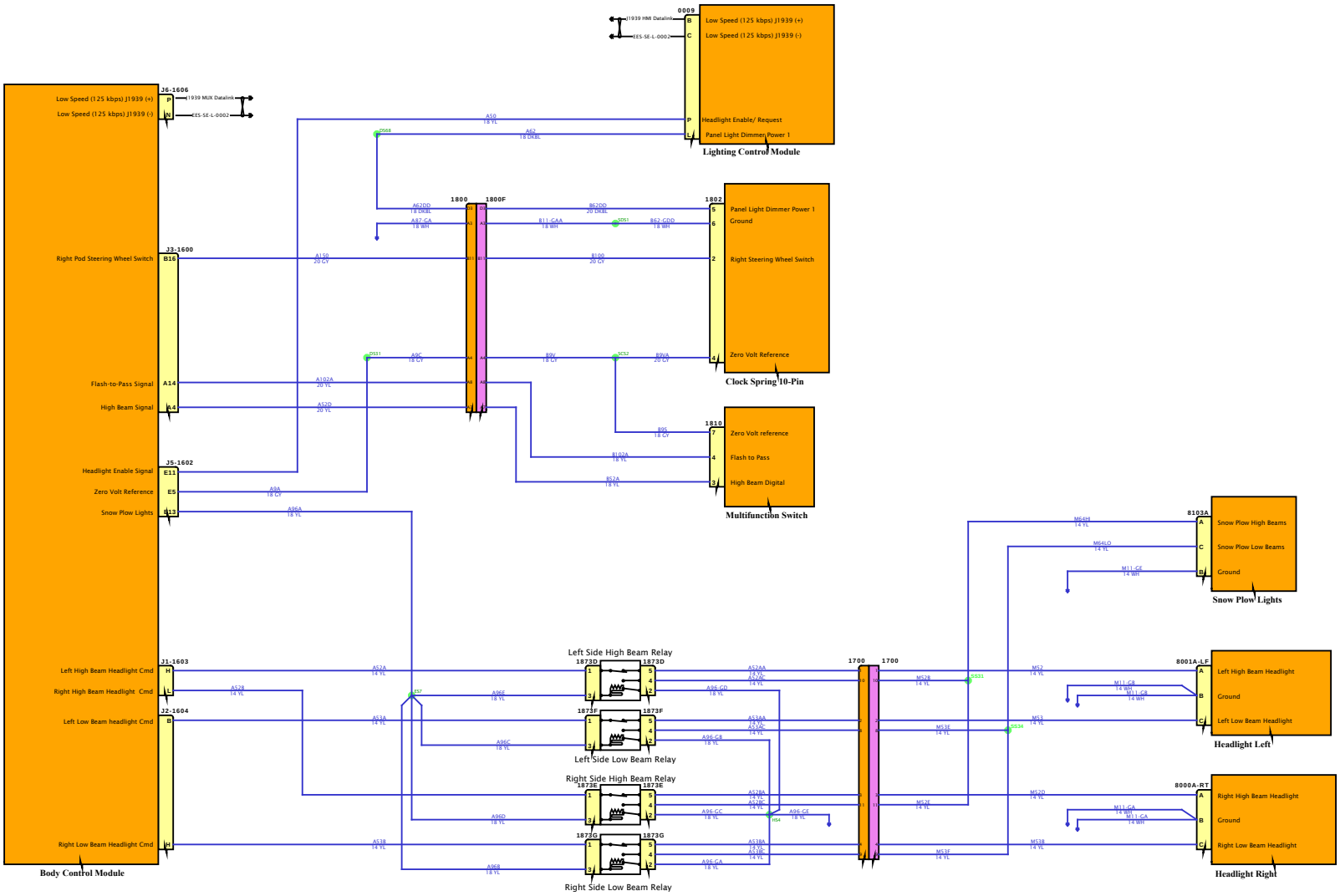
Low Speed (125 kbps) J1939 (+)
Low Speed (125 kbps) J1939 (-)
J6-1606
J1939 MUX Datalink
EES-SE-L-0002
J1939 HMI Datalink
0009
Low Speed (125 kbps) J1939 (+)
Low Speed (125 kbps) J1939 (-)
Headlight Enable/ Request
Panel Light Dimmer Power 1
Lighting Control Module
Right Pod Steering Wheel Switch
J3-1600
B16
1800
1800F
1802
Panel Light Dimmer Power 1
Ground
Right Steering Wheel Switch
Zero Volt Reference
Clock Spring 10-Pin
Flash-to-Pass Signal
A14
High Beam Signal
A4
1810
Zero Volt reference
Flash to Pass
High Beam Digital
Multifunction Switch
Headlight Enable Signal
J5-1602
E11
Zero Volt Reference
E5
Snow Plow Lights
B13
8103A
Snow Plow High Beams
Snow Plow Low Beams
Ground
Snow Plow Lights
Left High Beam Headlight Cmd
J1-1603
H
Right High Beam Headlight Cmd
L
Left Low Beam headlight Cmd
J2-1604
B
Left Side High Beam Relay
1873D
Left Side Low Beam Relay
1873F
Right Side High Beam Relay
1873E
Right Side Low Beam Relay
1873G
1700
8001A-LF
Left High Beam Headlight
Ground
Left Low Beam Headlight
Headlight Left
8000A-RT
Right High Beam Headlight
Ground
Right Low Beam Headlight
Headlight Right
Right Low Beam Headlight Cmd
H
Body Control Module
DESIGN DESCRIPTION
FEATURE CODES
SOFTWARE FEATURE CODES
NAVISTAR
NAVISTAR, INC. CONFIDENTIAL PROPRIETARY

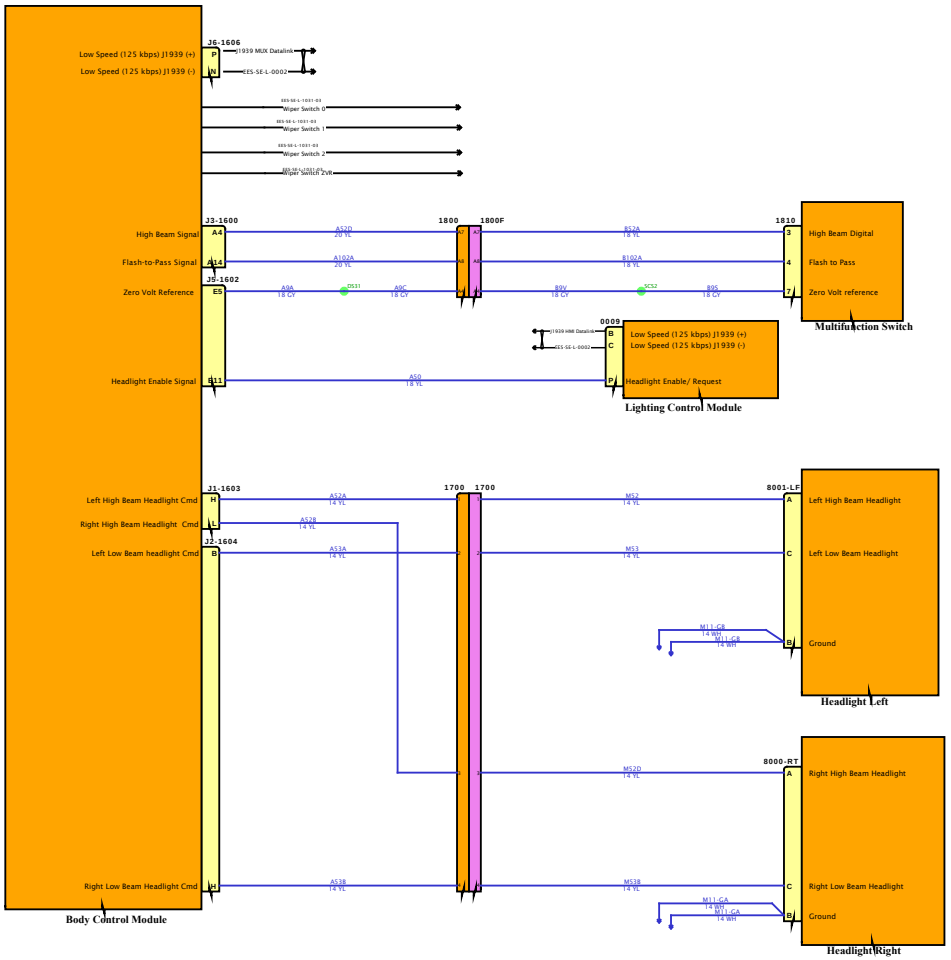

DESIGN DESCRIPTION

FEATURE CODES

SOFTWARE FEATURE CODES

NAVISTAR INC. CONFIDENTIAL PROPRIETARY

Diagram2

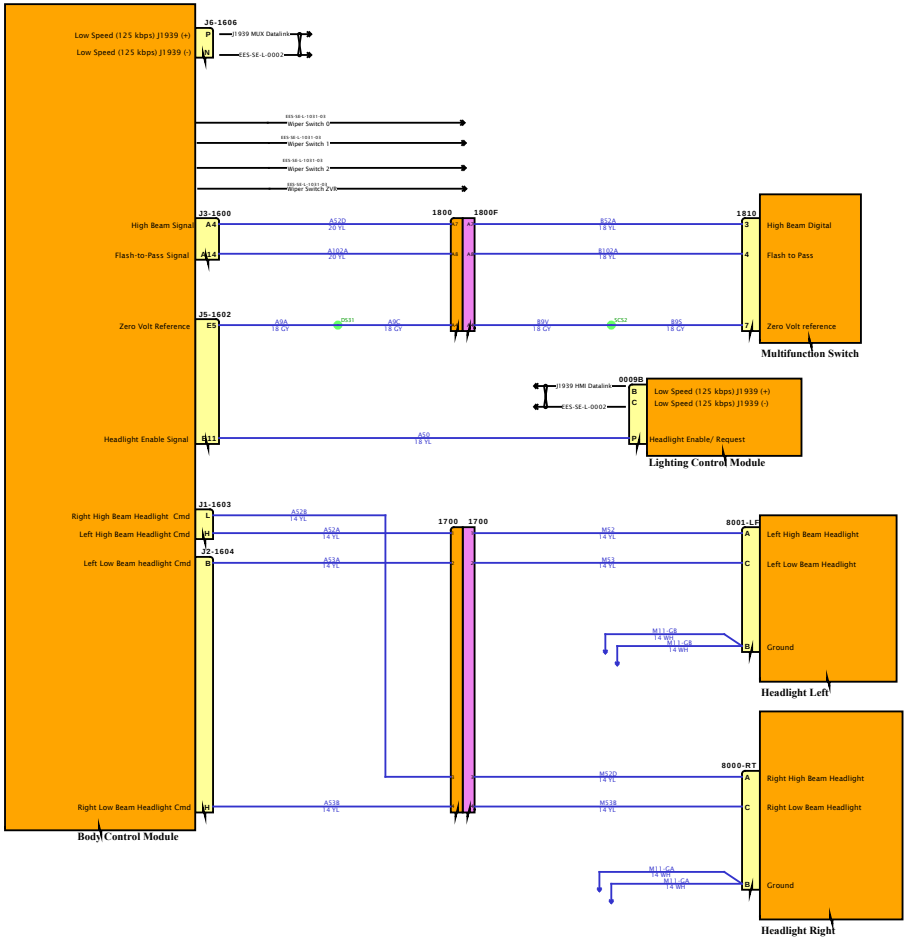

DESIGN DESCRIPTION

FEATURE CODES

SOFTWARE FEATURE CODES

NAVISTAR
NAVISTAR, INC. CONFIDENTIAL PROPRIETARY

DESIGN DESCRIPTION

FEATURE CODES

SOFTWARE FEATURE CODES

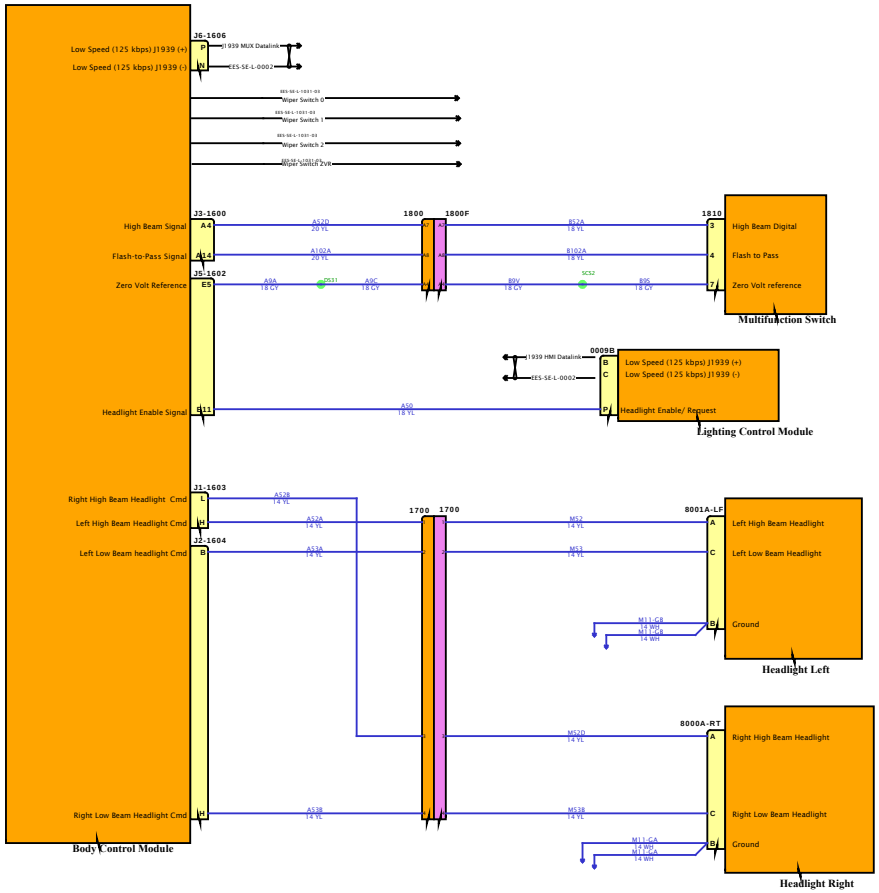

DESIGN DESCRIPTION

FEATURE CODES

SOFTWARE FEATURE CODES

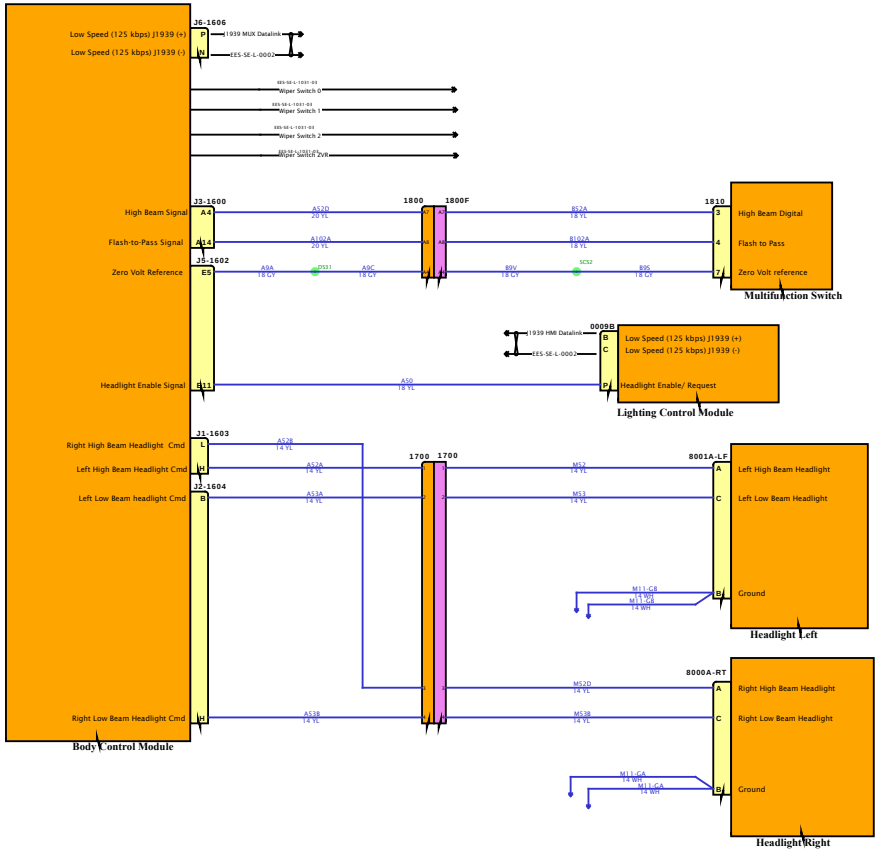

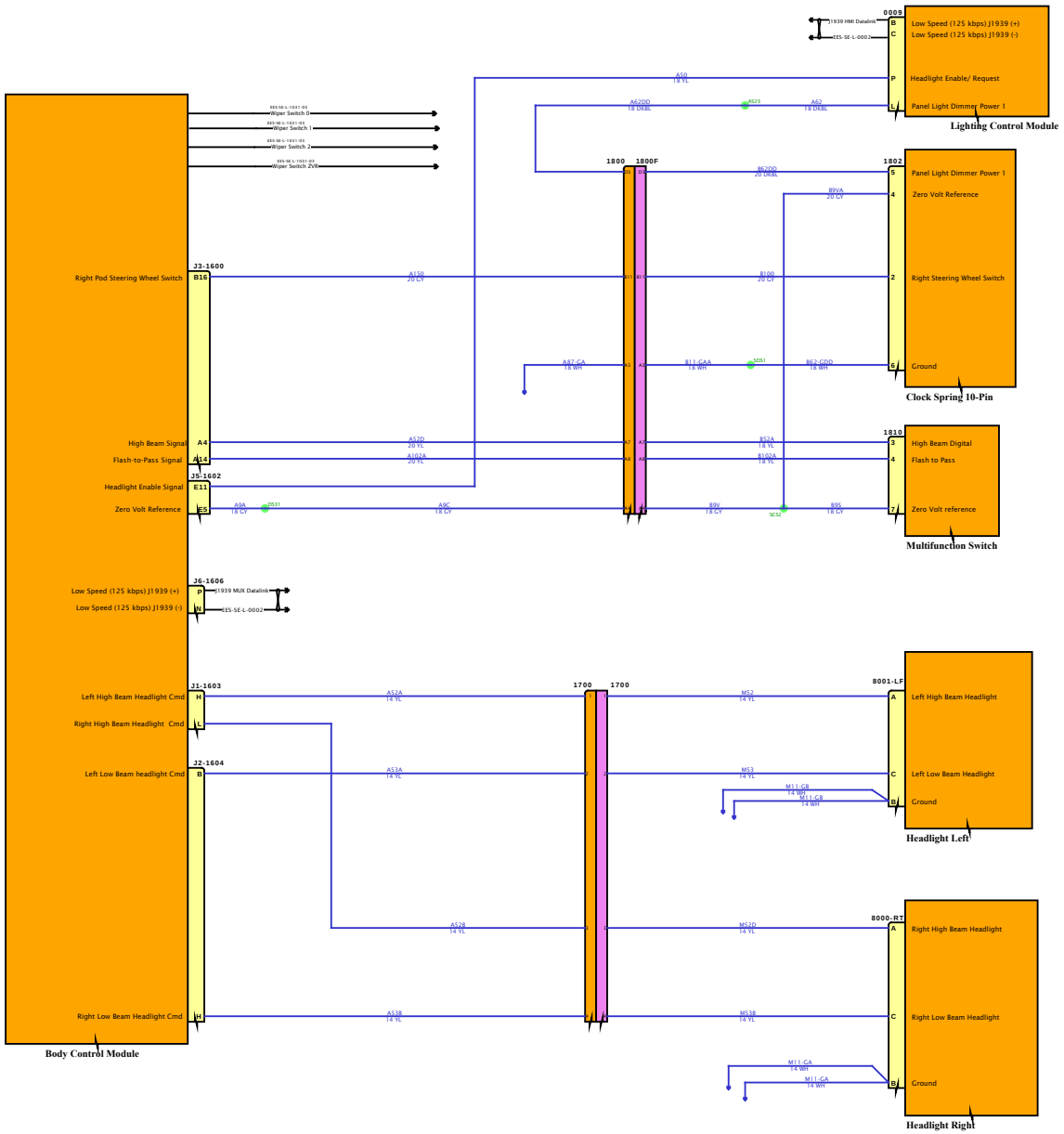

DESIGN DESCRIPTION

FEATURE CODES

SOFTWARE FEATURE CODES

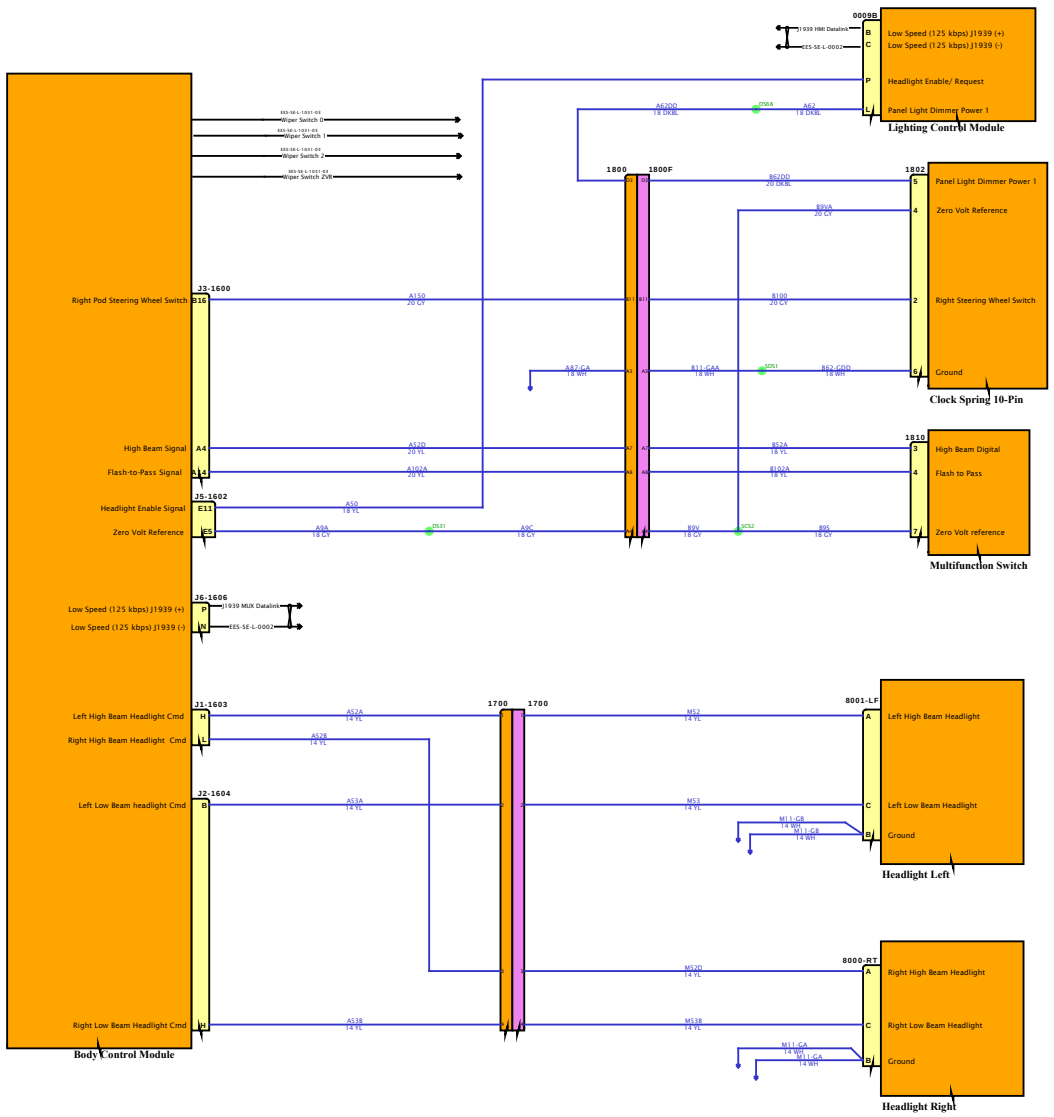

DESIGN DESCRIPTION

FEATURE CODES

SOFTWARE FEATURE CODES

NAVISTAR INC. CONFIDENTIAL PROPRIETARY

Diagram3

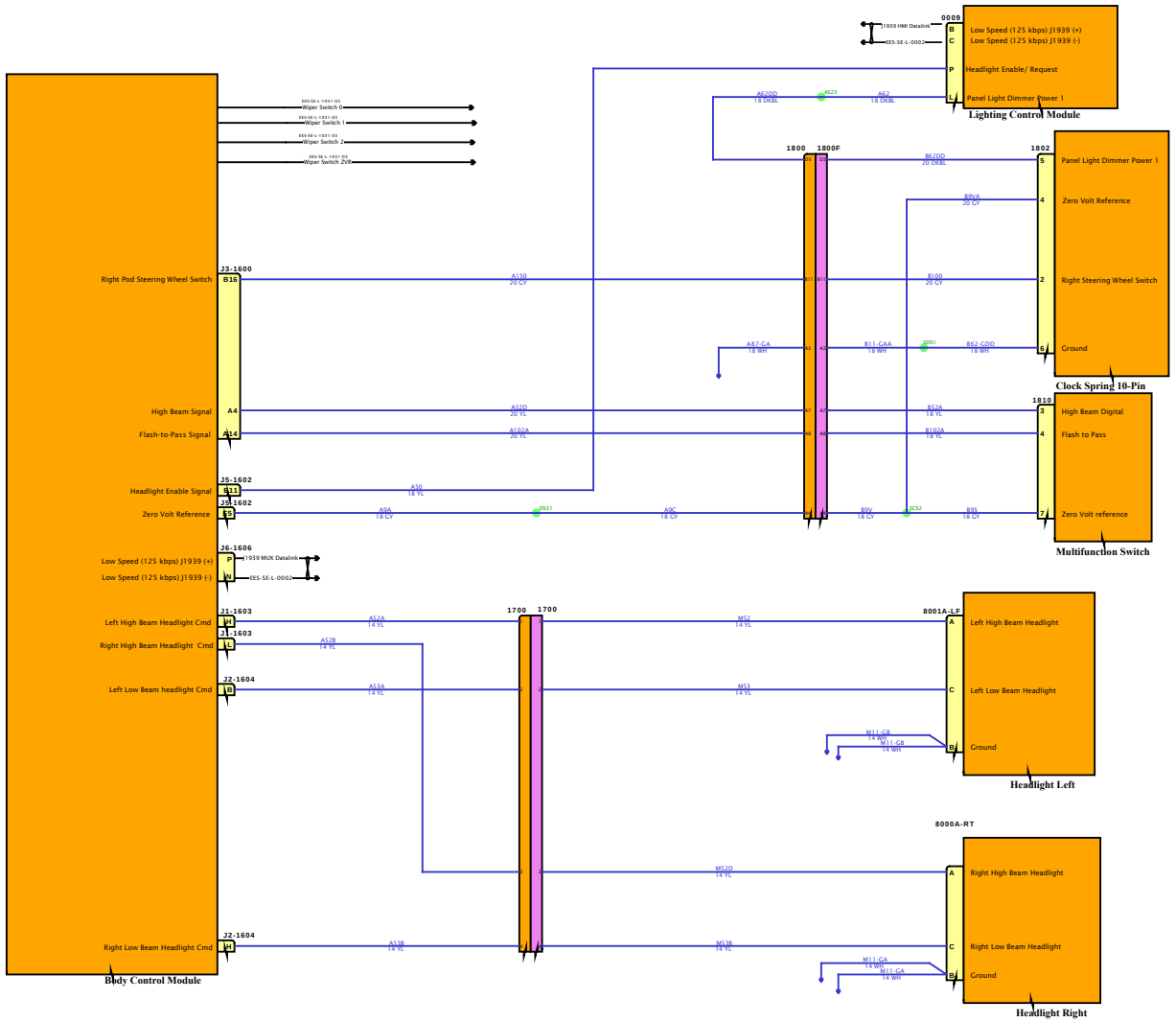

DESIGN DESCRIPTION

FEATURE CODES

SOFTWARE FEATURE CODES

NAVISTAR
NAVISTAR, INC. CONFIDENTIAL PROPRIETARY

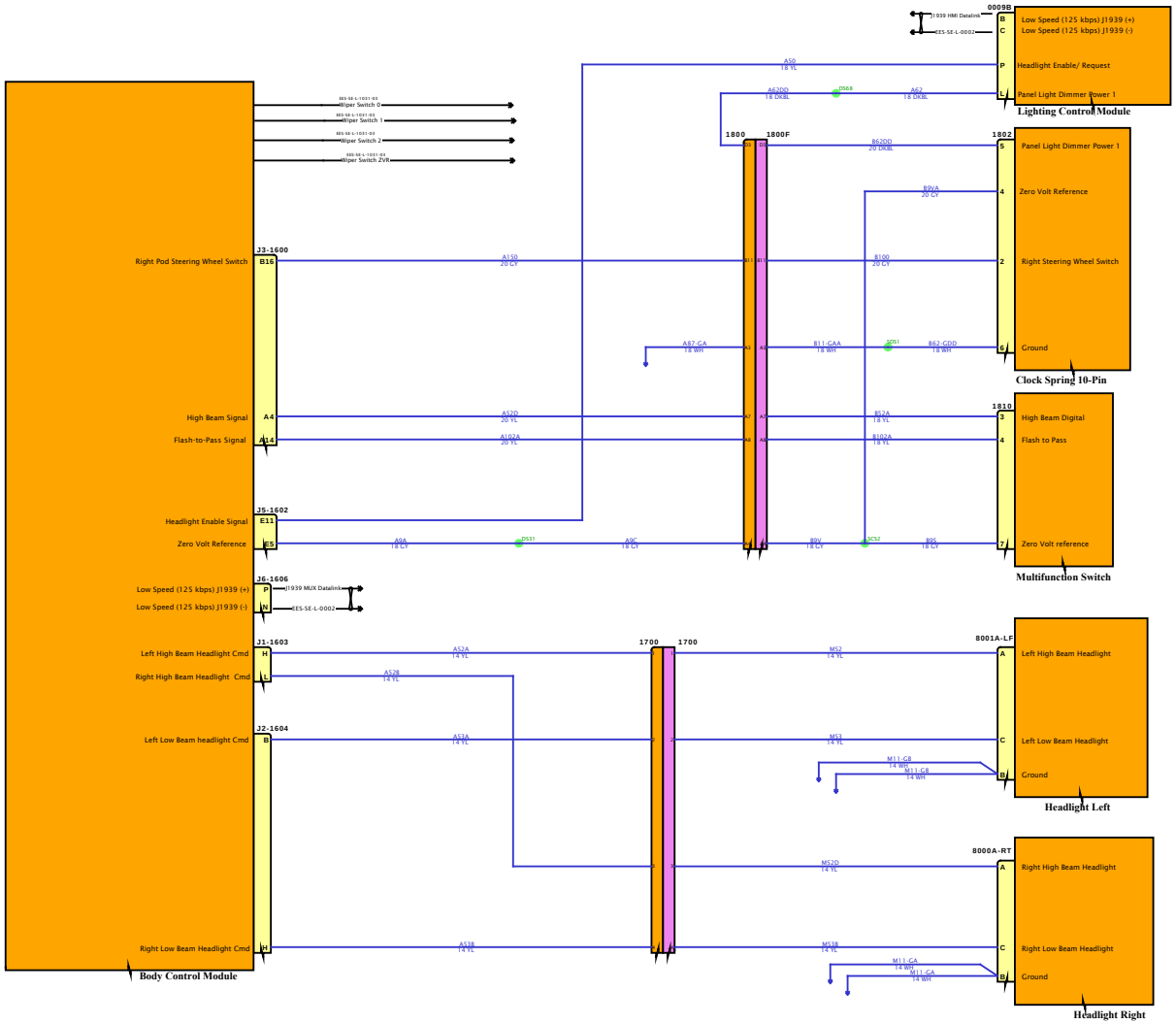
0009B
Low Speed (125 kbps) J1939 (+)
Low Speed (125 kbps) J1939 (-)
Headlight Enable/ Request
Panel Light Dimmer Power 1
Lighting Control Module
1802
Panel Light Dimmer Power 1
Zero Volt Reference
Right Steering Wheel Switch
Ground
Clock Spring 10-Pin
1810
High Beam Digital
Flash to Pass
Zero Volt reference
Multifunction Switch
J3-1600
Right Pod Steering Wheel Switch
High Beam Signal
Flash-to-Pass Signal
J5-1602
Headlight Enable Signal
Zero Volt Reference
J6-1606
Low Speed (125 kbps) J1939 (+)
Low Speed (125 kbps) J1939 (-)
J1-1603
Left High Beam Headlight Cmd
Right High Beam Headlight Cmd
J2-1604
Left Low Beam headlight Cmd
Right Low Beam Headlight Cmd
Body Control Module
8001A-LF
Left High Beam Headlight
Left Low Beam Headlight
Ground
Headlight Left
8000A-RT
Right High Beam Headlight
Right Low Beam Headlight
Ground
Headlight Right
DESIGN DESCRIPTION
FEATURE CODES
SOFTWARE FEATURE CODES

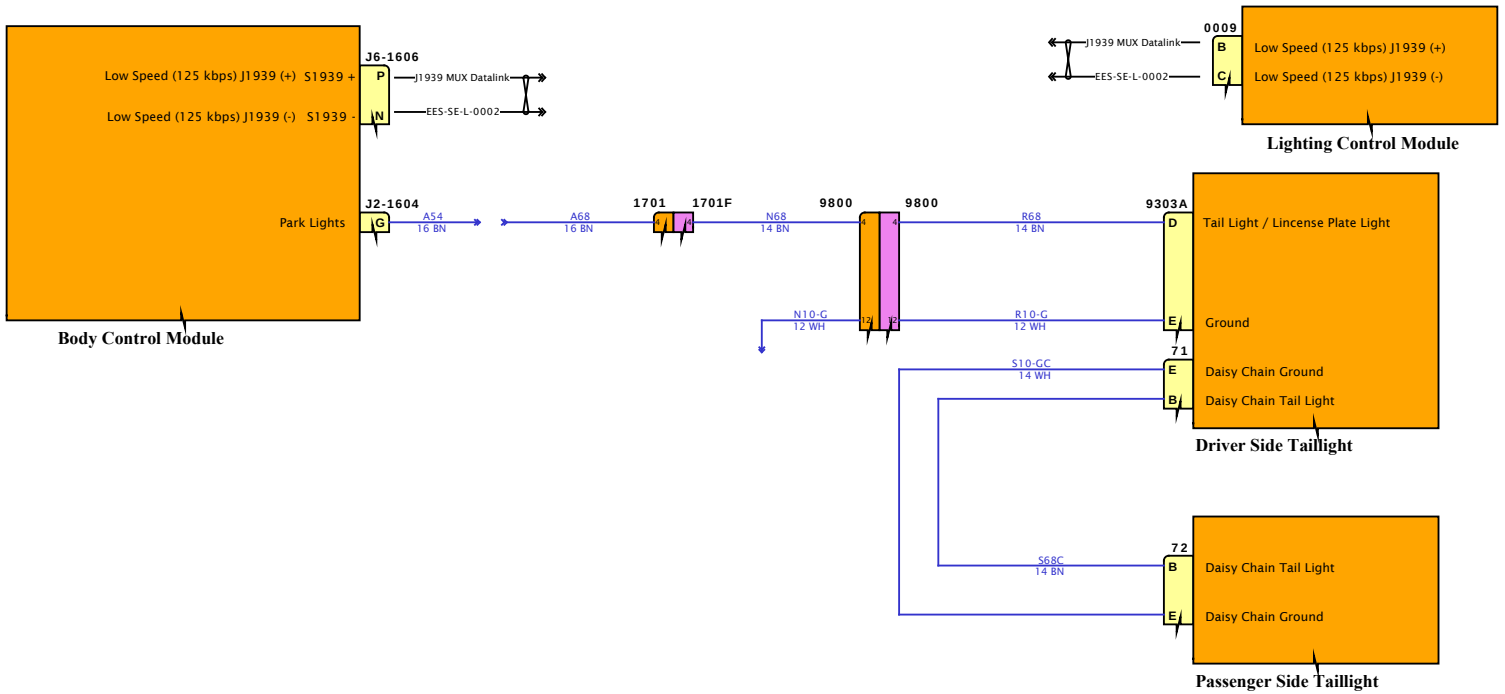

DESIGN DESCRIPTION

FEATURE CODES

SOFTWARE FEATURE CODES

NAVISTAR
NAVISTAR, INC. CONFIDENTIAL PROPRIETARY

Diagram1

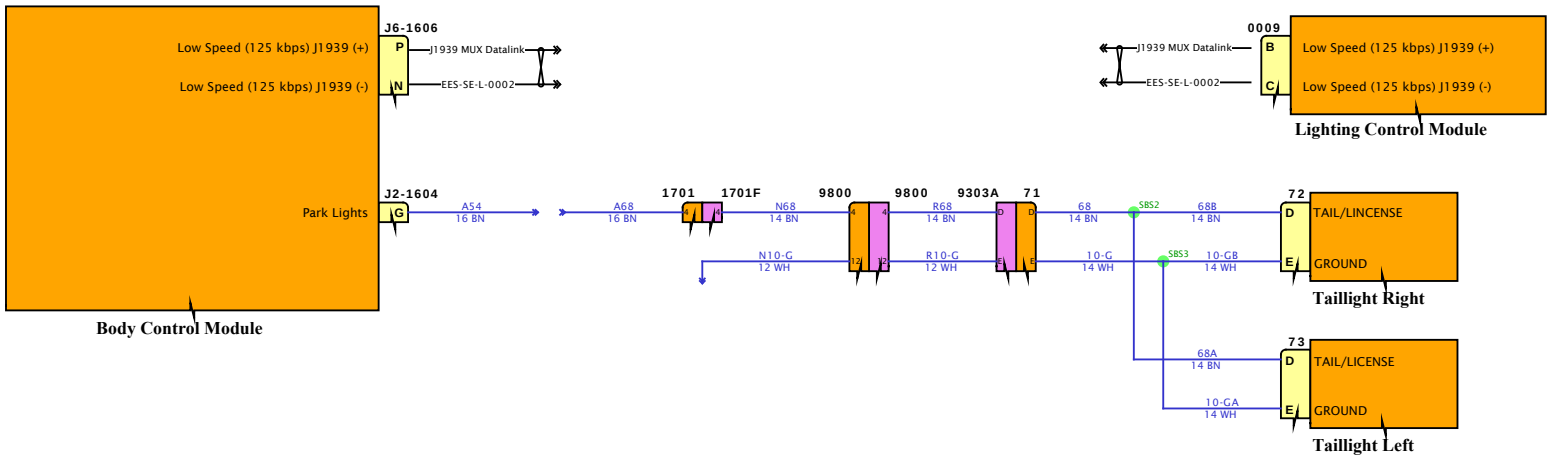

DESIGN DESCRIPTION

FEATURE CODES

SOFTWARE FEATURE CODES

NAVISTAR
NAVISTAR, INC. CONFIDENTIAL PROPRIETARY

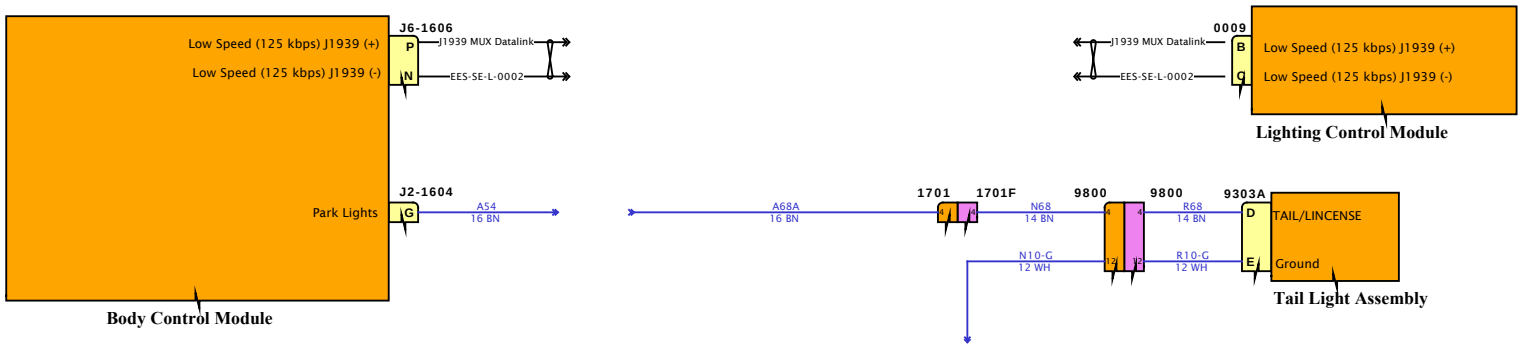

DESIGN DESCRIPTION

FEATURE CODES

SOFTWARE FEATURE CODES

NAVISTAR
NAVISTAR, INC. CONFIDENTIAL PROPRIETARY

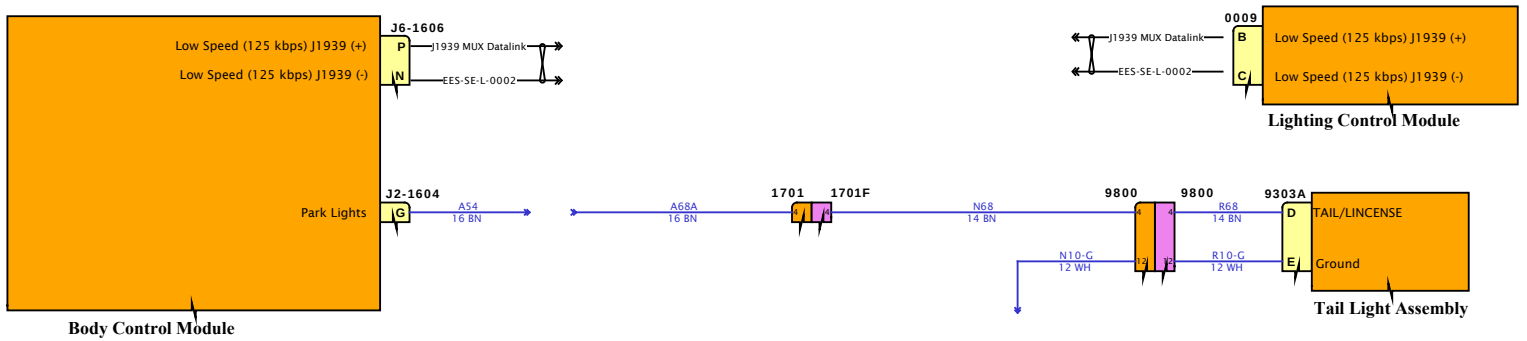

DESIGN DESCRIPTION

FEATURE CODES

SOFTWARE FEATURE CODES

NAVISTAR
NAVISTAR, INC. CONFIDENTIAL PROPRIETARY

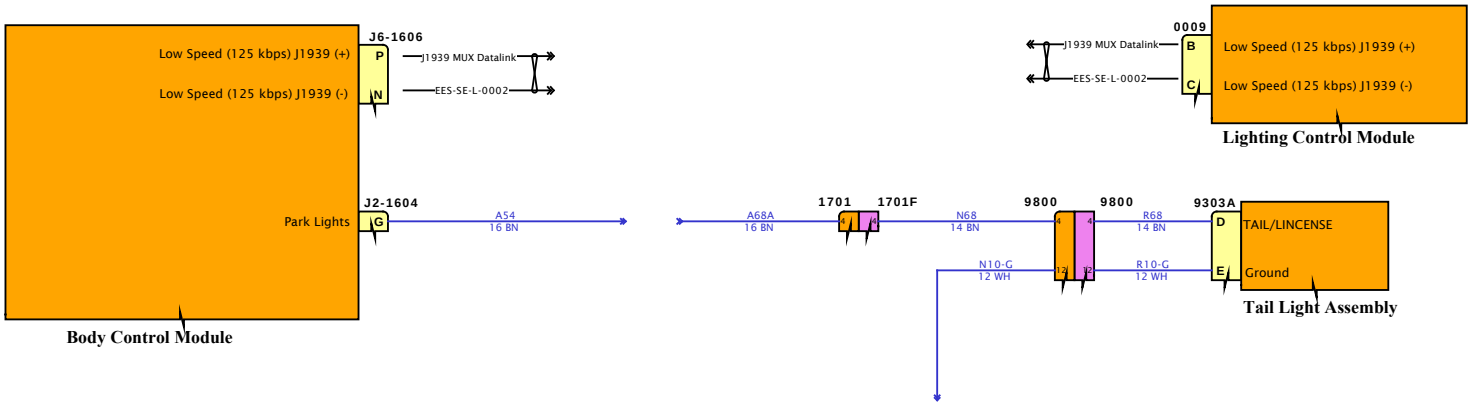

DESIGN DESCRIPTION

FEATURE CODES

SOFTWARE FEATURE CODES

NAVISTAR
NAVISTAR, INC. CONFIDENTIAL PROPRIETARY

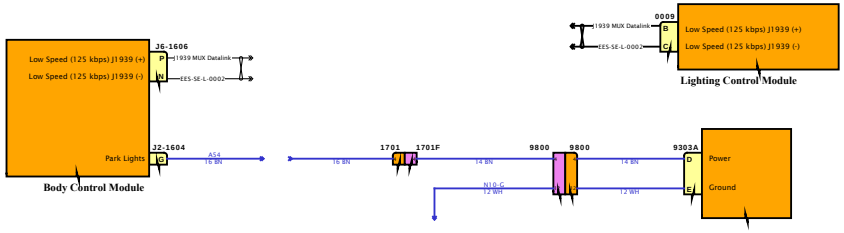

DESIGN DESCRIPTION

FEATURE CODES

SOFTWARE FEATURE CODES

NAVISTAR INC. CONFIDENTIAL PROPRIETARY

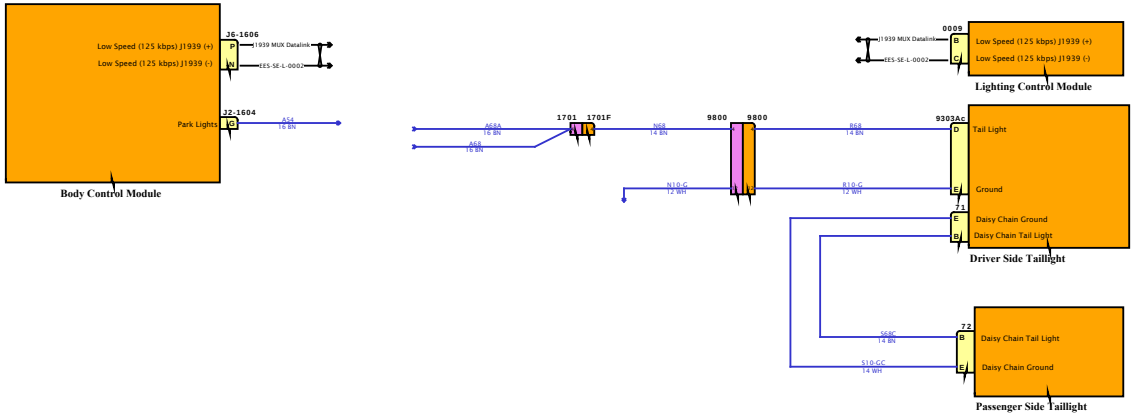

DESIGN DESCRIPTION

FEATURE CODES

SOFTWARE FEATURE CODES

NAVISTAR
NAVISTAR, INC. CONFIDENTIAL PROPRIETARY

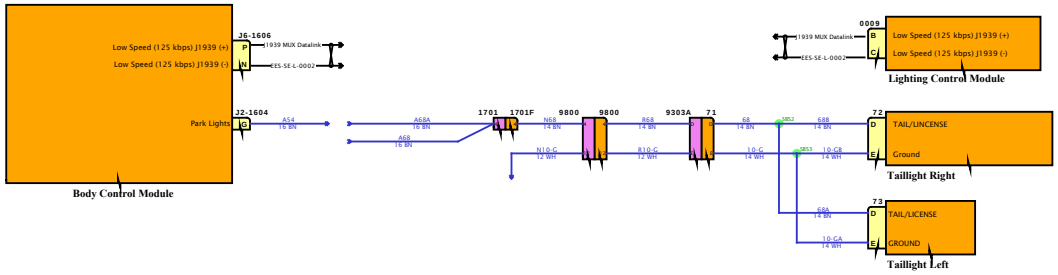

DESIGN DESCRIPTION

FEATURE CODES

SOFTWARE FEATURE CODES

NAVISTAR INC. CONFIDENTIAL PROPRIETARY

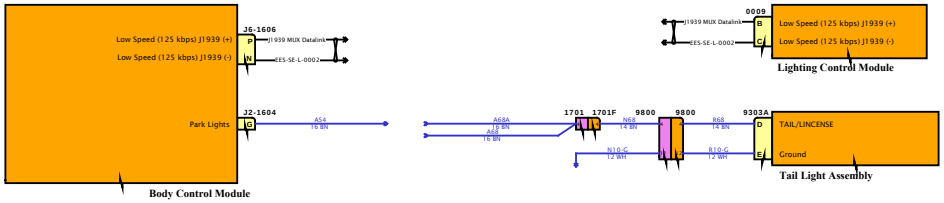

DESIGN DESCRIPTION

FEATURE CODES

SOFTWARE FEATURE CODES

NAVISTAR INC. CONFIDENTIAL PROPRIETARY

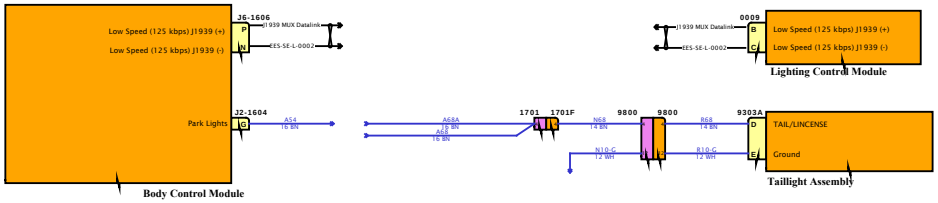

DESIGN DESCRIPTION

FEATURE CODES

SOFTWARE FEATURE CODES

NAVISTAR INC. CONFIDENTIAL PROPRIETARY

DESIGN DESCRIPTION

FEATURE CODES

SOFTWARE FEATURE CODES

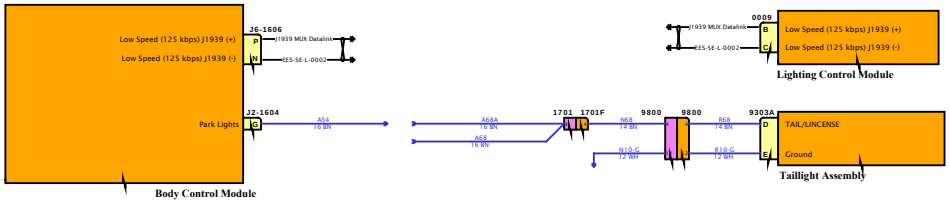

Diagram1

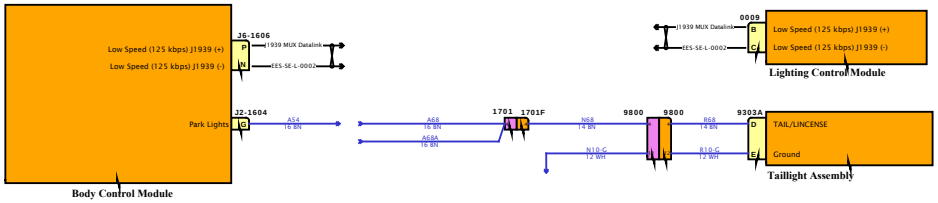

DESIGN DESCRIPTION

FEATURE CODES

SOFTWARE FEATURE CODES

NAVISTAR INC. CONFIDENTIAL PROPRIETARY

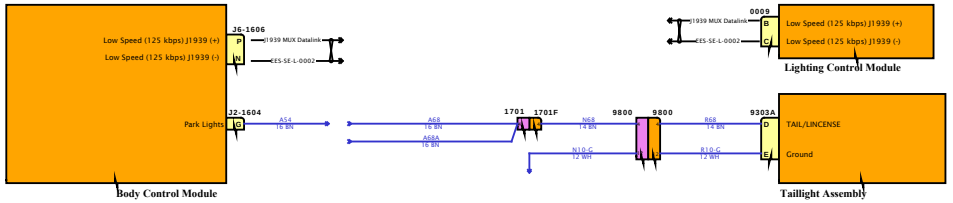

DESIGN DESCRIPTION

FEATURE CODES

SOFTWARE FEATURE CODES

NAVISTAR
NAVISTAR, INC. CONFIDENTIAL PROPRIETARY

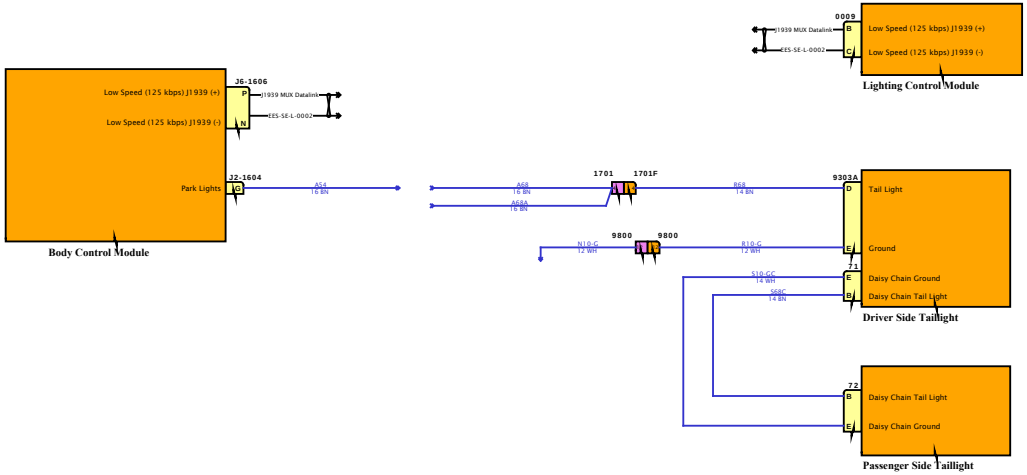

DESIGN DESCRIPTION

FEATURE CODES

SOFTWARE FEATURE CODES

NAVISTAR
NAVISTAR, INC. CONFIDENTIAL PROPRIETARY

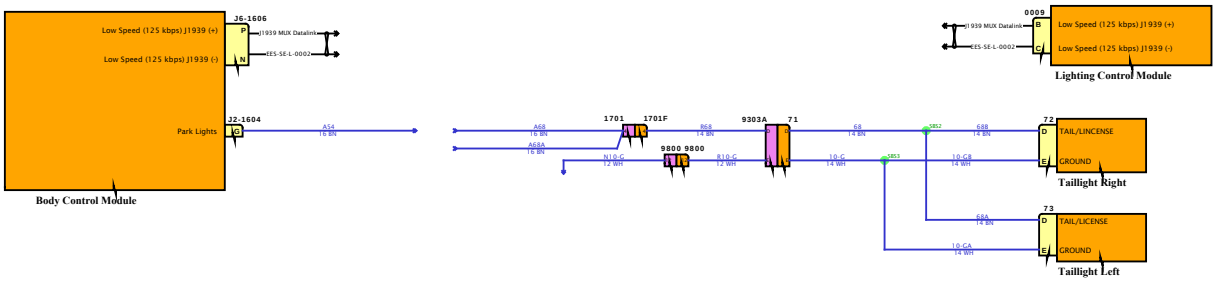

DESIGN DESCRIPTION

FEATURE CODES

SOFTWARE FEATURE CODES

NAVISTAR INC. CONFIDENTIAL PROPRIETARY

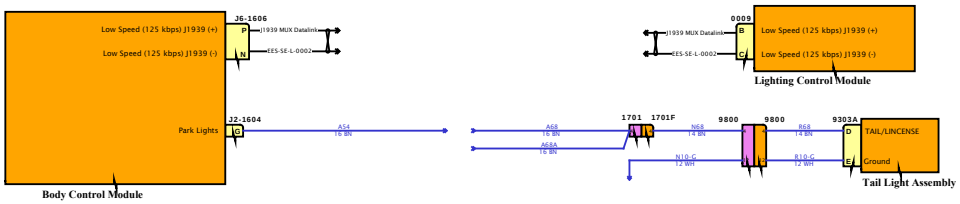

DESIGN DESCRIPTION

FEATURE CODES

SOFTWARE FEATURE CODES

NAVISTAR INC. CONFIDENTIAL PROPRIETARY

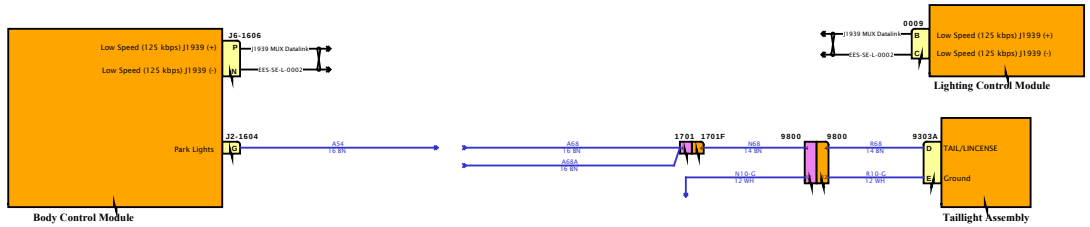

DESIGN DESCRIPTION

FEATURE CODES

SOFTWARE FEATURE CODES

NAVISTAR INC. CONFIDENTIAL PROPRIETARY

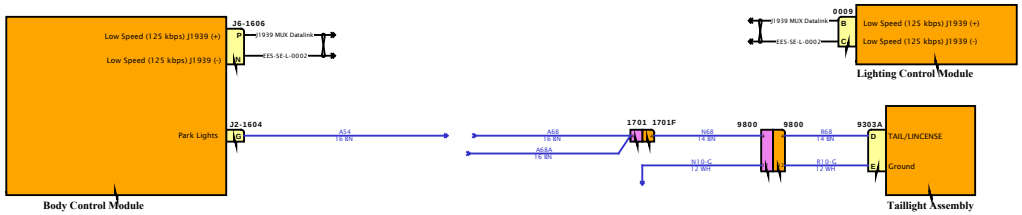

DESIGN DESCRIPTION

FEATURE CODES

SOFTWARE FEATURE CODES

NAVISTAR INC. CONFIDENTIAL PROPRIETARY

DESIGN DESCRIPTION

FEATURE CODES

SOFTWARE FEATURE CODES

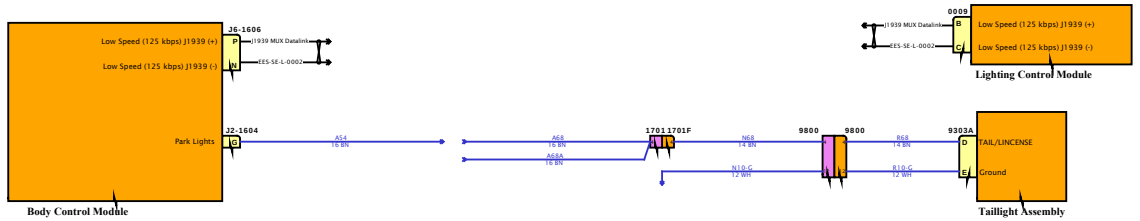

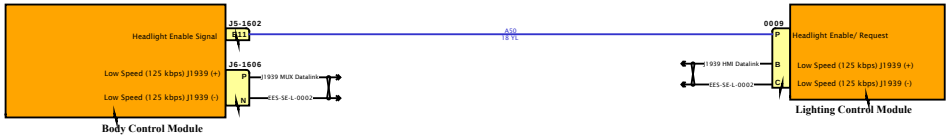

DESIGN DESCRIPTION

FEATURE CODES

SOFTWARE FEATURE CODES

NAVISTAR
NAVISTAR, INC. CONFIDENTIAL PROPRIETARY

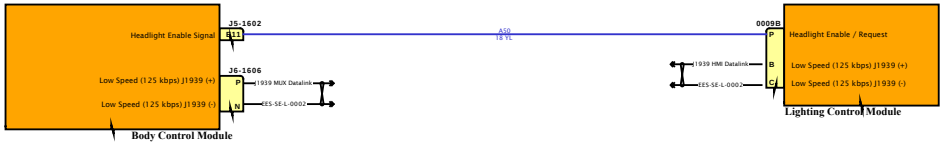

DESIGN DESCRIPTION

FEATURE CODES

SOFTWARE FEATURE CODES

NAVISTAR
NAVISTAR, INC. CONFIDENTIAL PROPRIETARY

DESIGN DESCRIPTION

FEATURE CODES

SOFTWARE FEATURE CODES

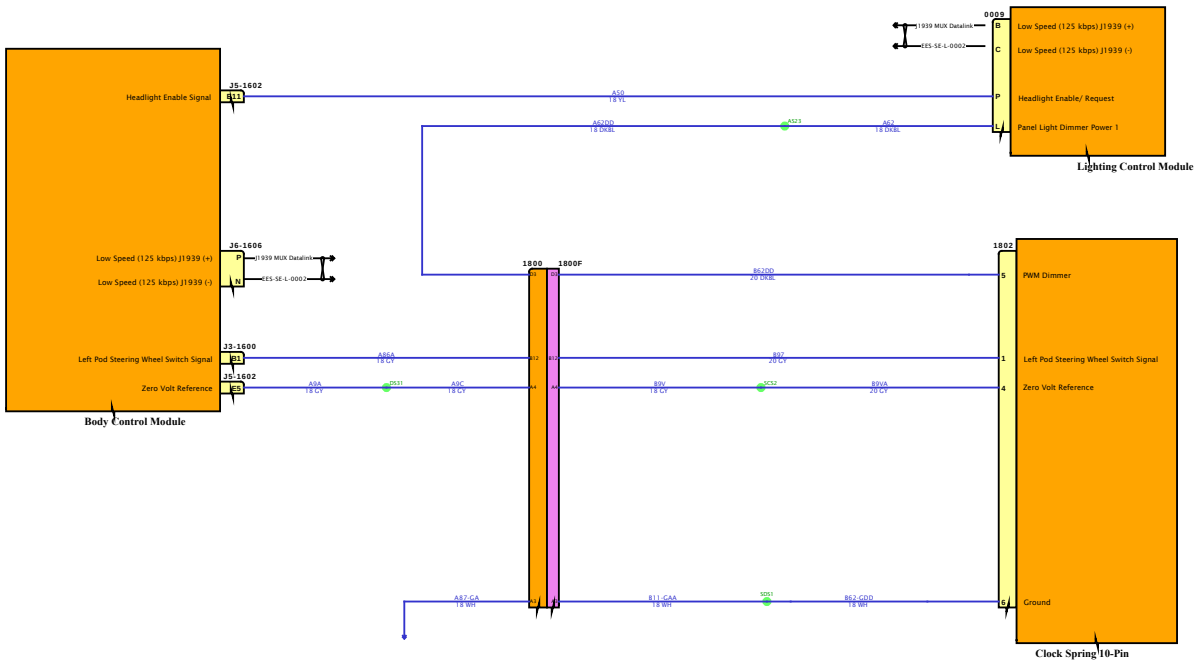

Diagram2

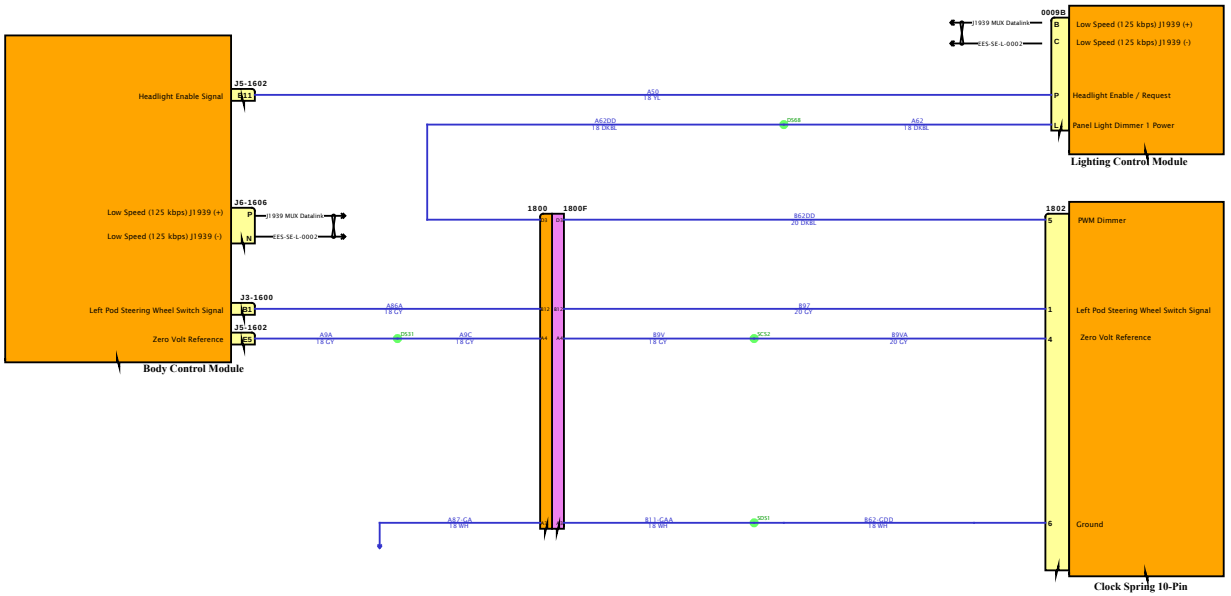

DESIGN DESCRIPTION

FEATURE CODES

SOFTWARE FEATURE CODES

NAVISTAR INC. CONFIDENTIAL PROPRIETARY

DESIGN DESCRIPTION

FEATURE CODES

SOFTWARE FEATURE CODES

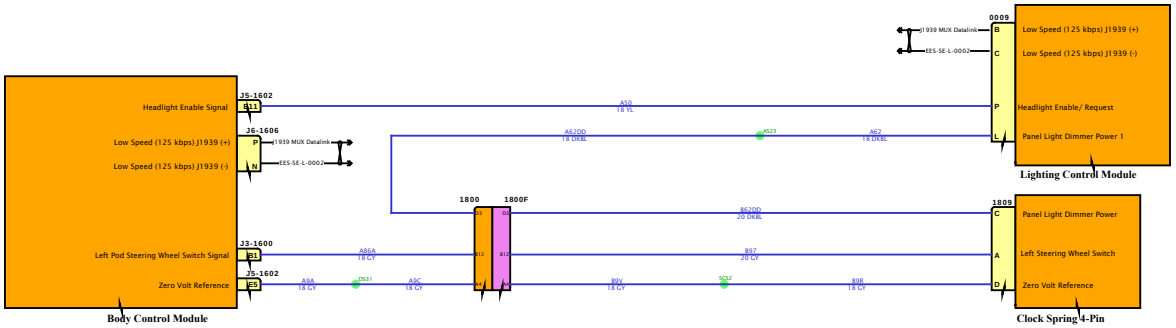

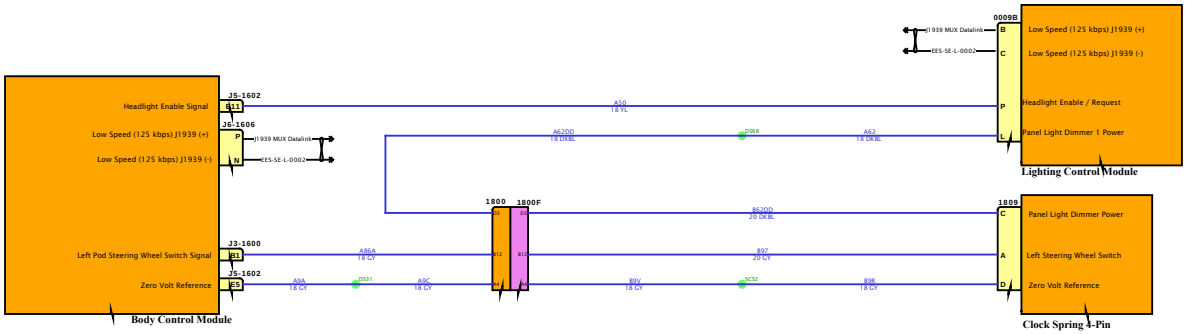

DESIGN DESCRIPTION

FEATURE CODES

SOFTWARE FEATURE CODES

NAVISTAR
NAVISTAR, INC. CONFIDENTIAL PROPRIETARY



DESIGN DESCRIPTION

FEATURE CODES

SOFTWARE FEATURE CODES

NAVISTAR INC. CONFIDENTIAL PROPRIETARY

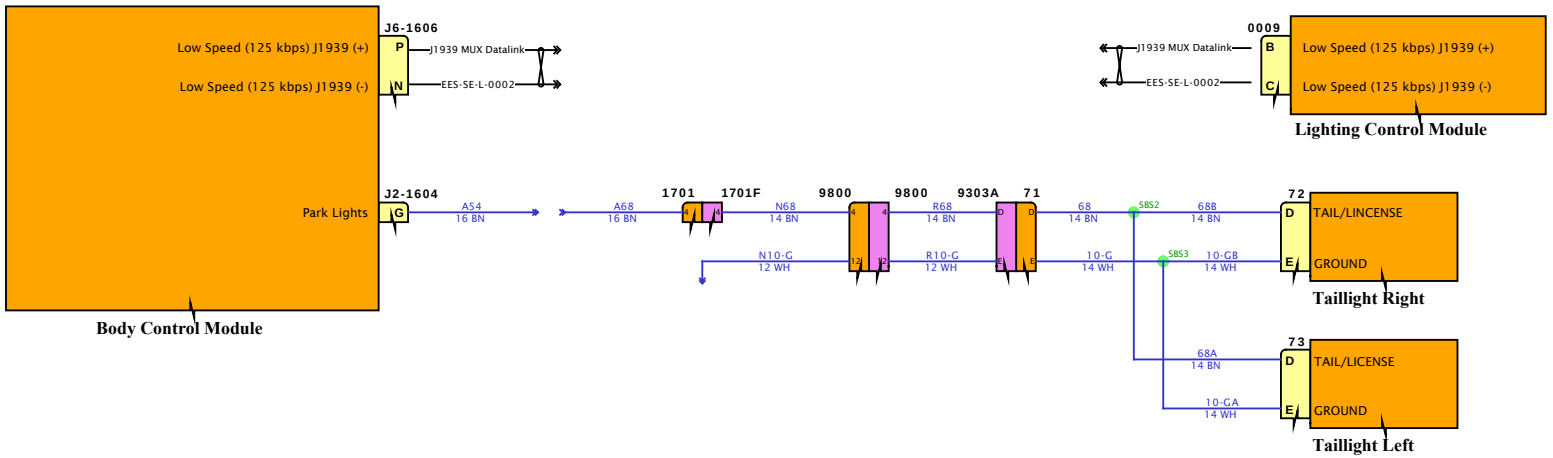

DESIGN DESCRIPTION

FEATURE CODES

SOFTWARE FEATURE CODES

NAVISTAR
NAVISTAR, INC. CONFIDENTIAL PROPRIETARY

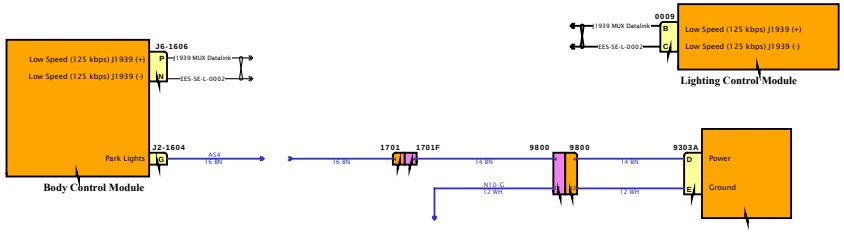

DESIGN DESCRIPTION

FEATURE CODES

SOFTWARE FEATURE CODES

NAVISTAR INC. CONFIDENTIAL PROPRIETARY

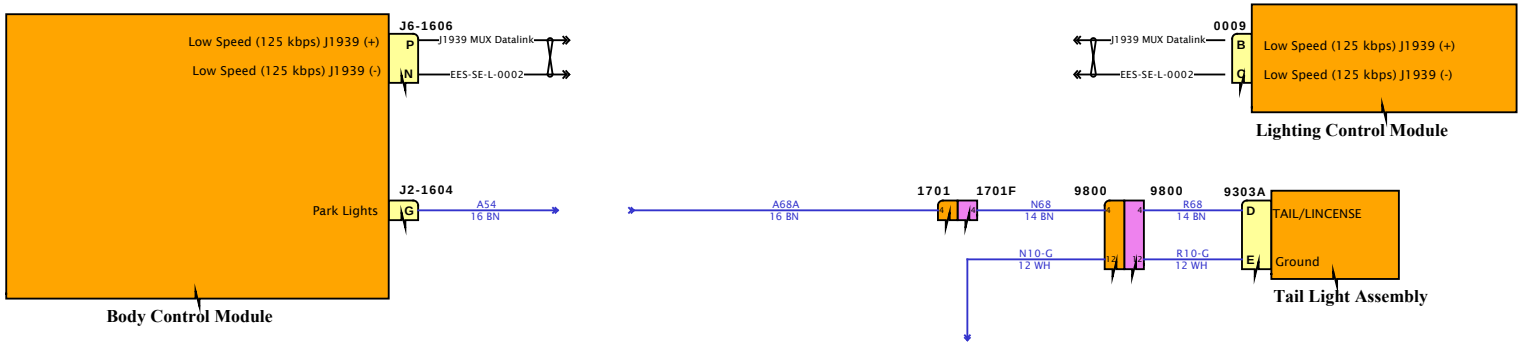

DESIGN DESCRIPTION

FEATURE CODES

SOFTWARE FEATURE CODES

NAVISTAR
NAVISTAR, INC. CONFIDENTIAL PROPRIETARY

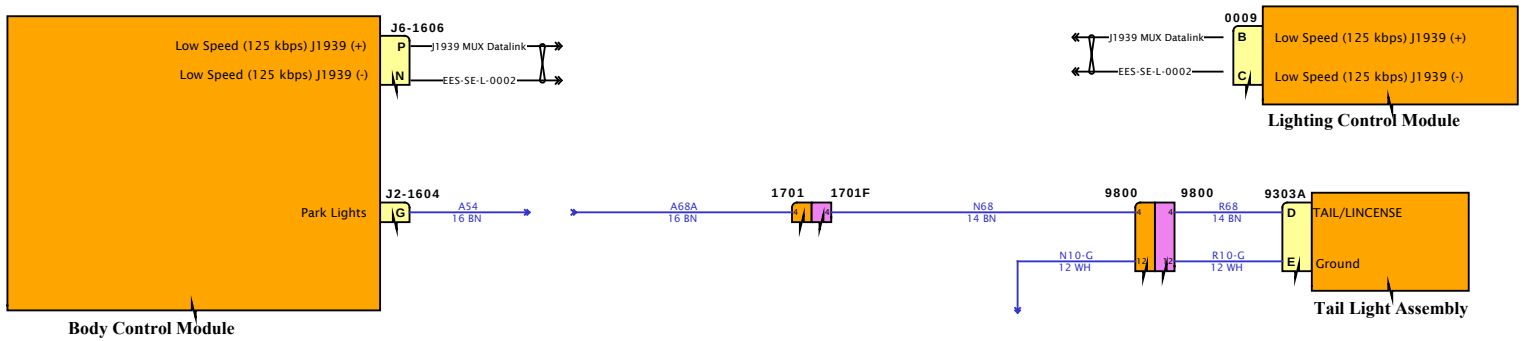

DESIGN DESCRIPTION

FEATURE CODES

SOFTWARE FEATURE CODES

NAVISTAR
NAVISTAR, INC. CONFIDENTIAL PROPRIETARY

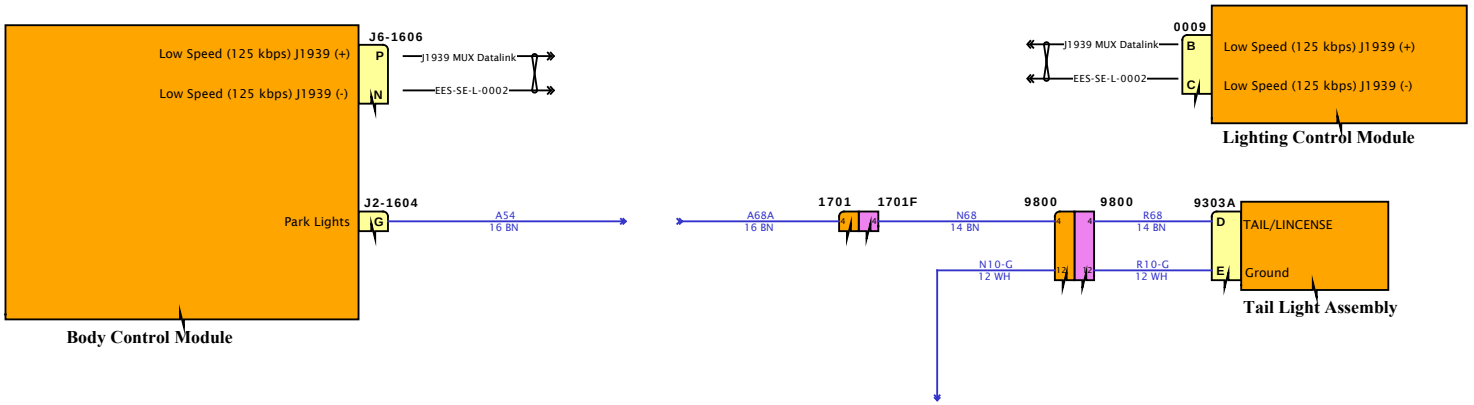

DESIGN DESCRIPTION

FEATURE CODES

SOFTWARE FEATURE CODES

NAVISTAR
NAVISTAR, INC. CONFIDENTIAL PROPRIETARY

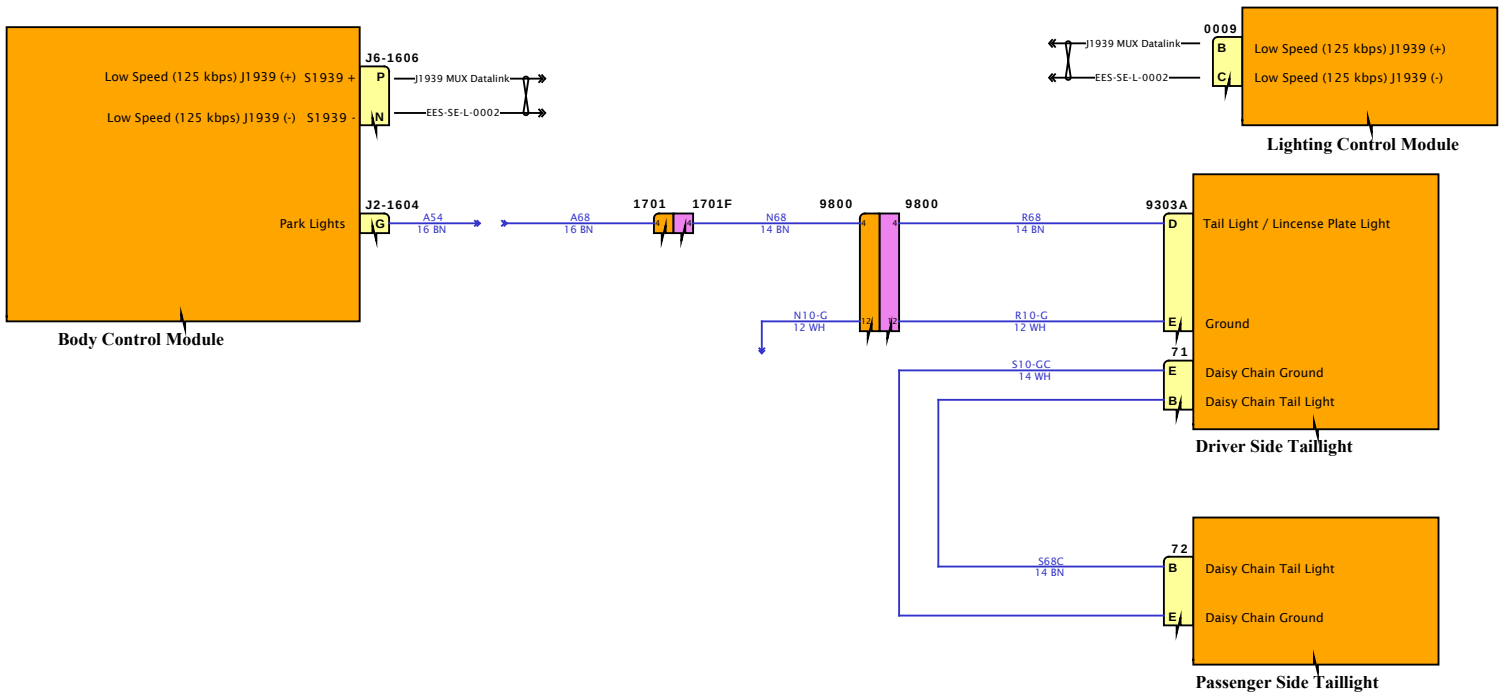

DESIGN DESCRIPTION

FEATURE CODES

SOFTWARE FEATURE CODES

NAVISTAR
NAVISTAR, INC. CONFIDENTIAL PROPRIETARY

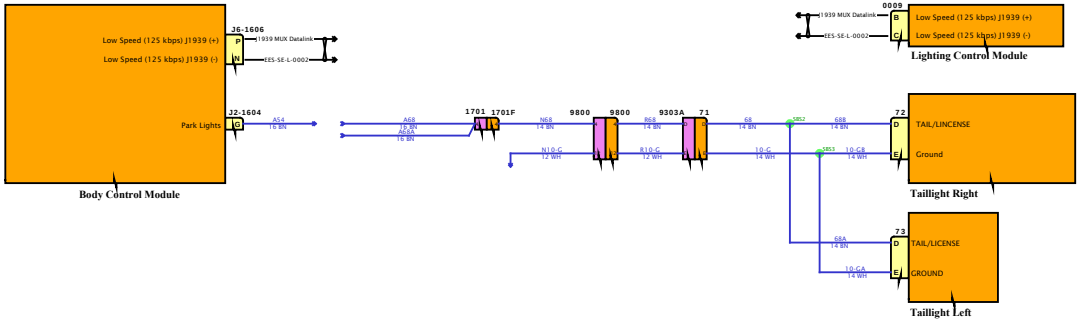

DESIGN DESCRIPTION

FEATURE CODES

SOFTWARE FEATURE CODES

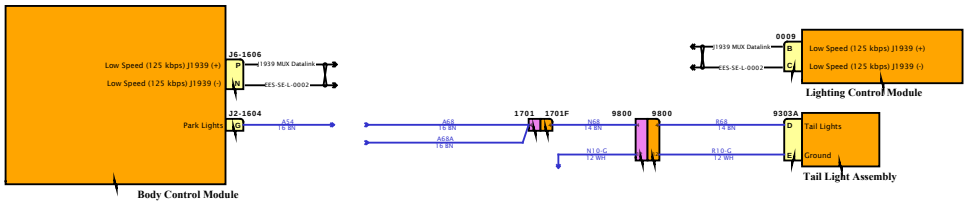

DESIGN DESCRIPTION

FEATURE CODES

SOFTWARE FEATURE CODES

NAVISTAR INC. CONFIDENTIAL PROPRIETARY

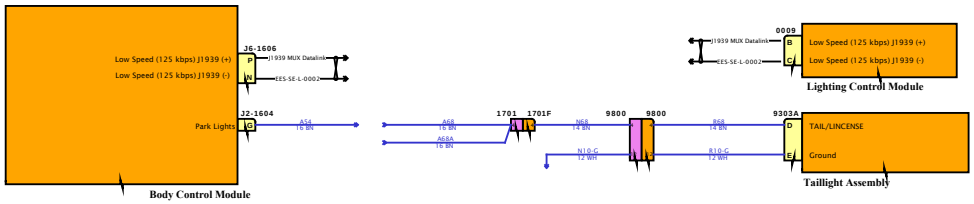

DESIGN DESCRIPTION

FEATURE CODES

SOFTWARE FEATURE CODES

NAVISTAR INC. CONFIDENTIAL PROPRIETARY

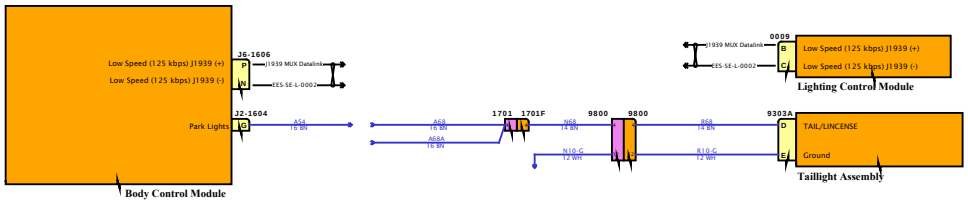

DESIGN DESCRIPTION

FEATURE CODES

SOFTWARE FEATURE CODES

NAVISTAR
NAVISTAR, INC. CONFIDENTIAL PROPRIETARY

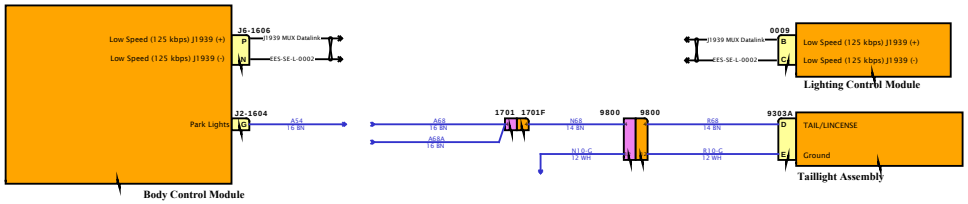

DESIGN DESCRIPTION

FEATURE CODES

SOFTWARE FEATURE CODES

NAVISTAR
NAVISTAR, INC. CONFIDENTIAL PROPRIETARY

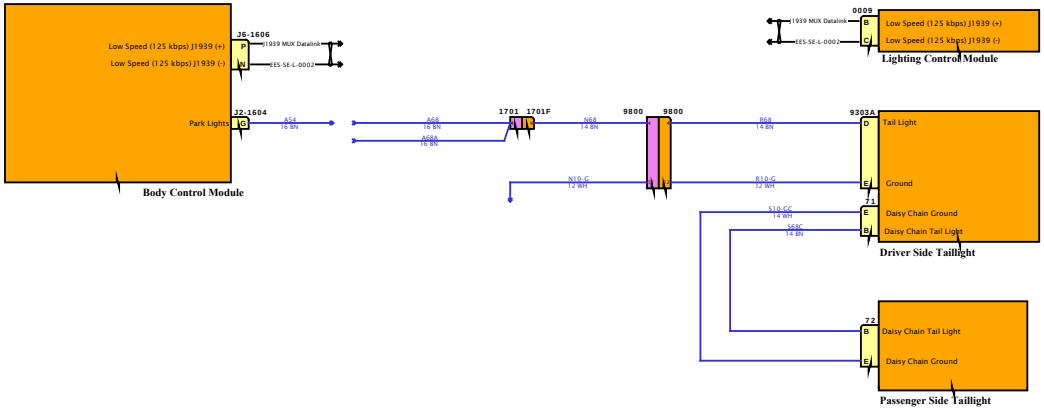

DESIGN DESCRIPTION

FEATURE CODES

SOFTWARE FEATURE CODES

NAVISTAR
NAVISTAR, INC. CONFIDENTIAL PROPRIETARY

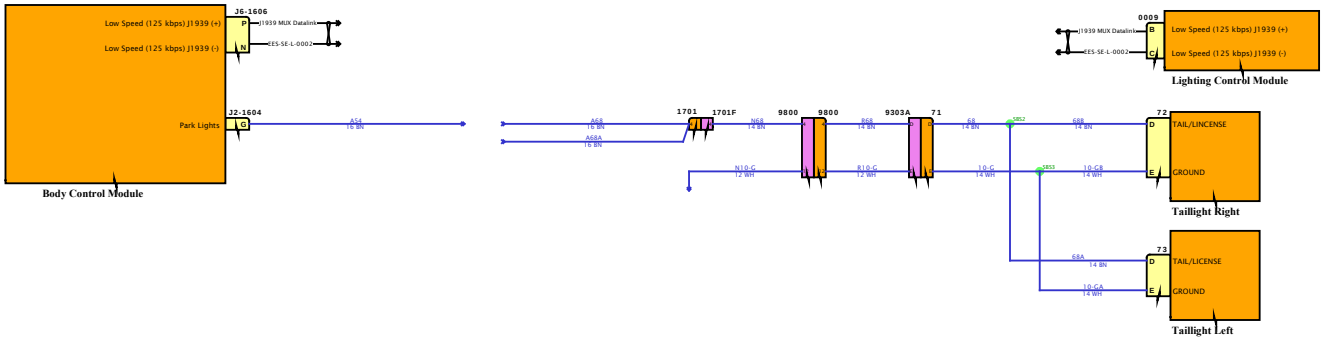

DESIGN DESCRIPTION

FEATURE CODES

SOFTWARE FEATURE CODES

NAVISTAR INC. CONFIDENTIAL PROPRIETARY

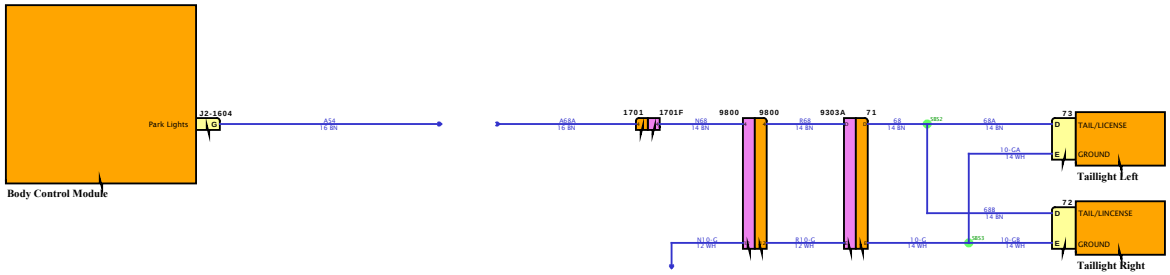

DESIGN DESCRIPTION

FEATURE CODES

SOFTWARE FEATURE CODES

NAVISTAR
NAVISTAR, INC. CONFIDENTIAL PROPRIETARY

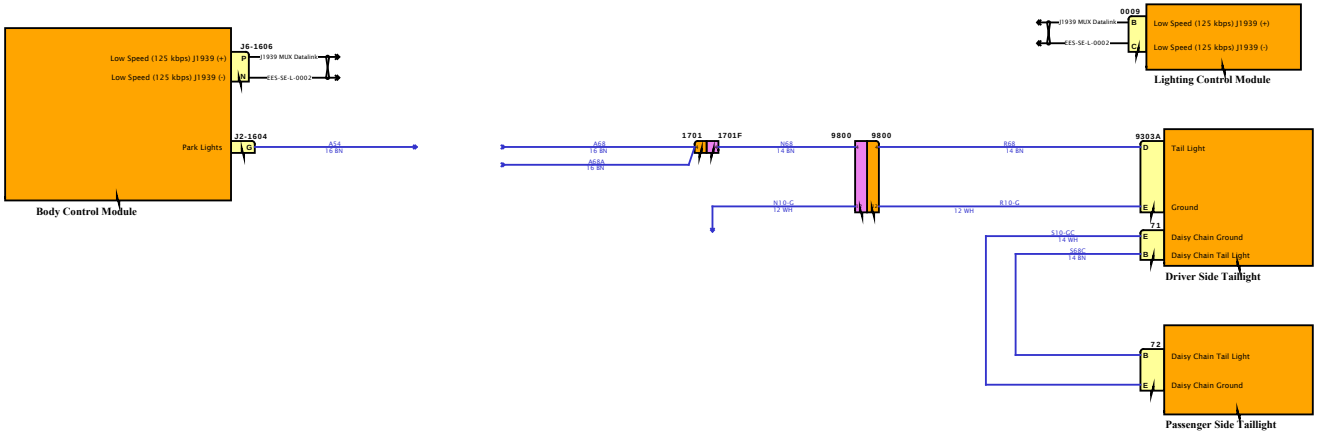

DESIGN DESCRIPTION

FEATURE CODES

SOFTWARE FEATURE CODES

NAVISTAR
NAVISTAR, INC. CONFIDENTIAL PROPRIETARY

DESIGN DESCRIPTION

FEATURE CODES

SOFTWARE FEATURE CODES

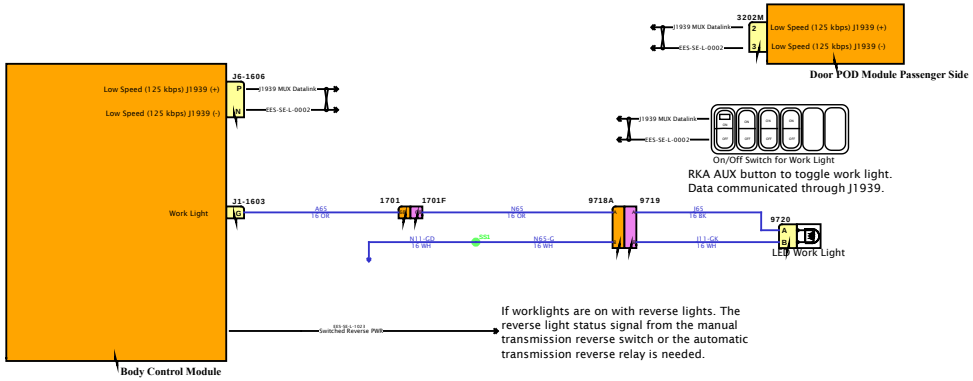

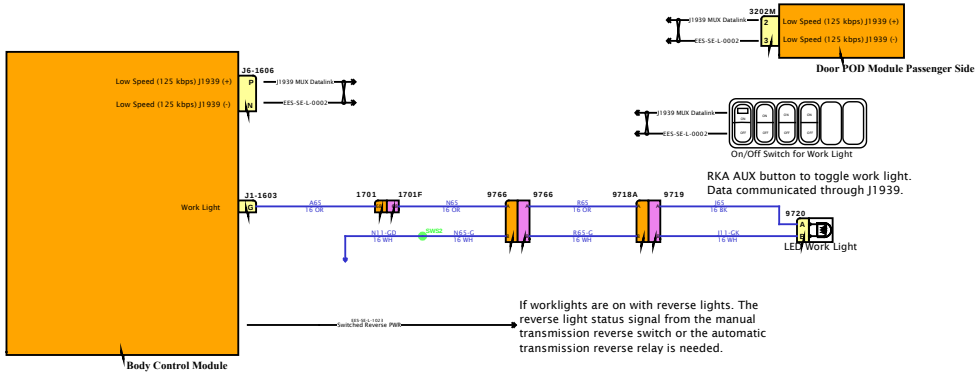

DESIGN DESCRIPTION

FEATURE CODES

SOFTWARE FEATURE CODES

NAVISTAR INC. CONFIDENTIAL PROPRIETARY

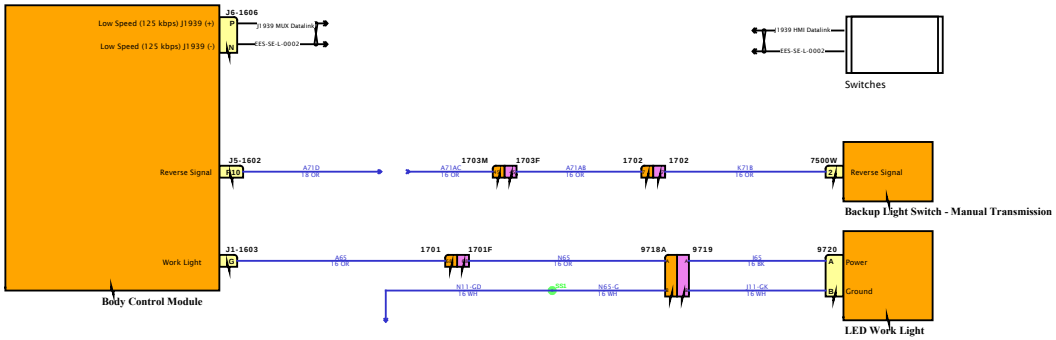

DESIGN DESCRIPTION

FEATURE CODES

SOFTWARE FEATURE CODES

NAVISTAR INC. CONFIDENTIAL PROPRIETARY

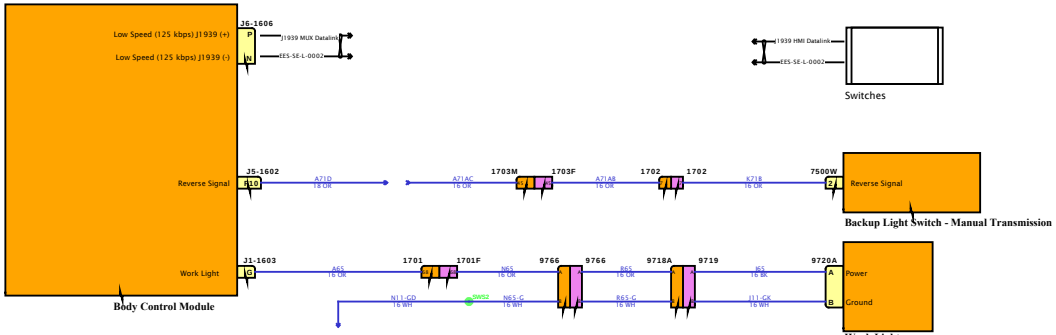

DESIGN DESCRIPTION

FEATURE CODES

SOFTWARE FEATURE CODES

NAVISTAR
NAVISTAR, INC. CONFIDENTIAL PROPRIETARY

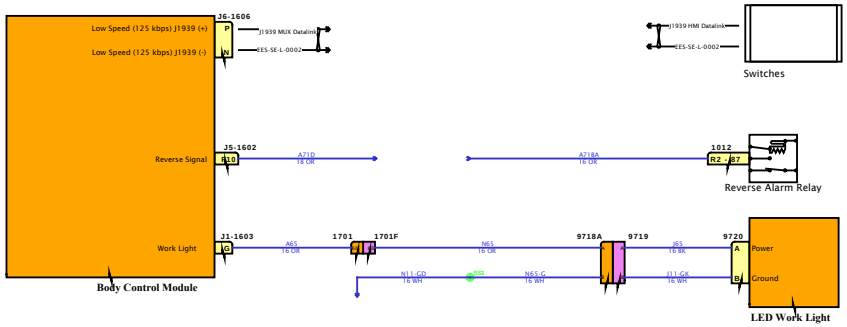

DESIGN DESCRIPTION

FEATURE CODES

SOFTWARE FEATURE CODES

NAVISTAR
NAVISTAR, INC. CONFIDENTIAL PROPRIETARY

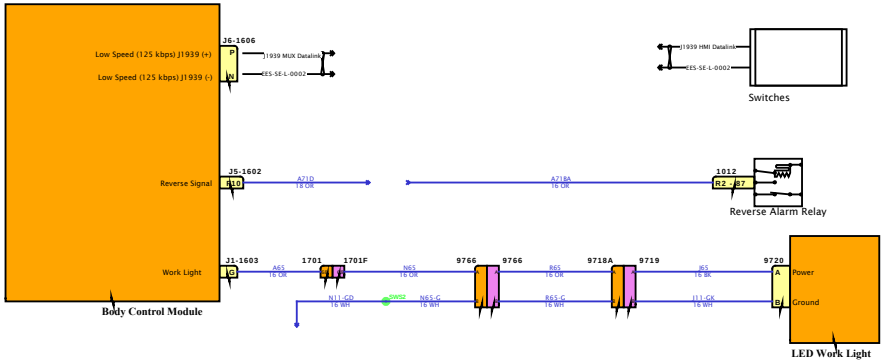

DESIGN DESCRIPTION

FEATURE CODES

SOFTWARE FEATURE CODES

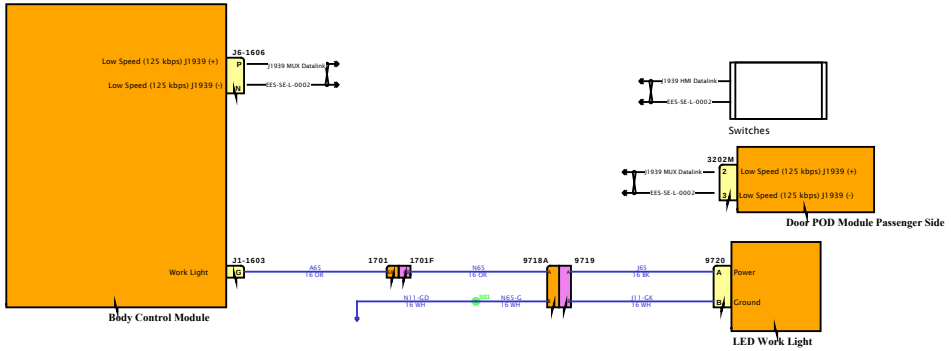

DESIGN DESCRIPTION

FEATURE CODES

SOFTWARE FEATURE CODES

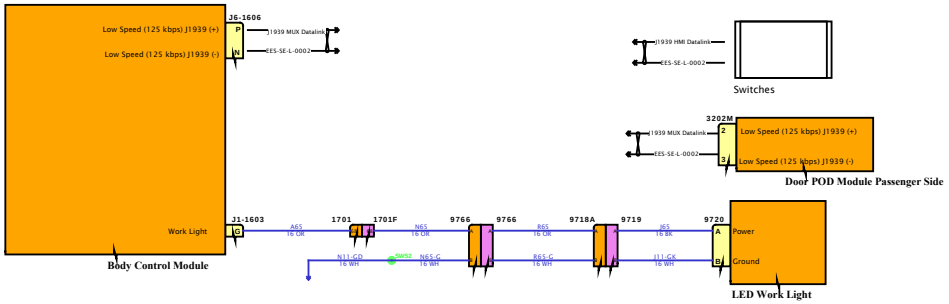

DESIGN DESCRIPTION

FEATURE CODES

SOFTWARE FEATURE CODES

NAVISTAR
NAVISTAR, INC. CONFIDENTIAL PROPRIETARY

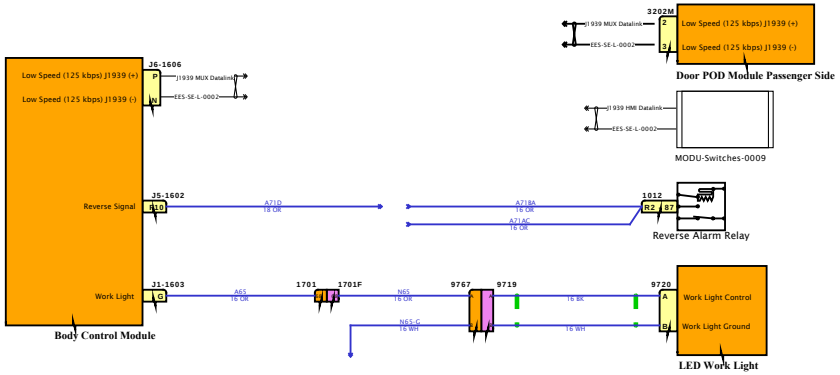

DESIGN DESCRIPTION

FEATURE CODES

SOFTWARE FEATURE CODES

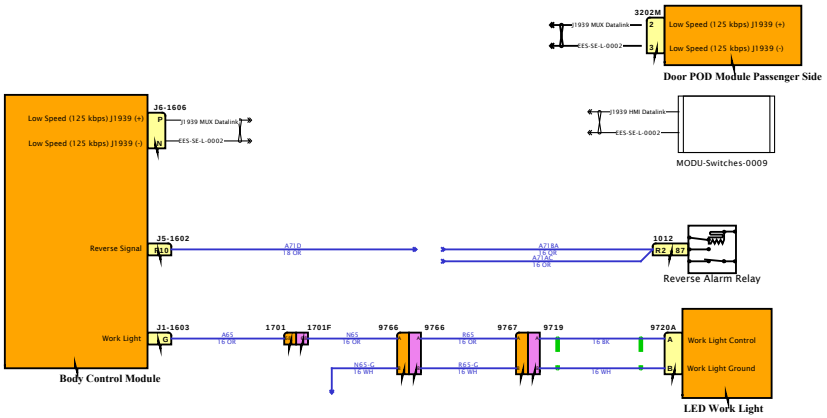

DESIGN DESCRIPTION

FEATURE CODES

SOFTWARE FEATURE CODES

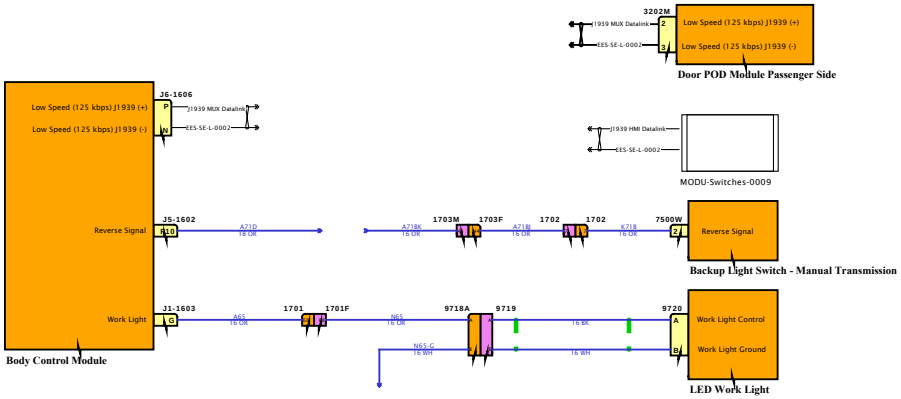

DESIGN DESCRIPTION

FEATURE CODES

SOFTWARE FEATURE CODES

NAVISTAR INC. CONFIDENTIAL PROPRIETARY

DESIGN DESCRIPTION

FEATURE CODES

SOFTWARE FEATURE CODES

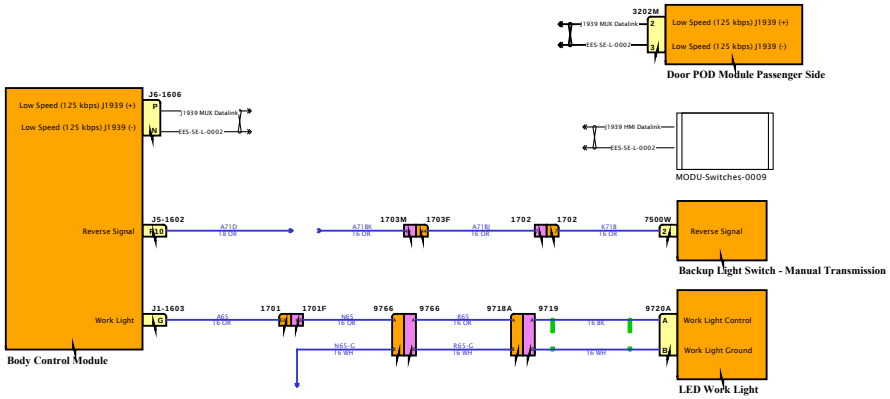

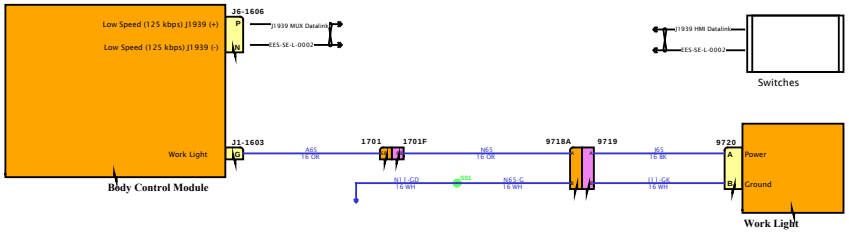

DESIGN DESCRIPTION

FEATURE CODES

SOFTWARE FEATURE CODES

NAVISTAR INC. CONFIDENTIAL PROPRIETARY

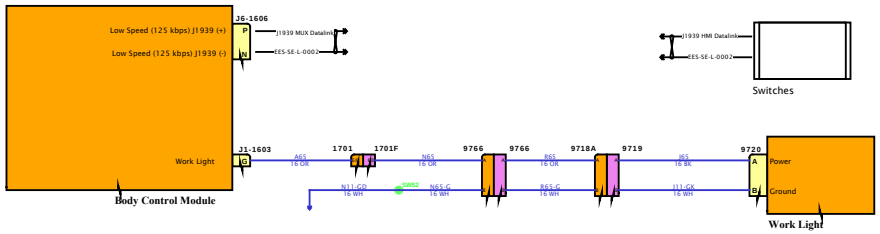

DESIGN DESCRIPTION

FEATURE CODES

SOFTWARE FEATURE CODES

NAVISTAR INC. CONFIDENTIAL PROPRIETARY

Diagram1

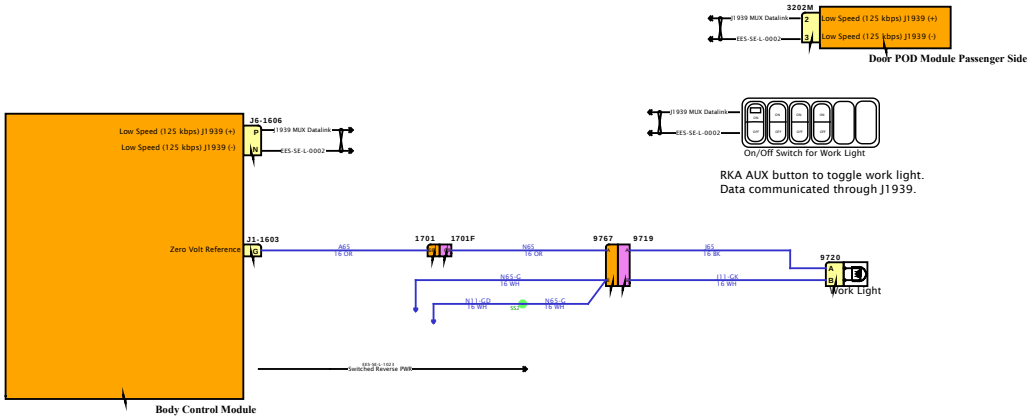

DESIGN DESCRIPTION

FEATURE CODES

SOFTWARE FEATURE CODES

NAVISTAR
NAVISTAR, INC. CONFIDENTIAL PROPRIETARY

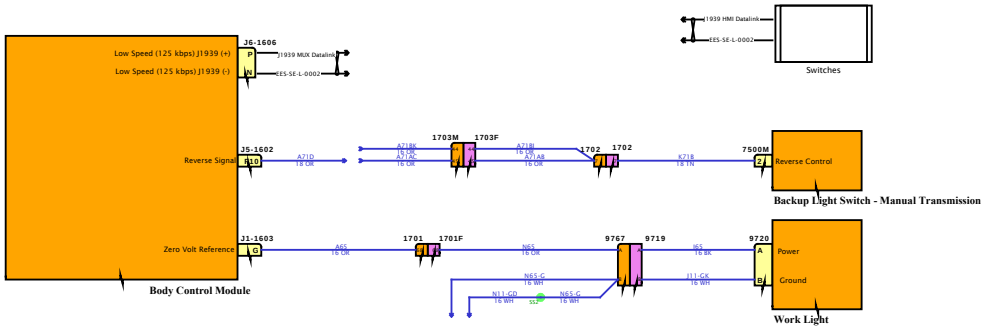

DESIGN DESCRIPTION

FEATURE CODES

SOFTWARE FEATURE CODES

NAVISTAR INC. CONFIDENTIAL PROPRIETARY

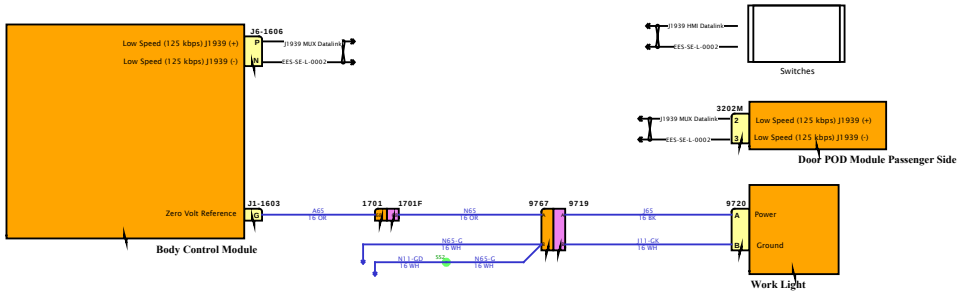

DESIGN DESCRIPTION

FEATURE CODES

SOFTWARE FEATURE CODES

NAVISTAR INC. CONFIDENTIAL PROPRIETARY

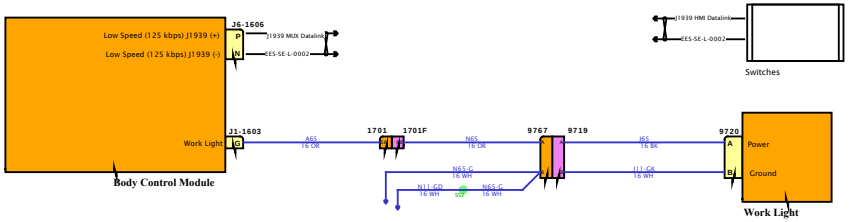

DESIGN DESCRIPTION

FEATURE CODES

SOFTWARE FEATURE CODES

NAVISTAR INC. CONFIDENTIAL PROPRIETARY

Diagram1

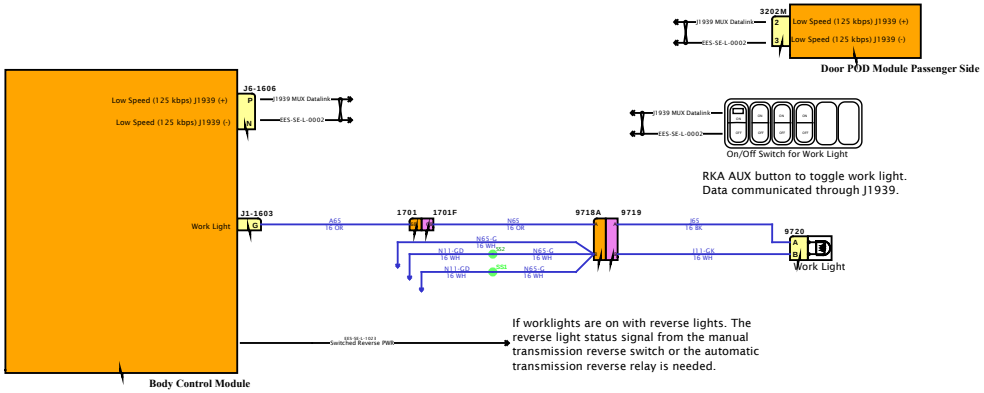

DESIGN DESCRIPTION

FEATURE CODES

SOFTWARE FEATURE CODES

NAVISTAR INC. CONFIDENTIAL PROPRIETARY

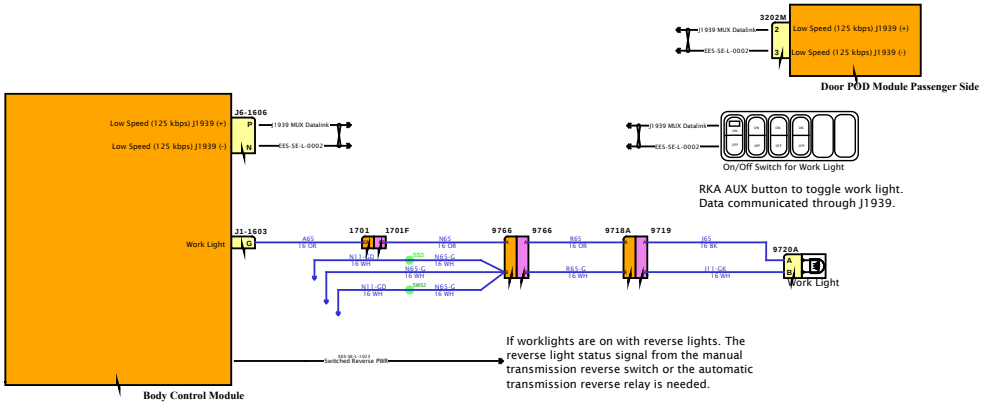

DESIGN DESCRIPTION

FEATURE CODES

SOFTWARE FEATURE CODES

NAVISTAR
NAVISTAR, INC. CONFIDENTIAL PROPRIETARY

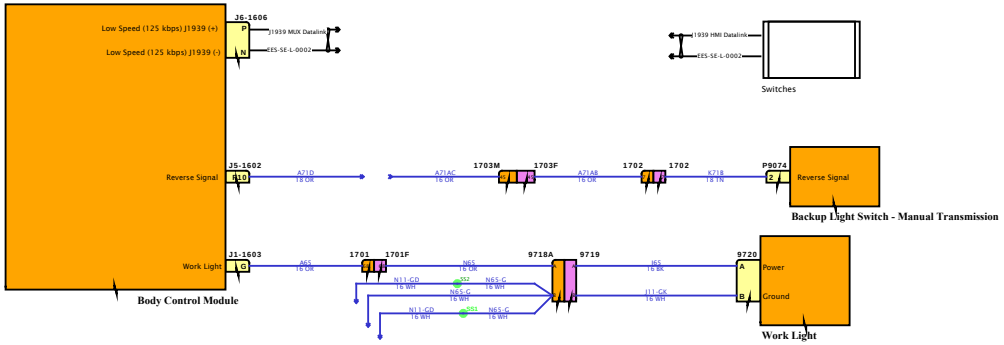

DESIGN DESCRIPTION

FEATURE CODES

SOFTWARE FEATURE CODES

NAVISTAR
NAVISTAR, INC. CONFIDENTIAL PROPRIETARY

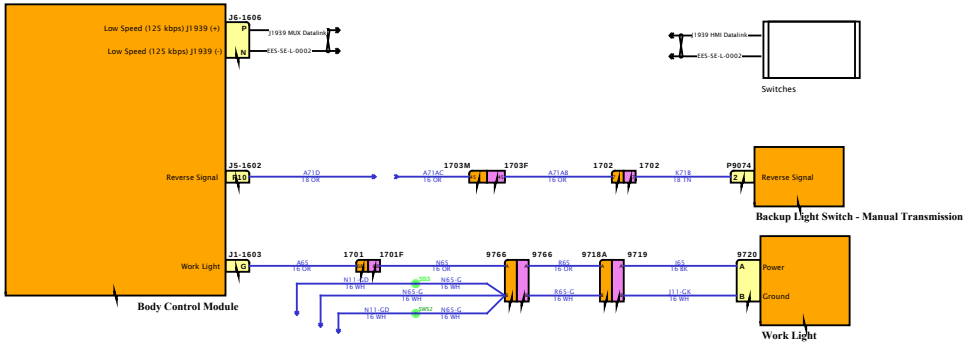

DESIGN DESCRIPTION

FEATURE CODES

SOFTWARE FEATURE CODES

NAVISTAR
NAVISTAR, INC. CONFIDENTIAL PROPRIETARY

DESIGN DESCRIPTION

FEATURE CODES

SOFTWARE FEATURE CODES

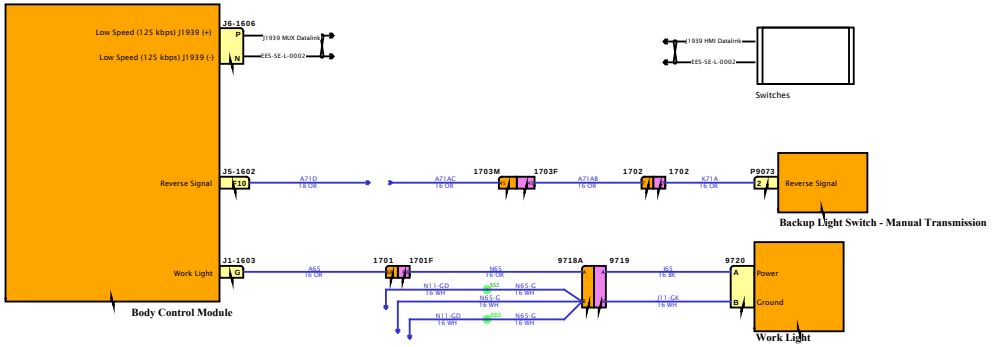

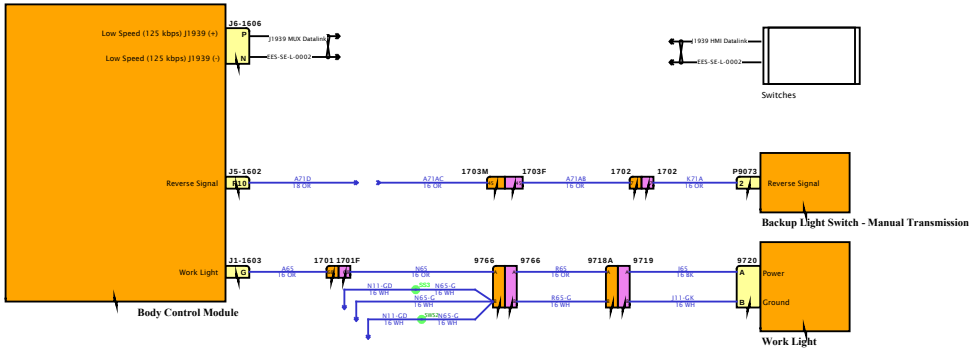

DESIGN DESCRIPTION

FEATURE CODES

SOFTWARE FEATURE CODES

NAVISTAR
NAVISTAR, INC. CONFIDENTIAL PROPRIETARY

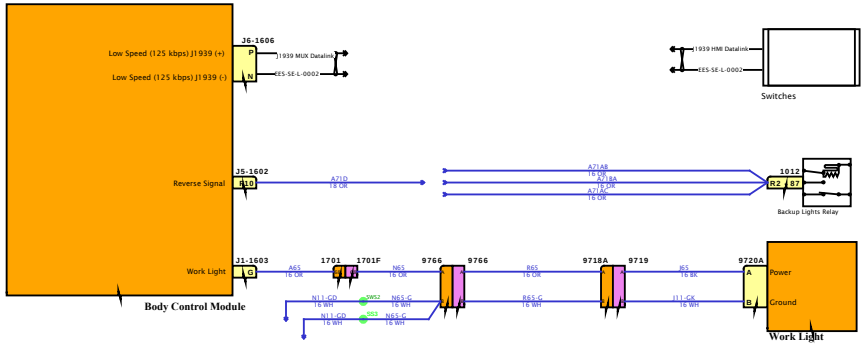

DESIGN DESCRIPTION

FEATURE CODES

SOFTWARE FEATURE CODES

NAVISTAR
NAVISTAR, INC. CONFIDENTIAL PROPRIETARY

Diagram2

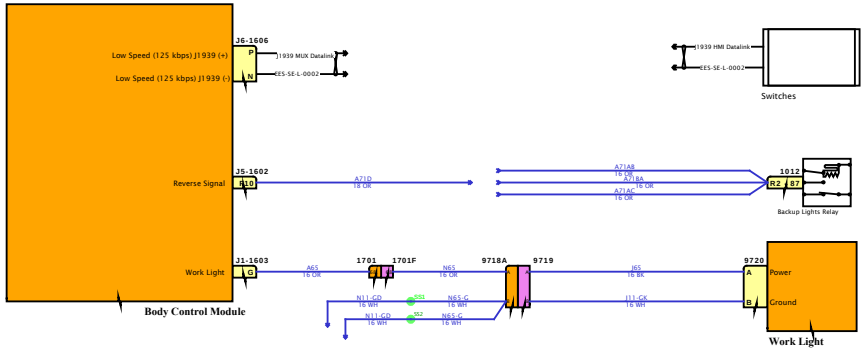

DESIGN DESCRIPTION

FEATURE CODES

SOFTWARE FEATURE CODES

NAVISTAR INC. CONFIDENTIAL PROPRIETARY

DESIGN DESCRIPTION

FEATURE CODES

SOFTWARE FEATURE CODES

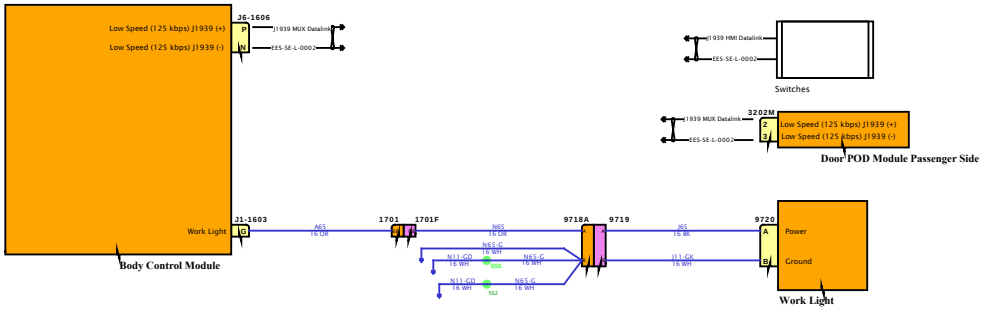

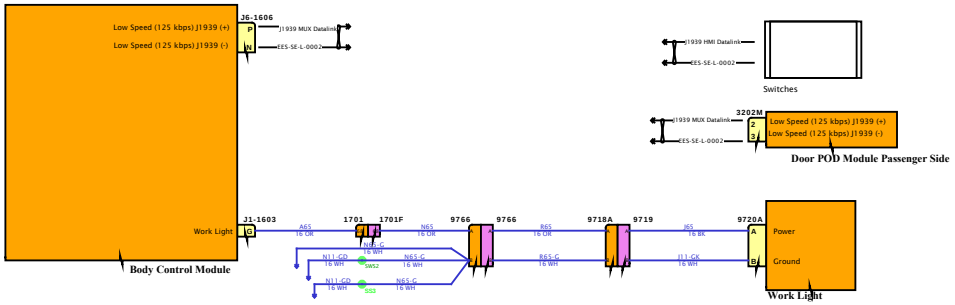

DESIGN DESCRIPTION

FEATURE CODES

SOFTWARE FEATURE CODES

NAVISTAR
NAVISTAR, INC. CONFIDENTIAL PROPRIETARY

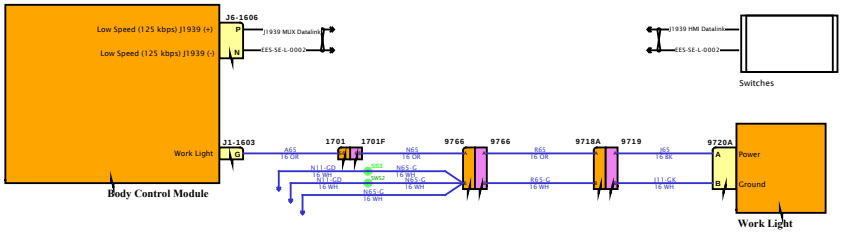

DESIGN DESCRIPTION

FEATURE CODES

SOFTWARE FEATURE CODES

NAVISTAR INC. CONFIDENTIAL PROPRIETARY

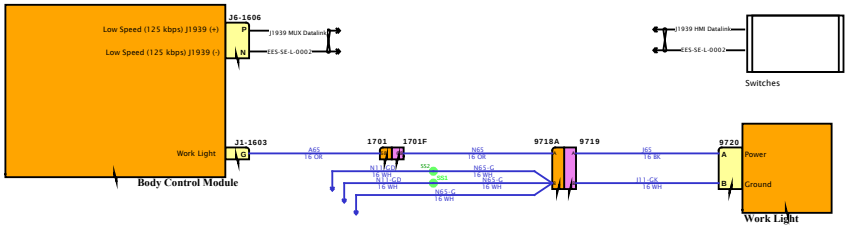

DESIGN DESCRIPTION

FEATURE CODES

SOFTWARE FEATURE CODES

NAVISTAR INC. CONFIDENTIAL PROPRIETARY

DESIGN DESCRIPTION

FEATURE CODES

SOFTWARE FEATURE CODES

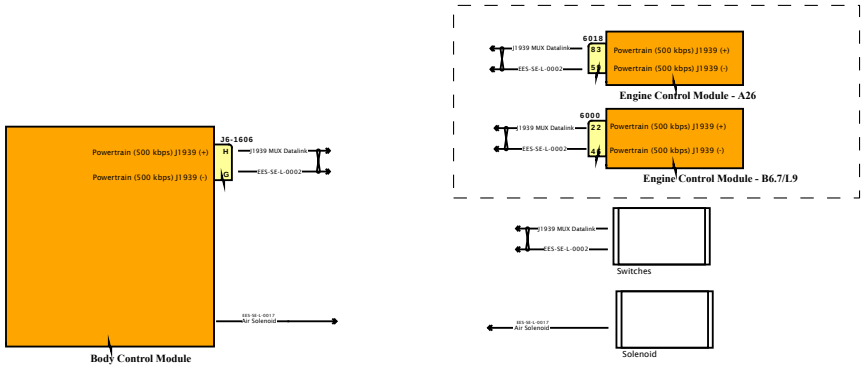

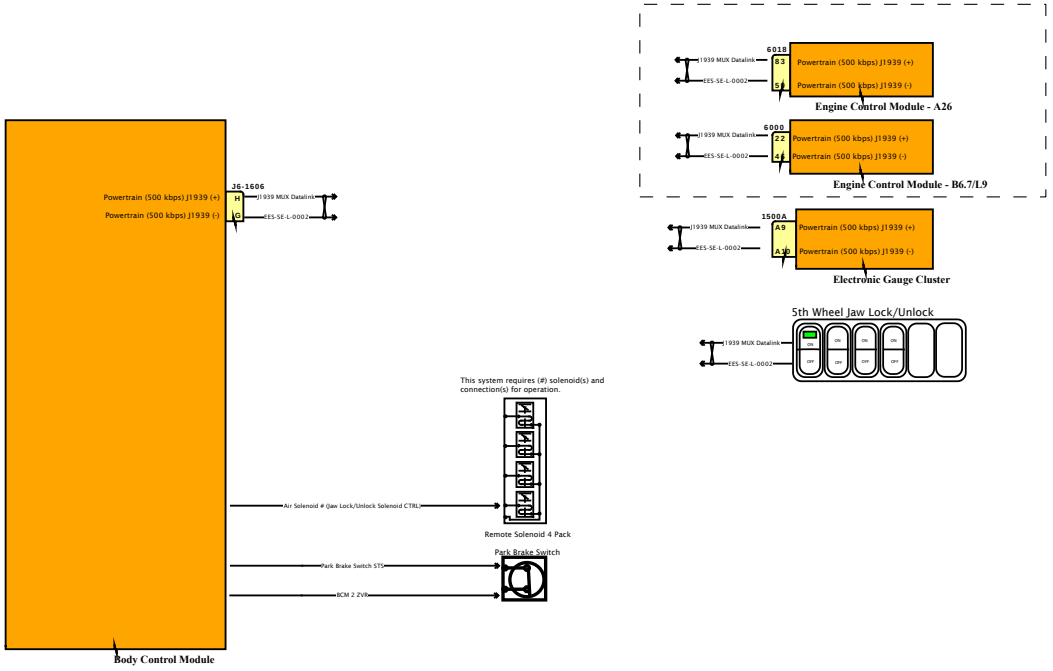

DESIGN DESCRIPTION

FEATURE CODES

SOFTWARE FEATURE CODES

NAVISTAR
NAVISTAR, INC. CONFIDENTIAL PROPRIETARY

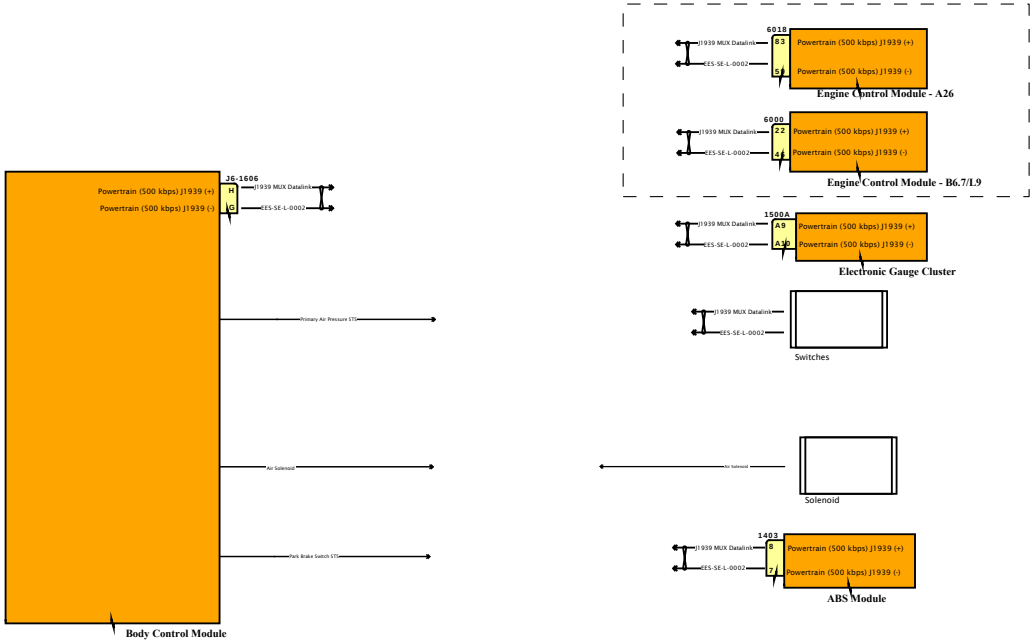

DESIGN DESCRIPTION

FEATURE CODES

SOFTWARE FEATURE CODES

NAVISTAR
NAVISTAR, INC. CONFIDENTIAL PROPRIETARY

Diagram1

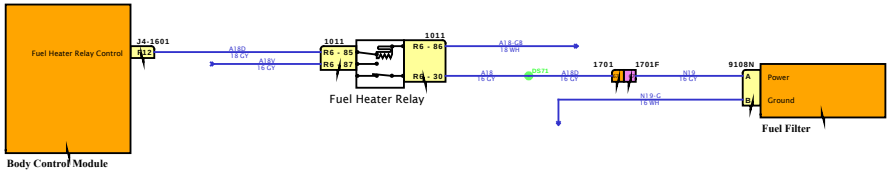

DESIGN DESCRIPTION

FEATURE CODES

SOFTWARE FEATURE CODES

NAVISTAR INC. CONFIDENTIAL PROPRIETARY

Diagram2

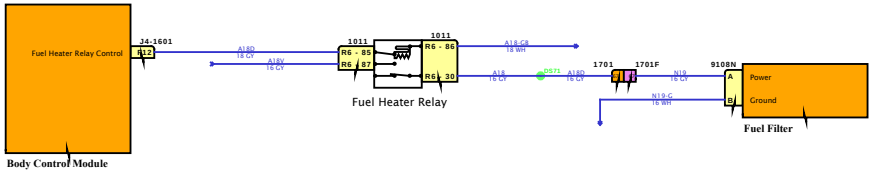

DESIGN DESCRIPTION

FEATURE CODES

SOFTWARE FEATURE CODES

NAVISTAR INC. CONFIDENTIAL PROPRIETARY

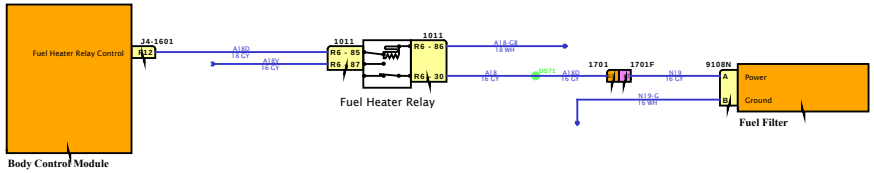

DESIGN DESCRIPTION

FEATURE CODES

SOFTWARE FEATURE CODES

NAVISTAR INC. CONFIDENTIAL PROPRIETARY

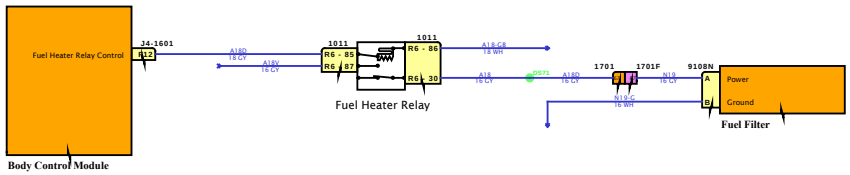

DESIGN DESCRIPTION

FEATURE CODES

SOFTWARE FEATURE CODES

NAVISTAR INC. CONFIDENTIAL PROPRIETARY

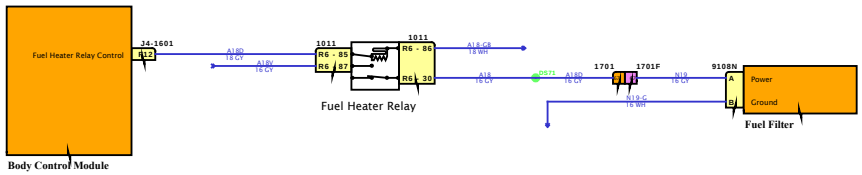

DESIGN DESCRIPTION

FEATURE CODES

SOFTWARE FEATURE CODES

NAVISTAR INC. CONFIDENTIAL PROPRIETARY

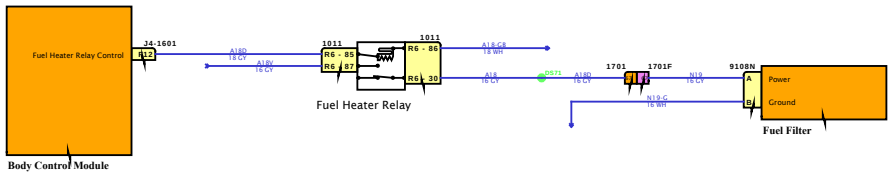

DESIGN DESCRIPTION

FEATURE CODES

SOFTWARE FEATURE CODES

NAVISTAR INC. CONFIDENTIAL PROPRIETARY

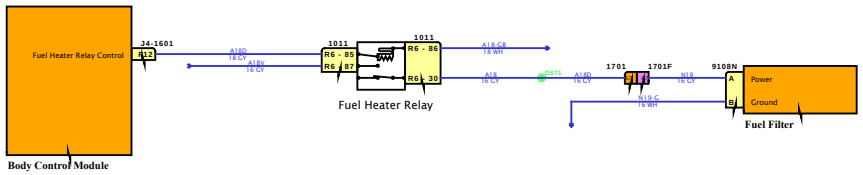

DESIGN DESCRIPTION

FEATURE CODES

SOFTWARE FEATURE CODES

NAVISTAR INC. CONFIDENTIAL PROPRIETARY

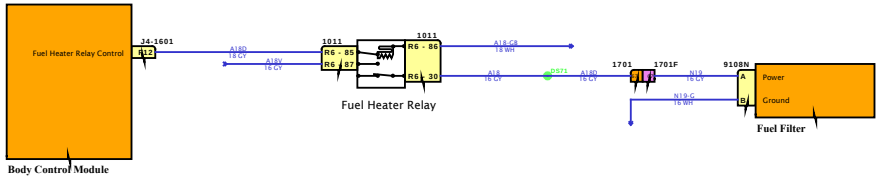

DESIGN DESCRIPTION

FEATURE CODES

SOFTWARE FEATURE CODES

NAVISTAR
NAVISTAR, INC. CONFIDENTIAL PROPRIETARY

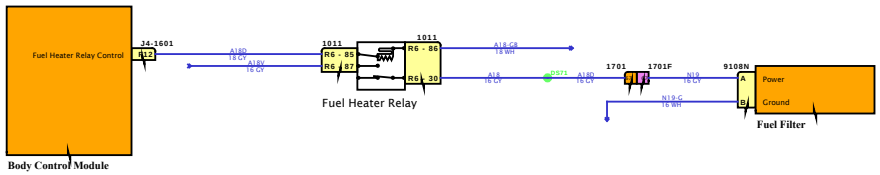

DESIGN DESCRIPTION

FEATURE CODES

SOFTWARE FEATURE CODES

NAVISTAR INC. CONFIDENTIAL PROPRIETARY

Diagram1

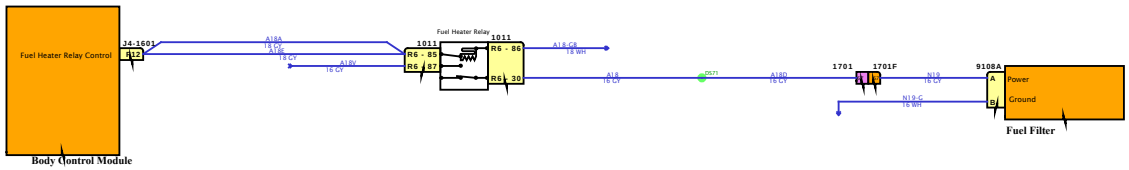

DESIGN DESCRIPTION

FEATURE CODES

SOFTWARE FEATURE CODES

NAVISTAR INC. CONFIDENTIAL PROPRIETARY

Diagram2

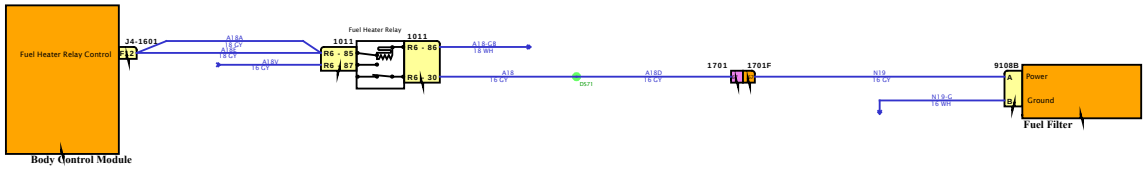

DESIGN DESCRIPTION

FEATURE CODES

SOFTWARE FEATURE CODES

NAVISTAR INC. CONFIDENTIAL PROPRIETARY

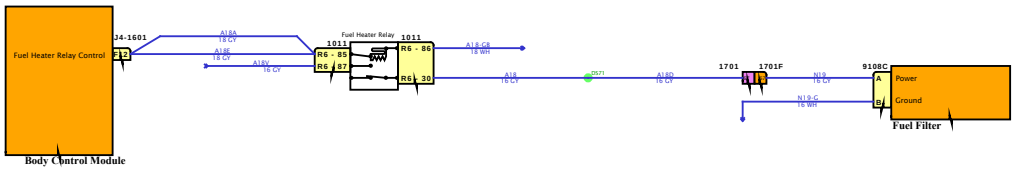

DESIGN DESCRIPTION

FEATURE CODES

SOFTWARE FEATURE CODES

NAVISTAR INC. CONFIDENTIAL PROPRIETARY

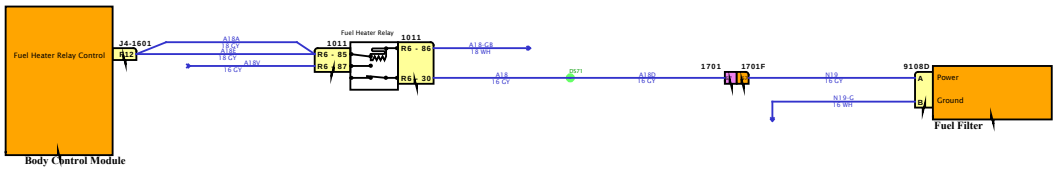

DESIGN DESCRIPTION

FEATURE CODES

SOFTWARE FEATURE CODES

NAVISTAR INC. CONFIDENTIAL PROPRIETARY

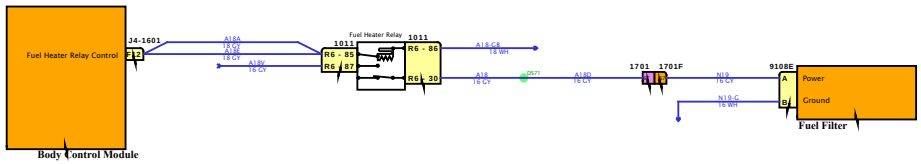

DESIGN DESCRIPTION

FEATURE CODES

SOFTWARE FEATURE CODES

NAVISTAR INC. CONFIDENTIAL PROPRIETARY

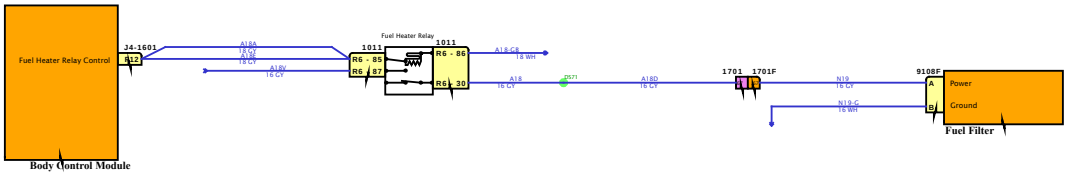

DESIGN DESCRIPTION

FEATURE CODES

SOFTWARE FEATURE CODES

NAVISTAR INC. CONFIDENTIAL PROPRIETARY

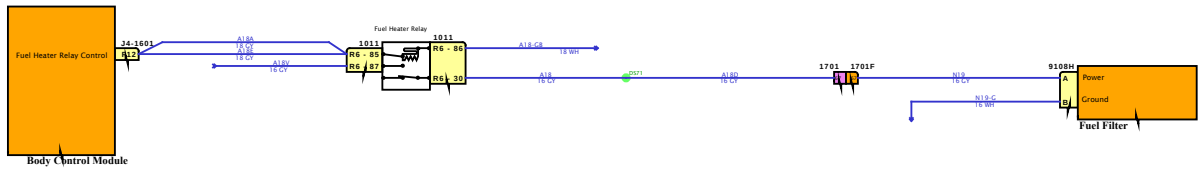

DESIGN DESCRIPTION

FEATURE CODES

SOFTWARE FEATURE CODES

NAVISTAR INC. CONFIDENTIAL PROPRIETARY

Diagram1

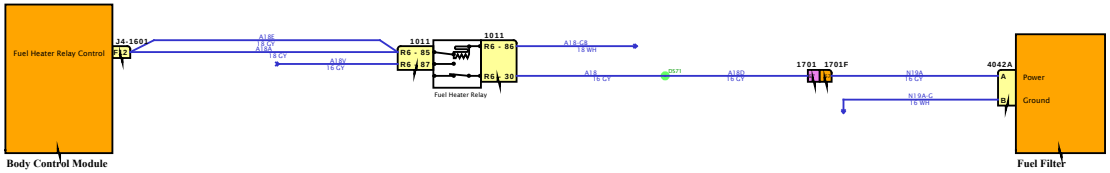

DESIGN DESCRIPTION

FEATURE CODES

SOFTWARE FEATURE CODES

NAVISTAR INC. CONFIDENTIAL PROPRIETARY

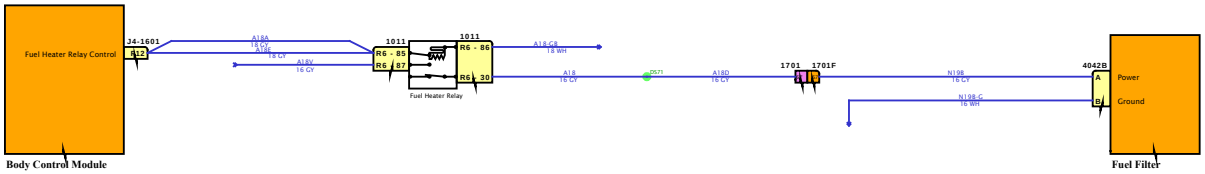

DESIGN DESCRIPTION

FEATURE CODES

SOFTWARE FEATURE CODES

NAVISTAR INC. CONFIDENTIAL PROPRIETARY

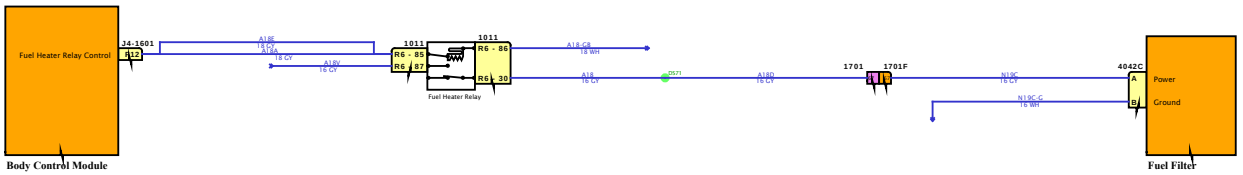

DESIGN DESCRIPTION

FEATURE CODES

SOFTWARE FEATURE CODES

NAVISTAR INC. CONFIDENTIAL PROPRIETARY

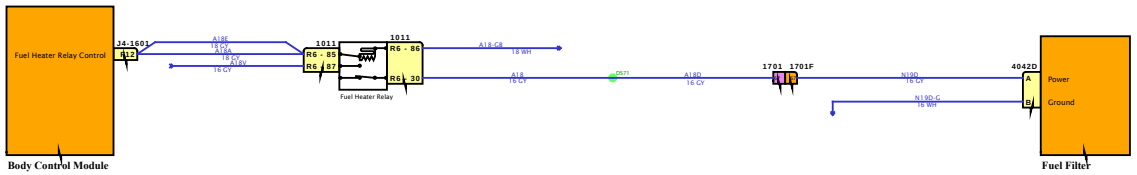

DESIGN DESCRIPTION

FEATURE CODES

SOFTWARE FEATURE CODES

NAVISTAR INC. CONFIDENTIAL PROPRIETARY

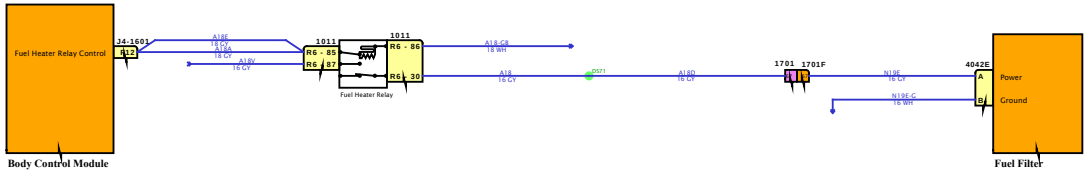

DESIGN DESCRIPTION

FEATURE CODES

SOFTWARE FEATURE CODES

NAVISTAR INC. CONFIDENTIAL PROPRIETARY

Diagram6

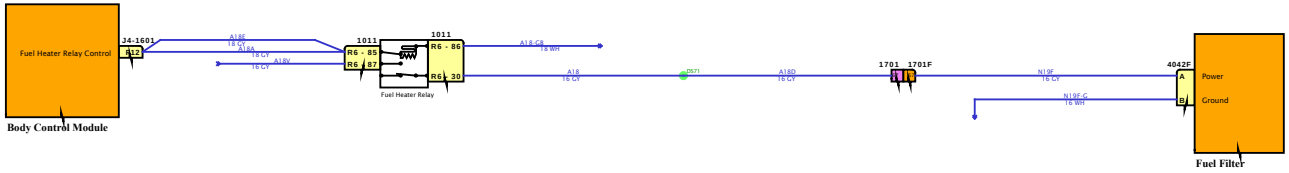

DESIGN DESCRIPTION

FEATURE CODES

SOFTWARE FEATURE CODES

NAVISTAR INC. CONFIDENTIAL PROPRIETARY

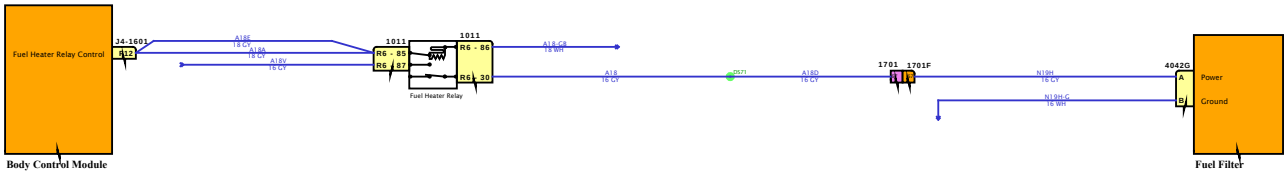

DESIGN DESCRIPTION

FEATURE CODES

SOFTWARE FEATURE CODES

NAVISTAR INC. CONFIDENTIAL PROPRIETARY

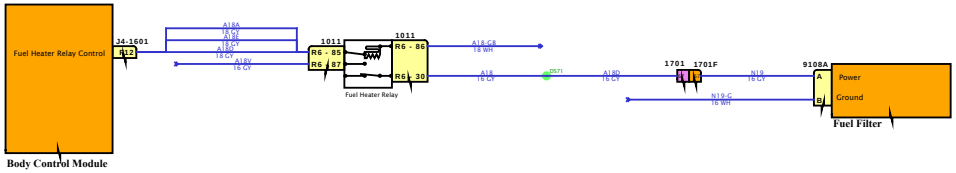

DESIGN DESCRIPTION

FEATURE CODES

SOFTWARE FEATURE CODES

NAVISTAR INC. CONFIDENTIAL PROPRIETARY

Diagram2

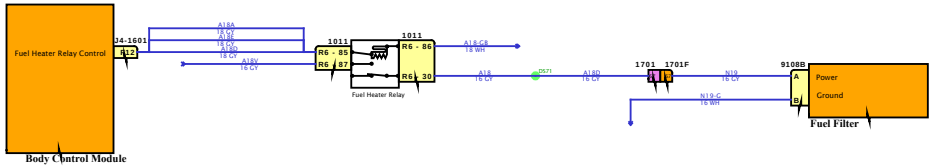

DESIGN DESCRIPTION

FEATURE CODES

SOFTWARE FEATURE CODES

NAVISTAR INC. CONFIDENTIAL PROPRIETARY

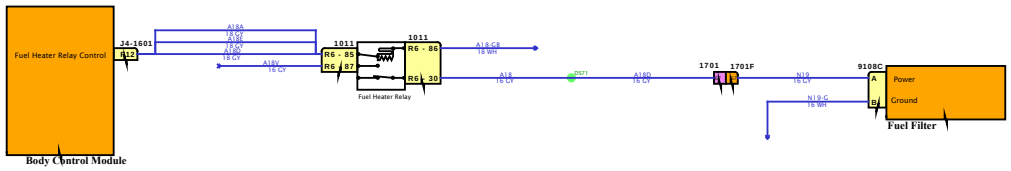

DESIGN DESCRIPTION

FEATURE CODES

SOFTWARE FEATURE CODES

NAVISTAR INC. CONFIDENTIAL PROPRIETARY

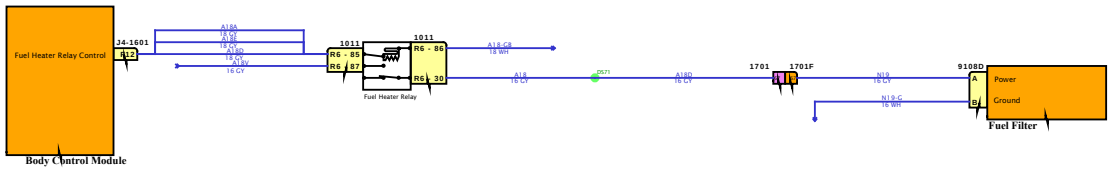

DESIGN DESCRIPTION

FEATURE CODES

SOFTWARE FEATURE CODES

NAVISTAR INC. CONFIDENTIAL PROPRIETARY

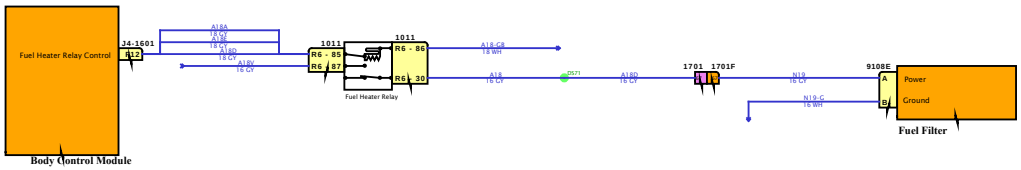

DESIGN DESCRIPTION

FEATURE CODES

SOFTWARE FEATURE CODES

NAVISTAR INC. CONFIDENTIAL PROPRIETARY

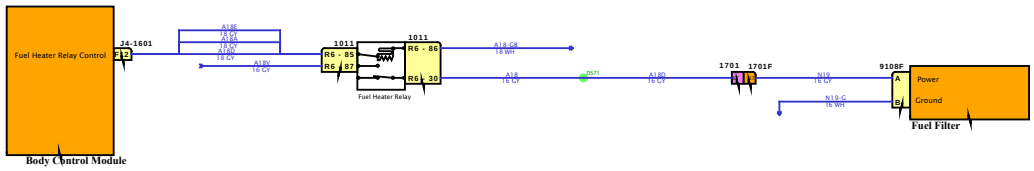

DESIGN DESCRIPTION

FEATURE CODES

SOFTWARE FEATURE CODES

NAVISTAR INC. CONFIDENTIAL PROPRIETARY

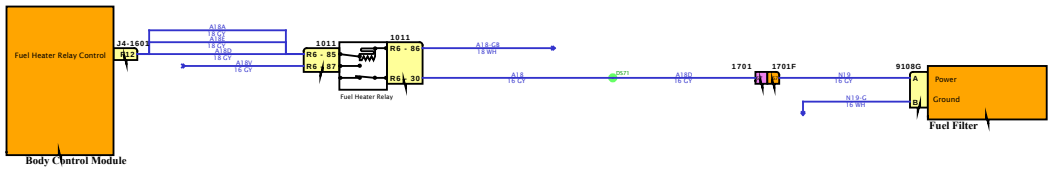

DESIGN DESCRIPTION

FEATURE CODES

SOFTWARE FEATURE CODES

NAVISTAR INC. CONFIDENTIAL PROPRIETARY

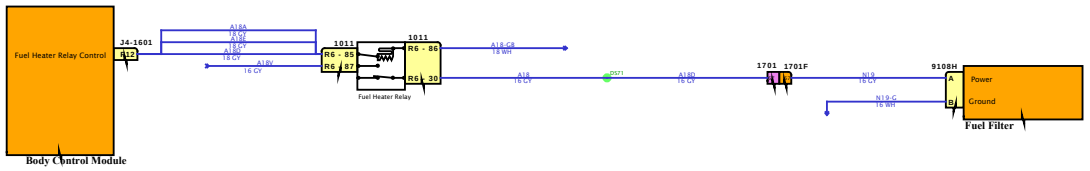

DESIGN DESCRIPTION

FEATURE CODES

SOFTWARE FEATURE CODES

NAVISTAR INC. CONFIDENTIAL PROPRIETARY

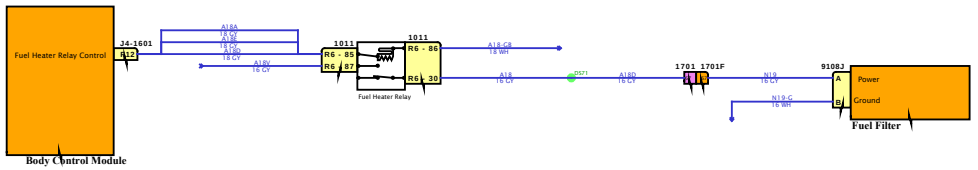

DESIGN DESCRIPTION

FEATURE CODES

SOFTWARE FEATURE CODES

NAVISTAR INC. CONFIDENTIAL PROPRIETARY

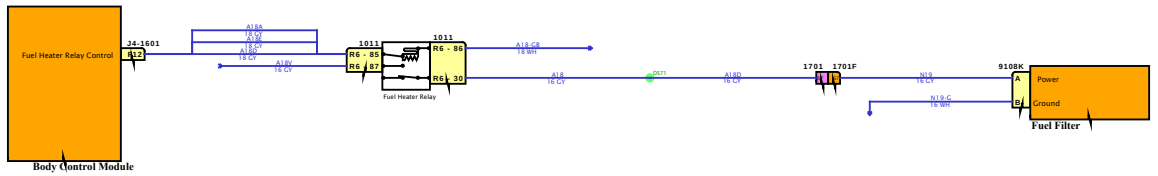

DESIGN DESCRIPTION

FEATURE CODES

SOFTWARE FEATURE CODES

NAVISTAR INC. CONFIDENTIAL PROPRIETARY

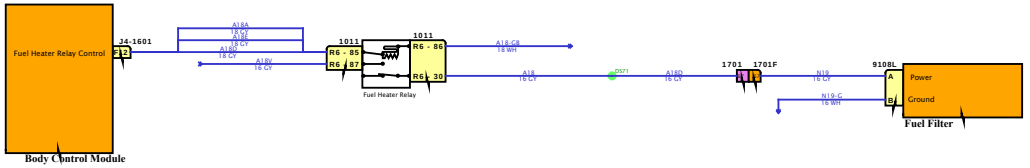

DESIGN DESCRIPTION

FEATURE CODES

SOFTWARE FEATURE CODES

NAVISTAR INC. CONFIDENTIAL PROPRIETARY

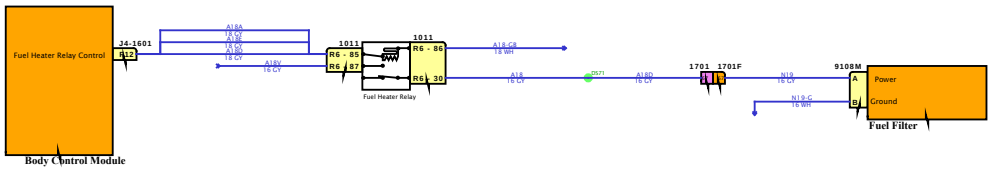

DESIGN DESCRIPTION

FEATURE CODES

SOFTWARE FEATURE CODES

NAVISTAR INC. CONFIDENTIAL PROPRIETARY

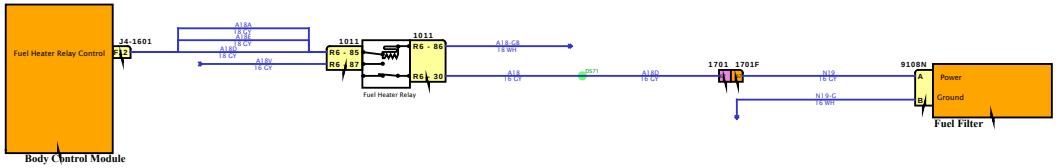

DESIGN DESCRIPTION

FEATURE CODES

SOFTWARE FEATURE CODES

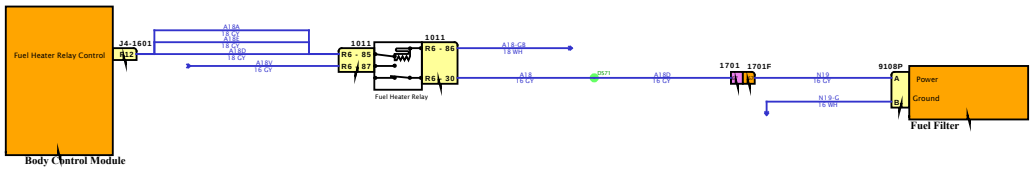

DESIGN DESCRIPTION

FEATURE CODES

SOFTWARE FEATURE CODES

NAVISTAR INC. CONFIDENTIAL PROPRIETARY

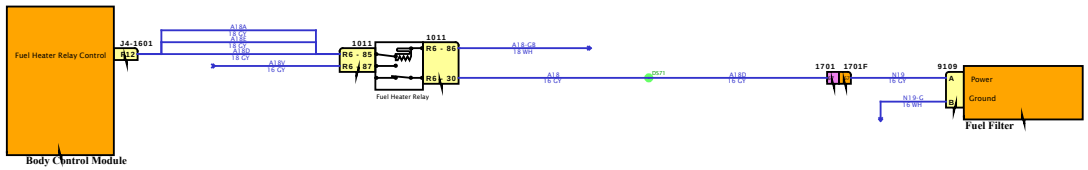

DESIGN DESCRIPTION

FEATURE CODES

SOFTWARE FEATURE CODES

NAVISTAR INC. CONFIDENTIAL PROPRIETARY

Diagram1

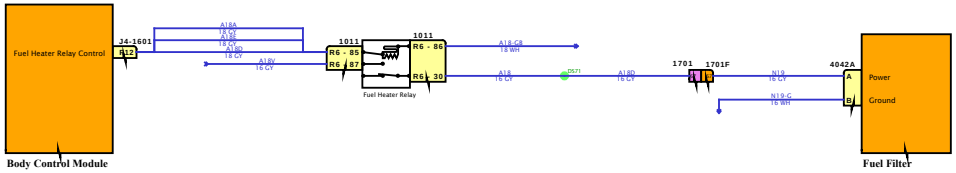

DESIGN DESCRIPTION

FEATURE CODES

SOFTWARE FEATURE CODES

NAVISTAR INC. CONFIDENTIAL PROPRIETARY

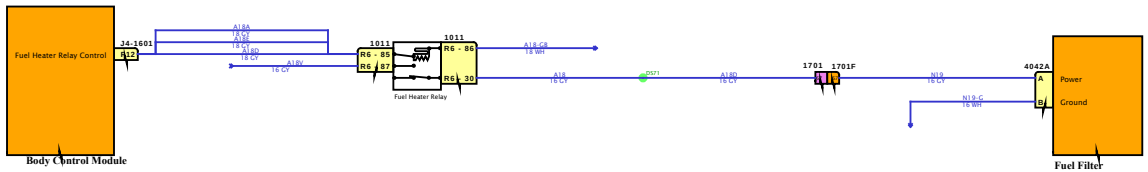

DESIGN DESCRIPTION

FEATURE CODES

SOFTWARE FEATURE CODES

NAVISTAR INC. CONFIDENTIAL PROPRIETARY

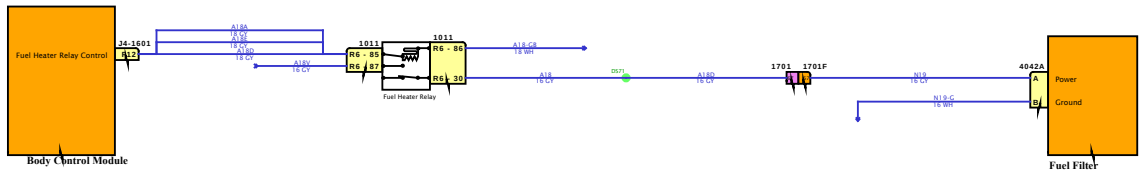

DESIGN DESCRIPTION

FEATURE CODES

SOFTWARE FEATURE CODES

NAVISTAR INC. CONFIDENTIAL PROPRIETARY

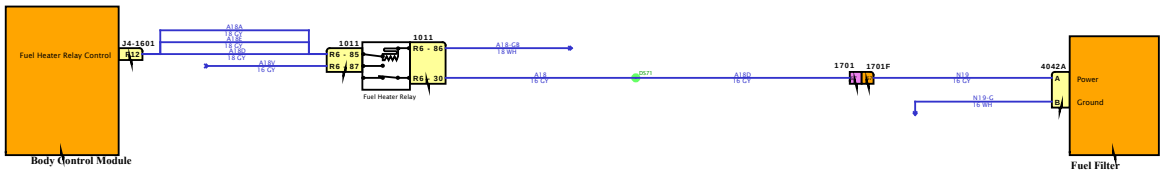

DESIGN DESCRIPTION

FEATURE CODES

SOFTWARE FEATURE CODES

NAVISTAR INC. CONFIDENTIAL PROPRIETARY

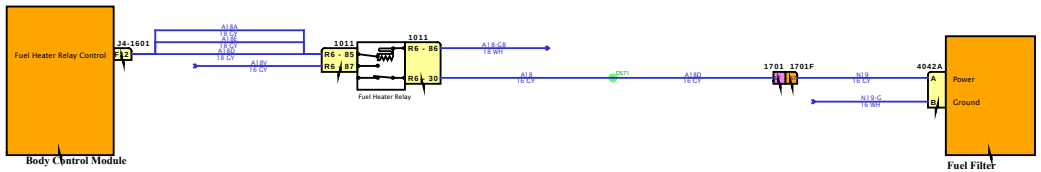

DESIGN DESCRIPTION

FEATURE CODES

SOFTWARE FEATURE CODES

NAVISTAR INC. CONFIDENTIAL PROPRIETARY



DESIGN DESCRIPTION

FEATURE CODES

SOFTWARE FEATURE CODES

NAVISTAR INC. CONFIDENTIAL PROPRIETARY

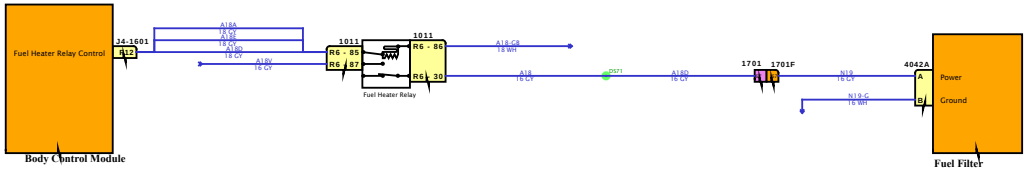

DESIGN DESCRIPTION

FEATURE CODES

SOFTWARE FEATURE CODES

NAVISTAR INC. CONFIDENTIAL PROPRIETARY

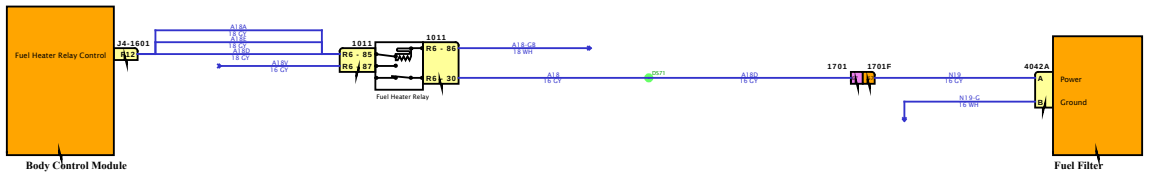

DESIGN DESCRIPTION

FEATURE CODES

SOFTWARE FEATURE CODES

NAVISTAR INC. CONFIDENTIAL PROPRIETARY

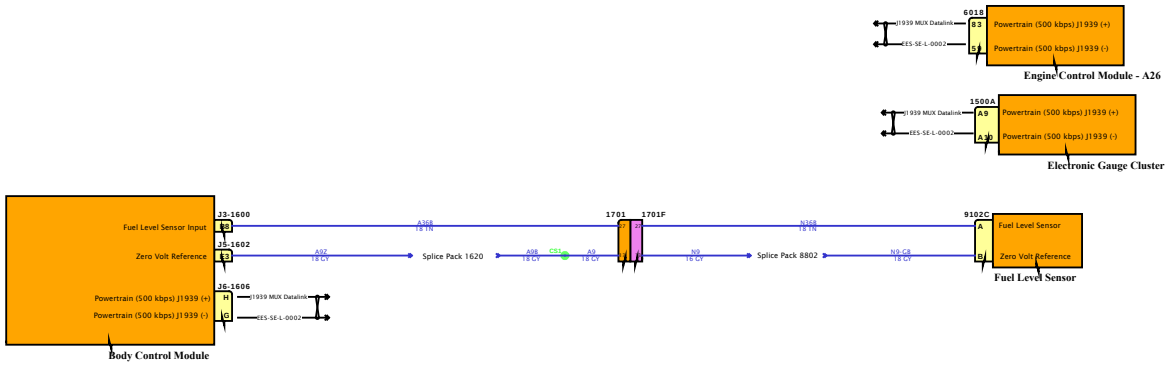

DESIGN DESCRIPTION

FEATURE CODES

SOFTWARE FEATURE CODES

NAVISTAR
NAVISTAR, INC. CONFIDENTIAL PROPRIETARY

Diagram2

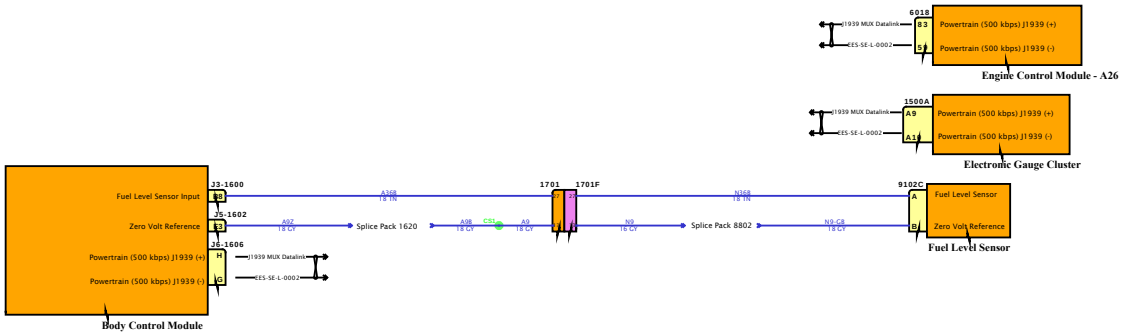

DESIGN DESCRIPTION

FEATURE CODES

SOFTWARE FEATURE CODES

NAVISTAR INC. CONFIDENTIAL PROPRIETARY

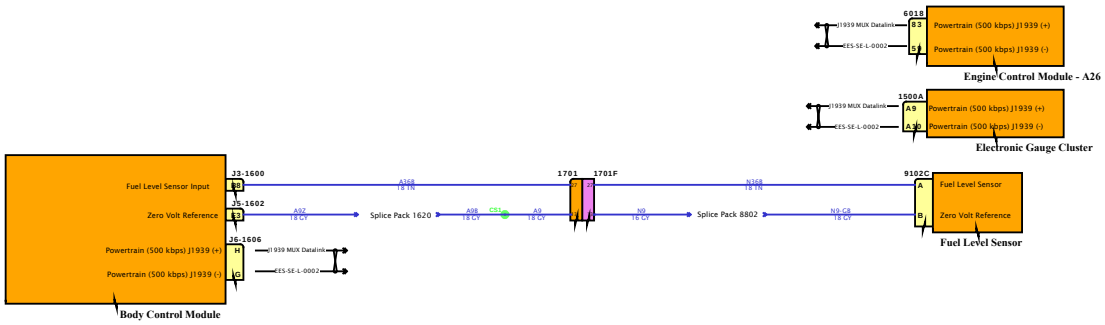

DESIGN DESCRIPTION

FEATURE CODES

SOFTWARE FEATURE CODES

NAVISTAR INC. CONFIDENTIAL PROPRIETARY

DESIGN DESCRIPTION

FEATURE CODES

SOFTWARE FEATURE CODES

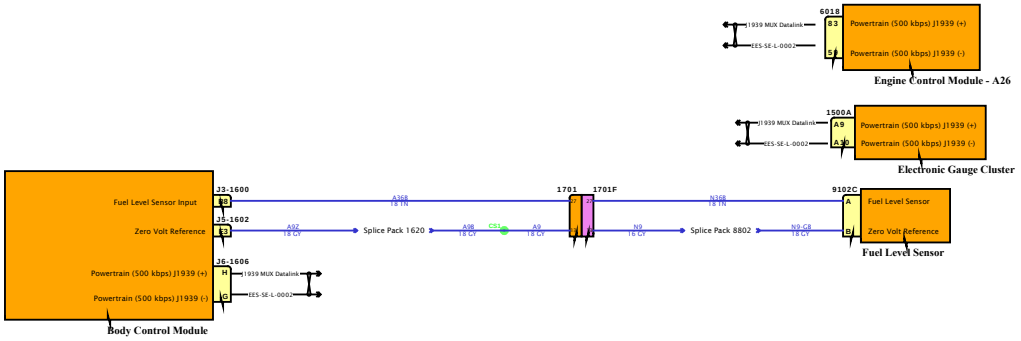

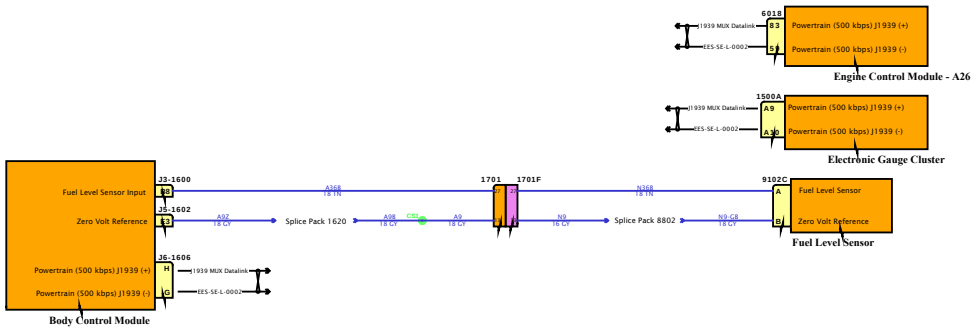

DESIGN DESCRIPTION

FEATURE CODES

SOFTWARE FEATURE CODES

NAVISTAR
NAVISTAR, INC. CONFIDENTIAL PROPRIETARY

Diagram1

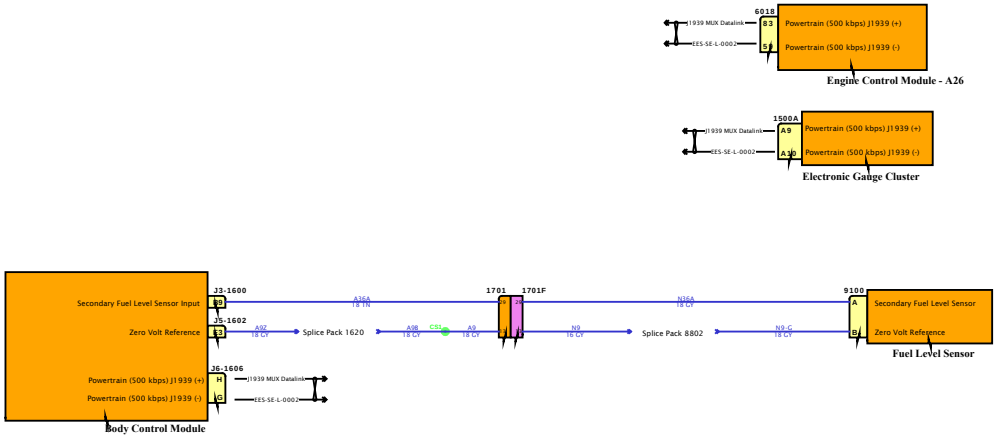

DESIGN DESCRIPTION

FEATURE CODES

SOFTWARE FEATURE CODES

NAVISTAR INC. CONFIDENTIAL PROPRIETARY

Diagram2

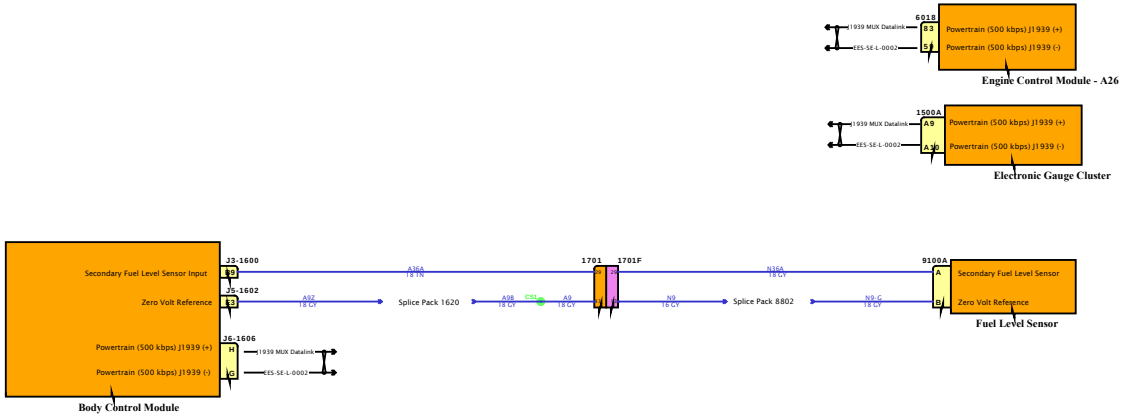

DESIGN DESCRIPTION

FEATURE CODES

SOFTWARE FEATURE CODES

NAVISTAR
NAVISTAR, INC. CONFIDENTIAL PROPRIETARY

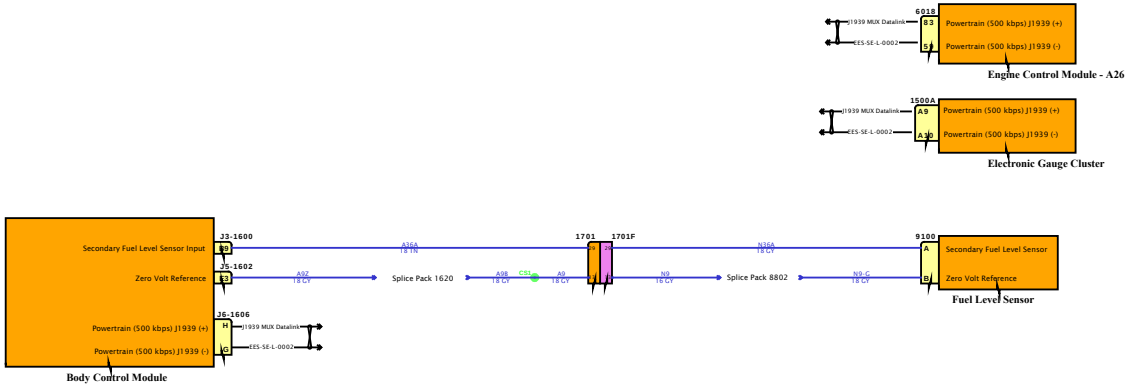

DESIGN DESCRIPTION

FEATURE CODES

SOFTWARE FEATURE CODES

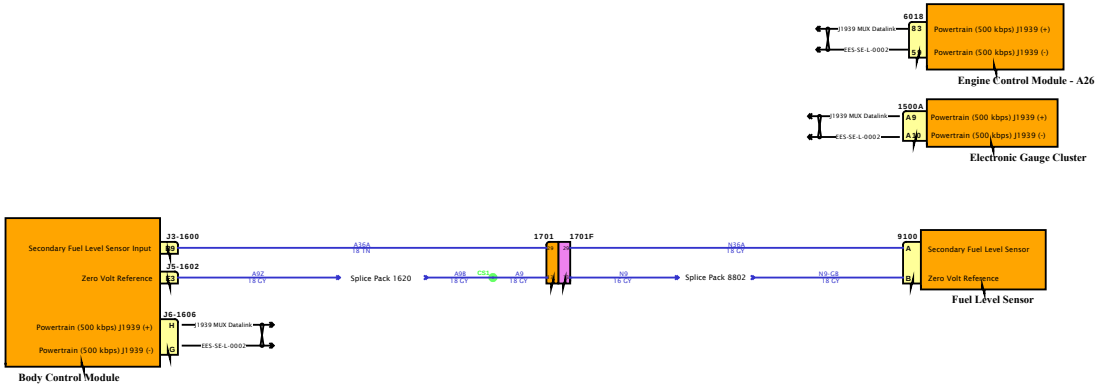

DESIGN DESCRIPTION

FEATURE CODES

SOFTWARE FEATURE CODES

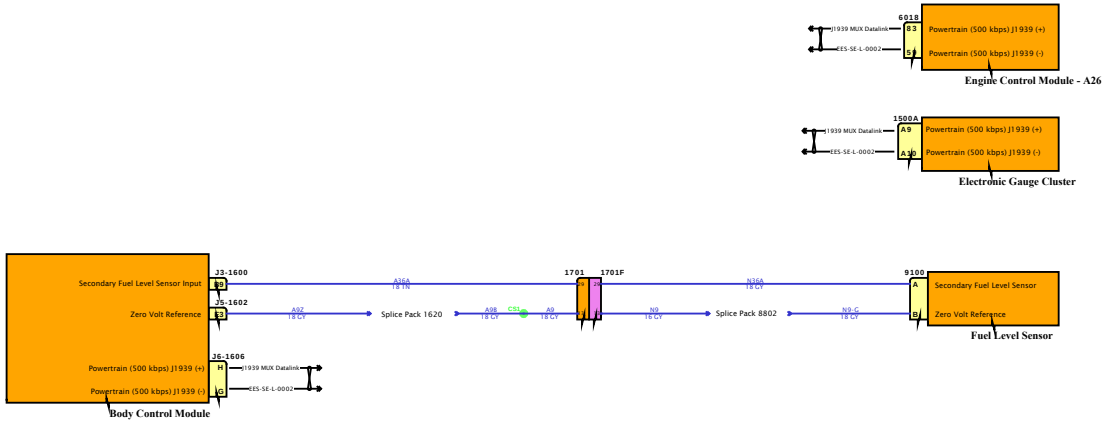

DESIGN DESCRIPTION

FEATURE CODES

SOFTWARE FEATURE CODES

NAVISTAR INC. CONFIDENTIAL PROPRIETARY

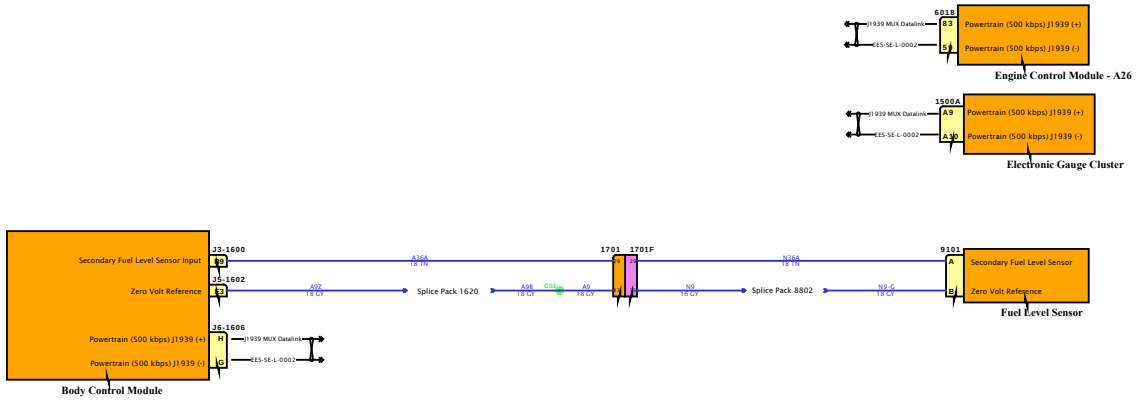

DESIGN DESCRIPTION

FEATURE CODES

SOFTWARE FEATURE CODES

NAVISTAR INC. CONFIDENTIAL PROPRIETARY

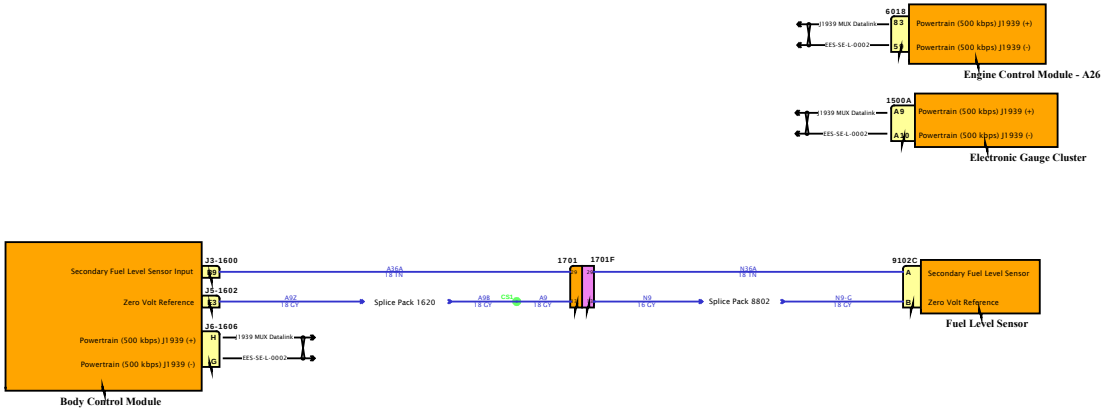

DESIGN DESCRIPTION

FEATURE CODES

SOFTWARE FEATURE CODES

NAVISTAR
NAVISTAR, INC. CONFIDENTIAL PROPRIETARY

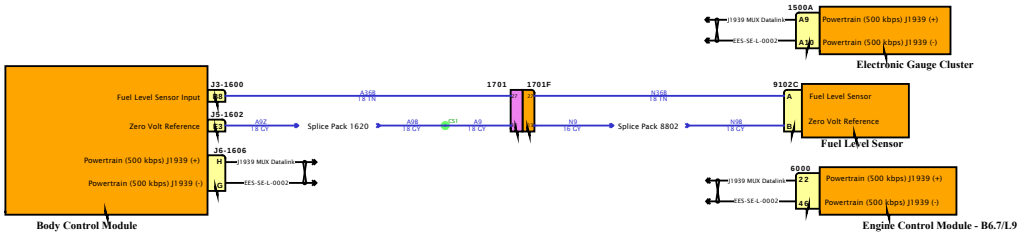

DESIGN DESCRIPTION

FEATURE CODES

SOFTWARE FEATURE CODES

NAVISTAR
NAVISTAR, INC. CONFIDENTIAL PROPRIETARY

DESIGN DESCRIPTION

FEATURE CODES

SOFTWARE FEATURE CODES

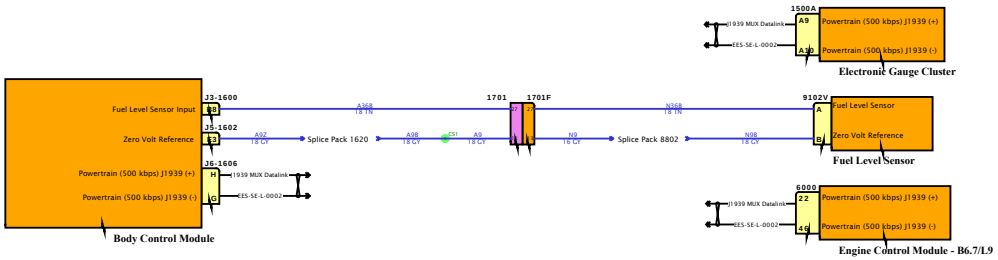

NAVISTAR
NAVISTAR, INC. CONFIDENTIAL PROPRIETARY

Diagram3

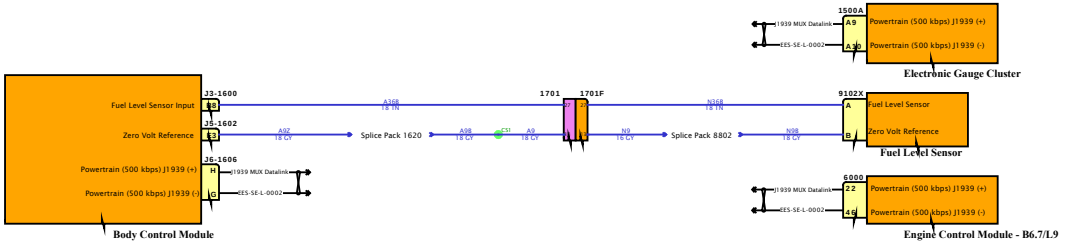

DESIGN DESCRIPTION

FEATURE CODES

SOFTWARE FEATURE CODES

NAVISTAR INC. CONFIDENTIAL PROPRIETARY

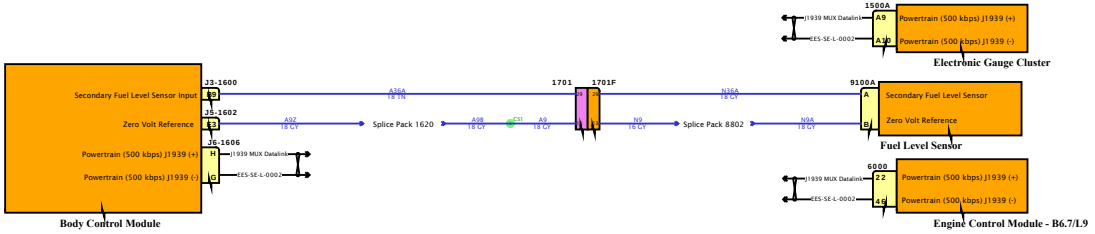

DESIGN DESCRIPTION

FEATURE CODES

SOFTWARE FEATURE CODES

NAVISTAR
NAVISTAR, INC. CONFIDENTIAL PROPRIETARY

DESIGN DESCRIPTION

FEATURE CODES

SOFTWARE FEATURE CODES

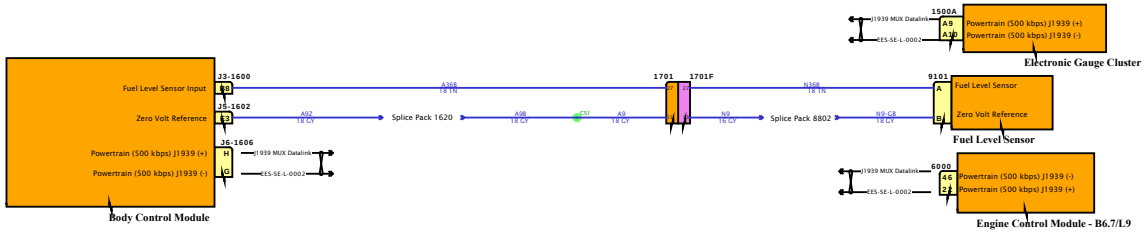

DESIGN DESCRIPTION

FEATURE CODES

SOFTWARE FEATURE CODES

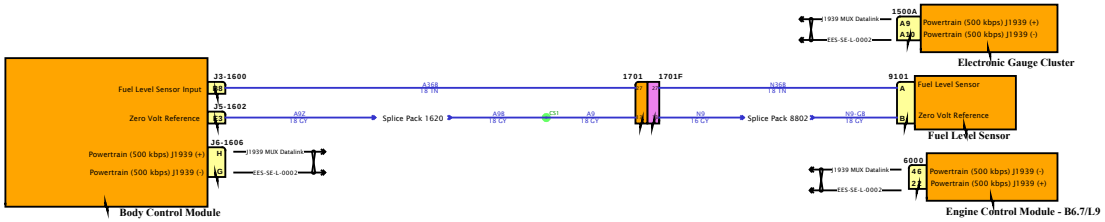

Diagram3

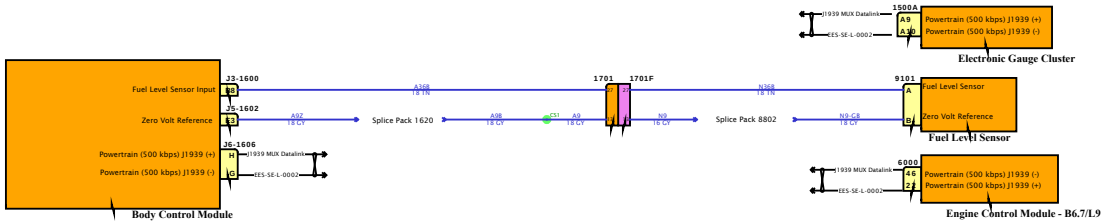

DESIGN DESCRIPTION

FEATURE CODES

SOFTWARE FEATURE CODES

NAVISTAR INC. CONFIDENTIAL PROPRIETARY

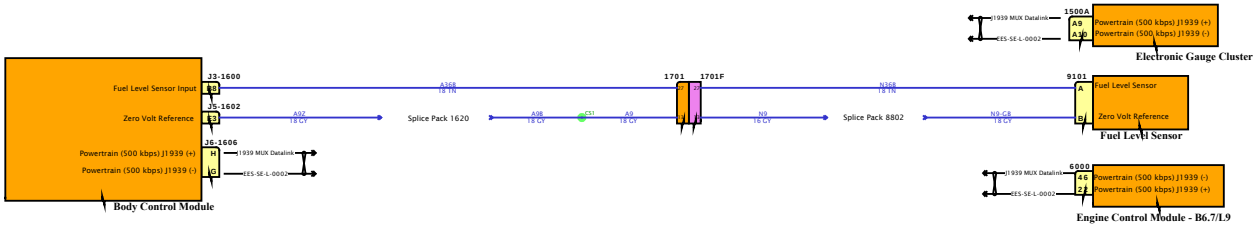

DESIGN DESCRIPTION

FEATURE CODES

SOFTWARE FEATURE CODES

DESIGN DESCRIPTION

FEATURE CODES

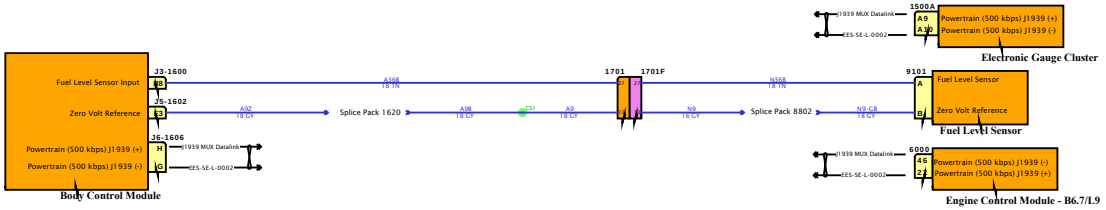

SOFTWARE FEATURE CODES

DESIGN DESCRIPTION

FEATURE CODES

SOFTWARE FEATURE CODES

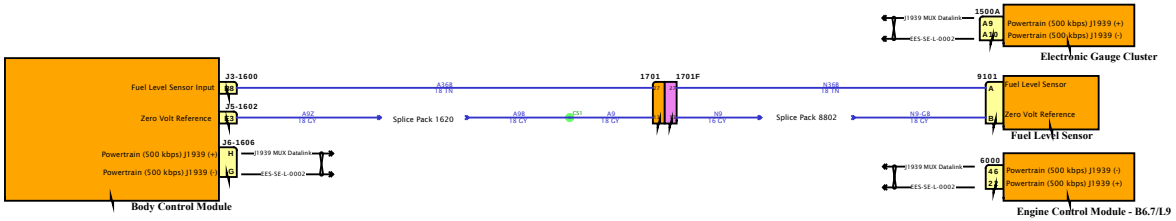

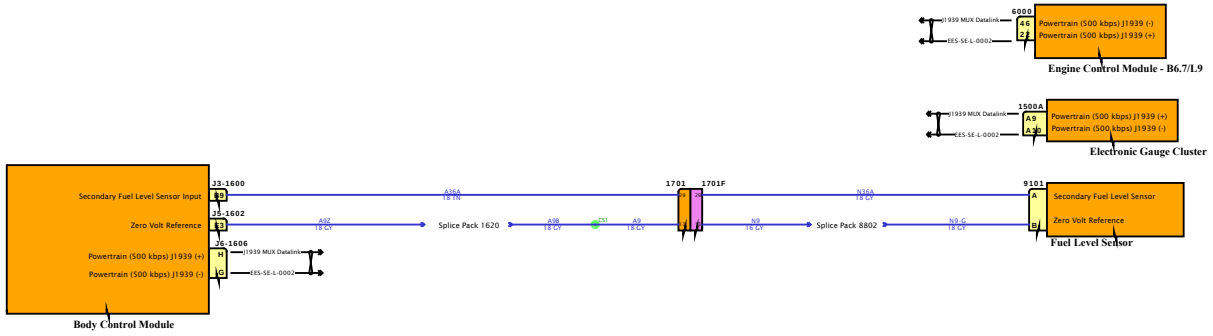

DESIGN DESCRIPTION

FEATURE CODES

SOFTWARE FEATURE CODES

DESIGN DESCRIPTION

FEATURE CODES

SOFTWARE FEATURE CODES

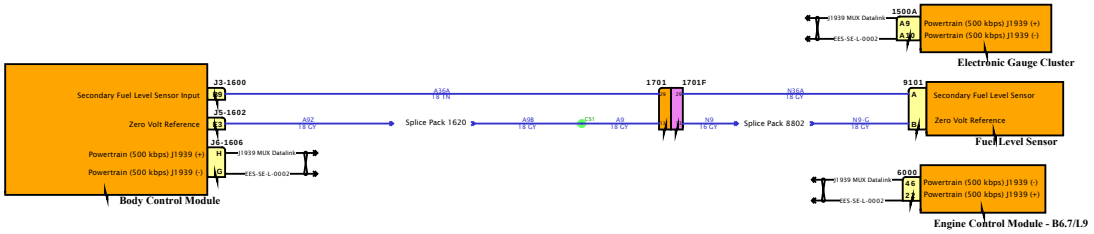

DESIGN DESCRIPTION

FEATURE CODES

SOFTWARE FEATURE CODES

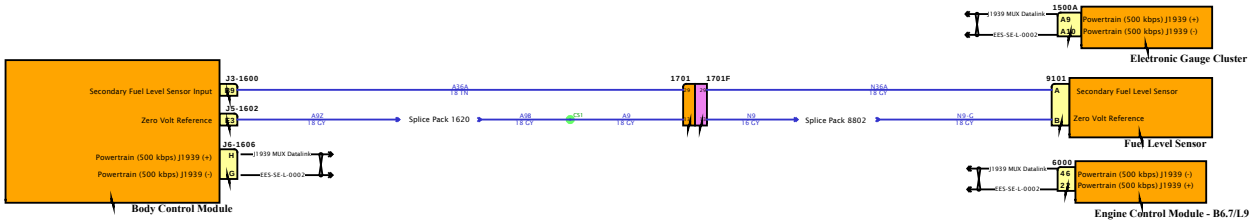

NAVISTAR
NAVISTAR, INC. CONFIDENTIAL PROPRIETARY

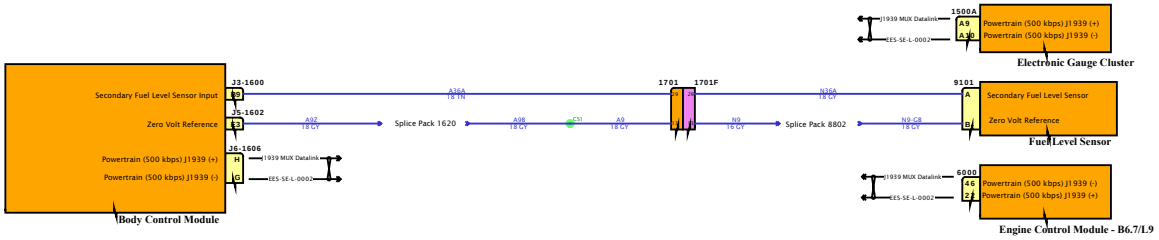

DESIGN DESCRIPTION

FEATURE CODES

SOFTWARE FEATURE CODES

NAVISTAR INC. CONFIDENTIAL PROPRIETARY

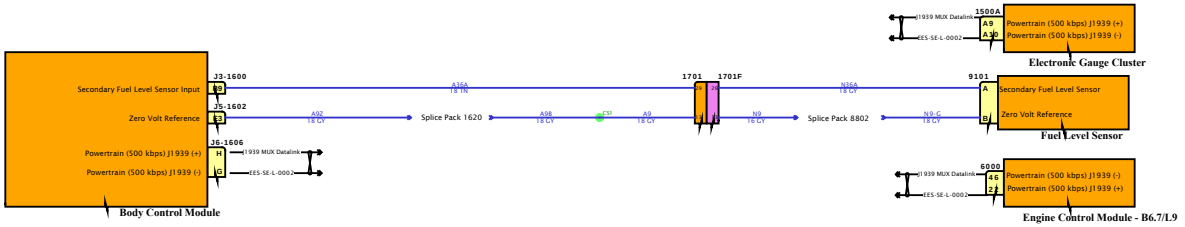

DESIGN DESCRIPTION

FEATURE CODES

SOFTWARE FEATURE CODES

NAVISTAR INC. CONFIDENTIAL PROPRIETARY

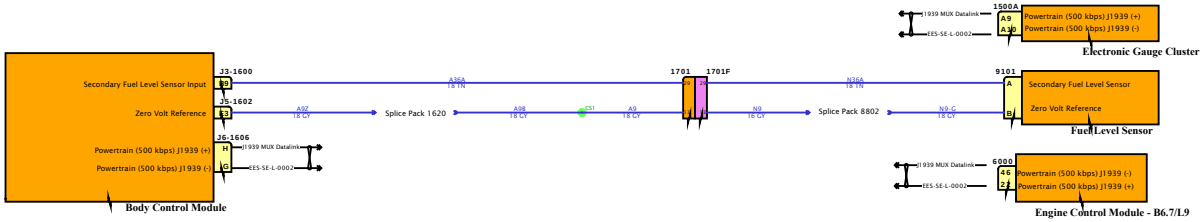

DESIGN DESCRIPTION

FEATURE CODES

SOFTWARE FEATURE CODES

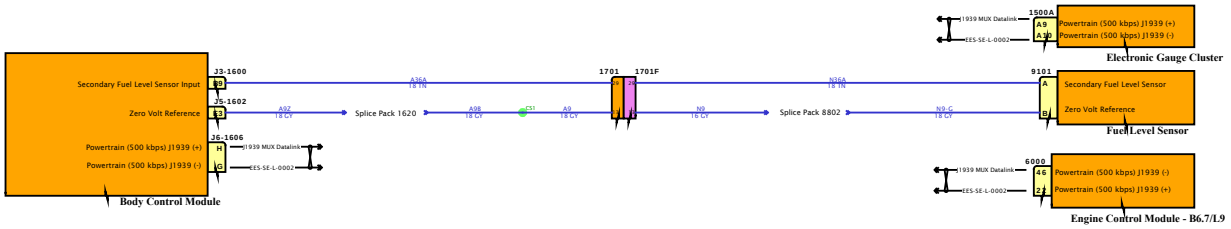

DESIGN DESCRIPTION

FEATURE CODES

SOFTWARE FEATURE CODES

NAVISTAR INC. CONFIDENTIAL PROPRIETARY

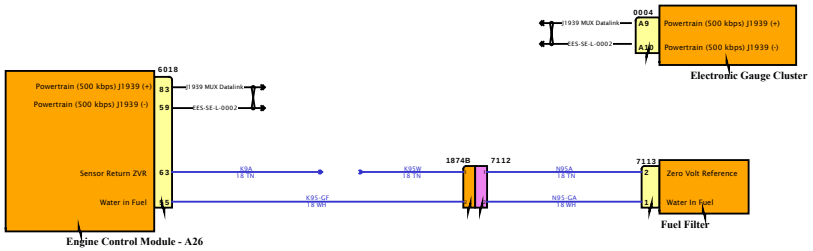

DESIGN DESCRIPTION

FEATURE CODES

SOFTWARE FEATURE CODES

NAVISTAR
NAVISTAR, INC. CONFIDENTIAL PROPRIETARY

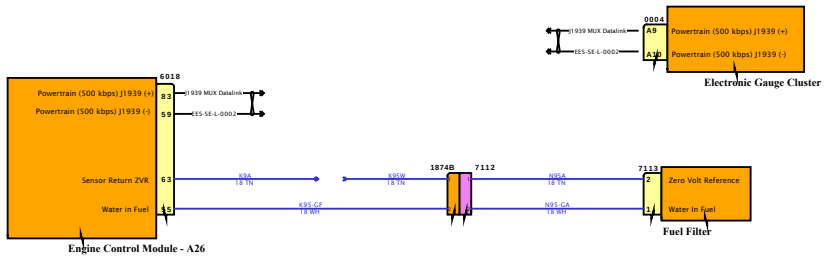

DESIGN DESCRIPTION

FEATURE CODES

SOFTWARE FEATURE CODES

NAVISTAR INC. CONFIDENTIAL PROPRIETARY

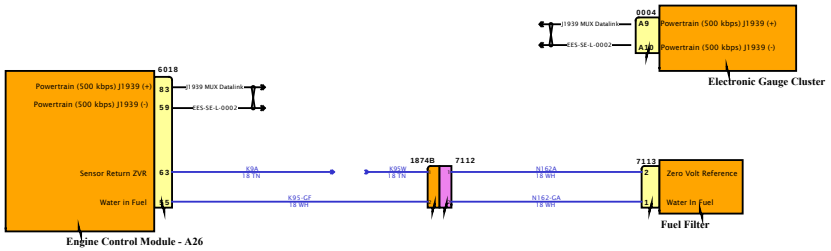

DESIGN DESCRIPTION

FEATURE CODES

SOFTWARE FEATURE CODES

NAVISTAR
NAVISTAR, INC. CONFIDENTIAL PROPRIETARY

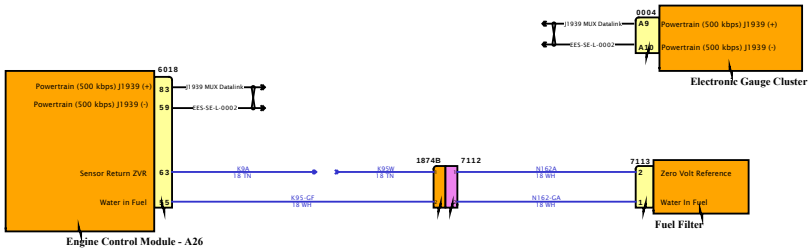

DESIGN DESCRIPTION

FEATURE CODES

SOFTWARE FEATURE CODES

NAVISTAR INC. CONFIDENTIAL PROPRIETARY

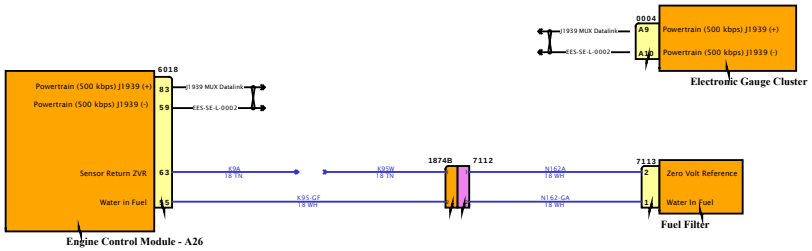

DESIGN DESCRIPTION

FEATURE CODES

SOFTWARE FEATURE CODES

NAVISTAR INC. CONFIDENTIAL PROPRIETARY

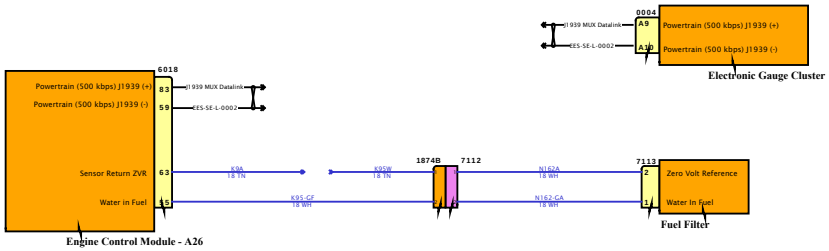

DESIGN DESCRIPTION

FEATURE CODES

SOFTWARE FEATURE CODES

NAVISTAR
NAVISTAR, INC. CONFIDENTIAL PROPRIETARY

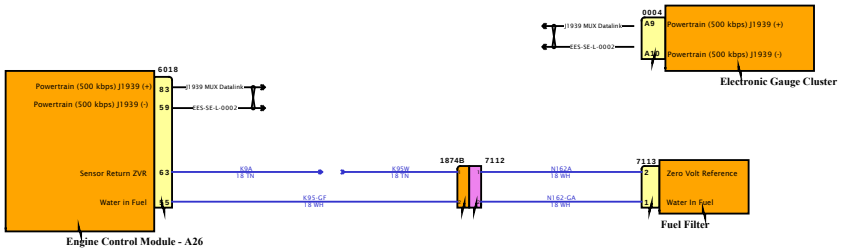

DESIGN DESCRIPTION

FEATURE CODES

SOFTWARE FEATURE CODES

NAVISTAR
NAVISTAR, INC. CONFIDENTIAL PROPRIETARY

Diagram8

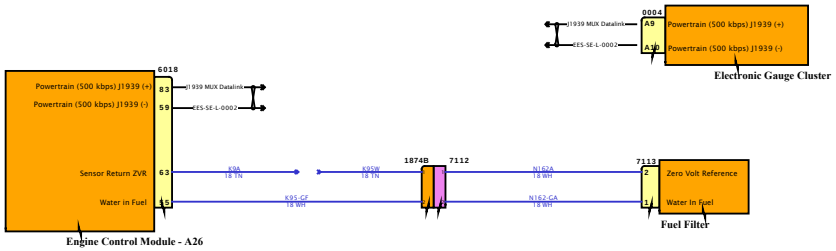

DESIGN DESCRIPTION

FEATURE CODES

SOFTWARE FEATURE CODES

NAVISTAR
NAVISTAR, INC. CONFIDENTIAL PROPRIETARY

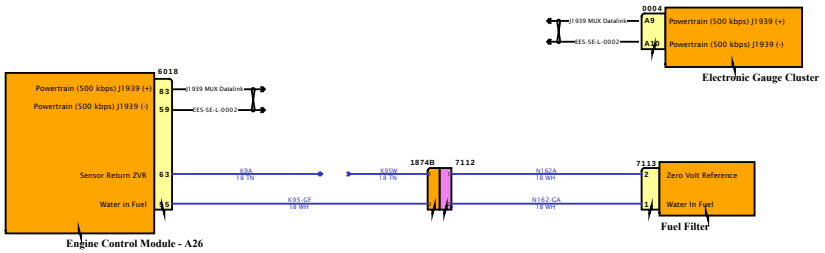

DESIGN DESCRIPTION

FEATURE CODES

SOFTWARE FEATURE CODES

NAVISTAR INC. CONFIDENTIAL PROPRIETARY

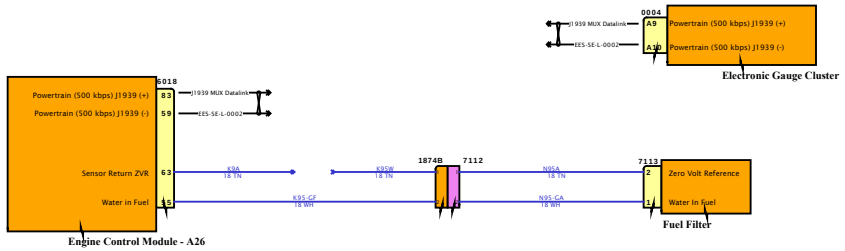

DESIGN DESCRIPTION

FEATURE CODES

SOFTWARE FEATURE CODES

NAVISTAR
NAVISTAR, INC. CONFIDENTIAL PROPRIETARY

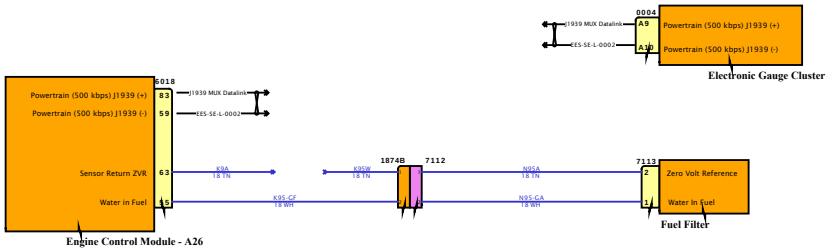

DESIGN DESCRIPTION

FEATURE CODES

SOFTWARE FEATURE CODES

NAVISTAR INC. CONFIDENTIAL PROPRIETARY

Diagram3

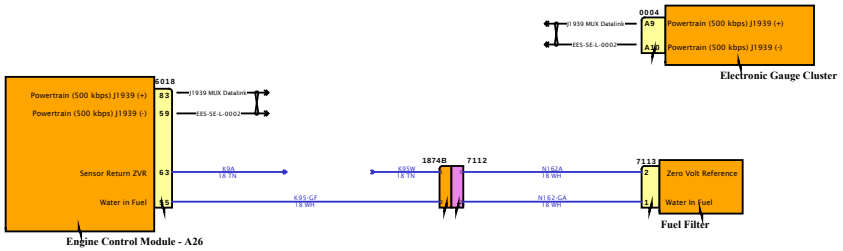

DESIGN DESCRIPTION

FEATURE CODES

SOFTWARE FEATURE CODES

NAVISTAR
NAVISTAR, INC. CONFIDENTIAL PROPRIETARY

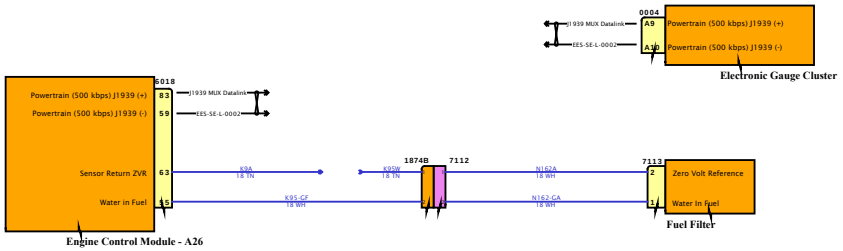

DESIGN DESCRIPTION

FEATURE CODES

SOFTWARE FEATURE CODES

NAVISTAR
NAVISTAR, INC. CONFIDENTIAL PROPRIETARY

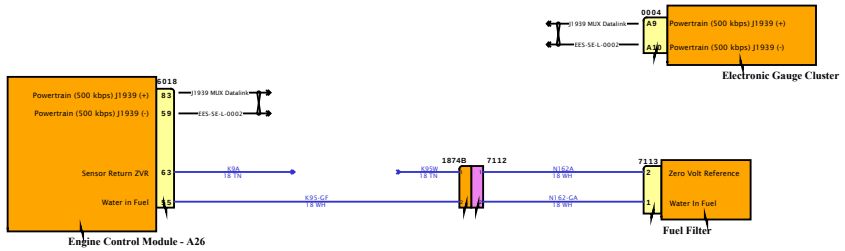

DESIGN DESCRIPTION

FEATURE CODES

SOFTWARE FEATURE CODES

NAVISTAR INC. CONFIDENTIAL PROPRIETARY

Diagram6

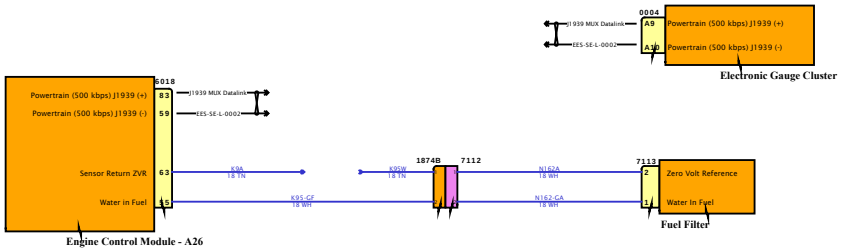

DESIGN DESCRIPTION

FEATURE CODES

SOFTWARE FEATURE CODES

NAVISTAR
NAVISTAR, INC. CONFIDENTIAL PROPRIETARY

Diagram7

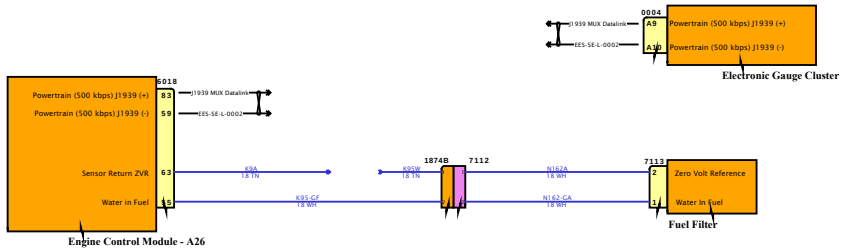

DESIGN DESCRIPTION

FEATURE CODES

SOFTWARE FEATURE CODES

NAVISTAR
NAVISTAR, INC. CONFIDENTIAL PROPRIETARY

DESIGN DESCRIPTION

FEATURE CODES

SOFTWARE FEATURE CODES

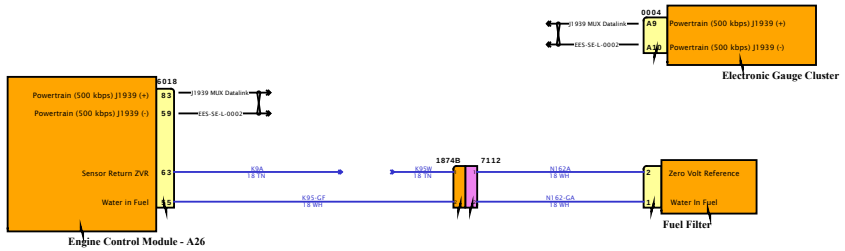

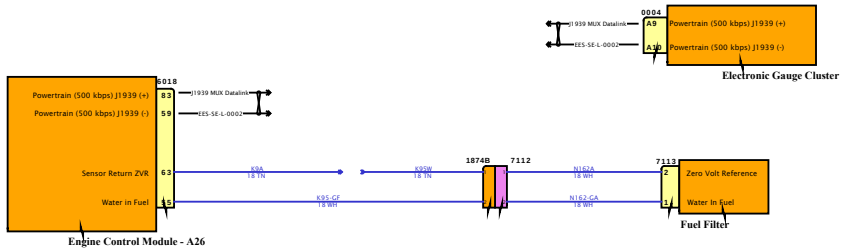

DESIGN DESCRIPTION

FEATURE CODES

SOFTWARE FEATURE CODES

NAVISTAR
NAVISTAR, INC. CONFIDENTIAL PROPRIETARY

Diagram1

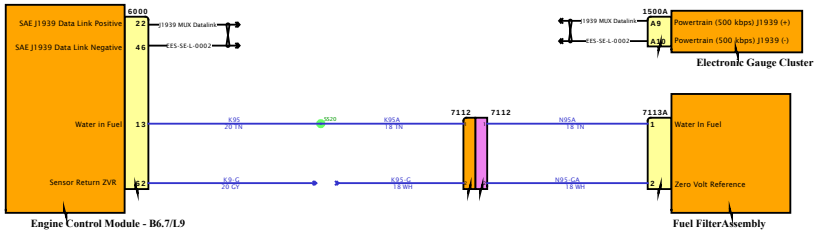

DESIGN DESCRIPTION

FEATURE CODES

SOFTWARE FEATURE CODES

NAVISTAR INC. CONFIDENTIAL PROPRIETARY

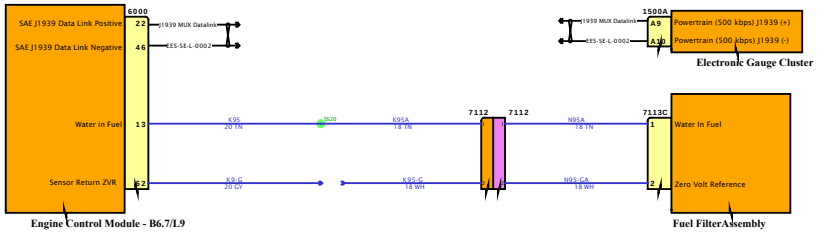

DESIGN DESCRIPTION

FEATURE CODES

SOFTWARE FEATURE CODES

NAVISTAR INC. CONFIDENTIAL PROPRIETARY

Diagram3

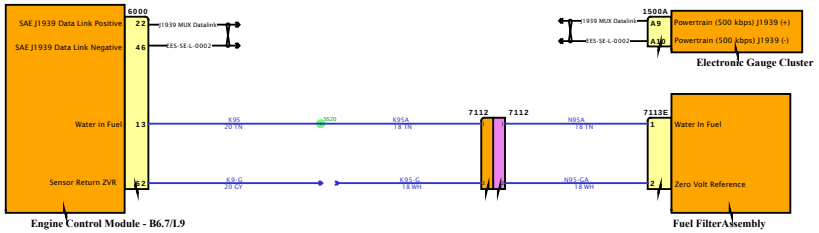

DESIGN DESCRIPTION

FEATURE CODES

SOFTWARE FEATURE CODES

NAVISTAR INC. CONFIDENTIAL PROPRIETARY

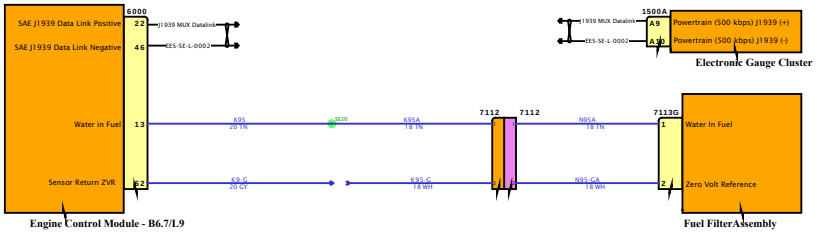

DESIGN DESCRIPTION

FEATURE CODES

SOFTWARE FEATURE CODES

NAVISTAR INC. CONFIDENTIAL PROPRIETARY

Diagram5

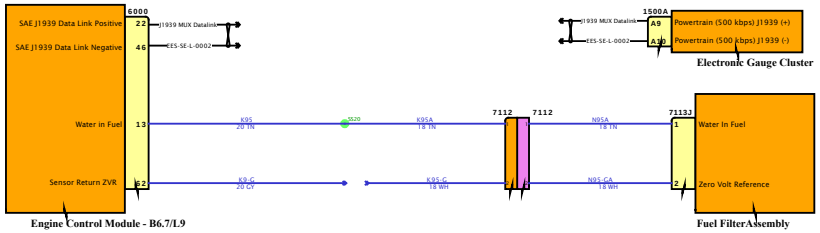

DESIGN DESCRIPTION

FEATURE CODES

SOFTWARE FEATURE CODES

Diagram6

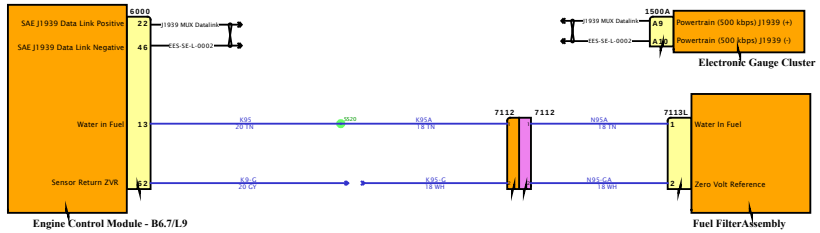

DESIGN DESCRIPTION

FEATURE CODES

SOFTWARE FEATURE CODES

NAVISTAR INC. CONFIDENTIAL PROPRIETARY

Diagram7

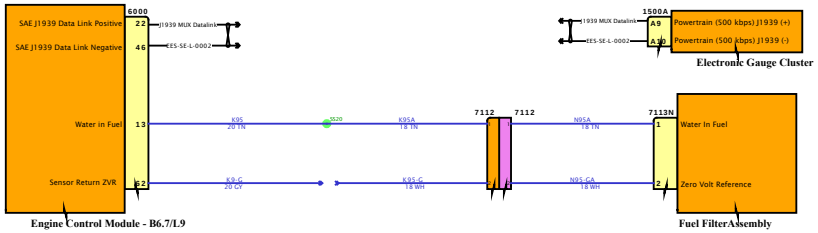

DESIGN DESCRIPTION

FEATURE CODES

SOFTWARE FEATURE CODES

NAVISTAR INC. CONFIDENTIAL PROPRIETARY

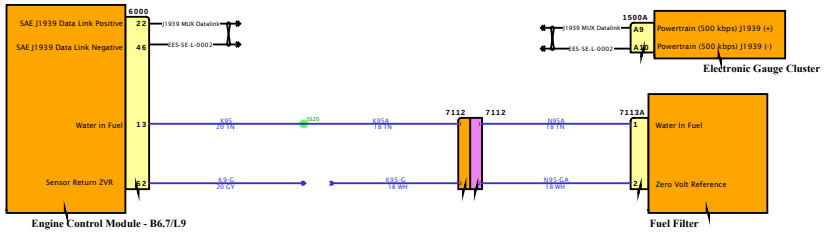

DESIGN DESCRIPTION

FEATURE CODES

SOFTWARE FEATURE CODES

NAVISTAR
NAVISTAR, INC. CONFIDENTIAL PROPRIETARY

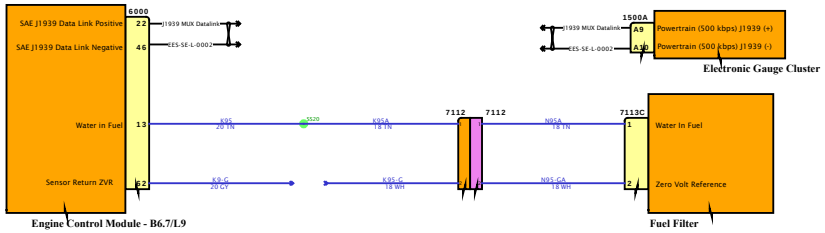

DESIGN DESCRIPTION

FEATURE CODES

SOFTWARE FEATURE CODES

NAVISTAR
NAVISTAR, INC. CONFIDENTIAL PROPRIETARY

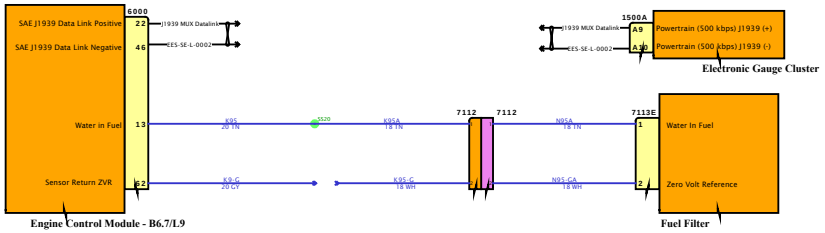

DESIGN DESCRIPTION

FEATURE CODES

SOFTWARE FEATURE CODES

NAVISTAR
NAVISTAR, INC. CONFIDENTIAL PROPRIETARY

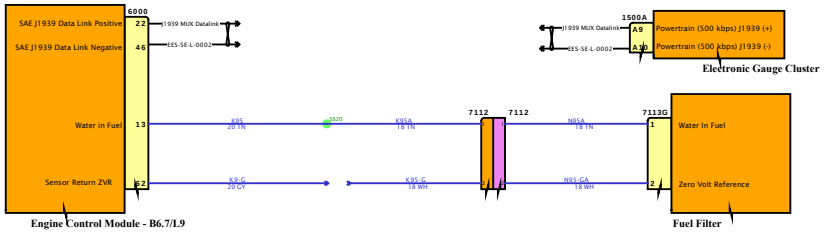

DESIGN DESCRIPTION

FEATURE CODES

SOFTWARE FEATURE CODES

NAVISTAR INC. CONFIDENTIAL PROPRIETARY

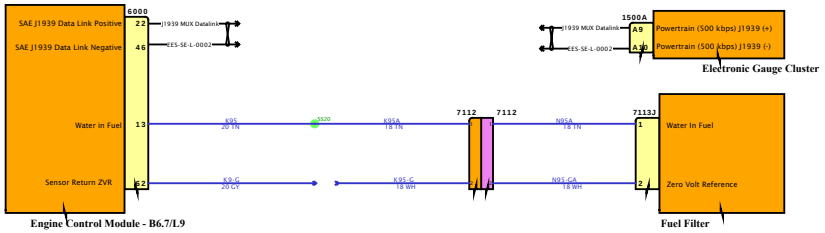

DESIGN DESCRIPTION

FEATURE CODES

SOFTWARE FEATURE CODES

NAVISTAR
NAVISTAR, INC. CONFIDENTIAL PROPRIETARY

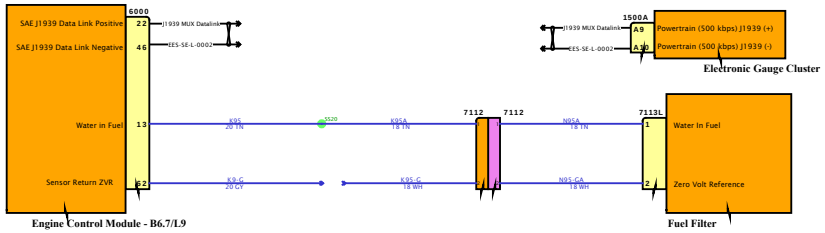

DESIGN DESCRIPTION

FEATURE CODES

SOFTWARE FEATURE CODES

NAVISTAR
NAVISTAR, INC. CONFIDENTIAL PROPRIETARY

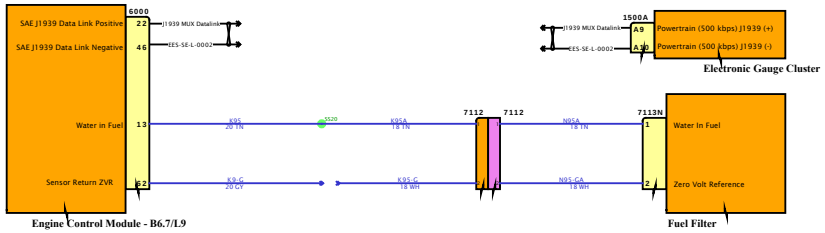

DESIGN DESCRIPTION

FEATURE CODES

SOFTWARE FEATURE CODES

NAVISTAR INC. CONFIDENTIAL PROPRIETARY

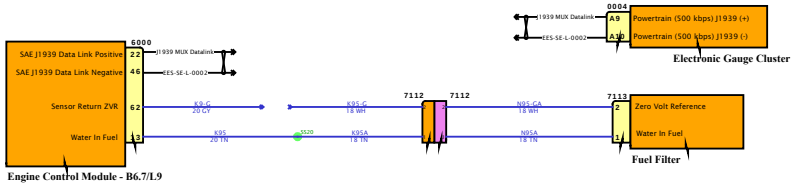

DESIGN DESCRIPTION

FEATURE CODES

SOFTWARE FEATURE CODES

NAVISTAR
NAVISTAR, INC. CONFIDENTIAL PROPRIETARY

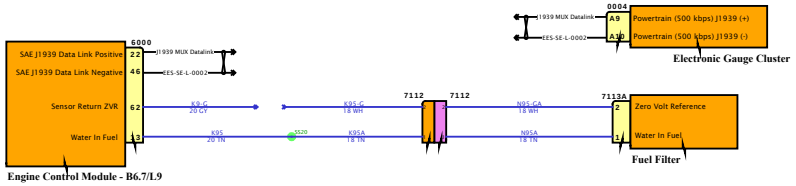

DESIGN DESCRIPTION

FEATURE CODES

SOFTWARE FEATURE CODES

NAVISTAR
NAVISTAR, INC. CONFIDENTIAL PROPRIETARY

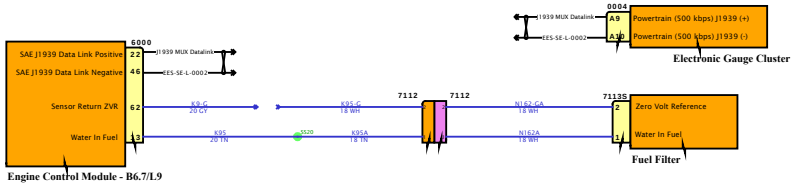

DESIGN DESCRIPTION

FEATURE CODES

SOFTWARE FEATURE CODES

NAVISTAR

NAVISTAR, INC. CONFIDENTIAL PROPRIETARY

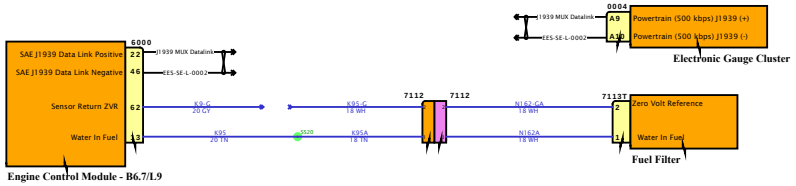

DESIGN DESCRIPTION

FEATURE CODES

SOFTWARE FEATURE CODES

NAVISTAR
NAVISTAR, INC. CONFIDENTIAL PROPRIETARY

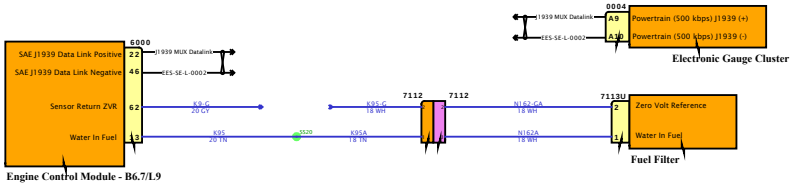

DESIGN DESCRIPTION

FEATURE CODES

SOFTWARE FEATURE CODES

NAVISTAR
NAVISTAR, INC. CONFIDENTIAL PROPRIETARY

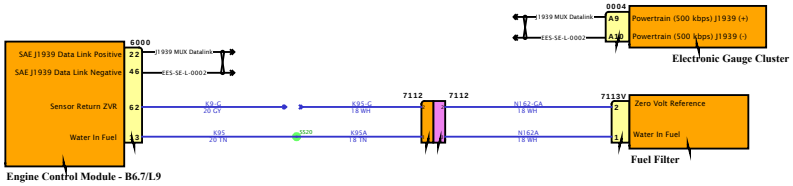

DESIGN DESCRIPTION

FEATURE CODES

SOFTWARE FEATURE CODES

NAVISTAR
NAVISTAR, INC. CONFIDENTIAL PROPRIETARY

DESIGN DESCRIPTION

FEATURE CODES

SOFTWARE FEATURE CODES

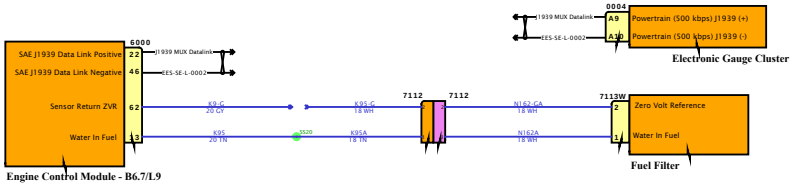

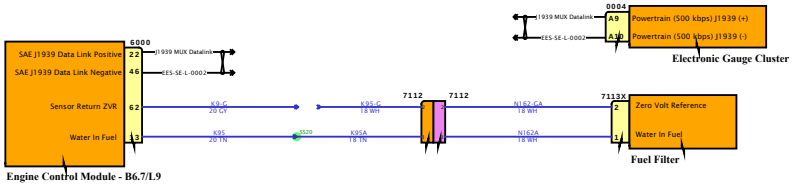

DESIGN DESCRIPTION

FEATURE CODES

SOFTWARE FEATURE CODES

NAVISTAR
NAVISTAR, INC. CONFIDENTIAL PROPRIETARY

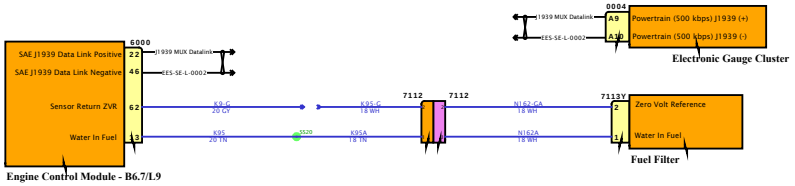

DESIGN DESCRIPTION

FEATURE CODES

SOFTWARE FEATURE CODES

NAVISTAR
NAVISTAR, INC. CONFIDENTIAL PROPRIETARY

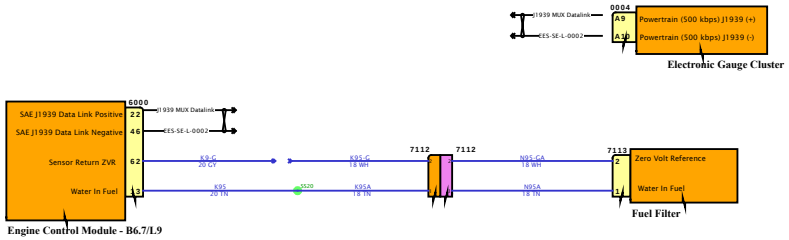

DESIGN DESCRIPTION

FEATURE CODES

SOFTWARE FEATURE CODES

NAVISTAR
NAVISTAR, INC. CONFIDENTIAL PROPRIETARY

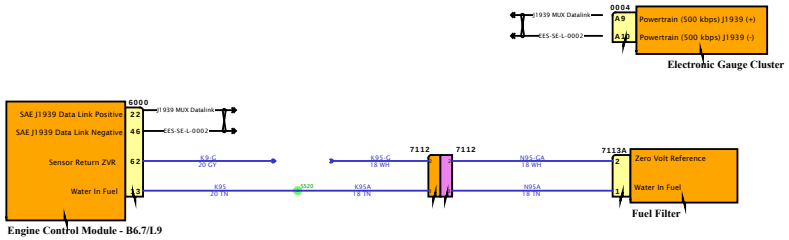

DESIGN DESCRIPTION

FEATURE CODES

SOFTWARE FEATURE CODES

NAVISTAR
NAVISTAR, INC. CONFIDENTIAL PROPRIETARY

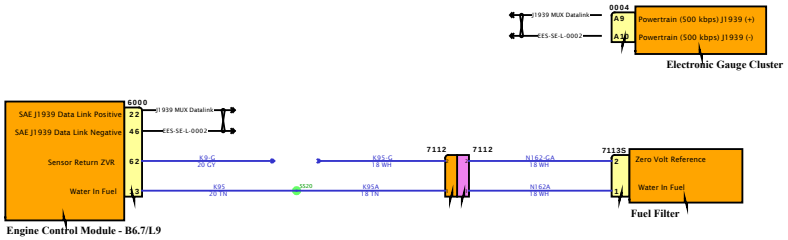

DESIGN DESCRIPTION

FEATURE CODES

SOFTWARE FEATURE CODES

NAVISTAR INC. CONFIDENTIAL PROPRIETARY

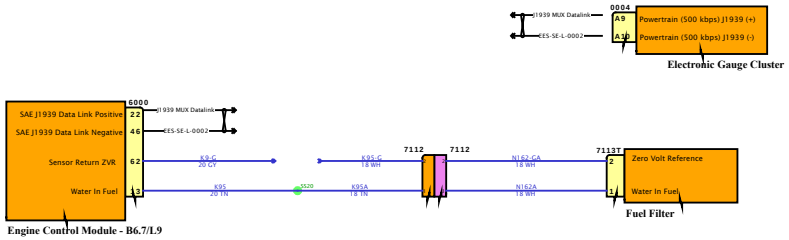

DESIGN DESCRIPTION

FEATURE CODES

SOFTWARE FEATURE CODES

NAVISTAR INC. CONFIDENTIAL PROPRIETARY

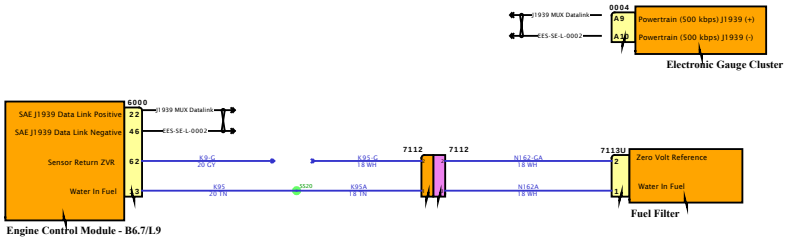

DESIGN DESCRIPTION

FEATURE CODES

SOFTWARE FEATURE CODES

NAVISTAR
NAVISTAR, INC. CONFIDENTIAL PROPRIETARY

Diagram6

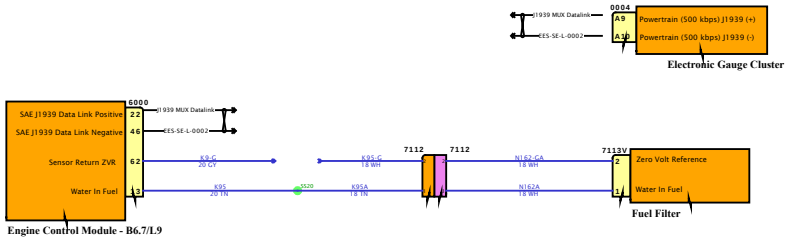

DESIGN DESCRIPTION

FEATURE CODES

SOFTWARE FEATURE CODES

NAVISTAR
NAVISTAR, INC. CONFIDENTIAL PROPRIETARY

Diagram7

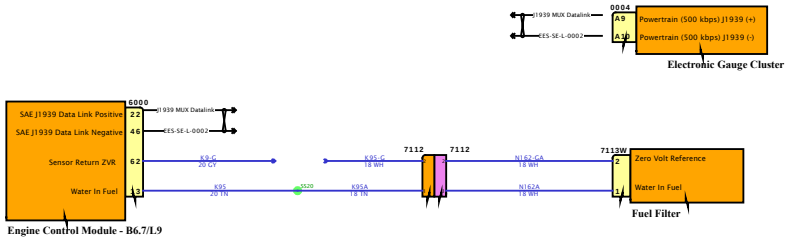

DESIGN DESCRIPTION

FEATURE CODES

SOFTWARE FEATURE CODES

NAVISTAR INC. CONFIDENTIAL PROPRIETARY

Diagram8

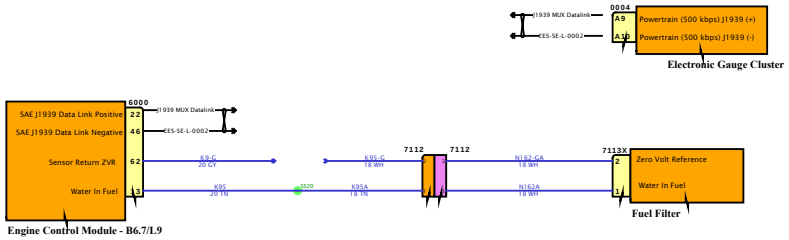

DESIGN DESCRIPTION

FEATURE CODES

SOFTWARE FEATURE CODES

NAVISTAR INC. CONFIDENTIAL PROPRIETARY

Diagram9

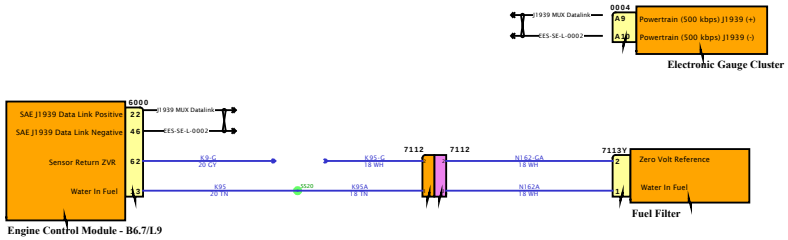

DESIGN DESCRIPTION

FEATURE CODES

SOFTWARE FEATURE CODES

NAVISTAR INC. CONFIDENTIAL PROPRIETARY

Diagram1 - HVAC

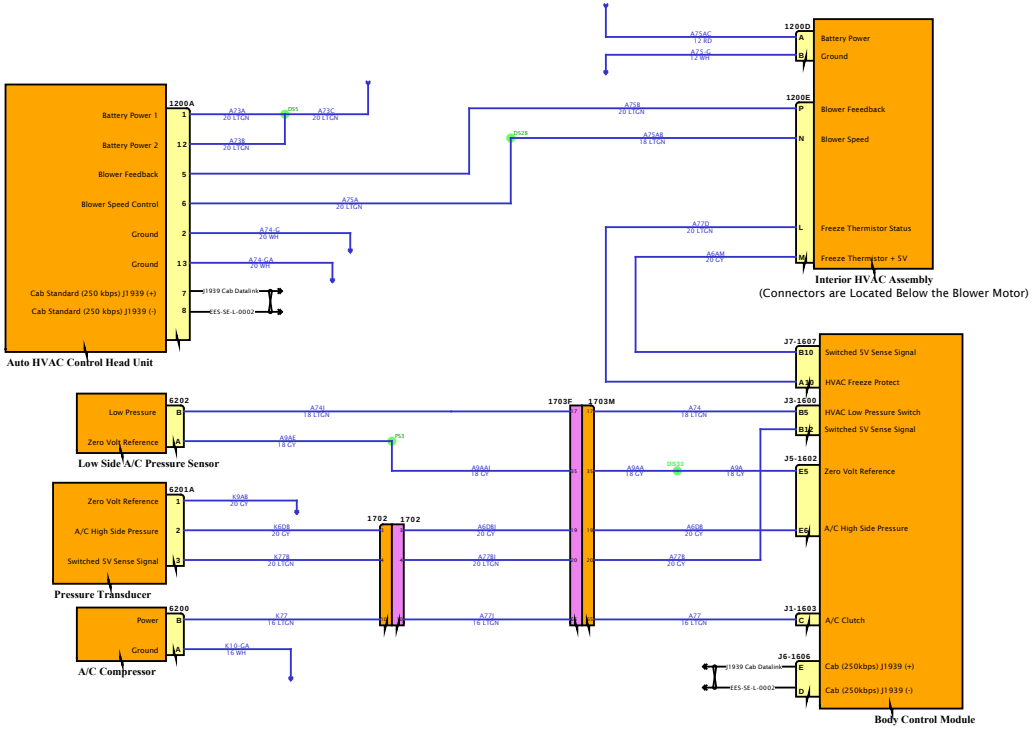

DESIGN DESCRIPTION

FEATURE CODES

SOFTWARE FEATURE CODES

NAVISTAR INC. CONFIDENTIAL PROPRIETARY

Diagram2 - Actuators

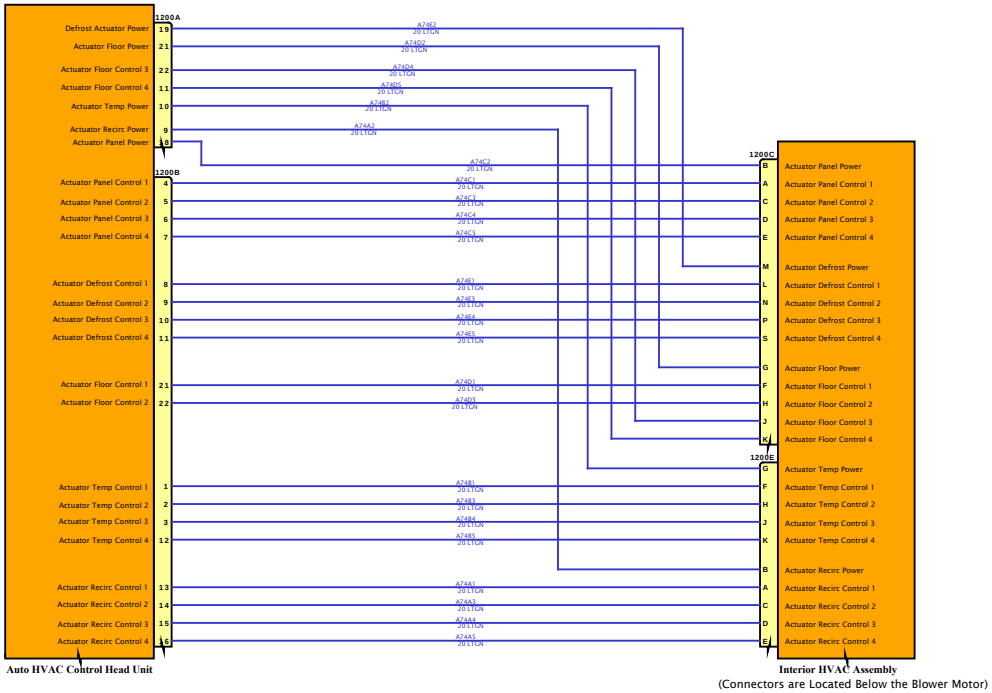

DESIGN DESCRIPTION

FEATURE CODES

SOFTWARE FEATURE CODES

NAVISTAR INC. CONFIDENTIAL PROPRIETARY

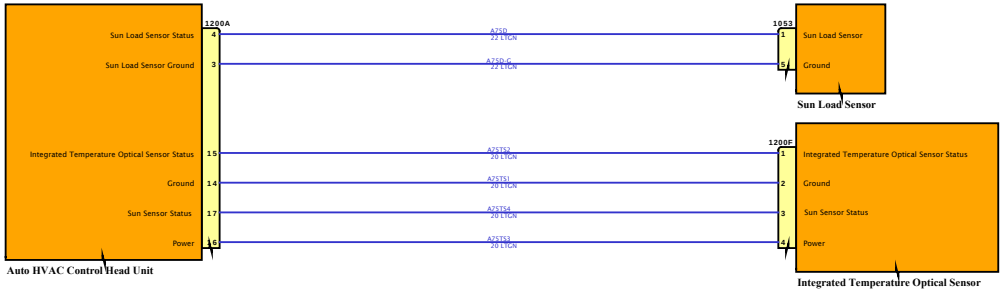

DESIGN DESCRIPTION

FEATURE CODES

SOFTWARE FEATURE CODES

NAVISTAR
NAVISTAR, INC. CONFIDENTIAL PROPRIETARY

Diagram1 - HVAC

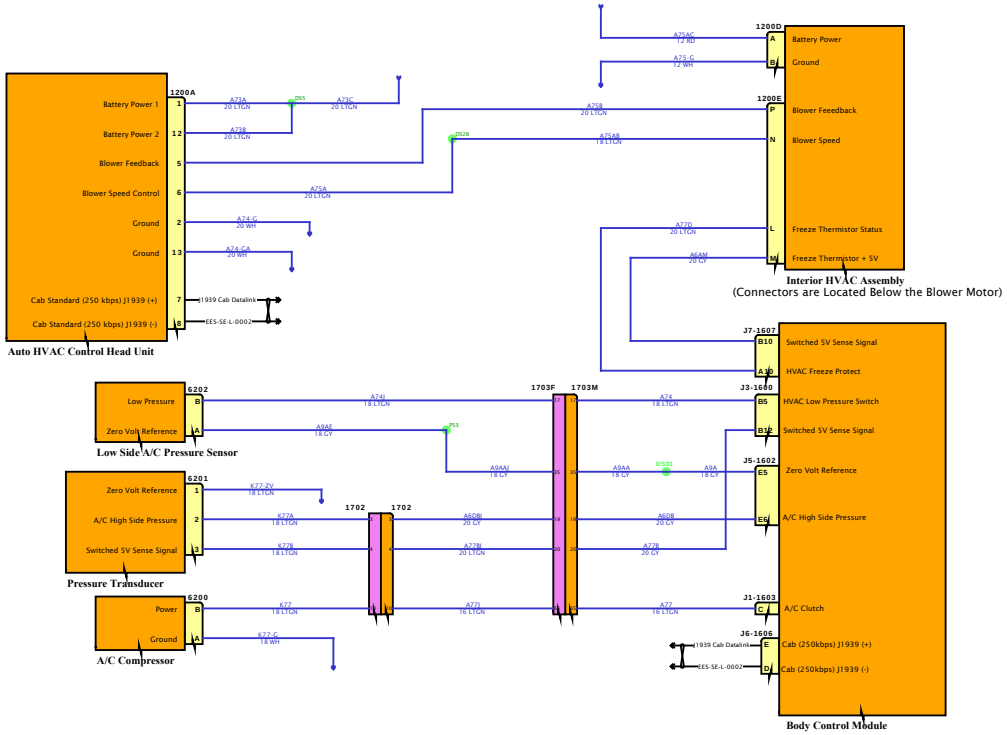

DESIGN DESCRIPTION

FEATURE CODES

SOFTWARE FEATURE CODES

NAVISTAR
NAVISTAR, INC. CONFIDENTIAL PROPRIETARY

Diagram2 - Actuators

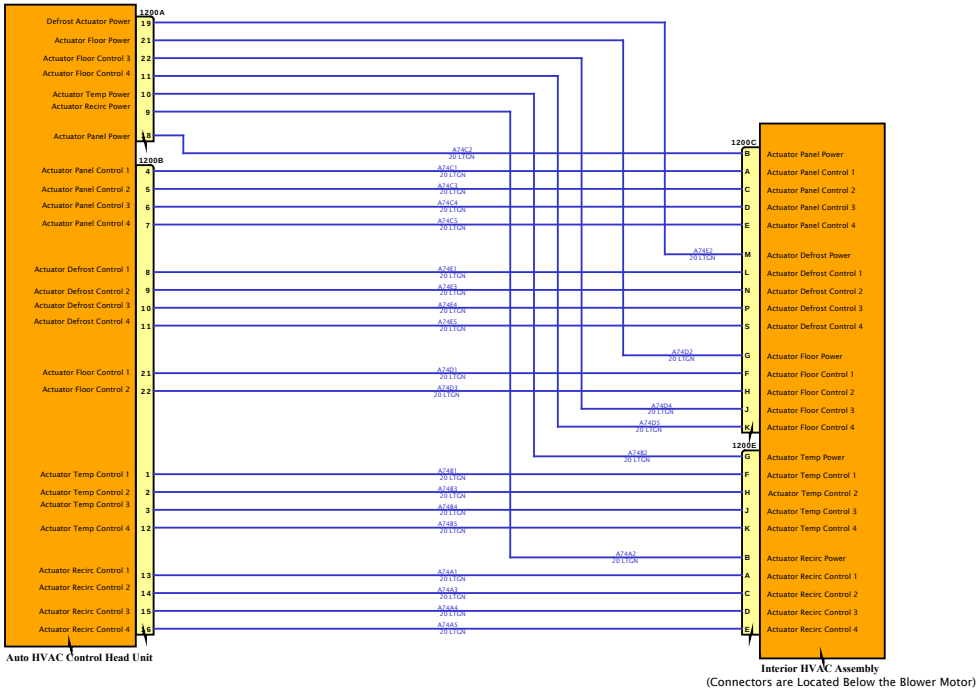

DESIGN DESCRIPTION

FEATURE CODES

SOFTWARE FEATURE CODES

NAVISTAR
NAVISTAR, INC. CONFIDENTIAL PROPRIETARY

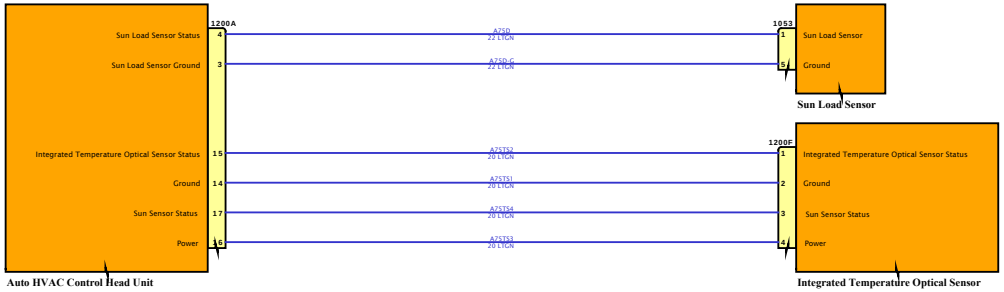

DESIGN DESCRIPTION

FEATURE CODES

SOFTWARE FEATURE CODES

NAVISTAR
NAVISTAR, INC. CONFIDENTIAL PROPRIETARY

Diagram1 - HVAC

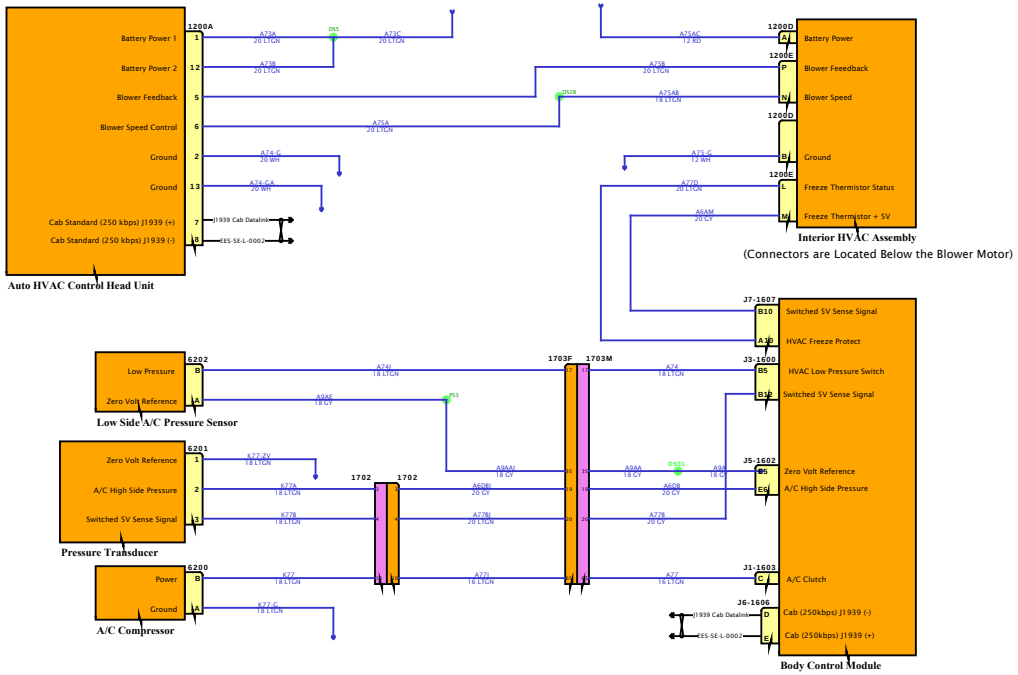

DESIGN DESCRIPTION

FEATURE CODES

SOFTWARE FEATURE CODES

Diagram2 - Actuators

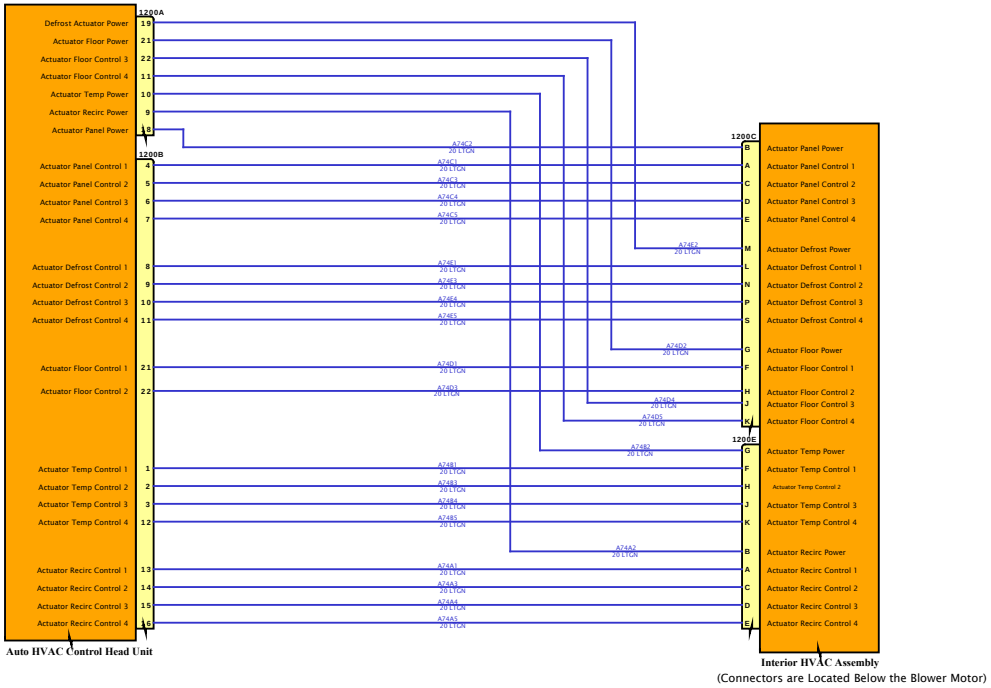

DESIGN DESCRIPTION

FEATURE CODES

SOFTWARE FEATURE CODES

NAVISTAR INC. CONFIDENTIAL PROPRIETARY



DESIGN DESCRIPTION

FEATURE CODES

SOFTWARE FEATURE CODES

NAVISTAR
NAVISTAR, INC. CONFIDENTIAL PROPRIETARY

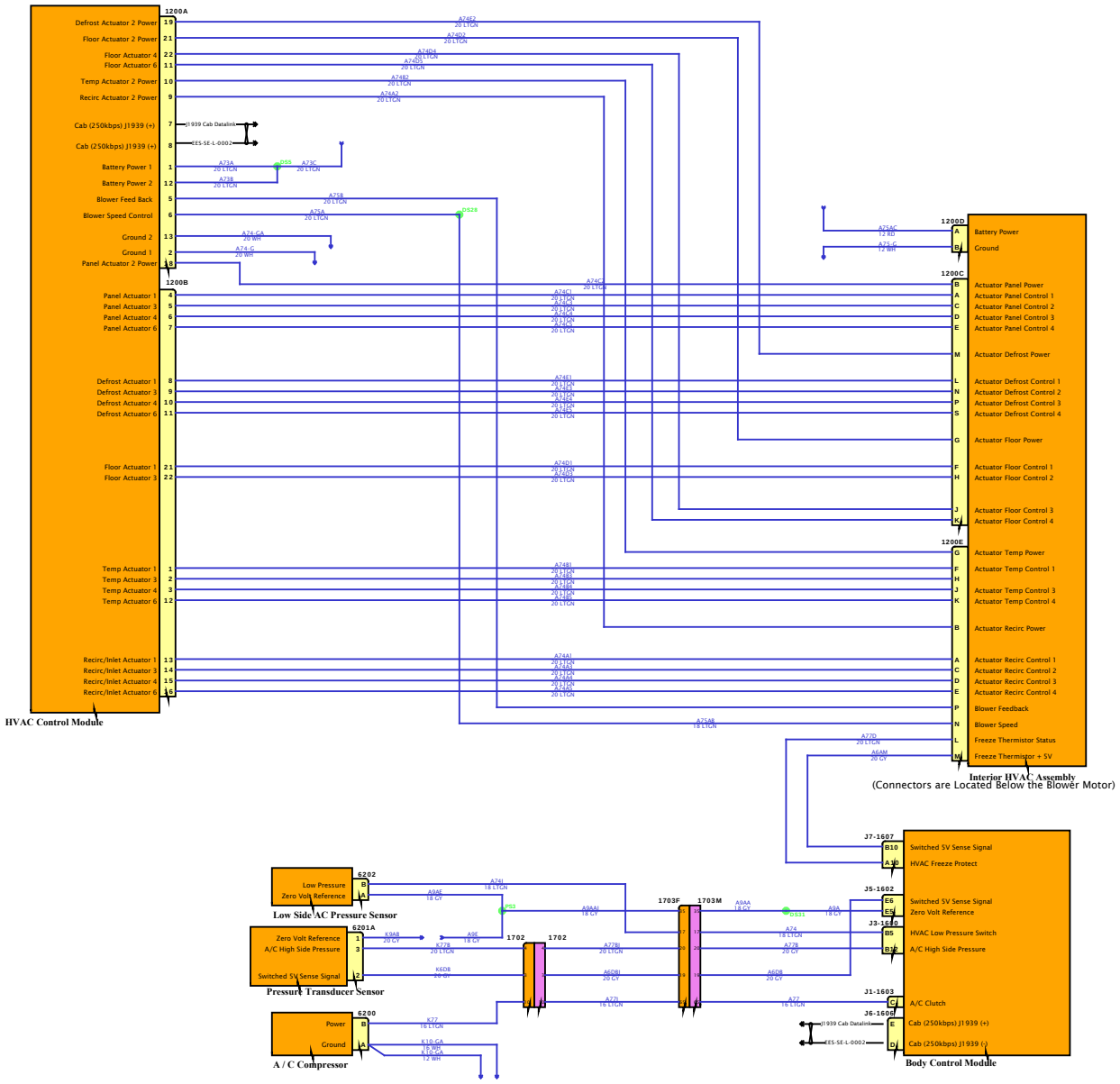

DESIGN DESCRIPTION

FEATURE CODES

SOFTWARE FEATURE CODES

NAVISTAR INC. CONFIDENTIAL PROPRIETARY

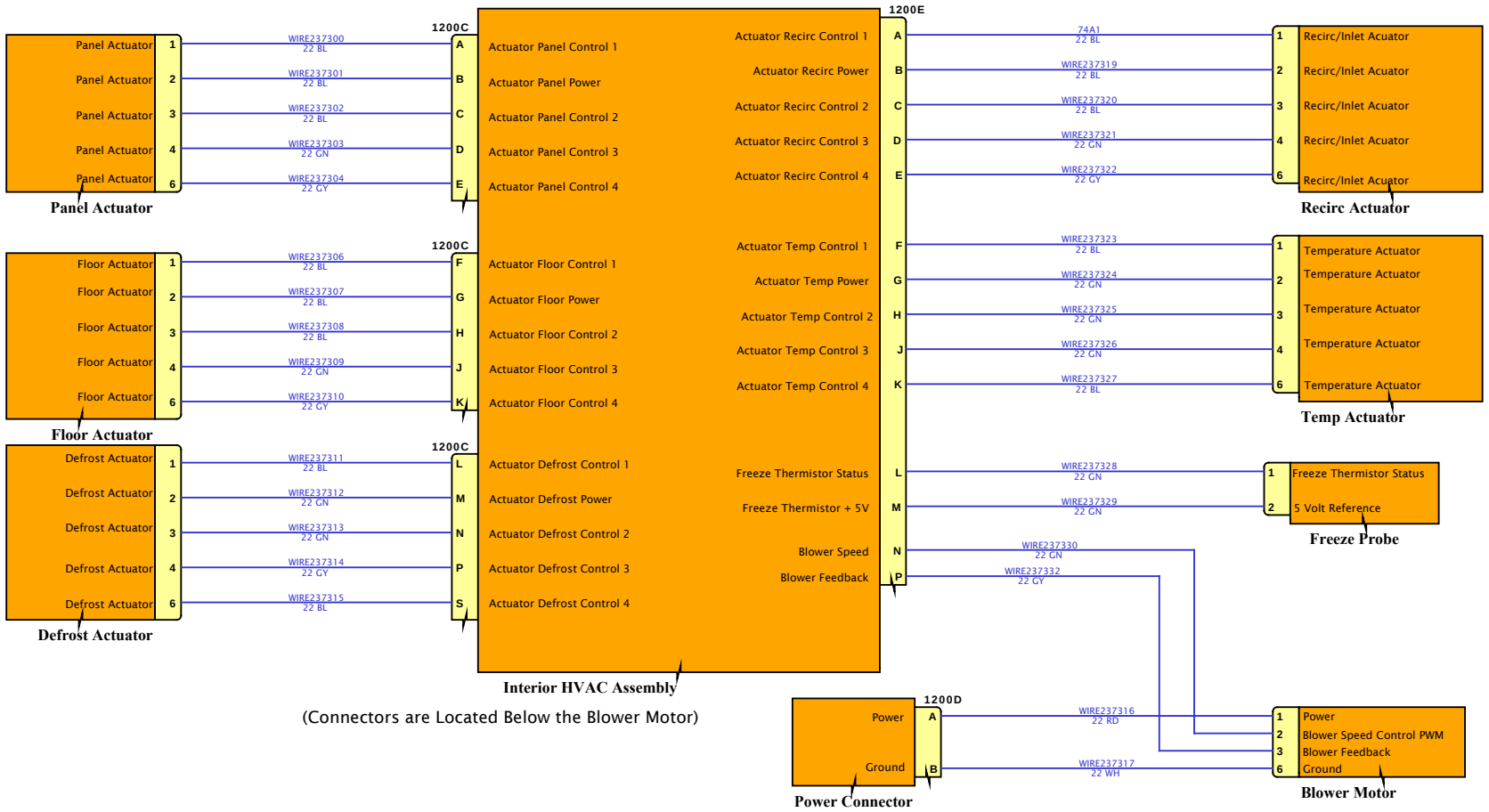

DESIGN DESCRIPTION

FEATURE CODES

SOFTWARE FEATURE CODES

NAVISTAR
NAVISTAR, INC. CONFIDENTIAL PROPRIETARY

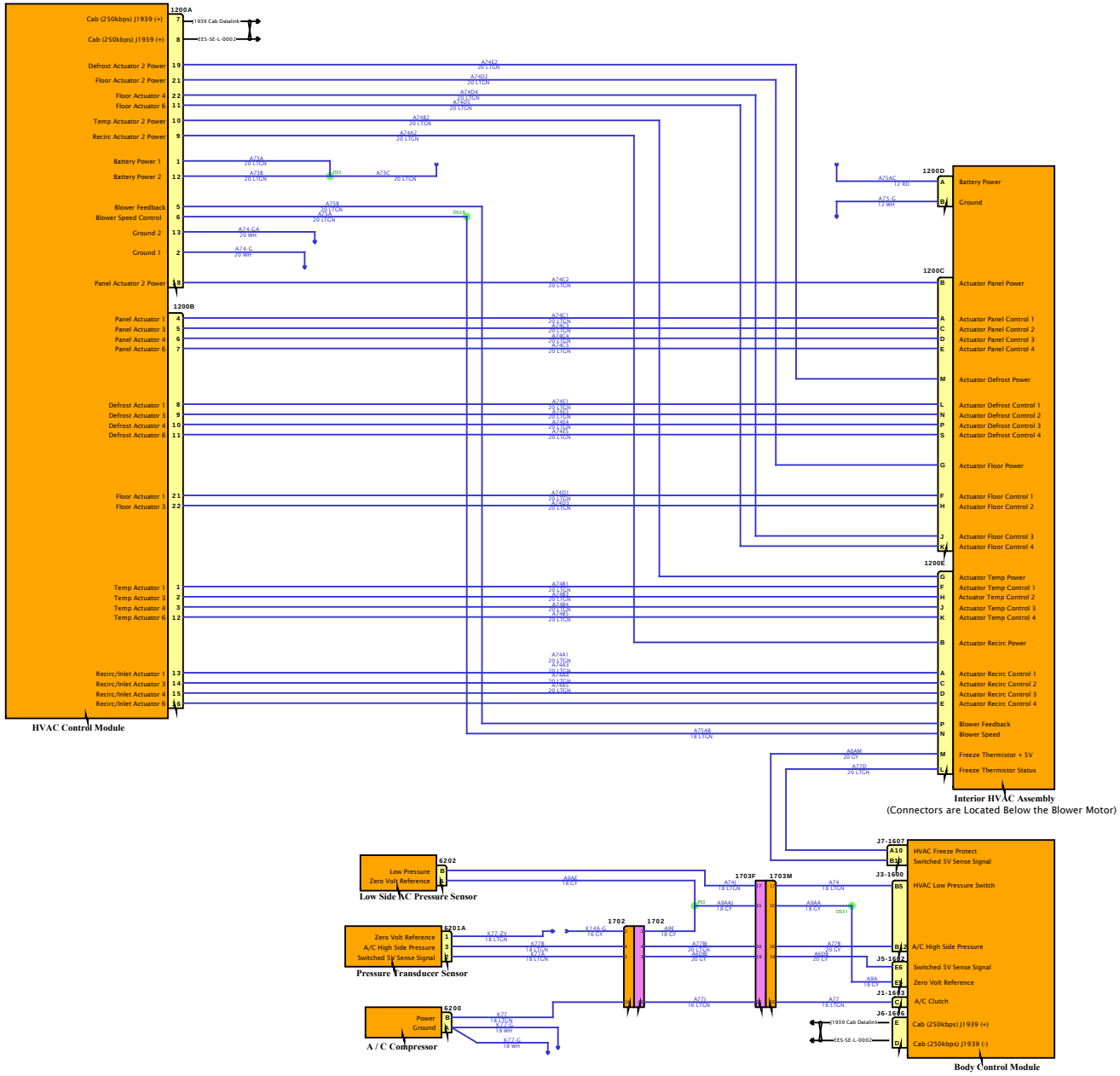
1200A
Cab (250kbps) J1939 (+)
Cab (250kbps) J1939 (+)
1939 Cab Datalink
EES-SE-L-0002
Defrost Actuator 2 Power
Floor Actuator 2 Power
Floor Actuator 4
Floor Actuator 6
Temp Actuator 2 Power
Recirc Actuator 2 Power
Battery Power 1
Battery Power 2
Blower Feedback
Blower Speed Control
Ground 2
Ground 1
Panel Actuator 2 Power
1200B
Panel Actuator 1
Panel Actuator 3
Panel Actuator 4
Panel Actuator 6
Defrost Actuator 1
Defrost Actuator 3
Defrost Actuator 4
Defrost Actuator 6
Floor Actuator 1
Floor Actuator 3
Temp Actuator 1
Temp Actuator 3
Temp Actuator 4
Temp Actuator 6
Recirc/Inlet Actuator 1
Recirc/Inlet Actuator 3
Recirc/Inlet Actuator 4
Recirc/Inlet Actuator 6
HVAC Control Module
1200D
Battery Power
Ground
1200C
Actuator Panel Power
Actuator Panel Control 1
Actuator Panel Control 2
Actuator Panel Control 3
Actuator Panel Control 4
Actuator Defrost Power
Actuator Defrost Control 1
Actuator Defrost Control 2
Actuator Defrost Control 3
Actuator Defrost Control 4
Actuator Floor Power
Actuator Floor Control 1
Actuator Floor Control 2
Actuator Floor Control 3
Actuator Floor Control 4
1200E
Actuator Temp Power
Actuator Temp Control 1
Actuator Temp Control 2
Actuator Temp Control 3
Actuator Temp Control 4
Actuator Recirc Power
Actuator Recirc Control 1
Actuator Recirc Control 2
Actuator Recirc Control 3
Actuator Recirc Control 4
Blower Feedback
Blower Speed
Freeze Thermistor + 5V
Freeze Thermistor Status
Interior HVAC Assembly
(Connectors are Located Below the Blower Motor)
S202
Low Pressure
Zero Volt Reference
Low Side AC Pressure Sensor
S201A
Zero Volt Reference
A/C High Side Pressure
Switched 5V Sense Signal
Pressure Transducer Sensor
S200
Power
Ground
A / C Compressor
1702
1703F
1703M
J7-1607
HVAC Freeze Protect
Switched 5V Sense Signal
J3-1600
HVAC Low Pressure Switch
A/C High Side Pressure
J5-1612
Switched 5V Sense Signal
Zero Volt Reference
J1-1603
A/C Clutch
J6-1616
Cab (250kbps) J1939 (+)
Cab (250kbps) J1939 (-)
1939 Cab Datalink
EES-SE-L-0002
Body Control Module
DESIGN DESCRIPTION
FEATURE CODES
SOFTWARE FEATURE CODES
NAVISTAR
NAVISTAR, INC. CONFIDENTIAL PROPRIETARY

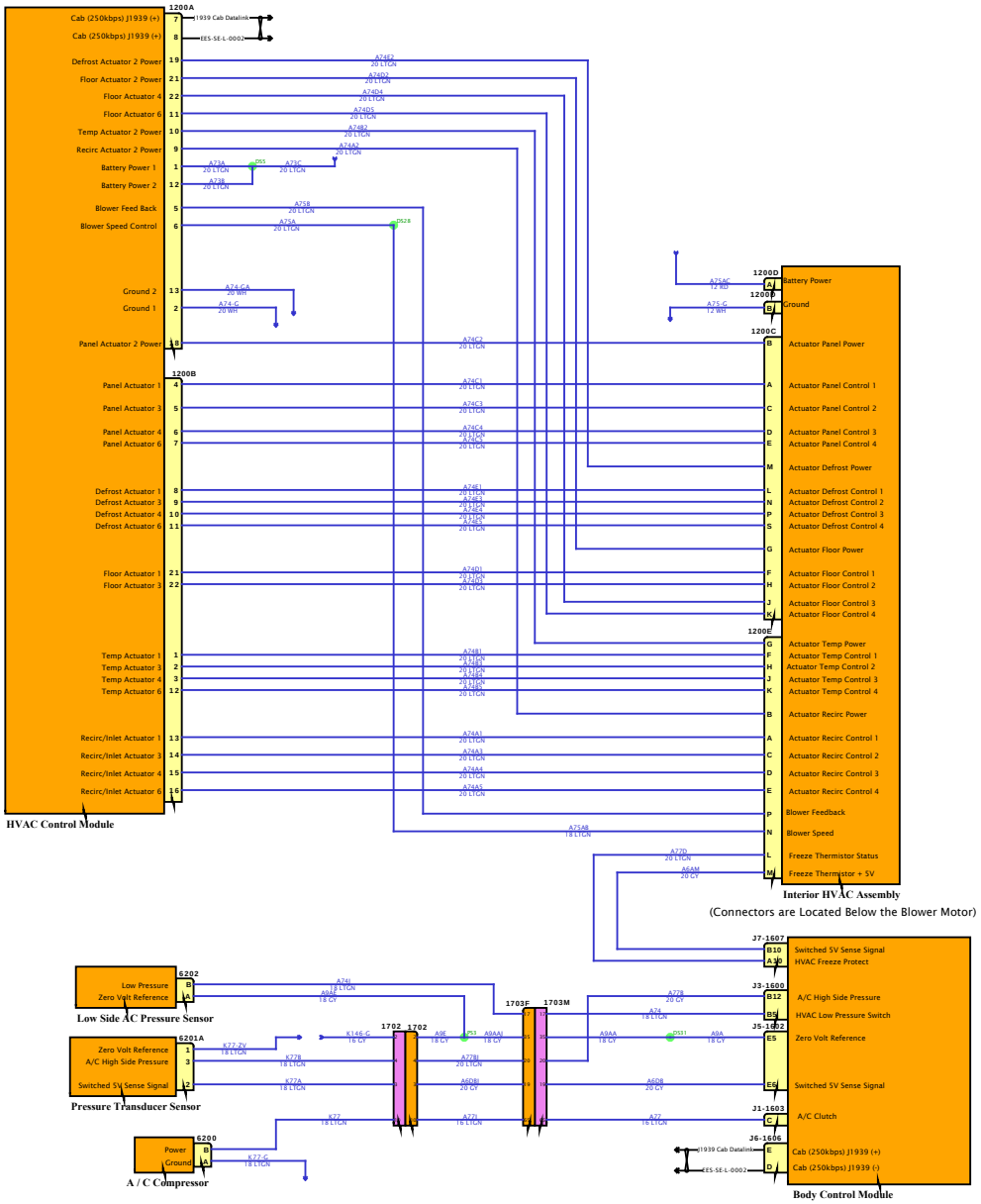

DESIGN DESCRIPTION

FEATURE CODES

SOFTWARE FEATURE CODES

DESIGN DESCRIPTION

FEATURE CODES

SOFTWARE FEATURE CODES

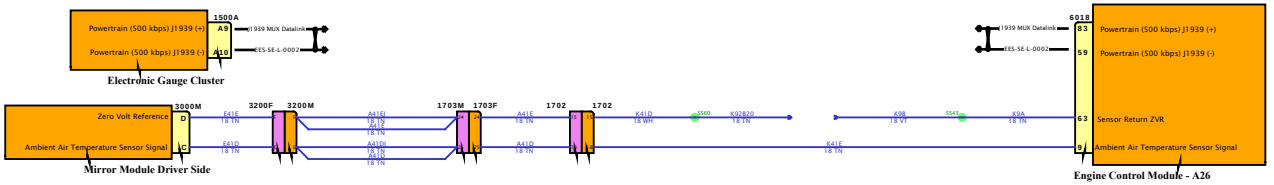

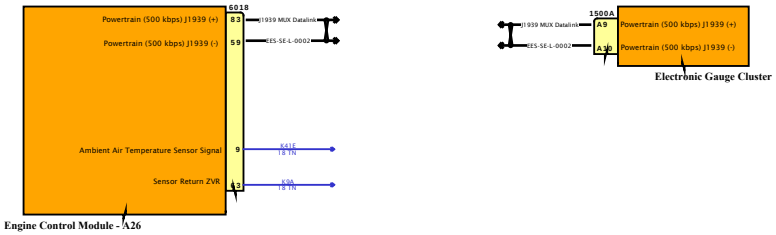

DESIGN DESCRIPTION

FEATURE CODES

SOFTWARE FEATURE CODES

NAVISTAR
NAVISTAR, INC. CONFIDENTIAL PROPRIETARY

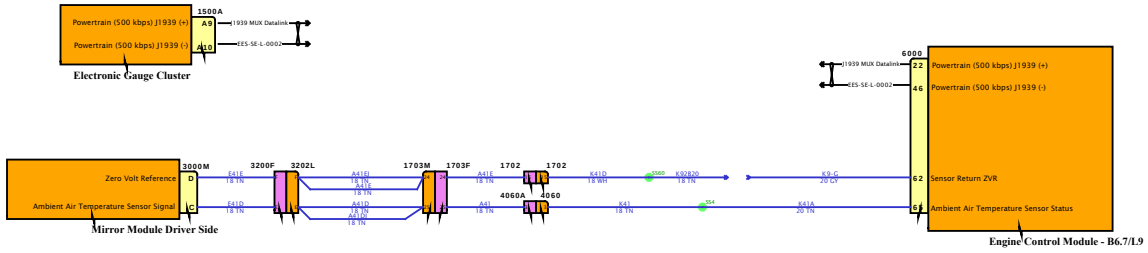

DESIGN DESCRIPTION

FEATURE CODES

SOFTWARE FEATURE CODES

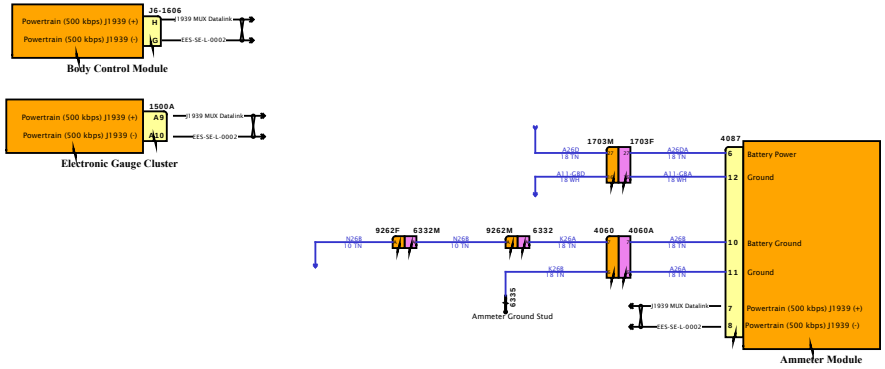

DESIGN DESCRIPTION

FEATURE CODES

SOFTWARE FEATURE CODES

NAVISTAR
NAVISTAR, INC. CONFIDENTIAL PROPRIETARY

Diagram2

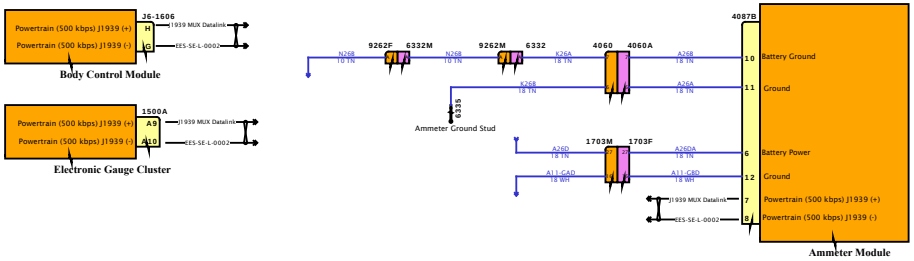

DESIGN DESCRIPTION

FEATURE CODES

SOFTWARE FEATURE CODES

NAVISTAR INC. CONFIDENTIAL PROPRIETARY

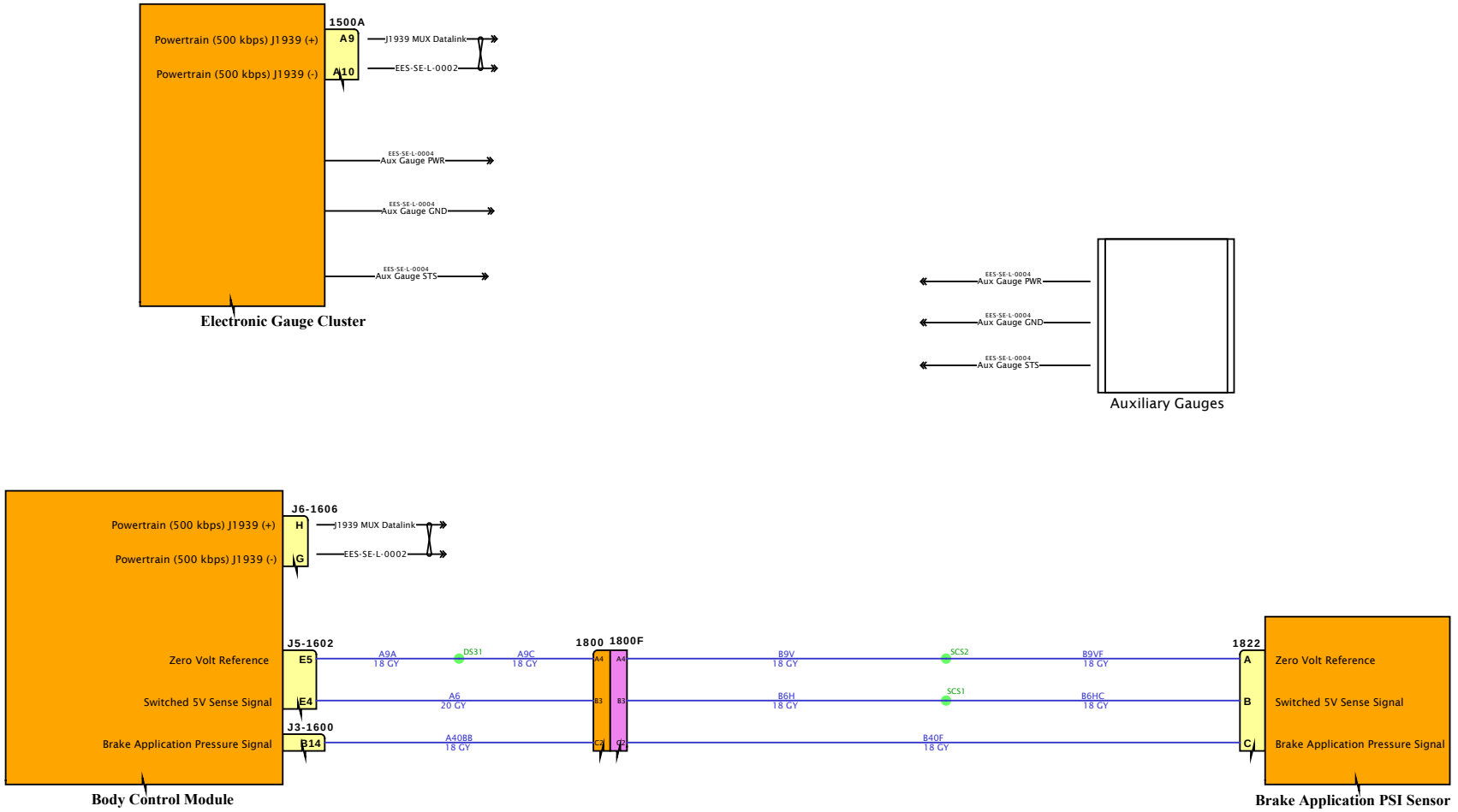

DESIGN DESCRIPTION

FEATURE CODES

SOFTWARE FEATURE CODES

NAVISTAR
NAVISTAR, INC. CONFIDENTIAL PROPRIETARY

DESIGN DESCRIPTION

FEATURE CODES

SOFTWARE FEATURE CODES

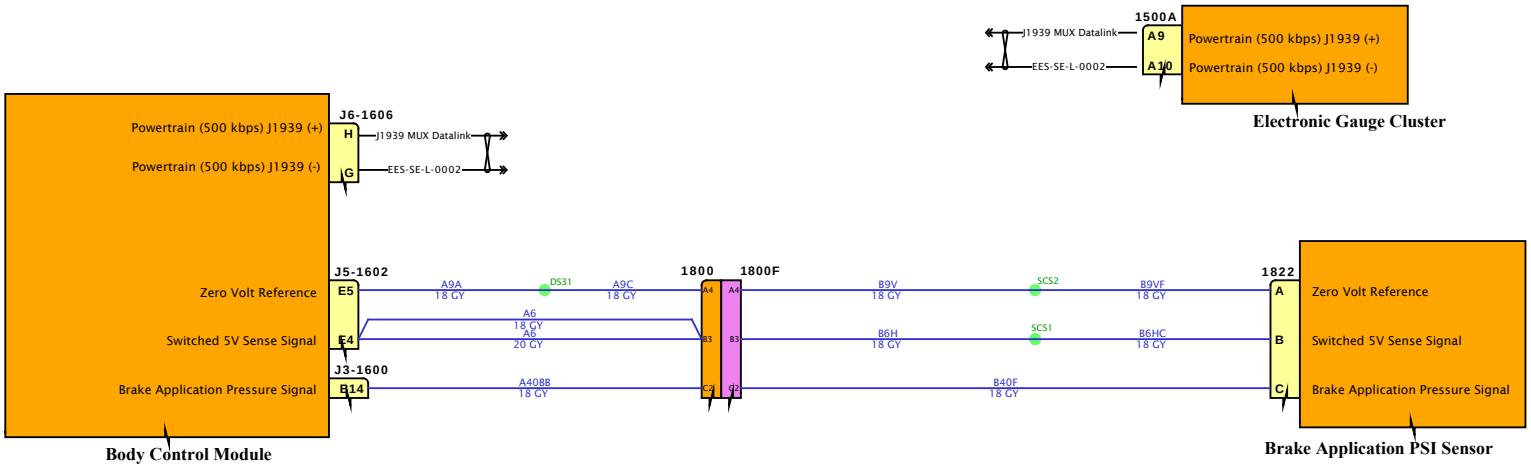

NAVISTAR
NAVISTAR, INC. CONFIDENTIAL PROPRIETARY

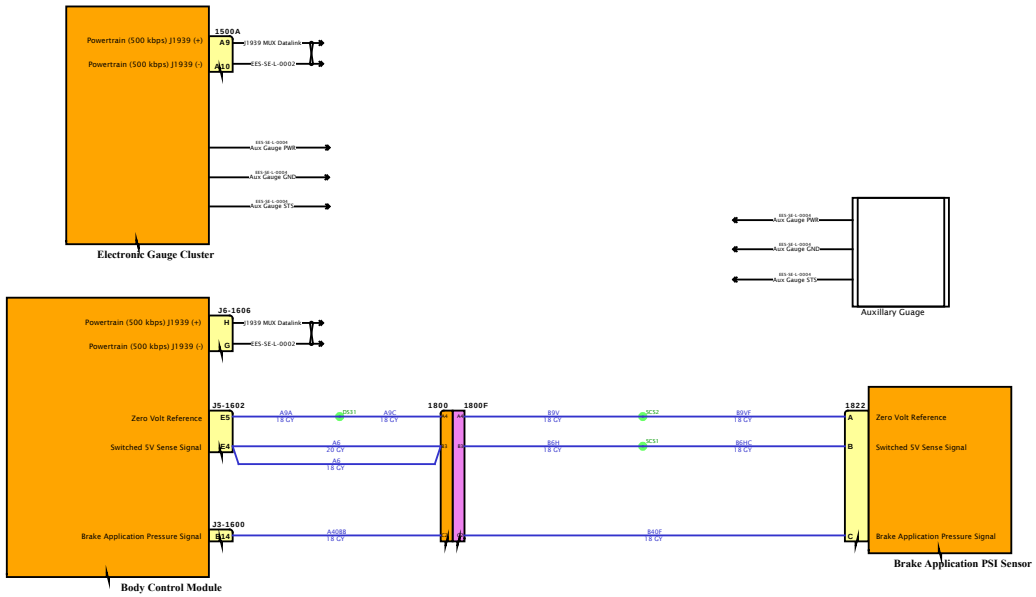

DESIGN DESCRIPTION

FEATURE CODES

SOFTWARE FEATURE CODES

NAVISTAR INC. CONFIDENTIAL PROPRIETARY

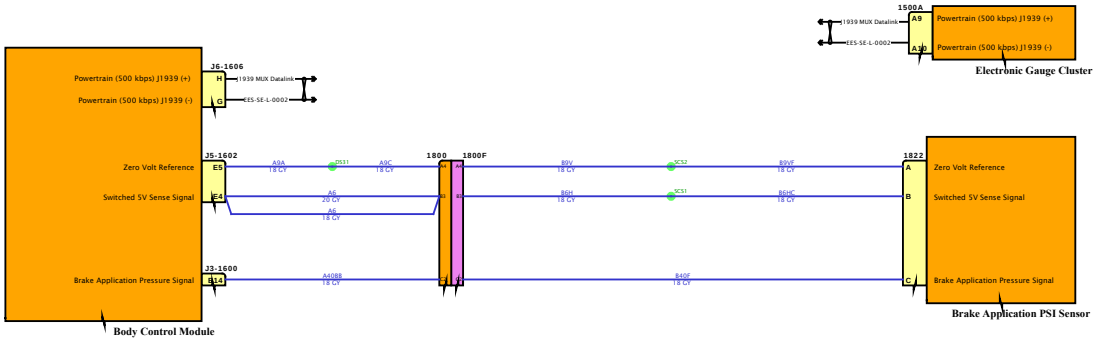

DESIGN DESCRIPTION

FEATURE CODES

SOFTWARE FEATURE CODES

NAVISTAR INC. CONFIDENTIAL PROPRIETARY

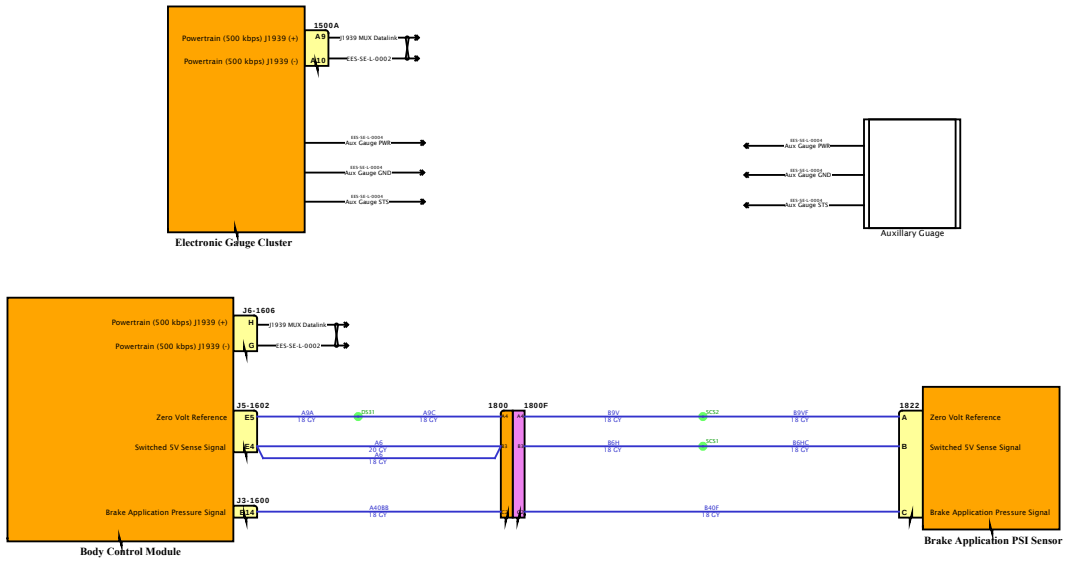

DESIGN DESCRIPTION

FEATURE CODES

SOFTWARE FEATURE CODES

NAVISTAR
NAVISTAR, INC. CONFIDENTIAL PROPRIETARY

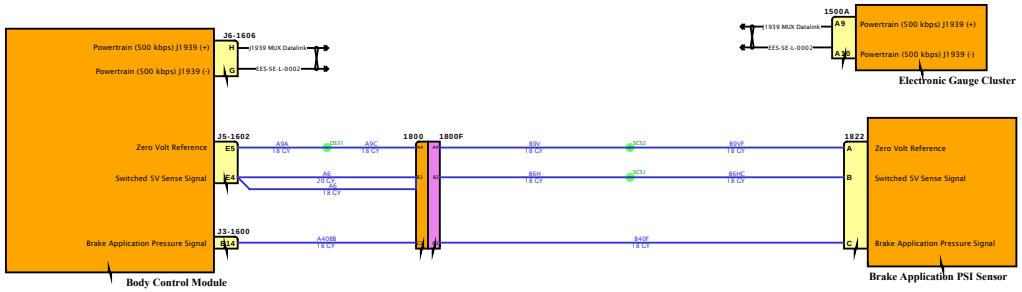

DESIGN DESCRIPTION

FEATURE CODES

SOFTWARE FEATURE CODES

NAVISTAR INC. CONFIDENTIAL PROPRIETARY

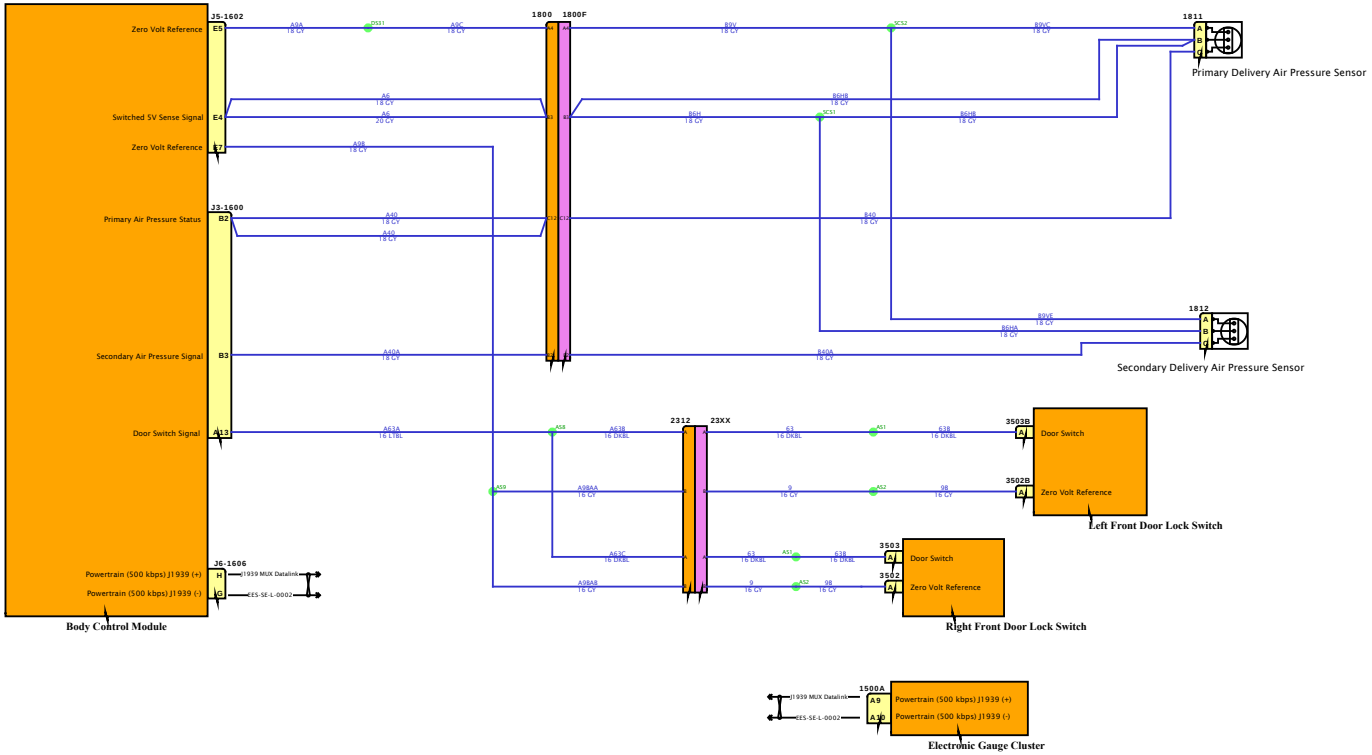

DESIGN DESCRIPTION

FEATURE CODES

SOFTWARE FEATURE CODES

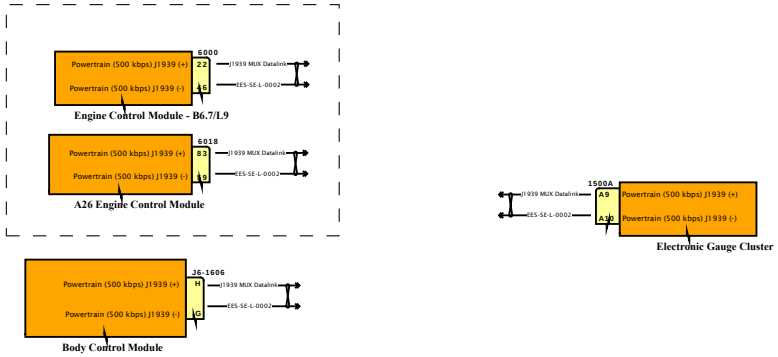

DESIGN DESCRIPTION

FEATURE CODES

SOFTWARE FEATURE CODES

NAVISTAR INC. CONFIDENTIAL PROPRIETARY

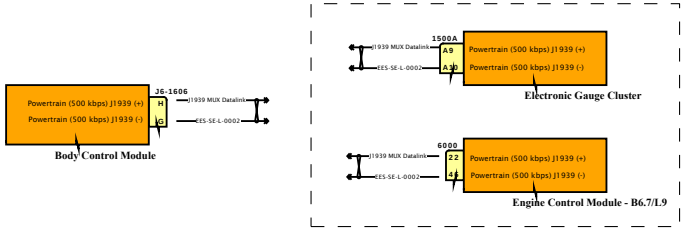

DESIGN DESCRIPTION

FEATURE CODES

SOFTWARE FEATURE CODES

NAVISTAR
NAVISTAR, INC. CONFIDENTIAL PROPRIETARY

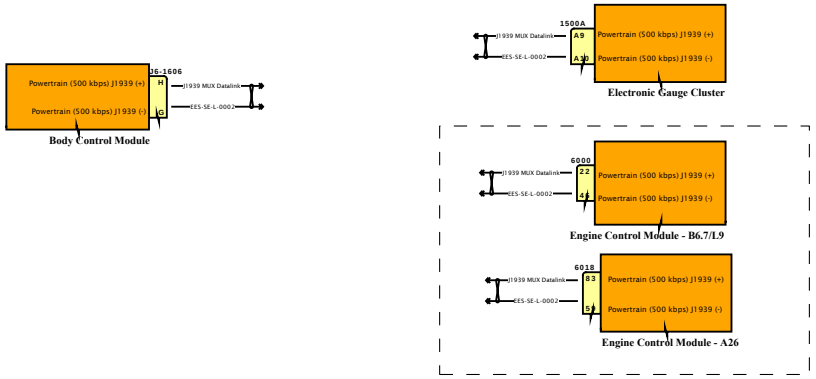

DESIGN DESCRIPTION

FEATURE CODES

SOFTWARE FEATURE CODES

NAVISTAR
NAVISTAR, INC. CONFIDENTIAL PROPRIETARY

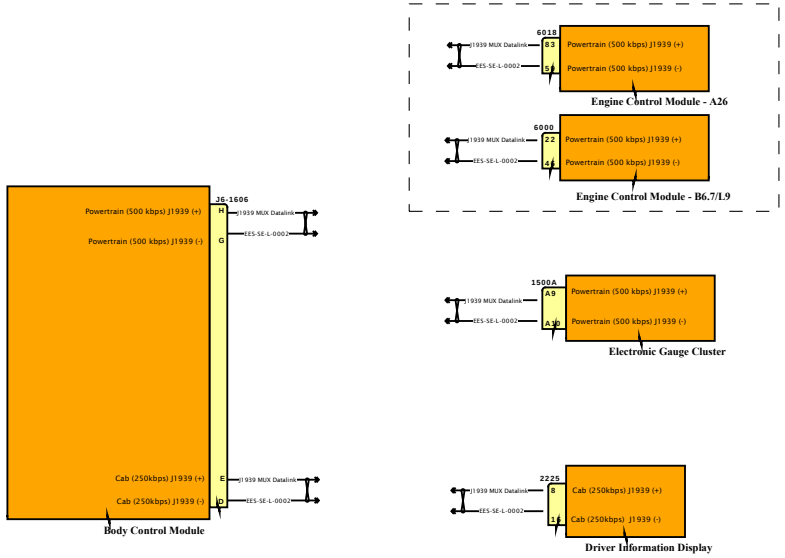

DESIGN DESCRIPTION

FEATURE CODES

SOFTWARE FEATURE CODES

NAVISTAR
NAVISTAR, INC. CONFIDENTIAL PROPRIETARY

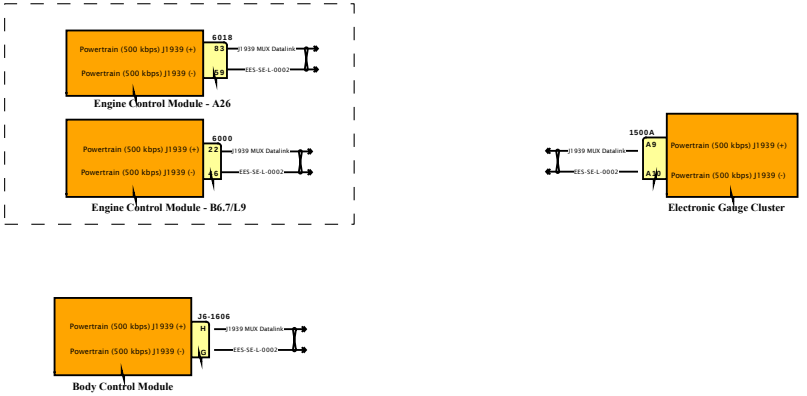

DESIGN DESCRIPTION

FEATURE CODES

SOFTWARE FEATURE CODES

NAVISTAR INC. CONFIDENTIAL PROPRIETARY

Diagram1

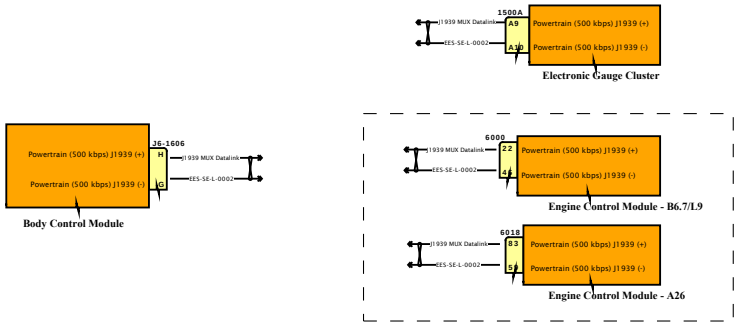

DESIGN DESCRIPTION

FEATURE CODES

SOFTWARE FEATURE CODES

NAVISTAR INC. CONFIDENTIAL PROPRIETARY

Diagram1

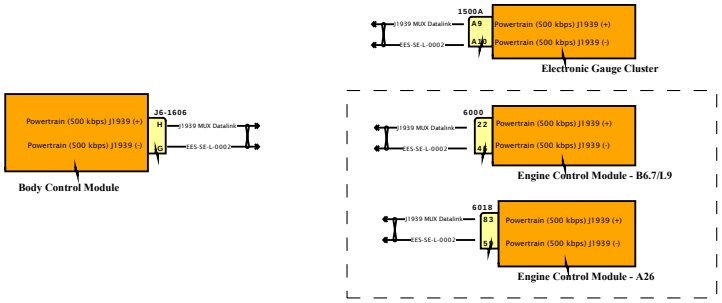

DESIGN DESCRIPTION

FEATURE CODES

SOFTWARE FEATURE CODES

NAVISTAR INC. CONFIDENTIAL PROPRIETARY

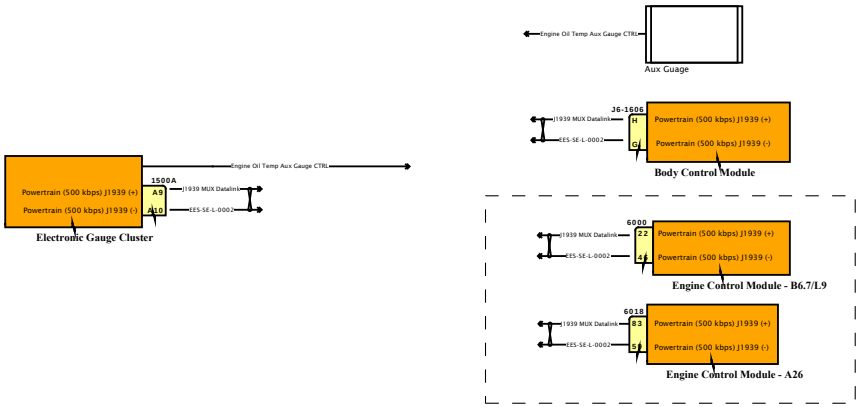

DESIGN DESCRIPTION

FEATURE CODES

SOFTWARE FEATURE CODES

NAVISTAR INC. CONFIDENTIAL PROPRIETARY

Diagram1

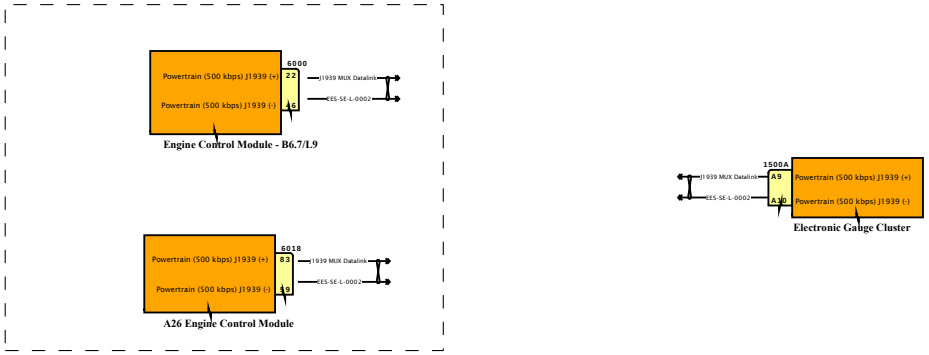

DESIGN DESCRIPTION

FEATURE CODES

SOFTWARE FEATURE CODES

NAVISTAR INC. CONFIDENTIAL PROPRIETARY

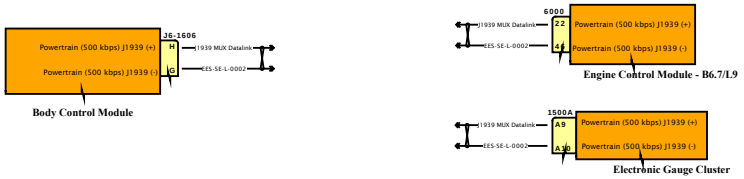

DESIGN DESCRIPTION

FEATURE CODES

SOFTWARE FEATURE CODES

NAVISTAR INC. CONFIDENTIAL PROPRIETARY

Diagram1

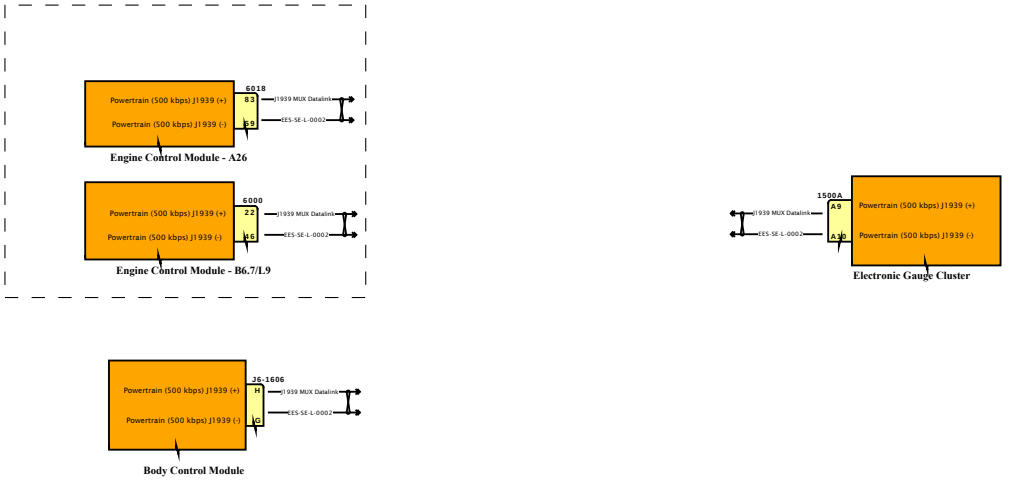

DESIGN DESCRIPTION

FEATURE CODES

SOFTWARE FEATURE CODES

NAVISTAR
NAVISTAR, INC. CONFIDENTIAL PROPRIETARY

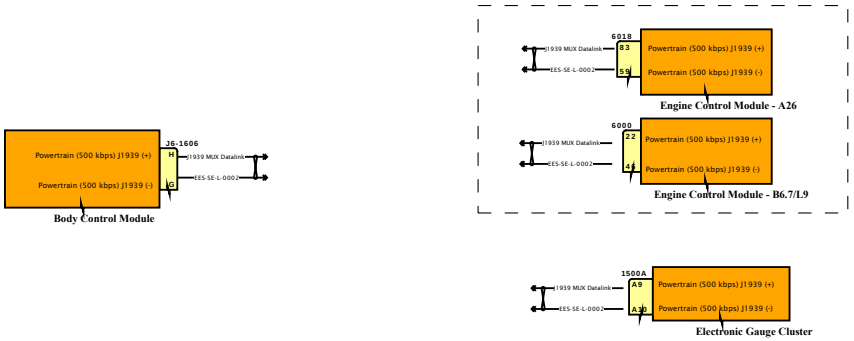

DESIGN DESCRIPTION

FEATURE CODES

SOFTWARE FEATURE CODES

NAVISTAR
NAVISTAR, INC. CONFIDENTIAL PROPRIETARY

Diagram1

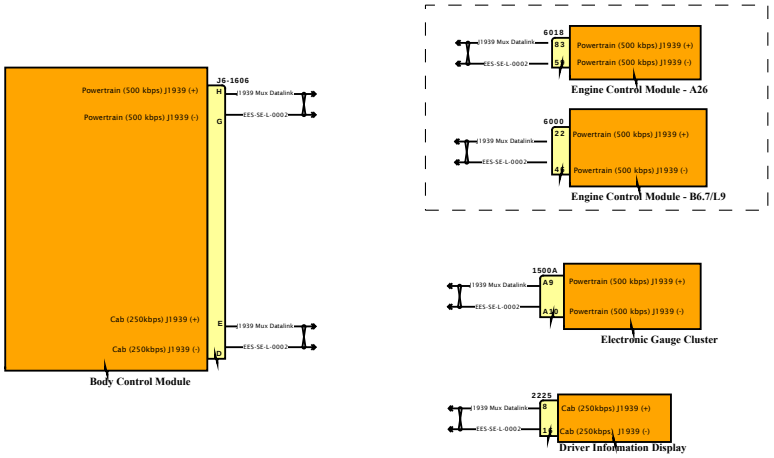

DESIGN DESCRIPTION

FEATURE CODES

SOFTWARE FEATURE CODES

NAVISTAR
NAVISTAR, INC. CONFIDENTIAL PROPRIETARY

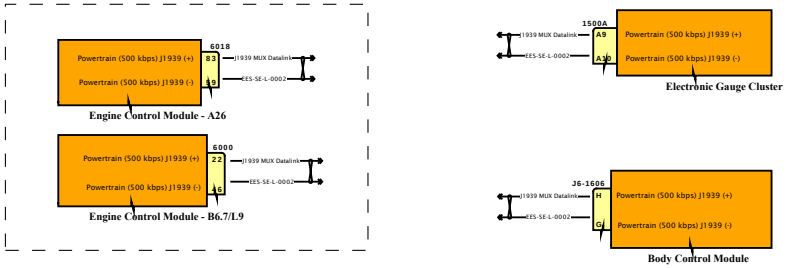

DESIGN DESCRIPTION

FEATURE CODES

SOFTWARE FEATURE CODES

NAVISTAR INC. CONFIDENTIAL PROPRIETARY

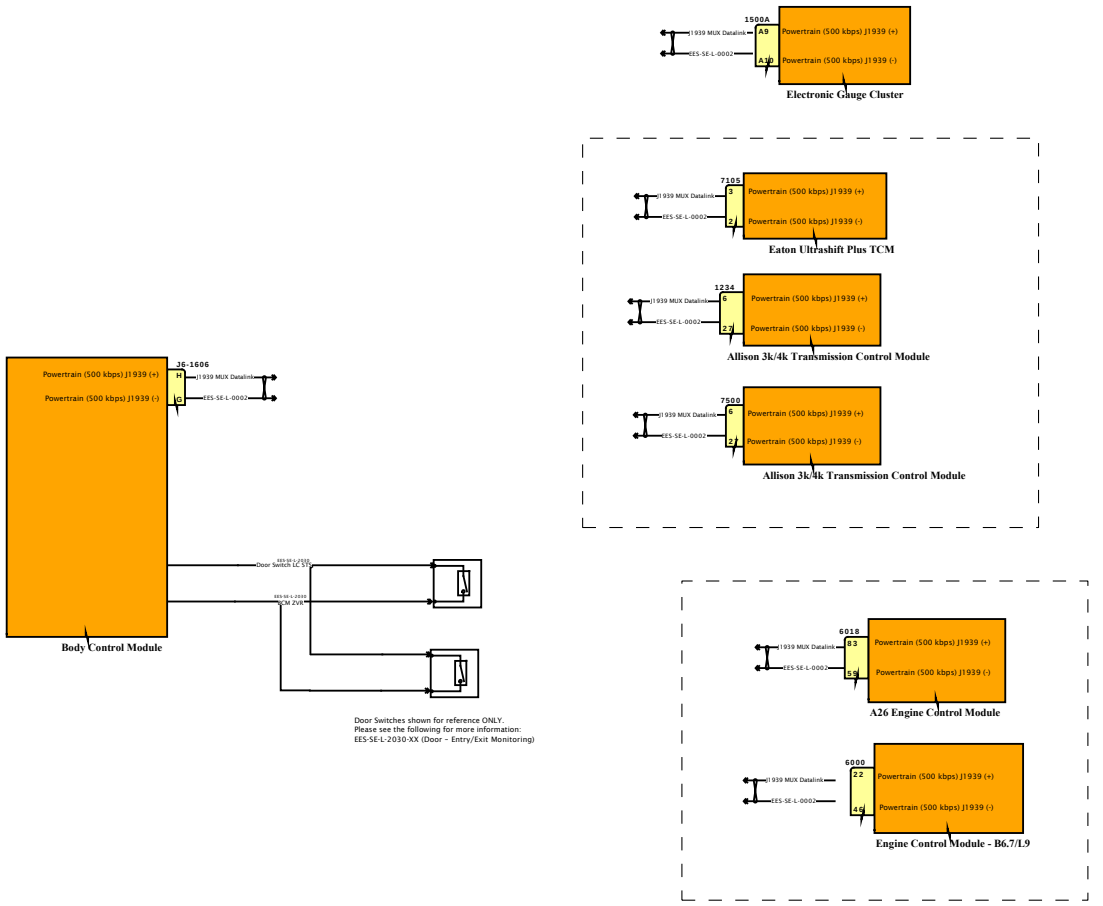

DESIGN DESCRIPTION

FEATURE CODES

SOFTWARE FEATURE CODES

NAVISTAR, INC. CONFIDENTIAL PROPRIETARY

Diagram1

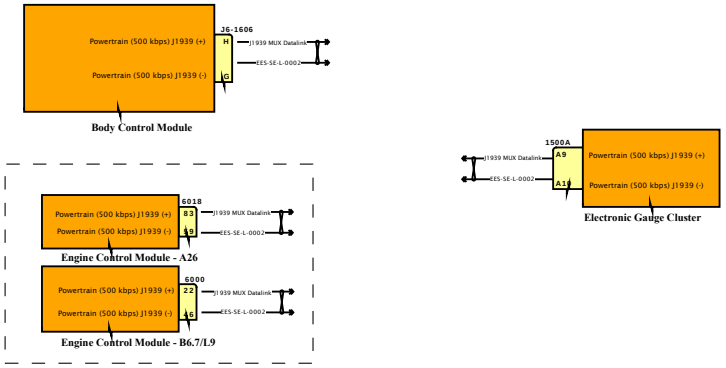

DESIGN DESCRIPTION

FEATURE CODES

SOFTWARE FEATURE CODES

NAVISTAR INC. CONFIDENTIAL PROPRIETARY

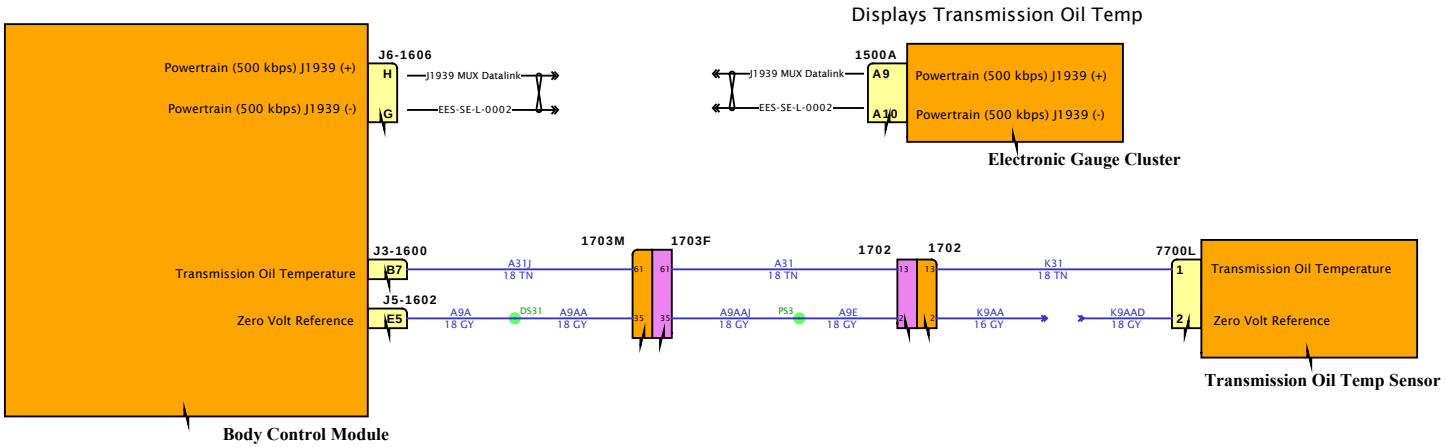

DESIGN DESCRIPTION

FEATURE CODES

SOFTWARE FEATURE CODES

NAVISTAR
NAVISTAR, INC. CONFIDENTIAL PROPRIETARY

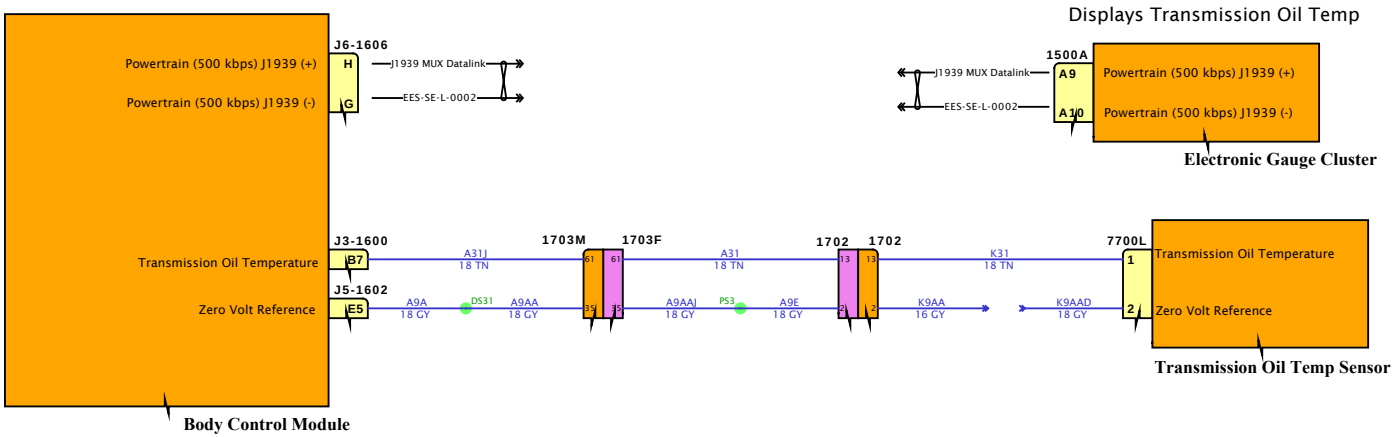

DESIGN DESCRIPTION

FEATURE CODES

SOFTWARE FEATURE CODES

NAVISTAR
NAVISTAR, INC. CONFIDENTIAL PROPRIETARY

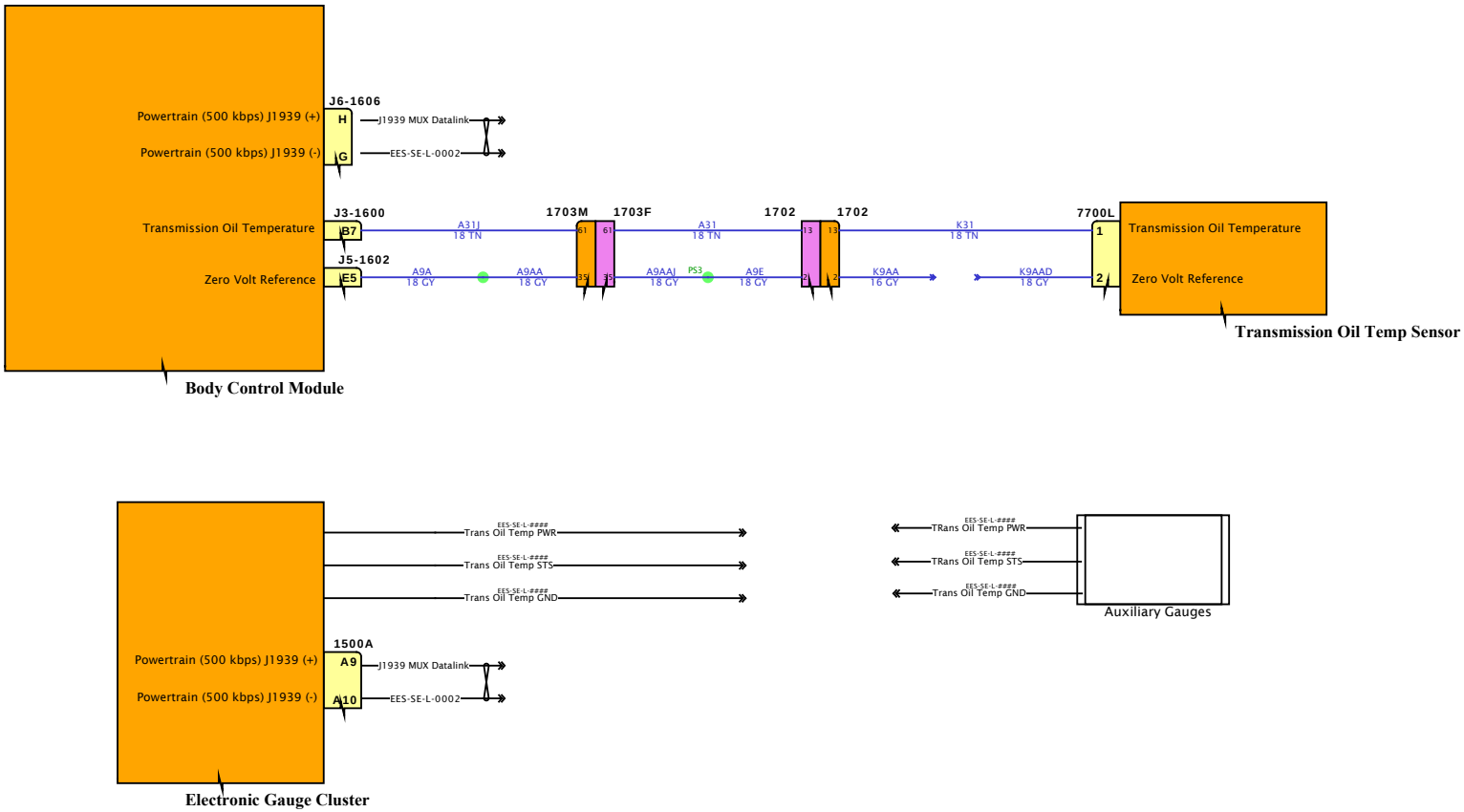

DESIGN DESCRIPTION

FEATURE CODES

SOFTWARE FEATURE CODES

NAVISTAR

NAVISTAR, INC. CONFIDENTIAL PROPRIETARY

Diagram2

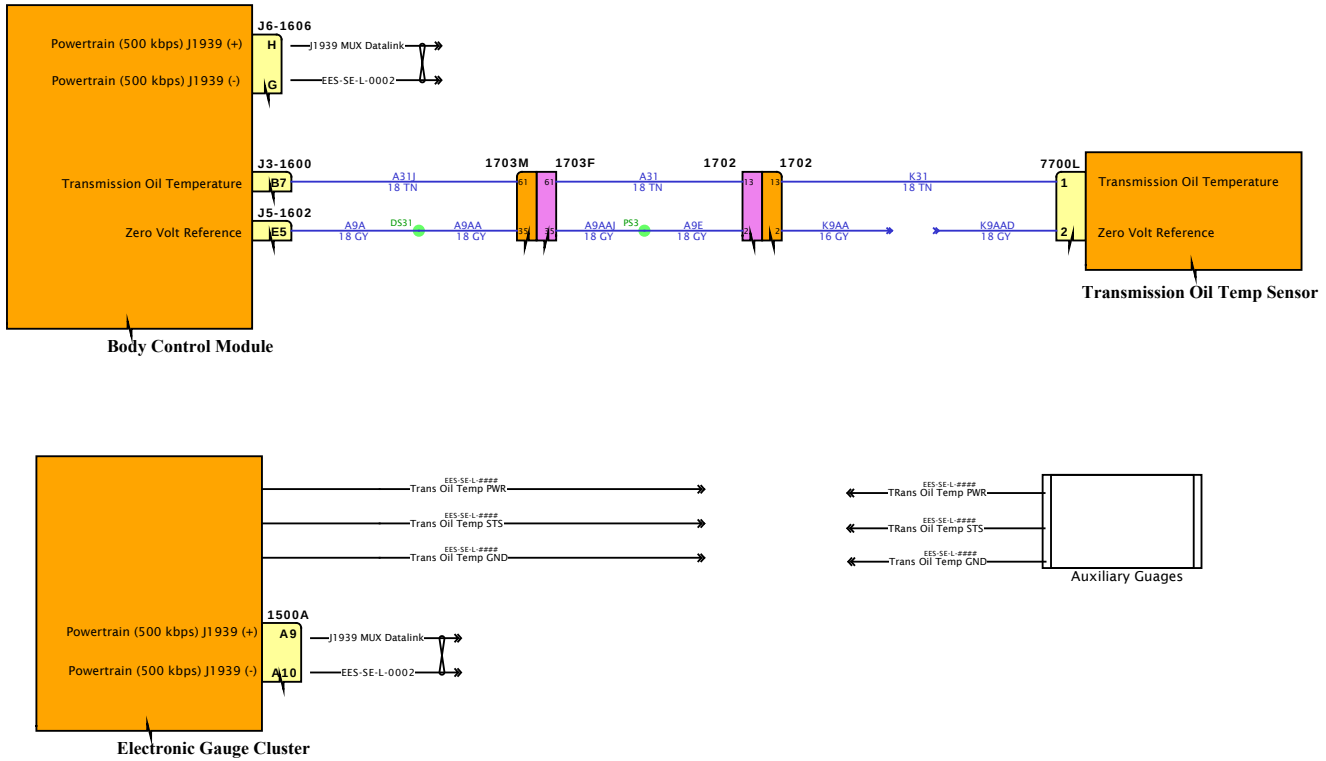

DESIGN DESCRIPTION

FEATURE CODES

SOFTWARE FEATURE CODES

NAVISTAR
NAVISTAR, INC. CONFIDENTIAL PROPRIETARY

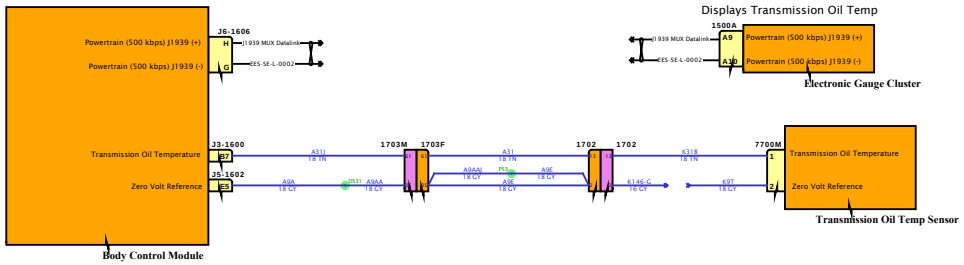

DESIGN DESCRIPTION

FEATURE CODES

SOFTWARE FEATURE CODES

NAVISTAR
NAVISTAR, INC. CONFIDENTIAL PROPRIETARY

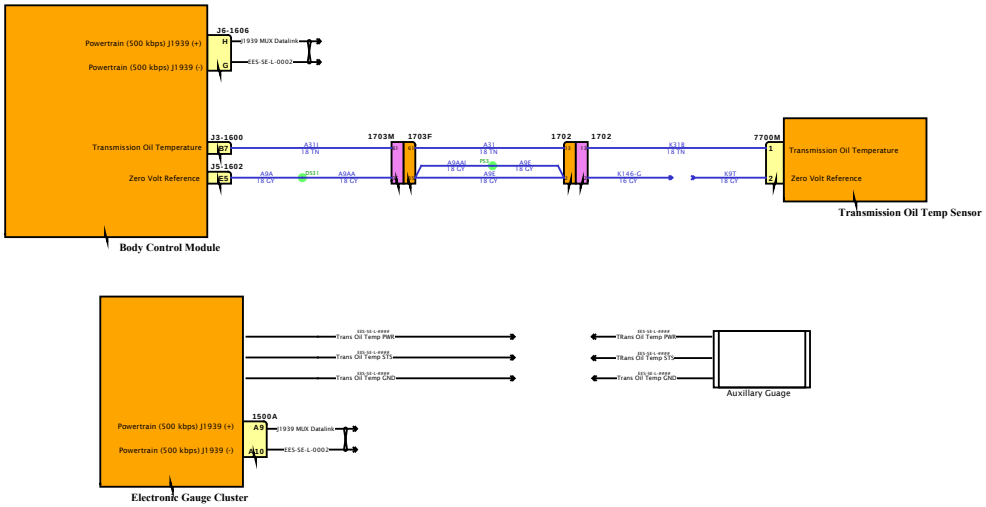

DESIGN DESCRIPTION

FEATURE CODES

SOFTWARE FEATURE CODES

NAVISTAR INC. CONFIDENTIAL PROPRIETARY

Diagram1

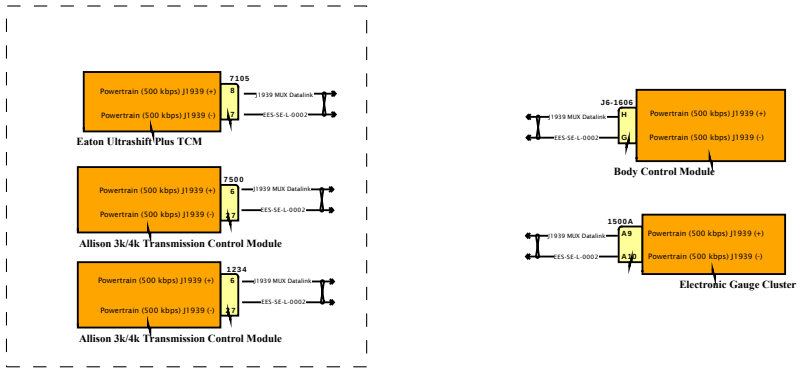

DESIGN DESCRIPTION

FEATURE CODES

SOFTWARE FEATURE CODES

NAVISTAR INC. CONFIDENTIAL PROPRIETARY

Diagram1

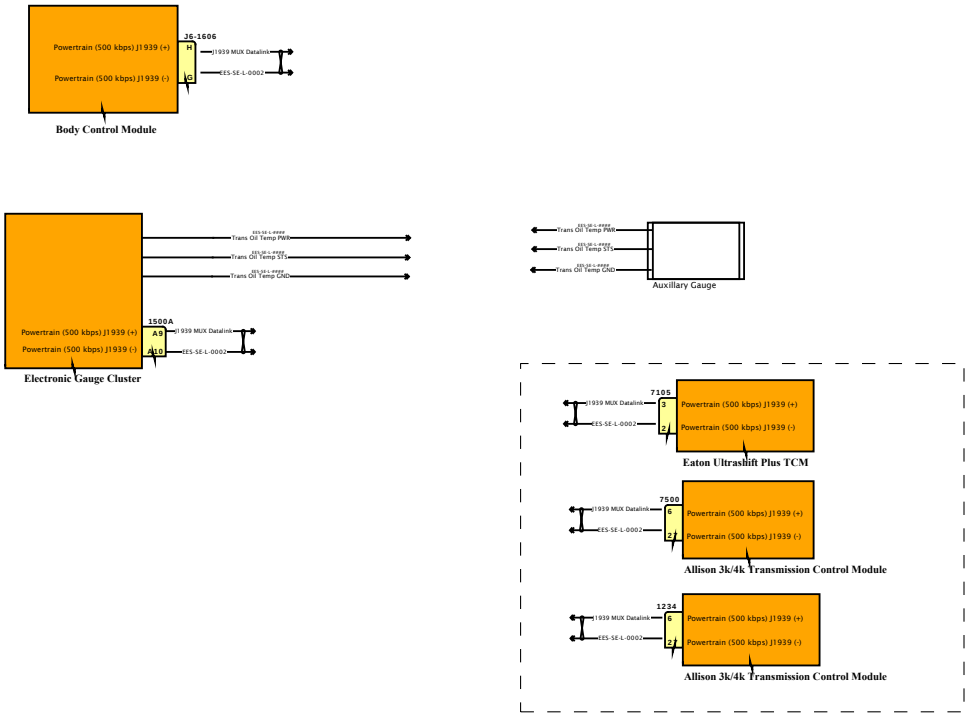

DESIGN DESCRIPTION

FEATURE CODES

SOFTWARE FEATURE CODES

NAVISTAR INC. CONFIDENTIAL PROPRIETARY

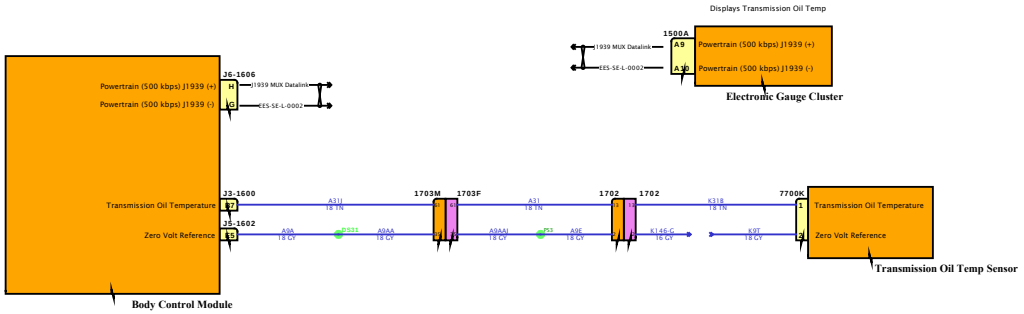

DESIGN DESCRIPTION

FEATURE CODES

SOFTWARE FEATURE CODES

NAVISTAR INC. CONFIDENTIAL PROPRIETARY

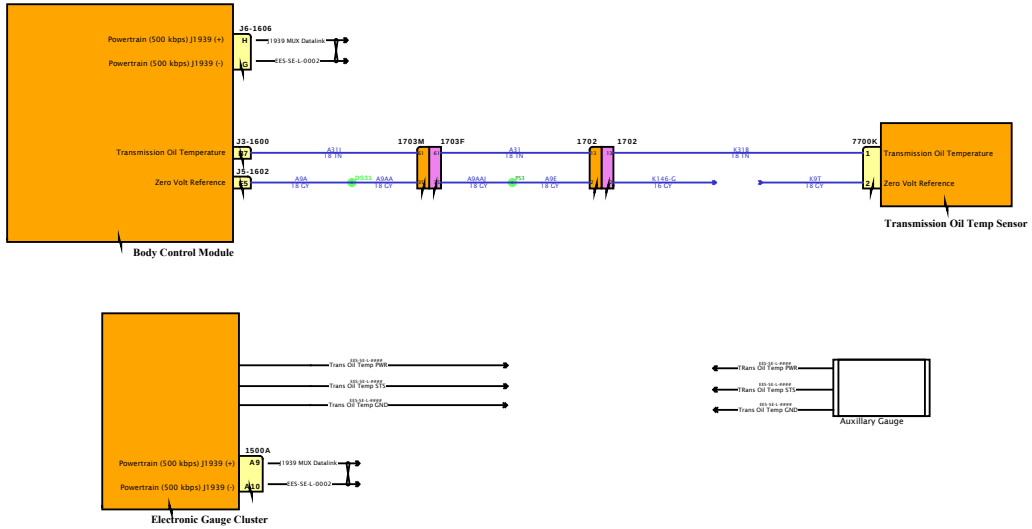

DESIGN DESCRIPTION

FEATURE CODES

SOFTWARE FEATURE CODES

NAVISTAR INC. CONFIDENTIAL PROPRIETARY

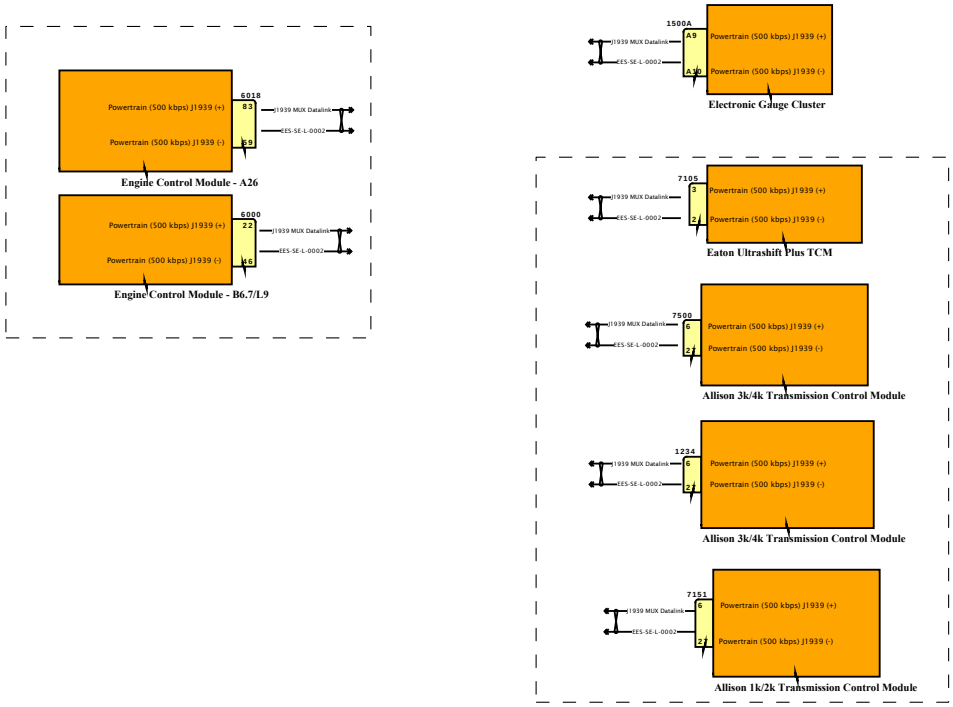

DESIGN DESCRIPTION

FEATURE CODES

SOFTWARE FEATURE CODES

NAVISTAR INC. CONFIDENTIAL PROPRIETARY

Diagram1

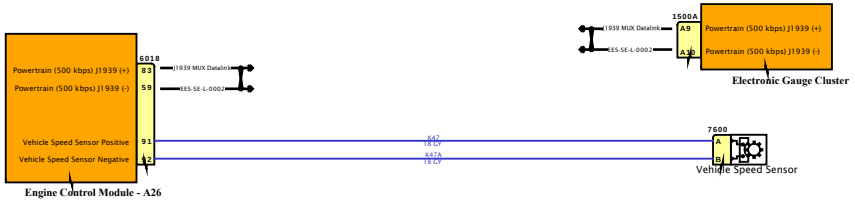

DESIGN DESCRIPTION

FEATURE CODES

SOFTWARE FEATURE CODES

NAVISTAR
NAVISTAR, INC. CONFIDENTIAL PROPRIETARY

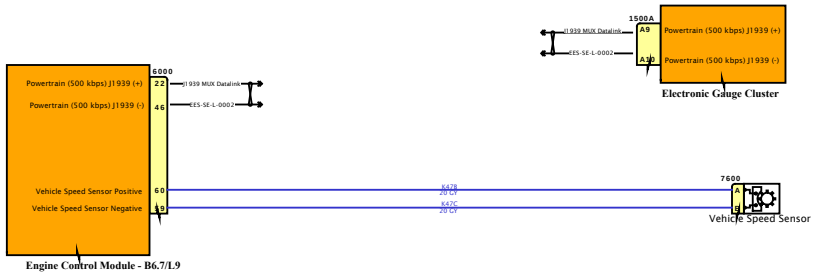

DESIGN DESCRIPTION

FEATURE CODES

SOFTWARE FEATURE CODES

NAVISTAR
NAVISTAR, INC. CONFIDENTIAL PROPRIETARY

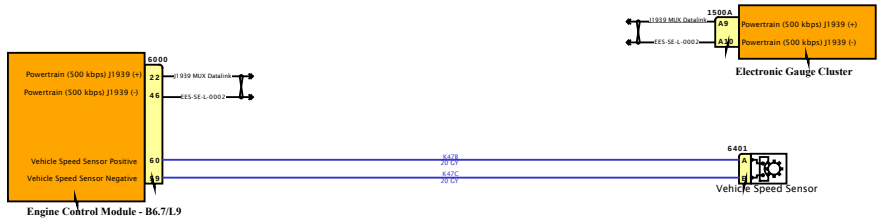

DESIGN DESCRIPTION

FEATURE CODES

SOFTWARE FEATURE CODES

NAVISTAR INC. CONFIDENTIAL PROPRIETARY

Diagram1

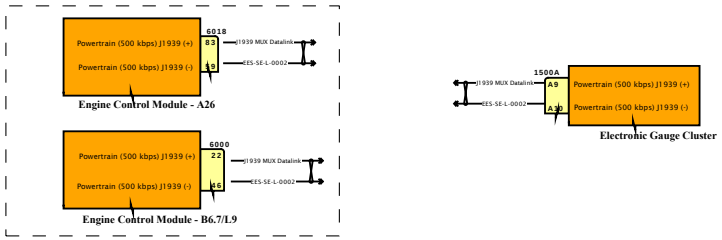

DESIGN DESCRIPTION

FEATURE CODES

SOFTWARE FEATURE CODES

NAVISTAR INC. CONFIDENTIAL PROPRIETARY

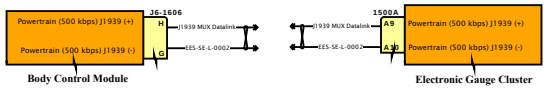

DESIGN DESCRIPTION

FEATURE CODES

SOFTWARE FEATURE CODES

NAVISTAR INC. CONFIDENTIAL PROPRIETARY

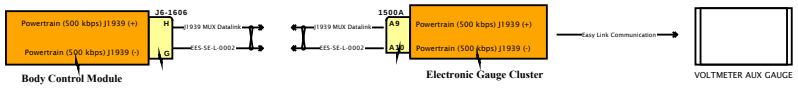

DESIGN DESCRIPTION

FEATURE CODES

SOFTWARE FEATURE CODES

NAVISTAR INC. CONFIDENTIAL PROPRIETARY

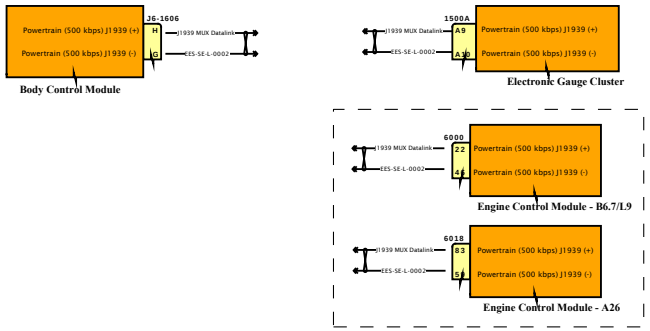

DESIGN DESCRIPTION

FEATURE CODES

SOFTWARE FEATURE CODES

NAVISTAR
NAVISTAR, INC. CONFIDENTIAL PROPRIETARY

Diagram1

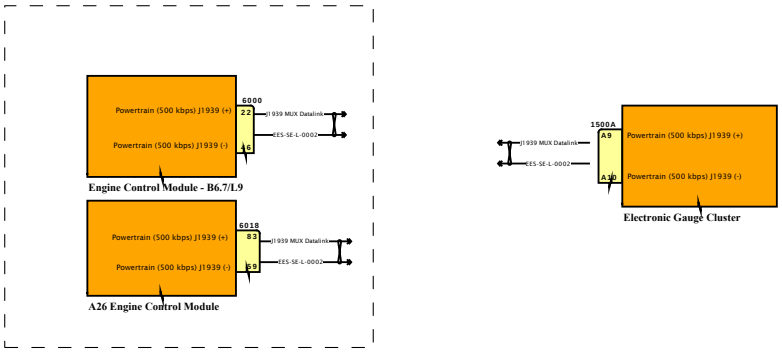

DESIGN DESCRIPTION

FEATURE CODES

SOFTWARE FEATURE CODES

NAVISTAR
NAVISTAR, INC. CONFIDENTIAL PROPRIETARY

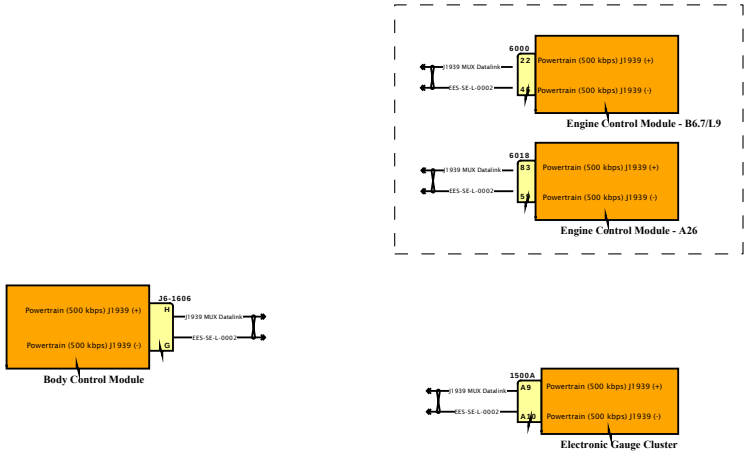

DESIGN DESCRIPTION

FEATURE CODES

SOFTWARE FEATURE CODES

NAVISTAR INC. CONFIDENTIAL PROPRIETARY

Diagram1

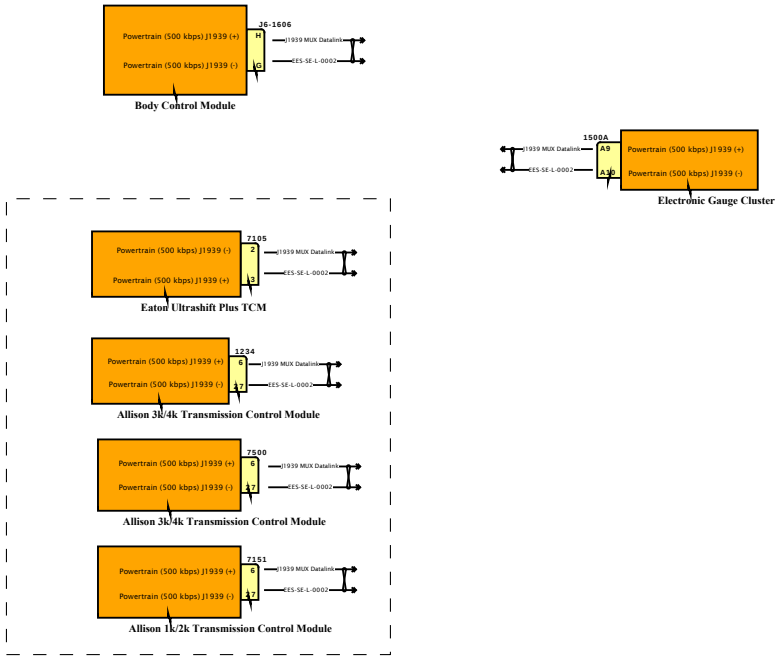

DESIGN DESCRIPTION

FEATURE CODES

SOFTWARE FEATURE CODES

NAVISTAR
NAVISTAR, INC. CONFIDENTIAL PROPRIETARY

Diagram1

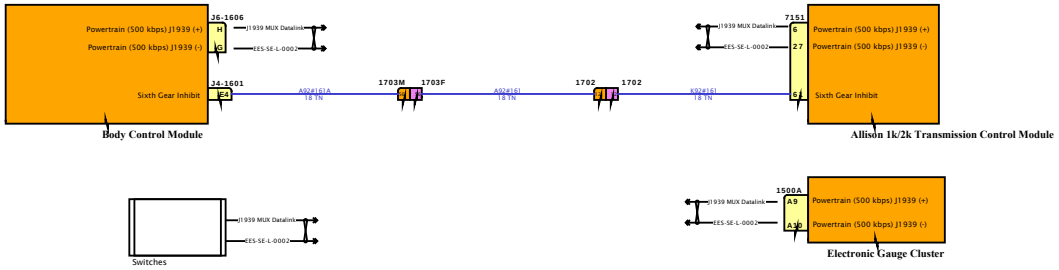

DESIGN DESCRIPTION

FEATURE CODES

SOFTWARE FEATURE CODES

NAVISTAR
NAVISTAR, INC. CONFIDENTIAL PROPRIETARY

DESIGN DESCRIPTION

FEATURE CODES

SOFTWARE FEATURE CODES

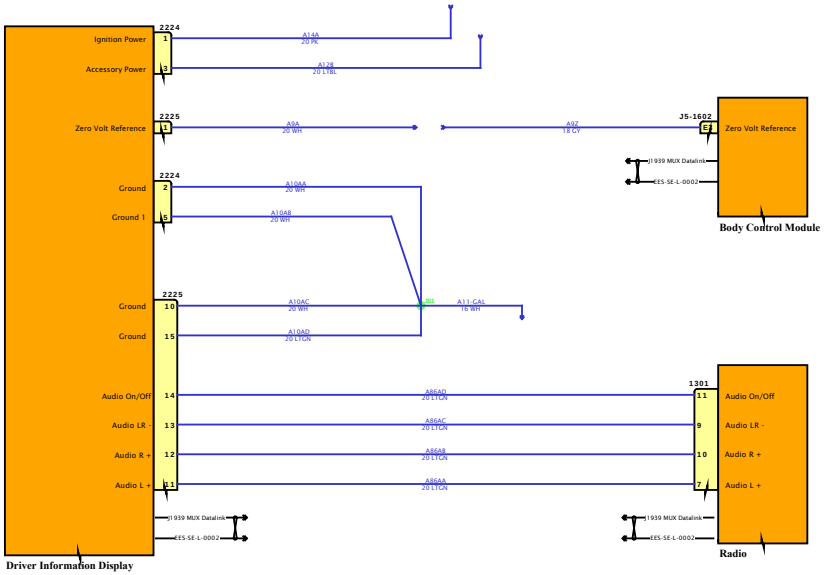

Diagram1

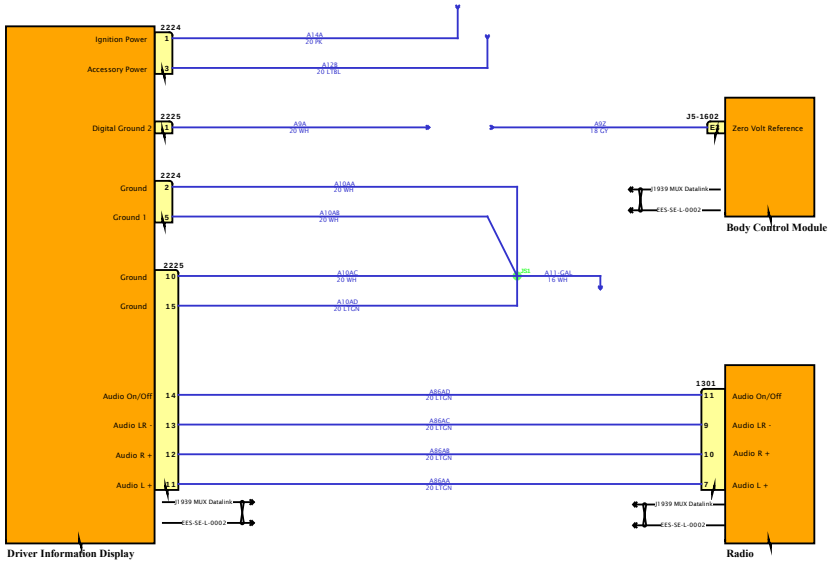

DESIGN DESCRIPTION

FEATURE CODES

SOFTWARE FEATURE CODES

NAVISTAR
NAVISTAR, INC. CONFIDENTIAL PROPRIETARY

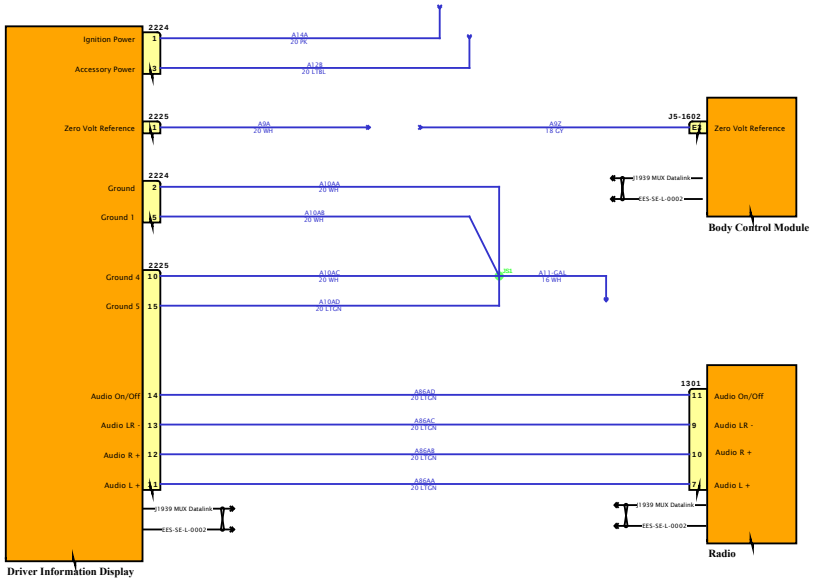

DESIGN DESCRIPTION

FEATURE CODES

SOFTWARE FEATURE CODES

NAVISTAR
NAVISTAR, INC. CONFIDENTIAL PROPRIETARY

Diagram1

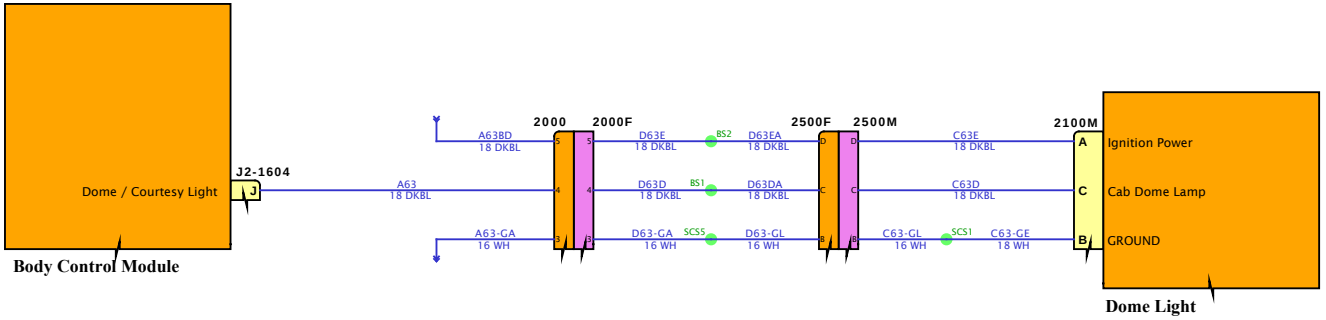

DESIGN DESCRIPTION

FEATURE CODES

SOFTWARE FEATURE CODES

NAVISTAR
NAVISTAR, INC. CONFIDENTIAL PROPRIETARY

Diagram1

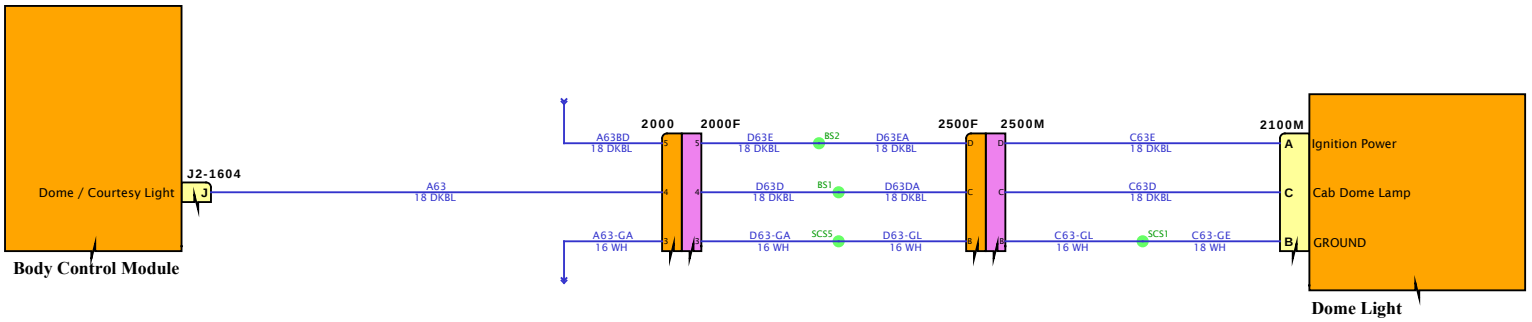

DESIGN DESCRIPTION

FEATURE CODES

SOFTWARE FEATURE CODES

NAVISTAR

NAVISTAR, INC. CONFIDENTIAL PROPRIETARY

Diagram1

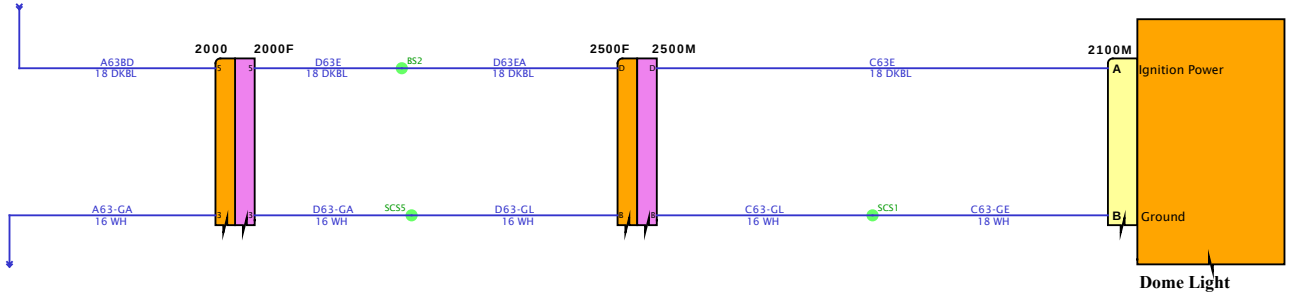

DESIGN DESCRIPTION

FEATURE CODES

SOFTWARE FEATURE CODES

NAVISTAR
NAVISTAR, INC. CONFIDENTIAL PROPRIETARY

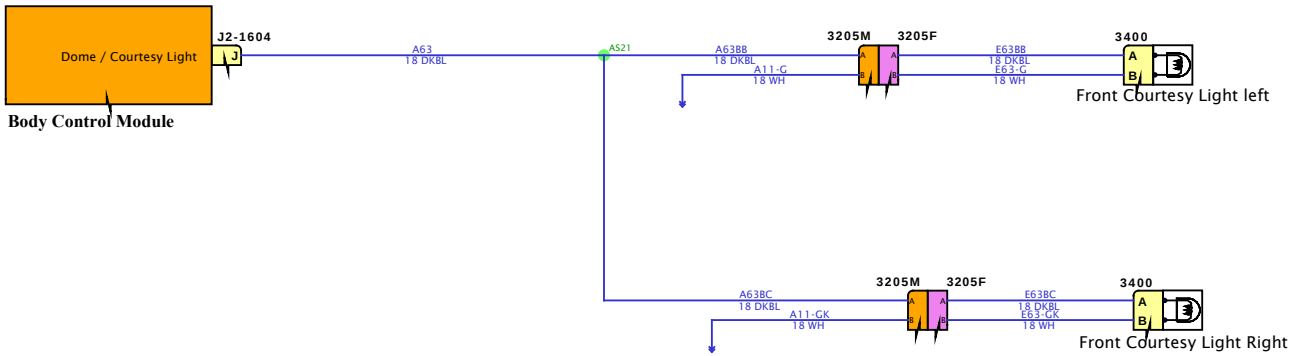

DESIGN DESCRIPTION

FEATURE CODES

SOFTWARE FEATURE CODES

NAVISTAR
NAVISTAR, INC. CONFIDENTIAL PROPRIETARY

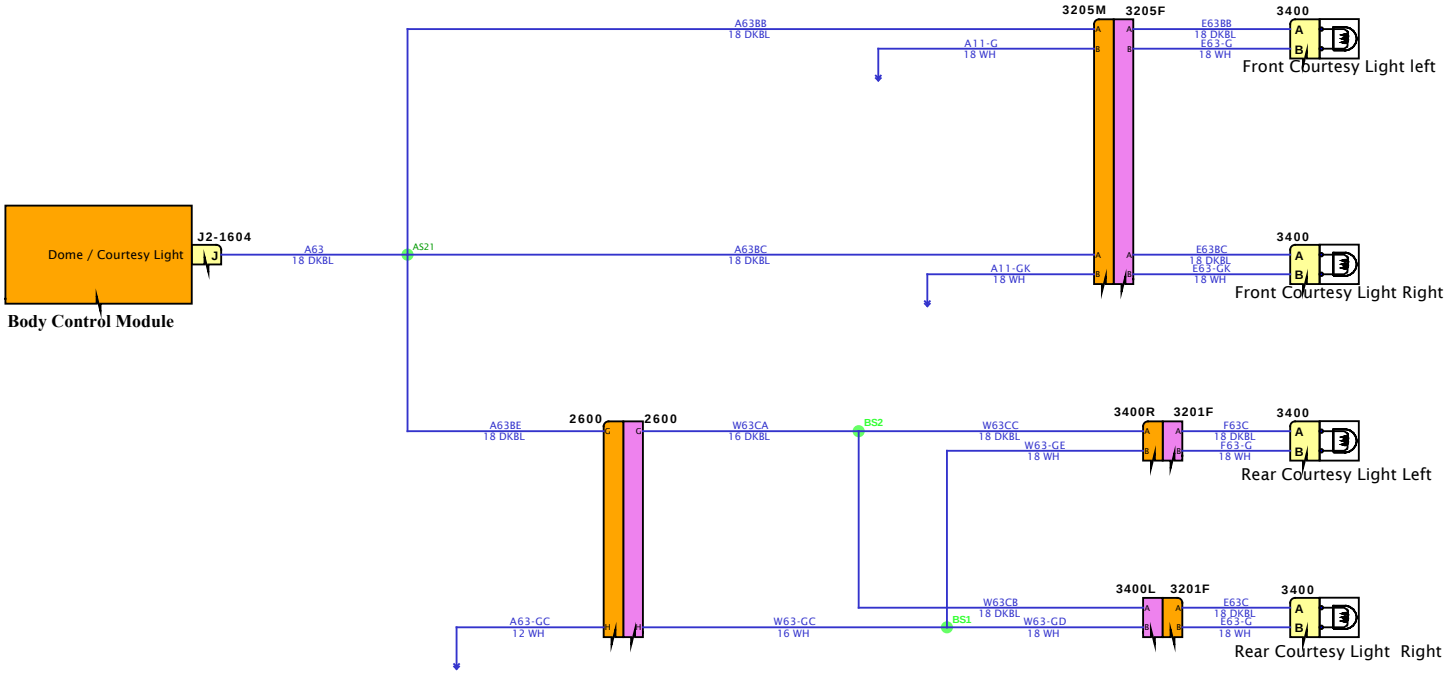

DESIGN DESCRIPTION

FEATURE CODES

SOFTWARE FEATURE CODES

NAVISTAR
NAVISTAR, INC. CONFIDENTIAL PROPRIETARY

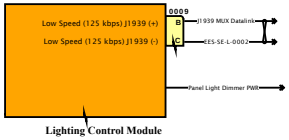

DESIGN DESCRIPTION

FEATURE CODES

SOFTWARE FEATURE CODES

NAVISTAR INC. CONFIDENTIAL PROPRIETARY

Diagram1

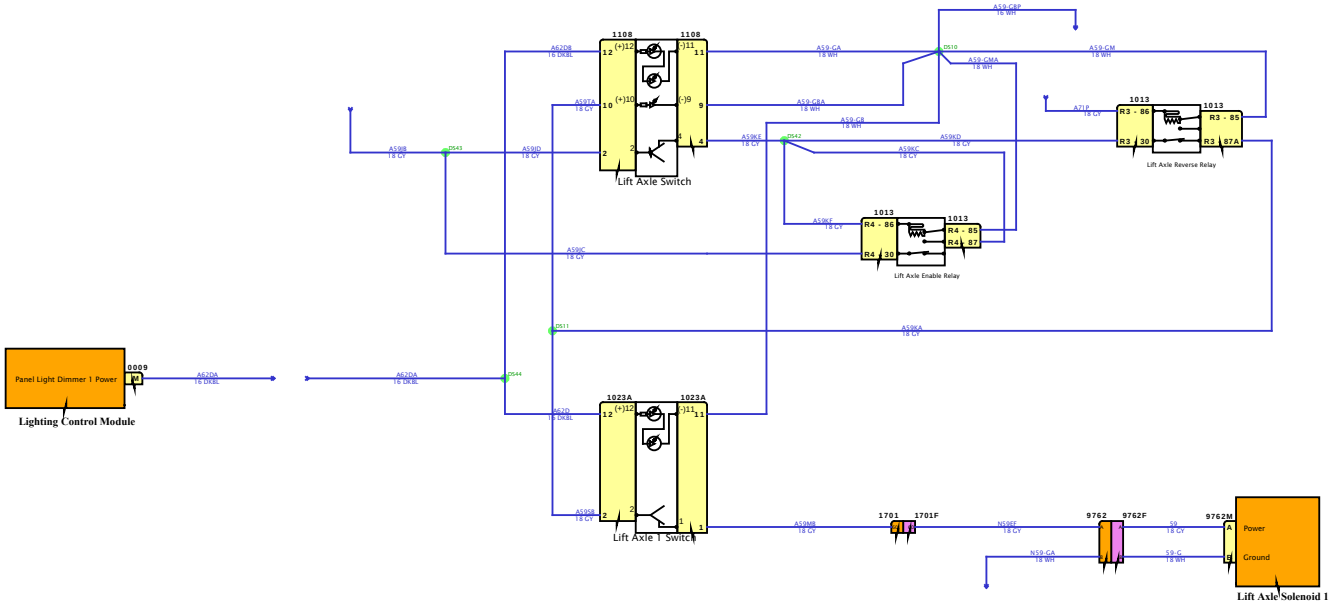

DESIGN DESCRIPTION

FEATURE CODES

SOFTWARE FEATURE CODES

NAVISTAR INC. CONFIDENTIAL PROPRIETARY

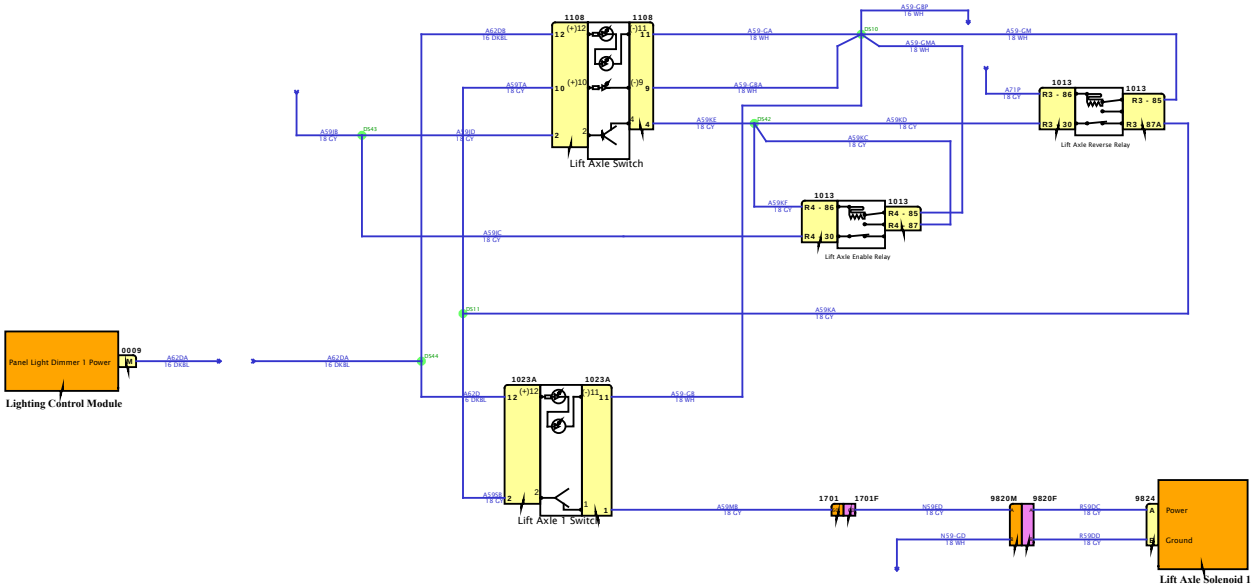

DESIGN DESCRIPTION

FEATURE CODES

SOFTWARE FEATURE CODES

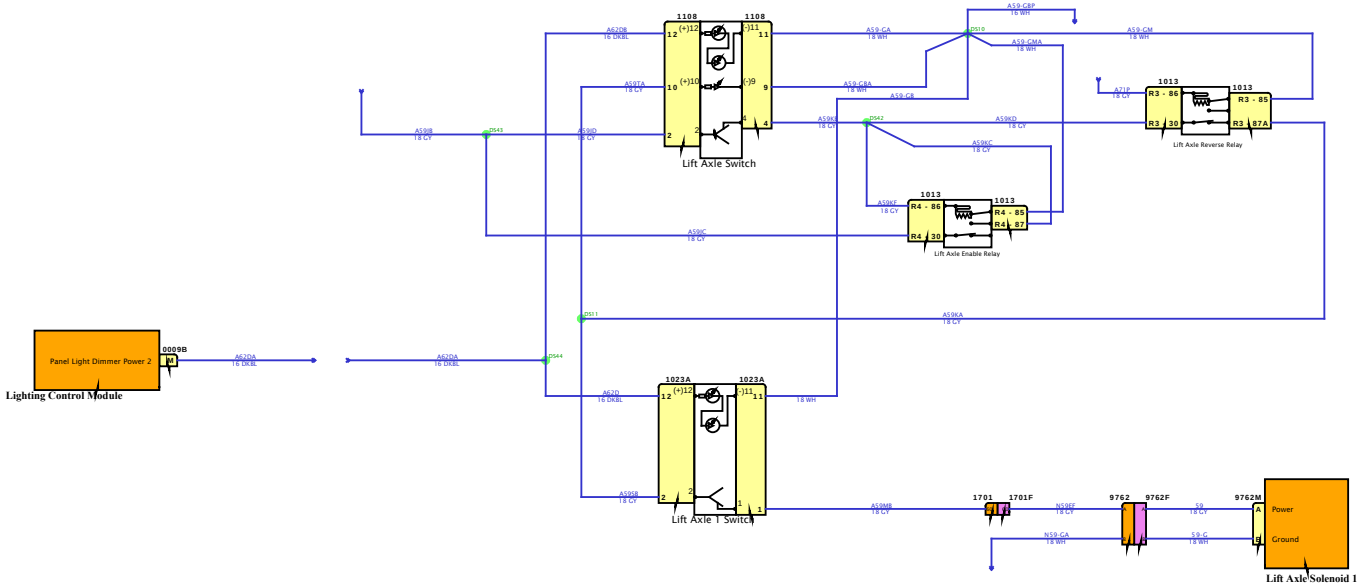

DESIGN DESCRIPTION

FEATURE CODES

SOFTWARE FEATURE CODES

NAVISTAR
NAVISTAR, INC. CONFIDENTIAL PROPRIETARY

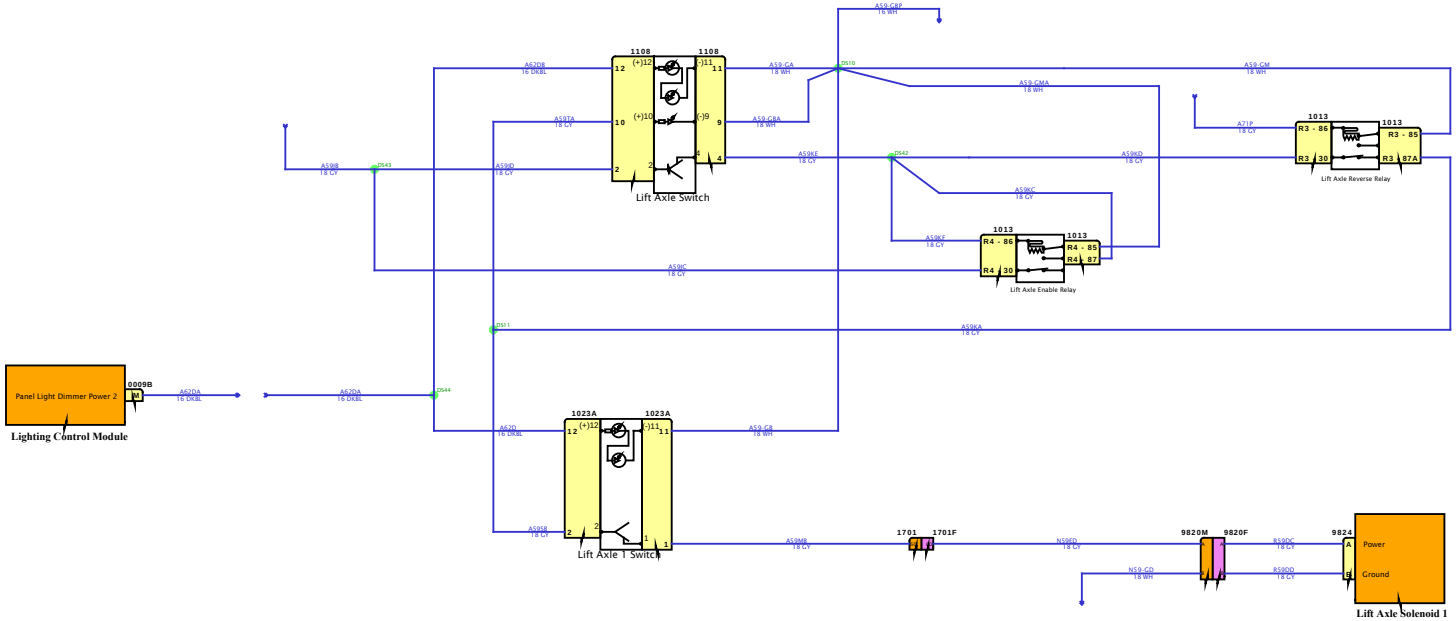

DESIGN DESCRIPTION

FEATURE CODES

SOFTWARE FEATURE CODES

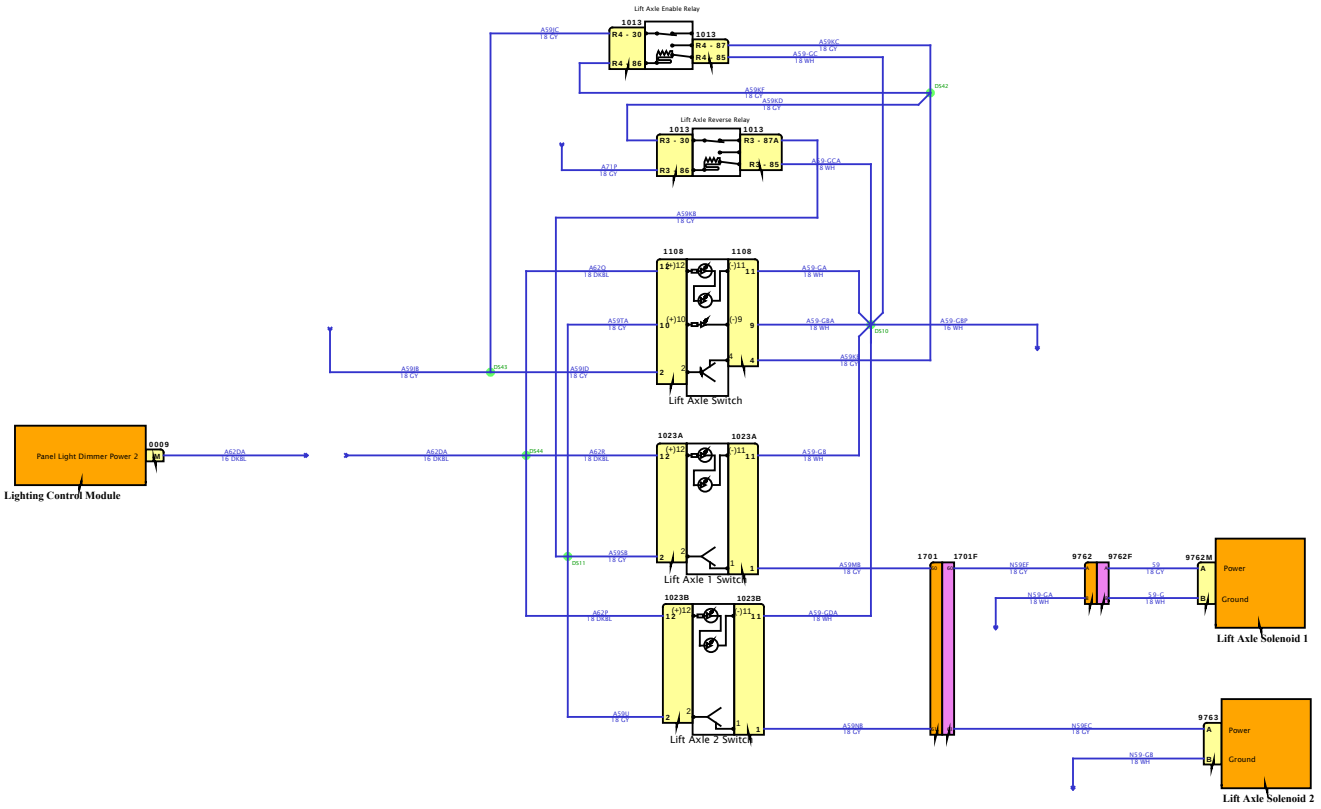

DESIGN DESCRIPTION

FEATURE CODES

SOFTWARE FEATURE CODES

Diagram2

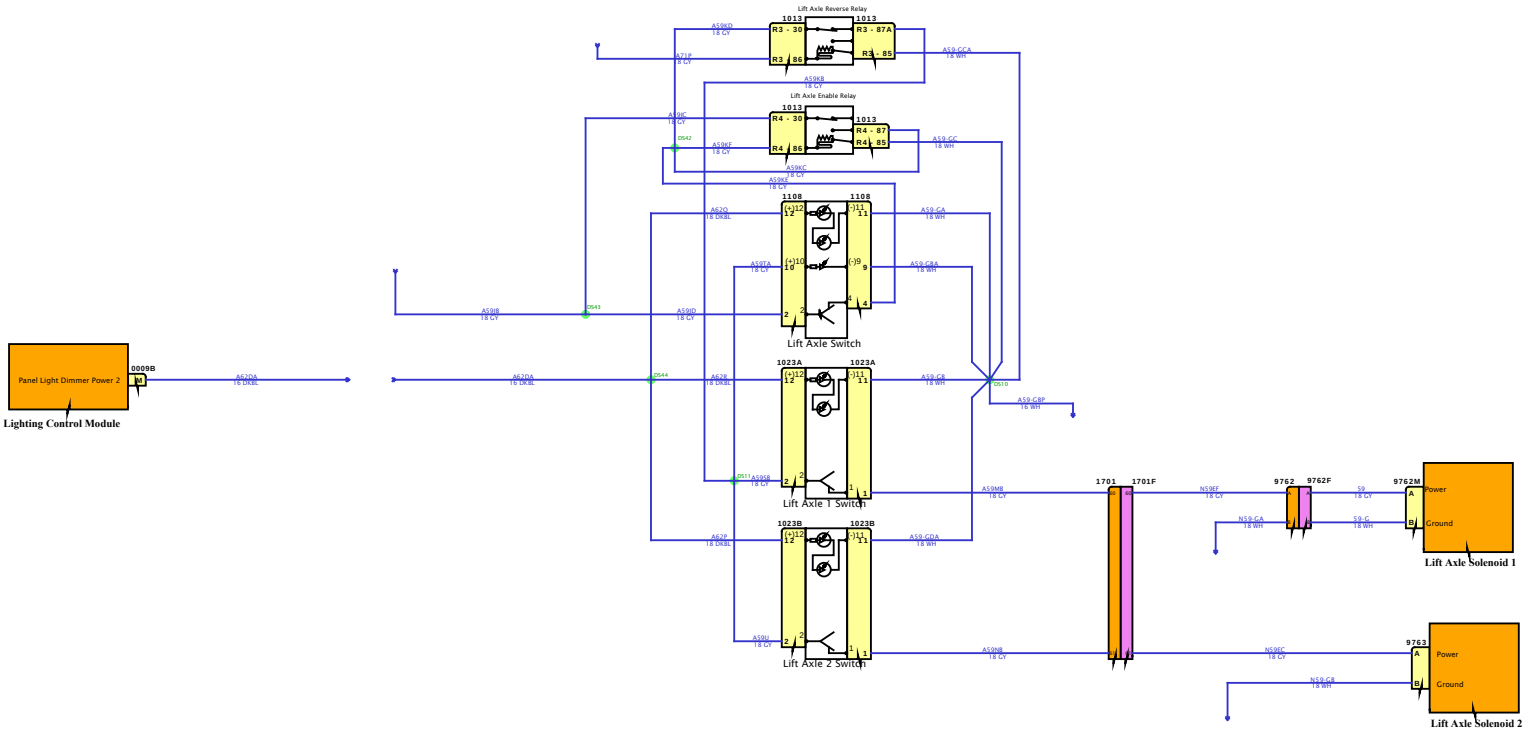

DESIGN DESCRIPTION

FEATURE CODES

SOFTWARE FEATURE CODES

NAVISTAR
NAVISTAR, INC. CONFIDENTIAL PROPRIETARY

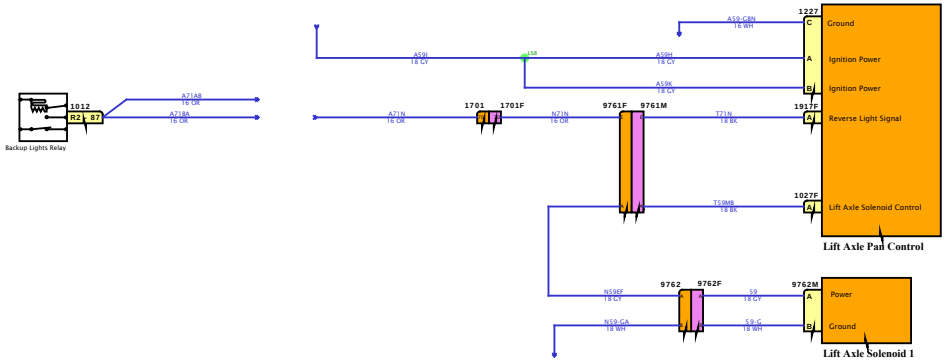

DESIGN DESCRIPTION

FEATURE CODES

SOFTWARE FEATURE CODES

NAVISTAR
NAVISTAR, INC. CONFIDENTIAL PROPRIETARY

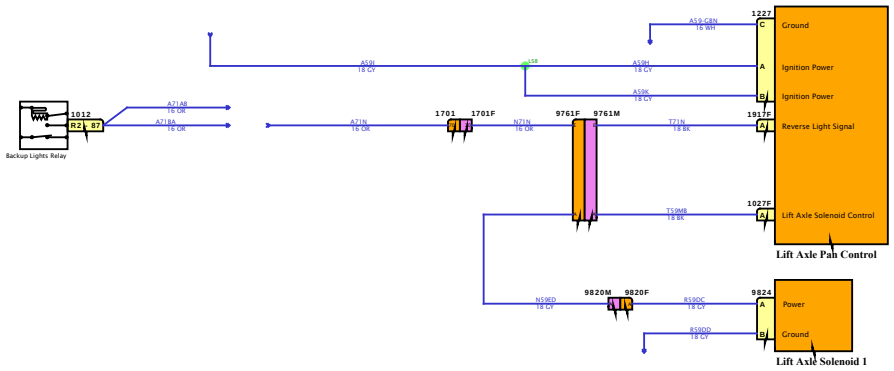

DESIGN DESCRIPTION

FEATURE CODES

SOFTWARE FEATURE CODES

NAVISTAR INC. CONFIDENTIAL PROPRIETARY

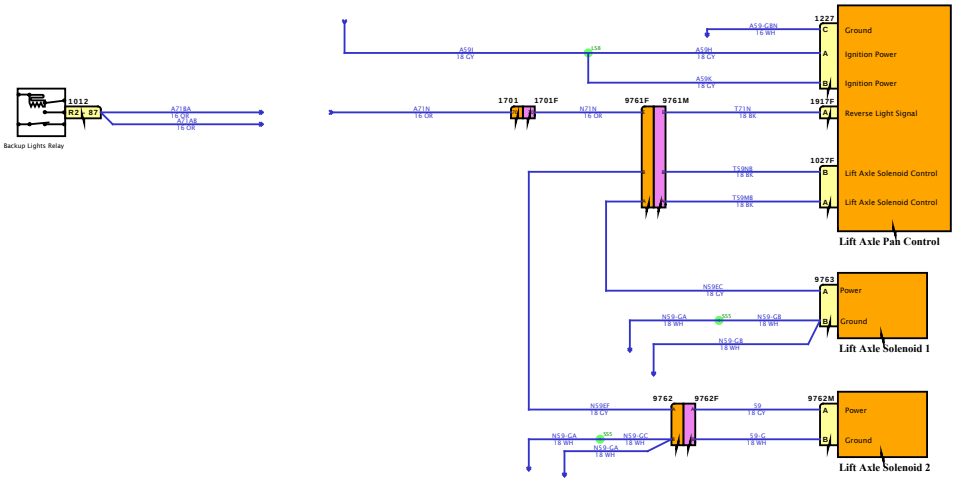

DESIGN DESCRIPTION

FEATURE CODES

SOFTWARE FEATURE CODES

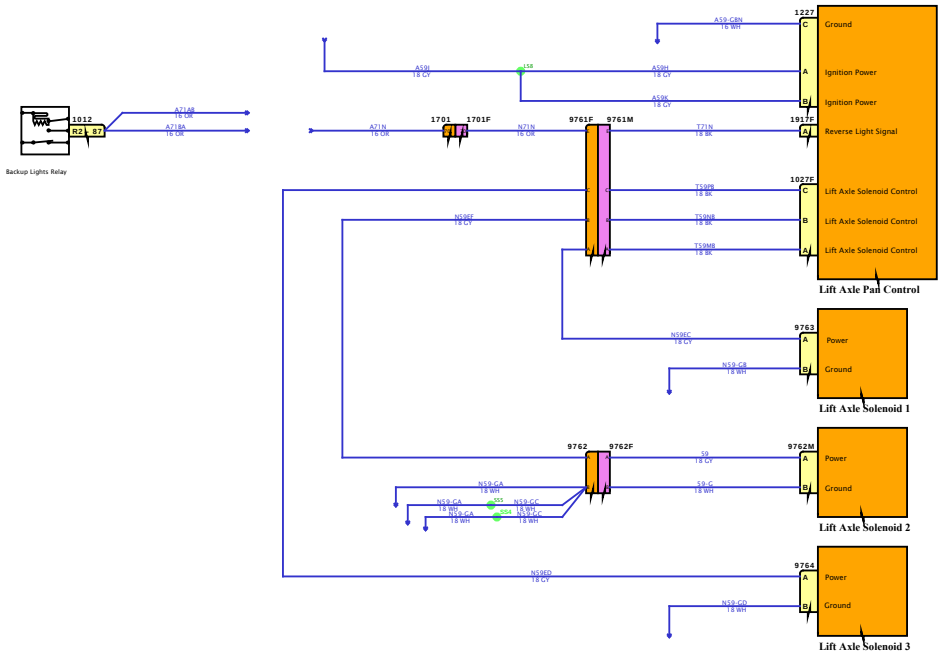

DESIGN DESCRIPTION

FEATURE CODES

SOFTWARE FEATURE CODES

NAVISTAR
NAVISTAR, INC. CONFIDENTIAL PROPRIETARY

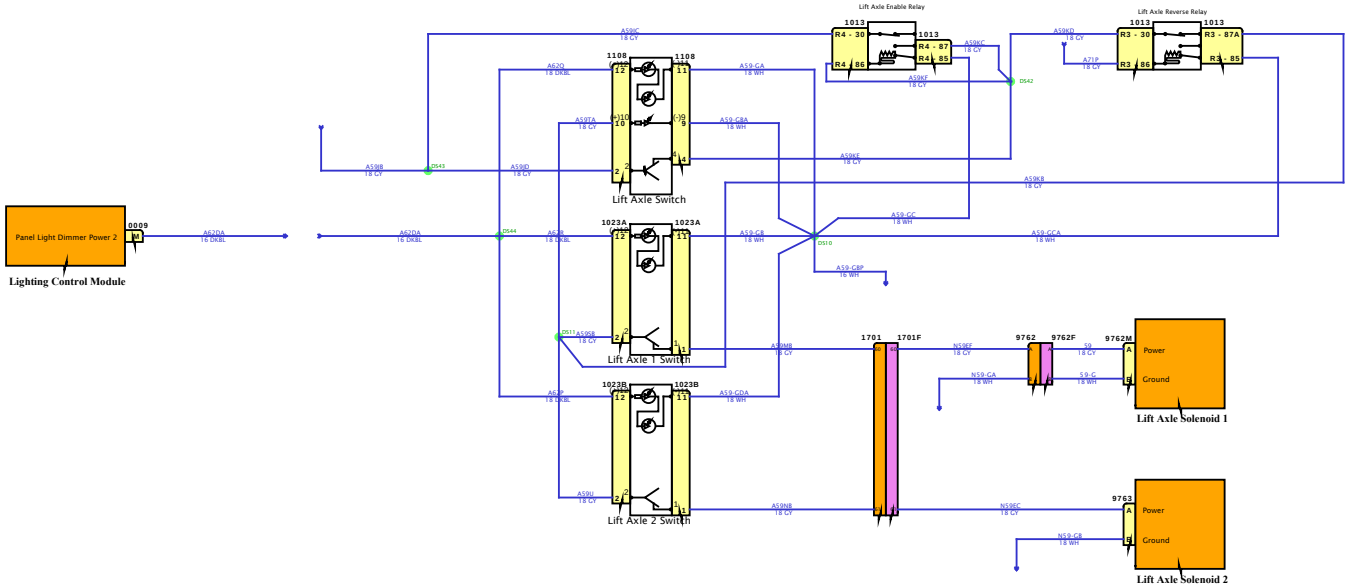

DESIGN DESCRIPTION

FEATURE CODES

SOFTWARE FEATURE CODES

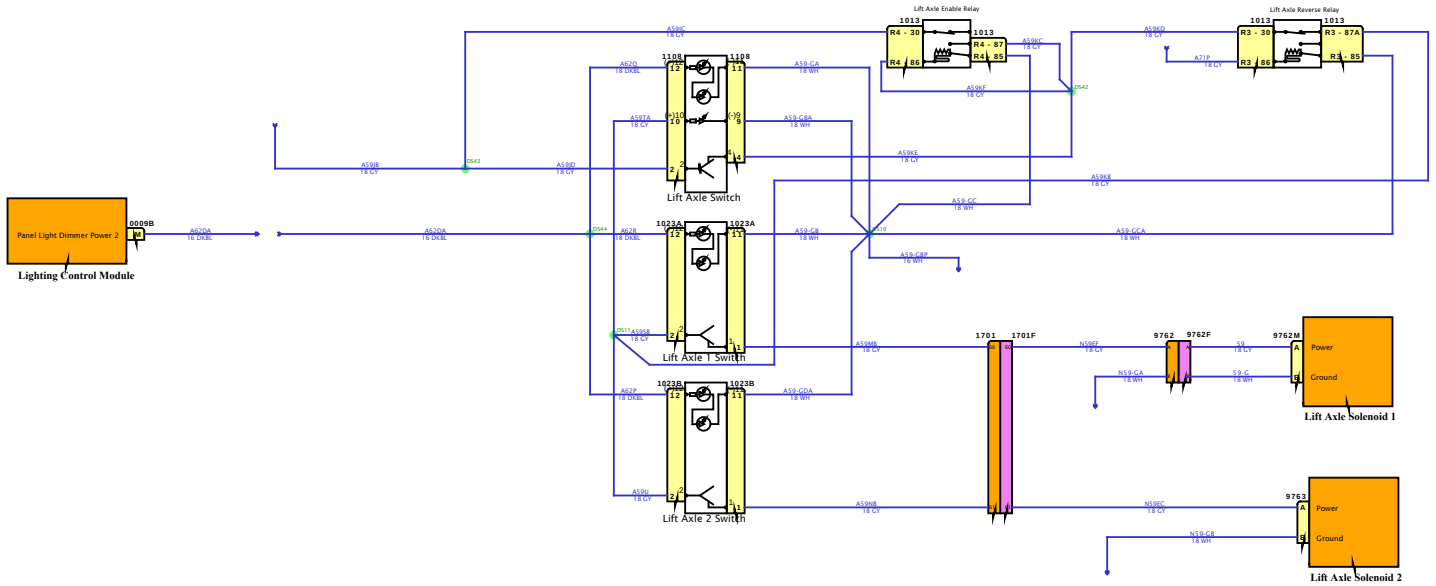

DESIGN DESCRIPTION

FEATURE CODES

SOFTWARE FEATURE CODES

NAVISTAR INC. CONFIDENTIAL PROPRIETARY

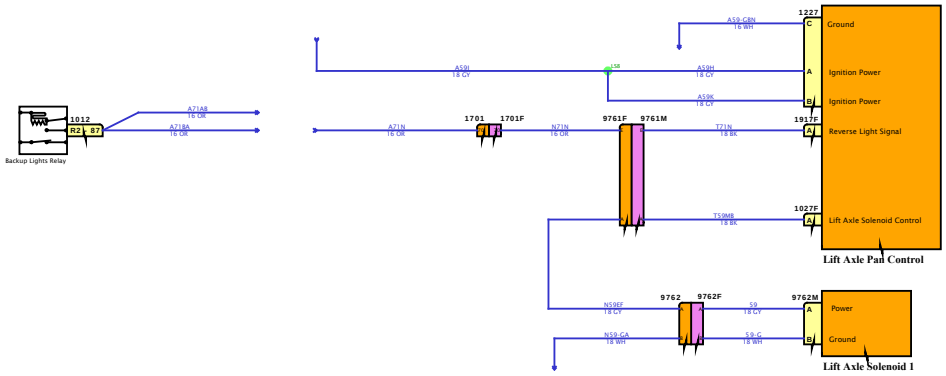

DESIGN DESCRIPTION

FEATURE CODES

SOFTWARE FEATURE CODES

NAVISTAR INC. CONFIDENTIAL PROPRIETARY

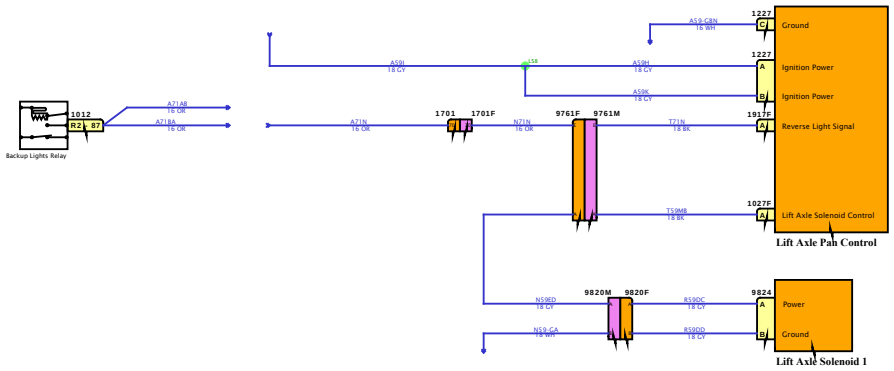

DESIGN DESCRIPTION

FEATURE CODES

SOFTWARE FEATURE CODES

NAVISTAR INC. CONFIDENTIAL PROPRIETARY

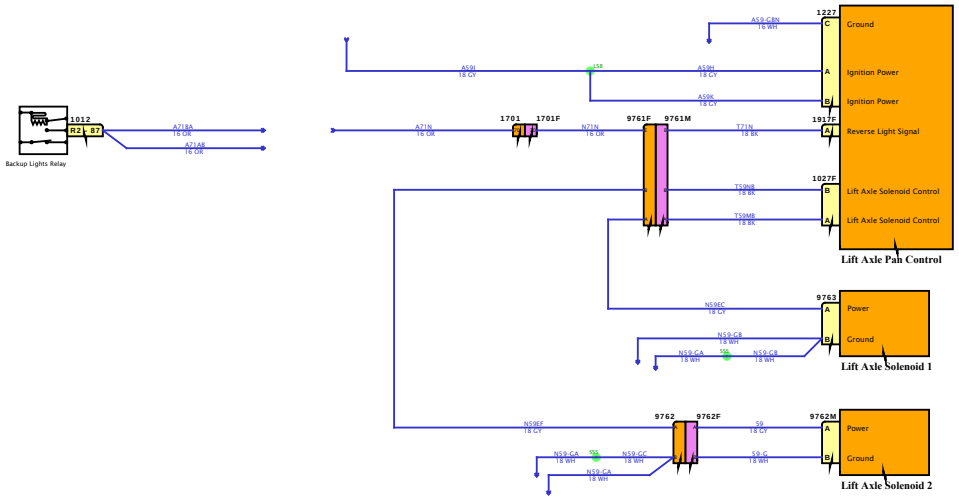

DESIGN DESCRIPTION

FEATURE CODES

SOFTWARE FEATURE CODES

NAVISTAR INC. CONFIDENTIAL PROPRIETARY

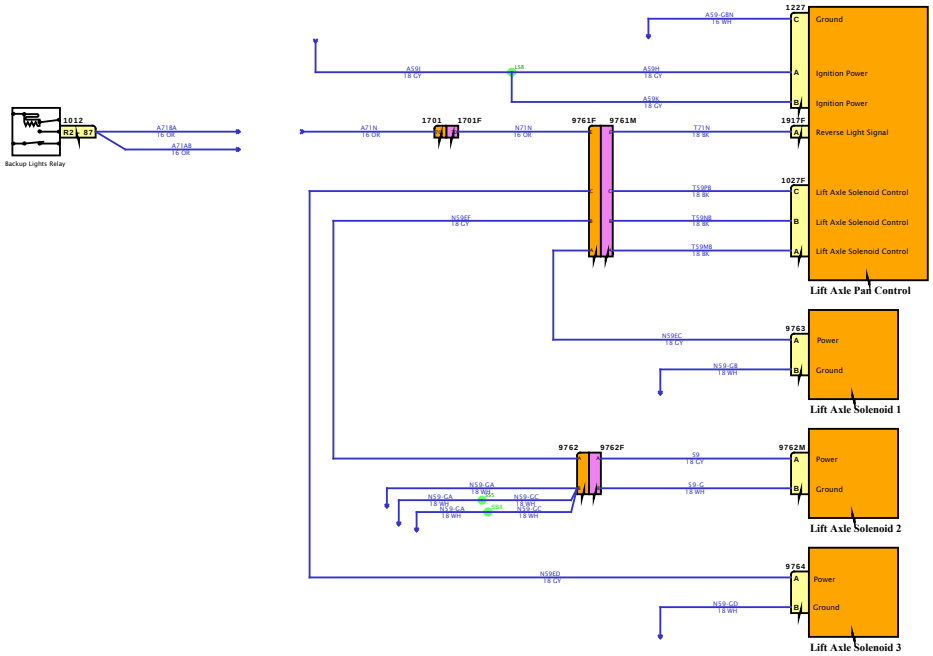

DESIGN DESCRIPTION

FEATURE CODES

SOFTWARE FEATURE CODES

NAVISTAR INC. CONFIDENTIAL PROPRIETARY

Diagram1

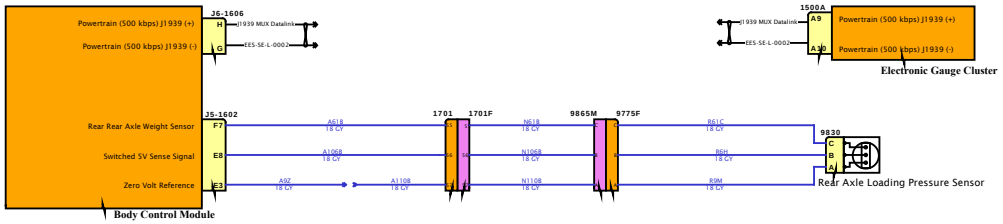

DESIGN DESCRIPTION

FEATURE CODES

SOFTWARE FEATURE CODES

NAVISTAR INC. CONFIDENTIAL PROPRIETARY

DESIGN DESCRIPTION

FEATURE CODES

SOFTWARE FEATURE CODES

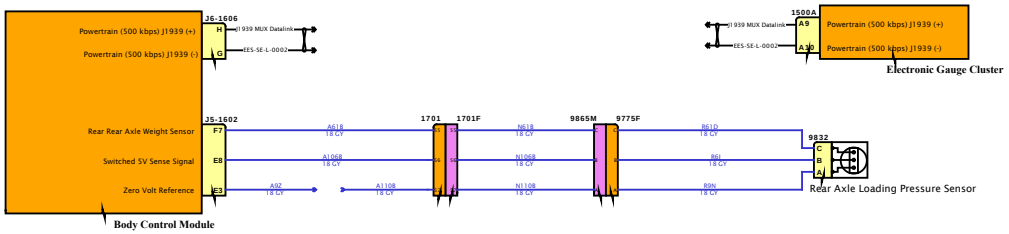

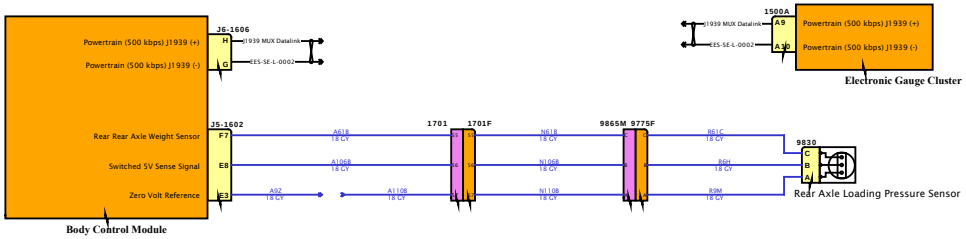

DESIGN DESCRIPTION

FEATURE CODES

SOFTWARE FEATURE CODES

NAVISTAR INC. CONFIDENTIAL PROPRIETARY

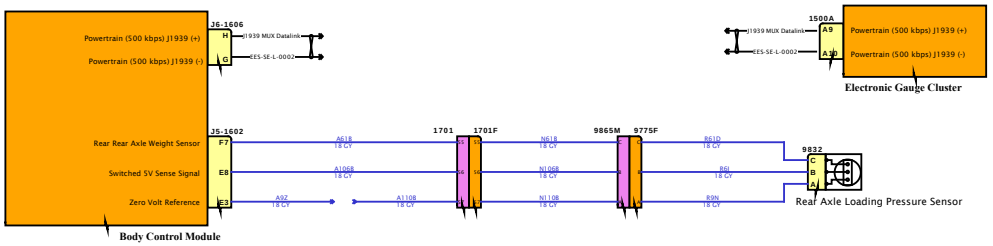

DESIGN DESCRIPTION

FEATURE CODES

SOFTWARE FEATURE CODES

NAVISTAR INC. CONFIDENTIAL PROPRIETARY

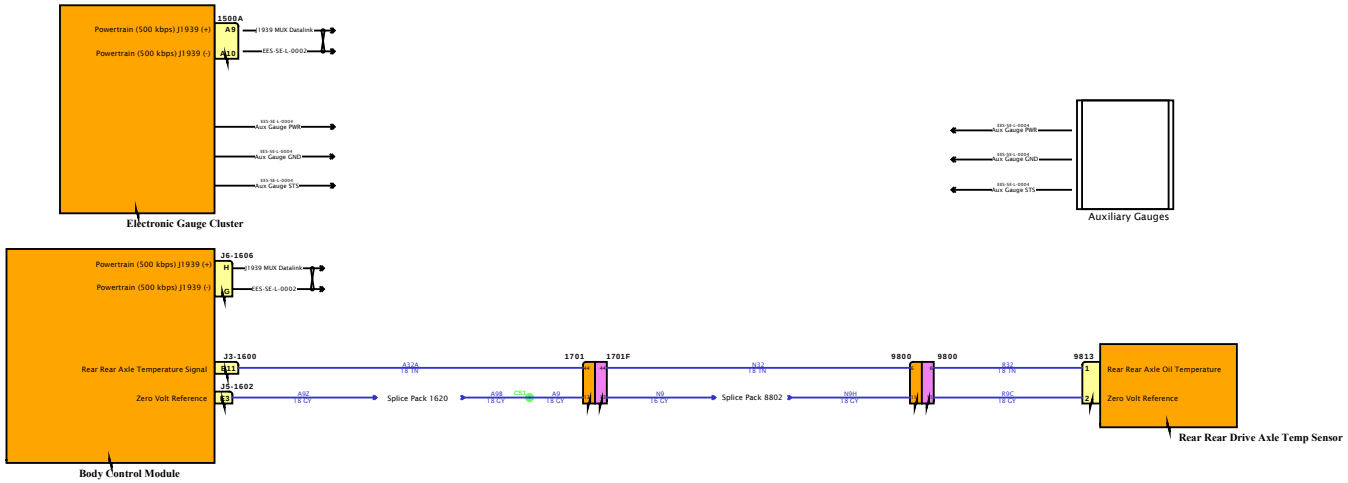

DESIGN DESCRIPTION

FEATURE CODES

SOFTWARE FEATURE CODES

NAVISTAR
NAVISTAR, INC. CONFIDENTIAL PROPRIETARY

Diagram1

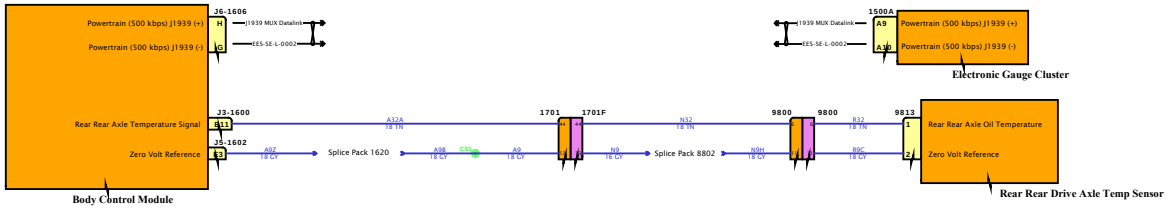

DESIGN DESCRIPTION

FEATURE CODES

SOFTWARE FEATURE CODES

NAVISTAR INC. CONFIDENTIAL PROPRIETARY

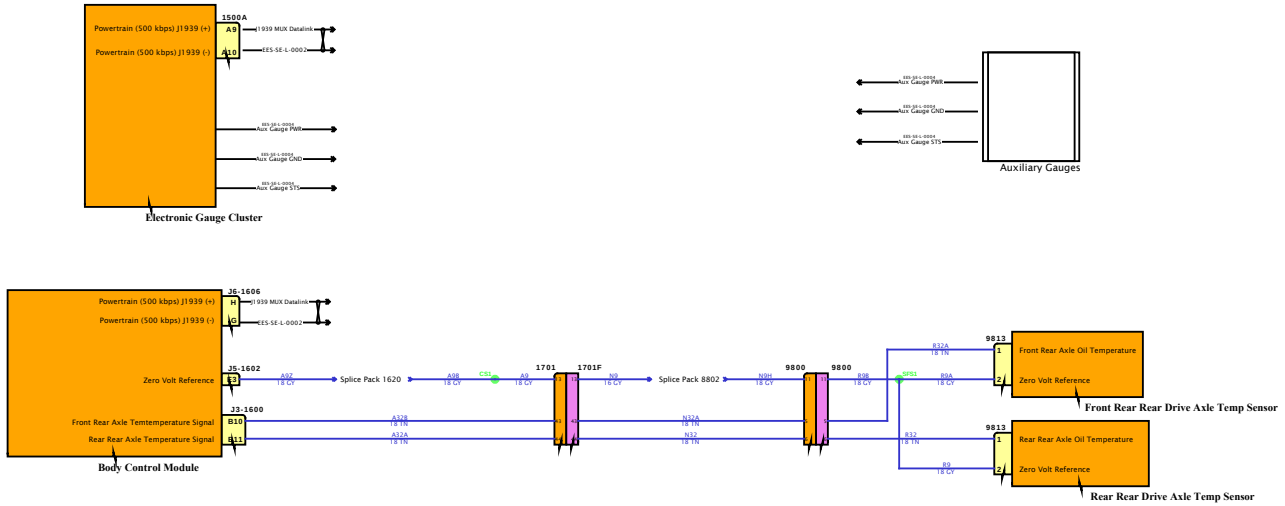

DESIGN DESCRIPTION

FEATURE CODES

SOFTWARE FEATURE CODES

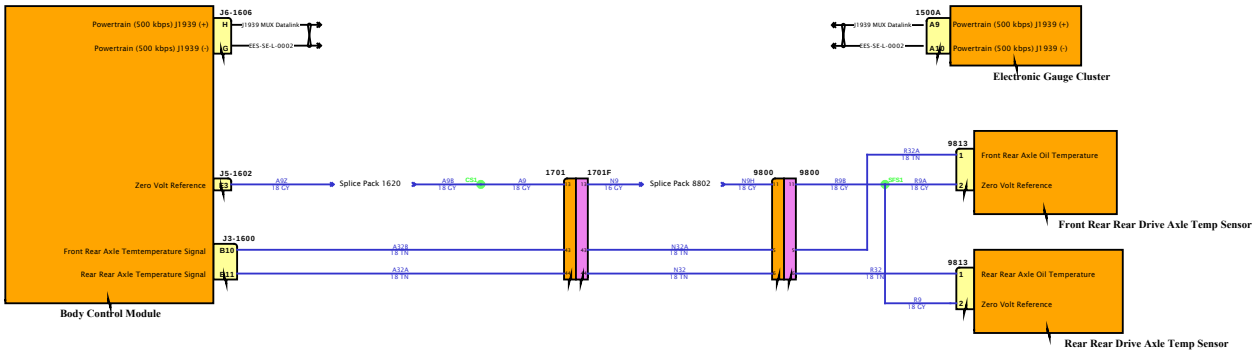

DESIGN DESCRIPTION

FEATURE CODES

SOFTWARE FEATURE CODES

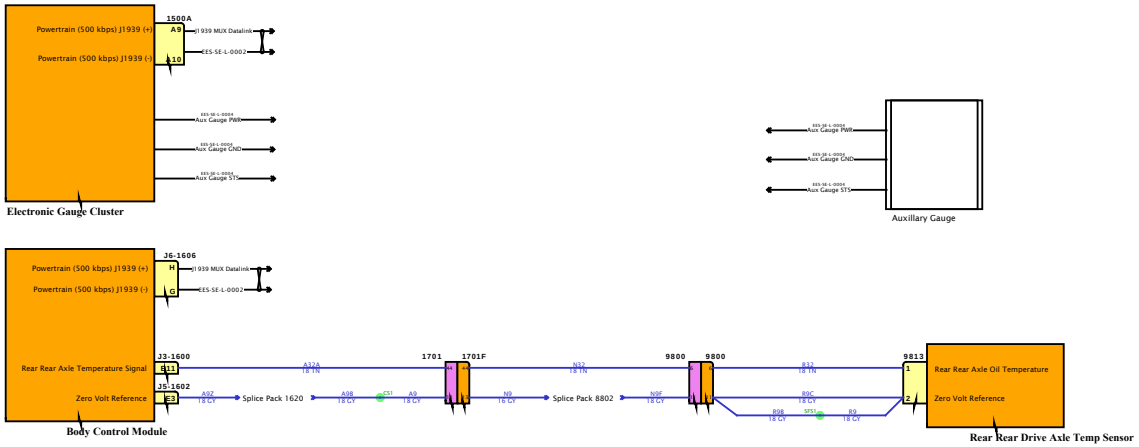

DESIGN DESCRIPTION

FEATURE CODES

SOFTWARE FEATURE CODES

NAVISTAR
NAVISTAR, INC. CONFIDENTIAL PROPRIETARY

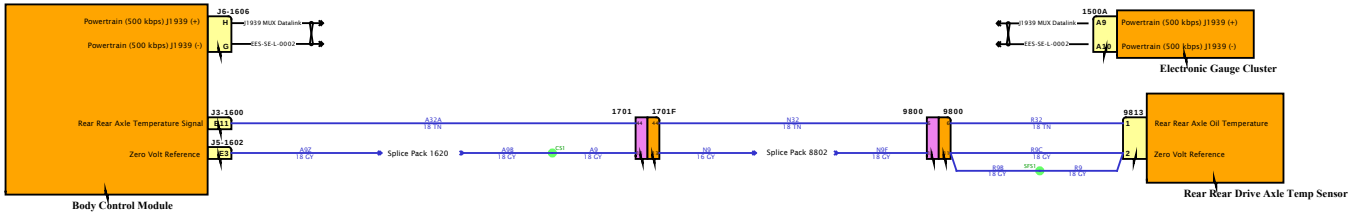

DESIGN DESCRIPTION

FEATURE CODES

SOFTWARE FEATURE CODES

NAVISTAR
NAVISTAR, INC. CONFIDENTIAL PROPRIETARY

Diagram1

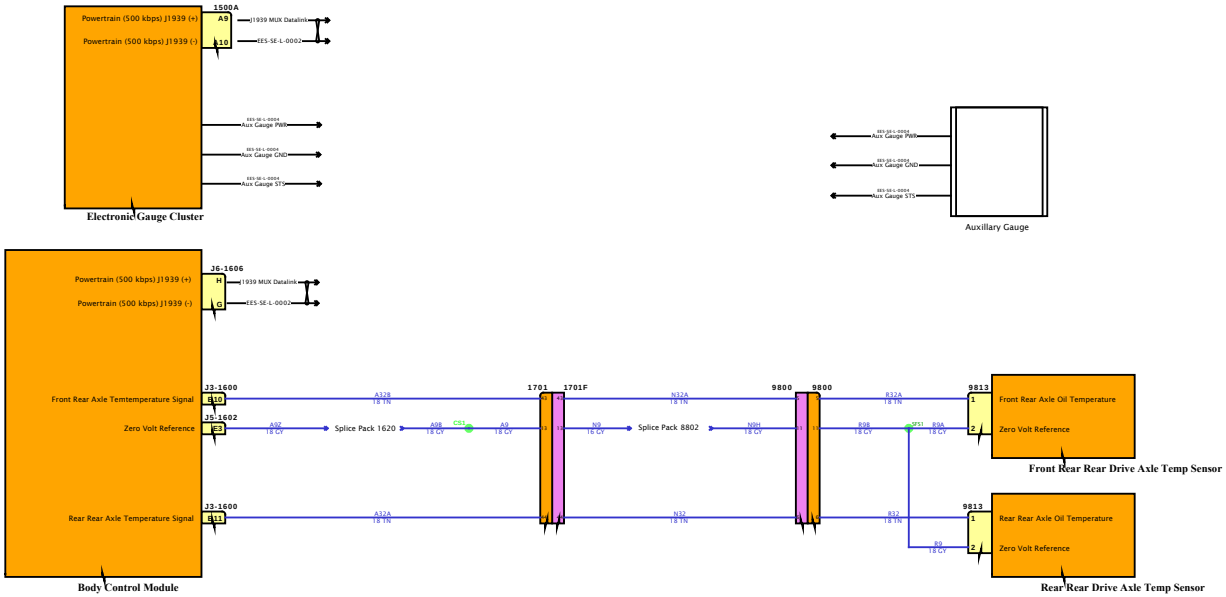

DESIGN DESCRIPTION

FEATURE CODES

SOFTWARE FEATURE CODES

NAVISTAR
NAVISTAR, INC. CONFIDENTIAL PROPRIETARY

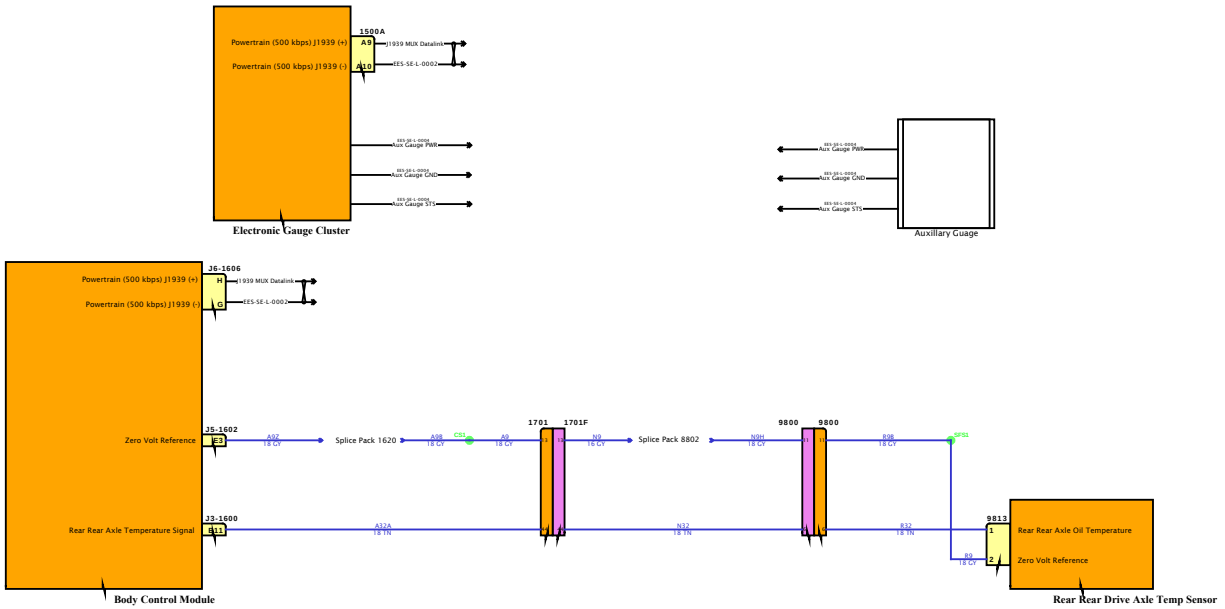

DESIGN DESCRIPTION

FEATURE CODES

SOFTWARE FEATURE CODES

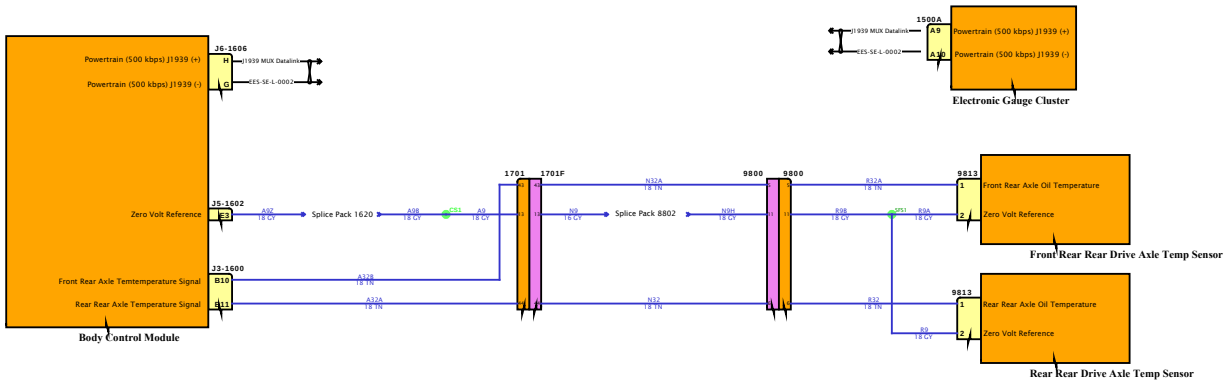

DESIGN DESCRIPTION

FEATURE CODES

SOFTWARE FEATURE CODES

NAVISTAR
NAVISTAR, INC. CONFIDENTIAL PROPRIETARY

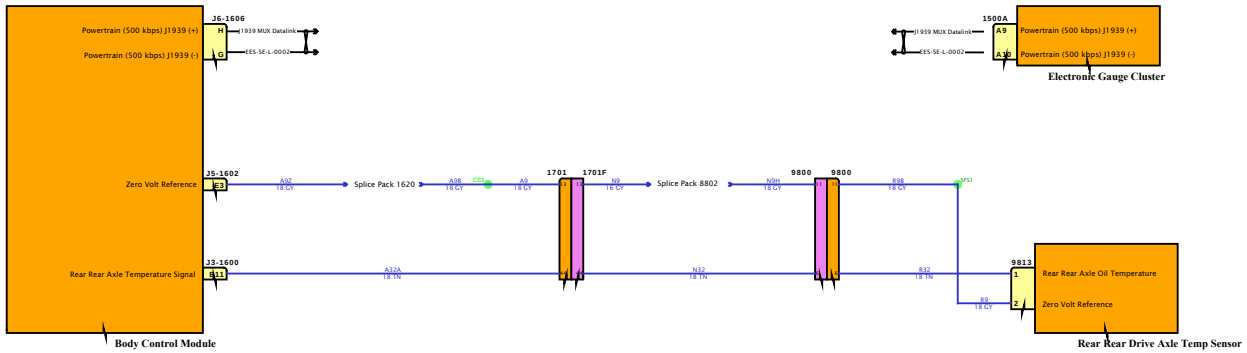

DESIGN DESCRIPTION

FEATURE CODES

SOFTWARE FEATURE CODES

NAVISTAR
NAVISTAR, INC. CONFIDENTIAL PROPRIETARY

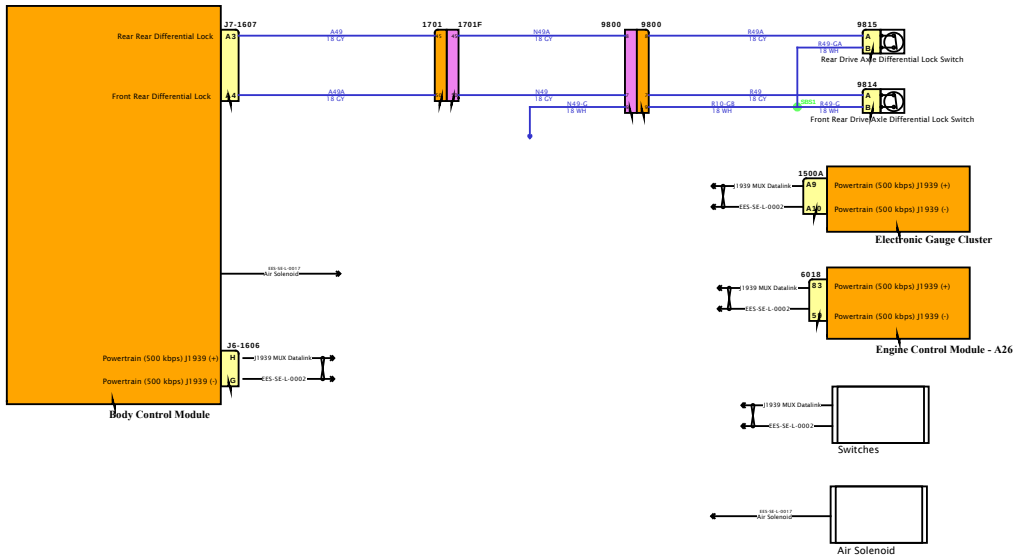

DESIGN DESCRIPTION

FEATURE CODES

SOFTWARE FEATURE CODES

NAVISTAR
NAVISTAR, INC. CONFIDENTIAL PROPRIETARY

Diagram1

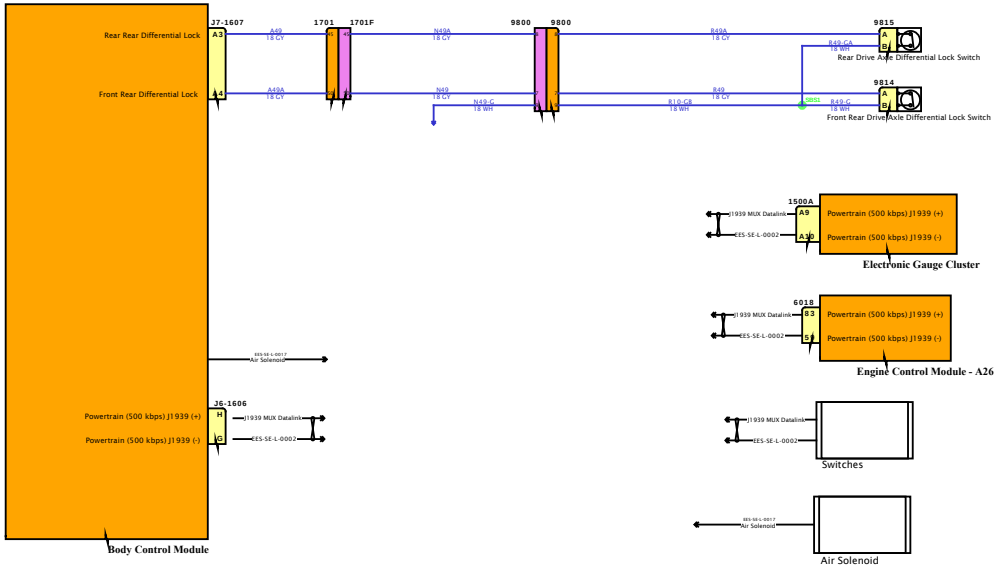

DESIGN DESCRIPTION

FEATURE CODES

SOFTWARE FEATURE CODES

NAVISTAR
NAVISTAR, INC. CONFIDENTIAL PROPRIETARY

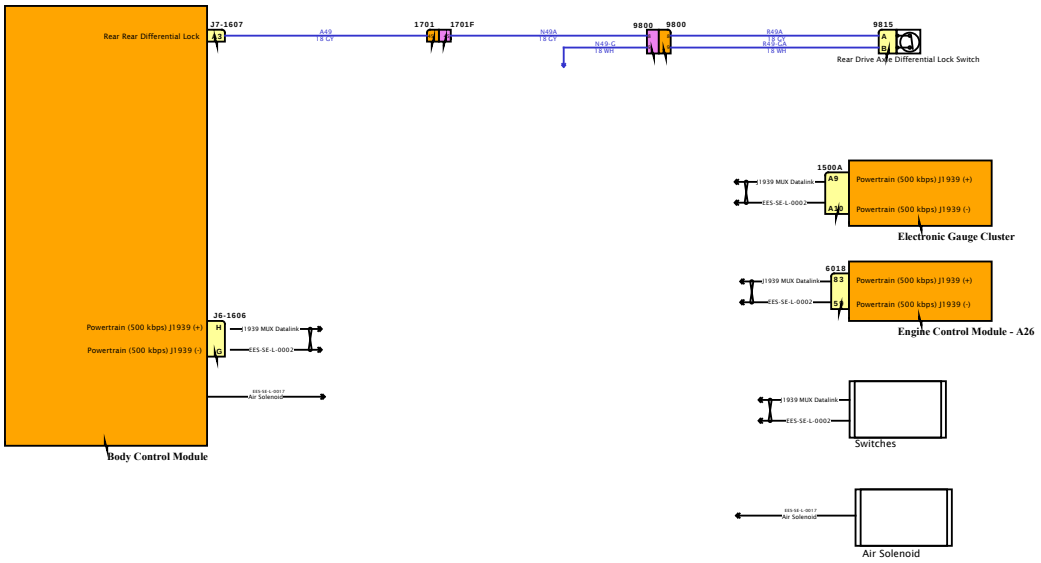

DESIGN DESCRIPTION

FEATURE CODES

SOFTWARE FEATURE CODES

NAVISTAR INC. CONFIDENTIAL PROPRIETARY

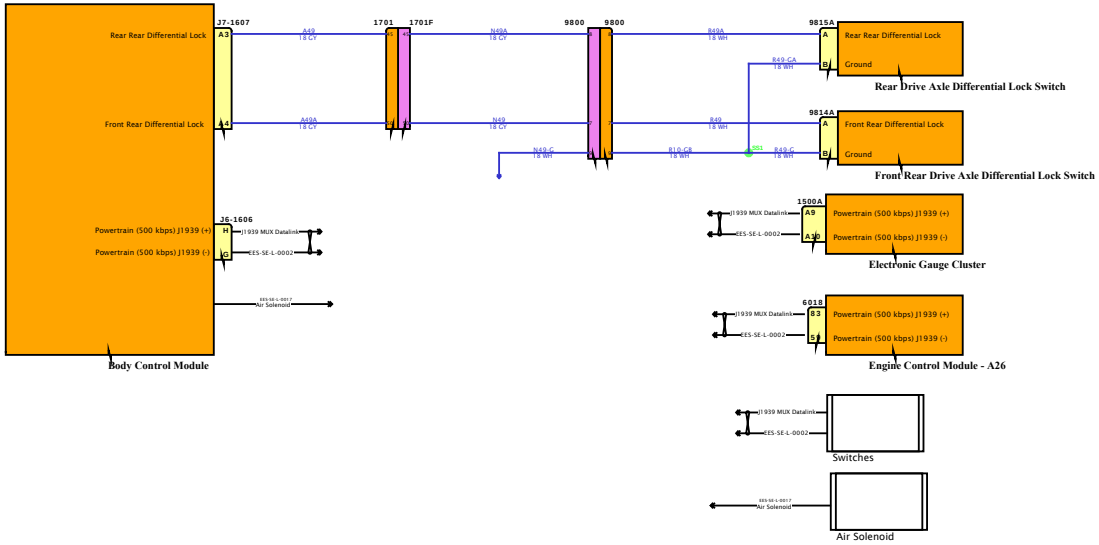

DESIGN DESCRIPTION

FEATURE CODES

SOFTWARE FEATURE CODES

NAVISTAR
NAVISTAR, INC. CONFIDENTIAL PROPRIETARY

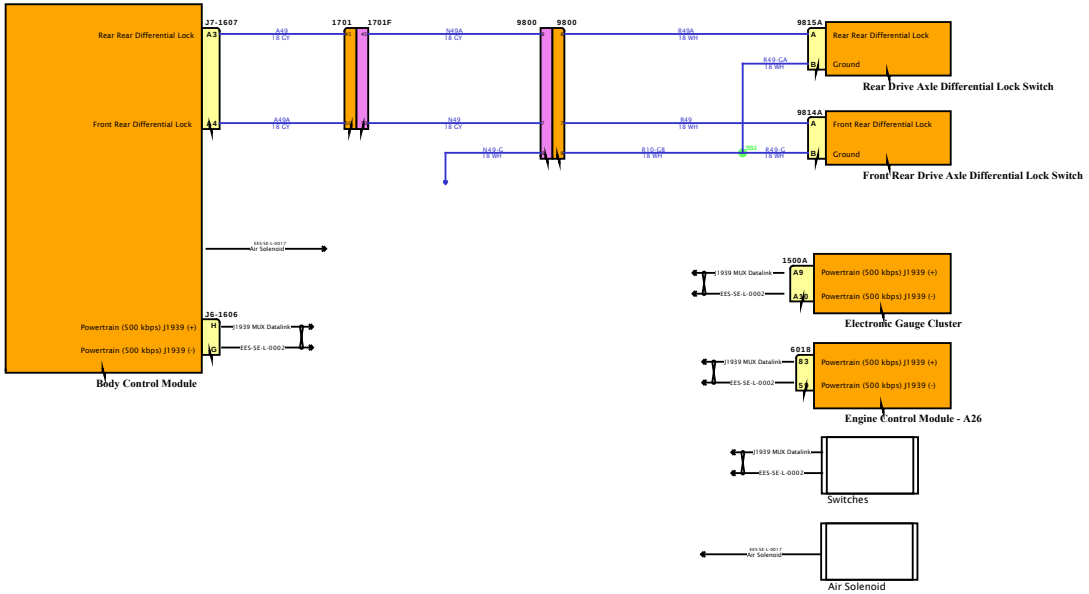

DESIGN DESCRIPTION

FEATURE CODES

SOFTWARE FEATURE CODES

Diagram1

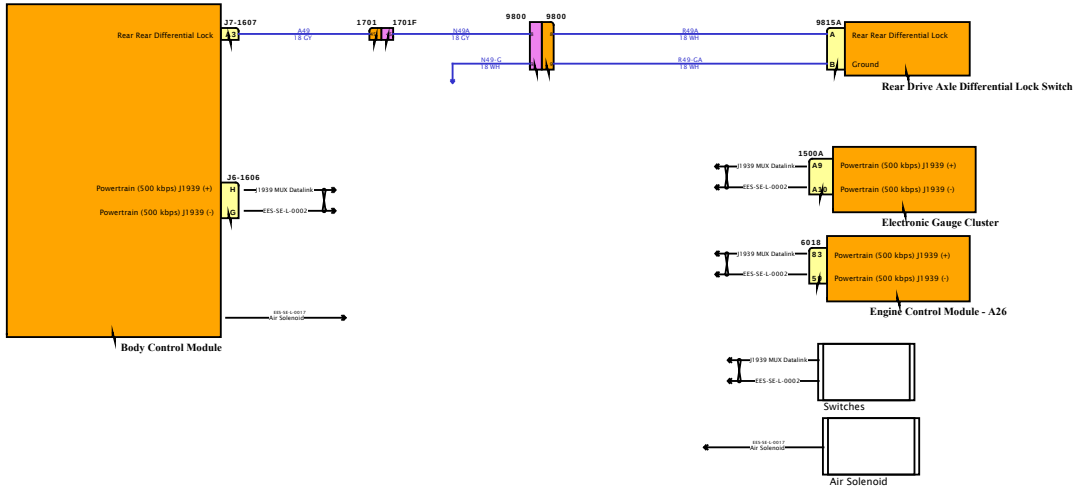

DESIGN DESCRIPTION

FEATURE CODES

SOFTWARE FEATURE CODES

NAVISTAR
NAVISTAR, INC. CONFIDENTIAL PROPRIETARY

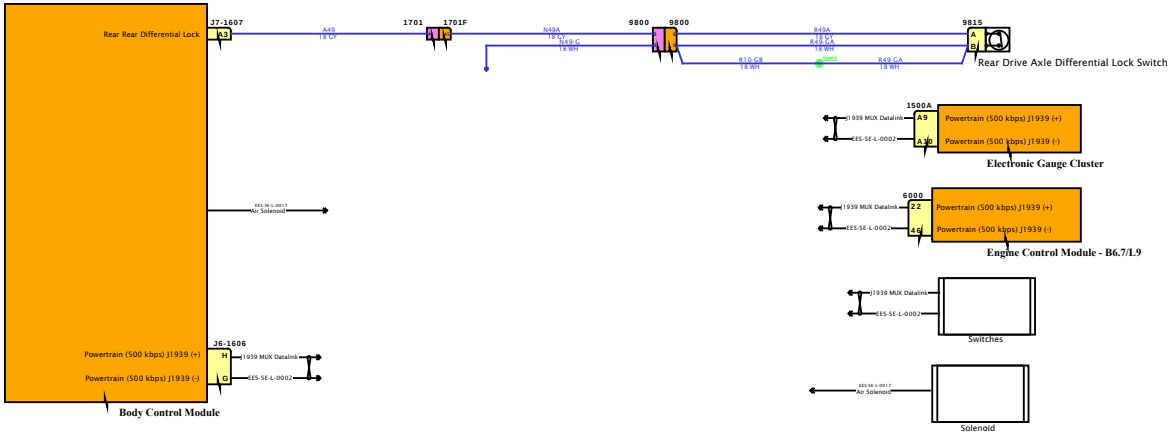

DESIGN DESCRIPTION

FEATURE CODES

SOFTWARE FEATURE CODES

NAVISTAR
NAVISTAR, INC. CONFIDENTIAL PROPRIETARY

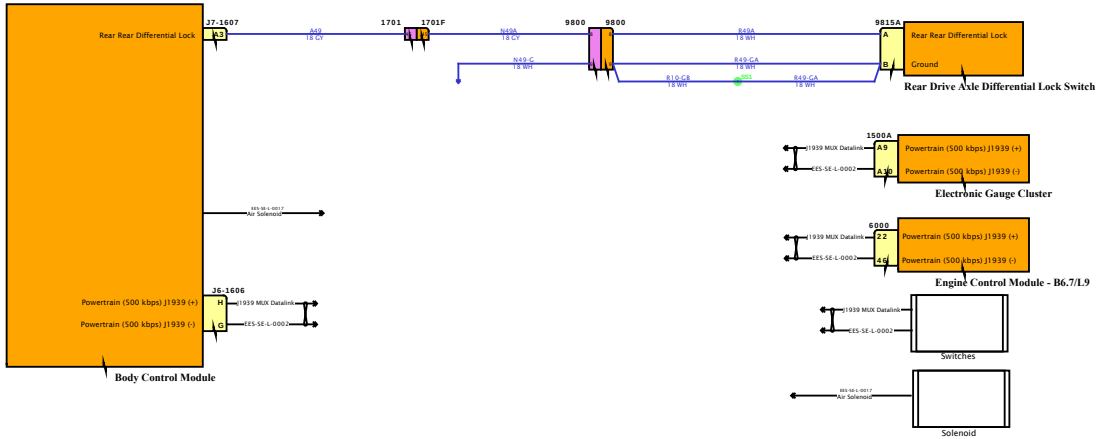

DESIGN DESCRIPTION

FEATURE CODES

SOFTWARE FEATURE CODES

NAVISTAR
NAVISTAR, INC. CONFIDENTIAL PROPRIETARY

Diagram1

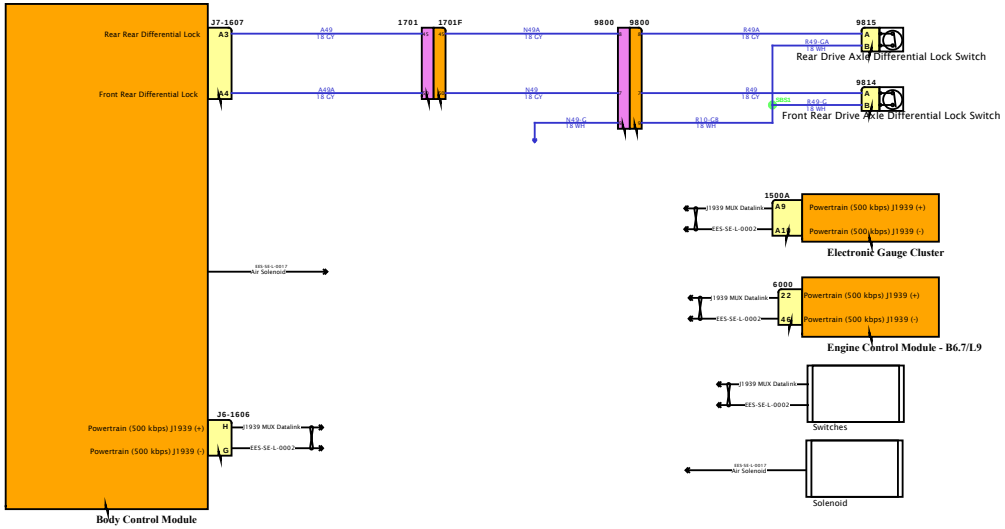

DESIGN DESCRIPTION

FEATURE CODES

SOFTWARE FEATURE CODES

NAVISTAR
NAVISTAR, INC. CONFIDENTIAL PROPRIETARY

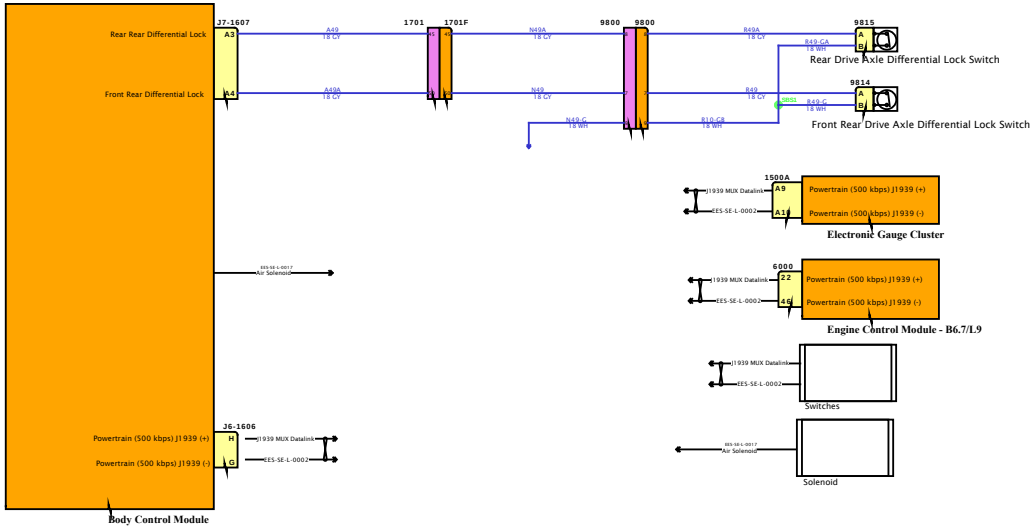

DESIGN DESCRIPTION

FEATURE CODES

SOFTWARE FEATURE CODES

NAVISTAR
NAVISTAR, INC. CONFIDENTIAL PROPRIETARY

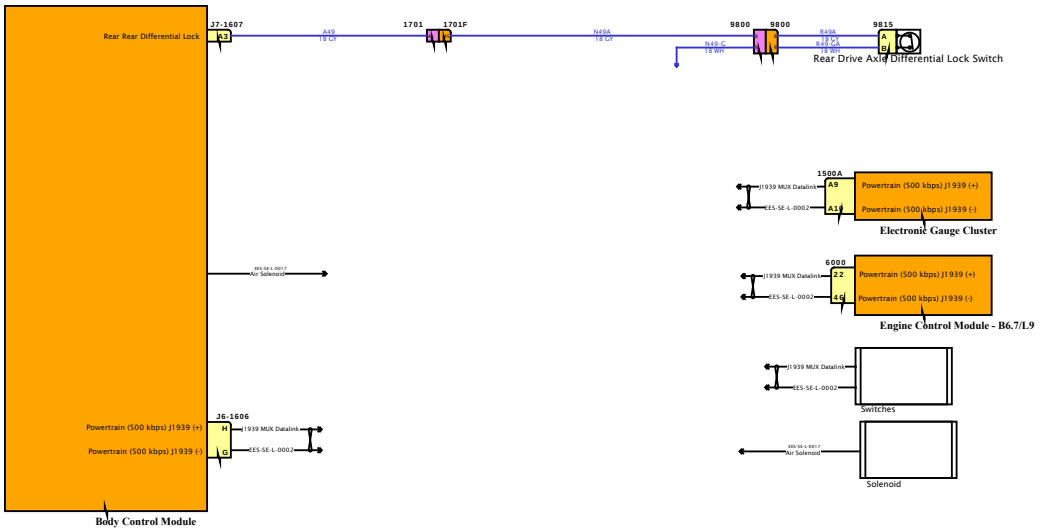

DESIGN DESCRIPTION

FEATURE CODES

SOFTWARE FEATURE CODES

NAVISTAR
NAVISTAR, INC. CONFIDENTIAL PROPRIETARY

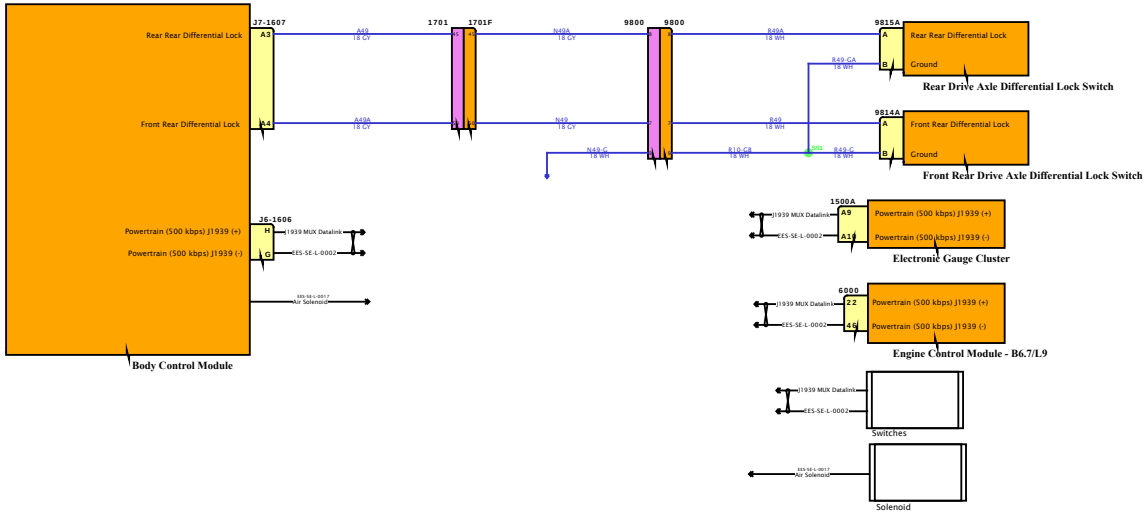

DESIGN DESCRIPTION

FEATURE CODES

SOFTWARE FEATURE CODES

NAVISTAR INC. CONFIDENTIAL PROPRIETARY

DESIGN DESCRIPTION

FEATURE CODES

SOFTWARE FEATURE CODES

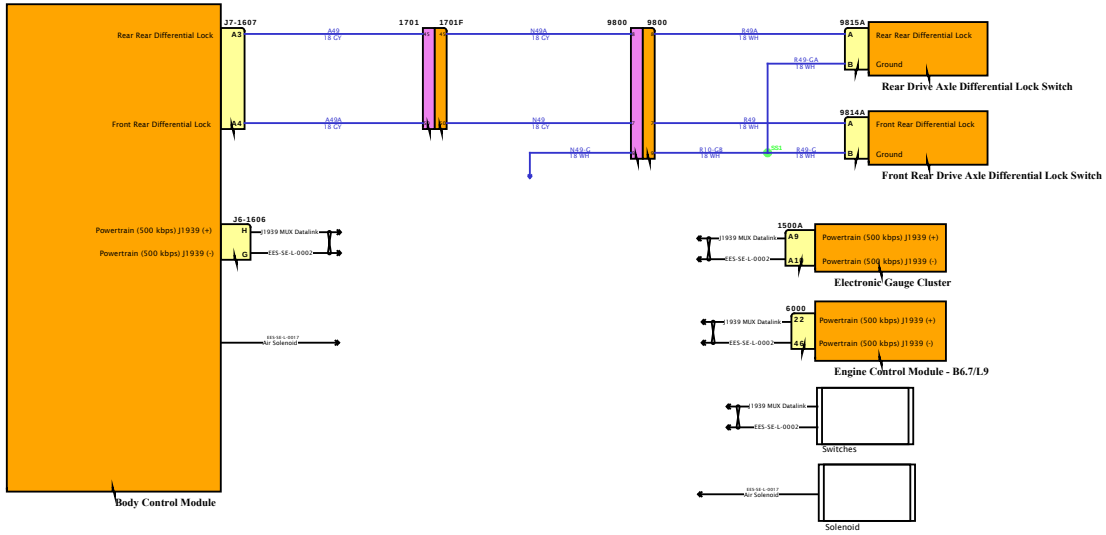

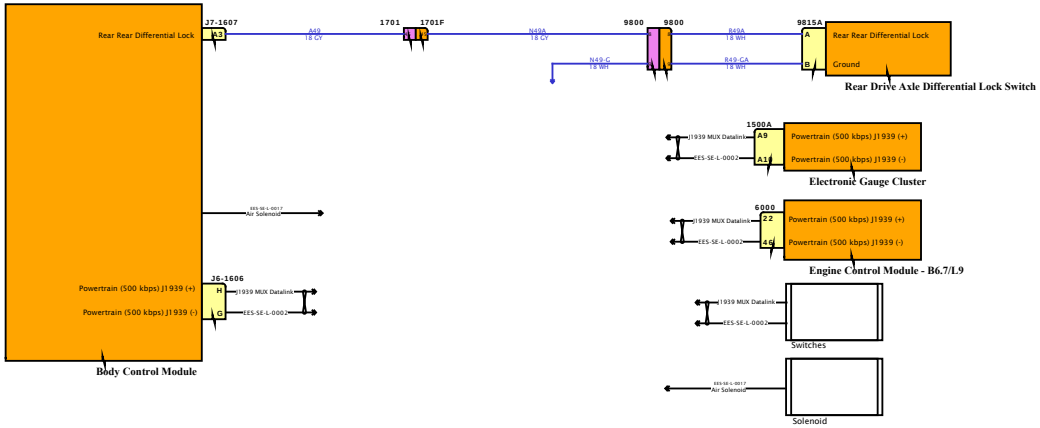

DESIGN DESCRIPTION

FEATURE CODES

SOFTWARE FEATURE CODES

NAVISTAR
NAVISTAR, INC. CONFIDENTIAL PROPRIETARY

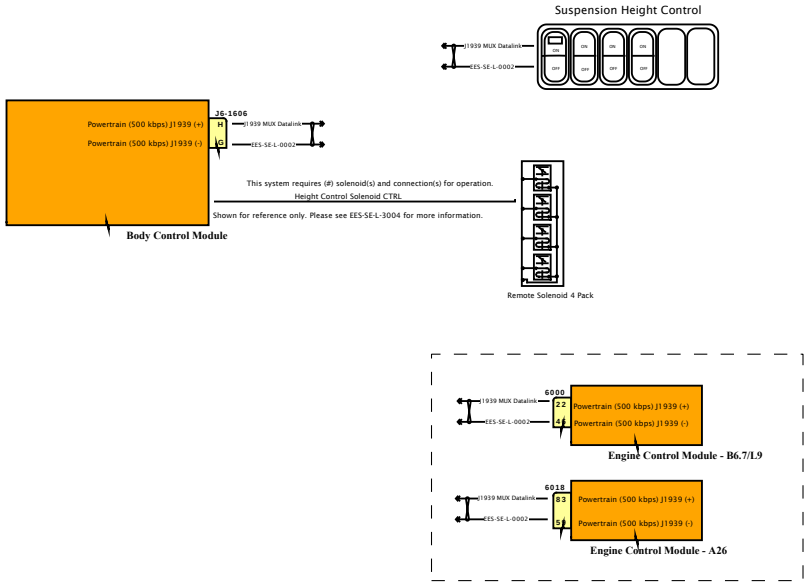

DESIGN DESCRIPTION

FEATURE CODES

SOFTWARE FEATURE CODES

NAVISTAR INC. CONFIDENTIAL PROPRIETARY

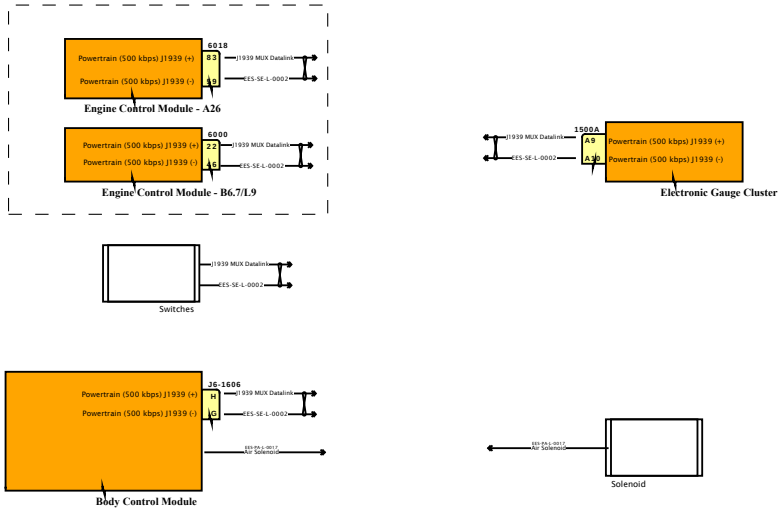

DESIGN DESCRIPTION

FEATURE CODES

SOFTWARE FEATURE CODES

NAVISTAR
NAVISTAR, INC. CONFIDENTIAL PROPRIETARY

Diagram1



DESIGN DESCRIPTION

FEATURE CODES

SOFTWARE FEATURE CODES

NAVISTAR
NAVISTAR, INC. CONFIDENTIAL PROPRIETARY

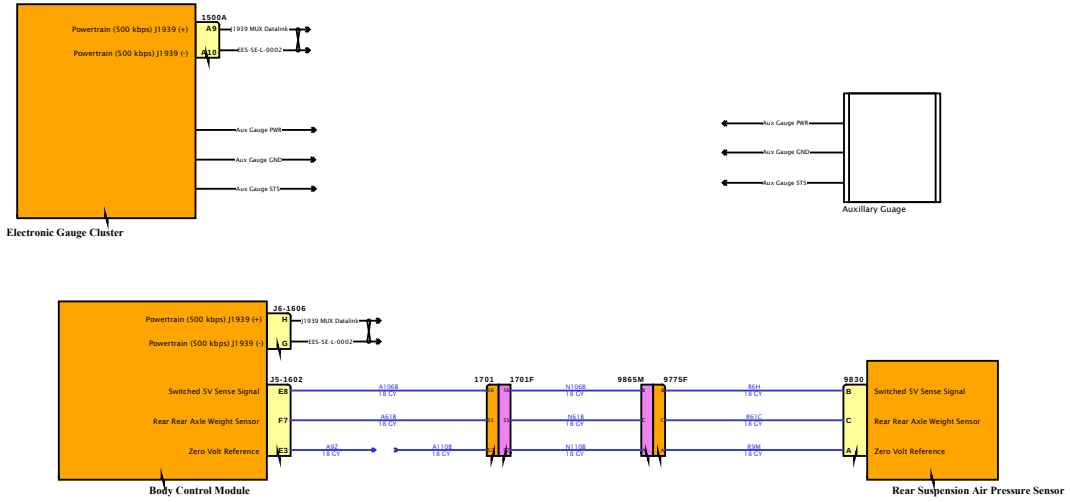

DESIGN DESCRIPTION

FEATURE CODES

SOFTWARE FEATURE CODES

NAVISTAR INC. CONFIDENTIAL PROPRIETARY

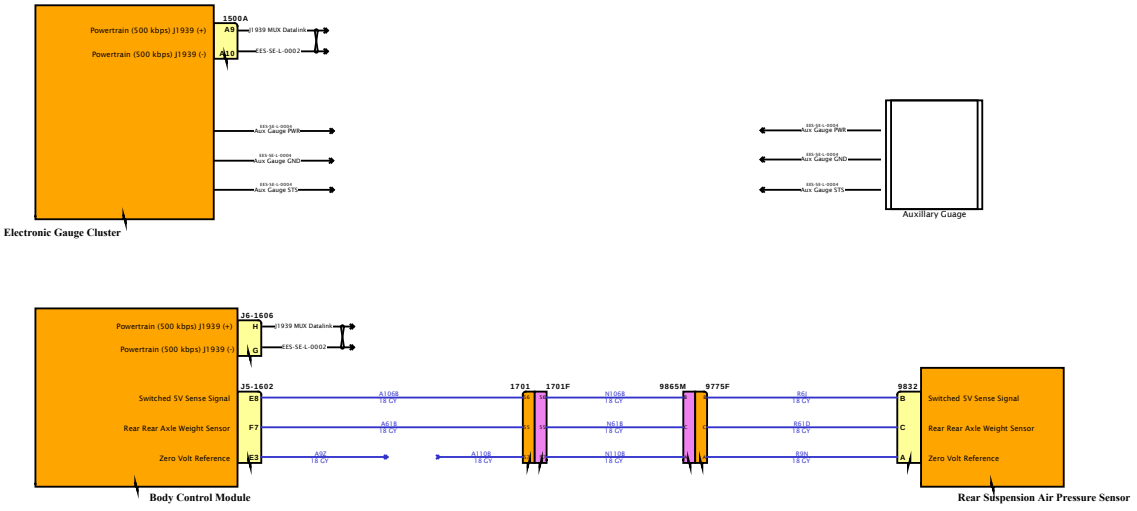

DESIGN DESCRIPTION

FEATURE CODES

SOFTWARE FEATURE CODES

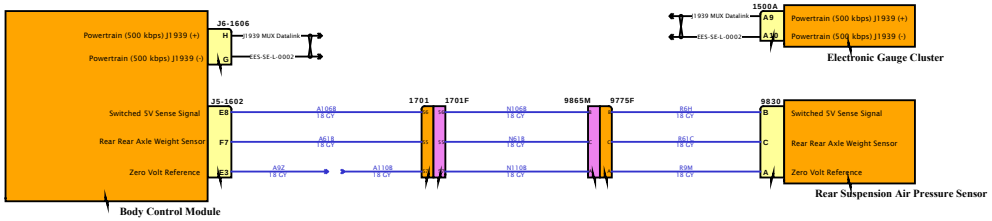

DESIGN DESCRIPTION

FEATURE CODES

SOFTWARE FEATURE CODES

NAVISTAR
NAVISTAR, INC. CONFIDENTIAL PROPRIETARY

DESIGN DESCRIPTION

FEATURE CODES

SOFTWARE FEATURE CODES

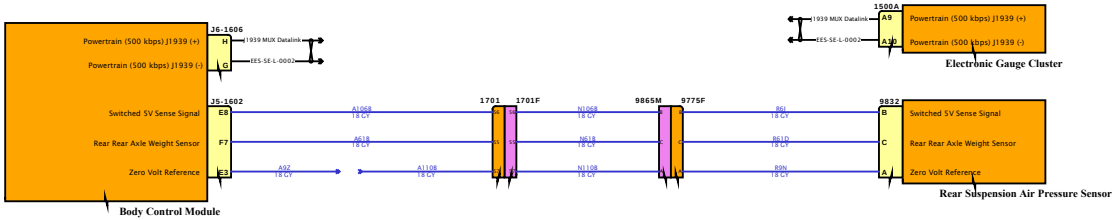

Diagram1

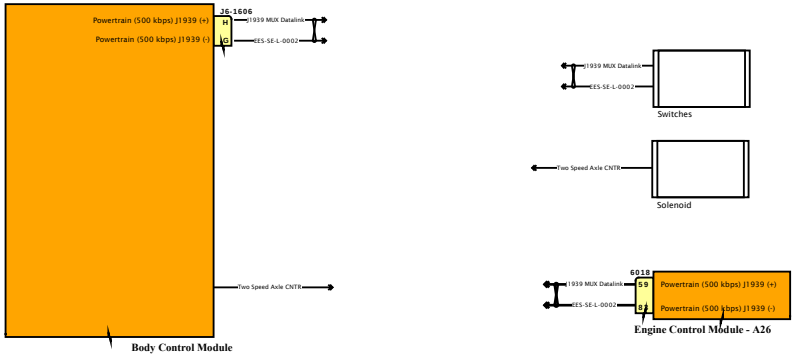

DESIGN DESCRIPTION

FEATURE CODES

SOFTWARE FEATURE CODES

NAVISTAR INC. CONFIDENTIAL PROPRIETARY

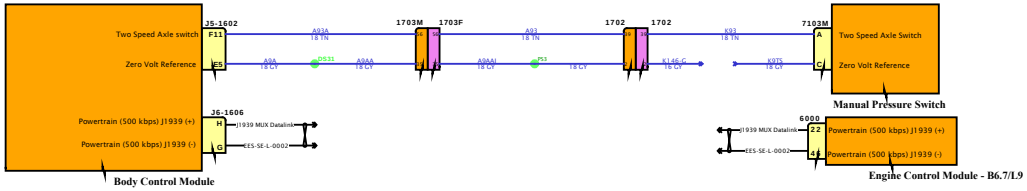

DESIGN DESCRIPTION

FEATURE CODES

SOFTWARE FEATURE CODES

NAVISTAR
NAVISTAR, INC. CONFIDENTIAL PROPRIETARY

DESIGN DESCRIPTION

FEATURE CODES

SOFTWARE FEATURE CODES

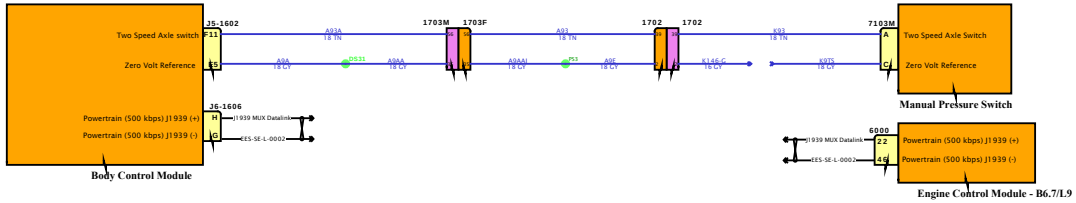

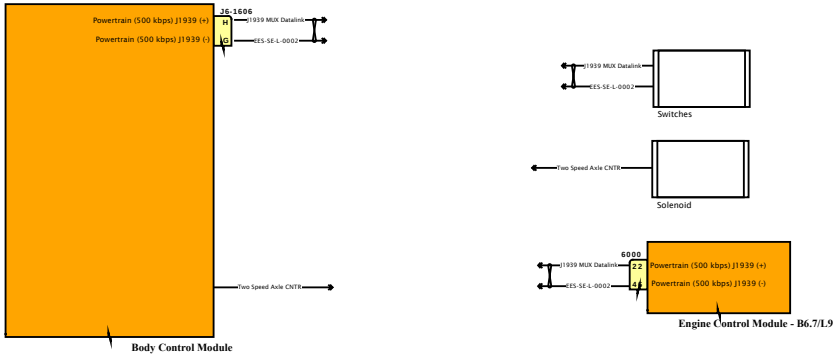

DESIGN DESCRIPTION

FEATURE CODES

SOFTWARE FEATURE CODES

NAVISTAR
NAVISTAR, INC. CONFIDENTIAL PROPRIETARY

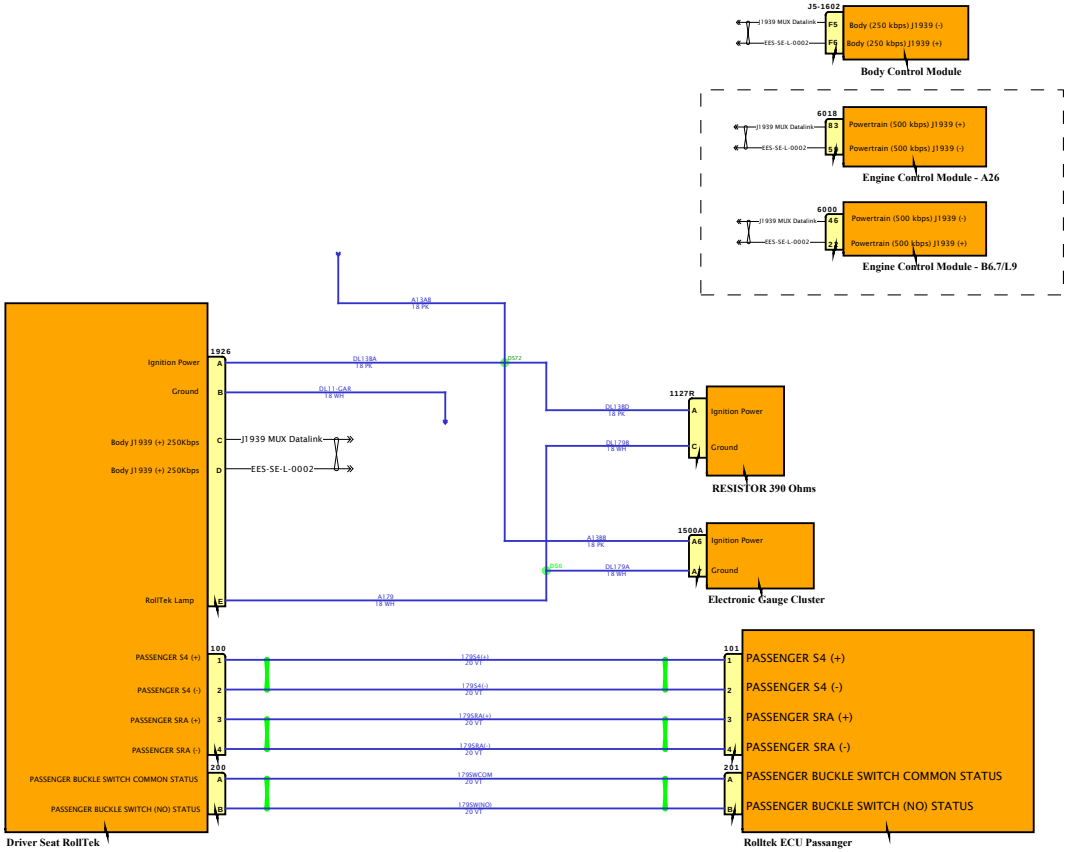

DESIGN DESCRIPTION

FEATURE CODES

SOFTWARE FEATURE CODES

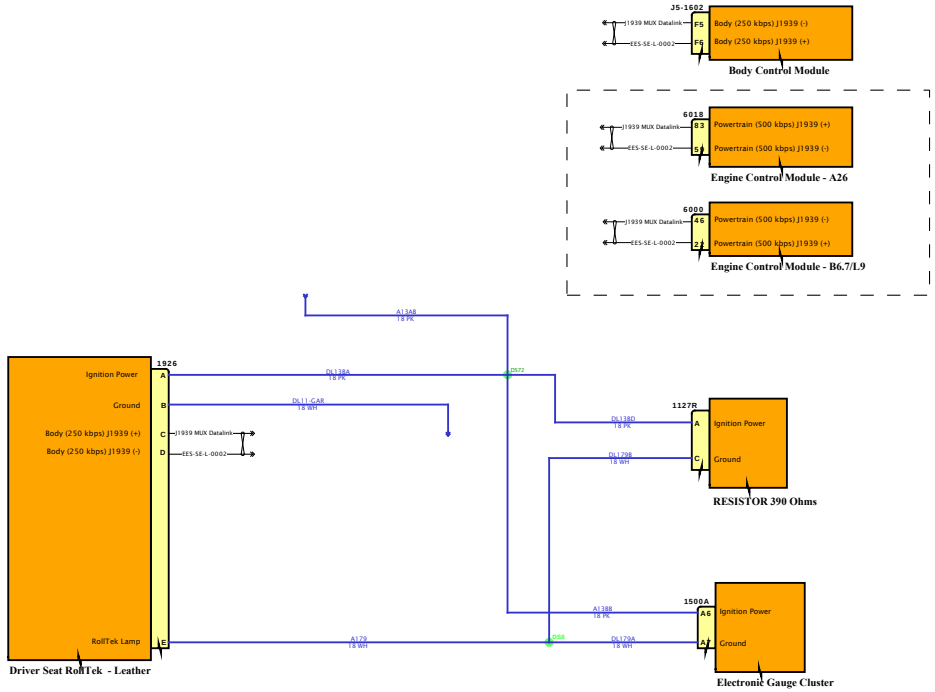

DESIGN DESCRIPTION

FEATURE CODES

SOFTWARE FEATURE CODES

NAVISTAR INC. CONFIDENTIAL PROPRIETARY

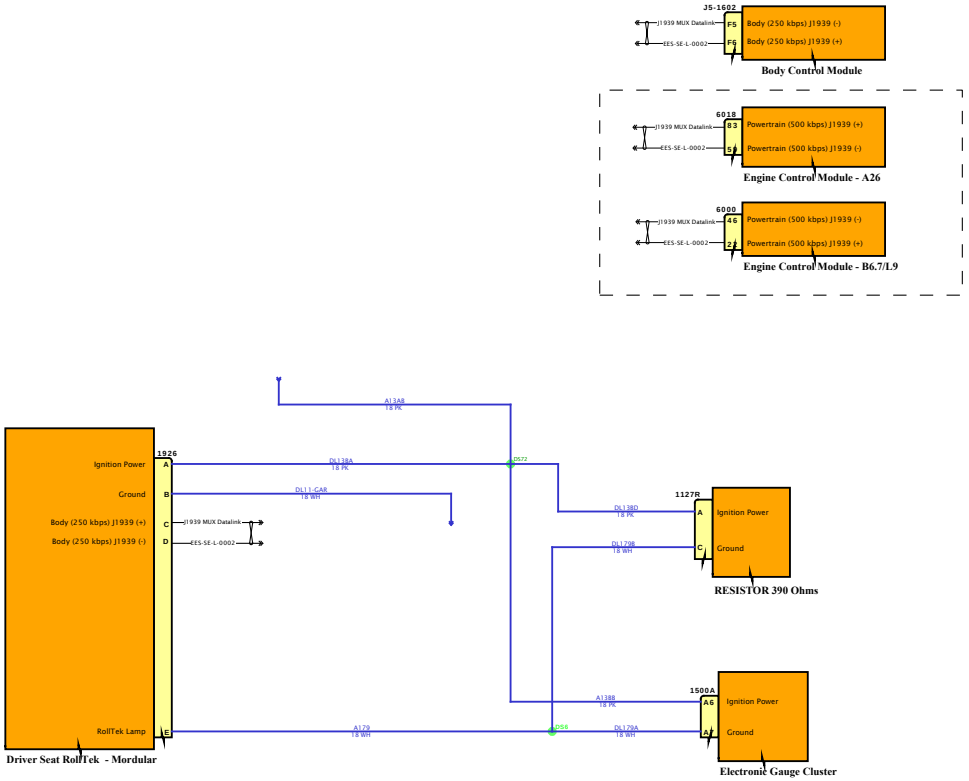

DESIGN DESCRIPTION

FEATURE CODES

SOFTWARE FEATURE CODES

NAVISTAR INC. CONFIDENTIAL PROPRIETARY

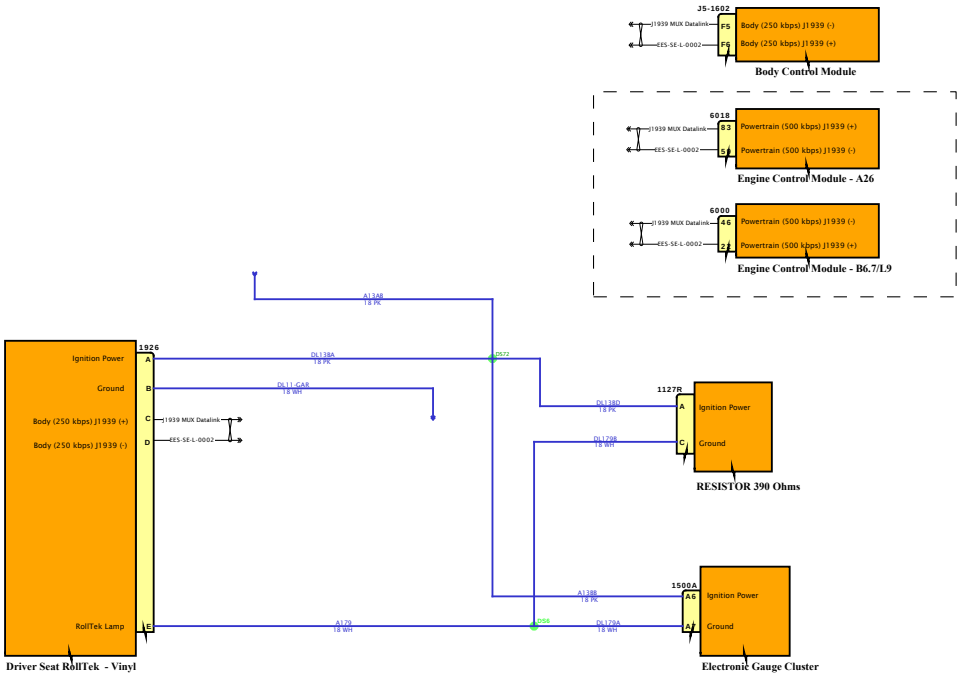

DESIGN DESCRIPTION

FEATURE CODES

SOFTWARE FEATURE CODES

NAVISTAR INC. CONFIDENTIAL PROPRIETARY

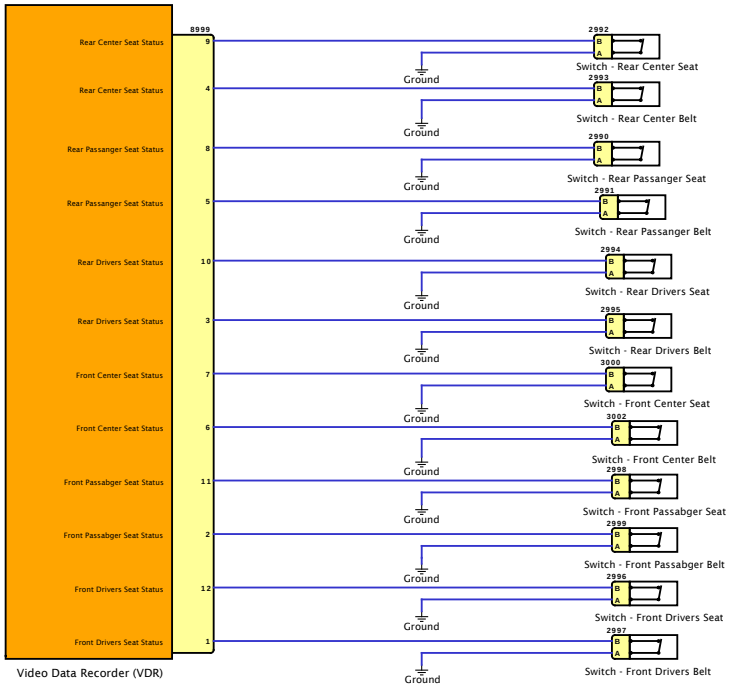

DESIGN DESCRIPTION

FEATURE CODES

SOFTWARE FEATURE CODES

NAVISTAR INC. CONFIDENTIAL PROPRIETARY

DESIGN DESCRIPTION

FEATURE CODES

SOFTWARE FEATURE CODES

Warning Lamp 17
(PGN 61184)
EGC Alarm
(PGN 65321)

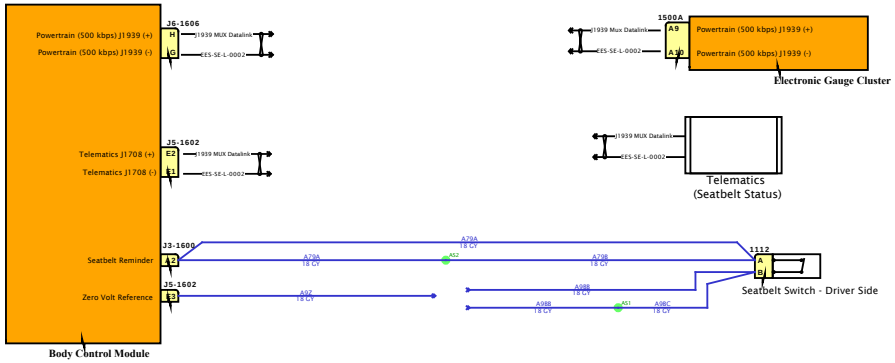

DESIGN DESCRIPTION

FEATURE CODES

SOFTWARE FEATURE CODES

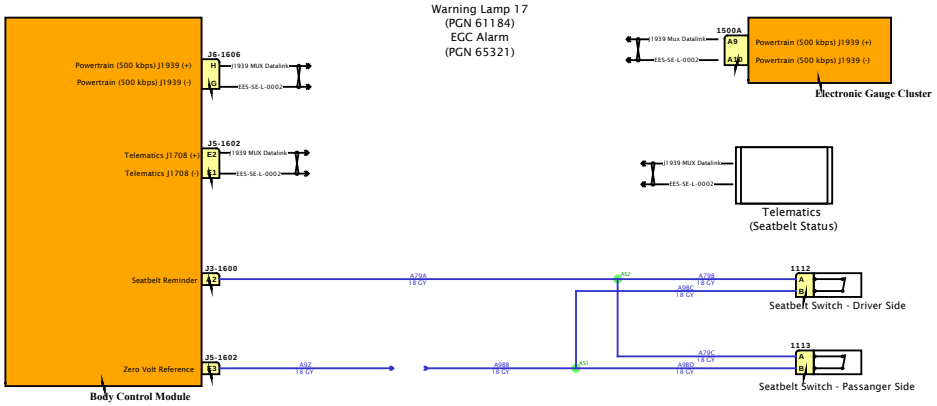

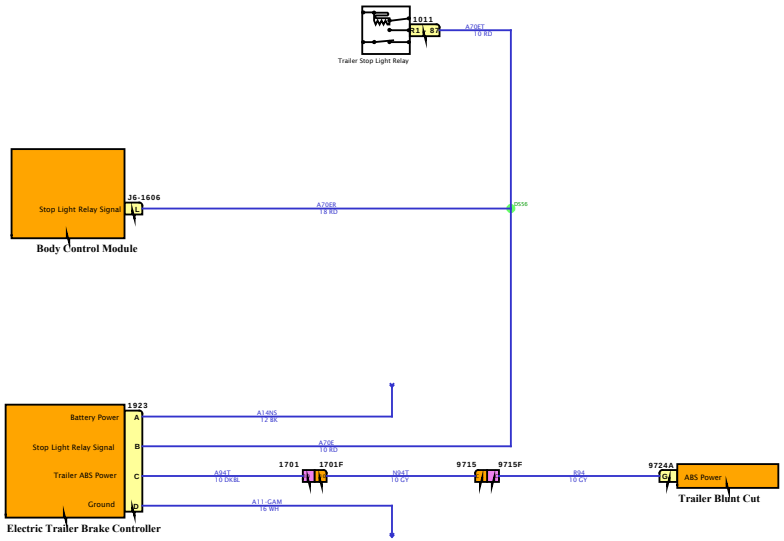

DESIGN DESCRIPTION

FEATURE CODES

SOFTWARE FEATURE CODES

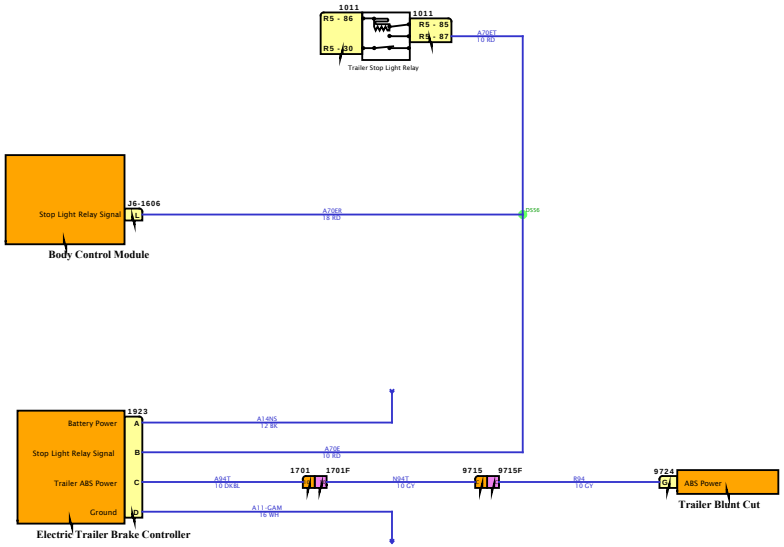

DESIGN DESCRIPTION

FEATURE CODES

SOFTWARE FEATURE CODES

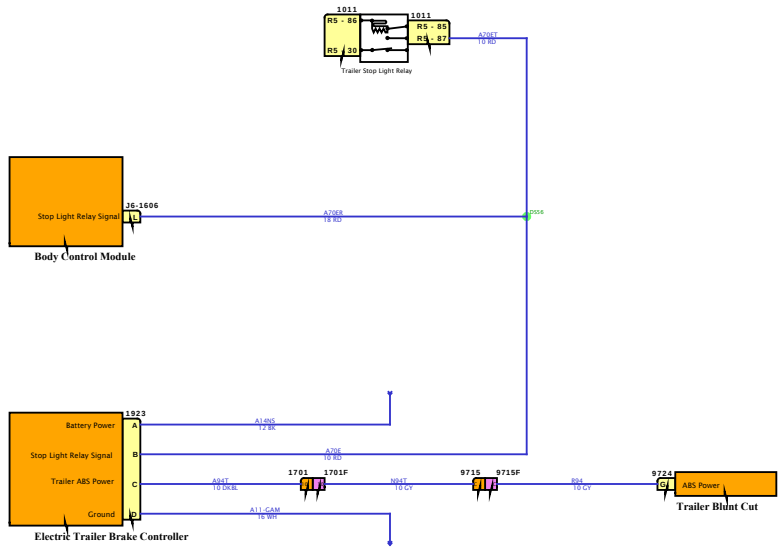

DESIGN DESCRIPTION

FEATURE CODES

SOFTWARE FEATURE CODES

NAVISTAR
NAVISTAR, INC. CONFIDENTIAL PROPRIETARY

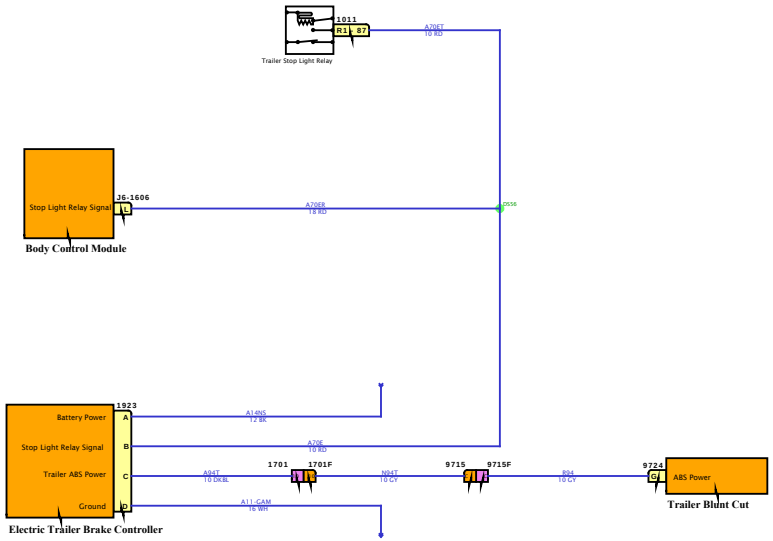

DESIGN DESCRIPTION

FEATURE CODES

SOFTWARE FEATURE CODES

Diagram1

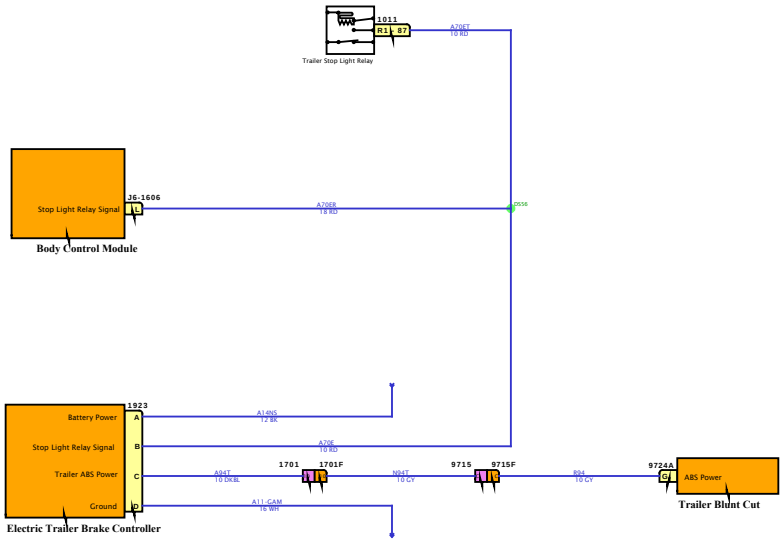

DESIGN DESCRIPTION

FEATURE CODES

SOFTWARE FEATURE CODES

NAVISTAR
NAVISTAR, INC. CONFIDENTIAL PROPRIETARY

Diagram1

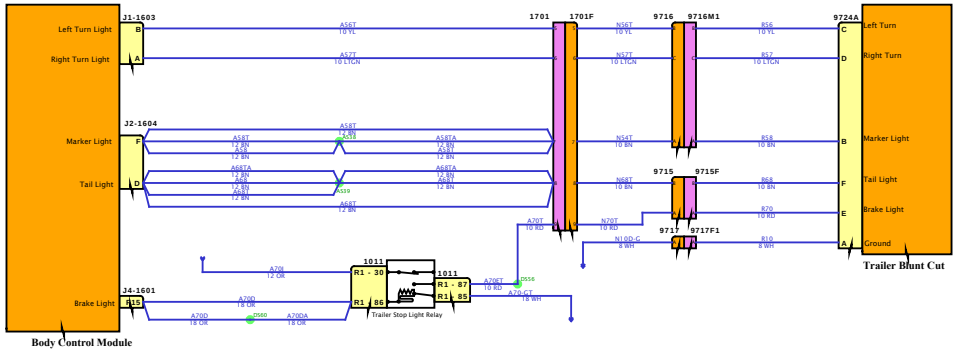

DESIGN DESCRIPTION

FEATURE CODES

SOFTWARE FEATURE CODES

NAVISTAR INC. CONFIDENTIAL PROPRIETARY

Diagram1

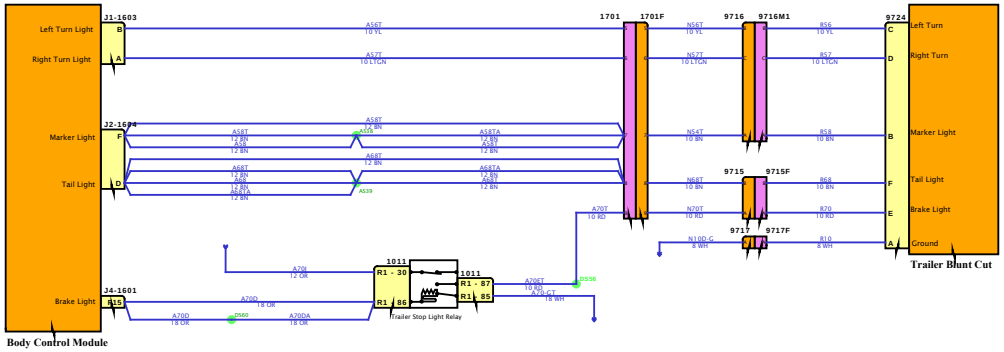

DESIGN DESCRIPTION

FEATURE CODES

SOFTWARE FEATURE CODES

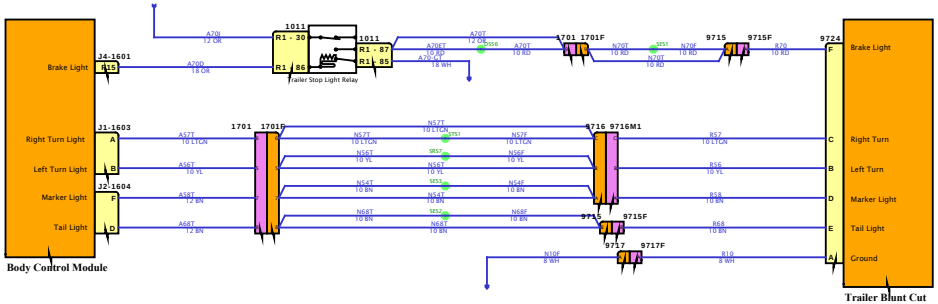

DESIGN DESCRIPTION

FEATURE CODES

SOFTWARE FEATURE CODES

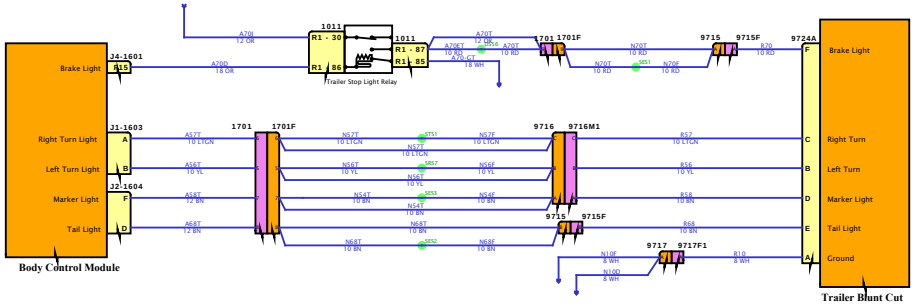

DESIGN DESCRIPTION

FEATURE CODES

SOFTWARE FEATURE CODES

DESIGN DESCRIPTION

FEATURE CODES

SOFTWARE FEATURE CODES

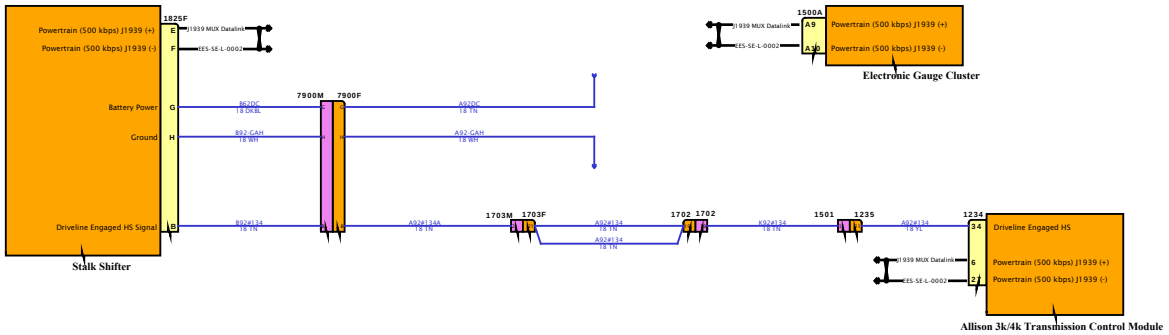

Diagram2

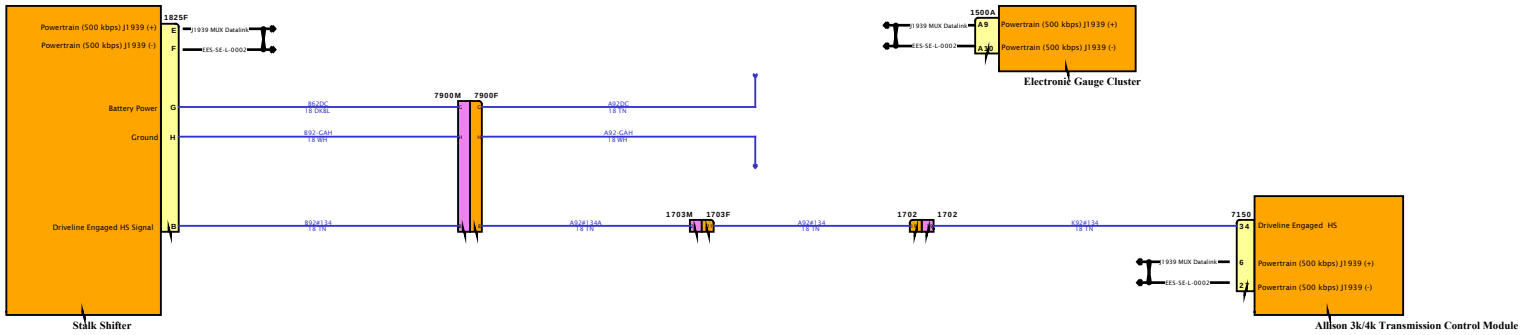

DESIGN DESCRIPTION

FEATURE CODES

SOFTWARE FEATURE CODES

NAVISTAR
NAVISTAR, INC. CONFIDENTIAL PROPRIETARY

DESIGN DESCRIPTION

FEATURE CODES

SOFTWARE FEATURE CODES

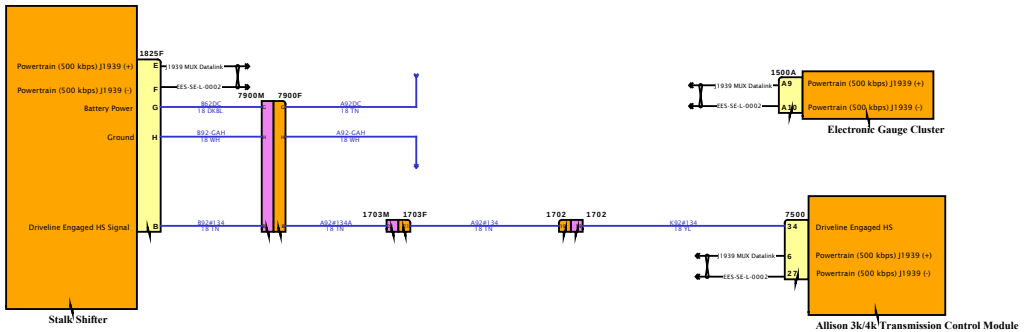

DESIGN DESCRIPTION

FEATURE CODES

SOFTWARE FEATURE CODES

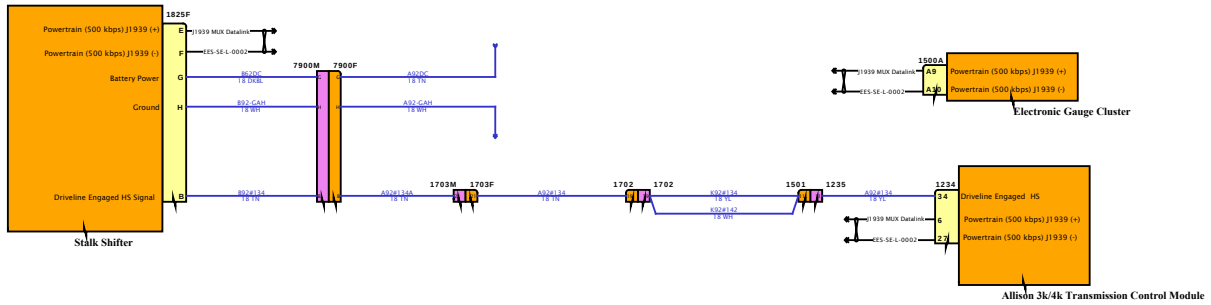

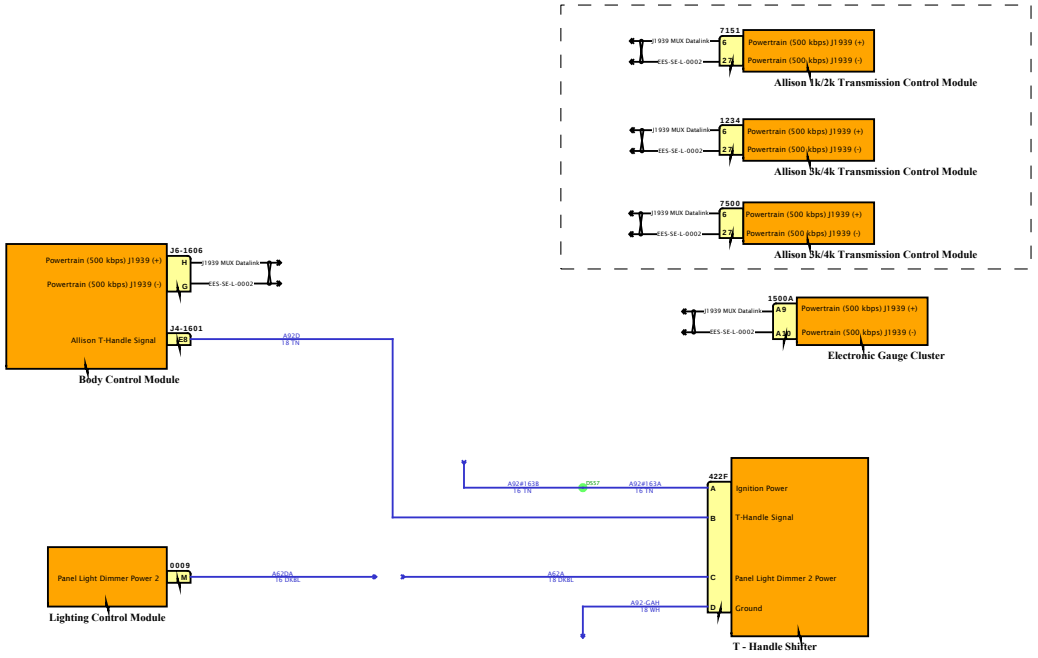

DESIGN DESCRIPTION

FEATURE CODES

SOFTWARE FEATURE CODES

NAVISTAR INC. CONFIDENTIAL PROPRIETARY

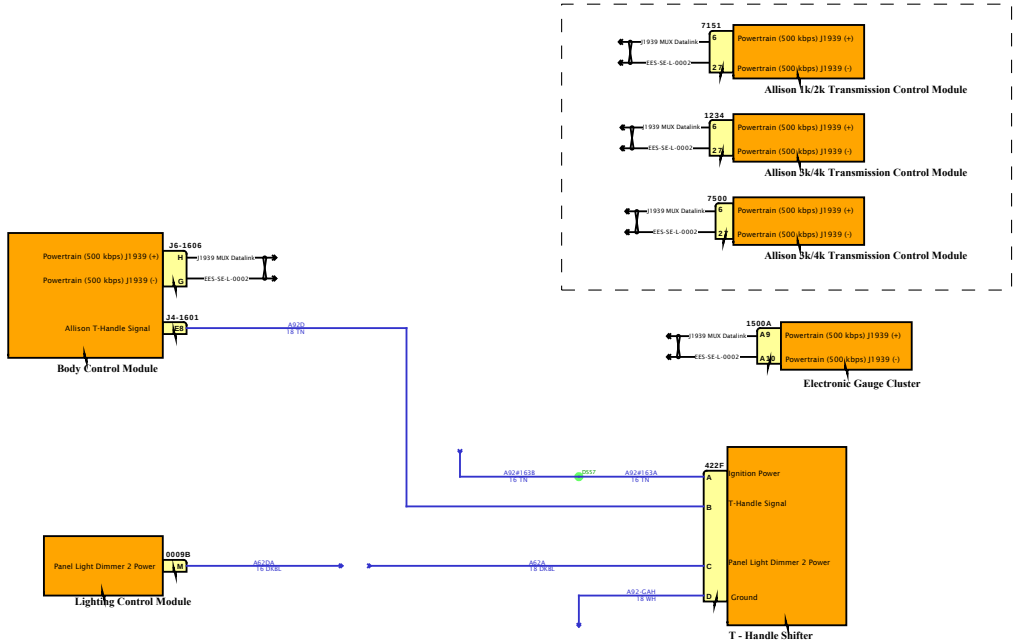

DESIGN DESCRIPTION

FEATURE CODES

SOFTWARE FEATURE CODES

NAVISTAR
NAVISTAR, INC. CONFIDENTIAL PROPRIETARY

Diagram1

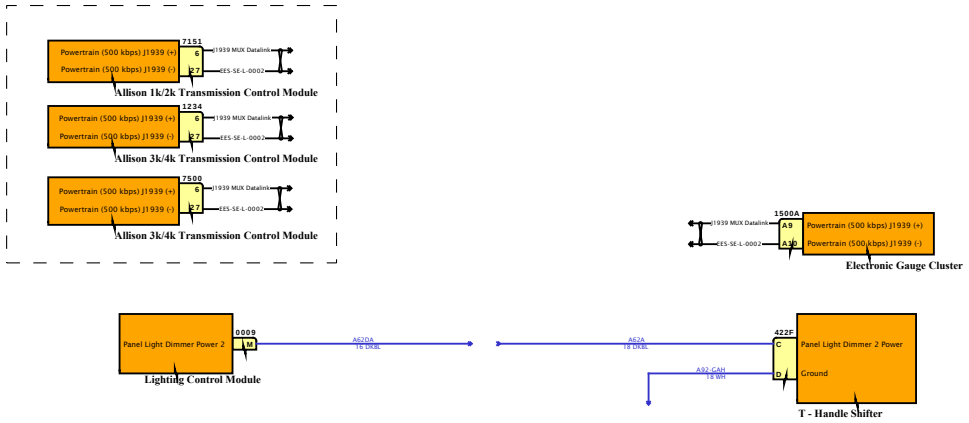

DESIGN DESCRIPTION

FEATURE CODES

SOFTWARE FEATURE CODES

NAVISTAR INC. CONFIDENTIAL PROPRIETARY

Diagram2

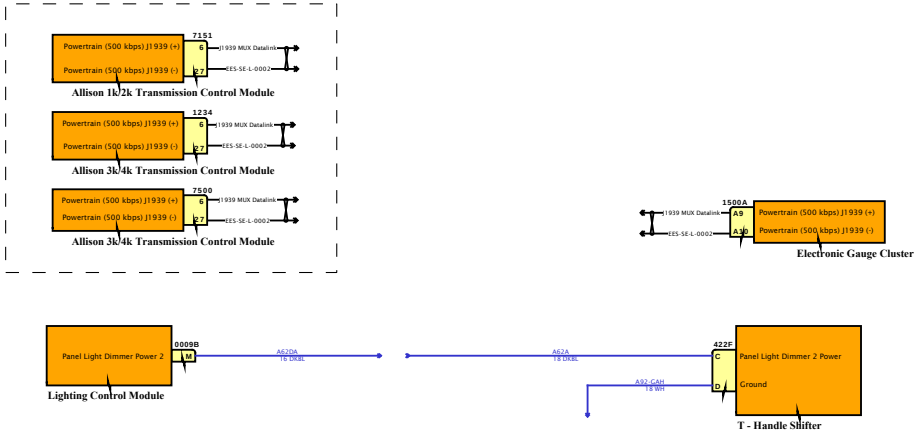

DESIGN DESCRIPTION

FEATURE CODES

SOFTWARE FEATURE CODES

NAVISTAR
NAVISTAR, INC. CONFIDENTIAL PROPRIETARY

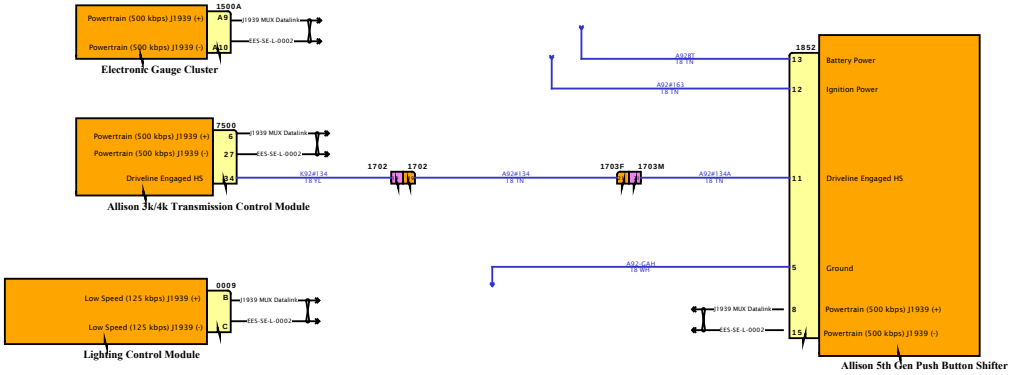

DESIGN DESCRIPTION

FEATURE CODES

SOFTWARE FEATURE CODES

NAVISTAR
NAVISTAR, INC. CONFIDENTIAL PROPRIETARY

DESIGN DESCRIPTION

FEATURE CODES

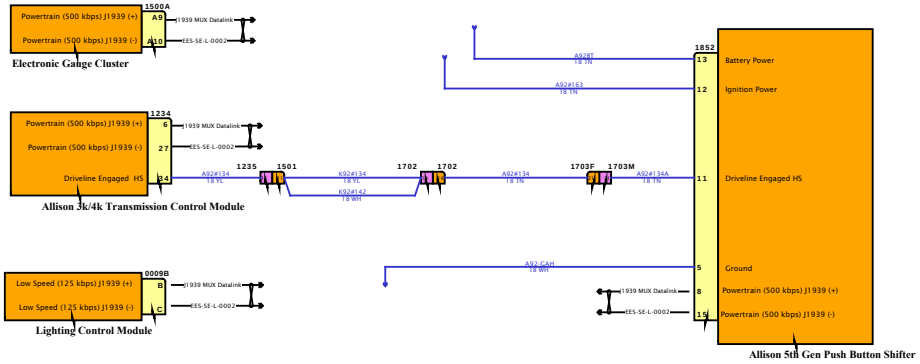

SOFTWARE FEATURE CODES

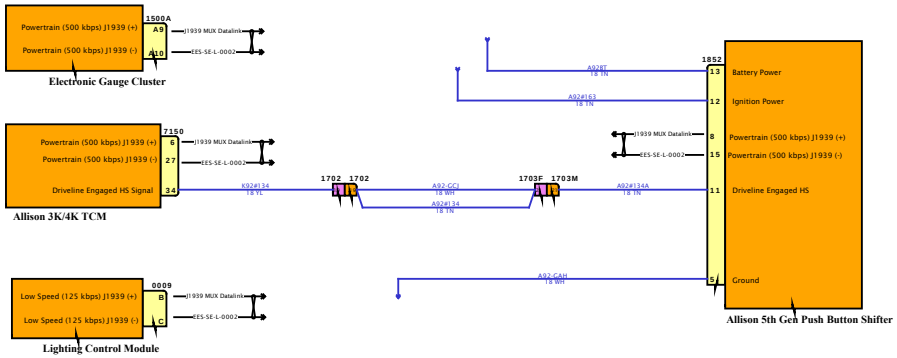

DESIGN DESCRIPTION

FEATURE CODES

SOFTWARE FEATURE CODES

NAVISTAR
NAVISTAR, INC. CONFIDENTIAL PROPRIETARY

Diagram1

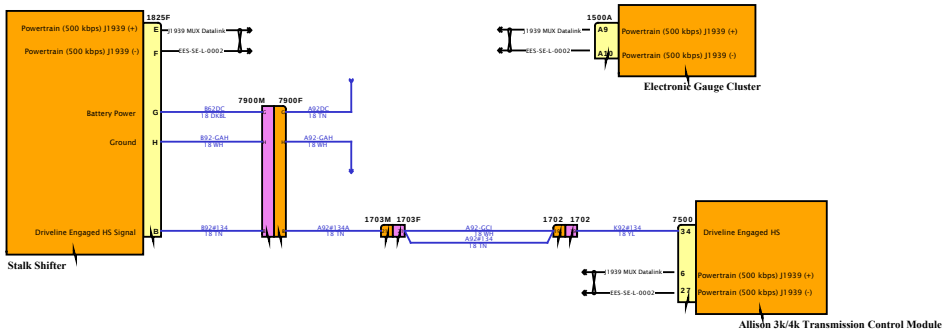

DESIGN DESCRIPTION

FEATURE CODES

SOFTWARE FEATURE CODES

NAVISTAR
NAVISTAR, INC. CONFIDENTIAL PROPRIETARY

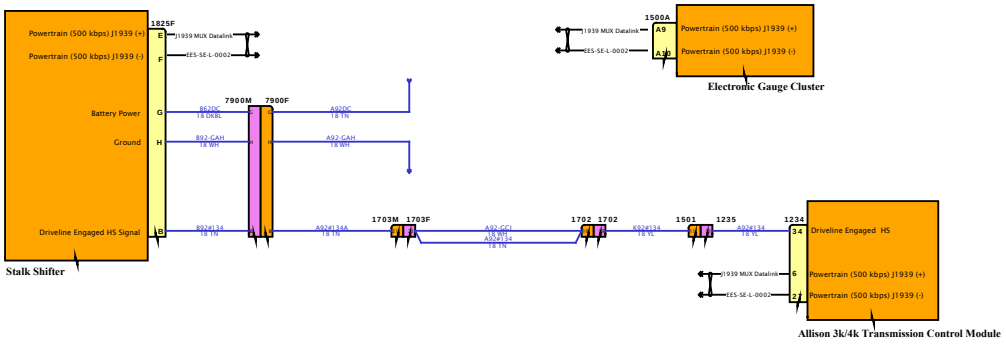

DESIGN DESCRIPTION

FEATURE CODES

SOFTWARE FEATURE CODES

NAVISTAR
NAVISTAR, INC. CONFIDENTIAL PROPRIETARY

Diagram1

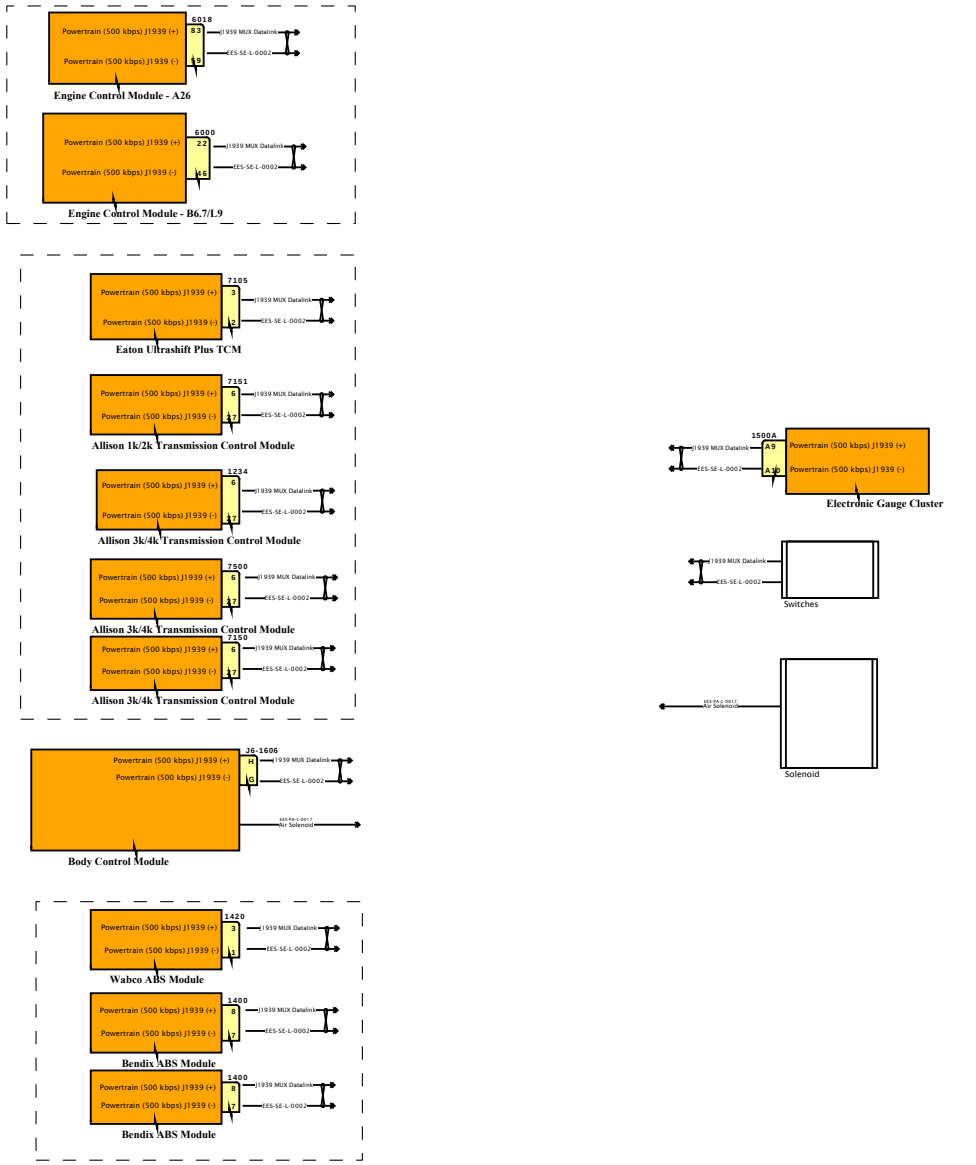

DESIGN DESCRIPTION

FEATURE CODES

SOFTWARE FEATURE CODES

NAVISTAR
NAVISTAR, INC. CONFIDENTIAL PROPRIETARY

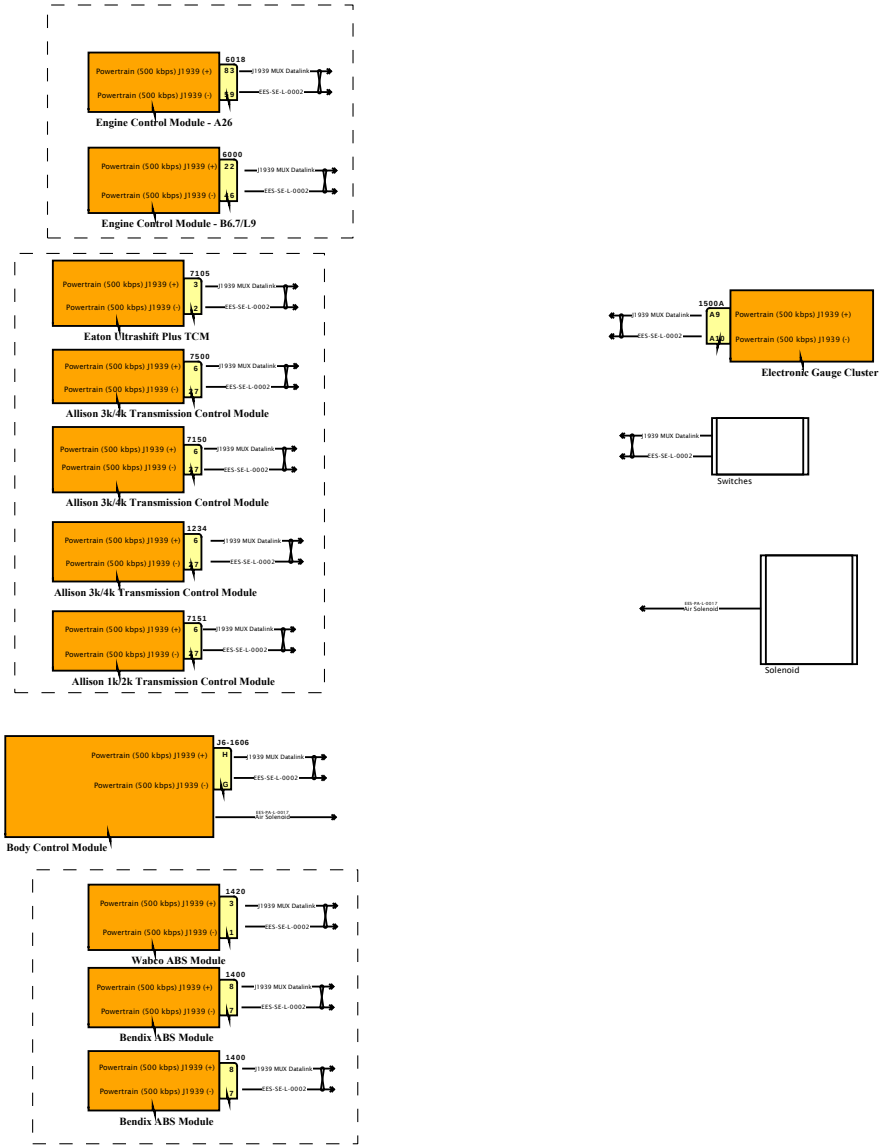

DESIGN DESCRIPTION

FEATURE CODES

SOFTWARE FEATURE CODES

NAVISTAR INC. CONFIDENTIAL PROPRIETARY

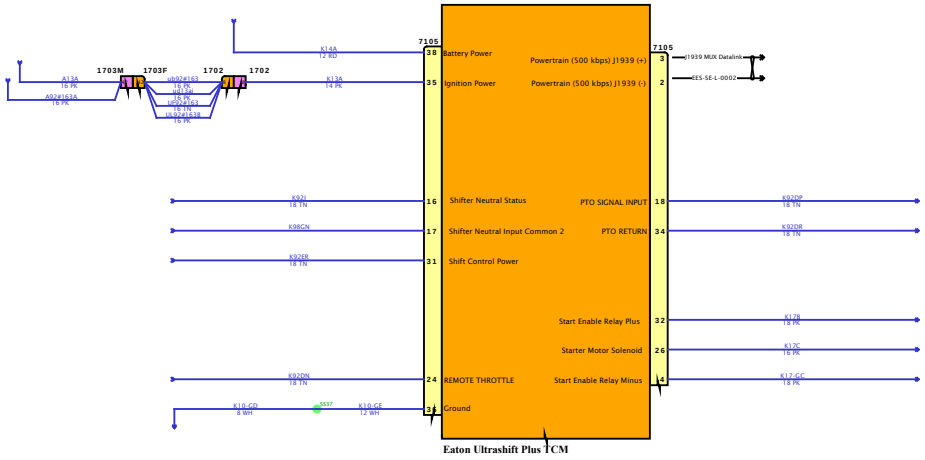

DESIGN DESCRIPTION

FEATURE CODES

SOFTWARE FEATURE CODES

NAVISTAR INC. CONFIDENTIAL PROPRIETARY

Diagram1

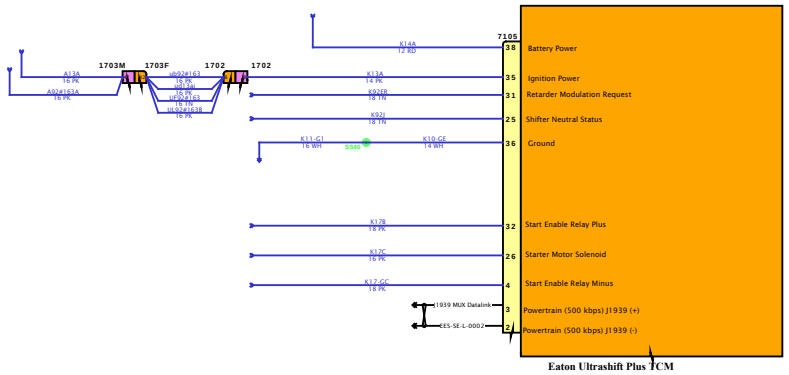

DESIGN DESCRIPTION

FEATURE CODES

SOFTWARE FEATURE CODES

NAVISTAR INC. CONFIDENTIAL PROPRIETARY

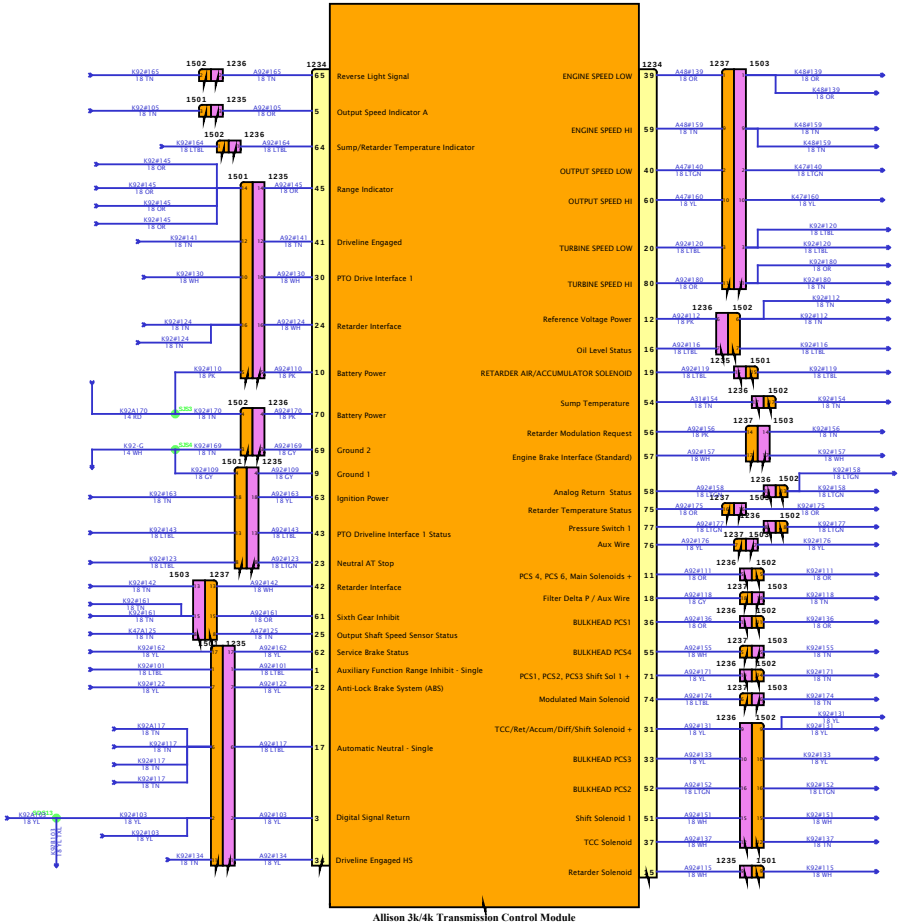

Allison 3k/4k Transmission Control Module

DESIGN DESCRIPTION

FEATURE CODES

SOFTWARE FEATURE CODES

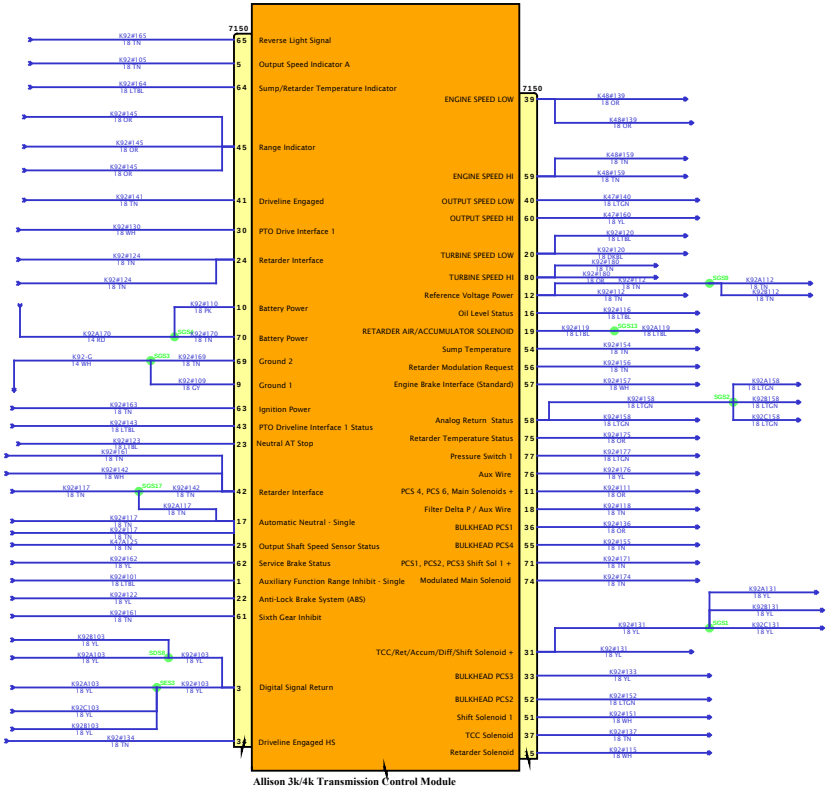

Allison 3k/4k Transmission Control Module

DESIGN DESCRIPTION

FEATURE CODES

SOFTWARE FEATURE CODES

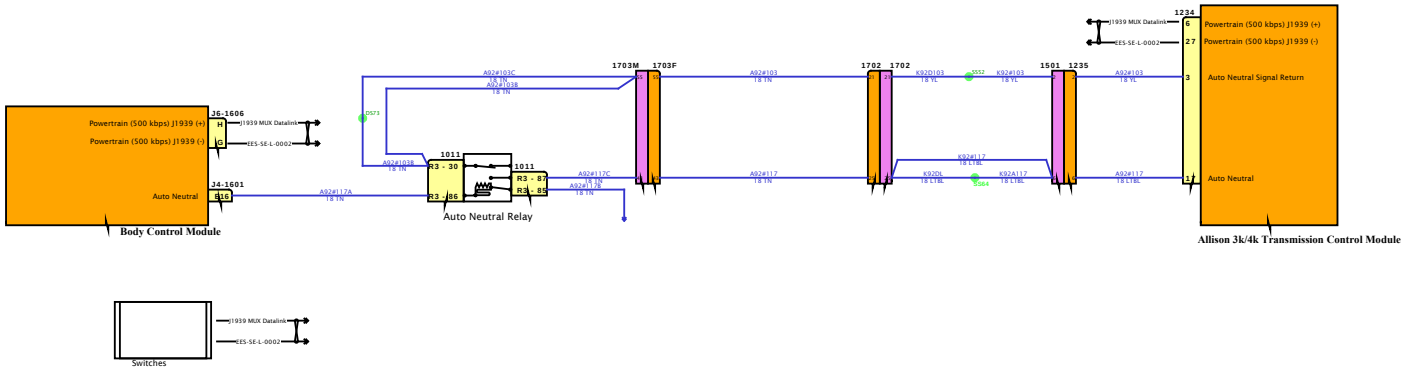

DESIGN DESCRIPTION

FEATURE CODES

SOFTWARE FEATURE CODES

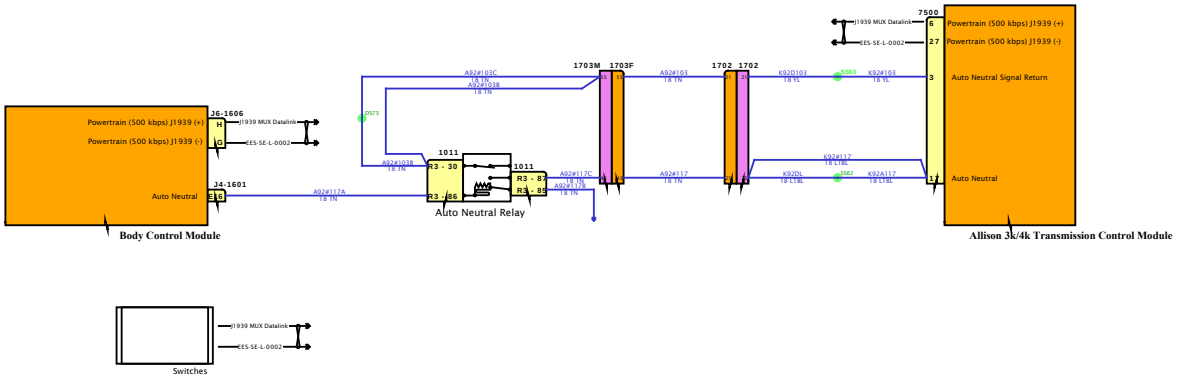

DESIGN DESCRIPTION

FEATURE CODES

SOFTWARE FEATURE CODES

NAVISTAR INC. CONFIDENTIAL PROPRIETARY

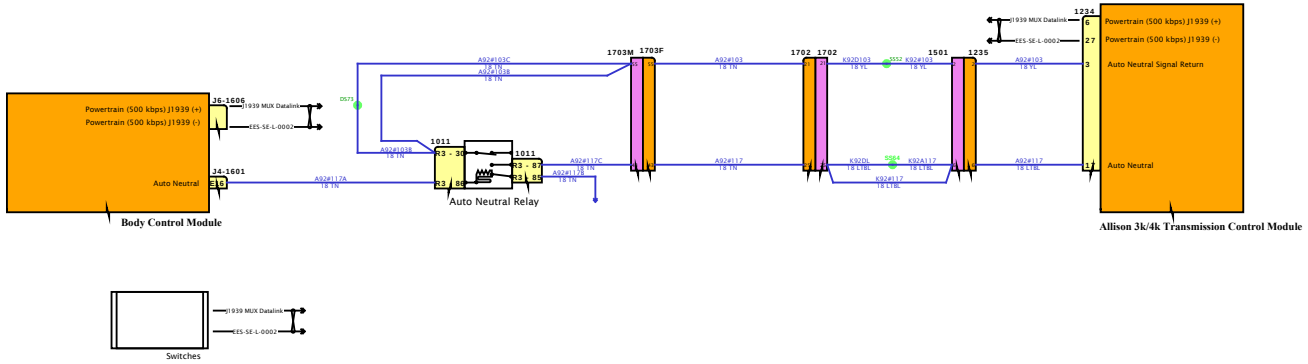

DESIGN DESCRIPTION

FEATURE CODES

SOFTWARE FEATURE CODES

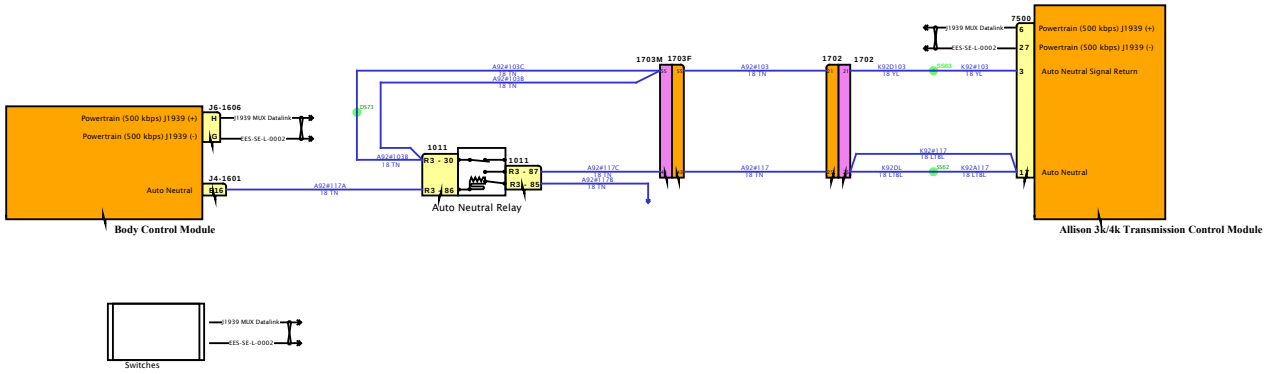

DESIGN DESCRIPTION

FEATURE CODES

SOFTWARE FEATURE CODES

NAVISTAR INC. CONFIDENTIAL PROPRIETARY

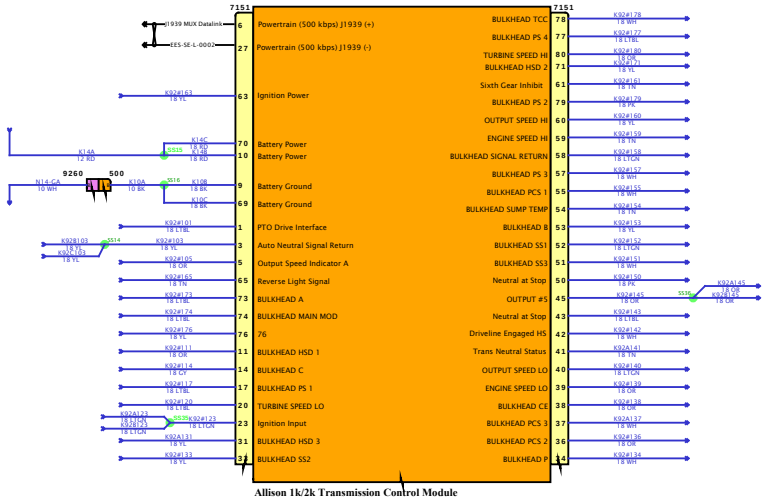

DESIGN DESCRIPTION

FEATURE CODES

SOFTWARE FEATURE CODES

Diagram1

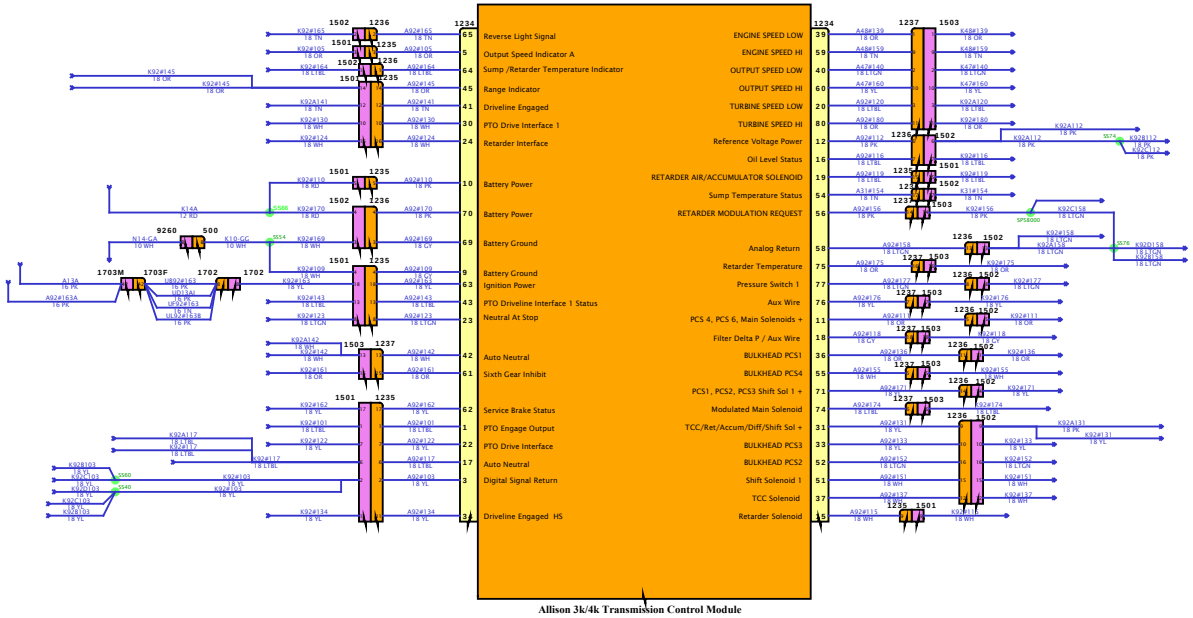

DESIGN DESCRIPTION

FEATURE CODES

SOFTWARE FEATURE CODES

NAVISTAR INC. CONFIDENTIAL PROPRIETARY

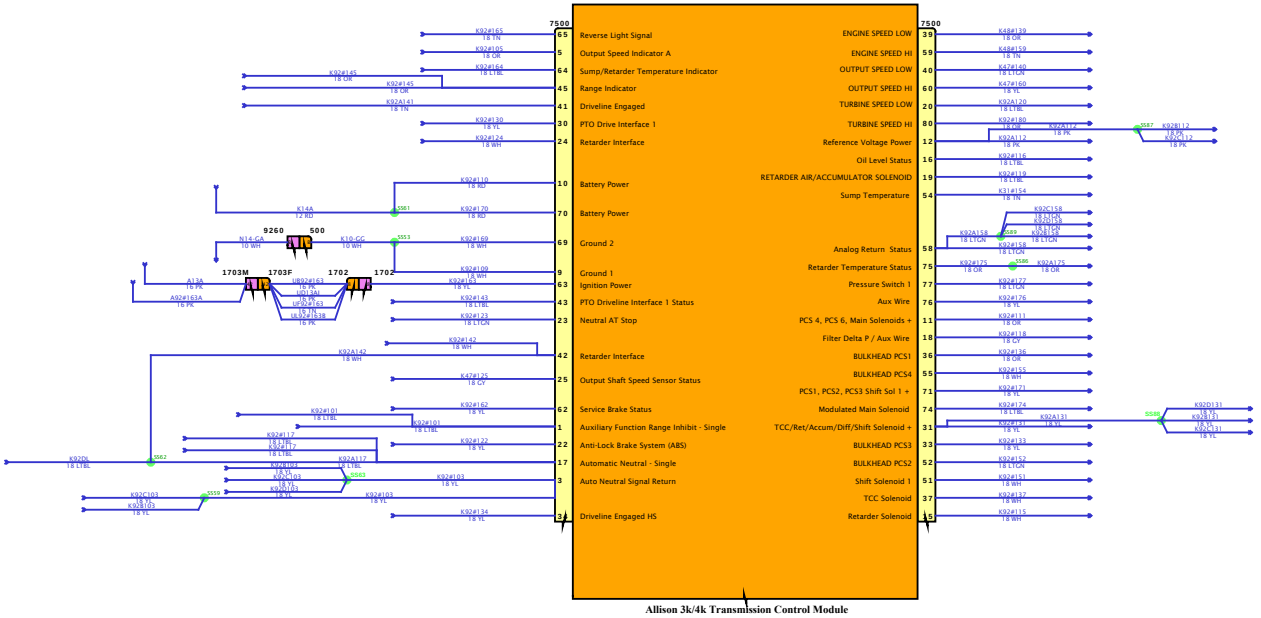

DESIGN DESCRIPTION

FEATURE CODES

SOFTWARE FEATURE CODES

Diagram1

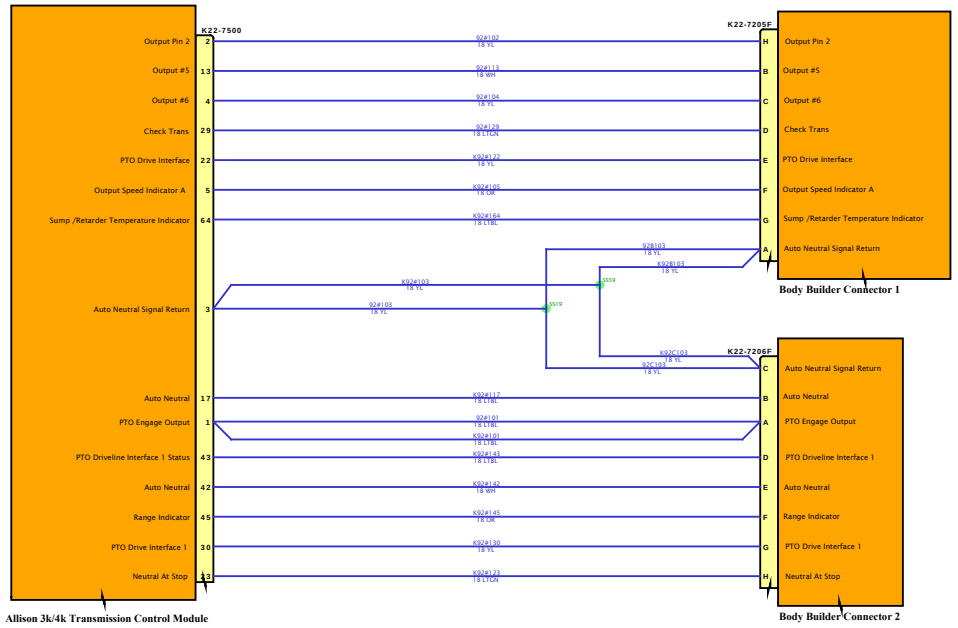

DESIGN DESCRIPTION

FEATURE CODES

SOFTWARE FEATURE CODES

NAVISTAR
NAVISTAR, INC. CONFIDENTIAL PROPRIETARY

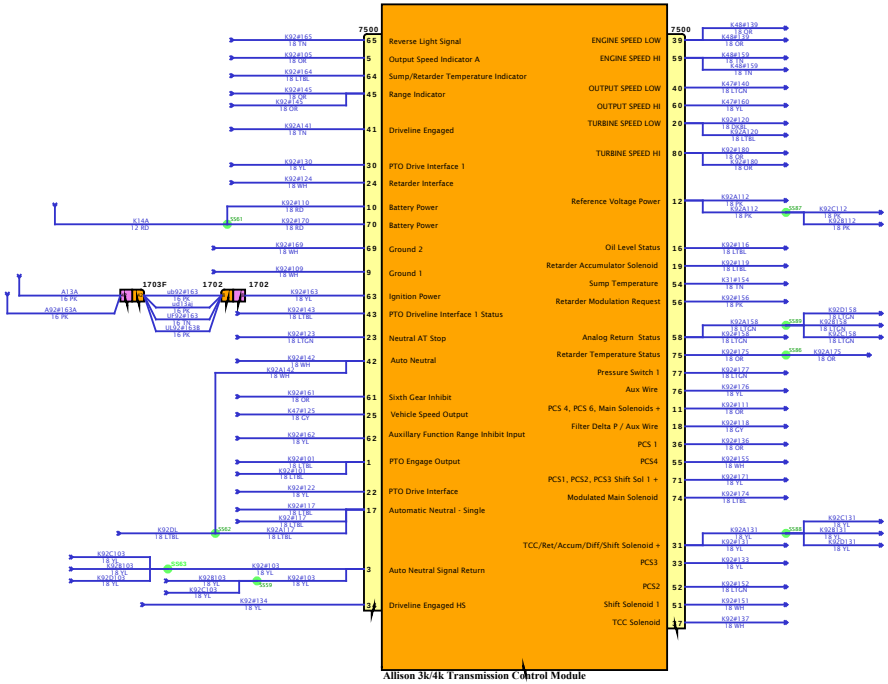

DESIGN DESCRIPTION

FEATURE CODES

SOFTWARE FEATURE CODES

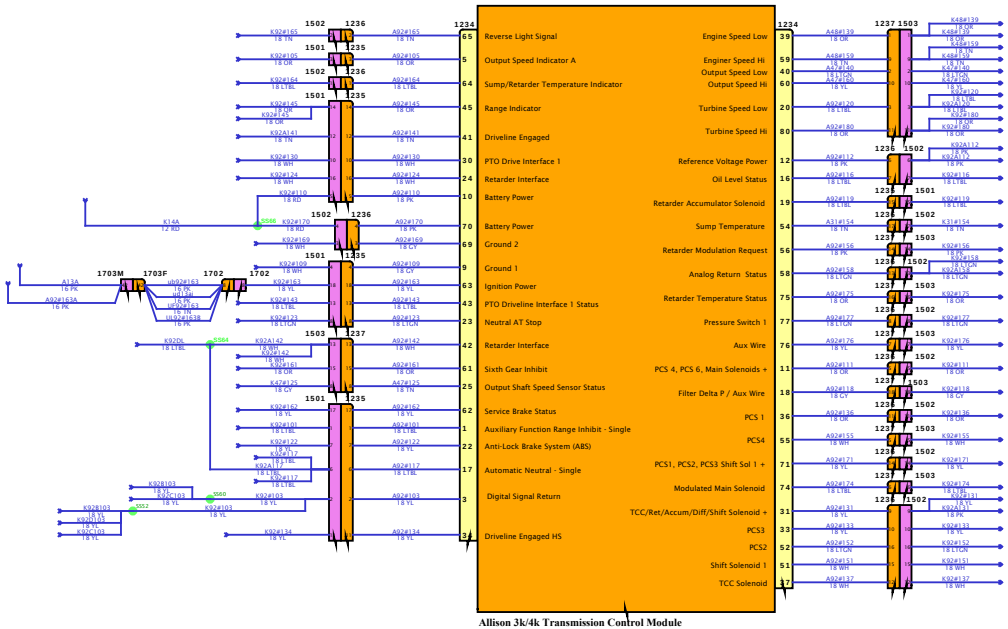

Allison 3k/4k Transmission Control Module

DESIGN DESCRIPTION

FEATURE CODES

SOFTWARE FEATURE CODES

NAVISTAR INC. CONFIDENTIAL PROPRIETARY

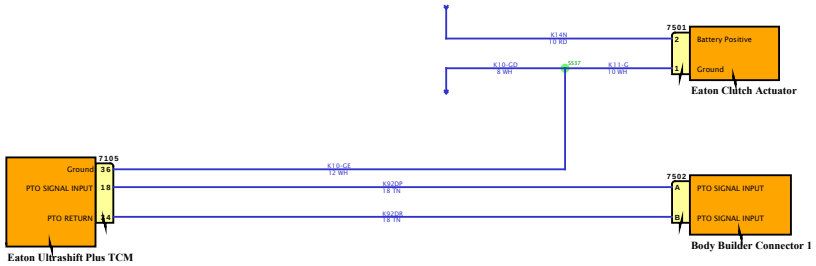

DESIGN DESCRIPTION

FEATURE CODES

SOFTWARE FEATURE CODES

NAVISTAR INC. CONFIDENTIAL PROPRIETARY

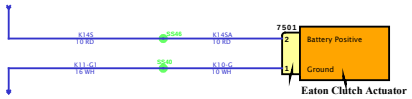

DESIGN DESCRIPTION

FEATURE CODES

SOFTWARE FEATURE CODES

NAVISTAR INC. CONFIDENTIAL PROPRIETARY

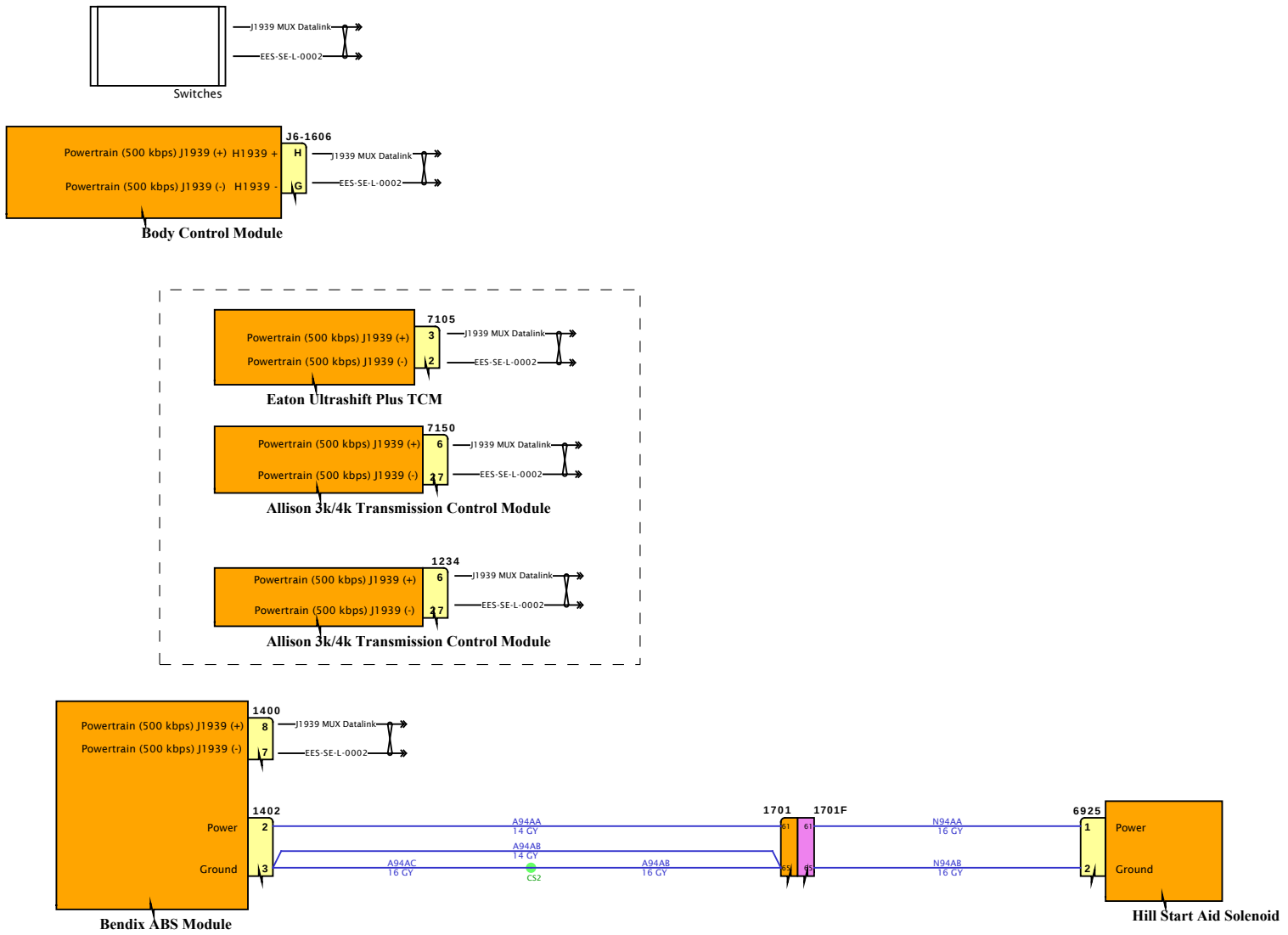

DESIGN DESCRIPTION

FEATURE CODES

SOFTWARE FEATURE CODES

NAVISTAR
NAVISTAR, INC. CONFIDENTIAL PROPRIETARY

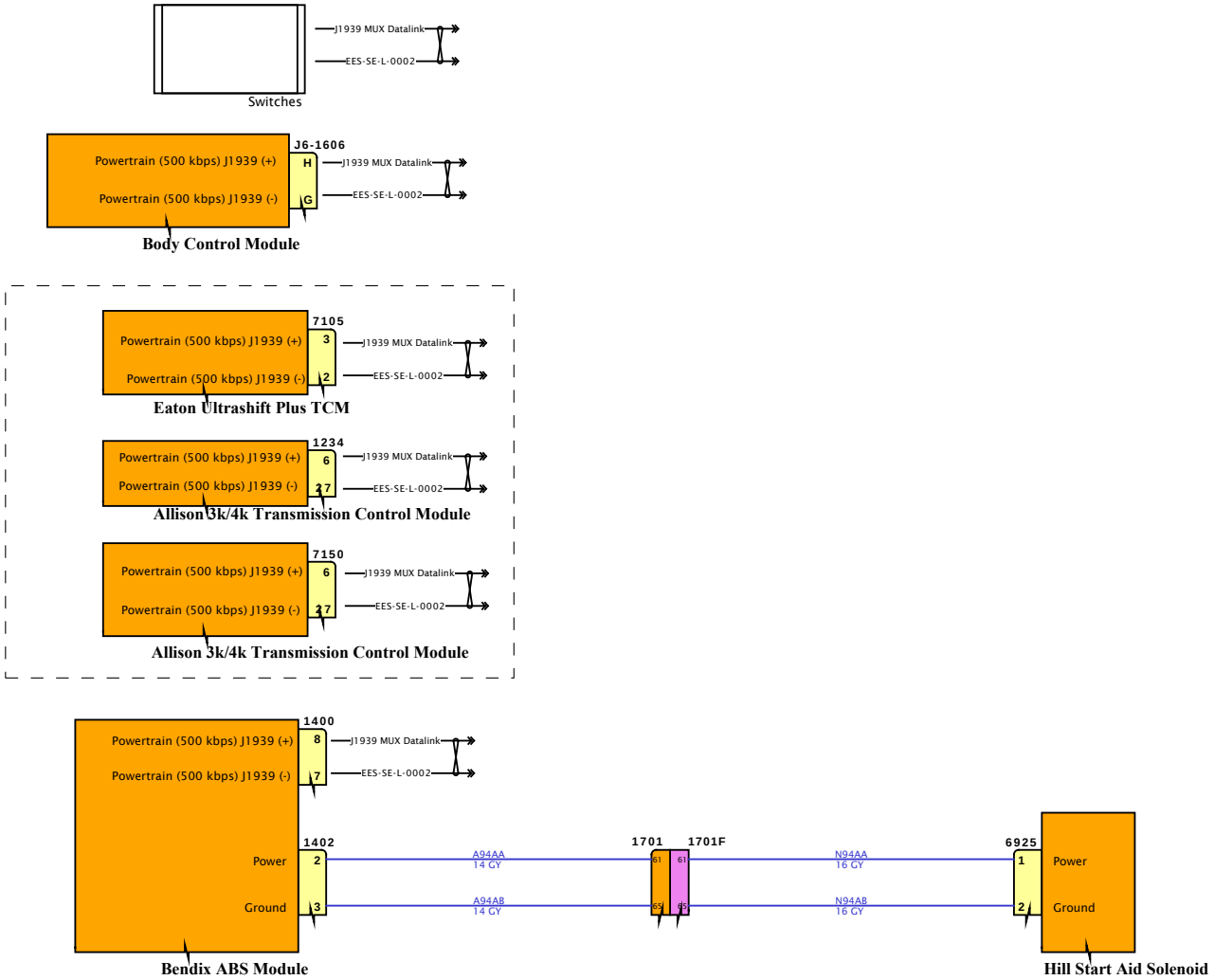

DESIGN DESCRIPTION

FEATURE CODES

SOFTWARE FEATURE CODES

NAVISTAR
NAVISTAR, INC. CONFIDENTIAL PROPRIETARY

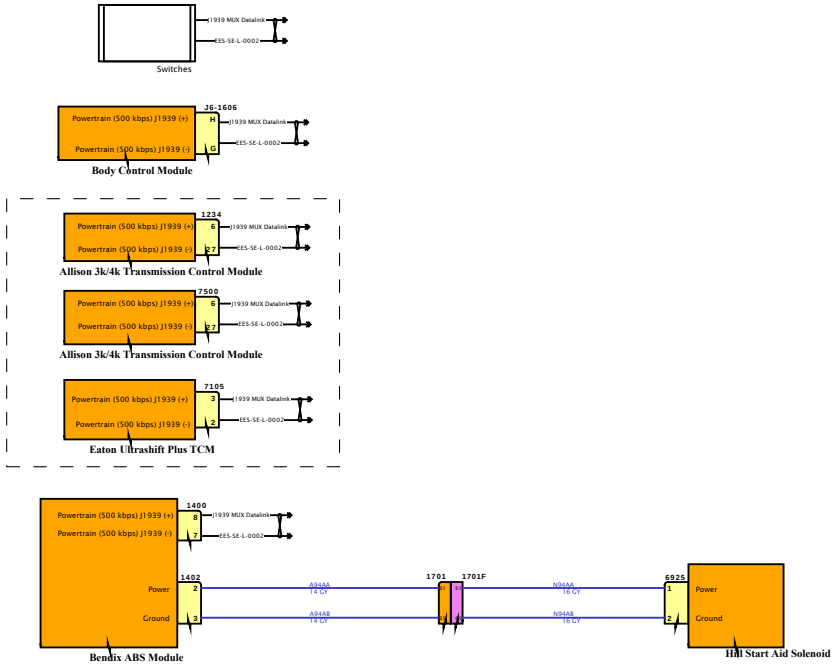

DESIGN DESCRIPTION

FEATURE CODES

SOFTWARE FEATURE CODES

NAVISTAR INC. CONFIDENTIAL PROPRIETARY

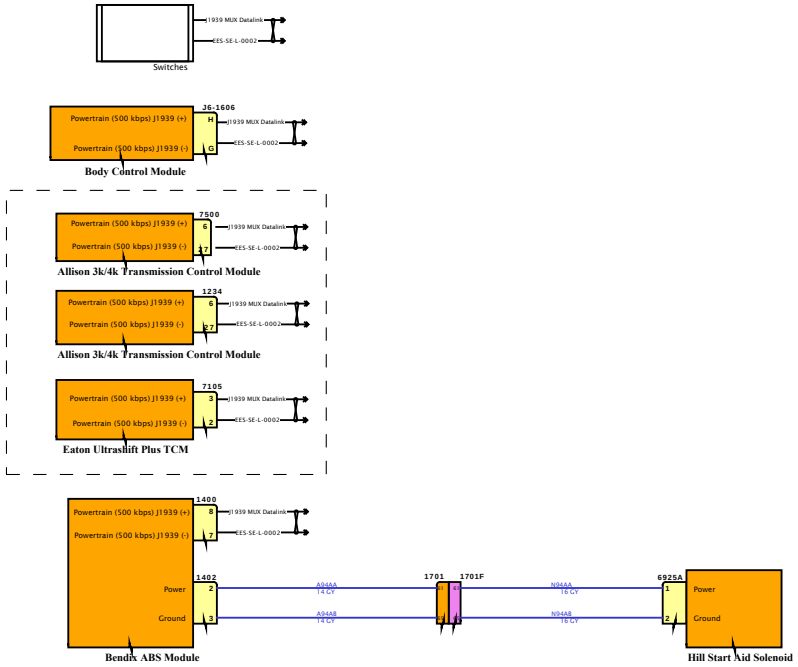

DESIGN DESCRIPTION

FEATURE CODES

SOFTWARE FEATURE CODES

NAVISTAR INC. CONFIDENTIAL PROPRIETARY

Diagram1

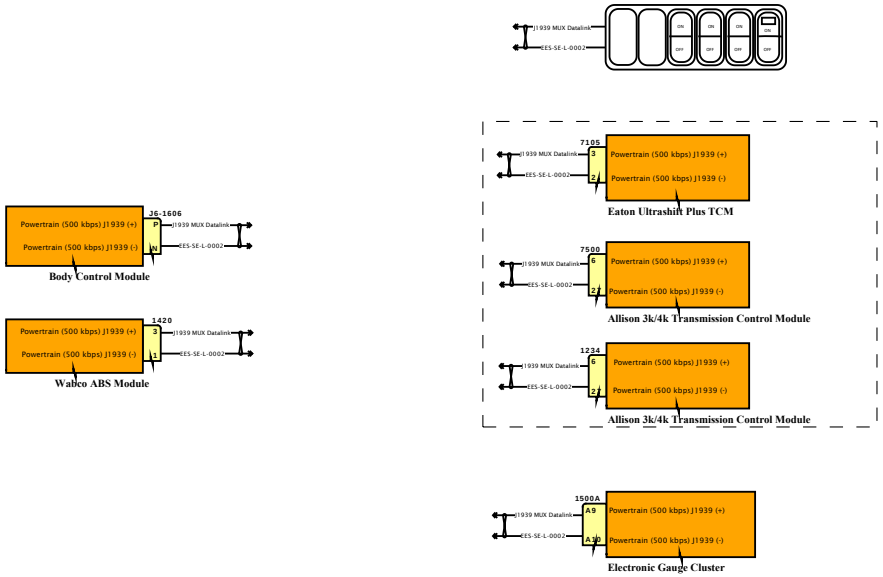

DESIGN DESCRIPTION

FEATURE CODES

SOFTWARE FEATURE CODES

NAVISTAR INC. CONFIDENTIAL PROPRIETARY

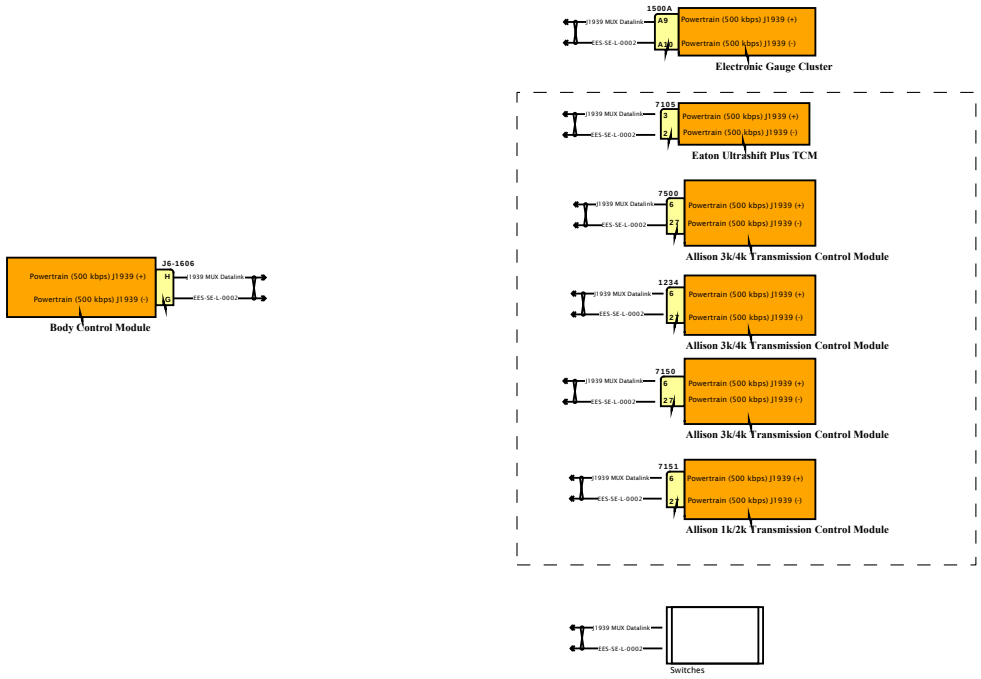

DESIGN DESCRIPTION

FEATURE CODES

SOFTWARE FEATURE CODES

NAVISTAR INC. CONFIDENTIAL PROPRIETARY

Diagram1

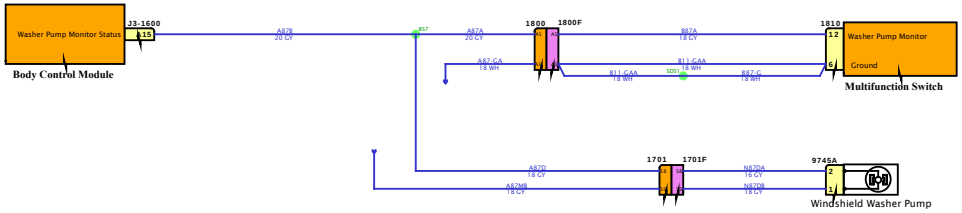

DESIGN DESCRIPTION

FEATURE CODES

SOFTWARE FEATURE CODES

NAVISTAR INC. CONFIDENTIAL PROPRIETARY

Diagram1

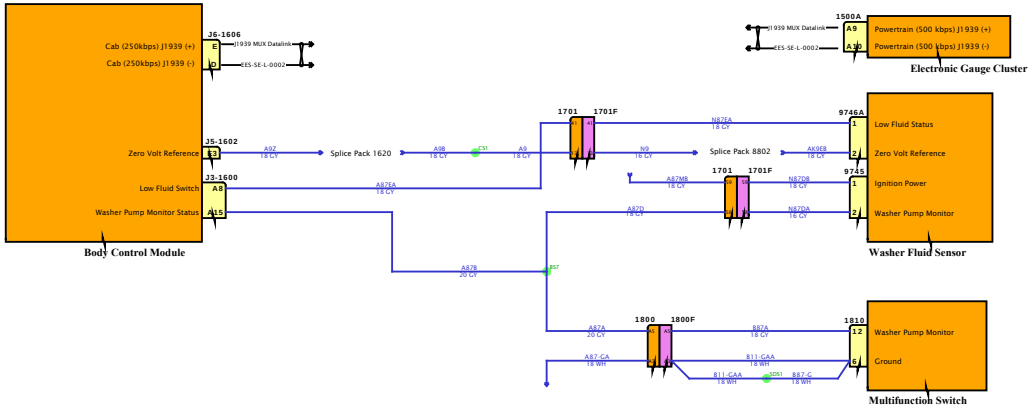

DESIGN DESCRIPTION

FEATURE CODES

SOFTWARE FEATURE CODES

NAVISTAR
NAVISTAR, INC. CONFIDENTIAL PROPRIETARY

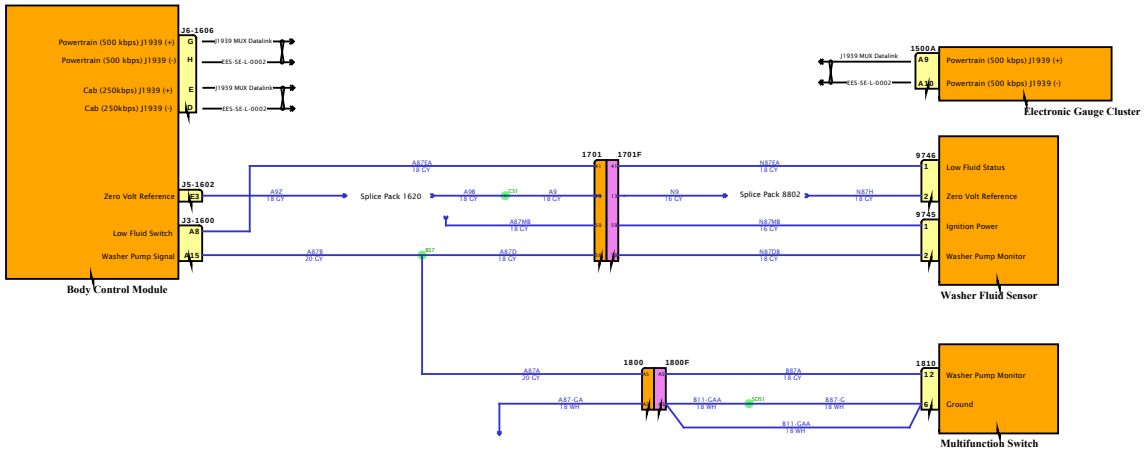

DESIGN DESCRIPTION

FEATURE CODES

SOFTWARE FEATURE CODES

NAVISTAR INC. CONFIDENTIAL PROPRIETARY

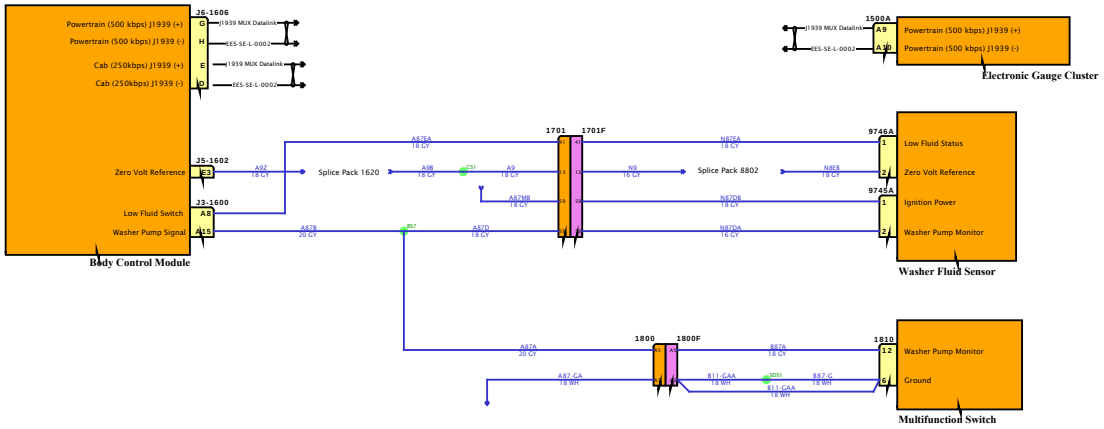

DESIGN DESCRIPTION

FEATURE CODES

SOFTWARE FEATURE CODES

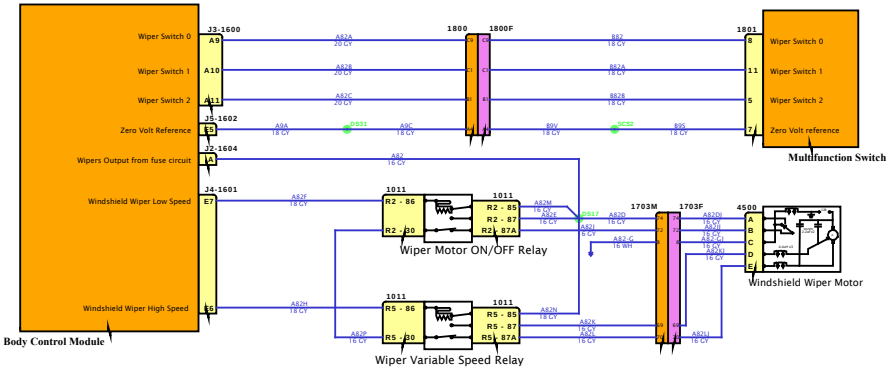

DESIGN DESCRIPTION

FEATURE CODES

SOFTWARE FEATURE CODES

NAVISTAR INC. CONFIDENTIAL PROPRIETARY

Diagram1

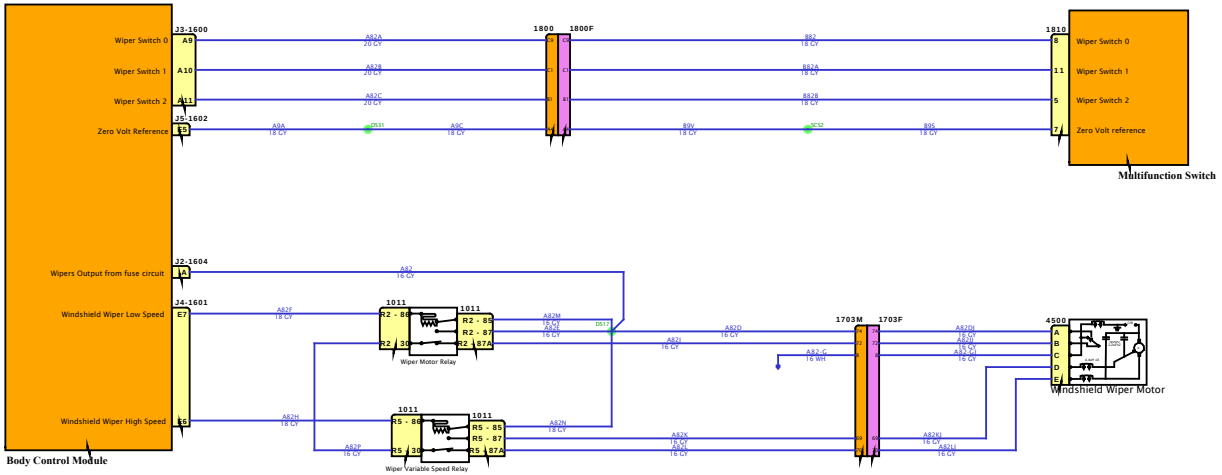

DESIGN DESCRIPTION

FEATURE CODES

SOFTWARE FEATURE CODES

NAVISTAR
NAVISTAR, INC. CONFIDENTIAL PROPRIETARY

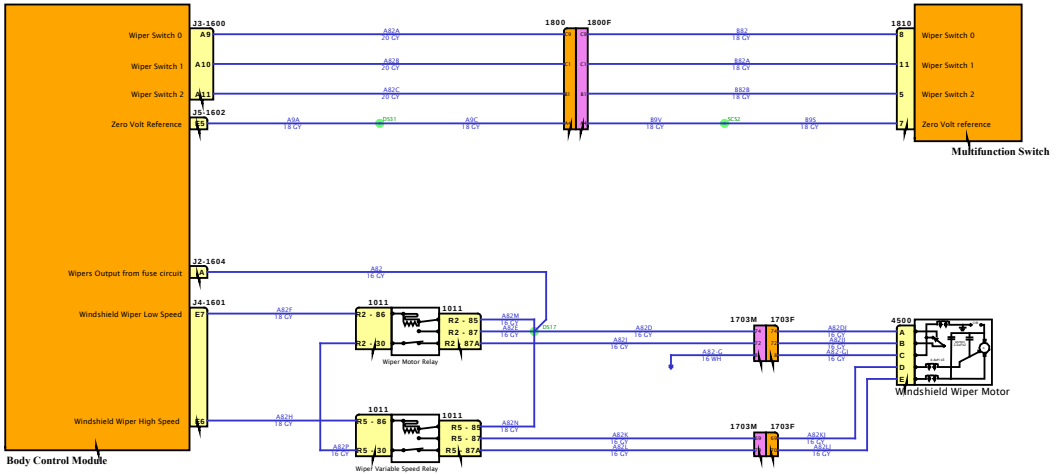

DESIGN DESCRIPTION

FEATURE CODES

SOFTWARE FEATURE CODES

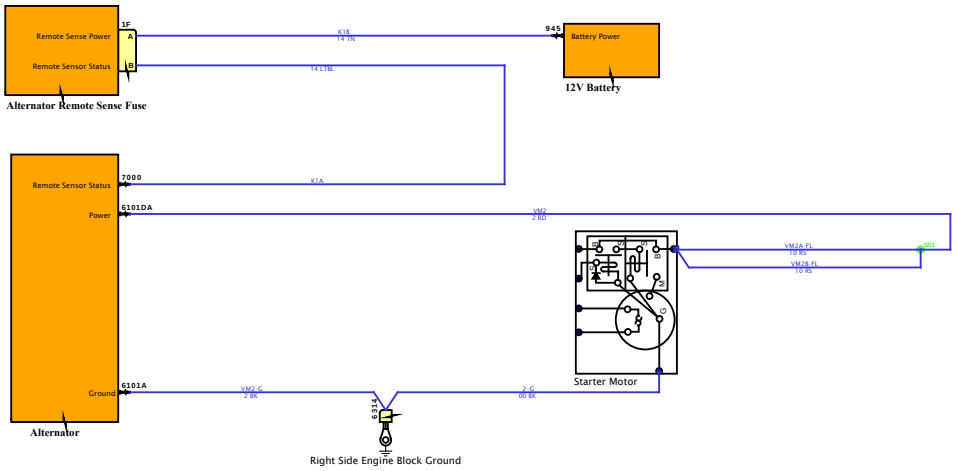

DESIGN DESCRIPTION

FEATURE CODES

SOFTWARE FEATURE CODES

NAVISTAR INC. CONFIDENTIAL PROPRIETARY

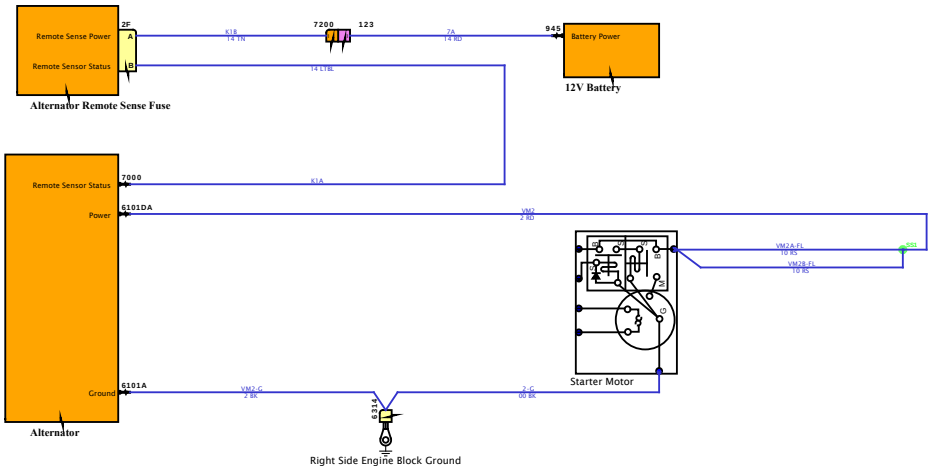

DESIGN DESCRIPTION

FEATURE CODES

SOFTWARE FEATURE CODES

NAVISTAR
NAVISTAR, INC. CONFIDENTIAL PROPRIETARY

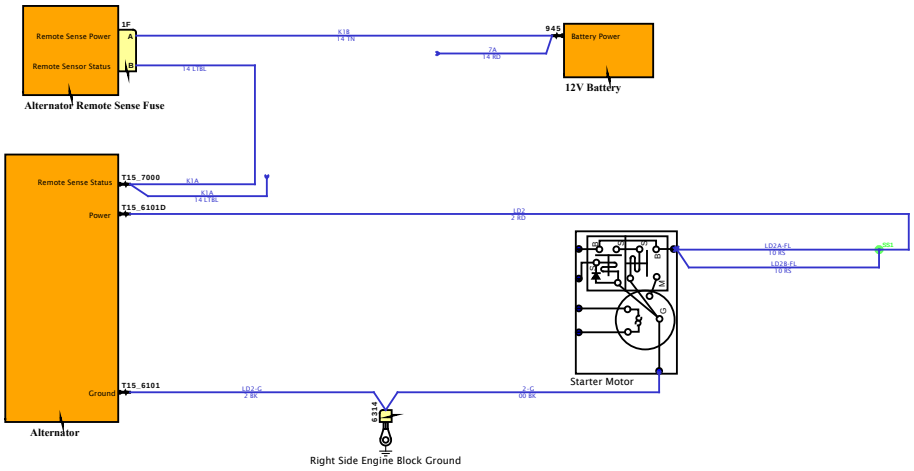

DESIGN DESCRIPTION

FEATURE CODES

SOFTWARE FEATURE CODES

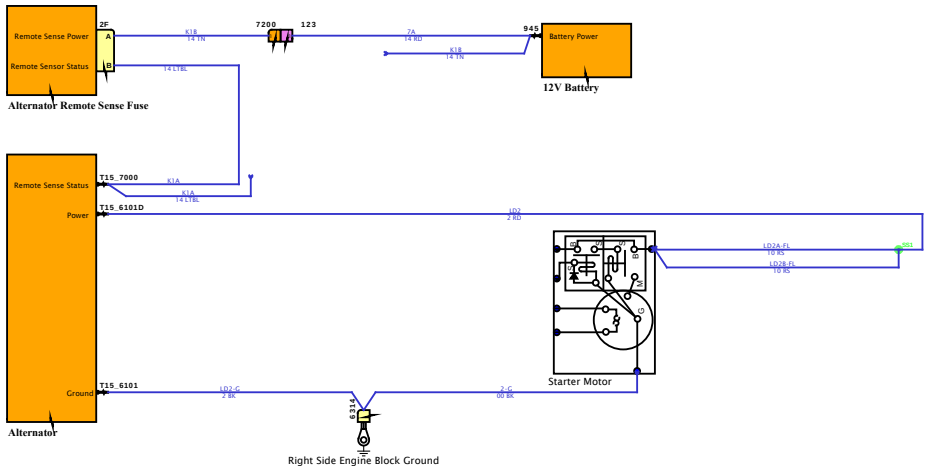

DESIGN DESCRIPTION

FEATURE CODES

SOFTWARE FEATURE CODES

NAVISTAR
NAVISTAR, INC. CONFIDENTIAL PROPRIETARY

Diagram1

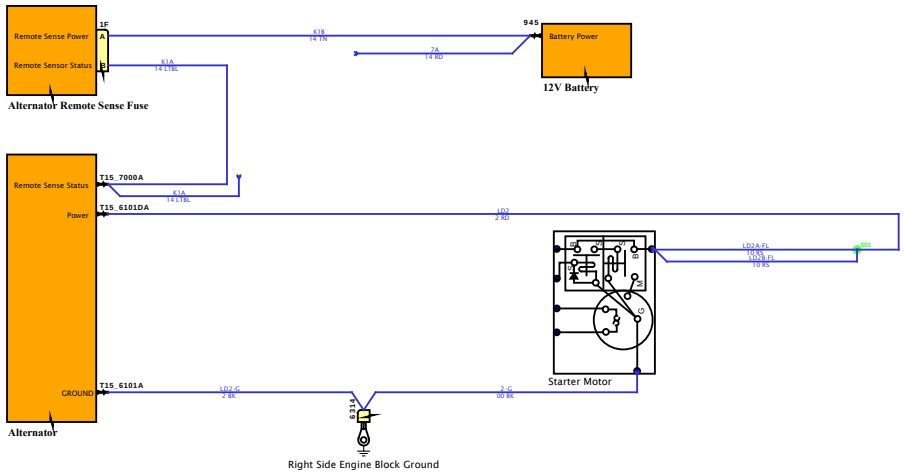

DESIGN DESCRIPTION

FEATURE CODES

SOFTWARE FEATURE CODES

NAVISTAR INC. CONFIDENTIAL PROPRIETARY

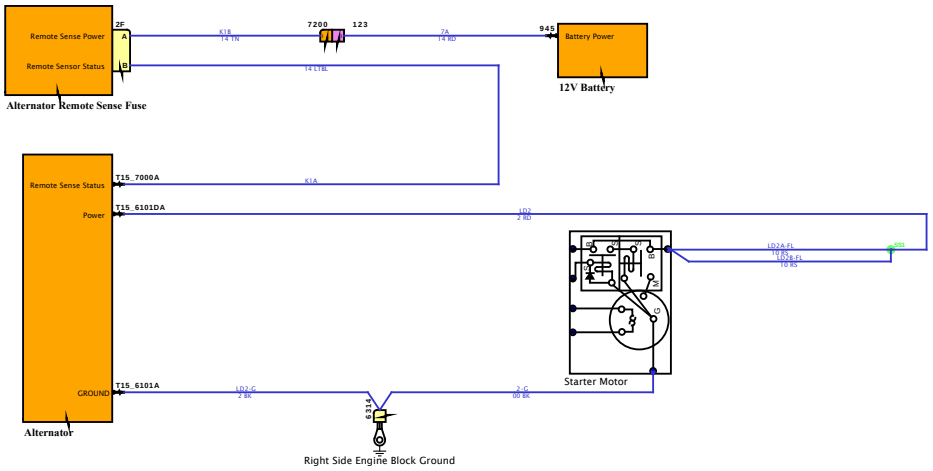

DESIGN DESCRIPTION

FEATURE CODES

SOFTWARE FEATURE CODES

NAVISTAR
NAVISTAR, INC. CONFIDENTIAL PROPRIETARY

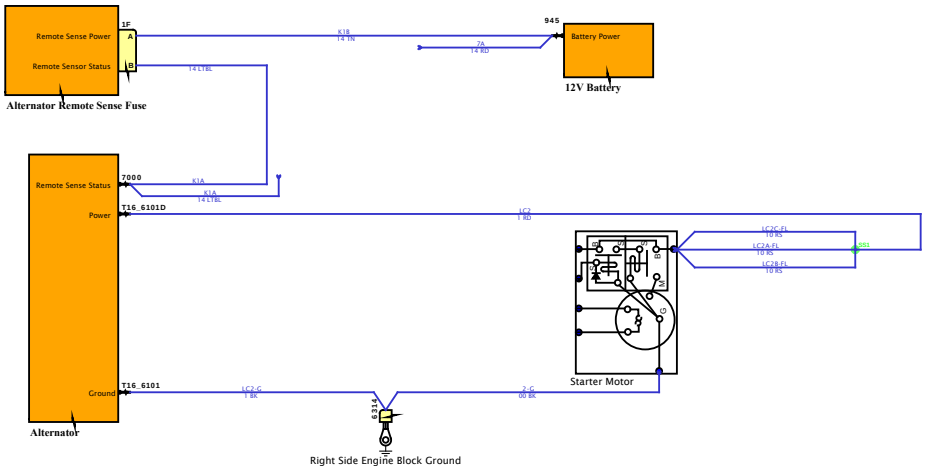

DESIGN DESCRIPTION

FEATURE CODES

SOFTWARE FEATURE CODES

NAVISTAR
NAVISTAR, INC. CONFIDENTIAL PROPRIETARY

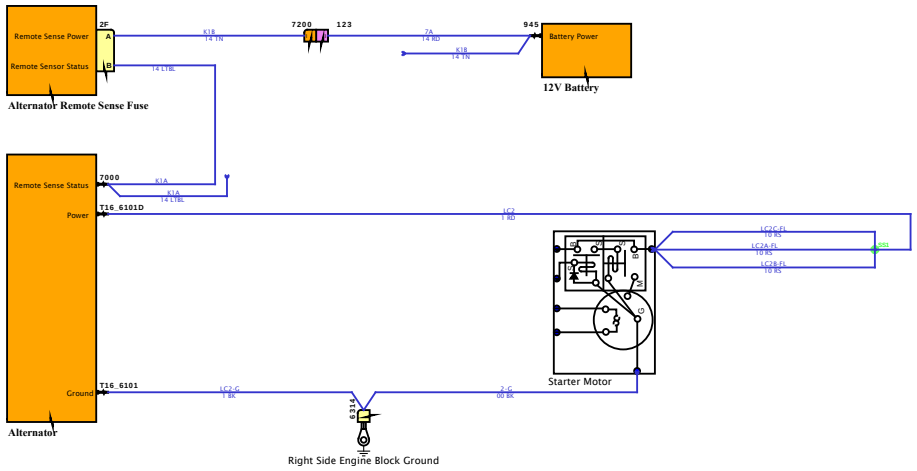

DESIGN DESCRIPTION

FEATURE CODES

SOFTWARE FEATURE CODES

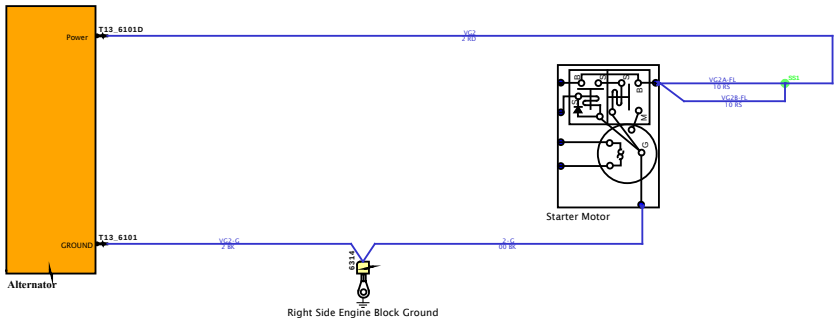

DESIGN DESCRIPTION

FEATURE CODES

SOFTWARE FEATURE CODES

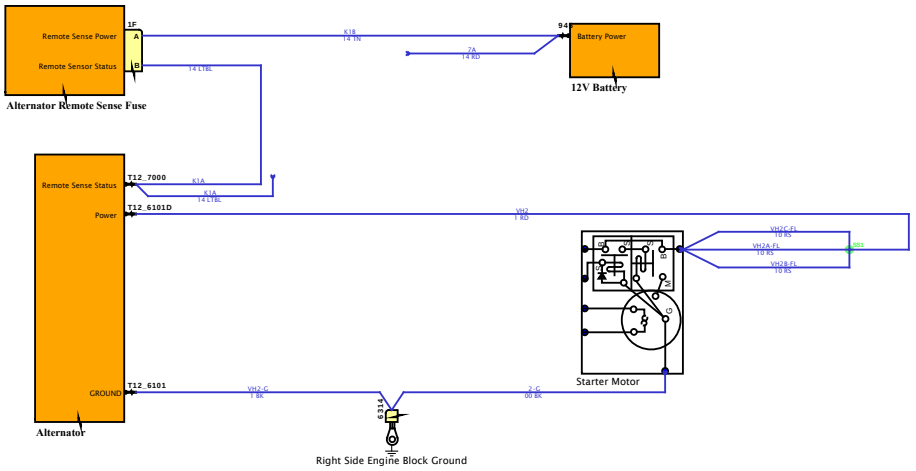

DESIGN DESCRIPTION

FEATURE CODES

SOFTWARE FEATURE CODES

NAVISTAR
NAVISTAR, INC. CONFIDENTIAL PROPRIETARY

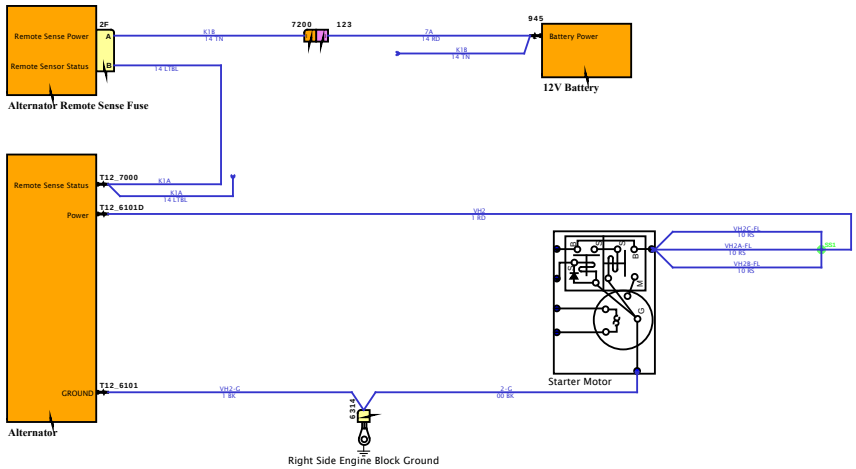

DESIGN DESCRIPTION

FEATURE CODES

SOFTWARE FEATURE CODES

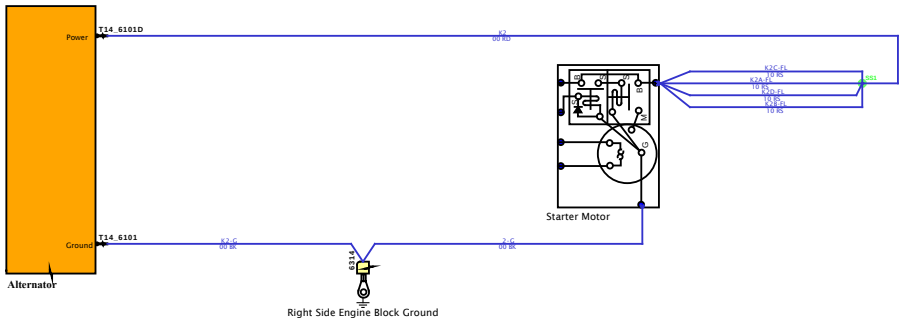

DESIGN DESCRIPTION

FEATURE CODES

SOFTWARE FEATURE CODES

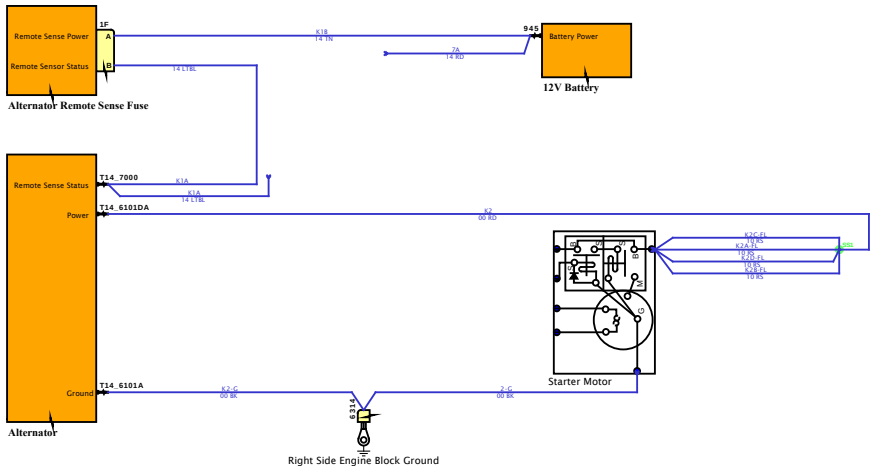

DESIGN DESCRIPTION

FEATURE CODES

SOFTWARE FEATURE CODES

NAVISTAR INC. CONFIDENTIAL PROPRIETARY

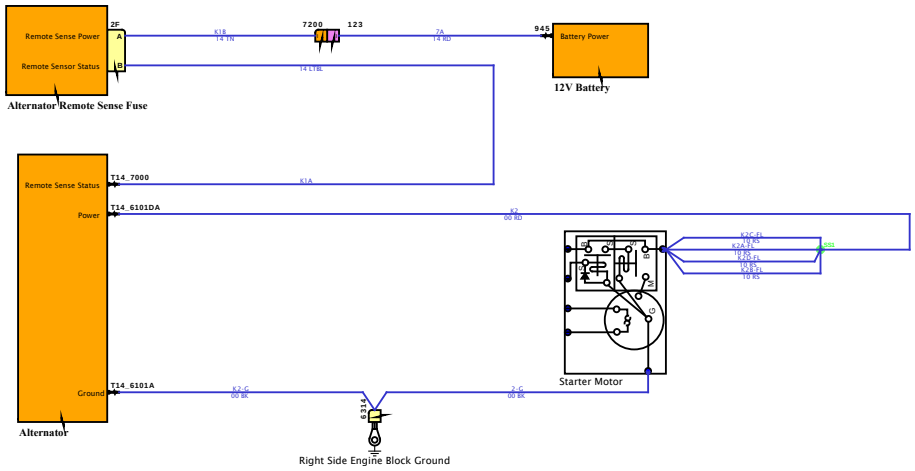

DESIGN DESCRIPTION

FEATURE CODES

SOFTWARE FEATURE CODES

Diagram1

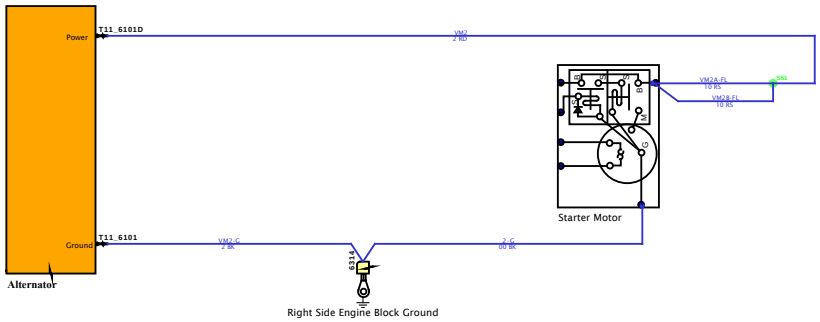

DESIGN DESCRIPTION

FEATURE CODES

SOFTWARE FEATURE CODES

NAVISTAR INC. CONFIDENTIAL PROPRIETARY

Diagram1

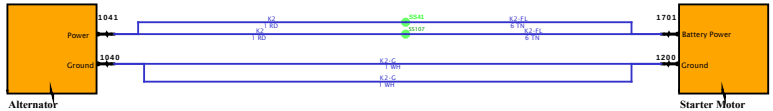

DESIGN DESCRIPTION

FEATURE CODES

SOFTWARE FEATURE CODES

NAVISTAR

NAVISTAR, INC. CONFIDENTIAL PROPRIETARY

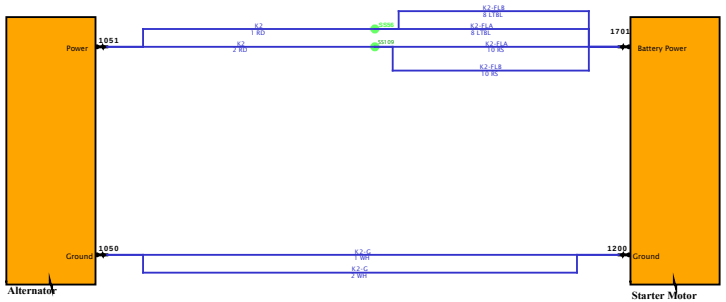

DESIGN DESCRIPTION

FEATURE CODES

SOFTWARE FEATURE CODES

NAVISTAR

NAVISTAR, INC. CONFIDENTIAL PROPRIETARY

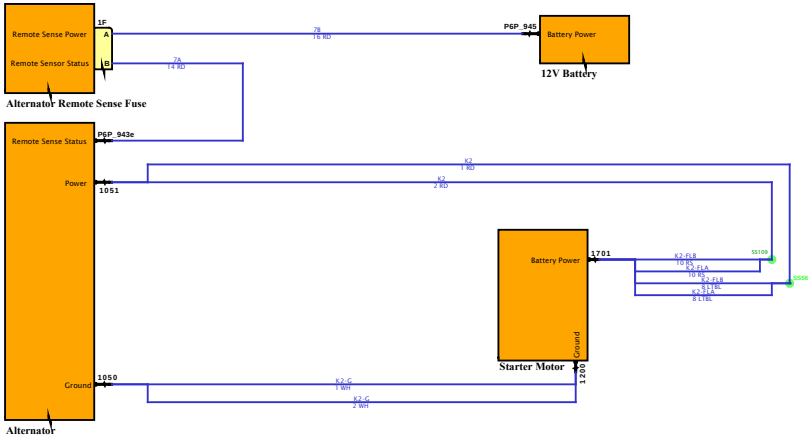

DESIGN DESCRIPTION

FEATURE CODES

SOFTWARE FEATURE CODES

NAVISTAR INC. CONFIDENTIAL PROPRIETARY

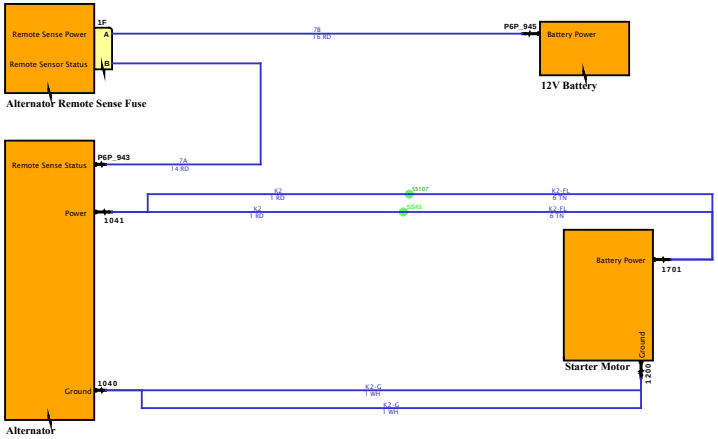

DESIGN DESCRIPTION

FEATURE CODES

SOFTWARE FEATURE CODES

NAVISTAR
NAVISTAR, INC. CONFIDENTIAL PROPRIETARY

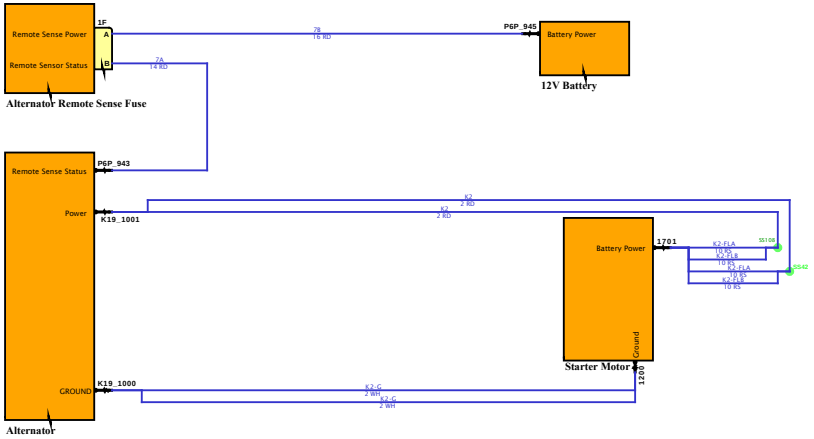

DESIGN DESCRIPTION

FEATURE CODES

SOFTWARE FEATURE CODES

NAVISTAR
NAVISTAR, INC. CONFIDENTIAL PROPRIETARY

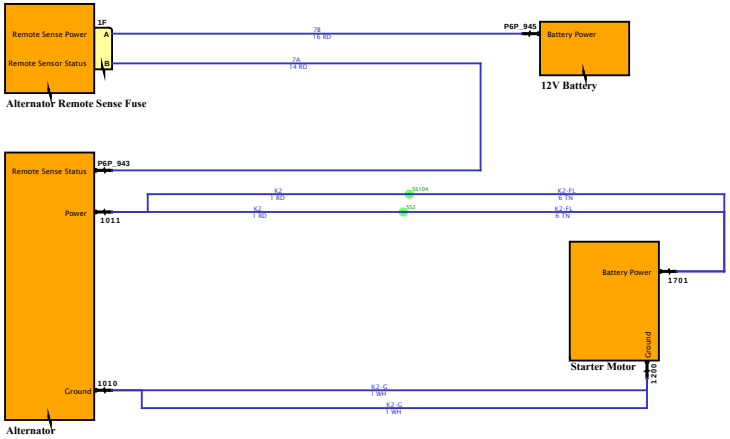

DESIGN DESCRIPTION

FEATURE CODES

SOFTWARE FEATURE CODES

NAVISTAR INC. CONFIDENTIAL PROPRIETARY

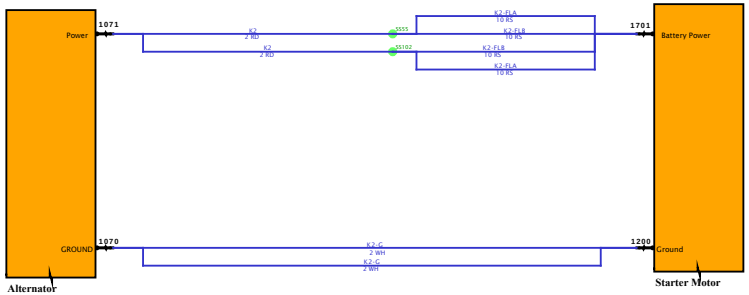

DESIGN DESCRIPTION

FEATURE CODES

SOFTWARE FEATURE CODES

NAVISTAR
NAVISTAR, INC. CONFIDENTIAL PROPRIETARY

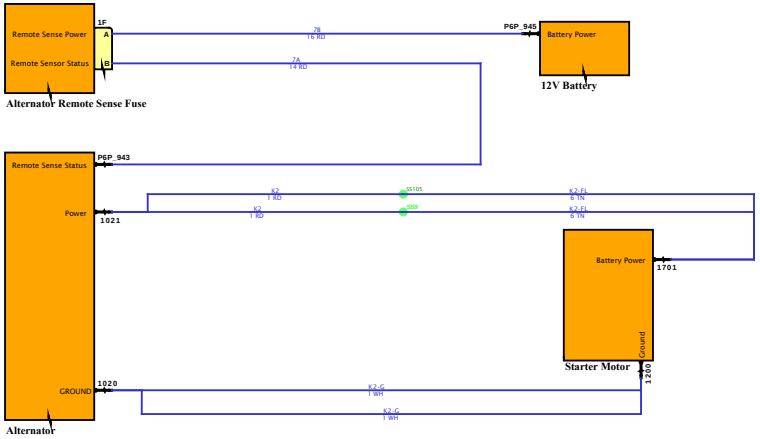

DESIGN DESCRIPTION

FEATURE CODES

SOFTWARE FEATURE CODES

NAVISTAR INC. CONFIDENTIAL PROPRIETARY

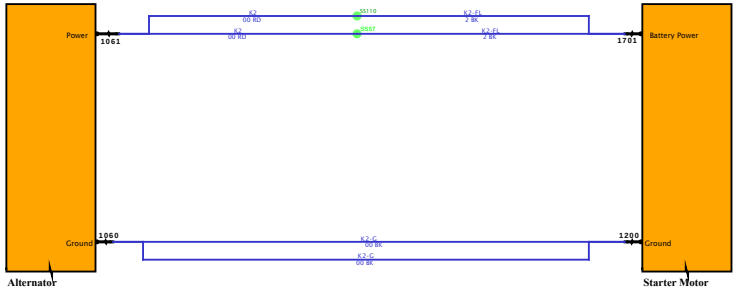

DESIGN DESCRIPTION

FEATURE CODES

SOFTWARE FEATURE CODES

NAVISTAR INC. CONFIDENTIAL PROPRIETARY

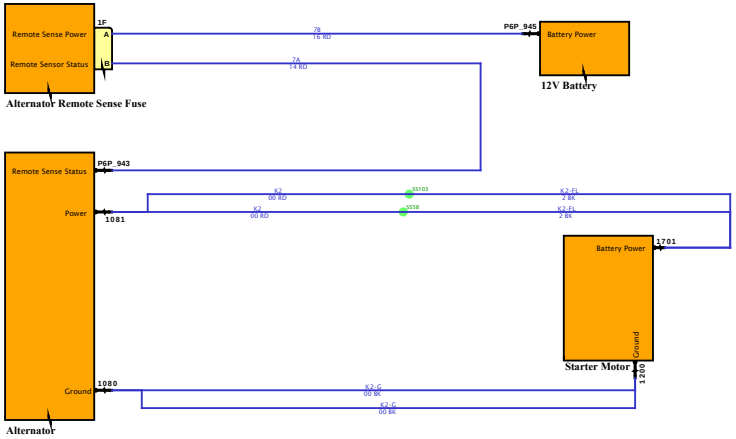

DESIGN DESCRIPTION

FEATURE CODES

SOFTWARE FEATURE CODES

NAVISTAR
NAVISTAR, INC. CONFIDENTIAL PROPRIETARY

Diagram1

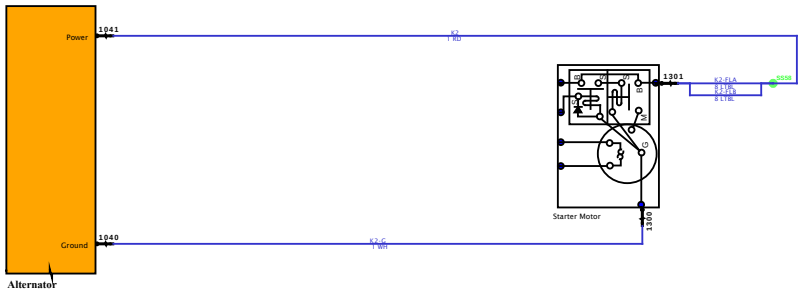

DESIGN DESCRIPTION

FEATURE CODES

SOFTWARE FEATURE CODES

NAVISTAR

NAVISTAR, INC. CONFIDENTIAL PROPRIETARY

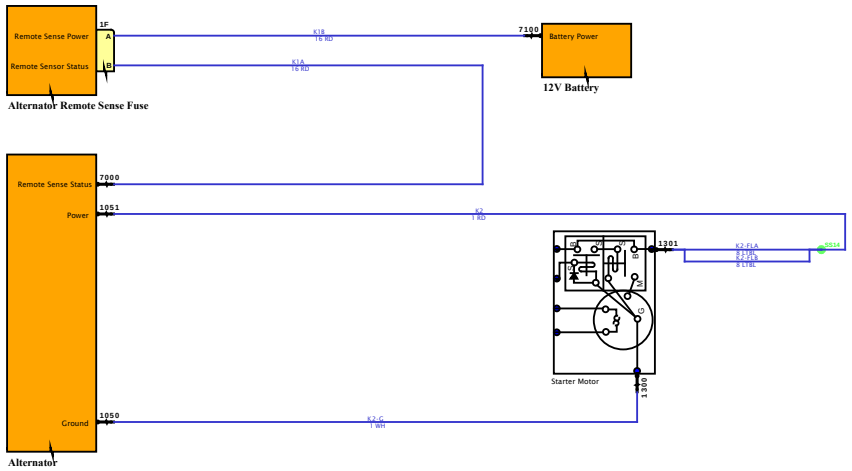

DESIGN DESCRIPTION

FEATURE CODES

SOFTWARE FEATURE CODES

NAVISTAR INC. CONFIDENTIAL PROPRIETARY

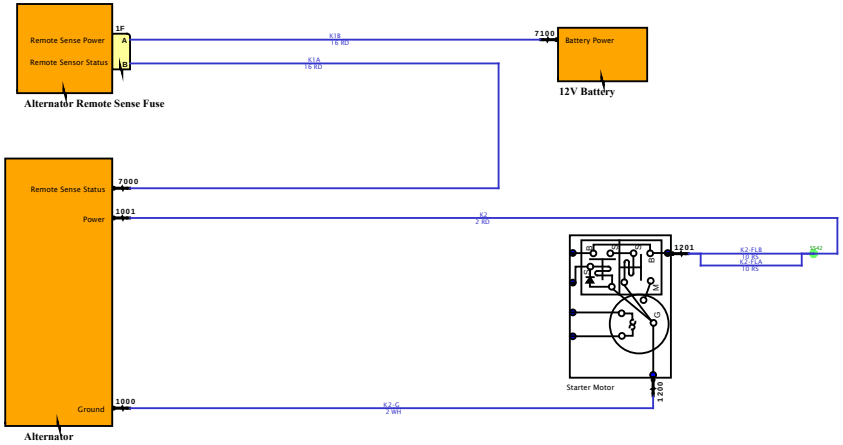

DESIGN DESCRIPTION

FEATURE CODES

SOFTWARE FEATURE CODES

NAVISTAR INC. CONFIDENTIAL PROPRIETARY

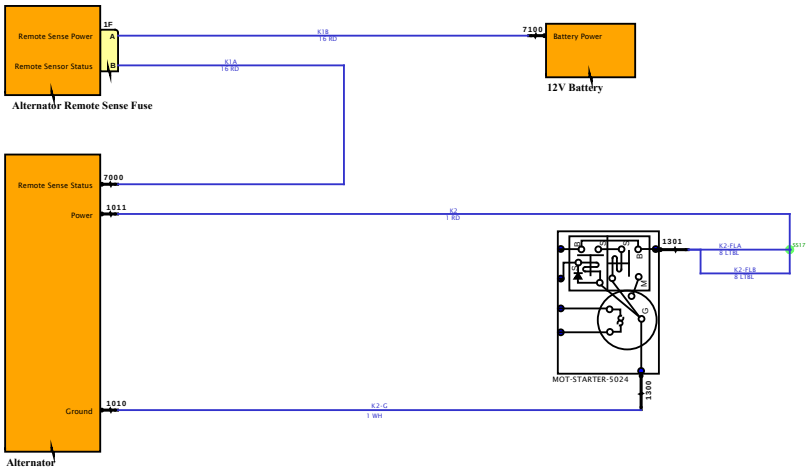

DESIGN DESCRIPTION

FEATURE CODES

SOFTWARE FEATURE CODES

NAVISTAR INC. CONFIDENTIAL PROPRIETARY

Diagram1

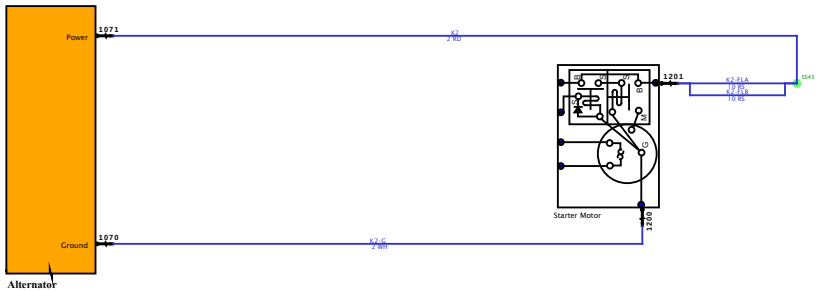

DESIGN DESCRIPTION

FEATURE CODES

SOFTWARE FEATURE CODES

NAVISTAR INC. CONFIDENTIAL PROPRIETARY

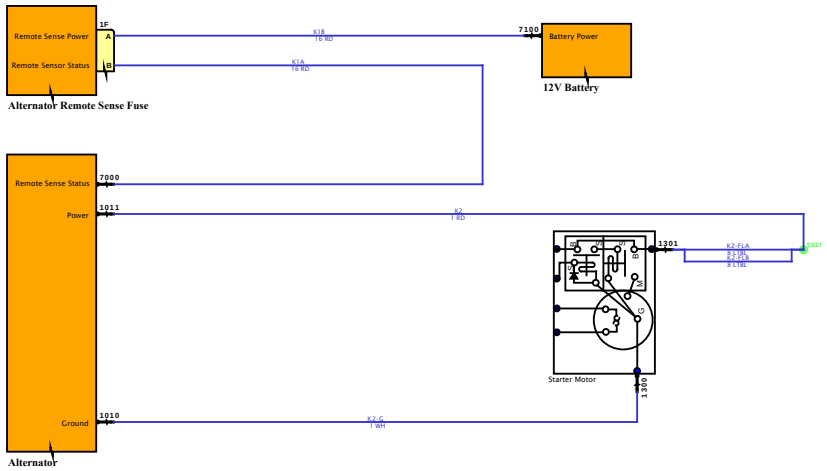

DESIGN DESCRIPTION

FEATURE CODES

SOFTWARE FEATURE CODES

NAVISTAR INC. CONFIDENTIAL PROPRIETARY

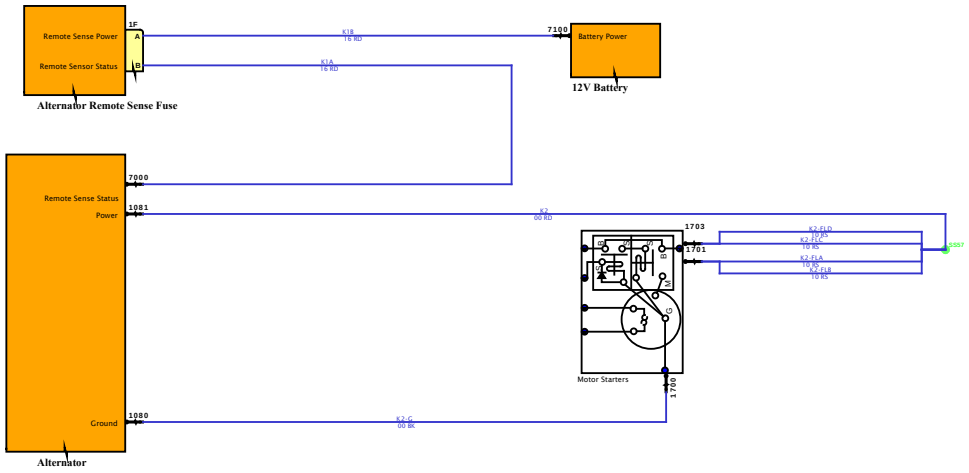

DESIGN DESCRIPTION

FEATURE CODES

SOFTWARE FEATURE CODES

NAVISTAR
NAVISTAR, INC. CONFIDENTIAL PROPRIETARY



DESIGN DESCRIPTION

FEATURE CODES

SOFTWARE FEATURE CODES

NAVISTAR INC. CONFIDENTIAL PROPRIETARY

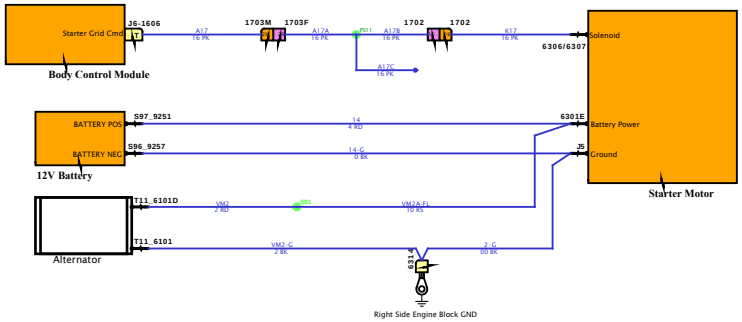

DESIGN DESCRIPTION

FEATURE CODES

SOFTWARE FEATURE CODES

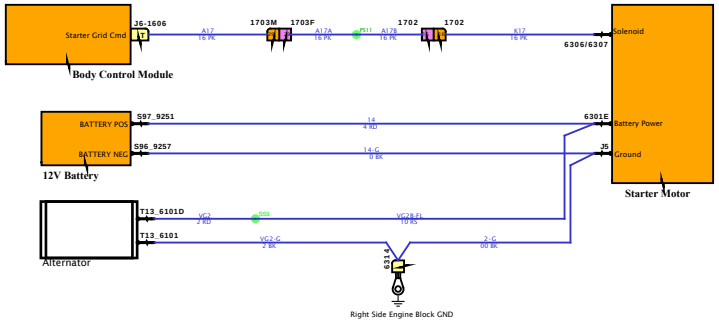

DESIGN DESCRIPTION

FEATURE CODES

SOFTWARE FEATURE CODES

NAVISTAR
NAVISTAR, INC. CONFIDENTIAL PROPRIETARY

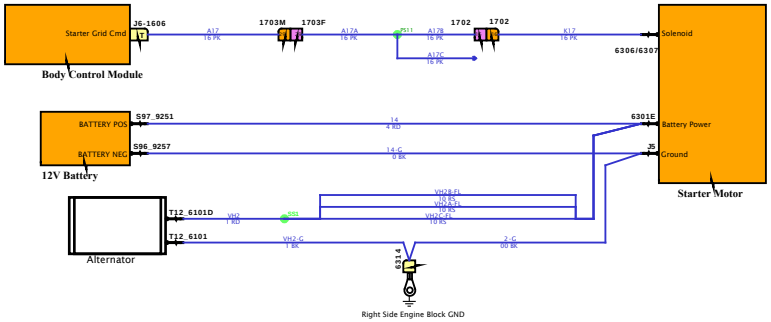

DESIGN DESCRIPTION

FEATURE CODES

SOFTWARE FEATURE CODES

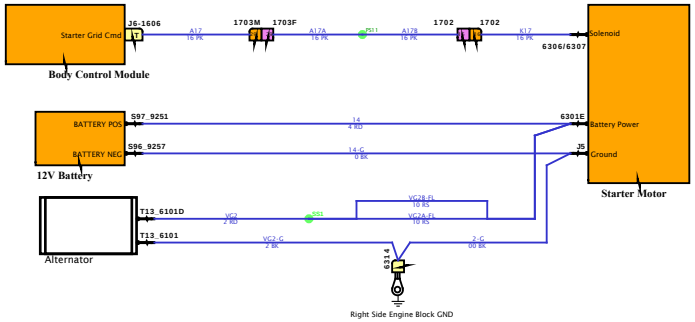

DESIGN DESCRIPTION

FEATURE CODES

SOFTWARE FEATURE CODES

NAVISTAR INC. CONFIDENTIAL PROPRIETARY

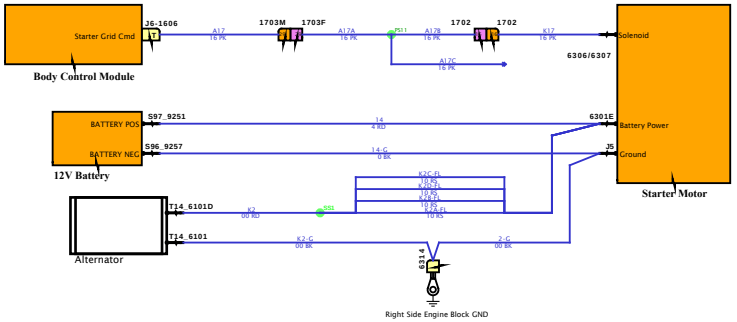

DESIGN DESCRIPTION

FEATURE CODES

SOFTWARE FEATURE CODES

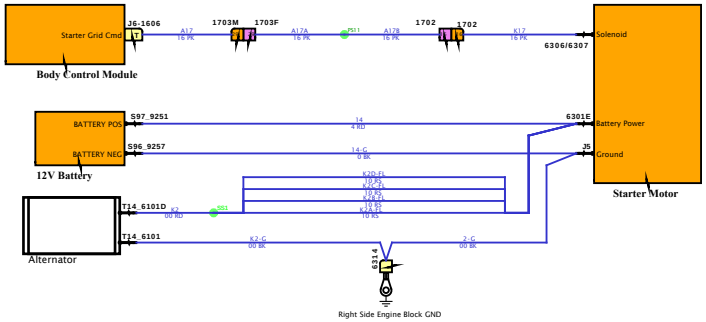

DESIGN DESCRIPTION

FEATURE CODES

SOFTWARE FEATURE CODES

NAVISTAR
NAVISTAR, INC. CONFIDENTIAL PROPRIETARY

Diagram1

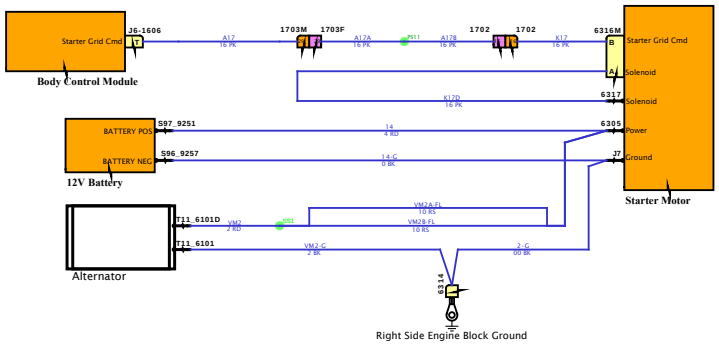

DESIGN DESCRIPTION

FEATURE CODES

SOFTWARE FEATURE CODES

NAVISTAR INC. CONFIDENTIAL PROPRIETARY

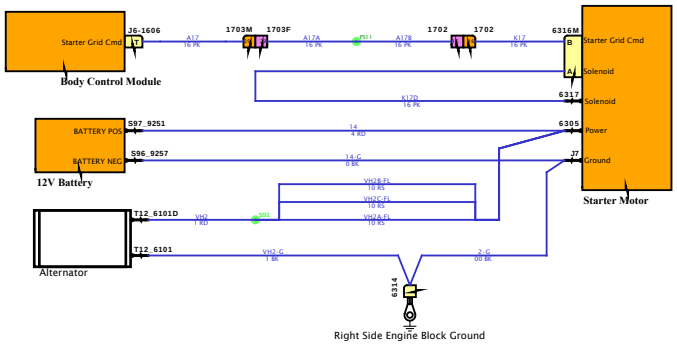

DESIGN DESCRIPTION

FEATURE CODES

SOFTWARE FEATURE CODES

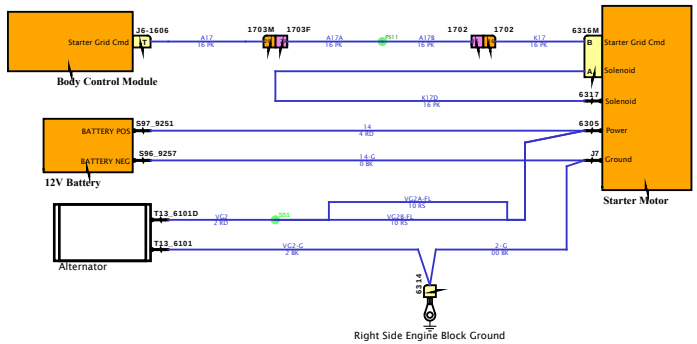

DESIGN DESCRIPTION

FEATURE CODES

SOFTWARE FEATURE CODES

NAVISTAR
NAVISTAR, INC. CONFIDENTIAL PROPRIETARY

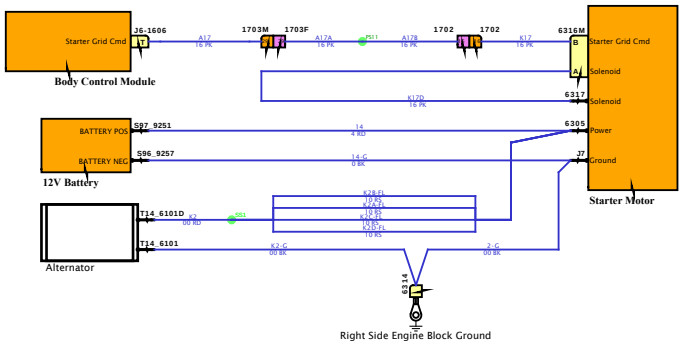

DESIGN DESCRIPTION

FEATURE CODES

SOFTWARE FEATURE CODES

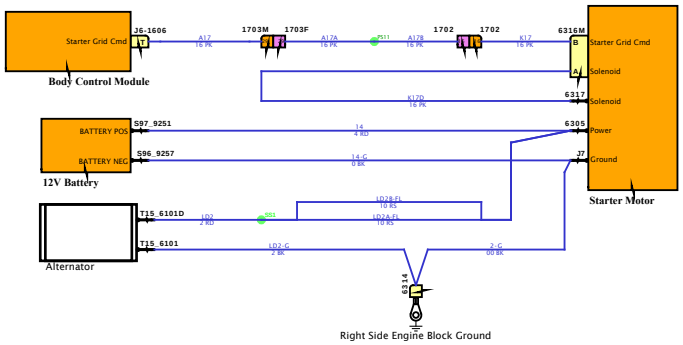

DESIGN DESCRIPTION

FEATURE CODES

SOFTWARE FEATURE CODES

NAVISTAR
NAVISTAR, INC. CONFIDENTIAL PROPRIETARY

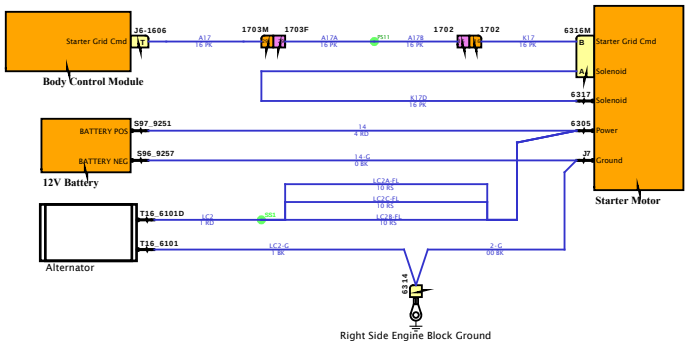

DESIGN DESCRIPTION

FEATURE CODES

SOFTWARE FEATURE CODES

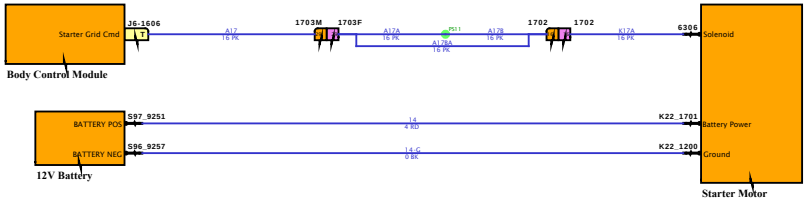

DESIGN DESCRIPTION

FEATURE CODES

SOFTWARE FEATURE CODES

NAVISTAR INC. CONFIDENTIAL PROPRIETARY

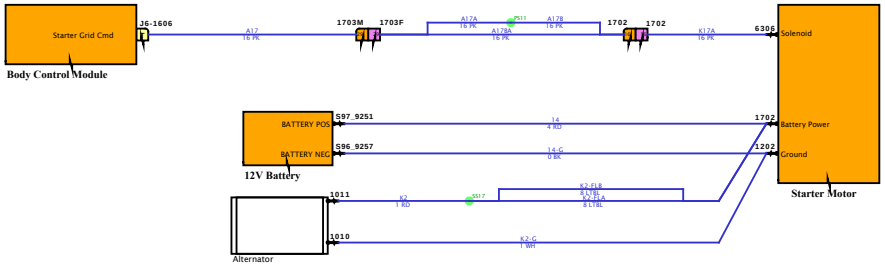

DESIGN DESCRIPTION

FEATURE CODES

SOFTWARE FEATURE CODES

NAVISTAR INC. CONFIDENTIAL PROPRIETARY

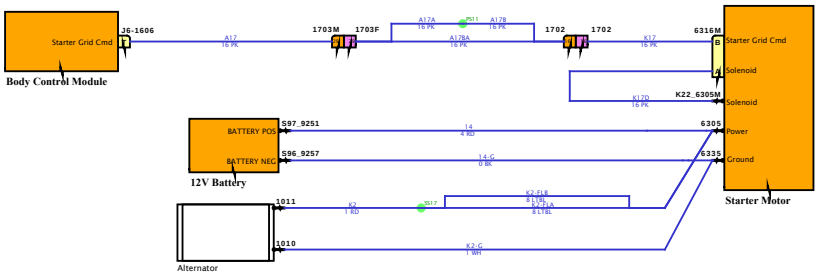

DESIGN DESCRIPTION

FEATURE CODES

SOFTWARE FEATURE CODES

NAVISTAR
NAVISTAR, INC. CONFIDENTIAL PROPRIETARY

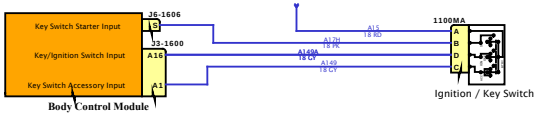

DESIGN DESCRIPTION

FEATURE CODES

SOFTWARE FEATURE CODES

NAVISTAR INC. CONFIDENTIAL PROPRIETARY

Diagram2



DESIGN DESCRIPTION

FEATURE CODES

SOFTWARE FEATURE CODES

NAVISTAR INC. CONFIDENTIAL PROPRIETARY

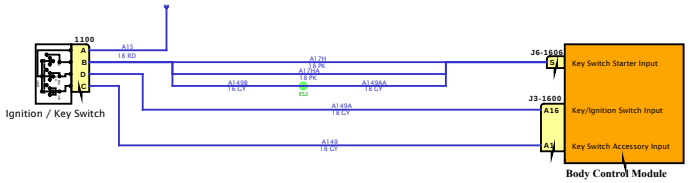

DESIGN DESCRIPTION

FEATURE CODES

SOFTWARE FEATURE CODES

NAVISTAR INC. CONFIDENTIAL PROPRIETARY



DESIGN DESCRIPTION

FEATURE CODES

SOFTWARE FEATURE CODES

NAVISTAR INC. CONFIDENTIAL PROPRIETARY

Diagram1

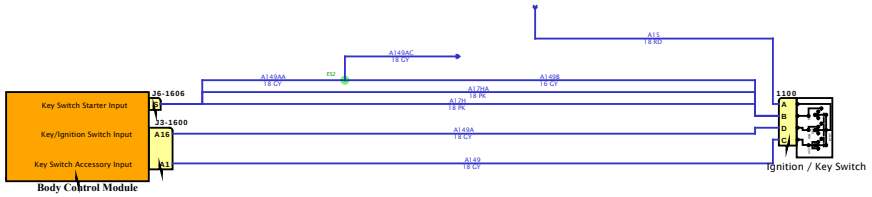

DESIGN DESCRIPTION

FEATURE CODES

SOFTWARE FEATURE CODES

NAVISTAR INC. CONFIDENTIAL PROPRIETARY

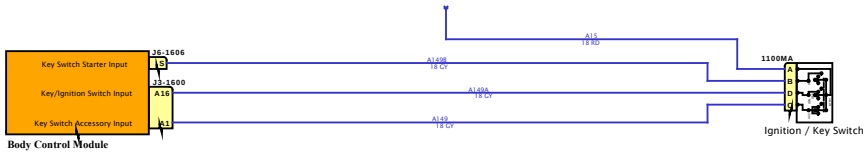

DESIGN DESCRIPTION

FEATURE CODES

SOFTWARE FEATURE CODES

NAVISTAR INC. CONFIDENTIAL PROPRIETARY



DESIGN DESCRIPTION

FEATURE CODES

SOFTWARE FEATURE CODES

NAVISTAR

NAVISTAR, INC. CONFIDENTIAL PROPRIETARY

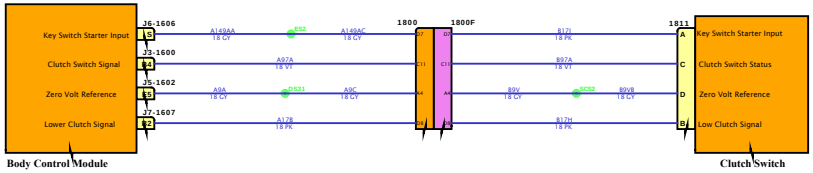

DESIGN DESCRIPTION

FEATURE CODES

SOFTWARE FEATURE CODES

NAVISTAR INC. CONFIDENTIAL PROPRIETARY

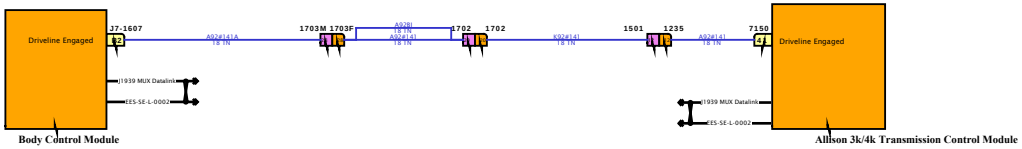

DESIGN DESCRIPTION

FEATURE CODES

SOFTWARE FEATURE CODES

NAVISTAR INC. CONFIDENTIAL PROPRIETARY

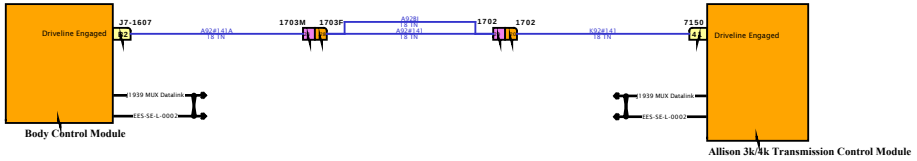

DESIGN DESCRIPTION

FEATURE CODES

SOFTWARE FEATURE CODES

NAVISTAR INC. CONFIDENTIAL PROPRIETARY

Diagram1

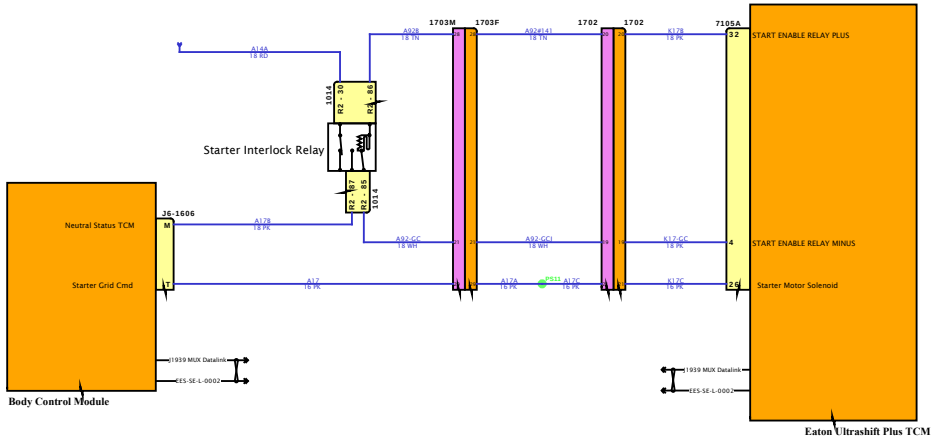

DESIGN DESCRIPTION

FEATURE CODES

SOFTWARE FEATURE CODES

NAVISTAR INC. CONFIDENTIAL PROPRIETARY

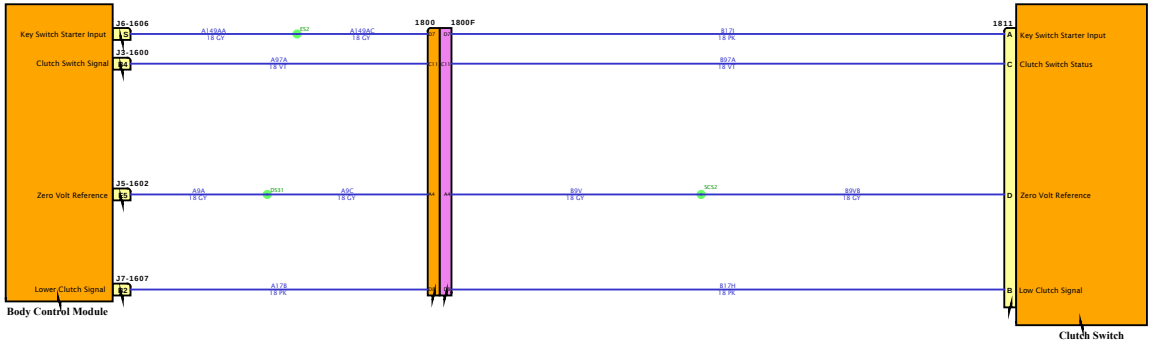

DESIGN DESCRIPTION

FEATURE CODES

SOFTWARE FEATURE CODES

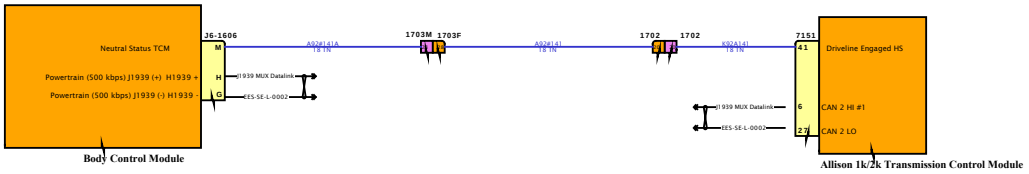

DESIGN DESCRIPTION

FEATURE CODES

SOFTWARE FEATURE CODES

NAVISTAR
NAVISTAR, INC. CONFIDENTIAL PROPRIETARY

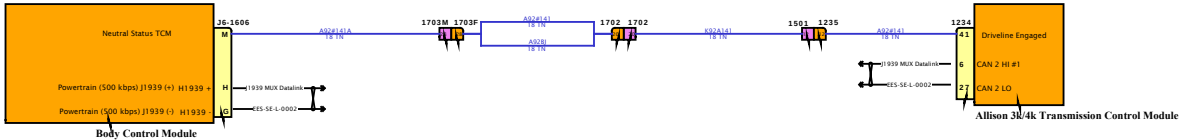

DESIGN DESCRIPTION

FEATURE CODES

SOFTWARE FEATURE CODES

NAVISTAR
NAVISTAR, INC. CONFIDENTIAL PROPRIETARY

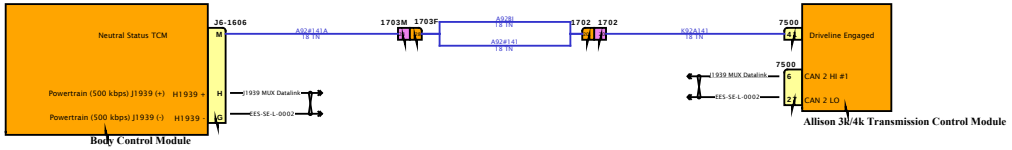

DESIGN DESCRIPTION

FEATURE CODES

SOFTWARE FEATURE CODES

NAVISTAR
NAVISTAR, INC. CONFIDENTIAL PROPRIETARY

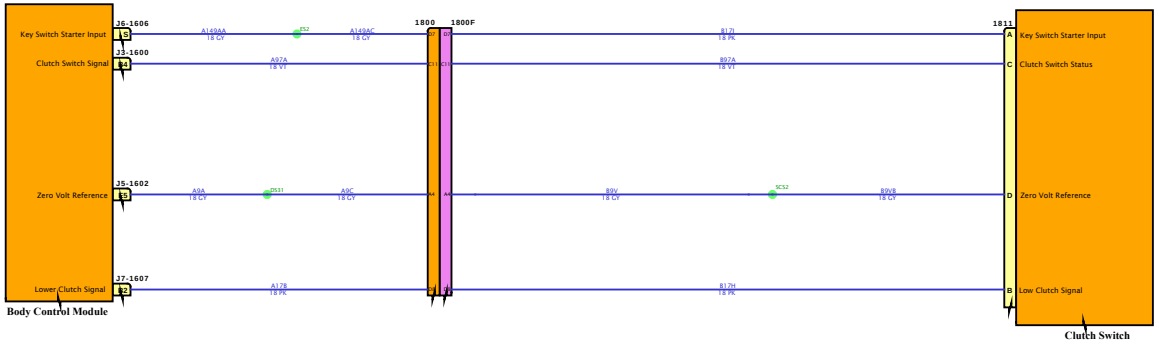

DESIGN DESCRIPTION

FEATURE CODES

SOFTWARE FEATURE CODES

NAVISTAR INC. CONFIDENTIAL PROPRIETARY

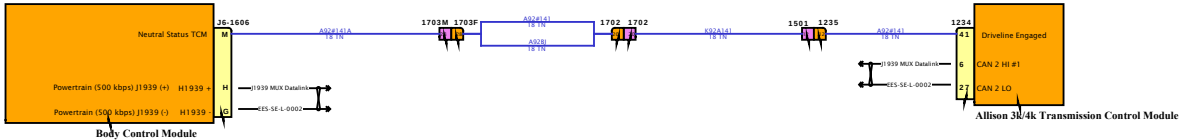

DESIGN DESCRIPTION

FEATURE CODES

SOFTWARE FEATURE CODES

NAVISTAR
NAVISTAR, INC. CONFIDENTIAL PROPRIETARY

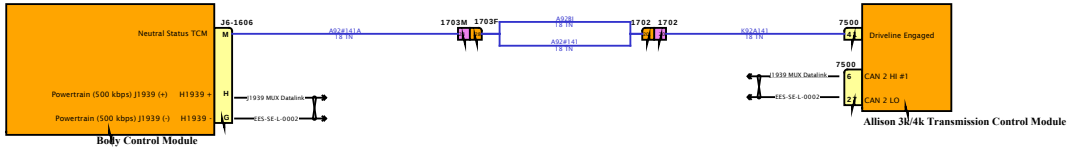

DESIGN DESCRIPTION

FEATURE CODES

SOFTWARE FEATURE CODES

NAVISTAR INC. CONFIDENTIAL PROPRIETARY

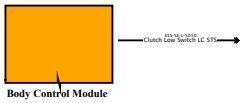

DESIGN DESCRIPTION

FEATURE CODES

SOFTWARE FEATURE CODES

NAVISTAR INC. CONFIDENTIAL PROPRIETARY

Diagram1

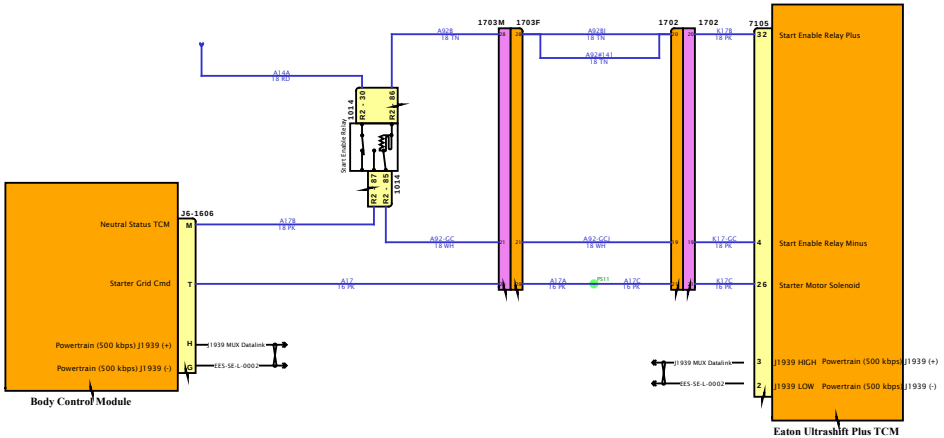

DESIGN DESCRIPTION

FEATURE CODES

SOFTWARE FEATURE CODES

NAVISTAR
NAVISTAR, INC. CONFIDENTIAL PROPRIETARY

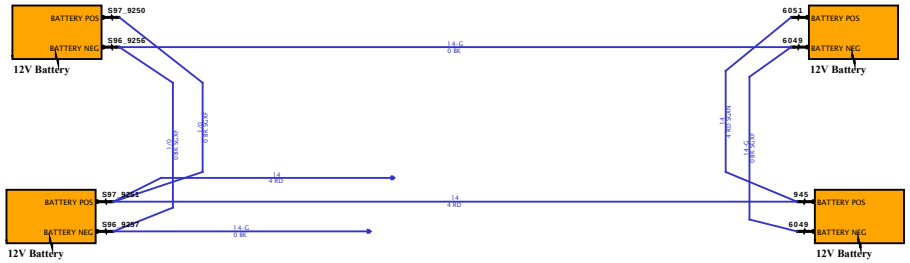

DESIGN DESCRIPTION

FEATURE CODES

SOFTWARE FEATURE CODES

Diagram1

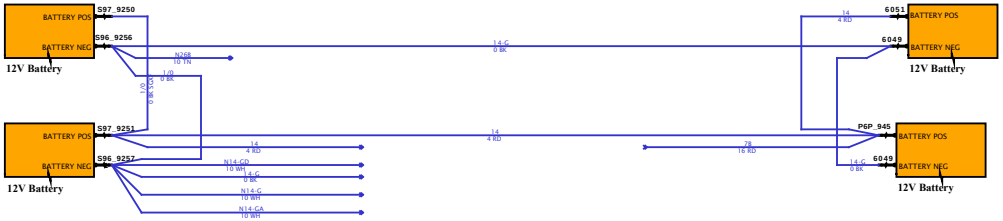

DESIGN DESCRIPTION

FEATURE CODES

SOFTWARE FEATURE CODES

NAVISTAR INC. CONFIDENTIAL PROPRIETARY

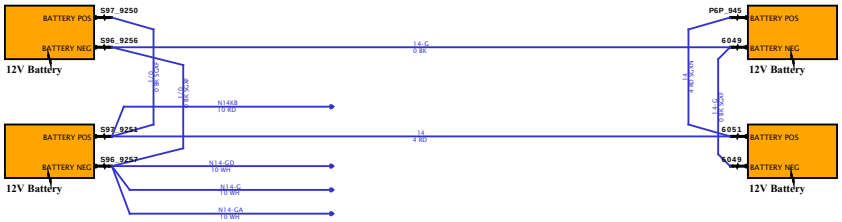

DESIGN DESCRIPTION

FEATURE CODES

SOFTWARE FEATURE CODES

NAVISTAR INC. CONFIDENTIAL PROPRIETARY

Connector Name A01-4450M

Part Number 2039311C91

Instances A26 - Body Builder Lighting - Combined Turn and Stop Lamps (Automatic):Diagram1-Option 1 (In Cab, W/08HAU)
A26 - Body Builder Lighting - Combined Turn and Stop Lamps (Manual):Diagram1-Option 1 (In Cab, W/08HAU)
A26/B6.7/L9 - Body Builder Aux Power (In Cab, BOC, or EOF):Diagram1-Option 1 (In Cab, W/08HAU)

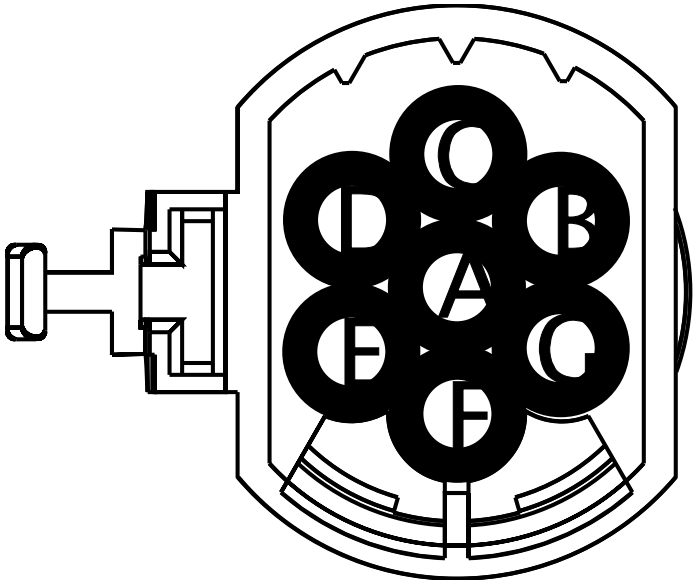

Name	Terminal Part Number	V-Min	Name	Wire Part Number	Wire CSA	Wire Spec	Wire Material description	Wire Color Description	Wire Length	End2 Terminal Part Number	End2 Pin Name	End2 Connector
A	-	-	VM68TB	3510308 R1	3.01	12.0	Thin Wall XLPE Primary Cable	BROWN	4160.0	-	X	-
A	-	-	VT68TB	3510308 R1	3.01	12.0	Thin Wall XLPE Primary Cable	BROWN	4160.0	-	X	-
B	-	-	YW56BB	3510336 R1	1.16	16.0	Thin Wall XLPE Primary Cable	YELLOW 2	3420.0	-	-	-
C	-	-	YW57BB	3510300 R1	1.16	16.0	Thin Wall XLPE Primary Cable	LIGHT GREEN	3420.0	-	-	-

Name	Terminal Part Number	V-Min	Name	Wire Part Number	Wire CSA	Wire Spec	Wire Material description	Wire Color Description	Wire Length	End2 Terminal Part Number	End2 Pin Name	End2 Connector
D	-	-	VT58TB	3510308 R1	3.01	12.0	Thin Wall XLPE Primary Cable	BROWN	4130.0	-	X	-
D	-	-	VM58TB	3510308 R1	3.01	12.0	Thin Wall XLPE Primary Cable	BROWN	4130.0	-	X	-
E	-	-	ZK71BB	3510342 R1	1.16	16.0	Thin Wall XLPE Primary Cable	LIGHT BLUE	3800.0	-	X	-
F	-	-	VT12BB	3510342 R1	1.16	16.0	Thin Wall XLPE Primary Cable	LIGHT BLUE	5080.0	-	R4 - 87	1012
G	-	-	YW11-GBJ	3510362 R1	3.01	12.0	Thin Wall XLPE Primary Cable	WHITE	4010.0	-	-	-

Connector Name A01-4460M

Part Number 1686834C1

Instances A26 - Body Builder Lighting - Combined Turn and Stop Lamps (Automatic):Diagram1-Option 1 (In Cab, W/08HAU)
A26 - Body Builder Lighting - Combined Turn and Stop Lamps (Manual):Diagram1-Option 1 (In Cab, W/08HAU)

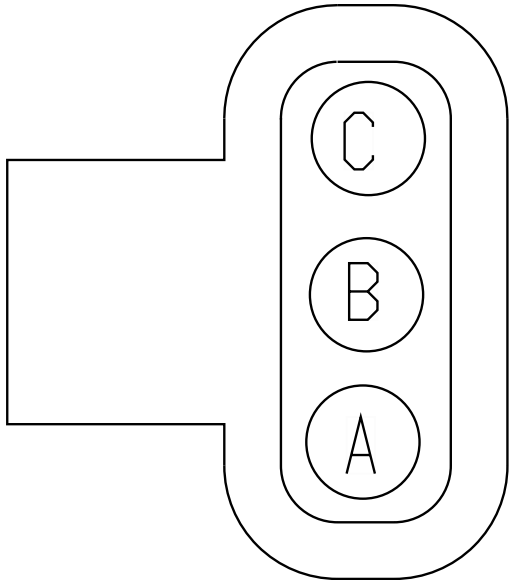

Name	Terminal Part Number	V-Min	Name	Wire Part Number	Wire CSA	Wire Spec	Wire Material description	Wire Color Description	Wire Length	End2 Terminal Part Number	End2 Pin Name	End2 Connect or
A	-	-	YW56BC	3510336 R1	1.16	16.0	Thin Wall XLPE Primary Cable	YELLOW 2	3850.0	-	-	-
B	-	-	YW57BC	3510300 R1	1.16	16.0	Thin Wall XLPE Primary Cable	LIGHT GREEN	3850.0	-	-	-
C	-	-	VM70TA	3510320 R1	3.01	12.0	Thin Wall XLPE Primary Cable	ORANGE	5105.0	-	R5 - 87	1012

Connector Name	A01_250M
Part Number	4064551C1
Instances	A26 - Body J1939 (250kbps):A26 - Body J1939 (250Kbps)
Mates	D49_250F

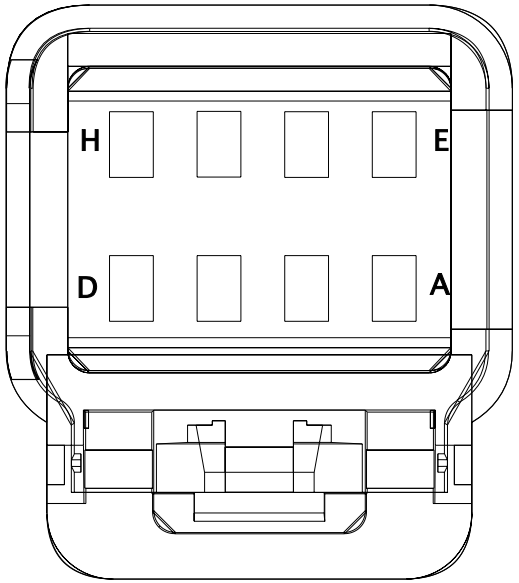

Name	Terminal Part Number	V-Min	Name	Wire Part Number	Wire CSA	Wire Spec	Wire Material description	Wire Color Description	Wire Length	End2 Terminal Part Number	End2 Pin Name	End2 Connect or
A	-	-	WIRE728837	-	0.0	-	-	-	0.0	-	F	1025
B	-	-	WIRE728835	-	0.0	-	-	-	0.0	-	G	1025
E	-	-	WIRE728838	-	0.0	-	-	-	0.0	-	B	1935N
F	-	-	WIRE728836	-	0.0	-	-	-	0.0	-	A	1935N

Connector Name	A01_250M
Part Number	4064551C1
Instances	B6.7 - Body J1939 (250kbps):B6.7 - Body J1939 (250Kbps)
Mates	D49_250F

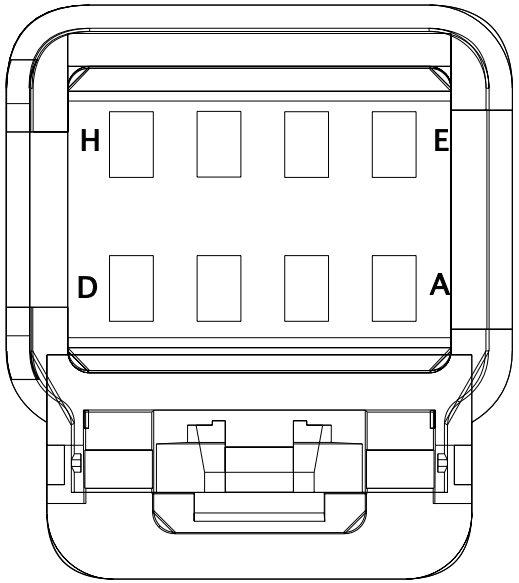

Name	Terminal Part Number	V-Min	Name	Wire Part Number	Wire CSA	Wire Spec	Wire Material description	Wire Color Description	Wire Length	End2 Terminal Part Number	End2 Pin Name	End2 Connect or
A	-	-	WIRE728837	-	0.0	-	-	-	0.0	-	F	1025
B	-	-	WIRE728835	-	0.0	-	-	-	0.0	-	G	1025
E	-	-	WIRE728838	-	0.0	-	-	-	0.0	-	B	1935N
F	-	-	WIRE728836	-	0.0	-	-	-	0.0	-	A	1935N

Connector Name	A01_250M
Part Number	4064551C1
Instances	L9 - Body J1939 (250kbps):L9 - Body J1939 (250Kbps)
Mates	D49_250F

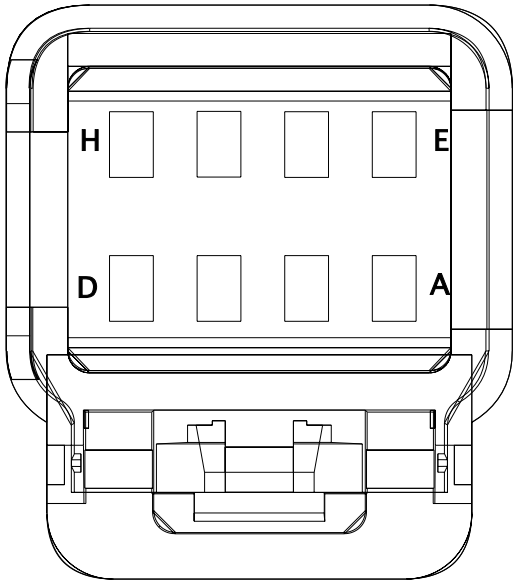

Name	Terminal Part Number	V-Min	Name	Wire Part Number	Wire CSA	Wire Spec	Wire Material description	Wire Color Description	Wire Length	End2 Terminal Part Number	End2 Pin Name	End2 Connect or
A	-	-	WIRE728837	-	0.0	-	-	-	0.0	-	F	1025
B	-	-	WIRE728835	-	0.0	-	-	-	0.0	-	G	1025
E	-	-	WIRE728838	-	0.0	-	-	-	0.0	-	B	1935N
F	-	-	WIRE728836	-	0.0	-	-	-	0.0	-	A	1935N

Connector Name	A01_250M
Part Number	4064551C1
Instances	A26/B6.7/L9 - Over The Air Electrical I/O (OnCommand Link / N2 Module):Diagram1
Mates	D49_250F

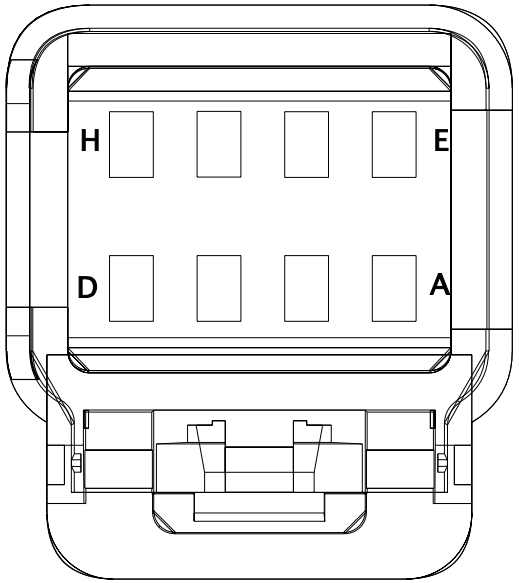

Name	Terminal Part Number	V-Min	Name	Wire Part Number	Wire CSA	Wire Spec	Wire Material description	Wire Color Description	Wire Length	End2 Terminal Part Number	End2 Pin Name	End2 Connect or
C	-	-	EN14KBB	3510365 R1	0.79	18.0	Thin Wall XLPE Primary Cable	RED	2783.0	-	-	-

Connector Name	D49_2000F
Part Number	3544687C1
Instances	A26/B6.7/L9 - Over The Air Electrical I/O (OnCommand Link / N2 Module):Diagram1
Mates	P16400

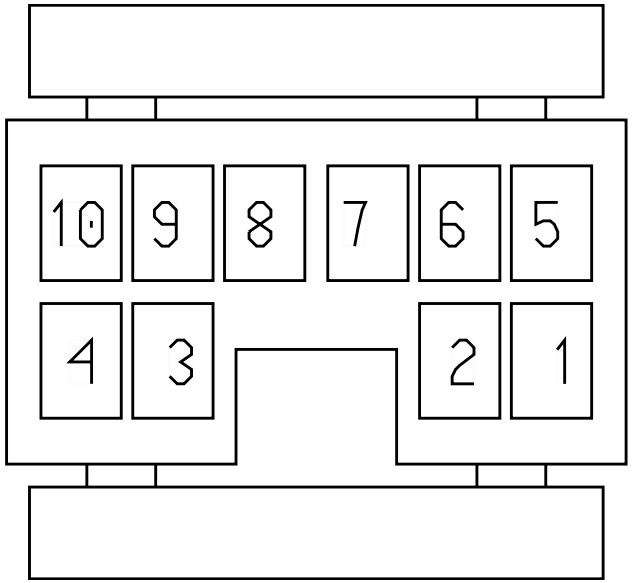

Name	Terminal Part Number	V-Min	Name	Wire Part Number	Wire CSA	Wire Spec	Wire Material description	Wire Color Description	Wire Length	End2 Terminal Part Number	End2 Pin Name	End2 Connect or
3	-	-	EC63-GA	2643681 R1	1.16	16.0	Std. Wall XLPE Primary Cable	WHITE	1965.0	-	1	-

Connector Name	D49_240
Part Number	3709924C1
Instances	A26 - Body J1939 (250kbps):A26 - Body J1939 (250Kbps) A26/B6.7/L9 - Over The Air Electrical I/O (OnCommand Link / N2 Module):Diagram1 B6.7 - Body J1939 (250kbps):B6.7 - Body J1939 (250Kbps) L9 - Body J1939 (250kbps):L9 - Body J1939 (250Kbps)
Mates	DEV-ONCOMMAND_LINK_N2-01:: HV A26

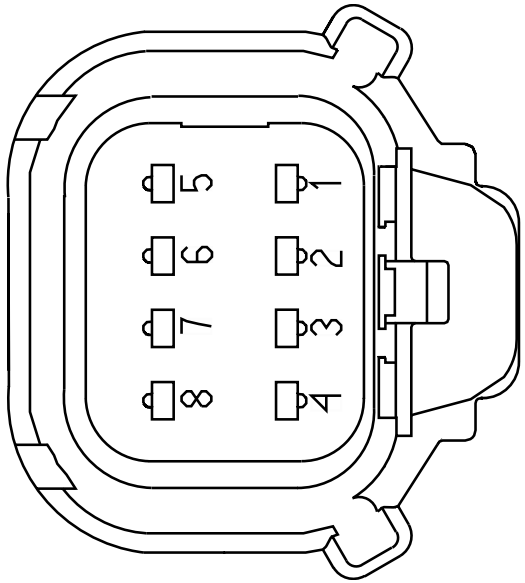

Name	Terminal Part Number	V-Min	Name	Wire Part Number	Wire CSA	Wire Spec	Wire Material description	Wire Color Description	Wire Length	End2 Terminal Part Number	End2 Pin Name	End2 Connect or
1	-	-	EL180G	3510359 R1	0.79	18.0	Thin Wall XLPE Primary Cable	WHITE	1365.0	-	1	-
2	-	-	WIRE728 832	-	0.0	-	-	-	0.0	-	1	-
5	-	-	EL14KBB	3510365 R1	0.79	18.0	Thin Wall XLPE Primary Cable	RED	2716.0	-	C	D49_250F
6	-	-	WIRE728 829	-	0.0	-	-	-	0.0	-	1	-

Connector Name	D49_240
Part Number	3709924C1
Instances	A26/B6.7/L9 - Over the Air Programming (OnCommand Link / N2 Module):Diagram1
Mates	DEV-ONCOMMAND_LINK_N2-01:: HV A26

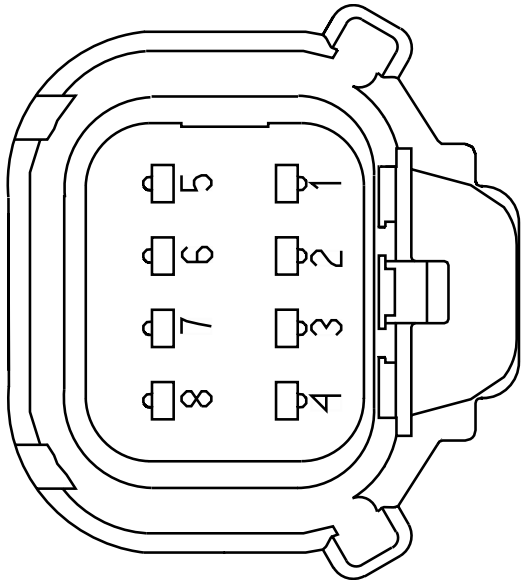

Name	Terminal Part Number	V-Min	Name	Wire Part Number	Wire CSA	Wire Spec	Wire Material description	Wire Color Description	Wire Length	End2 Terminal Part Number	End2 Pin Name	End2 Connector
2	-	-	-	-	-	-	-	-	-	-	-	-
6	-	-	-	-	-	-	-	-	-	-	-	-

Connector Name	D49_250F
Part Number	4064552C1
Instances	A26 - Body J1939 (250kbps):A26 - Body J1939 (250Kbps)
Mates	A01_250M

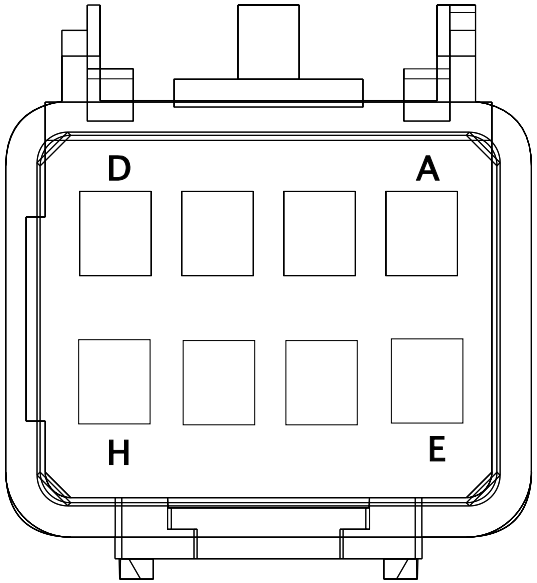

Name	Terminal Part Number	V-Min	Name	Wire Part Number	Wire CSA	Wire Spec	Wire Material description	Wire Color Description	Wire Length	End2 Terminal Part Number	End2 Pin Name	End2 Connector
A	-	-	WIRE728831	-	0.0	-	-	-	0.0	-	1	-
B	-	-	WIRE728830	-	0.0	-	-	-	0.0	-	1	-
E	-	-	WIRE728833	-	0.0	-	-	-	0.0	-	1	-
F	-	-	WIRE728834	-	0.0	-	-	-	0.0	-	1	-

Connector Name	D49_250F
Part Number	4064552C1
Instances	B6.7 - Body J1939 (250kbps):B6.7 - Body J1939 (250Kbps)
Mates	A01_250M

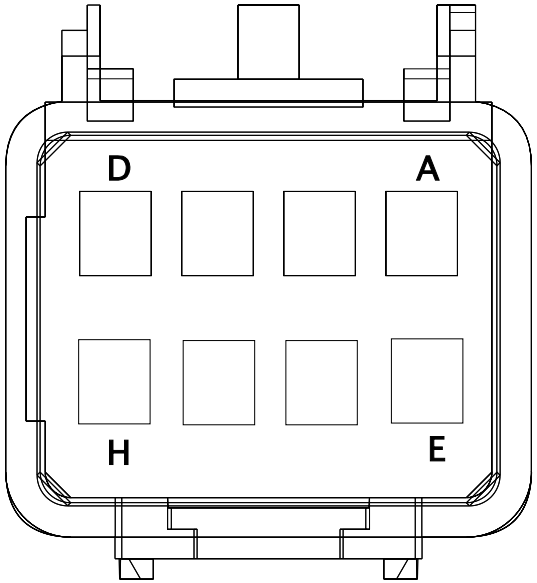

Name	Terminal Part Number	V-Min	Name	Wire Part Number	Wire CSA	Wire Spec	Wire Material description	Wire Color Description	Wire Length	End2 Terminal Part Number	End2 Pin Name	End2 Connector
A	-	-	WIRE728831	-	0.0	-	-	-	0.0	-	1	-
B	-	-	WIRE728830	-	0.0	-	-	-	0.0	-	1	-
E	-	-	WIRE728833	-	0.0	-	-	-	0.0	-	1	-
F	-	-	WIRE728834	-	0.0	-	-	-	0.0	-	1	-

Connector Name	D49_250F
Part Number	4064552C1
Instances	L9 - Body J1939 (250kbps):L9 - Body J1939 (250Kbps)
Mates	A01_250M

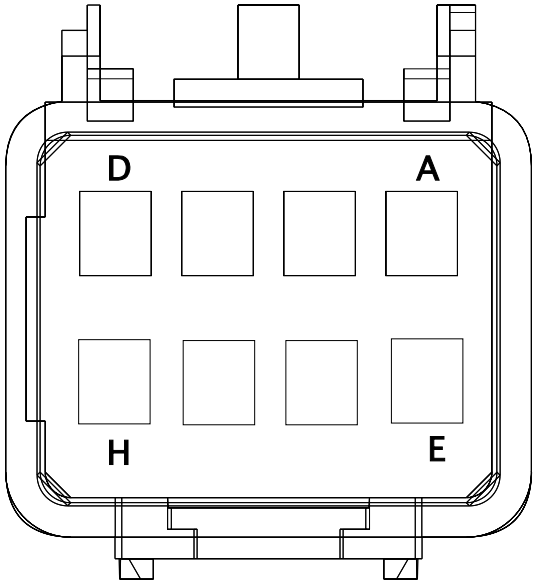

Name	Terminal Part Number	V-Min	Name	Wire Part Number	Wire CSA	Wire Spec	Wire Material description	Wire Color Description	Wire Length	End2 Terminal Part Number	End2 Pin Name	End2 Connect or
A	-	-	WIRE728831	-	0.0	-	-	-	0.0	-	1	-
B	-	-	WIRE728830	-	0.0	-	-	-	0.0	-	1	-
E	-	-	WIRE728833	-	0.0	-	-	-	0.0	-	1	-
F	-	-	WIRE728834	-	0.0	-	-	-	0.0	-	1	-

Connector Name	D49_250F
Part Number	4064552C1
Instances	A26/B6.7/L9 - Over The Air Electrical I/O (OnCommand Link / N2 Module):Diagram1
Mates	A01_250M

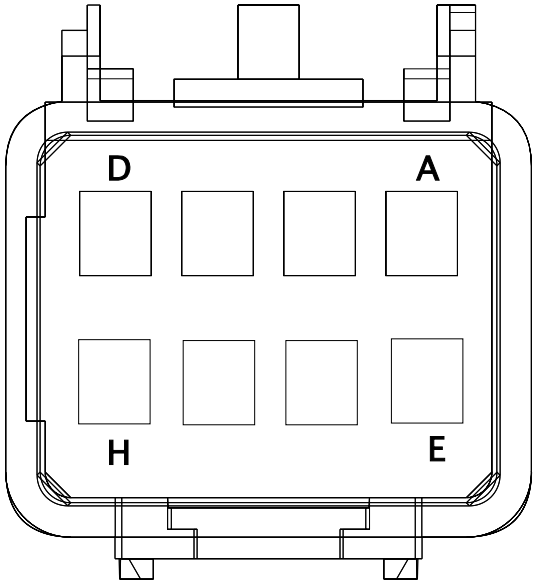

Name	Terminal Part Number	V-Min	Name	Wire Part Number	Wire CSA	Wire Spec	Wire Material description	Wire Color Description	Wire Length	End2 Terminal Part Number	End2 Pin Name	End2 Connect or
C	-	-	EL14KBB	3510365 R1	0.79	18.0	Thin Wall XLPE Primary Cable	RED	2716.0	-	5	D49_240

Connector Name	J1-1603
Part Number	3598711C1
Instances	A26 - Body Builder Lighting - BOC, 08HBX (Automatic):Diagram1 A26 - Body Builder Lighting - BOC, 08HBX (Manual):Diagram1 A26 - Body Builder Lighting - Combined Turn and Stop Lamps (Automatic):Diagram1-Option 1 (In Cab, W/08HAU) A26 - Body Builder Lighting - Combined Turn and Stop Lamps (Automatic):Diagram1-Option 2 (Back-of-Cab, W/08HAB) A26 - Body Builder Lighting - Combined Turn and Stop Lamps (Automatic):Diagram1-Option 3 (End-of-Frame, W/08HAE) A26 - Body Builder Lighting - Combined Turn and Stop Lamps (Manual):Diagram1-Option 1 (In Cab, W/08HAU) A26 - Body Builder Lighting - Combined Turn and Stop Lamps (Manual):Diagram1-Option 2 (Back-of-Cab, W/08HAB) A26 - Body Builder Lighting - Combined Turn and Stop Lamps (Manual):Diagram1-Option 3 (End-of-Frame, W/08HAE) A26 - Body Builder Lighting - Separate Turn and Stop Lamps (Blunt Cut) - Option 1:Diagram1-Option1 (R/D 9724) A26 - Body Builder Lighting - Separate Turn and Stop Lamps (Blunt Cut) - Option 2:Diagram1-Option1 (R/D 9724A) A26 - City Horn (W/ 4PIN Park Brake):Diagram1 A26 - City Horn (W/ 4PIN Park Brake):Diagram2 A26 - City Horn (W/ 4PIN Park Brake):Diagram3 A26 - City Horn (W/ 4PIN Park Brake):Diagram4 A26 - City Horn (W/ 4PIN):Diagram1 A26 - City Horn (W/ 4PIN):Diagram2 A26 - City Horn (W/ 4PIN):Diagram3 A26 - City Horn (W/ 4PIN):Diagram4 A26 - City Horn (W/ 10PIN Park Brake):Diagram1 A26 - City Horn (W/ 10PIN Park Brake):Diagram2 A26 - City Horn (W/ 10PIN):Diagram1 A26 - City Horn (W/ 10PIN):Diagram2 A26 - Directional Signal (Turn) W/ Daisy Chain Box Lamps:Diagram1 A26 - Directional Signal (Turn) W/ Daisy Chain Box Lamps, W/ Plow Lights:Diagram1-Option 1 (Snow Plow #1) A26 - Directional Signal (Turn) W/ Daisy Chain Box Lamps, W/ Plow Lights:Diagram1-Option 2 (Snow Plow #2) A26 - Directional Signal (Turn) W/ LED BOX LAMPS:Diagram1 A26 - Directional Signal (Turn) W/ LED BOX LAMPS, W/Plow Lights:Diagram1-Option 1 (Snow Plow #1)

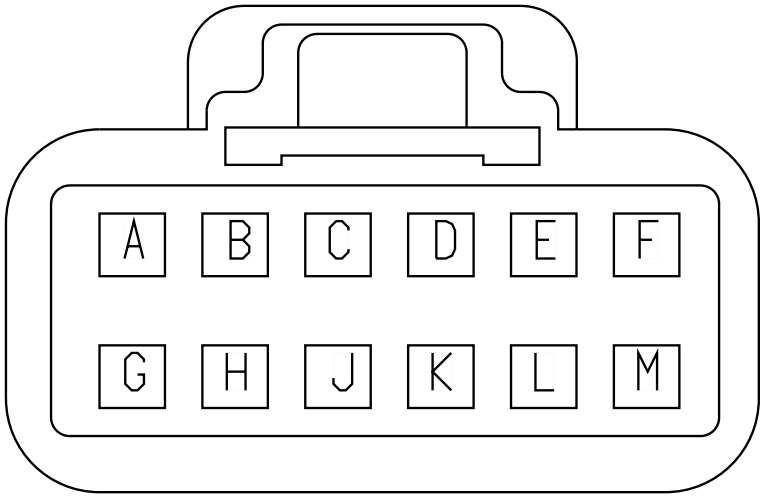

A26 - Directional Signal (Turn) W/ LED BOX LAMPS, W/Plow Lights:Diagram1-Option 2 (Snow Plow #2)
A26 - Directional Signal (Turn) W/ Less Power Module Tail Board, W/Hazard SW:Diagram1
A26 - Directional Signal (Turn) W/ Less Power Module Tail Board, W/Hazard SW, W/Plow Lights:Diagram1-Option 1 (Snow Plow #1)
A26 - Directional Signal (Turn) W/ Less Power Module Tail Board, W/Hazard SW, W/Plow Lights:Diagram1-Option 2 (Snow Plow #2)
A26 - Directional Signal (Turn) W/ Single Tail Board W/Hazard SW:Diagram1
A26 - Directional Signal (Turn) W/ Single Tail Board, W/Hazard SW, W/Plow Lights:Diagram1-Option 1 (Snow Plow #1)
A26 - Directional Signal (Turn) W/ Single Tail Board, W/Hazard SW, W/Plow Lights:Diagram1-Option 2 (Snow Plow #2)
A26 - Front Fog Lamps LED:Diagram1
A26 - Front Fog Lamps LED:Diagram2
A26 - Front Fog Lights W CONNECTOR Halogen:Diagram1
A26 - Front Fog Lights W CONNECTOR Halogen:Diagram2
A26 - Headlight W/Plowlights, W/LOWW, W/O Interrupt:Diagram1-Combination1
A26 - Headlight W/Plowlights, W/LOWW, W/O Interrupt:Diagram1-Combination2
A26 - Headlight W/Plowlights, W/LOWW, W/O Interrupt:Diagram1-Combination3
A26 - Headlight W/Plowlights, W/LOWW, W/O Interrupt:Diagram1-Combination4
A26 - Headlight W/Plowlights, W/O LOWW, W/O Interrupt:Diagram1-Combination1
A26 - Headlight W/Plowlights, W/O LOWW, W/O Interrupt:Diagram1-Combination2
A26 - Headlight W/Plowlights, W/O LOWW, W/O Interrupt:Diagram1-Combination3
A26 - Headlight W/Plowlights, W/O LOWW, W/O Interrupt:Diagram1-Combination4
A26 - Headlights W/LOWW, W/Interrupt - 10 PIN CLK:Diagram1-Combination1
A26 - Headlights W/LOWW, W/Interrupt - 10 PIN CLK:Diagram1-Combination2
A26 - Headlights W/LOWW, W/O Interrupt:Diagram1-Combination1
A26 - Headlights W/LOWW, W/O Interrupt:Diagram1-Combination2

A26 - Headlights W/O LOWW, W/Interrupt - 10 PIN CLK:Diagram1-Combination1
A26 - Headlights W/O LOWW, W/Interrupt - 10 PIN CLK:Diagram1-Combination2
A26 - Headlights W/O LOWW, W/O Interrupt:Diagram1-Combination1
A26 - Headlights W/O LOWW, W/O Interrupt:Diagram1-Combination2
A26 - Headlights W/PlowLights, W/LOWW, W/Interrupt - 10 PIN CLK:Diagram1-Combination1
A26 - Headlights W/PlowLights, W/LOWW, W/Interrupt - 10 PIN CLK:Diagram1-Combination2
A26 - Headlights W/PlowLights, W/LOWW, W/Interrupt - 10 PIN CLK:Diagram1-Combination3
A26 - Headlights W/PlowLights, W/LOWW, W/Interrupt - 10 PIN CLK:Diagram1-Combination4
A26 - Headlights W/PlowLights, W/O LOWW, W/Interrupt - 10 PIN CLK:Diagram1-Combination1
A26 - Headlights W/PlowLights, W/O LOWW, W/Interrupt - 10 PIN CLK:Diagram1-Combination2
A26 - Headlights W/PlowLights, W/O LOWW, W/Interrupt - 10 PIN CLK:Diagram1-Combination3
A26 - Headlights W/PlowLights, W/O LOWW, W/Interrupt - 10 PIN CLK:Diagram1-Combination4
A26 - Heating Ventilation & Air Conditioning (HVAC):Diagram1
A26 - Heating Ventilation & Air Conditioning (HVAC) Auto Temp Control:Diagram1 - HVAC
A26 - Power Lift Gate:Diagram1
A26 - Rear Lights Stop - Daisy Chain:Diagram1
A26 - Rear Lights Stop - Dual Assembly:Diagram1
A26 - Rear Lights Stop - Single Assemby:Diagram1
A26 - Rear Lights Stop - Single Assemby Jumper Harness W/08TKC, 08THM:Diagram1
A26 - Rear Lights Stop - Single Assemby W/08TKJ:Diagram1
A26 - Snow Valve Control:Diagram1
A26 - Snow Valve Control:Diagram2
A26 - WORK LIGHT 1 BULB:Diagram1
A26 - WORK LIGHT 1 BULB:Diagram2
A26 - WORK LIGHT W Backup 1 Bulb:Diagram1
A26 - WORK LIGHT W Backup 1 Bulb:Diagram2
A26 - WORK LIGHT W BackUP 1 BULB:Diagram1
A26 - WORK LIGHT W BackUP 1 BULB:Diagram2
A26 - WORK LIGHT W RKE 1 BULB:Diagram1
A26 - WORK LIGHT W RKE 1 BULB:Diagram2

A26 - Work Light W/ Backup 1 Bulb W/Automatic W/ RKE:Diagram1-Combination1
A26 - Work Light W/ Backup 1 Bulb W/Automatic W/ RKE:Diagram1-Combination2
A26 - Work Light W/ Backup 1 Bulb W/Manual W/ RKE:Diagram1-Combination1
A26 - Work Light W/ Backup 1 Bulb W/Manual W/ RKE:Diagram1-Combination2
A26 - Work Lights LED W/ Sw Pack - Day Cab:Diagram1
A26 - Work Lights LED W/ Sw Pack - Day Cab:Diagram2
A26/B6.7/L9 - BCM (Body Control Module):Connector J1-1603
B6.7 - Snow Valve Control:Diagram1
B6.7 - Snow Valve Control:Diagram2
B6.7 - Body Builder Lighting - Combined Turn and Stop Lamps (Automatic):Diagram1
B6.7 - Body Builder Lighting - Combined Turn and Stop Lamps (Automatic):Diagram2
B6.7 - Body Builder Lighting - Combined Turn and Stop Lamps (Automatic):Diagram3
B6.7 - Body Builder Lighting - Combined Turn and Stop Lamps (Manual):Diagram1
B6.7 - Body Builder Lighting - Combined Turn and Stop Lamps (Manual):Diagram2
B6.7 - Body Builder Lighting - Combined Turn and Stop Lamps (Manual):Diagram3
B6.7 - Body Builder Lighting - Separate Turn and Stop Lamps (Blunt Cut) Option 1:Diagram1
B6.7 - Body Builder Lighting - Separate Turn and Stop Lamps (Blunt Cut) Option 2:Diagram1
B6.7 - City Horn (W/ 4PIN CLK & Park Brake):Diagram1
B6.7 - City Horn (W/ 4PIN CLK & Park Brake):Diagram2
B6.7 - City Horn (W/ 4PIN CLK & Park Brake):Diagram3
B6.7 - City Horn (W/ 4PIN CLK & Park Brake):Diagram4
B6.7 - City Horn (W/ 4PIN CLK & Park Brake):Diagram5
B6.7 - City Horn (W/ 4PIN CLK & Park Brake):Diagram6
B6.7 - City Horn (W/ 4PIN CLK):Diagram1
B6.7 - City Horn (W/ 4PIN CLK):Diagram2
B6.7 - City Horn (W/ 4PIN CLK):Diagram3
B6.7 - City Horn (W/ 4PIN CLK):Diagram4
B6.7 - City Horn (W/ 4PIN CLK):Diagram5
B6.7 - City Horn (W/ 4PIN CLK):Diagram6
B6.7 - City Horn (W/ 10PIN CLK & Park Brake):Diagram1
B6.7 - City Horn (W/ 10PIN CLK & Park Brake):Diagram2
B6.7 - City Horn (W/ 10PIN CLK & Park Brake):Diagram3

B6.7 - City Horn (W/ 10PIN CLK):Diagram1
B6.7 - City Horn (W/ 10PIN CLK):Diagram2
B6.7 - City Horn (W/ 10PIN CLK):Diagram3
B6.7 - Directional Signal (Turn) W/ Less Power Module Tail Board W/Hazard SW W/PLOW LIGHTS:Diagram1
B6.7 - Directional Signal (Turn) W/ Less Power Module Tail Board W/Hazard SW W/PLOW LIGHTS:Diagram2
B6.7 - Directional Signal (Turn) W/ Less Power Module Tail Board W/Hazard SW W/PLOW LIGHTS:Diagram3
B6.7 - Directional Signal (Turn) W/ Less Power Module Tail Board W/Hazard SW W/PLOW LIGHTS:Diagram4
B6.7 - Directional Signal (Turn) W/ DAISY CHAIN BOX LAMPS:Diagram1
B6.7 - Directional Signal (Turn) W/ DAISY CHAIN BOX LAMPS:Diagram2
B6.7 - Directional Signal (Turn) W/ Daisy Chain Box Lamps W/ Plow Lights:Diagram1
B6.7 - Directional Signal (Turn) W/ Daisy Chain Box Lamps W/ Plow Lights:Diagram2
B6.7 - Directional Signal (Turn) W/ Daisy Chain Box Lamps W/ Plow Lights:Diagram3
B6.7 - Directional Signal (Turn) W/ Daisy Chain Box Lamps W/ Plow Lights:Diagram4
B6.7 - Directional Signal (Turn) W/ LED BOX LAMPS:Diagram1
B6.7 - Directional Signal (Turn) W/ LED BOX LAMPS:Diagram2
B6.7 - Directional Signal (Turn) W/ LED BOX LAMPS W/Plow Lights:Diagram1
B6.7 - Directional Signal (Turn) W/ LED BOX LAMPS W/Plow Lights:Diagram2
B6.7 - Directional Signal (Turn) W/ LED BOX LAMPS W/Plow Lights:Diagram3
B6.7 - Directional Signal (Turn) W/ LED BOX LAMPS W/Plow Lights:Diagram4
B6.7 - Directional Signal (Turn) W/ Less Power Module Tail Board W/Hazard SW:Diagram1
B6.7 - Directional Signal (Turn) W/ Less Power Module Tail Board W/Hazard SW:Diagram2
B6.7 - Directional Signal (Turn) W/ Single Tail Board W/Hazard SW:Diagram1
B6.7 - Directional Signal (Turn) W/ Single Tail Board W/Hazard SW:Diagram2
B6.7 - Directional Signal (Turn) W/ Single Tail Board W/Plow Lights:Diagram1

B6.7 - Directional Signal (Turn) W/ Single Tail Board W/Plow Lights:Diagram2
B6.7 - Directional Signal (Turn) W/ Single Tail Board W/Plow Lights:Diagram3
B6.7 - Directional Signal (Turn) W/ Single Tail Board W/Plow Lights:Diagram4
B6.7 - Fog Lights (Halogen White):Diagram1
B6.7 - Fog Lights (Halogen White):Diagram2
B6.7 - Fog Lights (Halogen White):Diagram3
B6.7 - Fog Lights (LED White):Diagram1
B6.7 - Fog Lights (LED White):Diagram2
B6.7 - Fog Lights (LED White):Diagram3
B6.7 - Front Fog Lamps:Diagram1
B6.7 - Front Fog Lamps:Diagram2
B6.7 - Front Fog Lamps:Diagram3
B6.7 - Front Fog Lights W CONNECTOR:Diagram1
B6.7 - Front Fog Lights W CONNECTOR:Diagram2
B6.7 - Headlight W/Plowlights W/LOWW W/O Headlight Interrupt -10 PIN CLK:Diagram1
B6.7 - Headlight W/Plowlights W/LOWW W/O Headlight Interrupt -10 PIN CLK:Diagram2
B6.7 - Headlight W/Plowlights W/LOWW W/O Headlight Interrupt -10 PIN CLK:Diagram3
B6.7 - Headlight W/Plowlights W/LOWW W/O Headlight Interrupt -10 PIN CLK:Diagram4
B6.7 - Headlight W/Plowlights W/LOWW W/O Headlight Interrupt -10 PIN CLK:Diagram5
B6.7 - Headlight W/Plowlights W/LOWW W/O Headlight Interrupt -10 PIN CLK:Diagram6
B6.7 - Headlight W/Plowlights W/LOWW W/O Headlight Interrupt -10 PIN CLK:Diagram7
B6.7 - Headlight W/Plowlights W/LOWW W/O Headlight Interrupt -10 PIN CLK:Diagram8
B6.7 - Headlights W 10PIN CLK W/LOWW W/Interrupt:Diagram1
B6.7 - Headlights W 10PIN CLK W/LOWW W/Interrupt:Diagram2
B6.7 - Headlights W 10PIN CLK W/LOWW W/Interrupt:Diagram3
B6.7 - Headlights W 10PIN CLK W/LOWW W/Interrupt:Diagram4
B6.7 - Headlights W 10PIN CLK W/LOWW W/O Interrupt:Diagram1
B6.7 - Headlights W 10PIN CLK W/LOWW W/O Interrupt:Diagram2
B6.7 - Headlights W 10PIN CLK W/LOWW W/O Interrupt:Diagram3

B6.7 - Headlights W 10PIN CLK W/LOWW W/O Interrupt:Diagram4
B6.7 - Headlights W/O Lights ON With Wipers (LOWW) W/O Headlights Interrupt:Diagram1
B6.7 - Headlights W/O Lights ON With Wipers (LOWW) W/O Headlights Interrupt:Diagram2
B6.7 - Headlights W/O Lights ON With Wipers (LOWW) W/O Headlights Interrupt:Diagram3
B6.7 - Headlights W/O Lights ON With Wipers (LOWW) W/O Headlights Interrupt:Diagram4
B6.7 - Headlights W/O Lights ON with wipers (LOWW) W/ Headlights Interrupt:Diagram1
B6.7 - Headlights W/O Lights ON with wipers (LOWW) W/ Headlights Interrupt:Diagram2
B6.7 - Headlights W/O Lights ON with wipers (LOWW) W/ Headlights Interrupt:Diagram3
B6.7 - Headlights W/O Lights ON with wipers (LOWW) W/ Headlights Interrupt:Diagram4
B6.7 - Headlights W/PlowLights W/Headlight Interrupt -10PIN CLK W/LOWW W/Interrupt:Diagram1
B6.7 - Headlights W/PlowLights W/Headlight Interrupt -10PIN CLK W/LOWW W/Interrupt:Diagram2
B6.7 - Headlights W/PlowLights W/Headlight Interrupt -10PIN CLK W/LOWW W/Interrupt:Diagram3
B6.7 - Headlights W/PlowLights W/Headlight Interrupt -10PIN CLK W/LOWW W/Interrupt:Diagram4
B6.7 - Headlights W/PlowLights W/Headlight Interrupt -10PIN CLK W/LOWW W/Interrupt:Diagram5
B6.7 - Headlights W/PlowLights W/Headlight Interrupt -10PIN CLK W/LOWW W/Interrupt:Diagram6
B6.7 - Headlights W/PlowLights W/Headlight Interrupt -10PIN CLK W/LOWW W/Interrupt:Diagram7
B6.7 - Headlights W/PlowLights W/Headlight Interrupt -10PIN CLK W/LOWW W/Interrupt:Diagram8
B6.7 - Headlights W/Plowlights W/O Lights ON With Wipers (LOWW) W/O Headlights Interrupt:Diagram1
B6.7 - Headlights W/Plowlights W/O Lights ON With Wipers (LOWW) W/O Headlights Interrupt:Diagram2
B6.7 - Headlights W/Plowlights W/O Lights ON With Wipers (LOWW) W/O Headlights Interrupt:Diagram3
B6.7 - Headlights W/Plowlights W/O Lights ON With Wipers (LOWW) W/O Headlights Interrupt:Diagram4
B6.7 - Headlights W/Plowlights W/O Lights ON With Wipers (LOWW) W/O Headlights Interrupt:Diagram5

B6.7 - Headlights W/Plowlights W/O Lights ON With Wipers (LOWW) W/O Headlights Interrupt:Diagram6
B6.7 - Headlights W/Plowlights W/O Lights ON With Wipers (LOWW) W/O Headlights Interrupt:Diagram7
B6.7 - Headlights W/Plowlights W/O Lights ON With Wipers (LOWW) W/O Headlights Interrupt:Diagram8
B6.7 - Headlights W/PlowLights W/O Lights ON with wipers (LOWW) W/ Headlights Interrupt:Diagram1
B6.7 - Headlights W/PlowLights W/O Lights ON with wipers (LOWW) W/ Headlights Interrupt:Diagram2
B6.7 - Headlights W/PlowLights W/O Lights ON with wipers (LOWW) W/ Headlights Interrupt:Diagram3
B6.7 - Headlights W/PlowLights W/O Lights ON with wipers (LOWW) W/ Headlights Interrupt:Diagram4
B6.7 - Headlights W/PlowLights W/O Lights ON with wipers (LOWW) W/ Headlights Interrupt:Diagram5
B6.7 - Headlights W/PlowLights W/O Lights ON with wipers (LOWW) W/ Headlights Interrupt:Diagram6
B6.7 - Headlights W/PlowLights W/O Lights ON with wipers (LOWW) W/ Headlights Interrupt:Diagram7
B6.7 - Headlights W/PlowLights W/O Lights ON with wipers (LOWW) W/ Headlights Interrupt:Diagram8
B6.7 - Heating Ventilation & Air Conditioning (HVAC):Diagram1
B6.7 - Heating Ventilation & Air Conditioning (HVAC) Auto Temp Control:Diagram1 - HVAC
B6.7 - Power Lift Gate:Diagram1
B6.7 - Rear Lights Stop - Daisy Chain:Diagram1
B6.7 - Rear Lights Stop - Dual Assembly:Diagram1
B6.7 - Rear Lights Stop - Single Assemby:Diagram1
B6.7 - Trailer Interface (Lighting) – BLUNT CUT (Part of Electric Trailer Brakes) Option 1:Diagram1
B6.7 - Trailer Interface (Lighting) – BLUNT CUT (Part of Electric Trailer Brakes) Option 2:Diagram1
B6.7 - WORK LIGHT 1 BULB:Diagram1
B6.7 - WORK LIGHT W BackUP 1 BULB:Diagram1
B6.7 - WORK LIGHT W RKE 1 BULB:Diagram1
B6.7 - Work Lights LED W/ Sw Pack - Day Cab:Diagram1
L9 - Body Builder Lighting - Combined Turn and Stop Lamps (Automatic):Diagram1
L9 - Body Builder Lighting - Combined Turn and Stop Lamps (Automatic):Diagram2
L9 - Body Builder Lighting - Combined Turn and Stop Lamps (Automatic):Diagram3

L9 - Body Builder Lighting - Combined Turn and Stop Lamps (Manual):Diagram1
L9 - Body Builder Lighting - Combined Turn and Stop Lamps (Manual):Diagram2
L9 - Body Builder Lighting - Combined Turn and Stop Lamps (Manual):Diagram3
L9 - Body Builder Lighting - Combined Turn and Stop Lamps (Manual):Diagram4
L9 - Body Builder Lighting - Combined Turn and Stop Lamps (Manual):Diagram5
L9 - Body Builder Lighting - Combined Turn and Stop Lamps (Manual):Diagram6
L9 - Body Builder Lighting - Separate Turn and Stop Lamps (Blunt Cut) Option 1:Diagram1
L9 - Body Builder Lighting - Separate Turn and Stop Lamps (Blunt Cut) Option 2:Diagram1
L9 - City Horn (W/ 4PIN CLK & Park Brake):Diagram1
L9 - City Horn (W/ 4PIN CLK & Park Brake):Diagram2
L9 - City Horn (W/ 4PIN CLK & Park Brake):Diagram3
L9 - City Horn (W/ 4PIN CLK & Park Brake):Diagram4
L9 - City Horn (W/ 4PIN CLK):Diagram1
L9 - City Horn (W/ 4PIN CLK):Diagram2
L9 - City Horn (W/ 4PIN CLK):Diagram3
L9 - City Horn (W/ 4PIN CLK):Diagram4
L9 - City Horn (W/ 10PIN CLK & Park Brake):Diagram1
L9 - City Horn (W/ 10PIN CLK & Park Brake):Diagram2
L9 - City Horn (W/ 10PIN CLK):Diagram1
L9 - City Horn (W/ 10PIN CLK):Diagram2
L9 - Directional Signal (Turn) W/ Less Power Module Tail Board W/Hazard SW W/PLOW LIGHTS:Diagram1
L9 - Directional Signal (Turn) W/ Less Power Module Tail Board W/Hazard SW W/PLOW LIGHTS:Diagram2
L9 - Directional Signal (Turn) W/ Less Power Module Tail Board W/Hazard SW W/PLOW LIGHTS:Diagram3
L9 - Directional Signal (Turn) W/ Less Power Module Tail Board W/Hazard SW W/PLOW LIGHTS:Diagram4
L9 - Directional Signal (Turn) W/ DAISY CHAIN BOX LAMPS:Diagram1
L9 - Directional Signal (Turn) W/ DAISY CHAIN BOX LAMPS:Diagram2
L9 - Directional Signal (Turn) W/ Daisy Chain Box Lamps W/ Plow Lights:Diagram1
L9 - Directional Signal (Turn) W/ Daisy Chain Box Lamps W/ Plow Lights:Diagram2

L9 - Directional Signal (Turn) W/ Daisy Chain Box Lamps W/ Plow Lights:Diagram3
L9 - Directional Signal (Turn) W/ Daisy Chain Box Lamps W/ Plow Lights:Diagram4
L9 - Directional Signal (Turn) W/ LED BOX LAMPS:Diagram1
L9 - Directional Signal (Turn) W/ LED BOX LAMPS:Diagram2
L9 - Directional Signal (Turn) W/ LED BOX LAMPS W/Plow Lights:Diagram1
L9 - Directional Signal (Turn) W/ LED BOX LAMPS W/Plow Lights:Diagram2
L9 - Directional Signal (Turn) W/ LED BOX LAMPS W/Plow Lights:Diagram3
L9 - Directional Signal (Turn) W/ LED BOX LAMPS W/Plow Lights:Diagram4
L9 - Directional Signal (Turn) W/ Less Power Module Tail Board W/Hazard SW:Diagram1
L9 - Directional Signal (Turn) W/ Less Power Module Tail Board W/Hazard SW:Diagram2
L9 - Directional Signal (Turn) W/ Single Tail Board W/Hazard SW:Diagram1
L9 - Directional Signal (Turn) W/ Single Tail Board W/Hazard SW:Diagram2
L9 - Directional Signal (Turn) W/ Single Tail Board W/Plow Lights:Diagram1
L9 - Directional Signal (Turn) W/ Single Tail Board W/Plow Lights:Diagram2
L9 - Directional Signal (Turn) W/ Single Tail Board W/Plow Lights:Diagram3
L9 - Directional Signal (Turn) W/ Single Tail Board W/Plow Lights:Diagram4
L9 - Fog Lights (Halogen White):Diagram1
L9 - Fog Lights (Halogen White):Diagram2
L9 - Fog Lights (LED White):Diagram1
L9 - Fog Lights (LED White):Diagram2
L9 - Front Fog Lights W CONNECTOR:Diagram1
L9 - Front Fog Lights W CONNECTOR:Diagram2
L9 - Headlight W/Plowlights W/LOWW W/O Headlight Interrupt -10 PIN CLK:Diagram1
L9 - Headlight W/Plowlights W/LOWW W/O Headlight Interrupt -10 PIN CLK:Diagram2
L9 - Headlight W/Plowlights W/LOWW W/O Headlight Interrupt -10 PIN CLK:Diagram3
L9 - Headlight W/Plowlights W/LOWW W/O Headlight Interrupt -10 PIN CLK:Diagram4

L9 - Headlight W/Plowlights W/LOWW W/O Headlight Interrupt -10 PIN CLK:Diagram5
L9 - Headlight W/Plowlights W/LOWW W/O Headlight Interrupt -10 PIN CLK:Diagram6
L9 - Headlight W/Plowlights W/LOWW W/O Headlight Interrupt -10 PIN CLK:Diagram7
L9 - Headlight W/Plowlights W/LOWW W/O Headlight Interrupt -10 PIN CLK:Diagram8
L9 - Headlights W 10PIN CLK W/LOWW W/Interrupt:Diagram1
L9 - Headlights W 10PIN CLK W/LOWW W/Interrupt:Diagram2
L9 - Headlights W 10PIN CLK W/LOWW W/Interrupt:Diagram3
L9 - Headlights W 10PIN CLK W/LOWW W/Interrupt:Diagram4
L9 - Headlights W 10PIN CLK W/LOWW W/O Interrupt:Diagram1
L9 - Headlights W 10PIN CLK W/LOWW W/O Interrupt:Diagram2
L9 - Headlights W 10PIN CLK W/LOWW W/O Interrupt:Diagram3
L9 - Headlights W 10PIN CLK W/LOWW W/O Interrupt:Diagram4
L9 - Headlights W/O Lights ON With Wipers (LOWW) W/O Headlights Interrupt:Diagram1
L9 - Headlights W/O Lights ON With Wipers (LOWW) W/O Headlights Interrupt:Diagram2
L9 - Headlights W/O Lights ON With Wipers (LOWW) W/O Headlights Interrupt:Diagram3
L9 - Headlights W/O Lights ON With Wipers (LOWW) W/O Headlights Interrupt:Diagram4
L9 - Headlights W/O Lights ON with wipers (LOWW) W/ Headlights Interrupt:Diagram1
L9 - Headlights W/O Lights ON with wipers (LOWW) W/ Headlights Interrupt:Diagram2
L9 - Headlights W/O Lights ON with wipers (LOWW) W/ Headlights Interrupt:Diagram3
L9 - Headlights W/O Lights ON with wipers (LOWW) W/ Headlights Interrupt:Diagram4
L9 - Headlights W/PlowLights W/Headlight Interrupt -10PIN CLK W/LOWW W/Interrupt:Diagram1
L9 - Headlights W/PlowLights W/Headlight Interrupt -10PIN CLK W/LOWW W/Interrupt:Diagram2
L9 - Headlights W/PlowLights W/Headlight Interrupt -10PIN CLK W/LOWW W/Interrupt:Diagram3
L9 - Headlights W/PlowLights W/Headlight Interrupt -10PIN CLK W/LOWW W/Interrupt:Diagram4

L9 - Headlights W/PlowLights W/Headlight Interrupt -10PIN CLK W/LOWW W/Interrupt:Diagram5
L9 - Headlights W/PlowLights W/Headlight Interrupt -10PIN CLK W/LOWW W/Interrupt:Diagram6
L9 - Headlights W/PlowLights W/Headlight Interrupt -10PIN CLK W/LOWW W/Interrupt:Diagram7
L9 - Headlights W/PlowLights W/Headlight Interrupt -10PIN CLK W/LOWW W/Interrupt:Diagram8
L9 - Headlights W/Plowlights W/O Lights ON With Wipers (LOWW) W/O Headlights Interrupt:Diagram1
L9 - Headlights W/Plowlights W/O Lights ON With Wipers (LOWW) W/O Headlights Interrupt:Diagram2
L9 - Headlights W/Plowlights W/O Lights ON With Wipers (LOWW) W/O Headlights Interrupt:Diagram3
L9 - Headlights W/Plowlights W/O Lights ON With Wipers (LOWW) W/O Headlights Interrupt:Diagram4
L9 - Headlights W/Plowlights W/O Lights ON With Wipers (LOWW) W/O Headlights Interrupt:Diagram5
L9 - Headlights W/Plowlights W/O Lights ON With Wipers (LOWW) W/O Headlights Interrupt:Diagram6
L9 - Headlights W/Plowlights W/O Lights ON With Wipers (LOWW) W/O Headlights Interrupt:Diagram7
L9 - Headlights W/Plowlights W/O Lights ON With Wipers (LOWW) W/O Headlights Interrupt:Diagram8
L9 - Headlights W/PlowLights W/O Lights ON with wipers (LOWW) W/ Headlights Interrupt:Diagram1
L9 - Headlights W/PlowLights W/O Lights ON with wipers (LOWW) W/ Headlights Interrupt:Diagram2
L9 - Headlights W/PlowLights W/O Lights ON with wipers (LOWW) W/ Headlights Interrupt:Diagram3
L9 - Headlights W/PlowLights W/O Lights ON with wipers (LOWW) W/ Headlights Interrupt:Diagram4
L9 - Headlights W/PlowLights W/O Lights ON with wipers (LOWW) W/ Headlights Interrupt:Diagram5
L9 - Headlights W/PlowLights W/O Lights ON with wipers (LOWW) W/ Headlights Interrupt:Diagram6
L9 - Headlights W/PlowLights W/O Lights ON with wipers (LOWW) W/ Headlights Interrupt:Diagram7
L9 - Headlights W/PlowLights W/O Lights ON with wipers (LOWW) W/ Headlights Interrupt:Diagram8
L9 - Heating Ventilation & Air Conditioning (HVAC):Diagram1
L9 - Heating Ventilation & Air Conditioning (HVAC) Auto Temp Control:Diagram1 - HVAC
L9 - Power Lift Gate:Diagram1

L9 - Rear Lights Stop - Daisy Chain:Diagram1
L9 - Rear Lights Stop - Dual Assembly:Diagram1
L9 - Rear Lights Stop - Single Assemby:Diagram1
L9 - Snow Valve Control:Diagram1
L9 - Snow Valve Control:Diagram2
L9 - Trailer Interface (Lighting) – BLUNT CUT (Part of Electric Trailer Brakes) Option 1:Diagram1
L9 - Trailer Interface (Lighting) – BLUNT CUT (Part of Electric Trailer Brakes) Option 2:Diagram1
L9 - WORK LIGHT 1 BULB:Diagram1
L9 - WORK LIGHT 1 BULB:Diagram2
L9 - WORK LIGHT W BackUP 1 BULB Option 1:Diagram1
L9 - WORK LIGHT W BackUP 1 BULB Option 1:Diagram2
L9 - WORK LIGHT W BackUP 1 BULB Option 1:Diagram3
L9 - WORK LIGHT W BackUP 1 BULB Option 1:Diagram4
L9 - WORK LIGHT W BackUP 1 BULB Option 2:Diagram1
L9 - WORK LIGHT W BackUP 1 BULB Option 2:Diagram2
L9 - WORK LIGHT W RKE 1 BULB:Diagram1
L9 - WORK LIGHT W RKE 1 BULB:Diagram2
L9 - Work Lights LED W/ Sw Pack - Day Cab:Diagram1
L9 - Work Lights LED W/ Sw Pack - Day Cab:Diagram2

Mates MODU-BCM-A000-10-00

Name	Terminal Part Number	V-Min	Name	Wire Part Number	Wire CSA	Wire Spec	Wire Material description	Wire Color Description	Wire Length	End2 Terminal Part Number	End2 Pin Name	End2 Connect or
A	-	-	VG57T	3510303 R1	4.81	10.0	Thin Wall XLPE Primary Cable	LIGHT GREEN	720.0	-	6	1701
A	-	-	YU57A	3510318 R1	1.16	16.0	Thin Wall XLPE Primary Cable	ORANGE	815.0	-	-	-
A	-	-	VG57T	3510303 R1	4.81	10.0	Thin Wall XLPE Primary Cable	LIGHT GREEN	720.0	-	-	-

Name	Terminal Part Number	V-Min	Name	Wire Part Number	Wire CSA	Wire Spec	Wire Material description	Wire Color Description	Wire Length	End2 Terminal Part Number	End2 Pin Name	End2 Connector
B	-	-	VG56T	3510339 R1	4.81	10.0	Thin Wall XLPE Primary Cable	YELLOW 2	720.0	-	5	1701
B	-	-	YT56AA	3510318 R1	1.16	16.0	Thin Wall XLPE Primary Cable	ORANGE	815.0	-	-	-
B	-	-	VG56T	3510339 R1	4.81	10.0	Thin Wall XLPE Primary Cable	YELLOW 2	720.0	-	-	-
C	-	-	SA77	2643678 R1	1.16	16.0	Std. Wall XLPE Primary Cable	LIGHT GREEN	2865.0	-	65	1703M
C	-	-	SA77	2643678 R1	1.16	16.0	Std. Wall XLPE Primary Cable	LIGHT GREEN	2865.0	-	-	-
D	-	-	YM56A	3510319 R1	1.91	14.0	Thin Wall XLPE Primary Cable	ORANGE	720.0	-	2	1701
D	-	-	YL57C	3510318 R1	1.16	16.0	Thin Wall XLPE Primary Cable	ORANGE	1180.0	-	-	-
D	-	-	YN56A	3510319 R1	1.91	14.0	Thin Wall XLPE Primary Cable	ORANGE	720.0	-	2	1701

Name	Terminal Part Number	V-Min	Name	Wire Part Number	Wire CSA	Wire Spec	Wire Material description	Wire Color Description	Wire Length	End2 Terminal Part Number	End2 Pin Name	End2 Connector
D	-	-	YL56A	3510318 R1	1.16	16.0	Thin Wall XLPE Primary Cable	ORANGE	1180.0	-	-	-
D	-	-	YL56CB	3510318 R1	1.16	16.0	Thin Wall XLPE Primary Cable	ORANGE	1180.0	-	-	-
D	-	-	YM56A	3510319 R1	1.91	14.0	Thin Wall XLPE Primary Cable	ORANGE	720.0	-	-	-
D	-	-	YN56A	3510319 R1	1.91	14.0	Thin Wall XLPE Primary Cable	ORANGE	720.0	-	-	-
E	-	-	AA85	3510312 R1	1.16	16.0	Thin Wall XLPE Primary Cable	GREY	640.0	-	21	1700
E	-	-	AA85	3510312 R1	1.16	16.0	Thin Wall XLPE Primary Cable	GREY	640.0	-	-	-
F	-	-	YJ64A	3510336 R1	1.16	16.0	Thin Wall XLPE Primary Cable	YELLOW 2	640.0	-	22	1700
F	-	-	YJ64A	3510336 R1	1.16	16.0	Thin Wall XLPE Primary Cable	YELLOW 2	640.0	-	-	-

Name	Terminal Part Number	V-Min	Name	Wire Part Number	Wire CSA	Wire Spec	Wire Material description	Wire Color Description	Wire Length	End2 Terminal Part Number	End2 Pin Name	End2 Connector
G	-	-	ZT65	3510318 R1	1.16	16.0	Thin Wall XLPE Primary Cable	ORANGE	720.0	-	68	1701
G	-	-	ZT65	3510318 R1	1.16	16.0	Thin Wall XLPE Primary Cable	ORANGE	720.0	-	-	-
H	-	-	YG52A	3510337 R1	1.91	14.0	Thin Wall XLPE Primary Cable	YELLOW 2	1440.0	-	1	1873D
H	-	-	YF52A	3510337 R1	1.91	14.0	Thin Wall XLPE Primary Cable	YELLOW 2	640.0	-	1	1700
H	-	-	YF52A	3510337 R1	1.91	14.0	Thin Wall XLPE Primary Cable	YELLOW 2	640.0	-	-	-
H	-	-	YG52A	3510337 R1	1.91	14.0	Thin Wall XLPE Primary Cable	YELLOW 2	1440.0	-	-	-
J	-	-	KP112	3510312 R1	1.16	16.0	Thin Wall XLPE Primary Cable	GREY	720.0	-	66	1701
J	-	-	QA23F	3510329 R1	0.79	18.0	Thin Wall XLPE Primary Cable	TAN	2435.0	-	-	-

Name	Terminal Part Number	V-Min	Name	Wire Part Number	Wire CSA	Wire Spec	Wire Material description	Wire Color Description	Wire Length	End2 Terminal Part Number	End2 Pin Name	End2 Connector
J	-	-	QA23F	3510329 R1	0.79	18.0	Thin Wall XLPE Primary Cable	TAN	2435.0	-	R2 - 85	1013
K	-	-	YJ64B	3510336 R1	1.16	16.0	Thin Wall XLPE Primary Cable	YELLOW 2	640.0	-	23	1700
K	-	-	YJ64B	3510336 R1	1.16	16.0	Thin Wall XLPE Primary Cable	YELLOW 2	640.0	-	-	-
L	-	-	YG52B	3510337 R1	1.91	14.0	Thin Wall XLPE Primary Cable	YELLOW 2	1480.0	-	1	1873E
L	-	-	YF52B	3510337 R1	1.91	14.0	Thin Wall XLPE Primary Cable	YELLOW 2	640.0	-	3	1700
L	-	-	YF52B	3510337 R1	1.91	14.0	Thin Wall XLPE Primary Cable	YELLOW 2	640.0	-	-	-
L	-	-	YG52B	3510337 R1	1.91	14.0	Thin Wall XLPE Primary Cable	YELLOW 2	1480.0	-	-	-
M	-	-	YM57A	3510319 R1	1.91	14.0	Thin Wall XLPE Primary Cable	ORANGE	720.0	-	3	1701

Name	Terminal Part Number	V-Min	Name	Wire Part Number	Wire CSA	Wire Spec	Wire Material description	Wire Color Description	Wire Length	End2 Terminal Part Number	End2 Pin Name	End2 Connect or
M	-	-	YN57A	3510319 R1	1.91	14.0	Thin Wall XLPE Primary Cable	ORANGE	720.0	-	3	1701
M	-	-	YL56A	3510318 R1	1.16	16.0	Thin Wall XLPE Primary Cable	ORANGE	1180.0	-	-	-
M	-	-	YL57C	3510318 R1	1.16	16.0	Thin Wall XLPE Primary Cable	ORANGE	1180.0	-	-	-
M	-	-	YL57E	3510318 R1	1.16	16.0	Thin Wall XLPE Primary Cable	ORANGE	1180.0	-	-	-
M	-	-	YN57A	3510319 R1	1.91	14.0	Thin Wall XLPE Primary Cable	ORANGE	720.0	-	-	-
M	-	-	YM57A	3510319 R1	1.91	14.0	Thin Wall XLPE Primary Cable	ORANGE	720.0	-	-	-

Connector Name	J2-1604
Part Number	3598710C1
Instances	A26 - Body Builder Lighting - BOC, 08HBX (Automatic):Diagram1 A26 - Body Builder Lighting - BOC, 08HBX (Manual):Diagram1 A26 - Body Builder Lighting - Combined Turn and Stop Lamps (Automatic):Diagram1-Option 1 (In Cab, W/08HAU) A26 - Body Builder Lighting - Combined Turn and Stop Lamps (Automatic):Diagram1-Option 2 (Back-of-Cab, W/08HAB) A26 - Body Builder Lighting - Combined Turn and Stop Lamps (Automatic):Diagram1-Option 3 (End-of-Frame, W/08HAE) A26 - Body Builder Lighting - Combined Turn and Stop Lamps (Manual):Diagram1-Option 1 (In Cab, W/08HAU) A26 - Body Builder Lighting - Combined Turn and Stop Lamps (Manual):Diagram1-Option 2 (Back-of-Cab, W/08HAB) A26 - Body Builder Lighting - Combined Turn and Stop Lamps (Manual):Diagram1-Option 3 (End-of-Frame, W/08HAE) A26 - Body Builder Lighting - Separate Turn and Stop Lamps (Blunt Cut) - Option 1:Diagram1-Option1 (R/D 9724) A26 - Body Builder Lighting - Separate Turn and Stop Lamps (Blunt Cut) - Option 2:Diagram1-Option1 (R/D 9724A) A26 - Directional Signal (Turn) W/ Daisy Chain Box Lamps:Diagram1 A26 - Directional Signal (Turn) W/ Daisy Chain Box Lamps, W/ Plow Lights:Diagram1-Option 1 (Snow Plow #1) A26 - Directional Signal (Turn) W/ Daisy Chain Box Lamps, W/ Plow Lights:Diagram1-Option 2 (Snow Plow #2) A26 - Directional Signal (Turn) W/ LED BOX LAMPS:Diagram1 A26 - Directional Signal (Turn) W/ LED BOX LAMPS, W/Plow Lights:Diagram1-Option 1 (Snow Plow #1) A26 - Directional Signal (Turn) W/ LED BOX LAMPS, W/Plow Lights:Diagram1-Option 2 (Snow Plow #2) A26 - Directional Signal (Turn) W/ Less Power Module Tail Board, W/Hazard SW:Diagram1 A26 - Directional Signal (Turn) W/ Less Power Module Tail Board, W/Hazard SW, W/Plow Lights:Diagram1-Option 1 (Snow Plow #1) A26 - Directional Signal (Turn) W/ Less Power Module Tail Board, W/Hazard SW, W/Plow Lights:Diagram1-Option 2 (Snow Plow #2) A26 - Directional Signal (Turn) W/ Single Tail Board W/Hazard SW:Diagram1

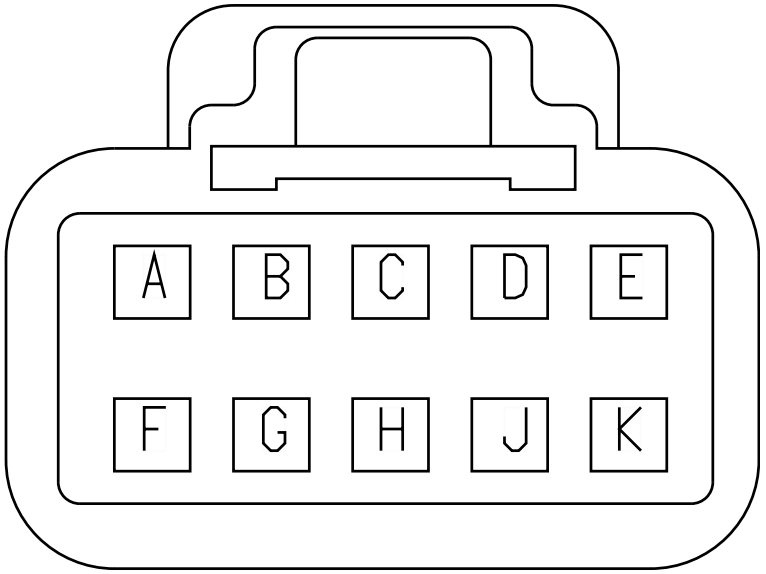

A26 - Directional Signal (Turn) W/ Single Tail Board, W/Hazard SW, W/Plow Lights:Diagram1-Option 1 (Snow Plow #1)
A26 - Directional Signal (Turn) W/ Single Tail Board, W/Hazard SW, W/Plow Lights:Diagram1-Option 2 (Snow Plow #2)
A26 - Front Marker Lights:Diagram1
A26 - Front Marker Lights W/Plow Lights:Diagram1-Combination1
A26 - Front Marker Lights W/Plow Lights:Diagram1-Combination2
A26 - Headlight W/Plowlights, W/LOWW, W/O Interrupt:Diagram1-Combination1
A26 - Headlight W/Plowlights, W/LOWW, W/O Interrupt:Diagram1-Combination2
A26 - Headlight W/Plowlights, W/LOWW, W/O Interrupt:Diagram1-Combination3
A26 - Headlight W/Plowlights, W/LOWW, W/O Interrupt:Diagram1-Combination4
A26 - Headlight W/Plowlights, W/O LOWW, W/O Interrupt:Diagram1-Combination1
A26 - Headlight W/Plowlights, W/O LOWW, W/O Interrupt:Diagram1-Combination2
A26 - Headlight W/Plowlights, W/O LOWW, W/O Interrupt:Diagram1-Combination3
A26 - Headlight W/Plowlights, W/O LOWW, W/O Interrupt:Diagram1-Combination4
A26 - Headlights W/LOWW, W/Interrupt - 10 PIN CLK:Diagram1-Combination1
A26 - Headlights W/LOWW, W/Interrupt - 10 PIN CLK:Diagram1-Combination2
A26 - Headlights W/LOWW, W/O Interrupt:Diagram1-Combination1
A26 - Headlights W/LOWW, W/O Interrupt:Diagram1-Combination2
A26 - Headlights W/O LOWW, W/Interrupt - 10 PIN CLK:Diagram1-Combination1
A26 - Headlights W/O LOWW, W/Interrupt - 10 PIN CLK:Diagram1-Combination2
A26 - Headlights W/O LOWW, W/O Interrupt:Diagram1-Combination1
A26 - Headlights W/O LOWW, W/O Interrupt:Diagram1-Combination2
A26 - Headlights W/PlowLights, W/LOWW, W/Interrupt - 10 PIN CLK:Diagram1-Combination1

A26 - Headlights W/PlowLights, W/LOWW, W/Interrupt - 10 PIN CLK:Diagram1-Combination2
A26 - Headlights W/PlowLights, W/LOWW, W/Interrupt - 10 PIN CLK:Diagram1-Combination3
A26 - Headlights W/PlowLights, W/LOWW, W/Interrupt - 10 PIN CLK:Diagram1-Combination4
A26 - Headlights W/PlowLights, W/O LOWW, W/Interrupt - 10 PIN CLK:Diagram1-Combination1
A26 - Headlights W/PlowLights, W/O LOWW, W/Interrupt - 10 PIN CLK:Diagram1-Combination2
A26 - Headlights W/PlowLights, W/O LOWW, W/Interrupt - 10 PIN CLK:Diagram1-Combination3
A26 - Headlights W/PlowLights, W/O LOWW, W/Interrupt - 10 PIN CLK:Diagram1-Combination4
A26 - License Plate Light (LED BOX LAMP Daisy Chain Tail Light):Diagram1
A26 - License Plate Light (LED BOX LAMP Tail Light):Diagram1
A26 - License Plate Light (Tail Light Single Assembly):Diagram1
A26 - License Plate Light (Tail Light Single Assembly)Option2:Diagram1
A26 - License Plate Light (Tail Light Single Assembly)Option3:Diagram1
A26 - License Plate Light (Tail Light Single Assy.) W/Less Power Module (W/08TKC, 08THM):Diagram1
A26 - Rear Light (LED BOX LAMP Tail Light) W/08TPS, 08TPR:Diagram1
A26 - Rear Light (Tail Light) W/08THK:Diagram1
A26 - Rear Light (Tail Light) W/08TKB:Diagram1
A26 - Rear Light (Tail Light) W/08TKJ:Diagram1
A26 - Rear Light (Tail Light) W/Less Power Module (W/08TKC, 08THM):Diagram1
A26 - Rear Light (Tail Light) W_Daisy Chain pair of Box Lamps W/08TRS:Diagram1
A26 - Windshield Wipers:Diagram1
A26/B6.7/L9 - BCM (Body Control Module):Connector J2-1604
A26/B6.7/L9 - Cab Dome Light W/Classic Trim:Diagram1
A26/B6.7/L9 - Cab Dome Light W/ Combo in Diamond Trim:Diagram1
A26/B6.7/L9 - Clearance and Identification Lights:Diagram1
A26/B6.7/L9 - Courtesy Light 4 Door:Diagram1
A26/B6.7/L9 - Courtesy Light Cab 2 door:Diagram1
B6.7 - Body Builder Lighting - Combined Turn and Stop Lamps (Automatic):Diagram1

B6.7 - Body Builder Lighting - Combined Turn and Stop Lamps (Automatic):Diagram2
B6.7 - Body Builder Lighting - Combined Turn and Stop Lamps (Automatic):Diagram3
B6.7 - Body Builder Lighting - Combined Turn and Stop Lamps (Manual):Diagram1
B6.7 - Body Builder Lighting - Combined Turn and Stop Lamps (Manual):Diagram2
B6.7 - Body Builder Lighting - Combined Turn and Stop Lamps (Manual):Diagram3
B6.7 - Body Builder Lighting - Separate Turn and Stop Lamps (Blunt Cut) Option 1:Diagram1
B6.7 - Body Builder Lighting - Separate Turn and Stop Lamps (Blunt Cut) Option 2:Diagram1
B6.7 - Directional Signal (Turn) W/ Less Power Module Tail Board W/Hazard SW W/PLOW LIGHTS:Diagram1
B6.7 - Directional Signal (Turn) W/ Less Power Module Tail Board W/Hazard SW W/PLOW LIGHTS:Diagram2
B6.7 - Directional Signal (Turn) W/ Less Power Module Tail Board W/Hazard SW W/PLOW LIGHTS:Diagram3
B6.7 - Directional Signal (Turn) W/ Less Power Module Tail Board W/Hazard SW W/PLOW LIGHTS:Diagram4
B6.7 - Directional Signal (Turn) W/ DAISY CHAIN BOX LAMPS:Diagram1
B6.7 - Directional Signal (Turn) W/ DAISY CHAIN BOX LAMPS:Diagram2
B6.7 - Directional Signal (Turn) W/ Daisy Chain Box Lamps W/ Plow Lights:Diagram1
B6.7 - Directional Signal (Turn) W/ Daisy Chain Box Lamps W/ Plow Lights:Diagram2
B6.7 - Directional Signal (Turn) W/ Daisy Chain Box Lamps W/ Plow Lights:Diagram3
B6.7 - Directional Signal (Turn) W/ Daisy Chain Box Lamps W/ Plow Lights:Diagram4
B6.7 - Directional Signal (Turn) W/ LED BOX LAMPS:Diagram1
B6.7 - Directional Signal (Turn) W/ LED BOX LAMPS:Diagram2
B6.7 - Directional Signal (Turn) W/ LED BOX LAMPS W/Plow Lights:Diagram1
B6.7 - Directional Signal (Turn) W/ LED BOX LAMPS W/Plow Lights:Diagram2
B6.7 - Directional Signal (Turn) W/ LED BOX LAMPS W/Plow Lights:Diagram3
B6.7 - Directional Signal (Turn) W/ LED BOX LAMPS W/Plow Lights:Diagram4

B6.7 - Directional Signal (Turn) W/ Less Power Module Tail Board W/Hazard SW:Diagram1
B6.7 - Directional Signal (Turn) W/ Less Power Module Tail Board W/Hazard SW:Diagram2
B6.7 - Directional Signal (Turn) W/ Single Tail Board W/Hazard SW:Diagram1
B6.7 - Directional Signal (Turn) W/ Single Tail Board W/Hazard SW:Diagram2
B6.7 - Directional Signal (Turn) W/ Single Tail Board W/Plow Lights:Diagram1
B6.7 - Directional Signal (Turn) W/ Single Tail Board W/Plow Lights:Diagram2
B6.7 - Directional Signal (Turn) W/ Single Tail Board W/Plow Lights:Diagram3
B6.7 - Directional Signal (Turn) W/ Single Tail Board W/Plow Lights:Diagram4
B6.7 - Front Marker Lights - With Plow Lights:Diagram1
B6.7 - Front Marker Lights - With Plow Lights:Diagram2
B6.7 - Front Marker Lights - With Plow Lights:Diagram3
B6.7 - Front Marker Lights - With Plow Lights:Diagram4
B6.7 - Front Marker Lights - Without Snow Plow Lights:Diagram1
B6.7 - Front Marker Lights - Without Snow Plow Lights:Diagram2
B6.7 - Headlight W/Plowlights W/LOWW W/O Headlight Interrupt -10 PIN CLK:Diagram1
B6.7 - Headlight W/Plowlights W/LOWW W/O Headlight Interrupt -10 PIN CLK:Diagram2
B6.7 - Headlight W/Plowlights W/LOWW W/O Headlight Interrupt -10 PIN CLK:Diagram3
B6.7 - Headlight W/Plowlights W/LOWW W/O Headlight Interrupt -10 PIN CLK:Diagram4
B6.7 - Headlight W/Plowlights W/LOWW W/O Headlight Interrupt -10 PIN CLK:Diagram5
B6.7 - Headlight W/Plowlights W/LOWW W/O Headlight Interrupt -10 PIN CLK:Diagram6
B6.7 - Headlight W/Plowlights W/LOWW W/O Headlight Interrupt -10 PIN CLK:Diagram7
B6.7 - Headlight W/Plowlights W/LOWW W/O Headlight Interrupt -10 PIN CLK:Diagram8
B6.7 - Headlights W 10PIN CLK W/LOWW W/Interrupt:Diagram1
B6.7 - Headlights W 10PIN CLK W/LOWW W/Interrupt:Diagram2
B6.7 - Headlights W 10PIN CLK W/LOWW W/Interrupt:Diagram3
B6.7 - Headlights W 10PIN CLK W/LOWW W/Interrupt:Diagram4
B6.7 - Headlights W 10PIN CLK W/LOWW W/O Interrupt:Diagram1

B6.7 - Headlights W 10PIN CLK W/LOWW W/O Interrupt:Diagram2
B6.7 - Headlights W 10PIN CLK W/LOWW W/O Interrupt:Diagram3
B6.7 - Headlights W 10PIN CLK W/LOWW W/O Interrupt:Diagram4
B6.7 - Headlights W/O Lights ON With Wipers (LOWW) W/O Headlights Interrupt:Diagram1
B6.7 - Headlights W/O Lights ON With Wipers (LOWW) W/O Headlights Interrupt:Diagram2
B6.7 - Headlights W/O Lights ON With Wipers (LOWW) W/O Headlights Interrupt:Diagram3
B6.7 - Headlights W/O Lights ON With Wipers (LOWW) W/O Headlights Interrupt:Diagram4
B6.7 - Headlights W/O Lights ON with wipers (LOWW) W/ Headlights Interrupt:Diagram1
B6.7 - Headlights W/O Lights ON with wipers (LOWW) W/ Headlights Interrupt:Diagram2
B6.7 - Headlights W/O Lights ON with wipers (LOWW) W/ Headlights Interrupt:Diagram3
B6.7 - Headlights W/O Lights ON with wipers (LOWW) W/ Headlights Interrupt:Diagram4
B6.7 - Headlights W/PlowLights W/Headlight Interrupt -10PIN CLK W/LOWW W/Interrupt:Diagram1
B6.7 - Headlights W/PlowLights W/Headlight Interrupt -10PIN CLK W/LOWW W/Interrupt:Diagram2
B6.7 - Headlights W/PlowLights W/Headlight Interrupt -10PIN CLK W/LOWW W/Interrupt:Diagram3
B6.7 - Headlights W/PlowLights W/Headlight Interrupt -10PIN CLK W/LOWW W/Interrupt:Diagram4
B6.7 - Headlights W/PlowLights W/Headlight Interrupt -10PIN CLK W/LOWW W/Interrupt:Diagram5
B6.7 - Headlights W/PlowLights W/Headlight Interrupt -10PIN CLK W/LOWW W/Interrupt:Diagram6
B6.7 - Headlights W/PlowLights W/Headlight Interrupt -10PIN CLK W/LOWW W/Interrupt:Diagram7
B6.7 - Headlights W/PlowLights W/Headlight Interrupt -10PIN CLK W/LOWW W/Interrupt:Diagram8
B6.7 - Headlights W/Plowlights W/O Lights ON With Wipers (LOWW) W/O Headlights Interrupt:Diagram1
B6.7 - Headlights W/Plowlights W/O Lights ON With Wipers (LOWW) W/O Headlights Interrupt:Diagram2
B6.7 - Headlights W/Plowlights W/O Lights ON With Wipers (LOWW) W/O Headlights Interrupt:Diagram3

B6.7 - Headlights W/Plowlights W/O Lights ON With Wipers (LOWW) W/O Headlights Interrupt:Diagram4
B6.7 - Headlights W/Plowlights W/O Lights ON With Wipers (LOWW) W/O Headlights Interrupt:Diagram5
B6.7 - Headlights W/Plowlights W/O Lights ON With Wipers (LOWW) W/O Headlights Interrupt:Diagram6
B6.7 - Headlights W/Plowlights W/O Lights ON With Wipers (LOWW) W/O Headlights Interrupt:Diagram7
B6.7 - Headlights W/Plowlights W/O Lights ON With Wipers (LOWW) W/O Headlights Interrupt:Diagram8
B6.7 - Headlights W/PlowLights W/O Lights ON with wipers (LOWW) W/ Headlights Interrupt:Diagram1
B6.7 - Headlights W/PlowLights W/O Lights ON with wipers (LOWW) W/ Headlights Interrupt:Diagram2
B6.7 - Headlights W/PlowLights W/O Lights ON with wipers (LOWW) W/ Headlights Interrupt:Diagram3
B6.7 - Headlights W/PlowLights W/O Lights ON with wipers (LOWW) W/ Headlights Interrupt:Diagram4
B6.7 - Headlights W/PlowLights W/O Lights ON with wipers (LOWW) W/ Headlights Interrupt:Diagram5
B6.7 - Headlights W/PlowLights W/O Lights ON with wipers (LOWW) W/ Headlights Interrupt:Diagram6
B6.7 - Headlights W/PlowLights W/O Lights ON with wipers (LOWW) W/ Headlights Interrupt:Diagram7
B6.7 - Headlights W/PlowLights W/O Lights ON with wipers (LOWW) W/ Headlights Interrupt:Diagram8
B6.7 - License Plate Light (LED BOX LAMP Daisy Chain Tail Light):Diagram1
B6.7 - License Plate Light (LED BOX LAMP Tail Light):Diagram1
B6.7 - License Plate Light (Tail Light Single Assy) Option 1:Diagram1
B6.7 - License Plate Light (Tail Light Single Assy) Option 2:Diagram1
B6.7 - License Plate Light (Tail Light Single Assy) Option 3:Diagram1
B6.7 - License Plate Light (Tail Light Single Assy) Option 4:Diagram1
B6.7 - License Plate Light (Tail Light Single Assy) W/Less Power Module:Diagram1
B6.7 - Rear Light (LED BOX LAMP Tail Light):Diagram1
B6.7 - Rear Light (Tail Light) Option 1:Diagram1
B6.7 - Rear Light (Tail Light) Option 2:Diagram1
B6.7 - Rear Light (Tail Light) Option 3:Diagram1
B6.7 - Rear Light (Tail Light) Option 4:Diagram1

B6.7 - Rear Light (Tail Light) W_Daisy Chain pair of Box Lamps:Diagram1
B6.7 - Trailer Interface (Lighting) – BLUNT CUT (Part of Electric Trailer Brakes) Option 1:Diagram1
B6.7 - Trailer Interface (Lighting) – BLUNT CUT (Part of Electric Trailer Brakes) Option 2:Diagram1
B6.7 - Windshield Wipers:Diagram1
L9 - Body Builder Lighting - Combined Turn and Stop Lamps (Automatic):Diagram1
L9 - Body Builder Lighting - Combined Turn and Stop Lamps (Automatic):Diagram2
L9 - Body Builder Lighting - Combined Turn and Stop Lamps (Automatic):Diagram3
L9 - Body Builder Lighting - Combined Turn and Stop Lamps (Manual):Diagram1
L9 - Body Builder Lighting - Combined Turn and Stop Lamps (Manual):Diagram2
L9 - Body Builder Lighting - Combined Turn and Stop Lamps (Manual):Diagram3
L9 - Body Builder Lighting - Combined Turn and Stop Lamps (Manual):Diagram4
L9 - Body Builder Lighting - Combined Turn and Stop Lamps (Manual):Diagram5
L9 - Body Builder Lighting - Combined Turn and Stop Lamps (Manual):Diagram6
L9 - Body Builder Lighting - Separate Turn and Stop Lamps (Blunt Cut) Option 1:Diagram1
L9 - Body Builder Lighting - Separate Turn and Stop Lamps (Blunt Cut) Option 2:Diagram1
L9 - Directional Signal (Turn) W/ Less Power Module Tail Board W/Hazard SW W/PLOW LIGHTS:Diagram1
L9 - Directional Signal (Turn) W/ Less Power Module Tail Board W/Hazard SW W/PLOW LIGHTS:Diagram2
L9 - Directional Signal (Turn) W/ Less Power Module Tail Board W/Hazard SW W/PLOW LIGHTS:Diagram3
L9 - Directional Signal (Turn) W/ Less Power Module Tail Board W/Hazard SW W/PLOW LIGHTS:Diagram4
L9 - Directional Signal (Turn) W/ DAISY CHAIN BOX LAMPS:Diagram1
L9 - Directional Signal (Turn) W/ DAISY CHAIN BOX LAMPS:Diagram2
L9 - Directional Signal (Turn) W/ Daisy Chain Box Lamps W/ Plow Lights:Diagram1

L9 - Directional Signal (Turn) W/ Daisy Chain Box Lamps W/ Plow Lights:Diagram2
L9 - Directional Signal (Turn) W/ Daisy Chain Box Lamps W/ Plow Lights:Diagram3
L9 - Directional Signal (Turn) W/ Daisy Chain Box Lamps W/ Plow Lights:Diagram4
L9 - Directional Signal (Turn) W/ LED BOX LAMPS:Diagram1
L9 - Directional Signal (Turn) W/ LED BOX LAMPS:Diagram2
L9 - Directional Signal (Turn) W/ LED BOX LAMPS W/Plow Lights:Diagram1
L9 - Directional Signal (Turn) W/ LED BOX LAMPS W/Plow Lights:Diagram2
L9 - Directional Signal (Turn) W/ LED BOX LAMPS W/Plow Lights:Diagram3
L9 - Directional Signal (Turn) W/ LED BOX LAMPS W/Plow Lights:Diagram4
L9 - Directional Signal (Turn) W/ Less Power Module Tail Board W/Hazard SW:Diagram1
L9 - Directional Signal (Turn) W/ Less Power Module Tail Board W/Hazard SW:Diagram2
L9 - Directional Signal (Turn) W/ Single Tail Board W/Hazard SW:Diagram1
L9 - Directional Signal (Turn) W/ Single Tail Board W/Hazard SW:Diagram2
L9 - Directional Signal (Turn) W/ Single Tail Board W/Plow Lights:Diagram1
L9 - Directional Signal (Turn) W/ Single Tail Board W/Plow Lights:Diagram2
L9 - Directional Signal (Turn) W/ Single Tail Board W/Plow Lights:Diagram3
L9 - Directional Signal (Turn) W/ Single Tail Board W/Plow Lights:Diagram4
L9 - Front Marker Lights - With Plow Lights:Diagram1
L9 - Front Marker Lights - With Plow Lights:Diagram2
L9 - Front Marker Lights - With Plow Lights:Diagram3
L9 - Front Marker Lights - With Plow Lights:Diagram4
L9 - Front Marker Lights - Without Snow Plow Lights:Diagram1
L9 - Front Marker Lights - Without Snow Plow Lights:Diagram2
L9 - Headlight W/Plowlights W/LOWW W/O Headlight Interrupt -10 PIN CLK:Diagram1
L9 - Headlight W/Plowlights W/LOWW W/O Headlight Interrupt -10 PIN CLK:Diagram2
L9 - Headlight W/Plowlights W/LOWW W/O Headlight Interrupt -10 PIN CLK:Diagram3

L9 - Headlight W/Plowlights W/LOWW W/O Headlight Interrupt -10 PIN CLK:Diagram4
L9 - Headlight W/Plowlights W/LOWW W/O Headlight Interrupt -10 PIN CLK:Diagram5
L9 - Headlight W/Plowlights W/LOWW W/O Headlight Interrupt -10 PIN CLK:Diagram6
L9 - Headlight W/Plowlights W/LOWW W/O Headlight Interrupt -10 PIN CLK:Diagram7
L9 - Headlight W/Plowlights W/LOWW W/O Headlight Interrupt -10 PIN CLK:Diagram8
L9 - Headlights W 10PIN CLK W/LOWW W/Interrupt:Diagram1
L9 - Headlights W 10PIN CLK W/LOWW W/Interrupt:Diagram2
L9 - Headlights W 10PIN CLK W/LOWW W/Interrupt:Diagram3
L9 - Headlights W 10PIN CLK W/LOWW W/Interrupt:Diagram4
L9 - Headlights W 10PIN CLK W/LOWW W/O Interrupt:Diagram1
L9 - Headlights W 10PIN CLK W/LOWW W/O Interrupt:Diagram2
L9 - Headlights W 10PIN CLK W/LOWW W/O Interrupt:Diagram3
L9 - Headlights W 10PIN CLK W/LOWW W/O Interrupt:Diagram4
L9 - Headlights W/O Lights ON With Wipers (LOWW) W/O Headlights Interrupt:Diagram1
L9 - Headlights W/O Lights ON With Wipers (LOWW) W/O Headlights Interrupt:Diagram2
L9 - Headlights W/O Lights ON With Wipers (LOWW) W/O Headlights Interrupt:Diagram3
L9 - Headlights W/O Lights ON With Wipers (LOWW) W/O Headlights Interrupt:Diagram4
L9 - Headlights W/O Lights ON with wipers (LOWW) W/ Headlights Interrupt:Diagram1
L9 - Headlights W/O Lights ON with wipers (LOWW) W/ Headlights Interrupt:Diagram2
L9 - Headlights W/O Lights ON with wipers (LOWW) W/ Headlights Interrupt:Diagram3
L9 - Headlights W/O Lights ON with wipers (LOWW) W/ Headlights Interrupt:Diagram4
L9 - Headlights W/PlowLights W/Headlight Interrupt -10PIN CLK W/LOWW W/Interrupt:Diagram1
L9 - Headlights W/PlowLights W/Headlight Interrupt -10PIN CLK W/LOWW W/Interrupt:Diagram2
L9 - Headlights W/PlowLights W/Headlight Interrupt -10PIN CLK W/LOWW W/Interrupt:Diagram3

L9 - Headlights W/PlowLights W/Headlight Interrupt -10PIN CLK W/LOWW W/Interrupt:Diagram4
L9 - Headlights W/PlowLights W/Headlight Interrupt -10PIN CLK W/LOWW W/Interrupt:Diagram5
L9 - Headlights W/PlowLights W/Headlight Interrupt -10PIN CLK W/LOWW W/Interrupt:Diagram6
L9 - Headlights W/PlowLights W/Headlight Interrupt -10PIN CLK W/LOWW W/Interrupt:Diagram7
L9 - Headlights W/PlowLights W/Headlight Interrupt -10PIN CLK W/LOWW W/Interrupt:Diagram8
L9 - Headlights W/Plowlights W/O Lights ON With Wipers (LOWW) W/O Headlights Interrupt:Diagram1
L9 - Headlights W/Plowlights W/O Lights ON With Wipers (LOWW) W/O Headlights Interrupt:Diagram2
L9 - Headlights W/Plowlights W/O Lights ON With Wipers (LOWW) W/O Headlights Interrupt:Diagram3
L9 - Headlights W/Plowlights W/O Lights ON With Wipers (LOWW) W/O Headlights Interrupt:Diagram4
L9 - Headlights W/Plowlights W/O Lights ON With Wipers (LOWW) W/O Headlights Interrupt:Diagram5
L9 - Headlights W/Plowlights W/O Lights ON With Wipers (LOWW) W/O Headlights Interrupt:Diagram6
L9 - Headlights W/Plowlights W/O Lights ON With Wipers (LOWW) W/O Headlights Interrupt:Diagram7
L9 - Headlights W/Plowlights W/O Lights ON With Wipers (LOWW) W/O Headlights Interrupt:Diagram8
L9 - Headlights W/PlowLights W/O Lights ON with wipers (LOWW) W/ Headlights Interrupt:Diagram1
L9 - Headlights W/PlowLights W/O Lights ON with wipers (LOWW) W/ Headlights Interrupt:Diagram2
L9 - Headlights W/PlowLights W/O Lights ON with wipers (LOWW) W/ Headlights Interrupt:Diagram3
L9 - Headlights W/PlowLights W/O Lights ON with wipers (LOWW) W/ Headlights Interrupt:Diagram4
L9 - Headlights W/PlowLights W/O Lights ON with wipers (LOWW) W/ Headlights Interrupt:Diagram5
L9 - Headlights W/PlowLights W/O Lights ON with wipers (LOWW) W/ Headlights Interrupt:Diagram6
L9 - Headlights W/PlowLights W/O Lights ON with wipers (LOWW) W/ Headlights Interrupt:Diagram7
L9 - Headlights W/PlowLights W/O Lights ON with wipers (LOWW) W/ Headlights Interrupt:Diagram8
L9 - License Plate Light (LED BOX LAMP Daisy Chain Tail Light):Diagram1

L9 - License Plate Light (LED BOX LAMP Tail Light):Diagram1
L9 - License Plate Light (Tail Light Single Assy) Option 1:Diagram1
L9 - License Plate Light (Tail Light Single Assy) Option 2:Diagram1
L9 - License Plate Light (Tail Light Single Assy) Option 3:Diagram1
L9 - License Plate Light (Tail Light Single Assy) Option 4:Diagram1
L9 - Rear Light (LED BOX LAMP Tail Light):Diagram1
L9 - Rear Light (Tail Light):Diagram1
L9 - Rear Light (Tail Light) W Daisy Chain pair of Box Lamps:Diagram1
L9 - Trailer Interface (Lighting) – BLUNT CUT (Part of Electric Trailer Brakes) Option 1:Diagram1
L9 - Trailer Interface (Lighting) – BLUNT CUT (Part of Electric Trailer Brakes) Option 2:Diagram1
L9 - Windshield Wipers:Diagram1

Mates MODU-BCM-A000-10-00

Name	Terminal Part Number	V-Min	Name	Wire Part Number	Wire CSA	Wire Spec	Wire Material description	Wire Color Description	Wire Length	End2 Terminal Part Number	End2 Pin Name	End2 Connect or
A	-	-	AA82	3510312 R1	1.16	16.0	Thin Wall XLPE Primary Cable	GREY	2135.0	-	X	-
A	-	-	AA82	3510312 R1	1.16	16.0	Thin Wall XLPE Primary Cable	GREY	2135.0	-	-	-
B	-	-	YG53A	3510337 R1	1.91	14.0	Thin Wall XLPE Primary Cable	YELLOW 2	1555.0	-	1	1873F
B	-	-	YF53A	3510337 R1	1.91	14.0	Thin Wall XLPE Primary Cable	YELLOW 2	675.0	-	2	1700

Name	Terminal Part Number	V-Min	Name	Wire Part Number	Wire CSA	Wire Spec	Wire Material description	Wire Color Description	Wire Length	End2 Terminal Part Number	End2 Pin Name	End2 Connector
B	-	-	YF53A	3510337 R1	1.91	14.0	Thin Wall XLPE Primary Cable	YELLOW 2	675.0	-	-	-
B	-	-	YG53A	3510337 R1	1.91	14.0	Thin Wall XLPE Primary Cable	YELLOW 2	1555.0	-	-	-
C	-	-	YM56	3510318 R1	1.16	16.0	Thin Wall XLPE Primary Cable	ORANGE	675.0	-	14	1700
C	-	-	YN56	3510317 R1	0.79	18.0	Thin Wall XLPE Primary Cable	ORANGE	375.0	-	X	-
C	-	-	YY56	3510318 R1	1.16	16.0	Thin Wall XLPE Primary Cable	ORANGE	375.0	-	X	-
C	-	-	XZ56	3510318 R1	1.16	16.0	Thin Wall XLPE Primary Cable	ORANGE	375.0	-	X	-
C	-	-	YT56B	3510318 R1	1.16	16.0	Thin Wall XLPE Primary Cable	ORANGE	675.0	-	14	1700
C	-	-	YN56	3510317 R1	0.79	18.0	Thin Wall XLPE Primary Cable	ORANGE	375.0	-	-	-

Name	Terminal Part Number	V-Min	Name	Wire Part Number	Wire CSA	Wire Spec	Wire Material description	Wire Color Description	Wire Length	End2 Terminal Part Number	End2 Pin Name	End2 Connector
C	-	-	YM56	3510318 R1	1.16	16.0	Thin Wall XLPE Primary Cable	ORANGE	675.0	-	-	-
C	-	-	YT56B	3510318 R1	1.16	16.0	Thin Wall XLPE Primary Cable	ORANGE	675.0	-	-	-
D	-	-	VG68T	3510308 R1	3.01	12.0	Thin Wall XLPE Primary Cable	BROWN	755.0	-	8	1701
D	-	-	VT68TA	3510308 R1	3.01	12.0	Thin Wall XLPE Primary Cable	BROWN	485.0	-	X	-
D	-	-	VP68	3510308 R1	3.01	12.0	Thin Wall XLPE Primary Cable	BROWN	485.0	-	X	-
D	-	-	VL68T	3510308 R1	3.01	12.0	Thin Wall XLPE Primary Cable	BROWN	485.0	-	X	-
D	-	-	VM68T	3510308 R1	3.01	12.0	Thin Wall XLPE Primary Cable	BROWN	485.0	-	X	-
D	-	-	VT68TA	3510308 R1	3.01	12.0	Thin Wall XLPE Primary Cable	BROWN	485.0	-	-	-

Name	Terminal Part Number	V-Min	Name	Wire Part Number	Wire CSA	Wire Spec	Wire Material description	Wire Color Description	Wire Length	End2 Terminal Part Number	End2 Pin Name	End2 Connector
D	-	-	VL68T	3510308 R1	3.01	12.0	Thin Wall XLPE Primary Cable	BROWN	485.0	-	-	-
D	-	-	VP68	3510308 R1	3.01	12.0	Thin Wall XLPE Primary Cable	BROWN	485.0	-	-	-
E	-	-	AA11-GKC	3510362 R1	3.01	12.0	Thin Wall XLPE Primary Cable	WHITE	855.0	-	-	-
F	-	-	VM58T	3510308 R1	3.01	12.0	Thin Wall XLPE Primary Cable	BROWN	455.0	-	X	-
F	-	-	VP58	3510308 R1	3.01	12.0	Thin Wall XLPE Primary Cable	BROWN	455.0	-	X	-
F	-	-	VG58T	3510308 R1	3.01	12.0	Thin Wall XLPE Primary Cable	BROWN	755.0	-	7	1701
F	-	-	VT58	3510308 R1	3.01	12.0	Thin Wall XLPE Primary Cable	BROWN	455.0	-	X	-
F	-	-	VL58T	3510308 R1	3.01	12.0	Thin Wall XLPE Primary Cable	BROWN	455.0	-	X	-

Name	Terminal Part Number	V-Min	Name	Wire Part Number	Wire CSA	Wire Spec	Wire Material description	Wire Color Description	Wire Length	End2 Terminal Part Number	End2 Pin Name	End2 Connector
F	-	-	VP58	3510308 R1	3.01	12.0	Thin Wall XLPE Primary Cable	BROWN	455.0	-	-	-
F	-	-	VM58T	3510308 R1	3.01	12.0	Thin Wall XLPE Primary Cable	BROWN	455.0	-	-	-
G	-	-	YP54	3510306 R1	1.16	16.0	Thin Wall XLPE Primary Cable	BROWN	1205.0	-	-	-
H	-	-	YG53B	3510337 R1	1.91	14.0	Thin Wall XLPE Primary Cable	YELLOW 2	1595.0	-	1	1873G
H	-	-	YF53B	3510337 R1	1.91	14.0	Thin Wall XLPE Primary Cable	YELLOW 2	675.0	-	4	1700
H	-	-	YG53B	3510337 R1	1.91	14.0	Thin Wall XLPE Primary Cable	YELLOW 2	1595.0	-	-	-
H	-	-	YF53B	3510337 R1	1.91	14.0	Thin Wall XLPE Primary Cable	YELLOW 2	675.0	-	-	-
J	-	-	WF63	3510353 R1	0.79	18.0	Thin Wall XLPE Primary Cable	DARK BLUE	680.0	-	4	2000

Name	Terminal Part Number	V-Min	Name	Wire Part Number	Wire CSA	Wire Spec	Wire Material description	Wire Color Description	Wire Length	End2 Terminal Part Number	End2 Pin Name	End2 Connector
J	-	-	WJ63	3510353 R1	0.79	18.0	Thin Wall XLPE Primary Cable	DARK BLUE	490.0	-	X	-
J	-	-	WJ63	3510353 R1	0.79	18.0	Thin Wall XLPE Primary Cable	DARK BLUE	490.0	-	-	-
J	-	-	WG63	3510353 R1	0.79	18.0	Thin Wall XLPE Primary Cable	DARK BLUE	490.0	-	-	-
J	-	-	WF63	3510353 R1	0.79	18.0	Thin Wall XLPE Primary Cable	DARK BLUE	680.0	-	-	-
K	-	-	YR57	3510318 R1	1.16	16.0	Thin Wall XLPE Primary Cable	ORANGE	675.0	-	15	1700
K	-	-	YY57	2643675 R1	0.79	18.0	Std. Wall XLPE Primary Cable	ORANGE	1870.0	-	X	-
K	-	-	XZ57	3510318 R1	1.16	16.0	Thin Wall XLPE Primary Cable	ORANGE	430.0	-	X	-
K	-	-	XV57	3510318 R1	1.16	16.0	Thin Wall XLPE Primary Cable	ORANGE	430.0	-	X	-

Name	Terminal Part Number	V-Min	Name	Wire Part Number	Wire CSA	Wire Spec	Wire Material description	Wire Color Description	Wire Length	End2 Terminal Part Number	End2 Pin Name	End2 Connector
K	-	-	YH57	3510318 R1	1.16	16.0	Thin Wall XLPE Primary Cable	ORANGE	430.0	-	X	-
K	-	-	YK57	3510318 R1	1.16	16.0	Thin Wall XLPE Primary Cable	ORANGE	430.0	-	X	-
K	-	-	YQ57	3510318 R1	1.16	16.0	Thin Wall XLPE Primary Cable	ORANGE	430.0	-	X	-
K	-	-	YT57B	3510318 R1	1.16	16.0	Thin Wall XLPE Primary Cable	ORANGE	675.0	-	15	1700
K	-	-	YK57	3510318 R1	1.16	16.0	Thin Wall XLPE Primary Cable	ORANGE	430.0	-	-	-
K	-	-	YR57	3510318 R1	1.16	16.0	Thin Wall XLPE Primary Cable	ORANGE	675.0	-	-	-
K	-	-	YQ57	3510318 R1	1.16	16.0	Thin Wall XLPE Primary Cable	ORANGE	430.0	-	-	-
K	-	-	YH57	3510318 R1	1.16	16.0	Thin Wall XLPE Primary Cable	ORANGE	430.0	-	-	-
K	-	-	YT57B	3510318 R1	1.16	16.0	Thin Wall XLPE Primary Cable	ORANGE	675.0	-	-	-

Connector Name	J3-1600
Part Number	3598706C1
Instances	A26 - 26" Fuel Tank:Diagram1 A26 - 26" Fuel Tank:Diagram2 A26 - 26" Fuel Tank:Diagram3 A26 - 26" Fuel Tank:Diagram4 A26 - 26" Fuel Tank:Diagram5 A26 - 26" Fuel Tank - Secondary:Diagram1 A26 - 26" Fuel Tank - Secondary:Diagram2 A26 - 26" Fuel Tank - Secondary:Diagram3 A26 - 26" Fuel Tank - Secondary:Diagram4 A26 - 26" Fuel Tank - Secondary:Diagram5 A26 - 26" Fuel Tank - Secondary:Diagram6 A26 - 26" Fuel Tank - Secondary:Diagram7 A26 - Axle Temperature Monitoring (Single Rear Aux Gauge):Diagram1 A26 - Axle Temperature Monitoring (Single Rear Virtual Gauge):Diagram1 A26 - Axle Temperature Monitoring (Tandem Rear Aux Gauge):Diagram1 A26 - Axle Temperature Monitoring (Tandem Rear Virtual Gauge):Diagram1 A26 - Brake Pressure (Auxiliary Gauge):Diagram1 A26 - Brake Pressure (Virtual Gauge):Diagram1 A26 - City Horn (W/ 4PIN Park Brake):Diagram1 A26 - City Horn (W/ 4PIN Park Brake):Diagram2 A26 - City Horn (W/ 4PIN Park Brake):Diagram3 A26 - City Horn (W/ 4PIN Park Brake):Diagram4 A26 - City Horn (W/ 4PIN):Diagram1 A26 - City Horn (W/ 4PIN):Diagram2 A26 - City Horn (W/ 4PIN):Diagram3 A26 - City Horn (W/ 4PIN):Diagram4 A26 - City Horn (W/ 10PIN Park Brake):Diagram1 A26 - City Horn (W/ 10PIN Park Brake):Diagram2 A26 - City Horn (W/ 10PIN):Diagram1 A26 - City Horn (W/ 10PIN):Diagram2 A26 - Clutch Switch/Monitoring (High and Low Switch to BCM):Diagram1 A26 - Cranking Request (w/ Key Switch w/ BCM):Diagram1 A26 - Cranking Request (w/ Key Switch w/ BCM):Diagram2 A26 - Directional Signal (Turn) W/ Daisy Chain Box Lamps:Diagram1

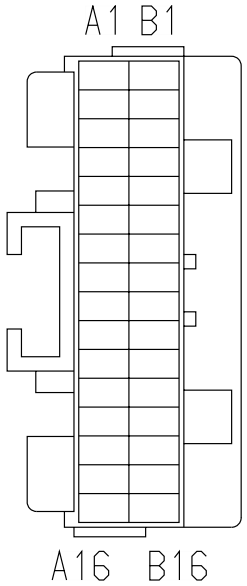

A26 - Directional Signal (Turn) W/ Daisy Chain Box Lamps, W/ Plow Lights:Diagram1-Option 1 (Snow Plow #1)
A26 - Directional Signal (Turn) W/ Daisy Chain Box Lamps, W/ Plow Lights:Diagram1-Option 2 (Snow Plow #2)
A26 - Directional Signal (Turn) W/ LED BOX LAMPS:Diagram1
A26 - Directional Signal (Turn) W/ LED BOX LAMPS, W/Plow Lights:Diagram1-Option 1 (Snow Plow #1)
A26 - Directional Signal (Turn) W/ LED BOX LAMPS, W/Plow Lights:Diagram1-Option 2 (Snow Plow #2)
A26 - Directional Signal (Turn) W/ Less Power Module Tail Board, W/Hazard SW:Diagram1
A26 - Directional Signal (Turn) W/ Less Power Module Tail Board, W/Hazard SW, W/Plow Lights:Diagram1-Option 1 (Snow Plow #1)
A26 - Directional Signal (Turn) W/ Less Power Module Tail Board, W/Hazard SW, W/Plow Lights:Diagram1-Option 2 (Snow Plow #2)
A26 - Directional Signal (Turn) W/ Single Tail Board W/Hazard SW:Diagram1
A26 - Directional Signal (Turn) W/ Single Tail Board, W/Hazard SW, W/Plow Lights:Diagram1-Option 1 (Snow Plow #1)
A26 - Directional Signal (Turn) W/ Single Tail Board, W/Hazard SW, W/Plow Lights:Diagram1-Option 2 (Snow Plow #2)
A26 - Headlight W/Plowlights, W/LOWW, W/O Interrupt:Diagram1-Combination1
A26 - Headlight W/Plowlights, W/LOWW, W/O Interrupt:Diagram1-Combination2
A26 - Headlight W/Plowlights, W/LOWW, W/O Interrupt:Diagram1-Combination3
A26 - Headlight W/Plowlights, W/LOWW, W/O Interrupt:Diagram1-Combination4
A26 - Headlight W/Plowlights, W/O LOWW, W/O Interrupt:Diagram1-Combination1
A26 - Headlight W/Plowlights, W/O LOWW, W/O Interrupt:Diagram1-Combination2
A26 - Headlight W/Plowlights, W/O LOWW, W/O Interrupt:Diagram1-Combination3
A26 - Headlight W/Plowlights, W/O LOWW, W/O Interrupt:Diagram1-Combination4
A26 - Headlights W/LOWW, W/Interrupt - 10 PIN CLK:Diagram1-Combination1
A26 - Headlights W/LOWW, W/Interrupt - 10 PIN CLK:Diagram1-Combination2

A26 - Headlights W/LOWW, W/O Interrupt:Diagram1-Combination1
A26 - Headlights W/LOWW, W/O Interrupt:Diagram1-Combination2
A26 - Headlights W/O LOWW, W/Interrupt - 10 PIN CLK:Diagram1-Combination1
A26 - Headlights W/O LOWW, W/Interrupt - 10 PIN CLK:Diagram1-Combination2
A26 - Headlights W/O LOWW, W/O Interrupt:Diagram1-Combination1
A26 - Headlights W/O LOWW, W/O Interrupt:Diagram1-Combination2
A26 - Headlights W/PlowLights, W/LOWW, W/Interrupt - 10 PIN CLK:Diagram1-Combination1
A26 - Headlights W/PlowLights, W/LOWW, W/Interrupt - 10 PIN CLK:Diagram1-Combination2
A26 - Headlights W/PlowLights, W/LOWW, W/Interrupt - 10 PIN CLK:Diagram1-Combination3
A26 - Headlights W/PlowLights, W/LOWW, W/Interrupt - 10 PIN CLK:Diagram1-Combination4
A26 - Headlights W/PlowLights, W/O LOWW, W/Interrupt - 10 PIN CLK:Diagram1-Combination1
A26 - Headlights W/PlowLights, W/O LOWW, W/Interrupt - 10 PIN CLK:Diagram1-Combination2
A26 - Headlights W/PlowLights, W/O LOWW, W/Interrupt - 10 PIN CLK:Diagram1-Combination3
A26 - Headlights W/PlowLights, W/O LOWW, W/Interrupt - 10 PIN CLK:Diagram1-Combination4
A26 - Heating Ventilation & Air Conditioning (HVAC):Diagram1
A26 - Heating Ventilation & Air Conditioning (HVAC) Auto Temp Control:Diagram1 - HVAC
A26 - Park Brake Control (Monitoring)(GEN IV BCM):Diagram1
A26 - Transmission Oil Temperature-Manual Trans:Diagram1
A26 - Transmission Oil Temperature-Manual Trans:Diagram2
A26 - Transmission Oil Temperature-Manual Trans w/Aux Gauge:Diagram1
A26 - Transmission Oil Temperature-Manual Trans w/Aux Gauge:Diagram2
A26 - Windshield Wipers:Diagram1
A26/B6.7/L9 - Adjustable Engine Speed Control (PTO) 4-pin:Diagram1
A26/B6.7/L9 - Adjustable Engine Speed Control (PTO) 10-pin:Diagram1

A26/B6.7/L9 - Adjustable Engine Speed Control (PTO) 10-pin:Diagram2
A26/B6.7/L9 - BCM (Body Control Module):Connector J3-1600
A26/B6.7/L9 - Compressed Air Supply:Diagram1
A26/B6.7/L9 - Cruise Control (W/ One Telltale 4 Pin):Diagram1
A26/B6.7/L9 - Cruise Control (W/ One Telltale 4 Pin):Diagram2
A26/B6.7/L9 - Cruise Control (W/ One Telltale 10 Pin):Diagram1
A26/B6.7/L9 - Cruise Control (W/ One Telltale 10 Pin):Diagram2
A26/B6.7/L9 - Door Ajar Reminder (Entry /Exit):4 Door:Diagram1
A26/B6.7/L9 - Door Ajar Reminder (Entry/Exit) 2 Door:Diagram1
A26/B6.7/L9 - Key Switch (Operator Input):Diagram1
A26/B6.7/L9 - Key Switch (Operator Input):Diagram2
A26/B6.7/L9 - PARK LIGHTS - W/Marker Interrupt 4 pin clockspring:Diagram1
A26/B6.7/L9 - PARK LIGHTS - W/Marker Interrupt 4 pin clockspring:Diagram2
A26/B6.7/L9 - PARK LIGHTS - W/Marker Interrupt 10pin CLCKSPRING:Diagram1
A26/B6.7/L9 - PARK LIGHTS - W/Marker Interrupt 10pin CLCKSPRING:Diagram2
A26/B6.7/L9 - Radio w/Bluetooth:Diagram1
A26/B6.7/L9 - Radio w/Bluetooth:Diagram2
A26/B6.7/L9 - Radio w/Steering Wheel Pod:Diagram1
A26/B6.7/L9 - Radio w/Steering Wheel Pod:Diagram2
A26/B6.7/L9 - Seatbelt Reminder (Warning)(Driver & Passenger in parallel):Diagram1
A26/B6.7/L9 - Seatbelt Reminder (Warning)(Driver only):Diagram1
A26/B6.7/L9 - Vehicle Speed Control (Cruise Control) 4 Pin:Diagram1
A26/B6.7/L9 - Vehicle Speed Control (Cruise Control) 10 Pin:Diagram1
B6.7 - 26 inch Fuel Tank:Diagram1
B6.7 - 26 inch Fuel Tank:Diagram2
B6.7 - 26 inch Fuel Tank:Diagram3
B6.7 - 26 inch Fuel Tank - Secondary:Diagram1
B6.7 - Axle Temperature Monitoring (Single Rear Aux Gauge):Diagram1
B6.7 - Axle Temperature Monitoring (Single Rear Virtual Gauge):Diagram1
B6.7 - Brake Pressure (Auxiliary Gauge):Diagram1
B6.7 - Brake Pressure (Virtual Gauge):Diagram1
B6.7 - City Horn (W/ 4PIN CLK & Park Brake):Diagram1
B6.7 - City Horn (W/ 4PIN CLK & Park Brake):Diagram2

B6.7 - City Horn (W/ 4PIN CLK & Park Brake):Diagram3
B6.7 - City Horn (W/ 4PIN CLK & Park Brake):Diagram4
B6.7 - City Horn (W/ 4PIN CLK & Park Brake):Diagram5
B6.7 - City Horn (W/ 4PIN CLK & Park Brake):Diagram6
B6.7 - City Horn (W/ 4PIN CLK):Diagram1
B6.7 - City Horn (W/ 4PIN CLK):Diagram2
B6.7 - City Horn (W/ 4PIN CLK):Diagram3
B6.7 - City Horn (W/ 4PIN CLK):Diagram4
B6.7 - City Horn (W/ 4PIN CLK):Diagram5
B6.7 - City Horn (W/ 4PIN CLK):Diagram6
B6.7 - City Horn (W/ 10PIN CLK & Park Brake):Diagram1
B6.7 - City Horn (W/ 10PIN CLK & Park Brake):Diagram2
B6.7 - City Horn (W/ 10PIN CLK & Park Brake):Diagram3
B6.7 - City Horn (W/ 10PIN CLK):Diagram1
B6.7 - City Horn (W/ 10PIN CLK):Diagram2
B6.7 - City Horn (W/ 10PIN CLK):Diagram3
B6.7 - Clutch Switch/Monitoring (High and Low Switch to BCM):Diagram1
B6.7 - Cranking Request (w/ Key Switch w/ BCM):Diagram1
B6.7 - Cranking Request (w/ Key Switch w/ BCM):Diagram2
B6.7 - Directional Signal (Turn) W/ Less Power Module Tail Board W/Hazard SW W/PLOW LIGHTS:Diagram1
B6.7 - Directional Signal (Turn) W/ Less Power Module Tail Board W/Hazard SW W/PLOW LIGHTS:Diagram2
B6.7 - Directional Signal (Turn) W/ Less Power Module Tail Board W/Hazard SW W/PLOW LIGHTS:Diagram3
B6.7 - Directional Signal (Turn) W/ Less Power Module Tail Board W/Hazard SW W/PLOW LIGHTS:Diagram4
B6.7 - Directional Signal (Turn) W/ DAISY CHAIN BOX LAMPS:Diagram1
B6.7 - Directional Signal (Turn) W/ DAISY CHAIN BOX LAMPS:Diagram2
B6.7 - Directional Signal (Turn) W/ Daisy Chain Box Lamps W/ Plow Lights:Diagram1
B6.7 - Directional Signal (Turn) W/ Daisy Chain Box Lamps W/ Plow Lights:Diagram2
B6.7 - Directional Signal (Turn) W/ Daisy Chain Box Lamps W/ Plow Lights:Diagram3
B6.7 - Directional Signal (Turn) W/ Daisy Chain Box Lamps W/ Plow Lights:Diagram4
B6.7 - Directional Signal (Turn) W/ LED BOX LAMPS:Diagram1
B6.7 - Directional Signal (Turn) W/ LED BOX LAMPS:Diagram2
B6.7 - Directional Signal (Turn) W/ LED BOX LAMPS W/Plow Lights:Diagram1

B6.7 - Directional Signal (Turn) W/ LED BOX LAMPS W/Plow Lights:Diagram2
B6.7 - Directional Signal (Turn) W/ LED BOX LAMPS W/Plow Lights:Diagram3
B6.7 - Directional Signal (Turn) W/ LED BOX LAMPS W/Plow Lights:Diagram4
B6.7 - Directional Signal (Turn) W/ Less Power Module Tail Board W/Hazard SW:Diagram1
B6.7 - Directional Signal (Turn) W/ Less Power Module Tail Board W/Hazard SW:Diagram2
B6.7 - Directional Signal (Turn) W/ Single Tail Board W/Hazard SW:Diagram1
B6.7 - Directional Signal (Turn) W/ Single Tail Board W/Hazard SW:Diagram2
B6.7 - Directional Signal (Turn) W/ Single Tail Board W/Plow Lights:Diagram1
B6.7 - Directional Signal (Turn) W/ Single Tail Board W/Plow Lights:Diagram2
B6.7 - Directional Signal (Turn) W/ Single Tail Board W/Plow Lights:Diagram3
B6.7 - Directional Signal (Turn) W/ Single Tail Board W/Plow Lights:Diagram4
B6.7 - Headlight W/Plowlights W/LOWW W/O Headlight Interrupt -10 PIN CLK:Diagram1
B6.7 - Headlight W/Plowlights W/LOWW W/O Headlight Interrupt -10 PIN CLK:Diagram2
B6.7 - Headlight W/Plowlights W/LOWW W/O Headlight Interrupt -10 PIN CLK:Diagram3
B6.7 - Headlight W/Plowlights W/LOWW W/O Headlight Interrupt -10 PIN CLK:Diagram4
B6.7 - Headlight W/Plowlights W/LOWW W/O Headlight Interrupt -10 PIN CLK:Diagram5
B6.7 - Headlight W/Plowlights W/LOWW W/O Headlight Interrupt -10 PIN CLK:Diagram6
B6.7 - Headlight W/Plowlights W/LOWW W/O Headlight Interrupt -10 PIN CLK:Diagram7
B6.7 - Headlight W/Plowlights W/LOWW W/O Headlight Interrupt -10 PIN CLK:Diagram8
B6.7 - Headlights W 10PIN CLK W/LOWW W/Interrupt:Diagram1
B6.7 - Headlights W 10PIN CLK W/LOWW W/Interrupt:Diagram2
B6.7 - Headlights W 10PIN CLK W/LOWW W/Interrupt:Diagram3
B6.7 - Headlights W 10PIN CLK W/LOWW W/Interrupt:Diagram4
B6.7 - Headlights W 10PIN CLK W/LOWW W/O Interrupt:Diagram1

B6.7 - Headlights W 10PIN CLK W/LOWW W/O Interrupt:Diagram2
B6.7 - Headlights W 10PIN CLK W/LOWW W/O Interrupt:Diagram3
B6.7 - Headlights W 10PIN CLK W/LOWW W/O Interrupt:Diagram4
B6.7 - Headlights W/O Lights ON With Wipers (LOWW) W/O Headlights Interrupt:Diagram1
B6.7 - Headlights W/O Lights ON With Wipers (LOWW) W/O Headlights Interrupt:Diagram2
B6.7 - Headlights W/O Lights ON With Wipers (LOWW) W/O Headlights Interrupt:Diagram3
B6.7 - Headlights W/O Lights ON With Wipers (LOWW) W/O Headlights Interrupt:Diagram4
B6.7 - Headlights W/O Lights ON with wipers (LOWW) W/ Headlights Interrupt:Diagram1
B6.7 - Headlights W/O Lights ON with wipers (LOWW) W/ Headlights Interrupt:Diagram2
B6.7 - Headlights W/O Lights ON with wipers (LOWW) W/ Headlights Interrupt:Diagram3
B6.7 - Headlights W/O Lights ON with wipers (LOWW) W/ Headlights Interrupt:Diagram4
B6.7 - Headlights W/PlowLights W/Headlight Interrupt -10PIN CLK W/LOWW W/Interrupt:Diagram1
B6.7 - Headlights W/PlowLights W/Headlight Interrupt -10PIN CLK W/LOWW W/Interrupt:Diagram2
B6.7 - Headlights W/PlowLights W/Headlight Interrupt -10PIN CLK W/LOWW W/Interrupt:Diagram3
B6.7 - Headlights W/PlowLights W/Headlight Interrupt -10PIN CLK W/LOWW W/Interrupt:Diagram4
B6.7 - Headlights W/PlowLights W/Headlight Interrupt -10PIN CLK W/LOWW W/Interrupt:Diagram5
B6.7 - Headlights W/PlowLights W/Headlight Interrupt -10PIN CLK W/LOWW W/Interrupt:Diagram6
B6.7 - Headlights W/PlowLights W/Headlight Interrupt -10PIN CLK W/LOWW W/Interrupt:Diagram7
B6.7 - Headlights W/PlowLights W/Headlight Interrupt -10PIN CLK W/LOWW W/Interrupt:Diagram8
B6.7 - Headlights W/Plowlights W/O Lights ON With Wipers (LOWW) W/O Headlights Interrupt:Diagram1
B6.7 - Headlights W/Plowlights W/O Lights ON With Wipers (LOWW) W/O Headlights Interrupt:Diagram2
B6.7 - Headlights W/Plowlights W/O Lights ON With Wipers (LOWW) W/O Headlights Interrupt:Diagram3

B6.7 - Headlights W/Plowlights W/O Lights ON With Wipers (LOWW) W/O Headlights Interrupt:Diagram4
B6.7 - Headlights W/Plowlights W/O Lights ON With Wipers (LOWW) W/O Headlights Interrupt:Diagram5
B6.7 - Headlights W/Plowlights W/O Lights ON With Wipers (LOWW) W/O Headlights Interrupt:Diagram6
B6.7 - Headlights W/Plowlights W/O Lights ON With Wipers (LOWW) W/O Headlights Interrupt:Diagram7
B6.7 - Headlights W/Plowlights W/O Lights ON With Wipers (LOWW) W/O Headlights Interrupt:Diagram8
B6.7 - Headlights W/PlowLights W/O Lights ON with wipers (LOWW) W/ Headlights Interrupt:Diagram1
B6.7 - Headlights W/PlowLights W/O Lights ON with wipers (LOWW) W/ Headlights Interrupt:Diagram2
B6.7 - Headlights W/PlowLights W/O Lights ON with wipers (LOWW) W/ Headlights Interrupt:Diagram3
B6.7 - Headlights W/PlowLights W/O Lights ON with wipers (LOWW) W/ Headlights Interrupt:Diagram4
B6.7 - Headlights W/PlowLights W/O Lights ON with wipers (LOWW) W/ Headlights Interrupt:Diagram5
B6.7 - Headlights W/PlowLights W/O Lights ON with wipers (LOWW) W/ Headlights Interrupt:Diagram6
B6.7 - Headlights W/PlowLights W/O Lights ON with wipers (LOWW) W/ Headlights Interrupt:Diagram7
B6.7 - Headlights W/PlowLights W/O Lights ON with wipers (LOWW) W/ Headlights Interrupt:Diagram8
B6.7 - Heating Ventilation & Air Conditioning (HVAC):Diagram1
B6.7 - Heating Ventilation & Air Conditioning (HVAC) Auto Temp Control:Diagram1 - HVAC
B6.7 - Park Brake Controls (Monitoring) (Door Switch City Horn):Diagram1
B6.7 - Transmission Oil Temperature-Manual Trans:Diagram1
B6.7 - Transmission Oil Temperature-Manual Trans (w/Aux Gauge):Diagram1
B6.7 - Windshield Washer Pump:Diagram1
B6.7 - Windshield Washer Pump & Low Fluid Sensor:Diagram1
B6.7 - Windshield Wipers:Diagram1
L9 - 26 inch Fuel Tank:Diagram1
L9 - 26 inch Fuel Tank:Diagram2
L9 - 26 inch Fuel Tank:Diagram3
L9 - 26 inch Fuel Tank:Diagram4
L9 - 26 inch Fuel Tank:Diagram5
L9 - 26 inch Fuel Tank:Diagram6
L9 - 26 inch Fuel Tank - Secondary:Diagram1

L9 - 26 inch Fuel Tank - Secondary:Diagram2
L9 - 26 inch Fuel Tank - Secondary:Diagram3
L9 - 26 inch Fuel Tank - Secondary:Diagram4
L9 - 26 inch Fuel Tank - Secondary:Diagram5
L9 - 26 inch Fuel Tank - Secondary:Diagram6
L9 - 26 inch Fuel Tank - Secondary:Diagram7
L9 - Axle Temperature Monitoring (Tandem Rear Aux Gauge) Option 1:Diagram1
L9 - Axle Temperature Monitoring (Tandem Rear Aux Gauge) Option 2:Diagram1
L9 - Axle Temperature Monitoring (Tandem Rear Virtual Gauge) Option 1:Diagram1
L9 - Axle Temperature Monitoring (Tandem Rear Virtual Gauge) Option 2:Diagram1
L9 - Brake Pressure (Auxiliary Gauge):Diagram1
L9 - Brake Pressure (Virtual Gauge):Diagram1
L9 - City Horn (W/ 4PIN CLK & Park Brake):Diagram1
L9 - City Horn (W/ 4PIN CLK & Park Brake):Diagram2
L9 - City Horn (W/ 4PIN CLK & Park Brake):Diagram3
L9 - City Horn (W/ 4PIN CLK & Park Brake):Diagram4
L9 - City Horn (W/ 4PIN CLK):Diagram1
L9 - City Horn (W/ 4PIN CLK):Diagram2
L9 - City Horn (W/ 4PIN CLK):Diagram3
L9 - City Horn (W/ 4PIN CLK):Diagram4
L9 - City Horn (W/ 10PIN CLK & Park Brake):Diagram1
L9 - City Horn (W/ 10PIN CLK & Park Brake):Diagram2
L9 - City Horn (W/ 10PIN CLK):Diagram1
L9 - City Horn (W/ 10PIN CLK):Diagram2
L9 - Clutch Switch/Monitoring (High and Low Switch to BCM):Diagram1
L9 - Directional Signal (Turn) W/ Less Power Module Tail Board W/Hazard SW W/PLOW LIGHTS:Diagram1
L9 - Directional Signal (Turn) W/ Less Power Module Tail Board W/Hazard SW W/PLOW LIGHTS:Diagram2
L9 - Directional Signal (Turn) W/ Less Power Module Tail Board W/Hazard SW W/PLOW LIGHTS:Diagram3
L9 - Directional Signal (Turn) W/ Less Power Module Tail Board W/Hazard SW W/PLOW LIGHTS:Diagram4
L9 - Directional Signal (Turn) W/ DAISY CHAIN BOX LAMPS:Diagram1
L9 - Directional Signal (Turn) W/ DAISY CHAIN BOX LAMPS:Diagram2
L9 - Directional Signal (Turn) W/ Daisy Chain Box Lamps W/ Plow Lights:Diagram1

L9 - Directional Signal (Turn) W/ Daisy Chain Box Lamps W/ Plow Lights:Diagram2
L9 - Directional Signal (Turn) W/ Daisy Chain Box Lamps W/ Plow Lights:Diagram3
L9 - Directional Signal (Turn) W/ Daisy Chain Box Lamps W/ Plow Lights:Diagram4
L9 - Directional Signal (Turn) W/ LED BOX LAMPS:Diagram1
L9 - Directional Signal (Turn) W/ LED BOX LAMPS:Diagram2
L9 - Directional Signal (Turn) W/ LED BOX LAMPS W/Plow Lights:Diagram1
L9 - Directional Signal (Turn) W/ LED BOX LAMPS W/Plow Lights:Diagram2
L9 - Directional Signal (Turn) W/ LED BOX LAMPS W/Plow Lights:Diagram3
L9 - Directional Signal (Turn) W/ LED BOX LAMPS W/Plow Lights:Diagram4
L9 - Directional Signal (Turn) W/ Less Power Module Tail Board W/Hazard SW:Diagram1
L9 - Directional Signal (Turn) W/ Less Power Module Tail Board W/Hazard SW:Diagram2
L9 - Directional Signal (Turn) W/ Single Tail Board W/Hazard SW:Diagram1
L9 - Directional Signal (Turn) W/ Single Tail Board W/Hazard SW:Diagram2
L9 - Directional Signal (Turn) W/ Single Tail Board W/Plow Lights:Diagram1
L9 - Directional Signal (Turn) W/ Single Tail Board W/Plow Lights:Diagram2
L9 - Directional Signal (Turn) W/ Single Tail Board W/Plow Lights:Diagram3
L9 - Directional Signal (Turn) W/ Single Tail Board W/Plow Lights:Diagram4
L9 - Headlight W/Plowlights W/LOWW W/O Headlight Interrupt -10 PIN CLK:Diagram1
L9 - Headlight W/Plowlights W/LOWW W/O Headlight Interrupt -10 PIN CLK:Diagram2
L9 - Headlight W/Plowlights W/LOWW W/O Headlight Interrupt -10 PIN CLK:Diagram3
L9 - Headlight W/Plowlights W/LOWW W/O Headlight Interrupt -10 PIN CLK:Diagram4
L9 - Headlight W/Plowlights W/LOWW W/O Headlight Interrupt -10 PIN CLK:Diagram5
L9 - Headlight W/Plowlights W/LOWW W/O Headlight Interrupt -10 PIN CLK:Diagram6

L9 - Headlight W/Plowlights W/LOWW W/O Headlight Interrupt -10 PIN CLK:Diagram7
L9 - Headlight W/Plowlights W/LOWW W/O Headlight Interrupt -10 PIN CLK:Diagram8
L9 - Headlights W 10PIN CLK W/LOWW W/Interrupt:Diagram1
L9 - Headlights W 10PIN CLK W/LOWW W/Interrupt:Diagram2
L9 - Headlights W 10PIN CLK W/LOWW W/Interrupt:Diagram3
L9 - Headlights W 10PIN CLK W/LOWW W/Interrupt:Diagram4
L9 - Headlights W 10PIN CLK W/LOWW W/O Interrupt:Diagram1
L9 - Headlights W 10PIN CLK W/LOWW W/O Interrupt:Diagram2
L9 - Headlights W 10PIN CLK W/LOWW W/O Interrupt:Diagram3
L9 - Headlights W 10PIN CLK W/LOWW W/O Interrupt:Diagram4
L9 - Headlights W/O Lights ON With Wipers (LOWW) W/O Headlights Interrupt:Diagram1
L9 - Headlights W/O Lights ON With Wipers (LOWW) W/O Headlights Interrupt:Diagram2
L9 - Headlights W/O Lights ON With Wipers (LOWW) W/O Headlights Interrupt:Diagram3
L9 - Headlights W/O Lights ON With Wipers (LOWW) W/O Headlights Interrupt:Diagram4
L9 - Headlights W/O Lights ON with wipers (LOWW) W/ Headlights Interrupt:Diagram1
L9 - Headlights W/O Lights ON with wipers (LOWW) W/ Headlights Interrupt:Diagram2
L9 - Headlights W/O Lights ON with wipers (LOWW) W/ Headlights Interrupt:Diagram3
L9 - Headlights W/O Lights ON with wipers (LOWW) W/ Headlights Interrupt:Diagram4
L9 - Headlights W/PlowLights W/Headlight Interrupt -10PIN CLK W/LOWW W/Interrupt:Diagram1
L9 - Headlights W/PlowLights W/Headlight Interrupt -10PIN CLK W/LOWW W/Interrupt:Diagram2
L9 - Headlights W/PlowLights W/Headlight Interrupt -10PIN CLK W/LOWW W/Interrupt:Diagram3
L9 - Headlights W/PlowLights W/Headlight Interrupt -10PIN CLK W/LOWW W/Interrupt:Diagram4
L9 - Headlights W/PlowLights W/Headlight Interrupt -10PIN CLK W/LOWW W/Interrupt:Diagram5
L9 - Headlights W/PlowLights W/Headlight Interrupt -10PIN CLK W/LOWW W/Interrupt:Diagram6

L9 - Headlights W/PlowLights W/Headlight Interrupt -10PIN CLK W/LOWW W/Interrupt:Diagram7
L9 - Headlights W/PlowLights W/Headlight Interrupt -10PIN CLK W/LOWW W/Interrupt:Diagram8
L9 - Headlights W/Plowlights W/O Lights ON With Wipers (LOWW) W/O Headlights Interrupt:Diagram1
L9 - Headlights W/Plowlights W/O Lights ON With Wipers (LOWW) W/O Headlights Interrupt:Diagram2
L9 - Headlights W/Plowlights W/O Lights ON With Wipers (LOWW) W/O Headlights Interrupt:Diagram3
L9 - Headlights W/Plowlights W/O Lights ON With Wipers (LOWW) W/O Headlights Interrupt:Diagram4
L9 - Headlights W/Plowlights W/O Lights ON With Wipers (LOWW) W/O Headlights Interrupt:Diagram5
L9 - Headlights W/Plowlights W/O Lights ON With Wipers (LOWW) W/O Headlights Interrupt:Diagram6
L9 - Headlights W/Plowlights W/O Lights ON With Wipers (LOWW) W/O Headlights Interrupt:Diagram7
L9 - Headlights W/Plowlights W/O Lights ON With Wipers (LOWW) W/O Headlights Interrupt:Diagram8
L9 - Headlights W/PlowLights W/O Lights ON with wipers (LOWW) W/ Headlights Interrupt:Diagram1
L9 - Headlights W/PlowLights W/O Lights ON with wipers (LOWW) W/ Headlights Interrupt:Diagram2
L9 - Headlights W/PlowLights W/O Lights ON with wipers (LOWW) W/ Headlights Interrupt:Diagram3
L9 - Headlights W/PlowLights W/O Lights ON with wipers (LOWW) W/ Headlights Interrupt:Diagram4
L9 - Headlights W/PlowLights W/O Lights ON with wipers (LOWW) W/ Headlights Interrupt:Diagram5
L9 - Headlights W/PlowLights W/O Lights ON with wipers (LOWW) W/ Headlights Interrupt:Diagram6
L9 - Headlights W/PlowLights W/O Lights ON with wipers (LOWW) W/ Headlights Interrupt:Diagram7
L9 - Headlights W/PlowLights W/O Lights ON with wipers (LOWW) W/ Headlights Interrupt:Diagram8
L9 - Heating Ventilation & Air Conditioning (HVAC):Diagram1
L9 - Heating Ventilation & Air Conditioning (HVAC) Auto Temp Control:Diagram1 - HVAC
L9 - Park Brake Control (Monitoring)(GEN IV BCM):Diagram1
L9 - Park Brake Controls (Monitoring) (Door Switch City Horn):Diagram1
L9 - Transmission Oil Temperature-Manual Trans w/Aux Gauge:Diagram1-Combination1

L9 - Transmission Oil Temperature-Manual
Transmission:Diagram1-Combination1
L9 - Windshield Washer Pump & Low Fluid Sensor:Diagram1
L9 - Windshield Washer Pump & Low Fluid Sensor:Diagram2
L9 - Windshield Wipers:Diagram1

Mates MODU-BCM-A000-10-00

Name	Terminal Part Number	V-Min	Name	Wire Part Number	Wire CSA	Wire Spec	Wire Material description	Wire Color Description	Wire Length	End2 Terminal Part Number	End2 Pin Name	End2 Connector
A1	-	-	EC149	3510311 R1	0.79	18.0	Thin Wall XLPE Primary Cable	GREY	1475.0	-	C	1100
A1	-	-	ED149	3510311 R1	0.79	18.0	Thin Wall XLPE Primary Cable	GREY	2105.0	-	C	1100MA
A1	-	-	EC149	3510311 R1	0.79	18.0	Thin Wall XLPE Primary Cable	GREY	1475.0	-	-	-
A1	-	-	ED149	3510311 R1	0.79	18.0	Thin Wall XLPE Primary Cable	GREY	2105.0	-	-	-
A1	-	-	EC149	3510311 R1	0.79	18.0	Thin Wall XLPE Primary Cable	GREY	1475.0	-	C	1100MA
A2	-	-	QI79A	3510311 R1	0.79	18.0	Thin Wall XLPE Primary Cable	GREY	3110.0	-	-	-
A2	-	-	QW79A	3510311 R1	0.79	18.0	Thin Wall XLPE Primary Cable	GREY	904.0	-	-	-

Name	Terminal Part Number	V-Min	Name	Wire Part Number	Wire CSA	Wire Spec	Wire Material description	Wire Color Description	Wire Length	End2 Terminal Part Number	End2 Pin Name	End2 Connector
A2	-	-	QW79A	3510311 R1	0.79	18.0	Thin Wall XLPE Primary Cable	GREY	904.0	-	X	-
A2	-	-	QI79A	3510311 R1	0.79	18.0	Thin Wall XLPE Primary Cable	GREY	3110.0	-	A	1112
A4	-	-	AA52D	2643768 R1	0.53	20.0	Std. Wall XLPE Primary Cable	YELLOW 2	1365.0	-	A7	1800
A4	-	-	AA52D	2643768 R1	0.53	20.0	Std. Wall XLPE Primary Cable	YELLOW 2	1365.0	-	-	-
A5	-	-	AA85A	3510310 R1	0.53	20.0	Thin Wall XLPE Primary Cable	GREY	1365.0	-	B10	1800
A5	-	-	AA85A	3510310 R1	0.53	20.0	Thin Wall XLPE Primary Cable	GREY	1365.0	-	-	-
A6	-	-	AA57B	3510316 R1	0.53	20.0	Thin Wall XLPE Primary Cable	ORANGE	1365.0	-	A2	1800
A6	-	-	AA57B	3510316 R1	0.53	20.0	Thin Wall XLPE Primary Cable	ORANGE	1365.0	-	-	-

Name	Terminal Part Number	V-Min	Name	Wire Part Number	Wire CSA	Wire Spec	Wire Material description	Wire Color Description	Wire Length	End2 Terminal Part Number	End2 Pin Name	End2 Connector
A7	-	-	AA56B	3510316 R1	0.53	20.0	Thin Wall XLPE Primary Cable	ORANGE	1365.0	-	A1	1800
A7	-	-	AA56B	3510316 R1	0.53	20.0	Thin Wall XLPE Primary Cable	ORANGE	1365.0	-	-	-
A8	-	-	HE87EA	3510311 R1	0.79	18.0	Thin Wall XLPE Primary Cable	GREY	1060.0	-	41	1701
A8	-	-	HE87EA	3510311 R1	0.79	18.0	Thin Wall XLPE Primary Cable	GREY	1060.0	-	-	-
A8	-	-	HK87C	3510311 R1	0.79	18.0	Thin Wall XLPE Primary Cable	GREY	980.0	-	-	-
A9	-	-	AA82A	3510310 R1	0.53	20.0	Thin Wall XLPE Primary Cable	GREY	1365.0	-	C9	1800
A9	-	-	AA82A	3510310 R1	0.53	20.0	Thin Wall XLPE Primary Cable	GREY	1365.0	-	-	-
A10	-	-	AA82B	3510310 R1	0.53	20.0	Thin Wall XLPE Primary Cable	GREY	1365.0	-	C1	1800

Name	Terminal Part Number	V-Min	Name	Wire Part Number	Wire CSA	Wire Spec	Wire Material description	Wire Color Description	Wire Length	End2 Terminal Part Number	End2 Pin Name	End2 Connector
A10	-	-	AA82B	3510310 R1	0.53	20.0	Thin Wall XLPE Primary Cable	GREY	1365.0	-	-	-
A11	-	-	AA82C	3510310 R1	0.53	20.0	Thin Wall XLPE Primary Cable	GREY	1365.0	-	B1	1800
A11	-	-	AA82C	3510310 R1	0.53	20.0	Thin Wall XLPE Primary Cable	GREY	1365.0	-	-	-
A12	-	-	WA44	3510312 R1	1.16	16.0	Thin Wall XLPE Primary Cable	GREY	1365.0	-	-	-
A12	-	-	WE44AB	3510312 R1	1.16	16.0	Thin Wall XLPE Primary Cable	GREY	1460.0	-	-	-
A12	-	-	WA44	3510312 R1	1.16	16.0	Thin Wall XLPE Primary Cable	GREY	1365.0	-	B7	1800
A12	-	-	WE44AB	3510312 R1	1.16	16.0	Thin Wall XLPE Primary Cable	GREY	1460.0	-	X	-
A13	-	-	AA63A	3510342 R1	1.16	16.0	Thin Wall XLPE Primary Cable	LIGHT BLUE	814.0	-	X	-

Name	Terminal Part Number	V-Min	Name	Wire Part Number	Wire CSA	Wire Spec	Wire Material description	Wire Color Description	Wire Length	End2 Terminal Part Number	End2 Pin Name	End2 Connector
A13	-	-	AA63A	3510342 R1	1.16	16.0	Thin Wall XLPE Primary Cable	LIGHT BLUE	814.0	-	-	-
A14	-	-	AA102A	3510334 R1	0.53	20.0	Thin Wall XLPE Primary Cable	YELLOW 2	1365.0	-	A8	1800
A14	-	-	AA102A	3510334 R1	0.53	20.0	Thin Wall XLPE Primary Cable	YELLOW 2	1365.0	-	-	-
A15	-	-	HE87B	3510310 R1	0.53	20.0	Thin Wall XLPE Primary Cable	GREY	890.0	-	X	-
A15	-	-	HE87B	3510310 R1	0.53	20.0	Thin Wall XLPE Primary Cable	GREY	890.0	-	-	-
A16	-	-	DC149A	3510311 R1	0.79	18.0	Thin Wall XLPE Primary Cable	GREY	2105.0	-	D	1100MA
A16	-	-	DB149A	3510311 R1	0.79	18.0	Thin Wall XLPE Primary Cable	GREY	1475.0	-	D	1100
A16	-	-	DD13FAM	3510305 R1	0.79	18.0	Thin Wall XLPE Primary Cable	BROWN	385.0	-	-	-

Name	Terminal Part Number	V-Min	Name	Wire Part Number	Wire CSA	Wire Spec	Wire Material description	Wire Color Description	Wire Length	End2 Terminal Part Number	End2 Pin Name	End2 Connector
A16	-	-	DH13C	3510311 R1	0.79	18.0	Thin Wall XLPE Primary Cable	GREY	385.0	-	-	-
A16	-	-	DB149A	3510311 R1	0.79	18.0	Thin Wall XLPE Primary Cable	GREY	1475.0	-	-	-
A16	-	-	DC149A	3510311 R1	0.79	18.0	Thin Wall XLPE Primary Cable	GREY	2105.0	-	-	-
A16	-	-	DB149A	3510311 R1	0.79	18.0	Thin Wall XLPE Primary Cable	GREY	1475.0	-	D	1100MA
B1	-	-	SN86A	3510311 R1	0.79	18.0	Thin Wall XLPE Primary Cable	GREY	1365.0	-	B12	1800
B1	-	-	SN86A	3510311 R1	0.79	18.0	Thin Wall XLPE Primary Cable	GREY	1365.0	-	-	-
B2	-	-	WC40	3510311 R1	0.79	18.0	Thin Wall XLPE Primary Cable	GREY	1365.0	-	-	-
B2	-	-	NK40	2643673 R1	0.79	18.0	Std. Wall XLPE Primary Cable	GREY	1365.0	-	-	-

Name	Terminal Part Number	V-Min	Name	Wire Part Number	Wire CSA	Wire Spec	Wire Material description	Wire Color Description	Wire Length	End2 Terminal Part Number	End2 Pin Name	End2 Connector
B2	-	-	NL40	2643673 R1	0.79	18.0	Std. Wall XLPE Primary Cable	GREY	980.0	-	-	-
B2	-	-	WC40	3510311 R1	0.79	18.0	Thin Wall XLPE Primary Cable	GREY	1365.0	-	C12	1800
B2	-	-	NK40	2643673 R1	0.79	18.0	Std. Wall XLPE Primary Cable	GREY	1365.0	-	C12	1800
B3	-	-	NK40A	2643673 R1	0.79	18.0	Std. Wall XLPE Primary Cable	GREY	1365.0	-	-	-
B3	-	-	NK40A	2643673 R1	0.79	18.0	Std. Wall XLPE Primary Cable	GREY	1365.0	-	B2	1800
B4	-	-	UA97A	3510347 R1	0.79	18.0	Thin Wall XLPE Primary Cable	VIOLET	1365.0	-	C11	1800
B4	-	-	UA97A	3510347 R1	0.79	18.0	Thin Wall XLPE Primary Cable	VIOLET	1365.0	-	-	-
B5	-	-	TB74	3510299 R1	0.79	18.0	Thin Wall XLPE Primary Cable	LIGHT GREEN	3205.0	-	17	1703M

Name	Terminal Part Number	V-Min	Name	Wire Part Number	Wire CSA	Wire Spec	Wire Material description	Wire Color Description	Wire Length	End2 Terminal Part Number	End2 Pin Name	End2 Connector
B5	-	-	TB74	3510299 R1	0.79	18.0	Thin Wall XLPE Primary Cable	LIGHT GREEN	3205.0	-	-	-
B7	-	-	NJ31J	3510329 R1	0.79	18.0	Thin Wall XLPE Primary Cable	TAN	3205.0	-	61	1703M
B7	-	-	NJ31J	3510329 R1	0.79	18.0	Thin Wall XLPE Primary Cable	TAN	3205.0	-	-	-
B8	-	-	AA36B	3510329 R1	0.79	18.0	Thin Wall XLPE Primary Cable	TAN	1060.0	-	27	1701
B8	-	-	AA36B	3510329 R1	0.79	18.0	Thin Wall XLPE Primary Cable	TAN	1060.0	-	-	-
B9	-	-	AA36A	3510329 R1	0.79	18.0	Thin Wall XLPE Primary Cable	TAN	1060.0	-	-	-
B9	-	-	AA36A	3510329 R1	0.79	18.0	Thin Wall XLPE Primary Cable	TAN	1060.0	-	29	1701
B10	-	-	NN32B	3510329 R1	0.79	18.0	Thin Wall XLPE Primary Cable	TAN	1060.0	-	43	1701

Name	Terminal Part Number	V-Min	Name	Wire Part Number	Wire CSA	Wire Spec	Wire Material description	Wire Color Description	Wire Length	End2 Terminal Part Number	End2 Pin Name	End2 Connector
B10	-	-	XS90HB	3510311 R1	0.79	18.0	Thin Wall XLPE Primary Cable	GREY	3205.0	-	-	-
B10	-	-	NN32B	3510329 R1	0.79	18.0	Thin Wall XLPE Primary Cable	TAN	1060.0	-	-	-
B11	-	-	NM32A	2643676 R1	0.79	18.0	Std. Wall XLPE Primary Cable	TAN	1060.0	-	44	1701
B11	-	-	NM32A	2643676 R1	0.79	18.0	Std. Wall XLPE Primary Cable	TAN	1060.0	-	-	-
B12	-	-	SA77B	3510310 R1	0.53	20.0	Thin Wall XLPE Primary Cable	GREY	3205.0	-	20	1703M
B12	-	-	SA77B	3510310 R1	0.53	20.0	Thin Wall XLPE Primary Cable	GREY	3155.0	-	20	1703M
B12	-	-	SA77B	3510310 R1	0.53	20.0	Thin Wall XLPE Primary Cable	GREY	3205.0	-	-	-
B14	-	-	NK40BB	3510311 R1	0.79	18.0	Thin Wall XLPE Primary Cable	GREY	1365.0	-	C2	1800

Name	Terminal Part Number	V-Min	Name	Wire Part Number	Wire CSA	Wire Spec	Wire Material description	Wire Color Description	Wire Length	End2 Terminal Part Number	End2 Pin Name	End2 Connector
B14	-	-	NK40BB	3510311 R1	0.79	18.0	Thin Wall XLPE Primary Cable	GREY	1365.0	-	-	-
B15	-	-	TA75AA	3510299 R1	0.79	18.0	Thin Wall XLPE Primary Cable	LIGHT GREEN	1260.0	-	-	-
B16	-	-	AA150	3510310 R1	0.53	20.0	Thin Wall XLPE Primary Cable	GREY	1365.0	-	B11	1800
B16	-	-	AA150	3510310 R1	0.53	20.0	Thin Wall XLPE Primary Cable	GREY	1365.0	-	-	-

Connector Name	J4-1601
Part Number	3598707C1
Instances	A26 - Auxiliary Air Solenoids Normally Closed:Diagram1 A26 - Auxillary Air Solenoids Normally Open:Combination1 A26 - Auxillary Air Solenoids Normally Open:Combination2 A26 - Auxillary Air Solenoids Normally Open:Combination3 A26 - Auxillary Air Solenoids Normally Open:Combination4 A26 - Auxillary Air Solenoids Normally Open:Combination5 A26 - Auxillary Air Solenoids Normally Open:Combination6 A26 - Body Builder Lighting - BOC, 08HBX (Automatic):Diagram1 A26 - Body Builder Lighting - BOC, 08HBX (Manual):Diagram1 A26 - Body Builder Lighting - Combined Turn and Stop Lamps (Automatic):Diagram1-Option 1 (In Cab, W/08HAU) A26 - Body Builder Lighting - Combined Turn and Stop Lamps (Automatic):Diagram1-Option 2 (Back-of-Cab, W/08HAB) A26 - Body Builder Lighting - Combined Turn and Stop Lamps (Automatic):Diagram1-Option 3 (End-of-Frame, W/08HAE) A26 - Body Builder Lighting - Combined Turn and Stop Lamps (Manual):Diagram1-Option 1 (In Cab, W/08HAU) A26 - Body Builder Lighting - Combined Turn and Stop Lamps (Manual):Diagram1-Option 2 (Back-of-Cab, W/08HAB) A26 - Body Builder Lighting - Combined Turn and Stop Lamps (Manual):Diagram1-Option 3 (End-of-Frame, W/08HAE) A26 - Body Builder Lighting - Separate Turn and Stop Lamps (Blunt Cut) - Option 1:Diagram1-Option1 (R/D 9724) A26 - Body Builder Lighting - Separate Turn and Stop Lamps (Blunt Cut) - Option 2:Diagram1-Option1 (R/D 9724A) A26 - Fuel Heater (Vehicle Powered)(Davco):Diagram1 A26 - Fuel Heater (Vehicle Powered)(Davco):Diagram2 A26 - Fuel Heater (Vehicle Powered)(Davco):Diagram3 A26 - Fuel Heater (Vehicle Powered)(Davco):Diagram4 A26 - Fuel Heater (Vehicle Powered)(Davco):Diagram5 A26 - Fuel Heater (Vehicle Powered)(Davco):Diagram6 A26 - Fuel Heater (Vehicle Powered)(Davco):Diagram7 A26 - Fuel Heater (Vehicle Powered)(Davco):Diagram8 A26 - Fuel Heater (Vehicle Powered)(Davco):Diagram9 A26 - Heated Mirrors (Hood with Door Pods):Diagram1 A26 - Heated Mirrors (RT Hood with Door Pods):Diagram1 A26 - I/O Expansion:Diagram1 A26 - Mirrors (Heat) Switch Pack Actuated includes Hood Mirrors:Diagram1

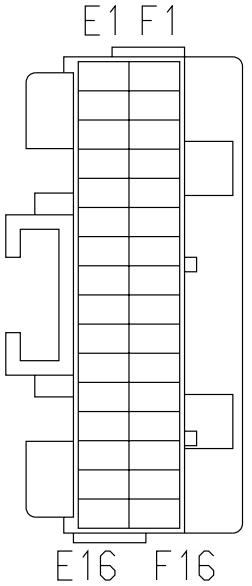

A26 - Mirrors (Heat) Switch Pack Actuated includes RT Hood Mirror:Diagram1
A26 - Separate Rear Lights (Stop) W/08TVH:Diagram1
A26 - Windshield Wipers:Diagram1
A26/B6.7/L9 - Auxiliary Power (40A) HSD:Diagram1
A26/B6.7/L9 - BCM (Body Control Module):Connector J4-1601
A26/B6.7/L9 - Heated Windshield:Diagram1
A26/B6.7/L9 - Mirrors (Heat) Switch Pack Actuated Relay Driven:Diagram1
B6.7 - Auxiliary Air Solenoids (1 Normally Closed) Option 1:Diagram1
B6.7 - Auxiliary Air Solenoids (1 Normally Closed) Option 2:Diagram1
B6.7 - Auxiliary Air Solenoids (1 Normally Closed) Option 2:Diagram2
B6.7 - Auxiliary Air Solenoids (1 Normally Closed) Option 2:Diagram3
B6.7 - Auxiliary Air Solenoids (1 Normally Closed) Option 3:Diagram1
B6.7 - Auxiliary Air Solenoids (1 Normally Closed) Option 3:Diagram2
B6.7 - Auxiliary Air Solenoids (1 Normally Closed) Option 3:Diagram3
B6.7 - Body Builder Lighting - Combined Turn and Stop Lamps (Automatic):Diagram1
B6.7 - Body Builder Lighting - Combined Turn and Stop Lamps (Automatic):Diagram2
B6.7 - Body Builder Lighting - Combined Turn and Stop Lamps (Automatic):Diagram3
B6.7 - Body Builder Lighting - Combined Turn and Stop Lamps (Manual):Diagram1
B6.7 - Body Builder Lighting - Combined Turn and Stop Lamps (Manual):Diagram2
B6.7 - Body Builder Lighting - Combined Turn and Stop Lamps (Manual):Diagram3
B6.7 - Body Builder Lighting - Separate Turn and Stop Lamps (Blunt Cut) Option 1:Diagram1
B6.7 - Body Builder Lighting - Separate Turn and Stop Lamps (Blunt Cut) Option 2:Diagram1
B6.7 - Fuel Heater (Vehicle Powered)(Davco):Diagram1
B6.7 - Fuel Heater (Vehicle Powered)(Davco):Diagram2
B6.7 - Fuel Heater (Vehicle Powered)(Davco):Diagram3
B6.7 - Fuel Heater (Vehicle Powered)(Davco):Diagram4
B6.7 - Fuel Heater (Vehicle Powered)(Davco):Diagram5

B6.7 - Fuel Heater (Vehicle Powered)(Davco):Diagram6
B6.7 - Fuel Heater (Vehicle Powered)(Davco):Diagram7
B6.7 - Fuel Heater (Vehicle Powered)(Racor):Diagram1
B6.7 - Fuel Heater (Vehicle Powered)(Racor):Diagram2
B6.7 - Fuel Heater (Vehicle Powered)(Racor):Diagram3
B6.7 - Fuel Heater (Vehicle Powered)(Racor):Diagram4
B6.7 - Fuel Heater (Vehicle Powered)(Racor):Diagram5
B6.7 - Fuel Heater (Vehicle Powered)(Racor):Diagram6
B6.7 - Fuel Heater (Vehicle Powered)(Racor):Diagram7
B6.7 - Heated Mirrors (Hood with Door Pods):Diagram1
B6.7 - Heated Mirrors (Hood with Door Pods):Diagram2
B6.7 - Heated Mirrors (RT Hood with Door Pods):Diagram1
B6.7 - Heated Mirrors (RT Hood with Door Pods):Diagram2
B6.7 - Heated Mirrors (RT Hood with Door Pods):Diagram3
B6.7 - Heated Mirrors (RT Hood with Door Pods):Diagram4
B6.7 - I/O Expansion:Diagram1
B6.7 - Mirrors (Heat) Switch Pack Actuated includes Hood Mirrors:Diagram1
B6.7 - Mirrors (Heat) Switch Pack Actuated includes Hood Mirrors:Diagram2
B6.7 - Mirrors (Heat) Switch Pack Actuated includes RT Hood Mirror:Diagram1
B6.7 - Mirrors (Heat) Switch Pack Actuated includes RT Hood Mirror:Diagram2
B6.7 - Mirrors (Heat) Switch Pack Actuated includes RT Hood Mirror:Diagram3
B6.7 - Mirrors (Heat) Switch Pack Actuated includes RT Hood Mirror:Diagram4
B6.7 - Range Inhibit (sixth gear inhibit switch):Diagram1
B6.7 - Remote Start/Stop w/ Emergency Pump:Diagram1
B6.7 - Trailer Interface (Lighting) – BLUNT CUT (Part of Electric Trailer Brakes) Option 1:Diagram1
B6.7 - Trailer Interface (Lighting) – BLUNT CUT (Part of Electric Trailer Brakes) Option 2:Diagram1
B6.7 - Transmission Shifter (T-Handle for Allison With Park Position):Diagram1
B6.7 - Transmission Shifter (T-Handle for Allison With Park Position):Diagram2
B6.7 - Windshield Wipers:Diagram1
L9 - Auto Neutral (Allison with Multiplex Switch and Confirmation Telltale):Diagram1
L9 - Auto Neutral (Allison with Multiplex Switch and Confirmation Telltale):Diagram2

L9 - Auto Neutral (Allison without Multiplex Switch and Confirmation Telltale):Diagram1
L9 - Auto Neutral (Allison without Multiplex Switch and Confirmation Telltale):Diagram2
L9 - Auxiliary Air Solenoids (1 Normally Closed):Diagram1
L9 - Auxillary Air Solenoids Normally Closed:Combination1
L9 - Auxillary Air Solenoids Normally Closed:Combination2
L9 - Auxillary Air Solenoids Normally Closed:Combination3
L9 - Auxillary Air Solenoids Normally Closed:Combination4
L9 - Auxillary Air Solenoids Normally Closed:Combination5
L9 - Auxillary Air Solenoids Normally Closed:Combination6
L9 - Body Builder Lighting - Combined Turn and Stop Lamps (Automatic):Diagram1
L9 - Body Builder Lighting - Combined Turn and Stop Lamps (Automatic):Diagram2
L9 - Body Builder Lighting - Combined Turn and Stop Lamps (Automatic):Diagram3
L9 - Body Builder Lighting - Combined Turn and Stop Lamps (Manual):Diagram1
L9 - Body Builder Lighting - Combined Turn and Stop Lamps (Manual):Diagram2
L9 - Body Builder Lighting - Combined Turn and Stop Lamps (Manual):Diagram3
L9 - Body Builder Lighting - Combined Turn and Stop Lamps (Manual):Diagram4
L9 - Body Builder Lighting - Combined Turn and Stop Lamps (Manual):Diagram5
L9 - Body Builder Lighting - Combined Turn and Stop Lamps (Manual):Diagram6
L9 - Body Builder Lighting - Separate Turn and Stop Lamps (Blunt Cut) Option 1:Diagram1
L9 - Body Builder Lighting - Separate Turn and Stop Lamps (Blunt Cut) Option 2:Diagram1
L9 - Four Auxillary Air Solenoids:Diagram1
L9 - Fuel Heater (Vehicle Powered)(Davco):Diagram1
L9 - Fuel Heater (Vehicle Powered)(Davco):Diagram2
L9 - Fuel Heater (Vehicle Powered)(Davco):Diagram3
L9 - Fuel Heater (Vehicle Powered)(Davco):Diagram4
L9 - Fuel Heater (Vehicle Powered)(Davco):Diagram5
L9 - Fuel Heater (Vehicle Powered)(Davco):Diagram6
L9 - Fuel Heater (Vehicle Powered)(Davco):Diagram7
L9 - Fuel Heater (Vehicle Powered)(Davco):Diagram8
L9 - Fuel Heater (Vehicle Powered)(Davco):Diagram9
L9 - Fuel Heater (Vehicle Powered)(Davco):Diagram10

L9 - Fuel Heater (Vehicle Powered)(Davco):Diagram11
L9 - Fuel Heater (Vehicle Powered)(Davco):Diagram12
L9 - Fuel Heater (Vehicle Powered)(Davco):Diagram13
L9 - Fuel Heater (Vehicle Powered)(Davco):Diagram14
L9 - Fuel Heater (Vehicle Powered)(Davco):Diagram15
L9 - Fuel Heater (Vehicle Powered)(Racor):Diagram1
L9 - Fuel Heater (Vehicle Powered)(Racor):Diagram2
L9 - Fuel Heater (Vehicle Powered)(Racor):Diagram3
L9 - Fuel Heater (Vehicle Powered)(Racor):Diagram4
L9 - Fuel Heater (Vehicle Powered)(Racor):Diagram5
L9 - Fuel Heater (Vehicle Powered)(Racor):Diagram6
L9 - Fuel Heater (Vehicle Powered)(Racor):Diagram7
L9 - Fuel Heater (Vehicle Powered)(Racor):Diagram8
L9 - Heated Mirrors (Hood with Door Pods):Diagram1
L9 - Heated Mirrors (Hood with Door Pods):Diagram2
L9 - Heated Mirrors (Hood with Door Pods):Diagram3
L9 - Heated Mirrors (Hood with Door Pods):Diagram4
L9 - Heated Mirrors (RT Hood with Door Pods):Diagram1
L9 - Heated Mirrors (RT Hood with Door Pods):Diagram2
L9 - Heated Mirrors (RT Hood with Door Pods):Diagram3
L9 - Heated Mirrors (RT Hood with Door Pods):Diagram4
L9 - I/O Expansion:Diagram1
L9 - Mirrors (Heat) Switch Pack Actuated includes Hood Mirrors:Diagram1
L9 - Mirrors (Heat) Switch Pack Actuated includes Hood Mirrors:Diagram2
L9 - Mirrors (Heat) Switch Pack Actuated includes Hood Mirrors:Diagram3
L9 - Mirrors (Heat) Switch Pack Actuated includes Hood Mirrors:Diagram4
L9 - Mirrors (Heat) Switch Pack Actuated includes RT Hood Mirror:Diagram1
L9 - Mirrors (Heat) Switch Pack Actuated includes RT Hood Mirror:Diagram2
L9 - Mirrors (Heat) Switch Pack Actuated includes RT Hood Mirror:Diagram3
L9 - Mirrors (Heat) Switch Pack Actuated includes RT Hood Mirror:Diagram4
L9 - Remote Start/Stop w/ Emergency Pump:Diagram1
L9 - Three Auxillary Air Solenoids:Diagram1
L9 - Three Auxillary Air Solenoids:Diagram2
L9 - Three Auxillary Air Solenoids:Diagram3
L9 - Trailer Interface (Lighting) – BLUNT CUT (Part of Electric Trailer Brakes) Option 1:Diagram1

L9 - Trailer Interface (Lighting) – BLUNT CUT (Part of Electric Trailer Brakes) Option 2:Diagram1
L9 - Transmission Power Take Off (Auto Trans with Lectradrive):Diagram1
L9 - Transmission Power Take Off (Lectrashift PTO with Manual Trans):Diagram1
L9 - Windshield Wipers:Diagram1

Mates MODU-BCM-A000-10-00

Name	Terminal Part Number	V-Min	Name	Wire Part Number	Wire CSA	Wire Spec	Wire Material description	Wire Color Description	Wire Length	End2 Terminal Part Number	End2 Pin Name	End2 Connector
E1	-	-	LJ104DC	3510353 R1	0.79	18.0	Thin Wall XLPE Primary Cable	DARK BLUE	2445.0	-	R6 - 85	1012
E1	-	-	VU103D	3510299 R1	0.79	18.0	Thin Wall XLPE Primary Cable	LIGHT GREEN	790.0	-	D	1940
E1	-	-	VU103D	3510299 R1	0.79	18.0	Thin Wall XLPE Primary Cable	LIGHT GREEN	790.0	-	-	-
E2	-	-	VU103C	3510299 R1	0.79	18.0	Thin Wall XLPE Primary Cable	LIGHT GREEN	790.0	-	C	1940
E2	-	-	VU103C	3510299 R1	0.79	18.0	Thin Wall XLPE Primary Cable	LIGHT GREEN	790.0	-	-	-
E4	-	-	UG92#16 1A	3510329 R1	0.79	18.0	Thin Wall XLPE Primary Cable	TAN	2890.0	-	-	-

Name	Terminal Part Number	V-Min	Name	Wire Part Number	Wire CSA	Wire Spec	Wire Material description	Wire Color Description	Wire Length	End2 Terminal Part Number	End2 Pin Name	End2 Connector
E4	-	-	UG92#161A	3510329R1	0.79	18.0	Thin Wall XLPE Primary Cable	TAN	2890.0	-	56	1703M
E6	-	-	AA82H	3510311R1	0.79	18.0	Thin Wall XLPE Primary Cable	GREY	2350.0	-	R5 - 86	1011
E6	-	-	AA82H	3510311R1	0.79	18.0	Thin Wall XLPE Primary Cable	GREY	2350.0	-	-	-
E7	-	-	AA82F	3510311R1	0.79	18.0	Thin Wall XLPE Primary Cable	GREY	2350.0	-	R2 - 86	1011
E7	-	-	AA82F	3510311R1	0.79	18.0	Thin Wall XLPE Primary Cable	GREY	2350.0	-	-	-
E8	-	-	UF92D	3510329R1	0.79	18.0	Thin Wall XLPE Primary Cable	TAN	1900.0	-	B	422F
E9	-	-	LY59J	3510311R1	0.79	18.0	Thin Wall XLPE Primary Cable	GREY	745.0	-	38	1701
E9	-	-	LY59J	3510311R1	0.79	18.0	Thin Wall XLPE Primary Cable	GREY	745.0	-	-	-

Name	Terminal Part Number	V-Min	Name	Wire Part Number	Wire CSA	Wire Spec	Wire Material description	Wire Color Description	Wire Length	End2 Terminal Part Number	End2 Pin Name	End2 Connector
E10	-	-	LZ59S	3510311 R1	0.79	18.0	Thin Wall XLPE Primary Cable	GREY	745.0	-	-	-
E10	-	-	LZ59S	3510311 R1	0.79	18.0	Thin Wall XLPE Primary Cable	GREY	745.0	-	54	1701
E11	-	-	HW12LC	3510323 R1	0.79	18.0	Thin Wall XLPE Primary Cable	PINK	1425.0	-	R1-85	1873
E12	-	-	LT59D	3510311 R1	0.79	18.0	Thin Wall XLPE Primary Cable	GREY	745.0	-	34	1701
E12	-	-	LT59D	3510311 R1	0.79	18.0	Thin Wall XLPE Primary Cable	GREY	745.0	-	-	-
E13	-	-	LY59G	3510311 R1	0.79	18.0	Thin Wall XLPE Primary Cable	GREY	745.0	-	36	1701
E13	-	-	LY59G	3510311 R1	0.79	18.0	Thin Wall XLPE Primary Cable	GREY	745.0	-	-	-
E14	-	-	HU103AA	3510299 R1	0.79	18.0	Thin Wall XLPE Primary Cable	LIGHT GREEN	1395.0	-	3	1873B

Name	Terminal Part Number	V-Min	Name	Wire Part Number	Wire CSA	Wire Spec	Wire Material description	Wire Color Description	Wire Length	End2 Terminal Part Number	End2 Pin Name	End2 Connector
E14	-	-	HU103AA	3510299 R1	0.79	18.0	Thin Wall XLPE Primary Cable	LIGHT GREEN	1395.0	-	-	-
E15	-	-	LZ59T	3510311 R1	0.79	18.0	Thin Wall XLPE Primary Cable	GREY	745.0	-	-	-
E15	-	-	LZ59T	3510311 R1	0.79	18.0	Thin Wall XLPE Primary Cable	GREY	745.0	-	55	1701
E16	-	-	VA92#11 7A	3510329 R1	0.79	18.0	Thin Wall XLPE Primary Cable	TAN	2350.0	-	R3 - 86	1011
F2	-	-	LW59P	3510311 R1	0.79	18.0	Thin Wall XLPE Primary Cable	GREY	745.0	-	48	1701
F2	-	-	LW59P	3510311 R1	0.79	18.0	Thin Wall XLPE Primary Cable	GREY	745.0	-	-	-
F3	-	-	LW59Q	3510311 R1	0.79	18.0	Thin Wall XLPE Primary Cable	GREY	745.0	-	49	1701
F3	-	-	LW59Q	3510311 R1	0.79	18.0	Thin Wall XLPE Primary Cable	GREY	745.0	-	-	-

Name	Terminal Part Number	V-Min	Name	Wire Part Number	Wire CSA	Wire Spec	Wire Material description	Wire Color Description	Wire Length	End2 Terminal Part Number	End2 Pin Name	End2 Connector
F4	-	-	LY59H	3510311 R1	0.79	18.0	Thin Wall XLPE Primary Cable	GREY	745.0	-	37	1701
F4	-	-	LY59H	3510311 R1	0.79	18.0	Thin Wall XLPE Primary Cable	GREY	745.0	-	-	-
F5	-	-	LY59K	3510311 R1	0.79	18.0	Thin Wall XLPE Primary Cable	GREY	745.0	-	39	1701
F5	-	-	LY59K	3510311 R1	0.79	18.0	Thin Wall XLPE Primary Cable	GREY	745.0	-	-	-
F6	-	-	LW59M	3510311 R1	0.79	18.0	Thin Wall XLPE Primary Cable	GREY	745.0	-	46	1701
F6	-	-	LW59M	3510311 R1	0.79	18.0	Thin Wall XLPE Primary Cable	GREY	745.0	-	-	-
F7	-	-	LW59N	3510311 R1	0.79	18.0	Thin Wall XLPE Primary Cable	GREY	745.0	-	47	1701
F7	-	-	LW59N	3510311 R1	0.79	18.0	Thin Wall XLPE Primary Cable	GREY	745.0	-	-	-

Name	Terminal Part Number	V-Min	Name	Wire Part Number	Wire CSA	Wire Spec	Wire Material description	Wire Color Description	Wire Length	End2 Terminal Part Number	End2 Pin Name	End2 Connector
F8	-	-	LU59E	3510311 R1	0.79	18.0	Thin Wall XLPE Primary Cable	GREY	745.0	-	35	1701
F8	-	-	LU59E	3510311 R1	0.79	18.0	Thin Wall XLPE Primary Cable	GREY	745.0	-	-	-
F9	-	-	LZ59W	3510311 R1	0.79	18.0	Thin Wall XLPE Primary Cable	GREY	745.0	-	57	1701
F10	-	-	LT59C	3510311 R1	0.79	18.0	Thin Wall XLPE Primary Cable	GREY	745.0	-	33	1701
F10	-	-	LT59C	3510311 R1	0.79	18.0	Thin Wall XLPE Primary Cable	GREY	745.0	-	-	-
F12	-	-	KK18A	3510311 R1	0.79	18.0	Thin Wall XLPE Primary Cable	GREY	2350.0	-	R6 - 85	1011
F12	-	-	KM18E	3510311 R1	0.79	18.0	Thin Wall XLPE Primary Cable	GREY	2350.0	-	R6 - 85	1011
F12	-	-	KM18E	3510311 R1	0.79	18.0	Thin Wall XLPE Primary Cable	GREY	2350.0	-	-	-

Name	Terminal Part Number	V-Min	Name	Wire Part Number	Wire CSA	Wire Spec	Wire Material description	Wire Color Description	Wire Length	End2 Terminal Part Number	End2 Pin Name	End2 Connector
F12	-	-	KK18A	3510311 R1	0.79	18.0	Thin Wall XLPE Primary Cable	GREY	2350.0	-	-	-
F12	-	-	KL18D	3510311 R1	0.79	18.0	Thin Wall XLPE Primary Cable	GREY	2350.0	-	-	-
F12	-	-	KL18D	3510311 R1	0.79	18.0	Thin Wall XLPE Primary Cable	GREY	2350.0	-	R6 - 85	1011
F13	-	-	RR78RC	3510299 R1	0.79	18.0	Thin Wall XLPE Primary Cable	LIGHT GREEN	2475.0	-	R6 - 86	1014
F13	-	-	RN78RC	3510299 R1	0.79	18.0	Thin Wall XLPE Primary Cable	LIGHT GREEN	2245.0	-	X	-
F13	-	-	RP78RC	3510299 R1	0.79	18.0	Thin Wall XLPE Primary Cable	LIGHT GREEN	2460.0	-	-	-
F13	-	-	RN78RC	3510299 R1	0.79	18.0	Thin Wall XLPE Primary Cable	LIGHT GREEN	2245.0	-	-	-
F13	-	-	RR78RC	3510299 R1	0.79	18.0	Thin Wall XLPE Primary Cable	LIGHT GREEN	2475.0	-	-	-

Name	Terminal Part Number	V-Min	Name	Wire Part Number	Wire CSA	Wire Spec	Wire Material description	Wire Color Description	Wire Length	End2 Terminal Part Number	End2 Pin Name	End2 Connector
F13	-	-	RP78RC	3510299 R1	0.79	18.0	Thin Wall XLPE Primary Cable	LIGHT GREEN	2460.0	-	R1 - 86	1013
F14	-	-	LZ59V	3510311 R1	0.79	18.0	Thin Wall XLPE Primary Cable	GREY	745.0	-	-	-
F14	-	-	LZ59V	3510311 R1	0.79	18.0	Thin Wall XLPE Primary Cable	GREY	745.0	-	56	1701
F15	-	-	VG70D	3510317 R1	0.79	18.0	Thin Wall XLPE Primary Cable	ORANGE	2350.0	-	R1 - 86	1011
F15	-	-	VJ70D	3510317 R1	0.79	18.0	Thin Wall XLPE Primary Cable	ORANGE	1985.0	-	X	-
F15	-	-	VN70D	3510317 R1	0.79	18.0	Thin Wall XLPE Primary Cable	ORANGE	2445.0	-	R5 - 86	1012
F15	-	-	VJ70D	3510317 R1	0.79	18.0	Thin Wall XLPE Primary Cable	ORANGE	1985.0	-	-	-
F15	-	-	VN70D	3510317 R1	0.79	18.0	Thin Wall XLPE Primary Cable	ORANGE	2445.0	-	-	-

Name	Terminal Part Number	V-Min	Name	Wire Part Number	Wire CSA	Wire Spec	Wire Material description	Wire Color Description	Wire Length	End2 Terminal Part Number	End2 Pin Name	End2 Connect or
F16	-	-	RK78BD	3510300 R1	1.16	16.0	Thin Wall XLPE Primary Cable	LIGHT GREEN	2305.0	-	-	-
F16	-	-	RK78BD	3510300 R1	1.16	16.0	Thin Wall XLPE Primary Cable	LIGHT GREEN	2305.0	-	X	-

Connector Name	J5-1602
Part Number	3598705C1
Instances	A26 - 26" Fuel Tank:Diagram1 A26 - 26" Fuel Tank:Diagram2 A26 - 26" Fuel Tank:Diagram3 A26 - 26" Fuel Tank:Diagram4 A26 - 26" Fuel Tank:Diagram5 A26 - 26" Fuel Tank - Secondary:Diagram1 A26 - 26" Fuel Tank - Secondary:Diagram2 A26 - 26" Fuel Tank - Secondary:Diagram3 A26 - 26" Fuel Tank - Secondary:Diagram4 A26 - 26" Fuel Tank - Secondary:Diagram5 A26 - 26" Fuel Tank - Secondary:Diagram6 A26 - 26" Fuel Tank - Secondary:Diagram7 A26 - Auxiliary Air Solenoids Normally Closed:Diagram1 A26 - Auxillary Air Solenoids Normally Open:Combination1 A26 - Auxillary Air Solenoids Normally Open:Combination2 A26 - Auxillary Air Solenoids Normally Open:Combination3 A26 - Auxillary Air Solenoids Normally Open:Combination4 A26 - Auxillary Air Solenoids Normally Open:Combination5 A26 - Auxillary Air Solenoids Normally Open:Combination6 A26 - Axle Temperature Monitoring (Single Rear Aux Gauge):Diagram1 A26 - Axle Temperature Monitoring (Single Rear Virtual Gauge):Diagram1 A26 - Axle Temperature Monitoring (Tandem Rear Aux Gauge):Diagram1 A26 - Axle Temperature Monitoring (Tandem Rear Virtual Gauge):Diagram1 A26 - Body J1939 (250kbps):A26 - Body J1939 (250Kbps) A26 - Brake Pressure (Auxiliary Gauge):Diagram1 A26 - Brake Pressure (Virtual Gauge):Diagram1 A26 - Brake Switch:Diagram1 A26 - CAN Layout:Body Standard J1939 (250Kbps) A26 - CAN Layout:Telematics J1708 A26 - City Horn (W/ 4PIN Park Brake):Diagram1 A26 - City Horn (W/ 4PIN Park Brake):Diagram2 A26 - City Horn (W/ 4PIN Park Brake):Diagram3 A26 - City Horn (W/ 4PIN Park Brake):Diagram4 A26 - City Horn (W/ 4PIN):Diagram1 A26 - City Horn (W/ 4PIN):Diagram2 A26 - City Horn (W/ 4PIN):Diagram3 A26 - City Horn (W/ 4PIN):Diagram4

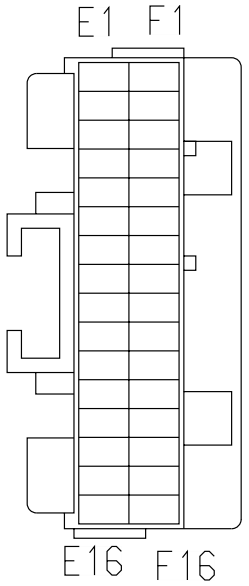

A26 - City Horn (W/ 10PIN Park Brake):Diagram1
A26 - City Horn (W/ 10PIN Park Brake):Diagram2
A26 - City Horn (W/ 10PIN):Diagram1
A26 - City Horn (W/ 10PIN):Diagram2
A26 - Clutch Switch/Monitoring (High and Low Switch to BCM):Diagram1
A26 - Directional Signal (Turn) W/ Daisy Chain Box Lamps:Diagram1
A26 - Directional Signal (Turn) W/ Daisy Chain Box Lamps, W/ Plow Lights:Diagram1-Option 1 (Snow Plow #1)
A26 - Directional Signal (Turn) W/ Daisy Chain Box Lamps, W/ Plow Lights:Diagram1-Option 2 (Snow Plow #2)
A26 - Directional Signal (Turn) W/ LED BOX LAMPS:Diagram1
A26 - Directional Signal (Turn) W/ LED BOX LAMPS, W/Plow Lights:Diagram1-Option 1 (Snow Plow #1)
A26 - Directional Signal (Turn) W/ LED BOX LAMPS, W/Plow Lights:Diagram1-Option 2 (Snow Plow #2)
A26 - Directional Signal (Turn) W/ Less Power Module Tail Board, W/Hazard SW:Diagram1
A26 - Directional Signal (Turn) W/ Less Power Module Tail Board, W/Hazard SW, W/Plow Lights:Diagram1-Option 1 (Snow Plow #1)
A26 - Directional Signal (Turn) W/ Less Power Module Tail Board, W/Hazard SW, W/Plow Lights:Diagram1-Option 2 (Snow Plow #2)
A26 - Directional Signal (Turn) W/ Single Tail Board W/Hazard SW:Diagram1
A26 - Directional Signal (Turn) W/ Single Tail Board, W/Hazard SW, W/Plow Lights:Diagram1-Option 1 (Snow Plow #1)
A26 - Directional Signal (Turn) W/ Single Tail Board, W/Hazard SW, W/Plow Lights:Diagram1-Option 2 (Snow Plow #2)
A26 - DLB - Remote Power Module (3 RPM n/Switch Pack):Diagram1
A26 - DLB - Remote Power Module (3 RPM n/Switch Pack)Option2:Diagram1
A26 - DLB - Remote Power Module (3 RPM n/Switch Pack)Option2:Diagram2
A26 - DLB - Remote Power Modules (1 RPM n/ Switch Packs):Diagram1
A26 - DLB - Remote Power Modules (1 RPM n/ Switch Packs):Diagram2
A26 - DLB - Remote Power Modules (1 RPM n/ Switch Packs):Diagram3

A26 - DLB - Remote Power Modules (1 RPM w/ Switch Packs):Diagram1
A26 - DLB - Remote Power Modules (1 RPM w/ Switch Packs):Diagram2
A26 - DLB - Remote Power Modules (1 RPM w/ Switch Packs):Diagram3
A26 - DLB - Remote Power Modules (2 RPM n/ Switch Pack):Diagram1
A26 - DLB - Remote Power Modules (2 RPM n/ Switch Pack):Diagram2
A26 - DLB - Remote Power Modules (2 RPM n/ Switch Pack):Diagram3
A26 - DLB - Remote Power Modules (2 RPM n/ Switch Pack)Option2:Diagram1
A26 - DLB - Remote Power Modules (2 RPM w/ Switch Packs):Diagram1
A26 - DLB - Remote Power Modules (2 RPM w/ Switch Packs)Option2:Diagram1
A26 - DLB - Remote Power Modules (2 RPM w/ Switch Packs)Option2:Diagram2
A26 - DLB - Remote Power Modules (2 RPM w/ Switch Packs)Option2:Diagram3
A26 - DLB - Remote Power Modules (3 RPM w/ Swtich Packs):Diagram1
A26 - DLB - Remote Power Modules (3 RPM w/ Swtich Packs)Option2:Diagram1
A26 - DLB - Remote Power Modules (3 RPM w/ Swtich Packs)Option2:Diagram2
A26 - Hazard Warning Light N/Trlr Socket:Diagram1
A26 - Hazard Warning Light N/Trlr Socket:Diagram2
A26 - Headlight W/Plowlights, W/LOWW, W/O Interrupt:Diagram1-Combination1
A26 - Headlight W/Plowlights, W/LOWW, W/O Interrupt:Diagram1-Combination2
A26 - Headlight W/Plowlights, W/LOWW, W/O Interrupt:Diagram1-Combination3
A26 - Headlight W/Plowlights, W/LOWW, W/O Interrupt:Diagram1-Combination4
A26 - Headlight W/Plowlights, W/O LOWW, W/O Interrupt:Diagram1-Combination1
A26 - Headlight W/Plowlights, W/O LOWW, W/O Interrupt:Diagram1-Combination2
A26 - Headlight W/Plowlights, W/O LOWW, W/O Interrupt:Diagram1-Combination3

A26 - Headlight W/Plowlights, W/O LOWW, W/O Interrupt:Diagram1-Combination4
A26 - Headlights W/LOWW, W/Interrupt - 10 PIN CLK:Diagram1-Combination1
A26 - Headlights W/LOWW, W/Interrupt - 10 PIN CLK:Diagram1-Combination2
A26 - Headlights W/LOWW, W/O Interrupt:Diagram1-Combination1
A26 - Headlights W/LOWW, W/O Interrupt:Diagram1-Combination2
A26 - Headlights W/O LOWW, W/Interrupt - 10 PIN CLK:Diagram1-Combination1
A26 - Headlights W/O LOWW, W/Interrupt - 10 PIN CLK:Diagram1-Combination2
A26 - Headlights W/O LOWW, W/O Interrupt:Diagram1-Combination1
A26 - Headlights W/O LOWW, W/O Interrupt:Diagram1-Combination2
A26 - Headlights W/PlowLights, W/LOWW, W/Interrupt - 10 PIN CLK:Diagram1-Combination1
A26 - Headlights W/PlowLights, W/LOWW, W/Interrupt - 10 PIN CLK:Diagram1-Combination2
A26 - Headlights W/PlowLights, W/LOWW, W/Interrupt - 10 PIN CLK:Diagram1-Combination3
A26 - Headlights W/PlowLights, W/LOWW, W/Interrupt - 10 PIN CLK:Diagram1-Combination4
A26 - Headlights W/PlowLights, W/O LOWW, W/Interrupt - 10 PIN CLK:Diagram1-Combination1
A26 - Headlights W/PlowLights, W/O LOWW, W/Interrupt - 10 PIN CLK:Diagram1-Combination2
A26 - Headlights W/PlowLights, W/O LOWW, W/Interrupt - 10 PIN CLK:Diagram1-Combination3
A26 - Headlights W/PlowLights, W/O LOWW, W/Interrupt - 10 PIN CLK:Diagram1-Combination4
A26 - Heating Ventilation & Air Conditioning (HVAC):Diagram1
A26 - Heating Ventilation & Air Conditioning (HVAC) Auto Temp Control:Diagram1 - HVAC
A26 - I/O Expansion:Diagram1
A26 - Park Brake Control (Monitoring)(GEN IV BCM):Diagram1
A26 - Remote Start/Stop:Diagram1
A26 - Snow Valve Control:Diagram1
A26 - Snow Valve Control:Diagram2
A26 - Telematics (PEOPLE NET, DAYCAB):Diagram1

A26 - Telematics J1708 (9.6kbps):A26 - Telematics J1708 (9.6kbps)
A26 - Transmission Oil Temperature-Manual Trans:Diagram1
A26 - Transmission Oil Temperature-Manual Trans:Diagram2
A26 - Transmission Oil Temperature-Manual Trans w/Aux Gauge:Diagram1
A26 - Transmission Oil Temperature-Manual Trans w/Aux Gauge:Diagram2
A26 - Transmission Power Take Off (Auto Trans Dual PTO W/ 42 Parameters):Diagram1
A26 - Transmission Power Take Off (Auto Trans Single PTO w/21 Parameters):Diagram1
A26 - Transmission Power Take Off (Manual Trans Dual PTO W/ 42 Parameters):Diagram1
A26 - Transmission Power Take Off (Manual Trans Single PTO w/ 21 Parameters):Diagram1
A26 - Transmission Power Take Off (Single Input Configurable pull up or pull down):Diagram1
A26 - Windshield Wipers:Diagram1
A26 - WORK LIGHT W Backup 1 Bulb:Diagram1
A26 - WORK LIGHT W Backup 1 Bulb:Diagram2
A26 - WORK LIGHT W BackUP 1 BULB:Diagram1
A26 - WORK LIGHT W BackUP 1 BULB:Diagram2
A26 - Work Light W/ Backup 1 Bulb W/Automatic W/ RKE:Diagram1-Combination1
A26 - Work Light W/ Backup 1 Bulb W/Automatic W/ RKE:Diagram1-Combination2
A26 - Work Light W/ Backup 1 Bulb W/Manual W/ RKE:Diagram1-Combination1
A26 - Work Light W/ Backup 1 Bulb W/Manual W/ RKE:Diagram1-Combination2
A26/B6.7/L9 - Adjustable Engine Speed Control (PTO) 4-pin:Diagram1
A26/B6.7/L9 - Adjustable Engine Speed Control (PTO) 10-pin:Diagram1
A26/B6.7/L9 - Adjustable Engine Speed Control (PTO) 10-pin:Diagram2
A26/B6.7/L9 - BCM (Body Control Module):Connector J5-1602
A26/B6.7/L9 - Compressed Air Supply:Diagram1
A26/B6.7/L9 - Cruise Control (W/ One Telltale 4 Pin):Diagram1
A26/B6.7/L9 - Cruise Control (W/ One Telltale 4 Pin):Diagram2
A26/B6.7/L9 - Cruise Control (W/ One Telltale 10 Pin):Diagram1
A26/B6.7/L9 - Cruise Control (W/ One Telltale 10 Pin):Diagram2
A26/B6.7/L9 - Door Ajar Reminder (Entry /Exit):4 Door:Diagram1

A26/B6.7/L9 - Door Ajar Reminder (Entry/Exit) 2 Door:Diagram1
A26/B6.7/L9 - Driver and Passenger Seats - RollTek (Hard Wired):Diagram1
A26/B6.7/L9 - Instrument Cluster (Premium):Diagram1
A26/B6.7/L9 - Instrument Cluster (Premium):Diagram2
A26/B6.7/L9 - Over the Air Programming (OnCommand Link / N2 Module):Diagram1
A26/B6.7/L9 - PARK LIGHTS - N/Marker Interrupt:Diagram1
A26/B6.7/L9 - PARK LIGHTS - N/Marker Interrupt:Diagram2
A26/B6.7/L9 - PARK LIGHTS - W/Marker Interrupt 4 pin clockspring:Diagram1
A26/B6.7/L9 - PARK LIGHTS - W/Marker Interrupt 4 pin clockspring:Diagram2
A26/B6.7/L9 - PARK LIGHTS - W/Marker Interrupt 10pin CLCKSPRING:Diagram1
A26/B6.7/L9 - PARK LIGHTS - W/Marker Interrupt 10pin CLCKSPRING:Diagram2
A26/B6.7/L9 - Radio w/Bluetooth:Diagram1
A26/B6.7/L9 - Radio w/Bluetooth:Diagram2
A26/B6.7/L9 - Radio w/Steering Wheel Pod:Diagram1
A26/B6.7/L9 - Radio w/Steering Wheel Pod:Diagram2
A26/B6.7/L9 - Rear Suspension Pressure Monitoring (Auxiliary Gauge):Diagram1
A26/B6.7/L9 - Rear Suspension Pressure Monitoring (Auxiliary Gauge):Diagram2
A26/B6.7/L9 - Rear Suspension Pressure Monitoring (Virtual Gauge):Diagram1
A26/B6.7/L9 - Rear Suspension Pressure Monitoring (Virtual Gauge):Diagram2
A26/B6.7/L9 - Seatbelt Reminder (Warning)(Driver & Passenger in parallel):Diagram1
A26/B6.7/L9 - Seatbelt Reminder (Warning)(Driver only):Diagram1
A26/B6.7/L9 - Seats (RollTek) Drivers Seat Only (Hard Wired) - Leather:Diagram1
A26/B6.7/L9 - Seats (RollTek) Drivers Seat Only (Hard Wired) - Mordular:Diagram1
A26/B6.7/L9 - Seats (RollTek) Drivers Seat Only (Hard Wired) - Vinyl:Diagram1
A26/B6.7/L9 - Snow Valve Control:Diagram1
A26/B6.7/L9 - Vehicle Information Display (With Bluetooth):Diagram1
A26/B6.7/L9 - Vehicle Information Display (Without Bluetooth):Diagram1

A26/B6.7/L9 - Vehicle Information Display Premium w/ Wi-Fi (VID):Diagram1
A26/B6.7/L9 - Vehicle Sleep Mode:Diagram1
A26/B6.7/L9 - Vehicle Speed Control (Cruise Control) 4 Pin:Diagram1
A26/B6.7/L9 - Vehicle Speed Control (Cruise Control) 10 Pin:Diagram1
B6.7 - DLB - Remote Power Modules (1 RPM n/ Switch Packs):Diagram1
B6.7 - DLB - Remote Power Modules (1 RPM n/ Switch Packs):Diagram2
B6.7 - DLB - Remote Power Modules (1 RPM n/ Switch Packs):Diagram3
B6.7 - Snow Valve Control:Diagram1
B6.7 - Snow Valve Control:Diagram2
B6.7 - 26 inch Fuel Tank:Diagram1
B6.7 - 26 inch Fuel Tank:Diagram2
B6.7 - 26 inch Fuel Tank:Diagram3
B6.7 - 26 inch Fuel Tank - Secondary:Diagram1
B6.7 - Auxiliary Air Solenoids (1 Normally Closed) Option 1:Diagram1
B6.7 - Auxiliary Air Solenoids (1 Normally Closed) Option 2:Diagram1
B6.7 - Auxiliary Air Solenoids (1 Normally Closed) Option 2:Diagram2
B6.7 - Auxiliary Air Solenoids (1 Normally Closed) Option 2:Diagram3
B6.7 - Auxiliary Air Solenoids (1 Normally Closed) Option 3:Diagram1
B6.7 - Auxiliary Air Solenoids (1 Normally Closed) Option 3:Diagram2
B6.7 - Auxiliary Air Solenoids (1 Normally Closed) Option 3:Diagram3
B6.7 - Axle Loading (Weight) Rear:Diagram1
B6.7 - Axle Loading (Weight) Rear:Diagram2
B6.7 - Axle Temperature Monitoring (Single Rear Aux Gauge):Diagram1
B6.7 - Axle Temperature Monitoring (Single Rear Virtual Gauge):Diagram1
B6.7 - Body J1939 (250kbps):B6.7 - Body J1939 (250Kbps)
B6.7 - Brake Pressure (Auxiliary Gauge):Diagram1
B6.7 - Brake Pressure (Virtual Gauge):Diagram1
B6.7 - Brake Switch:Diagram1
B6.7 - CAN Layout:Body Standard J1939 (250Kbps)

B6.7 - CAN Layout:Telematics J1708
B6.7 - City Horn (W/ 4PIN CLK & Park Brake):Diagram1
B6.7 - City Horn (W/ 4PIN CLK & Park Brake):Diagram2
B6.7 - City Horn (W/ 4PIN CLK & Park Brake):Diagram3
B6.7 - City Horn (W/ 4PIN CLK & Park Brake):Diagram4
B6.7 - City Horn (W/ 4PIN CLK & Park Brake):Diagram5
B6.7 - City Horn (W/ 4PIN CLK & Park Brake):Diagram6
B6.7 - City Horn (W/ 4PIN CLK):Diagram1
B6.7 - City Horn (W/ 4PIN CLK):Diagram2
B6.7 - City Horn (W/ 4PIN CLK):Diagram3
B6.7 - City Horn (W/ 4PIN CLK):Diagram4
B6.7 - City Horn (W/ 4PIN CLK):Diagram5
B6.7 - City Horn (W/ 4PIN CLK):Diagram6
B6.7 - City Horn (W/ 10PIN CLK & Park Brake):Diagram1
B6.7 - City Horn (W/ 10PIN CLK & Park Brake):Diagram2
B6.7 - City Horn (W/ 10PIN CLK & Park Brake):Diagram3
B6.7 - City Horn (W/ 10PIN CLK):Diagram1
B6.7 - City Horn (W/ 10PIN CLK):Diagram2
B6.7 - City Horn (W/ 10PIN CLK):Diagram3
B6.7 - Clutch Switch/Monitoring (High and Low Switch to BCM):Diagram1
B6.7 - Directional Signal (Turn) W/ Less Power Module Tail Board W/Hazard SW W/PLOW LIGHTS:Diagram1
B6.7 - Directional Signal (Turn) W/ Less Power Module Tail Board W/Hazard SW W/PLOW LIGHTS:Diagram2
B6.7 - Directional Signal (Turn) W/ Less Power Module Tail Board W/Hazard SW W/PLOW LIGHTS:Diagram3
B6.7 - Directional Signal (Turn) W/ Less Power Module Tail Board W/Hazard SW W/PLOW LIGHTS:Diagram4
B6.7 - Directional Signal (Turn) W/ DAISY CHAIN BOX LAMPS:Diagram1
B6.7 - Directional Signal (Turn) W/ DAISY CHAIN BOX LAMPS:Diagram2
B6.7 - Directional Signal (Turn) W/ Daisy Chain Box Lamps W/ Plow Lights:Diagram1
B6.7 - Directional Signal (Turn) W/ Daisy Chain Box Lamps W/ Plow Lights:Diagram2
B6.7 - Directional Signal (Turn) W/ Daisy Chain Box Lamps W/ Plow Lights:Diagram3
B6.7 - Directional Signal (Turn) W/ Daisy Chain Box Lamps W/ Plow Lights:Diagram4
B6.7 - Directional Signal (Turn) W/ LED BOX LAMPS:Diagram1
B6.7 - Directional Signal (Turn) W/ LED BOX LAMPS:Diagram2

B6.7 - Directional Signal (Turn) W/ LED BOX LAMPS W/Plow Lights:Diagram1
B6.7 - Directional Signal (Turn) W/ LED BOX LAMPS W/Plow Lights:Diagram2
B6.7 - Directional Signal (Turn) W/ LED BOX LAMPS W/Plow Lights:Diagram3
B6.7 - Directional Signal (Turn) W/ LED BOX LAMPS W/Plow Lights:Diagram4
B6.7 - Directional Signal (Turn) W/ Less Power Module Tail Board W/Hazard SW:Diagram1
B6.7 - Directional Signal (Turn) W/ Less Power Module Tail Board W/Hazard SW:Diagram2
B6.7 - Directional Signal (Turn) W/ Single Tail Board W/Hazard SW:Diagram1
B6.7 - Directional Signal (Turn) W/ Single Tail Board W/Hazard SW:Diagram2
B6.7 - Directional Signal (Turn) W/ Single Tail Board W/Plow Lights:Diagram1
B6.7 - Directional Signal (Turn) W/ Single Tail Board W/Plow Lights:Diagram2
B6.7 - Directional Signal (Turn) W/ Single Tail Board W/Plow Lights:Diagram3
B6.7 - Directional Signal (Turn) W/ Single Tail Board W/Plow Lights:Diagram4
B6.7 - DLB - Remote Power Module (3 RPM n/Switch Pack):Diagram1
B6.7 - DLB - Remote Power Modules (1 RPM w/ Switch Packs):Diagram1
B6.7 - DLB - Remote Power Modules (1 RPM w/ Switch Packs):Diagram2
B6.7 - DLB - Remote Power Modules (1 RPM w/ Switch Packs):Diagram3
B6.7 - DLB - Remote Power Modules (2 RPM n/ Switch Pack):Diagram1
B6.7 - DLB - Remote Power Modules (2 RPM n/ Switch Pack):Diagram2
B6.7 - DLB - Remote Power Modules (2 RPM n/ Switch Pack):Diagram3
B6.7 - DLB - Remote Power Modules (2 RPM n/ Switch Pack):Diagram4
B6.7 - DLB - Remote Power Modules (2 RPM w/ Switch Packs):Diagram1
B6.7 - DLB - Remote Power Modules (2 RPM w/ Switch Packs):Diagram2

B6.7 - DLB - Remote Power Modules (2 RPM w/ Switch Packs):Diagram3
B6.7 - DLB - Remote Power Modules (2 RPM w/ Switch Packs):Diagram4
B6.7 - DLB - Remote Power Modules (3 RPM w/ Swtich Packs):Diagram1
B6.7 - Headlight W/Plowlights W/LOWW W/O Headlight Interrupt -10 PIN CLK:Diagram1
B6.7 - Headlight W/Plowlights W/LOWW W/O Headlight Interrupt -10 PIN CLK:Diagram2
B6.7 - Headlight W/Plowlights W/LOWW W/O Headlight Interrupt -10 PIN CLK:Diagram3
B6.7 - Headlight W/Plowlights W/LOWW W/O Headlight Interrupt -10 PIN CLK:Diagram4
B6.7 - Headlight W/Plowlights W/LOWW W/O Headlight Interrupt -10 PIN CLK:Diagram5
B6.7 - Headlight W/Plowlights W/LOWW W/O Headlight Interrupt -10 PIN CLK:Diagram6
B6.7 - Headlight W/Plowlights W/LOWW W/O Headlight Interrupt -10 PIN CLK:Diagram7
B6.7 - Headlight W/Plowlights W/LOWW W/O Headlight Interrupt -10 PIN CLK:Diagram8
B6.7 - Headlights W 10PIN CLK W/LOWW W/Interrupt:Diagram1
B6.7 - Headlights W 10PIN CLK W/LOWW W/Interrupt:Diagram2
B6.7 - Headlights W 10PIN CLK W/LOWW W/Interrupt:Diagram3
B6.7 - Headlights W 10PIN CLK W/LOWW W/Interrupt:Diagram4
B6.7 - Headlights W 10PIN CLK W/LOWW W/O Interrupt:Diagram1
B6.7 - Headlights W 10PIN CLK W/LOWW W/O Interrupt:Diagram2
B6.7 - Headlights W 10PIN CLK W/LOWW W/O Interrupt:Diagram3
B6.7 - Headlights W 10PIN CLK W/LOWW W/O Interrupt:Diagram4
B6.7 - Headlights W/O Lights ON With Wipers (LOWW) W/O Headlights Interrupt:Diagram1
B6.7 - Headlights W/O Lights ON With Wipers (LOWW) W/O Headlights Interrupt:Diagram2
B6.7 - Headlights W/O Lights ON With Wipers (LOWW) W/O Headlights Interrupt:Diagram3
B6.7 - Headlights W/O Lights ON With Wipers (LOWW) W/O Headlights Interrupt:Diagram4
B6.7 - Headlights W/O Lights ON with wipers (LOWW) W/ Headlights Interrupt:Diagram1

B6.7 - Headlights W/O Lights ON with wipers (LOWW) W/ Headlights Interrupt:Diagram2
B6.7 - Headlights W/O Lights ON with wipers (LOWW) W/ Headlights Interrupt:Diagram3
B6.7 - Headlights W/O Lights ON with wipers (LOWW) W/ Headlights Interrupt:Diagram4
B6.7 - Headlights W/PlowLights W/Headlight Interrupt -10PIN CLK W/LOWW W/Interrupt:Diagram1
B6.7 - Headlights W/PlowLights W/Headlight Interrupt -10PIN CLK W/LOWW W/Interrupt:Diagram2
B6.7 - Headlights W/PlowLights W/Headlight Interrupt -10PIN CLK W/LOWW W/Interrupt:Diagram3
B6.7 - Headlights W/PlowLights W/Headlight Interrupt -10PIN CLK W/LOWW W/Interrupt:Diagram4
B6.7 - Headlights W/PlowLights W/Headlight Interrupt -10PIN CLK W/LOWW W/Interrupt:Diagram5
B6.7 - Headlights W/PlowLights W/Headlight Interrupt -10PIN CLK W/LOWW W/Interrupt:Diagram6
B6.7 - Headlights W/PlowLights W/Headlight Interrupt -10PIN CLK W/LOWW W/Interrupt:Diagram7
B6.7 - Headlights W/PlowLights W/Headlight Interrupt -10PIN CLK W/LOWW W/Interrupt:Diagram8
B6.7 - Headlights W/Plowlights W/O Lights ON With Wipers (LOWW) W/O Headlights Interrupt:Diagram1
B6.7 - Headlights W/Plowlights W/O Lights ON With Wipers (LOWW) W/O Headlights Interrupt:Diagram2
B6.7 - Headlights W/Plowlights W/O Lights ON With Wipers (LOWW) W/O Headlights Interrupt:Diagram3
B6.7 - Headlights W/Plowlights W/O Lights ON With Wipers (LOWW) W/O Headlights Interrupt:Diagram4
B6.7 - Headlights W/Plowlights W/O Lights ON With Wipers (LOWW) W/O Headlights Interrupt:Diagram5
B6.7 - Headlights W/Plowlights W/O Lights ON With Wipers (LOWW) W/O Headlights Interrupt:Diagram6
B6.7 - Headlights W/Plowlights W/O Lights ON With Wipers (LOWW) W/O Headlights Interrupt:Diagram7
B6.7 - Headlights W/Plowlights W/O Lights ON With Wipers (LOWW) W/O Headlights Interrupt:Diagram8
B6.7 - Headlights W/PlowLights W/O Lights ON with wipers (LOWW) W/ Headlights Interrupt:Diagram1
B6.7 - Headlights W/PlowLights W/O Lights ON with wipers (LOWW) W/ Headlights Interrupt:Diagram2
B6.7 - Headlights W/PlowLights W/O Lights ON with wipers (LOWW) W/ Headlights Interrupt:Diagram3

B6.7 - Headlights W/PlowLights W/O Lights ON with wipers (LOWW) W/ Headlights Interrupt:Diagram4
B6.7 - Headlights W/PlowLights W/O Lights ON with wipers (LOWW) W/ Headlights Interrupt:Diagram5
B6.7 - Headlights W/PlowLights W/O Lights ON with wipers (LOWW) W/ Headlights Interrupt:Diagram6
B6.7 - Headlights W/PlowLights W/O Lights ON with wipers (LOWW) W/ Headlights Interrupt:Diagram7
B6.7 - Headlights W/PlowLights W/O Lights ON with wipers (LOWW) W/ Headlights Interrupt:Diagram8
B6.7 - Heating Ventilation & Air Conditioning (HVAC):Diagram1
B6.7 - Heating Ventilation & Air Conditioning (HVAC) Auto Temp Control:Diagram1 - HVAC
B6.7 - I/O Expansion:Diagram1
B6.7 - Park Brake Controls (Monitoring) (Door Switch City Horn):Diagram1
B6.7 - Remote Start/Stop:Diagram1
B6.7 - Remote Start/Stop w/ Emergency Pump:Diagram1
B6.7 - Telematics J1708 (9.6kbps):B6.7 - Telematics J1708
B6.7 - Transmission Oil Temperature-Manual Trans:Diagram1
B6.7 - Transmission Oil Temperature-Manual Trans (w/Aux Gauge):Diagram1
B6.7 - Transmission Power Take Off (Auto Trans Single PTO w/21 Parameters):Diagram1
B6.7 - Transmission Power Take Off (Manual Trans Single PTO w/21 Parameters):Diagram1
B6.7 - Transmission Power Take Off (Single Input configurable pull up or pull down):Diagram1
B6.7 - Two Speed Axle (AirShift on Shifter):Diagram1
B6.7 - Windshield Washer Pump & Low Fluid Sensor:Diagram1
B6.7 - Windshield Wipers:Diagram1
B6.7 - WORK LIGHT W BackUP 1 BULB:Diagram1
L9 - 26 inch Fuel Tank:Diagram1
L9 - 26 inch Fuel Tank:Diagram2
L9 - 26 inch Fuel Tank:Diagram3
L9 - 26 inch Fuel Tank:Diagram4
L9 - 26 inch Fuel Tank:Diagram5
L9 - 26 inch Fuel Tank:Diagram6
L9 - 26 inch Fuel Tank - Secondary:Diagram1
L9 - 26 inch Fuel Tank - Secondary:Diagram2
L9 - 26 inch Fuel Tank - Secondary:Diagram3
L9 - 26 inch Fuel Tank - Secondary:Diagram4
L9 - 26 inch Fuel Tank - Secondary:Diagram5
L9 - 26 inch Fuel Tank - Secondary:Diagram6

L9 - 26 inch Fuel Tank - Secondary:Diagram7
L9 - Auxiliary Air Solenoids (1 Normally Closed):Diagram1
L9 - Auxillary Air Solenoids Normally Closed:Combination1
L9 - Auxillary Air Solenoids Normally Closed:Combination2
L9 - Auxillary Air Solenoids Normally Closed:Combination3
L9 - Auxillary Air Solenoids Normally Closed:Combination4
L9 - Auxillary Air Solenoids Normally Closed:Combination5
L9 - Auxillary Air Solenoids Normally Closed:Combination6
L9 - Axle Loading (Weight) Rear:Diagram1
L9 - Axle Loading (Weight) Rear:Diagram2
L9 - Axle Temperature Monitoring (Tandem Rear Aux Gauge) Option 1:Diagram1
L9 - Axle Temperature Monitoring (Tandem Rear Aux Gauge) Option 2:Diagram1
L9 - Axle Temperature Monitoring (Tandem Rear Virtual Gauge) Option 1:Diagram1
L9 - Axle Temperature Monitoring (Tandem Rear Virtual Gauge) Option 2:Diagram1
L9 - Body J1939 (250kbps):L9 - Body J1939 (250Kbps)
L9 - Brake Pressure (Auxiliary Gauge):Diagram1
L9 - Brake Pressure (Virtual Gauge):Diagram1
L9 - Brake Switch:Diagram1
L9 - CAN Layout:Body Standard J1939 (250Kbps)
L9 - CAN Layout:Telematics J1708
L9 - City Horn (W/ 4PIN CLK & Park Brake):Diagram1
L9 - City Horn (W/ 4PIN CLK & Park Brake):Diagram2
L9 - City Horn (W/ 4PIN CLK & Park Brake):Diagram3
L9 - City Horn (W/ 4PIN CLK & Park Brake):Diagram4
L9 - City Horn (W/ 4PIN CLK):Diagram1
L9 - City Horn (W/ 4PIN CLK):Diagram2
L9 - City Horn (W/ 4PIN CLK):Diagram3
L9 - City Horn (W/ 4PIN CLK):Diagram4
L9 - City Horn (W/ 10PIN CLK & Park Brake):Diagram1
L9 - City Horn (W/ 10PIN CLK & Park Brake):Diagram2
L9 - City Horn (W/ 10PIN CLK):Diagram1
L9 - City Horn (W/ 10PIN CLK):Diagram2
L9 - Clutch Switch/Monitoring (High and Low Switch to BCM):Diagram1
L9 - Directional Signal (Turn) W/ Less Power Module Tail Board W/Hazard SW W/PLOW LIGHTS:Diagram1
L9 - Directional Signal (Turn) W/ Less Power Module Tail Board W/Hazard SW W/PLOW LIGHTS:Diagram2
L9 - Directional Signal (Turn) W/ Less Power Module Tail Board W/Hazard SW W/PLOW LIGHTS:Diagram3

L9 - Directional Signal (Turn) W/ Less Power Module Tail Board W/Hazard SW W/PLOW LIGHTS:Diagram4
L9 - Directional Signal (Turn) W/ DAISY CHAIN BOX LAMPS:Diagram1
L9 - Directional Signal (Turn) W/ DAISY CHAIN BOX LAMPS:Diagram2
L9 - Directional Signal (Turn) W/ Daisy Chain Box Lamps W/ Plow Lights:Diagram1
L9 - Directional Signal (Turn) W/ Daisy Chain Box Lamps W/ Plow Lights:Diagram2
L9 - Directional Signal (Turn) W/ Daisy Chain Box Lamps W/ Plow Lights:Diagram3
L9 - Directional Signal (Turn) W/ Daisy Chain Box Lamps W/ Plow Lights:Diagram4
L9 - Directional Signal (Turn) W/ LED BOX LAMPS:Diagram1
L9 - Directional Signal (Turn) W/ LED BOX LAMPS:Diagram2
L9 - Directional Signal (Turn) W/ LED BOX LAMPS W/Plow Lights:Diagram1
L9 - Directional Signal (Turn) W/ LED BOX LAMPS W/Plow Lights:Diagram2
L9 - Directional Signal (Turn) W/ LED BOX LAMPS W/Plow Lights:Diagram3
L9 - Directional Signal (Turn) W/ LED BOX LAMPS W/Plow Lights:Diagram4
L9 - Directional Signal (Turn) W/ Less Power Module Tail Board W/Hazard SW:Diagram1
L9 - Directional Signal (Turn) W/ Less Power Module Tail Board W/Hazard SW:Diagram2
L9 - Directional Signal (Turn) W/ Single Tail Board W/Hazard SW:Diagram1
L9 - Directional Signal (Turn) W/ Single Tail Board W/Hazard SW:Diagram2
L9 - Directional Signal (Turn) W/ Single Tail Board W/Plow Lights:Diagram1
L9 - Directional Signal (Turn) W/ Single Tail Board W/Plow Lights:Diagram2
L9 - Directional Signal (Turn) W/ Single Tail Board W/Plow Lights:Diagram3
L9 - Directional Signal (Turn) W/ Single Tail Board W/Plow Lights:Diagram4
L9 - DLB - Remote Power Module (3 RPM n/Switch Pack):Diagram1
L9 - DLB - Remote Power Modules (1 RPM n/ Switch Packs):Diagram1

L9 - DLB - Remote Power Modules (1 RPM n/ Switch Packs):Diagram1-Combination3
L9 - DLB - Remote Power Modules (1 RPM n/ Switch Packs):Diagram2
L9 - DLB - Remote Power Modules (1 RPM w/ Switch Packs):Diagram1
L9 - DLB - Remote Power Modules (1 RPM w/ Switch Packs):Diagram2
L9 - DLB - Remote Power Modules (1 RPM w/ Switch Packs):Diagram3
L9 - DLB - Remote Power Modules (2 RPM n/ Switch Pack):Diagram1
L9 - DLB - Remote Power Modules (2 RPM n/ Switch Pack):Diagram2
L9 - DLB - Remote Power Modules (2 RPM n/ Switch Pack):Diagram3
L9 - DLB - Remote Power Modules (2 RPM n/ Switch Pack):Diagram4
L9 - DLB - Remote Power Modules (2 RPM w/ Switch Packs):Diagram1
L9 - DLB - Remote Power Modules (2 RPM w/ Switch Packs):Diagram2
L9 - DLB - Remote Power Modules (2 RPM w/ Switch Packs):Diagram3
L9 - DLB - Remote Power Modules (2 RPM w/ Switch Packs):Diagram4
L9 - DLB - Remote Power Modules (3 RPM w/ Swtich Packs):Diagram1
L9 - Four Auxillary Air Solenoids:Diagram1
L9 - Hazard Warning Light N/Trlr Socket:Diagram1
L9 - Hazard Warning Light N/Trlr Socket:Diagram2
L9 - Headlight W/Plowlights W/LOWW W/O Headlight Interrupt -10 PIN CLK:Diagram1
L9 - Headlight W/Plowlights W/LOWW W/O Headlight Interrupt -10 PIN CLK:Diagram2
L9 - Headlight W/Plowlights W/LOWW W/O Headlight Interrupt -10 PIN CLK:Diagram3
L9 - Headlight W/Plowlights W/LOWW W/O Headlight Interrupt -10 PIN CLK:Diagram4
L9 - Headlight W/Plowlights W/LOWW W/O Headlight Interrupt -10 PIN CLK:Diagram5
L9 - Headlight W/Plowlights W/LOWW W/O Headlight Interrupt -10 PIN CLK:Diagram6

L9 - Headlight W/Plowlights W/LOWW W/O Headlight Interrupt -10 PIN CLK:Diagram7
L9 - Headlight W/Plowlights W/LOWW W/O Headlight Interrupt -10 PIN CLK:Diagram8
L9 - Headlights W 10PIN CLK W/LOWW W/Interrupt:Diagram1
L9 - Headlights W 10PIN CLK W/LOWW W/Interrupt:Diagram2
L9 - Headlights W 10PIN CLK W/LOWW W/Interrupt:Diagram3
L9 - Headlights W 10PIN CLK W/LOWW W/Interrupt:Diagram4
L9 - Headlights W 10PIN CLK W/LOWW W/O Interrupt:Diagram1
L9 - Headlights W 10PIN CLK W/LOWW W/O Interrupt:Diagram2
L9 - Headlights W 10PIN CLK W/LOWW W/O Interrupt:Diagram3
L9 - Headlights W 10PIN CLK W/LOWW W/O Interrupt:Diagram4
L9 - Headlights W/O Lights ON With Wipers (LOWW) W/O Headlights Interrupt:Diagram1
L9 - Headlights W/O Lights ON With Wipers (LOWW) W/O Headlights Interrupt:Diagram2
L9 - Headlights W/O Lights ON With Wipers (LOWW) W/O Headlights Interrupt:Diagram3
L9 - Headlights W/O Lights ON With Wipers (LOWW) W/O Headlights Interrupt:Diagram4
L9 - Headlights W/O Lights ON with wipers (LOWW) W/ Headlights Interrupt:Diagram1
L9 - Headlights W/O Lights ON with wipers (LOWW) W/ Headlights Interrupt:Diagram2
L9 - Headlights W/O Lights ON with wipers (LOWW) W/ Headlights Interrupt:Diagram3
L9 - Headlights W/O Lights ON with wipers (LOWW) W/ Headlights Interrupt:Diagram4
L9 - Headlights W/PlowLights W/Headlight Interrupt -10PIN CLK W/LOWW W/Interrupt:Diagram1
L9 - Headlights W/PlowLights W/Headlight Interrupt -10PIN CLK W/LOWW W/Interrupt:Diagram2
L9 - Headlights W/PlowLights W/Headlight Interrupt -10PIN CLK W/LOWW W/Interrupt:Diagram3
L9 - Headlights W/PlowLights W/Headlight Interrupt -10PIN CLK W/LOWW W/Interrupt:Diagram4
L9 - Headlights W/PlowLights W/Headlight Interrupt -10PIN CLK W/LOWW W/Interrupt:Diagram5
L9 - Headlights W/PlowLights W/Headlight Interrupt -10PIN CLK W/LOWW W/Interrupt:Diagram6

L9 - Headlights W/PlowLights W/Headlight Interrupt -10PIN CLK W/LOWW W/Interrupt:Diagram7
L9 - Headlights W/PlowLights W/Headlight Interrupt -10PIN CLK W/LOWW W/Interrupt:Diagram8
L9 - Headlights W/Plowlights W/O Lights ON With Wipers (LOWW) W/O Headlights Interrupt:Diagram1
L9 - Headlights W/Plowlights W/O Lights ON With Wipers (LOWW) W/O Headlights Interrupt:Diagram2
L9 - Headlights W/Plowlights W/O Lights ON With Wipers (LOWW) W/O Headlights Interrupt:Diagram3
L9 - Headlights W/Plowlights W/O Lights ON With Wipers (LOWW) W/O Headlights Interrupt:Diagram4
L9 - Headlights W/Plowlights W/O Lights ON With Wipers (LOWW) W/O Headlights Interrupt:Diagram5
L9 - Headlights W/Plowlights W/O Lights ON With Wipers (LOWW) W/O Headlights Interrupt:Diagram6
L9 - Headlights W/Plowlights W/O Lights ON With Wipers (LOWW) W/O Headlights Interrupt:Diagram7
L9 - Headlights W/Plowlights W/O Lights ON With Wipers (LOWW) W/O Headlights Interrupt:Diagram8
L9 - Headlights W/PlowLights W/O Lights ON with wipers (LOWW) W/ Headlights Interrupt:Diagram1
L9 - Headlights W/PlowLights W/O Lights ON with wipers (LOWW) W/ Headlights Interrupt:Diagram2
L9 - Headlights W/PlowLights W/O Lights ON with wipers (LOWW) W/ Headlights Interrupt:Diagram3
L9 - Headlights W/PlowLights W/O Lights ON with wipers (LOWW) W/ Headlights Interrupt:Diagram4
L9 - Headlights W/PlowLights W/O Lights ON with wipers (LOWW) W/ Headlights Interrupt:Diagram5
L9 - Headlights W/PlowLights W/O Lights ON with wipers (LOWW) W/ Headlights Interrupt:Diagram6
L9 - Headlights W/PlowLights W/O Lights ON with wipers (LOWW) W/ Headlights Interrupt:Diagram7
L9 - Headlights W/PlowLights W/O Lights ON with wipers (LOWW) W/ Headlights Interrupt:Diagram8
L9 - Heating Ventilation & Air Conditioning (HVAC):Diagram1
L9 - Heating Ventilation & Air Conditioning (HVAC) Auto Temp Control:Diagram1 - HVAC
L9 - I/O Expansion:Diagram1
L9 - Park Brake Control (Monitoring)(GEN IV BCM):Diagram1
L9 - Park Brake Controls (Monitoring) (Door Switch City Horn):Diagram1
L9 - Remote Start/Stop:Diagram1

L9 - Remote Start/Stop w/ Emergency Pump:Diagram1
L9 - Snow Valve Control:Diagram1
L9 - Snow Valve Control:Diagram2
L9 - Telematics (PEOPLE NET DAYCAB):Diagram1
L9 - Telematics J1708 (9.6kbps):Telematics J1708 (9.6kbps)
L9 - Three Auxillary Air Solenoids:Diagram1
L9 - Three Auxillary Air Solenoids:Diagram2
L9 - Three Auxillary Air Solenoids:Diagram3
L9 - Transmission Oil Temperature-Manual Trans w/Aux Gauge:Diagram1-Combination1
L9 - Transmission Oil Temperature-Manual Transmission:Diagram1-Combination1
L9 - Transmission Power Take Off (Auto Trans Single PTO w/21 Parameters):Diagram1
L9 - Transmission Power Take Off (Auto Trans with Lectradrive):Diagram1
L9 - Transmission Power Take Off (Lectrashift PTO with Manual Trans):Diagram1
L9 - Transmission Power Take Off (Manual Trans Single PTO w/21 Parameters):Diagram1
L9 - Transmission Power Take Off (Single Input configurable pull up or pull down):Diagram1
L9 - Transmission Power Take Off (Single PTO W/ RPM and Auto Trans):Diagram1
L9 - Transmission Power Take Off (Single PTO W/ RPM and Manual Trans):Diagram1
L9 - Two Speed Axle (AirShift on Shifter):Diagram1
L9 - Windshield Washer Pump & Low Fluid Sensor:Diagram1
L9 - Windshield Washer Pump & Low Fluid Sensor:Diagram2
L9 - Windshield Wipers:Diagram1
L9 - WORK LIGHT W BackUP 1 BULB Option 1:Diagram1
L9 - WORK LIGHT W BackUP 1 BULB Option 1:Diagram2
L9 - WORK LIGHT W BackUP 1 BULB Option 1:Diagram3
L9 - WORK LIGHT W BackUP 1 BULB Option 1:Diagram4
L9 - WORK LIGHT W BackUP 1 BULB Option 2:Diagram1
L9 - WORK LIGHT W BackUP 1 BULB Option 2:Diagram2

Mates	MODU-BCM-A000-10-00

Name	Terminal Part Number	V-Min	Name	Wire Part Number	Wire CSA	Wire Spec	Wire Material description	Wire Color Description	Wire Length	End2 Terminal Part Number	End2 Pin Name	End2 Connector
E1	-	-	WIRE722843	-	0.0	-	-	-	0.0	-	A	1661
E1	-	-	-	-	-	-	-	-	-	-	-	-
E1	-	-	WIRE565818	-	0.0	-	-	-	0.0	-	A	1661
E2	-	-	WIRE722842	-	0.0	-	-	-	0.0	-	A	1660
E2	-	-	-	-	-	-	-	-	-	-	-	-
E2	-	-	WIRE565819	-	0.0	-	-	-	0.0	-	A	1660
E2	-	-	WIRE722842	-	0.0	-	-	-	0.0	-	-	-
E3	-	-	AA9Z	3510311R1	0.79	18.0	Thin Wall XLPE Primary Cable	GREY	1360.0	-	-	-
E4	-	-	WC6	3510310R1	0.53	20.0	Thin Wall XLPE Primary Cable	GREY	1385.0	-	B3	1800
E4	-	-	NK6	2643673R1	0.79	18.0	Std. Wall XLPE Primary Cable	GREY	1385.0	-	B3	1800
E4	-	-	NK6	2643673R1	0.79	18.0	Std. Wall XLPE Primary Cable	GREY	1385.0	-	-	-
E4	-	-	WC6	3510310R1	0.53	20.0	Thin Wall XLPE Primary Cable	GREY	1385.0	-	-	-

Name	Terminal Part Number	V-Min	Name	Wire Part Number	Wire CSA	Wire Spec	Wire Material description	Wire Color Description	Wire Length	End2 Terminal Part Number	End2 Pin Name	End2 Connector
E5	-	-	KA9A	3510311 R1	0.79	18.0	Thin Wall XLPE Primary Cable	GREY	1310.0	-	X	-
E5	-	-	-	-	-	-	-	-	-	-	-	-
E5	-	-	KA9A	3510311 R1	0.79	18.0	Thin Wall XLPE Primary Cable	GREY	1310.0	-	-	-
E6	-	-	SA6DB	3510310 R1	0.53	20.0	Thin Wall XLPE Primary Cable	GREY	3225.0	-	19	1703M
E6	-	-	SA6DB	3510310 R1	0.53	20.0	Thin Wall XLPE Primary Cable	GREY	3175.0	-	19	1703M
E6	-	-	SA6DB	3510310 R1	0.53	20.0	Thin Wall XLPE Primary Cable	GREY	3225.0	-	-	-
E7	-	-	AA9B	3510311 R1	0.79	18.0	Thin Wall XLPE Primary Cable	GREY	744.0	-	X	-
E7	-	-	AA9B	3510311 R1	0.79	18.0	Thin Wall XLPE Primary Cable	GREY	744.0	-	-	-
E8	-	-	ME106B	3510311 R1	0.79	18.0	Thin Wall XLPE Primary Cable	GREY	1080.0	-	56	1701

Name	Terminal Part Number	V-Min	Name	Wire Part Number	Wire CSA	Wire Spec	Wire Material description	Wire Color Description	Wire Length	End2 Terminal Part Number	End2 Pin Name	End2 Connect or
E8	-	-	ME106B	3510311 R1	0.79	18.0	Thin Wall XLPE Primary Cable	GREY	1080.0	-	-	-
E8	-	-	NL6A	2643673 R1	0.79	18.0	Std. Wall XLPE Primary Cable	GREY	1000.0	-	-	-
E9	-	-	LP88	3510299 R1	0.79	18.0	Thin Wall XLPE Primary Cable	LIGHT GREEN	3225.0	-	60	1703M
E11	-	-	AB50	3510335 R1	0.79	18.0	Thin Wall XLPE Primary Cable	YELLOW 2	1125.0	-	P	0009
E11	-	-	AC50	3510335 R1	0.79	18.0	Thin Wall XLPE Primary Cable	YELLOW 2	2220.0	-	P	0009
E11	-	-	AC50	3510335 R1	0.79	18.0	Thin Wall XLPE Primary Cable	YELLOW 2	2220.0	-	P	0009B
E11	-	-	AB50	3510335 R1	0.79	18.0	Thin Wall XLPE Primary Cable	YELLOW 2	1125.0	-	-	-
E11	-	-	AC50	3510335 R1	0.79	18.0	Thin Wall XLPE Primary Cable	YELLOW 2	2220.0	-	-	-

Name	Terminal Part Number	V-Min	Name	Wire Part Number	Wire CSA	Wire Spec	Wire Material description	Wire Color Description	Wire Length	End2 Terminal Part Number	End2 Pin Name	End2 Connector
E11	-	-	AB50	3510335 R1	0.79	18.0	Thin Wall XLPE Primary Cable	YELLOW 2	1125.0	-	P	0009B
E12	-	-	LS59A	3510311 R1	0.79	18.0	Thin Wall XLPE Primary Cable	GREY	1080.0	-	32	1701
E12	-	-	LS59A	3510311 R1	0.79	18.0	Thin Wall XLPE Primary Cable	GREY	1080.0	-	-	-
E13	-	-	YG96A	3510335 R1	0.79	18.0	Thin Wall XLPE Primary Cable	YELLOW 2	1575.0	-	X	-
E13	-	-	YG96A	3510335 R1	0.79	18.0	Thin Wall XLPE Primary Cable	YELLOW 2	1575.0	-	-	-
E14	-	-	WB70A	3510364 R1	0.53	20.0	Thin Wall XLPE Primary Cable	RED	1385.0	-	A6	1800
E14	-	-	WB70A	3510364 R1	0.53	20.0	Thin Wall XLPE Primary Cable	RED	1385.0	-	-	-
E15	-	-	XS70	3510311 R1	0.79	18.0	Thin Wall XLPE Primary Cable	GREY	1385.0	-	B9	1800

Name	Terminal Part Number	V-Min	Name	Wire Part Number	Wire CSA	Wire Spec	Wire Material description	Wire Color Description	Wire Length	End2 Terminal Part Number	End2 Pin Name	End2 Connector
E15	-	-	WB70	3510364 R1	0.53	20.0	Thin Wall XLPE Primary Cable	RED	1385.0	-	B9	1800
E15	-	-	WB70	3510364 R1	0.53	20.0	Thin Wall XLPE Primary Cable	RED	1385.0	-	-	-
E15	-	-	XS70	3510311 R1	0.79	18.0	Thin Wall XLPE Primary Cable	GREY	1385.0	-	-	-
E16	-	-	AE11-GAC	3510359 R1	0.79	18.0	Thin Wall XLPE Primary Cable	WHITE	940.0	-	-	-
F1	-	-	-	-	-	-	-	-	-	-	-	-
F2	-	-	-	-	-	-	-	-	-	-	-	-
F3	-	-	-	-	-	-	-	-	-	-	-	-
F4	-	-	-	-	-	-	-	-	-	-	-	-
F5	-	-	-	-	-	-	-	-	-	-	-	-
F5	-	-	WIRE722732	-	0.0	-	-	-	0.0	-	PIN1	-
F5	-	-	WIRE720007	-	0.0	-	-	-	0.0	-	PIN1	-
F5	-	-	WIRE565824	-	0.0	-	-	-	0.0	-	PIN1	-
F6	-	-	-	-	-	-	-	-	-	-	-	-
F6	-	-	WIRE722731	-	0.0	-	-	-	0.0	-	PIN1	-
F6	-	-	WIRE720004	-	0.0	-	-	-	0.0	-	PIN1	-

Name	Terminal Part Number	V-Min	Name	Wire Part Number	Wire CSA	Wire Spec	Wire Material description	Wire Color Description	Wire Length	End2 Terminal Part Number	End2 Pin Name	End2 Connector
F6	-	-	WIRE565822	-	0.0	-	-	-	0.0	-	PIN1	-
F7	-	-	ME61B	3510311R1	0.79	18.0	Thin Wall XLPE Primary Cable	GREY	1080.0	-	55	1701
F7	-	-	ME61B	3510311R1	0.79	18.0	Thin Wall XLPE Primary Cable	GREY	1080.0	-	-	-
F8	-	-	LF104D	3510353R1	0.79	18.0	Thin Wall XLPE Primary Cable	DARK BLUE	1080.0	-	43	1701
F8	-	-	LF104D	3510353R1	0.79	18.0	Thin Wall XLPE Primary Cable	DARK BLUE	1080.0	-	-	-
F9	-	-	RA28BA	3510329R1	0.79	18.0	Thin Wall XLPE Primary Cable	TAN	3225.0	-	-	-
F10	-	-	ZU71D	3510317R1	0.79	18.0	Thin Wall XLPE Primary Cable	ORANGE	1175.0	-	-	-
F11	-	-	UJ93A	3510329R1	0.79	18.0	Thin Wall XLPE Primary Cable	TAN	3225.0	-	-	-
F11	-	-	UJ93A	3510329R1	0.79	18.0	Thin Wall XLPE Primary Cable	TAN	3225.0	-	56	1703M

Name	Terminal Part Number	V-Min	Name	Wire Part Number	Wire CSA	Wire Spec	Wire Material description	Wire Color Description	Wire Length	End2 Terminal Part Number	End2 Pin Name	End2 Connector
F12	-	-	VU103B	3510299 R1	0.79	18.0	Thin Wall XLPE Primary Cable	LIGHT GREEN	1125.0	-	B	1940
F12	-	-	VU103B	3510299 R1	0.79	18.0	Thin Wall XLPE Primary Cable	LIGHT GREEN	1125.0	-	-	-
F13	-	-	QA23EA	3510329 R1	0.79	18.0	Thin Wall XLPE Primary Cable	TAN	2035.0	-	7	1703M
F13	-	-	QA9ZC	3510311 R1	0.79	18.0	Thin Wall XLPE Primary Cable	GREY	2500.0	-	-	-
F13	-	-	QA9ZC	3510311 R1	0.79	18.0	Thin Wall XLPE Primary Cable	GREY	2500.0	-	2	1107
F14	-	-	QA23CA	3510329 R1	0.79	18.0	Thin Wall XLPE Primary Cable	TAN	3520.0	-	5	1703M
F14	-	-	VU103A	3510299 R1	0.79	18.0	Thin Wall XLPE Primary Cable	LIGHT GREEN	1125.0	-	A	1940
F14	-	-	VU103A	3510299 R1	0.79	18.0	Thin Wall XLPE Primary Cable	LIGHT GREEN	1125.0	-	-	-

Name	Terminal Part Number	V-Min	Name	Wire Part Number	Wire CSA	Wire Spec	Wire Material description	Wire Color Description	Wire Length	End2 Terminal Part Number	End2 Pin Name	End2 Connect or
F14	-	-	LP88	3510299 R1	0.79	18.0	Thin Wall XLPE Primary Cable	LIGHT GREEN	3225.0	-	-	-
F14	-	-	LP88	3510299 R1	0.79	18.0	Thin Wall XLPE Primary Cable	LIGHT GREEN	3225.0	-	60	1703M
F15	-	-	LQ88A	3510299 R1	0.79	18.0	Thin Wall XLPE Primary Cable	LIGHT GREEN	3225.0	-	-	-
F15	-	-	LQ88A	3510299 R1	0.79	18.0	Thin Wall XLPE Primary Cable	LIGHT GREEN	3225.0	-	59	1703M
F16	-	-	WC44D	3510311 R1	0.79	18.0	Thin Wall XLPE Primary Cable	GREY	1080.0	-	-	-

Connector Name	J5
Part Number	RING-E-1-2_0
Instances	A26 - Cranking (Starter) GEN4 BCM W/O Thermal Overcrank:Diagram1 A26 - Cranking (Starter) GEN4 BCM W/O Thermal Overcrank:Diagram2 A26 - Cranking (Starter) GEN4 BCM W/O Thermal Overcrank:Diagram3 A26 - Cranking (Starter) GEN4 BCM W/O Thermal Overcrank:Diagram4 A26 - Cranking (Starter) GEN4 BCM W/O Thermal Overcrank:Diagram5 A26 - Cranking (Starter) GEN4 BCM W/O Thermal Overcrank:Diagram6
Mates	MOT-STARTER-5024-01-04

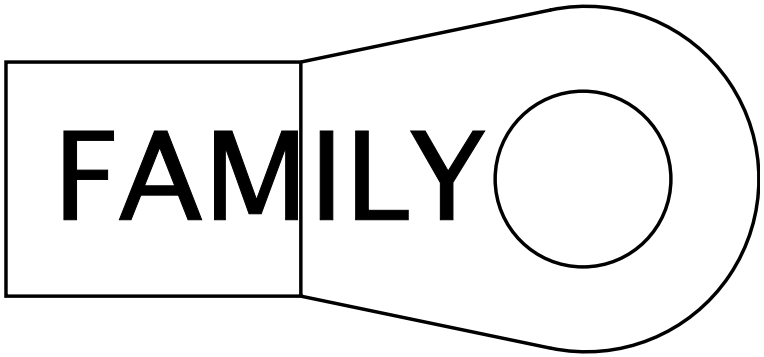

Name	Terminal Part Number	V-Min	Name	Wire Part Number	Wire CSA	Wire Spec	Wire Material description	Wire Color Description	Wire Length	End2 Terminal Part Number	End2 Pin Name	End2 Connect or
A	-	-	14-G	2645235 R1	49.99	0.0	SGX FLEX 125C	BLACK	360.0	-	1	S96_9257
A	-	-	2-G	2645227 R1	61.89	0.0	SGX FLEX 125C	BLACK	280.0	-	1	6314

Connector Name	J6-1606
Part Number	3759005C1
Instances	A26 - 26" Fuel Tank:Diagram1 A26 - 26" Fuel Tank:Diagram2 A26 - 26" Fuel Tank:Diagram3 A26 - 26" Fuel Tank:Diagram4 A26 - 26" Fuel Tank:Diagram5 A26 - 26" Fuel Tank - Secondary:Diagram1 A26 - 26" Fuel Tank - Secondary:Diagram2 A26 - 26" Fuel Tank - Secondary:Diagram3 A26 - 26" Fuel Tank - Secondary:Diagram4 A26 - 26" Fuel Tank - Secondary:Diagram5 A26 - 26" Fuel Tank - Secondary:Diagram6 A26 - 26" Fuel Tank - Secondary:Diagram7 A26 - Axle Temperature Monitoring (Single Rear Aux Gauge):Diagram1 A26 - Axle Temperature Monitoring (Single Rear Virtual Gauge):Diagram1 A26 - Axle Temperature Monitoring (Tandem Rear Aux Gauge):Diagram1 A26 - Axle Temperature Monitoring (Tandem Rear Virtual Gauge):Diagram1 A26 - Bendix Tractor or Towing Truck N/ Air SUSP J1939 Driven Lamp:Diagram1 A26 - Bendix Tractor or Towing Truck N/ Air SUSP J1939 Driven Lamp:Diagram2 A26 - Bendix Tractor or Towing Truck N/ Air SUSP J1939 Driven Lamp:Diagram3 A26 - Bendix Tractor or Towing Truck N/ Air SUSP J1939 Driven Lamp:Diagram4 A26 - Bendix Tractor or Towing Truck W/ Air SUSP J1939 Driven Lamp:Diagram1 A26 - Bendix Tractor or Towing Truck W/ Air SUSP J1939 Driven Lamp:Diagram2 A26 - Bendix Tractor or Towing Truck W/ Air SUSP J1939 Driven Lamp:Diagram3 A26 - Bendix Tractor or Towing Truck W/ Air SUSP J1939 Driven Lamp:Diagram4 A26 - Brake Pressure (Auxiliary Gauge):Diagram1 A26 - Brake Pressure (Virtual Gauge):Diagram1 A26 - Brake Switch:Diagram1 A26 - Cab J1939 (250Kbps):A26 - Cab J1939 (250Kbps) A26 - CAN Layout:Cab Standard J1939 (250Kbps)

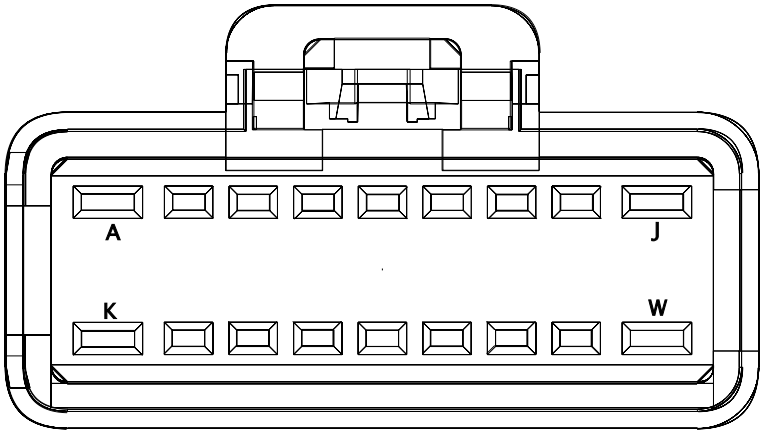

A26 - CAN Layout:HMI Standard J1939 (125Kbps)
A26 - Clutch Switch/Monitoring (High and Low Switch to BCM):Diagram1
A26 - Cooling Fan Control Two-Speed:Diagram1
A26 - Cranking (Starter) GEN4 BCM W/ Thermal Overcrank:Diagram1
A26 - Cranking (Starter) GEN4 BCM W/ Thermal Overcrank:Diagram2
A26 - Cranking (Starter) GEN4 BCM W/ Thermal Overcrank:Diagram3
A26 - Cranking (Starter) GEN4 BCM W/ Thermal Overcrank:Diagram4
A26 - Cranking (Starter) GEN4 BCM W/ Thermal Overcrank:Diagram5
A26 - Cranking (Starter) GEN4 BCM W/ Thermal Overcrank:Diagram6
A26 - Cranking (Starter) GEN4 BCM W/O Thermal Overcrank:Diagram1
A26 - Cranking (Starter) GEN4 BCM W/O Thermal Overcrank:Diagram2
A26 - Cranking (Starter) GEN4 BCM W/O Thermal Overcrank:Diagram3
A26 - Cranking (Starter) GEN4 BCM W/O Thermal Overcrank:Diagram4
A26 - Cranking (Starter) GEN4 BCM W/O Thermal Overcrank:Diagram5
A26 - Cranking (Starter) GEN4 BCM W/O Thermal Overcrank:Diagram6
A26 - Cranking Request (w/ Key Switch w/ BCM):Diagram1
A26 - Cranking Request (w/ Key Switch w/ BCM):Diagram2
A26 - Directional Signal (Turn) W/ Daisy Chain Box Lamps:Diagram1
A26 - Directional Signal (Turn) W/ Daisy Chain Box Lamps, W/ Plow Lights:Diagram1-Option 1 (Snow Plow #1)
A26 - Directional Signal (Turn) W/ Daisy Chain Box Lamps, W/ Plow Lights:Diagram1-Option 2 (Snow Plow #2)
A26 - Directional Signal (Turn) W/ LED BOX LAMPS:Diagram1
A26 - Directional Signal (Turn) W/ LED BOX LAMPS, W/Plow Lights:Diagram1-Option 1 (Snow Plow #1)
A26 - Directional Signal (Turn) W/ LED BOX LAMPS, W/Plow Lights:Diagram1-Option 2 (Snow Plow #2)
A26 - Directional Signal (Turn) W/ Less Power Module Tail Board, W/Hazard SW:Diagram1

A26 - Directional Signal (Turn) W/ Less Power Module Tail Board, W/Hazard SW, W/Plow Lights:Diagram1-Option 1 (Snow Plow #1)
A26 - Directional Signal (Turn) W/ Less Power Module Tail Board, W/Hazard SW, W/Plow Lights:Diagram1-Option 2 (Snow Plow #2)
A26 - Directional Signal (Turn) W/ Single Tail Board W/Hazard SW:Diagram1
A26 - Directional Signal (Turn) W/ Single Tail Board, W/Hazard SW, W/Plow Lights:Diagram1-Option 1 (Snow Plow #1)
A26 - Directional Signal (Turn) W/ Single Tail Board, W/Hazard SW, W/Plow Lights:Diagram1-Option 2 (Snow Plow #2)
A26 - Driver Controlled Locking Differential FR and RR Axle (Dana w/ one switch):Diagram1
A26 - Driver Controlled Locking Differential FR and RR Axle (Meritor w/ one sw):Diagram1
A26 - Driver Controlled Locking Differential FR and RR Axles (Dana w/ two sw):Diagram1
A26 - Driver Controlled Locking Differential FR and RR Axles (Meritor w/ two sw):Diagram1
A26 - Driver Controlled Locking Differential RR Axle (Dana w/ one sw):Diagram1
A26 - Driver Controlled Locking Differential RR Axle (Meritor w/ one sw):Diagram1
A26 - Engine Brake Mux Switch:Diagram1
A26 - Engine Brake W/ Stalk Shifter:Diagram1
A26 - Exhaust Brake:Diagram1
A26 - Front Fog Lamps LED:Diagram1
A26 - Front Fog Lamps LED:Diagram2
A26 - Front Fog Lights W CONNECTOR Halogen:Diagram1
A26 - Front Fog Lights W CONNECTOR Halogen:Diagram2
A26 - Hazard Warning Light N/Trlr Socket:Diagram1
A26 - Hazard Warning Light N/Trlr Socket:Diagram2
A26 - Headlight W/Plowlights, W/LOWW, W/O Interrupt:Diagram1-Combination1
A26 - Headlight W/Plowlights, W/LOWW, W/O Interrupt:Diagram1-Combination2
A26 - Headlight W/Plowlights, W/LOWW, W/O Interrupt:Diagram1-Combination3
A26 - Headlight W/Plowlights, W/LOWW, W/O Interrupt:Diagram1-Combination4
A26 - Headlight W/Plowlights, W/O LOWW, W/O Interrupt:Diagram1-Combination1

A26 - Headlight W/Plowlights, W/O LOWW, W/O Interrupt:Diagram1-Combination2
A26 - Headlight W/Plowlights, W/O LOWW, W/O Interrupt:Diagram1-Combination3
A26 - Headlight W/Plowlights, W/O LOWW, W/O Interrupt:Diagram1-Combination4
A26 - Headlights W/LOWW, W/Interrupt - 10 PIN CLK:Diagram1-Combination1
A26 - Headlights W/LOWW, W/Interrupt - 10 PIN CLK:Diagram1-Combination2
A26 - Headlights W/O LOWW, W/Interrupt - 10 PIN CLK:Diagram1-Combination1
A26 - Headlights W/O LOWW, W/Interrupt - 10 PIN CLK:Diagram1-Combination2
A26 - Headlights W/O LOWW, W/O Interrupt:Diagram1-Combination1
A26 - Headlights W/O LOWW, W/O Interrupt:Diagram1-Combination2
A26 - Headlights W/PlowLights, W/LOWW, W/Interrupt - 10 PIN CLK:Diagram1-Combination1
A26 - Headlights W/PlowLights, W/LOWW, W/Interrupt - 10 PIN CLK:Diagram1-Combination2
A26 - Headlights W/PlowLights, W/LOWW, W/Interrupt - 10 PIN CLK:Diagram1-Combination3
A26 - Headlights W/PlowLights, W/LOWW, W/Interrupt - 10 PIN CLK:Diagram1-Combination4
A26 - Headlights W/PlowLights, W/O LOWW, W/Interrupt - 10 PIN CLK:Diagram1-Combination1
A26 - Headlights W/PlowLights, W/O LOWW, W/Interrupt - 10 PIN CLK:Diagram1-Combination2
A26 - Headlights W/PlowLights, W/O LOWW, W/Interrupt - 10 PIN CLK:Diagram1-Combination3
A26 - Headlights W/PlowLights, W/O LOWW, W/Interrupt - 10 PIN CLK:Diagram1-Combination4
A26 - Heated Mirrors (Hood with Door Pods):Diagram1
A26 - Heated Mirrors (RT Hood with Door Pods):Diagram1
A26 - Heating Ventilation & Air Conditioning (HVAC):Diagram1
A26 - Heating Ventilation & Air Conditioning (HVAC) Auto Temp Control:Diagram1 - HVAC
A26 - Hill Start Aid (Bendix):Diagram1
A26 - Hill Start Aid (Bendix):Diagram2
A26 - License Plate Light (LED BOX LAMP Daisy Chain Tail Light):Diagram1
A26 - License Plate Light (LED BOX LAMP Tail Light):Diagram1

A26 - License Plate Light (Tail Light Single Assembly):Diagram1
A26 - License Plate Light (Tail Light Single Assembly)Option2:Diagram1
A26 - License Plate Light (Tail Light Single Assembly)Option3:Diagram1
A26 - License Plate Light (Tail Light Single Assy.) W/Less Power Module (W/08TKC, 08THM):Diagram1
A26 - Low Speed J1939 (125Kbps):A26 - HMI J1939 (125Kbps)
A26 - Mirrors (Heat) Switch Pack Actuated includes Hood Mirrors:Diagram1
A26 - Mirrors (Heat) Switch Pack Actuated includes RT Hood Mirror:Diagram1
A26 - Park Brake Control (Monitoring)(GEN IV BCM):Diagram1
A26 - Power Lift Gate:Diagram1
A26 - Powertrain J1939 Allison 3k/4k:A26 - Powertrain J1939 Allison 3k/4k
A26 - Powertrain J1939 UltraShift Transmission:A26 - Powertrain J1939 UltraShift Transmission
A26 - Rear Light (LED BOX LAMP Tail Light) W/08TPS, 08TPR:Diagram1
A26 - Rear Light (Tail Light) W/08THK:Diagram1
A26 - Rear Light (Tail Light) W/08TKB:Diagram1
A26 - Rear Light (Tail Light) W/08TKJ:Diagram1
A26 - Rear Light (Tail Light) W/Less Power Module (W/08TKC, 08THM):Diagram1
A26 - Rear Light (Tail Light) W_Daisy Chain pair of Box Lamps W/08TRS:Diagram1
A26 - Rear Lights Stop - Daisy Chain:Diagram1
A26 - Rear Lights Stop - Dual Assembly:Diagram1
A26 - Rear Lights Stop - Single Assemby:Diagram1
A26 - Rear Lights Stop - Single Assemby Jumper Harness W/08TKC, 08THM:Diagram1
A26 - Rear Lights Stop - Single Assemby W/08TKJ:Diagram1
A26 - Relays:Diagram1
A26 - Remote Keyless Access:Diagram1
A26 - Remote Start/Stop:Diagram1
A26 - Snow Valve Control:Diagram1
A26 - Snow Valve Control:Diagram2
A26 - Stability Control (Bendix Straight Truck J1939 Driven Lamp):Diagram1
A26 - Stability Control (Bendix Straight Truck J1939 Driven Lamp):Diagram2
A26 - Stability Control (Bendix Straight Truck J1939 Driven Lamp):Diagram3

A26 - Stability Control (Bendix Straight Truck J1939 Driven Lamp):Diagram4
A26 - Starter Interlock (BCM LSD Controlled w/ Relay & N/ Auto SS):Diagram1
A26 - TEM Electric Trailer Brake Controller Activated Stop LT:Diagram1
A26 - TEM Electric Trailer Brake Controller Activated Stop LT (Option2):Diagram1
A26 - Traction Control (Bendix):Diagram1
A26 - Traction Control (Bendix):Diagram2
A26 - Transmission Oil Temperature-Manual Trans:Diagram1
A26 - Transmission Oil Temperature-Manual Trans:Diagram2
A26 - Transmission Oil Temperature-Manual Trans w/Aux Gauge:Diagram1
A26 - Transmission Oil Temperature-Manual Trans w/Aux Gauge:Diagram2
A26 - Transmission Power Take Off (Auto Trans Dual PTO W/ 42 Parameters):Diagram1
A26 - Transmission Power Take Off (Auto Trans Single PTO w/21 Parameters):Diagram1
A26 - Transmission Power Take Off (Manual Trans Dual PTO W/ 42 Parameters):Diagram1
A26 - Transmission Power Take Off (Manual Trans Single PTO w/ 21 Parameters):Diagram1
A26 - Transmission Power Take Off (Single Input Configurable pull up or pull down):Diagram1
A26 - Two Speed Axle (Multiplex SW on Dash):Diagram1
A26 - WORK LIGHT 1 BULB:Diagram1
A26 - WORK LIGHT 1 BULB:Diagram2
A26 - WORK LIGHT W Backup 1 Bulb:Diagram1
A26 - WORK LIGHT W Backup 1 Bulb:Diagram2
A26 - WORK LIGHT W BackUP 1 BULB:Diagram1
A26 - WORK LIGHT W BackUP 1 BULB:Diagram2
A26 - WORK LIGHT W RKE 1 BULB:Diagram1
A26 - WORK LIGHT W RKE 1 BULB:Diagram2
A26 - Work Light W/ Backup 1 Bulb W/Automatic W/ RKE:Diagram1-Combination1
A26 - Work Light W/ Backup 1 Bulb W/Automatic W/ RKE:Diagram1-Combination2
A26 - Work Light W/ Backup 1 Bulb W/Manual W/ RKE:Diagram1-Combination1
A26 - Work Light W/ Backup 1 Bulb W/Manual W/ RKE:Diagram1-Combination2
A26 - Work Lights LED W/ Sw Pack - Day Cab:Diagram1

A26 - Work Lights LED W/ Sw Pack - Day Cab:Diagram2
A26/B6.7/L9 - Exterior Lamp Reminder:Diagram1
A26/B6.7/L9 - A26 - Adaptive Cruise Control w/o Display (Bendix):Diagram1
A26/B6.7/L9 - Adjustable Engine Speed Control (PTO) 4-pin:Diagram1
A26/B6.7/L9 - Adjustable Engine Speed Control (PTO) 10-pin:Diagram1
A26/B6.7/L9 - Adjustable Engine Speed Control (PTO) 10-pin:Diagram2
A26/B6.7/L9 - Alternate Flashing (Wig Wag) - Park Brake disables High Beams:Diagram1
A26/B6.7/L9 - Alternate Flashing (Wig Wag) - Park Brake disables Wig Wag:Diagram1
A26/B6.7/L9 - Automatic Lighting - Dual Sensor Twilight/ Solar:Diagram1
A26/B6.7/L9 - Automatic Lighting - Dual Sensor Twilight/ Solar:Diagram2
A26/B6.7/L9 - Automatic Lighting - Single Sensor Twilight:Diagram1
A26/B6.7/L9 - Automatic Lighting - Single Sensor Twilight:Diagram2
A26/B6.7/L9 - Auxiliary Power (40A) HSD:Diagram1
A26/B6.7/L9 - BCM (Body Control Module):Connector J6-1606
A26/B6.7/L9 - Body Builder Aux Power (In Cab, BOC, or EOF):Diagram1-Option 1 (In Cab, W/08HAU)
A26/B6.7/L9 - Body Builder Aux Power (In Cab, BOC, or EOF):Diagram1-Option 2 (Back-of-Cab, W/08HAB)
A26/B6.7/L9 - Body Builder Aux Power (In Cab, BOC, or EOF):Diagram1-Option 3 (End-of-Frame, W/08HAE)
A26/B6.7/L9 - Compressed Air Supply:Diagram1
A26/B6.7/L9 - Crank Inhibit (Engine Speed Inhibit Only):Diagram1
A26/B6.7/L9 - Cruise Control (W/ One Telltale 4 Pin):Diagram1
A26/B6.7/L9 - Cruise Control (W/ One Telltale 4 Pin):Diagram2
A26/B6.7/L9 - Cruise Control (W/ One Telltale 10 Pin):Diagram1
A26/B6.7/L9 - Cruise Control (W/ One Telltale 10 Pin):Diagram2
A26/B6.7/L9 - DEF Economy Monitor (GEN IV):Diagram1
A26/B6.7/L9 - Door Ajar Reminder (Entry /Exit):4 Door:Diagram1
A26/B6.7/L9 - Door Ajar Reminder (Entry/Exit) 2 Door:Diagram1
A26/B6.7/L9 - Door Pod Module (2 Door):Diagram1
A26/B6.7/L9 - Door Pod Module (4 Door):Diagram1
A26/B6.7/L9 - DPF Regen Switch Only:Diagram1
A26/B6.7/L9 - DPF With Bistable Inhibit Switch:Diagram1

A26/B6.7/L9 - DPF With Monostable Inhibit Switch:Diagram1
A26/B6.7/L9 - Engine Oil Level Monitoring:Diagram1
A26/B6.7/L9 - Engine Oil Pressure:Diagram1
A26/B6.7/L9 - Engine Oil Temperature (NA Mux):Diagram1
A26/B6.7/L9 - Engine Oil Temperature(NA MUX AUX Gauge):Diagram1
A26/B6.7/L9 - Engine Usage Monitoring (Base) NA:Diagram1
A26/B6.7/L9 - Engine Usage Monitoring (VID Option):Diagram1
A26/B6.7/L9 - Engine Warning_MUX:Diagram1
A26/B6.7/L9 - Exterior Lamp Check:Diagram1
A26/B6.7/L9 - Fifth Wheel Slide:Diagram1
A26/B6.7/L9 - Fuel Economy Monitor:Diagram1
A26/B6.7/L9 - Heated Windshield:Diagram1
A26/B6.7/L9 - Height Control:Diagram1
A26/B6.7/L9 - Instrument Cluster - Bulb Check:Diagram1
A26/B6.7/L9 - Instrument Cluster - Request and Status:Diagram1
A26/B6.7/L9 - Jaw Unlock Control:Diagram1
A26/B6.7/L9 - Jaw Unlock Control W/ SOLENOIDS W/SWITCH PACKS:Diagram1
A26/B6.7/L9 - Key Switch (Operator Input):Diagram1
A26/B6.7/L9 - Key Switch (Operator Input):Diagram2
A26/B6.7/L9 - Mirrors (Heat) Switch Pack Actuated Relay Driven:Diagram1
A26/B6.7/L9 - Mirrors (Heated):Diagram1
A26/B6.7/L9 - Odometer (via BCM/EGC):Diagram1
A26/B6.7/L9 - Over the Air Programming (OnCommand Link / N2 Module):Diagram1
A26/B6.7/L9 - PARK LIGHTS - N/Marker Interrupt:Diagram1
A26/B6.7/L9 - PARK LIGHTS - N/Marker Interrupt:Diagram2
A26/B6.7/L9 - PARK LIGHTS - W/Marker Interrupt 4 pin clockspring:Diagram1
A26/B6.7/L9 - PARK LIGHTS - W/Marker Interrupt 4 pin clockspring:Diagram2
A26/B6.7/L9 - PARK LIGHTS - W/Marker Interrupt 10pin CLCKSPRING:Diagram1
A26/B6.7/L9 - PARK LIGHTS - W/Marker Interrupt 10pin CLCKSPRING:Diagram2
A26/B6.7/L9 - Power Divider Lock Control and Monitoring:Diagram1
A26/B6.7/L9 - PTO Hour Meter:Diagram1
A26/B6.7/L9 - Real Time Clock (RTC) (BCM Controlled):Diagram1

A26/B6.7/L9 - Rear Suspension Pressure Monitoring (Auxiliary Gauge):Diagram1
A26/B6.7/L9 - Rear Suspension Pressure Monitoring (Auxiliary Gauge):Diagram2
A26/B6.7/L9 - Rear Suspension Pressure Monitoring (Virtual Gauge):Diagram1
A26/B6.7/L9 - Rear Suspension Pressure Monitoring (Virtual Gauge):Diagram2
A26/B6.7/L9 - Seatbelt Reminder (Warning)(Driver & Passenger in parallel):Diagram1
A26/B6.7/L9 - Seatbelt Reminder (Warning)(Driver only):Diagram1
A26/B6.7/L9 - Snow Plow Lights:Diagram1
A26/B6.7/L9 - Snow Valve Control:Diagram1
A26/B6.7/L9 - Theft Deterrent (Grid Controlled):Diagram1
A26/B6.7/L9 - Trans Range Inhibit (J1939 Comm):Diagram1
A26/B6.7/L9 - Transfer Case - High/Low Air Sol:Diagram1
A26/B6.7/L9 - Transfer Case - High/Neu/Low Air Sol:Diagram1
A26/B6.7/L9 - Transmission - MODE Selection:Diagram1
A26/B6.7/L9 - Trip Odometer (w/ECM & TCM):Diagram1
A26/B6.7/L9 - Trip Odometer (Gen 4 Cluster):Diagram1
A26/B6.7/L9 - Trip Odometer w/VID:Diagram1
A26/B6.7/L9 - Up Shift Indicator:Diagram1
A26/B6.7/L9 - Vehicle Sleep Mode:Diagram1
A26/B6.7/L9 - Vehicle Speed Control (Cruise Control) 4 Pin:Diagram1
A26/B6.7/L9 - Vehicle Speed Control (Cruise Control) 10 Pin:Diagram1
A26/B6.7/L9 - Voltage Monitoring (Voltmeter):Diagram1
A26/B6.7/L9 - Voltage Monitoring (Voltmeter) (with Aux gauge):Diagram1
B6.7 & L9 - Engine Speed (Tachometer):Diagram1
B6.7 - Snow Valve Control:Diagram1
B6.7 - Snow Valve Control:Diagram2
B6.7 - 26 inch Fuel Tank:Diagram1
B6.7 - 26 inch Fuel Tank:Diagram2
B6.7 - 26 inch Fuel Tank:Diagram3
B6.7 - 26 inch Fuel Tank - Secondary:Diagram1
B6.7 - Axle Loading (Weight) Rear:Diagram1
B6.7 - Axle Loading (Weight) Rear:Diagram2
B6.7 - Axle Temperature Monitoring (Single Rear Aux Gauge):Diagram1
B6.7 - Axle Temperature Monitoring (Single Rear Virtual Gauge):Diagram1

B6.7 - Brake Pressure (Auxiliary Gauge):Diagram1
B6.7 - Brake Pressure (Virtual Gauge):Diagram1
B6.7 - Brake Switch:Diagram1
B6.7 - Cab J1939 (250kbps):B6.7 - Cab J1939 (250Kbps)
B6.7 - CAN Layout:Cab Standard J1939 (250Kbps)
B6.7 - CAN Layout:HMI Standard J1939 (125Kbps)
B6.7 - CAN Layout:Powertrain Standard J1939 (500Kbps)
B6.7 - Clutch Switch/Monitoring (High and Low Switch to BCM):Diagram1
B6.7 - Cooling Fan Control Two-Speed:Diagram1
B6.7 - Cooling Fan Control Two-Speed:Diagram2
B6.7 - Cranking (Starter) GEN4 BCM W/O Thermal Overcrank:Diagram1
B6.7 - Cranking Request (w/ Key Switch w/ BCM):Diagram1
B6.7 - Cranking Request (w/ Key Switch w/ BCM):Diagram2
B6.7 - Current Monitoring (Ammeter):Diagram1
B6.7 - Current Monitoring (Ammeter):Diagram2
B6.7 - Directional Signal (Turn) W/ Less Power Module Tail Board W/Hazard SW W/PLOW LIGHTS:Diagram1
B6.7 - Directional Signal (Turn) W/ Less Power Module Tail Board W/Hazard SW W/PLOW LIGHTS:Diagram2
B6.7 - Directional Signal (Turn) W/ Less Power Module Tail Board W/Hazard SW W/PLOW LIGHTS:Diagram3
B6.7 - Directional Signal (Turn) W/ Less Power Module Tail Board W/Hazard SW W/PLOW LIGHTS:Diagram4
B6.7 - Directional Signal (Turn) W/ DAISY CHAIN BOX LAMPS:Diagram1
B6.7 - Directional Signal (Turn) W/ DAISY CHAIN BOX LAMPS:Diagram2
B6.7 - Directional Signal (Turn) W/ Daisy Chain Box Lamps W/ Plow Lights:Diagram1
B6.7 - Directional Signal (Turn) W/ Daisy Chain Box Lamps W/ Plow Lights:Diagram2
B6.7 - Directional Signal (Turn) W/ Daisy Chain Box Lamps W/ Plow Lights:Diagram3
B6.7 - Directional Signal (Turn) W/ Daisy Chain Box Lamps W/ Plow Lights:Diagram4
B6.7 - Directional Signal (Turn) W/ LED BOX LAMPS:Diagram1
B6.7 - Directional Signal (Turn) W/ LED BOX LAMPS:Diagram2
B6.7 - Directional Signal (Turn) W/ LED BOX LAMPS W/Plow Lights:Diagram1
B6.7 - Directional Signal (Turn) W/ LED BOX LAMPS W/Plow Lights:Diagram2

B6.7 - Directional Signal (Turn) W/ LED BOX LAMPS W/Plow Lights:Diagram3
B6.7 - Directional Signal (Turn) W/ LED BOX LAMPS W/Plow Lights:Diagram4
B6.7 - Directional Signal (Turn) W/ Single Tail Board W/Hazard SW:Diagram1
B6.7 - Directional Signal (Turn) W/ Single Tail Board W/Hazard SW:Diagram2
B6.7 - Directional Signal (Turn) W/ Single Tail Board W/Plow Lights:Diagram1
B6.7 - Directional Signal (Turn) W/ Single Tail Board W/Plow Lights:Diagram2
B6.7 - Directional Signal (Turn) W/ Single Tail Board W/Plow Lights:Diagram3
B6.7 - Directional Signal (Turn) W/ Single Tail Board W/Plow Lights:Diagram4
B6.7 - Driver Controlled Locking Differential - RR Axle (Dana w/ one sw):Diagram1
B6.7 - Driver Controlled Locking Differential - RR Axle (Meritor w/ one sw):Diagram1
B6.7 - Exhaust Brake (Cummins):Diagram1
B6.7 - Fog Lights (Halogen White):Diagram1
B6.7 - Fog Lights (Halogen White):Diagram2
B6.7 - Fog Lights (Halogen White):Diagram3
B6.7 - Fog Lights (LED White):Diagram1
B6.7 - Fog Lights (LED White):Diagram2
B6.7 - Fog Lights (LED White):Diagram3
B6.7 - Front Fog Lamps:Diagram1
B6.7 - Front Fog Lamps:Diagram2
B6.7 - Front Fog Lamps:Diagram3
B6.7 - Front Fog Lights W CONNECTOR:Diagram1
B6.7 - Front Fog Lights W CONNECTOR:Diagram2
B6.7 - Headlight W/Plowlights W/LOWW W/O Headlight Interrupt -10 PIN CLK:Diagram1
B6.7 - Headlight W/Plowlights W/LOWW W/O Headlight Interrupt -10 PIN CLK:Diagram2
B6.7 - Headlight W/Plowlights W/LOWW W/O Headlight Interrupt -10 PIN CLK:Diagram3
B6.7 - Headlight W/Plowlights W/LOWW W/O Headlight Interrupt -10 PIN CLK:Diagram4
B6.7 - Headlight W/Plowlights W/LOWW W/O Headlight Interrupt -10 PIN CLK:Diagram5
B6.7 - Headlight W/Plowlights W/LOWW W/O Headlight Interrupt -10 PIN CLK:Diagram6

B6.7 - Headlight W/Plowlights W/LOWW W/O Headlight Interrupt -10 PIN CLK:Diagram7
B6.7 - Headlight W/Plowlights W/LOWW W/O Headlight Interrupt -10 PIN CLK:Diagram8
B6.7 - Headlights W 10PIN CLK W/LOWW W/Interrupt:Diagram1
B6.7 - Headlights W 10PIN CLK W/LOWW W/Interrupt:Diagram2
B6.7 - Headlights W 10PIN CLK W/LOWW W/Interrupt:Diagram3
B6.7 - Headlights W 10PIN CLK W/LOWW W/Interrupt:Diagram4
B6.7 - Headlights W 10PIN CLK W/LOWW W/O Interrupt:Diagram1
B6.7 - Headlights W 10PIN CLK W/LOWW W/O Interrupt:Diagram2
B6.7 - Headlights W 10PIN CLK W/LOWW W/O Interrupt:Diagram3
B6.7 - Headlights W 10PIN CLK W/LOWW W/O Interrupt:Diagram4
B6.7 - Headlights W/O Lights ON With Wipers (LOWW) W/O Headlights Interrupt:Diagram1
B6.7 - Headlights W/O Lights ON With Wipers (LOWW) W/O Headlights Interrupt:Diagram2
B6.7 - Headlights W/O Lights ON With Wipers (LOWW) W/O Headlights Interrupt:Diagram3
B6.7 - Headlights W/O Lights ON With Wipers (LOWW) W/O Headlights Interrupt:Diagram4
B6.7 - Headlights W/O Lights ON with wipers (LOWW) W/ Headlights Interrupt:Diagram1
B6.7 - Headlights W/O Lights ON with wipers (LOWW) W/ Headlights Interrupt:Diagram2
B6.7 - Headlights W/O Lights ON with wipers (LOWW) W/ Headlights Interrupt:Diagram3
B6.7 - Headlights W/O Lights ON with wipers (LOWW) W/ Headlights Interrupt:Diagram4
B6.7 - Headlights W/PlowLights W/Headlight Interrupt -10PIN CLK W/LOWW W/Interrupt:Diagram1
B6.7 - Headlights W/PlowLights W/Headlight Interrupt -10PIN CLK W/LOWW W/Interrupt:Diagram2
B6.7 - Headlights W/PlowLights W/Headlight Interrupt -10PIN CLK W/LOWW W/Interrupt:Diagram3
B6.7 - Headlights W/PlowLights W/Headlight Interrupt -10PIN CLK W/LOWW W/Interrupt:Diagram4
B6.7 - Headlights W/PlowLights W/Headlight Interrupt -10PIN CLK W/LOWW W/Interrupt:Diagram5
B6.7 - Headlights W/PlowLights W/Headlight Interrupt -10PIN CLK W/LOWW W/Interrupt:Diagram6

B6.7 - Headlights W/PlowLights W/Headlight Interrupt -10PIN CLK W/LOWW W/Interrupt:Diagram7
B6.7 - Headlights W/PlowLights W/Headlight Interrupt -10PIN CLK W/LOWW W/Interrupt:Diagram8
B6.7 - Headlights W/Plowlights W/O Lights ON With Wipers (LOWW) W/O Headlights Interrupt:Diagram1
B6.7 - Headlights W/Plowlights W/O Lights ON With Wipers (LOWW) W/O Headlights Interrupt:Diagram2
B6.7 - Headlights W/Plowlights W/O Lights ON With Wipers (LOWW) W/O Headlights Interrupt:Diagram3
B6.7 - Headlights W/Plowlights W/O Lights ON With Wipers (LOWW) W/O Headlights Interrupt:Diagram4
B6.7 - Headlights W/Plowlights W/O Lights ON With Wipers (LOWW) W/O Headlights Interrupt:Diagram5
B6.7 - Headlights W/Plowlights W/O Lights ON With Wipers (LOWW) W/O Headlights Interrupt:Diagram6
B6.7 - Headlights W/Plowlights W/O Lights ON With Wipers (LOWW) W/O Headlights Interrupt:Diagram7
B6.7 - Headlights W/Plowlights W/O Lights ON With Wipers (LOWW) W/O Headlights Interrupt:Diagram8
B6.7 - Headlights W/PlowLights W/O Lights ON with wipers (LOWW) W/ Headlights Interrupt:Diagram1
B6.7 - Headlights W/PlowLights W/O Lights ON with wipers (LOWW) W/ Headlights Interrupt:Diagram2
B6.7 - Headlights W/PlowLights W/O Lights ON with wipers (LOWW) W/ Headlights Interrupt:Diagram3
B6.7 - Headlights W/PlowLights W/O Lights ON with wipers (LOWW) W/ Headlights Interrupt:Diagram4
B6.7 - Headlights W/PlowLights W/O Lights ON with wipers (LOWW) W/ Headlights Interrupt:Diagram5
B6.7 - Headlights W/PlowLights W/O Lights ON with wipers (LOWW) W/ Headlights Interrupt:Diagram6
B6.7 - Headlights W/PlowLights W/O Lights ON with wipers (LOWW) W/ Headlights Interrupt:Diagram7
B6.7 - Headlights W/PlowLights W/O Lights ON with wipers (LOWW) W/ Headlights Interrupt:Diagram8
B6.7 - Heated Mirrors (Hood with Door Pods):Diagram1
B6.7 - Heated Mirrors (Hood with Door Pods):Diagram2
B6.7 - Heated Mirrors (RT Hood with Door Pods):Diagram1
B6.7 - Heated Mirrors (RT Hood with Door Pods):Diagram2
B6.7 - Heated Mirrors (RT Hood with Door Pods):Diagram3
B6.7 - Heated Mirrors (RT Hood with Door Pods):Diagram4
B6.7 - Heating Ventilation & Air Conditioning (HVAC):Diagram1

B6.7 - Heating Ventilation & Air Conditioning (HVAC) Auto Temp Control:Diagram1 - HVAC
B6.7 - License Plate Light (LED BOX LAMP Daisy Chain Tail Light):Diagram1
B6.7 - License Plate Light (LED BOX LAMP Tail Light):Diagram1
B6.7 - License Plate Light (Tail Light Single Assy) Option 1:Diagram1
B6.7 - License Plate Light (Tail Light Single Assy) Option 2:Diagram1
B6.7 - License Plate Light (Tail Light Single Assy) Option 3:Diagram1
B6.7 - License Plate Light (Tail Light Single Assy) Option 4:Diagram1
B6.7 - License Plate Light (Tail Light Single Assy) W/Less Power Module:Diagram1
B6.7 - Low Speed J1939 (125kbps):B6.7 - Low Speed J1939 (125kbps)
B6.7 - Mirrors (Heat) Switch Pack Actuated includes Hood Mirrors:Diagram1
B6.7 - Mirrors (Heat) Switch Pack Actuated includes Hood Mirrors:Diagram2
B6.7 - Mirrors (Heat) Switch Pack Actuated includes RT Hood Mirror:Diagram1
B6.7 - Mirrors (Heat) Switch Pack Actuated includes RT Hood Mirror:Diagram2
B6.7 - Mirrors (Heat) Switch Pack Actuated includes RT Hood Mirror:Diagram3
B6.7 - Mirrors (Heat) Switch Pack Actuated includes RT Hood Mirror:Diagram4
B6.7 - Park Brake Controls (Monitoring) (Door Switch City Horn):Diagram1
B6.7 - Power Lift Gate:Diagram1
B6.7 - Powertrain J1939 Allison 1k/2k:B6.7 - Allison 1k/2k Transmission
B6.7 - Powertrain J1939 Allison 3k/4k:B6.7 - Allison 3k/4k Transmission
B6.7 - Powertrain J1939 Manual Transmission:B6.7 - Manual Transmission
B6.7 - Range Inhibit (sixth gear inhibit switch):Diagram1
B6.7 - Rear Light (LED BOX LAMP Tail Light):Diagram1
B6.7 - Rear Light (Tail Light) Option 1:Diagram1
B6.7 - Rear Light (Tail Light) Option 2:Diagram1
B6.7 - Rear Light (Tail Light) Option 3:Diagram1
B6.7 - Rear Light (Tail Light) Option 4:Diagram1

B6.7 - Rear Light (Tail Light) W_Daisy Chain pair of Box Lamps:Diagram1
B6.7 - Rear Lights Stop - Daisy Chain:Diagram1
B6.7 - Rear Lights Stop - Dual Assembly:Diagram1
B6.7 - Rear Lights Stop - Single Assemby:Diagram1
B6.7 - Relays:Diagram1
B6.7 - Remote Keyless Access:Diagram1
B6.7 - Remote Start/Stop:Diagram1
B6.7 - Remote Start/Stop w/ Emergency Pump:Diagram1
B6.7 - Stability Control (Bendix Straight Truck J1939 Driven Lamp):Diagram1
B6.7 - Stability Control (Bendix Straight Truck J1939 Driven Lamp):Diagram2
B6.7 - Stability Control (Bendix Straight Truck J1939 Driven Lamp):Diagram3
B6.7 - Stability Control (Bendix Straight Truck J1939 Driven Lamp):Diagram4
B6.7 - Starter Interlocks (BCM Controlled with Input from Allison 1K/2K TCM):Diagram1
B6.7 - Starter Interlocks (BCM Controlled with Input from Allison 3K/4K TCM):Diagram1
B6.7 - Starter Interlocks (BCM Controlled with Input from Allison 3K/4K TCM):Diagram2
B6.7 - TEM Electric Trailer Brake Controller Activated Stop LT Option 2:Diagram1
B6.7 - TEM _Electric Trailer Brake Controller Activated Stop LT Option 1:Diagram1
B6.7 - Traction Control (Bendix):Diagram1
B6.7 - Traction Control (Bendix):Diagram2
B6.7 - Transmission Oil Temperature-Manual Trans:Diagram1
B6.7 - Transmission Oil Temperature-Manual Trans (w/Aux Gauge):Diagram1
B6.7 - Transmission Power Take Off (Auto Trans Single PTO w/21 Parameters):Diagram1
B6.7 - Transmission Power Take Off (Manual Trans Single PTO w/21 Parameters):Diagram1
B6.7 - Transmission Power Take Off (Single Input configurable pull up or pull down):Diagram1
B6.7 - Transmission Shifter (T-Handle for Allison With Park Position):Diagram1
B6.7 - Transmission Shifter (T-Handle for Allison With Park Position):Diagram2
B6.7 - Two Speed Axle (AirShift on Shifter):Diagram1
B6.7 - Windshield Washer Pump & Low Fluid Sensor:Diagram1

B6.7 - WORK LIGHT 1 BULB:Diagram1
B6.7 - WORK LIGHT W BackUP 1 BULB:Diagram1
B6.7 - WORK LIGHT W RKE 1 BULB:Diagram1
B6.7 - Work Lights LED W/ Sw Pack - Day Cab:Diagram1
B6.7/L9 - Engine Brake Mux Switch:Diagram1
B6.7/L9 - Engine Brake W/ Stalk Shifter:Diagram1
L9 - 26 inch Fuel Tank:Diagram1
L9 - 26 inch Fuel Tank:Diagram2
L9 - 26 inch Fuel Tank:Diagram3
L9 - 26 inch Fuel Tank:Diagram4
L9 - 26 inch Fuel Tank:Diagram5
L9 - 26 inch Fuel Tank:Diagram6
L9 - 26 inch Fuel Tank - Secondary:Diagram1
L9 - 26 inch Fuel Tank - Secondary:Diagram2
L9 - 26 inch Fuel Tank - Secondary:Diagram3
L9 - 26 inch Fuel Tank - Secondary:Diagram4
L9 - 26 inch Fuel Tank - Secondary:Diagram5
L9 - 26 inch Fuel Tank - Secondary:Diagram6
L9 - 26 inch Fuel Tank - Secondary:Diagram7
L9 - Auto Neutral (Allison with Multiplex Switch and Confirmation Telltale):Diagram1
L9 - Auto Neutral (Allison with Multiplex Switch and Confirmation Telltale):Diagram2
L9 - Auto Neutral (Allison without Multiplex Switch and Confirmation Telltale):Diagram1
L9 - Auto Neutral (Allison without Multiplex Switch and Confirmation Telltale):Diagram2
L9 - Axle Loading (Weight) Rear:Diagram1
L9 - Axle Loading (Weight) Rear:Diagram2
L9 - Axle Temperature Monitoring (Tandem Rear Aux Gauge) Option 1:Diagram1
L9 - Axle Temperature Monitoring (Tandem Rear Aux Gauge) Option 2:Diagram1
L9 - Axle Temperature Monitoring (Tandem Rear Virtual Gauge) Option 1:Diagram1
L9 - Axle Temperature Monitoring (Tandem Rear Virtual Gauge) Option 2:Diagram1
L9 - Bendix Tractor or Towing Truck W/ Air SUSP J1939 Driven Lamp:Diagram1
L9 - Bendix Tractor or Towing Truck W/ Air SUSP J1939 Driven Lamp:Diagram2
L9 - Brake Pressure (Auxiliary Gauge):Diagram1
L9 - Brake Pressure (Virtual Gauge):Diagram1
L9 - Brake Switch:Diagram1

L9 - Cab J1939 (250kbps):L9 - Cab J1939 (250Kbps)
L9 - CAN Layout:Cab Standard J1939 (250Kbps)
L9 - CAN Layout:HMI Standard J1939 (125Kbps)
L9 - CAN Layout:Powertrain Standard J1939 (500kbps)
L9 - Clutch Switch/Monitoring (High and Low Switch to BCM):Diagram1
L9 - Coolant Temperature Monitoring (J1939 Comm):Diagram1
L9 - Cranking (Starter) GEN4 BCM W/ Thermal Overcrank - External Switch:Diagram1
L9 - Cranking (Starter) GEN4 BCM W/O Thermal Overcrank:Diagram1
L9 - Directional Signal (Turn) W/ Less Power Module Tail Board W/Hazard SW W/PLOW LIGHTS:Diagram1
L9 - Directional Signal (Turn) W/ Less Power Module Tail Board W/Hazard SW W/PLOW LIGHTS:Diagram2
L9 - Directional Signal (Turn) W/ Less Power Module Tail Board W/Hazard SW W/PLOW LIGHTS:Diagram3
L9 - Directional Signal (Turn) W/ Less Power Module Tail Board W/Hazard SW W/PLOW LIGHTS:Diagram4
L9 - Directional Signal (Turn) W/ DAISY CHAIN BOX LAMPS:Diagram1
L9 - Directional Signal (Turn) W/ DAISY CHAIN BOX LAMPS:Diagram2
L9 - Directional Signal (Turn) W/ Daisy Chain Box Lamps W/ Plow Lights:Diagram1
L9 - Directional Signal (Turn) W/ Daisy Chain Box Lamps W/ Plow Lights:Diagram2
L9 - Directional Signal (Turn) W/ Daisy Chain Box Lamps W/ Plow Lights:Diagram3
L9 - Directional Signal (Turn) W/ Daisy Chain Box Lamps W/ Plow Lights:Diagram4
L9 - Directional Signal (Turn) W/ LED BOX LAMPS:Diagram1
L9 - Directional Signal (Turn) W/ LED BOX LAMPS:Diagram2
L9 - Directional Signal (Turn) W/ LED BOX LAMPS W/Plow Lights:Diagram1
L9 - Directional Signal (Turn) W/ LED BOX LAMPS W/Plow Lights:Diagram2
L9 - Directional Signal (Turn) W/ LED BOX LAMPS W/Plow Lights:Diagram3
L9 - Directional Signal (Turn) W/ LED BOX LAMPS W/Plow Lights:Diagram4
L9 - Directional Signal (Turn) W/ Single Tail Board W/Hazard SW:Diagram1

L9 - Directional Signal (Turn) W/ Single Tail Board W/Hazard SW:Diagram2
L9 - Directional Signal (Turn) W/ Single Tail Board W/Plow Lights:Diagram1
L9 - Directional Signal (Turn) W/ Single Tail Board W/Plow Lights:Diagram2
L9 - Directional Signal (Turn) W/ Single Tail Board W/Plow Lights:Diagram3
L9 - Directional Signal (Turn) W/ Single Tail Board W/Plow Lights:Diagram4
L9 - Driver Controlled Locking Differential - FR and RR Axle (Dana w/ one sw):Diagram1
L9 - Driver Controlled Locking Differential - FR and RR Axle (Meritor w/ one sw):Diagram1
L9 - Driver Controlled Locking Differential - FR and RR Axles (Dana w/ two sw):Diagram1
L9 - Driver Controlled Locking Differential - FR and RR Axles (Meritor w/ two sw):Diagram1
L9 - Driver Controlled Locking Differential - RR Axle (Dana w/ one sw):Diagram1
L9 - Driver Controlled Locking Differential - RR Axle (Meritor w/ one sw):Diagram1
L9 - Exhaust Brake (Cummins):Diagram1
L9 - Fog Lights (Halogen White):Diagram1
L9 - Fog Lights (Halogen White):Diagram2
L9 - Fog Lights (LED White):Diagram1
L9 - Fog Lights (LED White):Diagram2
L9 - Front Fog Lights W CONNECTOR:Diagram1
L9 - Front Fog Lights W CONNECTOR:Diagram2
L9 - Hazard Warning Light N/Trlr Socket:Diagram1
L9 - Hazard Warning Light N/Trlr Socket:Diagram2
L9 - Headlight W/Plowlights W/LOWW W/O Headlight Interrupt -10 PIN CLK:Diagram1
L9 - Headlight W/Plowlights W/LOWW W/O Headlight Interrupt -10 PIN CLK:Diagram2
L9 - Headlight W/Plowlights W/LOWW W/O Headlight Interrupt -10 PIN CLK:Diagram3
L9 - Headlight W/Plowlights W/LOWW W/O Headlight Interrupt -10 PIN CLK:Diagram4
L9 - Headlight W/Plowlights W/LOWW W/O Headlight Interrupt -10 PIN CLK:Diagram5
L9 - Headlight W/Plowlights W/LOWW W/O Headlight Interrupt -10 PIN CLK:Diagram6

L9 - Headlight W/Plowlights W/LOWW W/O Headlight Interrupt -10 PIN CLK:Diagram7
L9 - Headlight W/Plowlights W/LOWW W/O Headlight Interrupt -10 PIN CLK:Diagram8
L9 - Headlights W 10PIN CLK W/LOWW W/Interrupt:Diagram1
L9 - Headlights W 10PIN CLK W/LOWW W/Interrupt:Diagram2
L9 - Headlights W 10PIN CLK W/LOWW W/Interrupt:Diagram3
L9 - Headlights W 10PIN CLK W/LOWW W/Interrupt:Diagram4
L9 - Headlights W 10PIN CLK W/LOWW W/O Interrupt:Diagram1
L9 - Headlights W 10PIN CLK W/LOWW W/O Interrupt:Diagram2
L9 - Headlights W 10PIN CLK W/LOWW W/O Interrupt:Diagram3
L9 - Headlights W 10PIN CLK W/LOWW W/O Interrupt:Diagram4
L9 - Headlights W/O Lights ON With Wipers (LOWW) W/O Headlights Interrupt:Diagram1
L9 - Headlights W/O Lights ON With Wipers (LOWW) W/O Headlights Interrupt:Diagram2
L9 - Headlights W/O Lights ON With Wipers (LOWW) W/O Headlights Interrupt:Diagram3
L9 - Headlights W/O Lights ON With Wipers (LOWW) W/O Headlights Interrupt:Diagram4
L9 - Headlights W/O Lights ON with wipers (LOWW) W/ Headlights Interrupt:Diagram1
L9 - Headlights W/O Lights ON with wipers (LOWW) W/ Headlights Interrupt:Diagram2
L9 - Headlights W/O Lights ON with wipers (LOWW) W/ Headlights Interrupt:Diagram3
L9 - Headlights W/O Lights ON with wipers (LOWW) W/ Headlights Interrupt:Diagram4
L9 - Headlights W/PlowLights W/Headlight Interrupt -10PIN CLK W/LOWW W/Interrupt:Diagram1
L9 - Headlights W/PlowLights W/Headlight Interrupt -10PIN CLK W/LOWW W/Interrupt:Diagram2
L9 - Headlights W/PlowLights W/Headlight Interrupt -10PIN CLK W/LOWW W/Interrupt:Diagram3
L9 - Headlights W/PlowLights W/Headlight Interrupt -10PIN CLK W/LOWW W/Interrupt:Diagram4
L9 - Headlights W/PlowLights W/Headlight Interrupt -10PIN CLK W/LOWW W/Interrupt:Diagram5
L9 - Headlights W/PlowLights W/Headlight Interrupt -10PIN CLK W/LOWW W/Interrupt:Diagram6

L9 - Headlights W/PlowLights W/Headlight Interrupt -10PIN CLK W/LOWW W/Interrupt:Diagram7
L9 - Headlights W/PlowLights W/Headlight Interrupt -10PIN CLK W/LOWW W/Interrupt:Diagram8
L9 - Headlights W/Plowlights W/O Lights ON With Wipers (LOWW) W/O Headlights Interrupt:Diagram1
L9 - Headlights W/Plowlights W/O Lights ON With Wipers (LOWW) W/O Headlights Interrupt:Diagram2
L9 - Headlights W/Plowlights W/O Lights ON With Wipers (LOWW) W/O Headlights Interrupt:Diagram3
L9 - Headlights W/Plowlights W/O Lights ON With Wipers (LOWW) W/O Headlights Interrupt:Diagram4
L9 - Headlights W/Plowlights W/O Lights ON With Wipers (LOWW) W/O Headlights Interrupt:Diagram5
L9 - Headlights W/Plowlights W/O Lights ON With Wipers (LOWW) W/O Headlights Interrupt:Diagram6
L9 - Headlights W/Plowlights W/O Lights ON With Wipers (LOWW) W/O Headlights Interrupt:Diagram7
L9 - Headlights W/Plowlights W/O Lights ON With Wipers (LOWW) W/O Headlights Interrupt:Diagram8
L9 - Headlights W/PlowLights W/O Lights ON with wipers (LOWW) W/ Headlights Interrupt:Diagram1
L9 - Headlights W/PlowLights W/O Lights ON with wipers (LOWW) W/ Headlights Interrupt:Diagram2
L9 - Headlights W/PlowLights W/O Lights ON with wipers (LOWW) W/ Headlights Interrupt:Diagram3
L9 - Headlights W/PlowLights W/O Lights ON with wipers (LOWW) W/ Headlights Interrupt:Diagram4
L9 - Headlights W/PlowLights W/O Lights ON with wipers (LOWW) W/ Headlights Interrupt:Diagram5
L9 - Headlights W/PlowLights W/O Lights ON with wipers (LOWW) W/ Headlights Interrupt:Diagram6
L9 - Headlights W/PlowLights W/O Lights ON with wipers (LOWW) W/ Headlights Interrupt:Diagram7
L9 - Headlights W/PlowLights W/O Lights ON with wipers (LOWW) W/ Headlights Interrupt:Diagram8
L9 - Heated Mirrors (Hood with Door Pods):Diagram1
L9 - Heated Mirrors (Hood with Door Pods):Diagram2
L9 - Heated Mirrors (Hood with Door Pods):Diagram3
L9 - Heated Mirrors (Hood with Door Pods):Diagram4
L9 - Heated Mirrors (RT Hood with Door Pods):Diagram1
L9 - Heated Mirrors (RT Hood with Door Pods):Diagram2
L9 - Heated Mirrors (RT Hood with Door Pods):Diagram3
L9 - Heated Mirrors (RT Hood with Door Pods):Diagram4

L9 - Heating Ventilation & Air Conditioning (HVAC):Diagram1
L9 - Heating Ventilation & Air Conditioning (HVAC) Auto Temp Control:Diagram1 - HVAC
L9 - Hill Start Aid (Bendix):Diagram1
L9 - Hill Start Aid (Bendix):Diagram2
L9 - Hill Start Aid (WABCO):Diagram1
L9 - License Plate Light (LED BOX LAMP Daisy Chain Tail Light):Diagram1
L9 - License Plate Light (LED BOX LAMP Tail Light):Diagram1
L9 - License Plate Light (Tail Light Single Assy) Option 1:Diagram1
L9 - License Plate Light (Tail Light Single Assy) Option 2:Diagram1
L9 - License Plate Light (Tail Light Single Assy) Option 3:Diagram1
L9 - License Plate Light (Tail Light Single Assy) Option 4:Diagram1
L9 - Low Speed J1939 (125kbps):L9 - Low Speed J1939 (125Kbps)
L9 - Mirrors (Heat) Switch Pack Actuated includes Hood Mirrors:Diagram1
L9 - Mirrors (Heat) Switch Pack Actuated includes Hood Mirrors:Diagram2
L9 - Mirrors (Heat) Switch Pack Actuated includes Hood Mirrors:Diagram3
L9 - Mirrors (Heat) Switch Pack Actuated includes Hood Mirrors:Diagram4
L9 - Mirrors (Heat) Switch Pack Actuated includes RT Hood Mirror:Diagram1
L9 - Mirrors (Heat) Switch Pack Actuated includes RT Hood Mirror:Diagram2
L9 - Mirrors (Heat) Switch Pack Actuated includes RT Hood Mirror:Diagram3
L9 - Mirrors (Heat) Switch Pack Actuated includes RT Hood Mirror:Diagram4
L9 - Park Brake Control (Monitoring)(GEN IV BCM):Diagram1
L9 - Park Brake Controls (Monitoring) (Door Switch City Horn):Diagram1
L9 - Power Lift Gate:Diagram1
L9 - Powertrain J1939 Allison 3k/4k:L9 - Powertrain J1939 Allison 3k/4k
L9 - Powertrain J1939 Eaton:L9 - Powertrain J1939 Eaton
L9 - Powertrain J1939 Manual Transmission:Powertrain Standard J1939 (500kbps)

L9 - Rear Axle Load Distribution:Diagram1
L9 - Rear Light (LED BOX LAMP Tail Light):Diagram1
L9 - Rear Light (Tail Light) W Daisy Chain pair of Box Lamps:Diagram1
L9 - Rear Lights Stop - Daisy Chain:Diagram1
L9 - Rear Lights Stop - Dual Assembly:Diagram1
L9 - Rear Lights Stop - Single Assemby:Diagram1
L9 - Relays:Diagram1
L9 - Remote Keyless Access:Diagram1
L9 - Remote Start/Stop:Diagram1
L9 - Remote Start/Stop w/ Emergency Pump:Diagram1
L9 - Snow Valve Control:Diagram1
L9 - Snow Valve Control:Diagram2
L9 - Stability Control (Bendix Straight Truck J1939 Driven Lamp):Diagram1
L9 - Stability Control (Bendix Straight Truck J1939 Driven Lamp):Diagram2
L9 - Stability Control (Bendix Straight Truck J1939 Driven Lamp):Diagram3
L9 - Stability Control (Bendix Straight Truck J1939 Driven Lamp):Diagram4
L9 - Starter Interlock (BCM LSD Controlled w/ Relay & N/ Auto SS)_EATON XMSN:Diagram1
L9 - Starter Interlocks (BCM Controlled with Input from Allison 3K/4K TCM):Diagram1
L9 - Starter Interlocks (BCM Controlled with Input from Allison 3K/4K TCM):Diagram2
L9 - TEM Electric Trailer Brake Controller Activated Stop LT:Diagram1
L9 - Traction Control (Bendix):Diagram1
L9 - Transmission Oil Temperature-Automatic Trans:Diagram1
L9 - Transmission Oil Temperature-Automatic Trans w/Aux Gauge:Diagram1
L9 - Transmission Oil Temperature-Manual Trans w/Aux Gauge:Diagram1-Combination1
L9 - Transmission Oil Temperature-Manual Transmission:Diagram1-Combination1
L9 - Transmission Power Take Off (Auto Trans Single PTO w/21 Parameters):Diagram1
L9 - Transmission Power Take Off (Auto Trans with Lectradrive):Diagram1
L9 - Transmission Power Take Off (Lectrashift PTO with Manual Trans):Diagram1

L9 - Transmission Power Take Off (Manual Trans Single PTO w/21 Parameters):Diagram1
L9 - Transmission Power Take Off (Single Input configurable pull up or pull down):Diagram1
L9 - Transmission Power Take Off (Single PTO W/ RPM and Auto Trans):Diagram1
L9 - Transmission Power Take Off (Single PTO W/ RPM and Manual Trans):Diagram1
L9 - Two Speed Axle (AirShift on Shifter):Diagram1
L9 - Two Speed Axle (Multiplex SW on Dash):Diagram1
L9 - Windshield Washer Pump & Low Fluid Sensor:Diagram1
L9 - Windshield Washer Pump & Low Fluid Sensor:Diagram2
L9 - WORK LIGHT 1 BULB:Diagram1
L9 - WORK LIGHT 1 BULB:Diagram2
L9 - WORK LIGHT W BackUP 1 BULB Option 1:Diagram1
L9 - WORK LIGHT W BackUP 1 BULB Option 1:Diagram2
L9 - WORK LIGHT W BackUP 1 BULB Option 1:Diagram3
L9 - WORK LIGHT W BackUP 1 BULB Option 1:Diagram4
L9 - WORK LIGHT W BackUP 1 BULB Option 2:Diagram1
L9 - WORK LIGHT W BackUP 1 BULB Option 2:Diagram2
L9 - WORK LIGHT W RKE 1 BULB:Diagram1
L9 - WORK LIGHT W RKE 1 BULB:Diagram2
L9 - Work Lights LED W/ Sw Pack - Day Cab:Diagram1
L9 - Work Lights LED W/ Sw Pack - Day Cab:Diagram2

Mates MODU-BCM-A000-10-00

Name	Terminal Part Number	V-Min	Name	Wire Part Number	Wire CSA	Wire Spec	Wire Material description	Wire Color Description	Wire Length	End2 Terminal Part Number	End2 Pin Name	End2 Connect or
A	-	-	EJ12C	3510341 R1	0.79	18.0	Thin Wall XLPE Primary Cable	LIGHT BLUE	2570.0	-	X	-
A	-	-	EH12C	3510341 R1	0.79	18.0	Thin Wall XLPE Primary Cable	LIGHT BLUE	2825.0	-	R4 - 86	1011 - B2
A	-	-	EJ12C	3510341 R1	0.79	18.0	Thin Wall XLPE Primary Cable	LIGHT BLUE	2570.0	-	-	-

Name	Terminal Part Number	V-Min	Name	Wire Part Number	Wire CSA	Wire Spec	Wire Material description	Wire Color Description	Wire Length	End2 Terminal Part Number	End2 Pin Name	End2 Connector
A	-	-	EH12C	3510341 R1	0.79	18.0	Thin Wall XLPE Primary Cable	LIGHT BLUE	2825.0	-	-	-
B	-	-	DF13DD	3510323 R1	0.79	18.0	Thin Wall XLPE Primary Cable	PINK	2530.0	-	X	-
B	-	-	DJ13DD	3510323 R1	0.79	18.0	Thin Wall XLPE Primary Cable	PINK	2530.0	-	-	-
B	-	-	DJ13DD	3510323 R1	0.79	18.0	Thin Wall XLPE Primary Cable	PINK	2530.0	-	X	-
C	-	-	-	-	-	-	-	-	-	-	-	-
D	-	-	-	-	-	-	-	-	-	-	-	-
D	-	-	WIRE720 026	-	0.0	-	-	-	0.0	-	PIN1	-
E	-	-	-	-	-	-	-	-	-	-	-	-
E	-	-	WIRE720 025	-	0.0	-	-	-	0.0	-	PIN1	-
F	-	-	-	-	-	-	-	-	-	-	-	-
G	-	-	-	-	-	-	-	-	-	-	-	-
G	-	-	WIRE735 141	-	0.0	-	-	-	0.0	-	PIN1	-
H	-	-	-	-	-	-	-	-	-	-	-	-
H	-	-	WIRE735 140	-	0.0	-	-	-	0.0	-	PIN1	-

Name	Terminal Part Number	V-Min	Name	Wire Part Number	Wire CSA	Wire Spec	Wire Material description	Wire Color Description	Wire Length	End2 Terminal Part Number	End2 Pin Name	End2 Connector
J	-	-	QA23BA	3510329 R1	0.79	18.0	Thin Wall XLPE Primary Cable	TAN	2005.0	-	4	1703M
K	-	-	FA11-GAE	3510359 R1	0.79	18.0	Thin Wall XLPE Primary Cable	WHITE	1381.0	-	1	-
L	-	-	TJ70ER	3510365 R1	0.79	18.0	Thin Wall XLPE Primary Cable	RED	1630.0	-	X	-
L	-	-	TJ70ER	3510365 R1	0.79	18.0	Thin Wall XLPE Primary Cable	RED	1630.0	-	-	-
M	-	-	UB92#14 1A	3510329 R1	0.79	18.0	Thin Wall XLPE Primary Cable	TAN	2890.0	-	28	1703M
M	-	-	UD17B	3510323 R1	0.79	18.0	Thin Wall XLPE Primary Cable	PINK	2950.0	-	-	-
M	-	-	UA104-GA	3510360 R1	1.16	16.0	Thin Wall XLPE Primary Cable	WHITE	3365.0	-	-	-
M	-	-	UD17B	3510323 R1	0.79	18.0	Thin Wall XLPE Primary Cable	PINK	2950.0	-	R2 - 87	1014
N	-	-	-	-	-	-	-	-	-	-	-	-
N	-	-	WIRE1640	-	0.0	-	-	-	0.0	-	PIN1	-
P	-	-	-	-	-	-	-	-	-	-	-	-

Name	Terminal Part Number	V-Min	Name	Wire Part Number	Wire CSA	Wire Spec	Wire Material description	Wire Color Description	Wire Length	End2 Terminal Part Number	End2 Pin Name	End2 Connector
P	-	-	WIRE1639	-	0.0	-	-	-	0.0	-	PIN1	-
S	-	-	LE149AA	3510311 R1	0.79	18.0	Thin Wall XLPE Primary Cable	GREY	1650.0	-	X	-
S	-	-	LB17H	3510323 R1	0.79	18.0	Thin Wall XLPE Primary Cable	PINK	1635.0	-	B	1100
S	-	-	LH149B	3510311 R1	0.79	18.0	Thin Wall XLPE Primary Cable	GREY	2265.0	-	B	1100MA
S	-	-	LC17HA	3510323 R1	0.79	18.0	Thin Wall XLPE Primary Cable	PINK	1635.0	-	B	1100
S	-	-	LE149AA	3510311 R1	0.79	18.0	Thin Wall XLPE Primary Cable	GREY	1650.0	-	-	-
S	-	-	LB17H	3510323 R1	0.79	18.0	Thin Wall XLPE Primary Cable	PINK	1635.0	-	-	-
S	-	-	LH149B	3510311 R1	0.79	18.0	Thin Wall XLPE Primary Cable	GREY	2265.0	-	-	-
S	-	-	LC17HA	3510323 R1	0.79	18.0	Thin Wall XLPE Primary Cable	PINK	1635.0	-	-	-

Name	Terminal Part Number	V-Min	Name	Wire Part Number	Wire CSA	Wire Spec	Wire Material description	Wire Color Description	Wire Length	End2 Terminal Part Number	End2 Pin Name	End2 Connector
S	-	-	LB17H	3510323 R1	0.79	18.0	Thin Wall XLPE Primary Cable	PINK	1635.0	-	B	1100MA
T	-	-	LA17	3510324 R1	1.16	16.0	Thin Wall XLPE Primary Cable	PINK	3365.0	-	29	1703M
T	-	-	LA17	3510324 R1	1.16	16.0	Thin Wall XLPE Primary Cable	PINK	3365.0	-	-	-
W	-	-	QA23DD	3510323 R1	0.79	18.0	Thin Wall XLPE Primary Cable	PINK	1090.0	-	6	1703M

Connector Name	J6-1606
Part Number	3759005C1
Instances	A26 - Headlights W/LOWW, W/O Interrupt:Diagram1-Combination1 A26 - Headlights W/LOWW, W/O Interrupt:Diagram1-Combination2
Mates	MODU-BCM-A000-10-00

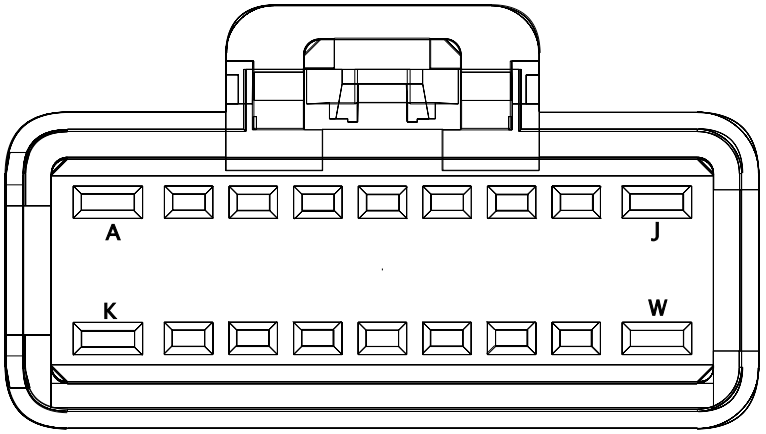

Name	Terminal Part Number	V-Min	Name	Wire Part Number	Wire CSA	Wire Spec	Wire Material description	Wire Color Description	Wire Length	End2 Terminal Part Number	End2 Pin Name	End2 Connector
N	-	-	-	-	-	-	-	-	-	-	-	-
P	-	-	-	-	-	-	-	-	-	-	-	-

Connector Name	J7-1607
Part Number	3710061C1
Instances	A26 - Clutch Switch/Monitoring (High and Low Switch to BCM):Diagram1 A26 - Driver Controlled Locking Differential FR and RR Axle (Dana w/ one switch):Diagram1 A26 - Driver Controlled Locking Differential FR and RR Axle (Meritor w/ one sw):Diagram1 A26 - Driver Controlled Locking Differential FR and RR Axles (Dana w/ two sw):Diagram1 A26 - Driver Controlled Locking Differential FR and RR Axles (Meritor w/ two sw):Diagram1 A26 - Driver Controlled Locking Differential RR Axle (Dana w/ one sw):Diagram1 A26 - Driver Controlled Locking Differential RR Axle (Meritor w/ one sw):Diagram1 A26 - Hazard Warning Light N/Trlr Socket:Diagram1 A26 - Hazard Warning Light N/Trlr Socket:Diagram2 A26 - Heating Ventilation & Air Conditioning (HVAC):Diagram1 A26 - Heating Ventilation & Air Conditioning (HVAC) Auto Temp Control:Diagram1 - HVAC A26 - Starter Interlock (BCM Controlled with Input from Allison 3K/4K TCM):Diagram1 A26 - Starter Interlock (BCM Controlled with Input from Allison 3K/4K TCM):Diagram2 A26/B6.7/L9 - BCM (Body Control Module):Connector J7-1607 A26/B6.7/L9 - Instrument Cluster (Premium):Diagram1 A26/B6.7/L9 - Instrument Cluster (Premium):Diagram2 B6.7 - Clutch Switch/Monitoring (High and Low Switch to BCM):Diagram1 B6.7 - Driver Controlled Locking Differential - RR Axle (Dana w/ one sw):Diagram1 B6.7 - Driver Controlled Locking Differential - RR Axle (Meritor w/ one sw):Diagram1 B6.7 - Heating Ventilation & Air Conditioning (HVAC):Diagram1 B6.7 - Heating Ventilation & Air Conditioning (HVAC) Auto Temp Control:Diagram1 - HVAC L9 - Clutch Switch/Monitoring (High and Low Switch to BCM):Diagram1 L9 - Driver Controlled Locking Differential - FR and RR Axle (Dana w/ one sw):Diagram1 L9 - Driver Controlled Locking Differential - FR and RR Axle (Meritor w/ one sw):Diagram1

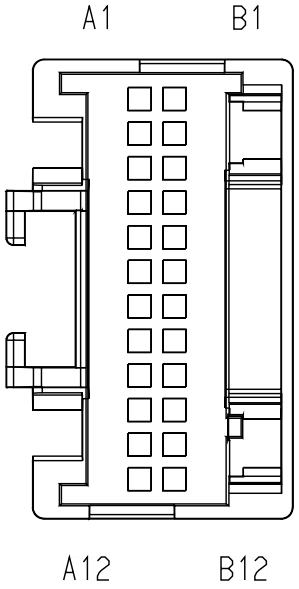

L9 - Driver Controlled Locking Differential - FR and RR Axles (Dana w/ two sw):Diagram1
L9 - Driver Controlled Locking Differential - FR and RR Axles (Meritor w/ two sw):Diagram1
L9 - Driver Controlled Locking Differential - RR Axle (Dana w/ one sw):Diagram1
L9 - Driver Controlled Locking Differential - RR Axle (Meritor w/ one sw):Diagram1
L9 - Hazard Warning Light N/Trlr Socket:Diagram1
L9 - Hazard Warning Light N/Trlr Socket:Diagram2
L9 - Heating Ventilation & Air Conditioning (HVAC):Diagram1
L9 - Heating Ventilation & Air Conditioning (HVAC) Auto Temp Control:Diagram1 - HVAC

Mates MODU-BCM-A000-10-00

Name	Terminal Part Number	V-Min	Name	Wire Part Number	Wire CSA	Wire Spec	Wire Material description	Wire Color Description	Wire Length	End2 Terminal Part Number	End2 Pin Name	End2 Connect or
A3	-	-	KN49	3510311 R1	0.79	18.0	Thin Wall XLPE Primary Cable	GREY	745.0	-	45	1701
A3	-	-	KN49	3510311 R1	0.79	18.0	Thin Wall XLPE Primary Cable	GREY	745.0	-	-	-
A4	-	-	KN49A	3510311 R1	0.79	18.0	Thin Wall XLPE Primary Cable	GREY	745.0	-	50	1701
A4	-	-	KN49A	3510311 R1	0.79	18.0	Thin Wall XLPE Primary Cable	GREY	745.0	-	-	-
A6	-	-	AA60A	3510317 R1	0.79	18.0	Thin Wall XLPE Primary Cable	ORANGE	1475.0	-	2	1202

Name	Terminal Part Number	V-Min	Name	Wire Part Number	Wire CSA	Wire Spec	Wire Material description	Wire Color Description	Wire Length	End2 Terminal Part Number	End2 Pin Name	End2 Connector
A6	-	-	AA60A	3510317 R1	0.79	18.0	Thin Wall XLPE Primary Cable	ORANGE	1475.0	-	-	-
A9	-	-	NA28D	3510328 R1	0.53	20.0	Thin Wall XLPE Primary Cable	TAN	1160.0	-	1	1020
A9	-	-	NA28D	3510328 R1	0.53	20.0	Thin Wall XLPE Primary Cable	TAN	1160.0	-	-	-
A10	-	-	SA77D	3510298 R1	0.53	20.0	Thin Wall XLPE Primary Cable	LIGHT GREEN	2945.0	-	L	1200E
A10	-	-	SA77D	3510298 R1	0.53	20.0	Thin Wall XLPE Primary Cable	LIGHT GREEN	2945.0	-	-	-
A12	-	-	SA77BA	3510298 R1	0.53	20.0	Thin Wall XLPE Primary Cable	LIGHT GREEN	2890.0	-	-	-
B2	-	-	UA17B	3510323 R1	0.79	18.0	Thin Wall XLPE Primary Cable	PINK	1050.0	-	D8	1800
B2	-	-	UA17B	3510323 R1	0.79	18.0	Thin Wall XLPE Primary Cable	PINK	1050.0	-	-	-

Name	Terminal Part Number	V-Min	Name	Wire Part Number	Wire CSA	Wire Spec	Wire Material description	Wire Color Description	Wire Length	End2 Terminal Part Number	End2 Pin Name	End2 Connect or
B2	-	-	UB92#14 1A	3510329 R1	0.79	18.0	Thin Wall XLPE Primary Cable	TAN	2890.0	-	-	-
B2	-	-	UB92#14 1A	3510329 R1	0.79	18.0	Thin Wall XLPE Primary Cable	TAN	2890.0	-	28	1703M
B5	-	-	LF104CB	2643720 R1	0.79	18.0	Std. Wall XLPE Primary Cable	DARK BLUE	665.0	-	-	-
B9	-	-	LF104CC	3510353 R1	0.79	18.0	Thin Wall XLPE Primary Cable	DARK BLUE	665.0	-	-	-
B10	-	-	AA6AM	3510310 R1	0.53	20.0	Thin Wall XLPE Primary Cable	GREY	2945.0	-	M	1200E
B10	-	-	AA6AM	3510310 R1	0.53	20.0	Thin Wall XLPE Primary Cable	GREY	2945.0	-	-	-

Connector Name	J7
Part Number	RING-M-12_0
Instances	A26 - Cranking (Starter) GEN4 BCM W/ Thermal Overcrank:Diagram1 A26 - Cranking (Starter) GEN4 BCM W/ Thermal Overcrank:Diagram2 A26 - Cranking (Starter) GEN4 BCM W/ Thermal Overcrank:Diagram3 A26 - Cranking (Starter) GEN4 BCM W/ Thermal Overcrank:Diagram4 A26 - Cranking (Starter) GEN4 BCM W/ Thermal Overcrank:Diagram5 A26 - Cranking (Starter) GEN4 BCM W/ Thermal Overcrank:Diagram6
Mates	MOT-STARTER-5024-01-03

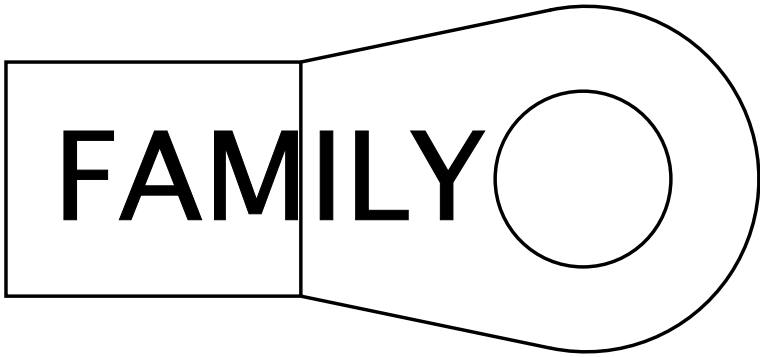

Name	Terminal Part Number	V-Min	Name	Wire Part Number	Wire CSA	Wire Spec	Wire Material description	Wire Color Description	Wire Length	End2 Terminal Part Number	End2 Pin Name	End2 Connect or
1	-	-	14-G	2645235 R1	49.99	0.0	SGX FLEX 125C	BLACK	360.0	-	1	S96_9257
1	-	-	2-G	2645227 R1	61.89	0.0	SGX FLEX 125C	BLACK	280.0	-	1	6314

Connector Name	K19-2000
Part Number	3710089C1
Instances	B6.7 - Starting Aid (Grid Heater):Diagram1
Mates	DEV-HEAT_GRID_SOL-01

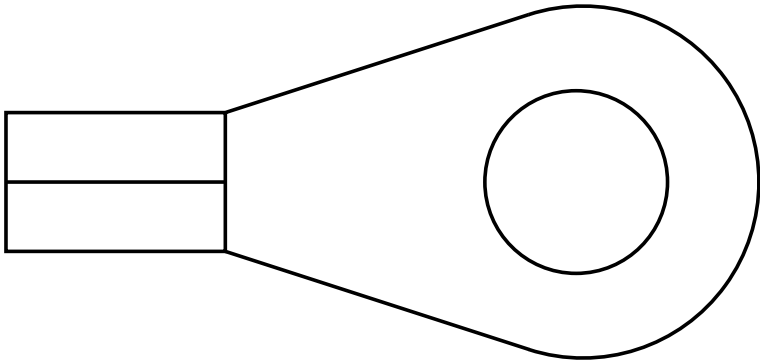

Name	Terminal Part Number	V-Min	Name	Wire Part Number	Wire CSA	Wire Spec	Wire Material description	Wire Color Description	Wire Length	End2 Terminal Part Number	End2 Pin Name	End2 Connect or
A	-	-	KA18	3510323 R1	0.79	18.0	Thin Wall XLPE Primary Cable	PINK	1490.0	-	75	6000

Connector Name	K19-2001
Part Number	3710089C1
Instances	B6.7 - Starting Aid (Grid Heater):Diagram1
Mates	DEV-HEAT_GRID_SOL-01

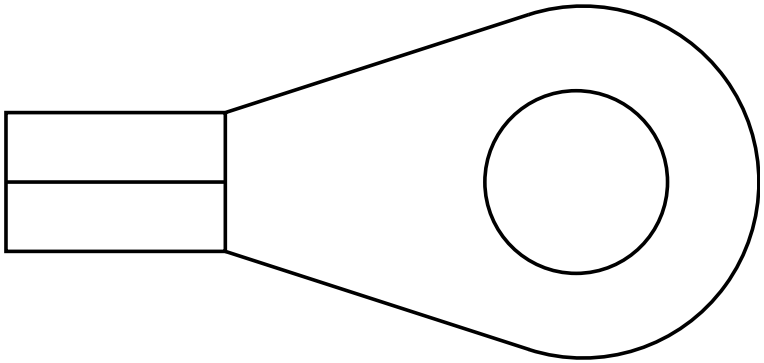

Name	Terminal Part Number	V-Min	Name	Wire Part Number	Wire CSA	Wire Spec	Wire Material description	Wire Color Description	Wire Length	End2 Terminal Part Number	End2 Pin Name	End2 Connect or
A	-	-	KA18S	3510323 R1	0.79	18.0	Thin Wall XLPE Primary Cable	PINK	1335.0	-	X	-

Connector Name	K19_1000
Part Number	RING-E-1-4_0
Instances	B6.7 - Delco Remy 36SI Alternator W/Sensor:Diagram1
Mates	DEV-Delco_Remy_36SI_Altern ator-4004-01-07A

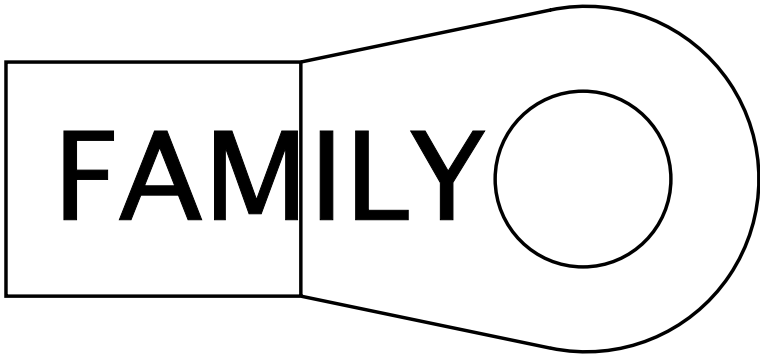

Name	Terminal Part Number	V-Min	Name	Wire Part Number	Wire CSA	Wire Spec	Wire Material description	Wire Color Description	Wire Length	End2 Terminal Part Number	End2 Pin Name	End2 Connect or
A	-	-	WM2-G	3592741 R1	32.19	2.0	Std. Wall XLPE Battery Cable	WHITE	1110.0	-	A	1200
A	-	-	WA2-G	3592741 R1	32.19	2.0	Std. Wall XLPE Battery Cable	WHITE	1390.0	-	A	1200

Connector Name	K19_1001
Part Number	RING-E-1-4_0
Instances	B6.7 - Delco Remy 36SI Alternator W/Sensor:Diagram1
Mates	DEV-Delco_Remy_36SI_Altern ator-4004-01-07A

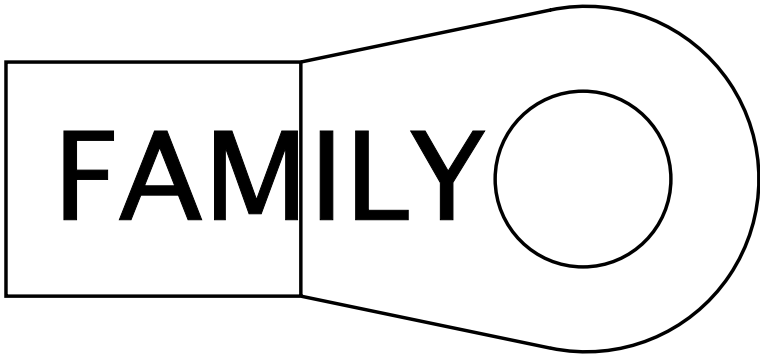

Name	Terminal Part Number	V-Min	Name	Wire Part Number	Wire CSA	Wire Spec	Wire Material description	Wire Color Description	Wire Length	End2 Terminal Part Number	End2 Pin Name	End2 Connect or
A	-	-	WM2	3592739 R1	32.19	2.0	Std. Wall XLPE Battery Cable	RED	1020.0	-	X	-
A	-	-	WA2	3592739 R1	32.19	2.0	Std. Wall XLPE Battery Cable	RED	1135.0	-	X	-

Connector Name	K20_7500W
Part Number	1661778C1
Instances	A26 - Body Builder Lighting - Combined Turn and Stop Lamps (Manual):Diagram1-Option 1 (In Cab, W/08HAU) A26 - Body Builder Lighting - Combined Turn and Stop Lamps (Manual):Diagram1-Option 2 (Back-of-Cab, W/08HAB) A26 - Body Builder Lighting - Combined Turn and Stop Lamps (Manual):Diagram1-Option 3 (End-of-Frame, W/08HAE)
Mates	SW-TRANSSWITCH-1023-01-02A

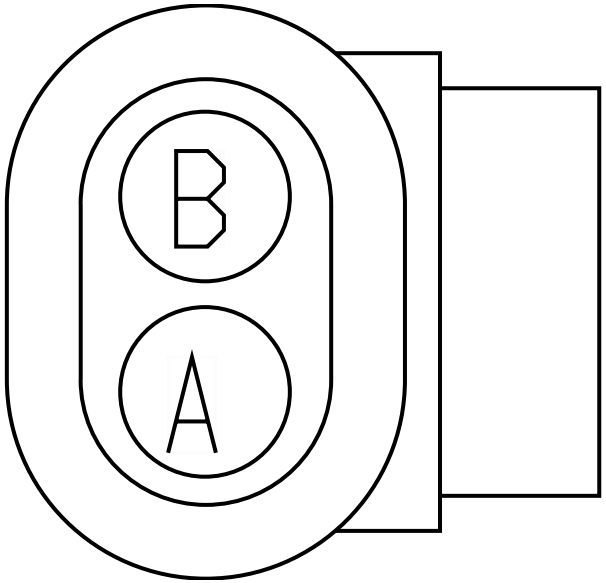

Name	Terminal Part Number	V-Min	Name	Wire Part Number	Wire CSA	Wire Spec	Wire Material description	Wire Color Description	Wire Length	End2 Terminal Part Number	End2 Pin Name	End2 Connect or
2	-	-	KW71B	2643682 R1	1.16	16.0	Std. Wall XLPE Primary Cable	ORANGE	2850.0	-	7	1702

Connector Name	K22-2000
Part Number	3710089C1
Instances	L9 - Starting Aid (Grid Heater):Diagram1
Mates	DEV-HEAT_GRID_SOL-01

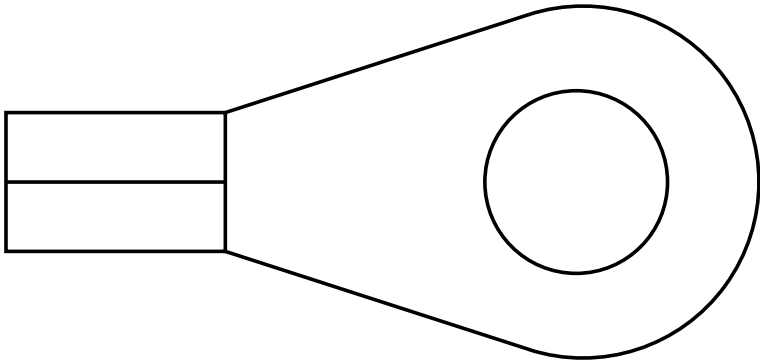

Name	Terminal Part Number	V-Min	Name	Wire Part Number	Wire CSA	Wire Spec	Wire Material description	Wire Color Description	Wire Length	End2 Terminal Part Number	End2 Pin Name	End2 Connect or
A	-	-	KA18	3510323 R1	0.79	18.0	Thin Wall XLPE Primary Cable	PINK	1490.0	-	75	6000

Connector Name	K22-2001
Part Number	3710089C1
Instances	L9 - Starting Aid (Grid Heater):Diagram1
Mates	DEV-HEAT_GRID_SOL-01

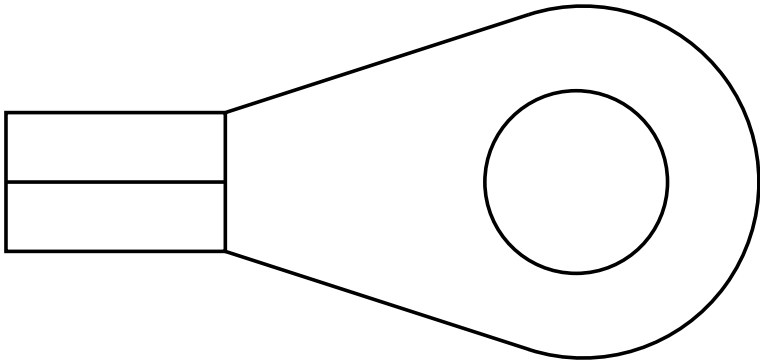

Name	Terminal Part Number	V-Min	Name	Wire Part Number	Wire CSA	Wire Spec	Wire Material description	Wire Color Description	Wire Length	End2 Terminal Part Number	End2 Pin Name	End2 Connect or
A	-	-	KA18R	3510323 R1	0.79	18.0	Thin Wall XLPE Primary Cable	PINK	155.0	-	76	6000

Connector Name	K22-7205F
Part Number	3525872C1
Instances	L9 - Transmission I/O (Allison 3K with Body Builder) - 13WUC:Diagram1
Mates	DEV-BODY_BUILDER_CONN-01

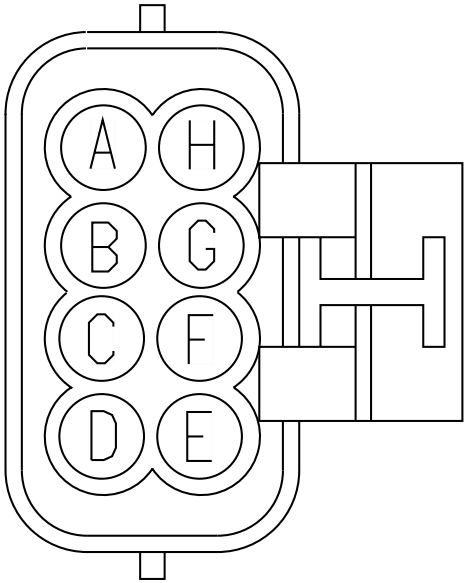

Name	Terminal Part Number	V-Min	Name	Wire Part Number	Wire CSA	Wire Spec	Wire Material description	Wire Color Description	Wire Length	End2 Terminal Part Number	End2 Pin Name	End2 Connect or
A	-	-	PJ92B103	3510335 R1	0.79	18.0	Thin Wall XLPE Primary Cable	YELLOW 2	153.0	-	X	-
A	-	-	PN92B103	3510335 R1	0.79	18.0	Thin Wall XLPE Primary Cable	YELLOW 2	150.0	-	X	-
B	-	-	PN92#113	3510359 R1	0.79	18.0	Thin Wall XLPE Primary Cable	WHITE	2818.0	-	13	K22-7500
C	-	-	PN92#104	3510335 R1	0.79	18.0	Thin Wall XLPE Primary Cable	YELLOW 2	2818.0	-	4	K22-7500

Name	Terminal Part Number	V-Min	Name	Wire Part Number	Wire CSA	Wire Spec	Wire Material description	Wire Color Description	Wire Length	End2 Terminal Part Number	End2 Pin Name	End2 Connector
D	-	-	PN92#129	3510299 R1	0.79	18.0	Thin Wall XLPE Primary Cable	LIGHT GREEN	2818.0	-	29	K22-7500
E	-	-	PM92#122	3510335 R1	0.79	18.0	Thin Wall XLPE Primary Cable	YELLOW 2	2785.0	-	22	K22-7500
F	-	-	PM92#105	3510317 R1	0.79	18.0	Thin Wall XLPE Primary Cable	ORANGE	2785.0	-	5	K22-7500
G	-	-	PM92#164	3510341 R1	0.79	18.0	Thin Wall XLPE Primary Cable	LIGHT BLUE	2785.0	-	64	K22-7500
H	-	-	PN92#102	3510335 R1	0.79	18.0	Thin Wall XLPE Primary Cable	YELLOW 2	2818.0	-	2	K22-7500

Connector Name	K22-7206F
Part Number	3525874C1
Instances	L9 - Transmission I/O (Allison 3K with Body Builder) - 13WUC:Diagram1
Mates	DEV-BODY_BUILDER_CONN-02

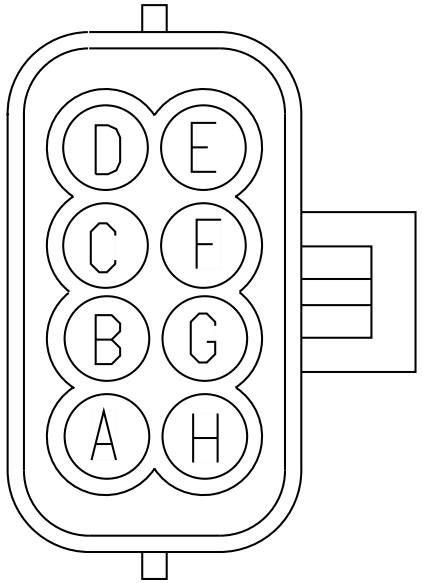

Name	Terminal Part Number	V-Min	Name	Wire Part Number	Wire CSA	Wire Spec	Wire Material description	Wire Color Description	Wire Length	End2 Terminal Part Number	End2 Pin Name	End2 Connector
A	-	-	PJ92#101	3510341 R1	0.79	18.0	Thin Wall XLPE Primary Cable	LIGHT BLUE	2818.0	-	1	K22-7500
A	-	-	PN92#101	3510341 R1	0.79	18.0	Thin Wall XLPE Primary Cable	LIGHT BLUE	2785.0	-	1	K22-7500
B	-	-	RL92#117	3510341 R1	0.79	18.0	Thin Wall XLPE Primary Cable	LIGHT BLUE	2785.0	-	17	K22-7500
C	-	-	PJ92C103	3510335 R1	0.79	18.0	Thin Wall XLPE Primary Cable	YELLOW 2	0.0	-	X	-

Name	Terminal Part Number	V-Min	Name	Wire Part Number	Wire CSA	Wire Spec	Wire Material description	Wire Color Description	Wire Length	End2 Terminal Part Number	End2 Pin Name	End2 Connect or
C	-	-	PN92C103	3510335 R1	0.79	18.0	Thin Wall XLPE Primary Cable	YELLOW 2	150.0	-	X	-
D	-	-	PM92#143	3510341 R1	0.79	18.0	Thin Wall XLPE Primary Cable	LIGHT BLUE	2785.0	-	43	K22-7500
E	-	-	RL92#142	3510359 R1	0.79	18.0	Thin Wall XLPE Primary Cable	WHITE	2785.0	-	42	K22-7500
F	-	-	RL92#145	3510317 R1	0.79	18.0	Thin Wall XLPE Primary Cable	ORANGE	2785.0	-	45	K22-7500
G	-	-	PM92#130	3510335 R1	0.79	18.0	Thin Wall XLPE Primary Cable	YELLOW 2	2785.0	-	30	K22-7500
H	-	-	PM92#123	3510299 R1	0.79	18.0	Thin Wall XLPE Primary Cable	LIGHT GREEN	2785.0	-	23	K22-7500

Connector Name	K22-7500
Part Number	3605713C1
Instances	L9 - Transmission I/O (Allison 3K with Body Builder) - 13WUC:Diagram1
Mates	MODU-TCM-A002-10-03

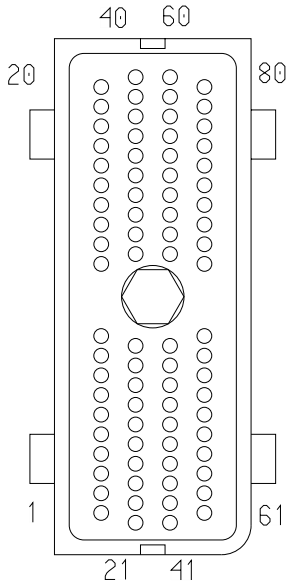

Name	Terminal Part Number	V-Min	Name	Wire Part Number	Wire CSA	Wire Spec	Wire Material description	Wire Color Description	Wire Length	End2 Terminal Part Number	End2 Pin Name	End2 Connector
1	-	-	PJ92#101	3510341 R1	0.79	18.0	Thin Wall XLPE Primary Cable	LIGHT BLUE	2818.0	-	A	K22-7206F
1	-	-	PN92#101	3510341 R1	0.79	18.0	Thin Wall XLPE Primary Cable	LIGHT BLUE	2785.0	-	A	K22-7206F
2	-	-	PN92#102	3510335 R1	0.79	18.0	Thin Wall XLPE Primary Cable	YELLOW 2	2818.0	-	H	K22-7205F
3	-	-	PJ92#103	3510335 R1	0.79	18.0	Thin Wall XLPE Primary Cable	YELLOW 2	2665.0	-	X	-

Name	Terminal Part Number	V-Min	Name	Wire Part Number	Wire CSA	Wire Spec	Wire Material description	Wire Color Description	Wire Length	End2 Terminal Part Number	End2 Pin Name	End2 Connector
3	-	-	PN92#103	3510335 R1	0.79	18.0	Thin Wall XLPE Primary Cable	YELLOW 2	2635.0	-	X	-
4	-	-	PN92#104	3510335 R1	0.79	18.0	Thin Wall XLPE Primary Cable	YELLOW 2	2818.0	-	C	K22-720 5F
5	-	-	PM92#105	3510317 R1	0.79	18.0	Thin Wall XLPE Primary Cable	ORANGE	2785.0	-	F	K22-720 5F
13	-	-	PN92#113	3510359 R1	0.79	18.0	Thin Wall XLPE Primary Cable	WHITE	2818.0	-	B	K22-720 5F
17	-	-	RL92#117	3510341 R1	0.79	18.0	Thin Wall XLPE Primary Cable	LIGHT BLUE	2785.0	-	B	K22-720 6F
22	-	-	PM92#122	3510335 R1	0.79	18.0	Thin Wall XLPE Primary Cable	YELLOW 2	2785.0	-	E	K22-720 5F
23	-	-	PM92#123	3510299 R1	0.79	18.0	Thin Wall XLPE Primary Cable	LIGHT GREEN	2785.0	-	H	K22-720 6F
29	-	-	PN92#129	3510299 R1	0.79	18.0	Thin Wall XLPE Primary Cable	LIGHT GREEN	2818.0	-	D	K22-720 5F

Name	Terminal Part Number	V-Min	Name	Wire Part Number	Wire CSA	Wire Spec	Wire Material description	Wire Color Description	Wire Length	End2 Terminal Part Number	End2 Pin Name	End2 Connector
30	-	-	PM92#130	3510335 R1	0.79	18.0	Thin Wall XLPE Primary Cable	YELLOW 2	2785.0	-	G	K22-7206F
42	-	-	RL92#142	3510359 R1	0.79	18.0	Thin Wall XLPE Primary Cable	WHITE	2785.0	-	E	K22-7206F
43	-	-	PM92#143	3510341 R1	0.79	18.0	Thin Wall XLPE Primary Cable	LIGHT BLUE	2785.0	-	D	K22-7206F
45	-	-	RL92#145	3510317 R1	0.79	18.0	Thin Wall XLPE Primary Cable	ORANGE	2785.0	-	F	K22-7206F
64	-	-	PM92#164	3510341 R1	0.79	18.0	Thin Wall XLPE Primary Cable	LIGHT BLUE	2785.0	-	G	K22-7205F

Connector Name	K22_1200
Part Number	RING-E-1-2_0
Instances	B6.7 - Cranking (Starter) GEN4 BCM W/O Thermal Overcrank:Diagram1
Mates	MOT-STARTER-5024-01-04

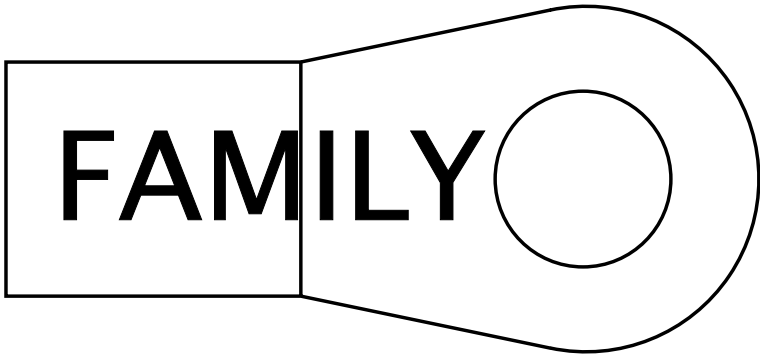

Name	Terminal Part Number	V-Min	Name	Wire Part Number	Wire CSA	Wire Spec	Wire Material description	Wire Color Description	Wire Length	End2 Terminal Part Number	End2 Pin Name	End2 Connect or
A	-	-	14-G	2645235 R1	49.99	0.0	SGX FLEX 125C	BLACK	360.0	-	1	S96_9257

Connector Name	K22_1701
Part Number	RING-E-1-2_0
Instances	B6.7 - Cranking (Starter) GEN4 BCM W/O Thermal Overcrank:Diagram1
Mates	MOT-STARTER-5024-01-04

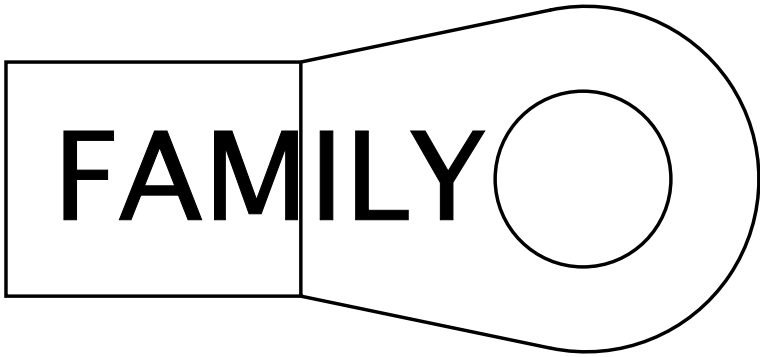

Name	Terminal Part Number	V-Min	Name	Wire Part Number	Wire CSA	Wire Spec	Wire Material description	Wire Color Description	Wire Length	End2 Terminal Part Number	End2 Pin Name	End2 Connect or
A	-	-	14	2645953 R1	18.94	4.0	SGX NFLEX 125	RED	3700.0	-	1	S97_9251

Connector Name	K22_6305M
Part Number	RING-M-5_0
Instances	L9 - Cranking (Starter) GEN4 BCM W/ Thermal Overcrank - External Switch:Diagram1
Mates	MOT-STARTER-5024-01-03

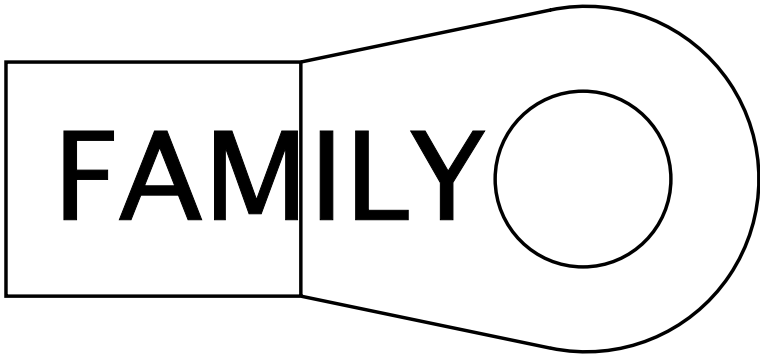

Name	Terminal Part Number	V-Min	Name	Wire Part Number	Wire CSA	Wire Spec	Wire Material description	Wire Color Description	Wire Length	End2 Terminal Part Number	End2 Pin Name	End2 Connect or
A	-	-	GA17D	2643752 R1	1.16	16.0	Std. Wall XLPE Primary Cable	PINK	860.0	-	A	6316M

Connector Name	L67-19
Part Number	2241353C1
Instances	B6.7 - Starting Aid (Grid Heater):Diagram1 L9 - Starting Aid (Grid Heater):Diagram1
Mates	DEV-HEAT_GRID_SOL-01

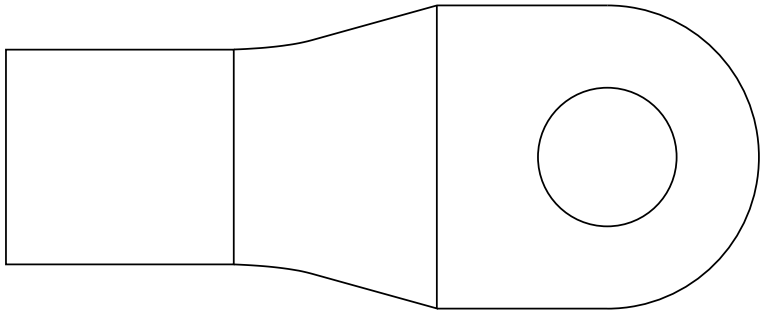

Name	Terminal Part Number	V-Min	Name	Wire Part Number	Wire CSA	Wire Spec	Wire Material description	Wire Color Description	Wire Length	End2 Terminal Part Number	End2 Pin Name	End2 Connect or
A	-	-	37A	2645955 R1	32.19	2.0	Std. Wall 125C Battery Cable	RED	940.0	-	A	P97-20
A	-	-	37A	2645955 R1	32.19	2.0	Std. Wall 125C Battery Cable	RED	940.0	-	-	-

Connector Name	M8 B
Part Number	RING-M-8_0
Instances	B6.7/L9 - Chassis PDM:Diagram1
Mates	Chassis PDM

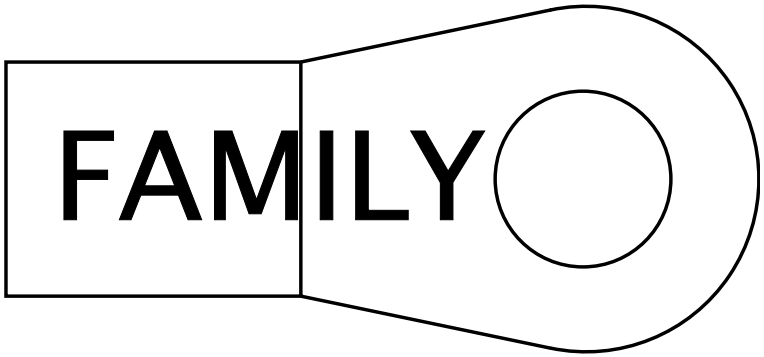

Name	Terminal Part Number	V-Min	Name	Wire Part Number	Wire CSA	Wire Spec	Wire Material description	Wire Color Description	Wire Length	End2 Terminal Part Number	End2 Pin Name	End2 Connect or
A	-	-	14	2645248 R1	49.99	0.0	SGX FLEX 125C	RED	360.0	-	A	6305

Connector Name N01-4450M

Part Number 2039311C91

Instances A26/B6.7/L9 - Body Builder Aux Power (In Cab, BOC, or EOF):Diagram1-Option 2 (Back-of-Cab, W/08HAB)

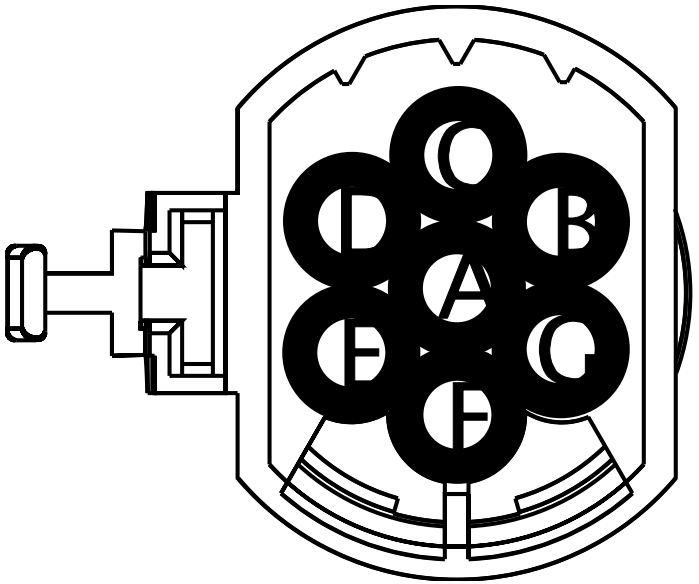

Name	Terminal Part Number	V-Min	Name	Wire Part Number	Wire CSA	Wire Spec	Wire Material description	Wire Color Description	Wire Length	End2 Terminal Part Number	End2 Pin Name	End2 Connect or
F	-	-	ND12BB	2643694 R1	1.91	14.0	Std. Wall XLPE Primary Cable	LIGHT BLUE	2260.0	-	75	1701F
G	-	-	ND11-GD	2643787 R1	3.01	12.0	Std. Wall XLPE Primary Cable	WHITE	250.0	-	-	-

Connector Name	N04_4450M
Part Number	2039311C91
Instances	A26 - Body Builder Lighting - Combined Turn and Stop Lamps (Automatic):Diagram1-Option 2 (Back-of-Cab, W/08HAB) A26 - Body Builder Lighting - Combined Turn and Stop Lamps (Manual):Diagram1-Option 2 (Back-of-Cab, W/08HAB)
Mates	CONN-BODY_BUILDER-1036-01- 02A

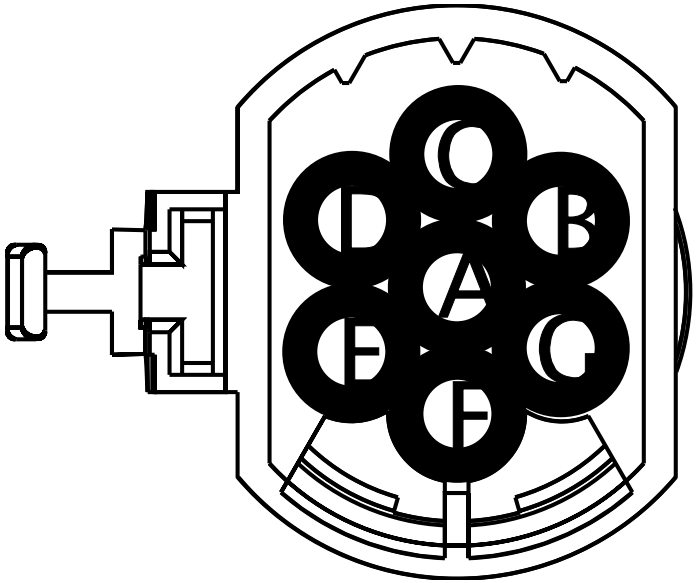

Name	Terminal Part Number	V-Min	Name	Wire Part Number	Wire CSA	Wire Spec	Wire Material description	Wire Color Description	Wire Length	End2 Terminal Part Number	End2 Pin Name	End2 Connect or
A	-	-	ND68BB	2643688 R1	1.91	14.0	Std. Wall XLPE Primary Cable	BROWN	2230.0	-	71	1701F
B	-	-	ND56BB	2643684 R1	1.16	16.0	Std. Wall XLPE Primary Cable	YELLOW 2	2230.0	-	12	1701F
C	-	-	ND57BB	2643678 R1	1.16	16.0	Std. Wall XLPE Primary Cable	LIGHT GREEN	2230.0	-	63	1701F
D	-	-	ND54BB	2643688 R1	1.91	14.0	Std. Wall XLPE Primary Cable	BROWN	2230.0	-	74	1701F

Name	Terminal Part Number	V-Min	Name	Wire Part Number	Wire CSA	Wire Spec	Wire Material description	Wire Color Description	Wire Length	End2 Terminal Part Number	End2 Pin Name	End2 Connect or
E	-	-	ND71BB	2643806 R1	1.16	16.0	Std. Wall XLPE Primary Cable	LIGHT BLUE	2230.0	-	73	1701F
G	-	-	ND11-GD	2643787 R1	3.01	12.0	Std. Wall XLPE Primary Cable	WHITE	250.0	-	-	-

Connector Name	N04_4460M
Part Number	1686834C1
Instances	A26 - Body Builder Lighting - Combined Turn and Stop Lamps (Automatic):Diagram1-Option 2 (Back-of-Cab, W/08HAB) A26 - Body Builder Lighting - Combined Turn and Stop Lamps (Manual):Diagram1-Option 2 (Back-of-Cab, W/08HAB)
Mates	CONN-BB_TURN_STOP-1036-01- 02A

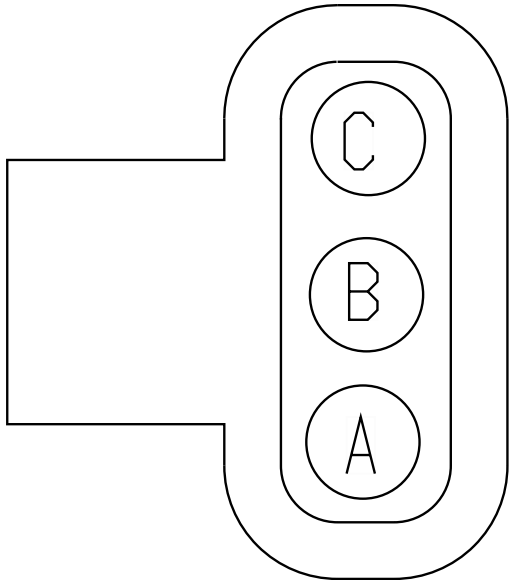

Name	Terminal Part Number	V-Min	Name	Wire Part Number	Wire CSA	Wire Spec	Wire Material description	Wire Color Description	Wire Length	End2 Terminal Part Number	End2 Pin Name	End2 Connector
A	-	-	ND56BC	2643684 R1	1.16	16.0	Std. Wall XLPE Primary Cable	YELLOW 2	2385.0	-	42	1701F
B	-	-	ND57BC	2643678 R1	1.16	16.0	Std. Wall XLPE Primary Cable	LIGHT GREEN	2385.0	-	64	1701F
C	-	-	ND70BB	2643686 R1	1.91	14.0	Std. Wall XLPE Primary Cable	RED	2385.0	-	72	1701F

Connector Name	P1L-829
Part Number	RING-10_0
Instances	A26 - Back-Up Alarm (Relay to 5 Pin 08TKC Tailboard to Alarm) (Automatic):Diagram1 A26 - Backup Alarm (Switch to 5 Pin 08TKC Tailboard to Alarm) (Manual):Diagram1
Mates	DEV-Backup_Alarm-3009-01-11

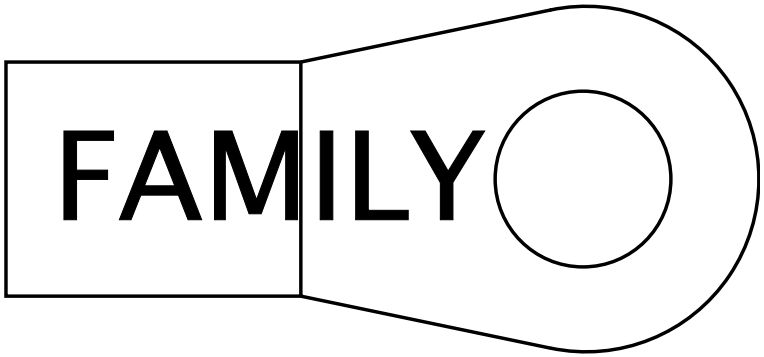

Name	Terminal Part Number	V-Min	Name	Wire Part Number	Wire CSA	Wire Spec	Wire Material description	Wire Color Description	Wire Length	End2 Terminal Part Number	End2 Pin Name	End2 Connect or
A	-	-	RD	2643686 R1	1.91	14.0	Std. Wall XLPE Primary Cable	RED	400.0	-	A	828

Connector Name	P1L-830
Part Number	RING-10_0
Instances	A26 - Back-Up Alarm (Relay to 5 Pin 08TKC Tailboard to Alarm) (Automatic):Diagram1 A26 - Backup Alarm (Switch to 5 Pin 08TKC Tailboard to Alarm) (Manual):Diagram1
Mates	DEV-Backup_Alarm-3009-01-11

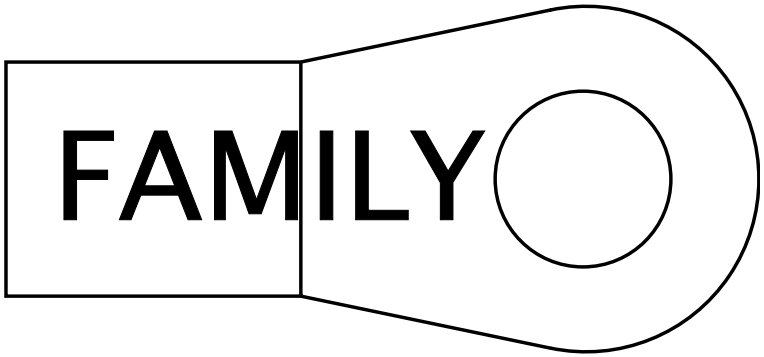

Name	Terminal Part Number	V-Min	Name	Wire Part Number	Wire CSA	Wire Spec	Wire Material description	Wire Color Description	Wire Length	End2 Terminal Part Number	End2 Pin Name	End2 Connect or
A	-	-	WH	2643689 R1	1.91	14.0	Std. Wall XLPE Primary Cable	WHITE	400.0	-	B	828

Connector Name	P16400
Part Number	3544688C1
Instances	A26/B6.7/L9 - Over The Air Electrical I/O (OnCommand Link / N2 Module):Diagram1
Mates	D49_2000F

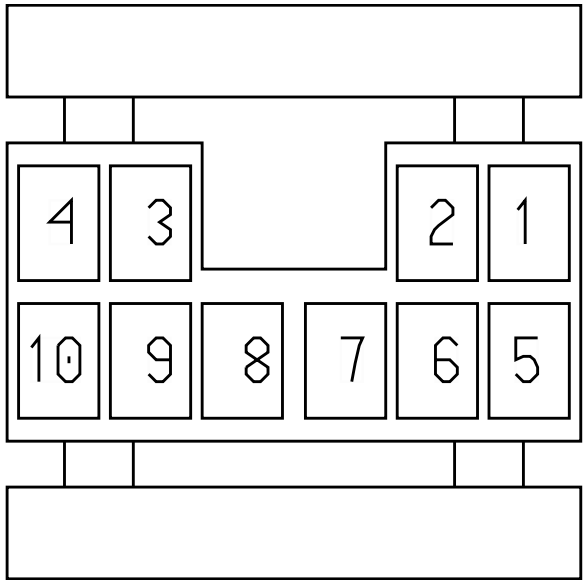

Name	Terminal Part Number	V-Min	Name	Wire Part Number	Wire CSA	Wire Spec	Wire Material description	Wire Color Description	Wire Length	End2 Terminal Part Number	End2 Pin Name	End2 Connect or
3	-	-	AD63-GA	3510360 R1	1.16	16.0	Thin Wall XLPE Primary Cable	WHITE	510.0	-	-	-

Connector Name	P1898
Part Number	3678796C1
Instances	L9 - Traction Control (Bendix):Diagram1
Mates	SOL-TCV_BENDIX-3033-01-01A

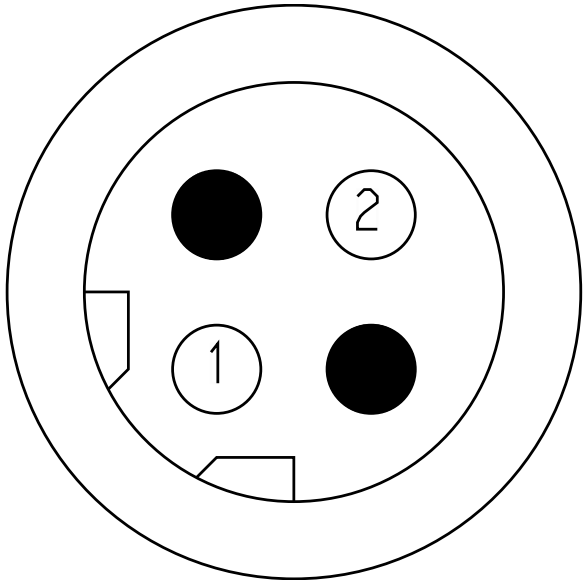

Name	Terminal Part Number	V-Min	Name	Wire Part Number	Wire CSA	Wire Spec	Wire Material description	Wire Color Description	Wire Length	End2 Terminal Part Number	End2 Pin Name	End2 Connect or
1	-	-	RD94BE	3510336 R1	1.16	16.0	Thin Wall XLPE Primary Cable	YELLOW 2	410.0	-	24	9800
2	-	-	RD94BD	3510306 R1	1.16	16.0	Thin Wall XLPE Primary Cable	BROWN	410.0	-	23	9800

Connector Name	P4X_1
Part Number	RING-M-8_0
Instances	A26 - Chassis PDM:Diagram1 B6.7/L9 - Chassis PDM:Diagram1
Mates	Chassis PDM

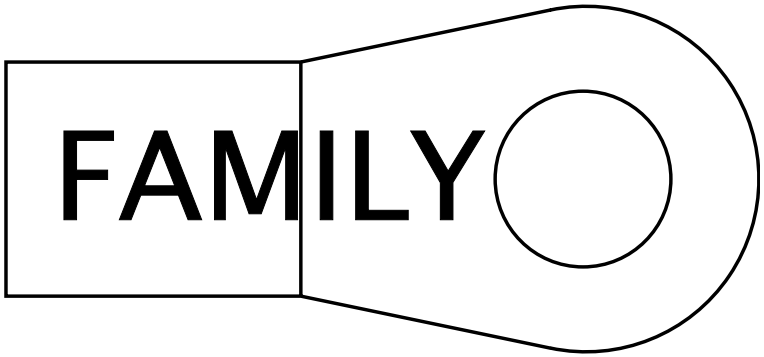

Name	Terminal Part Number	V-Min	Name	Wire Part Number	Wire CSA	Wire Spec	Wire Material description	Wire Color Description	Wire Length	End2 Terminal Part Number	End2 Pin Name	End2 Connect or
A	-	-	14B	2645970 R1	101.95	0.0	SGR 125	RED	300.0	-	-	-

Connector Name	P6P_943e
Part Number	RING-M-5_0
Instances	B6.7 - Delco Remy 28SI Alternator W/Sensor Option 1:Diagram1
Mates	DEV-Delco_Remy_28SI_Altern ator-4004-01-05A

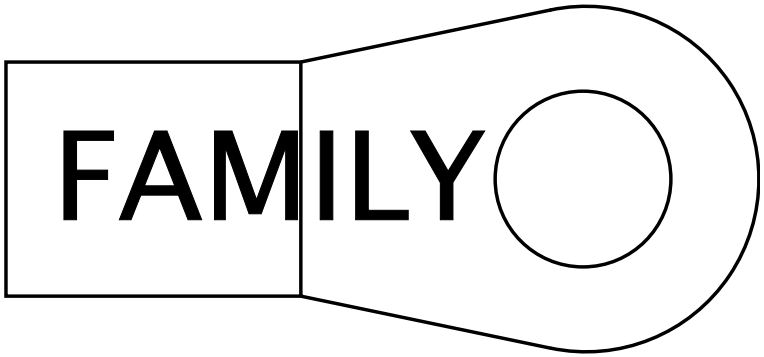

Name	Terminal Part Number	V-Min	Name	Wire Part Number	Wire CSA	Wire Spec	Wire Material description	Wire Color Description	Wire Length	End2 Terminal Part Number	End2 Pin Name	End2 Connect or
A	-	-	7A	2643686 R1	1.91	14.0	Std. Wall XLPE Primary Cable	RED	3950.0	-	B	1F

Connector Name	P6P_943
Part Number	RING-M-5_0
Instances	B6.7 - Delco Remy 28SI Alternator W/Sensor Option 2:Diagram1 B6.7 - Leece-Neville - LN 325A Alternator W/Sensor:Diagram1 B6.7 - Leece-Neville AVI160-210A/240A Alternator W/ Sensor:Diagram1
Mates	DEV-Delco_Remy_28SI_Altern ator-4004-01-05A

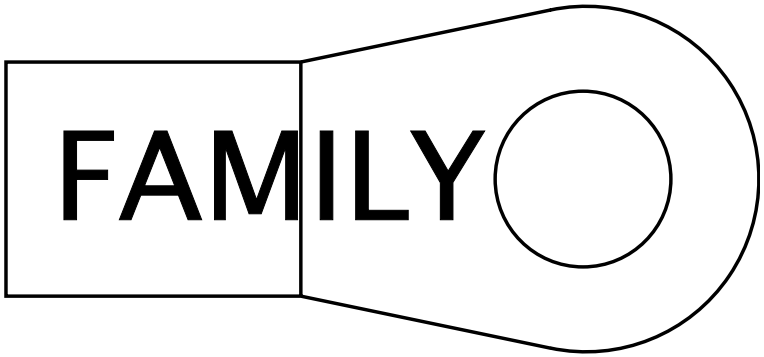

Name	Terminal Part Number	V-Min	Name	Wire Part Number	Wire CSA	Wire Spec	Wire Material description	Wire Color Description	Wire Length	End2 Terminal Part Number	End2 Pin Name	End2 Connect or
A	-	-	7A	2643686 R1	1.91	14.0	Std. Wall XLPE Primary Cable	RED	3950.0	-	B	1F

Connector Name	P6P_943
Part Number	RING-10_0
Instances	B6.7 - Delco Remy 36SI Alternator W/Sensor:Diagram1 B6.7 - Delco Remy 40SI Alternator W/Sensor:Diagram1
Mates	DEV-Delco_Remy_36SI_Altern ator-4004-01-07A

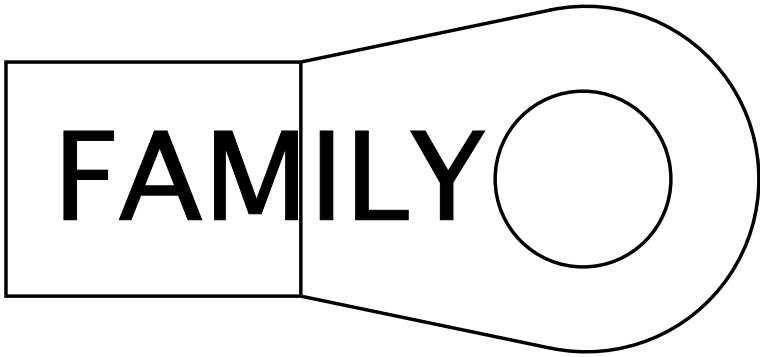

Name	Terminal Part Number	V-Min	Name	Wire Part Number	Wire CSA	Wire Spec	Wire Material description	Wire Color Description	Wire Length	End2 Terminal Part Number	End2 Pin Name	End2 Connect or
A	-	-	7A	2643686 R1	1.91	14.0	Std. Wall XLPE Primary Cable	RED	3950.0	-	B	1F

Connector Name	P6P_945
Part Number	3866817C1
Instances	B6.7 - Battery International (4) 12V:Diagram1 B6.7 - Delco Remy 28SI Alternator W/Sensor Option 1:Diagram1 B6.7 - Delco Remy 28SI Alternator W/Sensor Option 2:Diagram1 B6.7 - Delco Remy 36SI Alternator W/Sensor:Diagram1 B6.7 - Delco Remy 40SI Alternator W/Sensor:Diagram1 B6.7 - Leece-Neville - LN 325A Alternator W/Sensor:Diagram1 B6.7 - Leece-Neville AVI160-210A/240A Alternator W/ Sensor:Diagram1 L9 - Battery International (4) 12V:Diagram1
Mates	BTRY-925CCA_1-4005-01-01D

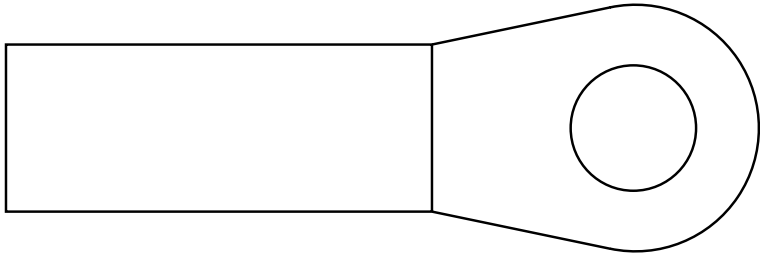

Name	Terminal Part Number	V-Min	Name	Wire Part Number	Wire CSA	Wire Spec	Wire Material description	Wire Color Description	Wire Length	End2 Terminal Part Number	End2 Pin Name	End2 Connect or
A	-	-	7B	3510366 R1	1.16	16.0	Thin Wall XLPE Primary Cable	RED	250.0	-	A	1F
A	-	-	14	2645953 R1	18.94	4.0	SGX NFLEX 125	RED	3700.0	-	-	-
A	-	-	14	2645953 R1	18.94	4.0	SGX NFLEX 125	RED	3700.0	-	1	S97_9251
A	-	-	7B	3510366 R1	1.16	16.0	Thin Wall XLPE Primary Cable	RED	250.0	-	-	-

Connector Name	P9073
Part Number	1661778C1
Instances	L9 - Backup Lights (Dual Daisy Reverse Light) Eaton/Manual Trans:Diagram2 L9 - Backup Lights (Dual Reverse Light) Eaton/Manual Trans:Diagram2 L9 - Backup Lights (Single Reverse Light) Eaton/Manual Trans Option 1:Diagram2 L9 - Backup Lights (Single Reverse Light) Eaton/Manual Trans Option 2:Diagram2 L9 - Backup Lights (Single Reverse Light) Eaton/Manual Trans Option 3:Diagram2 L9 - Backup Lights (Single Reverse Light) Eaton/Manual Trans Option 4:Diagram2 L9 - WORK LIGHT W BackUP 1 BULB Option 1:Diagram3 L9 - WORK LIGHT W BackUP 1 BULB Option 1:Diagram4
Mates	SW-TRANSSWITCH-1023-01-02A

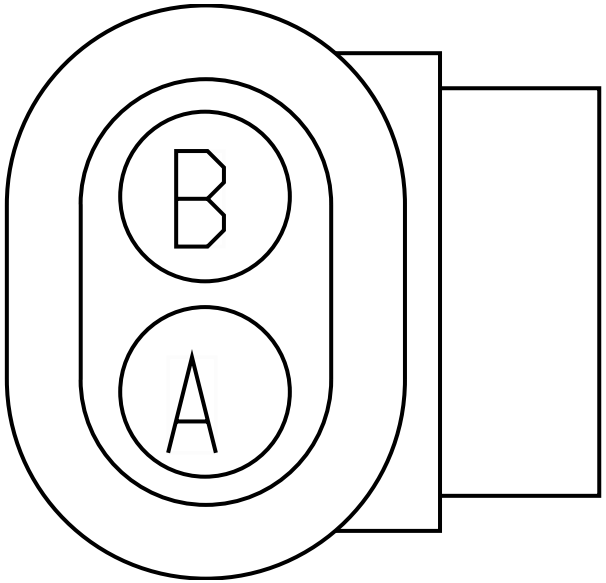

Name	Terminal Part Number	V-Min	Name	Wire Part Number	Wire CSA	Wire Spec	Wire Material description	Wire Color Description	Wire Length	End2 Terminal Part Number	End2 Pin Name	End2 Connect or
1	-	-	KH71	3510318 R1	1.16	16.0	Thin Wall XLPE Primary Cable	ORANGE	2310.0	-	6	1702
2	-	-	KH71A	3510318 R1	1.16	16.0	Thin Wall XLPE Primary Cable	ORANGE	2310.0	-	7	1702

Connector Name P9074

Part Number 1661778C1

Instances L9 - Backup Lights (Dual Daisy Reverse Light) Eaton/Manual Trans:Diagram1
L9 - Backup Lights (Dual Reverse Light) Eaton/Manual Trans:Diagram1
L9 - Backup Lights (Single Reverse Light) Eaton/Manual Trans Option 1:Diagram1
L9 - Backup Lights (Single Reverse Light) Eaton/Manual Trans Option 2:Diagram1
L9 - Backup Lights (Single Reverse Light) Eaton/Manual Trans Option 3:Diagram1
L9 - Backup Lights (Single Reverse Light) Eaton/Manual Trans Option 4:Diagram1
L9 - WORK LIGHT W BackUP 1 BULB Option 1:Diagram1
L9 - WORK LIGHT W BackUP 1 BULB Option 1:Diagram2

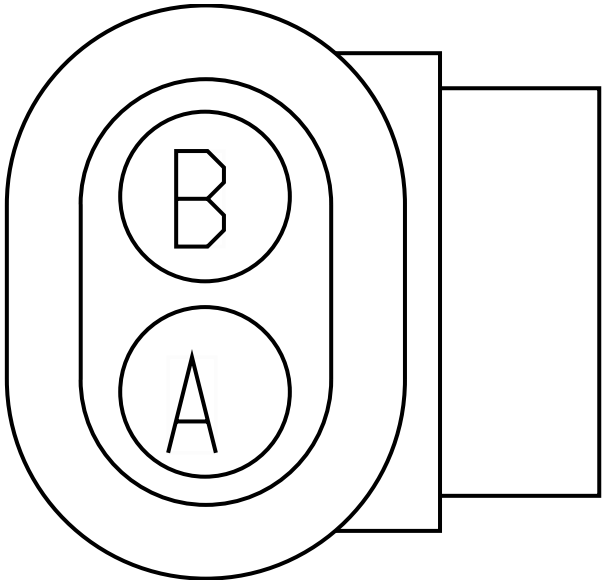

Name	Terminal Part Number	V-Min	Name	Wire Part Number	Wire CSA	Wire Spec	Wire Material description	Wire Color Description	Wire Length	End2 Terminal Part Number	End2 Pin Name	End2 Connect or
1	-	-	MJ71A	2645921 R1	0.79	18.0	TXL 150C	ORANGE	1990.0	-	6	1702
2	-	-	MJ71B	2645915 R1	0.79	18.0	TXL 150C	TAN	1990.0	-	7	1702

Connector Name	P97-20A
Part Number	2241353C1
Instances	B6.7 - Starting Aid (Grid Heater):Diagram1 L9 - Starting Aid (Grid Heater):Diagram1
Mates	DEV-ISB_ENG-01

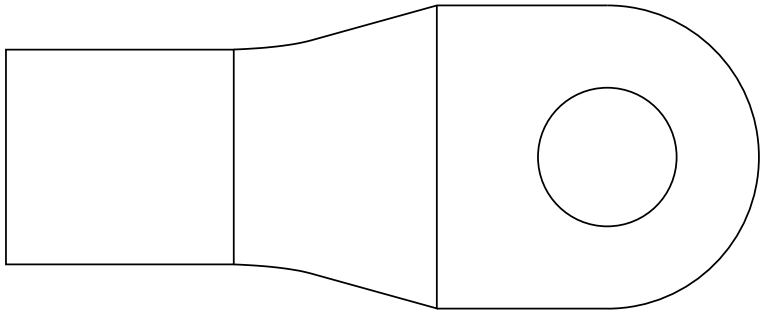

Name	Terminal Part Number	V-Min	Name	Wire Part Number	Wire CSA	Wire Spec	Wire Material description	Wire Color Description	Wire Length	End2 Terminal Part Number	End2 Pin Name	End2 Connect or
A	-	-	37A	2645955 R1	32.19	2.0	Std. Wall 125C Battery Cable	RED	940.0	-	-	-
A	-	-	37A	2645955 R1	32.19	2.0	Std. Wall 125C Battery Cable	RED	940.0	-	A	P97-20

Connector Name	P97-20
Part Number	2241353C1
Instances	B6.7 - Starting Aid (Grid Heater):Diagram1 L9 - Starting Aid (Grid Heater):Diagram1
Mates	DEV-HEAT_GRID_SOL-01

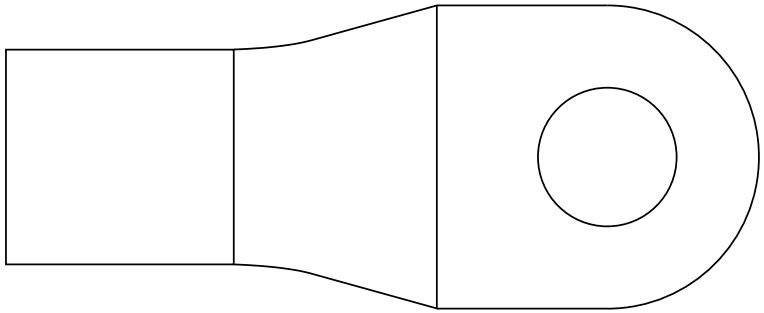

Name	Terminal Part Number	V-Min	Name	Wire Part Number	Wire CSA	Wire Spec	Wire Material description	Wire Color Description	Wire Length	End2 Terminal Part Number	End2 Pin Name	End2 Connect or
A	-	-	37A	2645955 R1	32.19	2.0	Std. Wall 125C Battery Cable	RED	940.0	-	A	L67-19
A	-	-	37A	2645955 R1	32.19	2.0	Std. Wall 125C Battery Cable	RED	940.0	-	A	P97-20A

Connector Name R01-4450BM

Part Number 1686834C1

Instances A26 - Body Builder Lighting - Combined Turn and Stop Lamps (Automatic):Diagram1-Option 3 (End-of-Frame, W/08HAE)
A26 - Body Builder Lighting - Combined Turn and Stop Lamps (Manual):Diagram1-Option 3 (End-of-Frame, W/08HAE)

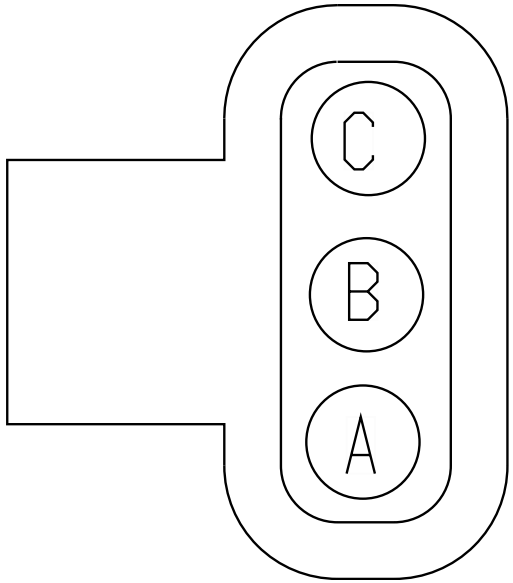

Name	Terminal Part Number	V-Min	Name	Wire Part Number	Wire CSA	Wire Spec	Wire Material description	Wire Color Description	Wire Length	End2 Terminal Part Number	End2 Pin Name	End2 Connector
A	-	-	RX56BC	2643682 R1	1.16	16.0	Std. Wall XLPE Primary Cable	ORANGE	2625.0	-	A	4460BF
B	-	-	RX57BC	2643682 R1	1.16	16.0	Std. Wall XLPE Primary Cable	ORANGE	2625.0	-	B	4460BF
C	-	-	RX70BB	2643690 R1	1.91	14.0	Std. Wall XLPE Primary Cable	ORANGE	2625.0	-	C	4460BF

Connector Name	R01-4460BM
Part Number	2039311C91
Instances	A26 - Body Builder Lighting - Combined Turn and Stop Lamps (Automatic):Diagram1-Option 3 (End-of-Frame, W/08HAE) A26 - Body Builder Lighting - Combined Turn and Stop Lamps (Manual):Diagram1-Option 3 (End-of-Frame, W/08HAE) A26/B6.7/L9 - Body Builder Aux Power (In Cab, BOC, or EOF):Diagram1-Option 3 (End-of-Frame, W/08HAE)
Mates	CONN-BODY_BUILDER-1036-01- 02A

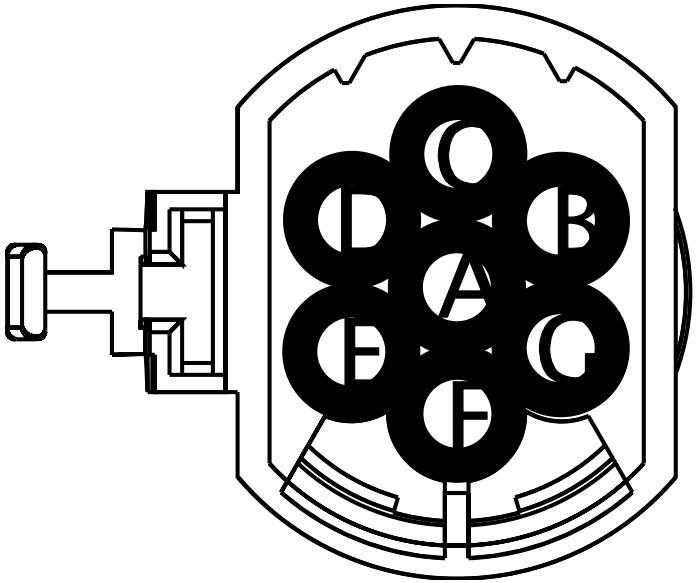

Name	Terminal Part Number	V-Min	Name	Wire Part Number	Wire CSA	Wire Spec	Wire Material description	Wire Color Description	Wire Length	End2 Terminal Part Number	End2 Pin Name	End2 Connector
A	-	-	RX68BB	2643688 R1	1.91	14.0	Std. Wall XLPE Primary Cable	BROWN	2625.0	-	A	4450BF
B	-	-	RX56BB	2643682 R1	1.16	16.0	Std. Wall XLPE Primary Cable	ORANGE	2625.0	-	B	4450BF
C	-	-	RX57BB	2643682 R1	1.16	16.0	Std. Wall XLPE Primary Cable	ORANGE	2625.0	-	C	4450BF
D	-	-	RX58BB	2643688 R1	1.91	14.0	Std. Wall XLPE Primary Cable	BROWN	2625.0	-	D	4450BF

Name	Terminal Part Number	V-Min	Name	Wire Part Number	Wire CSA	Wire Spec	Wire Material description	Wire Color Description	Wire Length	End2 Terminal Part Number	End2 Pin Name	End2 Connector
E	-	-	RX71BB	2643682 R1	1.16	16.0	Std. Wall XLPE Primary Cable	ORANGE	2625.0	-	E	4450BF
F	-	-	RX12BB	2643694 R1	1.91	14.0	Std. Wall XLPE Primary Cable	LIGHT BLUE	2652.0	-	F	4450BF
G	-	-	RX11-GBB	2643787 R1	3.01	12.0	Std. Wall XLPE Primary Cable	WHITE	2625.0	-	G	4450BF

Connector Name	R01-9303D
Part Number	587574C91
Instances	A26 - Separate Rear Lights (Stop) W/08TVH:Diagram1
Mates	DEV-TAIL_ASSEMBLY-01

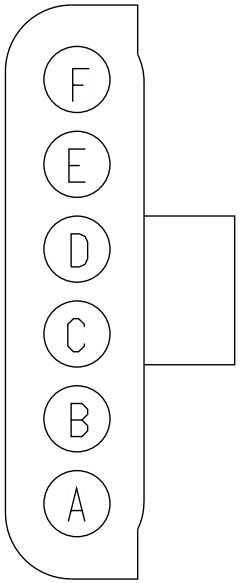

Name	Terminal Part Number	V-Min	Name	Wire Part Number	Wire CSA	Wire Spec	Wire Material description	Wire Color Description	Wire Length	End2 Terminal Part Number	End2 Pin Name	End2 Connect or
E	-	-	AF70	2643690 R1	1.91	14.0	Std. Wall XLPE Primary Cable	ORANGE	0.0	-	6	9800
F	-	-	AF11-GTL	3510362 R1	3.01	12.0	Thin Wall XLPE Primary Cable	WHITE	2875.0	-	12	9800

Connector Name	S96_9256
Part Number	3866817C1
Instances	A26 - Battery International (4) 12V:Diagram1 B6.7 - Battery International (4) 12V:Diagram1 L9 - Battery International (4) 12V:Diagram1
Mates	BTRY-925CCA_1-4005-01-01A

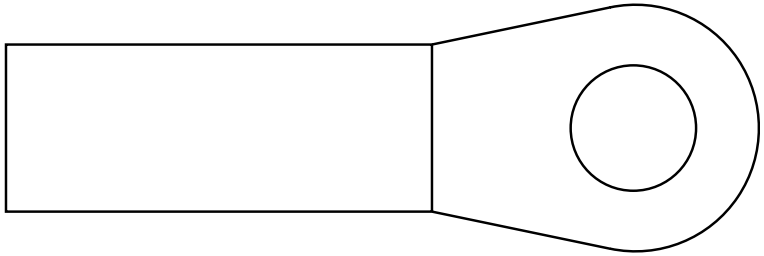

Name	Terminal Part Number	V-Min	Name	Wire Part Number	Wire CSA	Wire Spec	Wire Material description	Wire Color Description	Wire Length	End2 Terminal Part Number	End2 Pin Name	End2 Connect or
1	-	-	14-G	2645235 R1	49.99	0.0	SGX FLEX 125C	BLACK	360.0	-	1	6049
1	-	-	1/0	2645235 R1	49.99	0.0	SGX FLEX 125C	BLACK	210.0	-	1	S96_9257
1	-	-	14-G	2645235 R1	49.99	0.0	SGX FLEX 125C	BLACK	360.0	-	-	-
1	-	-	N26B	3510333 R1	4.81	10.0	Thin Wall XLPE Primary Cable	TAN	255.0	-	-	-

Connector Name	S96_9257
Part Number	3866817C1
Instances	A26 - Cranking (Starter) GEN4 BCM W/O Thermal Overcrank:Diagram1 A26 - Cranking (Starter) GEN4 BCM W/O Thermal Overcrank:Diagram2 A26 - Cranking (Starter) GEN4 BCM W/O Thermal Overcrank:Diagram3 A26 - Cranking (Starter) GEN4 BCM W/O Thermal Overcrank:Diagram4 A26 - Cranking (Starter) GEN4 BCM W/O Thermal Overcrank:Diagram5 A26 - Cranking (Starter) GEN4 BCM W/O Thermal Overcrank:Diagram6

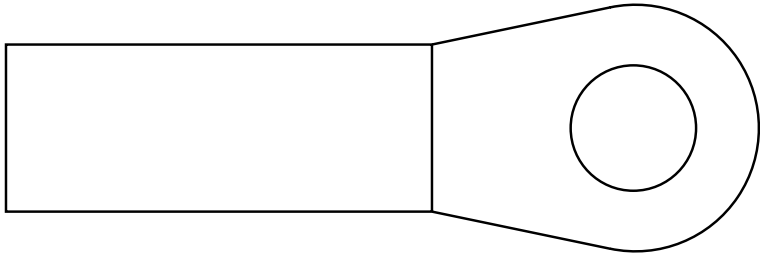

Name	Terminal Part Number	V-Min	Name	Wire Part Number	Wire CSA	Wire Spec	Wire Material description	Wire Color Description	Wire Length	End2 Terminal Part Number	End2 Pin Name	End2 Connector
1	-	-	14-G	2645235 R1	49.99	0.0	SGX FLEX 125C	BLACK	360.0	-	A	J5

Connector Name S96_9257

Part Number 3866817C1

Instances A26 - Battery International (4) 12V:Diagram1
A26 - Cranking (Starter) GEN4 BCM W/ Thermal Overcrank:Diagram1
A26 - Cranking (Starter) GEN4 BCM W/ Thermal Overcrank:Diagram2
A26 - Cranking (Starter) GEN4 BCM W/ Thermal Overcrank:Diagram3
A26 - Cranking (Starter) GEN4 BCM W/ Thermal Overcrank:Diagram4
A26 - Cranking (Starter) GEN4 BCM W/ Thermal Overcrank:Diagram5
A26 - Cranking (Starter) GEN4 BCM W/ Thermal Overcrank:Diagram6
B6.7 - Battery International (4) 12V:Diagram1
B6.7 - Cranking (Starter) GEN4 BCM W/O Thermal Overcrank:Diagram1
L9 - Battery International (4) 12V:Diagram1
L9 - Cranking (Starter) GEN4 BCM W/ Thermal Overcrank - External Switch:Diagram1
L9 - Cranking (Starter) GEN4 BCM W/O Thermal Overcrank:Diagram1

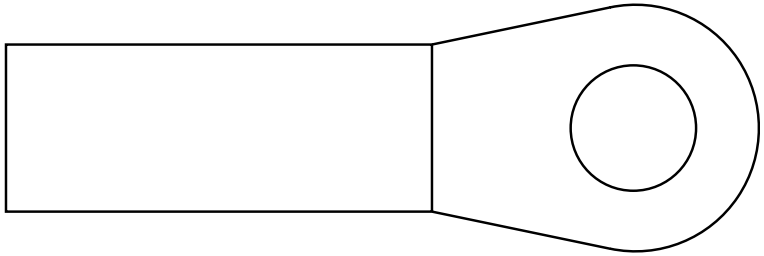

Mates BTRY-925CCA_1-4005-01-01B

Name	Terminal Part Number	V-Min	Name	Wire Part Number	Wire CSA	Wire Spec	Wire Material description	Wire Color Description	Wire Length	End2 Terminal Part Number	End2 Pin Name	End2 Connector
1	-	-	14-G	2645235 R1	49.99	0.0	SGX FLEX 125C	BLACK	360.0	-	A	6335
1	-	-	14-G	2645235 R1	49.99	0.0	SGX FLEX 125C	BLACK	360.0	-	1	J7
1	-	-	N14-GD	3510363 R1	4.81	10.0	Thin Wall XLPE Primary Cable	WHITE	230.0	-	-	-
1	-	-	1/0	2645235 R1	49.99	0.0	SGX FLEX 125C	BLACK	210.0	-	1	S96_9256

Name	Terminal Part Number	V-Min	Name	Wire Part Number	Wire CSA	Wire Spec	Wire Material description	Wire Color Description	Wire Length	End2 Terminal Part Number	End2 Pin Name	End2 Connect or
1	-	-	N14-G	2643788 R1	4.81	10.0	Std. Wall XLPE Primary Cable	WHITE	230.0	-	-	-
1	-	-	N14-GA	2643788 R1	4.81	10.0	Std. Wall XLPE Primary Cable	WHITE	230.0	-	-	-
1	-	-	14-G	2645235 R1	49.99	0.0	SGX FLEX 125C	BLACK	360.0	-	A	K22_1200
1	-	-	14-G	2645235 R1	49.99	0.0	SGX FLEX 125C	BLACK	360.0	-	A	1202
1	-	-	14-G	2645235 R1	49.99	0.0	SGX FLEX 125C	BLACK	360.0	-	1	6049
1	-	-	14-G	2645235 R1	49.99	0.0	SGX FLEX 125C	BLACK	360.0	-	-	-

Connector Name	S97_9250
Part Number	3866817C1
Instances	A26 - Battery International (4) 12V:Diagram1 B6.7 - Battery International (4) 12V:Diagram1 L9 - Battery International (4) 12V:Diagram1
Mates	BTRY-925CCA_1-4005-01-01A

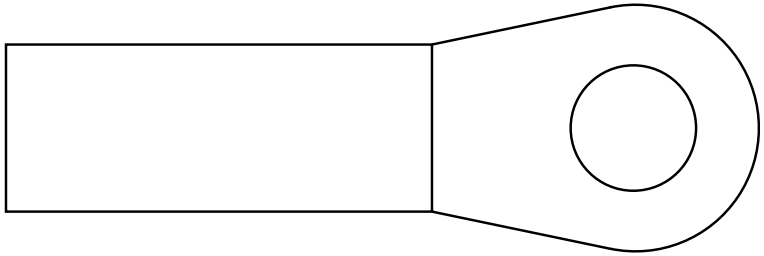

Name	Terminal Part Number	V-Min	Name	Wire Part Number	Wire CSA	Wire Spec	Wire Material description	Wire Color Description	Wire Length	End2 Terminal Part Number	End2 Pin Name	End2 Connect or
1	-	-	1/0	2645235 R1	49.99	0.0	SGX FLEX 125C	BLACK	210.0	-	-	-

Connector Name S97_9251

Part Number 3866817C1

Instances A26 - Battery International (4) 12V:Diagram1
A26 - Cranking (Starter) GEN4 BCM W/O Thermal Overcrank:Diagram1
A26 - Cranking (Starter) GEN4 BCM W/O Thermal Overcrank:Diagram2
A26 - Cranking (Starter) GEN4 BCM W/O Thermal Overcrank:Diagram3
A26 - Cranking (Starter) GEN4 BCM W/O Thermal Overcrank:Diagram4
A26 - Cranking (Starter) GEN4 BCM W/O Thermal Overcrank:Diagram5
A26 - Cranking (Starter) GEN4 BCM W/O Thermal Overcrank:Diagram6
B6.7 - Battery International (4) 12V:Diagram1
B6.7 - Cranking (Starter) GEN4 BCM W/O Thermal Overcrank:Diagram1
L9 - Battery International (4) 12V:Diagram1
L9 - Cranking (Starter) GEN4 BCM W/ Thermal Overcrank - External Switch:Diagram1
L9 - Cranking (Starter) GEN4 BCM W/O Thermal Overcrank:Diagram1

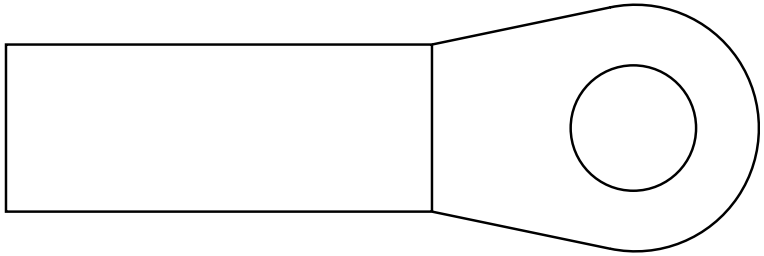

Mates BTRY-925CCA_1-4005-01-01B

Name	Terminal Part Number	V-Min	Name	Wire Part Number	Wire CSA	Wire Spec	Wire Material description	Wire Color Description	Wire Length	End2 Terminal Part Number	End2 Pin Name	End2 Connector
1	-	-	14	2645953 R1	18.94	4.0	SGX NFLEX 125	RED	3700.0	-	A	6301E
1	-	-	14	2645953 R1	18.94	4.0	SGX NFLEX 125	RED	3700.0	-	1	6305
1	-	-	14	2645953 R1	18.94	4.0	SGX NFLEX 125	RED	3700.0	-	1	6051

Name	Terminal Part Number	V-Min	Name	Wire Part Number	Wire CSA	Wire Spec	Wire Material description	Wire Color Description	Wire Length	End2 Terminal Part Number	End2 Pin Name	End2 Connect or
1	-	-	N14KB	3510369 R1	4.81	10.0	Thin Wall XLPE Primary Cable	RED	274.0	-	-	-
1	-	-	1/0	2645235 R1	49.99	0.0	SGX FLEX 125C	BLACK	210.0	-	-	-
1	-	-	14	2645953 R1	18.94	4.0	SGX NFLEX 125	RED	3700.0	-	A	K22_1701
1	-	-	14	2645953 R1	18.94	4.0	SGX NFLEX 125	RED	3700.0	-	A	1702
1	-	-	14	2645953 R1	18.94	4.0	SGX NFLEX 125	RED	3700.0	-	A	P6P_945
1	-	-	14	2645953 R1	18.94	4.0	SGX NFLEX 125	RED	3700.0	-	1	945

Connector Name	S97_9251
Part Number	3866817C1
Instances	A26 - Cranking (Starter) GEN4 BCM W/ Thermal Overcrank:Diagram1 A26 - Cranking (Starter) GEN4 BCM W/ Thermal Overcrank:Diagram2 A26 - Cranking (Starter) GEN4 BCM W/ Thermal Overcrank:Diagram3 A26 - Cranking (Starter) GEN4 BCM W/ Thermal Overcrank:Diagram4 A26 - Cranking (Starter) GEN4 BCM W/ Thermal Overcrank:Diagram5 A26 - Cranking (Starter) GEN4 BCM W/ Thermal Overcrank:Diagram6
Mates	BTRY-925CCA_1-4005-01-01B

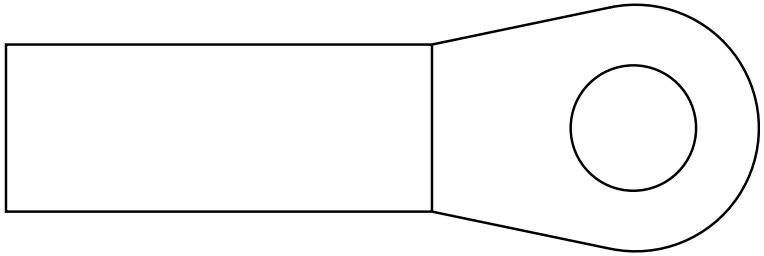

Name	Terminal Part Number	V-Min	Name	Wire Part Number	Wire CSA	Wire Spec	Wire Material description	Wire Color Description	Wire Length	End2 Terminal Part Number	End2 Pin Name	End2 Connect or
A	-	-	14	2645953 R1	18.94	4.0	SGX NFLEX 125	RED	3700.0	-	1	6305

Connector Name	T11_6101D
Part Number	RING-M-8_0
Instances	A26 - Cranking (Starter) GEN4 BCM W/ Thermal Overcrank:Diagram1 A26 - Cranking (Starter) GEN4 BCM W/O Thermal Overcrank:Diagram1 A26- Bosch LH160 LH200 Alternator:Diagram1
Mates	DEV-Bosch_LH160_LG200_Alte rnator- 4004-01-01A

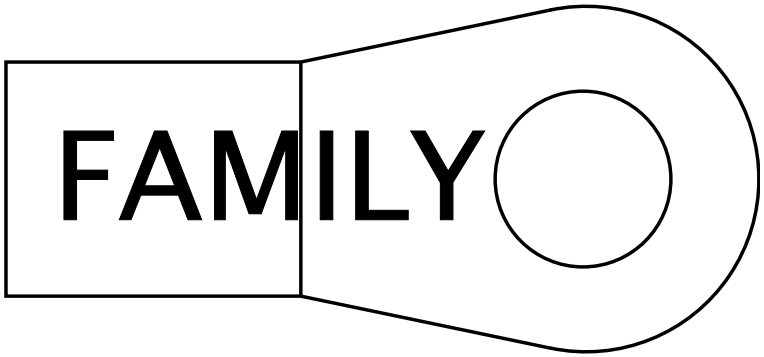

Name	Terminal Part Number	V-Min	Name	Wire Part Number	Wire CSA	Wire Spec	Wire Material description	Wire Color Description	Wire Length	End2 Terminal Part Number	End2 Pin Name	End2 Connect or
A	-	-	VM2	2645955 R1	32.19	2.0	SGR 125	RED	2910.0	-	X	-

Connector Name	T11_6101
Part Number	RING-M-6_0
Instances	A26 - Cranking (Starter) GEN4 BCM W/ Thermal Overcrank:Diagram1 A26 - Cranking (Starter) GEN4 BCM W/O Thermal Overcrank:Diagram1 A26- Bosch LH160 LH200 Alternator:Diagram1
Mates	DEV-Bosch_LH160_LG200_Alte rnator- 4004-01-01A

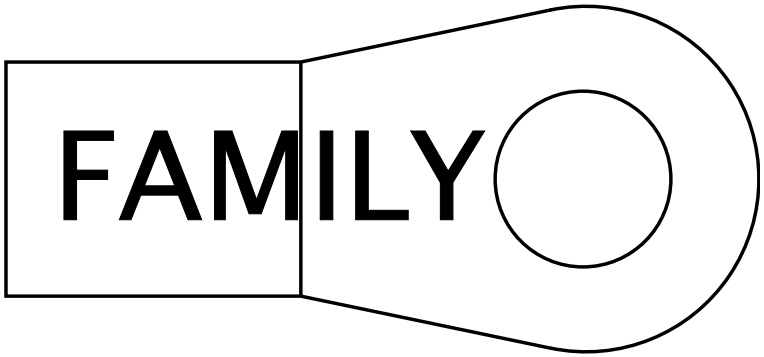

Name	Terminal Part Number	V-Min	Name	Wire Part Number	Wire CSA	Wire Spec	Wire Material description	Wire Color Description	Wire Length	End2 Terminal Part Number	End2 Pin Name	End2 Connect or
A	-	-	VM2-G	2645931 R1	32.19	2.0	SGR 125	BLACK	2900.0	-	1	6314

Connector Name	T12_6101D
Part Number	RING-M-8_0
Instances	A26 - Cranking (Starter) GEN4 BCM W/ Thermal Overcrank:Diagram2 A26 - Cranking (Starter) GEN4 BCM W/O Thermal Overcrank:Diagram3 A26 - Leece-Neville AVI160-210A/240A Alternator W/ Sensor:Diagram1 A26 - Leece-Neville AVI160-210A/240A Alternator W/ Sensor:Diagram2
Mates	DEV-Leece_Neville_AVI160_2 10A_240A_Alternator-4004-01-04A

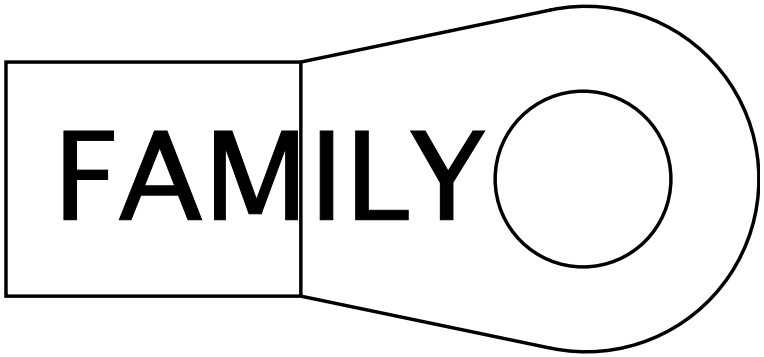

Name	Terminal Part Number	V-Min	Name	Wire Part Number	Wire CSA	Wire Spec	Wire Material description	Wire Color Description	Wire Length	End2 Terminal Part Number	End2 Pin Name	End2 Connect or
A	-	-	VH2	2645958 R1	39.43	1.0	SGR 125	RED	2875.0	-	X	-

Connector Name	T12_6101
Part Number	RING-M-8_0
Instances	A26 - Cranking (Starter) GEN4 BCM W/ Thermal Overcrank:Diagram2 A26 - Cranking (Starter) GEN4 BCM W/O Thermal Overcrank:Diagram3 A26 - Leece-Neville AVI160-210A/240A Alternator W/ Sensor:Diagram1 A26 - Leece-Neville AVI160-210A/240A Alternator W/ Sensor:Diagram2
Mates	DEV-Leece_Neville_AVI160_2 10A_240A_Alternator-4004-01-04A

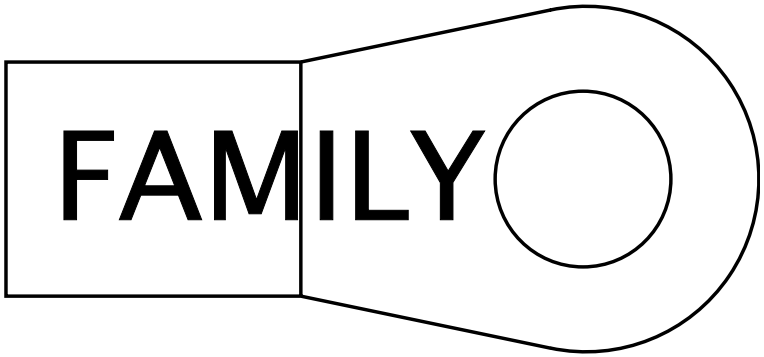

Name	Terminal Part Number	V-Min	Name	Wire Part Number	Wire CSA	Wire Spec	Wire Material description	Wire Color Description	Wire Length	End2 Terminal Part Number	End2 Pin Name	End2 Connect or
A	-	-	VH2-G	2645934 R1	39.43	1.0	SGR 125	BLACK	2880.0	-	1	6314

Connector Name	T12_7000
Part Number	RING-M-5_0
Instances	A26 - Leece-Neville AVI160-210A/240A Alternator W/ Sensor:Diagram1 A26 - Leece-Neville AVI160-210A/240A Alternator W/ Sensor:Diagram2
Mates	DEV-Leece_Neville_AVI160_2 10A_240A_Alternator-4004-01-04A

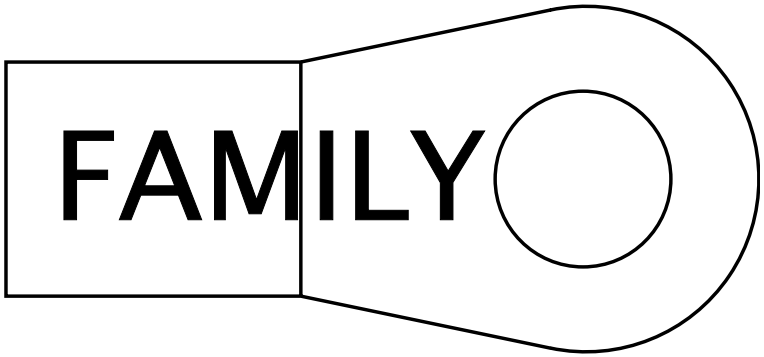

Name	Terminal Part Number	V-Min	Name	Wire Part Number	Wire CSA	Wire Spec	Wire Material description	Wire Color Description	Wire Length	End2 Terminal Part Number	End2 Pin Name	End2 Connect or
A	-	-	JS1A	2643694 R1	1.91	14.0	Std. Wall XLPE Primary Cable	LIGHT BLUE	3975.0	-	B	1F
A	-	-	JT1A	2643694 R1	1.91	14.0	Std. Wall XLPE Primary Cable	LIGHT BLUE	3965.0	-	B	2F

Connector Name	T13_6101D
Part Number	RING-M-8_0
Instances	A26 - Cranking (Starter) GEN4 BCM W/ Thermal Overcrank:Diagram3 A26 - Cranking (Starter) GEN4 BCM W/O Thermal Overcrank:Diagram2 A26 - Cranking (Starter) GEN4 BCM W/O Thermal Overcrank:Diagram4 A26 - Leece-Neville AVI160 Alternator:Diagram1
Mates	DEV-Leece_Neville_AVI_160_ Alternator-4004-01-02A

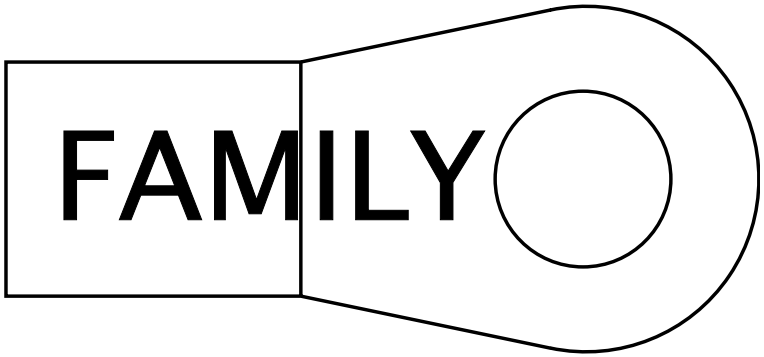

Name	Terminal Part Number	V-Min	Name	Wire Part Number	Wire CSA	Wire Spec	Wire Material description	Wire Color Description	Wire Length	End2 Terminal Part Number	End2 Pin Name	End2 Connect or
A	-	-	VG2	2645955 R1	32.19	2.0	SGR 125	RED	2875.0	-	X	-

Connector Name	T13_6101
Part Number	RING-M-8_0
Instances	A26 - Cranking (Starter) GEN4 BCM W/ Thermal Overcrank:Diagram3 A26 - Cranking (Starter) GEN4 BCM W/O Thermal Overcrank:Diagram2 A26 - Cranking (Starter) GEN4 BCM W/O Thermal Overcrank:Diagram4 A26 - Leece-Neville AVI160 Alternator:Diagram1
Mates	DEV-Leece_Neville_AVI_160_ Alternator-4004-01-02A

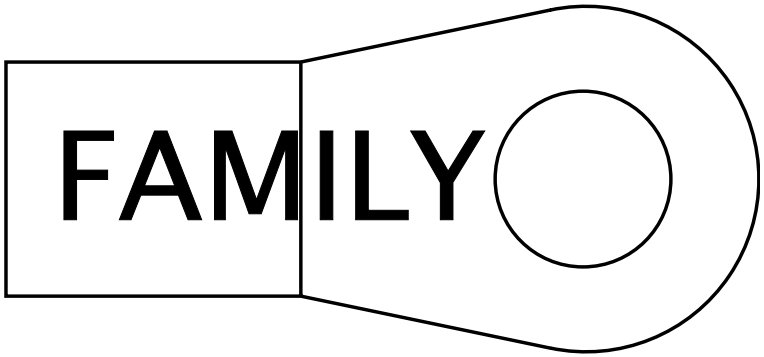

Name	Terminal Part Number	V-Min	Name	Wire Part Number	Wire CSA	Wire Spec	Wire Material description	Wire Color Description	Wire Length	End2 Terminal Part Number	End2 Pin Name	End2 Connect or
A	-	-	VG2-G	2645931 R1	32.19	2.0	SGR 125	BLACK	2880.0	-	1	6314

Connector Name	T14_6101A
Part Number	RING-M-8_0
Instances	A26 - Leece-Neville - LN 325A Alternator W/Sensor:Diagram1 A26 - Leece-Neville - LN 325A Alternator W/Sensor:Diagram2
Mates	DEV-Leece-Nevile_LN320_Alt ernator-4004-01-09A

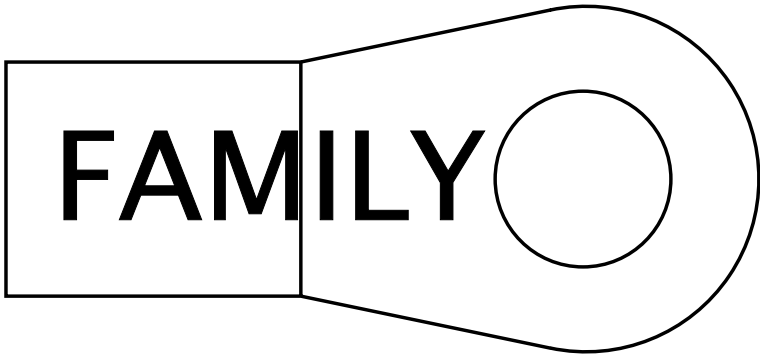

Name	Terminal Part Number	V-Min	Name	Wire Part Number	Wire CSA	Wire Spec	Wire Material description	Wire Color Description	Wire Length	End2 Terminal Part Number	End2 Pin Name	End2 Connect or
A	-	-	K2-G	2645940 R1	61.89	0.0	SGR 125	BLACK	2740.0	-	1	6314

Connector Name	T14_6101DA
Part Number	RING-M-8_0
Instances	A26 - Leece-Neville - LN 325A Alternator W/Sensor:Diagram1 A26 - Leece-Neville - LN 325A Alternator W/Sensor:Diagram2
Mates	DEV-Leece-Nevile_LN320_Alt ernator-4004-01-09A

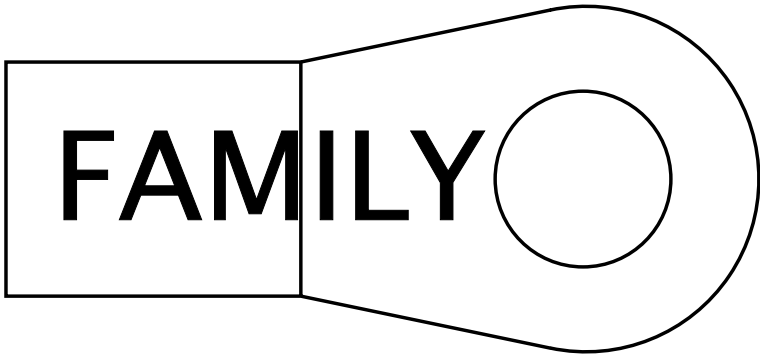

Name	Terminal Part Number	V-Min	Name	Wire Part Number	Wire CSA	Wire Spec	Wire Material description	Wire Color Description	Wire Length	End2 Terminal Part Number	End2 Pin Name	End2 Connect or
A	-	-	K2	2645964 R1	61.89	0.0	SGR 125	RED	2930.0	-	X	-

Connector Name	T14_6101D
Part Number	RING-M-8_0
Instances	A26 - Cranking (Starter) GEN4 BCM W/ Thermal Overcrank:Diagram4 A26 - Cranking (Starter) GEN4 BCM W/O Thermal Overcrank:Diagram5 A26 - Cranking (Starter) GEN4 BCM W/O Thermal Overcrank:Diagram6 A26 - Leece-Neville 320PAH Alternator:Diagram1
Mates	DEV-Leece_Neville_320PAH_A lternator-4004-01-03A

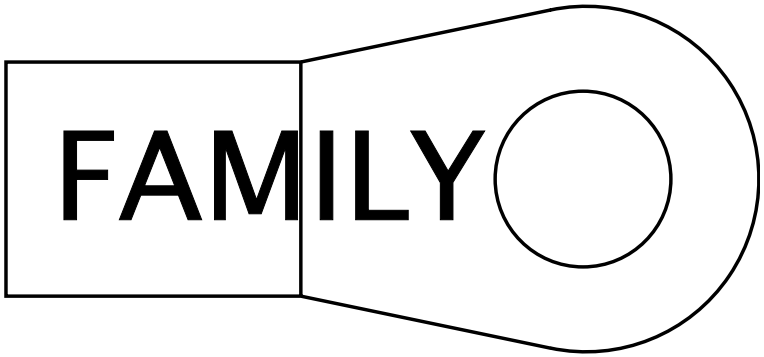

Name	Terminal Part Number	V-Min	Name	Wire Part Number	Wire CSA	Wire Spec	Wire Material description	Wire Color Description	Wire Length	End2 Terminal Part Number	End2 Pin Name	End2 Connect or
A	-	-	K2	2645964 R1	61.89	0.0	SGR 125	RED	2930.0	-	X	-

Connector Name	T14_6101
Part Number	RING-M-10_0
Instances	A26 - Cranking (Starter) GEN4 BCM W/ Thermal Overcrank:Diagram4 A26 - Cranking (Starter) GEN4 BCM W/O Thermal Overcrank:Diagram5 A26 - Cranking (Starter) GEN4 BCM W/O Thermal Overcrank:Diagram6 A26 - Leece-Neville 320PAH Alternator:Diagram1
Mates	DEV-Leece_Neville_320PAH_A lternator-4004-01-03A

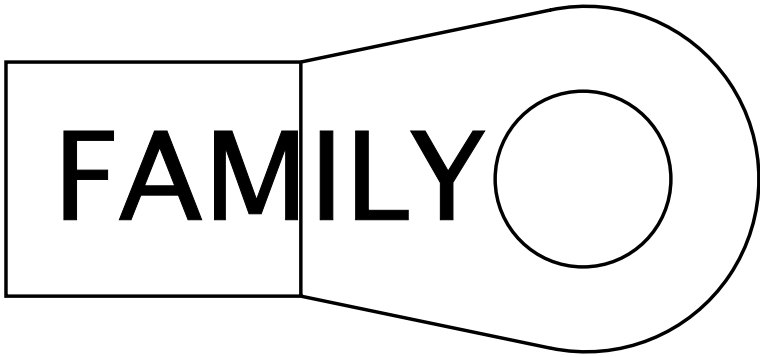

Name	Terminal Part Number	V-Min	Name	Wire Part Number	Wire CSA	Wire Spec	Wire Material description	Wire Color Description	Wire Length	End2 Terminal Part Number	End2 Pin Name	End2 Connect or
1	-	-	K2-G	2645940 R1	61.89	0.0	SGR 125	BLACK	2740.0	-	1	6314

Connector Name	T14_7000
Part Number	RING-M-5_0
Instances	A26 - Leece-Neville - LN 325A Alternator W/Sensor:Diagram1 A26 - Leece-Neville - LN 325A Alternator W/Sensor:Diagram2
Mates	DEV-Leece-Nevile_LN320_Alt ernator-4004-01-09A

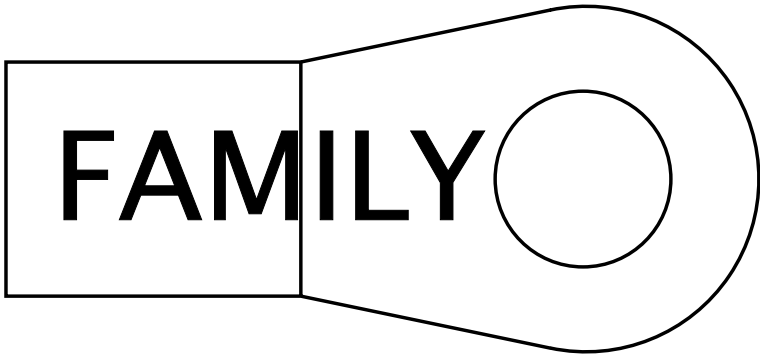

Name	Terminal Part Number	V-Min	Name	Wire Part Number	Wire CSA	Wire Spec	Wire Material description	Wire Color Description	Wire Length	End2 Terminal Part Number	End2 Pin Name	End2 Connect or
A	-	-	JS1A	2643694 R1	1.91	14.0	Std. Wall XLPE Primary Cable	LIGHT BLUE	3975.0	-	B	1F
A	-	-	JT1A	2643694 R1	1.91	14.0	Std. Wall XLPE Primary Cable	LIGHT BLUE	3965.0	-	B	2F

Connector Name	T15_6101A
Part Number	RING-E-1-4_0
Instances	A26 - Delco Remy 36SI Alternator W/Sensor:Diagram1 A26 - Delco Remy 36SI Alternator W/Sensor:Diagram2
Mates	DEV-Delco_Remy_36SI_Altern ator-4004-01-07A

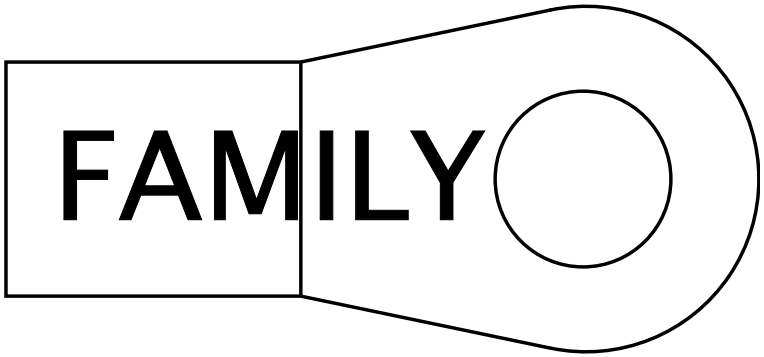

Name	Terminal Part Number	V-Min	Name	Wire Part Number	Wire CSA	Wire Spec	Wire Material description	Wire Color Description	Wire Length	End2 Terminal Part Number	End2 Pin Name	End2 Connect or
A	-	-	LD2-G	2645931 R1	32.19	2.0	SGR 125	BLACK	2885.0	-	1	6314

Connector Name	T15_6101DA
Part Number	RING-E-1-4_0
Instances	A26 - Delco Remy 36SI Alternator W/Sensor:Diagram1 A26 - Delco Remy 36SI Alternator W/Sensor:Diagram2
Mates	DEV-Delco_Remy_36SI_Altern ator-4004-01-07A

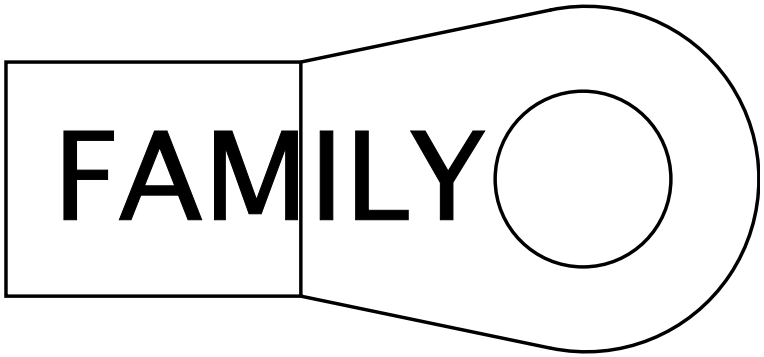

Name	Terminal Part Number	V-Min	Name	Wire Part Number	Wire CSA	Wire Spec	Wire Material description	Wire Color Description	Wire Length	End2 Terminal Part Number	End2 Pin Name	End2 Connect or
A	-	-	LD2	2645955 R1	32.19	2.0	SGR 125	RED	2945.0	-	X	-

Connector Name	T15_6101D
Part Number	RING-M-8_0
Instances	A26 - Cranking (Starter) GEN4 BCM W/ Thermal Overcrank:Diagram5 A26 - Delco Remy 28SI Alternator W/Sensor:Diagram1 A26 - Delco Remy 28SI Alternator W/Sensor:Diagram2
Mates	DEV-Delco_Remy_28SI_Altern ator-4004-01-05A

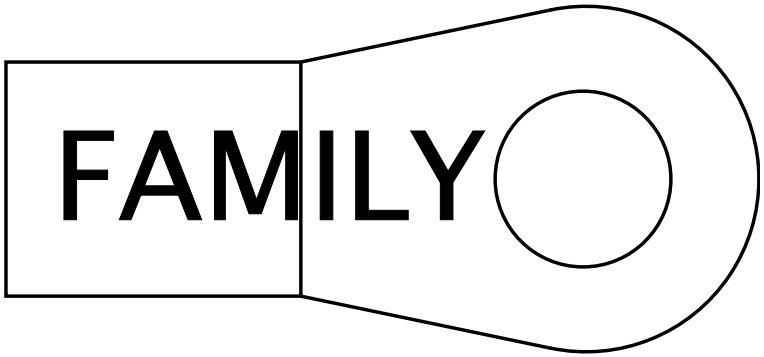

Name	Terminal Part Number	V-Min	Name	Wire Part Number	Wire CSA	Wire Spec	Wire Material description	Wire Color Description	Wire Length	End2 Terminal Part Number	End2 Pin Name	End2 Connect or
A	-	-	LD2	2645955 R1	32.19	2.0	SGR 125	RED	2945.0	-	X	-

Connector Name	T15_6101
Part Number	RING-M-6_0
Instances	A26 - Cranking (Starter) GEN4 BCM W/ Thermal Overcrank:Diagram5 A26 - Delco Remy 28SI Alternator W/Sensor:Diagram1 A26 - Delco Remy 28SI Alternator W/Sensor:Diagram2
Mates	DEV-Delco_Remy_28SI_Altern ator-4004-01-05A

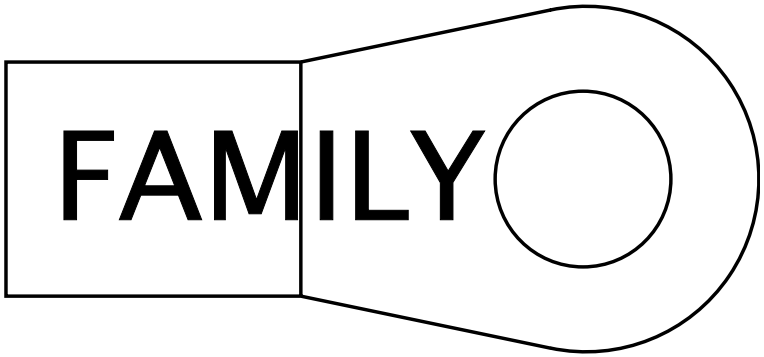

Name	Terminal Part Number	V-Min	Name	Wire Part Number	Wire CSA	Wire Spec	Wire Material description	Wire Color Description	Wire Length	End2 Terminal Part Number	End2 Pin Name	End2 Connect or
A	-	-	LD2-G	2645931 R1	32.19	2.0	SGR 125	BLACK	2885.0	-	1	6314

Connector Name	T15_7000A
Part Number	RING-10_0
Instances	A26 - Delco Remy 36SI Alternator W/Sensor:Diagram1 A26 - Delco Remy 36SI Alternator W/Sensor:Diagram2
Mates	DEV-Delco_Remy_36SI_Altern ator-4004-01-07A

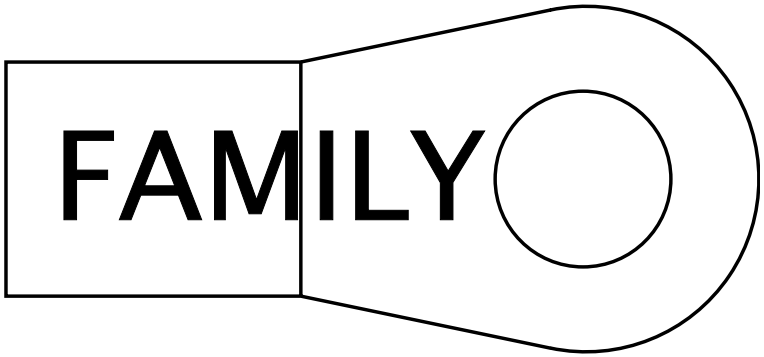

Name	Terminal Part Number	V-Min	Name	Wire Part Number	Wire CSA	Wire Spec	Wire Material description	Wire Color Description	Wire Length	End2 Terminal Part Number	End2 Pin Name	End2 Connect or
A	-	-	JS1A	2643694 R1	1.91	14.0	Std. Wall XLPE Primary Cable	LIGHT BLUE	3975.0	-	B	1F
A	-	-	JT1A	2643694 R1	1.91	14.0	Std. Wall XLPE Primary Cable	LIGHT BLUE	3965.0	-	B	2F

Connector Name	T15_7000
Part Number	RING-M-5_0
Instances	A26 - Delco Remy 28SI Alternator W/Sensor:Diagram1 A26 - Delco Remy 28SI Alternator W/Sensor:Diagram2
Mates	DEV-Delco_Remy_28SI_Altern ator-4004-01-05A

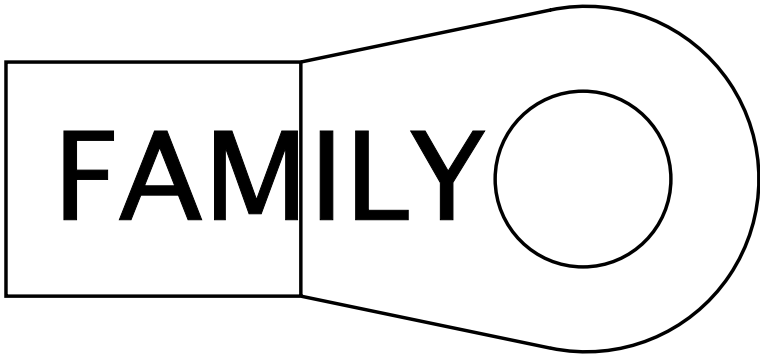

Name	Terminal Part Number	V-Min	Name	Wire Part Number	Wire CSA	Wire Spec	Wire Material description	Wire Color Description	Wire Length	End2 Terminal Part Number	End2 Pin Name	End2 Connect or
A	-	-	JS1A	2643694 R1	1.91	14.0	Std. Wall XLPE Primary Cable	LIGHT BLUE	3975.0	-	B	1F
A	-	-	JT1A	2643694 R1	1.91	14.0	Std. Wall XLPE Primary Cable	LIGHT BLUE	3965.0	-	B	2F

Connector Name	T16_6101D
Part Number	RING-E-5-16_0
Instances	A26 - Cranking (Starter) GEN4 BCM W/ Thermal Overcrank:Diagram6 A26 - Delco Remy 40SI Alternator W/Sensor:Diagram1 A26 - Delco Remy 40SI Alternator W/Sensor:Diagram2
Mates	DEV-Delco_Remy_40SI_Altern ator-4004-01-06A

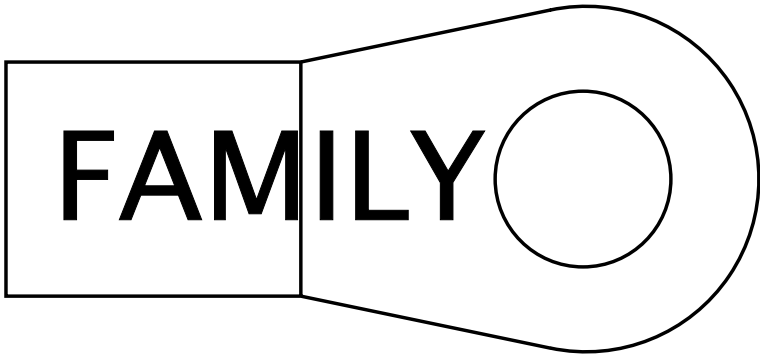

Name	Terminal Part Number	V-Min	Name	Wire Part Number	Wire CSA	Wire Spec	Wire Material description	Wire Color Description	Wire Length	End2 Terminal Part Number	End2 Pin Name	End2 Connect or
A	-	-	LC2	2645958 R1	39.43	1.0	SGR 125	RED	2945.0	-	X	-

Connector Name	T16_6101
Part Number	RING-E-5-16_0
Instances	A26 - Cranking (Starter) GEN4 BCM W/ Thermal Overcrank:Diagram6 A26 - Delco Remy 40SI Alternator W/Sensor:Diagram1 A26 - Delco Remy 40SI Alternator W/Sensor:Diagram2
Mates	DEV-Delco_Remy_40SI_Altern ator-4004-01-06A

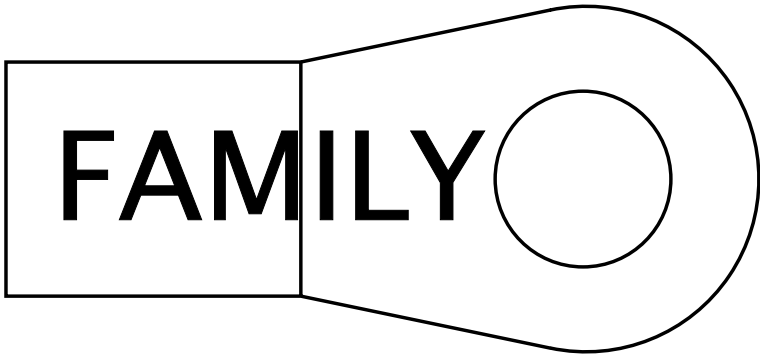

Name	Terminal Part Number	V-Min	Name	Wire Part Number	Wire CSA	Wire Spec	Wire Material description	Wire Color Description	Wire Length	End2 Terminal Part Number	End2 Pin Name	End2 Connect or
A	-	-	LC2-G	2645934 R1	39.43	1.0	SGR 125	BLACK	2880.0	-	1	6314

Connector Name	0004
Part Number	3710061C1
Instances	A26 - Bendix Tractor or Towing Truck N/ Air SUSP J1939 Driven Lamp:Diagram1 A26 - Bendix Tractor or Towing Truck N/ Air SUSP J1939 Driven Lamp:Diagram2 A26 - Bendix Tractor or Towing Truck N/ Air SUSP J1939 Driven Lamp:Diagram3 A26 - Bendix Tractor or Towing Truck N/ Air SUSP J1939 Driven Lamp:Diagram4 A26 - Bendix Tractor or Towing Truck W/ Air SUSP J1939 Driven Lamp:Diagram1 A26 - Bendix Tractor or Towing Truck W/ Air SUSP J1939 Driven Lamp:Diagram2 A26 - Bendix Tractor or Towing Truck W/ Air SUSP J1939 Driven Lamp:Diagram3 A26 - Bendix Tractor or Towing Truck W/ Air SUSP J1939 Driven Lamp:Diagram4 A26 - Engine Brake Mux Switch:Diagram1 A26 - Hazard Warning Light N/Trlr Socket:Diagram1 A26 - Hazard Warning Light N/Trlr Socket:Diagram2 A26 - Power Lift Gate:Diagram1 A26 - Stability Control (Bendix Straight Truck J1939 Driven Lamp):Diagram1 A26 - Stability Control (Bendix Straight Truck J1939 Driven Lamp):Diagram2 A26 - Stability Control (Bendix Straight Truck J1939 Driven Lamp):Diagram3 A26 - Stability Control (Bendix Straight Truck J1939 Driven Lamp):Diagram4 A26 - Traction Control (Bendix):Diagram1 A26 - Traction Control (Bendix):Diagram2 A26 - Water In Fuel (WIF) Davco N/ Heater:Diagram1 A26 - Water In Fuel (WIF) Davco N/ Heater:Diagram2 A26 - Water In Fuel (WIF) Davco N/ Heater:Diagram3 A26 - Water In Fuel (WIF) Davco N/ Heater:Diagram4 A26 - Water In Fuel (WIF) Davco N/ Heater:Diagram5 A26 - Water In Fuel (WIF) Davco N/ Heater:Diagram6 A26 - Water In Fuel (WIF) Davco N/ Heater:Diagram7 A26 - Water In Fuel (WIF) Davco N/ Heater:Diagram8 A26 - Water In Fuel (WIF) Davco N/ Heater:Diagram9 A26 - Water In Fuel (WIF) Davco W/ Heater:Diagram1 A26 - Water In Fuel (WIF) Davco W/ Heater:Diagram2

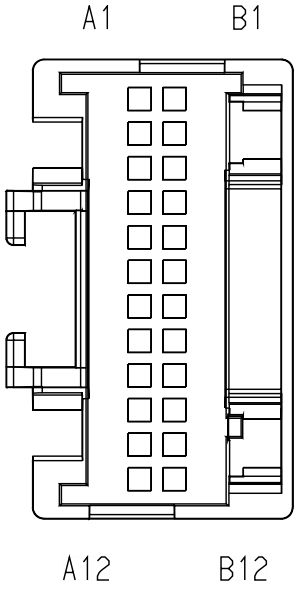

A26 - Water In Fuel (WIF) Davco W/ Heater:Diagram3
A26 - Water In Fuel (WIF) Davco W/ Heater:Diagram4
A26 - Water In Fuel (WIF) Davco W/ Heater:Diagram5
A26 - Water In Fuel (WIF) Davco W/ Heater:Diagram6
A26 - Water In Fuel (WIF) Davco W/ Heater:Diagram7
A26 - Water In Fuel (WIF) Davco W/ Heater:Diagram8
A26 - Water In Fuel (WIF) Davco W/ Heater:Diagram9
A26/B6.7/L9 - A26 - Adaptive Cruise Control w/o Display (Bendix):Diagram1
A26/B6.7/L9 - Cruise Control (W/ One Telltale 4 Pin):Diagram1
A26/B6.7/L9 - Cruise Control (W/ One Telltale 4 Pin):Diagram2
A26/B6.7/L9 - Cruise Control (W/ One Telltale 10 Pin):Diagram1
A26/B6.7/L9 - Cruise Control (W/ One Telltale 10 Pin):Diagram2
A26/B6.7/L9 - Door Ajar Reminder (Entry /Exit):4 Door:Diagram1
A26/B6.7/L9 - Door Ajar Reminder (Entry/Exit) 2 Door:Diagram1
A26/B6.7/L9 - Theft Deterrent (Grid Controlled):Diagram1
A26/B6.7/L9 - Vehicle Speed Control (Cruise Control) 4 Pin:Diagram1
A26/B6.7/L9 - Vehicle Speed Control (Cruise Control) 10 Pin:Diagram1
B6.7 - Power Lift Gate:Diagram1
B6.7/L9 - Engine Brake Mux Switch:Diagram1
L9 - Antilock Brake System (ABS) BENDIX 4 Channel Implemenation:Diagram1
L9 - Hazard Warning Light N/Trlr Socket:Diagram1
L9 - Hazard Warning Light N/Trlr Socket:Diagram2
L9 - Power Lift Gate:Diagram1
L9 - Traction Control (Bendix):Diagram1
L9 - Transmission Power Take Off (Single PTO W/ RPM and Auto Trans):Diagram1
L9 - Transmission Power Take Off (Single PTO W/ RPM and Manual Trans):Diagram1
L9 - Water In Fuel (WIF) Davco N/ Heater:Diagram1
L9 - Water In Fuel (WIF) Davco N/ Heater:Diagram2
L9 - Water In Fuel (WIF) Davco N/ Heater:Diagram3
L9 - Water In Fuel (WIF) Davco N/ Heater:Diagram4
L9 - Water In Fuel (WIF) Davco N/ Heater:Diagram5
L9 - Water In Fuel (WIF) Davco N/ Heater:Diagram6
L9 - Water In Fuel (WIF) Davco N/ Heater:Diagram7
L9 - Water In Fuel (WIF) Davco N/ Heater:Diagram8
L9 - Water In Fuel (WIF) Davco N/ Heater:Diagram9
L9 - Water In Fuel (WIF) Davco W/ Heater:Diagram1
L9 - Water In Fuel (WIF) Davco W/ Heater:Diagram2
L9 - Water In Fuel (WIF) Davco W/ Heater:Diagram3

L9 - Water In Fuel (WIF) Davco W/ Heater:Diagram4
L9 - Water In Fuel (WIF) Davco W/ Heater:Diagram5
L9 - Water In Fuel (WIF) Davco W/ Heater:Diagram6
L9 - Water In Fuel (WIF) Davco W/ Heater:Diagram7
L9 - Water In Fuel (WIF) Davco W/ Heater:Diagram8
L9 - Water In Fuel (WIF) Davco W/ Heater:Diagram9

Mates MODU-EGC-A003-10-00

Name	Terminal Part Number	V-Min	Name	Wire Part Number	Wire CSA	Wire Spec	Wire Material description	Wire Color Description	Wire Length	End2 Terminal Part Number	End2 Pin Name	End2 Connector
A9	-	-	-	-	-	-	-	-	-	-	-	-
A10	-	-	-	-	-	-	-	-	-	-	-	-

Connector Name	0009B
Part Number	4063156C1
Instances	A26 - Axle Lift Controls:Diagram2 A26 - Hazard Warning Light N/Trlr Socket:Diagram1 A26 - Hazard Warning Light N/Trlr Socket:Diagram2 A26 - Headlight W/Plowlights, W/LOWW, W/O Interrupt:Diagram1-Combination3 A26 - Headlight W/Plowlights, W/LOWW, W/O Interrupt:Diagram1-Combination4 A26 - Headlight W/Plowlights, W/O LOWW, W/O Interrupt:Diagram1-Combination3 A26 - Headlight W/Plowlights, W/O LOWW, W/O Interrupt:Diagram1-Combination4 A26 - Headlights W/LOWW, W/Interrupt - 10 PIN CLK:Diagram1-Combination2 A26 - Headlights W/LOWW, W/O Interrupt:Diagram1-Combination2 A26 - Headlights W/O LOWW, W/Interrupt - 10 PIN CLK:Diagram1-Combination2 A26 - Headlights W/O LOWW, W/O Interrupt:Diagram1-Combination2 A26 - Headlights W/PlowLights, W/LOWW, W/Interrupt - 10 PIN CLK:Diagram1-Combination3 A26 - Headlights W/PlowLights, W/LOWW, W/Interrupt - 10 PIN CLK:Diagram1-Combination4 A26 - Headlights W/PlowLights, W/O LOWW, W/Interrupt - 10 PIN CLK:Diagram1-Combination3 A26 - Headlights W/PlowLights, W/O LOWW, W/Interrupt - 10 PIN CLK:Diagram1-Combination4 A26/B6.7/L9 - Adjustable Engine Speed Control (PTO) 10-pin:Diagram2 A26/B6.7/L9 - Automatic Lighting - Dual Sensor Twilight/ Solar:Diagram2 A26/B6.7/L9 - Axle Lift Controls:Diagram3 A26/B6.7/L9 - Axle Lift Controls:Diagram4 A26/B6.7/L9 - Cruise Control (W/ One Telltale 4 Pin):Diagram2 A26/B6.7/L9 - Cruise Control (W/ One Telltale 10 Pin):Diagram2 A26/B6.7/L9 - Instrument Cluster (Premium):Diagram1 A26/B6.7/L9 - Instrument Cluster (Premium):Diagram2 A26/B6.7/L9 - Lighting Control Module:Diagram2 A26/B6.7/L9 - PARK LIGHTS - N/Marker Interrupt:Diagram2 A26/B6.7/L9 - PARK LIGHTS - W/Marker Interrupt 4 pin clockspring:Diagram2

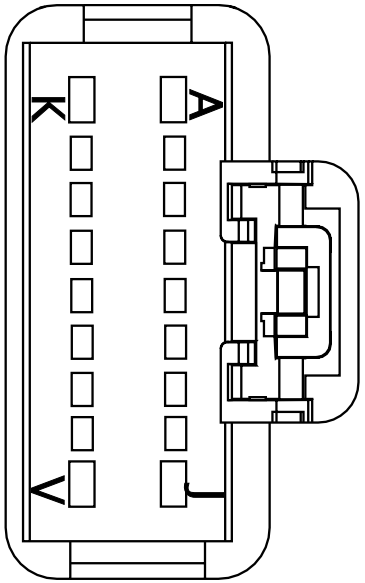

A26/B6.7/L9 - PARK LIGHTS - W/Marker Interrupt 10pin CLCKSPRING:Diagram2
A26/B6.7/L9 - Radio w/Bluetooth:Diagram2
A26/B6.7/L9 - Radio w/Steering Wheel Pod:Diagram2
B6.7 - Snow Valve Control:Diagram1
B6.7 - Snow Valve Control:Diagram2
B6.7 - CAN Layout:HMI Standard J1939 (125Kbps)
B6.7 - City Horn (W/ 4PIN CLK & Park Brake):Diagram4
B6.7 - City Horn (W/ 4PIN CLK & Park Brake):Diagram5
B6.7 - City Horn (W/ 4PIN CLK & Park Brake):Diagram6
B6.7 - City Horn (W/ 4PIN CLK):Diagram4
B6.7 - City Horn (W/ 4PIN CLK):Diagram5
B6.7 - City Horn (W/ 4PIN CLK):Diagram6
B6.7 - Headlights W 10PIN CLK W/LOWW W/Interrupt:Diagram2
B6.7 - Headlights W 10PIN CLK W/LOWW W/Interrupt:Diagram4
B6.7 - Headlights W 10PIN CLK W/LOWW W/O Interrupt:Diagram2
B6.7 - Headlights W 10PIN CLK W/LOWW W/O Interrupt:Diagram3
B6.7 - Headlights W 10PIN CLK W/LOWW W/O Interrupt:Diagram4
B6.7 - Headlights W/O Lights ON With Wipers (LOWW) W/O Headlights Interrupt:Diagram2
B6.7 - Headlights W/O Lights ON With Wipers (LOWW) W/O Headlights Interrupt:Diagram4
B6.7 - Headlights W/O Lights ON with wipers (LOWW) W/ Headlights Interrupt:Diagram2
B6.7 - Headlights W/O Lights ON with wipers (LOWW) W/ Headlights Interrupt:Diagram4
B6.7 - Low Speed J1939 (125kbps):B6.7 - Low Speed J1939 (125kbps)
B6.7 - T-Handle for Allison Without Park Position:Diagram2
B6.7 - Transmission Shifter (T-Handle for Allison With Park Position):Diagram2
B6.7 - Transmission Shifter Allison 5th Gen Push Button(SURHD):Diagram2
L9 - Axle Lift Controls Option 2:Diagram2
L9 - CAN Layout:HMI Standard J1939 (125Kbps)
L9 - City Horn (W/ 4PIN CLK & Park Brake):Diagram3
L9 - City Horn (W/ 4PIN CLK & Park Brake):Diagram4
L9 - City Horn (W/ 4PIN CLK):Diagram2
L9 - City Horn (W/ 4PIN CLK):Diagram3
L9 - City Horn (W/ 4PIN CLK):Diagram4
L9 - Hazard Warning Light N/Trlr Socket:Diagram2

L9 - Headlights W 10PIN CLK W/LOWW W/Interrupt:Diagram2
L9 - Headlights W 10PIN CLK W/LOWW W/Interrupt:Diagram4
L9 - Headlights W 10PIN CLK W/LOWW W/O Interrupt:Diagram2
L9 - Headlights W 10PIN CLK W/LOWW W/O Interrupt:Diagram3
L9 - Headlights W 10PIN CLK W/LOWW W/O Interrupt:Diagram4
L9 - Headlights W/O Lights ON With Wipers (LOWW) W/O Headlights Interrupt:Diagram2
L9 - Headlights W/O Lights ON With Wipers (LOWW) W/O Headlights Interrupt:Diagram4
L9 - Headlights W/O Lights ON with wipers (LOWW) W/ Headlights Interrupt:Diagram2
L9 - Headlights W/O Lights ON with wipers (LOWW) W/ Headlights Interrupt:Diagram4
L9 - Low Speed J1939 (125kbps):L9 - Low Speed J1939 (125Kbps)
L9 - Snow Valve Control:Diagram1
L9 - Snow Valve Control:Diagram2

Mates MODU-LCM-A004-00-01-0009B

Name	Terminal Part Number	V-Min	Name	Wire Part Number	Wire CSA	Wire Spec	Wire Material description	Wire Color Description	Wire Length	End2 Terminal Part Number	End2 Pin Name	End2 Connector
A	-	-	AC13D	3510323 R1	0.79	18.0	Thin Wall XLPE Primary Cable	PINK	1115.0	-	-	-
B	-	-	WIRE722 884	-	0.0	-	-	-	0.0	-	PIN1	-
B	-	-	-	-	-	-	-	-	-	-	-	-
C	-	-	WIRE722 885	-	0.0	-	-	-	0.0	-	PIN1	-
C	-	-	-	-	-	-	-	-	-	-	-	-
E	-	-	ZS50B	2645625 R1	0.35	22.0	Thin Wall XLPE Primary Cable	YELLOW 2	2340.0	-	-	-

Name	Terminal Part Number	V-Min	Name	Wire Part Number	Wire CSA	Wire Spec	Wire Material description	Wire Color Description	Wire Length	End2 Terminal Part Number	End2 Pin Name	End2 Connector
E	-	-	AC50B	3510335 R1	0.79	18.0	Thin Wall XLPE Primary Cable	YELLOW 2	2340.0	-	-	-
E	-	-	ZS50B	2645625 R1	0.35	22.0	Thin Wall XLPE Primary Cable	YELLOW 2	2340.0	-	2	1053
H	-	-	ZD50A	3510335 R1	0.79	18.0	Thin Wall XLPE Primary Cable	YELLOW 2	2340.0	-	-	-
J	-	-	AB11-GN	3510359 R1	0.79	18.0	Thin Wall XLPE Primary Cable	WHITE	625.0	-	J	0009
L	-	-	AC62	3510353 R1	0.79	18.0	Thin Wall XLPE Primary Cable	DARK BLUE	1720.0	-	X	-
L	-	-	AB62	3510353 R1	0.79	18.0	Thin Wall XLPE Primary Cable	DARK BLUE	175.0	-	X	-
L	-	-	-	-	-	-	-	-	-	-	-	-
L	-	-	AB62	3510353 R1	0.79	18.0	Thin Wall XLPE Primary Cable	DARK BLUE	175.0	-	-	-
M	-	-	AC62DA	3510354 R1	1.16	16.0	Thin Wall XLPE Primary Cable	DARK BLUE	1065.0	-	-	-

Name	Terminal Part Number	V-Min	Name	Wire Part Number	Wire CSA	Wire Spec	Wire Material description	Wire Color Description	Wire Length	End2 Terminal Part Number	End2 Pin Name	End2 Connector
M	-	-	AB62DA	3510354 R1	1.16	16.0	Thin Wall XLPE Primary Cable	DARK BLUE	1020.0	-	-	-
P	-	-	AC50	3510335 R1	0.79	18.0	Thin Wall XLPE Primary Cable	YELLOW 2	2220.0	-	E11	J5-1602
P	-	-	AB50	3510335 R1	0.79	18.0	Thin Wall XLPE Primary Cable	YELLOW 2	1125.0	-	-	-
P	-	-	AC50	3510335 R1	0.79	18.0	Thin Wall XLPE Primary Cable	YELLOW 2	2220.0	-	-	-
P	-	-	AB50	3510335 R1	0.79	18.0	Thin Wall XLPE Primary Cable	YELLOW 2	1125.0	-	E11	J5-1602
R	-	-	AC9	3510311 R1	0.79	18.0	Thin Wall XLPE Primary Cable	GREY	1080.0	-	-	-
S	-	-	AC14D	3510365 R1	0.79	18.0	Thin Wall XLPE Primary Cable	RED	895.0	-	-	-

Connector Name	0009
Part Number	4063156C1
Instances	A26 - Axle Lift Controls:Diagram1 A26 - CAN Layout:HMI Standard J1939 (125Kbps) A26 - City Horn (W/ 4PIN Park Brake):Diagram1 A26 - City Horn (W/ 4PIN Park Brake):Diagram2 A26 - City Horn (W/ 4PIN Park Brake):Diagram3 A26 - City Horn (W/ 4PIN Park Brake):Diagram4 A26 - City Horn (W/ 4PIN):Diagram1 A26 - City Horn (W/ 4PIN):Diagram2 A26 - City Horn (W/ 4PIN):Diagram3 A26 - City Horn (W/ 4PIN):Diagram4 A26 - Front Fog Lamps LED:Diagram1 A26 - Front Fog Lamps LED:Diagram2 A26 - Front Fog Lights W CONNECTOR Halogen:Diagram1 A26 - Front Fog Lights W CONNECTOR Halogen:Diagram2 A26 - Headlight W/Plowlights, W/LOWW, W/O Interrupt:Diagram1-Combination1 A26 - Headlight W/Plowlights, W/LOWW, W/O Interrupt:Diagram1-Combination2 A26 - Headlight W/Plowlights, W/O LOWW, W/O Interrupt:Diagram1-Combination1 A26 - Headlight W/Plowlights, W/O LOWW, W/O Interrupt:Diagram1-Combination2 A26 - Headlights W/LOWW, W/Interrupt - 10 PIN CLK:Diagram1-Combination1 A26 - Headlights W/LOWW, W/O Interrupt:Diagram1-Combination1 A26 - Headlights W/O LOWW, W/Interrupt - 10 PIN CLK:Diagram1-Combination1 A26 - Headlights W/O LOWW, W/O Interrupt:Diagram1-Combination1 A26 - Headlights W/PlowLights, W/LOWW, W/Interrupt - 10 PIN CLK:Diagram1-Combination1 A26 - Headlights W/PlowLights, W/LOWW, W/Interrupt - 10 PIN CLK:Diagram1-Combination2 A26 - Headlights W/PlowLights, W/O LOWW, W/Interrupt - 10 PIN CLK:Diagram1-Combination1 A26 - Headlights W/PlowLights, W/O LOWW, W/Interrupt - 10 PIN CLK:Diagram1-Combination2 A26 - License Plate Light (LED BOX LAMP Daisy Chain Tail Light):Diagram1 A26 - License Plate Light (LED BOX LAMP Tail Light):Diagram1

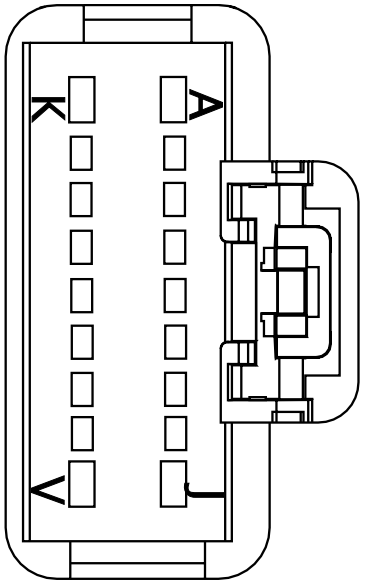

A26 - License Plate Light (Tail Light Single Assembly):Diagram1
A26 - License Plate Light (Tail Light Single Assembly)Option2:Diagram1
A26 - License Plate Light (Tail Light Single Assembly)Option3:Diagram1
A26 - License Plate Light (Tail Light Single Assy.) W/Less Power Module (W/08TKC, 08THM):Diagram1
A26 - Low Speed J1939 (125Kbps):A26 - HMI J1939 (125Kbps)
A26 - Rear Light (LED BOX LAMP Tail Light) W/08TPS, 08TPR:Diagram1
A26 - Rear Light (Tail Light) W/08THK:Diagram1
A26 - Rear Light (Tail Light) W/08TKB:Diagram1
A26 - Rear Light (Tail Light) W/08TKJ:Diagram1
A26 - Rear Light (Tail Light) W/Less Power Module (W/08TKC, 08THM):Diagram1
A26 - Rear Light (Tail Light) W_Daisy Chain pair of Box Lamps W/08TRS:Diagram1
A26 - Snow Valve Control:Diagram1
A26 - Snow Valve Control:Diagram2
A26/B6.7/L9 - Adjustable Engine Speed Control (PTO) 10-pin:Diagram1
A26/B6.7/L9 - Automatic Lighting - Dual Sensor Twilight/ Solar:Diagram1
A26/B6.7/L9 - Automatic Lighting - Single Sensor Twilight:Diagram1
A26/B6.7/L9 - Automatic Lighting - Single Sensor Twilight:Diagram2
A26/B6.7/L9 - Axle Lift Controls:Diagram1
A26/B6.7/L9 - Axle Lift Controls:Diagram2
A26/B6.7/L9 - Cruise Control (W/ One Telltale 4 Pin):Diagram1
A26/B6.7/L9 - Cruise Control (W/ One Telltale 10 Pin):Diagram1
A26/B6.7/L9 - Door Pod Module (2 Door):Diagram1
A26/B6.7/L9 - Door Pod Module (4 Door):Diagram1
A26/B6.7/L9 - Exterior Lamp Check:Diagram1
A26/B6.7/L9 - Lighting Control Module:Diagram1
A26/B6.7/L9 - Mirrors (Heated):Diagram1
A26/B6.7/L9 - Panel Backlighting (Cabin Dimmer):Diagram1
A26/B6.7/L9 - PARK LIGHTS - N/Marker Interrupt:Diagram1
A26/B6.7/L9 - PARK LIGHTS - W/Marker Interrupt 4 pin clockspring:Diagram1
A26/B6.7/L9 - PARK LIGHTS - W/Marker Interrupt 10pin CLCKSPRING:Diagram1
A26/B6.7/L9 - Radio:Diagram1
A26/B6.7/L9 - Radio w/Bluetooth:Diagram1

A26/B6.7/L9 - Radio w/Bluetooth without Steering Wheel Pod:Diagram1
A26/B6.7/L9 - Radio w/Steering Wheel Pod:Diagram1
A26/B6.7/L9 - Snow Valve Control:Diagram1
B6.7 - CAN Layout:HMI Standard J1939 (125Kbps)
B6.7 - City Horn (W/ 4PIN CLK & Park Brake):Diagram1
B6.7 - City Horn (W/ 4PIN CLK & Park Brake):Diagram2
B6.7 - City Horn (W/ 4PIN CLK & Park Brake):Diagram3
B6.7 - City Horn (W/ 4PIN CLK):Diagram1
B6.7 - City Horn (W/ 4PIN CLK):Diagram2
B6.7 - City Horn (W/ 4PIN CLK):Diagram3
B6.7 - Fog Lights (Halogen White):Diagram1
B6.7 - Fog Lights (Halogen White):Diagram2
B6.7 - Fog Lights (Halogen White):Diagram3
B6.7 - Fog Lights (LED White):Diagram1
B6.7 - Fog Lights (LED White):Diagram2
B6.7 - Fog Lights (LED White):Diagram3
B6.7 - Front Fog Lamps:Diagram1
B6.7 - Front Fog Lamps:Diagram2
B6.7 - Front Fog Lamps:Diagram3
B6.7 - Front Fog Lights W CONNECTOR:Diagram1
B6.7 - Front Fog Lights W CONNECTOR:Diagram2
B6.7 - Headlight W/Plowlights W/LOWW W/O Headlight Interrupt -10 PIN CLK:Diagram1
B6.7 - Headlight W/Plowlights W/LOWW W/O Headlight Interrupt -10 PIN CLK:Diagram2
B6.7 - Headlight W/Plowlights W/LOWW W/O Headlight Interrupt -10 PIN CLK:Diagram3
B6.7 - Headlight W/Plowlights W/LOWW W/O Headlight Interrupt -10 PIN CLK:Diagram4
B6.7 - Headlight W/Plowlights W/LOWW W/O Headlight Interrupt -10 PIN CLK:Diagram5
B6.7 - Headlight W/Plowlights W/LOWW W/O Headlight Interrupt -10 PIN CLK:Diagram6
B6.7 - Headlight W/Plowlights W/LOWW W/O Headlight Interrupt -10 PIN CLK:Diagram7
B6.7 - Headlight W/Plowlights W/LOWW W/O Headlight Interrupt -10 PIN CLK:Diagram8
B6.7 - Headlights W 10PIN CLK W/LOWW W/Interrupt:Diagram1
B6.7 - Headlights W 10PIN CLK W/LOWW W/Interrupt:Diagram3
B6.7 - Headlights W 10PIN CLK W/LOWW W/O Interrupt:Diagram1
B6.7 - Headlights W/O Lights ON With Wipers (LOWW) W/O Headlights Interrupt:Diagram1

B6.7 - Headlights W/O Lights ON With Wipers (LOWW) W/O Headlights Interrupt:Diagram3
B6.7 - Headlights W/O Lights ON with wipers (LOWW) W/ Headlights Interrupt:Diagram1
B6.7 - Headlights W/O Lights ON with wipers (LOWW) W/ Headlights Interrupt:Diagram2
B6.7 - Headlights W/O Lights ON with wipers (LOWW) W/ Headlights Interrupt:Diagram3
B6.7 - Headlights W/PlowLights W/Headlight Interrupt -10PIN CLK W/LOWW W/Interrupt:Diagram1
B6.7 - Headlights W/PlowLights W/Headlight Interrupt -10PIN CLK W/LOWW W/Interrupt:Diagram2
B6.7 - Headlights W/PlowLights W/Headlight Interrupt -10PIN CLK W/LOWW W/Interrupt:Diagram3
B6.7 - Headlights W/PlowLights W/Headlight Interrupt -10PIN CLK W/LOWW W/Interrupt:Diagram4
B6.7 - Headlights W/PlowLights W/Headlight Interrupt -10PIN CLK W/LOWW W/Interrupt:Diagram5
B6.7 - Headlights W/PlowLights W/Headlight Interrupt -10PIN CLK W/LOWW W/Interrupt:Diagram6
B6.7 - Headlights W/PlowLights W/Headlight Interrupt -10PIN CLK W/LOWW W/Interrupt:Diagram7
B6.7 - Headlights W/PlowLights W/Headlight Interrupt -10PIN CLK W/LOWW W/Interrupt:Diagram8
B6.7 - Headlights W/Plowlights W/O Lights ON With Wipers (LOWW) W/O Headlights Interrupt:Diagram1
B6.7 - Headlights W/Plowlights W/O Lights ON With Wipers (LOWW) W/O Headlights Interrupt:Diagram2
B6.7 - Headlights W/Plowlights W/O Lights ON With Wipers (LOWW) W/O Headlights Interrupt:Diagram3
B6.7 - Headlights W/Plowlights W/O Lights ON With Wipers (LOWW) W/O Headlights Interrupt:Diagram4
B6.7 - Headlights W/Plowlights W/O Lights ON With Wipers (LOWW) W/O Headlights Interrupt:Diagram5
B6.7 - Headlights W/Plowlights W/O Lights ON With Wipers (LOWW) W/O Headlights Interrupt:Diagram6
B6.7 - Headlights W/Plowlights W/O Lights ON With Wipers (LOWW) W/O Headlights Interrupt:Diagram7
B6.7 - Headlights W/Plowlights W/O Lights ON With Wipers (LOWW) W/O Headlights Interrupt:Diagram8
B6.7 - Headlights W/PlowLights W/O Lights ON with wipers (LOWW) W/ Headlights Interrupt:Diagram1
B6.7 - Headlights W/PlowLights W/O Lights ON with wipers (LOWW) W/ Headlights Interrupt:Diagram2

B6.7 - Headlights W/PlowLights W/O Lights ON with wipers (LOWW) W/ Headlights Interrupt:Diagram3
B6.7 - Headlights W/PlowLights W/O Lights ON with wipers (LOWW) W/ Headlights Interrupt:Diagram4
B6.7 - Headlights W/PlowLights W/O Lights ON with wipers (LOWW) W/ Headlights Interrupt:Diagram5
B6.7 - Headlights W/PlowLights W/O Lights ON with wipers (LOWW) W/ Headlights Interrupt:Diagram6
B6.7 - Headlights W/PlowLights W/O Lights ON with wipers (LOWW) W/ Headlights Interrupt:Diagram7
B6.7 - Headlights W/PlowLights W/O Lights ON with wipers (LOWW) W/ Headlights Interrupt:Diagram8
B6.7 - License Plate Light (LED BOX LAMP Daisy Chain Tail Light):Diagram1
B6.7 - License Plate Light (LED BOX LAMP Tail Light):Diagram1
B6.7 - License Plate Light (Tail Light Single Assy) Option 1:Diagram1
B6.7 - License Plate Light (Tail Light Single Assy) Option 2:Diagram1
B6.7 - License Plate Light (Tail Light Single Assy) Option 3:Diagram1
B6.7 - License Plate Light (Tail Light Single Assy) Option 4:Diagram1
B6.7 - License Plate Light (Tail Light Single Assy) W/Less Power Module:Diagram1
B6.7 - Low Speed J1939 (125kbps):B6.7 - Low Speed J1939 (125kbps)
B6.7 - Rear Light (LED BOX LAMP Tail Light):Diagram1
B6.7 - Rear Light (Tail Light) Option 1:Diagram1
B6.7 - Rear Light (Tail Light) Option 2:Diagram1
B6.7 - Rear Light (Tail Light) Option 3:Diagram1
B6.7 - Rear Light (Tail Light) Option 4:Diagram1
B6.7 - Rear Light (Tail Light) W_Daisy Chain pair of Box Lamps:Diagram1
B6.7 - T-Handle for Allison Without Park Position:Diagram1
B6.7 - Transmission Shifter (T-Handle for Allison With Park Position):Diagram1
B6.7 - Transmission Shifter Allison 5th Gen Push Button(SURHD):Diagram1
L9 - Axle Lift Controls Option 2:Diagram1
L9 - CAN Layout:HMI Standard J1939 (125Kbps)
L9 - City Horn (W/ 4PIN CLK & Park Brake):Diagram1
L9 - City Horn (W/ 4PIN CLK & Park Brake):Diagram2
L9 - City Horn (W/ 4PIN CLK):Diagram1

L9 - Fog Lights (Halogen White):Diagram1
L9 - Fog Lights (Halogen White):Diagram2
L9 - Fog Lights (LED White):Diagram1
L9 - Fog Lights (LED White):Diagram2
L9 - Front Fog Lights W CONNECTOR:Diagram1
L9 - Front Fog Lights W CONNECTOR:Diagram2
L9 - Hazard Warning Light N/Trlr Socket:Diagram1
L9 - Headlight W/Plowlights W/LOWW W/O Headlight Interrupt -10 PIN CLK:Diagram1
L9 - Headlight W/Plowlights W/LOWW W/O Headlight Interrupt -10 PIN CLK:Diagram2
L9 - Headlight W/Plowlights W/LOWW W/O Headlight Interrupt -10 PIN CLK:Diagram3
L9 - Headlight W/Plowlights W/LOWW W/O Headlight Interrupt -10 PIN CLK:Diagram4
L9 - Headlight W/Plowlights W/LOWW W/O Headlight Interrupt -10 PIN CLK:Diagram5
L9 - Headlight W/Plowlights W/LOWW W/O Headlight Interrupt -10 PIN CLK:Diagram6
L9 - Headlight W/Plowlights W/LOWW W/O Headlight Interrupt -10 PIN CLK:Diagram7
L9 - Headlight W/Plowlights W/LOWW W/O Headlight Interrupt -10 PIN CLK:Diagram8
L9 - Headlights W 10PIN CLK W/LOWW W/Interrupt:Diagram1
L9 - Headlights W 10PIN CLK W/LOWW W/Interrupt:Diagram3
L9 - Headlights W 10PIN CLK W/LOWW W/O Interrupt:Diagram1
L9 - Headlights W/O Lights ON With Wipers (LOWW) W/O Headlights Interrupt:Diagram1
L9 - Headlights W/O Lights ON With Wipers (LOWW) W/O Headlights Interrupt:Diagram3
L9 - Headlights W/O Lights ON with wipers (LOWW) W/ Headlights Interrupt:Diagram1
L9 - Headlights W/O Lights ON with wipers (LOWW) W/ Headlights Interrupt:Diagram3
L9 - Headlights W/PlowLights W/Headlight Interrupt -10PIN CLK W/LOWW W/Interrupt:Diagram1
L9 - Headlights W/PlowLights W/Headlight Interrupt -10PIN CLK W/LOWW W/Interrupt:Diagram2
L9 - Headlights W/PlowLights W/Headlight Interrupt -10PIN CLK W/LOWW W/Interrupt:Diagram3
L9 - Headlights W/PlowLights W/Headlight Interrupt -10PIN CLK W/LOWW W/Interrupt:Diagram4

L9 - Headlights W/PlowLights W/Headlight Interrupt -10PIN CLK W/LOWW W/Interrupt:Diagram5
L9 - Headlights W/PlowLights W/Headlight Interrupt -10PIN CLK W/LOWW W/Interrupt:Diagram6
L9 - Headlights W/PlowLights W/Headlight Interrupt -10PIN CLK W/LOWW W/Interrupt:Diagram7
L9 - Headlights W/PlowLights W/Headlight Interrupt -10PIN CLK W/LOWW W/Interrupt:Diagram8
L9 - Headlights W/Plowlights W/O Lights ON With Wipers (LOWW) W/O Headlights Interrupt:Diagram1
L9 - Headlights W/Plowlights W/O Lights ON With Wipers (LOWW) W/O Headlights Interrupt:Diagram2
L9 - Headlights W/Plowlights W/O Lights ON With Wipers (LOWW) W/O Headlights Interrupt:Diagram3
L9 - Headlights W/Plowlights W/O Lights ON With Wipers (LOWW) W/O Headlights Interrupt:Diagram4
L9 - Headlights W/Plowlights W/O Lights ON With Wipers (LOWW) W/O Headlights Interrupt:Diagram5
L9 - Headlights W/Plowlights W/O Lights ON With Wipers (LOWW) W/O Headlights Interrupt:Diagram6
L9 - Headlights W/Plowlights W/O Lights ON With Wipers (LOWW) W/O Headlights Interrupt:Diagram7
L9 - Headlights W/Plowlights W/O Lights ON With Wipers (LOWW) W/O Headlights Interrupt:Diagram8
L9 - Headlights W/PlowLights W/O Lights ON with wipers (LOWW) W/ Headlights Interrupt:Diagram1
L9 - Headlights W/PlowLights W/O Lights ON with wipers (LOWW) W/ Headlights Interrupt:Diagram2
L9 - Headlights W/PlowLights W/O Lights ON with wipers (LOWW) W/ Headlights Interrupt:Diagram3
L9 - Headlights W/PlowLights W/O Lights ON with wipers (LOWW) W/ Headlights Interrupt:Diagram4
L9 - Headlights W/PlowLights W/O Lights ON with wipers (LOWW) W/ Headlights Interrupt:Diagram5
L9 - Headlights W/PlowLights W/O Lights ON with wipers (LOWW) W/ Headlights Interrupt:Diagram6
L9 - Headlights W/PlowLights W/O Lights ON with wipers (LOWW) W/ Headlights Interrupt:Diagram7
L9 - Headlights W/PlowLights W/O Lights ON with wipers (LOWW) W/ Headlights Interrupt:Diagram8
L9 - License Plate Light (LED BOX LAMP Daisy Chain Tail Light):Diagram1
L9 - License Plate Light (LED BOX LAMP Tail Light):Diagram1

L9 - License Plate Light (Tail Light Single Assy) Option 1:Diagram1
L9 - License Plate Light (Tail Light Single Assy) Option 2:Diagram1
L9 - License Plate Light (Tail Light Single Assy) Option 3:Diagram1
L9 - License Plate Light (Tail Light Single Assy) Option 4:Diagram1
L9 - Low Speed J1939 (125kbps):L9 - Low Speed J1939 (125Kbps)
L9 - Rear Light (LED BOX LAMP Tail Light):Diagram1
L9 - Rear Light (Tail Light) W Daisy Chain pair of Box Lamps:Diagram1
L9 - Transmission Shifter Allison 5th Gen Push Button(SURHD):Diagram1

Mates MODU-LCM-A004-00-01

Name	Terminal Part Number	V-Min	Name	Wire Part Number	Wire CSA	Wire Spec	Wire Material description	Wire Color Description	Wire Length	End2 Terminal Part Number	End2 Pin Name	End2 Connect or
A	-	-	AB13D	3510323 R1	0.79	18.0	Thin Wall XLPE Primary Cable	PINK	2570.0	-	-	-
B	-	-	-	-	-	-	-	-	-	-	-	-
B	-	-	WIRE1647	-	0.0	-	-	-	0.0	-	PIN1	-
C	-	-	-	-	-	-	-	-	-	-	-	-
C	-	-	WIRE1648	-	0.0	-	-	-	0.0	-	PIN1	-
E	-	-	ZM50B	2645625 R1	0.35	22.0	Thin Wall XLPE Primary Cable	YELLOW 2	1495.0	-	-	-
E	-	-	AB50B	3510335 R1	0.79	18.0	Thin Wall XLPE Primary Cable	YELLOW 2	1495.0	-	-	-

Name	Terminal Part Number	V-Min	Name	Wire Part Number	Wire CSA	Wire Spec	Wire Material description	Wire Color Description	Wire Length	End2 Terminal Part Number	End2 Pin Name	End2 Connect or
E	-	-	AB50B	3510335 R1	0.79	18.0	Thin Wall XLPE Primary Cable	YELLOW 2	1495.0	-	B	1052
E	-	-	AC50B	3510335 R1	0.79	18.0	Thin Wall XLPE Primary Cable	YELLOW 2	2340.0	-	B	1052
E	-	-	ZM50B	2645625 R1	0.35	22.0	Thin Wall XLPE Primary Cable	YELLOW 2	1495.0	-	2	1053
H	-	-	ZB50A	3510335 R1	0.79	18.0	Thin Wall XLPE Primary Cable	YELLOW 2	1495.0	-	-	-
H	-	-	AB50A	3510335 R1	0.79	18.0	Thin Wall XLPE Primary Cable	YELLOW 2	1495.0	-	-	-
H	-	-	AC50A	3510335 R1	0.79	18.0	Thin Wall XLPE Primary Cable	YELLOW 2	2340.0	-	A	1052
H	-	-	AB50A	3510335 R1	0.79	18.0	Thin Wall XLPE Primary Cable	YELLOW 2	1495.0	-	A	1052
J	-	-	AB11-GN	3510359 R1	0.79	18.0	Thin Wall XLPE Primary Cable	WHITE	625.0	-	J	0009B

Name	Terminal Part Number	V-Min	Name	Wire Part Number	Wire CSA	Wire Spec	Wire Material description	Wire Color Description	Wire Length	End2 Terminal Part Number	End2 Pin Name	End2 Connector
L	-	-	AB62	3510353 R1	0.79	18.0	Thin Wall XLPE Primary Cable	DARK BLUE	175.0	-	X	-
L	-	-	AC62	3510353 R1	0.79	18.0	Thin Wall XLPE Primary Cable	DARK BLUE	1720.0	-	X	-
M	-	-	AB62DA	3510354 R1	1.16	16.0	Thin Wall XLPE Primary Cable	DARK BLUE	1020.0	-	-	-
M	-	-	AC62DA	3510354 R1	1.16	16.0	Thin Wall XLPE Primary Cable	DARK BLUE	1065.0	-	-	-
P	-	-	AB50	3510335 R1	0.79	18.0	Thin Wall XLPE Primary Cable	YELLOW 2	1125.0	-	E11	J5-1602
P	-	-	AC50	3510335 R1	0.79	18.0	Thin Wall XLPE Primary Cable	YELLOW 2	2220.0	-	E11	J5-1602
P	-	-	AB50	3510335 R1	0.79	18.0	Thin Wall XLPE Primary Cable	YELLOW 2	1125.0	-	-	-
R	-	-	AB9	3510311 R1	0.79	18.0	Thin Wall XLPE Primary Cable	GREY	1035.0	-	-	-
S	-	-	AB14D	3510365 R1	0.79	18.0	Thin Wall XLPE Primary Cable	RED	2350.0	-	-	-

Connector Name 1F

Part Number 1667639C1

Instances A26 - Bosch LIL165 LIL200 Alternator W/Sensor:Diagram1
A26 - Delco Remy 28SI Alternator W/Sensor:Diagram1
A26 - Delco Remy 36SI Alternator W/Sensor:Diagram1
A26 - Delco Remy 40SI Alternator W/Sensor:Diagram1
A26 - Leece-Neville - LN 325A Alternator W/Sensor:Diagram1
A26 - Leece-Neville AVI160-210A/240A Alternator W/ Sensor:Diagram1

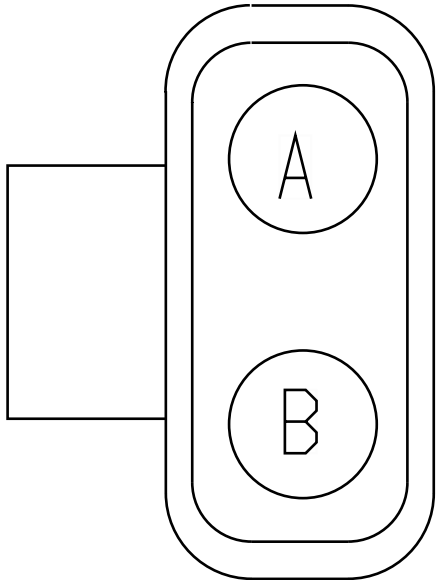

Name	Terminal Part Number	V-Min	Name	Wire Part Number	Wire CSA	Wire Spec	Wire Material description	Wire Color Description	Wire Length	End2 Terminal Part Number	End2 Pin Name	End2 Connect or
A	-	-	JS1B	2643692 R1	1.91	14.0	Std. Wall XLPE Primary Cable	TAN	290.0	-	1	945
B	-	-	JS1A	2643694 R1	1.91	14.0	Std. Wall XLPE Primary Cable	LIGHT BLUE	3975.0	-	A	T14_7000
B	-	-	JS1A	2643694 R1	1.91	14.0	Std. Wall XLPE Primary Cable	LIGHT BLUE	3975.0	-	A	T15_7000
B	-	-	JS1A	2643694 R1	1.91	14.0	Std. Wall XLPE Primary Cable	LIGHT BLUE	3975.0	-	A	7000

Name	Terminal Part Number	V-Min	Name	Wire Part Number	Wire CSA	Wire Spec	Wire Material description	Wire Color Description	Wire Length	End2 Terminal Part Number	End2 Pin Name	End2 Connect or
B	-	-	JS1A	2643694 R1	1.91	14.0	Std. Wall XLPE Primary Cable	LIGHT BLUE	3975.0	-	A	T12_7000
B	-	-	JS1A	2643694 R1	1.91	14.0	Std. Wall XLPE Primary Cable	LIGHT BLUE	3975.0	-	A	T15_7000A

Connector Name 1F

Part Number 1667639C1

Instances B6.7 - Delco Remy 28SI Alternator W/Sensor Option 1:Diagram1
B6.7 - Delco Remy 28SI Alternator W/Sensor Option 2:Diagram1
B6.7 - Delco Remy 36SI Alternator W/Sensor:Diagram1
B6.7 - Delco Remy 40SI Alternator W/Sensor:Diagram1
B6.7 - Leece-Neville - LN 325A Alternator W/Sensor:Diagram1
B6.7 - Leece-Neville AVI160-210A/240A Alternator W/ Sensor:Diagram1
L9 - Delco Remy 28SI Alternator W/Sensor:Diagram1
L9 - Delco Remy 36SI Alternator W/Sensor:Diagram1
L9 - Delco Remy 40SI Alternator W/Sensor:Diagram1
L9 - Leece-Neville - LN 325A Alternator W/Sensor:Diagram1
L9 - Leece-Neville AVI160-210A/240A Alternator W/ Sensor:Diagram1

Mates DEV-FUSE_5A_Inline-4004-01 -04A

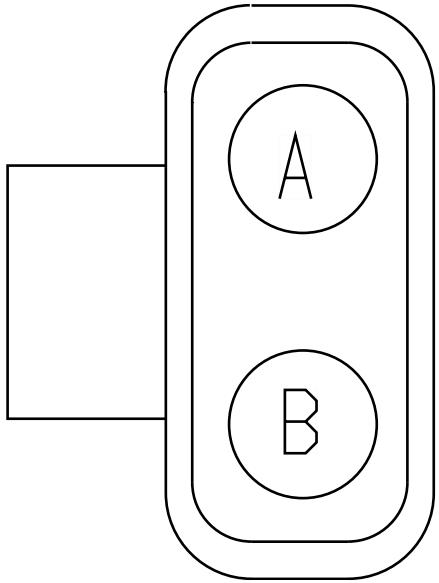

Name	Terminal Part Number	V-Min	Name	Wire Part Number	Wire CSA	Wire Spec	Wire Material description	Wire Color Description	Wire Length	End2 Terminal Part Number	End2 Pin Name	End2 Connect or
A	-	-	7B	3510366 R1	1.16	16.0	Thin Wall XLPE Primary Cable	RED	250.0	-	A	P6P_945
A	-	-	JS1B	3510366 R1	1.16	16.0	Thin Wall XLPE Primary Cable	RED	320.0	-	A	7100
B	-	-	7A	2643686 R1	1.91	14.0	Std. Wall XLPE Primary Cable	RED	3950.0	-	A	P6P_943
B	-	-	JS1A	3510366 R1	1.16	16.0	Thin Wall XLPE Primary Cable	RED	3020.0	-	A	7000

Name	Terminal Part Number	V-Min	Name	Wire Part Number	Wire CSA	Wire Spec	Wire Material description	Wire Color Description	Wire Length	End2 Terminal Part Number	End2 Pin Name	End2 Connect or
B	-	-	7A	2643686 R1	1.91	14.0	Std. Wall XLPE Primary Cable	RED	3950.0	-	A	P6P_943e

Connector Name	1000
Part Number	RING-E-1-4_0
Instances	L9 - Delco Remy 36SI Alternator W/Sensor:Diagram1
Mates	DEV-Delco_Remy_36SI_Altern ator-4004-01-07A

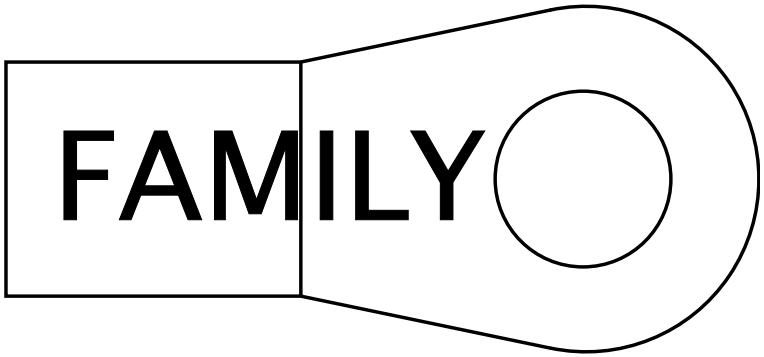

Name	Terminal Part Number	V-Min	Name	Wire Part Number	Wire CSA	Wire Spec	Wire Material description	Wire Color Description	Wire Length	End2 Terminal Part Number	End2 Pin Name	End2 Connect or
A	-	-	WA2-G	3592741 R1	32.19	2.0	Std. Wall XLPE Battery Cable	WHITE	1390.0	-	A	1200

Connector Name	1001
Part Number	RING-E-1-4_0
Instances	L9 - Delco Remy 36SI Alternator W/Sensor:Diagram1
Mates	DEV-Delco_Remy_36SI_Altern ator-4004-01-07A

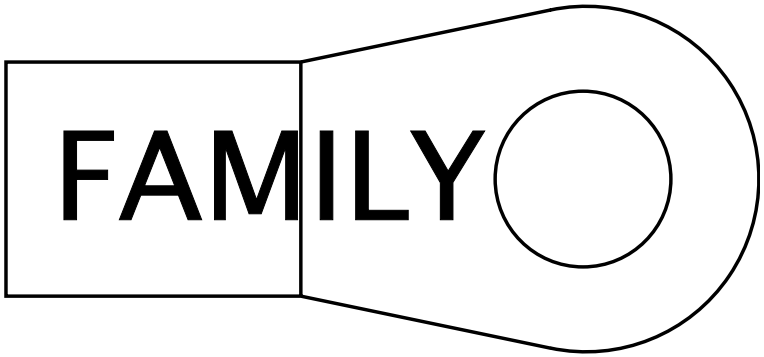

Name	Terminal Part Number	V-Min	Name	Wire Part Number	Wire CSA	Wire Spec	Wire Material description	Wire Color Description	Wire Length	End2 Terminal Part Number	End2 Pin Name	End2 Connect or
A	-	-	WA2	3592739 R1	32.19	2.0	Std. Wall XLPE Battery Cable	RED	1135.0	-	X	-

Connector Name	1002
Part Number	2015884C1
Instances	A26 - Underhood PDM:A26 - UNDERHOOD PDM B6.7/L9 - Underhood PDM:PDM - UNDERHOOD
Mates	MODU-PDM_UNDERHOOD-0003-00 -04

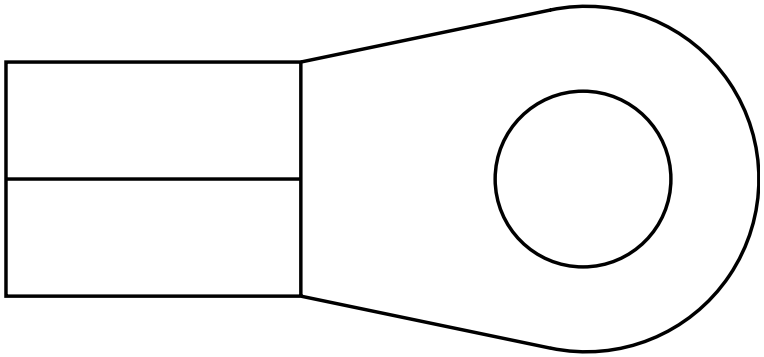

Name	Terminal Part Number	V-Min	Name	Wire Part Number	Wire CSA	Wire Spec	Wire Material description	Wire Color Description	Wire Length	End2 Terminal Part Number	End2 Pin Name	End2 Connect or
A	-	-	CD14	2644026 R1	18.94	4.0	Std. Wall XLPE Battery Cable	RED	2190.0	-	-	-

Connector Name	1003
Part Number	2015884C1
Instances	A26 - Underhood PDM:A26 - UNDERHOOD PDM B6.7/L9 - Underhood PDM:PDM - UNDERHOOD
Mates	MODU-PDM_UNDERHOOD-0003-00 -04

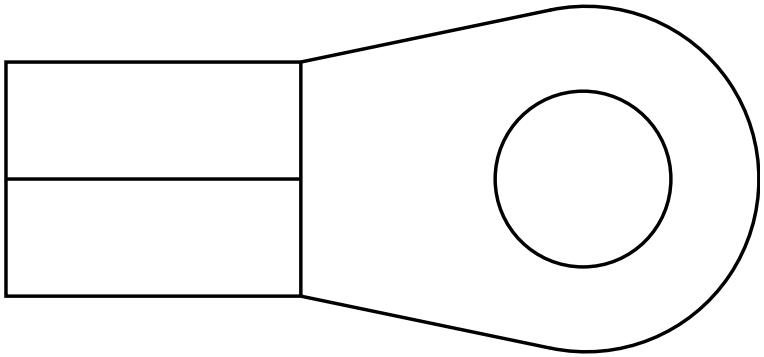

Name	Terminal Part Number	V-Min	Name	Wire Part Number	Wire CSA	Wire Spec	Wire Material description	Wire Color Description	Wire Length	End2 Terminal Part Number	End2 Pin Name	End2 Connect or
A	-	-	CD14D	2644026 R1	18.94	4.0	Std. Wall XLPE Battery Cable	RED	2310.0	-	-	-

Connector Name	100
Part Number	3510243C1
Instances	A26/B6.7/L9 - Power Mirrors (Control Switch Actuated):Diagram2
Mates	SW-MIRRORCTRL-1019-02-01A

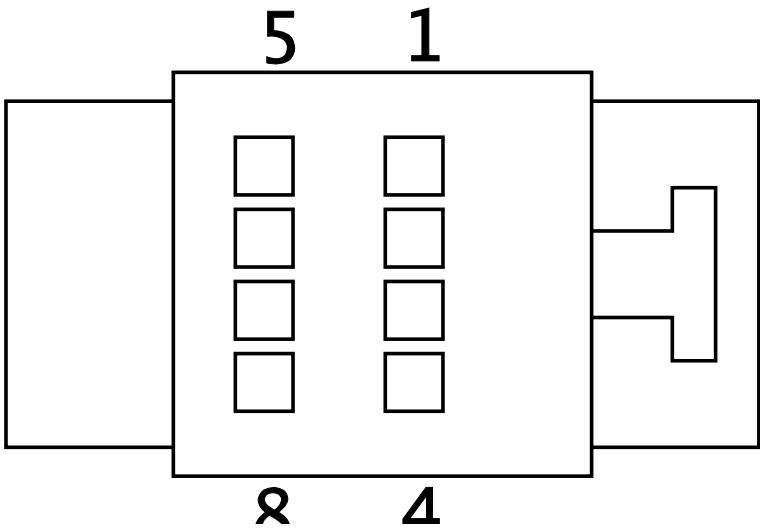

Name	Terminal Part Number	V-Min	Name	Wire Part Number	Wire CSA	Wire Spec	Wire Material description	Wire Color Description	Wire Length	End2 Terminal Part Number	End2 Pin Name	End2 Connect or
1	-	-	EJ62D	3510352 R1	0.53	20.0	Thin Wall XLPE Primary Cable	DARK BLUE	420.0	-	X	-
2	-	-	EJ78VA	3510298 R1	0.53	20.0	Thin Wall XLPE Primary Cable	LIGHT GREEN	370.0	-	X	-
3	-	-	EJ78FA	3510298 R1	0.53	20.0	Thin Wall XLPE Primary Cable	LIGHT GREEN	470.0	-	X	-
4	-	-	EJ78-GC	3510358 R1	0.53	20.0	Thin Wall XLPE Primary Cable	WHITE	710.0	-	X	-

Name	Terminal Part Number	V-Min	Name	Wire Part Number	Wire CSA	Wire Spec	Wire Material description	Wire Color Description	Wire Length	End2 Terminal Part Number	End2 Pin Name	End2 Connect or
5	-	-	EJ78J	3510298 R1	0.53	20.0	Thin Wall XLPE Primary Cable	LIGHT GREEN	1120.0	-	B	3000M
6	-	-	EJ78DA	3510298 R1	0.53	20.0	Thin Wall XLPE Primary Cable	LIGHT GREEN	320.0	-	X	-
7	-	-	EJ78R	3510298 R1	0.53	20.0	Thin Wall XLPE Primary Cable	LIGHT GREEN	1120.0	-	F	3000M
8	-	-	EJ78EA	3510298 R1	0.53	20.0	Thin Wall XLPE Primary Cable	LIGHT GREEN	270.0	-	X	-

Connector Name	100
Part Number	3767577C1
Instances	A26/B6.7/L9 - Radio w/Bluetooth:Diagram1 A26/B6.7/L9 - Radio w/Bluetooth:Diagram2 A26/B6.7/L9 - Radio w/Bluetooth without Steering Wheel Pod:Diagram1
Mates	MODU-MICROPHONE-2008-02-05A

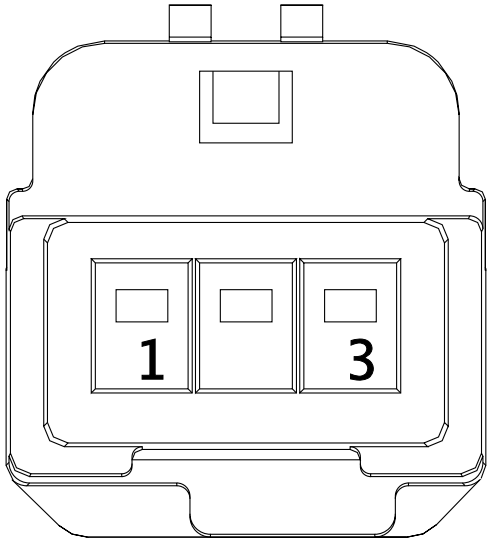

Name	Terminal Part Number	V-Min	Name	Wire Part Number	Wire CSA	Wire Spec	Wire Material description	Wire Color Description	Wire Length	End2 Terminal Part Number	End2 Pin Name	End2 Connect or
2	-	-	86A(+)	3510298 R1	0.53	20.0	Thin Wall XLPE Primary Cable	LIGHT GREEN	1200.0	-	2	2505M
3	-	-	86A(-)	3510298 R1	0.53	20.0	Thin Wall XLPE Primary Cable	LIGHT GREEN	1200.0	-	1	2505M

Connector Name	100
Part Number	4124472C1
Instances	A26/B6.7/L9 - Driver and Passenger Seats - RollTek (Hard Wired):Diagram1
Mates	DEV-DRIVER_SEAT_ROLTEK-01

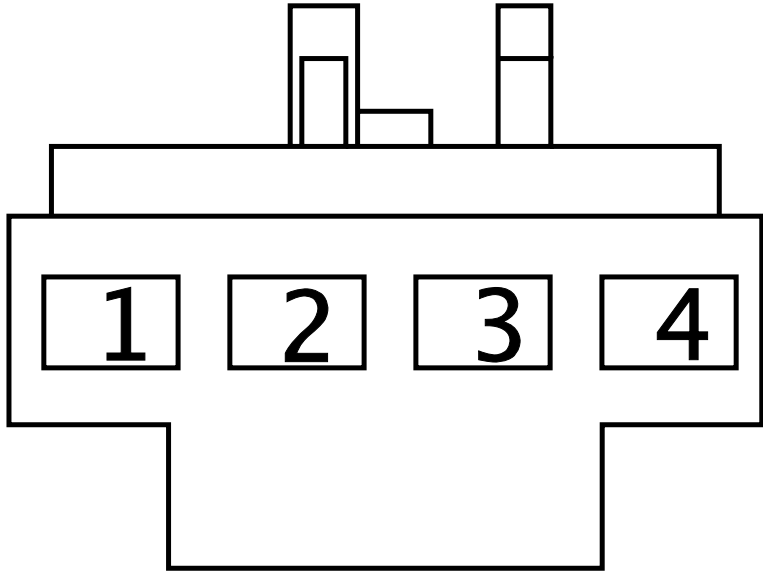

Name	Terminal Part Number	V-Min	Name	Wire Part Number	Wire CSA	Wire Spec	Wire Material description	Wire Color Description	Wire Length	End2 Terminal Part Number	End2 Pin Name	End2 Connect or
1	-	-	179S4(+)	3510346 R1	0.53	20.0	Thin Wall XLPE Primary Cable	VIOLET	1600.0	-	1	101
2	-	-	179S4(-)	3510346 R1	0.53	20.0	Thin Wall XLPE Primary Cable	VIOLET	1600.0	-	2	101
3	-	-	179SRA(+)	3510346 R1	0.53	20.0	Thin Wall XLPE Primary Cable	VIOLET	1600.0	-	3	101
4	-	-	179SRA(-)	3510346 R1	0.53	20.0	Thin Wall XLPE Primary Cable	VIOLET	1600.0	-	4	101

Connector Name	1010
Part Number	RING-E-5-16_0
Instances	B6.7 - Delco Remy 40SI Alternator W/Sensor:Diagram1
Mates	DEV-Delco_Remy_40SI_Altern ator-4004-01-06A

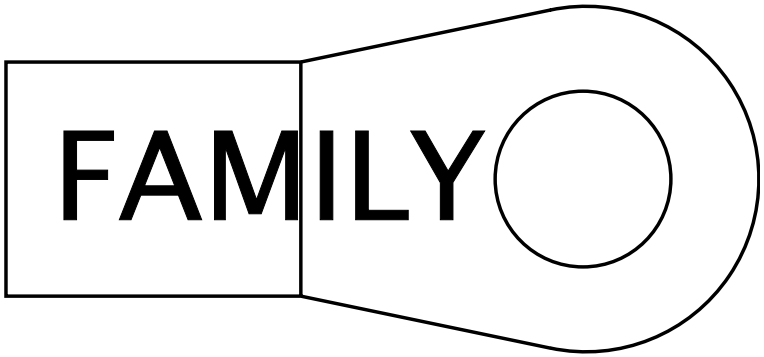

Name	Terminal Part Number	V-Min	Name	Wire Part Number	Wire CSA	Wire Spec	Wire Material description	Wire Color Description	Wire Length	End2 Terminal Part Number	End2 Pin Name	End2 Connect or
A	-	-	WB2-G	3592742 R1	39.43	1.0	Std. Wall XLPE Battery Cable	WHITE	2615.0	-	A	1200
A	-	-	WP2-G	3592742 R1	39.43	1.0	Std. Wall XLPE Battery Cable	WHITE	1110.0	-	A	1200

Connector Name	1010
Part Number	RING-M-8_0
Instances	L9 - Cranking (Starter) GEN4 BCM W/ Thermal Overcrank - External Switch:Diagram1 L9 - Cranking (Starter) GEN4 BCM W/O Thermal Overcrank:Diagram1 L9 - Delco Remy 40SI Alternator W/Sensor:Diagram1 L9 - Leece-Neville AVI160-210A/240A Alternator W/ Sensor:Diagram1
Mates	DEV-Delco_Remy_40SI_Altern ator-4004-01-06A

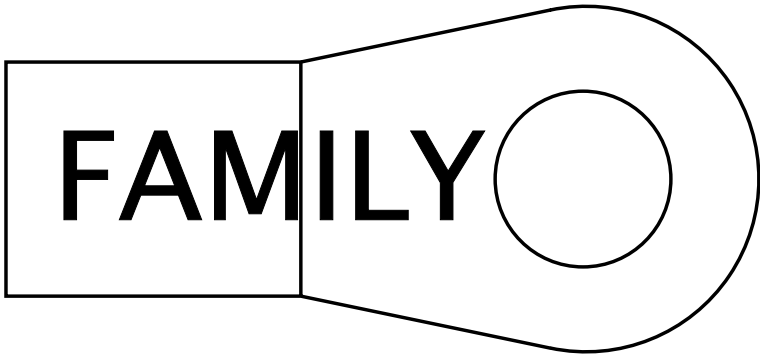

Name	Terminal Part Number	V-Min	Name	Wire Part Number	Wire CSA	Wire Spec	Wire Material description	Wire Color Description	Wire Length	End2 Terminal Part Number	End2 Pin Name	End2 Connect or
A	-	-	WB2-G	3592742 R1	39.43	1.0	Std. Wall XLPE Battery Cable	WHITE	2615.0	-	A	1300
A	-	-	WB2-G	3592742 R1	39.43	1.0	Std. Wall XLPE Battery Cable	WHITE	2615.0	-	A	6335
A	-	-	WB2-G	3592742 R1	39.43	1.0	Std. Wall XLPE Battery Cable	WHITE	2615.0	-	A	1202

Connector Name 1010
Part Number 3768015C1
Instances A26/B6.7/L9 - Battery Feed:Diagram 1
Mates Interior PDM

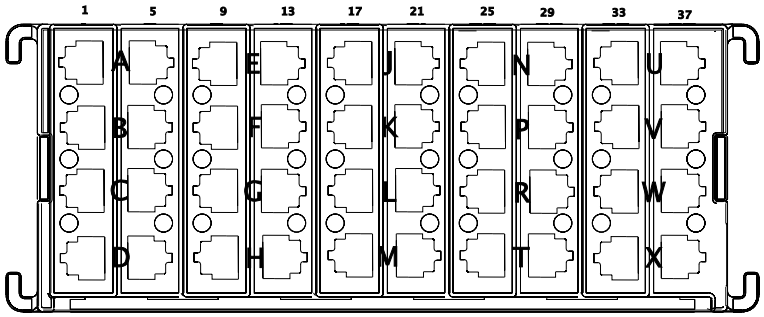

Name	Terminal Part Number	V-Min	Name	Wire Part Number	Wire CSA	Wire Spec	Wire Material description	Wire Color Description	Wire Length	End2 Terminal Part Number	End2 Pin Name	End2 Connector
2	-	-	CD14AB	3510368 R1	3.01	12.0	Thin Wall XLPE Primary Cable	RED	75.0	-	X	-
5	-	-	UL92BT	3510329 R1	0.79	18.0	Thin Wall XLPE Primary Cable	TAN	2195.0	-	-	-
5	-	-	UD14A	3510365 R1	0.79	18.0	Thin Wall XLPE Primary Cable	RED	445.0	-	-	-
6	-	-	VG70J	3510320 R1	3.01	12.0	Thin Wall XLPE Primary Cable	ORANGE	320.0	-	-	-

Name	Terminal Part Number	V-Min	Name	Wire Part Number	Wire CSA	Wire Spec	Wire Material description	Wire Color Description	Wire Length	End2 Terminal Part Number	End2 Pin Name	End2 Connector
7	-	-	AE98H	3510365 R1	0.79	18.0	Thin Wall XLPE Primary Cable	RED	2240.0	-	-	-
7	-	-	AD98H	3510365 R1	0.79	18.0	Thin Wall XLPE Primary Cable	RED	2240.0	-	-	-
8	-	-	AB14D	3510365 R1	0.79	18.0	Thin Wall XLPE Primary Cable	RED	2350.0	-	-	-
10	-	-	CD14AC	3510368 R1	3.01	12.0	Thin Wall XLPE Primary Cable	RED	75.0	-	X	-
13	-	-	AA14EE	3510366 R1	1.16	16.0	Thin Wall XLPE Primary Cable	RED	1745.0	-	-	-
14	-	-	TA75AC	2643695 R1	3.01	12.0	Std. Wall XLPE Primary Cable	RED	3415.0	-	-	-
15	-	-	EB15	3510365 R1	0.79	18.0	Thin Wall XLPE Primary Cable	RED	1830.0	-	-	-
15	-	-	EE15	3510365 R1	0.79	18.0	Thin Wall XLPE Primary Cable	RED	2300.0	-	-	-
16	-	-	-	-	-	-	-	-	-	-	-	-

Name	Terminal Part Number	V-Min	Name	Wire Part Number	Wire CSA	Wire Spec	Wire Material description	Wire Color Description	Wire Length	End2 Terminal Part Number	End2 Pin Name	End2 Connector
18	-	-	CD14AD	3510368 R1	3.01	12.0	Thin Wall XLPE Primary Cable	RED	75.0	-	X	-
21	-	-	UC92DC	3510329 R1	0.79	18.0	Thin Wall XLPE Primary Cable	TAN	1845.0	-	-	-
23	-	-	EN14KBB	3510365 R1	0.79	18.0	Thin Wall XLPE Primary Cable	RED	2783.0	-	-	-
26	-	-	CD14AE	3510368 R1	3.01	12.0	Thin Wall XLPE Primary Cable	RED	75.0	-	X	-
29	-	-	SM86P	3510299 R1	0.79	18.0	Thin Wall XLPE Primary Cable	LIGHT GREEN	1855.0	-	-	-
30	-	-	RD81B	3510368 R1	3.01	12.0	Thin Wall XLPE Primary Cable	RED	2235.0	-	-	-
30	-	-	RG78V	3510302 R1	3.01	12.0	Thin Wall XLPE Primary Cable	LIGHT GREEN	2235.0	-	-	-
31	-	-	AA14MUX	3510365 R1	0.79	18.0	Thin Wall XLPE Primary Cable	RED	1545.0	-	-	-

Name	Terminal Part Number	V-Min	Name	Wire Part Number	Wire CSA	Wire Spec	Wire Material description	Wire Color Description	Wire Length	End2 Terminal Part Number	End2 Pin Name	End2 Connector
32	-	-	HN20	3510300 R1	1.16	16.0	Thin Wall XLPE Primary Cable	LIGHT GREEN	2305.0	-	-	-
34	-	-	CD14AF	3510368 R1	3.01	12.0	Thin Wall XLPE Primary Cable	RED	75.0	-	X	-
37	-	-	MM14EB	2643759 R1	0.79	18.0	Std. Wall XLPE Primary Cable	RED	385.0	-	-	-
38	-	-	RC81A	3510302 R1	3.01	12.0	Thin Wall XLPE Primary Cable	LIGHT GREEN	3045.0	-	-	-
39	-	-	XA94AY	3510314 R1	3.01	12.0	Thin Wall XLPE Primary Cable	GREY	3095.0	-	-	-
39	-	-	XE94AY	2643782 R1	1.91	14.0	Std. Wall XLPE Primary Cable	GREY	3210.0	-	-	-
40	-	-	LB17BA	3510323 R1	0.79	18.0	Thin Wall XLPE Primary Cable	PINK	1720.0	-	-	-

Connector Name 1010
Part Number 3768015C1
Instances A26 - Separate Rear Lights (Stop) W/08TVH:Diagram1
Mates Interior PDM

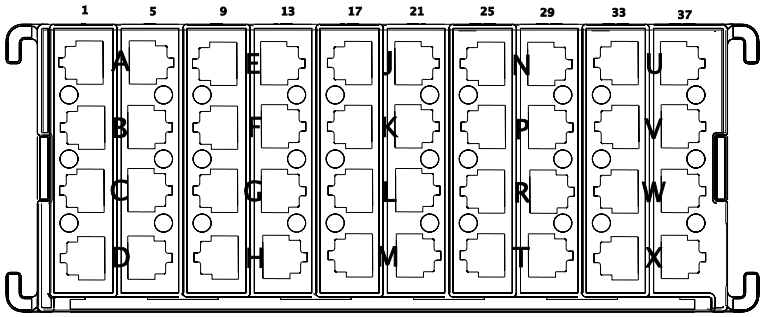

Name	Terminal Part Number	V-Min	Name	Wire Part Number	Wire CSA	Wire Spec	Wire Material description	Wire Color Description	Wire Length	End2 Terminal Part Number	End2 Pin Name	End2 Connect or
6	-	-	VG70J	3510320 R1	3.01	12.0	Thin Wall XLPE Primary Cable	ORANGE	320.0	-	R1 - 30	1011

Connector Name	1011 - B2
Part Number	3768010C1
Instances	A26 - Relays:Diagram1
Mates	Trailer Stop Relay

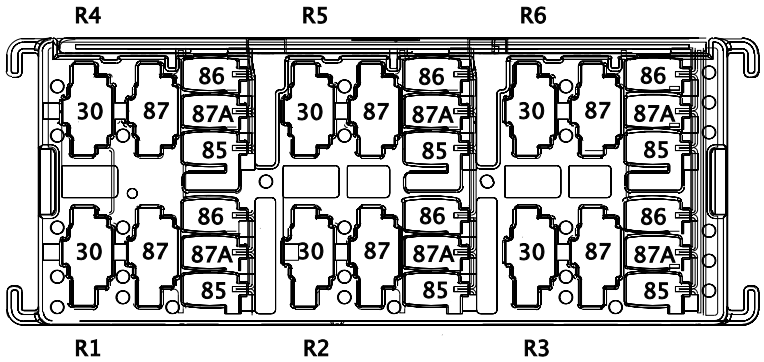

Name	Terminal Part Number	V-Min	Name	Wire Part Number	Wire CSA	Wire Spec	Wire Material description	Wire Color Description	Wire Length	End2 Terminal Part Number	End2 Pin Name	End2 Connector
R4 - 85	-	-	AE11-GR	3510359 R1	0.79	18.0	Thin Wall XLPE Primary Cable	WHITE	1255.0	-	X	-
R4 - 87	-	-	EJ12D	3510344 R1	3.01	12.0	Thin Wall XLPE Primary Cable	LIGHT BLUE	245.0	-	-	-

Connector Name	1011 - B2
Part Number	3768010C1
Instances	A26 - Relays:Diagram1
Mates	Trailer Stop Relay

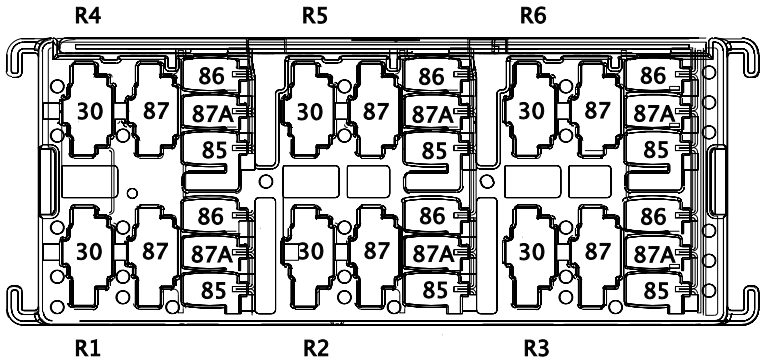

Name	Terminal Part Number	V-Min	Name	Wire Part Number	Wire CSA	Wire Spec	Wire Material description	Wire Color Description	Wire Length	End2 Terminal Part Number	End2 Pin Name	End2 Connect or
R4 - 30	-	-	CD14DA	3510369 R1	4.81	10.0	Thin Wall XLPE Primary Cable	RED	575.0	-	X	-
R4 - 86	-	-	EJ12S	3510341 R1	0.79	18.0	Thin Wall XLPE Primary Cable	LIGHT BLUE	255.0	-	X	-
R4 - 86	-	-	EH12C	3510341 R1	0.79	18.0	Thin Wall XLPE Primary Cable	LIGHT BLUE	2825.0	-	A	J6-1606

Connector Name	1011 - B2
Part Number	3768010C1
Instances	B6.7 - Relays:Diagram1
Mates	PDB

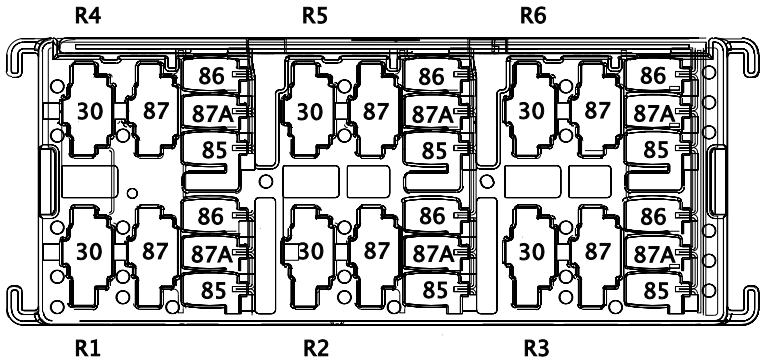

Name	Terminal Part Number	V-Min	Name	Wire Part Number	Wire CSA	Wire Spec	Wire Material description	Wire Color Description	Wire Length	End2 Terminal Part Number	End2 Pin Name	End2 Connector
R4 - 85	-	-	AE11-GR	3510359 R1	0.79	18.0	Thin Wall XLPE Primary Cable	WHITE	1255.0	-	X	-
R4 - 87	-	-	EJ12D	3510344 R1	3.01	12.0	Thin Wall XLPE Primary Cable	LIGHT BLUE	245.0	-	-	-

Connector Name	1011 - B2
Part Number	3768010C1
Instances	B6.7 - Relays:Diagram1
Mates	PDB

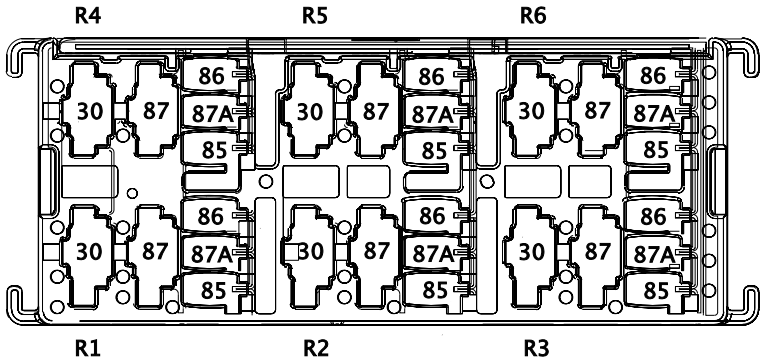

Name	Terminal Part Number	V-Min	Name	Wire Part Number	Wire CSA	Wire Spec	Wire Material description	Wire Color Description	Wire Length	End2 Terminal Part Number	End2 Pin Name	End2 Connector
R4 - 30	-	-	CD14DA	3510369 R1	4.81	10.0	Thin Wall XLPE Primary Cable	RED	575.0	-	X	-
R4 - 86	-	-	EJ12S	3510341 R1	0.79	18.0	Thin Wall XLPE Primary Cable	LIGHT BLUE	255.0	-	X	-
R4 - 86	-	-	EH12C	3510341 R1	0.79	18.0	Thin Wall XLPE Primary Cable	LIGHT BLUE	2825.0	-	A	J6-1606

Connector Name	1011 - B2
Part Number	3768010C1
Instances	L9 - Relays:Diagram1
Mates	PDB

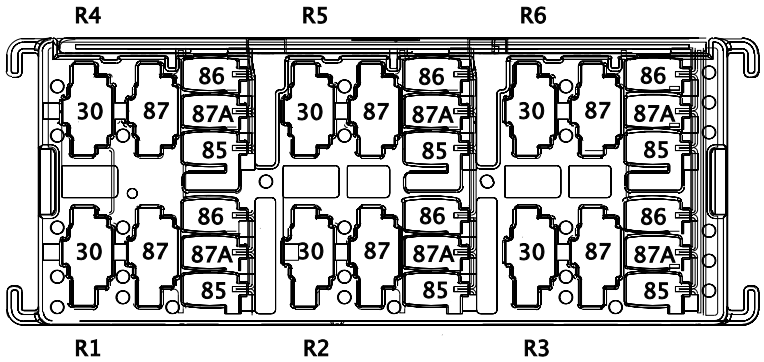

Name	Terminal Part Number	V-Min	Name	Wire Part Number	Wire CSA	Wire Spec	Wire Material description	Wire Color Description	Wire Length	End2 Terminal Part Number	End2 Pin Name	End2 Connect or
R4 - 30	-	-	CD14DA	3510369 R1	4.81	10.0	Thin Wall XLPE Primary Cable	RED	575.0	-	X	-
R4 - 86	-	-	EJ12S	3510341 R1	0.79	18.0	Thin Wall XLPE Primary Cable	LIGHT BLUE	255.0	-	X	-
R4 - 86	-	-	EH12C	3510341 R1	0.79	18.0	Thin Wall XLPE Primary Cable	LIGHT BLUE	2825.0	-	A	J6-1606

Connector Name 1011 - B2
Part Number 3768010C1
Instances L9 - Relays:Diagram1
Mates PDB

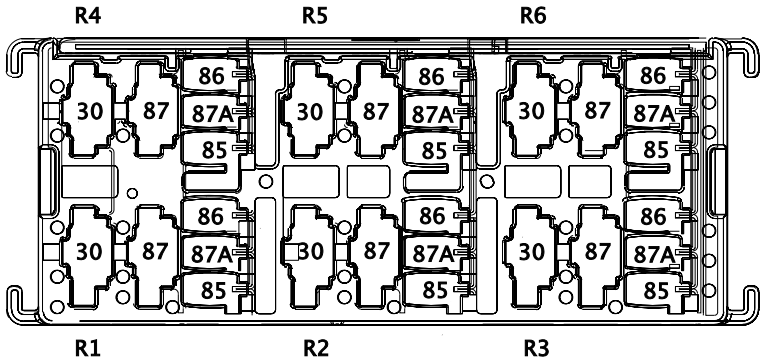

Name	Terminal Part Number	V-Min	Name	Wire Part Number	Wire CSA	Wire Spec	Wire Material description	Wire Color Description	Wire Length	End2 Terminal Part Number	End2 Pin Name	End2 Connect or
R4 - 85	-	-	AE11-GR	3510359 R1	0.79	18.0	Thin Wall XLPE Primary Cable	WHITE	1255.0	-	X	-
R4 - 87	-	-	EJ12D	3510344 R1	3.01	12.0	Thin Wall XLPE Primary Cable	LIGHT BLUE	245.0	-	-	-

Connector Name	1011
Part Number	RING-E-5-16_0
Instances	B6.7 - Delco Remy 40SI Alternator W/Sensor:Diagram1
Mates	DEV-Delco_Remy_40SI_Altern ator-4004-01-06A

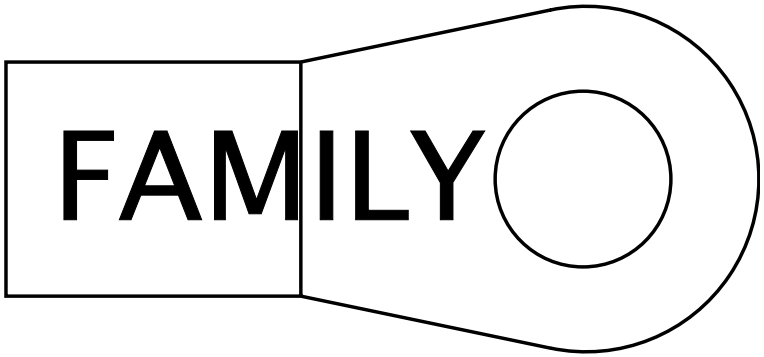

Name	Terminal Part Number	V-Min	Name	Wire Part Number	Wire CSA	Wire Spec	Wire Material description	Wire Color Description	Wire Length	End2 Terminal Part Number	End2 Pin Name	End2 Connect or
A	-	-	WP2	3592740 R1	39.43	1.0	Std. Wall XLPE Battery Cable	RED	1010.0	-	X	-
A	-	-	WB2	3592740 R1	39.43	1.0	Std. Wall XLPE Battery Cable	RED	2250.0	-	X	-

Connector Name	1011
Part Number	RING-M-8_0
Instances	L9 - Cranking (Starter) GEN4 BCM W/ Thermal Overcrank - External Switch:Diagram1 L9 - Cranking (Starter) GEN4 BCM W/O Thermal Overcrank:Diagram1 L9 - Delco Remy 40SI Alternator W/Sensor:Diagram1 L9 - Leece-Neville AVI160-210A/240A Alternator W/ Sensor:Diagram1
Mates	DEV-Delco_Remy_40SI_Altern ator-4004-01-06A

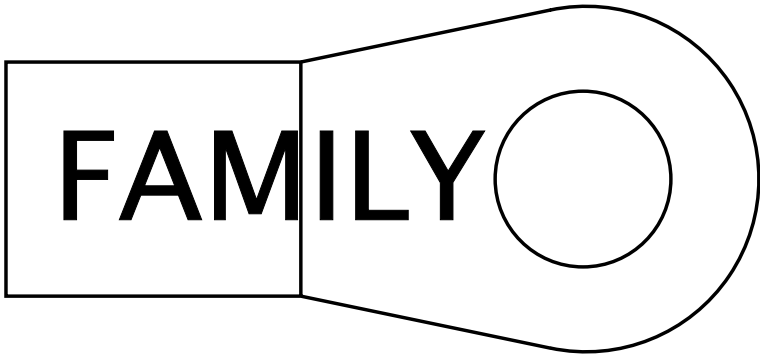

Name	Terminal Part Number	V-Min	Name	Wire Part Number	Wire CSA	Wire Spec	Wire Material description	Wire Color Description	Wire Length	End2 Terminal Part Number	End2 Pin Name	End2 Connect or
A	-	-	WB2	3592740 R1	39.43	1.0	Std. Wall XLPE Battery Cable	RED	2250.0	-	X	-

Connector Name	1011
Part Number	3768010C1
Instances	A26 - Body Builder Lighting - Separate Turn and Stop Lamps (Blunt Cut) - Option 1:Diagram1-Option1 (R/D 9724) A26 - Body Builder Lighting - Separate Turn and Stop Lamps (Blunt Cut) - Option 2:Diagram1-Option1 (R/D 9724A) A26 - Fuel Heater (Vehicle Powered)(Davco):Diagram1 A26 - Fuel Heater (Vehicle Powered)(Davco):Diagram2 A26 - Fuel Heater (Vehicle Powered)(Davco):Diagram3 A26 - Fuel Heater (Vehicle Powered)(Davco):Diagram4 A26 - Fuel Heater (Vehicle Powered)(Davco):Diagram5 A26 - Fuel Heater (Vehicle Powered)(Davco):Diagram6 A26 - Fuel Heater (Vehicle Powered)(Davco):Diagram7 A26 - Fuel Heater (Vehicle Powered)(Davco):Diagram8 A26 - Fuel Heater (Vehicle Powered)(Davco):Diagram9 A26 - Separate Rear Lights (Stop) W/08TVH:Diagram1 A26 - TEM Electric Trailer Brake Controller Activated Stop LT:Diagram1 A26 - TEM Electric Trailer Brake Controller Activated Stop LT (Option2):Diagram1 A26 - Windshield Wipers:Diagram1 B6.7 - Body Builder Lighting - Separate Turn and Stop Lamps (Blunt Cut) Option 1:Diagram1 B6.7 - Body Builder Lighting - Separate Turn and Stop Lamps (Blunt Cut) Option 2:Diagram1 B6.7 - Fuel Heater (Vehicle Powered)(Davco):Diagram1 B6.7 - Fuel Heater (Vehicle Powered)(Davco):Diagram2 B6.7 - Fuel Heater (Vehicle Powered)(Davco):Diagram3 B6.7 - Fuel Heater (Vehicle Powered)(Davco):Diagram4 B6.7 - Fuel Heater (Vehicle Powered)(Davco):Diagram5 B6.7 - Fuel Heater (Vehicle Powered)(Davco):Diagram6 B6.7 - Fuel Heater (Vehicle Powered)(Davco):Diagram7 B6.7 - Fuel Heater (Vehicle Powered)(Racor):Diagram1 B6.7 - Fuel Heater (Vehicle Powered)(Racor):Diagram2 B6.7 - Fuel Heater (Vehicle Powered)(Racor):Diagram3 B6.7 - Fuel Heater (Vehicle Powered)(Racor):Diagram4 B6.7 - Fuel Heater (Vehicle Powered)(Racor):Diagram5 B6.7 - Fuel Heater (Vehicle Powered)(Racor):Diagram6 B6.7 - Fuel Heater (Vehicle Powered)(Racor):Diagram7 B6.7 - TEM Electric Trailer Brake Controller Activated Stop LT Option 2:Diagram1 B6.7 - TEM _Electric Trailer Brake Controller Activated Stop LT Option 1:Diagram1

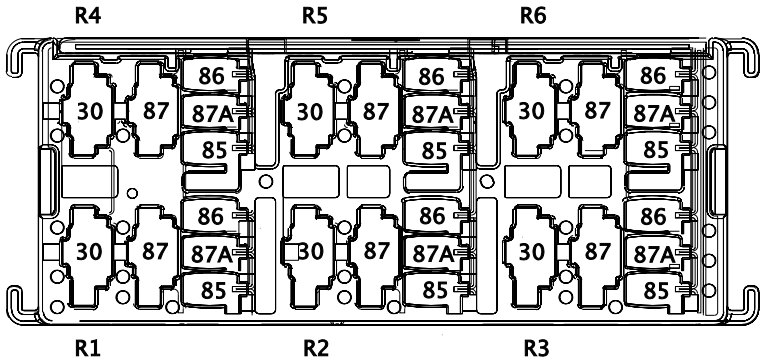

B6.7 - Trailer Interface (Lighting) – BLUNT CUT (Part of Electric Trailer Brakes) Option 1:Diagram1
B6.7 - Trailer Interface (Lighting) – BLUNT CUT (Part of Electric Trailer Brakes) Option 2:Diagram1
B6.7 - Windshield Wipers:Diagram1
L9 - Auto Neutral (Allison with Multiplex Switch and Confirmation Telltale):Diagram1
L9 - Auto Neutral (Allison with Multiplex Switch and Confirmation Telltale):Diagram2
L9 - Auto Neutral (Allison without Multiplex Switch and Confirmation Telltale):Diagram1
L9 - Auto Neutral (Allison without Multiplex Switch and Confirmation Telltale):Diagram2
L9 - Body Builder Lighting - Separate Turn and Stop Lamps (Blunt Cut) Option 1:Diagram1
L9 - Body Builder Lighting - Separate Turn and Stop Lamps (Blunt Cut) Option 2:Diagram1
L9 - Fuel Heater (Vehicle Powered)(Davco):Diagram1
L9 - Fuel Heater (Vehicle Powered)(Davco):Diagram2
L9 - Fuel Heater (Vehicle Powered)(Davco):Diagram3
L9 - Fuel Heater (Vehicle Powered)(Davco):Diagram4
L9 - Fuel Heater (Vehicle Powered)(Davco):Diagram5
L9 - Fuel Heater (Vehicle Powered)(Davco):Diagram6
L9 - Fuel Heater (Vehicle Powered)(Davco):Diagram7
L9 - Fuel Heater (Vehicle Powered)(Davco):Diagram8
L9 - Fuel Heater (Vehicle Powered)(Davco):Diagram9
L9 - Fuel Heater (Vehicle Powered)(Davco):Diagram10
L9 - Fuel Heater (Vehicle Powered)(Davco):Diagram11
L9 - Fuel Heater (Vehicle Powered)(Davco):Diagram12
L9 - Fuel Heater (Vehicle Powered)(Davco):Diagram13
L9 - Fuel Heater (Vehicle Powered)(Davco):Diagram14
L9 - Fuel Heater (Vehicle Powered)(Davco):Diagram15
L9 - Fuel Heater (Vehicle Powered)(Racor):Diagram1
L9 - Fuel Heater (Vehicle Powered)(Racor):Diagram2
L9 - Fuel Heater (Vehicle Powered)(Racor):Diagram3
L9 - Fuel Heater (Vehicle Powered)(Racor):Diagram4
L9 - Fuel Heater (Vehicle Powered)(Racor):Diagram5
L9 - Fuel Heater (Vehicle Powered)(Racor):Diagram6
L9 - Fuel Heater (Vehicle Powered)(Racor):Diagram7
L9 - Fuel Heater (Vehicle Powered)(Racor):Diagram8
L9 - TEM Electric Trailer Brake Controller Activated Stop LT:Diagram1
L9 - Trailer Interface (Lighting) – BLUNT CUT (Part of Electric Trailer Brakes) Option 1:Diagram1

L9 - Trailer Interface (Lighting) – BLUNT CUT (Part of Electric Trailer Brakes) Option 2:Diagram1
L9 - Windshield Wipers:Diagram1

Mates RLY-TRLR_STOP-3035-01-01A

Name	Terminal Part Number	V-Min	Name	Wire Part Number	Wire CSA	Wire Spec	Wire Material description	Wire Color Description	Wire Length	End2 Terminal Part Number	End2 Pin Name	End2 Connector
R1 - 30	-	-	VG70J	3510320 R1	3.01	12.0	Thin Wall XLPE Primary Cable	ORANGE	320.0	-	-	-
R1 - 30	-	-	VG70J	3510320 R1	3.01	12.0	Thin Wall XLPE Primary Cable	ORANGE	320.0	-	6	1010
R1 - 85	-	-	VG70-GT	3510359 R1	0.79	18.0	Thin Wall XLPE Primary Cable	WHITE	1935.0	-	-	-
R1 - 86	-	-	VG70D	3510317 R1	0.79	18.0	Thin Wall XLPE Primary Cable	ORANGE	2350.0	-	F15	J4-1601
R1 - 86	-	-	VJ70DA	3510317 R1	0.79	18.0	Thin Wall XLPE Primary Cable	ORANGE	365.0	-	X	-
R1 - 87	-	-	TJ70ET	3510369 R1	4.81	10.0	Thin Wall XLPE Primary Cable	RED	1195.0	-	X	-
R1 - 87	-	-	TK70T	3510320 R1	3.01	12.0	Thin Wall XLPE Primary Cable	ORANGE	2315.0	-	9	1701

Name	Terminal Part Number	V-Min	Name	Wire Part Number	Wire CSA	Wire Spec	Wire Material description	Wire Color Description	Wire Length	End2 Terminal Part Number	End2 Pin Name	End2 Connector
R2 - 30	-	-	AA82P	3510312 R1	1.16	16.0	Thin Wall XLPE Primary Cable	GREY	0.0	-	R5 - 30	1011
R2 - 85	-	-	AA82M	3510312 R1	1.16	16.0	Thin Wall XLPE Primary Cable	GREY	225.0	-	X	-
R2 - 86	-	-	AA82F	3510311 R1	0.79	18.0	Thin Wall XLPE Primary Cable	GREY	2350.0	-	E7	J4-1601
R2 - 87	-	-	AA82E	3510312 R1	1.16	16.0	Thin Wall XLPE Primary Cable	GREY	225.0	-	X	-
R2 - 87A	-	-	AA82J	3510312 R1	1.16	16.0	Thin Wall XLPE Primary Cable	GREY	3410.0	-	72	1703M
R3 - 30	-	-	GZ92#103B	3510329 R1	0.79	18.0	Thin Wall XLPE Primary Cable	TAN	1055.0	-	X	-
R3 - 30	-	-	GX92#103B	3510329 R1	0.79	18.0	Thin Wall XLPE Primary Cable	TAN	3410.0	-	55	1703M
R3 - 85	-	-	VA92#117B	3510329 R1	0.79	18.0	Thin Wall XLPE Primary Cable	TAN	2750.0	-	-	-

Name	Terminal Part Number	V-Min	Name	Wire Part Number	Wire CSA	Wire Spec	Wire Material description	Wire Color Description	Wire Length	End2 Terminal Part Number	End2 Pin Name	End2 Connector
R3 - 86	-	-	VA92#117A	3510329R1	0.79	18.0	Thin Wall XLPE Primary Cable	TAN	2350.0	-	E16	J4-1601
R3 - 87	-	-	VA92#117C	3510329R1	0.79	18.0	Thin Wall XLPE Primary Cable	TAN	3410.0	-	43	1703M
R5 - 30	-	-	AA82P	3510312R1	1.16	16.0	Thin Wall XLPE Primary Cable	GREY	0.0	-	R2 - 30	1011
R5 - 30	-	-	-	-	-	-	-	-	-	-	-	-
R5 - 85	-	-	AA82N	3510311R1	0.79	18.0	Thin Wall XLPE Primary Cable	GREY	225.0	-	X	-
R5 - 85	-	-	-	-	-	-	-	-	-	-	-	-
R5 - 86	-	-	AA82H	3510311R1	0.79	18.0	Thin Wall XLPE Primary Cable	GREY	2350.0	-	E6	J4-1601
R5 - 86	-	-	-	-	-	-	-	-	-	-	-	-
R5 - 87	-	-	AA82K	3510312R1	1.16	16.0	Thin Wall XLPE Primary Cable	GREY	3410.0	-	69	1703M
R5 - 87	-	-	TJ70ET	3510369R1	4.81	10.0	Thin Wall XLPE Primary Cable	RED	1195.0	-	X	-
R5 - 87A	-	-	AA82L	3510312R1	1.16	16.0	Thin Wall XLPE Primary Cable	GREY	3410.0	-	70	1703M

Name	Terminal Part Number	V-Min	Name	Wire Part Number	Wire CSA	Wire Spec	Wire Material description	Wire Color Description	Wire Length	End2 Terminal Part Number	End2 Pin Name	End2 Connector
R6 - 30	-	-	KM18	3510312 R1	1.16	16.0	Thin Wall XLPE Primary Cable	GREY	1135.0	-	X	-
R6 - 30	-	-	KK18	3510312 R1	1.16	16.0	Thin Wall XLPE Primary Cable	GREY	1135.0	-	X	-
R6 - 85	-	-	KK18A	3510311 R1	0.79	18.0	Thin Wall XLPE Primary Cable	GREY	2350.0	-	F12	J4-1601
R6 - 85	-	-	KM18E	3510311 R1	0.79	18.0	Thin Wall XLPE Primary Cable	GREY	2350.0	-	F12	J4-1601
R6 - 85	-	-	KL18D	3510311 R1	0.79	18.0	Thin Wall XLPE Primary Cable	GREY	2350.0	-	F12	J4-1601
R6 - 86	-	-	KK18-GB	3510359 R1	0.79	18.0	Thin Wall XLPE Primary Cable	WHITE	1935.0	-	-	-
R6 - 86	-	-	KL18-GB	3510359 R1	0.79	18.0	Thin Wall XLPE Primary Cable	WHITE	1935.0	-	-	-
R6 - 87	-	-	KK18V	3510312 R1	1.16	16.0	Thin Wall XLPE Primary Cable	GREY	365.0	-	-	-
R6 - 87	-	-	KL18V	3510312 R1	1.16	16.0	Thin Wall XLPE Primary Cable	GREY	365.0	-	-	-

Connector Name	1012
Part Number	3768010C1
Instances	A26 - Lift Axle Controls (Center Pedestal Controls f/ 2 Lift Axles):Diagram1 A26 - Back-Up Alarm (Automatic) W/ Tailboard:Diagram1 A26 - Back-Up Alarm (Automatic) W/O Tailboard:Diagram1 A26 - Back-Up Alarm (Relay to 5 Pin 08TKC Tailboard to Alarm) (Automatic):Diagram1 A26 - Back-Up Alarm (Relay to 5 Pin 08TKC Tailboard. Alarm Plugs In) (Automatic):Diagram1 A26 - Backup Light (Dual Daisy Reverse LT)Allison/ZF Trans 3K/4K:Diagram1 A26 - Backup Light (Dual Daisy Reverse LT)Allison/ZF Trans 3K/4K:Diagram2 A26 - Backup Light (Dual Reverse Light)Allison/ZF Trans 3K/4K:Diagram1 A26 - Backup Light (Dual Reverse Light)Allison/ZF Trans 3K/4K:Diagram2 A26 - Backup Light (Single Reverse Light) Allison 3K/4K:Diagram1 A26 - Backup Light (Single Reverse Light) Allison 3K/4K:Diagram2 A26 - Backup Light (Single Reverse Light) Allison 3K/4K Option2:Diagram1 A26 - Backup Light (Single Reverse Light) Allison 3K/4K Option2:Diagram2 A26 - Backup Light (Single Reverse Light) W/Less Power Module Allison 3K/4K:Diagram1-Combination1 A26 - Backup Light (Single Reverse Light) W/Less Power Module Allison 3K/4K:Diagram1-Combination2 A26 - Backup Light (Single Reverse Light)Allison 3K/4K:Diagram1 A26 - Backup Light (Single Reverse Light)Allison 3K/4K:Diagram2 A26 - Body Builder Lighting - BOC, 08HBX (Automatic):Diagram1 A26 - Body Builder Lighting - BOC, 08HBX (Manual):Diagram1 A26 - Body Builder Lighting - Combined Turn and Stop Lamps (Automatic):Diagram1-Option 1 (In Cab, W/08HAU) A26 - Body Builder Lighting - Combined Turn and Stop Lamps (Automatic):Diagram1-Option 2 (Back-of-Cab, W/08HAB) A26 - Body Builder Lighting - Combined Turn and Stop Lamps (Automatic):Diagram1-Option 3 (End-of-Frame, W/08HAE)

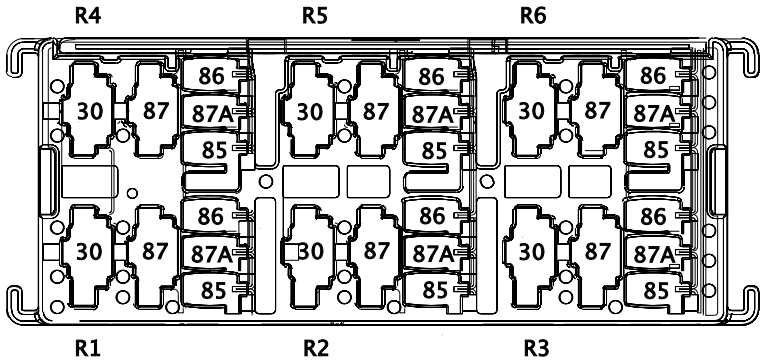

A26 - Body Builder Lighting - Combined Turn and Stop Lamps (Manual):Diagram1-Option 1 (In Cab, W/08HAU)
A26 - Body Builder Lighting - Combined Turn and Stop Lamps (Manual):Diagram1-Option 2 (Back-of-Cab, W/08HAB)
A26 - Body Builder Lighting - Combined Turn and Stop Lamps (Manual):Diagram1-Option 3 (End-of-Frame, W/08HAE)
A26 - Lift Axle Controls (Center Pedestal Controls f/ 1 lift axle):Diagram1
A26 - Lift Axle Controls (Center Pedestal Controls f/ 1 lift axle):Diagram2
A26 - Lift Axle Controls (Center Pedestal Controls f/ 3 lift axles):Diagram1
A26 - WORK LIGHT W BackUP 1 BULB:Diagram1
A26 - WORK LIGHT W BackUP 1 BULB:Diagram2
A26 - Work Light W/ Backup 1 Bulb W/Automatic W/ RKE:Diagram1-Combination1
A26 - Work Light W/ Backup 1 Bulb W/Automatic W/ RKE:Diagram1-Combination2
B6.7 - Back-Up Alarm (Automatic) W/ Tailboard:Diagram1
B6.7 - Back-Up Alarm (Automatic) W/O Tailboard:Diagram1
B6.7 - Backup Light (Dual Daisy Reverse LT)Allison/ZF Trans 1K/2K:Diagram1
B6.7 - Backup Light (Dual Daisy Reverse LT)Allison/ZF Trans 3K/4K:Diagram1
B6.7 - Backup Light (Dual Daisy Reverse LT)Allison/ZF Trans 3K/4K:Diagram2
B6.7 - Backup Light (Dual Reverse Light)Allison/ZF Trans 1K/2K:Diagram1
B6.7 - Backup Light (Dual Reverse Light)Allison/ZF Trans 3K/4K:Diagram1
B6.7 - Backup Light (Dual Reverse Light)Allison/ZF Trans 3K/4K:Diagram2
B6.7 - Backup Light (Single Reverse Light) Allison 1K/2K Option 1:Diagram1
B6.7 - Backup Light (Single Reverse Light) Allison 1K/2K Option 2:Diagram1
B6.7 - Backup Light (Single Reverse Light) Allison 1K/2K Option 3:Diagram1
B6.7 - Backup Light (Single Reverse Light) Allison 3K/4K Option 1:Diagram1
B6.7 - Backup Light (Single Reverse Light) Allison 3K/4K Option 1:Diagram2
B6.7 - Backup Light (Single Reverse Light) Allison 3K/4K Option 2:Diagram1

B6.7 - Backup Light (Single Reverse Light) Allison 3K/4K Option 2:Diagram2
B6.7 - Backup Light (Single Reverse Light) Allison 3K/4K Option 3:Diagram1
B6.7 - Backup Light (Single Reverse Light) Allison 3K/4K Option 3:Diagram2
B6.7 - Body Builder Lighting - Combined Turn and Stop Lamps (Automatic):Diagram1
B6.7 - Body Builder Lighting - Combined Turn and Stop Lamps (Automatic):Diagram2
B6.7 - Body Builder Lighting - Combined Turn and Stop Lamps (Automatic):Diagram3
B6.7 - Body Builder Lighting - Combined Turn and Stop Lamps (Manual):Diagram1
B6.7 - Body Builder Lighting - Combined Turn and Stop Lamps (Manual):Diagram2
B6.7 - Body Builder Lighting - Combined Turn and Stop Lamps (Manual):Diagram3
B6.7 - Remote Start/Stop w/ Emergency Pump:Diagram1
L9 - Back-Up Alarm (Automatic) W/ Tailboard:Diagram1
L9 - Back-Up Alarm (Automatic) W/O Tailboard:Diagram1
L9 - Backup Light (Dual Daisy Reverse Light)Allison/ZF Trans 3K/4K:Diagram1
L9 - Backup Light (Dual Daisy Reverse Light)Allison/ZF Trans 3K/4K:Diagram2
L9 - Backup Light (Single Reverse Light) Allison 3K/4K Option 1:Diagram1
L9 - Backup Light (Single Reverse Light) Allison 3K/4K Option 1:Diagram2
L9 - Backup Light (Single Reverse Light) Allison 3K/4K Option 2:Diagram1
L9 - Backup Light (Single Reverse Light) Allison 3K/4K Option 2:Diagram2
L9 - Backup Light (Single Reverse Light) Allison 3K/4K Option 3:Diagram1
L9 - Backup Light (Single Reverse Light) Allison 3K/4K Option 3:Diagram2
L9 - Backup Light (Single Reverse Light)Allison:Diagram1
L9 - Backup Light (Single Reverse Light)Allison:Diagram2
L9 - Body Builder Lighting - Combined Turn and Stop Lamps (Automatic):Diagram1
L9 - Body Builder Lighting - Combined Turn and Stop Lamps (Automatic):Diagram2

L9 - Body Builder Lighting - Combined Turn and Stop Lamps (Automatic):Diagram3
L9 - Body Builder Lighting - Combined Turn and Stop Lamps (Manual):Diagram1
L9 - Body Builder Lighting - Combined Turn and Stop Lamps (Manual):Diagram2
L9 - Body Builder Lighting - Combined Turn and Stop Lamps (Manual):Diagram3
L9 - Body Builder Lighting - Combined Turn and Stop Lamps (Manual):Diagram4
L9 - Body Builder Lighting - Combined Turn and Stop Lamps (Manual):Diagram5
L9 - Body Builder Lighting - Combined Turn and Stop Lamps (Manual):Diagram6
L9 - Lift Axle Controls (Center Pedestal Controls f/ 1 lift axle):Diagram1
L9 - Lift Axle Controls (Center Pedestal Controls f/ 1 lift axle):Diagram2
L9 - Lift Axle Controls (Center Pedestal Controls f/ 2 Lift Axles):Diagram1
L9 - Lift Axle Controls (Center Pedestal Controls f/ 3 lift axles):Diagram1
L9 - Remote Start/Stop w/ Emergency Pump:Diagram1
L9 - WORK LIGHT W BackUP 1 BULB Option 2:Diagram1
L9 - WORK LIGHT W BackUP 1 BULB Option 2:Diagram2

Mates RLY-REV_ALARM/LT-3009-01-0 1A

Name	Terminal Part Number	V-Min	Name	Wire Part Number	Wire CSA	Wire Spec	Wire Material description	Wire Color Description	Wire Length	End2 Terminal Part Number	End2 Pin Name	End2 Connect or
R2 - 30	-	-	ZJ71A	3510317 R1	0.79	18.0	Thin Wall XLPE Primary Cable	ORANGE	120.0	-	X	-
R2 - 30	-	-	ZC71A	3510317 R1	0.79	18.0	Thin Wall XLPE Primary Cable	ORANGE	120.0	-	X	-

Name	Terminal Part Number	V-Min	Name	Wire Part Number	Wire CSA	Wire Spec	Wire Material description	Wire Color Description	Wire Length	End2 Terminal Part Number	End2 Pin Name	End2 Connector
R2 - 85	-	-	ZJ92#16 5A	3510329 R1	0.79	18.0	Thin Wall XLPE Primary Cable	TAN	3505.0	-	45	1703M
R2 - 85	-	-	ZC92#16 5A	3510329 R1	0.79	18.0	Thin Wall XLPE Primary Cable	TAN	3505.0	-	45	1703M
R2 - 86	-	-	ZJ71B	3510359 R1	0.79	18.0	Thin Wall XLPE Primary Cable	WHITE	120.0	-	X	-
R2 - 86	-	-	ZC71B	3510359 R1	0.79	18.0	Thin Wall XLPE Primary Cable	WHITE	120.0	-	X	-
R2 - 87	-	-	ZJ71AB	3510318 R1	1.16	16.0	Thin Wall XLPE Primary Cable	ORANGE	1805.0	-	-	-
R2 - 87	-	-	ZC71BA	3510318 R1	1.16	16.0	Thin Wall XLPE Primary Cable	ORANGE	2410.0	-	-	-
R2 - 87	-	-	ZL71AC	3510318 R1	1.16	16.0	Thin Wall XLPE Primary Cable	ORANGE	1805.0	-	-	-
R2 - 87	-	-	ZC71BA	3510318 R1	1.16	16.0	Thin Wall XLPE Primary Cable	ORANGE	2410.0	-	1	1701

Name	Terminal Part Number	V-Min	Name	Wire Part Number	Wire CSA	Wire Spec	Wire Material description	Wire Color Description	Wire Length	End2 Terminal Part Number	End2 Pin Name	End2 Connector
R5 - 30	-	-	VN70JA	3510320 R1	3.01	12.0	Thin Wall XLPE Primary Cable	ORANGE	495.0	-	-	-
R5 - 85	-	-	VN70-GV	3510359 R1	0.79	18.0	Thin Wall XLPE Primary Cable	WHITE	2030.0	-	-	-
R5 - 85	-	-	VJ70-GV	3510359 R1	0.79	18.0	Thin Wall XLPE Primary Cable	WHITE	2030.0	-	-	-
R5 - 86	-	-	VN70D	3510317 R1	0.79	18.0	Thin Wall XLPE Primary Cable	ORANGE	2445.0	-	F15	J4-1601
R5 - 86	-	-	VJ70DB	3510317 R1	0.79	18.0	Thin Wall XLPE Primary Cable	ORANGE	460.0	-	X	-
R5 - 87	-	-	VS70TA	3510320 R1	3.01	12.0	Thin Wall XLPE Primary Cable	ORANGE	2410.0	-	72	1701
R5 - 87	-	-	VM70TA	3510320 R1	3.01	12.0	Thin Wall XLPE Primary Cable	ORANGE	5105.0	-	C	A01-4460M
R5 - 87	-	-	VM70TA	3510320 R1	3.01	12.0	Thin Wall XLPE Primary Cable	ORANGE	5105.0	-	C	4460M

Name	Terminal Part Number	V-Min	Name	Wire Part Number	Wire CSA	Wire Spec	Wire Material description	Wire Color Description	Wire Length	End2 Terminal Part Number	End2 Pin Name	End2 Connect or
R6 - 30	-	-	LJ104DA	3510354 R1	1.16	16.0	Thin Wall XLPE Primary Cable	DARK BLUE	460.0	-	-	-
R6 - 85	-	-	LJ104DC	3510353 R1	0.79	18.0	Thin Wall XLPE Primary Cable	DARK BLUE	2445.0	-	E1	J4-1601
R6 - 86	-	-	DF13DU	3510311 R1	0.79	18.0	Thin Wall XLPE Primary Cable	GREY	390.0	-	X	-
R6 - 87	-	-	LJ104DB	3510354 R1	1.16	16.0	Thin Wall XLPE Primary Cable	DARK BLUE	2410.0	-	44	1701
R6 - 87	-	-	ZL71AC	3510318 R1	1.16	16.0	Thin Wall XLPE Primary Cable	ORANGE	1805.0	-	-	-
R6 - 87	-	-	ZC71BA	3510318 R1	1.16	16.0	Thin Wall XLPE Primary Cable	ORANGE	2410.0	-	-	-

Connector Name	1012
Part Number	3768010C1
Instances	A26/B6.7/L9 - Body Builder Aux Power (In Cab, BOC, or EOF):Diagram1-Option 1 (In Cab, W/08HAU) A26/B6.7/L9 - Body Builder Aux Power (In Cab, BOC, or EOF):Diagram1-Option 2 (Back-of-Cab, W/08HAB) A26/B6.7/L9 - Body Builder Aux Power (In Cab, BOC, or EOF):Diagram1-Option 3 (End-of-Frame, W/08HAE)
Mates	RLY-AUX_TRAILER-3005-01-02A

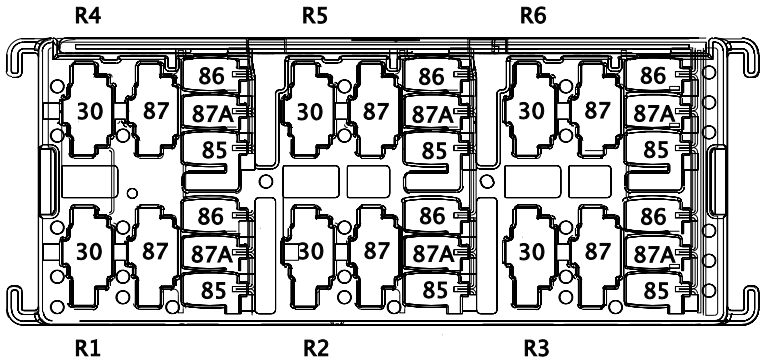

Name	Terminal Part Number	V-Min	Name	Wire Part Number	Wire CSA	Wire Spec	Wire Material description	Wire Color Description	Wire Length	End2 Terminal Part Number	End2 Pin Name	End2 Connector
R4 - 30	-	-	VK14BA	3510366 R1	1.16	16.0	Thin Wall XLPE Primary Cable	RED	460.0	-	-	-
R4 - 85	-	-	VK12-GCL	3510359 R1	0.79	18.0	Thin Wall XLPE Primary Cable	WHITE	2060.0	-	-	-
R4 - 86	-	-	EJ12T	3510341 R1	0.79	18.0	Thin Wall XLPE Primary Cable	LIGHT BLUE	350.0	-	X	-
R4 - 87	-	-	VT12BB	3510342 R1	1.16	16.0	Thin Wall XLPE Primary Cable	LIGHT BLUE	5080.0	-	F	A01-4450M

Name	Terminal Part Number	V-Min	Name	Wire Part Number	Wire CSA	Wire Spec	Wire Material description	Wire Color Description	Wire Length	End2 Terminal Part Number	End2 Pin Name	End2 Connector
R4 - 87	-	-	VP12BB	3510342 R1	1.16	16.0	Thin Wall XLPE Primary Cable	LIGHT BLUE	2410.0	-	75	1701

Connector Name 1012

Part Number 3768010C1

Instances A26 - Body Builder Lighting - Combined Turn and Stop Lamps (Automatic):Diagram1-Option 1 (In Cab, W/08HAU)
A26 - Body Builder Lighting - Combined Turn and Stop Lamps (Automatic):Diagram1-Option 2 (Back-of-Cab, W/08HAB)
A26 - Body Builder Lighting - Combined Turn and Stop Lamps (Automatic):Diagram1-Option 3 (End-of-Frame, W/08HAE)

Mates RLY-REV_ALARM/LT-3009-01-0 1A

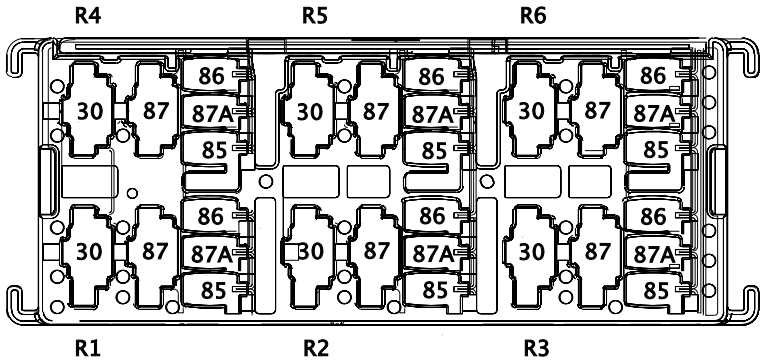

Name	Terminal Part Number	V-Min	Name	Wire Part Number	Wire CSA	Wire Spec	Wire Material description	Wire Color Description	Wire Length	End2 Terminal Part Number	End2 Pin Name	End2 Connect or
R2-87	-	-	ZC71BA	3510318 R1	1.16	16.0	Thin Wall XLPE Primary Cable	ORANGE	2410.0	-	-	-
R2-87	-	-	ZJ71AB	3510318 R1	1.16	16.0	Thin Wall XLPE Primary Cable	ORANGE	1805.0	-	-	-
R2-87	-	-	ZL71AC	3510318 R1	1.16	16.0	Thin Wall XLPE Primary Cable	ORANGE	1805.0	-	-	-

Connector Name	1013
Part Number	3768010C1
Instances	A26 - Axle Lift Controls:Diagram1 A26 - Axle Lift Controls:Diagram2 A26 - Mirrors (Heat) Switch Pack Actuated includes Hood Mirrors:Diagram1 A26 - Mirrors (Heat) Switch Pack Actuated includes RT Hood Mirror:Diagram1 A26 - Snow Valve Control:Diagram1 A26 - Snow Valve Control:Diagram2 A26/B6.7/L9 - Axle Lift Controls:Diagram1 A26/B6.7/L9 - Axle Lift Controls:Diagram2 A26/B6.7/L9 - Axle Lift Controls:Diagram3 A26/B6.7/L9 - Axle Lift Controls:Diagram4 A26/B6.7/L9 - Mirrors (Heat) Switch Pack Actuated Relay Driven:Diagram1 B6.7 - Snow Valve Control:Diagram1 B6.7 - Snow Valve Control:Diagram2 B6.7 - Mirrors (Heat) Switch Pack Actuated includes Hood Mirrors:Diagram1 B6.7 - Mirrors (Heat) Switch Pack Actuated includes Hood Mirrors:Diagram2 B6.7 - Mirrors (Heat) Switch Pack Actuated includes RT Hood Mirror:Diagram1 B6.7 - Mirrors (Heat) Switch Pack Actuated includes RT Hood Mirror:Diagram2 B6.7 - Mirrors (Heat) Switch Pack Actuated includes RT Hood Mirror:Diagram3 B6.7 - Mirrors (Heat) Switch Pack Actuated includes RT Hood Mirror:Diagram4 L9 - Axle Lift Controls Option 2:Diagram1 L9 - Axle Lift Controls Option 2:Diagram2 L9 - Mirrors (Heat) Switch Pack Actuated includes Hood Mirrors:Diagram1 L9 - Mirrors (Heat) Switch Pack Actuated includes Hood Mirrors:Diagram2 L9 - Mirrors (Heat) Switch Pack Actuated includes Hood Mirrors:Diagram3 L9 - Mirrors (Heat) Switch Pack Actuated includes Hood Mirrors:Diagram4 L9 - Mirrors (Heat) Switch Pack Actuated includes RT Hood Mirror:Diagram1

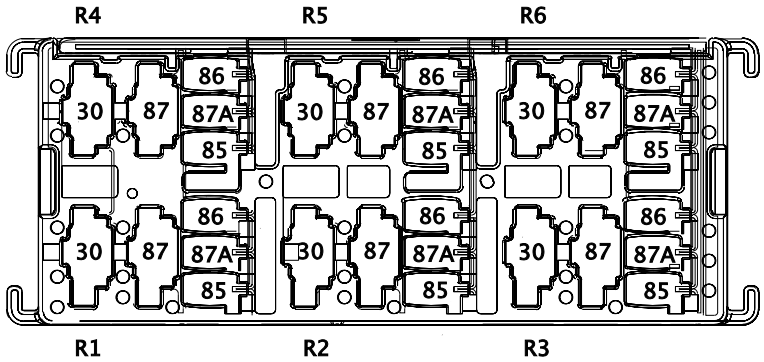

L9 - Mirrors (Heat) Switch Pack Actuated includes RT Hood Mirror:Diagram2
L9 - Mirrors (Heat) Switch Pack Actuated includes RT Hood Mirror:Diagram3
L9 - Mirrors (Heat) Switch Pack Actuated includes RT Hood Mirror:Diagram4
L9 - Snow Valve Control:Diagram1
L9 - Snow Valve Control:Diagram2

Mates PDB

Name	Terminal Part Number	V-Min	Name	Wire Part Number	Wire CSA	Wire Spec	Wire Material description	Wire Color Description	Wire Length	End2 Terminal Part Number	End2 Pin Name	End2 Connect or
R1 - 30	-	-	RF78RP	3510300 R1	1.16	16.0	Thin Wall XLPE Primary Cable	LIGHT GREEN	490.0	-	-	-
R1 - 85	-	-	RF78RR	3510359 R1	0.79	18.0	Thin Wall XLPE Primary Cable	WHITE	2045.0	-	-	-
R1 - 86	-	-	RN78RK	3510299 R1	0.79	18.0	Thin Wall XLPE Primary Cable	LIGHT GREEN	215.0	-	X	-
R1 - 86	-	-	RP78RC	3510299 R1	0.79	18.0	Thin Wall XLPE Primary Cable	LIGHT GREEN	2460.0	-	F13	J4-1601
R1 - 87	-	-	RF78	3510300 R1	1.16	16.0	Thin Wall XLPE Primary Cable	LIGHT GREEN	2150.0	-	X	-
R2 - 30	-	-	QA13B	3510323 R1	0.79	18.0	Thin Wall XLPE Primary Cable	PINK	305.0	-	X	-

Name	Terminal Part Number	V-Min	Name	Wire Part Number	Wire CSA	Wire Spec	Wire Material description	Wire Color Description	Wire Length	End2 Terminal Part Number	End2 Pin Name	End2 Connector
R2 - 85	-	-	QA23F	3510329 R1	0.79	18.0	Thin Wall XLPE Primary Cable	TAN	2435.0	-	J	J1-1603
R2 - 86	-	-	QA11-GM	3510359 R1	0.79	18.0	Thin Wall XLPE Primary Cable	WHITE	1275.0	-	-	-
R2 - 87	-	-	QA23DA	3510329 R1	0.79	18.0	Thin Wall XLPE Primary Cable	TAN	0.0	-	R5 - 85	1013
R2 - 87A	-	-	QA23H	3510329 R1	0.79	18.0	Thin Wall XLPE Primary Cable	TAN	0.0	-	R6 - 85	1013
R3 - 30	-	-	KS59KD	3510311 R1	0.79	18.0	Thin Wall XLPE Primary Cable	GREY	230.0	-	X	-
R3 - 30	-	-	KT59KD	3510311 R1	0.79	18.0	Thin Wall XLPE Primary Cable	GREY	230.0	-	X	-
R3 - 30	-	-	QA13B	3510323 R1	0.79	18.0	Thin Wall XLPE Primary Cable	PINK	305.0	-	-	-
R3 - 85	-	-	KS59-GCA	3510359 R1	0.79	18.0	Thin Wall XLPE Primary Cable	WHITE	1065.0	-	X	-

Name	Terminal Part Number	V-Min	Name	Wire Part Number	Wire CSA	Wire Spec	Wire Material description	Wire Color Description	Wire Length	End2 Terminal Part Number	End2 Pin Name	End2 Connector
R3 - 85	-	-	KT59-GM	3510359 R1	0.79	18.0	Thin Wall XLPE Primary Cable	WHITE	1065.0	-	X	-
R3 - 86	-	-	KS71P	3510311 R1	0.79	18.0	Thin Wall XLPE Primary Cable	GREY	1820.0	-	-	-
R3 - 86	-	-	KT71P	3510311 R1	0.79	18.0	Thin Wall XLPE Primary Cable	GREY	1820.0	-	-	-
R3 - 86	-	-	KT59-GM	3510359 R1	0.79	18.0	Thin Wall XLPE Primary Cable	WHITE	1065.0	-	X	-
R3 - 86	-	-	KS59-GC	3510359 R1	0.79	18.0	Thin Wall XLPE Primary Cable	WHITE	1065.0	-	X	-
R3 - 86	-	-	KU59-GMA	3510359 R1	0.79	18.0	Thin Wall XLPE Primary Cable	WHITE	1065.0	-	X	-
R3 - 87A	-	-	KS59KB	3510311 R1	0.79	18.0	Thin Wall XLPE Primary Cable	GREY	1120.0	-	X	-
R3 - 87A	-	-	KT59KA	3510311 R1	0.79	18.0	Thin Wall XLPE Primary Cable	GREY	1120.0	-	X	-

Name	Terminal Part Number	V-Min	Name	Wire Part Number	Wire CSA	Wire Spec	Wire Material description	Wire Color Description	Wire Length	End2 Terminal Part Number	End2 Pin Name	End2 Connector
R4 - 30	-	-	KS59JC	3510311 R1	0.79	18.0	Thin Wall XLPE Primary Cable	GREY	200.0	-	X	-
R4 - 30	-	-	KT59JC	3510311 R1	0.79	18.0	Thin Wall XLPE Primary Cable	GREY	200.0	-	X	-
R4 - 85	-	-	KS59-GC	3510359 R1	0.79	18.0	Thin Wall XLPE Primary Cable	WHITE	1065.0	-	X	-
R4 - 85	-	-	KT59-GMA	3510359 R1	0.79	18.0	Thin Wall XLPE Primary Cable	WHITE	1065.0	-	X	-
R4 - 86	-	-	KS59KF	3510311 R1	0.79	18.0	Thin Wall XLPE Primary Cable	GREY	230.0	-	X	-
R4 - 86	-	-	KT59KF	3510311 R1	0.79	18.0	Thin Wall XLPE Primary Cable	GREY	230.0	-	X	-
R4 - 87	-	-	KS59KC	3510311 R1	0.79	18.0	Thin Wall XLPE Primary Cable	GREY	230.0	-	X	-
R4 - 87	-	-	KT59KC	3510311 R1	0.79	18.0	Thin Wall XLPE Primary Cable	GREY	230.0	-	X	-

Name	Terminal Part Number	V-Min	Name	Wire Part Number	Wire CSA	Wire Spec	Wire Material description	Wire Color Description	Wire Length	End2 Terminal Part Number	End2 Pin Name	End2 Connector
R5 - 30	-	-	QA23BC	3510329 R1	0.79	18.0	Thin Wall XLPE Primary Cable	TAN	1515.0	-	X	-
R5 - 85	-	-	QA23DA	3510329 R1	0.79	18.0	Thin Wall XLPE Primary Cable	TAN	0.0	-	R2 - 87	1013
R5 - 86	-	-	QA23CA	3510329 R1	0.79	18.0	Thin Wall XLPE Primary Cable	TAN	3520.0	-	5	1703M
R5 - 87	-	-	QA13C	3510323 R1	0.79	18.0	Thin Wall XLPE Primary Cable	PINK	305.0	-	X	-
R5 - 87A	-	-	KU59-GM	3510359 R1	0.79	18.0	Thin Wall XLPE Primary Cable	WHITE	1065.0	-	X	-
R5 - 87A	-	-	QA11-GCH	3510359 R1	0.79	18.0	Thin Wall XLPE Primary Cable	WHITE	1275.0	-	-	-
R6 - 30	-	-	QA23DB	3510329 R1	0.79	18.0	Thin Wall XLPE Primary Cable	TAN	2430.0	-	X	-
R6 - 85	-	-	QA23H	3510329 R1	0.79	18.0	Thin Wall XLPE Primary Cable	TAN	0.0	-	R2 - 87A	1013

Name	Terminal Part Number	V-Min	Name	Wire Part Number	Wire CSA	Wire Spec	Wire Material description	Wire Color Description	Wire Length	End2 Terminal Part Number	End2 Pin Name	End2 Connect or
R6 - 86	-	-	QA23EB	3510329 R1	0.79	18.0	Thin Wall XLPE Primary Cable	TAN	1485.0	-	X	-
R6 - 87	-	-	QA13DA	3510323 R1	0.79	18.0	Thin Wall XLPE Primary Cable	PINK	305.0	-	X	-
R6 - 87A	-	-	KS59-GCA	3510359 R1	0.79	18.0	Thin Wall XLPE Primary Cable	WHITE	1065.0	-	X	-
R6 - 87A	-	-	QA11-GCJ	3510359 R1	0.79	18.0	Thin Wall XLPE Primary Cable	WHITE	1275.0	-	-	-

Connector Name	1014 - B5
Part Number	3768010C1
Instances	A26 - Relays:Diagram1
Mates	Trailer Stop Relay

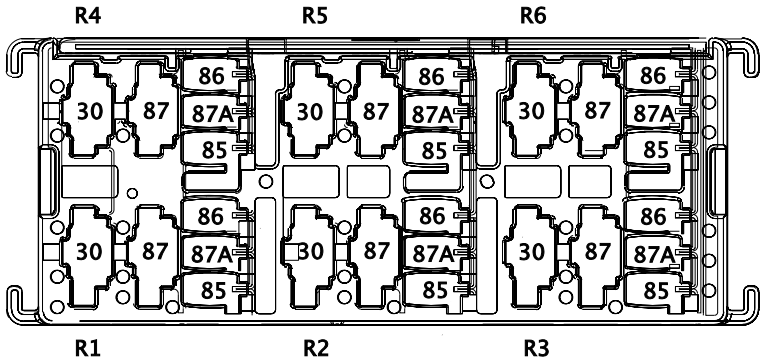

Name	Terminal Part Number	V-Min	Name	Wire Part Number	Wire CSA	Wire Spec	Wire Material description	Wire Color Description	Wire Length	End2 Terminal Part Number	End2 Pin Name	End2 Connector
R4 - 30	-	-	CD14DB	3510369 R1	4.81	10.0	Thin Wall XLPE Primary Cable	RED	580.0	-	X	-
R4 - 86	-	-	DJ13DF	3510323 R1	0.79	18.0	Thin Wall XLPE Primary Cable	PINK	420.0	-	X	-

Connector Name 1014 - B5
Part Number 3768010C1
Instances B6.7 - Relays:Diagram1
Mates PDB

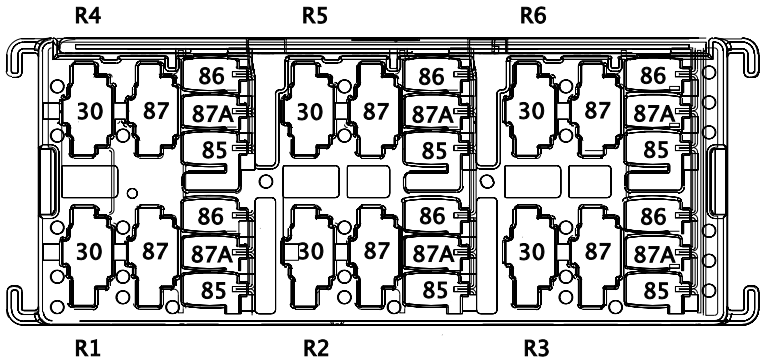

Name	Terminal Part Number	V-Min	Name	Wire Part Number	Wire CSA	Wire Spec	Wire Material description	Wire Color Description	Wire Length	End2 Terminal Part Number	End2 Pin Name	End2 Connect or
R4 - 30	-	-	CD14DB	3510369 R1	4.81	10.0	Thin Wall XLPE Primary Cable	RED	580.0	-	X	-
R4 - 86	-	-	DF13DF	3510323 R1	0.79	18.0	Thin Wall XLPE Primary Cable	PINK	420.0	-	X	-

Connector Name 1014 - B5
Part Number 3768010C1
Instances B6.7 - Relays:Diagram1
Mates PDB

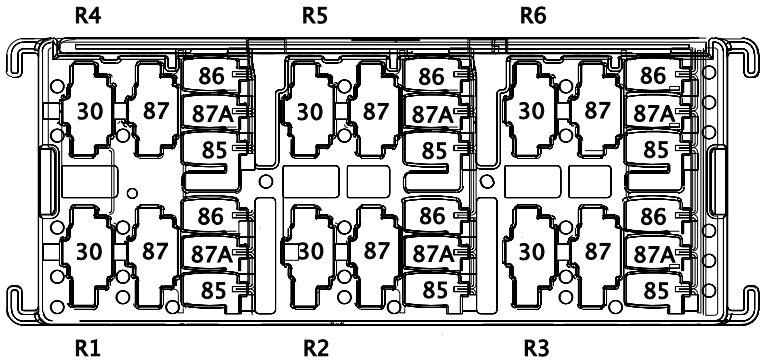

Name	Terminal Part Number	V-Min	Name	Wire Part Number	Wire CSA	Wire Spec	Wire Material description	Wire Color Description	Wire Length	End2 Terminal Part Number	End2 Pin Name	End2 Connector
R4 - 85	-	-	AE11-GY	3510359 R1	0.79	18.0	Thin Wall XLPE Primary Cable	WHITE	1380.0	-	X	-
R4 - 87	-	-	DJ13DG	3510326 R1	3.01	12.0	Thin Wall XLPE Primary Cable	PINK	525.0	-	-	-

Connector Name 1014 - B5
Part Number 3768010C1
Instances L9 - Relays:Diagram1
Mates PDB

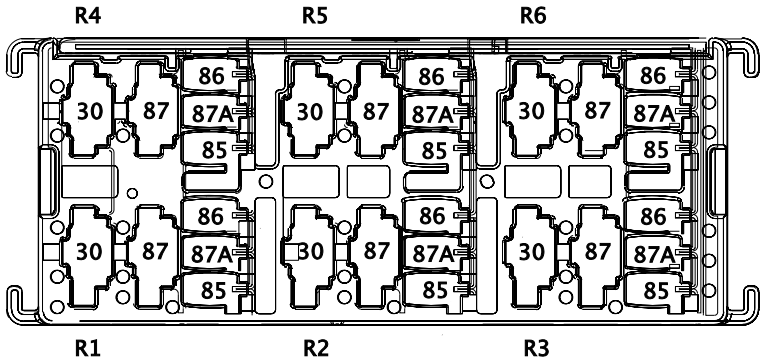

Name	Terminal Part Number	V-Min	Name	Wire Part Number	Wire CSA	Wire Spec	Wire Material description	Wire Color Description	Wire Length	End2 Terminal Part Number	End2 Pin Name	End2 Connect or
R4 - 30	-	-	CD14DB	3510369 R1	4.81	10.0	Thin Wall XLPE Primary Cable	RED	580.0	-	X	-
R4 - 86	-	-	DF13DF	3510323 R1	0.79	18.0	Thin Wall XLPE Primary Cable	PINK	420.0	-	X	-

Connector Name 1014 - B5
Part Number 3768010C1
Instances L9 - Relays:Diagram1
Mates PDB

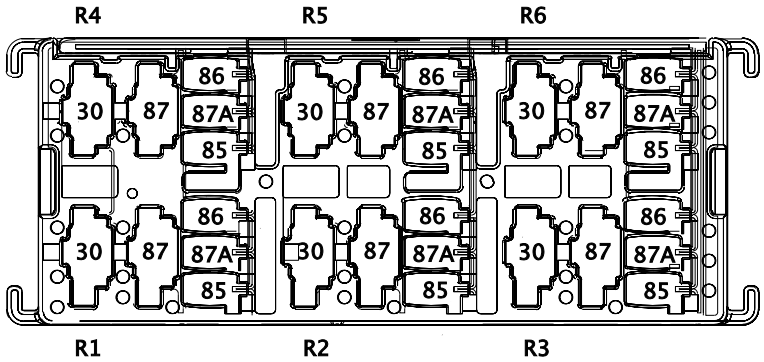

Name	Terminal Part Number	V-Min	Name	Wire Part Number	Wire CSA	Wire Spec	Wire Material description	Wire Color Description	Wire Length	End2 Terminal Part Number	End2 Pin Name	End2 Connect or
R4 - 85	-	-	AE11-GY	3510359 R1	0.79	18.0	Thin Wall XLPE Primary Cable	WHITE	1380.0	-	X	-
R4 - 87	-	-	DJ13DG	3510326 R1	3.01	12.0	Thin Wall XLPE Primary Cable	PINK	525.0	-	-	-

Connector Name	1014
Part Number	3768010C1
Instances	A26 - Relays:Diagram1
Mates	Trailer Stop Relay

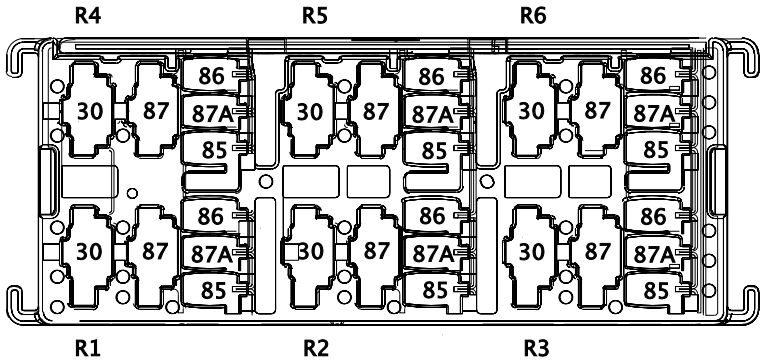

Name	Terminal Part Number	V-Min	Name	Wire Part Number	Wire CSA	Wire Spec	Wire Material description	Wire Color Description	Wire Length	End2 Terminal Part Number	End2 Pin Name	End2 Connector
R4 - 85	-	-	AE11-GY	3510359 R1	0.79	18.0	Thin Wall XLPE Primary Cable	WHITE	1380.0	-	X	-
R4 - 87	-	-	DJ13DG	3510326 R1	3.01	12.0	Thin Wall XLPE Primary Cable	PINK	525.0	-	-	-

Connector Name	1014
Part Number	3768010C1
Instances	A26 - Heated Mirrors (Hood with Door Pods):Diagram1 A26 - Heated Mirrors (RT Hood with Door Pods):Diagram1 A26 - Mirrors (Heat) Switch Pack Actuated includes Hood Mirrors:Diagram1 A26 - Mirrors (Heat) Switch Pack Actuated includes RT Hood Mirror:Diagram1 A26 - Starter Interlock (BCM LSD Controlled w/ Relay & N/ Auto SS):Diagram1 A26/B6.7/L9 - Heated Windshield:Diagram1 B6.7 - Heated Mirrors (Hood with Door Pods):Diagram1 B6.7 - Heated Mirrors (Hood with Door Pods):Diagram2 B6.7 - Heated Mirrors (RT Hood with Door Pods):Diagram1 B6.7 - Heated Mirrors (RT Hood with Door Pods):Diagram2 B6.7 - Heated Mirrors (RT Hood with Door Pods):Diagram3 B6.7 - Heated Mirrors (RT Hood with Door Pods):Diagram4 B6.7 - Mirrors (Heat) Switch Pack Actuated includes Hood Mirrors:Diagram1 B6.7 - Mirrors (Heat) Switch Pack Actuated includes Hood Mirrors:Diagram2 B6.7 - Mirrors (Heat) Switch Pack Actuated includes RT Hood Mirror:Diagram1 B6.7 - Mirrors (Heat) Switch Pack Actuated includes RT Hood Mirror:Diagram2 B6.7 - Mirrors (Heat) Switch Pack Actuated includes RT Hood Mirror:Diagram3 B6.7 - Mirrors (Heat) Switch Pack Actuated includes RT Hood Mirror:Diagram4 L9 - Heated Mirrors (Hood with Door Pods):Diagram1 L9 - Heated Mirrors (Hood with Door Pods):Diagram2 L9 - Heated Mirrors (Hood with Door Pods):Diagram3 L9 - Heated Mirrors (Hood with Door Pods):Diagram4 L9 - Heated Mirrors (RT Hood with Door Pods):Diagram1 L9 - Heated Mirrors (RT Hood with Door Pods):Diagram2 L9 - Heated Mirrors (RT Hood with Door Pods):Diagram3 L9 - Heated Mirrors (RT Hood with Door Pods):Diagram4 L9 - Mirrors (Heat) Switch Pack Actuated includes Hood Mirrors:Diagram1 L9 - Mirrors (Heat) Switch Pack Actuated includes Hood Mirrors:Diagram2 L9 - Mirrors (Heat) Switch Pack Actuated includes Hood Mirrors:Diagram3

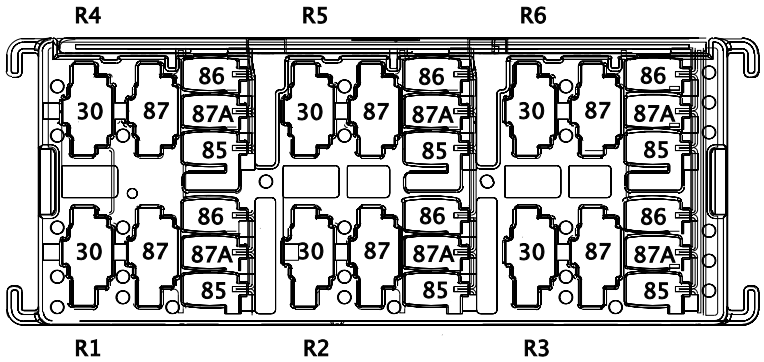

L9 - Mirrors (Heat) Switch Pack Actuated includes Hood Mirrors:Diagram4
L9 - Mirrors (Heat) Switch Pack Actuated includes RT Hood Mirror:Diagram1
L9 - Mirrors (Heat) Switch Pack Actuated includes RT Hood Mirror:Diagram2
L9 - Mirrors (Heat) Switch Pack Actuated includes RT Hood Mirror:Diagram3
L9 - Mirrors (Heat) Switch Pack Actuated includes RT Hood Mirror:Diagram4
L9 - Starter Interlock (BCM LSD Controlled w/ Relay & N/ Auto SS)_EATON XMSN:Diagram1

Mates PDB

Name	Terminal Part Number	V-Min	Name	Wire Part Number	Wire CSA	Wire Spec	Wire Material description	Wire Color Description	Wire Length	End2 Terminal Part Number	End2 Pin Name	End2 Connector
R1 - 30	-	-	RK78E	3510301 R1	1.91	14.0	Thin Wall XLPE Primary Cable	LIGHT GREEN	525.0	-	-	-
R1 - 85	-	-	RK78-GD	3510359 R1	0.79	18.0	Thin Wall XLPE Primary Cable	WHITE	2875.0	-	-	-
R1 - 86	-	-	RK78BC	3510300 R1	1.16	16.0	Thin Wall XLPE Primary Cable	LIGHT GREEN	170.0	-	X	-
R1 - 87	-	-	RK78D	3510295 R1	1.91	14.0	Thin Wall XLPE Primary Cable	BLACK	2460.0	-	A	3001
R2 - 30	-	-	UD14A	3510365 R1	0.79	18.0	Thin Wall XLPE Primary Cable	RED	445.0	-	-	-

Name	Terminal Part Number	V-Min	Name	Wire Part Number	Wire CSA	Wire Spec	Wire Material description	Wire Color Description	Wire Length	End2 Terminal Part Number	End2 Pin Name	End2 Connector
R2 - 85	-	-	UD92-GC	3510359 R1	0.79	18.0	Thin Wall XLPE Primary Cable	WHITE	3535.0	-	21	1703M
R2 - 86	-	-	UD92B	3510329 R1	0.79	18.0	Thin Wall XLPE Primary Cable	TAN	3535.0	-	28	1703M
R2 - 87	-	-	UD17B	3510323 R1	0.79	18.0	Thin Wall XLPE Primary Cable	PINK	2950.0	-	M	J6-1606
R5 - 30	-	-	RK78	3510300 R1	1.16	16.0	Thin Wall XLPE Primary Cable	LIGHT GREEN	490.0	-	-	-
R5 - 85	-	-	RK78-GC	3510359 R1	0.79	18.0	Thin Wall XLPE Primary Cable	WHITE	2875.0	-	-	-
R5 - 86	-	-	RK78F	3510299 R1	0.79	18.0	Thin Wall XLPE Primary Cable	LIGHT GREEN	170.0	-	X	-
R5 - 87	-	-	RK78B	3510295 R1	1.91	14.0	Thin Wall XLPE Primary Cable	BLACK	3595.0	-	A	3004
R6 - 30	-	-	RL78AA	3510300 R1	1.16	16.0	Thin Wall XLPE Primary Cable	LIGHT GREEN	490.0	-	-	-

Name	Terminal Part Number	V-Min	Name	Wire Part Number	Wire CSA	Wire Spec	Wire Material description	Wire Color Description	Wire Length	End2 Terminal Part Number	End2 Pin Name	End2 Connector
R6 - 30	-	-	RM78AA	3510300 R1	1.16	16.0	Thin Wall XLPE Primary Cable	LIGHT GREEN	490.0	-	-	-
R6 - 85	-	-	RL78RN	3510359 R1	0.79	18.0	Thin Wall XLPE Primary Cable	WHITE	2060.0	-	-	-
R6 - 85	-	-	RM78RM	3510359 R1	0.79	18.0	Thin Wall XLPE Primary Cable	WHITE	2060.0	-	-	-
R6 - 86	-	-	RR78RC	3510299 R1	0.79	18.0	Thin Wall XLPE Primary Cable	LIGHT GREEN	2475.0	-	F13	J4-1601
R6 - 86	-	-	RN78RD	3510299 R1	0.79	18.0	Thin Wall XLPE Primary Cable	LIGHT GREEN	230.0	-	X	-
R6 - 87	-	-	RL78AB	3510300 R1	1.16	16.0	Thin Wall XLPE Primary Cable	LIGHT GREEN	2360.0	-	63	1700
R6 - 87	-	-	RM78AB	3510300 R1	1.16	16.0	Thin Wall XLPE Primary Cable	LIGHT GREEN	1350.0	-	X	-

Connector Name 1015
Part Number 3768015C1
Instances A26/B6.7/L9 - Key Switch Ignition:Diagram 1
Mates Operating Grid PDB

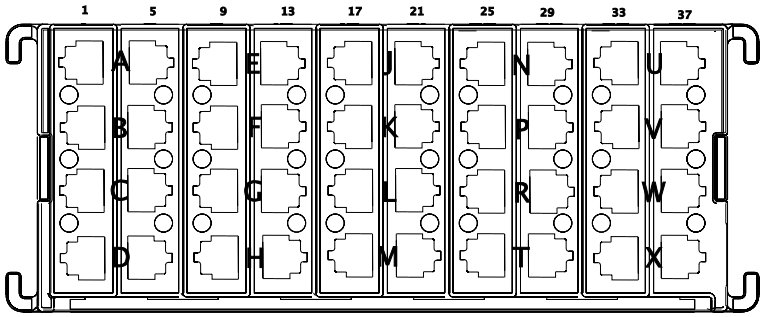

Name	Terminal Part Number	V-Min	Name	Wire Part Number	Wire CSA	Wire Spec	Wire Material description	Wire Color Description	Wire Length	End2 Terminal Part Number	End2 Pin Name	End2 Connector
2	-	-	DJ13DJ	3510326 R1	3.01	12.0	Thin Wall XLPE Primary Cable	PINK	230.0	-	X	-
5	-	-	MM13EE	3510323 R1	0.79	18.0	Thin Wall XLPE Primary Cable	PINK	4955.0	-	-	-
6	-	-	HE87MB	3510311 R1	0.79	18.0	Thin Wall XLPE Primary Cable	GREY	2525.0	-	-	-
8	-	-	WD44Y	3510312 R1	1.16	16.0	Thin Wall XLPE Primary Cable	GREY	2445.0	-	-	-

Name	Terminal Part Number	V-Min	Name	Wire Part Number	Wire CSA	Wire Spec	Wire Material description	Wire Color Description	Wire Length	End2 Terminal Part Number	End2 Pin Name	End2 Connector
10	-	-	DJ13DK	3510326 R1	3.01	12.0	Thin Wall XLPE Primary Cable	PINK	230.0	-	X	-
13	-	-	KS59JB	3510311 R1	0.79	18.0	Thin Wall XLPE Primary Cable	GREY	290.0	-	-	-
13	-	-	KR59J	3510311 R1	0.79	18.0	Thin Wall XLPE Primary Cable	GREY	2840.0	-	-	-
14	-	-	DL13AB	3510323 R1	0.79	18.0	Thin Wall XLPE Primary Cable	PINK	1000.0	-	-	-
15	-	-	ZA71BB	3510318 R1	1.16	16.0	Thin Wall XLPE Primary Cable	ORANGE	3620.0	-	-	-
15	-	-	ZC71	3510318 R1	1.16	16.0	Thin Wall XLPE Primary Cable	ORANGE	355.0	-	-	-
15	-	-	ZH71AA	3510318 R1	1.16	16.0	Thin Wall XLPE Primary Cable	ORANGE	3620.0	-	-	-
16	-	-	AB13D	3510323 R1	0.79	18.0	Thin Wall XLPE Primary Cable	PINK	2570.0	-	-	-

Name	Terminal Part Number	V-Min	Name	Wire Part Number	Wire CSA	Wire Spec	Wire Material description	Wire Color Description	Wire Length	End2 Terminal Part Number	End2 Pin Name	End2 Connector
18	-	-	DJ13DL	3510326 R1	3.01	12.0	Thin Wall XLPE Primary Cable	PINK	230.0	-	X	-
21	-	-	SL86P	3510300 R1	1.16	16.0	Thin Wall XLPE Primary Cable	LIGHT GREEN	2455.0	-	-	-
21	-	-	SH86P	3510300 R1	1.16	16.0	Thin Wall XLPE Primary Cable	LIGHT GREEN	5440.0	-	-	-
21	-	-	SJ86P	3510300 R1	1.16	16.0	Thin Wall XLPE Primary Cable	LIGHT GREEN	2455.0	-	-	-
22	-	-	RF78RP	3510300 R1	1.16	16.0	Thin Wall XLPE Primary Cable	LIGHT GREEN	490.0	-	-	-
23	-	-	AA13EA	3510323 R1	0.79	18.0	Thin Wall XLPE Primary Cable	PINK	1965.0	-	-	-
24	-	-	-	-	-	-	-	-	-	-	-	-
26	-	-	DJ13DM	3510326 R1	3.01	12.0	Thin Wall XLPE Primary Cable	PINK	230.0	-	X	-
29	-	-	YC67A	3510324 R1	1.16	16.0	Thin Wall XLPE Primary Cable	PINK	2445.0	-	-	-

Name	Terminal Part Number	V-Min	Name	Wire Part Number	Wire CSA	Wire Spec	Wire Material description	Wire Color Description	Wire Length	End2 Terminal Part Number	End2 Pin Name	End2 Connector
30	-	-	KH39A	3510312 R1	1.16	16.0	Thin Wall XLPE Primary Cable	GREY	2525.0	-	-	-
31	-	-	LL13B	3510324 R1	1.16	16.0	Thin Wall XLPE Primary Cable	PINK	375.0	-	-	-
32	-	-	MA97F	3510348 R1	1.16	16.0	Thin Wall XLPE Primary Cable	VIOLET	3620.0	-	-	-
34	-	-	DJ13DN	3510326 R1	3.01	12.0	Thin Wall XLPE Primary Cable	PINK	230.0	-	X	-
37	-	-	XE94V	2643782 R1	1.91	14.0	Std. Wall XLPE Primary Cable	GREY	3430.0	-	-	-
37	-	-	XA94V	3510311 R1	0.79	18.0	Thin Wall XLPE Primary Cable	GREY	3315.0	-	-	-
38	-	-	KH39	3510312 R1	1.16	16.0	Thin Wall XLPE Primary Cable	GREY	2525.0	-	-	-
39	-	-	-	-	-	-	-	-	-	-	-	-
40	-	-	-	-	-	-	-	-	-	-	-	-

Connector Name	1016 - B7
Part Number	4100070C1
Instances	A26 - Relays:Diagram1
Mates	Trailer Stop Relay

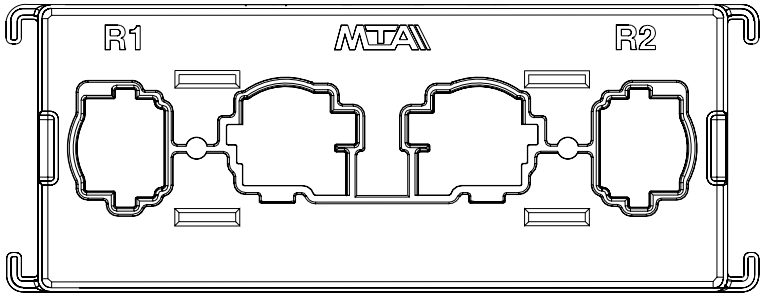

Name	Terminal Part Number	V-Min	Name	Wire Part Number	Wire CSA	Wire Spec	Wire Material description	Wire Color Description	Wire Length	End2 Terminal Part Number	End2 Pin Name	End2 Connector
R2 - 30	-	-	CD14DC	3525611 R1	7.48	8.0	Thin Wall XLPE Primary Cable	RED	685.0	-	X	-
R2 - 86	-	-	DJ13DE	3510323 R1	0.79	18.0	Thin Wall XLPE Primary Cable	PINK	525.0	-	X	-

Connector Name	1016 - B7
Part Number	4100070C1
Instances	A26 - Relays:Diagram1
Mates	Trailer Stop Relay

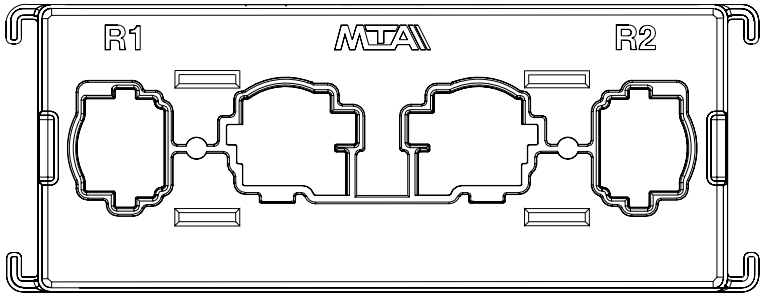

Name	Terminal Part Number	V-Min	Name	Wire Part Number	Wire CSA	Wire Spec	Wire Material description	Wire Color Description	Wire Length	End2 Terminal Part Number	End2 Pin Name	End2 Connector
R2 - 85	-	-	AD11-GZ	3510359 R1	0.79	18.0	Thin Wall XLPE Primary Cable	WHITE	1485.0	-	X	-
R2 - 87	-	-	DJ13DH	3525611 R1	7.48	8.0	Thin Wall XLPE Primary Cable	RED	170.0	-	-	-

Connector Name	1016 - B7
Part Number	4100070C1
Instances	A26 - Relays:Diagram1
Mates	Trailer Stop Relay

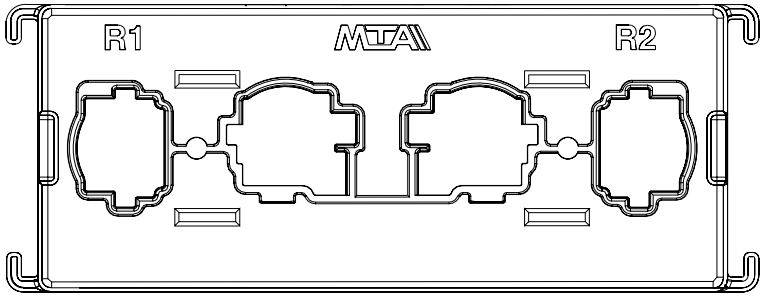

Name	Terminal Part Number	V-Min	Name	Wire Part Number	Wire CSA	Wire Spec	Wire Material description	Wire Color Description	Wire Length	End2 Terminal Part Number	End2 Pin Name	End2 Connector
R1 - 87	-	-	CD14CA	3525611 R1	7.48	8.0	Thin Wall XLPE Primary Cable	RED	455.0	-	-	-

Connector Name	1016 - B7
Part Number	4100070C1
Instances	A26 - Relays:Diagram1
Mates	Trailer Stop Relay

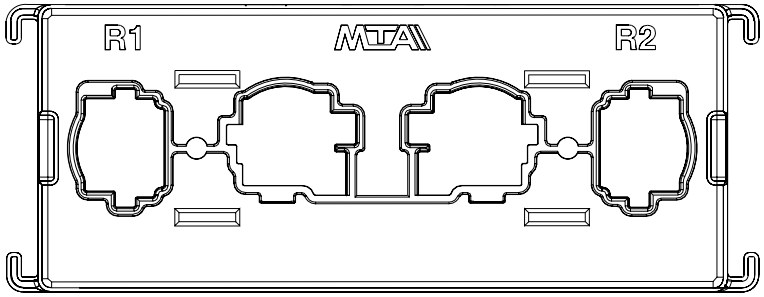

Name	Terminal Part Number	V-Min	Name	Wire Part Number	Wire CSA	Wire Spec	Wire Material description	Wire Color Description	Wire Length	End2 Terminal Part Number	End2 Pin Name	End2 Connector
R1 - 30	-	-	CD14C	3525611 R1	7.48	8.0	Thin Wall XLPE Primary Cable	RED	685.0	-	X	-

Connector Name	1016 - B7
Part Number	4100070C1
Instances	B6.7 - Relays:Diagram1
Mates	PDB

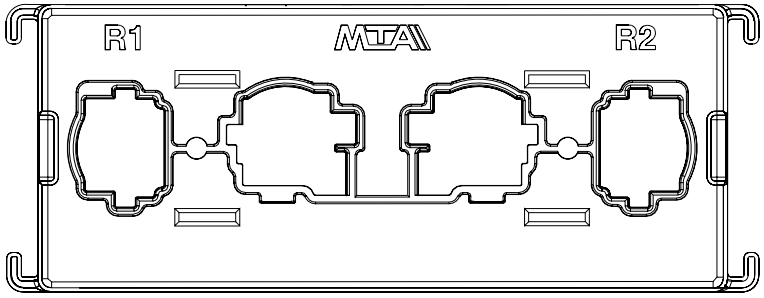

Name	Terminal Part Number	V-Min	Name	Wire Part Number	Wire CSA	Wire Spec	Wire Material description	Wire Color Description	Wire Length	End2 Terminal Part Number	End2 Pin Name	End2 Connector
R1 - 87	-	-	CD14CA	3525611 R1	7.48	8.0	Thin Wall XLPE Primary Cable	RED	455.0	-	-	-

Connector Name	1016 - B7
Part Number	4100070C1
Instances	B6.7 - Relays:Diagram1
Mates	PDB

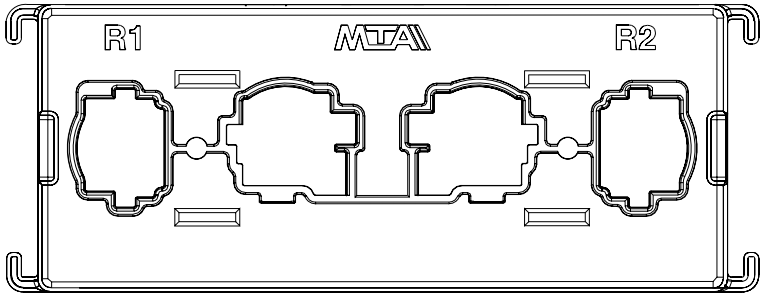

Name	Terminal Part Number	V-Min	Name	Wire Part Number	Wire CSA	Wire Spec	Wire Material description	Wire Color Description	Wire Length	End2 Terminal Part Number	End2 Pin Name	End2 Connector
R1 - 30	-	-	CD14DC	3525611 R1	7.48	8.0	Thin Wall XLPE Primary Cable	RED	685.0	-	X	-

Connector Name	1016 - B7
Part Number	4100070C1
Instances	B6.7 - Relays:Diagram1
Mates	PDB

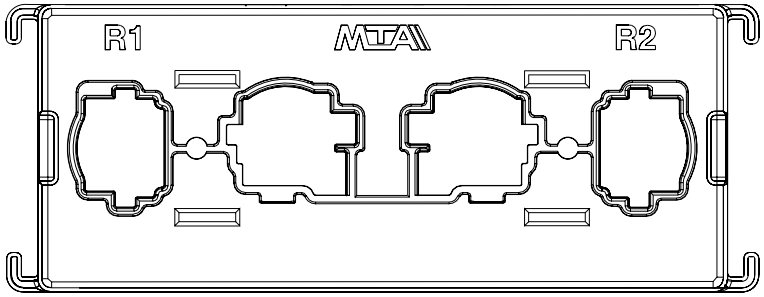

Name	Terminal Part Number	V-Min	Name	Wire Part Number	Wire CSA	Wire Spec	Wire Material description	Wire Color Description	Wire Length	End2 Terminal Part Number	End2 Pin Name	End2 Connector
R2 - 85	-	-	AD11-GZ	3510359 R1	0.79	18.0	Thin Wall XLPE Primary Cable	WHITE	1485.0	-	X	-
R2 - 87	-	-	DJ13DH	3525611 R1	7.48	8.0	Thin Wall XLPE Primary Cable	RED	170.0	-	-	-

Connector Name	1016 - B7
Part Number	4100070C1
Instances	B6.7 - Relays:Diagram1
Mates	PDB

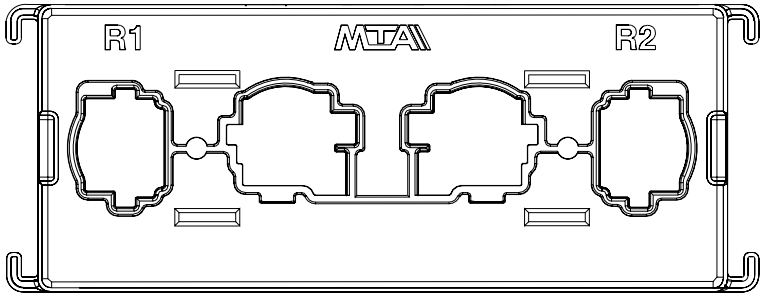

Name	Terminal Part Number	V-Min	Name	Wire Part Number	Wire CSA	Wire Spec	Wire Material description	Wire Color Description	Wire Length	End2 Terminal Part Number	End2 Pin Name	End2 Connector
R2 - 30	-	-	CD14C	3525611 R1	7.48	8.0	Thin Wall XLPE Primary Cable	RED	685.0	-	X	-
R2 - 86	-	-	DF13DE	3510323 R1	0.79	18.0	Thin Wall XLPE Primary Cable	PINK	525.0	-	X	-

Connector Name	1016 - B7
Part Number	4100070C1
Instances	L9 - Relays:Diagram1
Mates	PDB

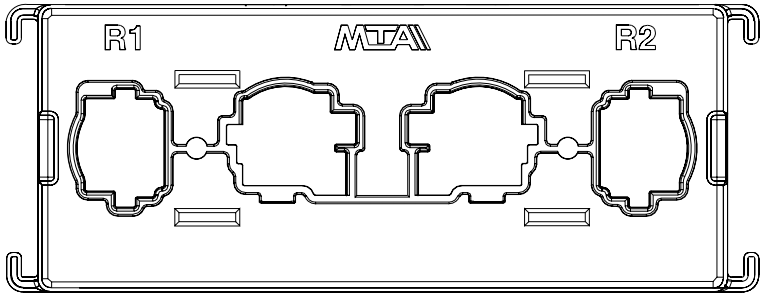

Name	Terminal Part Number	V-Min	Name	Wire Part Number	Wire CSA	Wire Spec	Wire Material description	Wire Color Description	Wire Length	End2 Terminal Part Number	End2 Pin Name	End2 Connector
R1 - 87	-	-	CD14CA	3525611 R1	7.48	8.0	Thin Wall XLPE Primary Cable	RED	455.0	-	-	-

Connector Name 1016 - B7
Part Number 4100070C1
Instances L9 - Relays:Diagram1
Mates PDB

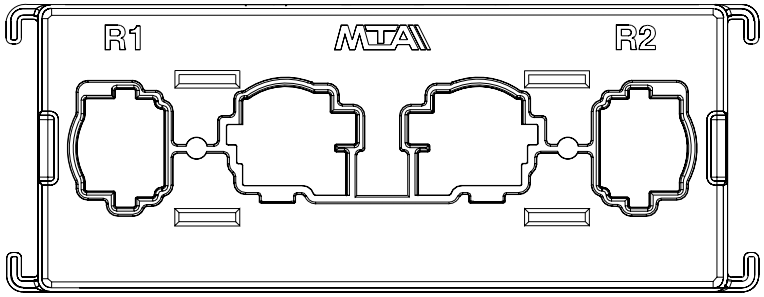

Name	Terminal Part Number	V-Min	Name	Wire Part Number	Wire CSA	Wire Spec	Wire Material description	Wire Color Description	Wire Length	End2 Terminal Part Number	End2 Pin Name	End2 Connector
R2 - 30	-	-	CD14C	3525611 R1	7.48	8.0	Thin Wall XLPE Primary Cable	RED	685.0	-	X	-
R2 - 86	-	-	DF13DE	3510323 R1	0.79	18.0	Thin Wall XLPE Primary Cable	PINK	525.0	-	X	-

Connector Name 1016 - B7
Part Number 4100070C1
Instances L9 - Relays:Diagram1
Mates PDB

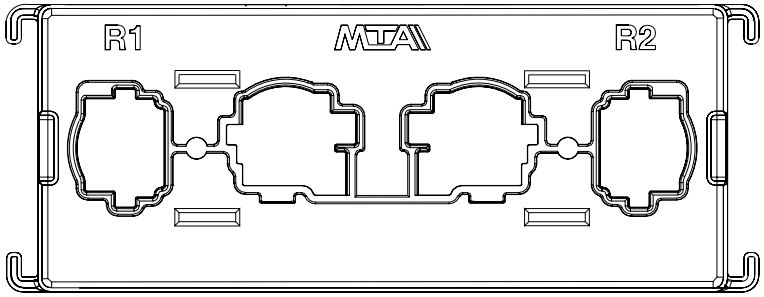

Name	Terminal Part Number	V-Min	Name	Wire Part Number	Wire CSA	Wire Spec	Wire Material description	Wire Color Description	Wire Length	End2 Terminal Part Number	End2 Pin Name	End2 Connector
R2 - 85	-	-	AD11-GZ	3510359 R1	0.79	18.0	Thin Wall XLPE Primary Cable	WHITE	1485.0	-	X	-
R2 - 87	-	-	DJ13DH	3525611 R1	7.48	8.0	Thin Wall XLPE Primary Cable	RED	170.0	-	-	-

Connector Name	1016 - B7
Part Number	4100070C1
Instances	L9 - Relays:Diagram1
Mates	PDB

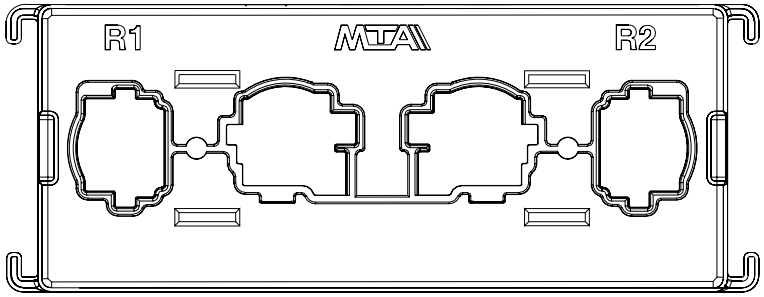

Name	Terminal Part Number	V-Min	Name	Wire Part Number	Wire CSA	Wire Spec	Wire Material description	Wire Color Description	Wire Length	End2 Terminal Part Number	End2 Pin Name	End2 Connector
R1 - 30	-	-	CD14DC	3525611 R1	7.48	8.0	Thin Wall XLPE Primary Cable	RED	685.0	-	X	-

Connector Name	1017
Part Number	3768015C1
Instances	A26/B6.7/L9 - Battery Feed:Diagram 1
Mates	Interior PDM

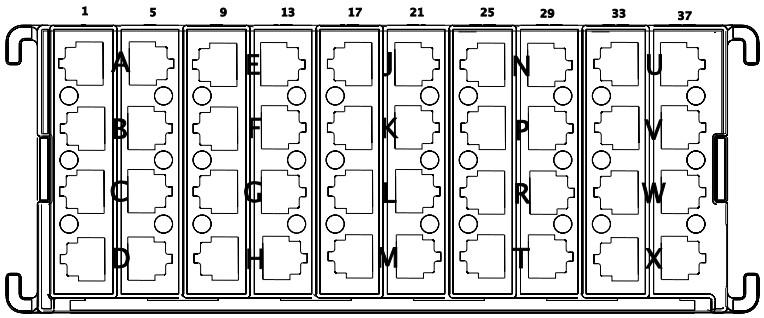

Name	Terminal Part Number	V-Min	Name	Wire Part Number	Wire CSA	Wire Spec	Wire Material description	Wire Color Description	Wire Length	End2 Terminal Part Number	End2 Pin Name	End2 Connector
1	-	-	CD14CG	3510368 R1	3.01	12.0	Thin Wall XLPE Primary Cable	RED	140.0	-	X	-
2	-	-	CD14CH	3510368 R1	3.01	12.0	Thin Wall XLPE Primary Cable	RED	140.0	-	X	-
5	-	-	-	-	-	-	-	-	-	-	-	-
6	-	-	-	-	-	-	-	-	-	-	-	-
10	-	-	CD14CB	3510368 R1	3.01	12.0	Thin Wall XLPE Primary Cable	RED	140.0	-	X	-
13	-	-	NE14A	3510322 R1	0.53	20.0	Thin Wall XLPE Primary Cable	PINK	2030.0	-	-	-

Name	Terminal Part Number	V-Min	Name	Wire Part Number	Wire CSA	Wire Spec	Wire Material description	Wire Color Description	Wire Length	End2 Terminal Part Number	End2 Pin Name	End2 Connector
14	-	-	JB86C	3510301 R1	1.91	14.0	Thin Wall XLPE Primary Cable	LIGHT GREEN	1270.0	-	-	-
15	-	-	AA63BD	3510353 R1	0.79	18.0	Thin Wall XLPE Primary Cable	DARK BLUE	2275.0	-	-	-
16	-	-	MH26D	2643676 R1	0.79	18.0	Std. Wall XLPE Primary Cable	TAN	3445.0	-	-	-
16	-	-	MJ26D	2643676 R1	0.79	18.0	Std. Wall XLPE Primary Cable	TAN	3445.0	-	-	-
16	-	-	RK78	3510300 R1	1.16	16.0	Thin Wall XLPE Primary Cable	LIGHT GREEN	490.0	-	-	-
17	-	-	CD14CC	3510368 R1	3.01	12.0	Thin Wall XLPE Primary Cable	RED	140.0	-	X	-
18	-	-	CD14CD	3510368 R1	3.01	12.0	Thin Wall XLPE Primary Cable	RED	140.0	-	X	-
19	-	-	CD14CE	3510368 R1	3.01	12.0	Thin Wall XLPE Primary Cable	RED	140.0	-	X	-

Name	Terminal Part Number	V-Min	Name	Wire Part Number	Wire CSA	Wire Spec	Wire Material description	Wire Color Description	Wire Length	End2 Terminal Part Number	End2 Pin Name	End2 Connect or
20	-	-	CD14CF	3510368 R1	3.01	12.0	Thin Wall XLPE Primary Cable	RED	140.0	-	X	-
21	-	-	KL18V	3510312 R1	1.16	16.0	Thin Wall XLPE Primary Cable	GREY	365.0	-	-	-
21	-	-	KK18V	3510312 R1	1.16	16.0	Thin Wall XLPE Primary Cable	GREY	365.0	-	-	-
23	-	-	JA84	3510301 R1	1.91	14.0	Thin Wall XLPE Primary Cable	LIGHT GREEN	1420.0	-	-	-

Connector Name 1017
Part Number 3768015C1
Short Description B9
Instances A26/B6.7/L9 - Battery Feed:Diagram 1

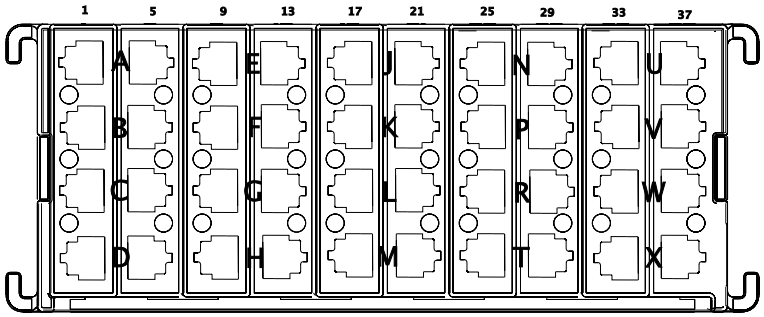

Name	Terminal Part Number	V-Min	Name	Wire Part Number	Wire CSA	Wire Spec	Wire Material description	Wire Color Description	Wire Length	End2 Terminal Part Number	End2 Pin Name	End2 Connector
22	-	-	VK14BA	3510366 R1	1.16	16.0	Thin Wall XLPE Primary Cable	RED	460.0	-	-	-

Connector Name 1017

Part Number 3768015C1

Instances A26/B6.7/L9 - Battery Feed:Diagram 1
A26/B6.7/L9 - Key Switch Accessory:Diagram 1
A26/B6.7/L9 - Key Switch Ignition:Diagram 1

Mates Interior PDM

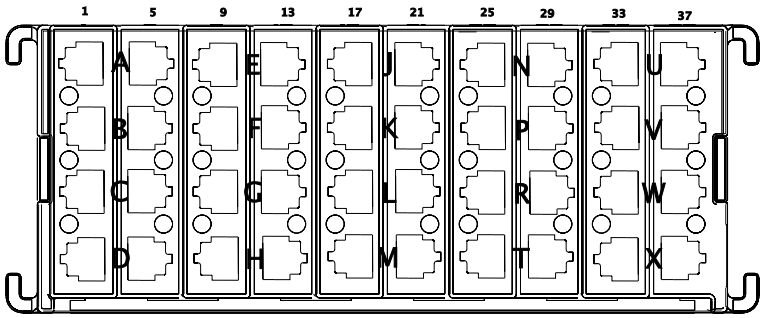

Name	Terminal Part Number	V-Min	Name	Wire Part Number	Wire CSA	Wire Spec	Wire Material description	Wire Color Description	Wire Length	End2 Terminal Part Number	End2 Pin Name	End2 Connect or
3	-	-	EH12J	3510341 R1	0.79	18.0	Thin Wall XLPE Primary Cable	LIGHT BLUE	120.0	-	X	-
4	-	-	CD14AG	3510368 R1	3.01	12.0	Thin Wall XLPE Primary Cable	RED	280.0	-	X	-
8	-	-	TJ14NS	3510296 R1	3.01	12.0	Thin Wall XLPE Primary Cable	BLACK	2050.0	-	-	-
25	-	-	EH12H	3510342 R1	1.16	16.0	Thin Wall XLPE Primary Cable	LIGHT BLUE	120.0	-	X	-

Name	Terminal Part Number	V-Min	Name	Wire Part Number	Wire CSA	Wire Spec	Wire Material description	Wire Color Description	Wire Length	End2 Terminal Part Number	End2 Pin Name	End2 Connector
26	-	-	EH12E	3510341 R1	0.79	18.0	Thin Wall XLPE Primary Cable	LIGHT BLUE	120.0	-	X	-
27	-	-	EH12F	3510344 R1	3.01	12.0	Thin Wall XLPE Primary Cable	LIGHT BLUE	120.0	-	X	-
28	-	-	EH12G	3510342 R1	1.16	16.0	Thin Wall XLPE Primary Cable	LIGHT BLUE	120.0	-	X	-
29	-	-	ZR12ZA	3510341 R1	0.79	18.0	Thin Wall XLPE Primary Cable	LIGHT BLUE	1220.0	-	2	1106
30	-	-	SM86AE	3510299 R1	0.79	18.0	Thin Wall XLPE Primary Cable	LIGHT GREEN	1900.0	-	-	-
31	-	-	SM86F	3510299 R1	0.79	18.0	Thin Wall XLPE Primary Cable	LIGHT GREEN	2275.0	-	-	-
32	-	-	NC12B	3510340 R1	0.53	20.0	Thin Wall XLPE Primary Cable	LIGHT BLUE	2030.0	-	-	-
32	-	-	NF12A	3510341 R1	0.79	18.0	Thin Wall XLPE Primary Cable	LIGHT BLUE	2130.0	-	-	-

Name	Terminal Part Number	V-Min	Name	Wire Part Number	Wire CSA	Wire Spec	Wire Material description	Wire Color Description	Wire Length	End2 Terminal Part Number	End2 Pin Name	End2 Connect or
34	-	-	DJ13DT	3510326 R1	3.01	12.0	Thin Wall XLPE Primary Cable	PINK	425.0	-	X	-
37	-	-	PB97DF	3510347 R1	0.79	18.0	Thin Wall XLPE Primary Cable	VIOLET	3445.0	-	-	-
38	-	-	RM78AA	3510300 R1	1.16	16.0	Thin Wall XLPE Primary Cable	LIGHT GREEN	490.0	-	-	-
38	-	-	RL78AA	3510300 R1	1.16	16.0	Thin Wall XLPE Primary Cable	LIGHT GREEN	490.0	-	-	-
39	-	-	JC13UC	3510322 R1	0.53	20.0	Thin Wall XLPE Primary Cable	PINK	1520.0	-	-	-
39	-	-	JE13U	3510322 R1	0.53	20.0	Thin Wall XLPE Primary Cable	PINK	1270.0	-	-	-

Connector Name 1018
Part Number 3768015C1
Instances A26/B6.7/L9 - Battery Feed:Diagram 1
Mates Interior PDM

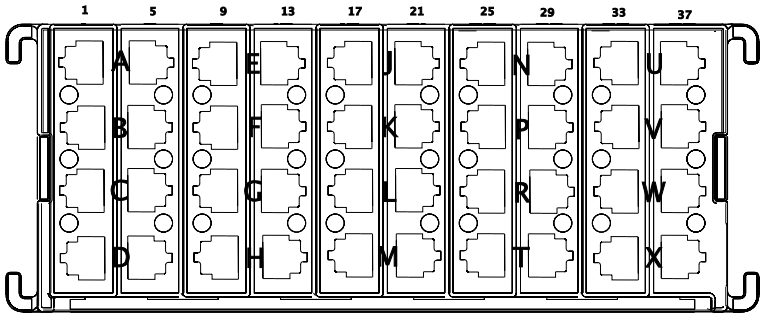

Name	Terminal Part Number	V-Min	Name	Wire Part Number	Wire CSA	Wire Spec	Wire Material description	Wire Color Description	Wire Length	End2 Terminal Part Number	End2 Pin Name	End2 Connector
10	-	-	CD14CJ	3510368 R1	3.01	12.0	Thin Wall XLPE Primary Cable	RED	455.0	-	X	-
14	-	-	VN70JA	3510320 R1	3.01	12.0	Thin Wall XLPE Primary Cable	ORANGE	495.0	-	-	-

Connector Name 1018

Part Number 3768015C1

Instances A26/B6.7/L9 - Battery Feed:Diagram 1
A26/B6.7/L9 - Key Switch Ignition:Diagram 1

Mates Interior PDM

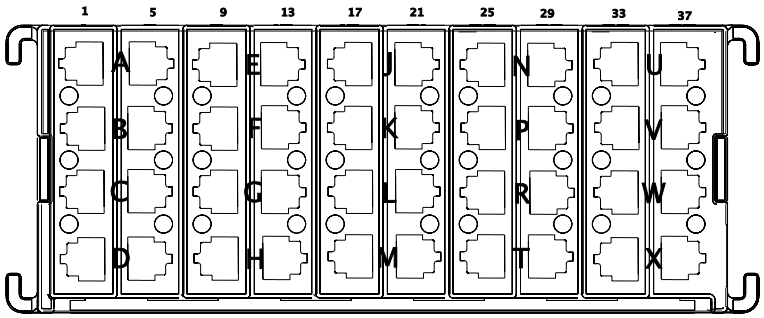

Name	Terminal Part Number	V-Min	Name	Wire Part Number	Wire CSA	Wire Spec	Wire Material description	Wire Color Description	Wire Length	End2 Terminal Part Number	End2 Pin Name	End2 Connector
2	-	-	CD14BG	3510368 R1	3.01	12.0	Thin Wall XLPE Primary Cable	RED	150.0	-	X	-
3	-	-	CD14BD	3510368 R1	3.01	12.0	Thin Wall XLPE Primary Cable	RED	150.0	-	X	-
4	-	-	CD14BE	3510368 R1	3.01	12.0	Thin Wall XLPE Primary Cable	RED	150.0	-	X	-
6	-	-	JD86C2	3510301 R1	1.91	14.0	Thin Wall XLPE Primary Cable	LIGHT GREEN	1395.0	-	-	-

Name	Terminal Part Number	V-Min	Name	Wire Part Number	Wire CSA	Wire Spec	Wire Material description	Wire Color Description	Wire Length	End2 Terminal Part Number	End2 Pin Name	End2 Connector
7	-	-	LL14G	3510366 R1	1.16	16.0	Thin Wall XLPE Primary Cable	RED	290.0	-	-	-
8	-	-	-	-	-	-	-	-	-	-	-	-
11	-	-	CD14BB	3510368 R1	3.01	12.0	Thin Wall XLPE Primary Cable	RED	150.0	-	X	-
12	-	-	CD14BC	3510368 R1	3.01	12.0	Thin Wall XLPE Primary Cable	RED	150.0	-	X	-
15	-	-	RD81D	3510368 R1	3.01	12.0	Thin Wall XLPE Primary Cable	RED	3945.0	-	-	-
16	-	-	RD81DA	3510368 R1	3.01	12.0	Thin Wall XLPE Primary Cable	RED	3945.0	-	-	-
18	-	-	CD14BA	3510368 R1	3.01	12.0	Thin Wall XLPE Primary Cable	RED	150.0	-	X	-
21	-	-	AA73C	3510298 R1	0.53	20.0	Thin Wall XLPE Primary Cable	LIGHT GREEN	1285.0	-	-	-
22	-	-	RK78E	3510301 R1	1.91	14.0	Thin Wall XLPE Primary Cable	LIGHT GREEN	525.0	-	-	-

Name	Terminal Part Number	V-Min	Name	Wire Part Number	Wire CSA	Wire Spec	Wire Material description	Wire Color Description	Wire Length	End2 Terminal Part Number	End2 Pin Name	End2 Connector
23	-	-	ZF14SUN	2645629 R1	0.35	22.0	Thin Wall XLPE Primary Cable	RED	2890.0	-	-	-
24	-	-	JE14UA	3510301 R1	1.91	14.0	Thin Wall XLPE Primary Cable	LIGHT GREEN	1465.0	-	-	-
24	-	-	JC84C	3510301 R1	1.91	14.0	Thin Wall XLPE Primary Cable	LIGHT GREEN	1715.0	-	-	-
26	-	-	DJ13DP	3510326 R1	3.01	12.0	Thin Wall XLPE Primary Cable	PINK	250.0	-	X	-
29	-	-	-	-	-	-	-	-	-	-	-	-
30	-	-	QC105	3510299 R1	0.79	18.0	Thin Wall XLPE Primary Cable	LIGHT GREEN	5065.0	-	-	-
30	-	-	QD105C	3510300 R1	1.16	16.0	Thin Wall XLPE Primary Cable	LIGHT GREEN	3810.0	-	-	-
31	-	-	-	-	-	-	-	-	-	-	-	-
32	-	-	QA13A	3510323 R1	0.79	18.0	Thin Wall XLPE Primary Cable	PINK	425.0	-	-	-
34	-	-	DJ13DG	3510326 R1	3.01	12.0	Thin Wall XLPE Primary Cable	PINK	525.0	-	-	-

Name	Terminal Part Number	V-Min	Name	Wire Part Number	Wire CSA	Wire Spec	Wire Material description	Wire Color Description	Wire Length	End2 Terminal Part Number	End2 Pin Name	End2 Connector
38	-	-	JA13UA	3510322 R1	0.53	20.0	Thin Wall XLPE Primary Cable	PINK	1615.0	-	-	-
39	-	-	UL92#163	3510329 R1	0.79	18.0	Thin Wall XLPE Primary Cable	TAN	2435.0	-	-	-
39	-	-	UF92#16 3B	3510330 R1	1.16	16.0	Thin Wall XLPE Primary Cable	TAN	1195.0	-	-	-
39	-	-	UB92#16 3A	3510324 R1	1.16	16.0	Thin Wall XLPE Primary Cable	PINK	3640.0	-	-	-
39	-	-	UD13A	2643752 R1	1.16	16.0	Std. Wall XLPE Primary Cable	PINK	3640.0	-	-	-
40	-	-	MQ98F	3510328 R1	0.53	20.0	Thin Wall XLPE Primary Cable	TAN	1985.0	-	-	-

Connector Name 101

Part Number 3753293C1

Instances A26 - Underhood PDM:A26 - UNDERHOOD PDM
B6.7/L9 - Underhood PDM:PDM - UNDERHOOD

Mates MODU-PDM_UNDERHOOD-0003-00 -04

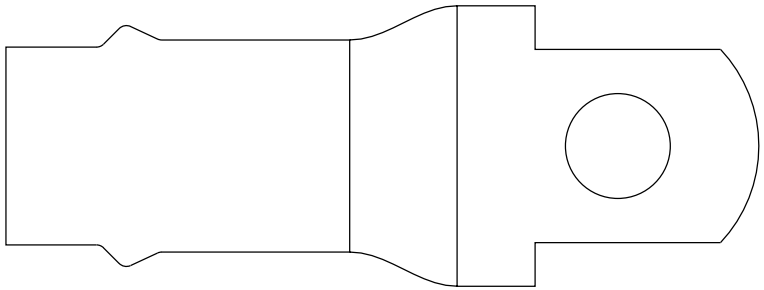

Name	Terminal Part Number	V-Min	Name	Wire Part Number	Wire CSA	Wire Spec	Wire Material description	Wire Color Description	Wire Length	End2 Terminal Part Number	End2 Pin Name	End2 Connect or
A	-	-	14B	2645970 R1	101.95	0.0	SGR 125	RED	300.0	-	2	(102)
A	-	-	37A	2645955 R1	32.19	2.0	Std. Wall 125C Battery Cable	RED	940.0	-	-	-

Connector Name	101
Part Number	4124471C1
Instances	A26/B6.7/L9 - Driver and Passenger Seats - RollTek (Hard Wired):Diagram1
Mates	ROLLTEK_ECU_PASSENGER-2056 -02-01

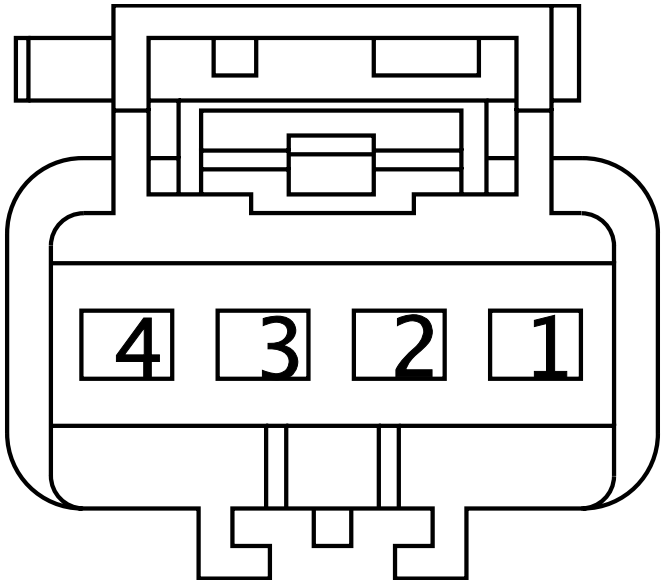

Name	Terminal Part Number	V-Min	Name	Wire Part Number	Wire CSA	Wire Spec	Wire Material description	Wire Color Description	Wire Length	End2 Terminal Part Number	End2 Pin Name	End2 Connect or
1	-	-	179S4(+)	3510346 R1	0.53	20.0	Thin Wall XLPE Primary Cable	VIOLET	1600.0	-	1	100
2	-	-	179S4(-)	3510346 R1	0.53	20.0	Thin Wall XLPE Primary Cable	VIOLET	1600.0	-	2	100
3	-	-	179SRA(+)	3510346 R1	0.53	20.0	Thin Wall XLPE Primary Cable	VIOLET	1600.0	-	3	100
4	-	-	179SRA(-)	3510346 R1	0.53	20.0	Thin Wall XLPE Primary Cable	VIOLET	1600.0	-	4	100

Connector Name	101
Part Number	475961C1
Instances	A26 - Underhood PDM:A26 - UNDERHOOD PDM B6.7/L9 - Underhood PDM:PDM - UNDERHOOD
Mates	MODU-PDM_UNDERHOOD-0003-00 -04

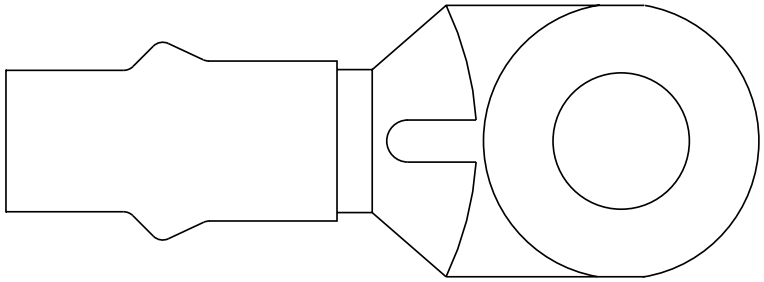

Name	Terminal Part Number	V-Min	Name	Wire Part Number	Wire CSA	Wire Spec	Wire Material description	Wire Color Description	Wire Length	End2 Terminal Part Number	End2 Pin Name	End2 Connect or
A	-	-	14A	2645964 R1	61.89	0.0	SGR 125	RED	8840.0	-	X	-
A	-	-	AA14A	2645255 R1	18.94	4.0	SGX FLEX 125C	RED	550.0	-	X	-

Connector Name	1020
Part Number	RING-M-8_0
Instances	B6.7 - Leece-Neville AVI160-210A/240A Alternator W/ Sensor:Diagram1
Mates	DEV-Leece_Neville_AVI160_2 10A_240A_Alternator-4004-01-04A

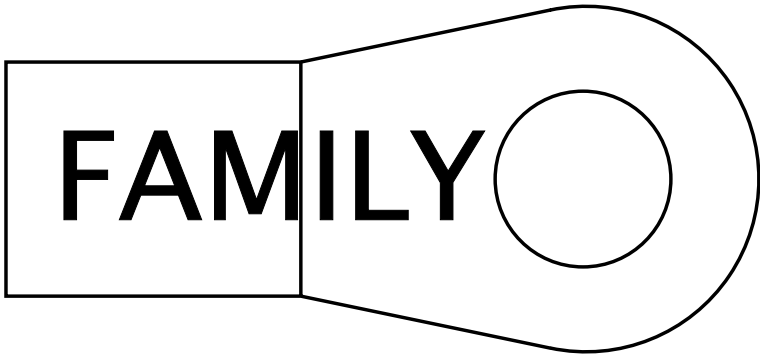

Name	Terminal Part Number	V-Min	Name	Wire Part Number	Wire CSA	Wire Spec	Wire Material description	Wire Color Description	Wire Length	End2 Terminal Part Number	End2 Pin Name	End2 Connect or
A	-	-	WD2-G	3592742 R1	39.43	1.0	Std. Wall XLPE Battery Cable	WHITE	1155.0	-	A	1200
A	-	-	WS2-G	3592742 R1	39.43	1.0	Std. Wall XLPE Battery Cable	WHITE	1205.0	-	A	1200

Connector Name	1020
Part Number	4063041C1
Instances	A26/B6.7/L9 - Instrument Cluster (Premium):Diagram1 A26/B6.7/L9 - Instrument Cluster (Premium):Diagram2
Mates	MODU-CDC-0004-00-04A

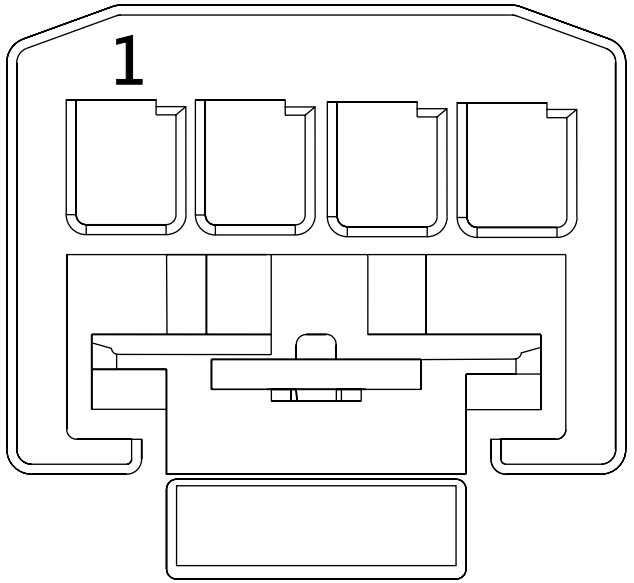

Name	Terminal Part Number	V-Min	Name	Wire Part Number	Wire CSA	Wire Spec	Wire Material description	Wire Color Description	Wire Length	End2 Terminal Part Number	End2 Pin Name	End2 Connect or
1	-	-	NA28D	3510328 R1	0.53	20.0	Thin Wall XLPE Primary Cable	TAN	1160.0	-	A9	J7-1607
2	-	-	NA9CDC	3510310 R1	0.53	20.0	Thin Wall XLPE Primary Cable	GREY	515.0	-	-	-
3	-	-	NA62F	3510352 R1	0.53	20.0	Thin Wall XLPE Primary Cable	DARK BLUE	500.0	-	-	-
4	-	-	NA11-GKF	3510358 R1	0.53	20.0	Thin Wall XLPE Primary Cable	WHITE	1720.0	-	-	-

Connector Name	1021
Part Number	RING-M-8_0
Instances	B6.7 - Leece-Neville AVI160-210A/240A Alternator W/ Sensor:Diagram1
Mates	DEV-Leece_Neville_AVI160_2 10A_240A_Alternator-4004-01-04A

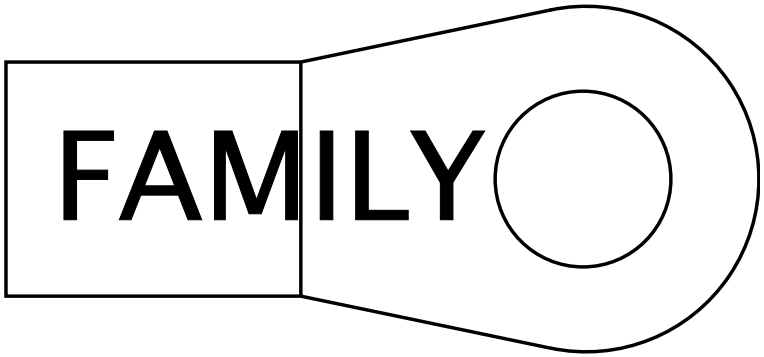

Name	Terminal Part Number	V-Min	Name	Wire Part Number	Wire CSA	Wire Spec	Wire Material description	Wire Color Description	Wire Length	End2 Terminal Part Number	End2 Pin Name	End2 Connect or
A	-	-	WS2	3592740 R1	39.43	1.0	Std. Wall XLPE Battery Cable	RED	895.0	-	X	-
A	-	-	WD2	3592740 R1	39.43	1.0	Std. Wall XLPE Battery Cable	RED	835.0	-	X	-

Connector Name	1021
Part Number	3613769C1
Instances	A26/B6.7/L9 - Panel Light Dimmer Splice Pack - 1021:Diagram1
Mates	SP-Panel_Dimmer-B003-10-AA

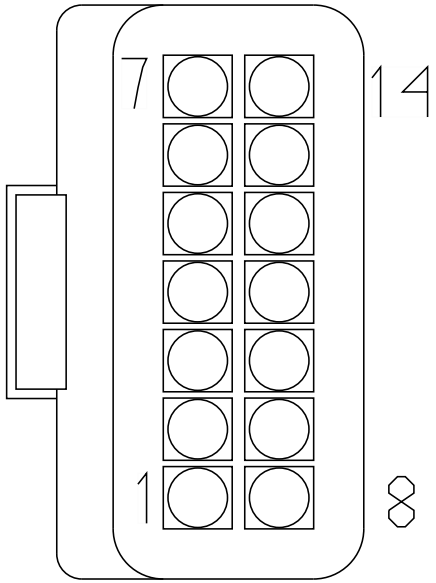

Name	Terminal Part Number	V-Min	Name	Wire Part Number	Wire CSA	Wire Spec	Wire Material description	Wire Color Description	Wire Length	End2 Terminal Part Number	End2 Pin Name	End2 Connect or
1	-	-	AB62DA	3510354 R1	1.16	16.0	Thin Wall XLPE Primary Cable	DARK BLUE	1020.0	-	-	-
1	-	-	AC62DA	3510354 R1	1.16	16.0	Thin Wall XLPE Primary Cable	DARK BLUE	1065.0	-	-	-
2	-	-	QA62K	3510353 R1	0.79	18.0	Thin Wall XLPE Primary Cable	DARK BLUE	1345.0	-	-	-
3	-	-	KS62DA	3510354 R1	1.16	16.0	Thin Wall XLPE Primary Cable	DARK BLUE	1085.0	-	-	-

Name	Terminal Part Number	V-Min	Name	Wire Part Number	Wire CSA	Wire Spec	Wire Material description	Wire Color Description	Wire Length	End2 Terminal Part Number	End2 Pin Name	End2 Connect or
3	-	-	KT62DA	3510354 R1	1.16	16.0	Thin Wall XLPE Primary Cable	DARK BLUE	1085.0	-	-	-
7	-	-	NA62F	3510352 R1	0.53	20.0	Thin Wall XLPE Primary Cable	DARK BLUE	500.0	-	-	-
10	-	-	RG62DD	3510353 R1	0.79	18.0	Thin Wall XLPE Primary Cable	DARK BLUE	905.0	-	-	-
14	-	-	UF62A	3510353 R1	0.79	18.0	Thin Wall XLPE Primary Cable	DARK BLUE	1080.0	-	-	-

Connector Name	1022
Part Number	3613769C1
Instances	A26/B6.7/L9 - Ground Splice Pack 1022 & 1023:Diagram1
Mates	SP-Ground_1-0003-00-10-A0

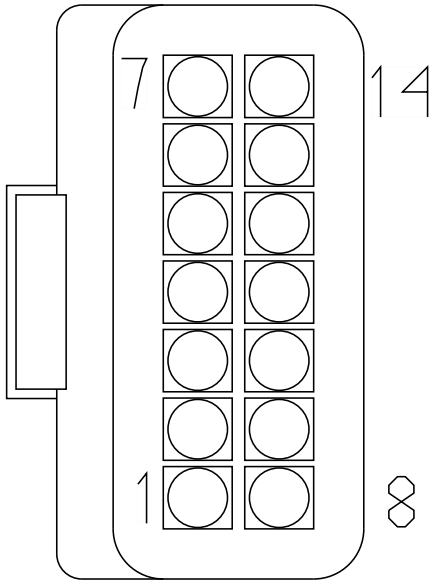

Name	Terminal Part Number	V-Min	Name	Wire Part Number	Wire CSA	Wire Spec	Wire Material description	Wire Color Description	Wire Length	End2 Terminal Part Number	End2 Pin Name	End2 Connect or
1	-	-	FB11-GBA	3510361 R1	1.91	14.0	Thin Wall XLPE Primary Cable	WHITE	190.0	-	-	-
2	-	-	AB11-GN	3510359 R1	0.79	18.0	Thin Wall XLPE Primary Cable	WHITE	625.0	-	-	-
3	-	-	RM78RM	3510359 R1	0.79	18.0	Thin Wall XLPE Primary Cable	WHITE	2060.0	-	-	-
3	-	-	RL78RN	3510359 R1	0.79	18.0	Thin Wall XLPE Primary Cable	WHITE	2060.0	-	-	-

Name	Terminal Part Number	V-Min	Name	Wire Part Number	Wire CSA	Wire Spec	Wire Material description	Wire Color Description	Wire Length	End2 Terminal Part Number	End2 Pin Name	End2 Connector
4	-	-	KL18-GB	3510359 R1	0.79	18.0	Thin Wall XLPE Primary Cable	WHITE	1935.0	-	-	-
4	-	-	KK18-GB	3510359 R1	0.79	18.0	Thin Wall XLPE Primary Cable	WHITE	1935.0	-	-	-
5	-	-	VK12-GCL	3510359 R1	0.79	18.0	Thin Wall XLPE Primary Cable	WHITE	2060.0	-	-	-
6	-	-	YC67-G	3510360 R1	1.16	16.0	Thin Wall XLPE Primary Cable	WHITE	500.0	-	-	-
7	-	-	VJ70-GV	3510359 R1	0.79	18.0	Thin Wall XLPE Primary Cable	WHITE	2030.0	-	-	-
7	-	-	VN70-GV	3510359 R1	0.79	18.0	Thin Wall XLPE Primary Cable	WHITE	2030.0	-	-	-
8	-	-	RF78RR	3510359 R1	0.79	18.0	Thin Wall XLPE Primary Cable	WHITE	2045.0	-	-	-
11	-	-	VG70-GT	3510359 R1	0.79	18.0	Thin Wall XLPE Primary Cable	WHITE	1935.0	-	-	-
14	-	-	TJ11-GAM	3510360 R1	1.16	16.0	Thin Wall XLPE Primary Cable	WHITE	920.0	-	-	-

Connector Name	1023A
Part Number	3928059C1
Instances	A26 - Axle Lift Controls:Diagram1 A26 - Axle Lift Controls:Diagram2 A26/B6.7/L9 - Axle Lift Controls:Diagram1 A26/B6.7/L9 - Axle Lift Controls:Diagram2 A26/B6.7/L9 - Axle Lift Controls:Diagram3 A26/B6.7/L9 - Axle Lift Controls:Diagram4 L9 - Axle Lift Controls Option 2:Diagram1 L9 - Axle Lift Controls Option 2:Diagram2
Mates	SW-LIFT_AXLE_1_UP/DN-3021- 03-02A

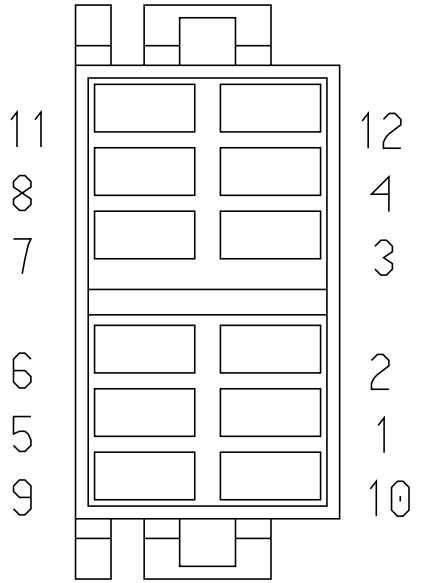

Name	Terminal Part Number	V-Min	Name	Wire Part Number	Wire CSA	Wire Spec	Wire Material description	Wire Color Description	Wire Length	End2 Terminal Part Number	End2 Pin Name	End2 Connect or
1	-	-	KS59MB	3510311 R1	0.79	18.0	Thin Wall XLPE Primary Cable	GREY	2180.0	-	60	1701
1	-	-	KT59MB	3510311 R1	0.79	18.0	Thin Wall XLPE Primary Cable	GREY	2180.0	-	60	1701
2	-	-	KS59SB	3510311 R1	0.79	18.0	Thin Wall XLPE Primary Cable	GREY	225.0	-	X	-
2	-	-	KT59SB	3510311 R1	0.79	18.0	Thin Wall XLPE Primary Cable	GREY	225.0	-	X	-

Name	Terminal Part Number	V-Min	Name	Wire Part Number	Wire CSA	Wire Spec	Wire Material description	Wire Color Description	Wire Length	End2 Terminal Part Number	End2 Pin Name	End2 Connect or
11	-	-	KS59-GB	3510359 R1	0.79	18.0	Thin Wall XLPE Primary Cable	WHITE	280.0	-	X	-
11	-	-	KT59-GB	3510359 R1	0.79	18.0	Thin Wall XLPE Primary Cable	WHITE	280.0	-	X	-
12	-	-	KS62R	3510353 R1	0.79	18.0	Thin Wall XLPE Primary Cable	DARK BLUE	310.0	-	X	-
12	-	-	KT62D	3510354 R1	1.16	16.0	Thin Wall XLPE Primary Cable	DARK BLUE	310.0	-	X	-

Connector Name	1023B
Part Number	3928059C1
Instances	A26 - Axle Lift Controls:Diagram1 A26 - Axle Lift Controls:Diagram2 L9 - Axle Lift Controls Option 2:Diagram1 L9 - Axle Lift Controls Option 2:Diagram2
Mates	SW-LIFT_AXLE_2_UP/DN-3021- 03-02A

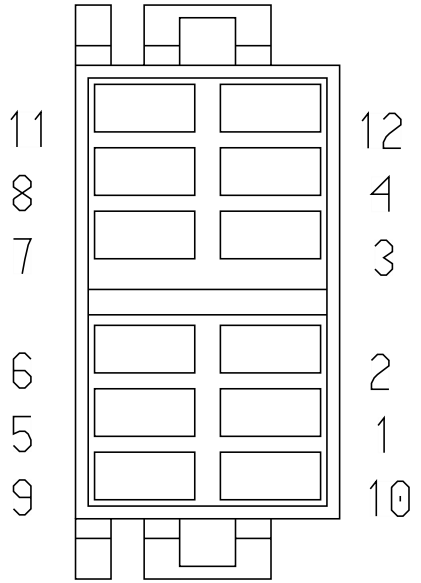

Name	Terminal Part Number	V-Min	Name	Wire Part Number	Wire CSA	Wire Spec	Wire Material description	Wire Color Description	Wire Length	End2 Terminal Part Number	End2 Pin Name	End2 Connect or
1	-	-	KS59NB	3510311 R1	0.79	18.0	Thin Wall XLPE Primary Cable	GREY	2180.0	-	61	1701
2	-	-	KS59U	3510311 R1	0.79	18.0	Thin Wall XLPE Primary Cable	GREY	225.0	-	X	-
11	-	-	KS59-GDA	3510359 R1	0.79	18.0	Thin Wall XLPE Primary Cable	WHITE	280.0	-	X	-
12	-	-	KS62P	3510353 R1	0.79	18.0	Thin Wall XLPE Primary Cable	DARK BLUE	310.0	-	X	-

Connector Name	1023
Part Number	3613769C1
Instances	A26/B6.7/L9 - Ground Splice Pack 1022 & 1023:Diagram1
Mates	SP-GROUND_2-0003-00-10-A0

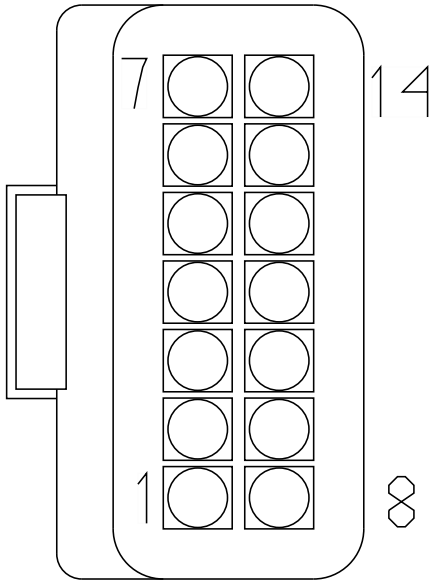

Name	Terminal Part Number	V-Min	Name	Wire Part Number	Wire CSA	Wire Spec	Wire Material description	Wire Color Description	Wire Length	End2 Terminal Part Number	End2 Pin Name	End2 Connect or
1	-	-	FB11-GCB	3510361 R1	1.91	14.0	Thin Wall XLPE Primary Cable	WHITE	1155.0	-	-	-
2	-	-	YG96-GE	3510335 R1	0.79	18.0	Thin Wall XLPE Primary Cable	YELLOW 2	330.0	-	-	-
3	-	-	UC92-GAH	3510359 R1	0.79	18.0	Thin Wall XLPE Primary Cable	WHITE	1265.0	-	-	-
3	-	-	UL92-GAH	3510359 R1	0.79	18.0	Thin Wall XLPE Primary Cable	WHITE	715.0	-	-	-

Name	Terminal Part Number	V-Min	Name	Wire Part Number	Wire CSA	Wire Spec	Wire Material description	Wire Color Description	Wire Length	End2 Terminal Part Number	End2 Pin Name	End2 Connector
4	-	-	JB11-GCC	3510361 R1	1.91	14.0	Thin Wall XLPE Primary Cable	WHITE	2145.0	-	-	-
5	-	-	MJ11-GAD	3510359 R1	0.79	18.0	Thin Wall XLPE Primary Cable	WHITE	1330.0	-	-	-
5	-	-	MH11-GBD	3510359 R1	0.79	18.0	Thin Wall XLPE Primary Cable	WHITE	1330.0	-	-	-
7	-	-	RF78-GB	3510360 R1	1.16	16.0	Thin Wall XLPE Primary Cable	WHITE	975.0	-	-	-
12	-	-	NF11-GAL	3510359 R1	0.79	18.0	Thin Wall XLPE Primary Cable	WHITE	1085.0	-	-	-
12	-	-	DL11-GAR	3510359 R1	0.79	18.0	Thin Wall XLPE Primary Cable	WHITE	3470.0	-	-	-
13	-	-	UF92-GAH	3510359 R1	0.79	18.0	Thin Wall XLPE Primary Cable	WHITE	1830.0	-	-	-

Connector Name	1024
Part Number	3601838C1
Instances	B6.7 - Body J1939 (250kbps):B6.7 - Body J1939 (250Kbps) B6.7 - CAN Layout:Body Standard J1939 (250Kbps) L9 - Body J1939 (250kbps):L9 - Body J1939 (250Kbps) L9 - CAN Layout:Body Standard J1939 (250Kbps)
Mates	SP-IP-B001-00-10-A1-1024

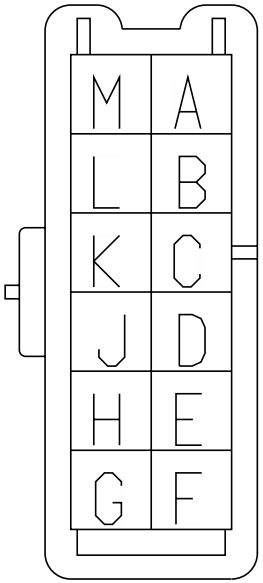

Name	Terminal Part Number	V-Min	Name	Wire Part Number	Wire CSA	Wire Spec	Wire Material description	Wire Color Description	Wire Length	End2 Terminal Part Number	End2 Pin Name	End2 Connect or
A	-	-	WIRE722734	-	0.0	-	-	-	0.0	-	PIN1	-
B	-	-	WIRE722870	-	0.0	-	-	-	0.0	-	13	8884A
C	-	-	WIRE722741	-	0.0	-	-	-	0.0	-	D	1024
D	-	-	WIRE722741	-	0.0	-	-	-	0.0	-	C	1024
E	-	-	WIRE722871	-	0.0	-	-	-	0.0	-	B	8884D
F	-	-	WIRE722743	-	0.0	-	-	-	0.0	-	A	1028
G	-	-	WIRE722742	-	0.0	-	-	-	0.0	-	M	1028
H	-	-	WIRE722872	-	0.0	-	-	-	0.0	-	A	8884D

Name	Terminal Part Number	V-Min	Name	Wire Part Number	Wire CSA	Wire Spec	Wire Material description	Wire Color Description	Wire Length	End2 Terminal Part Number	End2 Pin Name	End2 Connect or
J	-	-	WIRE722740	-	0.0	-	-	-	0.0	-	K	1024
K	-	-	WIRE722740	-	0.0	-	-	-	0.0	-	J	1024
L	-	-	WIRE722869	-	0.0	-	-	-	0.0	-	12	8884A
M	-	-	WIRE722733	-	0.0	-	-	-	0.0	-	PIN1	-

Connector Name	1025
Part Number	3601838C1
Instances	A26 - Body J1939 (250kbps):A26 - Body J1939 (250Kbps) A26 - CAN Layout:Body Standard J1939 (250Kbps) A26 - CAN Layout:Telematics J1708 A26 - Telematics J1708 (9.6kbps):A26 - Telematics J1708 (9.6kbps) B6.7 - Body J1939 (250kbps):B6.7 - Body J1939 (250Kbps) B6.7 - CAN Layout:Body Standard J1939 (250Kbps) L9 - Body J1939 (250kbps):L9 - Body J1939 (250Kbps) L9 - CAN Layout:Body Standard J1939 (250Kbps)
Mates	SP-IP-B001-00-10-A1-1025

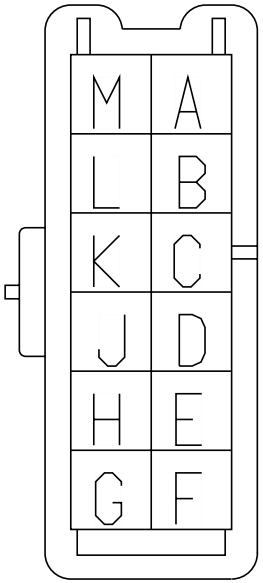

Name	Terminal Part Number	V-Min	Name	Wire Part Number	Wire CSA	Wire Spec	Wire Material description	Wire Color Description	Wire Length	End2 Terminal Part Number	End2 Pin Name	End2 Connect or
A	-	-	WIRE722772	-	0.0	-	-	-	0.0	-	-	-
A	-	-	WIRE720003	-	0.0	-	-	-	0.0	-	PIN1	-
A	-	-	WIRE565825	-	0.0	-	-	-	0.0	-	PIN1	-
B	-	-	WIRE722776	-	0.0	-	-	-	0.0	-	32	1703M
B	-	-	-	-	-	-	-	-	-	-	-	-
C	-	-	WIRE722768	-	0.0	-	-	-	0.0	-	D	1025
C	-	-	WIRE720015	-	0.0	-	-	-	0.0	-	D	1025
C	-	-	-	-	-	-	-	-	-	-	-	-
D	-	-	WIRE722768	-	0.0	-	-	-	0.0	-	C	1025

Name	Terminal Part Number	V-Min	Name	Wire Part Number	Wire CSA	Wire Spec	Wire Material description	Wire Color Description	Wire Length	End2 Terminal Part Number	End2 Pin Name	End2 Connector
D	-	-	WIRE720015	-	0.0	-	-	-	0.0	-	C	1025
D	-	-	-	-	-	-	-	-	-	-	-	-
E	-	-	WIRE722828	-	0.0	-	-	-	0.0	-	11	1939M
E	-	-	-	-	-	-	-	-	-	-	-	-
E	-	-	WIRE565816	-	0.0	-	-	-	0.0	-	11	1939M
F	-	-	WIRE722820	-	0.0	-	-	-	0.0	-	-	-
F	-	-	WIRE728837	-	0.0	-	-	-	0.0	-	A	A01_250M
F	-	-	WIRE720116	-	0.0	-	-	-	0.0	-	B	1935N
F	-	-	-	-	-	-	-	-	-	-	-	-
G	-	-	WIRE722874	-	0.0	-	-	-	0.0	-	-	-
G	-	-	WIRE728835	-	0.0	-	-	-	0.0	-	B	A01_250M
G	-	-	WIRE720117	-	0.0	-	-	-	0.0	-	A	1935N
G	-	-	-	-	-	-	-	-	-	-	-	-
H	-	-	WIRE722830	-	0.0	-	-	-	0.0	-	12	1939M
H	-	-	-	-	-	-	-	-	-	-	-	-
H	-	-	WIRE565817	-	0.0	-	-	-	0.0	-	12	1939M
J	-	-	WIRE722767	-	0.0	-	-	-	0.0	-	K	1025
J	-	-	WIRE720016	-	0.0	-	-	-	0.0	-	K	1025

Name	Terminal Part Number	V-Min	Name	Wire Part Number	Wire CSA	Wire Spec	Wire Material description	Wire Color Description	Wire Length	End2 Terminal Part Number	End2 Pin Name	End2 Connector
J	-	-	-	-	-	-	-	-	-	-	-	-
K	-	-	WIRE722767	-	0.0	-	-	-	0.0	-	J	1025
K	-	-	WIRE720016	-	0.0	-	-	-	0.0	-	J	1025
K	-	-	-	-	-	-	-	-	-	-	-	-
L	-	-	WIRE722775	-	0.0	-	-	-	0.0	-	30	1703M
L	-	-	-	-	-	-	-	-	-	-	-	-
M	-	-	WIRE722746	-	0.0	-	-	-	0.0	-	-	-
M	-	-	WIRE720006	-	0.0	-	-	-	0.0	-	PIN1	-
M	-	-	WIRE565823	-	0.0	-	-	-	0.0	-	PIN1	-
M	-	-	WIRE722746	-	0.0	-	-	-	0.0	-	E	1825F
M	-	-	WIRE722746	-	0.0	-	-	-	0.0	-	E	7900M

Connector Name 1026

Part Number 3601838C1

Instances A26 - Cab J1939 (250Kbps):A26 - Cab J1939 (250Kbps)
A26 - CAN Layout:Cab Standard J1939 (250Kbps)
B6.7 - Cab J1939 (250kbps):B6.7 - Cab J1939 (250Kbps)
B6.7 - CAN Layout:Cab Standard J1939 (250Kbps)
L9 - Cab J1939 (250kbps):L9 - Cab J1939 (250Kbps)
L9 - CAN Layout:Cab Standard J1939 (250Kbps)

Mates SP-IP-B001-00-10-A1-1026

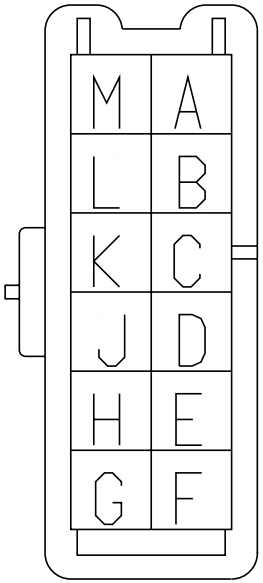

Name	Terminal Part Number	V-Min	Name	Wire Part Number	Wire CSA	Wire Spec	Wire Material description	Wire Color Description	Wire Length	End2 Terminal Part Number	End2 Pin Name	End2 Connect or
A	-	-	WIRE720037	-	0.0	-	-	-	0.0	-	PIN1	-
A	-	-	WIRE735295	-	0.0	-	-	-	0.0	-	PIN1	-
B	-	-	-	-	-	-	-	-	-	-	-	-
C	-	-	WIRE720039	-	0.0	-	-	-	0.0	-	D	1026
C	-	-	WIRE735293	-	0.0	-	-	-	0.0	-	D	1026
D	-	-	WIRE720039	-	0.0	-	-	-	0.0	-	C	1026
D	-	-	WIRE735293	-	0.0	-	-	-	0.0	-	C	1026
E	-	-	WIRE720050	-	0.0	-	-	-	0.0	-	8	2225
E	-	-	WIRE720050	-	0.0	-	-	-	0.0	-	16	2225

Name	Terminal Part Number	V-Min	Name	Wire Part Number	Wire CSA	Wire Spec	Wire Material description	Wire Color Description	Wire Length	End2 Terminal Part Number	End2 Pin Name	End2 Connector
E	-	-	WIRE735291	-	0.0	-	-	-	0.0	-	16	2225
F	-	-	WIRE720042	-	0.0	-	-	-	0.0	-	PIN1	-
F	-	-	WIRE735289	-	0.0	-	-	-	0.0	-	PIN1	-
G	-	-	WIRE720044	-	0.0	-	-	-	0.0	-	PIN1	-
G	-	-	WIRE735288	-	0.0	-	-	-	0.0	-	PIN1	-
H	-	-	WIRE720049	-	0.0	-	-	-	0.0	-	16	2225
H	-	-	WIRE720049	-	0.0	-	-	-	0.0	-	8	2225
H	-	-	WIRE735290	-	0.0	-	-	-	0.0	-	8	2225
J	-	-	WIRE720040	-	0.0	-	-	-	0.0	-	K	1026
J	-	-	WIRE735292	-	0.0	-	-	-	0.0	-	K	1026
K	-	-	WIRE720040	-	0.0	-	-	-	0.0	-	J	1026
K	-	-	WIRE735292	-	0.0	-	-	-	0.0	-	J	1026
L	-	-	-	-	-	-	-	-	-	-	-	-
M	-	-	WIRE720035	-	0.0	-	-	-	0.0	-	PIN1	-
M	-	-	WIRE735294	-	0.0	-	-	-	0.0	-	PIN1	-

Connector Name	1027F
Part Number	1667529C1
Instances	A26 - Lift Axle Controls (Center Pedestal Controls f/ 2 Lift Axles):Diagram1 A26 - Lift Axle Controls (Center Pedestal Controls f/ 1 lift axle):Diagram1 A26 - Lift Axle Controls (Center Pedestal Controls f/ 1 lift axle):Diagram2 A26 - Lift Axle Controls (Center Pedestal Controls f/ 3 lift axles):Diagram1 L9 - Lift Axle Controls (Center Pedestal Controls f/ 1 lift axle):Diagram1 L9 - Lift Axle Controls (Center Pedestal Controls f/ 1 lift axle):Diagram2 L9 - Lift Axle Controls (Center Pedestal Controls f/ 2 Lift Axles):Diagram1 L9 - Lift Axle Controls (Center Pedestal Controls f/ 3 lift axles):Diagram1
Mates	PAN-Lift_Axle_Controls-300 5-04-01A

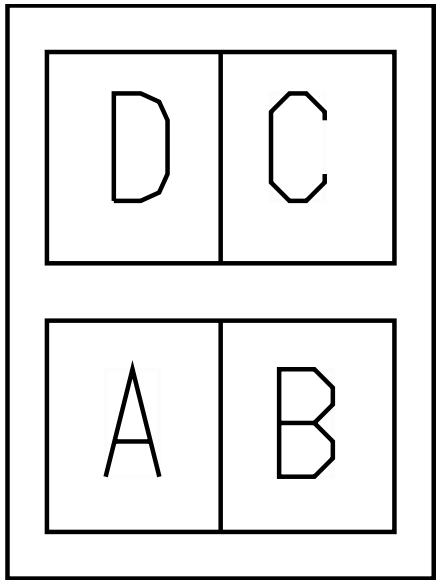

Name	Terminal Part Number	V-Min	Name	Wire Part Number	Wire CSA	Wire Spec	Wire Material description	Wire Color Description	Wire Length	End2 Terminal Part Number	End2 Pin Name	End2 Connector
A	-	-	T59MB	2643670 R1	0.79	18.0	Std. Wall XLPE Primary Cable	BLACK	2130.0	-	A	9761M
B	-	-	T59NB	2643670 R1	0.79	18.0	Std. Wall XLPE Primary Cable	BLACK	2130.0	-	B	9761M
C	-	-	T59PB	2643670 R1	0.79	18.0	Std. Wall XLPE Primary Cable	BLACK	2130.0	-	C	9761M

Connector Name	1027
Part Number	3613769C1
Instances	A26/B6.7/L9 - Ground Splice Pack 1027:Diagram1
Mates	SP-GROUND_3-0003-00-10-A0

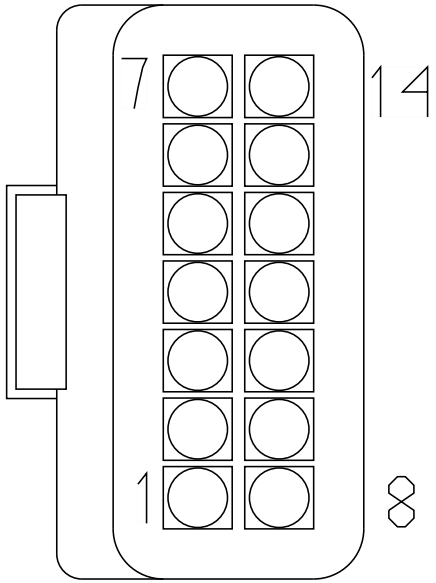

Name	Terminal Part Number	V-Min	Name	Wire Part Number	Wire CSA	Wire Spec	Wire Material description	Wire Color Description	Wire Length	End2 Terminal Part Number	End2 Pin Name	End2 Connect or
1	-	-	FB11-GCC	3510361 R1	1.91	14.0	Thin Wall XLPE Primary Cable	WHITE	1625.0	-	-	-
2	-	-	NA11-GKF	3510358 R1	0.53	20.0	Thin Wall XLPE Primary Cable	WHITE	1720.0	-	-	-
3	-	-	MM11-GBE	3510361 R1	1.91	14.0	Thin Wall XLPE Primary Cable	WHITE	685.0	-	-	-
4	-	-	MM11-GBH	3510359 R1	0.79	18.0	Thin Wall XLPE Primary Cable	WHITE	2215.0	-	-	-

Name	Terminal Part Number	V-Min	Name	Wire Part Number	Wire CSA	Wire Spec	Wire Material description	Wire Color Description	Wire Length	End2 Terminal Part Number	End2 Pin Name	End2 Connect or
6	-	-	VA92#117B	3510329 R1	0.79	18.0	Thin Wall XLPE Primary Cable	TAN	2750.0	-	-	-
8	-	-	HU103BA	2643678 R1	1.16	16.0	Std. Wall XLPE Primary Cable	LIGHT GREEN	1375.0	-	-	-
10	-	-	ZM50A	2645625 R1	0.35	22.0	Thin Wall XLPE Primary Cable	YELLOW 2	2685.0	-	-	-
12	-	-	RF78-GA	3510360 R1	1.16	16.0	Thin Wall XLPE Primary Cable	WHITE	2125.0	-	-	-
13	-	-	RK78-GC	3510359 R1	0.79	18.0	Thin Wall XLPE Primary Cable	WHITE	2875.0	-	-	-
14	-	-	RK78-GD	3510359 R1	0.79	18.0	Thin Wall XLPE Primary Cable	WHITE	2875.0	-	-	-

Connector Name	1028
Part Number	3601838C1
Instances	B6.7 - Body J1939 (250kbps):B6.7 - Body J1939 (250Kbps) B6.7 - CAN Layout:Body Standard J1939 (250Kbps) L9 - Body J1939 (250kbps):L9 - Body J1939 (250Kbps) L9 - CAN Layout:Body Standard J1939 (250Kbps)
Mates	SP-IP-B001-00-10-A1-1028

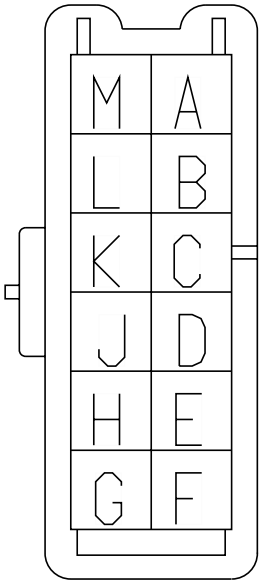

Name	Terminal Part Number	V-Min	Name	Wire Part Number	Wire CSA	Wire Spec	Wire Material description	Wire Color Description	Wire Length	End2 Terminal Part Number	End2 Pin Name	End2 Connect or
A	-	-	WIRE722753	-	0.0	-	-	-	0.0	-	PIN1	-
A	-	-	WIRE722743	-	0.0	-	-	-	0.0	-	F	1024
B	-	-	WIRE722868	-	0.0	-	-	-	0.0	-	B	8884G
C	-	-	WIRE722745	-	0.0	-	-	-	0.0	-	D	1028
D	-	-	WIRE722745	-	0.0	-	-	-	0.0	-	C	1028
E	-	-	WIRE722756	-	0.0	-	-	-	0.0	-	PIN1	-
F	-	-	WIRE722814	-	0.0	-	-	-	0.0	-	-	-
G	-	-	WIRE722875	-	0.0	-	-	-	0.0	-	-	-

Name	Terminal Part Number	V-Min	Name	Wire Part Number	Wire CSA	Wire Spec	Wire Material description	Wire Color Description	Wire Length	End2 Terminal Part Number	End2 Pin Name	End2 Connector
H	-	-	WIRE722761	-	0.0	-	-	-	0.0	-	PIN1	-
J	-	-	WIRE722744	-	0.0	-	-	-	0.0	-	K	1028
K	-	-	WIRE722744	-	0.0	-	-	-	0.0	-	J	1028
L	-	-	WIRE722867	-	0.0	-	-	-	0.0	-	A	8884G
M	-	-	WIRE722742	-	0.0	-	-	-	0.0	-	G	1024
M	-	-	WIRE722752	-	0.0	-	-	-	0.0	-	PIN1	-

Connector Name	1032F
Part Number	3709924C1
Instances	A26/B6.7/L9 - Door Pod Module (4 Door):Diagram1
Mates	MODU-REAR-PS_DOOR_POD-2016 -02-02A

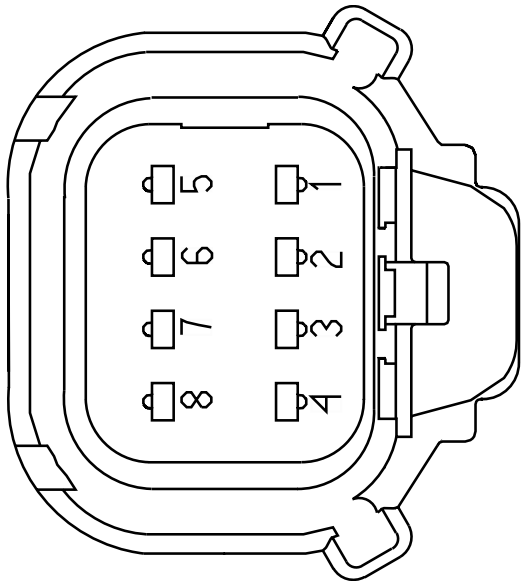

Name	Terminal Part Number	V-Min	Name	Wire Part Number	Wire CSA	Wire Spec	Wire Material description	Wire Color Description	Wire Length	End2 Terminal Part Number	End2 Pin Name	End2 Connect or
3	-	-	F11-G	3510359 R1	0.79	18.0	Thin Wall XLPE Primary Cable	WHITE	0.0	-	7	1032F
7	-	-	F11-G	3510359 R1	0.79	18.0	Thin Wall XLPE Primary Cable	WHITE	0.0	-	3	1032F

Connector Name	1040
Part Number	RING-M-6_0
Instances	B6.7 - Bosch LH160_LH200 Alternator:Diagram1 B6.7 - Delco Remy 28SI Alternator W/Sensor Option 2:Diagram1
Mates	DEV-Bosch_LH160_LG200_Alte rnator- 4004-01-01A

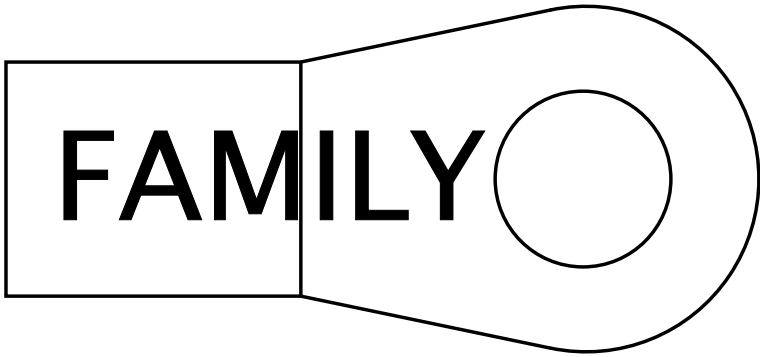

Name	Terminal Part Number	V-Min	Name	Wire Part Number	Wire CSA	Wire Spec	Wire Material description	Wire Color Description	Wire Length	End2 Terminal Part Number	End2 Pin Name	End2 Connect or
A	-	-	WF2-G	3592742 R1	39.43	1.0	Std. Wall XLPE Battery Cable	WHITE	2550.0	-	A	1200
A	-	-	WU2-G	3592742 R1	39.43	1.0	Std. Wall XLPE Battery Cable	WHITE	1120.0	-	A	1200

Connector Name	1040
Part Number	RING-M-6_0
Instances	L9 - Bosch LH160_LH200 Alternator:Diagram1
Mates	DEV-Bosch_LH160_LG200_Alte rnator- 4004-01-01A

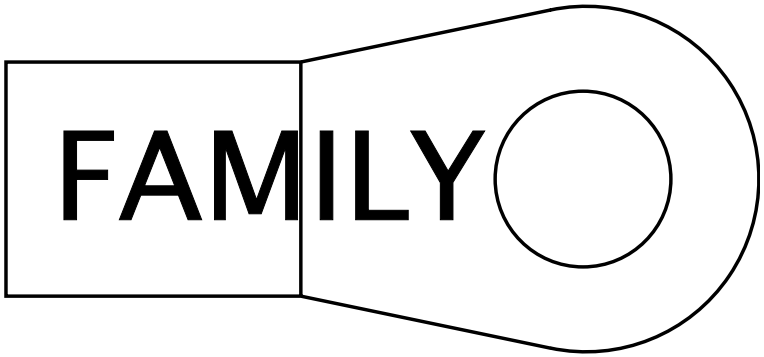

Name	Terminal Part Number	V-Min	Name	Wire Part Number	Wire CSA	Wire Spec	Wire Material description	Wire Color Description	Wire Length	End2 Terminal Part Number	End2 Pin Name	End2 Connect or
A	-	-	WF2-G	3592742 R1	39.43	1.0	Std. Wall XLPE Battery Cable	WHITE	2550.0	-	A	1300

Connector Name	1041
Part Number	RING-M-8_0
Instances	B6.7 - Bosch LH160_LH200 Alternator:Diagram1 B6.7 - Delco Remy 28SI Alternator W/Sensor Option 2:Diagram1
Mates	DEV-Bosch_LH160_LG200_Alte rnator- 4004-01-01A

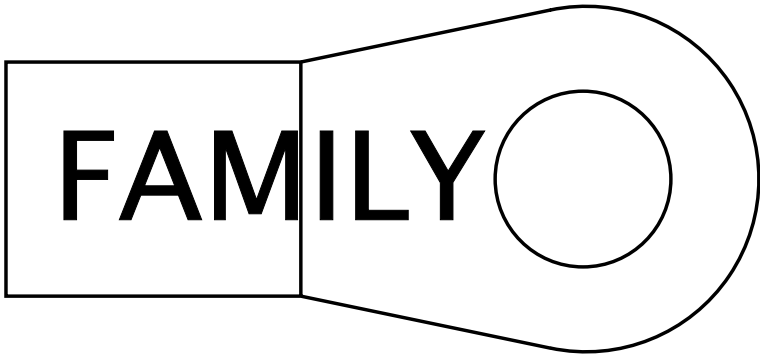

Name	Terminal Part Number	V-Min	Name	Wire Part Number	Wire CSA	Wire Spec	Wire Material description	Wire Color Description	Wire Length	End2 Terminal Part Number	End2 Pin Name	End2 Connect or
A	-	-	WU2	3592740 R1	39.43	1.0	Std. Wall XLPE Battery Cable	RED	940.0	-	X	-
A	-	-	WF2	3592740 R1	39.43	1.0	Std. Wall XLPE Battery Cable	RED	2250.0	-	X	-

Connector Name	1041
Part Number	RING-M-8_0
Instances	L9 - Bosch LH160_LH200 Alternator:Diagram1
Mates	DEV-Bosch_LH160_LG200_Alte rnator- 4004-01-01A

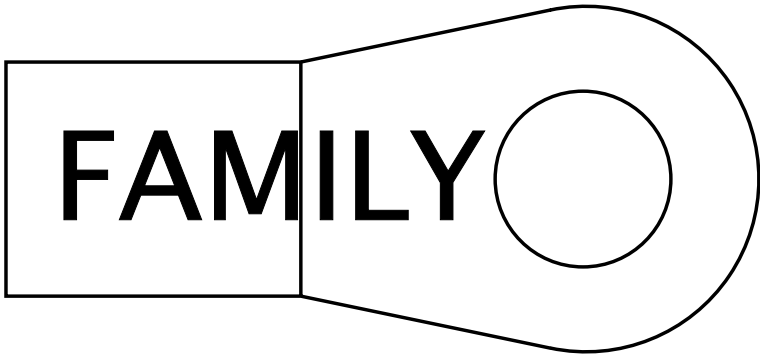

Name	Terminal Part Number	V-Min	Name	Wire Part Number	Wire CSA	Wire Spec	Wire Material description	Wire Color Description	Wire Length	End2 Terminal Part Number	End2 Pin Name	End2 Connect or
A	-	-	WF2	3592740 R1	39.43	1.0	Std. Wall XLPE Battery Cable	RED	2250.0	-	X	-

Connector Name 1050

Part Number RING-M-6_0

Instances B6.7 - Bosch LH160_LH200 Alternator:Diagram2
B6.7 - Delco Remy 28SI Alternator W/Sensor Option 1:Diagram1

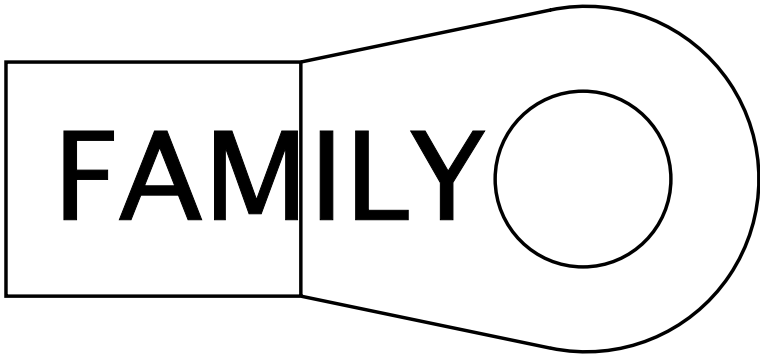

Name	Terminal Part Number	V-Min	Name	Wire Part Number	Wire CSA	Wire Spec	Wire Material description	Wire Color Description	Wire Length	End2 Terminal Part Number	End2 Pin Name	End2 Connect or
A	-	-	WG2-G	3592742 R1	39.43	1.0	Std. Wall XLPE Battery Cable	WHITE	2695.0	-	A	1200
A	-	-	WV2-G	3592741 R1	32.19	2.0	Std. Wall XLPE Battery Cable	WHITE	1120.0	-	A	1200

Connector Name	1050
Part Number	RING-M-6_0
Instances	L9 - Delco Remy 28SI Alternator W/Sensor:Diagram1
Mates	DEV-Delco_Remy_28SI_Altern ator-4004-01-05A

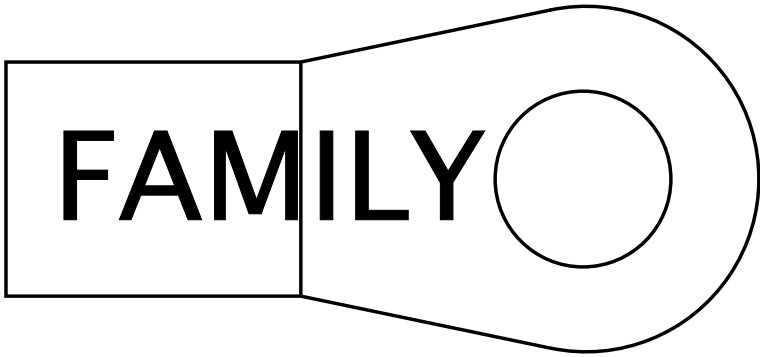

Name	Terminal Part Number	V-Min	Name	Wire Part Number	Wire CSA	Wire Spec	Wire Material description	Wire Color Description	Wire Length	End2 Terminal Part Number	End2 Pin Name	End2 Connect or
A	-	-	WG2-G	3592742 R1	39.43	1.0	Std. Wall XLPE Battery Cable	WHITE	2695.0	-	A	1300

Connector Name 1051

Part Number RING-M-8_0

Instances B6.7 - Bosch LH160_LH200 Alternator:Diagram2
B6.7 - Delco Remy 28SI Alternator W/Sensor Option 1:Diagram1

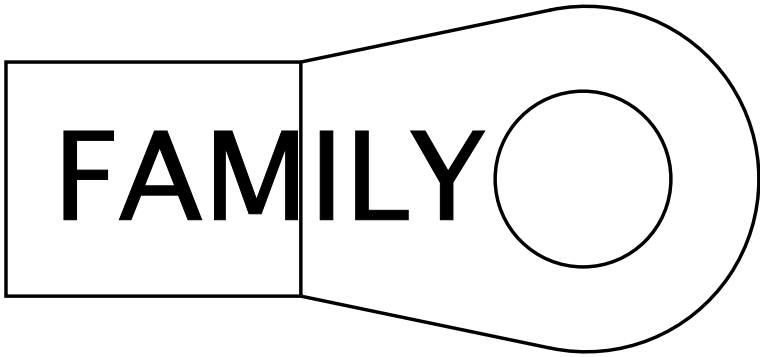

Name	Terminal Part Number	V-Min	Name	Wire Part Number	Wire CSA	Wire Spec	Wire Material description	Wire Color Description	Wire Length	End2 Terminal Part Number	End2 Pin Name	End2 Connect or
A	-	-	WV2	3592739 R1	32.19	2.0	Std. Wall XLPE Battery Cable	RED	940.0	-	X	-
A	-	-	WG2	3592740 R1	39.43	1.0	Std. Wall XLPE Battery Cable	RED	2290.0	-	X	-

Connector Name	1051
Part Number	RING-M-8_0
Instances	L9 - Delco Remy 28SI Alternator W/Sensor:Diagram1
Mates	DEV-Delco_Remy_28SI_Altern ator-4004-01-05A

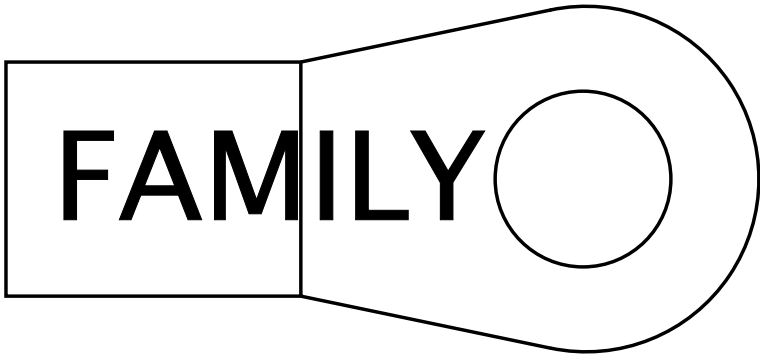

Name	Terminal Part Number	V-Min	Name	Wire Part Number	Wire CSA	Wire Spec	Wire Material description	Wire Color Description	Wire Length	End2 Terminal Part Number	End2 Pin Name	End2 Connect or
A	-	-	WG2	3592740 R1	39.43	1.0	Std. Wall XLPE Battery Cable	RED	2290.0	-	X	-

Connector Name	1052
Part Number	1661259C1
Instances	A26/B6.7/L9 - Automatic Lighting - Single Sensor Twilight:Diagram1 A26/B6.7/L9 - Automatic Lighting - Single Sensor Twilight:Diagram2
Mates	SNSR-AMB_LT-1018-03-01A

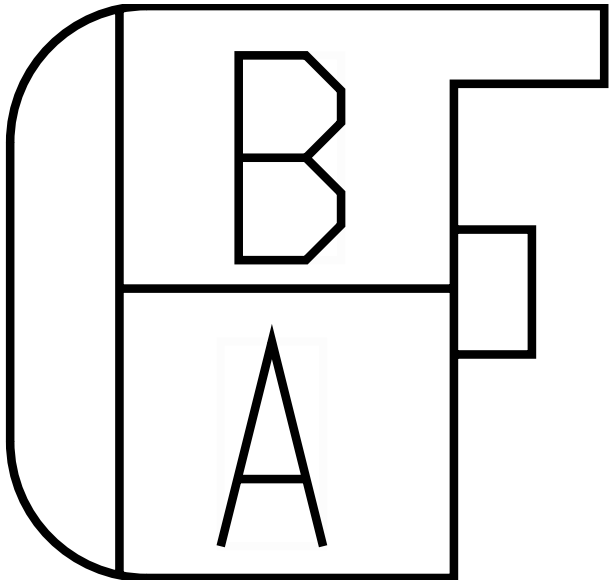

Name	Terminal Part Number	V-Min	Name	Wire Part Number	Wire CSA	Wire Spec	Wire Material description	Wire Color Description	Wire Length	End2 Terminal Part Number	End2 Pin Name	End2 Connect or
A	-	-	AC50A	3510335 R1	0.79	18.0	Thin Wall XLPE Primary Cable	YELLOW 2	2340.0	-	H	0009
A	-	-	AB50A	3510335 R1	0.79	18.0	Thin Wall XLPE Primary Cable	YELLOW 2	1495.0	-	H	0009
B	-	-	AB50B	3510335 R1	0.79	18.0	Thin Wall XLPE Primary Cable	YELLOW 2	1495.0	-	E	0009
B	-	-	AC50B	3510335 R1	0.79	18.0	Thin Wall XLPE Primary Cable	YELLOW 2	2340.0	-	E	0009

Connector Name	1053
Part Number	4116776C1
Instances	A26 - Heating Ventilation & Air Conditioning (HVAC) Auto Temp Control:Diagram3 - Sensors A26/B6.7/L9 - Automatic Lighting - Dual Sensor Twilight/ Solar:Diagram1 A26/B6.7/L9 - Automatic Lighting - Dual Sensor Twilight/ Solar:Diagram2 B6.7 - Heating Ventilation & Air Conditioning (HVAC) Auto Temp Control:Diagram3 - Sensors L9 - Heating Ventilation & Air Conditioning (HVAC) Auto Temp Control:Diagram3 - Sensors
Mates	DEV-SENSOR_SUN_LOAD_TWILIG HT-01

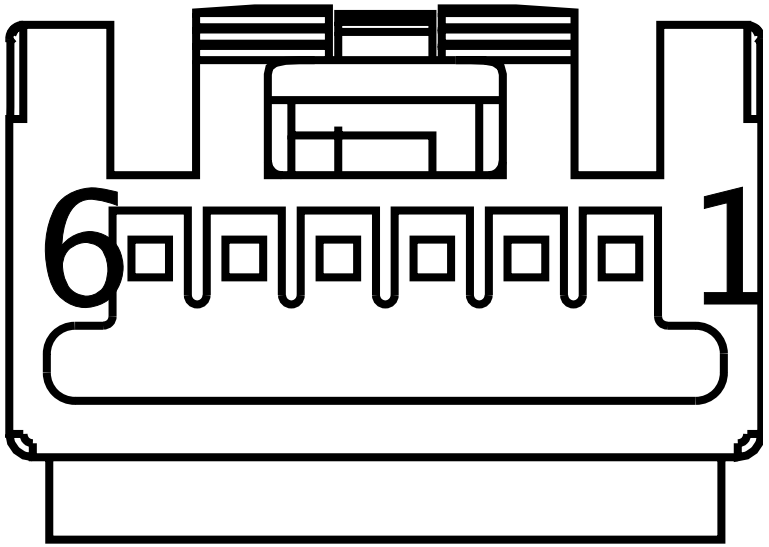

Name	Terminal Part Number	V-Min	Name	Wire Part Number	Wire CSA	Wire Spec	Wire Material description	Wire Color Description	Wire Length	End2 Terminal Part Number	End2 Pin Name	End2 Connect or
1	-	-	ZF75D	2645643 R1	0.35	22.0	Thin Wall XLPE Primary Cable	LIGHT GREEN	2730.0	-	4	1200A
2	-	-	ZM50B	2645625 R1	0.35	22.0	Thin Wall XLPE Primary Cable	YELLOW 2	1495.0	-	E	0009
2	-	-	ZS50B	2645625 R1	0.35	22.0	Thin Wall XLPE Primary Cable	YELLOW 2	2340.0	-	E	0009B
3	-	-	ZF14SUN	2645629 R1	0.35	22.0	Thin Wall XLPE Primary Cable	RED	2890.0	-	-	-

Name	Terminal Part Number	V-Min	Name	Wire Part Number	Wire CSA	Wire Spec	Wire Material description	Wire Color Description	Wire Length	End2 Terminal Part Number	End2 Pin Name	End2 Connect or
4	-	-	ZM50A	2645625 R1	0.35	22.0	Thin Wall XLPE Primary Cable	YELLOW 2	2685.0	-	-	-
5	-	-	ZF75D-G	2645643 R1	0.35	22.0	Thin Wall XLPE Primary Cable	LIGHT GREEN	2730.0	-	3	1200A

Connector Name	1060
Part Number	RING-M-10_0
Instances	B6.7 - Leece-Neville 320PAH Alternator:Diagram1
Mates	DEV-Leece_Neville_320PAH_A lternator-4004-01-03A

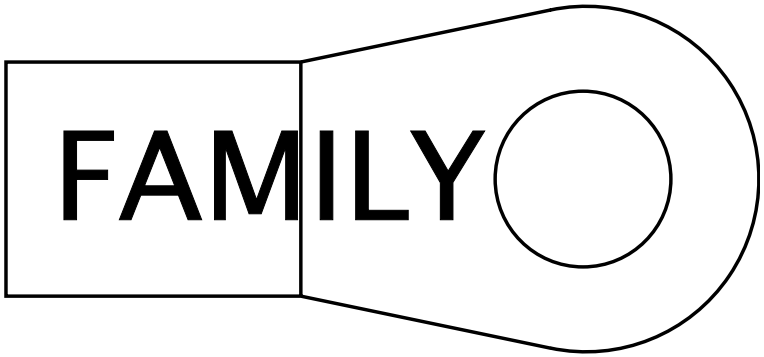

Name	Terminal Part Number	V-Min	Name	Wire Part Number	Wire CSA	Wire Spec	Wire Material description	Wire Color Description	Wire Length	End2 Terminal Part Number	End2 Pin Name	End2 Connect or
A	-	-	WC2-G	2645227 R1	61.89	0.0	SGX FLEX 125C	BLACK	1130.0	-	A	1200
A	-	-	WR2-G	2645227 R1	61.89	0.0	SGX FLEX 125C	BLACK	1180.0	-	A	1200

Connector Name	1061
Part Number	RING-M-8_0
Instances	B6.7 - Leece-Neville 320PAH Alternator:Diagram1
Mates	DEV-Leece_Neville_320PAH_A lternator-4004-01-03A

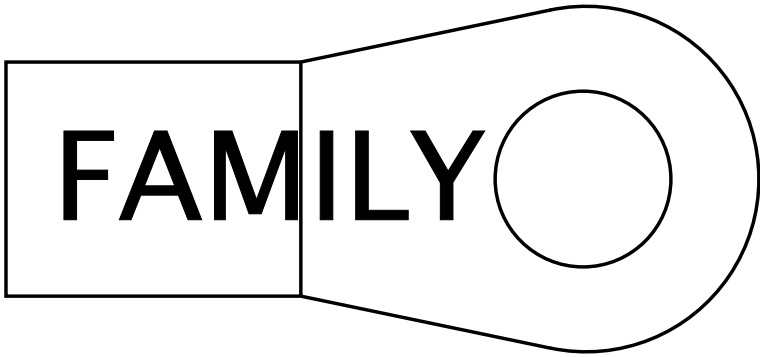

Name	Terminal Part Number	V-Min	Name	Wire Part Number	Wire CSA	Wire Spec	Wire Material description	Wire Color Description	Wire Length	End2 Terminal Part Number	End2 Pin Name	End2 Connect or
A	-	-	WR2	2645228 R1	61.89	0.0	SGX FLEX 125C	RED	985.0	-	X	-
A	-	-	WC2	2645228 R1	61.89	0.0	SGX FLEX 125C	RED	925.0	-	X	-

Connector Name	1070
Part Number	RING-M-8_0
Instances	B6.7 - Leece-Neville AVI160 Alternator:Diagram1
Mates	DEV-Leece_Neville_AVI_160_ Alternator-4004-01-02A

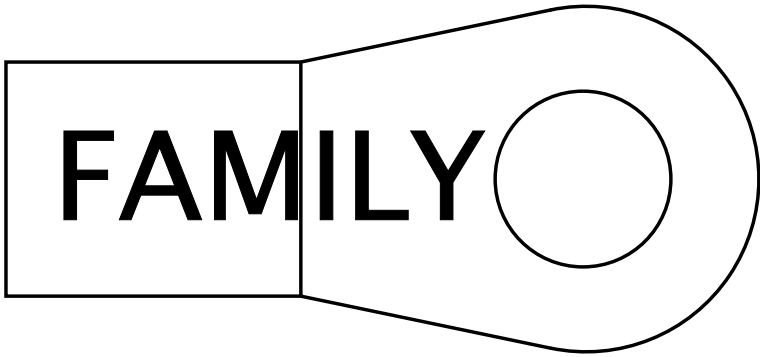

Name	Terminal Part Number	V-Min	Name	Wire Part Number	Wire CSA	Wire Spec	Wire Material description	Wire Color Description	Wire Length	End2 Terminal Part Number	End2 Pin Name	End2 Connect or
A	-	-	WW2-G	3592741 R1	32.19	2.0	Std. Wall XLPE Battery Cable	WHITE	1205.0	-	A	1200
A	-	-	WK2-G	3592741 R1	32.19	2.0	Std. Wall XLPE Battery Cable	WHITE	2615.0	-	A	1200

Connector Name	1070
Part Number	RING-M-8_0
Instances	L9 - Leece-Neville AVI160 Alternator:Diagram1
Mates	DEV-Leece_Neville_AVI_160_ Alternator-4004-01-02A

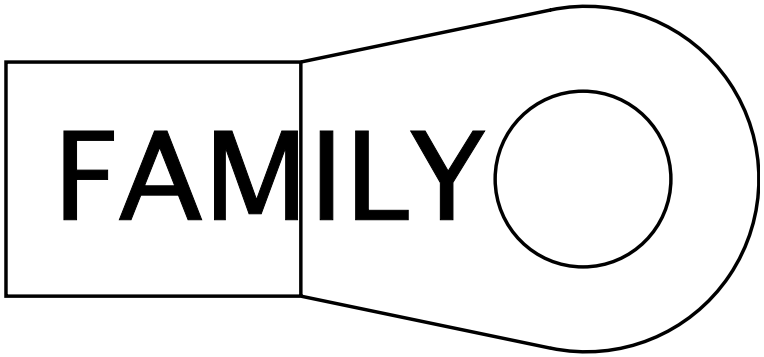

Name	Terminal Part Number	V-Min	Name	Wire Part Number	Wire CSA	Wire Spec	Wire Material description	Wire Color Description	Wire Length	End2 Terminal Part Number	End2 Pin Name	End2 Connect or
A	-	-	WK2-G	3592741 R1	32.19	2.0	Std. Wall XLPE Battery Cable	WHITE	2615.0	-	A	1200

Connector Name	1071
Part Number	RING-M-8_0
Instances	B6.7 - Leece-Neville AVI160 Alternator:Diagram1
Mates	DEV-Leece_Neville_AVI_160_ Alternator-4004-01-02A

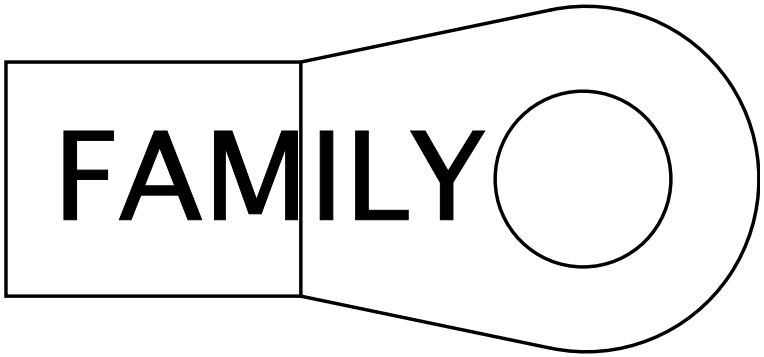

Name	Terminal Part Number	V-Min	Name	Wire Part Number	Wire CSA	Wire Spec	Wire Material description	Wire Color Description	Wire Length	End2 Terminal Part Number	End2 Pin Name	End2 Connect or
A	-	-	WW2	3592739 R1	32.19	2.0	Std. Wall XLPE Battery Cable	RED	875.0	-	X	-
A	-	-	WK2	3592739 R1	32.19	2.0	Std. Wall XLPE Battery Cable	RED	2250.0	-	X	-

Connector Name	1071
Part Number	RING-M-8_0
Instances	L9 - Leece-Neville AVI160 Alternator:Diagram1
Mates	DEV-Leece_Neville_AVI_160_ Alternator-4004-01-02A

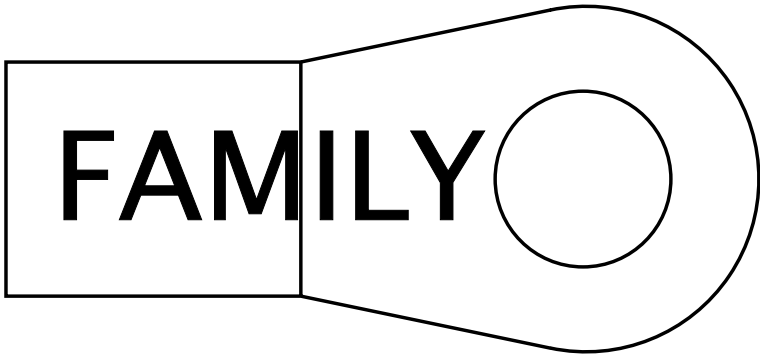

Name	Terminal Part Number	V-Min	Name	Wire Part Number	Wire CSA	Wire Spec	Wire Material description	Wire Color Description	Wire Length	End2 Terminal Part Number	End2 Pin Name	End2 Connect or
A	-	-	WK2	3592739 R1	32.19	2.0	Std. Wall XLPE Battery Cable	RED	2250.0	-	X	-

Connector Name	1080
Part Number	RING-M-8_0
Instances	B6.7 - Leece-Neville - LN 325A Alternator W/Sensor:Diagram1
Mates	DEV-Leece-Nevile_LN320_Alt ernator-4004-01-09A

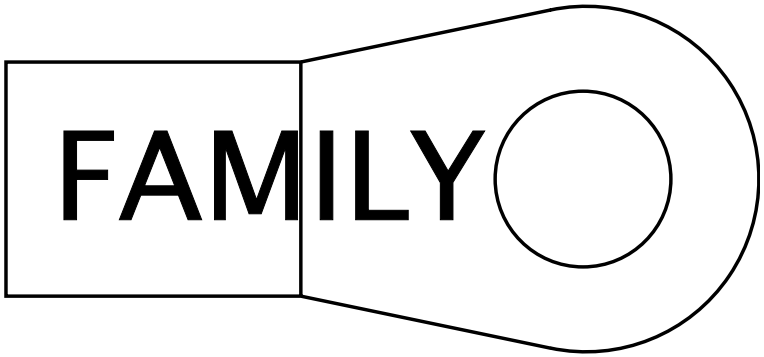

Name	Terminal Part Number	V-Min	Name	Wire Part Number	Wire CSA	Wire Spec	Wire Material description	Wire Color Description	Wire Length	End2 Terminal Part Number	End2 Pin Name	End2 Connect or
A	-	-	WX2-G	2645227 R1	61.89	0.0	SGX FLEX 125C	BLACK	1085.0	-	A	1200
A	-	-	WL2-G	2645227 R1	61.89	0.0	SGX FLEX 125C	BLACK	2615.0	-	A	1200

Connector Name	1080
Part Number	RING-M-8_0
Instances	L9 - Leece-Neville - LN 325A Alternator W/Sensor:Diagram1
Mates	DEV-Leece-Nevile_LN320_Alt ernator-4004-01-09A

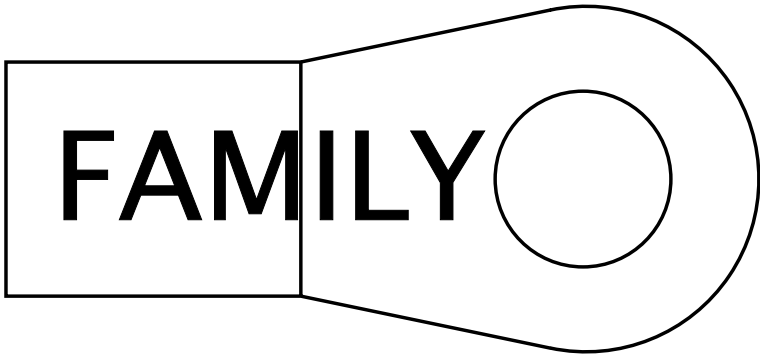

Name	Terminal Part Number	V-Min	Name	Wire Part Number	Wire CSA	Wire Spec	Wire Material description	Wire Color Description	Wire Length	End2 Terminal Part Number	End2 Pin Name	End2 Connect or
A	-	-	WL2-G	2645227 R1	61.89	0.0	SGX FLEX 125C	BLACK	2615.0	-	A	1700

Connector Name	1081
Part Number	RING-M-8_0
Instances	B6.7 - Leece-Neville - LN 325A Alternator W/Sensor:Diagram1
Mates	DEV-Leece-Nevile_LN320_Alt ernator-4004-01-09A

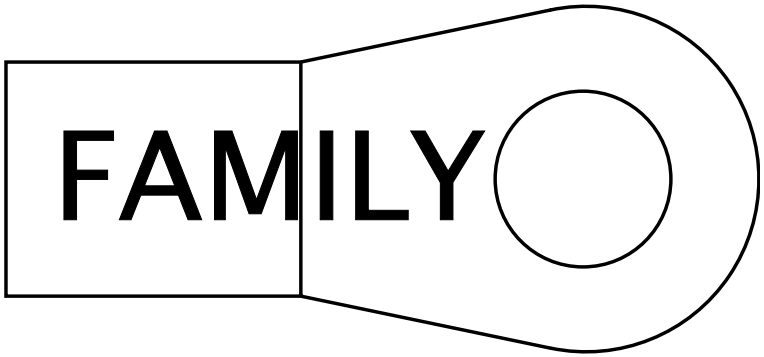

Name	Terminal Part Number	V-Min	Name	Wire Part Number	Wire CSA	Wire Spec	Wire Material description	Wire Color Description	Wire Length	End2 Terminal Part Number	End2 Pin Name	End2 Connect or
A	-	-	WX2	2645228 R1	61.89	0.0	SGX FLEX 125C	RED	855.0	-	X	-
A	-	-	WL2	2645228 R1	61.89	0.0	SGX FLEX 125C	RED	2290.0	-	X	-

Connector Name	1081
Part Number	RING-M-8_0
Instances	L9 - Leece-Neville - LN 325A Alternator W/Sensor:Diagram1
Mates	DEV-Leece-Nevile_LN320_Alt ernator-4004-01-09A

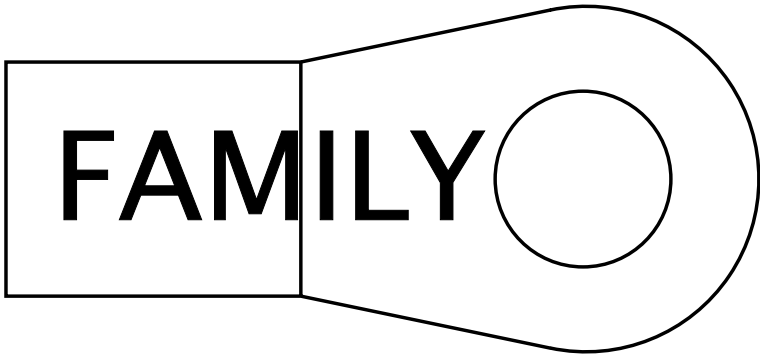

Name	Terminal Part Number	V-Min	Name	Wire Part Number	Wire CSA	Wire Spec	Wire Material description	Wire Color Description	Wire Length	End2 Terminal Part Number	End2 Pin Name	End2 Connect or
A	-	-	WL2	2645228 R1	61.89	0.0	SGX FLEX 125C	RED	2290.0	-	X	-

Connector Name	1100MA
Part Number	3546518C1
Instances	A26 - Cranking Request (w/ Key Switch w/ BCM):Diagram1 A26 - Cranking Request (w/ Key Switch w/ BCM):Diagram2 A26/B6.7/L9 - Key Switch (Operator Input):Diagram2 B6.7 - Cranking Request (w/ Key Switch w/ BCM):Diagram2
Mates	SW-KEY-5039-01-01A

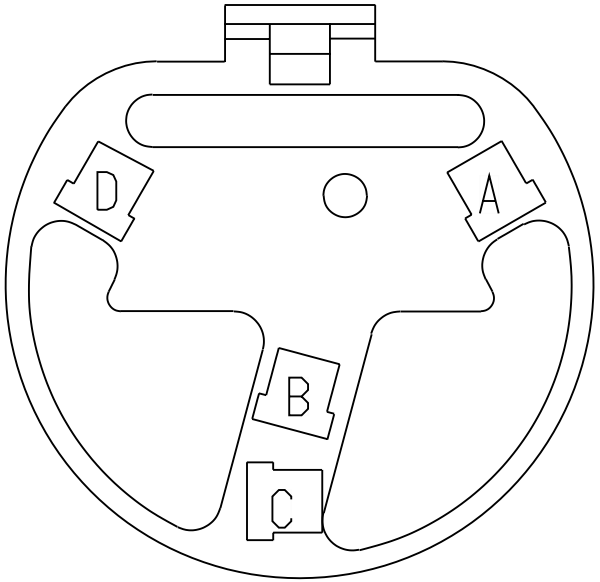

Name	Terminal Part Number	V-Min	Name	Wire Part Number	Wire CSA	Wire Spec	Wire Material description	Wire Color Description	Wire Length	End2 Terminal Part Number	End2 Pin Name	End2 Connect or
A	-	-	EE15	3510365 R1	0.79	18.0	Thin Wall XLPE Primary Cable	RED	2300.0	-	-	-
A	-	-	EB15	3510365 R1	0.79	18.0	Thin Wall XLPE Primary Cable	RED	1830.0	-	-	-
B	-	-	LH149B	3510311 R1	0.79	18.0	Thin Wall XLPE Primary Cable	GREY	2265.0	-	S	J6-1606
B	-	-	LB17H	3510323 R1	0.79	18.0	Thin Wall XLPE Primary Cable	PINK	1635.0	-	S	J6-1606

Name	Terminal Part Number	V-Min	Name	Wire Part Number	Wire CSA	Wire Spec	Wire Material description	Wire Color Description	Wire Length	End2 Terminal Part Number	End2 Pin Name	End2 Connector
C	-	-	ED149	3510311 R1	0.79	18.0	Thin Wall XLPE Primary Cable	GREY	2105.0	-	A1	J3-1600
C	-	-	EC149	3510311 R1	0.79	18.0	Thin Wall XLPE Primary Cable	GREY	1475.0	-	A1	J3-1600
D	-	-	DC149A	3510311 R1	0.79	18.0	Thin Wall XLPE Primary Cable	GREY	2105.0	-	A16	J3-1600
D	-	-	DB149A	3510311 R1	0.79	18.0	Thin Wall XLPE Primary Cable	GREY	1475.0	-	A16	J3-1600

Connector Name 1100

Part Number 3546518C1

Instances A26/B6.7/L9 - Key Switch (Operator Input):Diagram1
B6.7 - Cranking Request (w/ Key Switch w/ BCM):Diagram1

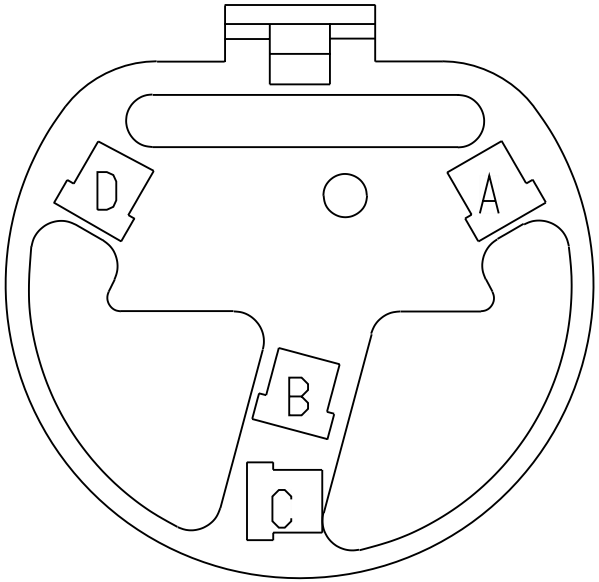

Name	Terminal Part Number	V-Min	Name	Wire Part Number	Wire CSA	Wire Spec	Wire Material description	Wire Color Description	Wire Length	End2 Terminal Part Number	End2 Pin Name	End2 Connect or
A	-	-	EB15	3510365 R1	0.79	18.0	Thin Wall XLPE Primary Cable	RED	1830.0	-	-	-
B	-	-	LB17H	3510323 R1	0.79	18.0	Thin Wall XLPE Primary Cable	PINK	1635.0	-	S	J6-1606
B	-	-	LC17HA	3510323 R1	0.79	18.0	Thin Wall XLPE Primary Cable	PINK	1635.0	-	S	J6-1606
B	-	-	LD149B	3510312 R1	1.16	16.0	Thin Wall XLPE Primary Cable	GREY	665.0	-	X	-

Name	Terminal Part Number	V-Min	Name	Wire Part Number	Wire CSA	Wire Spec	Wire Material description	Wire Color Description	Wire Length	End2 Terminal Part Number	End2 Pin Name	End2 Connect or
C	-	-	EC149	3510311 R1	0.79	18.0	Thin Wall XLPE Primary Cable	GREY	1475.0	-	A1	J3-1600
D	-	-	DB149A	3510311 R1	0.79	18.0	Thin Wall XLPE Primary Cable	GREY	1475.0	-	A16	J3-1600

Connector Name	1101F
Part Number	3768593C1
Instances	A26 - CAN Layout:HMI Standard J1939 (125Kbps) A26 - Low Speed J1939 (125Kbps):A26 - HMI J1939 (125Kbps) B6.7 - CAN Layout:HMI Standard J1939 (125Kbps) B6.7 - Low Speed J1939 (125kbps):B6.7 - Low Speed J1939 (125kbps) L9 - CAN Layout:HMI Standard J1939 (125Kbps) L9 - Low Speed J1939 (125kbps):L9 - Low Speed J1939 (125Kbps)
Mates	SW-J1939_PACK-0009-00-02A

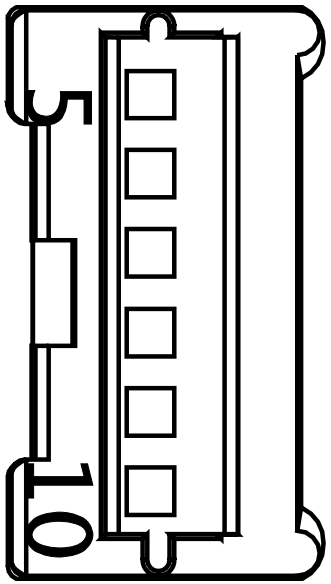

Name	Terminal Part Number	V-Min	Name	Wire Part Number	Wire CSA	Wire Spec	Wire Material description	Wire Color Description	Wire Length	End2 Terminal Part Number	End2 Pin Name	End2 Connect or
5	-	-	WIRE1651	-	0.0	-	-	-	0.0	-	PIN1	-
6	-	-	WIRE1652	-	0.0	-	-	-	0.0	-	PIN1	-

Connector Name	1101M
Part Number	3522071C1
Instances	A26 - CAN Layout:HMI Standard J1939 (125Kbps) A26 - Low Speed J1939 (125Kbps):A26 - HMI J1939 (125Kbps) L9 - CAN Layout:HMI Standard J1939 (125Kbps) L9 - Low Speed J1939 (125kbps):L9 - Low Speed J1939 (125Kbps)
Mates	SW-J1939_PACK-0009-00-02A

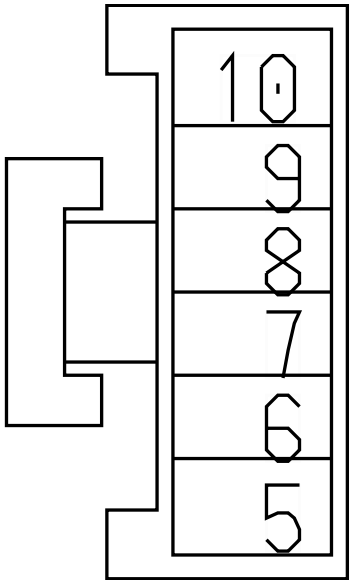

Name	Terminal Part Number	V-Min	Name	Wire Part Number	Wire CSA	Wire Spec	Wire Material description	Wire Color Description	Wire Length	End2 Terminal Part Number	End2 Pin Name	End2 Connect or
5	-	-	WIRE1649	-	0.0	-	-	-	0.0	-	PIN1	-
6	-	-	WIRE1650	-	0.0	-	-	-	0.0	-	PIN1	-

Connector Name	1101M
Part Number	3522071C1
Instances	A26/B6.7/L9 - Multiplexed Switch Pack (Primary Switch):Diagram1 B6.7 - CAN Layout:HMI Standard J1939 (125Kbps) B6.7 - Low Speed J1939 (125kbps):B6.7 - Low Speed J1939 (125kbps)
Mates	SW-J1939_PACK-0009-00-02A

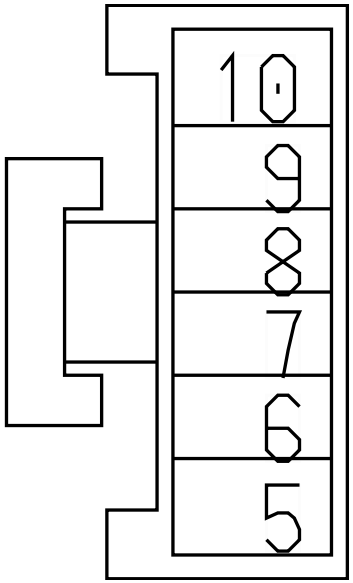

Name	Terminal Part Number	V-Min	Name	Wire Part Number	Wire CSA	Wire Spec	Wire Material description	Wire Color Description	Wire Length	End2 Terminal Part Number	End2 Pin Name	End2 Connect or
5	-	-	WIRE1649	-	0.0	-	-	-	0.0	-	PIN1	-
5	-	-	-	-	-	-	-	-	-	-	-	-
6	-	-	WIRE1650	-	0.0	-	-	-	0.0	-	PIN1	-
6	-	-	-	-	-	-	-	-	-	-	-	-
8	-	-	AE11-GKD	3510359 R1	0.79	18.0	Thin Wall XLPE Primary Cable	WHITE	1140.0	-	X	-
10	-	-	AA14MUX	3510365 R1	0.79	18.0	Thin Wall XLPE Primary Cable	RED	1545.0	-	-	-

Connector Name	1106
Part Number	3928059C1
Short Description	IP AUX ROOF LOAD SWITCH
Instances	A26/B6.7/L9 - Key Switch Accessory:Diagram 1

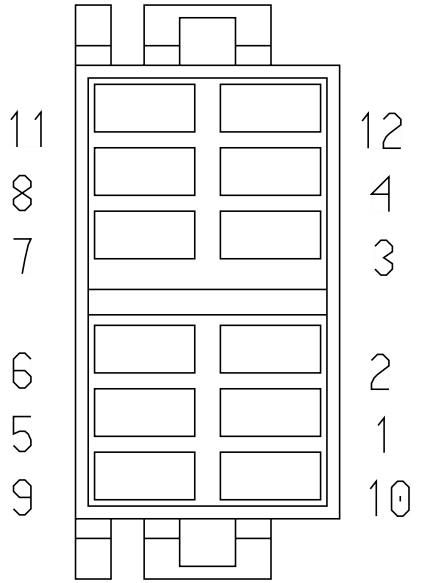

Name	Terminal Part Number	V-Min	Name	Wire Part Number	Wire CSA	Wire Spec	Wire Material description	Wire Color Description	Wire Length	End2 Terminal Part Number	End2 Pin Name	End2 Connect or
2	-	-	ZR12ZA	3510341 R1	0.79	18.0	Thin Wall XLPE Primary Cable	LIGHT BLUE	1220.0	-	29	1017

Connector Name	1107
Part Number	3928059C1
Instances	A26 - Snow Valve Control:Diagram1 A26 - Snow Valve Control:Diagram2 B6.7 - Snow Valve Control:Diagram1 B6.7 - Snow Valve Control:Diagram2 L9 - Snow Valve Control:Diagram1 L9 - Snow Valve Control:Diagram2
Mates	SW-SNOW_VALVE-5042-01-02A

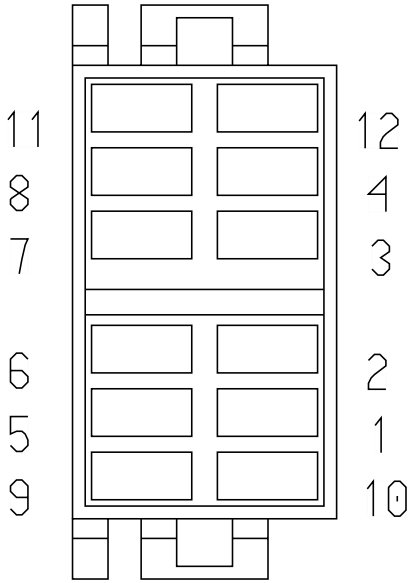

Name	Terminal Part Number	V-Min	Name	Wire Part Number	Wire CSA	Wire Spec	Wire Material description	Wire Color Description	Wire Length	End2 Terminal Part Number	End2 Pin Name	End2 Connector
1	-	-	QA9Z	3510311 R1	0.79	18.0	Thin Wall XLPE Primary Cable	GREY	1360.0	-	-	-
2	-	-	QA9ZC	3510311 R1	0.79	18.0	Thin Wall XLPE Primary Cable	GREY	2500.0	-	F13	J5-1602
9	-	-	QA23EC	3510329 R1	0.79	18.0	Thin Wall XLPE Primary Cable	TAN	1190.0	-	X	-
10	-	-	QA13DB	3510323 R1	0.79	18.0	Thin Wall XLPE Primary Cable	PINK	990.0	-	X	-

Name	Terminal Part Number	V-Min	Name	Wire Part Number	Wire CSA	Wire Spec	Wire Material description	Wire Color Description	Wire Length	End2 Terminal Part Number	End2 Pin Name	End2 Connector
11	-	-	QA11-GAD	3510359 R1	0.79	18.0	Thin Wall XLPE Primary Cable	WHITE	980.0	-	-	-
12	-	-	QA62K	3510353 R1	0.79	18.0	Thin Wall XLPE Primary Cable	DARK BLUE	1345.0	-	-	-

Connector Name	1108
Part Number	3928059C1
Instances	A26 - Axle Lift Controls:Diagram1 A26 - Axle Lift Controls:Diagram2 A26/B6.7/L9 - Axle Lift Controls:Diagram1 A26/B6.7/L9 - Axle Lift Controls:Diagram2 A26/B6.7/L9 - Axle Lift Controls:Diagram3 A26/B6.7/L9 - Axle Lift Controls:Diagram4 L9 - Axle Lift Controls Option 2:Diagram1 L9 - Axle Lift Controls Option 2:Diagram2
Mates	SW-LIFT_AXLE_ENABLE-3021-0 3-01A

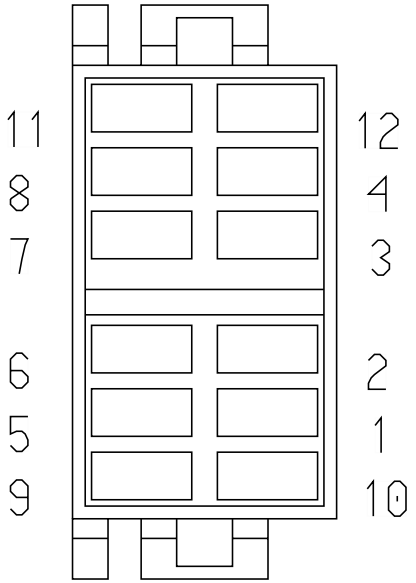

Name	Terminal Part Number	V-Min	Name	Wire Part Number	Wire CSA	Wire Spec	Wire Material description	Wire Color Description	Wire Length	End2 Terminal Part Number	End2 Pin Name	End2 Connect or
2	-	-	KT59JD	3510311 R1	0.79	18.0	Thin Wall XLPE Primary Cable	GREY	1155.0	-	X	-
4	-	-	KS59KE	3510311 R1	0.79	18.0	Thin Wall XLPE Primary Cable	GREY	1185.0	-	X	-
4	-	-	KT59KE	3510311 R1	0.79	18.0	Thin Wall XLPE Primary Cable	GREY	1185.0	-	X	-
9	-	-	KS59-GBA	3510359 R1	0.79	18.0	Thin Wall XLPE Primary Cable	WHITE	280.0	-	X	-

Name	Terminal Part Number	V-Min	Name	Wire Part Number	Wire CSA	Wire Spec	Wire Material description	Wire Color Description	Wire Length	End2 Terminal Part Number	End2 Pin Name	End2 Connector
9	-	-	KT59-GBA	3510359 R1	0.79	18.0	Thin Wall XLPE Primary Cable	WHITE	280.0	-	X	-
10	-	-	KS59TA	3510311 R1	0.79	18.0	Thin Wall XLPE Primary Cable	GREY	225.0	-	X	-
10	-	-	KT59TA	3510311 R1	0.79	18.0	Thin Wall XLPE Primary Cable	GREY	225.0	-	X	-
11	-	-	KS59-GA	3510359 R1	0.79	18.0	Thin Wall XLPE Primary Cable	WHITE	280.0	-	X	-
11	-	-	KT59-GA	3510359 R1	0.79	18.0	Thin Wall XLPE Primary Cable	WHITE	280.0	-	X	-
12	-	-	KS62Q	3510353 R1	0.79	18.0	Thin Wall XLPE Primary Cable	DARK BLUE	310.0	-	X	-
12	-	-	KT62DB	3510354 R1	1.16	16.0	Thin Wall XLPE Primary Cable	DARK BLUE	310.0	-	X	-

Connector Name	1112
Part Number	1661260C1
Instances	A26/B6.7/L9 - Seatbelt Reminder (Warning)(Driver & Passenger in parallel):Diagram1 A26/B6.7/L9 - Seatbelt Reminder (Warning)(Driver only):Diagram1
Mates	SW-SEATBELT-2017-03-01A

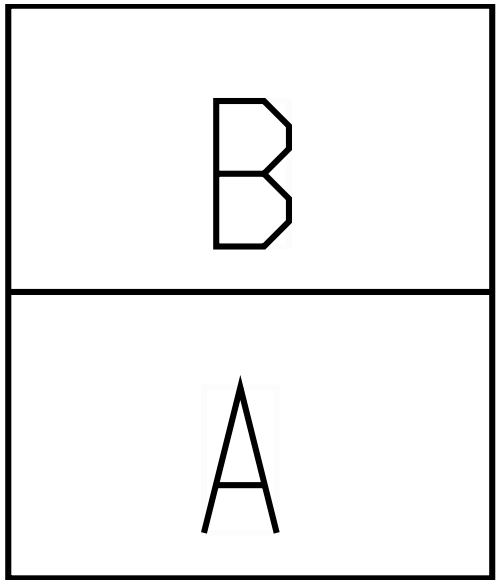

Name	Terminal Part Number	V-Min	Name	Wire Part Number	Wire CSA	Wire Spec	Wire Material description	Wire Color Description	Wire Length	End2 Terminal Part Number	End2 Pin Name	End2 Connect or
A	-	-	QW79B	2643673 R1	0.79	18.0	Std. Wall XLPE Primary Cable	GREY	2206.0	-	X	-
A	-	-	QI79A	3510311 R1	0.79	18.0	Thin Wall XLPE Primary Cable	GREY	3110.0	-	A2	J3-1600
B	-	-	QW9BC	2643673 R1	0.79	18.0	Std. Wall XLPE Primary Cable	GREY	2176.0	-	X	-
B	-	-	QI9BB	3510311 R1	0.79	18.0	Thin Wall XLPE Primary Cable	GREY	4090.0	-	-	-

Connector Name	1113
Part Number	1661260C1
Instances	A26/B6.7/L9 - Seatbelt Reminder (Warning)(Driver & Passenger in parallel):Diagram1
Mates	SW-SEATBELT-2017-03-01B

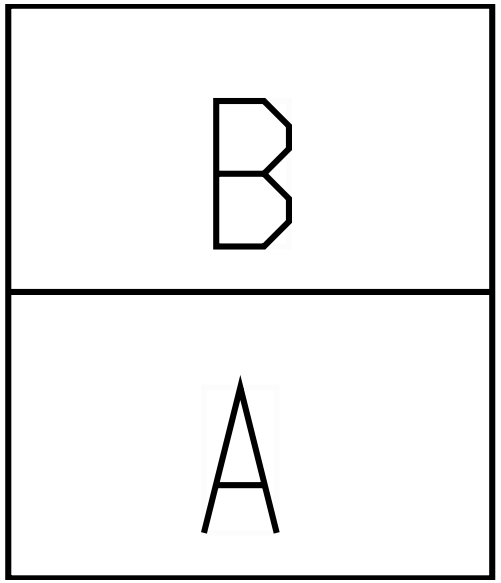

Name	Terminal Part Number	V-Min	Name	Wire Part Number	Wire CSA	Wire Spec	Wire Material description	Wire Color Description	Wire Length	End2 Terminal Part Number	End2 Pin Name	End2 Connect or
A	-	-	QW79C	2643673 R1	0.79	18.0	Std. Wall XLPE Primary Cable	GREY	2906.0	-	X	-
B	-	-	QW9BD	2643673 R1	0.79	18.0	Std. Wall XLPE Primary Cable	GREY	2876.0	-	X	-

Connector Name	1127R
Part Number	1667741C1
Instances	A26/B6.7/L9 - Driver and Passenger Seats - RollTek (Hard Wired):Diagram1 A26/B6.7/L9 - Seats (RollTek) Drivers Seat Only (Hard Wired) - Leather:Diagram1 A26/B6.7/L9 - Seats (RollTek) Drivers Seat Only (Hard Wired) - Mordular:Diagram1 A26/B6.7/L9 - Seats (RollTek) Drivers Seat Only (Hard Wired) - Vinyl:Diagram1
Mates	DEV-RESISTOR_390_OHM_2W-01

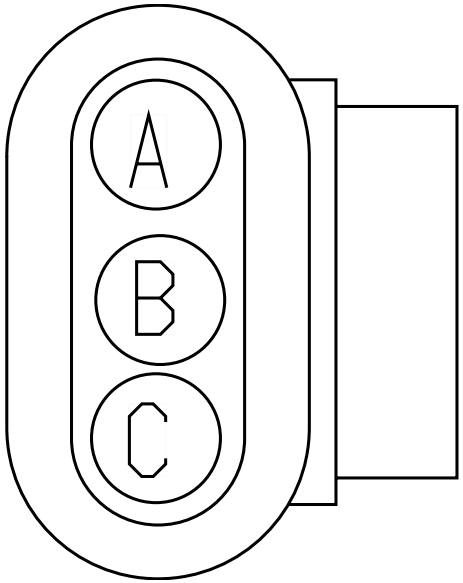

Name	Terminal Part Number	V-Min	Name	Wire Part Number	Wire CSA	Wire Spec	Wire Material description	Wire Color Description	Wire Length	End2 Terminal Part Number	End2 Pin Name	End2 Connect or
A	-	-	DL13BD	3510323 R1	0.79	18.0	Thin Wall XLPE Primary Cable	PINK	0.0	-	X	-
C	-	-	DL179B	3510359 R1	0.79	18.0	Thin Wall XLPE Primary Cable	WHITE	0.0	-	X	-

Connector Name 1200A

Part Number 3768152C1

Instances
A26 - Cab J1939 (250Kbps):A26 - Cab J1939 (250Kbps)
A26 - CAN Layout:Cab Standard J1939 (250Kbps)
A26 - Heating Ventilation & Air Conditioning (HVAC):Diagram1
A26 - Heating Ventilation & Air Conditioning (HVAC) Auto Temp Control:Diagram1 - HVAC
A26 - Heating Ventilation & Air Conditioning (HVAC) Auto Temp Control:Diagram2 - Actuators
A26 - Heating Ventilation & Air Conditioning (HVAC) Auto Temp Control:Diagram3 - Sensors
B6.7 - Cab J1939 (250kbps):B6.7 - Cab J1939 (250Kbps)
B6.7 - CAN Layout:Cab Standard J1939 (250Kbps)
B6.7 - Heating Ventilation & Air Conditioning (HVAC):Diagram1
B6.7 - Heating Ventilation & Air Conditioning (HVAC) Auto Temp Control:Diagram1 - HVAC
B6.7 - Heating Ventilation & Air Conditioning (HVAC) Auto Temp Control:Diagram2 - Actuators
B6.7 - Heating Ventilation & Air Conditioning (HVAC) Auto Temp Control:Diagram3 - Sensors
L9 - Cab J1939 (250kbps):L9 - Cab J1939 (250Kbps)
L9 - CAN Layout:Cab Standard J1939 (250Kbps)
L9 - Heating Ventilation & Air Conditioning (HVAC):Diagram1
L9 - Heating Ventilation & Air Conditioning (HVAC) Auto Temp Control:Diagram1 - HVAC
L9 - Heating Ventilation & Air Conditioning (HVAC) Auto Temp Control:Diagram2 - Actuators
L9 - Heating Ventilation & Air Conditioning (HVAC) Auto Temp Control:Diagram3 - Sensors

Mates MODU-HVAC_CRTL_HEAD-6003-0 6-01A

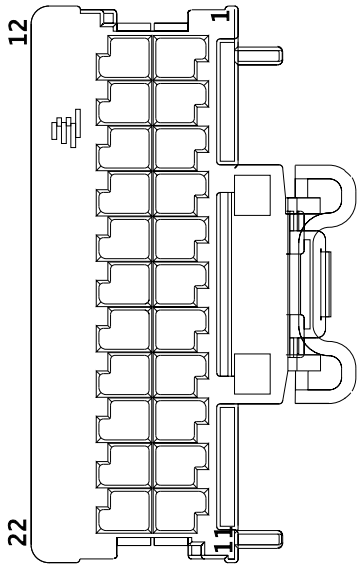

Name	Terminal Part Number	V-Min	Name	Wire Part Number	Wire CSA	Wire Spec	Wire Material description	Wire Color Description	Wire Length	End2 Terminal Part Number	End2 Pin Name	End2 Connector
1	-	-	AA73A	3510298 R1	0.53	20.0	Thin Wall XLPE Primary Cable	LIGHT GREEN	980.0	-	X	-

Name	Terminal Part Number	V-Min	Name	Wire Part Number	Wire CSA	Wire Spec	Wire Material description	Wire Color Description	Wire Length	End2 Terminal Part Number	End2 Pin Name	End2 Connector
2	-	-	AE74-G	3510358 R1	0.53	20.0	Thin Wall XLPE Primary Cable	WHITE	1180.0	-	-	-
3	-	-	ZF75D-G	2645643 R1	0.35	22.0	Thin Wall XLPE Primary Cable	LIGHT GREEN	2730.0	-	5	1053
4	-	-	ZF75D	2645643 R1	0.35	22.0	Thin Wall XLPE Primary Cable	LIGHT GREEN	2730.0	-	1	1053
5	-	-	AA75B	3510298 R1	0.53	20.0	Thin Wall XLPE Primary Cable	LIGHT GREEN	3390.0	-	P	1200E
6	-	-	TA75A	3510298 R1	0.53	20.0	Thin Wall XLPE Primary Cable	LIGHT GREEN	1390.0	-	X	-
7	-	-	-	-	-	-	-	-	-	-	-	-
7	-	-	WIRE720031	-	0.0	-	-	-	0.0	-	PIN1	-
8	-	-	-	-	-	-	-	-	-	-	-	-
8	-	-	WIRE720033	-	0.0	-	-	-	0.0	-	PIN1	-
9	-	-	AA74A2	3510298 R1	0.53	20.0	Thin Wall XLPE Primary Cable	LIGHT GREEN	3390.0	-	B	1200E
10	-	-	AA74B2	3510298 R1	0.53	20.0	Thin Wall XLPE Primary Cable	LIGHT GREEN	3390.0	-	G	1200E

Name	Terminal Part Number	V-Min	Name	Wire Part Number	Wire CSA	Wire Spec	Wire Material description	Wire Color Description	Wire Length	End2 Terminal Part Number	End2 Pin Name	End2 Connector
11	-	-	AA74D5	3510298 R1	0.53	20.0	Thin Wall XLPE Primary Cable	LIGHT GREEN	3240.0	-	K	1200C
12	-	-	AA73B	3510298 R1	0.53	20.0	Thin Wall XLPE Primary Cable	LIGHT GREEN	980.0	-	X	-
13	-	-	AE74-GA	3510358 R1	0.53	20.0	Thin Wall XLPE Primary Cable	WHITE	1180.0	-	-	-
14	-	-	ZF75TS1	3510298 R1	0.53	20.0	Thin Wall XLPE Primary Cable	LIGHT GREEN	1790.0	-	2	1200F
15	-	-	ZF75TS2	3510298 R1	0.53	20.0	Thin Wall XLPE Primary Cable	LIGHT GREEN	1790.0	-	1	1200F
16	-	-	ZF75TS3	3510298 R1	0.53	20.0	Thin Wall XLPE Primary Cable	LIGHT GREEN	1790.0	-	4	1200F
17	-	-	ZF75TS4	3510298 R1	0.53	20.0	Thin Wall XLPE Primary Cable	LIGHT GREEN	1790.0	-	3	1200F
18	-	-	AA74C2	3510298 R1	0.53	20.0	Thin Wall XLPE Primary Cable	LIGHT GREEN	3240.0	-	B	1200C

Name	Terminal Part Number	V-Min	Name	Wire Part Number	Wire CSA	Wire Spec	Wire Material description	Wire Color Description	Wire Length	End2 Terminal Part Number	End2 Pin Name	End2 Connect or
19	-	-	AA74E2	3510298 R1	0.53	20.0	Thin Wall XLPE Primary Cable	LIGHT GREEN	3240.0	-	M	1200C
21	-	-	AA74D2	3510298 R1	0.53	20.0	Thin Wall XLPE Primary Cable	LIGHT GREEN	3240.0	-	G	1200C
22	-	-	AA74D4	3510298 R1	0.53	20.0	Thin Wall XLPE Primary Cable	LIGHT GREEN	3240.0	-	J	1200C

Connector Name	1200B
Part Number	3768153C1
Instances	A26 - Heating Ventilation & Air Conditioning (HVAC):Diagram1 A26 - Heating Ventilation & Air Conditioning (HVAC) Auto Temp Control:Diagram2 - Actuators B6.7 - Heating Ventilation & Air Conditioning (HVAC):Diagram1 B6.7 - Heating Ventilation & Air Conditioning (HVAC) Auto Temp Control:Diagram2 - Actuators L9 - Heating Ventilation & Air Conditioning (HVAC):Diagram1 L9 - Heating Ventilation & Air Conditioning (HVAC) Auto Temp Control:Diagram2 - Actuators
Mates	DEV-HVAC_CTRL_HEAD_AUTO-01

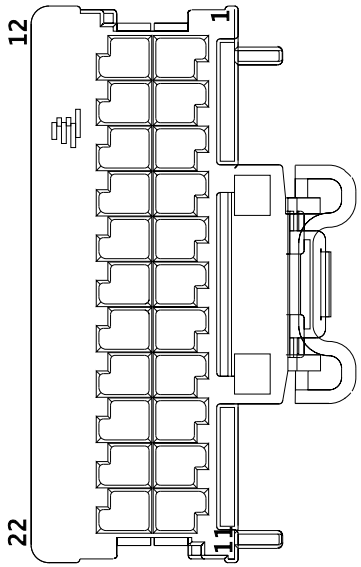

Name	Terminal Part Number	V-Min	Name	Wire Part Number	Wire CSA	Wire Spec	Wire Material description	Wire Color Description	Wire Length	End2 Terminal Part Number	End2 Pin Name	End2 Connect or
1	-	-	AA74B1	3510298 R1	0.53	20.0	Thin Wall XLPE Primary Cable	LIGHT GREEN	3390.0	-	F	1200E
2	-	-	AA74B3	3510298 R1	0.53	20.0	Thin Wall XLPE Primary Cable	LIGHT GREEN	3390.0	-	H	1200E
3	-	-	AA74B4	3510298 R1	0.53	20.0	Thin Wall XLPE Primary Cable	LIGHT GREEN	3390.0	-	J	1200E
4	-	-	AA74C1	3510298 R1	0.53	20.0	Thin Wall XLPE Primary Cable	LIGHT GREEN	3240.0	-	A	1200C

Name	Terminal Part Number	V-Min	Name	Wire Part Number	Wire CSA	Wire Spec	Wire Material description	Wire Color Description	Wire Length	End2 Terminal Part Number	End2 Pin Name	End2 Connector
5	-	-	AA74C3	3510298 R1	0.53	20.0	Thin Wall XLPE Primary Cable	LIGHT GREEN	3240.0	-	C	1200C
6	-	-	AA74C4	3510298 R1	0.53	20.0	Thin Wall XLPE Primary Cable	LIGHT GREEN	3240.0	-	D	1200C
7	-	-	AA74C5	3510298 R1	0.53	20.0	Thin Wall XLPE Primary Cable	LIGHT GREEN	3240.0	-	E	1200C
8	-	-	AA74E1	3510298 R1	0.53	20.0	Thin Wall XLPE Primary Cable	LIGHT GREEN	3240.0	-	L	1200C
9	-	-	AA74E3	3510298 R1	0.53	20.0	Thin Wall XLPE Primary Cable	LIGHT GREEN	3240.0	-	N	1200C
10	-	-	AA74E4	3510298 R1	0.53	20.0	Thin Wall XLPE Primary Cable	LIGHT GREEN	3240.0	-	P	1200C
11	-	-	AA74E5	3510298 R1	0.53	20.0	Thin Wall XLPE Primary Cable	LIGHT GREEN	3240.0	-	S	1200C
12	-	-	AA74B5	3510298 R1	0.53	20.0	Thin Wall XLPE Primary Cable	LIGHT GREEN	3390.0	-	K	1200E

Name	Terminal Part Number	V-Min	Name	Wire Part Number	Wire CSA	Wire Spec	Wire Material description	Wire Color Description	Wire Length	End2 Terminal Part Number	End2 Pin Name	End2 Connector
13	-	-	AA74A1	3510298 R1	0.53	20.0	Thin Wall XLPE Primary Cable	LIGHT GREEN	3390.0	-	A	1200E
14	-	-	AA74A3	3510298 R1	0.53	20.0	Thin Wall XLPE Primary Cable	LIGHT GREEN	3390.0	-	C	1200E
15	-	-	AA74A4	3510298 R1	0.53	20.0	Thin Wall XLPE Primary Cable	LIGHT GREEN	3390.0	-	D	1200E
16	-	-	AA74A5	3510298 R1	0.53	20.0	Thin Wall XLPE Primary Cable	LIGHT GREEN	3390.0	-	E	1200E
21	-	-	AA74D1	3510298 R1	0.53	20.0	Thin Wall XLPE Primary Cable	LIGHT GREEN	3240.0	-	F	1200C
22	-	-	AA74D3	3510298 R1	0.53	20.0	Thin Wall XLPE Primary Cable	LIGHT GREEN	3240.0	-	H	1200C

Connector Name	1200C
Part Number	4057474C1
Instances	A26 - Heating Ventilation & Air Conditioning (HVAC):Diagram1 A26 - Heating Ventilation & Air Conditioning (HVAC) Auto Temp Control:Diagram2 - Actuators A26/B6.7/L9 - HVAC Assembly Actuators:Diagram 1 B6.7 - Heating Ventilation & Air Conditioning (HVAC):Diagram1 B6.7 - Heating Ventilation & Air Conditioning (HVAC) Auto Temp Control:Diagram2 - Actuators L9 - Heating Ventilation & Air Conditioning (HVAC):Diagram1 L9 - Heating Ventilation & Air Conditioning (HVAC) Auto Temp Control:Diagram2 - Actuators
Mates	DEV-HEAT/EVAP-01

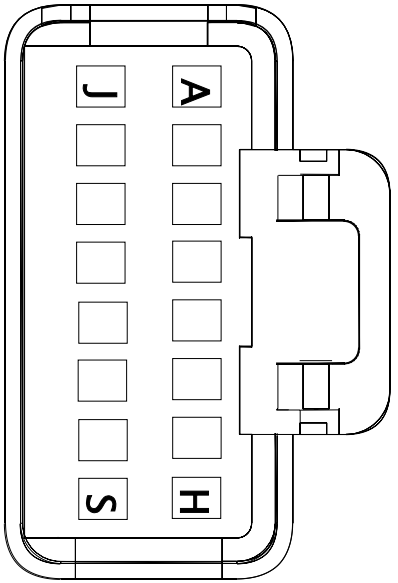

Name	Terminal Part Number	V-Min	Name	Wire Part Number	Wire CSA	Wire Spec	Wire Material description	Wire Color Description	Wire Length	End2 Terminal Part Number	End2 Pin Name	End2 Connect or
A	-	-	AA74C1	3510298 R1	0.53	20.0	Thin Wall XLPE Primary Cable	LIGHT GREEN	3240.0	-	4	1200B
A	-	-	WIRE237 300	-	0.35	22.0	Thin Wall XLPE Primary Cable	BLUE	0.0	-	1	HVAC
B	-	-	AA74C2	3510298 R1	0.53	20.0	Thin Wall XLPE Primary Cable	LIGHT GREEN	3240.0	-	18	1200A
B	-	-	WIRE237 301	-	0.35	22.0	Thin Wall XLPE Primary Cable	BLUE	0.0	-	2	HVAC

Name	Terminal Part Number	V-Min	Name	Wire Part Number	Wire CSA	Wire Spec	Wire Material description	Wire Color Description	Wire Length	End2 Terminal Part Number	End2 Pin Name	End2 Connector
C	-	-	AA74C3	3510298 R1	0.53	20.0	Thin Wall XLPE Primary Cable	LIGHT GREEN	3240.0	-	5	1200B
C	-	-	WIRE237 302	-	0.35	22.0	Thin Wall XLPE Primary Cable	BLUE	0.0	-	3	HVAC
D	-	-	AA74C4	3510298 R1	0.53	20.0	Thin Wall XLPE Primary Cable	LIGHT GREEN	3240.0	-	6	1200B
D	-	-	WIRE237 303	-	0.35	22.0	Thin Wall XLPE Primary Cable	GREEN	0.0	-	4	HVAC
E	-	-	AA74C5	3510298 R1	0.53	20.0	Thin Wall XLPE Primary Cable	LIGHT GREEN	3240.0	-	7	1200B
E	-	-	WIRE237 304	-	0.35	22.0	Thin Wall XLPE Primary Cable	GREY	0.0	-	6	HVAC
F	-	-	AA74D1	3510298 R1	0.53	20.0	Thin Wall XLPE Primary Cable	LIGHT GREEN	3240.0	-	21	1200B
F	-	-	WIRE237 306	-	0.35	22.0	Thin Wall XLPE Primary Cable	BLUE	0.0	-	1	HVAC

Name	Terminal Part Number	V-Min	Name	Wire Part Number	Wire CSA	Wire Spec	Wire Material description	Wire Color Description	Wire Length	End2 Terminal Part Number	End2 Pin Name	End2 Connector
G	-	-	AA74D2	3510298 R1	0.53	20.0	Thin Wall XLPE Primary Cable	LIGHT GREEN	3240.0	-	21	1200A
G	-	-	WIRE237 307	-	0.35	22.0	Thin Wall XLPE Primary Cable	BLUE	0.0	-	2	HVAC
H	-	-	AA74D3	3510298 R1	0.53	20.0	Thin Wall XLPE Primary Cable	LIGHT GREEN	3240.0	-	22	1200B
H	-	-	WIRE237 308	-	0.35	22.0	Thin Wall XLPE Primary Cable	BLUE	0.0	-	3	HVAC
J	-	-	AA74D4	3510298 R1	0.53	20.0	Thin Wall XLPE Primary Cable	LIGHT GREEN	3240.0	-	22	1200A
J	-	-	WIRE237 309	-	0.35	22.0	Thin Wall XLPE Primary Cable	GREEN	0.0	-	4	HVAC
K	-	-	AA74D5	3510298 R1	0.53	20.0	Thin Wall XLPE Primary Cable	LIGHT GREEN	3240.0	-	11	1200A
K	-	-	WIRE237 310	-	0.35	22.0	Thin Wall XLPE Primary Cable	GREY	0.0	-	6	HVAC

Name	Terminal Part Number	V-Min	Name	Wire Part Number	Wire CSA	Wire Spec	Wire Material description	Wire Color Description	Wire Length	End2 Terminal Part Number	End2 Pin Name	End2 Connector
L	-	-	AA74E1	3510298 R1	0.53	20.0	Thin Wall XLPE Primary Cable	LIGHT GREEN	3240.0	-	8	1200B
L	-	-	WIRE237 311	-	0.35	22.0	Thin Wall XLPE Primary Cable	BLUE	0.0	-	1	HVAC
M	-	-	AA74E2	3510298 R1	0.53	20.0	Thin Wall XLPE Primary Cable	LIGHT GREEN	3240.0	-	19	1200A
M	-	-	WIRE237 312	-	0.35	22.0	Thin Wall XLPE Primary Cable	GREEN	0.0	-	2	HVAC
N	-	-	AA74E3	3510298 R1	0.53	20.0	Thin Wall XLPE Primary Cable	LIGHT GREEN	3240.0	-	9	1200B
N	-	-	WIRE237 313	-	0.35	22.0	Thin Wall XLPE Primary Cable	GREEN	0.0	-	3	HVAC
P	-	-	AA74E4	3510298 R1	0.53	20.0	Thin Wall XLPE Primary Cable	LIGHT GREEN	3240.0	-	10	1200B
P	-	-	WIRE237 314	-	0.35	22.0	Thin Wall XLPE Primary Cable	GREY	0.0	-	4	HVAC

Name	Terminal Part Number	V-Min	Name	Wire Part Number	Wire CSA	Wire Spec	Wire Material description	Wire Color Description	Wire Length	End2 Terminal Part Number	End2 Pin Name	End2 Connector
S	-	-	AA74E5	3510298 R1	0.53	20.0	Thin Wall XLPE Primary Cable	LIGHT GREEN	3240.0	-	11	1200B
S	-	-	WIRE237 315	-	0.35	22.0	Thin Wall XLPE Primary Cable	BLUE	0.0	-	6	HVAC

Connector Name	1200D
Part Number	4061870C1
Instances	A26 - Heating Ventilation & Air Conditioning (HVAC):Diagram1 A26 - Heating Ventilation & Air Conditioning (HVAC) Auto Temp Control:Diagram1 - HVAC A26/B6.7/L9 - HVAC Assembly Actuators:Diagram 1 B6.7 - Heating Ventilation & Air Conditioning (HVAC):Diagram1 B6.7 - Heating Ventilation & Air Conditioning (HVAC) Auto Temp Control:Diagram1 - HVAC L9 - Heating Ventilation & Air Conditioning (HVAC):Diagram1 L9 - Heating Ventilation & Air Conditioning (HVAC) Auto Temp Control:Diagram1 - HVAC
Mates	DEV-HEAT/EVAP-01

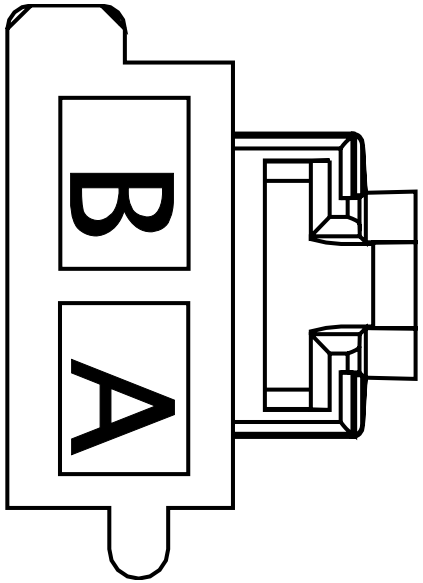

Name	Terminal Part Number	V-Min	Name	Wire Part Number	Wire CSA	Wire Spec	Wire Material description	Wire Color Description	Wire Length	End2 Terminal Part Number	End2 Pin Name	End2 Connect or
A	-	-	TA75AC	2643695 R1	3.01	12.0	Std. Wall XLPE Primary Cable	RED	3415.0	-	-	-
A	-	-	WIRE237 316	-	0.35	22.0	Thin Wall XLPE Primary Cable	RED	0.0	-	1	HVAC
B	-	-	AD75-G	3510362 R1	3.01	12.0	Thin Wall XLPE Primary Cable	WHITE	2170.0	-	-	-
B	-	-	WIRE237 317	-	0.35	22.0	Thin Wall XLPE Primary Cable	WHITE	0.0	-	6	HVAC

Connector Name 1200E

Part Number 4057658C1

Instances
A26 - Heating Ventilation & Air Conditioning (HVAC):Diagram1
A26 - Heating Ventilation & Air Conditioning (HVAC) Auto Temp Control:Diagram1 - HVAC
A26 - Heating Ventilation & Air Conditioning (HVAC) Auto Temp Control:Diagram2 - Actuators
A26/B6.7/L9 - HVAC Assembly Actuators:Diagram 1
B6.7 - Heating Ventilation & Air Conditioning (HVAC):Diagram1
B6.7 - Heating Ventilation & Air Conditioning (HVAC) Auto Temp Control:Diagram1 - HVAC
B6.7 - Heating Ventilation & Air Conditioning (HVAC) Auto Temp Control:Diagram2 - Actuators
L9 - Heating Ventilation & Air Conditioning (HVAC):Diagram1
L9 - Heating Ventilation & Air Conditioning (HVAC) Auto Temp Control:Diagram1 - HVAC
L9 - Heating Ventilation & Air Conditioning (HVAC) Auto Temp Control:Diagram2 - Actuators

Mates DEV-HEAT/EVAP-01

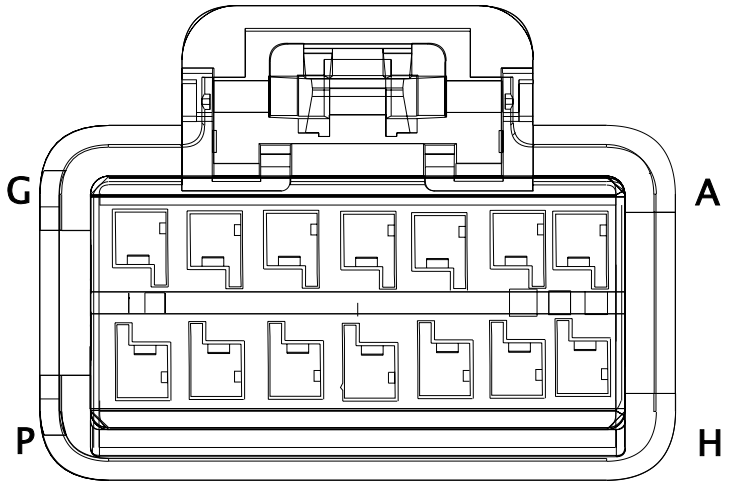

Name	Terminal Part Number	V-Min	Name	Wire Part Number	Wire CSA	Wire Spec	Wire Material description	Wire Color Description	Wire Length	End2 Terminal Part Number	End2 Pin Name	End2 Connector
A	-	-	AA74A1	3510298 R1	0.53	20.0	Thin Wall XLPE Primary Cable	LIGHT GREEN	3390.0	-	13	1200B
A	-	-	74A1	-	0.35	22.0	Thin Wall XLPE Primary Cable	BLUE	0.0	-	1	HVAC
B	-	-	AA74A2	3510298 R1	0.53	20.0	Thin Wall XLPE Primary Cable	LIGHT GREEN	3390.0	-	9	1200A
B	-	-	WIRE237319	-	0.35	22.0	Thin Wall XLPE Primary Cable	BLUE	0.0	-	2	HVAC

Name	Terminal Part Number	V-Min	Name	Wire Part Number	Wire CSA	Wire Spec	Wire Material description	Wire Color Description	Wire Length	End2 Terminal Part Number	End2 Pin Name	End2 Connector
C	-	-	AA74A3	3510298 R1	0.53	20.0	Thin Wall XLPE Primary Cable	LIGHT GREEN	3390.0	-	14	1200B
C	-	-	WIRE237320	-	0.35	22.0	Thin Wall XLPE Primary Cable	BLUE	0.0	-	3	HVAC
D	-	-	AA74A4	3510298 R1	0.53	20.0	Thin Wall XLPE Primary Cable	LIGHT GREEN	3390.0	-	15	1200B
D	-	-	WIRE237321	-	0.35	22.0	Thin Wall XLPE Primary Cable	GREEN	0.0	-	4	HVAC
E	-	-	AA74A5	3510298 R1	0.53	20.0	Thin Wall XLPE Primary Cable	LIGHT GREEN	3390.0	-	16	1200B
E	-	-	WIRE237322	-	0.35	22.0	Thin Wall XLPE Primary Cable	GREY	0.0	-	6	HVAC
F	-	-	AA74B1	3510298 R1	0.53	20.0	Thin Wall XLPE Primary Cable	LIGHT GREEN	3390.0	-	1	1200B
F	-	-	WIRE237323	-	0.35	22.0	Thin Wall XLPE Primary Cable	BLUE	0.0	-	1	HVAC

Name	Terminal Part Number	V-Min	Name	Wire Part Number	Wire CSA	Wire Spec	Wire Material description	Wire Color Description	Wire Length	End2 Terminal Part Number	End2 Pin Name	End2 Connector
G	-	-	AA74B2	3510298 R1	0.53	20.0	Thin Wall XLPE Primary Cable	LIGHT GREEN	3390.0	-	10	1200A
G	-	-	WIRE237 324	-	0.35	22.0	Thin Wall XLPE Primary Cable	GREEN	0.0	-	2	HVAC
H	-	-	AA74B3	3510298 R1	0.53	20.0	Thin Wall XLPE Primary Cable	LIGHT GREEN	3390.0	-	2	1200B
H	-	-	WIRE237 325	-	0.35	22.0	Thin Wall XLPE Primary Cable	GREEN	0.0	-	3	HVAC
J	-	-	AA74B4	3510298 R1	0.53	20.0	Thin Wall XLPE Primary Cable	LIGHT GREEN	3390.0	-	3	1200B
J	-	-	WIRE237 326	-	0.35	22.0	Thin Wall XLPE Primary Cable	GREEN	0.0	-	4	HVAC
K	-	-	AA74B5	3510298 R1	0.53	20.0	Thin Wall XLPE Primary Cable	LIGHT GREEN	3390.0	-	12	1200B
K	-	-	WIRE237 327	-	0.35	22.0	Thin Wall XLPE Primary Cable	BLUE	0.0	-	6	HVAC

Name	Terminal Part Number	V-Min	Name	Wire Part Number	Wire CSA	Wire Spec	Wire Material description	Wire Color Description	Wire Length	End2 Terminal Part Number	End2 Pin Name	End2 Connector
L	-	-	SA77D	3510298 R1	0.53	20.0	Thin Wall XLPE Primary Cable	LIGHT GREEN	2945.0	-	A10	J7-1607
L	-	-	WIRE237 328	-	0.35	22.0	Thin Wall XLPE Primary Cable	GREEN	0.0	-	1	HVAC
M	-	-	AA6AM	3510310 R1	0.53	20.0	Thin Wall XLPE Primary Cable	GREY	2945.0	-	B10	J7-1607
M	-	-	WIRE237 329	-	0.35	22.0	Thin Wall XLPE Primary Cable	GREEN	0.0	-	2	HVAC
N	-	-	TA75AB	3510299 R1	0.79	18.0	Thin Wall XLPE Primary Cable	LIGHT GREEN	2000.0	-	X	-
N	-	-	WIRE237 330	-	0.35	22.0	Thin Wall XLPE Primary Cable	GREEN	0.0	-	2	HVAC
P	-	-	AA75B	3510298 R1	0.53	20.0	Thin Wall XLPE Primary Cable	LIGHT GREEN	3390.0	-	5	1200A
P	-	-	WIRE237 332	-	0.35	22.0	Thin Wall XLPE Primary Cable	GREY	0.0	-	3	HVAC

Connector Name	1200F
Part Number	4116508C1
Instances	A26 - Heating Ventilation & Air Conditioning (HVAC) Auto Temp Control:Diagram3 - Sensors B6.7 - Heating Ventilation & Air Conditioning (HVAC) Auto Temp Control:Diagram3 - Sensors L9 - Heating Ventilation & Air Conditioning (HVAC) Auto Temp Control:Diagram3 - Sensors
Mates	DEV-ITOS_SNSR-01

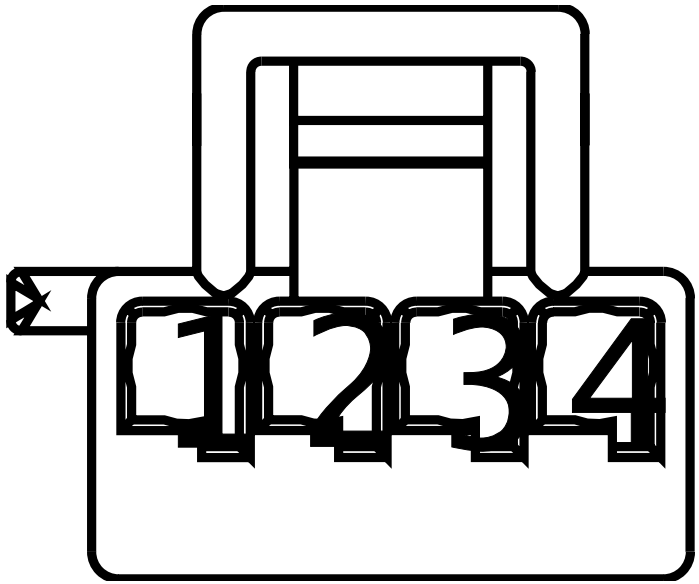

Name	Terminal Part Number	V-Min	Name	Wire Part Number	Wire CSA	Wire Spec	Wire Material description	Wire Color Description	Wire Length	End2 Terminal Part Number	End2 Pin Name	End2 Connect or
1	-	-	ZF75TS2	3510298 R1	0.53	20.0	Thin Wall XLPE Primary Cable	LIGHT GREEN	1790.0	-	15	1200A
2	-	-	ZF75TS1	3510298 R1	0.53	20.0	Thin Wall XLPE Primary Cable	LIGHT GREEN	1790.0	-	14	1200A
3	-	-	ZF75TS4	3510298 R1	0.53	20.0	Thin Wall XLPE Primary Cable	LIGHT GREEN	1790.0	-	17	1200A
4	-	-	ZF75TS3	3510298 R1	0.53	20.0	Thin Wall XLPE Primary Cable	LIGHT GREEN	1790.0	-	16	1200A

Connector Name	1200
Part Number	RING-E-1-2_0
Instances	B6.7 - Bosch LH160_LH200 Alternator:Diagram1 B6.7 - Bosch LH160_LH200 Alternator:Diagram2 B6.7 - Delco Remy 28SI Alternator W/Sensor Option 1:Diagram1 B6.7 - Delco Remy 28SI Alternator W/Sensor Option 2:Diagram1 B6.7 - Delco Remy 36SI Alternator W/Sensor:Diagram1 B6.7 - Delco Remy 40SI Alternator W/Sensor:Diagram1 B6.7 - Leece-Neville - LN 325A Alternator W/Sensor:Diagram1 B6.7 - Leece-Neville 320PAH Alternator:Diagram1 B6.7 - Leece-Neville AVI160 Alternator:Diagram1 B6.7 - Leece-Neville AVI160-210A/240A Alternator W/ Sensor:Diagram1
Mates	MOT-STARTER-5024-01-04

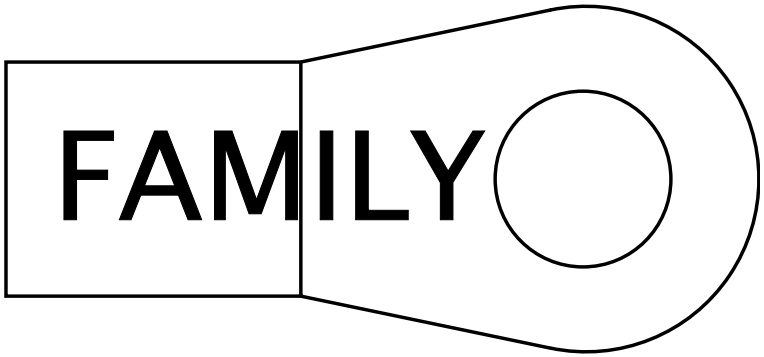

Name	Terminal Part Number	V-Min	Name	Wire Part Number	Wire CSA	Wire Spec	Wire Material description	Wire Color Description	Wire Length	End2 Terminal Part Number	End2 Pin Name	End2 Connect or
A	-	-	WF2-G	3592742 R1	39.43	1.0	Std. Wall XLPE Battery Cable	WHITE	2550.0	-	A	1040
A	-	-	WU2-G	3592742 R1	39.43	1.0	Std. Wall XLPE Battery Cable	WHITE	1120.0	-	A	1040
A	-	-	WW2-G	3592741 R1	32.19	2.0	Std. Wall XLPE Battery Cable	WHITE	1205.0	-	A	1070
A	-	-	WK2-G	3592741 R1	32.19	2.0	Std. Wall XLPE Battery Cable	WHITE	2615.0	-	A	1070

Name	Terminal Part Number	V-Min	Name	Wire Part Number	Wire CSA	Wire Spec	Wire Material description	Wire Color Description	Wire Length	End2 Terminal Part Number	End2 Pin Name	End2 Connector
A	-	-	WM2-G	3592741 R1	32.19	2.0	Std. Wall XLPE Battery Cable	WHITE	1110.0	-	A	K19_1000
A	-	-	WA2-G	3592741 R1	32.19	2.0	Std. Wall XLPE Battery Cable	WHITE	1390.0	-	A	K19_1000
A	-	-	WG2-G	3592742 R1	39.43	1.0	Std. Wall XLPE Battery Cable	WHITE	2695.0	-	A	1050
A	-	-	WV2-G	3592741 R1	32.19	2.0	Std. Wall XLPE Battery Cable	WHITE	1120.0	-	A	1050
A	-	-	WC2-G	2645227 R1	61.89	0.0	SGX FLEX 125C	BLACK	1130.0	-	A	1060
A	-	-	WR2-G	2645227 R1	61.89	0.0	SGX FLEX 125C	BLACK	1180.0	-	A	1060
A	-	-	WB2-G	3592742 R1	39.43	1.0	Std. Wall XLPE Battery Cable	WHITE	2615.0	-	A	1010
A	-	-	WP2-G	3592742 R1	39.43	1.0	Std. Wall XLPE Battery Cable	WHITE	1110.0	-	A	1010
A	-	-	WX2-G	2645227 R1	61.89	0.0	SGX FLEX 125C	BLACK	1085.0	-	A	1080
A	-	-	WL2-G	2645227 R1	61.89	0.0	SGX FLEX 125C	BLACK	2615.0	-	A	1080

Name	Terminal Part Number	V-Min	Name	Wire Part Number	Wire CSA	Wire Spec	Wire Material description	Wire Color Description	Wire Length	End2 Terminal Part Number	End2 Pin Name	End2 Connect or
A	-	-	WD2-G	3592742 R1	39.43	1.0	Std. Wall XLPE Battery Cable	WHITE	1155.0	-	A	1020
A	-	-	WS2-G	3592742 R1	39.43	1.0	Std. Wall XLPE Battery Cable	WHITE	1205.0	-	A	1020

Connector Name 1200

Part Number RING-M-12_0

Instances L9 - Delco Remy 36SI Alternator W/Sensor:Diagram1
L9 - Leece-Neville AVI160 Alternator:Diagram1

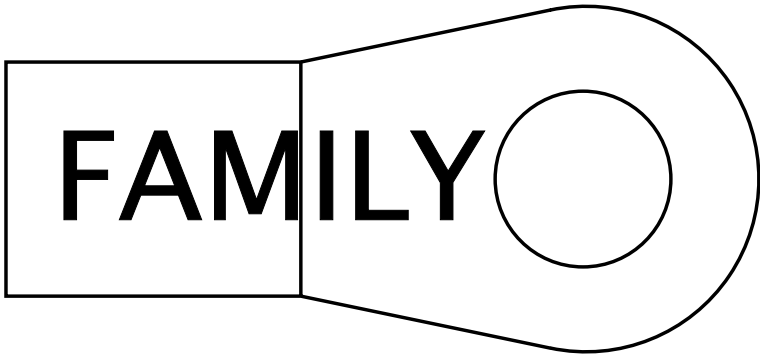

Name	Terminal Part Number	V-Min	Name	Wire Part Number	Wire CSA	Wire Spec	Wire Material description	Wire Color Description	Wire Length	End2 Terminal Part Number	End2 Pin Name	End2 Connect or
A	-	-	WK2-G	3592741 R1	32.19	2.0	Std. Wall XLPE Battery Cable	WHITE	2615.0	-	A	1070
A	-	-	WA2-G	3592741 R1	32.19	2.0	Std. Wall XLPE Battery Cable	WHITE	1390.0	-	A	1000

Connector Name 1201

Part Number RING-M-12_0

Instances L9 - Delco Remy 36SI Alternator W/Sensor:Diagram1
L9 - Leece-Neville AVI160 Alternator:Diagram1

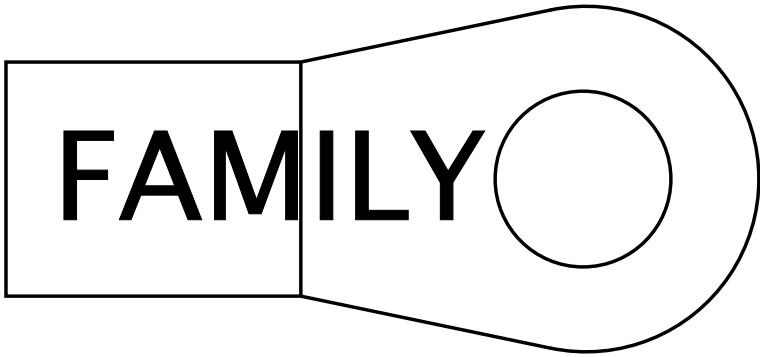

Name	Terminal Part Number	V-Min	Name	Wire Part Number	Wire CSA	Wire Spec	Wire Material description	Wire Color Description	Wire Length	End2 Terminal Part Number	End2 Pin Name	End2 Connect or
A	-	-	WK2-FLB	2643473 R1	4.81	10.0	FUSEABLE LINK	RUST	190.0	-	X	-
A	-	-	WK2-FLA	2643473 R1	4.81	10.0	FUSEABLE LINK	RUST	190.0	-	X	-
A	-	-	WA2-FLA	2643473 R1	4.81	10.0	FUSEABLE LINK	RUST	190.0	-	X	-
A	-	-	WA2-FLB	2643473 R1	4.81	10.0	FUSEABLE LINK	RUST	170.0	-	X	-

Connector Name	1202
Part Number	RING-E-1-2_0
Instances	L9 - Cranking (Starter) GEN4 BCM W/O Thermal Overcrank:Diagram1
Mates	MOT-STARTER-5024-01-04

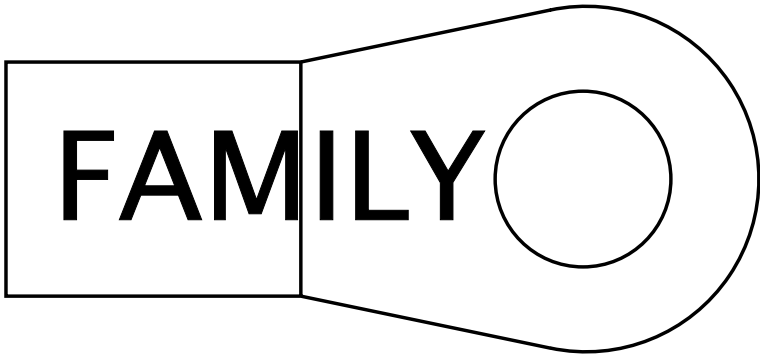

Name	Terminal Part Number	V-Min	Name	Wire Part Number	Wire CSA	Wire Spec	Wire Material description	Wire Color Description	Wire Length	End2 Terminal Part Number	End2 Pin Name	End2 Connect or
A	-	-	14-G	2645235 R1	49.99	0.0	SGX FLEX 125C	BLACK	360.0	-	1	S96_9257
A	-	-	WB2-G	3592742 R1	39.43	1.0	Std. Wall XLPE Battery Cable	WHITE	2615.0	-	A	1010

Connector Name 1202

Part Number 3767197C1

Instances A26 - Hazard Warning Light N/Trlr Socket:Diagram1
A26 - Hazard Warning Light N/Trlr Socket:Diagram2
L9 - Hazard Warning Light N/Trlr Socket:Diagram1
L9 - Hazard Warning Light N/Trlr Socket:Diagram2

Mates SW-HAZARD-1014-04-01A

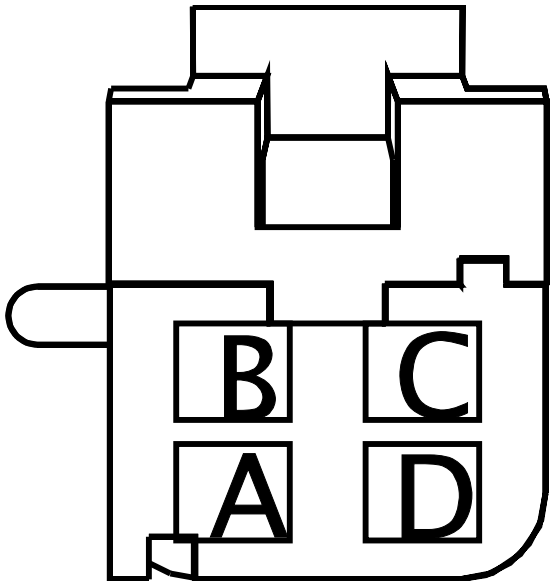

Name	Terminal Part Number	V-Min	Name	Wire Part Number	Wire CSA	Wire Spec	Wire Material description	Wire Color Description	Wire Length	End2 Terminal Part Number	End2 Pin Name	End2 Connect or
1	-	-	AE60-G	3510359 R1	0.79	18.0	Thin Wall XLPE Primary Cable	WHITE	740.0	-	X	-
2	-	-	AA60A	3510317 R1	0.79	18.0	Thin Wall XLPE Primary Cable	ORANGE	1475.0	-	A6	J7-1607
3	-	-	AB60C	3510317 R1	0.79	18.0	Thin Wall XLPE Primary Cable	ORANGE	1310.0	-	X	-
3	-	-	AC60C	3510317 R1	0.79	18.0	Thin Wall XLPE Primary Cable	ORANGE	1310.0	-	X	-

Name	Terminal Part Number	V-Min	Name	Wire Part Number	Wire CSA	Wire Spec	Wire Material description	Wire Color Description	Wire Length	End2 Terminal Part Number	End2 Pin Name	End2 Connector
4	-	-	KA60B	3510311 R1	0.79	18.0	Thin Wall XLPE Primary Cable	GREY	500.0	-	X	-

Connector Name	1227
Part Number	1661889C1
Instances	A26 - Lift Axle Controls (Center Pedestal Controls f/ 2 Lift Axles):Diagram1 A26 - Lift Axle Controls (Center Pedestal Controls f/ 1 lift axle):Diagram1 A26 - Lift Axle Controls (Center Pedestal Controls f/ 1 lift axle):Diagram2 A26 - Lift Axle Controls (Center Pedestal Controls f/ 3 lift axles):Diagram1 L9 - Lift Axle Controls (Center Pedestal Controls f/ 1 lift axle):Diagram1 L9 - Lift Axle Controls (Center Pedestal Controls f/ 1 lift axle):Diagram2 L9 - Lift Axle Controls (Center Pedestal Controls f/ 2 Lift Axles):Diagram1 L9 - Lift Axle Controls (Center Pedestal Controls f/ 3 lift axles):Diagram1
Mates	PAN-Lift_Axle_Controls-300 5-04-01A

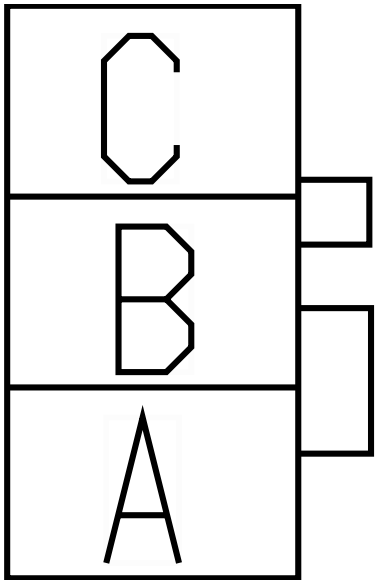

Name	Terminal Part Number	V-Min	Name	Wire Part Number	Wire CSA	Wire Spec	Wire Material description	Wire Color Description	Wire Length	End2 Terminal Part Number	End2 Pin Name	End2 Connector
A	-	-	KR59H	3510311 R1	0.79	18.0	Thin Wall XLPE Primary Cable	GREY	3780.0	-	X	-
B	-	-	KR59K	3510311 R1	0.79	18.0	Thin Wall XLPE Primary Cable	GREY	3780.0	-	X	-
C	-	-	KR59-GBN	3510360 R1	1.16	16.0	Thin Wall XLPE Primary Cable	WHITE	5435.0	-	-	-

Connector Name	1234
Part Number	3605713C1
Instances	A26 - CAN Layout:Powertrain Standard J1939 (500Kbps) A26 - Hill Start Aid (Bendix):Diagram1 A26 - Hill Start Aid (Bendix):Diagram2 A26 - Powertrain J1939 Allison 3k/4k:A26 - Powertrain J1939 Allison 3k/4k A26 - Rear Lights Stop - Daisy Chain:Diagram1 A26 - Rear Lights Stop - Dual Assembly:Diagram1 A26 - Rear Lights Stop - Single Assemby:Diagram1 A26 - Remote Start/Stop:Diagram1 A26 - Transmission (Allison 3K/4K):Diagram1 A26 - Transmission Power Take Off (Auto Trans Dual PTO W/ 42 Parameters):Diagram1 A26 - Transmission Power Take Off (Auto Trans Single PTO w/21 Parameters):Diagram1 A26 - Transmission Shifter (Stalk Shifter Allison):Diagram1 A26/B6.7/L9 - Trans Range Inhibit (J1939 Comm):Diagram1 A26/B6.7/L9 - Transfer Case - High/Low Air Sol:Diagram1 A26/B6.7/L9 - Transfer Case - High/Neu/Low Air Sol:Diagram1 A26/B6.7/L9 - Transmission - MODE Selection:Diagram1 A26/B6.7/L9 - Trip Odometer (w/ECM & TCM):Diagram1 A26/B6.7/L9 - Vehicle Speedometer System (Automatic XMSN):Diagram1 B6.7 - CAN Layout:Powertrain Standard J1939 (500Kbps) B6.7 - Powertrain J1939 Allison 1k/2k:B6.7 - Allison 1k/2k Transmission B6.7 - Powertrain J1939 Allison 3k/4k:B6.7 - Allison 3k/4k Transmission B6.7 - Rear Lights Stop - Daisy Chain:Diagram1 B6.7 - Rear Lights Stop - Dual Assembly:Diagram1 B6.7 - Rear Lights Stop - Single Assemby:Diagram1 B6.7 - Remote Start/Stop:Diagram1 B6.7 - Remote Start/Stop w/ Emergency Pump:Diagram1 B6.7 - Starter Interlocks (BCM Controlled with Input from Allison 3K/4K TCM):Diagram1 B6.7 - T-Handle for Allison Without Park Position:Diagram1 B6.7 - T-Handle for Allison Without Park Position:Diagram2 B6.7 - Transmission (Allison 3K/4K):Diagram1 B6.7 - Transmission Power Take Off (Auto Trans Single PTO w/21 Parameters):Diagram1 B6.7 - Transmission Shifter (Stalk Shifter Allison):Diagram2

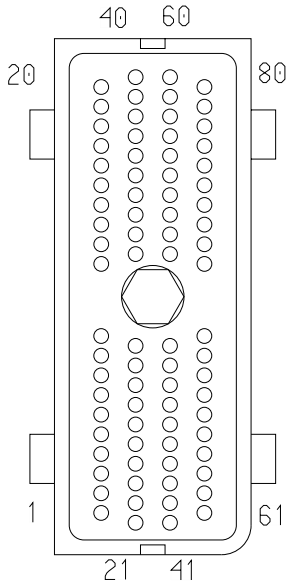

B6.7 - Transmission Shifter (T-Handle for Allison With Park Position):Diagram1
B6.7 - Transmission Shifter (T-Handle for Allison With Park Position):Diagram2
B6.7 - Transmission Shifter Allison 5th Gen Push Button(SURHD):Diagram2
L9 - Auto Neutral (Allison with Multiplex Switch and Confirmation Telltale):Diagram1
L9 - Auto Neutral (Allison without Multiplex Switch and Confirmation Telltale):Diagram1
L9 - Backup Light (Dual Daisy Reverse Light)Allison/ZF Trans 3K/4K:Diagram1
L9 - Backup Light (Single Reverse Light) Allison 3K/4K Option 1:Diagram1
L9 - Backup Light (Single Reverse Light) Allison 3K/4K Option 2:Diagram1
L9 - Backup Light (Single Reverse Light) Allison 3K/4K Option 3:Diagram1
L9 - Backup Light (Single Reverse Light)Allison:Diagram1
L9 - CAN Layout:Powertrain Standard J1939 (500kbps)
L9 - Hill Start Aid (Bendix):Diagram1
L9 - Hill Start Aid (Bendix):Diagram2
L9 - Hill Start Aid (WABCO):Diagram1
L9 - Powertrain J1939 Allison 3k/4k:L9 - Powertrain J1939 Allison 3k/4k
L9 - Rear Lights Stop - Daisy Chain:Diagram1
L9 - Rear Lights Stop - Dual Assembly:Diagram1
L9 - Rear Lights Stop - Single Assemby:Diagram1
L9 - Remote Start/Stop:Diagram1
L9 - Remote Start/Stop w/ Emergency Pump:Diagram1
L9 - Starter Interlocks (BCM Controlled with Input from Allison 3K/4K TCM):Diagram1
L9 - Transmission (Allison 3K/4K):Diagram2
L9 - Transmission Oil Temperature-Automatic Trans:Diagram1
L9 - Transmission Oil Temperature-Automatic Trans w/Aux Gauge:Diagram1
L9 - Transmission Power Take Off (Auto Trans Single PTO w/21 Parameters):Diagram1
L9 - Transmission Power Take Off (Auto Trans with Lectradrive):Diagram1
L9 - Transmission Power Take Off (Single PTO W/ RPM and Auto Trans):Diagram1
L9 - Transmission Shifter (Stalk Shifter Allison):Diagram2

Name	Terminal Part Number	V-Min	Name	Wire Part Number	Wire CSA	Wire Spec	Wire Material description	Wire Color Description	Wire Length	End2 Terminal Part Number	End2 Pin Name	End2 Connect or
1	-	-	A92#101	3510341 R1	0.79	18.0	Thin Wall XLPE Primary Cable	LIGHT BLUE	370.0	-	1	1235
3	-	-	A92#103	3510335 R1	0.79	18.0	Thin Wall XLPE Primary Cable	YELLOW 2	370.0	-	2	1235
5	-	-	A92#105	3510317 R1	0.79	18.0	Thin Wall XLPE Primary Cable	ORANGE	370.0	-	3	1235
6	-	-	-	-	-	-	-	-	-	-	-	-
6	-	-	WIRE722745	-	0.0	-	-	-	0.0	-	12	1237
6	-	-	WIRE720081	-	0.0	-	-	-	0.0	-	12	1237
6	-	-	WIRE722745	-	0.0	-	-	-	0.0	-	-	-
9	-	-	A92#109	3510311 R1	0.79	18.0	Thin Wall XLPE Primary Cable	GREY	370.0	-	4	1235
10	-	-	A92#110	3510323 R1	0.79	18.0	Thin Wall XLPE Primary Cable	PINK	370.0	-	5	1235
11	-	-	A92#111	3510317 R1	0.79	18.0	Thin Wall XLPE Primary Cable	ORANGE	370.0	-	5	1236

Name	Terminal Part Number	V-Min	Name	Wire Part Number	Wire CSA	Wire Spec	Wire Material description	Wire Color Description	Wire Length	End2 Terminal Part Number	End2 Pin Name	End2 Connector
12	-	-	A92#112	3510323 R1	0.79	18.0	Thin Wall XLPE Primary Cable	PINK	370.0	-	6	1236
15	-	-	A92#115	3510359 R1	0.79	18.0	Thin Wall XLPE Primary Cable	WHITE	370.0	-	9	1235
16	-	-	A92#116	3510341 R1	0.79	18.0	Thin Wall XLPE Primary Cable	LIGHT BLUE	370.0	-	7	1236
17	-	-	A92#117	3510341 R1	0.79	18.0	Thin Wall XLPE Primary Cable	LIGHT BLUE	370.0	-	6	1235
18	-	-	A92#118	3510311 R1	0.79	18.0	Thin Wall XLPE Primary Cable	GREY	370.0	-	18	1237
19	-	-	A92#119	3510341 R1	0.79	18.0	Thin Wall XLPE Primary Cable	LIGHT BLUE	370.0	-	15	1235
20	-	-	A92#120	3510341 R1	0.79	18.0	Thin Wall XLPE Primary Cable	LIGHT BLUE	370.0	-	3	1237
22	-	-	A92#122	3510335 R1	0.79	18.0	Thin Wall XLPE Primary Cable	YELLOW 2	370.0	-	7	1235

Name	Terminal Part Number	V-Min	Name	Wire Part Number	Wire CSA	Wire Spec	Wire Material description	Wire Color Description	Wire Length	End2 Terminal Part Number	End2 Pin Name	End2 Connector
23	-	-	A92#123	3510299 R1	0.79	18.0	Thin Wall XLPE Primary Cable	LIGHT GREEN	370.0	-	8	1235
24	-	-	A92#124	3510359 R1	0.79	18.0	Thin Wall XLPE Primary Cable	WHITE	370.0	-	16	1235
25	-	-	A47#125	3510329 R1	0.79	18.0	Thin Wall XLPE Primary Cable	TAN	370.0	-	8	1237
27	-	-	-	-	-	-	-	-	-	-	-	-
27	-	-	WIRE722742	-	0.0	-	-	-	0.0	-	4	1237
27	-	-	WIRE720082	-	0.0	-	-	-	0.0	-	4	1237
27	-	-	WIRE722742	-	0.0	-	-	-	0.0	-	-	-
30	-	-	A92#130	3510359 R1	0.79	18.0	Thin Wall XLPE Primary Cable	WHITE	370.0	-	10	1235
31	-	-	A92#131	3510335 R1	0.79	18.0	Thin Wall XLPE Primary Cable	YELLOW 2	370.0	-	9	1236
33	-	-	A92#133	3510335 R1	0.79	18.0	Thin Wall XLPE Primary Cable	YELLOW 2	370.0	-	10	1236
34	-	-	A92#134	3510335 R1	0.79	18.0	Thin Wall XLPE Primary Cable	YELLOW 2	370.0	-	11	1235

Name	Terminal Part Number	V-Min	Name	Wire Part Number	Wire CSA	Wire Spec	Wire Material description	Wire Color Description	Wire Length	End2 Terminal Part Number	End2 Pin Name	End2 Connector
36	-	-	A92#136	3510317 R1	0.79	18.0	Thin Wall XLPE Primary Cable	ORANGE	370.0	-	11	1236
37	-	-	A92#137	3510359 R1	0.79	18.0	Thin Wall XLPE Primary Cable	WHITE	370.0	-	12	1236
39	-	-	A48#139	3510317 R1	0.79	18.0	Thin Wall XLPE Primary Cable	ORANGE	370.0	-	1	1237
40	-	-	A47#140	3510299 R1	0.79	18.0	Thin Wall XLPE Primary Cable	LIGHT GREEN	370.0	-	2	1237
41	-	-	A92#141	3510329 R1	0.79	18.0	Thin Wall XLPE Primary Cable	TAN	370.0	-	12	1235
42	-	-	A92#142	3510359 R1	0.79	18.0	Thin Wall XLPE Primary Cable	WHITE	370.0	-	13	1237
43	-	-	A92#143	3510341 R1	0.79	18.0	Thin Wall XLPE Primary Cable	LIGHT BLUE	370.0	-	13	1235
45	-	-	A92#145	3510317 R1	0.79	18.0	Thin Wall XLPE Primary Cable	ORANGE	370.0	-	14	1235

Name	Terminal Part Number	V-Min	Name	Wire Part Number	Wire CSA	Wire Spec	Wire Material description	Wire Color Description	Wire Length	End2 Terminal Part Number	End2 Pin Name	End2 Connector
51	-	-	A92#151	3510359 R1	0.79	18.0	Thin Wall XLPE Primary Cable	WHITE	370.0	-	15	1236
52	-	-	A92#152	3510299 R1	0.79	18.0	Thin Wall XLPE Primary Cable	LIGHT GREEN	370.0	-	16	1236
54	-	-	A31#154	3510329 R1	0.79	18.0	Thin Wall XLPE Primary Cable	TAN	370.0	-	17	1236
55	-	-	A92#155	3510359 R1	0.79	18.0	Thin Wall XLPE Primary Cable	WHITE	370.0	-	5	1237
56	-	-	A92#156	3510323 R1	0.79	18.0	Thin Wall XLPE Primary Cable	PINK	370.0	-	14	1237
57	-	-	A92#157	3510359 R1	0.79	18.0	Thin Wall XLPE Primary Cable	WHITE	370.0	-	17	1237
58	-	-	A92#158	3510299 R1	0.79	18.0	Thin Wall XLPE Primary Cable	LIGHT GREEN	370.0	-	13	1236
59	-	-	A48#159	3510329 R1	0.79	18.0	Thin Wall XLPE Primary Cable	TAN	370.0	-	9	1237

Name	Terminal Part Number	V-Min	Name	Wire Part Number	Wire CSA	Wire Spec	Wire Material description	Wire Color Description	Wire Length	End2 Terminal Part Number	End2 Pin Name	End2 Connector
60	-	-	A47#160	3510335 R1	0.79	18.0	Thin Wall XLPE Primary Cable	YELLOW 2	370.0	-	10	1237
61	-	-	A92#161	3510317 R1	0.79	18.0	Thin Wall XLPE Primary Cable	ORANGE	370.0	-	15	1237
62	-	-	A92#162	3510335 R1	0.79	18.0	Thin Wall XLPE Primary Cable	YELLOW 2	370.0	-	17	1235
63	-	-	A92#163	3510335 R1	0.79	18.0	Thin Wall XLPE Primary Cable	YELLOW 2	370.0	-	18	1235
64	-	-	A92#164	3510341 R1	0.79	18.0	Thin Wall XLPE Primary Cable	LIGHT BLUE	370.0	-	1	1236
65	-	-	A92#165	3510329 R1	0.79	18.0	Thin Wall XLPE Primary Cable	TAN	370.0	-	2	1236
69	-	-	A92#169	3510311 R1	0.79	18.0	Thin Wall XLPE Primary Cable	GREY	370.0	-	3	1236
70	-	-	A92#170	3510323 R1	0.79	18.0	Thin Wall XLPE Primary Cable	PINK	370.0	-	4	1236

Name	Terminal Part Number	V-Min	Name	Wire Part Number	Wire CSA	Wire Spec	Wire Material description	Wire Color Description	Wire Length	End2 Terminal Part Number	End2 Pin Name	End2 Connect or
71	-	-	A92#171	3510335 R1	0.79	18.0	Thin Wall XLPE Primary Cable	YELLOW 2	370.0	-	14	1236
74	-	-	A92#174	3510341 R1	0.79	18.0	Thin Wall XLPE Primary Cable	LIGHT BLUE	370.0	-	6	1237
75	-	-	A92#175	3510317 R1	0.79	18.0	Thin Wall XLPE Primary Cable	ORANGE	370.0	-	16	1237
76	-	-	A92#176	3510335 R1	0.79	18.0	Thin Wall XLPE Primary Cable	YELLOW 2	370.0	-	7	1237
77	-	-	A92#177	3510299 R1	0.79	18.0	Thin Wall XLPE Primary Cable	LIGHT GREEN	370.0	-	8	1236
80	-	-	A92#180	3510317 R1	0.79	18.0	Thin Wall XLPE Primary Cable	ORANGE	370.0	-	11	1237

Connector Name 1234

Part Number 3605713C1

Instances A26 - Backup Light (Dual Daisy Reverse LT)Allison/ZF Trans 3K/4K:Diagram1
A26 - Backup Light (Dual Reverse Light)Allison/ZF Trans 3K/4K:Diagram1
A26 - Backup Light (Single Reverse Light) Allison 3K/4K:Diagram1
A26 - Backup Light (Single Reverse Light) Allison 3K/4K Option2:Diagram1
A26 - Backup Light (Single Reverse Light) W/Less Power Module Allison 3K/4K:Diagram1-Combination1
A26 - Backup Light (Single Reverse Light)Allison 3K/4K:Diagram1
A26 - Rear Lights Stop - Single Assemby Jumper Harness W/08TKC, 08THM:Diagram1
A26 - Rear Lights Stop - Single Assemby W/08TKJ:Diagram1
B6.7 - Backup Light (Dual Daisy Reverse LT)Allison/ZF Trans 3K/4K:Diagram1
B6.7 - Backup Light (Dual Reverse Light)Allison/ZF Trans 3K/4K:Diagram1
B6.7 - Backup Light (Single Reverse Light) Allison 3K/4K Option 1:Diagram1
B6.7 - Backup Light (Single Reverse Light) Allison 3K/4K Option 2:Diagram1
B6.7 - Backup Light (Single Reverse Light) Allison 3K/4K Option 3:Diagram1

Mates MODU-TCM-A002-10-03

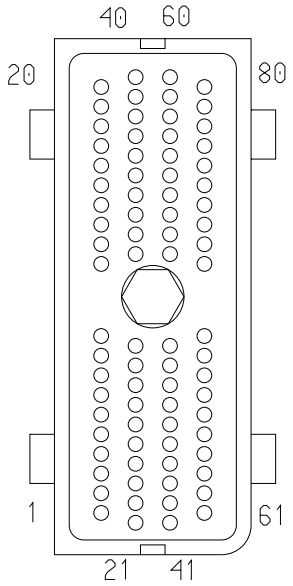

Name	Terminal Part Number	V-Min	Name	Wire Part Number	Wire CSA	Wire Spec	Wire Material description	Wire Color Description	Wire Length	End2 Terminal Part Number	End2 Pin Name	End2 Connector
6	-	-	-	-	-	-	-	-	-	-	-	-
27	-	-	-	-	-	-	-	-	-	-	-	-
65	-	-	A92#165	3510329 R1	0.79	18.0	Thin Wall XLPE Primary Cable	TAN	370.0	-	2	1236

Connector Name	1234
Part Number	3605713C1
Instances	A26 - Separate Rear Lights (Stop) W/08TVH:Diagram1
Mates	MODU-TCM-A002-10-03

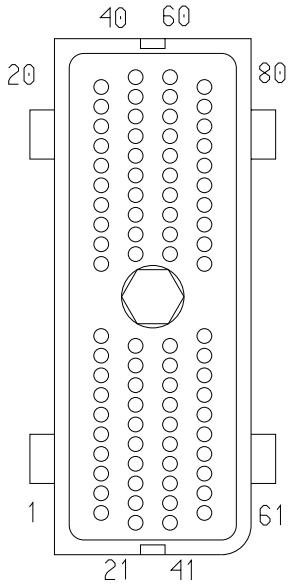

Name	Terminal Part Number	V-Min	Name	Wire Part Number	Wire CSA	Wire Spec	Wire Material description	Wire Color Description	Wire Length	End2 Terminal Part Number	End2 Pin Name	End2 Connector
6	-	-	-	-	-	-	-	-	-	-	-	-
27	-	-	-	-	-	-	-	-	-	-	-	-

Connector Name	1235
Part Number	3627615C1
Short Description	TRANS MODULE 1
Instances	A26 - Starter Interlock (BCM Controlled with Input from Allison 3K/4K TCM):Diagram1 A26 - Transmission Shifter (Stalk Shifter Allison):Diagram1 B6.7 - Starter Interlocks (BCM Controlled with Input from Allison 3K/4K TCM):Diagram1 B6.7 - Transmission (Allison 3K/4K):Diagram1 L9 - Auto Neutral (Allison with Multiplex Switch and Confirmation Telltale):Diagram1 L9 - Auto Neutral (Allison without Multiplex Switch and Confirmation Telltale):Diagram1 L9 - Starter Interlocks (BCM Controlled with Input from Allison 3K/4K TCM):Diagram1 L9 - Transmission (Allison 3K/4K):Diagram2
Mates	1501

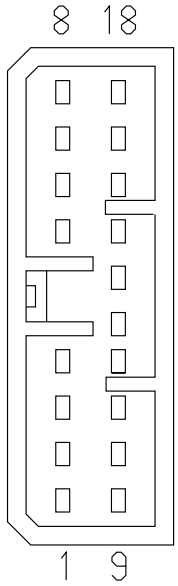

Name	Terminal Part Number	V-Min	Name	Wire Part Number	Wire CSA	Wire Spec	Wire Material description	Wire Color Description	Wire Length	End2 Terminal Part Number	End2 Pin Name	End2 Connect or
1	-	-	A92#101	3510341 R1	0.79	18.0	Thin Wall XLPE Primary Cable	LIGHT BLUE	370.0	-	1	1234
2	-	-	A92#103	3510335 R1	0.79	18.0	Thin Wall XLPE Primary Cable	YELLOW 2	370.0	-	3	1234
3	-	-	A92#105	3510317 R1	0.79	18.0	Thin Wall XLPE Primary Cable	ORANGE	370.0	-	5	1234
4	-	-	A92#109	3510311 R1	0.79	18.0	Thin Wall XLPE Primary Cable	GREY	370.0	-	9	1234

Name	Terminal Part Number	V-Min	Name	Wire Part Number	Wire CSA	Wire Spec	Wire Material description	Wire Color Description	Wire Length	End2 Terminal Part Number	End2 Pin Name	End2 Connect or
5	-	-	A92#110	3510323 R1	0.79	18.0	Thin Wall XLPE Primary Cable	PINK	370.0	-	10	1234
6	-	-	A92#117	3510341 R1	0.79	18.0	Thin Wall XLPE Primary Cable	LIGHT BLUE	370.0	-	17	1234
7	-	-	A92#122	3510335 R1	0.79	18.0	Thin Wall XLPE Primary Cable	YELLOW 2	370.0	-	22	1234
8	-	-	A92#123	3510299 R1	0.79	18.0	Thin Wall XLPE Primary Cable	LIGHT GREEN	370.0	-	23	1234
9	-	-	A92#115	3510359 R1	0.79	18.0	Thin Wall XLPE Primary Cable	WHITE	370.0	-	15	1234
10	-	-	A92#130	3510359 R1	0.79	18.0	Thin Wall XLPE Primary Cable	WHITE	370.0	-	30	1234
11	-	-	A92#134	3510335 R1	0.79	18.0	Thin Wall XLPE Primary Cable	YELLOW 2	370.0	-	34	1234
12	-	-	A92#141	3510329 R1	0.79	18.0	Thin Wall XLPE Primary Cable	TAN	370.0	-	41	1234

Name	Terminal Part Number	V-Min	Name	Wire Part Number	Wire CSA	Wire Spec	Wire Material description	Wire Color Description	Wire Length	End2 Terminal Part Number	End2 Pin Name	End2 Connect or
12	-	-	A92#141	3510329 R1	0.79	18.0	Thin Wall XLPE Primary Cable	TAN	370.0	-	41	7150
13	-	-	A92#143	3510341 R1	0.79	18.0	Thin Wall XLPE Primary Cable	LIGHT BLUE	370.0	-	43	1234
14	-	-	A92#145	3510317 R1	0.79	18.0	Thin Wall XLPE Primary Cable	ORANGE	370.0	-	45	1234
15	-	-	A92#119	3510341 R1	0.79	18.0	Thin Wall XLPE Primary Cable	LIGHT BLUE	370.0	-	19	1234
16	-	-	A92#124	3510359 R1	0.79	18.0	Thin Wall XLPE Primary Cable	WHITE	370.0	-	24	1234
17	-	-	A92#162	3510335 R1	0.79	18.0	Thin Wall XLPE Primary Cable	YELLOW 2	370.0	-	62	1234
18	-	-	A92#163	3510335 R1	0.79	18.0	Thin Wall XLPE Primary Cable	YELLOW 2	370.0	-	63	1234

Connector Name	1235
Part Number	3627615C1
Short Description	TRANS MODULE 1
Instances	A26 - Transmission (Allison 3K/4K):Diagram1 B6.7 - Transmission Shifter (Stalk Shifter Allison):Diagram2 B6.7 - Transmission Shifter Allison 5th Gen Push Button(SURHD):Diagram2 L9 - Transmission Shifter (Stalk Shifter Allison):Diagram2
Mates	1501

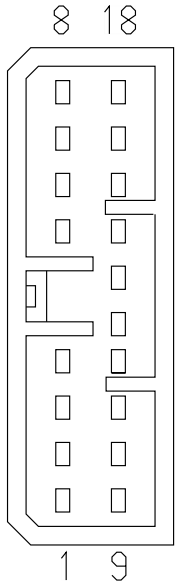

Name	Terminal Part Number	V-Min	Name	Wire Part Number	Wire CSA	Wire Spec	Wire Material description	Wire Color Description	Wire Length	End2 Terminal Part Number	End2 Pin Name	End2 Connect or
1	-	-	A92#101	3510341 R1	0.79	18.0	Thin Wall XLPE Primary Cable	LIGHT BLUE	370.0	-	1	1234
2	-	-	A92#103	3510335 R1	0.79	18.0	Thin Wall XLPE Primary Cable	YELLOW 2	370.0	-	3	1234
3	-	-	A92#105	3510317 R1	0.79	18.0	Thin Wall XLPE Primary Cable	ORANGE	370.0	-	5	1234
4	-	-	A92#109	3510311 R1	0.79	18.0	Thin Wall XLPE Primary Cable	GREY	370.0	-	9	1234

Name	Terminal Part Number	V-Min	Name	Wire Part Number	Wire CSA	Wire Spec	Wire Material description	Wire Color Description	Wire Length	End2 Terminal Part Number	End2 Pin Name	End2 Connector
5	-	-	A92#110	3510323 R1	0.79	18.0	Thin Wall XLPE Primary Cable	PINK	370.0	-	10	1234
6	-	-	A92#117	3510341 R1	0.79	18.0	Thin Wall XLPE Primary Cable	LIGHT BLUE	370.0	-	17	1234
7	-	-	A92#122	3510335 R1	0.79	18.0	Thin Wall XLPE Primary Cable	YELLOW 2	370.0	-	22	1234
8	-	-	A92#123	3510299 R1	0.79	18.0	Thin Wall XLPE Primary Cable	LIGHT GREEN	370.0	-	23	1234
9	-	-	A92#115	3510359 R1	0.79	18.0	Thin Wall XLPE Primary Cable	WHITE	370.0	-	15	1234
10	-	-	A92#130	3510359 R1	0.79	18.0	Thin Wall XLPE Primary Cable	WHITE	370.0	-	30	1234
11	-	-	A92#134	3510335 R1	0.79	18.0	Thin Wall XLPE Primary Cable	YELLOW 2	370.0	-	34	1234
12	-	-	A92#141	3510329 R1	0.79	18.0	Thin Wall XLPE Primary Cable	TAN	370.0	-	41	1234

Name	Terminal Part Number	V-Min	Name	Wire Part Number	Wire CSA	Wire Spec	Wire Material description	Wire Color Description	Wire Length	End2 Terminal Part Number	End2 Pin Name	End2 Connect or
13	-	-	A92#143	3510341 R1	0.79	18.0	Thin Wall XLPE Primary Cable	LIGHT BLUE	370.0	-	43	1234
14	-	-	A92#145	3510317 R1	0.79	18.0	Thin Wall XLPE Primary Cable	ORANGE	370.0	-	45	1234
15	-	-	A92#119	3510341 R1	0.79	18.0	Thin Wall XLPE Primary Cable	LIGHT BLUE	370.0	-	19	1234
16	-	-	A92#124	3510359 R1	0.79	18.0	Thin Wall XLPE Primary Cable	WHITE	370.0	-	24	1234
17	-	-	A92#162	3510335 R1	0.79	18.0	Thin Wall XLPE Primary Cable	YELLOW 2	370.0	-	62	1234
18	-	-	A92#163	3510335 R1	0.79	18.0	Thin Wall XLPE Primary Cable	YELLOW 2	370.0	-	63	1234

Connector Name	1236
Part Number	2042685C1
Short Description	TRANS MODULE 2
Instances	A26 - Backup Light (Dual Daisy Reverse LT)Allison/ZF Trans 3K/4K:Diagram1 A26 - Backup Light (Dual Reverse Light)Allison/ZF Trans 3K/4K:Diagram1 A26 - Backup Light (Single Reverse Light) Allison 3K/4K:Diagram1 A26 - Backup Light (Single Reverse Light) Allison 3K/4K Option2:Diagram1 A26 - Backup Light (Single Reverse Light)Allison 3K/4K:Diagram1
Mates	1502

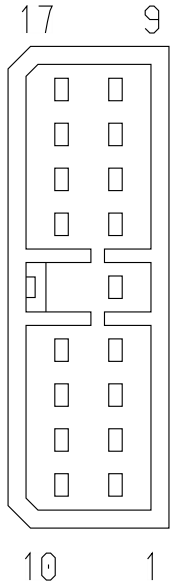

Name	Terminal Part Number	V-Min	Name	Wire Part Number	Wire CSA	Wire Spec	Wire Material description	Wire Color Description	Wire Length	End2 Terminal Part Number	End2 Pin Name	End2 Connect or
2	-	-	A92#165	3510329 R1	0.79	18.0	Thin Wall XLPE Primary Cable	TAN	370.0	-	65	1234

Connector Name	1236
Part Number	2042685C1
Short Description	TRANS MODULE 2
Instances	A26 - Backup Light (Single Reverse Light) W/Less Power Module Allison 3K/4K:Diagram1-Combination1 A26 - Transmission (Allison 3K/4K):Diagram1 B6.7 - Backup Light (Dual Daisy Reverse LT)Allison/ZF Trans 3K/4K:Diagram1 B6.7 - Backup Light (Dual Reverse Light)Allison/ZF Trans 3K/4K:Diagram1 B6.7 - Backup Light (Single Reverse Light) Allison 3K/4K Option 1:Diagram1 B6.7 - Backup Light (Single Reverse Light) Allison 3K/4K Option 2:Diagram1 B6.7 - Backup Light (Single Reverse Light) Allison 3K/4K Option 3:Diagram1
Mates	1502

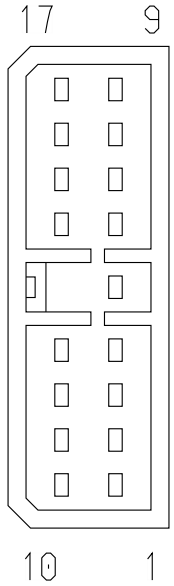

Name	Terminal Part Number	V-Min	Name	Wire Part Number	Wire CSA	Wire Spec	Wire Material description	Wire Color Description	Wire Length	End2 Terminal Part Number	End2 Pin Name	End2 Connect or
1	-	-	A92#164	3510341 R1	0.79	18.0	Thin Wall XLPE Primary Cable	LIGHT BLUE	370.0	-	64	1234
2	-	-	A92#165	3510329 R1	0.79	18.0	Thin Wall XLPE Primary Cable	TAN	370.0	-	65	1234
3	-	-	A92#169	3510311 R1	0.79	18.0	Thin Wall XLPE Primary Cable	GREY	370.0	-	69	1234
4	-	-	A92#170	3510323 R1	0.79	18.0	Thin Wall XLPE Primary Cable	PINK	370.0	-	70	1234

Name	Terminal Part Number	V-Min	Name	Wire Part Number	Wire CSA	Wire Spec	Wire Material description	Wire Color Description	Wire Length	End2 Terminal Part Number	End2 Pin Name	End2 Connector
5	-	-	A92#111	3510317 R1	0.79	18.0	Thin Wall XLPE Primary Cable	ORANGE	370.0	-	11	1234
6	-	-	A92#112	3510323 R1	0.79	18.0	Thin Wall XLPE Primary Cable	PINK	370.0	-	12	1234
7	-	-	A92#116	3510341 R1	0.79	18.0	Thin Wall XLPE Primary Cable	LIGHT BLUE	370.0	-	16	1234
8	-	-	A92#177	3510299 R1	0.79	18.0	Thin Wall XLPE Primary Cable	LIGHT GREEN	370.0	-	77	1234
9	-	-	A92#131	3510335 R1	0.79	18.0	Thin Wall XLPE Primary Cable	YELLOW 2	370.0	-	31	1234
10	-	-	A92#133	3510335 R1	0.79	18.0	Thin Wall XLPE Primary Cable	YELLOW 2	370.0	-	33	1234
11	-	-	A92#136	3510317 R1	0.79	18.0	Thin Wall XLPE Primary Cable	ORANGE	370.0	-	36	1234
12	-	-	A92#137	3510359 R1	0.79	18.0	Thin Wall XLPE Primary Cable	WHITE	370.0	-	37	1234

Name	Terminal Part Number	V-Min	Name	Wire Part Number	Wire CSA	Wire Spec	Wire Material description	Wire Color Description	Wire Length	End2 Terminal Part Number	End2 Pin Name	End2 Connect or
13	-	-	A92#158	3510299 R1	0.79	18.0	Thin Wall XLPE Primary Cable	LIGHT GREEN	370.0	-	58	1234
14	-	-	A92#171	3510335 R1	0.79	18.0	Thin Wall XLPE Primary Cable	YELLOW 2	370.0	-	71	1234
15	-	-	A92#151	3510359 R1	0.79	18.0	Thin Wall XLPE Primary Cable	WHITE	370.0	-	51	1234
16	-	-	A92#152	3510299 R1	0.79	18.0	Thin Wall XLPE Primary Cable	LIGHT GREEN	370.0	-	52	1234
17	-	-	A31#154	3510329 R1	0.79	18.0	Thin Wall XLPE Primary Cable	TAN	370.0	-	54	1234

Connector Name	1236
Part Number	2042685C1
Short Description	TRANS MODULE 2
Instances	B6.7 - Transmission (Allison 3K/4K):Diagram1 L9 - Backup Light (Dual Daisy Reverse Light)Allison/ZF Trans 3K/4K:Diagram1 L9 - Backup Light (Single Reverse Light) Allison 3K/4K Option 1:Diagram1 L9 - Backup Light (Single Reverse Light) Allison 3K/4K Option 2:Diagram1 L9 - Backup Light (Single Reverse Light) Allison 3K/4K Option 3:Diagram1 L9 - Backup Light (Single Reverse Light)Allison:Diagram1 L9 - Transmission (Allison 3K/4K):Diagram2
Mates	1502

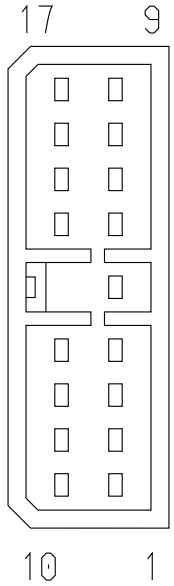

Name	Terminal Part Number	V-Min	Name	Wire Part Number	Wire CSA	Wire Spec	Wire Material description	Wire Color Description	Wire Length	End2 Terminal Part Number	End2 Pin Name	End2 Connect or
1	-	-	A92#164	3510341 R1	0.79	18.0	Thin Wall XLPE Primary Cable	LIGHT BLUE	370.0	-	64	1234
2	-	-	A92#165	3510329 R1	0.79	18.0	Thin Wall XLPE Primary Cable	TAN	370.0	-	65	1234
3	-	-	A92#169	3510311 R1	0.79	18.0	Thin Wall XLPE Primary Cable	GREY	370.0	-	69	1234
4	-	-	A92#170	3510323 R1	0.79	18.0	Thin Wall XLPE Primary Cable	PINK	370.0	-	70	1234

Name	Terminal Part Number	V-Min	Name	Wire Part Number	Wire CSA	Wire Spec	Wire Material description	Wire Color Description	Wire Length	End2 Terminal Part Number	End2 Pin Name	End2 Connector
5	-	-	A92#111	3510317 R1	0.79	18.0	Thin Wall XLPE Primary Cable	ORANGE	370.0	-	11	1234
6	-	-	A92#112	3510323 R1	0.79	18.0	Thin Wall XLPE Primary Cable	PINK	370.0	-	12	1234
7	-	-	A92#116	3510341 R1	0.79	18.0	Thin Wall XLPE Primary Cable	LIGHT BLUE	370.0	-	16	1234
8	-	-	A92#177	3510299 R1	0.79	18.0	Thin Wall XLPE Primary Cable	LIGHT GREEN	370.0	-	77	1234
9	-	-	A92#131	3510335 R1	0.79	18.0	Thin Wall XLPE Primary Cable	YELLOW 2	370.0	-	31	1234
10	-	-	A92#133	3510335 R1	0.79	18.0	Thin Wall XLPE Primary Cable	YELLOW 2	370.0	-	33	1234
11	-	-	A92#136	3510317 R1	0.79	18.0	Thin Wall XLPE Primary Cable	ORANGE	370.0	-	36	1234
12	-	-	A92#137	3510359 R1	0.79	18.0	Thin Wall XLPE Primary Cable	WHITE	370.0	-	37	1234

Name	Terminal Part Number	V-Min	Name	Wire Part Number	Wire CSA	Wire Spec	Wire Material description	Wire Color Description	Wire Length	End2 Terminal Part Number	End2 Pin Name	End2 Connect or
13	-	-	A92#158	3510299 R1	0.79	18.0	Thin Wall XLPE Primary Cable	LIGHT GREEN	370.0	-	58	1234
14	-	-	A92#171	3510335 R1	0.79	18.0	Thin Wall XLPE Primary Cable	YELLOW 2	370.0	-	71	1234
15	-	-	A92#151	3510359 R1	0.79	18.0	Thin Wall XLPE Primary Cable	WHITE	370.0	-	51	1234
16	-	-	A92#152	3510299 R1	0.79	18.0	Thin Wall XLPE Primary Cable	LIGHT GREEN	370.0	-	52	1234
17	-	-	A31#154	3510329 R1	0.79	18.0	Thin Wall XLPE Primary Cable	TAN	370.0	-	54	1234

Connector Name 1237
Part Number 2018589C1
Instances A26 - CAN Layout:Powertrain Standard J1939 (500Kbps)

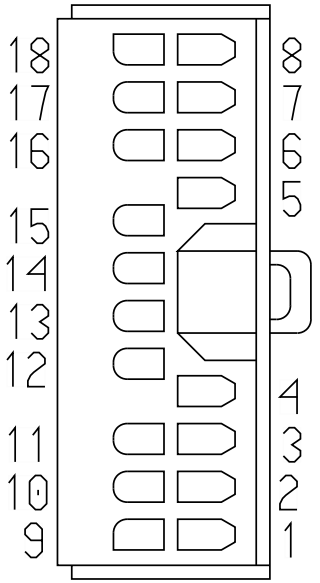

Name	Terminal Part Number	V-Min	Name	Wire Part Number	Wire CSA	Wire Spec	Wire Material description	Wire Color Description	Wire Length	End2 Terminal Part Number	End2 Pin Name	End2 Connect or
4	-	-	WIRE720082	-	0.0	-	-	-	0.0	-	27	1234
12	-	-	WIRE720081	-	0.0	-	-	-	0.0	-	6	1234

Connector Name	1237
Part Number	2018589C1
Instances	A26 - Powertrain J1939 Allison 3k/4k:A26 - Powertrain J1939 Allison 3k/4k B6.7 - CAN Layout:Powertrain Standard J1939 (500Kbps) B6.7 - Powertrain J1939 Allison 1k/2k:B6.7 - Allison 1k/2k Transmission B6.7 - Powertrain J1939 Allison 3k/4k:B6.7 - Allison 3k/4k Transmission L9 - CAN Layout:Powertrain Standard J1939 (500kbps) L9 - Powertrain J1939 Allison 3k/4k:L9 - Powertrain J1939 Allison 3k/4k
Mates	1503

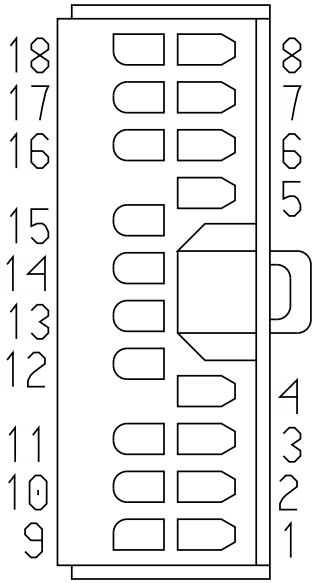

Name	Terminal Part Number	V-Min	Name	Wire Part Number	Wire CSA	Wire Spec	Wire Material description	Wire Color Description	Wire Length	End2 Terminal Part Number	End2 Pin Name	End2 Connect or
4	-	-	WIRE722742	-	0.0	-	-	-	0.0	-	27	1234
4	-	-	WIRE722742	-	0.0	-	-	-	0.0	-	-	-
12	-	-	WIRE722745	-	0.0	-	-	-	0.0	-	6	1234
12	-	-	WIRE722745	-	0.0	-	-	-	0.0	-	-	-

Connector Name	1237
Part Number	2018589C1
Short Description	TRANS MODULE 3
Instances	A26 - Transmission (Allison 3K/4K):Diagram1 B6.7 - Transmission (Allison 3K/4K):Diagram1 L9 - Transmission (Allison 3K/4K):Diagram2
Mates	1503

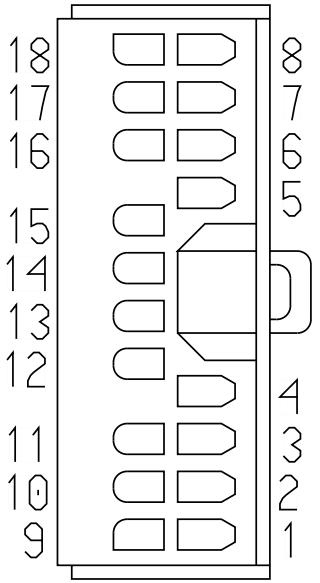

Name	Terminal Part Number	V-Min	Name	Wire Part Number	Wire CSA	Wire Spec	Wire Material description	Wire Color Description	Wire Length	End2 Terminal Part Number	End2 Pin Name	End2 Connect or
1	-	-	A48#139	3510317 R1	0.79	18.0	Thin Wall XLPE Primary Cable	ORANGE	370.0	-	39	1234
2	-	-	A47#140	3510299 R1	0.79	18.0	Thin Wall XLPE Primary Cable	LIGHT GREEN	370.0	-	40	1234
3	-	-	A92#120	3510341 R1	0.79	18.0	Thin Wall XLPE Primary Cable	LIGHT BLUE	370.0	-	20	1234
5	-	-	A92#155	3510359 R1	0.79	18.0	Thin Wall XLPE Primary Cable	WHITE	370.0	-	55	1234

Name	Terminal Part Number	V-Min	Name	Wire Part Number	Wire CSA	Wire Spec	Wire Material description	Wire Color Description	Wire Length	End2 Terminal Part Number	End2 Pin Name	End2 Connector
6	-	-	A92#174	3510341 R1	0.79	18.0	Thin Wall XLPE Primary Cable	LIGHT BLUE	370.0	-	74	1234
7	-	-	A92#176	3510335 R1	0.79	18.0	Thin Wall XLPE Primary Cable	YELLOW 2	370.0	-	76	1234
8	-	-	A47#125	3510329 R1	0.79	18.0	Thin Wall XLPE Primary Cable	TAN	370.0	-	25	1234
9	-	-	A48#159	3510329 R1	0.79	18.0	Thin Wall XLPE Primary Cable	TAN	370.0	-	59	1234
10	-	-	A47#160	3510335 R1	0.79	18.0	Thin Wall XLPE Primary Cable	YELLOW 2	370.0	-	60	1234
11	-	-	A92#180	3510317 R1	0.79	18.0	Thin Wall XLPE Primary Cable	ORANGE	370.0	-	80	1234
13	-	-	A92#142	3510359 R1	0.79	18.0	Thin Wall XLPE Primary Cable	WHITE	370.0	-	42	1234
14	-	-	A92#156	3510323 R1	0.79	18.0	Thin Wall XLPE Primary Cable	PINK	370.0	-	56	1234

Name	Terminal Part Number	V-Min	Name	Wire Part Number	Wire CSA	Wire Spec	Wire Material description	Wire Color Description	Wire Length	End2 Terminal Part Number	End2 Pin Name	End2 Connect or
15	-	-	A92#161	3510317 R1	0.79	18.0	Thin Wall XLPE Primary Cable	ORANGE	370.0	-	61	1234
16	-	-	A92#175	3510317 R1	0.79	18.0	Thin Wall XLPE Primary Cable	ORANGE	370.0	-	75	1234
17	-	-	A92#157	3510359 R1	0.79	18.0	Thin Wall XLPE Primary Cable	WHITE	370.0	-	57	1234
18	-	-	A92#118	3510311 R1	0.79	18.0	Thin Wall XLPE Primary Cable	GREY	370.0	-	18	1234

Connector Name	123
Part Number	3626435C1
Short Description	INTERCONNECT CONN AT JUNCTION BOX
Instances	A26 - Bosch LIL165 LIL200 Alternator W/Sensor:Diagram2 A26 - Delco Remy 28SI Alternator W/Sensor:Diagram2 A26 - Delco Remy 36SI Alternator W/Sensor:Diagram2 A26 - Delco Remy 40SI Alternator W/Sensor:Diagram2 A26 - Leece-Neville - LN 325A Alternator W/Sensor:Diagram2 A26 - Leece-Neville AVI160-210A/240A Alternator W/ Sensor:Diagram2
Mates	7200

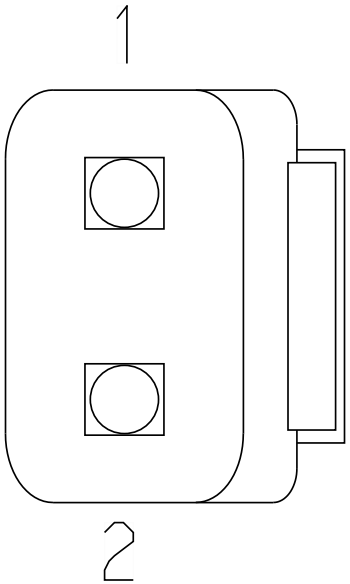

Name	Terminal Part Number	V-Min	Name	Wire Part Number	Wire CSA	Wire Spec	Wire Material description	Wire Color Description	Wire Length	End2 Terminal Part Number	End2 Pin Name	End2 Connect or
1	-	-	7A	2643686 R1	1.91	14.0	Std. Wall XLPE Primary Cable	RED	3950.0	-	1	945

Connector Name 1300

Part Number RING-M-12_0

Instances L9 - Bosch LH160_LH200 Alternator:Diagram1
L9 - Delco Remy 28SI Alternator W/Sensor:Diagram1
L9 - Delco Remy 40SI Alternator W/Sensor:Diagram1
L9 - Leece-Neville AVI160-210A/240A Alternator W/ Sensor:Diagram1

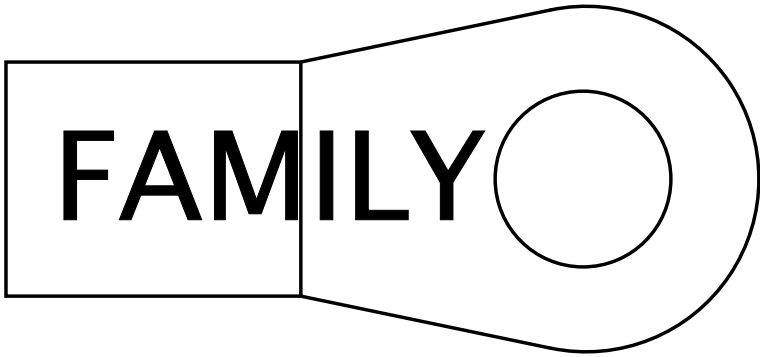

Name	Terminal Part Number	V-Min	Name	Wire Part Number	Wire CSA	Wire Spec	Wire Material description	Wire Color Description	Wire Length	End2 Terminal Part Number	End2 Pin Name	End2 Connect or
A	-	-	WB2-G	3592742 R1	39.43	1.0	Std. Wall XLPE Battery Cable	WHITE	2615.0	-	A	1010
A	-	-	WG2-G	3592742 R1	39.43	1.0	Std. Wall XLPE Battery Cable	WHITE	2695.0	-	A	1050
A	-	-	WF2-G	3592742 R1	39.43	1.0	Std. Wall XLPE Battery Cable	WHITE	2550.0	-	A	1040

Connector Name 1300

Part Number 3597143C1

Instances A26 - Cab J1939 (250Kbps):A26 - Cab J1939 (250Kbps)
A26 - CAN Layout:Cab Standard J1939 (250Kbps)
A26/B6.7/L9 - Four Speakers Daycab BT n/QC:Diagram1
A26/B6.7/L9 - Four Speakers Daycab n/BT n/QC:Diagram1
A26/B6.7/L9 - Radio:Diagram1
A26/B6.7/L9 - Radio w/Bluetooth:Diagram1
A26/B6.7/L9 - Radio w/Bluetooth:Diagram2
A26/B6.7/L9 - Radio w/Bluetooth without Steering Wheel Pod:Diagram1
A26/B6.7/L9 - Radio w/Steering Wheel Pod:Diagram1
A26/B6.7/L9 - Radio w/Steering Wheel Pod:Diagram2
A26/B6.7/L9 - Two Speakers Daycab BT n/QC:Diagram1
A26/B6.7/L9 - Two Speakers Daycab n/BT n/QC:Diagram1
B6.7 - Cab J1939 (250kbps):B6.7 - Cab J1939 (250Kbps)
B6.7 - CAN Layout:Cab Standard J1939 (250Kbps)
B6.7 - Speaker:Four Speakers Daycab w/BT w/QC:Diagram1
B6.7 - Speakers:Four Speakers Daycab n/BT w/QC:Diagram1
B6.7 - Speakers:Two Speakers n/BT w/QC:Diagram1
B6.7 - Speakers:Two Speakers w/BT w/QC:Diagram1
L9 - Cab J1939 (250kbps):L9 - Cab J1939 (250Kbps)
L9 - CAN Layout:Cab Standard J1939 (250Kbps)
L9 - Speaker:Four Speakers Daycab w/BT w/QC:Diagram1
L9 - Speakers:Four Speakers Daycab n/BT w/QC:Diagram1
L9 - Speakers:Two Speakers n/BT w/QC:Diagram1
L9 - Speakers:Two Speakers w/BT w/QC:Diagram1

Mates MODU-Radio-2008-02-01A

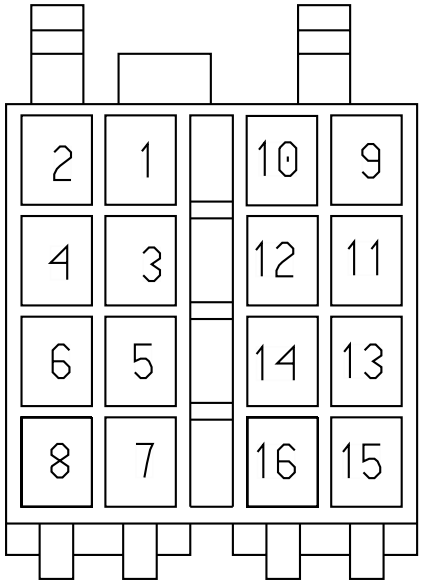

Name	Terminal Part Number	V-Min	Name	Wire Part Number	Wire CSA	Wire Spec	Wire Material description	Wire Color Description	Wire Length	End2 Terminal Part Number	End2 Pin Name	End2 Connect or
1	-	-	WIRE720043	-	0.0	-	-	-	0.0	-	PIN1	-
1	-	-	WIRE735285	-	0.0	-	-	-	0.0	-	PIN1	-
1	-	-	-	-	-	-	-	-	-	-	-	-
2	-	-	WIRE720045	-	0.0	-	-	-	0.0	-	PIN1	-

Name	Terminal Part Number	V-Min	Name	Wire Part Number	Wire CSA	Wire Spec	Wire Material description	Wire Color Description	Wire Length	End2 Terminal Part Number	End2 Pin Name	End2 Connector
2	-	-	WIRE735284	-	0.0	-	-	-	0.0	-	PIN1	-
2	-	-	-	-	-	-	-	-	-	-	-	-
4	-	-	SM86AE	3510299 R1	0.79	18.0	Thin Wall XLPE Primary Cable	LIGHT GREEN	1900.0	-	-	-
7	-	-	SM86P	3510299 R1	0.79	18.0	Thin Wall XLPE Primary Cable	LIGHT GREEN	1855.0	-	-	-
8	-	-	SM86-G	3510359 R1	0.79	18.0	Thin Wall XLPE Primary Cable	WHITE	890.0	-	-	-
9	-	-	SP86DA	3510299 R1	0.79	18.0	Thin Wall XLPE Primary Cable	LIGHT GREEN	3320.0	-	C	2312
10	-	-	SP86EA	3510299 R1	0.79	18.0	Thin Wall XLPE Primary Cable	LIGHT GREEN	3320.0	-	D	2312
11	-	-	MQ86K	3510299 R1	0.79	18.0	Thin Wall XLPE Primary Cable	LIGHT GREEN	1650.0	-	C	3206M
11	-	-	MQ86K	3510299 R1	0.79	18.0	Thin Wall XLPE Primary Cable	LIGHT GREEN	1650.0	-	C	3205M
12	-	-	MQ86L	3510299 R1	0.79	18.0	Thin Wall XLPE Primary Cable	LIGHT GREEN	1650.0	-	D	3206M

Name	Terminal Part Number	V-Min	Name	Wire Part Number	Wire CSA	Wire Spec	Wire Material description	Wire Color Description	Wire Length	End2 Terminal Part Number	End2 Pin Name	End2 Connect or
12	-	-	SQ86L	3510299 R1	0.79	18.0	Thin Wall XLPE Primary Cable	LIGHT GREEN	1650.0	-	D	3205M
13	-	-	MQ86H	3510299 R1	0.79	18.0	Thin Wall XLPE Primary Cable	LIGHT GREEN	1265.0	-	A	1916A
13	-	-	SQ86H	3510299 R1	0.79	18.0	Thin Wall XLPE Primary Cable	LIGHT GREEN	1235.0	-	C	3205M
14	-	-	MQ86J	3510299 R1	0.79	18.0	Thin Wall XLPE Primary Cable	LIGHT GREEN	1265.0	-	B	1916A
14	-	-	SQ86J	3510299 R1	0.79	18.0	Thin Wall XLPE Primary Cable	LIGHT GREEN	1235.0	-	D	3205M
15	-	-	SP86BA	3510299 R1	0.79	18.0	Thin Wall XLPE Primary Cable	LIGHT GREEN	2730.0	-	C	2312
16	-	-	SP86CA	3510299 R1	0.79	18.0	Thin Wall XLPE Primary Cable	LIGHT GREEN	2730.0	-	D	2312

Connector Name 1301

Part Number RING-M-12_0

Instances L9 - Bosch LH160_LH200 Alternator:Diagram1
L9 - Delco Remy 28SI Alternator W/Sensor:Diagram1
L9 - Delco Remy 40SI Alternator W/Sensor:Diagram1
L9 - Leece-Neville AVI160-210A/240A Alternator W/ Sensor:Diagram1

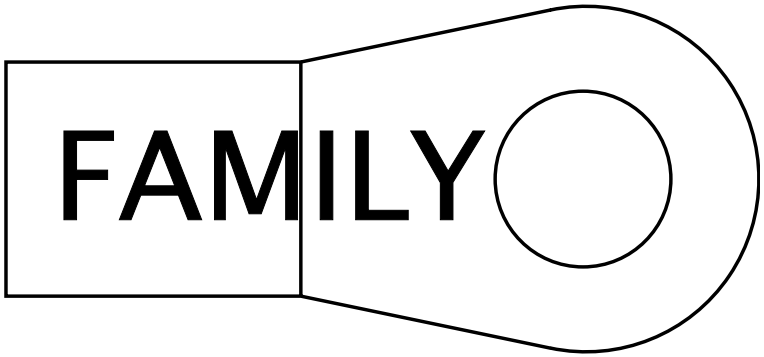

Name	Terminal Part Number	V-Min	Name	Wire Part Number	Wire CSA	Wire Spec	Wire Material description	Wire Color Description	Wire Length	End2 Terminal Part Number	End2 Pin Name	End2 Connect or
A	-	-	WB2-FLA	3961608 R1	7.48	8.0	FUSEABLE LINK	LIGHT BLUE	190.0	-	X	-
A	-	-	WB2-FLB	3961608 R1	7.48	8.0	FUSEABLE LINK	LIGHT BLUE	190.0	-	X	-
A	-	-	WG2-FLB	3961608 R1	7.48	8.0	FUSEABLE LINK	LIGHT BLUE	190.0	-	X	-
A	-	-	WG2-FLA	3961608 R1	7.48	8.0	FUSEABLE LINK	LIGHT BLUE	190.0	-	X	-
A	-	-	WF2-FLA	3961608 R1	7.48	8.0	FUSEABLE LINK	LIGHT BLUE	190.0	-	X	-
A	-	-	WF2-FLB	3961608 R1	7.48	8.0	FUSEABLE LINK	LIGHT BLUE	190.0	-	X	-

Connector Name	1301
Part Number	3600061C1
Instances	A26/B6.7/L9 - Radio w/Bluetooth:Diagram1 A26/B6.7/L9 - Radio w/Bluetooth:Diagram2 A26/B6.7/L9 - Radio w/Bluetooth without Steering Wheel Pod:Diagram1 A26/B6.7/L9 - Vehicle Information Display (With Bluetooth):Diagram1 A26/B6.7/L9 - Vehicle Information Display (Without Bluetooth):Diagram1 A26/B6.7/L9 - Vehicle Information Display Premium w/ Wi-Fi (VID):Diagram1
Mates	MODU-Radio-2008-02-05A

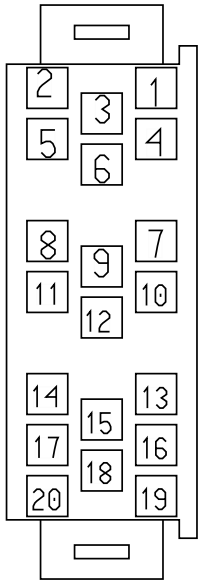

Name	Terminal Part Number	V-Min	Name	Wire Part Number	Wire CSA	Wire Spec	Wire Material description	Wire Color Description	Wire Length	End2 Terminal Part Number	End2 Pin Name	End2 Connect or
7	-	-	NE86AA	3510298 R1	0.53	20.0	Thin Wall XLPE Primary Cable	LIGHT GREEN	570.0	-	11	2225
9	-	-	NE86AC	3510298 R1	0.53	20.0	Thin Wall XLPE Primary Cable	LIGHT GREEN	570.0	-	13	2225
10	-	-	NE86AB	3510298 R1	0.53	20.0	Thin Wall XLPE Primary Cable	LIGHT GREEN	570.0	-	12	2225
11	-	-	NE86AD	3510298 R1	0.53	20.0	Thin Wall XLPE Primary Cable	LIGHT GREEN	570.0	-	14	2225
15	-	-	SR86A(+)	-	0.0	20.0	J1939 .46 WAL	YELLOW 2	1265.0	-	2	2505

Name	Terminal Part Number	V-Min	Name	Wire Part Number	Wire CSA	Wire Spec	Wire Material description	Wire Color Description	Wire Length	End2 Terminal Part Number	End2 Pin Name	End2 Connect or
16	-	-	SR86A(-)	-	0.0	20.0	J1939 .46 WAL	GREEN	1265.0	-	1	2505

Connector Name	1400
Part Number	3596926C1
Instances	A26 - Antilock Brake System (ABS) Bendix:Diagram1 A26 - Antilock Brake System (ABS) Bendix:Diagram2 A26 - Antilock Brake System (ABS) Bendix:Diagram3 A26 - Bendix Tractor or Towing Truck N/ Air SUSP J1939 Driven Lamp:Diagram1 A26 - Bendix Tractor or Towing Truck N/ Air SUSP J1939 Driven Lamp:Diagram2 A26 - Bendix Tractor or Towing Truck N/ Air SUSP J1939 Driven Lamp:Diagram3 A26 - Bendix Tractor or Towing Truck N/ Air SUSP J1939 Driven Lamp:Diagram4 A26 - Bendix Tractor or Towing Truck W/ Air SUSP J1939 Driven Lamp:Diagram1 A26 - Bendix Tractor or Towing Truck W/ Air SUSP J1939 Driven Lamp:Diagram2 A26 - Bendix Tractor or Towing Truck W/ Air SUSP J1939 Driven Lamp:Diagram3 A26 - Bendix Tractor or Towing Truck W/ Air SUSP J1939 Driven Lamp:Diagram4 A26 - CAN Layout:Powertrain Standard J1939 (500Kbps) A26 - Engine Brake Mux Switch:Diagram1 A26 - Engine Brake W/ Stalk Shifter:Diagram1 A26 - Exhaust Brake:Diagram1 A26 - Hill Start Aid (Bendix):Diagram1 A26 - Hill Start Aid (Bendix):Diagram2 A26 - Powertrain J1939 Allison 3k/4k:A26 - Powertrain J1939 Allison 3k/4k A26 - Powertrain J1939 UltraShift Transmission:A26 - Powertrain J1939 UltraShift Transmission A26 - Rear Lights Stop - Daisy Chain:Diagram1 A26 - Rear Lights Stop - Dual Assembly:Diagram1 A26 - Rear Lights Stop - Single Assemby:Diagram1 A26 - Rear Lights Stop - Single Assemby Jumper Harness W/08TKC, 08THM:Diagram1 A26 - Rear Lights Stop - Single Assemby W/08TKJ:Diagram1 A26 - Separate Rear Lights (Stop) W/08TVH:Diagram1 A26 - Stability Control (Bendix Straight Truck J1939 Driven Lamp):Diagram1 A26 - Stability Control (Bendix Straight Truck J1939 Driven Lamp):Diagram2

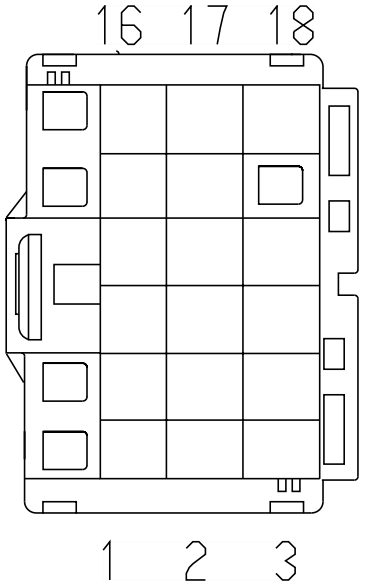

A26 - Stability Control (Bendix Straight Truck J1939 Driven Lamp):Diagram3
A26 - Stability Control (Bendix Straight Truck J1939 Driven Lamp):Diagram4
A26 - Traction Control (Bendix):Diagram1
A26 - Traction Control (Bendix):Diagram2
A26/B6.7/L9 - A26 - Adaptive Cruise Control w/o Display (Bendix):Diagram1
A26/B6.7/L9 - Transfer Case - High/Low Air Sol:Diagram1
A26/B6.7/L9 - Transfer Case - High/Neu/Low Air Sol:Diagram1
B6.7 - Antilock Brake System (ABS) BENDIX 4 Channel Implemenation:Diagram1
B6.7 - Antilock Brake System (ABS) BENDIX 4 Channel Implemenation:Diagram2
B6.7 - Antilock Brake System (ABS) BENDIX 4 Channel Implemenation:Diagram3
B6.7 - CAN Layout:Powertrain Standard J1939 (500Kbps)
B6.7 - Exhaust Brake (Cummins):Diagram1
B6.7 - Powertrain J1939 Allison 1k/2k:B6.7 - Allison 1k/2k Transmission
B6.7 - Powertrain J1939 Allison 3k/4k:B6.7 - Allison 3k/4k Transmission
B6.7 - Powertrain J1939 Manual Transmission:B6.7 - Manual Transmission
B6.7 - Rear Lights Stop - Daisy Chain:Diagram1
B6.7 - Rear Lights Stop - Dual Assembly:Diagram1
B6.7 - Rear Lights Stop - Single Assemby:Diagram1
B6.7 - Stability Control (Bendix Straight Truck J1939 Driven Lamp):Diagram1
B6.7 - Stability Control (Bendix Straight Truck J1939 Driven Lamp):Diagram2
B6.7 - Stability Control (Bendix Straight Truck J1939 Driven Lamp):Diagram3
B6.7 - Stability Control (Bendix Straight Truck J1939 Driven Lamp):Diagram4
B6.7 - Traction Control (Bendix):Diagram1
B6.7 - Traction Control (Bendix):Diagram2
B6.7/L9 - Engine Brake Mux Switch:Diagram1
B6.7/L9 - Engine Brake W/ Stalk Shifter:Diagram1
L9 - Antilock Brake System (ABS) BENDIX 4 Channel Implemenation:Diagram1
L9 - Antilock Brake System (ABS) Bendix 6 Channel Implementation:Diagram1

L9 - Antilock Brake System (ABS) Bendix 6 Channel Implementation:Diagram2
L9 - Antilock Brake System (ABS) Bendix 6 Channel Implementation:Diagram3
L9 - Antilock Brake System (ABS) Bendix 6 Channel Implementation:Diagram4
L9 - Antilock Brake System (ABS) Bendix 6 Channel Implementation:Diagram5
L9 - Antilock Brake System (ABS) Bendix 6 Channel Implementation:Diagram6
L9 - Antilock Brake System (ABS) Bendix 6 Channel Implementation:Diagram7
L9 - Antilock Brake System (ABS) Bendix 6 Channel Implementation:Diagram8
L9 - Antilock Brake System (ABS) Bendix 6 Channel Implementation:Diagram9
L9 - Bendix Tractor or Towing Truck W/ Air SUSP J1939 Driven Lamp:Diagram1
L9 - Bendix Tractor or Towing Truck W/ Air SUSP J1939 Driven Lamp:Diagram2
L9 - CAN Layout:Powertrain Standard J1939 (500kbps)
L9 - Exhaust Brake (Cummins):Diagram1
L9 - Hill Start Aid (Bendix):Diagram1
L9 - Hill Start Aid (Bendix):Diagram2
L9 - Powertrain J1939 Allison 3k/4k:L9 - Powertrain J1939 Allison 3k/4k
L9 - Powertrain J1939 Eaton:L9 - Powertrain J1939 Eaton
L9 - Powertrain J1939 Manual Transmission:Powertrain Standard J1939 (500kbps)
L9 - Rear Axle Load Distribution:Diagram1
L9 - Rear Lights Stop - Daisy Chain:Diagram1
L9 - Rear Lights Stop - Dual Assembly:Diagram1
L9 - Rear Lights Stop - Single Assemby:Diagram1
L9 - Stability Control (Bendix Straight Truck J1939 Driven Lamp):Diagram1
L9 - Stability Control (Bendix Straight Truck J1939 Driven Lamp):Diagram2
L9 - Stability Control (Bendix Straight Truck J1939 Driven Lamp):Diagram3
L9 - Stability Control (Bendix Straight Truck J1939 Driven Lamp):Diagram4
L9 - Traction Control (Bendix):Diagram1

Mates MODU-ABS-3003-01-02A

Name	Terminal Part Number	V-Min	Name	Wire Part Number	Wire CSA	Wire Spec	Wire Material description	Wire Color Description	Wire Length	End2 Terminal Part Number	End2 Pin Name	End2 Connector
1	-	-	XA94-GA	3510362 R1	3.01	12.0	Thin Wall XLPE Primary Cable	WHITE	2400.0	-	-	-
3	-	-	XA94V	3510311 R1	0.79	18.0	Thin Wall XLPE Primary Cable	GREY	3315.0	-	-	-
4	-	-	XB94BN	3510312 R1	1.16	16.0	Thin Wall XLPE Primary Cable	GREY	2550.0	-	15	1701
5	-	-	XB94BM	3510312 R1	1.16	16.0	Thin Wall XLPE Primary Cable	GREY	2550.0	-	14	1701
7	-	-	-	-	-	-	-	-	-	-	-	-
7	-	-	WIRE735 118	-	0.0	-	-	-	0.0	-	PIN1	-
7	-	-	WIRE720 095	-	0.0	-	-	-	0.0	-	PIN1	-
8	-	-	-	-	-	-	-	-	-	-	-	-
8	-	-	WIRE735 117	-	0.0	-	-	-	0.0	-	PIN1	-
8	-	-	WIRE720 098	-	0.0	-	-	-	0.0	-	PIN1	-
10	-	-	XA94BH	3510312 R1	1.16	16.0	Thin Wall XLPE Primary Cable	GREY	2550.0	-	18	1701
11	-	-	XA94BF	3510312 R1	1.16	16.0	Thin Wall XLPE Primary Cable	GREY	2550.0	-	19	1701

Name	Terminal Part Number	V-Min	Name	Wire Part Number	Wire CSA	Wire Spec	Wire Material description	Wire Color Description	Wire Length	End2 Terminal Part Number	End2 Pin Name	End2 Connector
16	-	-	XA94AY	3510314 R1	3.01	12.0	Thin Wall XLPE Primary Cable	GREY	3095.0	-	-	-

Connector Name 1401

Part Number 3596929C1

Instances
A26 - Antilock Brake System (ABS) Bendix:Diagram1
A26 - Antilock Brake System (ABS) Bendix:Diagram2
A26 - Antilock Brake System (ABS) Bendix:Diagram3
B6.7 - Antilock Brake System (ABS) BENDIX 4 Channel Implemenation:Diagram1
B6.7 - Antilock Brake System (ABS) BENDIX 4 Channel Implemenation:Diagram2
B6.7 - Antilock Brake System (ABS) BENDIX 4 Channel Implemenation:Diagram3
L9 - Antilock Brake System (ABS) BENDIX 4 Channel Implemenation:Diagram1
L9 - Antilock Brake System (ABS) Bendix 6 Channel Implementation:Diagram1
L9 - Antilock Brake System (ABS) Bendix 6 Channel Implementation:Diagram2
L9 - Antilock Brake System (ABS) Bendix 6 Channel Implementation:Diagram3
L9 - Antilock Brake System (ABS) Bendix 6 Channel Implementation:Diagram4
L9 - Antilock Brake System (ABS) Bendix 6 Channel Implementation:Diagram5
L9 - Antilock Brake System (ABS) Bendix 6 Channel Implementation:Diagram6
L9 - Antilock Brake System (ABS) Bendix 6 Channel Implementation:Diagram7
L9 - Antilock Brake System (ABS) Bendix 6 Channel Implementation:Diagram8
L9 - Antilock Brake System (ABS) Bendix 6 Channel Implementation:Diagram9

Mates MODU-ABS-3003-01-02A

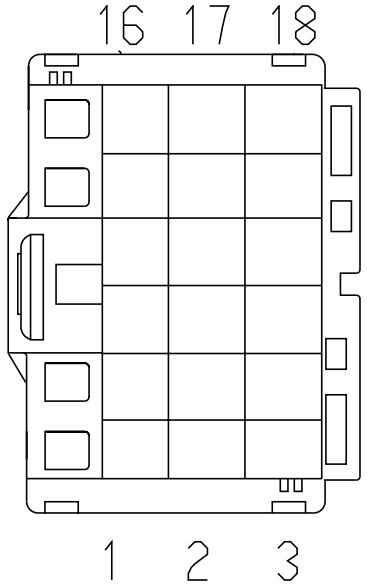

Name	Terminal Part Number	V-Min	Name	Wire Part Number	Wire CSA	Wire Spec	Wire Material description	Wire Color Description	Wire Length	End2 Terminal Part Number	End2 Pin Name	End2 Connect or
1	-	-	XA94B	3510312 R1	1.16	16.0	Thin Wall XLPE Primary Cable	GREY	2500.0	-	29	1700

Name	Terminal Part Number	V-Min	Name	Wire Part Number	Wire CSA	Wire Spec	Wire Material description	Wire Color Description	Wire Length	End2 Terminal Part Number	End2 Pin Name	End2 Connector
2	-	-	XA94	3510312 R1	1.16	16.0	Thin Wall XLPE Primary Cable	GREY	2500.0	-	27	1700
3	-	-	XA94A	3510312 R1	1.16	16.0	Thin Wall XLPE Primary Cable	GREY	2500.0	-	28	1700
4	-	-	XA94K	3510312 R1	1.16	16.0	Thin Wall XLPE Primary Cable	GREY	2500.0	-	36	1700
5	-	-	XA94C	3510312 R1	1.16	16.0	Thin Wall XLPE Primary Cable	GREY	2500.0	-	30	1700
6	-	-	XA94J	3510312 R1	1.16	16.0	Thin Wall XLPE Primary Cable	GREY	2500.0	-	35	1700
7	-	-	XA94H	3510312 R1	1.16	16.0	Thin Wall XLPE Primary Cable	GREY	2500.0	-	34	1700
8	-	-	XA94D	3510312 R1	1.16	16.0	Thin Wall XLPE Primary Cable	GREY	2500.0	-	31	1700
9	-	-	XA94BK	3510312 R1	1.16	16.0	Thin Wall XLPE Primary Cable	GREY	2580.0	-	22	1701

Name	Terminal Part Number	V-Min	Name	Wire Part Number	Wire CSA	Wire Spec	Wire Material description	Wire Color Description	Wire Length	End2 Terminal Part Number	End2 Pin Name	End2 Connector
10	-	-	XA94BL	3510312 R1	1.16	16.0	Thin Wall XLPE Primary Cable	GREY	2580.0	-	20	1701
11	-	-	XA94E	3510312 R1	1.16	16.0	Thin Wall XLPE Primary Cable	GREY	2500.0	-	32	1700
12	-	-	XA94BB	3510312 R1	1.16	16.0	Thin Wall XLPE Primary Cable	GREY	2580.0	-	24	1701
13	-	-	XA94BJ	3510312 R1	1.16	16.0	Thin Wall XLPE Primary Cable	GREY	2580.0	-	21	1701
14	-	-	XA94F	3510312 R1	1.16	16.0	Thin Wall XLPE Primary Cable	GREY	2500.0	-	33	1700
15	-	-	XA94BE	3510312 R1	1.16	16.0	Thin Wall XLPE Primary Cable	GREY	2580.0	-	16	1701
16	-	-	XA94BC	3510312 R1	1.16	16.0	Thin Wall XLPE Primary Cable	GREY	2580.0	-	25	1701
17	-	-	XA94BA	3510312 R1	1.16	16.0	Thin Wall XLPE Primary Cable	GREY	2580.0	-	23	1701
18	-	-	XA94BD	3510312 R1	1.16	16.0	Thin Wall XLPE Primary Cable	GREY	2580.0	-	17	1701

Connector Name	1402
Part Number	3596928C1
Instances	A26 - Antilock Brake System (ABS) Bendix:Diagram1 A26 - Antilock Brake System (ABS) Bendix:Diagram2 A26 - Antilock Brake System (ABS) Bendix:Diagram3 A26 - Bendix Tractor or Towing Truck N/ Air SUSP J1939 Driven Lamp:Diagram1 A26 - Bendix Tractor or Towing Truck N/ Air SUSP J1939 Driven Lamp:Diagram2 A26 - Bendix Tractor or Towing Truck N/ Air SUSP J1939 Driven Lamp:Diagram3 A26 - Bendix Tractor or Towing Truck N/ Air SUSP J1939 Driven Lamp:Diagram4 A26 - Bendix Tractor or Towing Truck W/ Air SUSP J1939 Driven Lamp:Diagram1 A26 - Bendix Tractor or Towing Truck W/ Air SUSP J1939 Driven Lamp:Diagram2 A26 - Bendix Tractor or Towing Truck W/ Air SUSP J1939 Driven Lamp:Diagram3 A26 - Bendix Tractor or Towing Truck W/ Air SUSP J1939 Driven Lamp:Diagram4 A26 - Hill Start Aid (Bendix):Diagram1 A26 - Hill Start Aid (Bendix):Diagram2 A26 - Stability Control (Bendix Straight Truck J1939 Driven Lamp):Diagram1 A26 - Stability Control (Bendix Straight Truck J1939 Driven Lamp):Diagram2 A26 - Stability Control (Bendix Straight Truck J1939 Driven Lamp):Diagram3 A26 - Stability Control (Bendix Straight Truck J1939 Driven Lamp):Diagram4 B6.7 - Stability Control (Bendix Straight Truck J1939 Driven Lamp):Diagram1 B6.7 - Stability Control (Bendix Straight Truck J1939 Driven Lamp):Diagram2 B6.7 - Stability Control (Bendix Straight Truck J1939 Driven Lamp):Diagram3 B6.7 - Stability Control (Bendix Straight Truck J1939 Driven Lamp):Diagram4 L9 - Antilock Brake System (ABS) Bendix 6 Channel Implementation:Diagram1 L9 - Antilock Brake System (ABS) Bendix 6 Channel Implementation:Diagram2

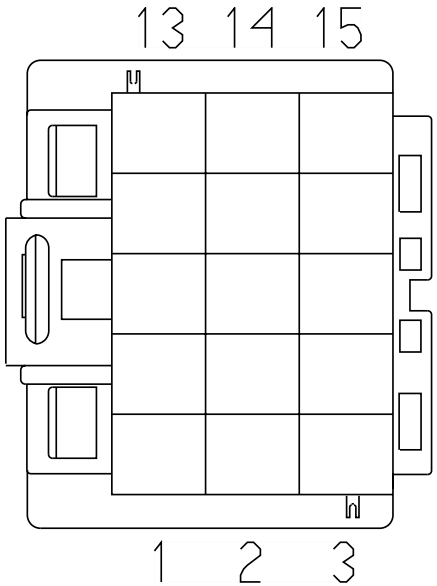

L9 - Antilock Brake System (ABS) Bendix 6 Channel Implementation:Diagram3
L9 - Antilock Brake System (ABS) Bendix 6 Channel Implementation:Diagram4
L9 - Antilock Brake System (ABS) Bendix 6 Channel Implementation:Diagram5
L9 - Antilock Brake System (ABS) Bendix 6 Channel Implementation:Diagram6
L9 - Antilock Brake System (ABS) Bendix 6 Channel Implementation:Diagram7
L9 - Antilock Brake System (ABS) Bendix 6 Channel Implementation:Diagram8
L9 - Antilock Brake System (ABS) Bendix 6 Channel Implementation:Diagram9
L9 - Bendix Tractor or Towing Truck W/ Air SUSP J1939 Driven Lamp:Diagram1
L9 - Bendix Tractor or Towing Truck W/ Air SUSP J1939 Driven Lamp:Diagram2
L9 - Hill Start Aid (Bendix):Diagram1
L9 - Hill Start Aid (Bendix):Diagram2
L9 - Stability Control (Bendix Straight Truck J1939 Driven Lamp):Diagram1
L9 - Stability Control (Bendix Straight Truck J1939 Driven Lamp):Diagram2
L9 - Stability Control (Bendix Straight Truck J1939 Driven Lamp):Diagram3
L9 - Stability Control (Bendix Straight Truck J1939 Driven Lamp):Diagram4

Mates MODU-ABS-3003-01-02A

Name	Terminal Part Number	V-Min	Name	Wire Part Number	Wire CSA	Wire Spec	Wire Material description	Wire Color Description	Wire Length	End2 Terminal Part Number	End2 Pin Name	End2 Connect or
2	-	-	XQ94AA	2643782 R1	1.91	14.0	Std. Wall XLPE Primary Cable	GREY	2520.0	-	61	1701
3	-	-	XP94AC	2643680 R1	1.16	16.0	Std. Wall XLPE Primary Cable	GREY	1770.0	-	X	-

Name	Terminal Part Number	V-Min	Name	Wire Part Number	Wire CSA	Wire Spec	Wire Material description	Wire Color Description	Wire Length	End2 Terminal Part Number	End2 Pin Name	End2 Connector
3	-	-	XN94AB	2643782 R1	1.91	14.0	Std. Wall XLPE Primary Cable	GREY	2520.0	-	65	1701
3	-	-	XJ94SK	3510311 R1	0.79	18.0	Thin Wall XLPE Primary Cable	GREY	2440.0	-	70	1700
3	-	-	XM94SK	3510311 R1	0.79	18.0	Thin Wall XLPE Primary Cable	GREY	2520.0	-	69	1701
4	-	-	XR94BP	3510312 R1	1.16	16.0	Thin Wall XLPE Primary Cable	GREY	2440.0	-	24	1700
5	-	-	XF94SJ	2643680 R1	1.16	16.0	Std. Wall XLPE Primary Cable	GREY	2440.0	-	69	1700
5	-	-	XL94SJ	2643680 R1	1.16	16.0	Std. Wall XLPE Primary Cable	GREY	2520.0	-	49	1701
6	-	-	XR94BY	3510312 R1	1.16	16.0	Thin Wall XLPE Primary Cable	GREY	2440.0	-	37	1700
7	-	-	XR94BZ	3510312 R1	1.16	16.0	Thin Wall XLPE Primary Cable	GREY	2440.0	-	38	1700

Name	Terminal Part Number	V-Min	Name	Wire Part Number	Wire CSA	Wire Spec	Wire Material description	Wire Color Description	Wire Length	End2 Terminal Part Number	End2 Pin Name	End2 Connect or
9	-	-	XR94BT	3510312 R1	1.16	16.0	Thin Wall XLPE Primary Cable	GREY	2440.0	-	39	1700
10	-	-	XR94BU	3510312 R1	1.16	16.0	Thin Wall XLPE Primary Cable	GREY	2440.0	-	40	1700
11	-	-	XR94BR	3510312 R1	1.16	16.0	Thin Wall XLPE Primary Cable	GREY	2440.0	-	45	1700
12	-	-	XR94BW	3510312 R1	1.16	16.0	Thin Wall XLPE Primary Cable	GREY	2440.0	-	48	1700
13	-	-	XR94BS	3510312 R1	1.16	16.0	Thin Wall XLPE Primary Cable	GREY	2440.0	-	41	1700
14	-	-	XR94BQ	3510312 R1	1.16	16.0	Thin Wall XLPE Primary Cable	GREY	2440.0	-	46	1700
15	-	-	XR94BV	3510312 R1	1.16	16.0	Thin Wall XLPE Primary Cable	GREY	2440.0	-	49	1700

Connector Name	1403
Part Number	3596927C1
Instances	A26 - ABS Private J1939:A26 - ABS Private J1939 A26 - Bendix Tractor or Towing Truck N/ Air SUSP J1939 Driven Lamp:Diagram1 A26 - Bendix Tractor or Towing Truck N/ Air SUSP J1939 Driven Lamp:Diagram2 A26 - Bendix Tractor or Towing Truck N/ Air SUSP J1939 Driven Lamp:Diagram3 A26 - Bendix Tractor or Towing Truck N/ Air SUSP J1939 Driven Lamp:Diagram4 A26 - Bendix Tractor or Towing Truck W/ Air SUSP J1939 Driven Lamp:Diagram1 A26 - Bendix Tractor or Towing Truck W/ Air SUSP J1939 Driven Lamp:Diagram2 A26 - Bendix Tractor or Towing Truck W/ Air SUSP J1939 Driven Lamp:Diagram3 A26 - Bendix Tractor or Towing Truck W/ Air SUSP J1939 Driven Lamp:Diagram4 A26 - CAN Layout:ABS Proprietary J1939 A26 - Stability Control (Bendix Straight Truck J1939 Driven Lamp):Diagram1 A26 - Stability Control (Bendix Straight Truck J1939 Driven Lamp):Diagram2 A26 - Stability Control (Bendix Straight Truck J1939 Driven Lamp):Diagram3 A26 - Stability Control (Bendix Straight Truck J1939 Driven Lamp):Diagram4 A26/B6.7/L9 - Jaw Unlock Control W/ SOLENOIDS W/SWITCH PACKS:Diagram1 B6.7 - ABS Private J1939:B6.7 - ABS Private J1939 B6.7 - CAN Layout:ABS Proprietary J1939 B6.7 - Rear Lights Stop - Daisy Chain:Diagram1 B6.7 - Rear Lights Stop - Dual Assembly:Diagram1 B6.7 - Rear Lights Stop - Single Assemby:Diagram1 B6.7 - Stability Control (Bendix Straight Truck J1939 Driven Lamp):Diagram1 B6.7 - Stability Control (Bendix Straight Truck J1939 Driven Lamp):Diagram2 B6.7 - Stability Control (Bendix Straight Truck J1939 Driven Lamp):Diagram3 B6.7 - Stability Control (Bendix Straight Truck J1939 Driven Lamp):Diagram4

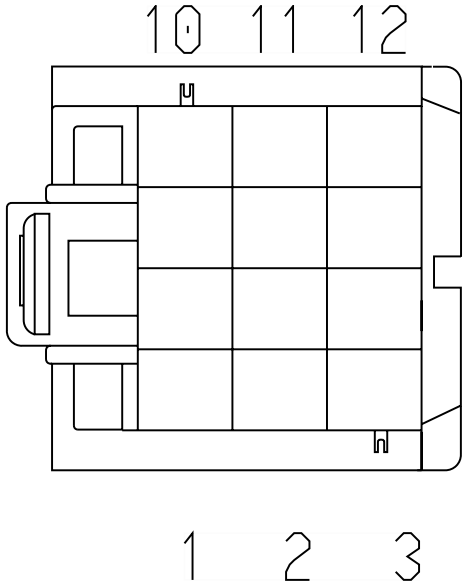

L9 - ABS Private J1939:L9 - ABS Private J1939
L9 - Bendix Tractor or Towing Truck W/ Air SUSP J1939 Driven Lamp:Diagram1
L9 - Bendix Tractor or Towing Truck W/ Air SUSP J1939 Driven Lamp:Diagram2
L9 - CAN Layout:ABS Proprietary J1939
L9 - Rear Axle Load Distribution:Diagram1
L9 - Stability Control (Bendix Straight Truck J1939 Driven Lamp):Diagram1
L9 - Stability Control (Bendix Straight Truck J1939 Driven Lamp):Diagram2
L9 - Stability Control (Bendix Straight Truck J1939 Driven Lamp):Diagram3
L9 - Stability Control (Bendix Straight Truck J1939 Driven Lamp):Diagram4

Mates MODU-ABS-3003-01-02A

Name	Terminal Part Number	V-Min	Name	Wire Part Number	Wire CSA	Wire Spec	Wire Material description	Wire Color Description	Wire Length	End2 Terminal Part Number	End2 Pin Name	End2 Connect or
1	-	-	XH94SZ	3510311 R1	0.79	18.0	Thin Wall XLPE Primary Cable	GREY	2065.0	-	C10	1800
1	-	-	XF94SZD	3510312 R1	1.16	16.0	Thin Wall XLPE Primary Cable	GREY	190.0	-	X	-
1	-	-	XK94SZD	3510311 R1	0.79	18.0	Thin Wall XLPE Primary Cable	GREY	190.0	-	X	-
2	-	-	XF94SE	3510311 R1	0.79	18.0	Thin Wall XLPE Primary Cable	GREY	2065.0	-	D5	1800
2	-	-	XL94SE	3510311 R1	0.79	18.0	Thin Wall XLPE Primary Cable	GREY	2065.0	-	D5	1800

Name	Terminal Part Number	V-Min	Name	Wire Part Number	Wire CSA	Wire Spec	Wire Material description	Wire Color Description	Wire Length	End2 Terminal Part Number	End2 Pin Name	End2 Connector
3	-	-	XF94SH	3510311 R1	0.79	18.0	Thin Wall XLPE Primary Cable	GREY	2570.0	-	76	1700
4	-	-	XH94SV	3510311 R1	0.79	18.0	Thin Wall XLPE Primary Cable	GREY	2065.0	-	C3	1800
4	-	-	XK94SVD	3510311 R1	0.79	18.0	Thin Wall XLPE Primary Cable	GREY	210.0	-	X	-
4	-	-	XF94SVD	3510312 R1	1.16	16.0	Thin Wall XLPE Primary Cable	GREY	210.0	-	X	-
5	-	-	XL94SF	3510311 R1	0.79	18.0	Thin Wall XLPE Primary Cable	GREY	2065.0	-	D6	1800
5	-	-	XF94SF	3510311 R1	0.79	18.0	Thin Wall XLPE Primary Cable	GREY	2065.0	-	D6	1800
6	-	-	XF94SL	2643680 R1	1.16	16.0	Std. Wall XLPE Primary Cable	GREY	2570.0	-	73	1700
7	-	-	XZ94SDA	3510299 R1	0.79	18.0	Thin Wall XLPE Primary Cable	LIGHT GREEN	0.0	-	K	1410
7	-	-	-	-	-	-	-	-	-	-	-	-

Name	Terminal Part Number	V-Min	Name	Wire Part Number	Wire CSA	Wire Spec	Wire Material description	Wire Color Description	Wire Length	End2 Terminal Part Number	End2 Pin Name	End2 Connector
8	-	-	XZ94SBA	3510311 R1	0.79	18.0	Thin Wall XLPE Primary Cable	GREY	0.0	-	G	1410
8	-	-	-	-	-	-	-	-	-	-	-	-
9	-	-	XF94SM	2643680 R1	1.16	16.0	Std. Wall XLPE Primary Cable	GREY	2570.0	-	71	1700
10	-	-	XZ94SCA	3510311 R1	0.79	18.0	Thin Wall XLPE Primary Cable	GREY	0.0	-	D	1410
10	-	-	XF94SCA	3510311 R1	0.79	18.0	Thin Wall XLPE Primary Cable	GREY	1395.0	-	-	-
11	-	-	XZ94SAA	3510311 R1	0.79	18.0	Thin Wall XLPE Primary Cable	GREY	0.0	-	A	1410
11	-	-	XL94SAA	3510311 R1	0.79	18.0	Thin Wall XLPE Primary Cable	GREY	1395.0	-	-	-
12	-	-	XF94SN	2643680 R1	1.16	16.0	Std. Wall XLPE Primary Cable	GREY	2570.0	-	72	1700

Connector Name	1410
Part Number	3601838C1
Instances	A26 - ABS Private J1939:A26 - ABS Private J1939 A26 - CAN Layout:ABS Proprietary J1939 A26/B6.7/L9 - ABS CAN Splice Pack - 1410:Diagram1 B6.7 - ABS Private J1939:B6.7 - ABS Private J1939 B6.7 - CAN Layout:ABS Proprietary J1939 L9 - ABS Private J1939:L9 - ABS Private J1939 L9 - CAN Layout:ABS Proprietary J1939
Mates	SP-ABS_SPLICE-B002-00-10-A1

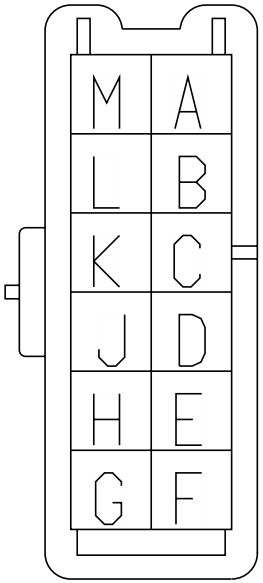

Name	Terminal Part Number	V-Min	Name	Wire Part Number	Wire CSA	Wire Spec	Wire Material description	Wire Color Description	Wire Length	End2 Terminal Part Number	End2 Pin Name	End2 Connect or
A	-	-	XZ94SAA	3510311 R1	0.79	18.0	Thin Wall XLPE Primary Cable	GREY	0.0	-	11	1403
A	-	-	XL94SAA	3510311 R1	0.79	18.0	Thin Wall XLPE Primary Cable	GREY	1395.0	-	-	-
B	-	-	WIRE239 177	-	0.0	-	-	-	0.0	-	50	1700
B	-	-	WIRE239 193	-	0.0	-	-	-	0.0	-	A	1820M
B	-	-	XF94SAB	3510311 R1	0.79	18.0	Thin Wall XLPE Primary Cable	GREY	1325.0	-	-	-
C	-	-	WIRE239 184	-	0.0	-	-	-	0.0	-	54	1701

Name	Terminal Part Number	V-Min	Name	Wire Part Number	Wire CSA	Wire Spec	Wire Material description	Wire Color Description	Wire Length	End2 Terminal Part Number	End2 Pin Name	End2 Connector
C	-	-	WIRE239192	-	0.0	-	-	-	0.0	-	A	1820M
C	-	-	XF94SA	3510310R1	0.53	20.0	Thin Wall XLPE Primary Cable	GREY	870.0	-	-	-
C	-	-	XL94SA	3510310R1	0.53	20.0	Thin Wall XLPE Primary Cable	GREY	1405.0	-	-	-
D	-	-	XZ94SCA	3510311R1	0.79	18.0	Thin Wall XLPE Primary Cable	GREY	0.0	-	10	1403
D	-	-	XF94SCA	3510311R1	0.79	18.0	Thin Wall XLPE Primary Cable	GREY	1395.0	-	-	-
E	-	-	WIRE239179	-	0.0	-	-	-	0.0	-	60	1700
E	-	-	WIRE239194	-	0.0	-	-	-	0.0	-	C	1820M
E	-	-	XF94SCB	3510311R1	0.79	18.0	Thin Wall XLPE Primary Cable	GREY	1325.0	-	-	-
F	-	-	WIRE239185	-	0.0	-	-	-	0.0	-	55	1701
F	-	-	WIRE239195	-	0.0	-	-	-	0.0	-	C	1820M
F	-	-	XF94SC	3510310R1	0.53	20.0	Thin Wall XLPE Primary Cable	GREY	870.0	-	-	-

Name	Terminal Part Number	V-Min	Name	Wire Part Number	Wire CSA	Wire Spec	Wire Material description	Wire Color Description	Wire Length	End2 Terminal Part Number	End2 Pin Name	End2 Connector
F	-	-	XL94SC	3510310 R1	0.53	20.0	Thin Wall XLPE Primary Cable	GREY	1405.0	-	-	-
G	-	-	XZ94SBA	3510311 R1	0.79	18.0	Thin Wall XLPE Primary Cable	GREY	0.0	-	8	1403
G	-	-	XF94SBA	3510311 R1	0.79	18.0	Thin Wall XLPE Primary Cable	GREY	1395.0	-	-	-
G	-	-	XL94SBA	3510311 R1	0.79	18.0	Thin Wall XLPE Primary Cable	GREY	1395.0	-	-	-
H	-	-	WIRE239176	-	0.0	-	-	-	0.0	-	42	1700
H	-	-	WIRE239196	-	0.0	-	-	-	0.0	-	B	1820M
H	-	-	XF94SBB	3510311 R1	0.79	18.0	Thin Wall XLPE Primary Cable	GREY	1325.0	-	-	-
H	-	-	XL94SBB	3510311 R1	0.79	18.0	Thin Wall XLPE Primary Cable	GREY	870.0	-	-	-
J	-	-	WIRE239186	-	0.0	-	-	-	0.0	-	56	1701
J	-	-	WIRE239197	-	0.0	-	-	-	0.0	-	B	1820M

Name	Terminal Part Number	V-Min	Name	Wire Part Number	Wire CSA	Wire Spec	Wire Material description	Wire Color Description	Wire Length	End2 Terminal Part Number	End2 Pin Name	End2 Connector
J	-	-	XF94SB	3510310 R1	0.53	20.0	Thin Wall XLPE Primary Cable	GREY	870.0	-	-	-
J	-	-	XL94SB	3510310 R1	0.53	20.0	Thin Wall XLPE Primary Cable	GREY	1405.0	-	-	-
K	-	-	XZ94SDA	3510299 R1	0.79	18.0	Thin Wall XLPE Primary Cable	LIGHT GREEN	0.0	-	7	1403
K	-	-	XF94SDA	3510299 R1	0.79	18.0	Thin Wall XLPE Primary Cable	LIGHT GREEN	1395.0	-	-	-
K	-	-	XL94SDA	3510299 R1	0.79	18.0	Thin Wall XLPE Primary Cable	LIGHT GREEN	1395.0	-	-	-
L	-	-	WIRE239178	-	0.0	-	-	-	0.0	-	51	1700
L	-	-	WIRE239198	-	0.0	-	-	-	0.0	-	D	1820M
L	-	-	XF94SDB	3510311 R1	0.79	18.0	Thin Wall XLPE Primary Cable	GREY	1325.0	-	-	-
L	-	-	XL94SDB	3510311 R1	0.79	18.0	Thin Wall XLPE Primary Cable	GREY	870.0	-	-	-
M	-	-	WIRE239187	-	0.0	-	-	-	0.0	-	57	1701

Name	Terminal Part Number	V-Min	Name	Wire Part Number	Wire CSA	Wire Spec	Wire Material description	Wire Color Description	Wire Length	End2 Terminal Part Number	End2 Pin Name	End2 Connector
M	-	-	WIRE239199	-	0.0	-	-	-	0.0	-	D	1820M
M	-	-	XL94SD	3510310R1	0.53	20.0	Thin Wall XLPE Primary Cable	GREY	1405.0	-	-	-
M	-	-	XF94SD	3510310R1	0.53	20.0	Thin Wall XLPE Primary Cable	GREY	870.0	-	-	-

Connector Name	1420
Part Number	3557922C1
Instances	A26 - Antilock Brake System (ABS)-Wabco 4 Channel Implementation:Diagram1 A26 - CAN Layout:Powertrain Standard J1939 (500Kbps) A26 - Engine Brake Mux Switch:Diagram1 A26 - Engine Brake W/ Stalk Shifter:Diagram1 A26 - Exhaust Brake:Diagram1 A26 - Powertrain J1939 Allison 3k/4k:A26 - Powertrain J1939 Allison 3k/4k A26 - Powertrain J1939 UltraShift Transmission:A26 - Powertrain J1939 UltraShift Transmission A26 - Rear Lights Stop - Daisy Chain:Diagram1 A26 - Rear Lights Stop - Dual Assembly:Diagram1 A26 - Rear Lights Stop - Single Assemby:Diagram1 A26 - Rear Lights Stop - Single Assemby Jumper Harness W/08TKC, 08THM:Diagram1 A26 - Rear Lights Stop - Single Assemby W/08TKJ:Diagram1 A26 - Separate Rear Lights (Stop) W/08TVH:Diagram1 A26/B6.7/L9 - A26 - Adaptive Cruise Control w/o Display (Bendix):Diagram1 A26/B6.7/L9 - Transfer Case - High/Low Air Sol:Diagram1 A26/B6.7/L9 - Transfer Case - High/Neu/Low Air Sol:Diagram1 B6.7 - CAN Layout:Powertrain Standard J1939 (500Kbps) B6.7 - Exhaust Brake (Cummins):Diagram1 B6.7 - Powertrain J1939 Allison 1k/2k:B6.7 - Allison 1k/2k Transmission B6.7 - Powertrain J1939 Allison 3k/4k:B6.7 - Allison 3k/4k Transmission B6.7 - Powertrain J1939 Manual Transmission:B6.7 - Manual Transmission B6.7 - Rear Lights Stop - Daisy Chain:Diagram1 B6.7 - Rear Lights Stop - Dual Assembly:Diagram1 B6.7 - Rear Lights Stop - Single Assemby:Diagram1 B6.7/L9 - Engine Brake Mux Switch:Diagram1 B6.7/L9 - Engine Brake W/ Stalk Shifter:Diagram1 L9 - Antilock Brake System (ABS) Wabco 4 Channel Implementation:Diagram1 L9 - CAN Layout:Powertrain Standard J1939 (500kbps) L9 - Exhaust Brake (Cummins):Diagram1 L9 - Hill Start Aid (WABCO):Diagram1 L9 - Powertrain J1939 Allison 3k/4k:L9 - Powertrain J1939 Allison 3k/4k

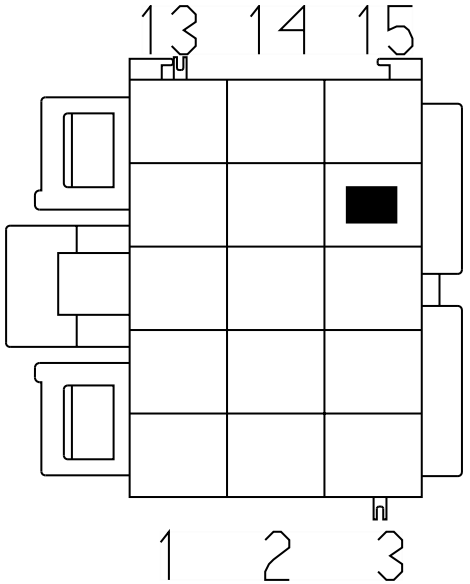

L9 - Powertrain J1939 Eaton:L9 - Powertrain J1939 Eaton
L9 - Powertrain J1939 Manual Transmission:Powertrain
Standard J1939 (500kbps)
L9 - Rear Axle Load Distribution:Diagram1
L9 - Rear Lights Stop - Daisy Chain:Diagram1
L9 - Rear Lights Stop - Dual Assembly:Diagram1
L9 - Rear Lights Stop - Single Assemby:Diagram1

Mates MODU-ABS-3003-02-02A

Name	Terminal Part Number	V-Min	Name	Wire Part Number	Wire CSA	Wire Spec	Wire Material description	Wire Color Description	Wire Length	End2 Terminal Part Number	End2 Pin Name	End2 Connect or
1	-	-	-	-	-	-	-	-	-	-	-	-
1	-	-	WIRE735120	-	0.0	-	-	-	0.0	-	PIN1	-
1	-	-	WIRE720094	-	0.0	-	-	-	0.0	-	PIN1	-
3	-	-	-	-	-	-	-	-	-	-	-	-
3	-	-	WIRE735119	-	0.0	-	-	-	0.0	-	PIN1	-
3	-	-	WIRE720097	-	0.0	-	-	-	0.0	-	PIN1	-
4	-	-	XE94G1	3510359 R1	0.79	18.0	Thin Wall XLPE Primary Cable	WHITE	2250.0	-	-	-
4	-	-	XE94G1	3510359 R1	0.79	18.0	Thin Wall XLPE Primary Cable	WHITE	2250.0	-	X	-
7	-	-	XE94V	2643782 R1	1.91	14.0	Std. Wall XLPE Primary Cable	GREY	3430.0	-	-	-
8	-	-	XE94AY	2643782 R1	1.91	14.0	Std. Wall XLPE Primary Cable	GREY	3210.0	-	-	-

Name	Terminal Part Number	V-Min	Name	Wire Part Number	Wire CSA	Wire Spec	Wire Material description	Wire Color Description	Wire Length	End2 Terminal Part Number	End2 Pin Name	End2 Connect or
9	-	-	XE94G2	3510360 R1	1.16	16.0	Thin Wall XLPE Primary Cable	WHITE	2250.0	-	-	-
9	-	-	XE94G2	3510360 R1	1.16	16.0	Thin Wall XLPE Primary Cable	WHITE	2250.0	-	X	-

Connector Name	1421
Part Number	3557921C1
Instances	A26 - Antilock Brake System (ABS)-Wabco 4 Channel Implementation:Diagram1 L9 - Antilock Brake System (ABS) Wabco 4 Channel Implementation:Diagram1
Mates	MODU-ABS-3003-02-02A

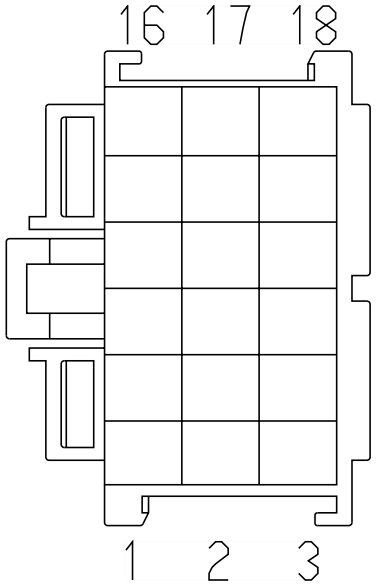

Name	Terminal Part Number	V-Min	Name	Wire Part Number	Wire CSA	Wire Spec	Wire Material description	Wire Color Description	Wire Length	End2 Terminal Part Number	End2 Pin Name	End2 Connect or
1	-	-	XE94AK	2643782 R1	1.91	14.0	Std. Wall XLPE Primary Cable	GREY	2540.0	-	34	1700
2	-	-	XE94WR	2643782 R1	1.91	14.0	Std. Wall XLPE Primary Cable	GREY	2620.0	-	19	1701
3	-	-	XE94AB	2643782 R1	1.91	14.0	Std. Wall XLPE Primary Cable	GREY	2540.0	-	27	1700
4	-	-	XE94AH	2643782 R1	1.91	14.0	Std. Wall XLPE Primary Cable	GREY	2540.0	-	36	1700

Name	Terminal Part Number	V-Min	Name	Wire Part Number	Wire CSA	Wire Spec	Wire Material description	Wire Color Description	Wire Length	End2 Terminal Part Number	End2 Pin Name	End2 Connector
5	-	-	XE94WN	2643782 R1	1.91	14.0	Std. Wall XLPE Primary Cable	GREY	2620.0	-	18	1701
6	-	-	XE94AL	2643782 R1	1.91	14.0	Std. Wall XLPE Primary Cable	GREY	2540.0	-	29	1700
8	-	-	XE94WW	2643782 R1	1.91	14.0	Std. Wall XLPE Primary Cable	GREY	2620.0	-	16	1701
9	-	-	XE94WU	3510313 R1	1.91	14.0	Thin Wall XLPE Primary Cable	GREY	2620.0	-	17	1701
10	-	-	XE94AE	3510311 R1	0.79	18.0	Thin Wall XLPE Primary Cable	GREY	2540.0	-	32	1700
11	-	-	XE94WL	3510311 R1	0.79	18.0	Thin Wall XLPE Primary Cable	GREY	2620.0	-	14	1701
12	-	-	XE94AC	3510311 R1	0.79	18.0	Thin Wall XLPE Primary Cable	GREY	2540.0	-	30	1700
13	-	-	XE94AF	3510311 R1	0.79	18.0	Thin Wall XLPE Primary Cable	GREY	2540.0	-	33	1700

Name	Terminal Part Number	V-Min	Name	Wire Part Number	Wire CSA	Wire Spec	Wire Material description	Wire Color Description	Wire Length	End2 Terminal Part Number	End2 Pin Name	End2 Connect or
14	-	-	XE94WM	3510311 R1	0.79	18.0	Thin Wall XLPE Primary Cable	GREY	2620.0	-	15	1701
15	-	-	XE94AD	3510311 R1	0.79	18.0	Thin Wall XLPE Primary Cable	GREY	2540.0	-	31	1700
17	-	-	XE94WS	3510311 R1	0.79	18.0	Thin Wall XLPE Primary Cable	GREY	2620.0	-	22	1701
18	-	-	XE94WT	3510311 R1	0.79	18.0	Thin Wall XLPE Primary Cable	GREY	2620.0	-	23	1701

Connector Name	1500A
Part Number	3710061C1
Instances	A26 - 26" Fuel Tank:Diagram1 A26 - 26" Fuel Tank:Diagram2 A26 - 26" Fuel Tank:Diagram3 A26 - 26" Fuel Tank:Diagram4 A26 - 26" Fuel Tank:Diagram5 A26 - 26" Fuel Tank - Secondary:Diagram1 A26 - 26" Fuel Tank - Secondary:Diagram2 A26 - 26" Fuel Tank - Secondary:Diagram3 A26 - 26" Fuel Tank - Secondary:Diagram4 A26 - 26" Fuel Tank - Secondary:Diagram5 A26 - 26" Fuel Tank - Secondary:Diagram6 A26 - 26" Fuel Tank - Secondary:Diagram7 A26 - Ambient Air Temperature:Diagram1 A26 - Ambient Temperature Monitoring:Diagram1 A26 - Axle Temperature Monitoring (Single Rear Aux Gauge):Diagram1 A26 - Axle Temperature Monitoring (Single Rear Virtual Gauge):Diagram1 A26 - Axle Temperature Monitoring (Tandem Rear Aux Gauge):Diagram1 A26 - Axle Temperature Monitoring (Tandem Rear Virtual Gauge):Diagram1 A26 - Brake Pressure (Auxiliary Gauge):Diagram1 A26 - Brake Pressure (Virtual Gauge):Diagram1 A26 - CAN Layout:Powertrain Standard J1939 (500Kbps) A26 - Coolant Level Monitoring (No Coolant Module):Diagram1 A26 - Driver Controlled Locking Differential FR and RR Axle (Dana w/ one switch):Diagram1 A26 - Driver Controlled Locking Differential FR and RR Axle (Meritor w/ one sw):Diagram1 A26 - Driver Controlled Locking Differential FR and RR Axles (Dana w/ two sw):Diagram1 A26 - Driver Controlled Locking Differential FR and RR Axles (Meritor w/ two sw):Diagram1 A26 - Driver Controlled Locking Differential RR Axle (Dana w/ one sw):Diagram1 A26 - Driver Controlled Locking Differential RR Axle (Meritor w/ one sw):Diagram1 A26 - Engine Brake W/ Stalk Shifter:Diagram1 A26 - Engine Speed (Tachometer):Diagram1 A26 - Park Brake Control (Monitoring)(GEN IV BCM):Diagram1

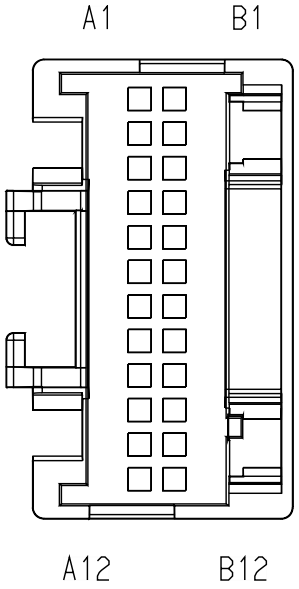

A26 - Powertrain J1939 Allison 3k/4k:A26 - Powertrain J1939 Allison 3k/4k
A26 - Powertrain J1939 UltraShift Transmission:A26 - Powertrain J1939 UltraShift Transmission
A26 - Snow Valve Control:Diagram1
A26 - Snow Valve Control:Diagram2
A26 - Transmission Oil Temperature-Manual Trans:Diagram1
A26 - Transmission Oil Temperature-Manual Trans:Diagram2
A26 - Transmission Oil Temperature-Manual Trans w/Aux Gauge:Diagram1
A26 - Transmission Oil Temperature-Manual Trans w/Aux Gauge:Diagram2
A26 - Transmission Power Take Off (Auto Trans Dual PTO W/ 42 Parameters):Diagram1
A26 - Transmission Power Take Off (Auto Trans Single PTO w/21 Parameters):Diagram1
A26 - Transmission Power Take Off (Manual Trans Dual PTO W/ 42 Parameters):Diagram1
A26 - Transmission Power Take Off (Manual Trans Single PTO w/ 21 Parameters):Diagram1
A26 - Transmission Shifter (Stalk Shifter Allison):Diagram1
A26 - Transmission Shifter (Stalk Shifter Allison):Diagram2
A26 - Vehicle Speedometer System (Manual XMSN):Diagram1
A26/B6.7/L9 - Exterior Lamp Reminder:Diagram1
A26/B6.7/L9 - Adjustable Engine Speed Control (PTO) 4-pin:Diagram1
A26/B6.7/L9 - Adjustable Engine Speed Control (PTO) 10-pin:Diagram1
A26/B6.7/L9 - Adjustable Engine Speed Control (PTO) 10-pin:Diagram2
A26/B6.7/L9 - Compressed Air Supply:Diagram1
A26/B6.7/L9 - DEF Economy Monitor (GEN IV):Diagram1
A26/B6.7/L9 - DPF Regen Switch Only:Diagram1
A26/B6.7/L9 - DPF With Bistable Inhibit Switch:Diagram1
A26/B6.7/L9 - DPF With Monostable Inhibit Switch:Diagram1
A26/B6.7/L9 - Engine Oil Level Monitoring:Diagram1
A26/B6.7/L9 - Engine Oil Pressure:Diagram1
A26/B6.7/L9 - Engine Oil Temperature (NA Mux):Diagram1
A26/B6.7/L9 - Engine Oil Temperature(NA MUX AUX Gauge):Diagram1
A26/B6.7/L9 - Engine Usage Monitoring (Base) NA:Diagram1
A26/B6.7/L9 - Engine Usage Monitoring (VID Option):Diagram1
A26/B6.7/L9 - Engine Warning_MUX:Diagram1
A26/B6.7/L9 - Fuel Economy Monitor:Diagram1

A26/B6.7/L9 - High Exhaust System Temperature (HEST) Monitoring:Diagram1
A26/B6.7/L9 - Instrument Cluster (Premium):Diagram1
A26/B6.7/L9 - Instrument Cluster (Premium):Diagram2
A26/B6.7/L9 - Instrument Cluster (Standard):Diagram1
A26/B6.7/L9 - Instrument Cluster (Standard):Diagram2
A26/B6.7/L9 - Instrument Cluster - Bulb Check:Diagram1
A26/B6.7/L9 - Instrument Cluster - Request and Status:Diagram1
A26/B6.7/L9 - Jaw Unlock Control:Diagram1
A26/B6.7/L9 - Jaw Unlock Control W/ SOLENOIDS W/SWITCH PACKS:Diagram1
A26/B6.7/L9 - Odometer (via BCM/EGC):Diagram1
A26/B6.7/L9 - Over the Air Programming (OnCommand Link / N2 Module):Diagram1
A26/B6.7/L9 - Power Divider Lock Control and Monitoring:Diagram1
A26/B6.7/L9 - PTO Hour Meter:Diagram1
A26/B6.7/L9 - Rear Suspension Pressure Monitoring (Auxiliary Gauge):Diagram1
A26/B6.7/L9 - Rear Suspension Pressure Monitoring (Auxiliary Gauge):Diagram2
A26/B6.7/L9 - Rear Suspension Pressure Monitoring (Virtual Gauge):Diagram1
A26/B6.7/L9 - Rear Suspension Pressure Monitoring (Virtual Gauge):Diagram2
A26/B6.7/L9 - Seatbelt Reminder (Warning)(Driver & Passenger in parallel):Diagram1
A26/B6.7/L9 - Seatbelt Reminder (Warning)(Driver only):Diagram1
A26/B6.7/L9 - Snow Valve Control:Diagram1
A26/B6.7/L9 - Trans Range Inhibit (J1939 Comm):Diagram1
A26/B6.7/L9 - Transfer Case - High/Low Air Sol:Diagram1
A26/B6.7/L9 - Transfer Case - High/Neu/Low Air Sol:Diagram1
A26/B6.7/L9 - Transmission - MODE Selection:Diagram1
A26/B6.7/L9 - Trip Odometer (w/ECM & TCM):Diagram1
A26/B6.7/L9 - Trip Odometer (Gen 4 Cluster):Diagram1
A26/B6.7/L9 - Trip Odometer w/VID:Diagram1
A26/B6.7/L9 - Up Shift Indicator:Diagram1
A26/B6.7/L9 - Vehicle Speed Limit Override:Diagram1
A26/B6.7/L9 - Vehicle Speedometer System (Automatic XMSN):Diagram1
A26/B6.7/L9 - Voltage Monitoring (Voltmeter):Diagram1

A26/B6.7/L9 - Voltage Monitoring (Voltmeter) (with Aux gauge):Diagram1
B6.7 & L9 - Engine Speed (Tachometer):Diagram1
B6.7 - Snow Valve Control:Diagram1
B6.7 - Snow Valve Control:Diagram2
B6.7 - 26 inch Fuel Tank:Diagram1
B6.7 - 26 inch Fuel Tank:Diagram2
B6.7 - 26 inch Fuel Tank:Diagram3
B6.7 - 26 inch Fuel Tank - Secondary:Diagram1
B6.7 - Antilock Brake System (ABS) BENDIX 4 Channel Implemenation:Diagram1
B6.7 - Antilock Brake System (ABS) BENDIX 4 Channel Implemenation:Diagram2
B6.7 - Antilock Brake System (ABS) BENDIX 4 Channel Implemenation:Diagram3
B6.7 - Axle Loading (Weight) Rear:Diagram1
B6.7 - Axle Loading (Weight) Rear:Diagram2
B6.7 - Axle Temperature Monitoring (Single Rear Aux Gauge):Diagram1
B6.7 - Axle Temperature Monitoring (Single Rear Virtual Gauge):Diagram1
B6.7 - Brake Pressure (Auxiliary Gauge):Diagram1
B6.7 - Brake Pressure (Virtual Gauge):Diagram1
B6.7 - CAN Layout:Powertrain Standard J1939 (500Kbps)
B6.7 - Coolant Level Monitoring (No Coolant Module):Diagram1
B6.7 - Current Monitoring (Ammeter):Diagram1
B6.7 - Current Monitoring (Ammeter):Diagram2
B6.7 - Driver Controlled Locking Differential - RR Axle (Dana w/ one sw):Diagram1
B6.7 - Driver Controlled Locking Differential - RR Axle (Meritor w/ one sw):Diagram1
B6.7 - Park Brake Controls (Monitoring) (Door Switch City Horn):Diagram1
B6.7 - Powertrain J1939 Allison 1k/2k:B6.7 - Allison 1k/2k Transmission
B6.7 - Powertrain J1939 Allison 3k/4k:B6.7 - Allison 3k/4k Transmission
B6.7 - Powertrain J1939 Manual Transmission:B6.7 - Manual Transmission
B6.7 - Range Inhibit (sixth gear inhibit switch):Diagram1
B6.7 - Stability Control (Bendix Straight Truck J1939 Driven Lamp):Diagram1
B6.7 - Stability Control (Bendix Straight Truck J1939 Driven Lamp):Diagram2

B6.7 - Stability Control (Bendix Straight Truck J1939 Driven Lamp):Diagram3
B6.7 - Stability Control (Bendix Straight Truck J1939 Driven Lamp):Diagram4
B6.7 - T-Handle for Allison Without Park Position:Diagram1
B6.7 - T-Handle for Allison Without Park Position:Diagram2
B6.7 - Traction Control (Bendix):Diagram1
B6.7 - Traction Control (Bendix):Diagram2
B6.7 - Transmission Oil Temperature-Manual Trans:Diagram1
B6.7 - Transmission Oil Temperature-Manual Trans (w/Aux Gauge):Diagram1
B6.7 - Transmission Power Take Off (Auto Trans Single PTO w/21 Parameters):Diagram1
B6.7 - Transmission Power Take Off (Manual Trans Single PTO w/21 Parameters):Diagram1
B6.7 - Transmission Shifter (Stalk Shifter Allison):Diagram1
B6.7 - Transmission Shifter (Stalk Shifter Allison):Diagram2
B6.7 - Transmission Shifter (T-Handle for Allison With Park Position):Diagram1
B6.7 - Transmission Shifter (T-Handle for Allison With Park Position):Diagram2
B6.7 - Transmission Shifter Allison 5th Gen Push Button(SURHD):Diagram1
B6.7 - Transmission Shifter Allison 5th Gen Push Button(SURHD):Diagram2
B6.7 - Vehicle Speedometer System (Manual XMSN):Diagram1
B6.7 - Water In Fuel (WIF) Racor N/ Heater:Diagram1
B6.7 - Water In Fuel (WIF) Racor N/ Heater:Diagram2
B6.7 - Water In Fuel (WIF) Racor N/ Heater:Diagram3
B6.7 - Water In Fuel (WIF) Racor N/ Heater:Diagram4
B6.7 - Water In Fuel (WIF) Racor N/ Heater:Diagram5
B6.7 - Water In Fuel (WIF) Racor N/ Heater:Diagram6
B6.7 - Water In Fuel (WIF) Racor N/ Heater:Diagram7
B6.7 - Water In Fuel (WIF) Racor W/ Heater:Diagram1
B6.7 - Water In Fuel (WIF) Racor W/ Heater:Diagram2
B6.7 - Water In Fuel (WIF) Racor W/ Heater:Diagram3
B6.7 - Water In Fuel (WIF) Racor W/ Heater:Diagram4
B6.7 - Water In Fuel (WIF) Racor W/ Heater:Diagram5
B6.7 - Water In Fuel (WIF) Racor W/ Heater:Diagram6
B6.7 - Water In Fuel (WIF) Racor W/ Heater:Diagram7
B6.7 - Windshield Washer Pump & Low Fluid Sensor:Diagram1
B6.7/L9 - Engine Brake W/ Stalk Shifter:Diagram1
HV B6.7 - Coolant Level Monitoring (With Coolant Module):Diagram1

HV L9 - Coolant Level Monitoring (With Coolant Module):Diagram1
L9 - 26 inch Fuel Tank:Diagram1
L9 - 26 inch Fuel Tank:Diagram2
L9 - 26 inch Fuel Tank:Diagram3
L9 - 26 inch Fuel Tank:Diagram4
L9 - 26 inch Fuel Tank:Diagram5
L9 - 26 inch Fuel Tank:Diagram6
L9 - 26 inch Fuel Tank - Secondary:Diagram1
L9 - 26 inch Fuel Tank - Secondary:Diagram2
L9 - 26 inch Fuel Tank - Secondary:Diagram3
L9 - 26 inch Fuel Tank - Secondary:Diagram4
L9 - 26 inch Fuel Tank - Secondary:Diagram5
L9 - 26 inch Fuel Tank - Secondary:Diagram6
L9 - 26 inch Fuel Tank - Secondary:Diagram7
L9 - Ambient Air Temperature:Diagram1
L9 - Axle Loading (Weight) Rear:Diagram1
L9 - Axle Loading (Weight) Rear:Diagram2
L9 - Axle Temperature Monitoring (Tandem Rear Aux Gauge) Option 1:Diagram1
L9 - Axle Temperature Monitoring (Tandem Rear Aux Gauge) Option 2:Diagram1
L9 - Axle Temperature Monitoring (Tandem Rear Virtual Gauge) Option 1:Diagram1
L9 - Axle Temperature Monitoring (Tandem Rear Virtual Gauge) Option 2:Diagram1
L9 - Bendix Tractor or Towing Truck W/ Air SUSP J1939 Driven Lamp:Diagram1
L9 - Bendix Tractor or Towing Truck W/ Air SUSP J1939 Driven Lamp:Diagram2
L9 - Brake Pressure (Auxiliary Gauge):Diagram1
L9 - Brake Pressure (Virtual Gauge):Diagram1
L9 - CAN Layout:Powertrain Standard J1939 (500kbps)
L9 - Coolant Level Monitoring (No Coolant Module):Diagram1
L9 - Coolant Temperature Monitoring (J1939 Comm):Diagram1
L9 - Driver Controlled Locking Differential - FR and RR Axle (Dana w/ one sw):Diagram1
L9 - Driver Controlled Locking Differential - FR and RR Axle (Meritor w/ one sw):Diagram1
L9 - Driver Controlled Locking Differential - FR and RR Axles (Dana w/ two sw):Diagram1
L9 - Driver Controlled Locking Differential - FR and RR Axles (Meritor w/ two sw):Diagram1

L9 - Driver Controlled Locking Differential - RR Axle (Dana w/ one sw):Diagram1
L9 - Driver Controlled Locking Differential - RR Axle (Meritor w/ one sw):Diagram1
L9 - Hill Start Aid (WABCO):Diagram1
L9 - Park Brake Control (Monitoring)(GEN IV BCM):Diagram1
L9 - Park Brake Controls (Monitoring) (Door Switch City Horn):Diagram1
L9 - Powertrain J1939 Allison 3k/4k:L9 - Powertrain J1939 Allison 3k/4k
L9 - Powertrain J1939 Eaton:L9 - Powertrain J1939 Eaton
L9 - Powertrain J1939 Manual Transmission:Powertrain Standard J1939 (500kbps)
L9 - Snow Valve Control:Diagram1
L9 - Snow Valve Control:Diagram2
L9 - Stability Control (Bendix Straight Truck J1939 Driven Lamp):Diagram1
L9 - Stability Control (Bendix Straight Truck J1939 Driven Lamp):Diagram2
L9 - Stability Control (Bendix Straight Truck J1939 Driven Lamp):Diagram3
L9 - Stability Control (Bendix Straight Truck J1939 Driven Lamp):Diagram4
L9 - Transmission Oil Temperature-Automatic Trans:Diagram1
L9 - Transmission Oil Temperature-Automatic Trans w/Aux Gauge:Diagram1
L9 - Transmission Oil Temperature-Manual Trans w/Aux Gauge:Diagram1-Combination1
L9 - Transmission Oil Temperature-Manual Transmission:Diagram1-Combination1
L9 - Transmission Power Take Off (Auto Trans Single PTO w/21 Parameters):Diagram1
L9 - Transmission Power Take Off (Auto Trans with Lectradrive):Diagram1
L9 - Transmission Power Take Off (Lectrashift PTO with Manual Trans):Diagram1
L9 - Transmission Power Take Off (Manual Trans Single PTO w/21 Parameters):Diagram1
L9 - Transmission Shifter (Stalk Shifter Allison):Diagram1
L9 - Transmission Shifter (Stalk Shifter Allison):Diagram2
L9 - Transmission Shifter Allison 5th Gen Push Button(SURHD):Diagram1
L9 - Vehicle Speedometer System (Manual XMSN):Diagram1
L9 - Windshield Washer Pump & Low Fluid Sensor:Diagram1

L9 - Windshield Washer Pump & Low Fluid Sensor:Diagram2

Mates MODU-EGC-A003-10-00

Name	Terminal Part Number	V-Min	Name	Wire Part Number	Wire CSA	Wire Spec	Wire Material description	Wire Color Description	Wire Length	End2 Terminal Part Number	End2 Pin Name	End2 Connect or
A2	-	-	AA14EE	3510366 R1	1.16	16.0	Thin Wall XLPE Primary Cable	RED	1745.0	-	-	-
A3	-	-	AA13EA	3510323 R1	0.79	18.0	Thin Wall XLPE Primary Cable	PINK	1965.0	-	-	-
A6	-	-	QA23A	3510329 R1	0.79	18.0	Thin Wall XLPE Primary Cable	TAN	1165.0	-	-	-
A6	-	-	QA23A	3510329 R1	0.79	18.0	Thin Wall XLPE Primary Cable	TAN	1165.0	-	3	9916
A6	-	-	QA23A	3510329 R1	0.79	18.0	Thin Wall XLPE Primary Cable	TAN	1165.0	-	2	9916
A7	-	-	QA23-GT	3510359 R1	0.79	18.0	Thin Wall XLPE Primary Cable	WHITE	590.0	-	-	-
A9	-	-	-	-	-	-	-	-	-	-	-	-
A9	-	-	WIRE735121	-	0.0	-	-	-	0.0	-	PIN1	-
A9	-	-	WIRE720104	-	0.0	-	-	-	0.0	-	PIN1	-
A10	-	-	-	-	-	-	-	-	-	-	-	-
A10	-	-	WIRE735122	-	0.0	-	-	-	0.0	-	PIN1	-

Name	Terminal Part Number	V-Min	Name	Wire Part Number	Wire CSA	Wire Spec	Wire Material description	Wire Color Description	Wire Length	End2 Terminal Part Number	End2 Pin Name	End2 Connector
A10	-	-	WIRE720102	-	0.0	-	-	-	0.0	-	PIN1	-
B3	-	-	AD11-GKE	3510360R1	1.16	16.0	Thin Wall XLPE Primary Cable	WHITE	455.0	-	-	-
B4	-	-	MQ98F	3510328R1	0.53	20.0	Thin Wall XLPE Primary Cable	TAN	1985.0	-	-	-
B5	-	-	MQ11-GMW	3510358R1	0.53	20.0	Thin Wall XLPE Primary Cable	WHITE	3630.0	-	-	-
B8	-	-	BG28C	3510328R1	0.53	20.0	Thin Wall XLPE Primary Cable	TAN	1095.0	-	-	-
B9	-	-	BG28A	3510328R1	0.53	20.0	Thin Wall XLPE Primary Cable	TAN	1095.0	-	-	-
B10	-	-	BG28B	3510328R1	0.53	20.0	Thin Wall XLPE Primary Cable	TAN	1095.0	-	-	-

Connector Name	1500A
Part Number	3710061C1
Instances	A26/B6.7/L9 - Driver and Passenger Seats - RollTek (Hard Wired):Diagram1 A26/B6.7/L9 - Seats (RollTek) Drivers Seat Only (Hard Wired) - Leather:Diagram1 A26/B6.7/L9 - Seats (RollTek) Drivers Seat Only (Hard Wired) - Mordular:Diagram1 A26/B6.7/L9 - Seats (RollTek) Drivers Seat Only (Hard Wired) - Vinyl:Diagram1 B6.7 - Starting Aid (Grid Heater):Diagram1 L9 - Starting Aid (Grid Heater):Diagram1
Mates	MODU-EGC-A003-10-00

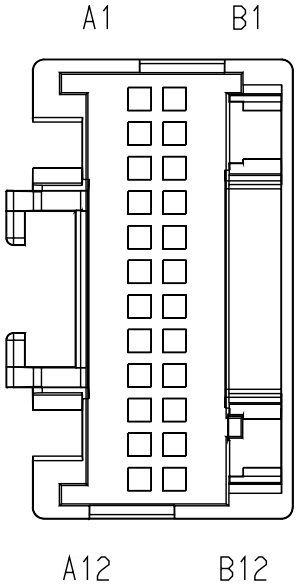

Name	Terminal Part Number	V-Min	Name	Wire Part Number	Wire CSA	Wire Spec	Wire Material description	Wire Color Description	Wire Length	End2 Terminal Part Number	End2 Pin Name	End2 Connect or
A6	-	-	DL13BB	3510323 R1	0.79	18.0	Thin Wall XLPE Primary Cable	PINK	820.0	-	X	-
A7	-	-	DL179A	3510359 R1	0.79	18.0	Thin Wall XLPE Primary Cable	WHITE	0.0	-	X	-
A9	-	-	-	-	-	-	-	-	-	-	-	-
A10	-	-	-	-	-	-	-	-	-	-	-	-

Connector Name	1501
Part Number	2018589C1
Short Description	ADD TRANS MODULE 1
Instances	A26 - Starter Interlock (BCM Controlled with Input from Allison 3K/4K TCM):Diagram1 A26 - Transmission Shifter (Stalk Shifter Allison):Diagram1 B6.7 - Starter Interlocks (BCM Controlled with Input from Allison 3K/4K TCM):Diagram1 B6.7 - Transmission (Allison 3K/4K):Diagram1 L9 - Auto Neutral (Allison with Multiplex Switch and Confirmation Telltale):Diagram1 L9 - Auto Neutral (Allison without Multiplex Switch and Confirmation Telltale):Diagram1 L9 - Starter Interlocks (BCM Controlled with Input from Allison 3K/4K TCM):Diagram1 L9 - Transmission (Allison 3K/4K):Diagram2
Mates	1235

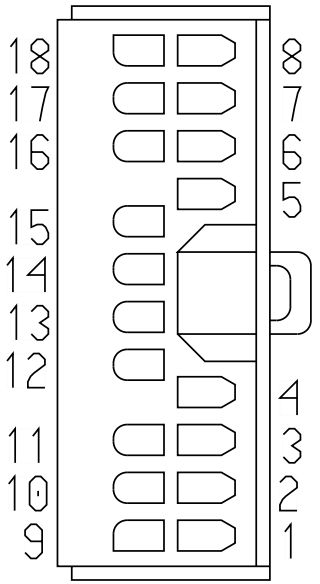

Name	Terminal Part Number	V-Min	Name	Wire Part Number	Wire CSA	Wire Spec	Wire Material description	Wire Color Description	Wire Length	End2 Terminal Part Number	End2 Pin Name	End2 Connect or
1	-	-	SM92#101	3510341 R1	0.79	18.0	Thin Wall XLPE Primary Cable	LIGHT BLUE	3065.0	-	-	-
2	-	-	SN92#103	3510335 R1	0.79	18.0	Thin Wall XLPE Primary Cable	YELLOW 2	2915.0	-	X	-
2	-	-	SR92#103	3510335 R1	0.79	18.0	Thin Wall XLPE Primary Cable	YELLOW 2	2550.0	-	X	-
3	-	-	SM92#105	3510317 R1	0.79	18.0	Thin Wall XLPE Primary Cable	ORANGE	3065.0	-	-	-

Name	Terminal Part Number	V-Min	Name	Wire Part Number	Wire CSA	Wire Spec	Wire Material description	Wire Color Description	Wire Length	End2 Terminal Part Number	End2 Pin Name	End2 Connector
4	-	-	SM92#109	3510359 R1	0.79	18.0	Thin Wall XLPE Primary Cable	WHITE	2590.0	-	-	-
4	-	-	LB92#109	3510359 R1	0.79	18.0	Thin Wall XLPE Primary Cable	WHITE	590.0	-	X	-
5	-	-	SM92#110	3510365 R1	0.79	18.0	Thin Wall XLPE Primary Cable	RED	190.0	-	X	-
6	-	-	TN92#117	3510341 R1	0.79	18.0	Thin Wall XLPE Primary Cable	LIGHT BLUE	3100.0	-	-	-
6	-	-	TL92#117	3510341 R1	0.79	18.0	Thin Wall XLPE Primary Cable	LIGHT BLUE	3065.0	-	-	-
6	-	-	TM92A117	3510341 R1	0.79	18.0	Thin Wall XLPE Primary Cable	LIGHT BLUE	165.0	-	X	-
6	-	-	TN92#117	3510341 R1	0.79	18.0	Thin Wall XLPE Primary Cable	LIGHT BLUE	3100.0	-	25	1702
6	-	-	TM92A117	3510341 R1	0.79	18.0	Thin Wall XLPE Primary Cable	LIGHT BLUE	165.0	-	-	-

Name	Terminal Part Number	V-Min	Name	Wire Part Number	Wire CSA	Wire Spec	Wire Material description	Wire Color Description	Wire Length	End2 Terminal Part Number	End2 Pin Name	End2 Connector
7	-	-	SM92#122	3510335 R1	0.79	18.0	Thin Wall XLPE Primary Cable	YELLOW 2	3065.0	-	-	-
8	-	-	SM92#123	3510299 R1	0.79	18.0	Thin Wall XLPE Primary Cable	LIGHT GREEN	3065.0	-	-	-
9	-	-	SR92#115	3510359 R1	0.79	18.0	Thin Wall XLPE Primary Cable	WHITE	850.0	-	-	-
10	-	-	SM92#130	3510359 R1	0.79	18.0	Thin Wall XLPE Primary Cable	WHITE	3065.0	-	-	-
11	-	-	TZ92#134	3510329 R1	0.79	18.0	Thin Wall XLPE Primary Cable	TAN	2545.0	-	19	1702
11	-	-	SM92#134	3510335 R1	0.79	18.0	Thin Wall XLPE Primary Cable	YELLOW 2	3100.0	-	-	-
12	-	-	SY92A141	3510329 R1	0.79	18.0	Thin Wall XLPE Primary Cable	TAN	3100.0	-	-	-
12	-	-	SY92A141	3510329 R1	0.79	18.0	Thin Wall XLPE Primary Cable	TAN	3100.0	-	20	1702

Name	Terminal Part Number	V-Min	Name	Wire Part Number	Wire CSA	Wire Spec	Wire Material description	Wire Color Description	Wire Length	End2 Terminal Part Number	End2 Pin Name	End2 Connector
12	-	-	TZ92#141	3510329 R1	0.79	18.0	Thin Wall XLPE Primary Cable	TAN	2545.0	-	20	1702
13	-	-	SM92#143	3510341 R1	0.79	18.0	Thin Wall XLPE Primary Cable	LIGHT BLUE	3065.0	-	-	-
14	-	-	SY92#145	3510317 R1	0.79	18.0	Thin Wall XLPE Primary Cable	ORANGE	3100.0	-	-	-
14	-	-	TL92#145	3510317 R1	0.79	18.0	Thin Wall XLPE Primary Cable	ORANGE	3065.0	-	-	-
15	-	-	SR92#119	3510341 R1	0.79	18.0	Thin Wall XLPE Primary Cable	LIGHT BLUE	910.0	-	-	-
16	-	-	SR92#124	3510359 R1	0.79	18.0	Thin Wall XLPE Primary Cable	WHITE	3100.0	-	-	-
17	-	-	SM92#162	3510335 R1	0.79	18.0	Thin Wall XLPE Primary Cable	YELLOW 2	3065.0	-	-	-
18	-	-	SM92#163	3510335 R1	0.79	18.0	Thin Wall XLPE Primary Cable	YELLOW 2	3100.0	-	8	1702

Connector Name	1501
Part Number	2018589C1
Short Description	ADD TRANS MODULE 1
Instances	A26 - Transmission (Allison 3K/4K):Diagram1 B6.7 - Transmission Shifter (Stalk Shifter Allison):Diagram2 B6.7 - Transmission Shifter Allison 5th Gen Push Button(SURHD):Diagram2 L9 - Transmission Shifter (Stalk Shifter Allison):Diagram2
Mates	1235

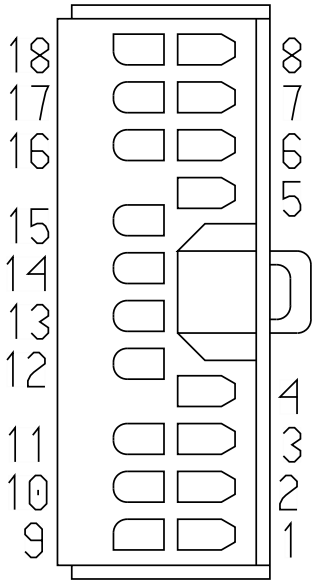

Name	Terminal Part Number	V-Min	Name	Wire Part Number	Wire CSA	Wire Spec	Wire Material description	Wire Color Description	Wire Length	End2 Terminal Part Number	End2 Pin Name	End2 Connect or
1	-	-	TZ92#101	3510341 R1	0.79	18.0	Thin Wall XLPE Primary Cable	LIGHT BLUE	2170.0	-	-	-
2	-	-	TQ92#103	3510335 R1	0.79	18.0	Thin Wall XLPE Primary Cable	YELLOW 2	1835.0	-	X	-
2	-	-	TX92#103	3510335 R1	0.79	18.0	Thin Wall XLPE Primary Cable	YELLOW 2	1745.0	-	-	-
3	-	-	TZ92#105	3510329 R1	0.79	18.0	Thin Wall XLPE Primary Cable	TAN	2170.0	-	-	-

Name	Terminal Part Number	V-Min	Name	Wire Part Number	Wire CSA	Wire Spec	Wire Material description	Wire Color Description	Wire Length	End2 Terminal Part Number	End2 Pin Name	End2 Connector
4	-	-	TZ92#109	3510311 R1	0.79	18.0	Thin Wall XLPE Primary Cable	GREY	175.0	-	X	-
5	-	-	TZ92#110	3510323 R1	0.79	18.0	Thin Wall XLPE Primary Cable	PINK	200.0	-	X	-
6	-	-	SB92#117	3510329 R1	0.79	18.0	Thin Wall XLPE Primary Cable	TAN	2170.0	-	-	-
6	-	-	XJ92#117	3510329 R1	0.79	18.0	Thin Wall XLPE Primary Cable	TAN	2170.0	-	-	-
6	-	-	XK92A117	3510329 R1	0.79	18.0	Thin Wall XLPE Primary Cable	TAN	225.0	-	-	-
6	-	-	XL92#117	3510329 R1	0.79	18.0	Thin Wall XLPE Primary Cable	TAN	2545.0	-	-	-
7	-	-	TZ92#122	3510335 R1	0.79	18.0	Thin Wall XLPE Primary Cable	YELLOW 2	2170.0	-	-	-
8	-	-	TZ92#123	3510341 R1	0.79	18.0	Thin Wall XLPE Primary Cable	LIGHT BLUE	2170.0	-	-	-

Name	Terminal Part Number	V-Min	Name	Wire Part Number	Wire CSA	Wire Spec	Wire Material description	Wire Color Description	Wire Length	End2 Terminal Part Number	End2 Pin Name	End2 Connect or
9	-	-	TX92#115	3510359 R1	0.79	18.0	Thin Wall XLPE Primary Cable	WHITE	1490.0	-	-	-
10	-	-	TZ92#130	3510359 R1	0.79	18.0	Thin Wall XLPE Primary Cable	WHITE	2170.0	-	-	-
11	-	-	PV92#142	3510359 R1	0.79	18.0	Thin Wall XLPE Primary Cable	WHITE	2845.0	-	19	1702
11	-	-	SM92#134	3510335 R1	0.79	18.0	Thin Wall XLPE Primary Cable	YELLOW 2	3100.0	-	19	1702
11	-	-	TZ92#134	3510329 R1	0.79	18.0	Thin Wall XLPE Primary Cable	TAN	2545.0	-	-	-
12	-	-	TZ92#141	3510329 R1	0.79	18.0	Thin Wall XLPE Primary Cable	TAN	2545.0	-	-	-
13	-	-	TZ92#143	3510341 R1	0.79	18.0	Thin Wall XLPE Primary Cable	LIGHT BLUE	2170.0	-	-	-
14	-	-	SB92#145	3510317 R1	0.79	18.0	Thin Wall XLPE Primary Cable	ORANGE	2170.0	-	-	-

Name	Terminal Part Number	V-Min	Name	Wire Part Number	Wire CSA	Wire Spec	Wire Material description	Wire Color Description	Wire Length	End2 Terminal Part Number	End2 Pin Name	End2 Connector
14	-	-	XJ92#145	3510317 R1	0.79	18.0	Thin Wall XLPE Primary Cable	ORANGE	2170.0	-	-	-
14	-	-	XK92#145	3510317 R1	0.79	18.0	Thin Wall XLPE Primary Cable	ORANGE	2545.0	-	-	-
14	-	-	XL92#145	3510317 R1	0.79	18.0	Thin Wall XLPE Primary Cable	ORANGE	2545.0	-	-	-
15	-	-	TX92#119	3510341 R1	0.79	18.0	Thin Wall XLPE Primary Cable	LIGHT BLUE	1315.0	-	-	-
16	-	-	TQ92#124	3510329 R1	0.79	18.0	Thin Wall XLPE Primary Cable	TAN	2170.0	-	-	-
16	-	-	TX92#124	3510329 R1	0.79	18.0	Thin Wall XLPE Primary Cable	TAN	2545.0	-	-	-
17	-	-	TZ92#162	3510335 R1	0.79	18.0	Thin Wall XLPE Primary Cable	YELLOW 2	2170.0	-	-	-
18	-	-	TZ92#163	3510329 R1	0.79	18.0	Thin Wall XLPE Primary Cable	TAN	2545.0	-	-	-

Connector Name	1502
Part Number	1661601C1
Short Description	TRANS MODULE 2
Instances	B6.7 - Transmission (Allison 3K/4K):Diagram1 L9 - Backup Light (Dual Daisy Reverse Light)Allison/ZF Trans 3K/4K:Diagram1 L9 - Backup Light (Single Reverse Light) Allison 3K/4K Option 1:Diagram1 L9 - Backup Light (Single Reverse Light) Allison 3K/4K Option 2:Diagram1 L9 - Backup Light (Single Reverse Light) Allison 3K/4K Option 3:Diagram1 L9 - Backup Light (Single Reverse Light)Allison:Diagram1 L9 - Transmission (Allison 3K/4K):Diagram2
Mates	1236

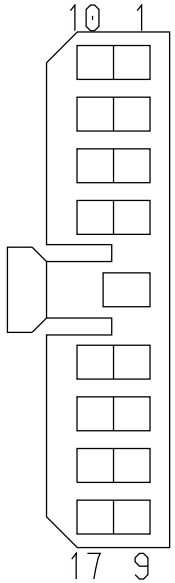

Name	Terminal Part Number	V-Min	Name	Wire Part Number	Wire CSA	Wire Spec	Wire Material description	Wire Color Description	Wire Length	End2 Terminal Part Number	End2 Pin Name	End2 Connect or
1	-	-	SM92#164	3510341 R1	0.79	18.0	Thin Wall XLPE Primary Cable	LIGHT BLUE	3065.0	-	-	-
2	-	-	SM92#165	3510329 R1	0.79	18.0	Thin Wall XLPE Primary Cable	TAN	3100.0	-	7	1702
2	-	-	SM92#165	3510329 R1	0.79	18.0	Thin Wall XLPE Primary Cable	TAN	3100.0	-	-	-
3	-	-	SM92#169	3510359 R1	0.79	18.0	Thin Wall XLPE Primary Cable	WHITE	2590.0	-	-	-

Name	Terminal Part Number	V-Min	Name	Wire Part Number	Wire CSA	Wire Spec	Wire Material description	Wire Color Description	Wire Length	End2 Terminal Part Number	End2 Pin Name	End2 Connector
3	-	-	LB92#169	3510359 R1	0.79	18.0	Thin Wall XLPE Primary Cable	WHITE	590.0	-	X	-
4	-	-	SM92#170	3510365 R1	0.79	18.0	Thin Wall XLPE Primary Cable	RED	190.0	-	X	-
5	-	-	SW92#111	2645921 R1	0.79	18.0	TXL 150C	ORANGE	800.0	-	-	-
6	-	-	SR92A112	3510323 R1	0.79	18.0	Thin Wall XLPE Primary Cable	PINK	590.0	-	-	-
6	-	-	ST92A112	2645918 R1	0.79	18.0	TXL 150C	PINK	800.0	-	-	-
6	-	-	SR92A112	3510323 R1	0.79	18.0	Thin Wall XLPE Primary Cable	PINK	590.0	-	X	-
7	-	-	SW92#116	2645922 R1	0.79	18.0	TXL 150C	LIGHT BLUE	800.0	-	-	-
8	-	-	SW92#177	2645920 R1	0.79	18.0	TXL 150C	LIGHT GREEN	800.0	-	-	-
9	-	-	SR92A131	3510323 R1	0.79	18.0	Thin Wall XLPE Primary Cable	PINK	590.0	-	-	-
9	-	-	ST92#131	2645910 R1	0.79	18.0	TXL 150C	YELLOW 2	800.0	-	-	-
10	-	-	SW92#133	2645910 R1	0.79	18.0	TXL 150C	YELLOW 2	800.0	-	-	-
11	-	-	SW92#136	2645921 R1	0.79	18.0	TXL 150C	ORANGE	800.0	-	-	-

Name	Terminal Part Number	V-Min	Name	Wire Part Number	Wire CSA	Wire Spec	Wire Material description	Wire Color Description	Wire Length	End2 Terminal Part Number	End2 Pin Name	End2 Connector
12	-	-	SW92#137	2645919 R1	0.79	18.0	TXL 150C	WHITE	800.0	-	-	-
13	-	-	SR92A158	3510299 R1	0.79	18.0	Thin Wall XLPE Primary Cable	LIGHT GREEN	640.0	-	-	-
13	-	-	ST92#158	2645920 R1	0.79	18.0	TXL 150C	LIGHT GREEN	800.0	-	-	-
13	-	-	SR92A158	3510299 R1	0.79	18.0	Thin Wall XLPE Primary Cable	LIGHT GREEN	640.0	-	X	-
14	-	-	SW92#171	2645910 R1	0.79	18.0	TXL 150C	YELLOW 2	800.0	-	-	-
15	-	-	SW92#151	2645919 R1	0.79	18.0	TXL 150C	WHITE	800.0	-	-	-
16	-	-	SW92#152	2645920 R1	0.79	18.0	TXL 150C	LIGHT GREEN	800.0	-	-	-
17	-	-	SW31#154	2645915 R1	0.79	18.0	TXL 150C	TAN	800.0	-	-	-

Connector Name	1502
Part Number	1661603C1
Short Description	ADD TRANS MODULE 2
Instances	A26 - Backup Light (Dual Daisy Reverse LT)Allison/ZF Trans 3K/4K:Diagram1 A26 - Backup Light (Dual Reverse Light)Allison/ZF Trans 3K/4K:Diagram1 A26 - Backup Light (Single Reverse Light) Allison 3K/4K:Diagram1 A26 - Backup Light (Single Reverse Light) Allison 3K/4K Option2:Diagram1 A26 - Backup Light (Single Reverse Light)Allison 3K/4K:Diagram1
Mates	1236

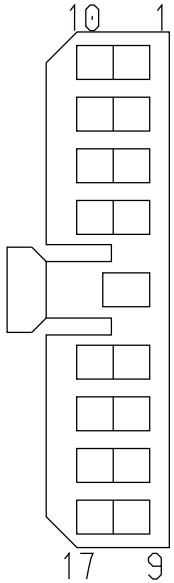

Name	Terminal Part Number	V-Min	Name	Wire Part Number	Wire CSA	Wire Spec	Wire Material description	Wire Color Description	Wire Length	End2 Terminal Part Number	End2 Pin Name	End2 Connect or
2	-	-	TZ92#165	3510329 R1	0.79	18.0	Thin Wall XLPE Primary Cable	TAN	2545.0	-	7	1702

Connector Name	1502
Part Number	1661603C1
Short Description	ADD TRANS MODULE 2
Instances	A26 - Backup Light (Single Reverse Light) W/Less Power Module Allison 3K/4K:Diagram1-Combination1 A26 - Transmission (Allison 3K/4K):Diagram1 B6.7 - Backup Light (Dual Daisy Reverse LT)Allison/ZF Trans 3K/4K:Diagram1 B6.7 - Backup Light (Dual Reverse Light)Allison/ZF Trans 3K/4K:Diagram1 B6.7 - Backup Light (Single Reverse Light) Allison 3K/4K Option 1:Diagram1 B6.7 - Backup Light (Single Reverse Light) Allison 3K/4K Option 2:Diagram1 B6.7 - Backup Light (Single Reverse Light) Allison 3K/4K Option 3:Diagram1
Mates	1236

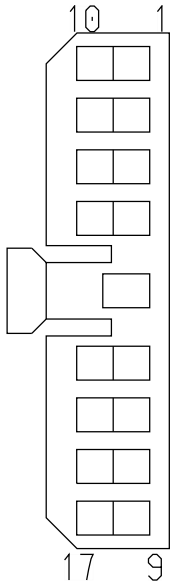

Name	Terminal Part Number	V-Min	Name	Wire Part Number	Wire CSA	Wire Spec	Wire Material description	Wire Color Description	Wire Length	End2 Terminal Part Number	End2 Pin Name	End2 Connect or
1	-	-	TZ92#164	3510341 R1	0.79	18.0	Thin Wall XLPE Primary Cable	LIGHT BLUE	2170.0	-	-	-
2	-	-	SM92#165	3510329 R1	0.79	18.0	Thin Wall XLPE Primary Cable	TAN	3100.0	-	7	1702
2	-	-	TZ92#165	3510329 R1	0.79	18.0	Thin Wall XLPE Primary Cable	TAN	2545.0	-	-	-
2	-	-	TZ92#165	3510329 R1	0.79	18.0	Thin Wall XLPE Primary Cable	TAN	2545.0	-	7	1702

Name	Terminal Part Number	V-Min	Name	Wire Part Number	Wire CSA	Wire Spec	Wire Material description	Wire Color Description	Wire Length	End2 Terminal Part Number	End2 Pin Name	End2 Connector
3	-	-	TZ92#169	3510329 R1	0.79	18.0	Thin Wall XLPE Primary Cable	TAN	175.0	-	X	-
4	-	-	TZ92#170	3510329 R1	0.79	18.0	Thin Wall XLPE Primary Cable	TAN	200.0	-	X	-
5	-	-	TZ92#111	3510317 R1	0.79	18.0	Thin Wall XLPE Primary Cable	ORANGE	1595.0	-	-	-
6	-	-	TQ92#112	3510329 R1	0.79	18.0	Thin Wall XLPE Primary Cable	TAN	1595.0	-	-	-
6	-	-	TX92#112	3510329 R1	0.79	18.0	Thin Wall XLPE Primary Cable	TAN	1040.0	-	-	-
7	-	-	TZ92#116	3510341 R1	0.79	18.0	Thin Wall XLPE Primary Cable	LIGHT BLUE	1595.0	-	-	-
8	-	-	TZ92#177	3510299 R1	0.79	18.0	Thin Wall XLPE Primary Cable	LIGHT GREEN	1595.0	-	-	-
9	-	-	TN92#131	3510335 R1	0.79	18.0	Thin Wall XLPE Primary Cable	YELLOW 2	1595.0	-	-	-

Name	Terminal Part Number	V-Min	Name	Wire Part Number	Wire CSA	Wire Spec	Wire Material description	Wire Color Description	Wire Length	End2 Terminal Part Number	End2 Pin Name	End2 Connector
9	-	-	TY92#131	3510335 R1	0.79	18.0	Thin Wall XLPE Primary Cable	YELLOW 2	425.0	-	-	-
10	-	-	TZ92#133	3510335 R1	0.79	18.0	Thin Wall XLPE Primary Cable	YELLOW 2	1595.0	-	-	-
11	-	-	TZ92#136	3510317 R1	0.79	18.0	Thin Wall XLPE Primary Cable	ORANGE	1595.0	-	-	-
12	-	-	TZ92#137	3510329 R1	0.79	18.0	Thin Wall XLPE Primary Cable	TAN	1595.0	-	-	-
13	-	-	TN92#158	3510299 R1	0.79	18.0	Thin Wall XLPE Primary Cable	LIGHT GREEN	1595.0	-	-	-
13	-	-	TY92#158	3510299 R1	0.79	18.0	Thin Wall XLPE Primary Cable	LIGHT GREEN	450.0	-	-	-
14	-	-	TZ92#171	3510329 R1	0.79	18.0	Thin Wall XLPE Primary Cable	TAN	1595.0	-	-	-
15	-	-	TZ92#151	3510359 R1	0.79	18.0	Thin Wall XLPE Primary Cable	WHITE	1595.0	-	-	-

Name	Terminal Part Number	V-Min	Name	Wire Part Number	Wire CSA	Wire Spec	Wire Material description	Wire Color Description	Wire Length	End2 Terminal Part Number	End2 Pin Name	End2 Connect or
16	-	-	TZ92#152	3510299 R1	0.79	18.0	Thin Wall XLPE Primary Cable	LIGHT GREEN	1595.0	-	-	-
17	-	-	TZ92#154	3510329 R1	0.79	18.0	Thin Wall XLPE Primary Cable	TAN	1595.0	-	-	-

Connector Name 1503
Part Number 3627615C1
Instances A26 - CAN Layout:Powertrain Standard J1939 (500Kbps)

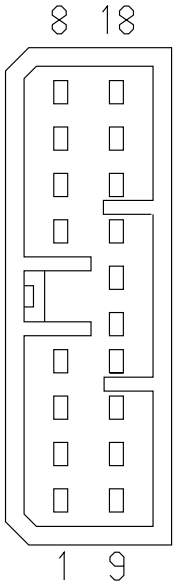

Name	Terminal Part Number	V-Min	Name	Wire Part Number	Wire CSA	Wire Spec	Wire Material description	Wire Color Description	Wire Length	End2 Terminal Part Number	End2 Pin Name	End2 Connect or
4	-	-	WIRE720080	-	0.0	-	-	-	0.0	-	PIN1	-
12	-	-	WIRE720079	-	0.0	-	-	-	0.0	-	PIN1	-

Connector Name	1503
Part Number	3627615C1
Instances	A26 - Powertrain J1939 Allison 3k/4k:A26 - Powertrain J1939 Allison 3k/4k B6.7 - CAN Layout:Powertrain Standard J1939 (500Kbps) B6.7 - Powertrain J1939 Allison 1k/2k:B6.7 - Allison 1k/2k Transmission B6.7 - Powertrain J1939 Allison 3k/4k:B6.7 - Allison 3k/4k Transmission L9 - CAN Layout:Powertrain Standard J1939 (500kbps) L9 - Powertrain J1939 Allison 3k/4k:L9 - Powertrain J1939 Allison 3k/4k
Mates	1237

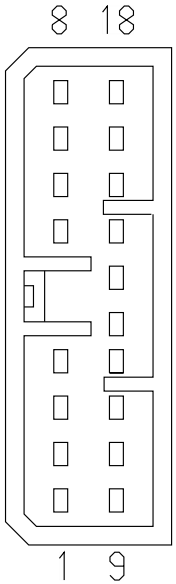

Name	Terminal Part Number	V-Min	Name	Wire Part Number	Wire CSA	Wire Spec	Wire Material description	Wire Color Description	Wire Length	End2 Terminal Part Number	End2 Pin Name	End2 Connect or
4	-	-	WIRE735147	-	0.0	-	-	-	0.0	-	1	-
4	-	-	WIRE870716	-	0.0	-	-	-	0.0	-	X	-
4	-	-	WIRE755208	-	0.0	-	-	-	0.0	-	PIN1	-
4	-	-	WIRE725691	-	0.0	-	-	-	0.0	-	PIN1	-
4	-	-	WIRE735147	-	0.0	-	-	-	0.0	-	PIN1	-
12	-	-	WIRE735146	-	0.0	-	-	-	0.0	-	1	-
12	-	-	WIRE870717	-	0.0	-	-	-	0.0	-	PIN1	-
12	-	-	WIRE755209	-	0.0	-	-	-	0.0	-	X	-

Name	Terminal Part Number	V-Min	Name	Wire Part Number	Wire CSA	Wire Spec	Wire Material description	Wire Color Description	Wire Length	End2 Terminal Part Number	End2 Pin Name	End2 Connect or
12	-	-	WIRE725690	-	0.0	-	-	-	0.0	-	X	-
12	-	-	WIRE735146	-	0.0	-	-	-	0.0	-	X	-

Connector Name	1503
Part Number	3627615C1
Short Description	ADD TRANS MODULE 3
Instances	A26 - Transmission (Allison 3K/4K):Diagram1 B6.7 - Transmission (Allison 3K/4K):Diagram1 L9 - Transmission (Allison 3K/4K):Diagram2
Mates	1237

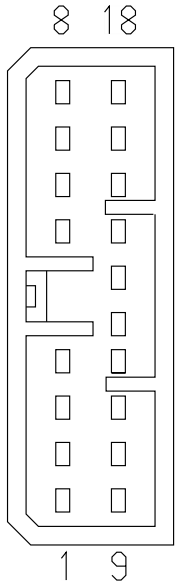

Name	Terminal Part Number	V-Min	Name	Wire Part Number	Wire CSA	Wire Spec	Wire Material description	Wire Color Description	Wire Length	End2 Terminal Part Number	End2 Pin Name	End2 Connect or
1	-	-	SA48#139	2645921 R1	0.79	18.0	TXL 150C	ORANGE	2690.0	-	-	-
1	-	-	SL48#139	3510317 R1	0.79	18.0	Thin Wall XLPE Primary Cable	ORANGE	1420.0	-	-	-
1	-	-	SW48#139	2645921 R1	0.79	18.0	TXL 150C	ORANGE	2460.0	-	-	-
1	-	-	TS48#139	3510317 R1	0.79	18.0	Thin Wall XLPE Primary Cable	ORANGE	2055.0	-	-	-
1	-	-	TL48#139	3510317 R1	0.79	18.0	Thin Wall XLPE Primary Cable	ORANGE	2050.0	-	-	-

Name	Terminal Part Number	V-Min	Name	Wire Part Number	Wire CSA	Wire Spec	Wire Material description	Wire Color Description	Wire Length	End2 Terminal Part Number	End2 Pin Name	End2 Connector
2	-	-	SW47#140	3510299 R1	0.79	18.0	Thin Wall XLPE Primary Cable	LIGHT GREEN	900.0	-	-	-
2	-	-	TZ47#140	3510299 R1	0.79	18.0	Thin Wall XLPE Primary Cable	LIGHT GREEN	1555.0	-	-	-
3	-	-	SA92A120	2645922 R1	0.79	18.0	TXL 150C	LIGHT BLUE	800.0	-	-	-
3	-	-	SV92#120	3510341 R1	0.79	18.0	Thin Wall XLPE Primary Cable	LIGHT BLUE	1065.0	-	-	-
3	-	-	SW92A120	2645922 R1	0.79	18.0	TXL 150C	LIGHT BLUE	800.0	-	-	-
3	-	-	TL92#120	3510341 R1	0.79	18.0	Thin Wall XLPE Primary Cable	LIGHT BLUE	1595.0	-	-	-
3	-	-	TS92#120	3510341 R1	0.79	18.0	Thin Wall XLPE Primary Cable	LIGHT BLUE	1680.0	-	-	-
5	-	-	SW92#155	2645919 R1	0.79	18.0	TXL 150C	WHITE	800.0	-	-	-
5	-	-	TZ92#155	3510329 R1	0.79	18.0	Thin Wall XLPE Primary Cable	TAN	1595.0	-	-	-
6	-	-	SW92#174	2645922 R1	0.79	18.0	TXL 150C	LIGHT BLUE	800.0	-	-	-

Name	Terminal Part Number	V-Min	Name	Wire Part Number	Wire CSA	Wire Spec	Wire Material description	Wire Color Description	Wire Length	End2 Terminal Part Number	End2 Pin Name	End2 Connector
6	-	-	TZ92#174	3510329 R1	0.79	18.0	Thin Wall XLPE Primary Cable	TAN	1595.0	-	-	-
7	-	-	SW92#176	2645910 R1	0.79	18.0	TXL 150C	YELLOW 2	800.0	-	-	-
7	-	-	TZ92#176	3510335 R1	0.79	18.0	Thin Wall XLPE Primary Cable	YELLOW 2	1595.0	-	-	-
8	-	-	SW47#125	3510311 R1	0.79	18.0	Thin Wall XLPE Primary Cable	GREY	3100.0	-	-	-
8	-	-	XQ47A125	3510329 R1	0.79	18.0	Thin Wall XLPE Primary Cable	TAN	2190.0	-	-	-
9	-	-	SA48#159	2645915 R1	0.79	18.0	TXL 150C	TAN	2690.0	-	-	-
9	-	-	SL48#159	3510329 R1	0.79	18.0	Thin Wall XLPE Primary Cable	TAN	1420.0	-	-	-
9	-	-	SW48#159	2645915 R1	0.79	18.0	TXL 150C	TAN	2460.0	-	-	-
9	-	-	TS48#159	3510329 R1	0.79	18.0	Thin Wall XLPE Primary Cable	TAN	2055.0	-	-	-
9	-	-	TL48#159	3510329 R1	0.79	18.0	Thin Wall XLPE Primary Cable	TAN	2050.0	-	-	-

Name	Terminal Part Number	V-Min	Name	Wire Part Number	Wire CSA	Wire Spec	Wire Material description	Wire Color Description	Wire Length	End2 Terminal Part Number	End2 Pin Name	End2 Connector
10	-	-	SW47#160	3510335 R1	0.79	18.0	Thin Wall XLPE Primary Cable	YELLOW 2	900.0	-	-	-
10	-	-	TZ47#160	3510335 R1	0.79	18.0	Thin Wall XLPE Primary Cable	YELLOW 2	1555.0	-	-	-
11	-	-	SV92#180	3510317 R1	0.79	18.0	Thin Wall XLPE Primary Cable	ORANGE	1065.0	-	-	-
11	-	-	SA92#180	2645921 R1	0.79	18.0	TXL 150C	ORANGE	800.0	-	-	-
11	-	-	SW92#180	2645921 R1	0.79	18.0	TXL 150C	ORANGE	800.0	-	-	-
11	-	-	TL92#180	3510329 R1	0.79	18.0	Thin Wall XLPE Primary Cable	TAN	1595.0	-	-	-
11	-	-	TS92#180	3510317 R1	0.79	18.0	Thin Wall XLPE Primary Cable	ORANGE	1680.0	-	-	-
13	-	-	TL92#142	3510359 R1	0.79	18.0	Thin Wall XLPE Primary Cable	WHITE	3065.0	-	-	-
13	-	-	TM92A142	3510359 R1	0.79	18.0	Thin Wall XLPE Primary Cable	WHITE	165.0	-	X	-

Name	Terminal Part Number	V-Min	Name	Wire Part Number	Wire CSA	Wire Spec	Wire Material description	Wire Color Description	Wire Length	End2 Terminal Part Number	End2 Pin Name	End2 Connector
13	-	-	TM92A142	3510359 R1	0.79	18.0	Thin Wall XLPE Primary Cable	WHITE	165.0	-	-	-
13	-	-	XK92#142	3510329 R1	0.79	18.0	Thin Wall XLPE Primary Cable	TAN	225.0	-	-	-
14	-	-	SR92#156	3510323 R1	0.79	18.0	Thin Wall XLPE Primary Cable	PINK	3100.0	-	-	-
14	-	-	TX92#156	3510329 R1	0.79	18.0	Thin Wall XLPE Primary Cable	TAN	2545.0	-	-	-
15	-	-	SR92#161	3510317 R1	0.79	18.0	Thin Wall XLPE Primary Cable	ORANGE	3100.0	-	-	-
15	-	-	TQ92#161	3510329 R1	0.79	18.0	Thin Wall XLPE Primary Cable	TAN	2170.0	-	-	-
15	-	-	TX92#161	3510329 R1	0.79	18.0	Thin Wall XLPE Primary Cable	TAN	2545.0	-	-	-
16	-	-	SR92#175	3510317 R1	0.79	18.0	Thin Wall XLPE Primary Cable	ORANGE	390.0	-	-	-

Name	Terminal Part Number	V-Min	Name	Wire Part Number	Wire CSA	Wire Spec	Wire Material description	Wire Color Description	Wire Length	End2 Terminal Part Number	End2 Pin Name	End2 Connector
16	-	-	TX92#175	3510317 R1	0.79	18.0	Thin Wall XLPE Primary Cable	ORANGE	1290.0	-	-	-
17	-	-	TZ92#157	3510359 R1	0.79	18.0	Thin Wall XLPE Primary Cable	WHITE	2170.0	-	-	-
18	-	-	SW92#118	2645914 R1	0.79	18.0	TXL 150C	GREY	800.0	-	-	-
18	-	-	TZ92#118	3510329 R1	0.79	18.0	Thin Wall XLPE Primary Cable	TAN	1595.0	-	-	-

Connector Name 16A

Part Number 3540612C1

Instances A26 - Powertrain J1939 Allison 3k/4k:A26 - Powertrain J1939 Allison 3k/4k
A26 - Powertrain J1939 UltraShift Transmission:A26 - Powertrain J1939 UltraShift Transmission
B6.7 - CAN Layout:Powertrain Standard J1939 (500Kbps)
B6.7 - Powertrain J1939 Allison 1k/2k:B6.7 - Allison 1k/2k Transmission
B6.7 - Powertrain J1939 Allison 3k/4k:B6.7 - Allison 3k/4k Transmission
B6.7 - Powertrain J1939 Manual Transmission:B6.7 - Manual Transmission
L9 - CAN Layout:Powertrain Standard J1939 (500kbps)
L9 - Powertrain J1939 Allison 3k/4k:L9 - Powertrain J1939 Allison 3k/4k
L9 - Powertrain J1939 Eaton:L9 - Powertrain J1939 Eaton
L9 - Powertrain J1939 Manual Transmission:Powertrain Standard J1939 (500kbps)

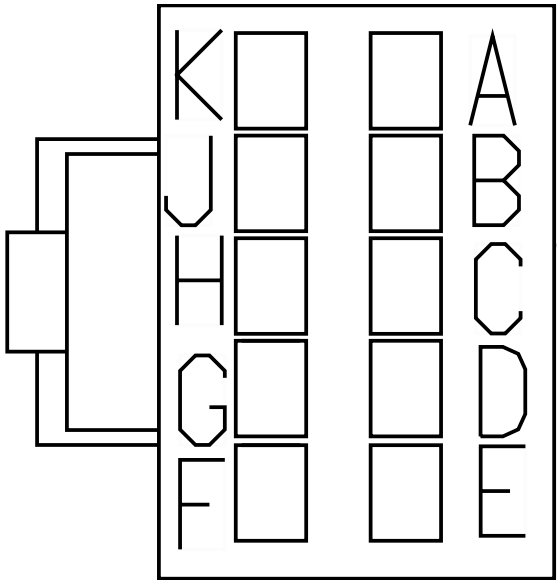

Mates 16B

Name	Terminal Part Number	V-Min	Name	Wire Part Number	Wire CSA	Wire Spec	Wire Material description	Wire Color Description	Wire Length	End2 Terminal Part Number	End2 Pin Name	End2 Connect or
J	-	-	WIRE735262	-	0.0	-	-	-	0.0	-	PIN1	-
J	-	-	WIRE735133	-	0.0	-	-	-	0.0	-	6	1979
K	-	-	WIRE735263	-	0.0	-	-	-	0.0	-	PIN1	-
K	-	-	WIRE735132	-	0.0	-	-	-	0.0	-	5	1979

Connector Name 16B

Part Number 3540613C1

Instances A26 - Powertrain J1939 Allison 3k/4k:A26 - Powertrain J1939 Allison 3k/4k
A26 - Powertrain J1939 UltraShift Transmission:A26 - Powertrain J1939 UltraShift Transmission
B6.7 - CAN Layout:Powertrain Standard J1939 (500Kbps)
B6.7 - Powertrain J1939 Allison 1k/2k:B6.7 - Allison 1k/2k Transmission
B6.7 - Powertrain J1939 Allison 3k/4k:B6.7 - Allison 3k/4k Transmission
B6.7 - Powertrain J1939 Manual Transmission:B6.7 - Manual Transmission
L9 - CAN Layout:Powertrain Standard J1939 (500kbps)
L9 - Powertrain J1939 Allison 3k/4k:L9 - Powertrain J1939 Allison 3k/4k
L9 - Powertrain J1939 Eaton:L9 - Powertrain J1939 Eaton
L9 - Powertrain J1939 Manual Transmission:Powertrain Standard J1939 (500kbps)

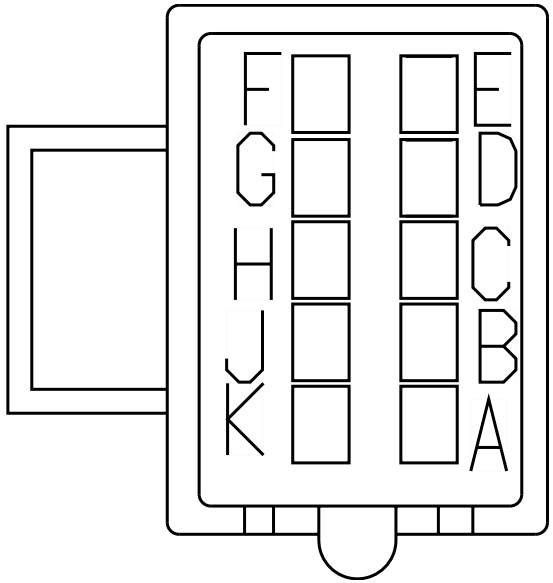

Mates 16A

Name	Terminal Part Number	V-Min	Name	Wire Part Number	Wire CSA	Wire Spec	Wire Material description	Wire Color Description	Wire Length	End2 Terminal Part Number	End2 Pin Name	End2 Connect or
J	-	-	WIRE735134	-	0.0	-	-	-	0.0	-	PIN1	-
K	-	-	WIRE735135	-	0.0	-	-	-	0.0	-	PIN1	-

Connector Name	1605
Part Number	373759C2
Instances	A26/B6.7/L9 - BCM (Body Control Module):Connector J8 (Power Feed) A26/B6.7/L9 - Interior Dual Post Ground Stud-Cowl Wall:Diagram1
Mates	MODU-BCM-A000-10-00

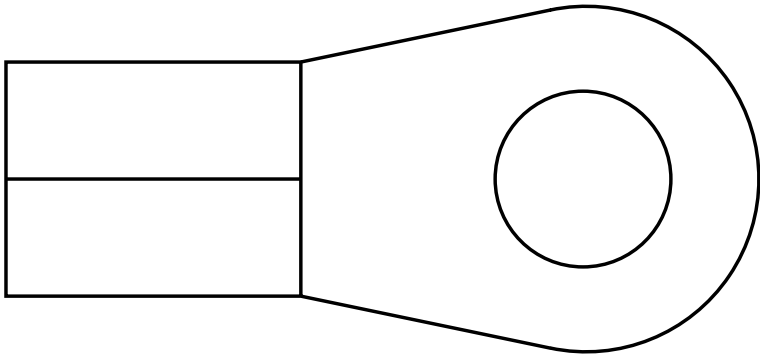

Name	Terminal Part Number	V-Min	Name	Wire Part Number	Wire CSA	Wire Spec	Wire Material description	Wire Color Description	Wire Length	End2 Terminal Part Number	End2 Pin Name	End2 Connect or
A	-	-	RC81-G	2643788 R1	4.81	10.0	Std. Wall XLPE Primary Cable	WHITE	345.0	-	X	-
A	-	-	HZ14BC	2644026 R1	18.94	4.0	Std. Wall XLPE Battery Cable	RED	395.0	-	X	-

Connector Name	1620
Part Number	2007315C1
Instances	A26/B6.7/L9 - ZVR Splice Pack - 1620:Diagram1
Mates	SP-ZVR_SPLICE_PACK-B000-10 -A1

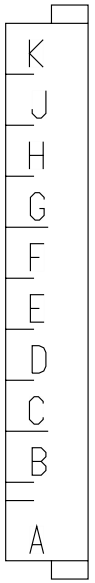

Name	Terminal Part Number	V-Min	Name	Wire Part Number	Wire CSA	Wire Spec	Wire Material description	Wire Color Description	Wire Length	End2 Terminal Part Number	End2 Pin Name	End2 Connect or
A	-	-	AA9Z	3510311 R1	0.79	18.0	Thin Wall XLPE Primary Cable	GREY	1360.0	-	-	-
B	-	-	NA9CDC	3510310 R1	0.53	20.0	Thin Wall XLPE Primary Cable	GREY	515.0	-	-	-
C	-	-	NL9ZB	3510311 R1	0.79	18.0	Thin Wall XLPE Primary Cable	GREY	910.0	-	27	1700
D	-	-	VU9ZF	3510311 R1	0.79	18.0	Thin Wall XLPE Primary Cable	GREY	1035.0	-	-	-

Name	Terminal Part Number	V-Min	Name	Wire Part Number	Wire CSA	Wire Spec	Wire Material description	Wire Color Description	Wire Length	End2 Terminal Part Number	End2 Pin Name	End2 Connector
D	-	-	ME110B	3510311 R1	0.79	18.0	Thin Wall XLPE Primary Cable	GREY	990.0	-	-	-
E	-	-	QA9Z	3510311 R1	0.79	18.0	Thin Wall XLPE Primary Cable	GREY	1360.0	-	-	-
F	-	-	AC9	3510311 R1	0.79	18.0	Thin Wall XLPE Primary Cable	GREY	1080.0	-	-	-
F	-	-	AB9	3510311 R1	0.79	18.0	Thin Wall XLPE Primary Cable	GREY	1035.0	-	-	-
G	-	-	KA9B	3510311 R1	0.79	18.0	Thin Wall XLPE Primary Cable	GREY	220.0	-	-	-
H	-	-	ND9A	3510358 R1	0.53	20.0	Thin Wall XLPE Primary Cable	WHITE	670.0	-	-	-
J	-	-	QI9BB	3510311 R1	0.79	18.0	Thin Wall XLPE Primary Cable	GREY	4090.0	-	-	-
J	-	-	QW9BB	3510311 R1	0.79	18.0	Thin Wall XLPE Primary Cable	GREY	1914.0	-	-	-

Connector Name	1623
Part Number	2007315C1
Instances	A26/B6.7/L9 - Park / Turn Lights Splice Packs 1623/1625/400:Diagram1
Mates	SP-MARKER_LT_SPLICE_PACK-B 000-10-A1

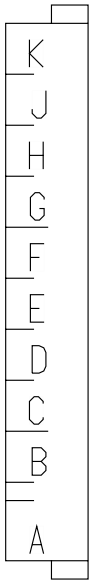

Name	Terminal Part Number	V-Min	Name	Wire Part Number	Wire CSA	Wire Spec	Wire Material description	Wire Color Description	Wire Length	End2 Terminal Part Number	End2 Pin Name	End2 Connect or
A	-	-	YP54	3510306 R1	1.16	16.0	Thin Wall XLPE Primary Cable	BROWN	1205.0	-	-	-
C	-	-	YS54B	3510305 R1	0.79	18.0	Thin Wall XLPE Primary Cable	BROWN	1080.0	-	-	-
D	-	-	YS58T	3510305 R1	0.79	18.0	Thin Wall XLPE Primary Cable	BROWN	925.0	-	1	2000
F	-	-	YP58T	3510305 R1	0.79	18.0	Thin Wall XLPE Primary Cable	BROWN	865.0	-	1	2000

Name	Terminal Part Number	V-Min	Name	Wire Part Number	Wire CSA	Wire Spec	Wire Material description	Wire Color Description	Wire Length	End2 Terminal Part Number	End2 Pin Name	End2 Connector
G	-	-	ZQ68	3510306 R1	1.16	16.0	Thin Wall XLPE Primary Cable	BROWN	290.0	-	X	-
G	-	-	ZN68	3510306 R1	1.16	16.0	Thin Wall XLPE Primary Cable	BROWN	1160.0	-	-	-
G	-	-	ZP68	3510306 R1	1.16	16.0	Thin Wall XLPE Primary Cable	BROWN	320.0	-	X	-

Connector Name	1625
Part Number	3543733C1
Instances	A26/B6.7/L9 - Park / Turn Lights Splice Packs 1623/1625/400:Diagram1
Mates	SP-REAR_TURN_SIGNAL_SPLICE _PACK-B000-10-A1

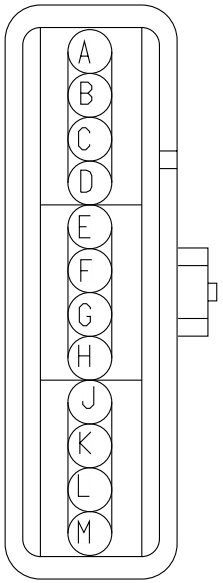

Name	Terminal Part Number	V-Min	Name	Wire Part Number	Wire CSA	Wire Spec	Wire Material description	Wire Color Description	Wire Length	End2 Terminal Part Number	End2 Pin Name	End2 Connect or
A	-	-	YL57C	3510318 R1	1.16	16.0	Thin Wall XLPE Primary Cable	ORANGE	1180.0	-	-	-
A	-	-	YL57E	3510318 R1	1.16	16.0	Thin Wall XLPE Primary Cable	ORANGE	1180.0	-	-	-
B	-	-	YL57	3510318 R1	1.16	16.0	Thin Wall XLPE Primary Cable	ORANGE	1170.0	-	-	-
C	-	-	YX57BB	3510300 R1	1.16	16.0	Thin Wall XLPE Primary Cable	LIGHT GREEN	1170.0	-	-	-

Name	Terminal Part Number	V-Min	Name	Wire Part Number	Wire CSA	Wire Spec	Wire Material description	Wire Color Description	Wire Length	End2 Terminal Part Number	End2 Pin Name	End2 Connector
C	-	-	YW57BB	3510300 R1	1.16	16.0	Thin Wall XLPE Primary Cable	LIGHT GREEN	3420.0	-	-	-
E	-	-	YL56A	3510318 R1	1.16	16.0	Thin Wall XLPE Primary Cable	ORANGE	1180.0	-	-	-
E	-	-	YL56CB	3510318 R1	1.16	16.0	Thin Wall XLPE Primary Cable	ORANGE	1180.0	-	-	-
F	-	-	YL56	3510318 R1	1.16	16.0	Thin Wall XLPE Primary Cable	ORANGE	1170.0	-	-	-
G	-	-	YV56BB	3510336 R1	1.16	16.0	Thin Wall XLPE Primary Cable	YELLOW 2	1170.0	-	-	-
G	-	-	YW56BB	3510336 R1	1.16	16.0	Thin Wall XLPE Primary Cable	YELLOW 2	3420.0	-	-	-

Connector Name	1650MA
Part Number	3544066C1
Short Description	DIAGNOSTIC CONNECTOR 250K
Instances	A26 - Powertrain J1939 Allison 3k/4k:A26 - Powertrain J1939 Allison 3k/4k A26 - Powertrain J1939 UltraShift Transmission:A26 - Powertrain J1939 UltraShift Transmission B6.7 - Cab J1939 (250kbps):B6.7 - Cab J1939 (250Kbps) B6.7 - CAN Layout:Cab Standard J1939 (250Kbps) B6.7 - CAN Layout:Powertrain Standard J1939 (500Kbps) B6.7 - Powertrain J1939 Allison 1k/2k:B6.7 - Allison 1k/2k Transmission B6.7 - Powertrain J1939 Allison 3k/4k:B6.7 - Allison 3k/4k Transmission B6.7 - Powertrain J1939 Manual Transmission:B6.7 - Manual Transmission L9 - Cab J1939 (250kbps):L9 - Cab J1939 (250Kbps) L9 - CAN Layout:Cab Standard J1939 (250Kbps) L9 - CAN Layout:Powertrain Standard J1939 (500kbps) L9 - Powertrain J1939 Allison 3k/4k:L9 - Powertrain J1939 Allison 3k/4k L9 - Powertrain J1939 Eaton:L9 - Powertrain J1939 Eaton L9 - Powertrain J1939 Manual Transmission:Powertrain Standard J1939 (500kbps)

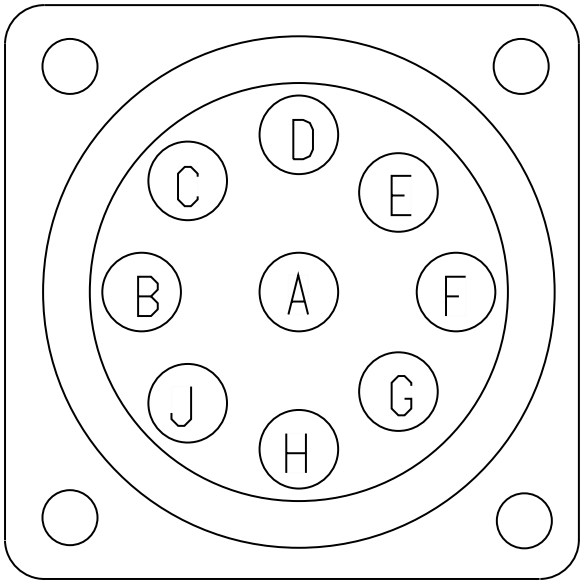

Name	Terminal Part Number	V-Min	Name	Wire Part Number	Wire CSA	Wire Spec	Wire Material description	Wire Color Description	Wire Length	End2 Terminal Part Number	End2 Pin Name	End2 Connector
C	-	-	WIRE735129	-	0.0	-	-	-	0.0	-	PIN1	-
D	-	-	WIRE735130	-	0.0	-	-	-	0.0	-	PIN1	-
H	-	-	WIRE722840	-	0.0	-	-	-	0.0	-	PIN1	-
H	-	-	WIRE735299	-	0.0	-	-	-	0.0	-	PIN1	-
J	-	-	WIRE722841	-	0.0	-	-	-	0.0	-	PIN1	-

Name	Terminal Part Number	V-Min	Name	Wire Part Number	Wire CSA	Wire Spec	Wire Material description	Wire Color Description	Wire Length	End2 Terminal Part Number	End2 Pin Name	End2 Connect or
J	-	-	WIRE735298	-	0.0	-	-	-	0.0	-	PIN1	-

Connector Name 1650

Part Number 3757649C1

Short Description DIAGNOSTIC CONNECTOR 500K

Instances A26 - Cab J1939 (250Kbps):A26 - Cab J1939 (250Kbps)
A26 - CAN Layout:Cab Standard J1939 (250Kbps)
A26 - CAN Layout:Powertrain Standard J1939 (500Kbps)
A26 - Powertrain J1939 Allison 3k/4k:A26 - Powertrain J1939 Allison 3k/4k
A26 - Powertrain J1939 UltraShift Transmission:A26 - Powertrain J1939 UltraShift Transmission
B6.7 - Cab J1939 (250kbps):B6.7 - Cab J1939 (250Kbps)
B6.7 - CAN Layout:Cab Standard J1939 (250Kbps)
B6.7 - CAN Layout:Powertrain Standard J1939 (500Kbps)
B6.7 - Powertrain J1939 Allison 1k/2k:B6.7 - Allison 1k/2k Transmission
B6.7 - Powertrain J1939 Allison 3k/4k:B6.7 - Allison 3k/4k Transmission
B6.7 - Powertrain J1939 Manual Transmission:B6.7 - Manual Transmission
L9 - Cab J1939 (250kbps):L9 - Cab J1939 (250Kbps)
L9 - CAN Layout:Cab Standard J1939 (250Kbps)
L9 - CAN Layout:Powertrain Standard J1939 (500kbps)
L9 - Powertrain J1939 Allison 3k/4k:L9 - Powertrain J1939 Allison 3k/4k
L9 - Powertrain J1939 Eaton:L9 - Powertrain J1939 Eaton
L9 - Powertrain J1939 Manual Transmission:Powertrain Standard J1939 (500kbps)

Mates DEV-9PinDiag-0008-00-10-01A

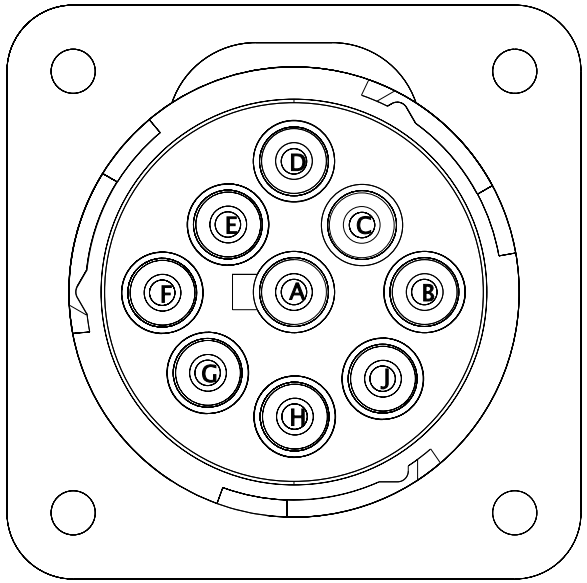

Name	Terminal Part Number	V-Min	Name	Wire Part Number	Wire CSA	Wire Spec	Wire Material description	Wire Color Description	Wire Length	End2 Terminal Part Number	End2 Pin Name	End2 Connector
C	-	-	WIRE735138	-	0.0	-	-	-	0.0	-	PIN1	-
C	-	-	WIRE720108	-	0.0	-	-	-	0.0	-	PIN1	-
D	-	-	WIRE735139	-	0.0	-	-	-	0.0	-	PIN1	-
D	-	-	WIRE720106	-	0.0	-	-	-	0.0	-	PIN1	-

Name	Terminal Part Number	V-Min	Name	Wire Part Number	Wire CSA	Wire Spec	Wire Material description	Wire Color Description	Wire Length	End2 Terminal Part Number	End2 Pin Name	End2 Connector
H	-	-	WIRE720027	-	0.0	-	-	-	0.0	-	PIN1	-
J	-	-	WIRE720029	-	0.0	-	-	-	0.0	-	PIN1	-

Connector Name 1651

Part Number 3757649C1

Instances A26 - Powertrain J1939 Allison 3k/4k:A26 - Powertrain J1939 Allison 3k/4k
A26 - Powertrain J1939 UltraShift Transmission:A26 - Powertrain J1939 UltraShift Transmission
B6.7 - CAN Layout:Powertrain Standard J1939 (500Kbps)
L9 - CAN Layout:Powertrain Standard J1939 (500kbps)
L9 - Powertrain J1939 Allison 3k/4k:L9 - Powertrain J1939 Allison 3k/4k
L9 - Powertrain J1939 Eaton:L9 - Powertrain J1939 Eaton
L9 - Powertrain J1939 Manual Transmission:Powertrain Standard J1939 (500kbps)

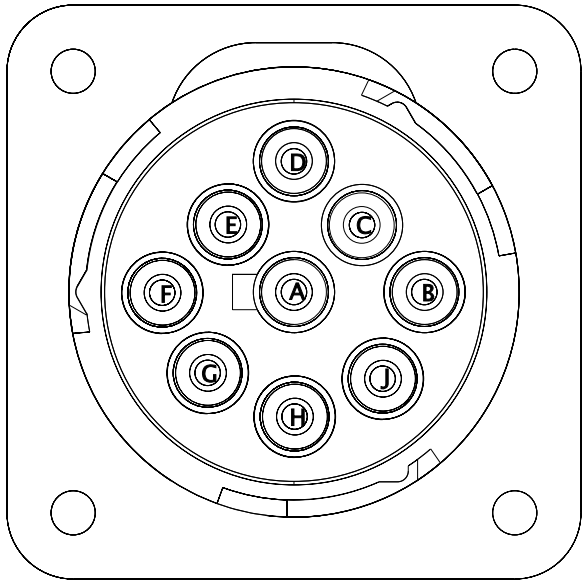

Name	Terminal Part Number	V-Min	Name	Wire Part Number	Wire CSA	Wire Spec	Wire Material description	Wire Color Description	Wire Length	End2 Terminal Part Number	End2 Pin Name	End2 Connector
C	-	-	WIRE735156	-	0.0	-	-	-	0.0	-	PIN1	-
C	-	-	WIRE735281	-	0.0	-	-	-	0.0	-	1	-
D	-	-	WIRE735157	-	0.0	-	-	-	0.0	-	PIN1	-
D	-	-	WIRE735280	-	0.0	-	-	-	0.0	-	1	-

Connector Name 1651

Part Number 3757649C1

Instances B6.7 - Powertrain J1939 Allison 1k/2k:B6.7 - Allison 1k/2k Transmission

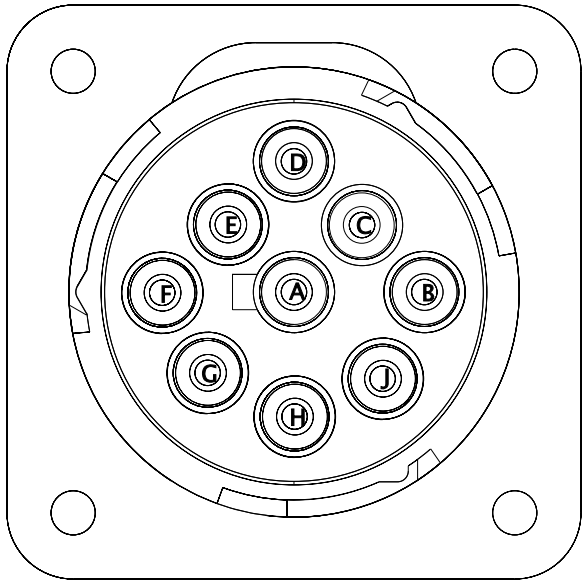

Name	Terminal Part Number	V-Min	Name	Wire Part Number	Wire CSA	Wire Spec	Wire Material description	Wire Color Description	Wire Length	End2 Terminal Part Number	End2 Pin Name	End2 Connect or
C	-	-	WIRE735281	-	0.0	-	-	-	0.0	-	1	-
D	-	-	WIRE735280	-	0.0	-	-	-	0.0	-	1	-

Connector Name 1651

Part Number 3757649C1

Instances B6.7 - Powertrain J1939 Allison 3k/4k:B6.7 - Allison 3k/4k Transmission

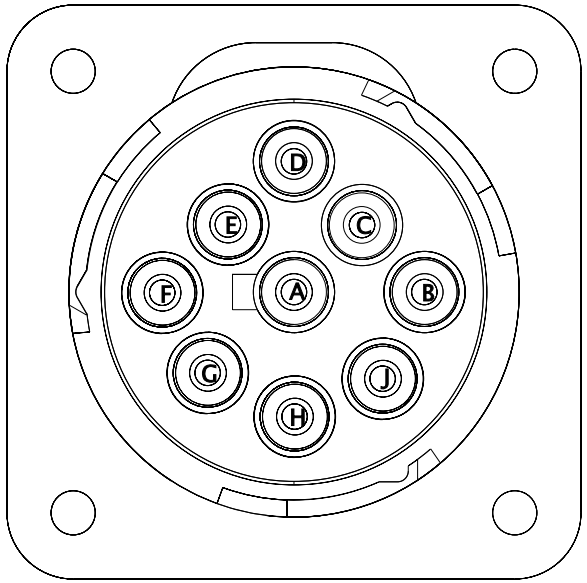

Name	Terminal Part Number	V-Min	Name	Wire Part Number	Wire CSA	Wire Spec	Wire Material description	Wire Color Description	Wire Length	End2 Terminal Part Number	End2 Pin Name	End2 Connect or
C	-	-	WIRE735281	-	0.0	-	-	-	0.0	-	1	-
D	-	-	WIRE735280	-	0.0	-	-	-	0.0	-	1	-

Connector Name 1651

Part Number 3757649C1

Instances B6.7 - Powertrain J1939 Manual Transmission:B6.7 - Manual Transmission

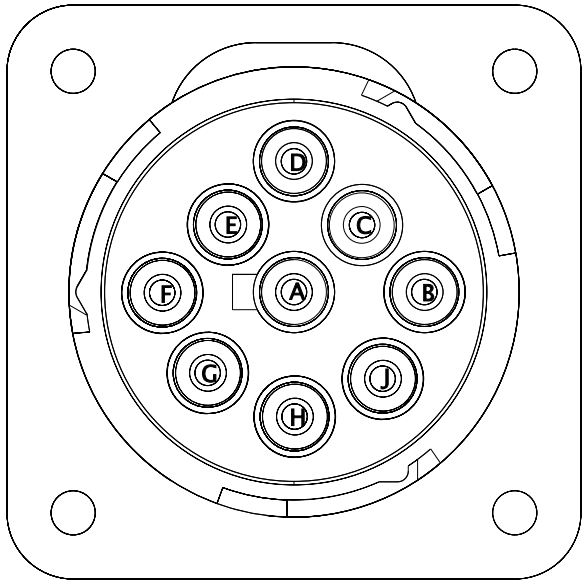

Name	Terminal Part Number	V-Min	Name	Wire Part Number	Wire CSA	Wire Spec	Wire Material description	Wire Color Description	Wire Length	End2 Terminal Part Number	End2 Pin Name	End2 Connect or
C	-	-	WIRE735281	-	0.0	-	-	-	0.0	-	1	-
D	-	-	WIRE735280	-	0.0	-	-	-	0.0	-	1	-

Connector Name	1657M
Part Number	3683465C1
Instances	A26 - Powertrain J1939 Allison 3k/4k:A26 - Powertrain J1939 Allison 3k/4k A26 - Powertrain J1939 UltraShift Transmission:A26 - Powertrain J1939 UltraShift Transmission B6.7 - CAN Layout:Powertrain Standard J1939 (500Kbps) B6.7 - Powertrain J1939 Allison 1k/2k:B6.7 - Allison 1k/2k Transmission B6.7 - Powertrain J1939 Allison 3k/4k:B6.7 - Allison 3k/4k Transmission B6.7 - Powertrain J1939 Manual Transmission:B6.7 - Manual Transmission L9 - CAN Layout:Powertrain Standard J1939 (500kbps) L9 - Powertrain J1939 Allison 3k/4k:L9 - Powertrain J1939 Allison 3k/4k L9 - Powertrain J1939 Eaton:L9 - Powertrain J1939 Eaton L9 - Powertrain J1939 Manual Transmission:Powertrain Standard J1939 (500kbps)

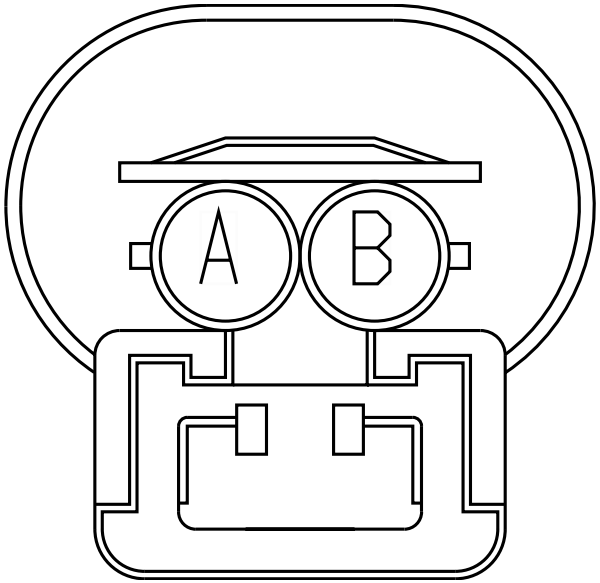

Name	Terminal Part Number	V-Min	Name	Wire Part Number	Wire CSA	Wire Spec	Wire Material description	Wire Color Description	Wire Length	End2 Terminal Part Number	End2 Pin Name	End2 Connector
A	-	-	WIRE735248	-	0.0	-	-	-	0.0	-	1	-
A	-	-	WIRE735152	-	0.0	-	-	-	0.0	-	1	-
B	-	-	WIRE735249	-	0.0	-	-	-	0.0	-	1	-
B	-	-	WIRE735153	-	0.0	-	-	-	0.0	-	1	-

Connector Name 1660

Part Number 2006789C1

Instances A26 - CAN Layout:Telematics J1708
A26 - Telematics J1708 (9.6kbps):A26 - Telematics J1708 (9.6kbps)
B6.7 - CAN Layout:Telematics J1708
B6.7 - Telematics J1708 (9.6kbps):B6.7 - Telematics J1708
L9 - CAN Layout:Telematics J1708
L9 - Telematics J1708 (9.6kbps):Telematics J1708 (9.6kbps)

Mates SP-IP-B001-00-10-A1-1660

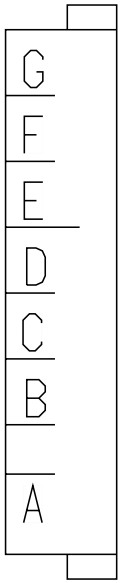

Name	Terminal Part Number	V-Min	Name	Wire Part Number	Wire CSA	Wire Spec	Wire Material description	Wire Color Description	Wire Length	End2 Terminal Part Number	End2 Pin Name	End2 Connect or
A	-	-	WIRE722842	-	0.0	-	-	-	0.0	-	E2	J5-1602
A	-	-	WIRE565819	-	0.0	-	-	-	0.0	-	E2	J5-1602
A	-	-	-	-	-	-	-	-	-	-	-	-
E	-	-	WIRE722853	-	0.0	-	-	-	0.0	-	4	1939M
E	-	-	WIRE565820	-	0.0	-	-	-	0.0	-	4	1939M
E	-	-	-	-	-	-	-	-	-	-	-	-
F	-	-	WIRE722860	-	0.0	-	-	-	0.0	-	4	8998
F	-	-	-	-	-	-	-	-	-	-	-	-

Connector Name	1661
Part Number	2006789C1
Instances	A26 - CAN Layout:Telematics J1708 A26 - Telematics J1708 (9.6kbps):A26 - Telematics J1708 (9.6kbps) B6.7 - CAN Layout:Telematics J1708 B6.7 - Telematics J1708 (9.6kbps):B6.7 - Telematics J1708 L9 - CAN Layout:Telematics J1708 L9 - Telematics J1708 (9.6kbps):Telematics J1708 (9.6kbps)
Mates	SP-IP-B001-00-10-A1-1661

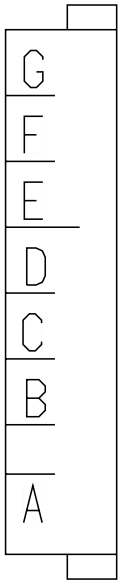

Name	Terminal Part Number	V-Min	Name	Wire Part Number	Wire CSA	Wire Spec	Wire Material description	Wire Color Description	Wire Length	End2 Terminal Part Number	End2 Pin Name	End2 Connect or
A	-	-	WIRE722843	-	0.0	-	-	-	0.0	-	E1	J5-1602
A	-	-	WIRE565818	-	0.0	-	-	-	0.0	-	E1	J5-1602
E	-	-	WIRE722847	-	0.0	-	-	-	0.0	-	5	1939M
E	-	-	WIRE565821	-	0.0	-	-	-	0.0	-	5	1939M
F	-	-	WIRE722859	-	0.0	-	-	-	0.0	-	5	8998

Connector Name 1700
Part Number RING-M-12_0
Instances L9 - Leece-Neville - LN 325A Alternator W/Sensor:Diagram1

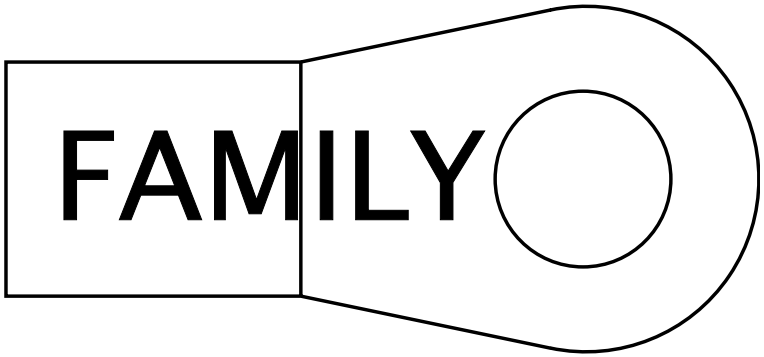

Name	Terminal Part Number	V-Min	Name	Wire Part Number	Wire CSA	Wire Spec	Wire Material description	Wire Color Description	Wire Length	End2 Terminal Part Number	End2 Pin Name	End2 Connect or
A	-	-	WL2-G	2645227 R1	61.89	0.0	SGX FLEX 125C	BLACK	2615.0	-	A	1080

Connector Name	1700
Part Number	3595624C1
Short Description	DASH HARNESS CONNECTOR
Instances	A26 - ABS Private J1939:A26 - ABS Private J1939 A26 - Antilock Brake System (ABS) Bendix:Diagram1 A26 - Antilock Brake System (ABS) Bendix:Diagram2 A26 - Antilock Brake System (ABS) Bendix:Diagram3 A26 - Antilock Brake System (ABS)-Wabco 4 Channel Implementation:Diagram1 A26 - Bendix Tractor or Towing Truck N/ Air SUSP J1939 Driven Lamp:Diagram1 A26 - Bendix Tractor or Towing Truck N/ Air SUSP J1939 Driven Lamp:Diagram2 A26 - Bendix Tractor or Towing Truck N/ Air SUSP J1939 Driven Lamp:Diagram3 A26 - Bendix Tractor or Towing Truck N/ Air SUSP J1939 Driven Lamp:Diagram4 A26 - Bendix Tractor or Towing Truck W/ Air SUSP J1939 Driven Lamp:Diagram1 A26 - Bendix Tractor or Towing Truck W/ Air SUSP J1939 Driven Lamp:Diagram2 A26 - Bendix Tractor or Towing Truck W/ Air SUSP J1939 Driven Lamp:Diagram3 A26 - Bendix Tractor or Towing Truck W/ Air SUSP J1939 Driven Lamp:Diagram4 A26 - CAN Layout:ABS Proprietary J1939 A26 - City Horn (W/ 4PIN Park Brake):Diagram1 A26 - City Horn (W/ 4PIN Park Brake):Diagram2 A26 - City Horn (W/ 4PIN Park Brake):Diagram3 A26 - City Horn (W/ 4PIN Park Brake):Diagram4 A26 - City Horn (W/ 4PIN):Diagram1 A26 - City Horn (W/ 4PIN):Diagram2 A26 - City Horn (W/ 4PIN):Diagram3 A26 - City Horn (W/ 4PIN):Diagram4 A26 - City Horn (W/ 10PIN Park Brake):Diagram1 A26 - City Horn (W/ 10PIN Park Brake):Diagram2 A26 - City Horn (W/ 10PIN):Diagram1 A26 - City Horn (W/ 10PIN):Diagram2 A26 - Directional Signal (Turn) W/ LED BOX LAMPS:Diagram1 A26 - Directional Signal (Turn) W/ LED BOX LAMPS, W/Plow Lights:Diagram1-Option 1 (Snow Plow #1) A26 - Directional Signal (Turn) W/ LED BOX LAMPS, W/Plow Lights:Diagram1-Option 2 (Snow Plow #2)

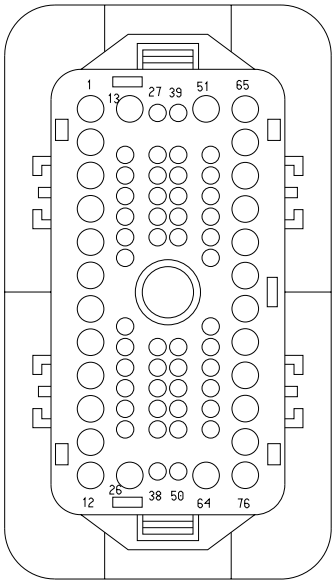

A26 - Directional Signal (Turn) W/ Single Tail Board W/Hazard SW:Diagram1
A26 - Front Fog Lamps LED:Diagram1
A26 - Front Fog Lamps LED:Diagram2
A26 - Front Fog Lights W CONNECTOR Halogen:Diagram1
A26 - Front Fog Lights W CONNECTOR Halogen:Diagram2
A26 - Front Marker Lights:Diagram1
A26 - Front Marker Lights W/Plow Lights:Diagram1-Combination1
A26 - Front Marker Lights W/Plow Lights:Diagram1-Combination2
A26 - Headlight W/Plowlights, W/LOWW, W/O Interrupt:Diagram1-Combination1
A26 - Headlight W/Plowlights, W/LOWW, W/O Interrupt:Diagram1-Combination2
A26 - Headlight W/Plowlights, W/LOWW, W/O Interrupt:Diagram1-Combination3
A26 - Headlight W/Plowlights, W/LOWW, W/O Interrupt:Diagram1-Combination4
A26 - Headlight W/Plowlights, W/O LOWW, W/O Interrupt:Diagram1-Combination1
A26 - Headlight W/Plowlights, W/O LOWW, W/O Interrupt:Diagram1-Combination2
A26 - Headlight W/Plowlights, W/O LOWW, W/O Interrupt:Diagram1-Combination3
A26 - Headlight W/Plowlights, W/O LOWW, W/O Interrupt:Diagram1-Combination4
A26 - Headlights W/LOWW, W/Interrupt - 10 PIN CLK:Diagram1-Combination1
A26 - Headlights W/LOWW, W/Interrupt - 10 PIN CLK:Diagram1-Combination2
A26 - Headlights W/O LOWW, W/Interrupt - 10 PIN CLK:Diagram1-Combination1
A26 - Headlights W/O LOWW, W/Interrupt - 10 PIN CLK:Diagram1-Combination2
A26 - Headlights W/PlowLights, W/LOWW, W/Interrupt - 10 PIN CLK:Diagram1-Combination1
A26 - Headlights W/PlowLights, W/LOWW, W/Interrupt - 10 PIN CLK:Diagram1-Combination2
A26 - Headlights W/PlowLights, W/LOWW, W/Interrupt - 10 PIN CLK:Diagram1-Combination3
A26 - Headlights W/PlowLights, W/LOWW, W/Interrupt - 10 PIN CLK:Diagram1-Combination4

A26 - Headlights W/PlowLights, W/O LOWW, W/Interrupt - 10 PIN CLK:Diagram1-Combination1
A26 - Headlights W/PlowLights, W/O LOWW, W/Interrupt - 10 PIN CLK:Diagram1-Combination2
A26 - Headlights W/PlowLights, W/O LOWW, W/Interrupt - 10 PIN CLK:Diagram1-Combination3
A26 - Headlights W/PlowLights, W/O LOWW, W/Interrupt - 10 PIN CLK:Diagram1-Combination4
A26 - Heated Mirrors (Hood with Door Pods):Diagram1
A26 - Heated Mirrors (RT Hood with Door Pods):Diagram1
A26 - Mirrors (Heat) Switch Pack Actuated includes Hood Mirrors:Diagram1
A26 - Mirrors (Heat) Switch Pack Actuated includes RT Hood Mirror:Diagram1
A26 - Powertrain J1939 Allison 3k/4k:A26 - Powertrain J1939 Allison 3k/4k
A26 - Powertrain J1939 UltraShift Transmission:A26 - Powertrain J1939 UltraShift Transmission
A26 - Stability Control (Bendix Straight Truck J1939 Driven Lamp):Diagram1
A26 - Stability Control (Bendix Straight Truck J1939 Driven Lamp):Diagram2
A26/B6.7/L9 - A26 - Adaptive Cruise Control w/o Display (Bendix):Diagram1
A26/B6.7/L9 - Auxiliary Power (40A) HSD:Diagram1
A26/B6.7/L9 - ZVR Splice Pack - 1620:Diagram1
B6.7 - Antilock Brake System (ABS) BENDIX 4 Channel Implemenation:Diagram1
B6.7 - Antilock Brake System (ABS) BENDIX 4 Channel Implemenation:Diagram2
B6.7 - Antilock Brake System (ABS) BENDIX 4 Channel Implemenation:Diagram3
B6.7 - CAN Layout:Powertrain Standard J1939 (500Kbps)
B6.7 - City Horn (W/ 4PIN CLK & Park Brake):Diagram1
B6.7 - City Horn (W/ 4PIN CLK & Park Brake):Diagram2
B6.7 - City Horn (W/ 4PIN CLK & Park Brake):Diagram3
B6.7 - City Horn (W/ 4PIN CLK & Park Brake):Diagram4
B6.7 - City Horn (W/ 4PIN CLK & Park Brake):Diagram5
B6.7 - City Horn (W/ 4PIN CLK & Park Brake):Diagram6
B6.7 - City Horn (W/ 4PIN CLK):Diagram1
B6.7 - City Horn (W/ 4PIN CLK):Diagram2
B6.7 - City Horn (W/ 4PIN CLK):Diagram3
B6.7 - City Horn (W/ 4PIN CLK):Diagram4
B6.7 - City Horn (W/ 4PIN CLK):Diagram5

B6.7 - City Horn (W/ 4PIN CLK):Diagram6
B6.7 - City Horn (W/ 10PIN CLK & Park Brake):Diagram1
B6.7 - City Horn (W/ 10PIN CLK & Park Brake):Diagram2
B6.7 - City Horn (W/ 10PIN CLK & Park Brake):Diagram3
B6.7 - City Horn (W/ 10PIN CLK):Diagram1
B6.7 - City Horn (W/ 10PIN CLK):Diagram2
B6.7 - City Horn (W/ 10PIN CLK):Diagram3
B6.7 - Directional Signal (Turn) W/ Less Power Module Tail Board W/Hazard SW W/PLOW LIGHTS:Diagram1
B6.7 - Directional Signal (Turn) W/ Less Power Module Tail Board W/Hazard SW W/PLOW LIGHTS:Diagram2
B6.7 - Directional Signal (Turn) W/ Less Power Module Tail Board W/Hazard SW W/PLOW LIGHTS:Diagram3
B6.7 - Directional Signal (Turn) W/ Less Power Module Tail Board W/Hazard SW W/PLOW LIGHTS:Diagram4
B6.7 - Directional Signal (Turn) W/ DAISY CHAIN BOX LAMPS:Diagram1
B6.7 - Directional Signal (Turn) W/ DAISY CHAIN BOX LAMPS:Diagram2
B6.7 - Directional Signal (Turn) W/ Daisy Chain Box Lamps W/ Plow Lights:Diagram1
B6.7 - Directional Signal (Turn) W/ Daisy Chain Box Lamps W/ Plow Lights:Diagram2
B6.7 - Directional Signal (Turn) W/ Daisy Chain Box Lamps W/ Plow Lights:Diagram3
B6.7 - Directional Signal (Turn) W/ Daisy Chain Box Lamps W/ Plow Lights:Diagram4
B6.7 - Directional Signal (Turn) W/ LED BOX LAMPS:Diagram1
B6.7 - Directional Signal (Turn) W/ LED BOX LAMPS:Diagram2
B6.7 - Directional Signal (Turn) W/ LED BOX LAMPS W/Plow Lights:Diagram1
B6.7 - Directional Signal (Turn) W/ LED BOX LAMPS W/Plow Lights:Diagram2
B6.7 - Directional Signal (Turn) W/ LED BOX LAMPS W/Plow Lights:Diagram3
B6.7 - Directional Signal (Turn) W/ LED BOX LAMPS W/Plow Lights:Diagram4
B6.7 - Directional Signal (Turn) W/ Less Power Module Tail Board W/Hazard SW:Diagram1
B6.7 - Directional Signal (Turn) W/ Less Power Module Tail Board W/Hazard SW:Diagram2
B6.7 - Directional Signal (Turn) W/ Single Tail Board W/Hazard SW:Diagram1

B6.7 - Directional Signal (Turn) W/ Single Tail Board W/Hazard SW:Diagram2
B6.7 - Directional Signal (Turn) W/ Single Tail Board W/Plow Lights:Diagram1
B6.7 - Directional Signal (Turn) W/ Single Tail Board W/Plow Lights:Diagram2
B6.7 - Directional Signal (Turn) W/ Single Tail Board W/Plow Lights:Diagram3
B6.7 - Directional Signal (Turn) W/ Single Tail Board W/Plow Lights:Diagram4
B6.7 - Fog Lights (Halogen White):Diagram1
B6.7 - Fog Lights (Halogen White):Diagram2
B6.7 - Fog Lights (Halogen White):Diagram3
B6.7 - Fog Lights (LED White):Diagram1
B6.7 - Fog Lights (LED White):Diagram2
B6.7 - Fog Lights (LED White):Diagram3
B6.7 - Front Fog Lamps:Diagram1
B6.7 - Front Fog Lamps:Diagram2
B6.7 - Front Fog Lamps:Diagram3
B6.7 - Front Fog Lights W CONNECTOR:Diagram1
B6.7 - Front Fog Lights W CONNECTOR:Diagram2
B6.7 - Front Marker Lights - With Plow Lights:Diagram1
B6.7 - Front Marker Lights - With Plow Lights:Diagram2
B6.7 - Front Marker Lights - With Plow Lights:Diagram3
B6.7 - Front Marker Lights - With Plow Lights:Diagram4
B6.7 - Front Marker Lights - Without Snow Plow Lights:Diagram1
B6.7 - Front Marker Lights - Without Snow Plow Lights:Diagram2
B6.7 - Headlight W/Plowlights W/LOWW W/O Headlight Interrupt -10 PIN CLK:Diagram1
B6.7 - Headlight W/Plowlights W/LOWW W/O Headlight Interrupt -10 PIN CLK:Diagram2
B6.7 - Headlight W/Plowlights W/LOWW W/O Headlight Interrupt -10 PIN CLK:Diagram3
B6.7 - Headlight W/Plowlights W/LOWW W/O Headlight Interrupt -10 PIN CLK:Diagram4
B6.7 - Headlight W/Plowlights W/LOWW W/O Headlight Interrupt -10 PIN CLK:Diagram5
B6.7 - Headlight W/Plowlights W/LOWW W/O Headlight Interrupt -10 PIN CLK:Diagram6
B6.7 - Headlight W/Plowlights W/LOWW W/O Headlight Interrupt -10 PIN CLK:Diagram7
B6.7 - Headlight W/Plowlights W/LOWW W/O Headlight Interrupt -10 PIN CLK:Diagram8
B6.7 - Headlights W 10PIN CLK W/LOWW W/Interrupt:Diagram1

B6.7 - Headlights W 10PIN CLK W/LOWW W/Interrupt:Diagram2
B6.7 - Headlights W 10PIN CLK W/LOWW W/Interrupt:Diagram3
B6.7 - Headlights W 10PIN CLK W/LOWW W/Interrupt:Diagram4
B6.7 - Headlights W 10PIN CLK W/LOWW W/O Interrupt:Diagram1
B6.7 - Headlights W 10PIN CLK W/LOWW W/O Interrupt:Diagram2
B6.7 - Headlights W 10PIN CLK W/LOWW W/O Interrupt:Diagram3
B6.7 - Headlights W 10PIN CLK W/LOWW W/O Interrupt:Diagram4
B6.7 - Headlights W/O Lights ON With Wipers (LOWW) W/O Headlights Interrupt:Diagram1
B6.7 - Headlights W/O Lights ON With Wipers (LOWW) W/O Headlights Interrupt:Diagram2
B6.7 - Headlights W/O Lights ON With Wipers (LOWW) W/O Headlights Interrupt:Diagram3
B6.7 - Headlights W/O Lights ON With Wipers (LOWW) W/O Headlights Interrupt:Diagram4
B6.7 - Headlights W/O Lights ON with wipers (LOWW) W/ Headlights Interrupt:Diagram1
B6.7 - Headlights W/O Lights ON with wipers (LOWW) W/ Headlights Interrupt:Diagram2
B6.7 - Headlights W/O Lights ON with wipers (LOWW) W/ Headlights Interrupt:Diagram3
B6.7 - Headlights W/O Lights ON with wipers (LOWW) W/ Headlights Interrupt:Diagram4
B6.7 - Headlights W/PlowLights W/Headlight Interrupt -10PIN CLK W/LOWW W/Interrupt:Diagram1
B6.7 - Headlights W/PlowLights W/Headlight Interrupt -10PIN CLK W/LOWW W/Interrupt:Diagram2
B6.7 - Headlights W/PlowLights W/Headlight Interrupt -10PIN CLK W/LOWW W/Interrupt:Diagram3
B6.7 - Headlights W/PlowLights W/Headlight Interrupt -10PIN CLK W/LOWW W/Interrupt:Diagram4
B6.7 - Headlights W/PlowLights W/Headlight Interrupt -10PIN CLK W/LOWW W/Interrupt:Diagram5
B6.7 - Headlights W/PlowLights W/Headlight Interrupt -10PIN CLK W/LOWW W/Interrupt:Diagram6
B6.7 - Headlights W/PlowLights W/Headlight Interrupt -10PIN CLK W/LOWW W/Interrupt:Diagram7
B6.7 - Headlights W/PlowLights W/Headlight Interrupt -10PIN CLK W/LOWW W/Interrupt:Diagram8

B6.7 - Headlights W/Plowlights W/O Lights ON With Wipers (LOWW) W/O Headlights Interrupt:Diagram1
B6.7 - Headlights W/Plowlights W/O Lights ON With Wipers (LOWW) W/O Headlights Interrupt:Diagram2
B6.7 - Headlights W/Plowlights W/O Lights ON With Wipers (LOWW) W/O Headlights Interrupt:Diagram3
B6.7 - Headlights W/Plowlights W/O Lights ON With Wipers (LOWW) W/O Headlights Interrupt:Diagram4
B6.7 - Headlights W/Plowlights W/O Lights ON With Wipers (LOWW) W/O Headlights Interrupt:Diagram5
B6.7 - Headlights W/Plowlights W/O Lights ON With Wipers (LOWW) W/O Headlights Interrupt:Diagram6
B6.7 - Headlights W/Plowlights W/O Lights ON With Wipers (LOWW) W/O Headlights Interrupt:Diagram7
B6.7 - Headlights W/Plowlights W/O Lights ON With Wipers (LOWW) W/O Headlights Interrupt:Diagram8
B6.7 - Headlights W/PlowLights W/O Lights ON with wipers (LOWW) W/ Headlights Interrupt:Diagram1
B6.7 - Headlights W/PlowLights W/O Lights ON with wipers (LOWW) W/ Headlights Interrupt:Diagram2
B6.7 - Headlights W/PlowLights W/O Lights ON with wipers (LOWW) W/ Headlights Interrupt:Diagram3
B6.7 - Headlights W/PlowLights W/O Lights ON with wipers (LOWW) W/ Headlights Interrupt:Diagram4
B6.7 - Headlights W/PlowLights W/O Lights ON with wipers (LOWW) W/ Headlights Interrupt:Diagram5
B6.7 - Headlights W/PlowLights W/O Lights ON with wipers (LOWW) W/ Headlights Interrupt:Diagram6
B6.7 - Headlights W/PlowLights W/O Lights ON with wipers (LOWW) W/ Headlights Interrupt:Diagram7
B6.7 - Headlights W/PlowLights W/O Lights ON with wipers (LOWW) W/ Headlights Interrupt:Diagram8
B6.7 - Heated Mirrors (Hood with Door Pods):Diagram1
B6.7 - Heated Mirrors (Hood with Door Pods):Diagram2
B6.7 - Heated Mirrors (RT Hood with Door Pods):Diagram1
B6.7 - Heated Mirrors (RT Hood with Door Pods):Diagram2
B6.7 - Heated Mirrors (RT Hood with Door Pods):Diagram3
B6.7 - Heated Mirrors (RT Hood with Door Pods):Diagram4
B6.7 - Mirrors (Heat) Switch Pack Actuated includes Hood Mirrors:Diagram1
B6.7 - Mirrors (Heat) Switch Pack Actuated includes Hood Mirrors:Diagram2
B6.7 - Mirrors (Heat) Switch Pack Actuated includes RT Hood Mirror:Diagram1

B6.7 - Mirrors (Heat) Switch Pack Actuated includes RT Hood Mirror:Diagram2
B6.7 - Mirrors (Heat) Switch Pack Actuated includes RT Hood Mirror:Diagram3
B6.7 - Mirrors (Heat) Switch Pack Actuated includes RT Hood Mirror:Diagram4
B6.7 - Powertrain J1939 Allison 1k/2k:B6.7 - Allison 1k/2k Transmission
B6.7 - Powertrain J1939 Allison 3k/4k:B6.7 - Allison 3k/4k Transmission
B6.7 - Powertrain J1939 Manual Transmission:B6.7 - Manual Transmission
B6.7 - Stability Control (Bendix Straight Truck J1939 Driven Lamp):Diagram1
B6.7 - Stability Control (Bendix Straight Truck J1939 Driven Lamp):Diagram2
L9 - ABS Private J1939:L9 - ABS Private J1939
L9 - Antilock Brake System (ABS) BENDIX 4 Channel Implemenation:Diagram1
L9 - Antilock Brake System (ABS) Bendix 6 Channel Implementation:Diagram1
L9 - Antilock Brake System (ABS) Bendix 6 Channel Implementation:Diagram2
L9 - Antilock Brake System (ABS) Bendix 6 Channel Implementation:Diagram3
L9 - Antilock Brake System (ABS) Bendix 6 Channel Implementation:Diagram4
L9 - Antilock Brake System (ABS) Bendix 6 Channel Implementation:Diagram5
L9 - Antilock Brake System (ABS) Bendix 6 Channel Implementation:Diagram6
L9 - Antilock Brake System (ABS) Bendix 6 Channel Implementation:Diagram7
L9 - Antilock Brake System (ABS) Bendix 6 Channel Implementation:Diagram8
L9 - Antilock Brake System (ABS) Bendix 6 Channel Implementation:Diagram9
L9 - Antilock Brake System (ABS) Wabco 4 Channel Implementation:Diagram1
L9 - Bendix Tractor or Towing Truck W/ Air SUSP J1939 Driven Lamp:Diagram1
L9 - Bendix Tractor or Towing Truck W/ Air SUSP J1939 Driven Lamp:Diagram2
L9 - CAN Layout:ABS Proprietary J1939

L9 - CAN Layout:Powertrain Standard J1939 (500kbps)
L9 - City Horn (W/ 4PIN CLK & Park Brake):Diagram1
L9 - City Horn (W/ 4PIN CLK & Park Brake):Diagram2
L9 - City Horn (W/ 4PIN CLK & Park Brake):Diagram3
L9 - City Horn (W/ 4PIN CLK & Park Brake):Diagram4
L9 - City Horn (W/ 4PIN CLK):Diagram1
L9 - City Horn (W/ 4PIN CLK):Diagram2
L9 - City Horn (W/ 4PIN CLK):Diagram3
L9 - City Horn (W/ 4PIN CLK):Diagram4
L9 - City Horn (W/ 10PIN CLK & Park Brake):Diagram1
L9 - City Horn (W/ 10PIN CLK & Park Brake):Diagram2
L9 - City Horn (W/ 10PIN CLK):Diagram1
L9 - City Horn (W/ 10PIN CLK):Diagram2
L9 - Directional Signal (Turn) W/ Less Power Module Tail Board W/Hazard SW W/PLOW LIGHTS:Diagram1
L9 - Directional Signal (Turn) W/ Less Power Module Tail Board W/Hazard SW W/PLOW LIGHTS:Diagram2
L9 - Directional Signal (Turn) W/ Less Power Module Tail Board W/Hazard SW W/PLOW LIGHTS:Diagram3
L9 - Directional Signal (Turn) W/ Less Power Module Tail Board W/Hazard SW W/PLOW LIGHTS:Diagram4
L9 - Directional Signal (Turn) W/ DAISY CHAIN BOX LAMPS:Diagram1
L9 - Directional Signal (Turn) W/ DAISY CHAIN BOX LAMPS:Diagram2
L9 - Directional Signal (Turn) W/ Daisy Chain Box Lamps W/ Plow Lights:Diagram1
L9 - Directional Signal (Turn) W/ Daisy Chain Box Lamps W/ Plow Lights:Diagram2
L9 - Directional Signal (Turn) W/ Daisy Chain Box Lamps W/ Plow Lights:Diagram3
L9 - Directional Signal (Turn) W/ Daisy Chain Box Lamps W/ Plow Lights:Diagram4
L9 - Directional Signal (Turn) W/ LED BOX LAMPS:Diagram1
L9 - Directional Signal (Turn) W/ LED BOX LAMPS:Diagram2
L9 - Directional Signal (Turn) W/ LED BOX LAMPS W/Plow Lights:Diagram1
L9 - Directional Signal (Turn) W/ LED BOX LAMPS W/Plow Lights:Diagram2
L9 - Directional Signal (Turn) W/ LED BOX LAMPS W/Plow Lights:Diagram3
L9 - Directional Signal (Turn) W/ LED BOX LAMPS W/Plow Lights:Diagram4

L9 - Directional Signal (Turn) W/ Less Power Module Tail Board W/Hazard SW:Diagram1
L9 - Directional Signal (Turn) W/ Less Power Module Tail Board W/Hazard SW:Diagram2
L9 - Directional Signal (Turn) W/ Single Tail Board W/Hazard SW:Diagram1
L9 - Directional Signal (Turn) W/ Single Tail Board W/Hazard SW:Diagram2
L9 - Directional Signal (Turn) W/ Single Tail Board W/Plow Lights:Diagram1
L9 - Directional Signal (Turn) W/ Single Tail Board W/Plow Lights:Diagram2
L9 - Directional Signal (Turn) W/ Single Tail Board W/Plow Lights:Diagram3
L9 - Directional Signal (Turn) W/ Single Tail Board W/Plow Lights:Diagram4
L9 - Fog Lights (Halogen White):Diagram1
L9 - Fog Lights (Halogen White):Diagram2
L9 - Fog Lights (LED White):Diagram1
L9 - Fog Lights (LED White):Diagram2
L9 - Front Fog Lights W CONNECTOR:Diagram1
L9 - Front Fog Lights W CONNECTOR:Diagram2
L9 - Front Marker Lights - With Plow Lights:Diagram1
L9 - Front Marker Lights - With Plow Lights:Diagram2
L9 - Front Marker Lights - With Plow Lights:Diagram3
L9 - Front Marker Lights - With Plow Lights:Diagram4
L9 - Front Marker Lights - Without Snow Plow Lights:Diagram1
L9 - Front Marker Lights - Without Snow Plow Lights:Diagram2
L9 - Headlight W/Plowlights W/LOWW W/O Headlight Interrupt -10 PIN CLK:Diagram1
L9 - Headlight W/Plowlights W/LOWW W/O Headlight Interrupt -10 PIN CLK:Diagram2
L9 - Headlight W/Plowlights W/LOWW W/O Headlight Interrupt -10 PIN CLK:Diagram3
L9 - Headlight W/Plowlights W/LOWW W/O Headlight Interrupt -10 PIN CLK:Diagram4
L9 - Headlight W/Plowlights W/LOWW W/O Headlight Interrupt -10 PIN CLK:Diagram5
L9 - Headlight W/Plowlights W/LOWW W/O Headlight Interrupt -10 PIN CLK:Diagram6
L9 - Headlight W/Plowlights W/LOWW W/O Headlight Interrupt -10 PIN CLK:Diagram7
L9 - Headlight W/Plowlights W/LOWW W/O Headlight Interrupt -10 PIN CLK:Diagram8

L9 - Headlights W 10PIN CLK W/LOWW W/Interrupt:Diagram1
L9 - Headlights W 10PIN CLK W/LOWW W/Interrupt:Diagram2
L9 - Headlights W 10PIN CLK W/LOWW W/Interrupt:Diagram3
L9 - Headlights W 10PIN CLK W/LOWW W/Interrupt:Diagram4
L9 - Headlights W 10PIN CLK W/LOWW W/O Interrupt:Diagram1
L9 - Headlights W 10PIN CLK W/LOWW W/O Interrupt:Diagram2
L9 - Headlights W 10PIN CLK W/LOWW W/O Interrupt:Diagram3
L9 - Headlights W 10PIN CLK W/LOWW W/O Interrupt:Diagram4
L9 - Headlights W/O Lights ON With Wipers (LOWW) W/O Headlights Interrupt:Diagram1
L9 - Headlights W/O Lights ON With Wipers (LOWW) W/O Headlights Interrupt:Diagram2
L9 - Headlights W/O Lights ON With Wipers (LOWW) W/O Headlights Interrupt:Diagram3
L9 - Headlights W/O Lights ON With Wipers (LOWW) W/O Headlights Interrupt:Diagram4
L9 - Headlights W/O Lights ON with wipers (LOWW) W/ Headlights Interrupt:Diagram1
L9 - Headlights W/O Lights ON with wipers (LOWW) W/ Headlights Interrupt:Diagram2
L9 - Headlights W/O Lights ON with wipers (LOWW) W/ Headlights Interrupt:Diagram3
L9 - Headlights W/O Lights ON with wipers (LOWW) W/ Headlights Interrupt:Diagram4
L9 - Headlights W/PlowLights W/Headlight Interrupt -10PIN CLK W/LOWW W/Interrupt:Diagram1
L9 - Headlights W/PlowLights W/Headlight Interrupt -10PIN CLK W/LOWW W/Interrupt:Diagram2
L9 - Headlights W/PlowLights W/Headlight Interrupt -10PIN CLK W/LOWW W/Interrupt:Diagram3
L9 - Headlights W/PlowLights W/Headlight Interrupt -10PIN CLK W/LOWW W/Interrupt:Diagram4
L9 - Headlights W/PlowLights W/Headlight Interrupt -10PIN CLK W/LOWW W/Interrupt:Diagram5
L9 - Headlights W/PlowLights W/Headlight Interrupt -10PIN CLK W/LOWW W/Interrupt:Diagram6
L9 - Headlights W/PlowLights W/Headlight Interrupt -10PIN CLK W/LOWW W/Interrupt:Diagram7
L9 - Headlights W/PlowLights W/Headlight Interrupt -10PIN CLK W/LOWW W/Interrupt:Diagram8

L9 - Headlights W/Plowlights W/O Lights ON With Wipers (LOWW) W/O Headlights Interrupt:Diagram1
L9 - Headlights W/Plowlights W/O Lights ON With Wipers (LOWW) W/O Headlights Interrupt:Diagram2
L9 - Headlights W/Plowlights W/O Lights ON With Wipers (LOWW) W/O Headlights Interrupt:Diagram3
L9 - Headlights W/Plowlights W/O Lights ON With Wipers (LOWW) W/O Headlights Interrupt:Diagram4
L9 - Headlights W/Plowlights W/O Lights ON With Wipers (LOWW) W/O Headlights Interrupt:Diagram5
L9 - Headlights W/Plowlights W/O Lights ON With Wipers (LOWW) W/O Headlights Interrupt:Diagram6
L9 - Headlights W/Plowlights W/O Lights ON With Wipers (LOWW) W/O Headlights Interrupt:Diagram7
L9 - Headlights W/Plowlights W/O Lights ON With Wipers (LOWW) W/O Headlights Interrupt:Diagram8
L9 - Headlights W/PlowLights W/O Lights ON with wipers (LOWW) W/ Headlights Interrupt:Diagram1
L9 - Headlights W/PlowLights W/O Lights ON with wipers (LOWW) W/ Headlights Interrupt:Diagram2
L9 - Headlights W/PlowLights W/O Lights ON with wipers (LOWW) W/ Headlights Interrupt:Diagram3
L9 - Headlights W/PlowLights W/O Lights ON with wipers (LOWW) W/ Headlights Interrupt:Diagram4
L9 - Headlights W/PlowLights W/O Lights ON with wipers (LOWW) W/ Headlights Interrupt:Diagram5
L9 - Headlights W/PlowLights W/O Lights ON with wipers (LOWW) W/ Headlights Interrupt:Diagram6
L9 - Headlights W/PlowLights W/O Lights ON with wipers (LOWW) W/ Headlights Interrupt:Diagram7
L9 - Headlights W/PlowLights W/O Lights ON with wipers (LOWW) W/ Headlights Interrupt:Diagram8
L9 - Heated Mirrors (Hood with Door Pods):Diagram1
L9 - Heated Mirrors (Hood with Door Pods):Diagram2
L9 - Heated Mirrors (Hood with Door Pods):Diagram3
L9 - Heated Mirrors (Hood with Door Pods):Diagram4
L9 - Heated Mirrors (RT Hood with Door Pods):Diagram1
L9 - Heated Mirrors (RT Hood with Door Pods):Diagram2
L9 - Heated Mirrors (RT Hood with Door Pods):Diagram3
L9 - Heated Mirrors (RT Hood with Door Pods):Diagram4
L9 - Mirrors (Heat) Switch Pack Actuated includes Hood Mirrors:Diagram1
L9 - Mirrors (Heat) Switch Pack Actuated includes Hood Mirrors:Diagram2

L9 - Mirrors (Heat) Switch Pack Actuated includes Hood Mirrors:Diagram3
L9 - Mirrors (Heat) Switch Pack Actuated includes Hood Mirrors:Diagram4
L9 - Mirrors (Heat) Switch Pack Actuated includes RT Hood Mirror:Diagram1
L9 - Mirrors (Heat) Switch Pack Actuated includes RT Hood Mirror:Diagram2
L9 - Mirrors (Heat) Switch Pack Actuated includes RT Hood Mirror:Diagram3
L9 - Mirrors (Heat) Switch Pack Actuated includes RT Hood Mirror:Diagram4
L9 - Powertrain J1939 Allison 3k/4k:L9 - Powertrain J1939 Allison 3k/4k
L9 - Powertrain J1939 Eaton:L9 - Powertrain J1939 Eaton
L9 - Powertrain J1939 Manual Transmission:Powertrain Standard J1939 (500kbps)
L9 - Stability Control (Bendix Straight Truck J1939 Driven Lamp):Diagram1
L9 - Stability Control (Bendix Straight Truck J1939 Driven Lamp):Diagram2
L9 - Transmission Power Take Off (Auto Trans with Lectradrive):Diagram1
L9 - Transmission Power Take Off (Lectrashift PTO with Manual Trans):Diagram1

Mates 1700

Name	Terminal Part Number	V-Min	Name	Wire Part Number	Wire CSA	Wire Spec	Wire Material description	Wire Color Description	Wire Length	End2 Terminal Part Number	End2 Pin Name	End2 Connector
1	-	-	ML52	2643693 R1	1.91	14.0	Std. Wall XLPE Primary Cable	YELLOW 2	2975.0	-	A	8001A-LF
1	-	-	RB52	2643693 R1	1.91	14.0	Std. Wall XLPE Primary Cable	YELLOW 2	2360.0	-	A	8001-LF

Name	Terminal Part Number	V-Min	Name	Wire Part Number	Wire CSA	Wire Spec	Wire Material description	Wire Color Description	Wire Length	End2 Terminal Part Number	End2 Pin Name	End2 Connect or
1	-	-	RD52	2643693 R1	1.91	14.0	Std. Wall XLPE Primary Cable	YELLOW 2	2975.0	-	A	8001A-LF
1	-	-	MC52	2643693 R1	1.91	14.0	Std. Wall XLPE Primary Cable	YELLOW 2	2360.0	-	A	8001-LF
1	-	-	MA52	2643693 R1	1.91	14.0	Std. Wall XLPE Primary Cable	YELLOW 2	2360.0	-	A	8001
1	-	-	MB52	2643693 R1	1.91	14.0	Std. Wall XLPE Primary Cable	YELLOW 2	2360.0	-	A	8001-LF
1	-	-	RB52	2643693 R1	1.91	14.0	Std. Wall XLPE Primary Cable	YELLOW 2	2360.0	-	A	8001
1	-	-	MC52	2643693 R1	1.91	14.0	Std. Wall XLPE Primary Cable	YELLOW 2	2360.0	-	A	8001
2	-	-	RB53	2643693 R1	1.91	14.0	Std. Wall XLPE Primary Cable	YELLOW 2	2360.0	-	C	8001-LF
2	-	-	ML53	2643693 R1	1.91	14.0	Std. Wall XLPE Primary Cable	YELLOW 2	2975.0	-	C	8001A-LF

Name	Terminal Part Number	V-Min	Name	Wire Part Number	Wire CSA	Wire Spec	Wire Material description	Wire Color Description	Wire Length	End2 Terminal Part Number	End2 Pin Name	End2 Connector
2	-	-	MC53	2643693 R1	1.91	14.0	Std. Wall XLPE Primary Cable	YELLOW 2	2360.0	-	C	8001-LF
2	-	-	RD53	2643693 R1	1.91	14.0	Std. Wall XLPE Primary Cable	YELLOW 2	2975.0	-	C	8001A-LF
2	-	-	MA53	2643693 R1	1.91	14.0	Std. Wall XLPE Primary Cable	YELLOW 2	2360.0	-	C	8001
2	-	-	MA53	2643693 R1	1.91	14.0	Std. Wall XLPE Primary Cable	YELLOW 2	2360.0	-	C	8001-LF
2	-	-	MF53	2643693 R1	1.91	14.0	Std. Wall XLPE Primary Cable	YELLOW 2	2975.0	-	C	8001A-LF
2	-	-	MC53	2643693 R1	1.91	14.0	Std. Wall XLPE Primary Cable	YELLOW 2	2360.0	-	C	8001
2	-	-	RB53	2643693 R1	1.91	14.0	Std. Wall XLPE Primary Cable	YELLOW 2	2360.0	-	C	8001
3	-	-	RB52D	2643693 R1	1.91	14.0	Std. Wall XLPE Primary Cable	YELLOW 2	3610.0	-	A	8000-RT

Name	Terminal Part Number	V-Min	Name	Wire Part Number	Wire CSA	Wire Spec	Wire Material description	Wire Color Description	Wire Length	End2 Terminal Part Number	End2 Pin Name	End2 Connector
3	-	-	RD52D	2643693 R1	1.91	14.0	Std. Wall XLPE Primary Cable	YELLOW 2	3710.0	-	A	8000A-RT
3	-	-	MC52D	2643693 R1	1.91	14.0	Std. Wall XLPE Primary Cable	YELLOW 2	3610.0	-	A	8000-RT
3	-	-	ML52D	2643693 R1	1.91	14.0	Std. Wall XLPE Primary Cable	YELLOW 2	3710.0	-	A	8000A-RT
3	-	-	MA52D	2643693 R1	1.91	14.0	Std. Wall XLPE Primary Cable	YELLOW 2	3610.0	-	A	8000
3	-	-	NF52D	2643693 R1	1.91	14.0	Std. Wall XLPE Primary Cable	YELLOW 2	3710.0	-	A	8000A-RT
3	-	-	MW52D	2643693 R1	1.91	14.0	Std. Wall XLPE Primary Cable	YELLOW 2	3610.0	-	A	8000-RT
3	-	-	MC52D	2643693 R1	1.91	14.0	Std. Wall XLPE Primary Cable	YELLOW 2	3610.0	-	A	8000
3	-	-	RB52D	2643693 R1	1.91	14.0	Std. Wall XLPE Primary Cable	YELLOW 2	3610.0	-	A	8000

Name	Terminal Part Number	V-Min	Name	Wire Part Number	Wire CSA	Wire Spec	Wire Material description	Wire Color Description	Wire Length	End2 Terminal Part Number	End2 Pin Name	End2 Connector
4	-	-	ML53B	2643693 R1	1.91	14.0	Std. Wall XLPE Primary Cable	YELLOW 2	3710.0	-	C	8000A-RT
4	-	-	MC53B	2643693 R1	1.91	14.0	Std. Wall XLPE Primary Cable	YELLOW 2	3610.0	-	C	8000-RT
4	-	-	RD53B	2643693 R1	1.91	14.0	Std. Wall XLPE Primary Cable	YELLOW 2	3710.0	-	C	8000A-RT
4	-	-	RB53B	2643693 R1	1.91	14.0	Std. Wall XLPE Primary Cable	YELLOW 2	3610.0	-	C	8000-RT
4	-	-	MA53B	2643693 R1	1.91	14.0	Std. Wall XLPE Primary Cable	YELLOW 2	3610.0	-	C	8000
4	-	-	MW53B	2643693 R1	1.91	14.0	Std. Wall XLPE Primary Cable	YELLOW 2	3610.0	-	C	8000-RT
4	-	-	MC53B	2643693 R1	1.91	14.0	Std. Wall XLPE Primary Cable	YELLOW 2	3610.0	-	C	8000
4	-	-	RB53B	2643693 R1	1.91	14.0	Std. Wall XLPE Primary Cable	YELLOW 2	3610.0	-	C	8000

Name	Terminal Part Number	V-Min	Name	Wire Part Number	Wire CSA	Wire Spec	Wire Material description	Wire Color Description	Wire Length	End2 Terminal Part Number	End2 Pin Name	End2 Connector
5	-	-	MN54B	2643688 R1	1.91	14.0	Std. Wall XLPE Primary Cable	BROWN	2075.0	-	X	-
5	-	-	ML54B	2643688 R1	1.91	14.0	Std. Wall XLPE Primary Cable	BROWN	2075.0	-	X	-
5	-	-	RB54B	2643688 R1	1.91	14.0	Std. Wall XLPE Primary Cable	BROWN	2925.0	-	X	-
5	-	-	MC54B	2643688 R1	1.91	14.0	Std. Wall XLPE Primary Cable	BROWN	3075.0	-	X	-
5	-	-	NF54B	2643688 R1	1.91	14.0	Std. Wall XLPE Primary Cable	BROWN	1925.0	-	X	-
5	-	-	MU54B	2643688 R1	1.91	14.0	Std. Wall XLPE Primary Cable	BROWN	2075.0	-	X	-
5	-	-	MW54B	2643688 R1	1.91	14.0	Std. Wall XLPE Primary Cable	BROWN	1925.0	-	X	-
5	-	-	MA54B	2643688 R1	1.91	14.0	Std. Wall XLPE Primary Cable	BROWN	2825.0	-	X	-

Name	Terminal Part Number	V-Min	Name	Wire Part Number	Wire CSA	Wire Spec	Wire Material description	Wire Color Description	Wire Length	End2 Terminal Part Number	End2 Pin Name	End2 Connector
8	-	-	RB53E	2643693 R1	1.91	14.0	Std. Wall XLPE Primary Cable	YELLOW 2	670.0	-	X	-
8	-	-	MC53E	2643693 R1	1.91	14.0	Std. Wall XLPE Primary Cable	YELLOW 2	620.0	-	X	-
8	-	-	ML53E	2643693 R1	1.91	14.0	Std. Wall XLPE Primary Cable	YELLOW 2	620.0	-	X	-
8	-	-	RD53E	2643693 R1	1.91	14.0	Std. Wall XLPE Primary Cable	YELLOW 2	670.0	-	X	-
8	-	-	WC53E	3510337 R1	1.91	14.0	Thin Wall XLPE Primary Cable	YELLOW 2	715.0	-	X	-
8	-	-	WB53E	3510337 R1	1.91	14.0	Thin Wall XLPE Primary Cable	YELLOW 2	665.0	-	X	-
9	-	-	RD53F	2643693 R1	1.91	14.0	Std. Wall XLPE Primary Cable	YELLOW 2	670.0	-	X	-
9	-	-	RB53F	2643693 R1	1.91	14.0	Std. Wall XLPE Primary Cable	YELLOW 2	670.0	-	X	-

Name	Terminal Part Number	V-Min	Name	Wire Part Number	Wire CSA	Wire Spec	Wire Material description	Wire Color Description	Wire Length	End2 Terminal Part Number	End2 Pin Name	End2 Connector
9	-	-	ML53F	2643693 R1	1.91	14.0	Std. Wall XLPE Primary Cable	YELLOW 2	620.0	-	X	-
9	-	-	MC53F	2643693 R1	1.91	14.0	Std. Wall XLPE Primary Cable	YELLOW 2	620.0	-	X	-
9	-	-	WB53F	3510337 R1	1.91	14.0	Thin Wall XLPE Primary Cable	YELLOW 2	665.0	-	X	-
9	-	-	WC53F	3510337 R1	1.91	14.0	Thin Wall XLPE Primary Cable	YELLOW 2	715.0	-	X	-
10	-	-	RB52B	2643693 R1	1.91	14.0	Std. Wall XLPE Primary Cable	YELLOW 2	770.0	-	X	-
10	-	-	MC52B	2643693 R1	1.91	14.0	Std. Wall XLPE Primary Cable	YELLOW 2	720.0	-	X	-
10	-	-	ML52B	2643693 R1	1.91	14.0	Std. Wall XLPE Primary Cable	YELLOW 2	720.0	-	X	-
10	-	-	RD52B	2643693 R1	1.91	14.0	Std. Wall XLPE Primary Cable	YELLOW 2	770.0	-	X	-

Name	Terminal Part Number	V-Min	Name	Wire Part Number	Wire CSA	Wire Spec	Wire Material description	Wire Color Description	Wire Length	End2 Terminal Part Number	End2 Pin Name	End2 Connector
10	-	-	WC52B	3510337 R1	1.91	14.0	Thin Wall XLPE Primary Cable	YELLOW 2	615.0	-	X	-
10	-	-	WB52B	3510337 R1	1.91	14.0	Thin Wall XLPE Primary Cable	YELLOW 2	565.0	-	X	-
11	-	-	MC52E	2643693 R1	1.91	14.0	Std. Wall XLPE Primary Cable	YELLOW 2	720.0	-	X	-
11	-	-	RB52E	2643693 R1	1.91	14.0	Std. Wall XLPE Primary Cable	YELLOW 2	770.0	-	X	-
11	-	-	ML52E	2643693 R1	1.91	14.0	Std. Wall XLPE Primary Cable	YELLOW 2	720.0	-	X	-
11	-	-	RD52E	2643693 R1	1.91	14.0	Std. Wall XLPE Primary Cable	YELLOW 2	770.0	-	X	-
11	-	-	WB52E	3510337 R1	1.91	14.0	Thin Wall XLPE Primary Cable	YELLOW 2	565.0	-	X	-
11	-	-	WC52E	3510337 R1	1.91	14.0	Thin Wall XLPE Primary Cable	YELLOW 2	615.0	-	X	-

Name	Terminal Part Number	V-Min	Name	Wire Part Number	Wire CSA	Wire Spec	Wire Material description	Wire Color Description	Wire Length	End2 Terminal Part Number	End2 Pin Name	End2 Connector
12	-	-	MG103C	3510302 R1	3.01	12.0	Thin Wall XLPE Primary Cable	LIGHT GREEN	470.0	-	-	-
12	-	-	MH103C	3510302 R1	3.01	12.0	Thin Wall XLPE Primary Cable	LIGHT GREEN	470.0	-	-	-
12	-	-	HW14LP	2643698 R1	4.81	10.0	Std. Wall XLPE Primary Cable	RED	1310.0	-	R1-30	1873
13	-	-	MG103D	2643753 R1	3.01	12.0	Std. Wall XLPE Primary Cable	LIGHT GREEN	590.0	-	A	4069
14	-	-	MC56B	3510318 R1	1.16	16.0	Thin Wall XLPE Primary Cable	ORANGE	1735.0	-	X	-
14	-	-	RB56B	3510318 R1	1.16	16.0	Thin Wall XLPE Primary Cable	ORANGE	2560.0	-	X	-
14	-	-	RD56B	3510318 R1	1.16	16.0	Thin Wall XLPE Primary Cable	ORANGE	1685.0	-	X	-
14	-	-	MN56B	3510318 R1	1.16	16.0	Thin Wall XLPE Primary Cable	ORANGE	1735.0	-	X	-

Name	Terminal Part Number	V-Min	Name	Wire Part Number	Wire CSA	Wire Spec	Wire Material description	Wire Color Description	Wire Length	End2 Terminal Part Number	End2 Pin Name	End2 Connector
14	-	-	MW56B	3510318 R1	1.16	16.0	Thin Wall XLPE Primary Cable	ORANGE	1685.0	-	X	-
14	-	-	MB56B	3510318 R1	1.16	16.0	Thin Wall XLPE Primary Cable	ORANGE	2360.0	-	D	8001-LF
14	-	-	ML56B	3510318 R1	1.16	16.0	Thin Wall XLPE Primary Cable	ORANGE	1735.0	-	X	-
14	-	-	NF56B	3510318 R1	1.16	16.0	Thin Wall XLPE Primary Cable	ORANGE	1685.0	-	X	-
14	-	-	MU56B	3510318 R1	1.16	16.0	Thin Wall XLPE Primary Cable	ORANGE	1735.0	-	X	-
14	-	-	MA56B	3510318 R1	1.16	16.0	Thin Wall XLPE Primary Cable	ORANGE	2360.0	-	D	8001-LF
14	-	-	MF56B	3510318 R1	1.16	16.0	Thin Wall XLPE Primary Cable	ORANGE	2975.0	-	D	8001-LF
14	-	-	MA56B	3510318 R1	1.16	16.0	Thin Wall XLPE Primary Cable	ORANGE	2360.0	-	D	8001

Name	Terminal Part Number	V-Min	Name	Wire Part Number	Wire CSA	Wire Spec	Wire Material description	Wire Color Description	Wire Length	End2 Terminal Part Number	End2 Pin Name	End2 Connector
14	-	-	MF56B	3510318 R1	1.16	16.0	Thin Wall XLPE Primary Cable	ORANGE	2975.0	-	D	8001A-LF
15	-	-	MC57B	3510318 R1	1.16	16.0	Thin Wall XLPE Primary Cable	ORANGE	1465.0	-	X	-
15	-	-	RB57B	3510318 R1	1.16	16.0	Thin Wall XLPE Primary Cable	ORANGE	1565.0	-	X	-
15	-	-	RD57B	3510318 R1	1.16	16.0	Thin Wall XLPE Primary Cable	ORANGE	1565.0	-	X	-
15	-	-	MU57B	3510318 R1	1.16	16.0	Thin Wall XLPE Primary Cable	ORANGE	1465.0	-	X	-
15	-	-	MN57B	3510318 R1	1.16	16.0	Thin Wall XLPE Primary Cable	ORANGE	1465.0	-	X	-
15	-	-	NF57B	3510318 R1	1.16	16.0	Thin Wall XLPE Primary Cable	ORANGE	1565.0	-	X	-
15	-	-	MA57B	3510318 R1	1.16	16.0	Thin Wall XLPE Primary Cable	ORANGE	4640.0	-	D	8000A-RT

Name	Terminal Part Number	V-Min	Name	Wire Part Number	Wire CSA	Wire Spec	Wire Material description	Wire Color Description	Wire Length	End2 Terminal Part Number	End2 Pin Name	End2 Connector
15	-	-	MW57B	3510318 R1	1.16	16.0	Thin Wall XLPE Primary Cable	ORANGE	1565.0	-	X	-
15	-	-	ML57B	3510318 R1	1.16	16.0	Thin Wall XLPE Primary Cable	ORANGE	1465.0	-	X	-
15	-	-	MF57B	3510318 R1	1.16	16.0	Thin Wall XLPE Primary Cable	ORANGE	3710.0	-	D	8000-RT
15	-	-	MA57B	3510318 R1	1.16	16.0	Thin Wall XLPE Primary Cable	ORANGE	4640.0	-	D	8000-RT
15	-	-	MJ57B	3510318 R1	1.16	16.0	Thin Wall XLPE Primary Cable	ORANGE	3710.0	-	D	8000-RT
15	-	-	MA57B	3510318 R1	1.16	16.0	Thin Wall XLPE Primary Cable	ORANGE	4640.0	-	D	8000
15	-	-	MJ57B	3510318 R1	1.16	16.0	Thin Wall XLPE Primary Cable	ORANGE	3710.0	-	D	8000A-RT
15	-	-	MF57B	3510318 R1	1.16	16.0	Thin Wall XLPE Primary Cable	ORANGE	3710.0	-	D	8000A-RT

Name	Terminal Part Number	V-Min	Name	Wire Part Number	Wire CSA	Wire Spec	Wire Material description	Wire Color Description	Wire Length	End2 Terminal Part Number	End2 Pin Name	End2 Connect or
20	-	-	WG67AA	3510322 R1	0.53	20.0	Thin Wall XLPE Primary Cable	PINK	3990.0	-	8	8903
21	-	-	AA85	3510312 R1	1.16	16.0	Thin Wall XLPE Primary Cable	GREY	640.0	-	-	-
21	-	-	TB85E	2643680 R1	1.16	16.0	Std. Wall XLPE Primary Cable	GREY	2005.0	-	A	8301A
21	-	-	MX85E	2643680 R1	1.16	16.0	Std. Wall XLPE Primary Cable	GREY	1880.0	-	A	8301b
21	-	-	MR85E	2643680 R1	1.16	16.0	Std. Wall XLPE Primary Cable	GREY	1930.0	-	A	8301
21	-	-	MR85E	2643680 R1	1.16	16.0	Std. Wall XLPE Primary Cable	GREY	1930.0	-	A	9100
21	-	-	TB85E	2643680 R1	1.16	16.0	Std. Wall XLPE Primary Cable	GREY	2005.0	-	A	8301
22	-	-	TG64A	2643684 R1	1.16	16.0	Std. Wall XLPE Primary Cable	YELLOW 2	4000.0	-	A	8201X

Name	Terminal Part Number	V-Min	Name	Wire Part Number	Wire CSA	Wire Spec	Wire Material description	Wire Color Description	Wire Length	End2 Terminal Part Number	End2 Pin Name	End2 Connector
22	-	-	MD64A	3510336 R1	1.16	16.0	Thin Wall XLPE Primary Cable	YELLOW 2	3400.0	-	A	8201
22	-	-	TH64A	3510336 R1	1.16	16.0	Thin Wall XLPE Primary Cable	YELLOW 2	2550.0	-	1	8201A
22	-	-	TK64A	3510336 R1	1.16	16.0	Thin Wall XLPE Primary Cable	YELLOW 2	3150.0	-	1	8201B
22	-	-	MD64A	3510336 R1	1.16	16.0	Thin Wall XLPE Primary Cable	YELLOW 2	3400.0	-	1	8201X
22	-	-	TG64A	2643684 R1	1.16	16.0	Std. Wall XLPE Primary Cable	YELLOW 2	4000.0	-	1	8201X
22	-	-	XH64A	3510336 R1	1.16	16.0	Thin Wall XLPE Primary Cable	YELLOW 2	4610.0	-	A	8201A
22	-	-	XK64A	3510336 R1	1.16	16.0	Thin Wall XLPE Primary Cable	YELLOW 2	4010.0	-	A	8201A
22	-	-	TJ64A	3510336 R1	1.16	16.0	Thin Wall XLPE Primary Cable	YELLOW 2	2400.0	-	1	8201A

Name	Terminal Part Number	V-Min	Name	Wire Part Number	Wire CSA	Wire Spec	Wire Material description	Wire Color Description	Wire Length	End2 Terminal Part Number	End2 Pin Name	End2 Connector
22	-	-	TM64A	3510336 R1	1.16	16.0	Thin Wall XLPE Primary Cable	YELLOW 2	2400.0	-	1	8201C
23	-	-	TG64B	2643684 R1	1.16	16.0	Std. Wall XLPE Primary Cable	YELLOW 2	4740.0	-	A	8200X
23	-	-	MD64B	3510336 R1	1.16	16.0	Thin Wall XLPE Primary Cable	YELLOW 2	4140.0	-	A	8200
23	-	-	TH64B	3510336 R1	1.16	16.0	Thin Wall XLPE Primary Cable	YELLOW 2	3310.0	-	1	8200A
23	-	-	TK64B	3510336 R1	1.16	16.0	Thin Wall XLPE Primary Cable	YELLOW 2	3760.0	-	1	8200B
23	-	-	MD64B	3510336 R1	1.16	16.0	Thin Wall XLPE Primary Cable	YELLOW 2	4140.0	-	1	8200X
23	-	-	TG64B	2643684 R1	1.16	16.0	Std. Wall XLPE Primary Cable	YELLOW 2	4740.0	-	1	8200X
23	-	-	XK64B	3510336 R1	1.16	16.0	Thin Wall XLPE Primary Cable	YELLOW 2	4750.0	-	A	8200A

Name	Terminal Part Number	V-Min	Name	Wire Part Number	Wire CSA	Wire Spec	Wire Material description	Wire Color Description	Wire Length	End2 Terminal Part Number	End2 Pin Name	End2 Connector
23	-	-	XH64B	3510336 R1	1.16	16.0	Thin Wall XLPE Primary Cable	YELLOW 2	5350.0	-	A	8200A
23	-	-	TJ64B	3510336 R1	1.16	16.0	Thin Wall XLPE Primary Cable	YELLOW 2	3160.0	-	1	8200A
23	-	-	TM64B	3510336 R1	1.16	16.0	Thin Wall XLPE Primary Cable	YELLOW 2	3160.0	-	1	8200C
24	-	-	XR94BP	3510312 R1	1.16	16.0	Thin Wall XLPE Primary Cable	GREY	2440.0	-	4	1402
24	-	-	TF94BP	2643680 R1	1.16	16.0	Std. Wall XLPE Primary Cable	GREY	330.0	-	-	-
24	-	-	TF94BP	2643680 R1	1.16	16.0	Std. Wall XLPE Primary Cable	GREY	330.0	-	1	9531F
27	-	-	ME94	2643673 R1	0.79	18.0	Std. Wall XLPE Primary Cable	GREY	1670.0	-	A	8500
27	-	-	MH94AB	3510313 R1	1.91	14.0	Thin Wall XLPE Primary Cable	GREY	1025.0	-	3	8508A

Name	Terminal Part Number	V-Min	Name	Wire Part Number	Wire CSA	Wire Spec	Wire Material description	Wire Color Description	Wire Length	End2 Terminal Part Number	End2 Pin Name	End2 Connector
27	-	-	MF94AB	3510313 R1	1.91	14.0	Thin Wall XLPE Primary Cable	GREY	200.0	-	X	-
27	-	-	ME94	2643673 R1	0.79	18.0	Std. Wall XLPE Primary Cable	GREY	1670.0	-	-	-
27	-	-	XA94	3510312 R1	1.16	16.0	Thin Wall XLPE Primary Cable	GREY	2500.0	-	-	-
28	-	-	ME94A	2643673 R1	0.79	18.0	Std. Wall XLPE Primary Cable	GREY	1670.0	-	B	8500
28	-	-	MH94AA	3510313 R1	1.91	14.0	Thin Wall XLPE Primary Cable	GREY	1025.0	-	2	8508A
28	-	-	MF94AA	3510313 R1	1.91	14.0	Thin Wall XLPE Primary Cable	GREY	150.0	-	X	-
28	-	-	XA94A	3510312 R1	1.16	16.0	Thin Wall XLPE Primary Cable	GREY	2500.0	-	-	-
29	-	-	ME94B	2643673 R1	0.79	18.0	Std. Wall XLPE Primary Cable	GREY	1670.0	-	C	8500

Name	Terminal Part Number	V-Min	Name	Wire Part Number	Wire CSA	Wire Spec	Wire Material description	Wire Color Description	Wire Length	End2 Terminal Part Number	End2 Pin Name	End2 Connector
29	-	-	MH94AL	3510313 R1	1.91	14.0	Thin Wall XLPE Primary Cable	GREY	1025.0	-	1	8508A
29	-	-	MF94AL	3510313 R1	1.91	14.0	Thin Wall XLPE Primary Cable	GREY	75.0	-	X	-
29	-	-	XA94B	3510312 R1	1.16	16.0	Thin Wall XLPE Primary Cable	GREY	2500.0	-	-	-
30	-	-	FB94C	2643673 R1	0.79	18.0	Std. Wall XLPE Primary Cable	GREY	1170.0	-	1	8502A
30	-	-	FD94AC	3510311 R1	0.79	18.0	Thin Wall XLPE Primary Cable	GREY	1170.0	-	1	8506A
30	-	-	MF94AC	3510311 R1	0.79	18.0	Thin Wall XLPE Primary Cable	GREY	1615.0	-	1	8506A
30	-	-	FB94C	2643673 R1	0.79	18.0	Std. Wall XLPE Primary Cable	GREY	1170.0	-	1	8502
30	-	-	FA94C	2643673 R1	0.79	18.0	Std. Wall XLPE Primary Cable	GREY	1170.0	-	1	8502

Name	Terminal Part Number	V-Min	Name	Wire Part Number	Wire CSA	Wire Spec	Wire Material description	Wire Color Description	Wire Length	End2 Terminal Part Number	End2 Pin Name	End2 Connector
30	-	-	FL94C	2643673 R1	0.79	18.0	Std. Wall XLPE Primary Cable	GREY	1170.0	-	1	8502
30	-	-	ME94C	2643673 R1	0.79	18.0	Std. Wall XLPE Primary Cable	GREY	1615.0	-	1	8502A
30	-	-	XA94C	3510312 R1	1.16	16.0	Thin Wall XLPE Primary Cable	GREY	2500.0	-	-	-
30	-	-	FA94C	2643673 R1	0.79	18.0	Std. Wall XLPE Primary Cable	GREY	1170.0	-	1	8502A
30	-	-	FL94C	2643673 R1	0.79	18.0	Std. Wall XLPE Primary Cable	GREY	1170.0	-	1	8502A
31	-	-	FL94D	2643673 R1	0.79	18.0	Std. Wall XLPE Primary Cable	GREY	1170.0	-	2	8502A
31	-	-	FE94AD	3510311 R1	0.79	18.0	Thin Wall XLPE Primary Cable	GREY	1170.0	-	2	8506A
31	-	-	MF94AD	3510311 R1	0.79	18.0	Thin Wall XLPE Primary Cable	GREY	1615.0	-	2	8506A

Name	Terminal Part Number	V-Min	Name	Wire Part Number	Wire CSA	Wire Spec	Wire Material description	Wire Color Description	Wire Length	End2 Terminal Part Number	End2 Pin Name	End2 Connector
31	-	-	FA94D	2643673 R1	0.79	18.0	Std. Wall XLPE Primary Cable	GREY	1170.0	-	2	8502
31	-	-	FB94D	2643673 R1	0.79	18.0	Std. Wall XLPE Primary Cable	GREY	1170.0	-	2	8502
31	-	-	FL94D	2643673 R1	0.79	18.0	Std. Wall XLPE Primary Cable	GREY	1170.0	-	2	8502
31	-	-	XA94D	3510312 R1	1.16	16.0	Thin Wall XLPE Primary Cable	GREY	2500.0	-	-	-
31	-	-	ME94D	2643673 R1	0.79	18.0	Std. Wall XLPE Primary Cable	GREY	1615.0	-	2	8502A
31	-	-	FA94D	2643673 R1	0.79	18.0	Std. Wall XLPE Primary Cable	GREY	1170.0	-	2	8502A
31	-	-	FB94D	2643673 R1	0.79	18.0	Std. Wall XLPE Primary Cable	GREY	1170.0	-	2	8502A
32	-	-	FL94E	2643673 R1	0.79	18.0	Std. Wall XLPE Primary Cable	GREY	4175.0	-	1	8503A

Name	Terminal Part Number	V-Min	Name	Wire Part Number	Wire CSA	Wire Spec	Wire Material description	Wire Color Description	Wire Length	End2 Terminal Part Number	End2 Pin Name	End2 Connector
32	-	-	FD94AE	3510311 R1	0.79	18.0	Thin Wall XLPE Primary Cable	GREY	4175.0	-	1	8507A
32	-	-	MF94AE	3510311 R1	0.79	18.0	Thin Wall XLPE Primary Cable	GREY	5105.0	-	1	8507A
32	-	-	FB94E	2643673 R1	0.79	18.0	Std. Wall XLPE Primary Cable	GREY	4135.0	-	1	8503C
32	-	-	FA94E	2643673 R1	0.79	18.0	Std. Wall XLPE Primary Cable	GREY	4195.0	-	1	8503B
32	-	-	XA94E	3510312 R1	1.16	16.0	Thin Wall XLPE Primary Cable	GREY	2500.0	-	-	-
32	-	-	ME94E	2643673 R1	0.79	18.0	Std. Wall XLPE Primary Cable	GREY	5105.0	-	1	8503A
33	-	-	FL94F	2643673 R1	0.79	18.0	Std. Wall XLPE Primary Cable	GREY	4175.0	-	2	8503A
33	-	-	FD94AF	3510311 R1	0.79	18.0	Thin Wall XLPE Primary Cable	GREY	4175.0	-	2	8507A

Name	Terminal Part Number	V-Min	Name	Wire Part Number	Wire CSA	Wire Spec	Wire Material description	Wire Color Description	Wire Length	End2 Terminal Part Number	End2 Pin Name	End2 Connector
33	-	-	MF94AF	3510311 R1	0.79	18.0	Thin Wall XLPE Primary Cable	GREY	5105.0	-	2	8507A
33	-	-	FB94F	2643673 R1	0.79	18.0	Std. Wall XLPE Primary Cable	GREY	4135.0	-	2	8503C
33	-	-	FA94F	2643673 R1	0.79	18.0	Std. Wall XLPE Primary Cable	GREY	4195.0	-	2	8503B
33	-	-	ME94F	2643673 R1	0.79	18.0	Std. Wall XLPE Primary Cable	GREY	5105.0	-	2	8503A
33	-	-	XA94F	3510312 R1	1.16	16.0	Thin Wall XLPE Primary Cable	GREY	2500.0	-	-	-
34	-	-	ME94H	2643673 R1	0.79	18.0	Std. Wall XLPE Primary Cable	GREY	5680.0	-	A	8501
34	-	-	MH94AK	3510313 R1	1.91	14.0	Thin Wall XLPE Primary Cable	GREY	4665.0	-	3	8509A
34	-	-	MF94AK	3510313 R1	1.91	14.0	Thin Wall XLPE Primary Cable	GREY	365.0	-	X	-

Name	Terminal Part Number	V-Min	Name	Wire Part Number	Wire CSA	Wire Spec	Wire Material description	Wire Color Description	Wire Length	End2 Terminal Part Number	End2 Pin Name	End2 Connector
34	-	-	XA94H	3510312 R1	1.16	16.0	Thin Wall XLPE Primary Cable	GREY	2500.0	-	-	-
35	-	-	ME94J	2643673 R1	0.79	18.0	Std. Wall XLPE Primary Cable	GREY	5680.0	-	B	8501
35	-	-	MH94AJ	3510313 R1	1.91	14.0	Thin Wall XLPE Primary Cable	GREY	4665.0	-	2	8509A
35	-	-	MF94AJ	3510313 R1	1.91	14.0	Thin Wall XLPE Primary Cable	GREY	315.0	-	X	-
35	-	-	XA94K	3510312 R1	1.16	16.0	Thin Wall XLPE Primary Cable	GREY	2500.0	-	-	-
36	-	-	ME94K	2643673 R1	0.79	18.0	Std. Wall XLPE Primary Cable	GREY	5680.0	-	C	8501
36	-	-	MH94AH	3510313 R1	1.91	14.0	Thin Wall XLPE Primary Cable	GREY	4665.0	-	1	8509A
36	-	-	MF94AH	3510313 R1	1.91	14.0	Thin Wall XLPE Primary Cable	GREY	265.0	-	X	-

Name	Terminal Part Number	V-Min	Name	Wire Part Number	Wire CSA	Wire Spec	Wire Material description	Wire Color Description	Wire Length	End2 Terminal Part Number	End2 Pin Name	End2 Connector
36	-	-	XA94J	3510312 R1	1.16	16.0	Thin Wall XLPE Primary Cable	GREY	2500.0	-	-	-
37	-	-	TF94BY	2643680 R1	1.16	16.0	Std. Wall XLPE Primary Cable	GREY	330.0	-	-	-
37	-	-	XR94BY	3510312 R1	1.16	16.0	Thin Wall XLPE Primary Cable	GREY	2440.0	-	6	1402
37	-	-	TF94BY	2643680 R1	1.16	16.0	Std. Wall XLPE Primary Cable	GREY	330.0	-	2	9531F
38	-	-	TF94BZ	2643680 R1	1.16	16.0	Std. Wall XLPE Primary Cable	GREY	330.0	-	-	-
38	-	-	XR94BZ	3510312 R1	1.16	16.0	Thin Wall XLPE Primary Cable	GREY	2440.0	-	7	1402
38	-	-	TF94BZ	2643680 R1	1.16	16.0	Std. Wall XLPE Primary Cable	GREY	330.0	-	3	9531F
39	-	-	XR94BT	3510312 R1	1.16	16.0	Thin Wall XLPE Primary Cable	GREY	2440.0	-	9	1402

Name	Terminal Part Number	V-Min	Name	Wire Part Number	Wire CSA	Wire Spec	Wire Material description	Wire Color Description	Wire Length	End2 Terminal Part Number	End2 Pin Name	End2 Connector
39	-	-	TF94BT	2643680 R1	1.16	16.0	Std. Wall XLPE Primary Cable	GREY	330.0	-	-	-
39	-	-	TF94BT	2643680 R1	1.16	16.0	Std. Wall XLPE Primary Cable	GREY	330.0	-	4	9531F
40	-	-	XR94BU	3510312 R1	1.16	16.0	Thin Wall XLPE Primary Cable	GREY	2440.0	-	10	1402
40	-	-	TF94BU	2643680 R1	1.16	16.0	Std. Wall XLPE Primary Cable	GREY	330.0	-	-	-
40	-	-	TF94BU	2643680 R1	1.16	16.0	Std. Wall XLPE Primary Cable	GREY	330.0	-	5	9531F
41	-	-	XR94BS	3510312 R1	1.16	16.0	Thin Wall XLPE Primary Cable	GREY	2440.0	-	13	1402
41	-	-	TF94BS	2643680 R1	1.16	16.0	Std. Wall XLPE Primary Cable	GREY	330.0	-	-	-
41	-	-	TF94BS	2643680 R1	1.16	16.0	Std. Wall XLPE Primary Cable	GREY	330.0	-	6	9531F
42	-	-	WIRE239168	-	0.0	-	-	-	0.0	-	3	9524

Name	Terminal Part Number	V-Min	Name	Wire Part Number	Wire CSA	Wire Spec	Wire Material description	Wire Color Description	Wire Length	End2 Terminal Part Number	End2 Pin Name	End2 Connector
42	-	-	XF94SBB	3510311 R1	0.79	18.0	Thin Wall XLPE Primary Cable	GREY	1325.0	-	-	-
42	-	-	ND94SBB	2643680 R1	1.16	16.0	Std. Wall XLPE Primary Cable	GREY	250.0	-	3	9524
45	-	-	XR94BR	3510312 R1	1.16	16.0	Thin Wall XLPE Primary Cable	GREY	2440.0	-	-	-
45	-	-	TF94BR	2643680 R1	1.16	16.0	Std. Wall XLPE Primary Cable	GREY	330.0	-	7	9531F
46	-	-	XR94BQ	3510312 R1	1.16	16.0	Thin Wall XLPE Primary Cable	GREY	2440.0	-	-	-
46	-	-	TF94BQ	2643680 R1	1.16	16.0	Std. Wall XLPE Primary Cable	GREY	330.0	-	8	9531F
47	-	-	WG67-GA	3510358 R1	0.53	20.0	Thin Wall XLPE Primary Cable	WHITE	3990.0	-	5	8903
48	-	-	XR94BW	3510312 R1	1.16	16.0	Thin Wall XLPE Primary Cable	GREY	2440.0	-	-	-

Name	Terminal Part Number	V-Min	Name	Wire Part Number	Wire CSA	Wire Spec	Wire Material description	Wire Color Description	Wire Length	End2 Terminal Part Number	End2 Pin Name	End2 Connector
48	-	-	TF94BW	2643680 R1	1.16	16.0	Std. Wall XLPE Primary Cable	GREY	330.0	-	9	9531F
49	-	-	XR94BV	3510312 R1	1.16	16.0	Thin Wall XLPE Primary Cable	GREY	2440.0	-	-	-
49	-	-	TF94BV	2643680 R1	1.16	16.0	Std. Wall XLPE Primary Cable	GREY	330.0	-	10	9531F
50	-	-	WIRE239169	-	0.0	-	-	-	0.0	-	1	9524
50	-	-	XF94SAB	3510311 R1	0.79	18.0	Thin Wall XLPE Primary Cable	GREY	1325.0	-	-	-
50	-	-	ND94SAB	2643680 R1	1.16	16.0	Std. Wall XLPE Primary Cable	GREY	250.0	-	1	9524
50	-	-	XY94SAB	2643680 R1	1.16	16.0	Std. Wall XLPE Primary Cable	GREY	250.0	-	1	9524
51	-	-	WIRE239170	-	0.0	-	-	-	0.0	-	4	9524
60	-	-	WIRE239171	-	0.0	-	-	-	0.0	-	2	9524
60	-	-	ND94SCB	2643680 R1	1.16	16.0	Std. Wall XLPE Primary Cable	GREY	250.0	-	2	9524

Name	Terminal Part Number	V-Min	Name	Wire Part Number	Wire CSA	Wire Spec	Wire Material description	Wire Color Description	Wire Length	End2 Terminal Part Number	End2 Pin Name	End2 Connector
60	-	-	TV94SCB	2643680 R1	1.16	16.0	Std. Wall XLPE Primary Cable	GREY	250.0	-	2	9524
61	-	-	WIRE735 247	-	0.0	-	-	-	0.0	-	1	-
61	-	-	WIRE735 149	-	0.0	-	-	-	0.0	-	1	-
62	-	-	WIRE735 246	-	0.0	-	-	-	0.0	-	1	-
62	-	-	WIRE735 148	-	0.0	-	-	-	0.0	-	1	-
63	-	-	PM78BC	2643678 R1	1.16	16.0	Std. Wall XLPE Primary Cable	LIGHT GREEN	4370.0	-	A	8701A-RT-DB
63	-	-	MT78BC	2643678 R1	1.16	16.0	Std. Wall XLPE Primary Cable	LIGHT GREEN	4495.0	-	A	8701-RT - DA
63	-	-	PU78BC	2643678 R1	1.16	16.0	Std. Wall XLPE Primary Cable	LIGHT GREEN	4720.0	-	A	8702A-RT-DD
63	-	-	PF78BC	2643678 R1	1.16	16.0	Std. Wall XLPE Primary Cable	LIGHT GREEN	4845.0	-	A	8702-RT - DC
64	-	-	MT78AC	2643678 R1	1.16	16.0	Std. Wall XLPE Primary Cable	LIGHT GREEN	3245.0	-	A	8700-DA

Name	Terminal Part Number	V-Min	Name	Wire Part Number	Wire CSA	Wire Spec	Wire Material description	Wire Color Description	Wire Length	End2 Terminal Part Number	End2 Pin Name	End2 Connector
64	-	-	PM78AC	2643678 R1	1.16	16.0	Std. Wall XLPE Primary Cable	LIGHT GREEN	3725.0	-	A	8700A-DB
64	-	-	PG78AC	2643678 R1	1.16	16.0	Std. Wall XLPE Primary Cable	LIGHT GREEN	3595.0	-	A	8700B-LF-DC
64	-	-	PS78AC	2643678 R1	1.16	16.0	Std. Wall XLPE Primary Cable	LIGHT GREEN	3960.0	-	A	8700C-LF-DD
69	-	-	XF94SJ	2643680 R1	1.16	16.0	Std. Wall XLPE Primary Cable	GREY	2440.0	-	5	1402
69	-	-	TV94SJ	2643680 R1	1.16	16.0	Std. Wall XLPE Primary Cable	GREY	250.0	-	5	9524
69	-	-	ND94SJ	2643680 R1	1.16	16.0	Std. Wall XLPE Primary Cable	GREY	250.0	-	5	9524
70	-	-	XP94SK	2643680 R1	1.16	16.0	Std. Wall XLPE Primary Cable	GREY	670.0	-	X	-
70	-	-	XJ94SK	3510311 R1	0.79	18.0	Thin Wall XLPE Primary Cable	GREY	2440.0	-	3	1402

Name	Terminal Part Number	V-Min	Name	Wire Part Number	Wire CSA	Wire Spec	Wire Material description	Wire Color Description	Wire Length	End2 Terminal Part Number	End2 Pin Name	End2 Connector
70	-	-	TV94SK	2643680 R1	1.16	16.0	Std. Wall XLPE Primary Cable	GREY	250.0	-	6	9524
70	-	-	ND94SK	2643680 R1	1.16	16.0	Std. Wall XLPE Primary Cable	GREY	250.0	-	6	9524
71	-	-	ND94SM	2643680 R1	1.16	16.0	Std. Wall XLPE Primary Cable	GREY	250.0	-	7	9524
71	-	-	TV94SM	2643680 R1	1.16	16.0	Std. Wall XLPE Primary Cable	GREY	250.0	-	7	9524
72	-	-	ND94SN	2643680 R1	1.16	16.0	Std. Wall XLPE Primary Cable	GREY	250.0	-	8	9524
72	-	-	TV94SN	2643680 R1	1.16	16.0	Std. Wall XLPE Primary Cable	GREY	250.0	-	8	9524
73	-	-	ND94SL	2643680 R1	1.16	16.0	Std. Wall XLPE Primary Cable	GREY	250.0	-	9	9524
74	-	-	ND94SZC	2643680 R1	1.16	16.0	Std. Wall XLPE Primary Cable	GREY	250.0	-	10	9524

Name	Terminal Part Number	V-Min	Name	Wire Part Number	Wire CSA	Wire Spec	Wire Material description	Wire Color Description	Wire Length	End2 Terminal Part Number	End2 Pin Name	End2 Connect or
75	-	-	ND94SVC	2643680 R1	1.16	16.0	Std. Wall XLPE Primary Cable	GREY	250.0	-	11	9524
76	-	-	ND94SH	2643680 R1	1.16	16.0	Std. Wall XLPE Primary Cable	GREY	250.0	-	12	9524

Connector Name	1700
Part Number	3595624C1
Short Description	DASH HARNESS CONNECTOR
Instances	A26 - Directional Signal (Turn) W/ Daisy Chain Box Lamps:Diagram1 A26 - Directional Signal (Turn) W/ Daisy Chain Box Lamps, W/ Plow Lights:Diagram1-Option 1 (Snow Plow #1) A26 - Directional Signal (Turn) W/ Daisy Chain Box Lamps, W/ Plow Lights:Diagram1-Option 2 (Snow Plow #2) A26 - Directional Signal (Turn) W/ Less Power Module Tail Board, W/Hazard SW:Diagram1 A26 - Directional Signal (Turn) W/ Less Power Module Tail Board, W/Hazard SW, W/Plow Lights:Diagram1-Option 1 (Snow Plow #1) A26 - Directional Signal (Turn) W/ Less Power Module Tail Board, W/Hazard SW, W/Plow Lights:Diagram1-Option 2 (Snow Plow #2) A26 - Directional Signal (Turn) W/ Single Tail Board, W/Hazard SW, W/Plow Lights:Diagram1-Option 1 (Snow Plow #1) A26 - Directional Signal (Turn) W/ Single Tail Board, W/Hazard SW, W/Plow Lights:Diagram1-Option 2 (Snow Plow #2) A26 - Headlights W/LOWW, W/O Interrupt:Diagram1-Combination1 A26 - Headlights W/LOWW, W/O Interrupt:Diagram1-Combination2 A26 - Headlights W/O LOWW, W/O Interrupt:Diagram1-Combination1 A26 - Headlights W/O LOWW, W/O Interrupt:Diagram1-Combination2
Mates	1700

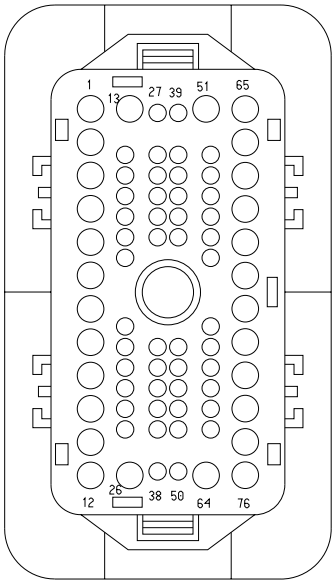

Name	Terminal Part Number	V-Min	Name	Wire Part Number	Wire CSA	Wire Spec	Wire Material description	Wire Color Description	Wire Length	End2 Terminal Part Number	End2 Pin Name	End2 Connect or
1	-	-	MA52	2643693 R1	1.91	14.0	Std. Wall XLPE Primary Cable	YELLOW 2	2360.0	-	A	8001

Name	Terminal Part Number	V-Min	Name	Wire Part Number	Wire CSA	Wire Spec	Wire Material description	Wire Color Description	Wire Length	End2 Terminal Part Number	End2 Pin Name	End2 Connector
2	-	-	MA53	2643693 R1	1.91	14.0	Std. Wall XLPE Primary Cable	YELLOW 2	2360.0	-	C	8001
3	-	-	MA52D	2643693 R1	1.91	14.0	Std. Wall XLPE Primary Cable	YELLOW 2	3610.0	-	A	8000
4	-	-	MA53B	2643693 R1	1.91	14.0	Std. Wall XLPE Primary Cable	YELLOW 2	3610.0	-	C	8000
14	-	-	RB56B	3510318 R1	1.16	16.0	Thin Wall XLPE Primary Cable	ORANGE	2560.0	-	X	-
14	-	-	MC56B	3510318 R1	1.16	16.0	Thin Wall XLPE Primary Cable	ORANGE	1735.0	-	X	-
14	-	-	MA56B	3510318 R1	1.16	16.0	Thin Wall XLPE Primary Cable	ORANGE	2360.0	-	D	8001
15	-	-	RB57B	3510318 R1	1.16	16.0	Thin Wall XLPE Primary Cable	ORANGE	1565.0	-	X	-
15	-	-	MC57B	3510318 R1	1.16	16.0	Thin Wall XLPE Primary Cable	ORANGE	1465.0	-	X	-
15	-	-	MA57B	3510318 R1	1.16	16.0	Thin Wall XLPE Primary Cable	ORANGE	4640.0	-	D	8000

Connector Name	1700
Part Number	3595625C1
Short Description	FORWARD CHASSIS
Instances	A26 - ABS Private J1939:A26 - ABS Private J1939 A26 - Antilock Brake System (ABS) Bendix:Diagram1 A26 - Antilock Brake System (ABS) Bendix:Diagram2 A26 - Antilock Brake System (ABS) Bendix:Diagram3 A26 - Antilock Brake System (ABS)-Wabco 4 Channel Implementation:Diagram1 A26 - Bendix Tractor or Towing Truck N/ Air SUSP J1939 Driven Lamp:Diagram1 A26 - Bendix Tractor or Towing Truck N/ Air SUSP J1939 Driven Lamp:Diagram2 A26 - Bendix Tractor or Towing Truck N/ Air SUSP J1939 Driven Lamp:Diagram3 A26 - Bendix Tractor or Towing Truck N/ Air SUSP J1939 Driven Lamp:Diagram4 A26 - Bendix Tractor or Towing Truck W/ Air SUSP J1939 Driven Lamp:Diagram1 A26 - Bendix Tractor or Towing Truck W/ Air SUSP J1939 Driven Lamp:Diagram2 A26 - Bendix Tractor or Towing Truck W/ Air SUSP J1939 Driven Lamp:Diagram3 A26 - Bendix Tractor or Towing Truck W/ Air SUSP J1939 Driven Lamp:Diagram4 A26 - CAN Layout:ABS Proprietary J1939 A26 - City Horn (W/ 4PIN Park Brake):Diagram1 A26 - City Horn (W/ 4PIN Park Brake):Diagram2 A26 - City Horn (W/ 4PIN Park Brake):Diagram3 A26 - City Horn (W/ 4PIN Park Brake):Diagram4 A26 - City Horn (W/ 4PIN):Diagram1 A26 - City Horn (W/ 4PIN):Diagram2 A26 - City Horn (W/ 4PIN):Diagram3 A26 - City Horn (W/ 4PIN):Diagram4 A26 - City Horn (W/ 10PIN Park Brake):Diagram1 A26 - City Horn (W/ 10PIN Park Brake):Diagram2 A26 - City Horn (W/ 10PIN):Diagram1 A26 - City Horn (W/ 10PIN):Diagram2 A26 - Directional Signal (Turn) W/ LED BOX LAMPS:Diagram1 A26 - Directional Signal (Turn) W/ LED BOX LAMPS, W/Plow Lights:Diagram1-Option 1 (Snow Plow #1) A26 - Directional Signal (Turn) W/ LED BOX LAMPS, W/Plow Lights:Diagram1-Option 2 (Snow Plow #2)

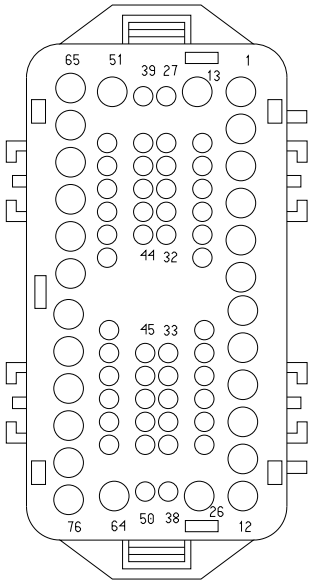

A26 - Directional Signal (Turn) W/ Single Tail Board W/Hazard SW:Diagram1
A26 - Front Fog Lamps LED:Diagram1
A26 - Front Fog Lamps LED:Diagram2
A26 - Front Fog Lights W CONNECTOR Halogen:Diagram1
A26 - Front Fog Lights W CONNECTOR Halogen:Diagram2
A26 - Front Marker Lights:Diagram1
A26 - Front Marker Lights W/Plow Lights:Diagram1-Combination1
A26 - Front Marker Lights W/Plow Lights:Diagram1-Combination2
A26 - Headlight W/Plowlights, W/LOWW, W/O Interrupt:Diagram1-Combination1
A26 - Headlight W/Plowlights, W/LOWW, W/O Interrupt:Diagram1-Combination2
A26 - Headlight W/Plowlights, W/LOWW, W/O Interrupt:Diagram1-Combination3
A26 - Headlight W/Plowlights, W/LOWW, W/O Interrupt:Diagram1-Combination4
A26 - Headlight W/Plowlights, W/O LOWW, W/O Interrupt:Diagram1-Combination1
A26 - Headlight W/Plowlights, W/O LOWW, W/O Interrupt:Diagram1-Combination2
A26 - Headlight W/Plowlights, W/O LOWW, W/O Interrupt:Diagram1-Combination3
A26 - Headlight W/Plowlights, W/O LOWW, W/O Interrupt:Diagram1-Combination4
A26 - Headlights W/LOWW, W/Interrupt - 10 PIN CLK:Diagram1-Combination1
A26 - Headlights W/LOWW, W/Interrupt - 10 PIN CLK:Diagram1-Combination2
A26 - Headlights W/O LOWW, W/Interrupt - 10 PIN CLK:Diagram1-Combination1
A26 - Headlights W/O LOWW, W/Interrupt - 10 PIN CLK:Diagram1-Combination2
A26 - Headlights W/PlowLights, W/LOWW, W/Interrupt - 10 PIN CLK:Diagram1-Combination1
A26 - Headlights W/PlowLights, W/LOWW, W/Interrupt - 10 PIN CLK:Diagram1-Combination2
A26 - Headlights W/PlowLights, W/LOWW, W/Interrupt - 10 PIN CLK:Diagram1-Combination3
A26 - Headlights W/PlowLights, W/LOWW, W/Interrupt - 10 PIN CLK:Diagram1-Combination4

A26 - Headlights W/PlowLights, W/O LOWW, W/Interrupt - 10 PIN CLK:Diagram1-Combination1
A26 - Headlights W/PlowLights, W/O LOWW, W/Interrupt - 10 PIN CLK:Diagram1-Combination2
A26 - Headlights W/PlowLights, W/O LOWW, W/Interrupt - 10 PIN CLK:Diagram1-Combination3
A26 - Headlights W/PlowLights, W/O LOWW, W/Interrupt - 10 PIN CLK:Diagram1-Combination4
A26 - Heated Mirrors (Hood with Door Pods):Diagram1
A26 - Heated Mirrors (RT Hood with Door Pods):Diagram1
A26 - Mirrors (Heat) Switch Pack Actuated includes Hood Mirrors:Diagram1
A26 - Mirrors (Heat) Switch Pack Actuated includes RT Hood Mirror:Diagram1
A26 - Powertrain J1939 Allison 3k/4k:A26 - Powertrain J1939 Allison 3k/4k
A26 - Powertrain J1939 UltraShift Transmission:A26 - Powertrain J1939 UltraShift Transmission
A26 - Stability Control (Bendix Straight Truck J1939 Driven Lamp):Diagram1
A26 - Stability Control (Bendix Straight Truck J1939 Driven Lamp):Diagram2
A26/B6.7/L9 - A26 - Adaptive Cruise Control w/o Display (Bendix):Diagram1
A26/B6.7/L9 - Auxiliary Power (40A) HSD:Diagram1
A26/B6.7/L9 - ZVR Splice Pack - 1620:Diagram1
B6.7 - Antilock Brake System (ABS) BENDIX 4 Channel Implemenation:Diagram1
B6.7 - Antilock Brake System (ABS) BENDIX 4 Channel Implemenation:Diagram2
B6.7 - Antilock Brake System (ABS) BENDIX 4 Channel Implemenation:Diagram3
B6.7 - CAN Layout:Powertrain Standard J1939 (500Kbps)
B6.7 - City Horn (W/ 4PIN CLK & Park Brake):Diagram1
B6.7 - City Horn (W/ 4PIN CLK & Park Brake):Diagram2
B6.7 - City Horn (W/ 4PIN CLK & Park Brake):Diagram3
B6.7 - City Horn (W/ 4PIN CLK & Park Brake):Diagram4
B6.7 - City Horn (W/ 4PIN CLK & Park Brake):Diagram5
B6.7 - City Horn (W/ 4PIN CLK & Park Brake):Diagram6
B6.7 - City Horn (W/ 4PIN CLK):Diagram1
B6.7 - City Horn (W/ 4PIN CLK):Diagram2
B6.7 - City Horn (W/ 4PIN CLK):Diagram3
B6.7 - City Horn (W/ 4PIN CLK):Diagram4
B6.7 - City Horn (W/ 4PIN CLK):Diagram5

B6.7 - City Horn (W/ 4PIN CLK):Diagram6
B6.7 - City Horn (W/ 10PIN CLK & Park Brake):Diagram1
B6.7 - City Horn (W/ 10PIN CLK & Park Brake):Diagram2
B6.7 - City Horn (W/ 10PIN CLK & Park Brake):Diagram3
B6.7 - City Horn (W/ 10PIN CLK):Diagram1
B6.7 - City Horn (W/ 10PIN CLK):Diagram2
B6.7 - City Horn (W/ 10PIN CLK):Diagram3
B6.7 - Directional Signal (Turn) W/ Less Power Module Tail Board W/Hazard SW W/PLOW LIGHTS:Diagram1
B6.7 - Directional Signal (Turn) W/ Less Power Module Tail Board W/Hazard SW W/PLOW LIGHTS:Diagram2
B6.7 - Directional Signal (Turn) W/ Less Power Module Tail Board W/Hazard SW W/PLOW LIGHTS:Diagram3
B6.7 - Directional Signal (Turn) W/ Less Power Module Tail Board W/Hazard SW W/PLOW LIGHTS:Diagram4
B6.7 - Directional Signal (Turn) W/ DAISY CHAIN BOX LAMPS:Diagram1
B6.7 - Directional Signal (Turn) W/ DAISY CHAIN BOX LAMPS:Diagram2
B6.7 - Directional Signal (Turn) W/ Daisy Chain Box Lamps W/ Plow Lights:Diagram1
B6.7 - Directional Signal (Turn) W/ Daisy Chain Box Lamps W/ Plow Lights:Diagram2
B6.7 - Directional Signal (Turn) W/ Daisy Chain Box Lamps W/ Plow Lights:Diagram3
B6.7 - Directional Signal (Turn) W/ Daisy Chain Box Lamps W/ Plow Lights:Diagram4
B6.7 - Directional Signal (Turn) W/ LED BOX LAMPS:Diagram1
B6.7 - Directional Signal (Turn) W/ LED BOX LAMPS:Diagram2
B6.7 - Directional Signal (Turn) W/ LED BOX LAMPS W/Plow Lights:Diagram1
B6.7 - Directional Signal (Turn) W/ LED BOX LAMPS W/Plow Lights:Diagram2
B6.7 - Directional Signal (Turn) W/ LED BOX LAMPS W/Plow Lights:Diagram3
B6.7 - Directional Signal (Turn) W/ LED BOX LAMPS W/Plow Lights:Diagram4
B6.7 - Directional Signal (Turn) W/ Less Power Module Tail Board W/Hazard SW:Diagram1
B6.7 - Directional Signal (Turn) W/ Less Power Module Tail Board W/Hazard SW:Diagram2
B6.7 - Directional Signal (Turn) W/ Single Tail Board W/Hazard SW:Diagram1

B6.7 - Directional Signal (Turn) W/ Single Tail Board W/Hazard SW:Diagram2
B6.7 - Directional Signal (Turn) W/ Single Tail Board W/Plow Lights:Diagram1
B6.7 - Directional Signal (Turn) W/ Single Tail Board W/Plow Lights:Diagram2
B6.7 - Directional Signal (Turn) W/ Single Tail Board W/Plow Lights:Diagram3
B6.7 - Directional Signal (Turn) W/ Single Tail Board W/Plow Lights:Diagram4
B6.7 - Fog Lights (Halogen White):Diagram1
B6.7 - Fog Lights (Halogen White):Diagram2
B6.7 - Fog Lights (Halogen White):Diagram3
B6.7 - Fog Lights (LED White):Diagram1
B6.7 - Fog Lights (LED White):Diagram2
B6.7 - Fog Lights (LED White):Diagram3
B6.7 - Front Fog Lamps:Diagram1
B6.7 - Front Fog Lamps:Diagram2
B6.7 - Front Fog Lamps:Diagram3
B6.7 - Front Fog Lights W CONNECTOR:Diagram1
B6.7 - Front Fog Lights W CONNECTOR:Diagram2
B6.7 - Front Marker Lights - With Plow Lights:Diagram1
B6.7 - Front Marker Lights - With Plow Lights:Diagram2
B6.7 - Front Marker Lights - With Plow Lights:Diagram3
B6.7 - Front Marker Lights - With Plow Lights:Diagram4
B6.7 - Front Marker Lights - Without Snow Plow Lights:Diagram1
B6.7 - Front Marker Lights - Without Snow Plow Lights:Diagram2
B6.7 - Headlight W/Plowlights W/LOWW W/O Headlight Interrupt -10 PIN CLK:Diagram1
B6.7 - Headlight W/Plowlights W/LOWW W/O Headlight Interrupt -10 PIN CLK:Diagram2
B6.7 - Headlight W/Plowlights W/LOWW W/O Headlight Interrupt -10 PIN CLK:Diagram3
B6.7 - Headlight W/Plowlights W/LOWW W/O Headlight Interrupt -10 PIN CLK:Diagram4
B6.7 - Headlight W/Plowlights W/LOWW W/O Headlight Interrupt -10 PIN CLK:Diagram5
B6.7 - Headlight W/Plowlights W/LOWW W/O Headlight Interrupt -10 PIN CLK:Diagram6
B6.7 - Headlight W/Plowlights W/LOWW W/O Headlight Interrupt -10 PIN CLK:Diagram7
B6.7 - Headlight W/Plowlights W/LOWW W/O Headlight Interrupt -10 PIN CLK:Diagram8
B6.7 - Headlights W 10PIN CLK W/LOWW W/Interrupt:Diagram1

B6.7 - Headlights W 10PIN CLK W/LOWW W/Interrupt:Diagram2
B6.7 - Headlights W 10PIN CLK W/LOWW W/Interrupt:Diagram3
B6.7 - Headlights W 10PIN CLK W/LOWW W/Interrupt:Diagram4
B6.7 - Headlights W 10PIN CLK W/LOWW W/O Interrupt:Diagram1
B6.7 - Headlights W 10PIN CLK W/LOWW W/O Interrupt:Diagram2
B6.7 - Headlights W 10PIN CLK W/LOWW W/O Interrupt:Diagram3
B6.7 - Headlights W 10PIN CLK W/LOWW W/O Interrupt:Diagram4
B6.7 - Headlights W/O Lights ON With Wipers (LOWW) W/O Headlights Interrupt:Diagram1
B6.7 - Headlights W/O Lights ON With Wipers (LOWW) W/O Headlights Interrupt:Diagram2
B6.7 - Headlights W/O Lights ON With Wipers (LOWW) W/O Headlights Interrupt:Diagram3
B6.7 - Headlights W/O Lights ON With Wipers (LOWW) W/O Headlights Interrupt:Diagram4
B6.7 - Headlights W/O Lights ON with wipers (LOWW) W/ Headlights Interrupt:Diagram1
B6.7 - Headlights W/O Lights ON with wipers (LOWW) W/ Headlights Interrupt:Diagram2
B6.7 - Headlights W/O Lights ON with wipers (LOWW) W/ Headlights Interrupt:Diagram3
B6.7 - Headlights W/O Lights ON with wipers (LOWW) W/ Headlights Interrupt:Diagram4
B6.7 - Headlights W/PlowLights W/Headlight Interrupt -10PIN CLK W/LOWW W/Interrupt:Diagram1
B6.7 - Headlights W/PlowLights W/Headlight Interrupt -10PIN CLK W/LOWW W/Interrupt:Diagram2
B6.7 - Headlights W/PlowLights W/Headlight Interrupt -10PIN CLK W/LOWW W/Interrupt:Diagram3
B6.7 - Headlights W/PlowLights W/Headlight Interrupt -10PIN CLK W/LOWW W/Interrupt:Diagram4
B6.7 - Headlights W/PlowLights W/Headlight Interrupt -10PIN CLK W/LOWW W/Interrupt:Diagram5
B6.7 - Headlights W/PlowLights W/Headlight Interrupt -10PIN CLK W/LOWW W/Interrupt:Diagram6
B6.7 - Headlights W/PlowLights W/Headlight Interrupt -10PIN CLK W/LOWW W/Interrupt:Diagram7
B6.7 - Headlights W/PlowLights W/Headlight Interrupt -10PIN CLK W/LOWW W/Interrupt:Diagram8

B6.7 - Headlights W/Plowlights W/O Lights ON With Wipers (LOWW) W/O Headlights Interrupt:Diagram1
B6.7 - Headlights W/Plowlights W/O Lights ON With Wipers (LOWW) W/O Headlights Interrupt:Diagram2
B6.7 - Headlights W/Plowlights W/O Lights ON With Wipers (LOWW) W/O Headlights Interrupt:Diagram3
B6.7 - Headlights W/Plowlights W/O Lights ON With Wipers (LOWW) W/O Headlights Interrupt:Diagram4
B6.7 - Headlights W/Plowlights W/O Lights ON With Wipers (LOWW) W/O Headlights Interrupt:Diagram5
B6.7 - Headlights W/Plowlights W/O Lights ON With Wipers (LOWW) W/O Headlights Interrupt:Diagram6
B6.7 - Headlights W/Plowlights W/O Lights ON With Wipers (LOWW) W/O Headlights Interrupt:Diagram7
B6.7 - Headlights W/Plowlights W/O Lights ON With Wipers (LOWW) W/O Headlights Interrupt:Diagram8
B6.7 - Headlights W/PlowLights W/O Lights ON with wipers (LOWW) W/ Headlights Interrupt:Diagram1
B6.7 - Headlights W/PlowLights W/O Lights ON with wipers (LOWW) W/ Headlights Interrupt:Diagram2
B6.7 - Headlights W/PlowLights W/O Lights ON with wipers (LOWW) W/ Headlights Interrupt:Diagram3
B6.7 - Headlights W/PlowLights W/O Lights ON with wipers (LOWW) W/ Headlights Interrupt:Diagram4
B6.7 - Headlights W/PlowLights W/O Lights ON with wipers (LOWW) W/ Headlights Interrupt:Diagram5
B6.7 - Headlights W/PlowLights W/O Lights ON with wipers (LOWW) W/ Headlights Interrupt:Diagram6
B6.7 - Headlights W/PlowLights W/O Lights ON with wipers (LOWW) W/ Headlights Interrupt:Diagram7
B6.7 - Headlights W/PlowLights W/O Lights ON with wipers (LOWW) W/ Headlights Interrupt:Diagram8
B6.7 - Heated Mirrors (Hood with Door Pods):Diagram1
B6.7 - Heated Mirrors (Hood with Door Pods):Diagram2
B6.7 - Heated Mirrors (RT Hood with Door Pods):Diagram1
B6.7 - Heated Mirrors (RT Hood with Door Pods):Diagram2
B6.7 - Heated Mirrors (RT Hood with Door Pods):Diagram3
B6.7 - Heated Mirrors (RT Hood with Door Pods):Diagram4
B6.7 - Mirrors (Heat) Switch Pack Actuated includes Hood Mirrors:Diagram1
B6.7 - Mirrors (Heat) Switch Pack Actuated includes Hood Mirrors:Diagram2
B6.7 - Mirrors (Heat) Switch Pack Actuated includes RT Hood Mirror:Diagram1

B6.7 - Mirrors (Heat) Switch Pack Actuated includes RT Hood Mirror:Diagram2
B6.7 - Mirrors (Heat) Switch Pack Actuated includes RT Hood Mirror:Diagram3
B6.7 - Mirrors (Heat) Switch Pack Actuated includes RT Hood Mirror:Diagram4
B6.7 - Powertrain J1939 Allison 1k/2k:B6.7 - Allison 1k/2k Transmission
B6.7 - Powertrain J1939 Allison 3k/4k:B6.7 - Allison 3k/4k Transmission
B6.7 - Powertrain J1939 Manual Transmission:B6.7 - Manual Transmission
B6.7 - Stability Control (Bendix Straight Truck J1939 Driven Lamp):Diagram1
B6.7 - Stability Control (Bendix Straight Truck J1939 Driven Lamp):Diagram2
L9 - ABS Private J1939:L9 - ABS Private J1939
L9 - Antilock Brake System (ABS) BENDIX 4 Channel Implemenation:Diagram1
L9 - Antilock Brake System (ABS) Bendix 6 Channel Implementation:Diagram1
L9 - Antilock Brake System (ABS) Bendix 6 Channel Implementation:Diagram2
L9 - Antilock Brake System (ABS) Bendix 6 Channel Implementation:Diagram3
L9 - Antilock Brake System (ABS) Bendix 6 Channel Implementation:Diagram4
L9 - Antilock Brake System (ABS) Bendix 6 Channel Implementation:Diagram5
L9 - Antilock Brake System (ABS) Bendix 6 Channel Implementation:Diagram6
L9 - Antilock Brake System (ABS) Bendix 6 Channel Implementation:Diagram7
L9 - Antilock Brake System (ABS) Bendix 6 Channel Implementation:Diagram8
L9 - Antilock Brake System (ABS) Bendix 6 Channel Implementation:Diagram9
L9 - Antilock Brake System (ABS) Wabco 4 Channel Implementation:Diagram1
L9 - Bendix Tractor or Towing Truck W/ Air SUSP J1939 Driven Lamp:Diagram1
L9 - Bendix Tractor or Towing Truck W/ Air SUSP J1939 Driven Lamp:Diagram2
L9 - CAN Layout:ABS Proprietary J1939

L9 - CAN Layout:Powertrain Standard J1939 (500kbps)
L9 - City Horn (W/ 4PIN CLK & Park Brake):Diagram1
L9 - City Horn (W/ 4PIN CLK & Park Brake):Diagram2
L9 - City Horn (W/ 4PIN CLK & Park Brake):Diagram3
L9 - City Horn (W/ 4PIN CLK & Park Brake):Diagram4
L9 - City Horn (W/ 4PIN CLK):Diagram1
L9 - City Horn (W/ 4PIN CLK):Diagram2
L9 - City Horn (W/ 4PIN CLK):Diagram3
L9 - City Horn (W/ 4PIN CLK):Diagram4
L9 - City Horn (W/ 10PIN CLK & Park Brake):Diagram1
L9 - City Horn (W/ 10PIN CLK & Park Brake):Diagram2
L9 - City Horn (W/ 10PIN CLK):Diagram1
L9 - City Horn (W/ 10PIN CLK):Diagram2
L9 - Directional Signal (Turn) W/ Less Power Module Tail Board W/Hazard SW W/PLOW LIGHTS:Diagram1
L9 - Directional Signal (Turn) W/ Less Power Module Tail Board W/Hazard SW W/PLOW LIGHTS:Diagram2
L9 - Directional Signal (Turn) W/ Less Power Module Tail Board W/Hazard SW W/PLOW LIGHTS:Diagram3
L9 - Directional Signal (Turn) W/ Less Power Module Tail Board W/Hazard SW W/PLOW LIGHTS:Diagram4
L9 - Directional Signal (Turn) W/ DAISY CHAIN BOX LAMPS:Diagram1
L9 - Directional Signal (Turn) W/ DAISY CHAIN BOX LAMPS:Diagram2
L9 - Directional Signal (Turn) W/ Daisy Chain Box Lamps W/ Plow Lights:Diagram1
L9 - Directional Signal (Turn) W/ Daisy Chain Box Lamps W/ Plow Lights:Diagram2
L9 - Directional Signal (Turn) W/ Daisy Chain Box Lamps W/ Plow Lights:Diagram3
L9 - Directional Signal (Turn) W/ Daisy Chain Box Lamps W/ Plow Lights:Diagram4
L9 - Directional Signal (Turn) W/ LED BOX LAMPS:Diagram1
L9 - Directional Signal (Turn) W/ LED BOX LAMPS:Diagram2
L9 - Directional Signal (Turn) W/ LED BOX LAMPS W/Plow Lights:Diagram1
L9 - Directional Signal (Turn) W/ LED BOX LAMPS W/Plow Lights:Diagram2
L9 - Directional Signal (Turn) W/ LED BOX LAMPS W/Plow Lights:Diagram3
L9 - Directional Signal (Turn) W/ LED BOX LAMPS W/Plow Lights:Diagram4

L9 - Directional Signal (Turn) W/ Less Power Module Tail Board W/Hazard SW:Diagram1
L9 - Directional Signal (Turn) W/ Less Power Module Tail Board W/Hazard SW:Diagram2
L9 - Directional Signal (Turn) W/ Single Tail Board W/Hazard SW:Diagram1
L9 - Directional Signal (Turn) W/ Single Tail Board W/Hazard SW:Diagram2
L9 - Directional Signal (Turn) W/ Single Tail Board W/Plow Lights:Diagram1
L9 - Directional Signal (Turn) W/ Single Tail Board W/Plow Lights:Diagram2
L9 - Directional Signal (Turn) W/ Single Tail Board W/Plow Lights:Diagram3
L9 - Directional Signal (Turn) W/ Single Tail Board W/Plow Lights:Diagram4
L9 - Fog Lights (Halogen White):Diagram1
L9 - Fog Lights (Halogen White):Diagram2
L9 - Fog Lights (LED White):Diagram1
L9 - Fog Lights (LED White):Diagram2
L9 - Front Fog Lights W CONNECTOR:Diagram1
L9 - Front Fog Lights W CONNECTOR:Diagram2
L9 - Front Marker Lights - With Plow Lights:Diagram1
L9 - Front Marker Lights - With Plow Lights:Diagram2
L9 - Front Marker Lights - With Plow Lights:Diagram3
L9 - Front Marker Lights - With Plow Lights:Diagram4
L9 - Front Marker Lights - Without Snow Plow Lights:Diagram1
L9 - Front Marker Lights - Without Snow Plow Lights:Diagram2
L9 - Headlight W/Plowlights W/LOWW W/O Headlight Interrupt -10 PIN CLK:Diagram1
L9 - Headlight W/Plowlights W/LOWW W/O Headlight Interrupt -10 PIN CLK:Diagram2
L9 - Headlight W/Plowlights W/LOWW W/O Headlight Interrupt -10 PIN CLK:Diagram3
L9 - Headlight W/Plowlights W/LOWW W/O Headlight Interrupt -10 PIN CLK:Diagram4
L9 - Headlight W/Plowlights W/LOWW W/O Headlight Interrupt -10 PIN CLK:Diagram5
L9 - Headlight W/Plowlights W/LOWW W/O Headlight Interrupt -10 PIN CLK:Diagram6
L9 - Headlight W/Plowlights W/LOWW W/O Headlight Interrupt -10 PIN CLK:Diagram7
L9 - Headlight W/Plowlights W/LOWW W/O Headlight Interrupt -10 PIN CLK:Diagram8

L9 - Headlights W 10PIN CLK W/LOWW W/Interrupt:Diagram1
L9 - Headlights W 10PIN CLK W/LOWW W/Interrupt:Diagram2
L9 - Headlights W 10PIN CLK W/LOWW W/Interrupt:Diagram3
L9 - Headlights W 10PIN CLK W/LOWW W/Interrupt:Diagram4
L9 - Headlights W 10PIN CLK W/LOWW W/O Interrupt:Diagram1
L9 - Headlights W 10PIN CLK W/LOWW W/O Interrupt:Diagram2
L9 - Headlights W 10PIN CLK W/LOWW W/O Interrupt:Diagram3
L9 - Headlights W 10PIN CLK W/LOWW W/O Interrupt:Diagram4
L9 - Headlights W/O Lights ON With Wipers (LOWW) W/O Headlights Interrupt:Diagram1
L9 - Headlights W/O Lights ON With Wipers (LOWW) W/O Headlights Interrupt:Diagram2
L9 - Headlights W/O Lights ON With Wipers (LOWW) W/O Headlights Interrupt:Diagram3
L9 - Headlights W/O Lights ON With Wipers (LOWW) W/O Headlights Interrupt:Diagram4
L9 - Headlights W/O Lights ON with wipers (LOWW) W/ Headlights Interrupt:Diagram1
L9 - Headlights W/O Lights ON with wipers (LOWW) W/ Headlights Interrupt:Diagram2
L9 - Headlights W/O Lights ON with wipers (LOWW) W/ Headlights Interrupt:Diagram3
L9 - Headlights W/O Lights ON with wipers (LOWW) W/ Headlights Interrupt:Diagram4
L9 - Headlights W/PlowLights W/Headlight Interrupt -10PIN CLK W/LOWW W/Interrupt:Diagram1
L9 - Headlights W/PlowLights W/Headlight Interrupt -10PIN CLK W/LOWW W/Interrupt:Diagram2
L9 - Headlights W/PlowLights W/Headlight Interrupt -10PIN CLK W/LOWW W/Interrupt:Diagram3
L9 - Headlights W/PlowLights W/Headlight Interrupt -10PIN CLK W/LOWW W/Interrupt:Diagram4
L9 - Headlights W/PlowLights W/Headlight Interrupt -10PIN CLK W/LOWW W/Interrupt:Diagram5
L9 - Headlights W/PlowLights W/Headlight Interrupt -10PIN CLK W/LOWW W/Interrupt:Diagram6
L9 - Headlights W/PlowLights W/Headlight Interrupt -10PIN CLK W/LOWW W/Interrupt:Diagram7
L9 - Headlights W/PlowLights W/Headlight Interrupt -10PIN CLK W/LOWW W/Interrupt:Diagram8

L9 - Headlights W/Plowlights W/O Lights ON With Wipers (LOWW) W/O Headlights Interrupt:Diagram1
L9 - Headlights W/Plowlights W/O Lights ON With Wipers (LOWW) W/O Headlights Interrupt:Diagram2
L9 - Headlights W/Plowlights W/O Lights ON With Wipers (LOWW) W/O Headlights Interrupt:Diagram3
L9 - Headlights W/Plowlights W/O Lights ON With Wipers (LOWW) W/O Headlights Interrupt:Diagram4
L9 - Headlights W/Plowlights W/O Lights ON With Wipers (LOWW) W/O Headlights Interrupt:Diagram5
L9 - Headlights W/Plowlights W/O Lights ON With Wipers (LOWW) W/O Headlights Interrupt:Diagram6
L9 - Headlights W/Plowlights W/O Lights ON With Wipers (LOWW) W/O Headlights Interrupt:Diagram7
L9 - Headlights W/Plowlights W/O Lights ON With Wipers (LOWW) W/O Headlights Interrupt:Diagram8
L9 - Headlights W/PlowLights W/O Lights ON with wipers (LOWW) W/ Headlights Interrupt:Diagram1
L9 - Headlights W/PlowLights W/O Lights ON with wipers (LOWW) W/ Headlights Interrupt:Diagram2
L9 - Headlights W/PlowLights W/O Lights ON with wipers (LOWW) W/ Headlights Interrupt:Diagram3
L9 - Headlights W/PlowLights W/O Lights ON with wipers (LOWW) W/ Headlights Interrupt:Diagram4
L9 - Headlights W/PlowLights W/O Lights ON with wipers (LOWW) W/ Headlights Interrupt:Diagram5
L9 - Headlights W/PlowLights W/O Lights ON with wipers (LOWW) W/ Headlights Interrupt:Diagram6
L9 - Headlights W/PlowLights W/O Lights ON with wipers (LOWW) W/ Headlights Interrupt:Diagram7
L9 - Headlights W/PlowLights W/O Lights ON with wipers (LOWW) W/ Headlights Interrupt:Diagram8
L9 - Heated Mirrors (Hood with Door Pods):Diagram1
L9 - Heated Mirrors (Hood with Door Pods):Diagram2
L9 - Heated Mirrors (Hood with Door Pods):Diagram3
L9 - Heated Mirrors (Hood with Door Pods):Diagram4
L9 - Heated Mirrors (RT Hood with Door Pods):Diagram1
L9 - Heated Mirrors (RT Hood with Door Pods):Diagram2
L9 - Heated Mirrors (RT Hood with Door Pods):Diagram3
L9 - Heated Mirrors (RT Hood with Door Pods):Diagram4
L9 - Mirrors (Heat) Switch Pack Actuated includes Hood Mirrors:Diagram1
L9 - Mirrors (Heat) Switch Pack Actuated includes Hood Mirrors:Diagram2

L9 - Mirrors (Heat) Switch Pack Actuated includes Hood Mirrors:Diagram3
L9 - Mirrors (Heat) Switch Pack Actuated includes Hood Mirrors:Diagram4
L9 - Mirrors (Heat) Switch Pack Actuated includes RT Hood Mirror:Diagram1
L9 - Mirrors (Heat) Switch Pack Actuated includes RT Hood Mirror:Diagram2
L9 - Mirrors (Heat) Switch Pack Actuated includes RT Hood Mirror:Diagram3
L9 - Mirrors (Heat) Switch Pack Actuated includes RT Hood Mirror:Diagram4
L9 - Powertrain J1939 Allison 3k/4k:L9 - Powertrain J1939 Allison 3k/4k
L9 - Powertrain J1939 Eaton:L9 - Powertrain J1939 Eaton
L9 - Powertrain J1939 Manual Transmission:Powertrain Standard J1939 (500kbps)
L9 - Stability Control (Bendix Straight Truck J1939 Driven Lamp):Diagram1
L9 - Stability Control (Bendix Straight Truck J1939 Driven Lamp):Diagram2
L9 - Transmission Power Take Off (Auto Trans with Lectradrive):Diagram1
L9 - Transmission Power Take Off (Lectrashift PTO with Manual Trans):Diagram1

Mates 1700

Name	Terminal Part Number	V-Min	Name	Wire Part Number	Wire CSA	Wire Spec	Wire Material description	Wire Color Description	Wire Length	End2 Terminal Part Number	End2 Pin Name	End2 Connect or
1	-	-	YG52AA	3510337 R1	1.91	14.0	Thin Wall XLPE Primary Cable	YELLOW 2	1350.0	-	5	1873D
1	-	-	YF52A	3510337 R1	1.91	14.0	Thin Wall XLPE Primary Cable	YELLOW 2	640.0	-	H	J1-1603

Name	Terminal Part Number	V-Min	Name	Wire Part Number	Wire CSA	Wire Spec	Wire Material description	Wire Color Description	Wire Length	End2 Terminal Part Number	End2 Pin Name	End2 Connector
2	-	-	YG53AA	3510337 R1	1.91	14.0	Thin Wall XLPE Primary Cable	YELLOW 2	1430.0	-	5	1873F
2	-	-	YF53A	3510337 R1	1.91	14.0	Thin Wall XLPE Primary Cable	YELLOW 2	675.0	-	B	J2-1604
3	-	-	YG52BA	3510337 R1	1.91	14.0	Thin Wall XLPE Primary Cable	YELLOW 2	1390.0	-	5	1873E
3	-	-	YF52B	3510337 R1	1.91	14.0	Thin Wall XLPE Primary Cable	YELLOW 2	640.0	-	L	J1-1603
4	-	-	YG53BA	3510337 R1	1.91	14.0	Thin Wall XLPE Primary Cable	YELLOW 2	1470.0	-	5	1873G
4	-	-	YF53B	3510337 R1	1.91	14.0	Thin Wall XLPE Primary Cable	YELLOW 2	675.0	-	H	J2-1604
5	-	-	YS54B	3510305 R1	0.79	18.0	Thin Wall XLPE Primary Cable	BROWN	1080.0	-	-	-
8	-	-	YG53AC	3510337 R1	1.91	14.0	Thin Wall XLPE Primary Cable	YELLOW 2	1430.0	-	4	1873F

Name	Terminal Part Number	V-Min	Name	Wire Part Number	Wire CSA	Wire Spec	Wire Material description	Wire Color Description	Wire Length	End2 Terminal Part Number	End2 Pin Name	End2 Connector
9	-	-	YG53BC	3510337 R1	1.91	14.0	Thin Wall XLPE Primary Cable	YELLOW 2	1470.0	-	4	1873G
10	-	-	YG52AC	3510337 R1	1.91	14.0	Thin Wall XLPE Primary Cable	YELLOW 2	1350.0	-	4	1873D
11	-	-	YG52BC	3510337 R1	1.91	14.0	Thin Wall XLPE Primary Cable	YELLOW 2	1390.0	-	4	1873E
12	-	-	HU103C	2643776 R1	4.81	10.0	Std. Wall XLPE Primary Cable	LIGHT GREEN	1280.0	-	1	1873B
12	-	-	MG103C	3510302 R1	3.01	12.0	Thin Wall XLPE Primary Cable	LIGHT GREEN	470.0	-	-	-
13	-	-	HU103D	3510302 R1	3.01	12.0	Thin Wall XLPE Primary Cable	LIGHT GREEN	1280.0	-	4	1873B
14	-	-	YM56	3510318 R1	1.16	16.0	Thin Wall XLPE Primary Cable	ORANGE	675.0	-	C	J2-1604
14	-	-	YN56B	3510318 R1	1.16	16.0	Thin Wall XLPE Primary Cable	ORANGE	300.0	-	X	-

Name	Terminal Part Number	V-Min	Name	Wire Part Number	Wire CSA	Wire Spec	Wire Material description	Wire Color Description	Wire Length	End2 Terminal Part Number	End2 Pin Name	End2 Connector
14	-	-	XZ56B	3510318 R1	1.16	16.0	Thin Wall XLPE Primary Cable	ORANGE	300.0	-	X	-
14	-	-	YY56B	3510318 R1	1.16	16.0	Thin Wall XLPE Primary Cable	ORANGE	300.0	-	X	-
14	-	-	YT56B	3510318 R1	1.16	16.0	Thin Wall XLPE Primary Cable	ORANGE	675.0	-	C	J2-1604
15	-	-	YR57	3510318 R1	1.16	16.0	Thin Wall XLPE Primary Cable	ORANGE	675.0	-	K	J2-1604
15	-	-	YH57B	3510318 R1	1.16	16.0	Thin Wall XLPE Primary Cable	ORANGE	305.0	-	X	-
15	-	-	XZ57B	3510318 R1	1.16	16.0	Thin Wall XLPE Primary Cable	ORANGE	305.0	-	X	-
15	-	-	YK57B	3510318 R1	1.16	16.0	Thin Wall XLPE Primary Cable	ORANGE	305.0	-	X	-
15	-	-	YY57B	3510318 R1	1.16	16.0	Thin Wall XLPE Primary Cable	ORANGE	305.0	-	X	-

Name	Terminal Part Number	V-Min	Name	Wire Part Number	Wire CSA	Wire Spec	Wire Material description	Wire Color Description	Wire Length	End2 Terminal Part Number	End2 Pin Name	End2 Connector
15	-	-	XV57B	3510318 R1	1.16	16.0	Thin Wall XLPE Primary Cable	ORANGE	305.0	-	X	-
15	-	-	YQ57B	3510318 R1	1.16	16.0	Thin Wall XLPE Primary Cable	ORANGE	305.0	-	X	-
15	-	-	YT57B	3510318 R1	1.16	16.0	Thin Wall XLPE Primary Cable	ORANGE	675.0	-	K	J2-1604
20	-	-	YC67A	3510324 R1	1.16	16.0	Thin Wall XLPE Primary Cable	PINK	2445.0	-	-	-
21	-	-	AA85	3510312 R1	1.16	16.0	Thin Wall XLPE Primary Cable	GREY	640.0	-	E	J1-1603
21	-	-	TB85E	2643680 R1	1.16	16.0	Std. Wall XLPE Primary Cable	GREY	2005.0	-	-	-
22	-	-	YJ64A	3510336 R1	1.16	16.0	Thin Wall XLPE Primary Cable	YELLOW 2	640.0	-	F	J1-1603
23	-	-	YJ64B	3510336 R1	1.16	16.0	Thin Wall XLPE Primary Cable	YELLOW 2	640.0	-	K	J1-1603

Name	Terminal Part Number	V-Min	Name	Wire Part Number	Wire CSA	Wire Spec	Wire Material description	Wire Color Description	Wire Length	End2 Terminal Part Number	End2 Pin Name	End2 Connector
24	-	-	XR94BP	3510312 R1	1.16	16.0	Thin Wall XLPE Primary Cable	GREY	2440.0	-	-	-
24	-	-	TF94BP	2643680 R1	1.16	16.0	Std. Wall XLPE Primary Cable	GREY	330.0	-	1	9531F
24	-	-	XR94BP	3510312 R1	1.16	16.0	Thin Wall XLPE Primary Cable	GREY	2440.0	-	4	1402
27	-	-	XA94	3510312 R1	1.16	16.0	Thin Wall XLPE Primary Cable	GREY	2500.0	-	2	1401
27	-	-	XE94AB	2643782 R1	1.91	14.0	Std. Wall XLPE Primary Cable	GREY	2540.0	-	3	1421
27	-	-	NL9ZB	3510311 R1	0.79	18.0	Thin Wall XLPE Primary Cable	GREY	910.0	-	C	1620
27	-	-	ME94	2643673 R1	0.79	18.0	Std. Wall XLPE Primary Cable	GREY	1670.0	-	-	-
28	-	-	XA94A	3510312 R1	1.16	16.0	Thin Wall XLPE Primary Cable	GREY	2500.0	-	3	1401

Name	Terminal Part Number	V-Min	Name	Wire Part Number	Wire CSA	Wire Spec	Wire Material description	Wire Color Description	Wire Length	End2 Terminal Part Number	End2 Pin Name	End2 Connector
28	-	-	XE94AA	2643782 R1	1.91	14.0	Std. Wall XLPE Primary Cable	GREY	335.0	-	-	-
28	-	-	XE94AA	2643782 R1	1.91	14.0	Std. Wall XLPE Primary Cable	GREY	335.0	-	X	-
28	-	-	ME94A	2643673 R1	0.79	18.0	Std. Wall XLPE Primary Cable	GREY	1670.0	-	-	-
29	-	-	XA94B	3510312 R1	1.16	16.0	Thin Wall XLPE Primary Cable	GREY	2500.0	-	1	1401
29	-	-	XE94AL	2643782 R1	1.91	14.0	Std. Wall XLPE Primary Cable	GREY	2540.0	-	6	1421
29	-	-	ME94B	2643673 R1	0.79	18.0	Std. Wall XLPE Primary Cable	GREY	1670.0	-	-	-
30	-	-	XA94C	3510312 R1	1.16	16.0	Thin Wall XLPE Primary Cable	GREY	2500.0	-	5	1401
30	-	-	XE94AC	3510311 R1	0.79	18.0	Thin Wall XLPE Primary Cable	GREY	2540.0	-	12	1421

Name	Terminal Part Number	V-Min	Name	Wire Part Number	Wire CSA	Wire Spec	Wire Material description	Wire Color Description	Wire Length	End2 Terminal Part Number	End2 Pin Name	End2 Connector
30	-	-	ME94C	2643673 R1	0.79	18.0	Std. Wall XLPE Primary Cable	GREY	1615.0	-	-	-
31	-	-	XA94D	3510312 R1	1.16	16.0	Thin Wall XLPE Primary Cable	GREY	2500.0	-	8	1401
31	-	-	XE94AD	3510311 R1	0.79	18.0	Thin Wall XLPE Primary Cable	GREY	2540.0	-	15	1421
31	-	-	ME94D	2643673 R1	0.79	18.0	Std. Wall XLPE Primary Cable	GREY	1615.0	-	-	-
32	-	-	XA94E	3510312 R1	1.16	16.0	Thin Wall XLPE Primary Cable	GREY	2500.0	-	11	1401
32	-	-	XE94AE	3510311 R1	0.79	18.0	Thin Wall XLPE Primary Cable	GREY	2540.0	-	10	1421
32	-	-	ME94E	2643673 R1	0.79	18.0	Std. Wall XLPE Primary Cable	GREY	5105.0	-	-	-
33	-	-	XA94F	3510312 R1	1.16	16.0	Thin Wall XLPE Primary Cable	GREY	2500.0	-	14	1401

Name	Terminal Part Number	V-Min	Name	Wire Part Number	Wire CSA	Wire Spec	Wire Material description	Wire Color Description	Wire Length	End2 Terminal Part Number	End2 Pin Name	End2 Connector
33	-	-	XE94AF	3510311 R1	0.79	18.0	Thin Wall XLPE Primary Cable	GREY	2540.0	-	13	1421
33	-	-	ME94F	2643673 R1	0.79	18.0	Std. Wall XLPE Primary Cable	GREY	5105.0	-	-	-
34	-	-	XA94H	3510312 R1	1.16	16.0	Thin Wall XLPE Primary Cable	GREY	2500.0	-	7	1401
34	-	-	XE94AK	2643782 R1	1.91	14.0	Std. Wall XLPE Primary Cable	GREY	2540.0	-	1	1421
34	-	-	ME94H	2643673 R1	0.79	18.0	Std. Wall XLPE Primary Cable	GREY	5680.0	-	-	-
35	-	-	XA94J	3510312 R1	1.16	16.0	Thin Wall XLPE Primary Cable	GREY	2500.0	-	6	1401
35	-	-	XE94AJ	2643782 R1	1.91	14.0	Std. Wall XLPE Primary Cable	GREY	335.0	-	-	-
35	-	-	XE94AJ	2643782 R1	1.91	14.0	Std. Wall XLPE Primary Cable	GREY	335.0	-	X	-

Name	Terminal Part Number	V-Min	Name	Wire Part Number	Wire CSA	Wire Spec	Wire Material description	Wire Color Description	Wire Length	End2 Terminal Part Number	End2 Pin Name	End2 Connector
35	-	-	ME94K	2643673 R1	0.79	18.0	Std. Wall XLPE Primary Cable	GREY	5680.0	-	-	-
36	-	-	XA94K	3510312 R1	1.16	16.0	Thin Wall XLPE Primary Cable	GREY	2500.0	-	4	1401
36	-	-	XE94AH	2643782 R1	1.91	14.0	Std. Wall XLPE Primary Cable	GREY	2540.0	-	4	1421
36	-	-	ME94J	2643673 R1	0.79	18.0	Std. Wall XLPE Primary Cable	GREY	5680.0	-	-	-
37	-	-	TF94BY	2643680 R1	1.16	16.0	Std. Wall XLPE Primary Cable	GREY	330.0	-	2	9531F
37	-	-	XR94BY	3510312 R1	1.16	16.0	Thin Wall XLPE Primary Cable	GREY	2440.0	-	-	-
37	-	-	XR94BY	3510312 R1	1.16	16.0	Thin Wall XLPE Primary Cable	GREY	2440.0	-	6	1402
38	-	-	TF94BZ	2643680 R1	1.16	16.0	Std. Wall XLPE Primary Cable	GREY	330.0	-	3	9531F

Name	Terminal Part Number	V-Min	Name	Wire Part Number	Wire CSA	Wire Spec	Wire Material description	Wire Color Description	Wire Length	End2 Terminal Part Number	End2 Pin Name	End2 Connector
38	-	-	XR94BZ	3510312 R1	1.16	16.0	Thin Wall XLPE Primary Cable	GREY	2440.0	-	-	-
38	-	-	XR94BZ	3510312 R1	1.16	16.0	Thin Wall XLPE Primary Cable	GREY	2440.0	-	7	1402
39	-	-	XR94BT	3510312 R1	1.16	16.0	Thin Wall XLPE Primary Cable	GREY	2440.0	-	-	-
39	-	-	TF94BT	2643680 R1	1.16	16.0	Std. Wall XLPE Primary Cable	GREY	330.0	-	4	9531F
39	-	-	XR94BT	3510312 R1	1.16	16.0	Thin Wall XLPE Primary Cable	GREY	2440.0	-	9	1402
40	-	-	XR94BU	3510312 R1	1.16	16.0	Thin Wall XLPE Primary Cable	GREY	2440.0	-	-	-
40	-	-	TF94BU	2643680 R1	1.16	16.0	Std. Wall XLPE Primary Cable	GREY	330.0	-	5	9531F
40	-	-	XR94BU	3510312 R1	1.16	16.0	Thin Wall XLPE Primary Cable	GREY	2440.0	-	10	1402

Name	Terminal Part Number	V-Min	Name	Wire Part Number	Wire CSA	Wire Spec	Wire Material description	Wire Color Description	Wire Length	End2 Terminal Part Number	End2 Pin Name	End2 Connector
41	-	-	XR94BS	3510312 R1	1.16	16.0	Thin Wall XLPE Primary Cable	GREY	2440.0	-	-	-
41	-	-	TF94BS	2643680 R1	1.16	16.0	Std. Wall XLPE Primary Cable	GREY	330.0	-	6	9531F
41	-	-	XR94BS	3510312 R1	1.16	16.0	Thin Wall XLPE Primary Cable	GREY	2440.0	-	13	1402
42	-	-	WIRE239 176	-	0.0	-	-	-	0.0	-	H	1410
42	-	-	ND94SBB	2643680 R1	1.16	16.0	Std. Wall XLPE Primary Cable	GREY	250.0	-	3	9524
42	-	-	XF94SBB	3510311 R1	0.79	18.0	Thin Wall XLPE Primary Cable	GREY	1325.0	-	-	-
45	-	-	XR94BR	3510312 R1	1.16	16.0	Thin Wall XLPE Primary Cable	GREY	2440.0	-	11	1402
45	-	-	TF94BR	2643680 R1	1.16	16.0	Std. Wall XLPE Primary Cable	GREY	330.0	-	-	-
46	-	-	XR94BQ	3510312 R1	1.16	16.0	Thin Wall XLPE Primary Cable	GREY	2440.0	-	14	1402

Name	Terminal Part Number	V-Min	Name	Wire Part Number	Wire CSA	Wire Spec	Wire Material description	Wire Color Description	Wire Length	End2 Terminal Part Number	End2 Pin Name	End2 Connector
46	-	-	TF94BQ	2643680 R1	1.16	16.0	Std. Wall XLPE Primary Cable	GREY	330.0	-	-	-
47	-	-	YC67-G	3510360 R1	1.16	16.0	Thin Wall XLPE Primary Cable	WHITE	500.0	-	-	-
48	-	-	XR94BW	3510312 R1	1.16	16.0	Thin Wall XLPE Primary Cable	GREY	2440.0	-	12	1402
48	-	-	TF94BW	2643680 R1	1.16	16.0	Std. Wall XLPE Primary Cable	GREY	330.0	-	-	-
49	-	-	XR94BV	3510312 R1	1.16	16.0	Thin Wall XLPE Primary Cable	GREY	2440.0	-	15	1402
49	-	-	TF94BV	2643680 R1	1.16	16.0	Std. Wall XLPE Primary Cable	GREY	330.0	-	-	-
50	-	-	WIRE239177	-	0.0	-	-	-	0.0	-	B	1410
50	-	-	ND94SAB	2643680 R1	1.16	16.0	Std. Wall XLPE Primary Cable	GREY	250.0	-	1	9524
50	-	-	XF94SAB	3510311 R1	0.79	18.0	Thin Wall XLPE Primary Cable	GREY	1325.0	-	A	1820M

Name	Terminal Part Number	V-Min	Name	Wire Part Number	Wire CSA	Wire Spec	Wire Material description	Wire Color Description	Wire Length	End2 Terminal Part Number	End2 Pin Name	End2 Connector
50	-	-	XF94SAB	3510311 R1	0.79	18.0	Thin Wall XLPE Primary Cable	GREY	1325.0	-	-	-
51	-	-	WIRE239 178	-	0.0	-	-	-	0.0	-	L	1410
60	-	-	WIRE239 179	-	0.0	-	-	-	0.0	-	E	1410
60	-	-	XF94SCB	3510311 R1	0.79	18.0	Thin Wall XLPE Primary Cable	GREY	1325.0	-	C	1820M
60	-	-	XF94SCB	3510311 R1	0.79	18.0	Thin Wall XLPE Primary Cable	GREY	1325.0	-	-	-
61	-	-	WIRE735 242	-	0.0	-	-	-	0.0	-	PIN1	-
61	-	-	WIRE735 143	-	0.0	-	-	-	0.0	-	PIN1	-
62	-	-	WIRE735 243	-	0.0	-	-	-	0.0	-	PIN1	-
62	-	-	WIRE735 146	-	0.0	-	-	-	0.0	-	PIN1	-
63	-	-	RL78AB	3510300 R1	1.16	16.0	Thin Wall XLPE Primary Cable	LIGHT GREEN	2360.0	-	R6 - 87	1014
63	-	-	RM78AC	3510300 R1	1.16	16.0	Thin Wall XLPE Primary Cable	LIGHT GREEN	1010.0	-	X	-

Name	Terminal Part Number	V-Min	Name	Wire Part Number	Wire CSA	Wire Spec	Wire Material description	Wire Color Description	Wire Length	End2 Terminal Part Number	End2 Pin Name	End2 Connector
64	-	-	RM78AD	3510300 R1	1.16	16.0	Thin Wall XLPE Primary Cable	LIGHT GREEN	1010.0	-	X	-
69	-	-	ND94SJ	2643680 R1	1.16	16.0	Std. Wall XLPE Primary Cable	GREY	250.0	-	5	9524
69	-	-	XF94SJ	2643680 R1	1.16	16.0	Std. Wall XLPE Primary Cable	GREY	2440.0	-	5	1402
70	-	-	ND94SK	2643680 R1	1.16	16.0	Std. Wall XLPE Primary Cable	GREY	250.0	-	6	9524
70	-	-	XP94SK	2643680 R1	1.16	16.0	Std. Wall XLPE Primary Cable	GREY	670.0	-	X	-
70	-	-	XJ94SK	3510311 R1	0.79	18.0	Thin Wall XLPE Primary Cable	GREY	2440.0	-	3	1402
71	-	-	XF94SM	2643680 R1	1.16	16.0	Std. Wall XLPE Primary Cable	GREY	2570.0	-	9	1403
72	-	-	XF94SN	2643680 R1	1.16	16.0	Std. Wall XLPE Primary Cable	GREY	2570.0	-	12	1403

Name	Terminal Part Number	V-Min	Name	Wire Part Number	Wire CSA	Wire Spec	Wire Material description	Wire Color Description	Wire Length	End2 Terminal Part Number	End2 Pin Name	End2 Connect or
73	-	-	XF94SL	2643680 R1	1.16	16.0	Std. Wall XLPE Primary Cable	GREY	2570.0	-	6	1403
74	-	-	XF94SZC	3510312 R1	1.16	16.0	Thin Wall XLPE Primary Cable	GREY	2380.0	-	X	-
75	-	-	XF94SVC	3510312 R1	1.16	16.0	Thin Wall XLPE Primary Cable	GREY	2360.0	-	X	-
76	-	-	XF94SH	3510311 R1	0.79	18.0	Thin Wall XLPE Primary Cable	GREY	2570.0	-	3	1403

Connector Name	1700
Part Number	3595625C1
Short Description	FORWARD CHASSIS
Instances	A26 - Directional Signal (Turn) W/ Daisy Chain Box Lamps:Diagram1 A26 - Directional Signal (Turn) W/ Daisy Chain Box Lamps, W/ Plow Lights:Diagram1-Option 1 (Snow Plow #1) A26 - Directional Signal (Turn) W/ Daisy Chain Box Lamps, W/ Plow Lights:Diagram1-Option 2 (Snow Plow #2) A26 - Directional Signal (Turn) W/ Less Power Module Tail Board, W/Hazard SW:Diagram1 A26 - Directional Signal (Turn) W/ Less Power Module Tail Board, W/Hazard SW, W/Plow Lights:Diagram1-Option 1 (Snow Plow #1) A26 - Directional Signal (Turn) W/ Less Power Module Tail Board, W/Hazard SW, W/Plow Lights:Diagram1-Option 2 (Snow Plow #2) A26 - Directional Signal (Turn) W/ Single Tail Board, W/Hazard SW, W/Plow Lights:Diagram1-Option 1 (Snow Plow #1) A26 - Directional Signal (Turn) W/ Single Tail Board, W/Hazard SW, W/Plow Lights:Diagram1-Option 2 (Snow Plow #2) A26 - Headlights W/LOWW, W/O Interrupt:Diagram1-Combination1 A26 - Headlights W/LOWW, W/O Interrupt:Diagram1-Combination2 A26 - Headlights W/O LOWW, W/O Interrupt:Diagram1-Combination1 A26 - Headlights W/O LOWW, W/O Interrupt:Diagram1-Combination2
Mates	1700

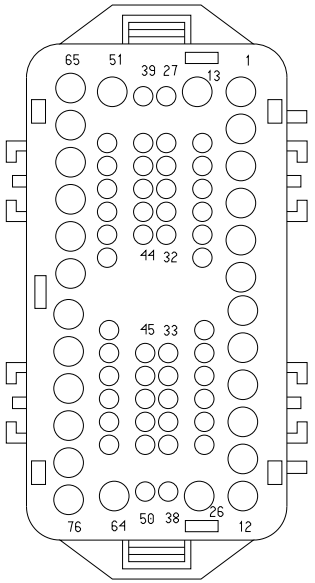

Name	Terminal Part Number	V-Min	Name	Wire Part Number	Wire CSA	Wire Spec	Wire Material description	Wire Color Description	Wire Length	End2 Terminal Part Number	End2 Pin Name	End2 Connect or
1	-	-	YF52A	3510337 R1	1.91	14.0	Thin Wall XLPE Primary Cable	YELLOW 2	640.0	-	H	J1-1603

Name	Terminal Part Number	V-Min	Name	Wire Part Number	Wire CSA	Wire Spec	Wire Material description	Wire Color Description	Wire Length	End2 Terminal Part Number	End2 Pin Name	End2 Connect or
2	-	-	YF53A	3510337 R1	1.91	14.0	Thin Wall XLPE Primary Cable	YELLOW 2	675.0	-	B	J2-1604
3	-	-	YF52B	3510337 R1	1.91	14.0	Thin Wall XLPE Primary Cable	YELLOW 2	640.0	-	L	J1-1603
4	-	-	YF53B	3510337 R1	1.91	14.0	Thin Wall XLPE Primary Cable	YELLOW 2	675.0	-	H	J2-1604
14	-	-	YM56	3510318 R1	1.16	16.0	Thin Wall XLPE Primary Cable	ORANGE	675.0	-	C	J2-1604
15	-	-	YR57	3510318 R1	1.16	16.0	Thin Wall XLPE Primary Cable	ORANGE	675.0	-	K	J2-1604

Connector Name	1701F
Part Number	3595622C1
Instances	A26 - Body Builder Lighting - BOC, 08HBX (Automatic):Diagram1 A26 - Body Builder Lighting - BOC, 08HBX (Manual):Diagram1 A26 - Body J1939 (250kbps):A26 - Body J1939 (250Kbps) A26 - CAN Layout:Body Standard J1939 (250Kbps) B6.7 - 26 inch Fuel Tank:Diagram1 B6.7 - 26 inch Fuel Tank:Diagram2 B6.7 - 26 inch Fuel Tank:Diagram3 B6.7 - 26 inch Fuel Tank - Secondary:Diagram1 B6.7 - Antilock Brake System (ABS) BENDIX 4 Channel Implemenation:Diagram1 B6.7 - Antilock Brake System (ABS) BENDIX 4 Channel Implemenation:Diagram2 B6.7 - Antilock Brake System (ABS) BENDIX 4 Channel Implemenation:Diagram3 B6.7 - Auxiliary Air Solenoids (1 Normally Closed) Option 1:Diagram1 B6.7 - Auxiliary Air Solenoids (1 Normally Closed) Option 2:Diagram1 B6.7 - Auxiliary Air Solenoids (1 Normally Closed) Option 2:Diagram2 B6.7 - Auxiliary Air Solenoids (1 Normally Closed) Option 2:Diagram3 B6.7 - Auxiliary Air Solenoids (1 Normally Closed) Option 3:Diagram1 B6.7 - Auxiliary Air Solenoids (1 Normally Closed) Option 3:Diagram2 B6.7 - Auxiliary Air Solenoids (1 Normally Closed) Option 3:Diagram3 B6.7 - Axle Temperature Monitoring (Single Rear Aux Gauge):Diagram1 B6.7 - Axle Temperature Monitoring (Single Rear Virtual Gauge):Diagram1 B6.7 - Back-Up Alarm (Automatic) W/ Tailboard:Diagram1 B6.7 - Back-Up Alarm (Automatic) W/O Tailboard:Diagram1 B6.7 - Back-Up Alarm (Manual) W/ Tailboard:Diagram1 B6.7 - Back-Up Alarm (Manual) W/O Tailboard:Diagram1 B6.7 - Backup Light (Dual Daisy Reverse LT)Allison/ZF Trans 1K/2K:Diagram1 B6.7 - Backup Light (Dual Daisy Reverse LT)Allison/ZF Trans 3K/4K:Diagram1

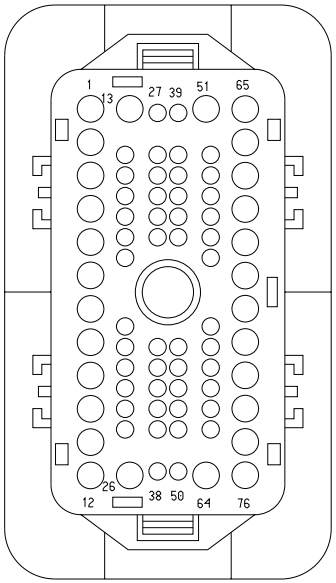

B6.7 - Backup Light (Dual Daisy Reverse LT)Allison/ZF Trans 3K/4K:Diagram2
B6.7 - Backup Light (Dual Reverse Light)Allison/ZF Trans 1K/2K:Diagram1
B6.7 - Backup Light (Dual Reverse Light)Allison/ZF Trans 3K/4K:Diagram1
B6.7 - Backup Light (Dual Reverse Light)Allison/ZF Trans 3K/4K:Diagram2
B6.7 - Backup Light (Single Reverse Light) Allison 1K/2K Option 1:Diagram1
B6.7 - Backup Light (Single Reverse Light) Allison 1K/2K Option 2:Diagram1
B6.7 - Backup Light (Single Reverse Light) Allison 1K/2K Option 3:Diagram1
B6.7 - Backup Light (Single Reverse Light) Allison 3K/4K Option 1:Diagram1
B6.7 - Backup Light (Single Reverse Light) Allison 3K/4K Option 1:Diagram2
B6.7 - Backup Light (Single Reverse Light) Allison 3K/4K Option 2:Diagram1
B6.7 - Backup Light (Single Reverse Light) Allison 3K/4K Option 2:Diagram2
B6.7 - Backup Light (Single Reverse Light) Allison 3K/4K Option 3:Diagram1
B6.7 - Backup Light (Single Reverse Light) Allison 3K/4K Option 3:Diagram2
B6.7 - Backup Lights (Dual Daisy Reverse Light) Eaton/Manual Trans:Diagram1
B6.7 - Backup Lights (Dual Reverse Light) Eaton/Manual Trans:Diagram1
B6.7 - Backup Lights (Single Reverse Light) Eaton/Manual Trans:Diagram1
B6.7 - Backup Lights (Single Reverse Lights) Eaton/Manual Trans Option 1:Diagram1
B6.7 - Backup Lights (Single Reverse Lights) Eaton/Manual Trans Option 2:Diagram1
B6.7 - Body J1939 (250kbps):B6.7 - Body J1939 (250Kbps)
B6.7 - CAN Layout:Body Standard J1939 (250Kbps)
B6.7 - DLB - Remote Power Module (3 RPM n/Switch Pack):Diagram1
B6.7 - DLB - Remote Power Modules (3 RPM w/ Swtich Packs):Diagram1
B6.7 - Driver Controlled Locking Differential - RR Axle (Dana w/ one sw):Diagram1

B6.7 - Driver Controlled Locking Differential - RR Axle (Meritor w/ one sw):Diagram1
B6.7 - Fuel Heater (Vehicle Powered)(Davco):Diagram1
B6.7 - Fuel Heater (Vehicle Powered)(Davco):Diagram2
B6.7 - Fuel Heater (Vehicle Powered)(Davco):Diagram3
B6.7 - Fuel Heater (Vehicle Powered)(Davco):Diagram4
B6.7 - Fuel Heater (Vehicle Powered)(Davco):Diagram5
B6.7 - Fuel Heater (Vehicle Powered)(Davco):Diagram6
B6.7 - Fuel Heater (Vehicle Powered)(Davco):Diagram7
B6.7 - Fuel Heater (Vehicle Powered)(Racor):Diagram1
B6.7 - Fuel Heater (Vehicle Powered)(Racor):Diagram2
B6.7 - Fuel Heater (Vehicle Powered)(Racor):Diagram3
B6.7 - Fuel Heater (Vehicle Powered)(Racor):Diagram4
B6.7 - Fuel Heater (Vehicle Powered)(Racor):Diagram5
B6.7 - Fuel Heater (Vehicle Powered)(Racor):Diagram6
B6.7 - Fuel Heater (Vehicle Powered)(Racor):Diagram7
B6.7 - License Plate Light (LED BOX LAMP Daisy Chain Tail Light):Diagram1
B6.7 - License Plate Light (LED BOX LAMP Tail Light):Diagram1
B6.7 - License Plate Light (Tail Light Single Assy) Option 1:Diagram1
B6.7 - License Plate Light (Tail Light Single Assy) Option 2:Diagram1
B6.7 - License Plate Light (Tail Light Single Assy) Option 3:Diagram1
B6.7 - License Plate Light (Tail Light Single Assy) Option 4:Diagram1
B6.7 - License Plate Light (Tail Light Single Assy) W/Less Power Module:Diagram1
B6.7 - Rear Light (LED BOX LAMP Tail Light):Diagram1
B6.7 - Rear Light (Tail Light) Option 1:Diagram1
B6.7 - Rear Light (Tail Light) Option 2:Diagram1
B6.7 - Rear Light (Tail Light) Option 3:Diagram1
B6.7 - Rear Light (Tail Light) Option 4:Diagram1
B6.7 - Rear Light (Tail Light) W_Daisy Chain pair of Box Lamps:Diagram1
B6.7 - Rear Lights Stop - Daisy Chain:Diagram1
B6.7 - Rear Lights Stop - Dual Assembly:Diagram1
B6.7 - Rear Lights Stop - Single Assemby:Diagram1
B6.7 - Remote Start/Stop:Diagram1
B6.7 - Remote Start/Stop w/ Emergency Pump:Diagram1
B6.7 - RIGHTSIDE AIR DRYER:Diagram1
B6.7 - RIGHTSIDE AIR DRYER:Diagram2
B6.7 - RIGHTSIDE AIR DRYER:Diagram3

B6.7 - RIGHTSIDE AIR DRYER:Diagram4
B6.7 - RIGHTSIDE AIR DRYER:Diagram5
B6.7 - RIGHTSIDE AIR DRYER:Diagram6
B6.7 - Stability Control (Bendix Straight Truck J1939 Driven Lamp):Diagram3
B6.7 - Stability Control (Bendix Straight Truck J1939 Driven Lamp):Diagram4
B6.7 - TEM Electric Trailer Brake Controller Activated Stop LT Option 2:Diagram1
B6.7 - TEM _Electric Trailer Brake Controller Activated Stop LT Option 1:Diagram1
B6.7 - Trailer Interface (Lighting) – BLUNT CUT (Part of Electric Trailer Brakes) Option 1:Diagram1
B6.7 - Trailer Interface (Lighting) – BLUNT CUT (Part of Electric Trailer Brakes) Option 2:Diagram1
L9 - Auxiliary Air Solenoids (1 Normally Closed):Diagram1
L9 - Auxillary Air Solenoids Normally Closed:Combination1
L9 - Auxillary Air Solenoids Normally Closed:Combination2
L9 - Auxillary Air Solenoids Normally Closed:Combination3
L9 - Auxillary Air Solenoids Normally Closed:Combination4
L9 - Auxillary Air Solenoids Normally Closed:Combination5
L9 - Auxillary Air Solenoids Normally Closed:Combination6
L9 - Axle Loading (Weight) Rear:Diagram1
L9 - Axle Loading (Weight) Rear:Diagram2
L9 - Back-Up Alarm (Automatic) W/ Tailboard:Diagram1
L9 - Back-Up Alarm (Automatic) W/O Tailboard:Diagram1
L9 - Back-Up Alarm (Manual) W/ Tailboard:Diagram1
L9 - Back-Up Alarm (Manual) W/ Tailboard:Diagram2
L9 - Back-Up Alarm (Manual) W/O Tailboard:Diagram1
L9 - Back-Up Alarm (Manual) W/O Tailboard:Diagram2
L9 - Body Builder Lighting - Combined Turn and Stop Lamps (Automatic):Diagram2
L9 - Body Builder Lighting - Combined Turn and Stop Lamps (Automatic):Diagram3
L9 - Body Builder Lighting - Separate Turn and Stop Lamps (Blunt Cut) Option 1:Diagram1
L9 - Body Builder Lighting - Separate Turn and Stop Lamps (Blunt Cut) Option 2:Diagram1
L9 - Body J1939 (250kbps):L9 - Body J1939 (250Kbps)
L9 - CAN Layout:Body Standard J1939 (250Kbps)
L9 - DLB - Remote Power Module (3 RPM n/Switch Pack):Diagram1
L9 - DLB - Remote Power Modules (3 RPM w/ Swtich Packs):Diagram1

L9 - Driver Controlled Locking Differential - FR and RR Axle (Dana w/ one sw):Diagram1
L9 - Driver Controlled Locking Differential - FR and RR Axle (Meritor w/ one sw):Diagram1
L9 - Driver Controlled Locking Differential - FR and RR Axles (Dana w/ two sw):Diagram1
L9 - Driver Controlled Locking Differential - FR and RR Axles (Meritor w/ two sw):Diagram1
L9 - Driver Controlled Locking Differential - RR Axle (Dana w/ one sw):Diagram1
L9 - Driver Controlled Locking Differential - RR Axle (Meritor w/ one sw):Diagram1
L9 - Four Auxillary Air Solenoids:Diagram1
L9 - Fuel Heater (Vehicle Powered)(Davco):Diagram1
L9 - Fuel Heater (Vehicle Powered)(Davco):Diagram2
L9 - Fuel Heater (Vehicle Powered)(Davco):Diagram3
L9 - Fuel Heater (Vehicle Powered)(Davco):Diagram4
L9 - Fuel Heater (Vehicle Powered)(Davco):Diagram5
L9 - Fuel Heater (Vehicle Powered)(Davco):Diagram6
L9 - Fuel Heater (Vehicle Powered)(Davco):Diagram7
L9 - Fuel Heater (Vehicle Powered)(Davco):Diagram8
L9 - Fuel Heater (Vehicle Powered)(Davco):Diagram9
L9 - Fuel Heater (Vehicle Powered)(Davco):Diagram10
L9 - Fuel Heater (Vehicle Powered)(Davco):Diagram11
L9 - Fuel Heater (Vehicle Powered)(Davco):Diagram12
L9 - Fuel Heater (Vehicle Powered)(Davco):Diagram13
L9 - Fuel Heater (Vehicle Powered)(Davco):Diagram14
L9 - Fuel Heater (Vehicle Powered)(Davco):Diagram15
L9 - Fuel Heater (Vehicle Powered)(Racor):Diagram1
L9 - Fuel Heater (Vehicle Powered)(Racor):Diagram2
L9 - Fuel Heater (Vehicle Powered)(Racor):Diagram3
L9 - Fuel Heater (Vehicle Powered)(Racor):Diagram4
L9 - Fuel Heater (Vehicle Powered)(Racor):Diagram5
L9 - Fuel Heater (Vehicle Powered)(Racor):Diagram6
L9 - Fuel Heater (Vehicle Powered)(Racor):Diagram7
L9 - Fuel Heater (Vehicle Powered)(Racor):Diagram8
L9 - License Plate Light (LED BOX LAMP Daisy Chain Tail Light):Diagram1
L9 - License Plate Light (LED BOX LAMP Tail Light):Diagram1
L9 - License Plate Light (Tail Light Single Assy) Option 1:Diagram1
L9 - License Plate Light (Tail Light Single Assy) Option 2:Diagram1

L9 - License Plate Light (Tail Light Single Assy) Option 3:Diagram1
L9 - License Plate Light (Tail Light Single Assy) Option 4:Diagram1
L9 - Rear Lights Stop - Daisy Chain:Diagram1
L9 - Remote Start/Stop:Diagram1
L9 - Remote Start/Stop w/ Emergency Pump:Diagram1
L9 - Stability Control (Bendix Straight Truck J1939 Driven Lamp):Diagram3
L9 - Stability Control (Bendix Straight Truck J1939 Driven Lamp):Diagram4
L9 - TEM Electric Trailer Brake Controller Activated Stop LT:Diagram1
L9 - Three Auxillary Air Solenoids:Diagram1
L9 - Three Auxillary Air Solenoids:Diagram2
L9 - Three Auxillary Air Solenoids:Diagram3
L9 - Trailer Interface (Lighting) – BLUNT CUT (Part of Electric Trailer Brakes) Option 1:Diagram1
L9 - Trailer Interface (Lighting) – BLUNT CUT (Part of Electric Trailer Brakes) Option 2:Diagram1

Mates 1701

Name	Terminal Part Number	V-Min	Name	Wire Part Number	Wire CSA	Wire Spec	Wire Material description	Wire Color Description	Wire Length	End2 Terminal Part Number	End2 Pin Name	End2 Connector
1	-	-	RK71A	2643690 R1	1.91	14.0	Std. Wall XLPE Primary Cable	ORANGE	4380.0	-	1	9800
2	-	-	RK56	2643690 R1	1.91	14.0	Std. Wall XLPE Primary Cable	ORANGE	4380.0	-	2	9800
3	-	-	RK57	2643690 R1	1.91	14.0	Std. Wall XLPE Primary Cable	ORANGE	4380.0	-	3	9800
4	-	-	RK68	2643688 R1	1.91	14.0	Std. Wall XLPE Primary Cable	BROWN	4380.0	-	4	9800

Name	Terminal Part Number	V-Min	Name	Wire Part Number	Wire CSA	Wire Spec	Wire Material description	Wire Color Description	Wire Length	End2 Terminal Part Number	End2 Pin Name	End2 Connector
4	-	-	RB68	2643688 R1	1.91	14.0	Std. Wall XLPE Primary Cable	BROWN	2875.0	-	D	9303A
5	-	-	NC56T	2643802 R1	4.81	10.0	Std. Wall XLPE Primary Cable	YELLOW 2	4430.0	-	B	9716
5	-	-	NE56T	2643802 R1	4.81	10.0	Std. Wall XLPE Primary Cable	YELLOW 2	1920.0	-	X	-
6	-	-	NC57T	2643776 R1	4.81	10.0	Std. Wall XLPE Primary Cable	LIGHT GREEN	4430.0	-	C	9716
6	-	-	NE57T	2643776 R1	4.81	10.0	Std. Wall XLPE Primary Cable	LIGHT GREEN	1980.0	-	X	-
7	-	-	NC54T	2643779 R1	4.81	10.0	Std. Wall XLPE Primary Cable	BROWN	4430.0	-	A	9716
7	-	-	NE54T	2643779 R1	4.81	10.0	Std. Wall XLPE Primary Cable	BROWN	1855.0	-	X	-
8	-	-	NC68T	2643779 R1	4.81	10.0	Std. Wall XLPE Primary Cable	BROWN	4455.0	-	B	9715

Name	Terminal Part Number	V-Min	Name	Wire Part Number	Wire CSA	Wire Spec	Wire Material description	Wire Color Description	Wire Length	End2 Terminal Part Number	End2 Pin Name	End2 Connector
8	-	-	NE68T	2643779 R1	4.81	10.0	Std. Wall XLPE Primary Cable	BROWN	1805.0	-	X	-
9	-	-	NC70T	2643698 R1	4.81	10.0	Std. Wall XLPE Primary Cable	RED	4455.0	-	A	9715
9	-	-	NE70T	2643698 R1	4.81	10.0	Std. Wall XLPE Primary Cable	RED	1755.0	-	X	-
10	-	-	NC94T	2643784 R1	4.81	10.0	Std. Wall XLPE Primary Cable	GREY	4455.0	-	C	9715
12	-	-	ND56BB	2643684 R1	1.16	16.0	Std. Wall XLPE Primary Cable	YELLOW 2	2230.0	-	B	4450M
12	-	-	PV56BB	2643684 R1	1.16	16.0	Std. Wall XLPE Primary Cable	YELLOW 2	4430.0	-	B	4450AM
13	-	-	SL9	2643680 R1	1.16	16.0	Std. Wall XLPE Primary Cable	GREY	2180.0	-	-	-
16	-	-	MD94BE	2643680 R1	1.16	16.0	Std. Wall XLPE Primary Cable	GREY	4380.0	-	13	9800

Name	Terminal Part Number	V-Min	Name	Wire Part Number	Wire CSA	Wire Spec	Wire Material description	Wire Color Description	Wire Length	End2 Terminal Part Number	End2 Pin Name	End2 Connector
17	-	-	MD94BD	2643680 R1	1.16	16.0	Std. Wall XLPE Primary Cable	GREY	4380.0	-	14	9800
18	-	-	MD94BH	3510312 R1	1.16	16.0	Thin Wall XLPE Primary Cable	GREY	4380.0	-	15	9800
19	-	-	MD94BF	3510312 R1	1.16	16.0	Thin Wall XLPE Primary Cable	GREY	4380.0	-	16	9800
20	-	-	MD94BL	3510312 R1	1.16	16.0	Thin Wall XLPE Primary Cable	GREY	4380.0	-	22	9800
21	-	-	MD94BJ	3510312 R1	1.16	16.0	Thin Wall XLPE Primary Cable	GREY	4380.0	-	20	9800
22	-	-	MD94BK	3510312 R1	1.16	16.0	Thin Wall XLPE Primary Cable	GREY	4380.0	-	21	9800
23	-	-	MD94BA	2643680 R1	1.16	16.0	Std. Wall XLPE Primary Cable	GREY	4380.0	-	17	9800
24	-	-	MD94BB	3510312 R1	1.16	16.0	Thin Wall XLPE Primary Cable	GREY	4380.0	-	18	9800

Name	Terminal Part Number	V-Min	Name	Wire Part Number	Wire CSA	Wire Spec	Wire Material description	Wire Color Description	Wire Length	End2 Terminal Part Number	End2 Pin Name	End2 Connector
24	-	-	ZU94C	3510313 R1	1.91	14.0	Thin Wall XLPE Primary Cable	GREY	4780.0	-	18	9800
25	-	-	MD94BC	3510312 R1	1.16	16.0	Thin Wall XLPE Primary Cable	GREY	4380.0	-	19	9800
27	-	-	ZP36B	2643676 R1	0.79	18.0	Std. Wall XLPE Primary Cable	TAN	4240.0	-	A	9102C
27	-	-	ZV36B	2643676 R1	0.79	18.0	Std. Wall XLPE Primary Cable	TAN	6465.0	-	A	9102V
27	-	-	ZX36B	2643676 R1	0.79	18.0	Std. Wall XLPE Primary Cable	TAN	4370.0	-	A	9102X
29	-	-	FD36A	2643673 R1	0.79	18.0	Std. Wall XLPE Primary Cable	GREY	2125.0	-	A	9100A
31	-	-	AR39B	2643680 R1	1.16	16.0	Std. Wall XLPE Primary Cable	GREY	3730.0	-	A	9900AR
31	-	-	AQ39B	2643680 R1	1.16	16.0	Std. Wall XLPE Primary Cable	GREY	4280.0	-	A	9900AQ

Name	Terminal Part Number	V-Min	Name	Wire Part Number	Wire CSA	Wire Spec	Wire Material description	Wire Color Description	Wire Length	End2 Terminal Part Number	End2 Pin Name	End2 Connector
31	-	-	AC39B	2643680 R1	1.16	16.0	Std. Wall XLPE Primary Cable	GREY	3270.0	-	A	9900AC
31	-	-	AE39B	2643680 R1	1.16	16.0	Std. Wall XLPE Primary Cable	GREY	4330.0	-	A	9900AE
31	-	-	AJ39B	2643680 R1	1.16	16.0	Std. Wall XLPE Primary Cable	GREY	2610.0	-	A	9900AJ
31	-	-	AP39B	2643680 R1	1.16	16.0	Std. Wall XLPE Primary Cable	GREY	4580.0	-	A	9900AP
32	-	-	NG59B	2643673 R1	0.79	18.0	Std. Wall XLPE Primary Cable	GREY	2155.0	-	B	9736
33	-	-	NG59C	2643673 R1	0.79	18.0	Std. Wall XLPE Primary Cable	GREY	2155.0	-	C	9736
34	-	-	NG59D	2643673 R1	0.79	18.0	Std. Wall XLPE Primary Cable	GREY	2155.0	-	D	9736
35	-	-	NG59E	2643673 R1	0.79	18.0	Std. Wall XLPE Primary Cable	GREY	2155.0	-	E	9736

Name	Terminal Part Number	V-Min	Name	Wire Part Number	Wire CSA	Wire Spec	Wire Material description	Wire Color Description	Wire Length	End2 Terminal Part Number	End2 Pin Name	End2 Connector
36	-	-	NU59G	2643673 R1	0.79	18.0	Std. Wall XLPE Primary Cable	GREY	5380.0	-	B	9740
36	-	-	NZ59G	2643673 R1	0.79	18.0	Std. Wall XLPE Primary Cable	GREY	5730.0	-	B	9740C
36	-	-	2A59G	2643673 R1	0.79	18.0	Std. Wall XLPE Primary Cable	GREY	4085.0	-	B	9740E
36	-	-	BU59G	2643673 R1	0.79	18.0	Std. Wall XLPE Primary Cable	GREY	4885.0	-	B	9740H
36	-	-	BV59G	2643673 R1	0.79	18.0	Std. Wall XLPE Primary Cable	GREY	6530.0	-	B	9740G
36	-	-	RE59G	2643689 R1	1.91	14.0	Std. Wall XLPE Primary Cable	WHITE	4035.0	-	B	9740D
36	-	-	NS59T	2643673 R1	0.79	18.0	Std. Wall XLPE Primary Cable	GREY	6930.0	-	B	9740D
36	-	-	NT59T	2643673 R1	0.79	18.0	Std. Wall XLPE Primary Cable	GREY	5455.0	-	B	9740E

Name	Terminal Part Number	V-Min	Name	Wire Part Number	Wire CSA	Wire Spec	Wire Material description	Wire Color Description	Wire Length	End2 Terminal Part Number	End2 Pin Name	End2 Connector
37	-	-	NU59H	2643673 R1	0.79	18.0	Std. Wall XLPE Primary Cable	GREY	5380.0	-	C	9740
37	-	-	NZ59H	2643673 R1	0.79	18.0	Std. Wall XLPE Primary Cable	GREY	5730.0	-	C	9740C
37	-	-	2A59H	2643673 R1	0.79	18.0	Std. Wall XLPE Primary Cable	GREY	4085.0	-	C	9740E
37	-	-	BU59H	2643673 R1	0.79	18.0	Std. Wall XLPE Primary Cable	GREY	4885.0	-	C	9740H
37	-	-	RE59H	2643673 R1	0.79	18.0	Std. Wall XLPE Primary Cable	GREY	4035.0	-	C	9740D
37	-	-	BV59H	2643673 R1	0.79	18.0	Std. Wall XLPE Primary Cable	GREY	6530.0	-	C	9740G
37	-	-	NS59U	2643673 R1	0.79	18.0	Std. Wall XLPE Primary Cable	GREY	6930.0	-	C	9740D
37	-	-	NT59U	2643673 R1	0.79	18.0	Std. Wall XLPE Primary Cable	GREY	5455.0	-	C	9740E

Name	Terminal Part Number	V-Min	Name	Wire Part Number	Wire CSA	Wire Spec	Wire Material description	Wire Color Description	Wire Length	End2 Terminal Part Number	End2 Pin Name	End2 Connector
38	-	-	NU59J	2643673 R1	0.79	18.0	Std. Wall XLPE Primary Cable	GREY	5380.0	-	D	9740
38	-	-	2A59J	2643673 R1	0.79	18.0	Std. Wall XLPE Primary Cable	GREY	4085.0	-	D	9740E
38	-	-	NZ59J	2643673 R1	0.79	18.0	Std. Wall XLPE Primary Cable	GREY	5730.0	-	D	9740C
38	-	-	RE59J	2643673 R1	0.79	18.0	Std. Wall XLPE Primary Cable	GREY	4035.0	-	D	9740D
38	-	-	BV59J	2643673 R1	0.79	18.0	Std. Wall XLPE Primary Cable	GREY	6530.0	-	D	9740G
38	-	-	BU59J	2643673 R1	0.79	18.0	Std. Wall XLPE Primary Cable	GREY	4885.0	-	D	9740H
38	-	-	NT59V	2643673 R1	0.79	18.0	Std. Wall XLPE Primary Cable	GREY	5455.0	-	D	9740E
38	-	-	NS59V	2643673 R1	0.79	18.0	Std. Wall XLPE Primary Cable	GREY	6930.0	-	D	9740D

Name	Terminal Part Number	V-Min	Name	Wire Part Number	Wire CSA	Wire Spec	Wire Material description	Wire Color Description	Wire Length	End2 Terminal Part Number	End2 Pin Name	End2 Connect or
39	-	-	NZ59K	2643673 R1	0.79	18.0	Std. Wall XLPE Primary Cable	GREY	5730.0	-	E	9740C
39	-	-	2A59K	2643673 R1	0.79	18.0	Std. Wall XLPE Primary Cable	GREY	4085.0	-	E	9740E
39	-	-	NU59K	2643673 R1	0.79	18.0	Std. Wall XLPE Primary Cable	GREY	5380.0	-	E	9740
39	-	-	BV59K	2643673 R1	0.79	18.0	Std. Wall XLPE Primary Cable	GREY	6530.0	-	E	9740G
39	-	-	BU59K	2643673 R1	0.79	18.0	Std. Wall XLPE Primary Cable	GREY	4885.0	-	E	9740H
39	-	-	RE59K	2643673 R1	0.79	18.0	Std. Wall XLPE Primary Cable	GREY	4035.0	-	E	9740D
39	-	-	NS59W	2643673 R1	0.79	18.0	Std. Wall XLPE Primary Cable	GREY	5980.0	-	E	9740D
39	-	-	NT59W	2643673 R1	0.79	18.0	Std. Wall XLPE Primary Cable	GREY	5455.0	-	E	9740E

Name	Terminal Part Number	V-Min	Name	Wire Part Number	Wire CSA	Wire Spec	Wire Material description	Wire Color Description	Wire Length	End2 Terminal Part Number	End2 Pin Name	End2 Connector
42	-	-	ND56BC	2643684 R1	1.16	16.0	Std. Wall XLPE Primary Cable	YELLOW 2	2385.0	-	A	4460M
42	-	-	PV56BC	2643684 R1	1.16	16.0	Std. Wall XLPE Primary Cable	YELLOW 2	4405.0	-	A	4460AM
43	-	-	SW104CA	3510354 R1	1.16	16.0	Thin Wall XLPE Primary Cable	DARK BLUE	4480.0	-	B	9778
44	-	-	SW59CA	3510312 R1	1.16	16.0	Thin Wall XLPE Primary Cable	GREY	4480.0	-	A	9778
44	-	-	RH32	2643676 R1	0.79	18.0	Std. Wall XLPE Primary Cable	TAN	4380.0	-	6	9800
45	-	-	RL49A	2643673 R1	0.79	18.0	Std. Wall XLPE Primary Cable	GREY	4380.0	-	8	9800
46	-	-	NR59M	2643673 R1	0.79	18.0	Std. Wall XLPE Primary Cable	GREY	5980.0	-	B	9740B
46	-	-	2B59M	2643673 R1	0.79	18.0	Std. Wall XLPE Primary Cable	GREY	4085.0	-	B	9740F

Name	Terminal Part Number	V-Min	Name	Wire Part Number	Wire CSA	Wire Spec	Wire Material description	Wire Color Description	Wire Length	End2 Terminal Part Number	End2 Pin Name	End2 Connector
46	-	-	NW59M	2643673 R1	0.79	18.0	Std. Wall XLPE Primary Cable	GREY	5480.0	-	B	9740A
47	-	-	NR59N	2643673 R1	0.79	18.0	Std. Wall XLPE Primary Cable	GREY	5980.0	-	C	9740B
47	-	-	2B59N	2643673 R1	0.79	18.0	Std. Wall XLPE Primary Cable	GREY	4085.0	-	C	9740F
47	-	-	NW59N	2643673 R1	0.79	18.0	Std. Wall XLPE Primary Cable	GREY	5480.0	-	C	9740A
48	-	-	NR59P	2643673 R1	0.79	18.0	Std. Wall XLPE Primary Cable	GREY	5980.0	-	D	9740B
48	-	-	2B59P	2643673 R1	0.79	18.0	Std. Wall XLPE Primary Cable	GREY	4085.0	-	D	9740F
48	-	-	NW59P	2643673 R1	0.79	18.0	Std. Wall XLPE Primary Cable	GREY	5480.0	-	D	9740A
49	-	-	NR59Q	2643673 R1	0.79	18.0	Std. Wall XLPE Primary Cable	GREY	5980.0	-	E	9740B

Name	Terminal Part Number	V-Min	Name	Wire Part Number	Wire CSA	Wire Spec	Wire Material description	Wire Color Description	Wire Length	End2 Terminal Part Number	End2 Pin Name	End2 Connector
49	-	-	2B59Q	2643673 R1	0.79	18.0	Std. Wall XLPE Primary Cable	GREY	4085.0	-	E	9740F
49	-	-	NW59Q	2643673 R1	0.79	18.0	Std. Wall XLPE Primary Cable	GREY	5480.0	-	E	9740A
49	-	-	VT94SJ	2643673 R1	0.79	18.0	Std. Wall XLPE Primary Cable	GREY	1660.0	-	1	9512
50	-	-	MJ49	2643673 R1	0.79	18.0	Std. Wall XLPE Primary Cable	GREY	4380.0	-	7	9800
51	-	-	RA20	2643678 R1	1.16	16.0	Std. Wall XLPE Primary Cable	LIGHT GREEN	3860.0	-	6	4410D
52	-	-	WIRE724015	-	0.0	-	-	-	0.0	-	4	4410G
52	-	-	WIRE724016	-	0.0	-	-	-	0.0	-	4	4410L
52	-	-	WIRE720123	-	0.0	-	-	-	0.0	-	-	-
52	-	-	WIRE722724	-	0.0	-	-	-	0.0	-	4	4410H
52	-	-	WIRE722725	-	0.0	-	-	-	0.0	-	4	4410D
52	-	-	WIRE722726	-	0.0	-	-	-	0.0	-	4	4410F
53	-	-	WIRE724013	-	0.0	-	-	-	0.0	-	3	4410L

Name	Terminal Part Number	V-Min	Name	Wire Part Number	Wire CSA	Wire Spec	Wire Material description	Wire Color Description	Wire Length	End2 Terminal Part Number	End2 Pin Name	End2 Connector
53	-	-	WIRE724014	-	0.0	-	-	-	0.0	-	3	4410G
53	-	-	WIRE720118	-	0.0	-	-	-	0.0	-	-	-
53	-	-	WIRE722721	-	0.0	-	-	-	0.0	-	3	4410H
53	-	-	WIRE722722	-	0.0	-	-	-	0.0	-	3	4410D
53	-	-	WIRE722723	-	0.0	-	-	-	0.0	-	3	4410F
54	-	-	TG94SAB	2643673 R1	0.79	18.0	Std. Wall XLPE Primary Cable	GREY	4555.0	-	1	9514F
54	-	-	TA94SAB	2643673 R1	0.79	18.0	Std. Wall XLPE Primary Cable	GREY	2985.0	-	1	9514D
54	-	-	NS59S	2643673 R1	0.79	18.0	Std. Wall XLPE Primary Cable	GREY	5980.0	-	B	9740B
55	-	-	TG94SCB	2643673 R1	0.79	18.0	Std. Wall XLPE Primary Cable	GREY	4555.0	-	2	9514F
55	-	-	TA94SCB	2643673 R1	0.79	18.0	Std. Wall XLPE Primary Cable	GREY	2985.0	-	2	9514D
55	-	-	NS59T	2643673 R1	0.79	18.0	Std. Wall XLPE Primary Cable	GREY	6930.0	-	C	9740B

Name	Terminal Part Number	V-Min	Name	Wire Part Number	Wire CSA	Wire Spec	Wire Material description	Wire Color Description	Wire Length	End2 Terminal Part Number	End2 Pin Name	End2 Connector
55	-	-	PD61B	2643673 R1	0.79	18.0	Std. Wall XLPE Primary Cable	GREY	4405.0	-	C	9865M
56	-	-	NS59V	2643673 R1	0.79	18.0	Std. Wall XLPE Primary Cable	GREY	6930.0	-	D	9740B
56	-	-	PD106B	2643673 R1	0.79	18.0	Std. Wall XLPE Primary Cable	GREY	4405.0	-	B	9865M
57	-	-	NS59W	2643673 R1	0.79	18.0	Std. Wall XLPE Primary Cable	GREY	5980.0	-	E	9740B
57	-	-	PD110B	2643673 R1	0.79	18.0	Std. Wall XLPE Primary Cable	GREY	4405.0	-	A	9865M
63	-	-	ND57BB	2643678 R1	1.16	16.0	Std. Wall XLPE Primary Cable	LIGHT GREEN	2230.0	-	C	4450M
63	-	-	PV57BB	2643678 R1	1.16	16.0	Std. Wall XLPE Primary Cable	LIGHT GREEN	4430.0	-	C	4450AM
64	-	-	ND57BC	2643678 R1	1.16	16.0	Std. Wall XLPE Primary Cable	LIGHT GREEN	2385.0	-	B	4460M

Name	Terminal Part Number	V-Min	Name	Wire Part Number	Wire CSA	Wire Spec	Wire Material description	Wire Color Description	Wire Length	End2 Terminal Part Number	End2 Pin Name	End2 Connector
64	-	-	PV57BC	2643678 R1	1.16	16.0	Std. Wall XLPE Primary Cable	LIGHT GREEN	4405.0	-	B	4460AM
67	-	-	CA19	2643680 R1	1.16	16.0	Std. Wall XLPE Primary Cable	GREY	3535.0	-	A	9108A
67	-	-	CB19	2643680 R1	1.16	16.0	Std. Wall XLPE Primary Cable	GREY	2660.0	-	A	9108B
67	-	-	CD19	2643680 R1	1.16	16.0	Std. Wall XLPE Primary Cable	GREY	3670.0	-	A	9108D
67	-	-	CE19	2643680 R1	1.16	16.0	Std. Wall XLPE Primary Cable	GREY	4230.0	-	A	9108E
67	-	-	CF19	2643680 R1	1.16	16.0	Std. Wall XLPE Primary Cable	GREY	4825.0	-	A	9108F
67	-	-	CG19	2643680 R1	1.16	16.0	Std. Wall XLPE Primary Cable	GREY	3535.0	-	A	9108C
67	-	-	CN19	2643680 R1	1.16	16.0	Std. Wall XLPE Primary Cable	GREY	3445.0	-	A	9108H

Name	Terminal Part Number	V-Min	Name	Wire Part Number	Wire CSA	Wire Spec	Wire Material description	Wire Color Description	Wire Length	End2 Terminal Part Number	End2 Pin Name	End2 Connector
67	-	-	CJ19A	2643680 R1	1.16	16.0	Std. Wall XLPE Primary Cable	GREY	3710.0	-	A	4042A
67	-	-	CH19E	2643680 R1	1.16	16.0	Std. Wall XLPE Primary Cable	GREY	3385.0	-	A	4042E
67	-	-	CK19B	2643680 R1	1.16	16.0	Std. Wall XLPE Primary Cable	GREY	4205.0	-	A	4042B
67	-	-	CL19C	2643680 R1	1.16	16.0	Std. Wall XLPE Primary Cable	GREY	4905.0	-	A	4042C
67	-	-	CM19F	2643680 R1	1.16	16.0	Std. Wall XLPE Primary Cable	GREY	3835.0	-	A	4042F
67	-	-	CP19D	2643680 R1	1.16	16.0	Std. Wall XLPE Primary Cable	GREY	3535.0	-	A	4042D
67	-	-	CR19H	2643680 R1	1.16	16.0	Std. Wall XLPE Primary Cable	GREY	4035.0	-	A	4042G
67	-	-	CB19	2643680 R1	1.16	16.0	Std. Wall XLPE Primary Cable	GREY	2660.0	-	A	9108A

Name	Terminal Part Number	V-Min	Name	Wire Part Number	Wire CSA	Wire Spec	Wire Material description	Wire Color Description	Wire Length	End2 Terminal Part Number	End2 Pin Name	End2 Connect or
67	-	-	CA19	2643680 R1	1.16	16.0	Std. Wall XLPE Primary Cable	GREY	3535.0	-	A	9108B
67	-	-	CC19	2643680 R1	1.16	16.0	Std. Wall XLPE Primary Cable	GREY	3377.0	-	A	9109
67	-	-	CG19	2643680 R1	1.16	16.0	Std. Wall XLPE Primary Cable	GREY	3535.0	-	A	9108J
67	-	-	CR19	2643680 R1	1.16	16.0	Std. Wall XLPE Primary Cable	GREY	3610.0	-	A	9108K
67	-	-	CT19	2643680 R1	1.16	16.0	Std. Wall XLPE Primary Cable	GREY	3785.0	-	A	9108L
67	-	-	CV19	2643680 R1	1.16	16.0	Std. Wall XLPE Primary Cable	GREY	3955.0	-	A	9108M
67	-	-	CX19	2643680 R1	1.16	16.0	Std. Wall XLPE Primary Cable	GREY	4155.0	-	A	9108N
67	-	-	CZ19	2643680 R1	1.16	16.0	Std. Wall XLPE Primary Cable	GREY	4805.0	-	A	9108P

Name	Terminal Part Number	V-Min	Name	Wire Part Number	Wire CSA	Wire Spec	Wire Material description	Wire Color Description	Wire Length	End2 Terminal Part Number	End2 Pin Name	End2 Connect or
67	-	-	PU19	2643680 R1	1.16	16.0	Std. Wall XLPE Primary Cable	GREY	4205.0	-	A	9108G
67	-	-	PX19	2643680 R1	1.16	16.0	Std. Wall XLPE Primary Cable	GREY	2285.0	-	A	9108C
67	-	-	CH19	2643680 R1	1.16	16.0	Std. Wall XLPE Primary Cable	GREY	2935.0	-	A	4042A
67	-	-	CP19	2643680 R1	1.16	16.0	Std. Wall XLPE Primary Cable	GREY	3210.0	-	A	4042A
67	-	-	CS19	2643680 R1	1.16	16.0	Std. Wall XLPE Primary Cable	GREY	3435.0	-	A	4042A
67	-	-	CU19	2643680 R1	1.16	16.0	Std. Wall XLPE Primary Cable	GREY	3655.0	-	A	4042A
67	-	-	CW19	2643680 R1	1.16	16.0	Std. Wall XLPE Primary Cable	GREY	3955.0	-	A	4042A
67	-	-	CY19	2643680 R1	1.16	16.0	Std. Wall XLPE Primary Cable	GREY	4505.0	-	A	4042A

Name	Terminal Part Number	V-Min	Name	Wire Part Number	Wire CSA	Wire Spec	Wire Material description	Wire Color Description	Wire Length	End2 Terminal Part Number	End2 Pin Name	End2 Connector
67	-	-	XA19	2643680 R1	1.16	16.0	Std. Wall XLPE Primary Cable	GREY	2845.0	-	A	4042A
67	-	-	XY19	2643680 R1	1.16	16.0	Std. Wall XLPE Primary Cable	GREY	3355.0	-	A	4042A
69	-	-	VT94SK	2643673 R1	0.79	18.0	Std. Wall XLPE Primary Cable	GREY	1660.0	-	2	9512
71	-	-	ND68BB	2643688 R1	1.91	14.0	Std. Wall XLPE Primary Cable	BROWN	2230.0	-	A	4450M
71	-	-	PV68BB	2643688 R1	1.91	14.0	Std. Wall XLPE Primary Cable	BROWN	4430.0	-	A	4450AM
72	-	-	ND70BB	2643686 R1	1.91	14.0	Std. Wall XLPE Primary Cable	RED	2385.0	-	C	4460M
72	-	-	PV70BB	2643686 R1	1.91	14.0	Std. Wall XLPE Primary Cable	RED	4405.0	-	C	4460AM
73	-	-	ND71BB	2643806 R1	1.16	16.0	Std. Wall XLPE Primary Cable	LIGHT BLUE	2230.0	-	E	4450M

Name	Terminal Part Number	V-Min	Name	Wire Part Number	Wire CSA	Wire Spec	Wire Material description	Wire Color Description	Wire Length	End2 Terminal Part Number	End2 Pin Name	End2 Connect or
74	-	-	ND54BB	2643688 R1	1.91	14.0	Std. Wall XLPE Primary Cable	BROWN	2230.0	-	D	4450M
74	-	-	PV54BB	2643688 R1	1.91	14.0	Std. Wall XLPE Primary Cable	BROWN	4430.0	-	D	4450AM

Connector Name	1701F
Part Number	3595622C1
Short Description	CONNECTOR TO DASH HARNESS
Instances	A26 - Lift Axle Controls (Center Pedestal Controls f/ 2 Lift Axles):Diagram1 A26 - 26" Fuel Tank:Diagram1 A26 - 26" Fuel Tank:Diagram2 A26 - 26" Fuel Tank:Diagram3 A26 - 26" Fuel Tank:Diagram4 A26 - 26" Fuel Tank:Diagram5 A26 - 26" Fuel Tank - Secondary:Diagram1 A26 - 26" Fuel Tank - Secondary:Diagram2 A26 - 26" Fuel Tank - Secondary:Diagram3 A26 - 26" Fuel Tank - Secondary:Diagram4 A26 - 26" Fuel Tank - Secondary:Diagram5 A26 - 26" Fuel Tank - Secondary:Diagram6 A26 - 26" Fuel Tank - Secondary:Diagram7 A26 - ABS Private J1939:A26 - ABS Private J1939 A26 - Antilock Brake System (ABS) Bendix:Diagram1 A26 - Antilock Brake System (ABS) Bendix:Diagram2 A26 - Antilock Brake System (ABS) Bendix:Diagram3 A26 - Antilock Brake System (ABS)-Wabco 4 Channel Implementation:Diagram1 A26 - Auxiliary Air Solenoids Normally Closed:Diagram1 A26 - Auxillary Air Solenoids Normally Open:Combination1 A26 - Auxillary Air Solenoids Normally Open:Combination2 A26 - Auxillary Air Solenoids Normally Open:Combination3 A26 - Auxillary Air Solenoids Normally Open:Combination4 A26 - Auxillary Air Solenoids Normally Open:Combination5 A26 - Auxillary Air Solenoids Normally Open:Combination6 A26 - Axle Lift Controls:Diagram1 A26 - Axle Lift Controls:Diagram2 A26 - Axle Temperature Monitoring (Single Rear Aux Gauge):Diagram1 A26 - Axle Temperature Monitoring (Single Rear Virtual Gauge):Diagram1 A26 - Axle Temperature Monitoring (Tandem Rear Aux Gauge):Diagram1 A26 - Axle Temperature Monitoring (Tandem Rear Virtual Gauge):Diagram1 A26 - Back-Up Alarm (Automatic) W/ Tailboard:Diagram1 A26 - Back-Up Alarm (Automatic) W/O Tailboard:Diagram1 A26 - Back-Up Alarm (Manual) W/ Tailboard:Diagram1

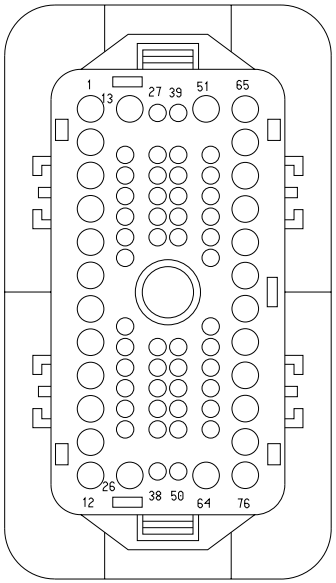

A26 - Back-Up Alarm (Manual) W/O Tailboard:Diagram1
A26 - Back-Up Alarm (Relay to 5 Pin 08TKC Tailboard to Alarm) (Automatic):Diagram1
A26 - Back-Up Alarm (Relay to 5 Pin 08TKC Tailboard. Alarm Plugs In) (Automatic):Diagram1
A26 - Backup Alarm (Switch to 5 Pin 08TKC Tailboard to Alarm) (Manual):Diagram1
A26 - Backup Alarm (Switch to 5 Pin 08TKC Tailboard. Alarm Plugs In) (Manual):Diagram1
A26 - Backup Light (Dual Daisy Reverse LT)Allison/ZF Trans 3K/4K:Diagram1
A26 - Backup Light (Dual Daisy Reverse LT)Allison/ZF Trans 3K/4K:Diagram2
A26 - Backup Light (Dual Reverse Light)Allison/ZF Trans 3K/4K:Diagram1
A26 - Backup Light (Dual Reverse Light)Allison/ZF Trans 3K/4K:Diagram2
A26 - Backup Light (Single Reverse Light) Allison 3K/4K:Diagram1
A26 - Backup Light (Single Reverse Light) Allison 3K/4K:Diagram2
A26 - Backup Light (Single Reverse Light) Allison 3K/4K Option2:Diagram1
A26 - Backup Light (Single Reverse Light) Allison 3K/4K Option2:Diagram2
A26 - Backup Light (Single Reverse Light) W/Less Power Module Allison 3K/4K:Diagram1-Combination1
A26 - Backup Light (Single Reverse Light) W/Less Power Module Allison 3K/4K:Diagram1-Combination2
A26 - Backup Light (Single Reverse Light)Allison 3K/4K:Diagram1
A26 - Backup Light (Single Reverse Light)Allison 3K/4K:Diagram2
A26 - Backup Lights (Dual Daisy Reverse Light) Eaton/Manual Trans:Diagram1
A26 - Backup Lights (Dual Reverse Light) Eaton/Manual Trans:Diagram1
A26 - Backup Lights (Reverse) W/Less Power Module Eaton/ Manual Trans:Diagram1
A26 - Backup Lights (Single Reverse Light) Eaton/Manual Trans:Diagram1
A26 - Backup Lights (Single Reverse Lights) Eaton/Manual Trans:Diagram1

A26 - Backup Lights (Single Reverse Lights) Eaton/Manual Trans Option2:Diagram1
A26 - Backup Lights (Single Reverse Lights) Eaton/Manual Transmission:Diagram1
A26 - Bendix Tractor or Towing Truck N/ Air SUSP J1939 Driven Lamp:Diagram3
A26 - Bendix Tractor or Towing Truck N/ Air SUSP J1939 Driven Lamp:Diagram4
A26 - Bendix Tractor or Towing Truck W/ Air SUSP J1939 Driven Lamp:Diagram3
A26 - Bendix Tractor or Towing Truck W/ Air SUSP J1939 Driven Lamp:Diagram4
A26 - Body Builder Lighting - Combined Turn and Stop Lamps (Automatic):Diagram1-Option 2 (Back-of-Cab, W/08HAB)
A26 - Body Builder Lighting - Combined Turn and Stop Lamps (Automatic):Diagram1-Option 3 (End-of-Frame, W/08HAE)
A26 - Body Builder Lighting - Combined Turn and Stop Lamps (Manual):Diagram1-Option 2 (Back-of-Cab, W/08HAB)
A26 - Body Builder Lighting - Combined Turn and Stop Lamps (Manual):Diagram1-Option 3 (End-of-Frame, W/08HAE)
A26 - Body Builder Lighting - Separate Turn and Stop Lamps (Blunt Cut) - Option 1:Diagram1-Option1 (R/D 9724)
A26 - Body Builder Lighting - Separate Turn and Stop Lamps (Blunt Cut) - Option 2:Diagram1-Option1 (R/D 9724A)
A26 - CAN Layout:ABS Proprietary J1939
A26 - Directional Signal (Turn) W/ Daisy Chain Box Lamps:Diagram1
A26 - Directional Signal (Turn) W/ Daisy Chain Box Lamps, W/ Plow Lights:Diagram1-Option 1 (Snow Plow #1)
A26 - Directional Signal (Turn) W/ Daisy Chain Box Lamps, W/ Plow Lights:Diagram1-Option 2 (Snow Plow #2)
A26 - Directional Signal (Turn) W/ LED BOX LAMPS:Diagram1
A26 - Directional Signal (Turn) W/ LED BOX LAMPS, W/Plow Lights:Diagram1-Option 1 (Snow Plow #1)
A26 - Directional Signal (Turn) W/ LED BOX LAMPS, W/Plow Lights:Diagram1-Option 2 (Snow Plow #2)
A26 - Directional Signal (Turn) W/ Less Power Module Tail Board, W/Hazard SW:Diagram1
A26 - Directional Signal (Turn) W/ Less Power Module Tail Board, W/Hazard SW, W/Plow Lights:Diagram1-Option 1 (Snow Plow #1)
A26 - Directional Signal (Turn) W/ Less Power Module Tail Board, W/Hazard SW, W/Plow Lights:Diagram1-Option 2 (Snow Plow #2)

A26 - Directional Signal (Turn) W/ Single Tail Board W/Hazard SW:Diagram1
A26 - Directional Signal (Turn) W/ Single Tail Board, W/Hazard SW, W/Plow Lights:Diagram1-Option 1 (Snow Plow #1)
A26 - Directional Signal (Turn) W/ Single Tail Board, W/Hazard SW, W/Plow Lights:Diagram1-Option 2 (Snow Plow #2)
A26 - DLB - Remote Power Module (3 RPM n/Switch Pack):Diagram1
A26 - DLB - Remote Power Module (3 RPM n/Switch Pack)Option2:Diagram1
A26 - DLB - Remote Power Module (3 RPM n/Switch Pack)Option2:Diagram2
A26 - DLB - Remote Power Modules (1 RPM n/ Switch Packs):Diagram1
A26 - DLB - Remote Power Modules (1 RPM n/ Switch Packs):Diagram2
A26 - DLB - Remote Power Modules (1 RPM n/ Switch Packs):Diagram3
A26 - DLB - Remote Power Modules (1 RPM w/ Switch Packs):Diagram1
A26 - DLB - Remote Power Modules (1 RPM w/ Switch Packs):Diagram2
A26 - DLB - Remote Power Modules (1 RPM w/ Switch Packs):Diagram3
A26 - DLB - Remote Power Modules (2 RPM n/ Switch Pack):Diagram1
A26 - DLB - Remote Power Modules (2 RPM n/ Switch Pack):Diagram2
A26 - DLB - Remote Power Modules (2 RPM n/ Switch Pack):Diagram3
A26 - DLB - Remote Power Modules (2 RPM n/ Switch Pack)Option2:Diagram1
A26 - DLB - Remote Power Modules (2 RPM w/ Switch Packs):Diagram1
A26 - DLB - Remote Power Modules (2 RPM w/ Switch Packs)Option2:Diagram1
A26 - DLB - Remote Power Modules (2 RPM w/ Switch Packs)Option2:Diagram2
A26 - DLB - Remote Power Modules (2 RPM w/ Switch Packs)Option2:Diagram3
A26 - DLB - Remote Power Modules (3 RPM w/ Swtich Packs):Diagram1
A26 - DLB - Remote Power Modules (3 RPM w/ Swtich Packs)Option2:Diagram1

A26 - DLB - Remote Power Modules (3 RPM w/ Swtich Packs)Option2:Diagram2
A26 - Drain Valve Heater:Diagram1
A26 - Drain Valve Heater:Diagram2
A26 - Drain Valve Heater:Diagram3
A26 - Drain Valve Heater:Diagram4
A26 - Drain Valve Heater:Diagram5
A26 - Drain Valve Heater:Diagram6
A26 - Drain Valve Heater:Diagram7
A26 - Drain Valve Heater:Diagram8
A26 - Drain Valve Heater:Diagram9
A26 - Drain Valve Heater:Diagram10
A26 - Driver Controlled Locking Differential FR and RR Axle (Dana w/ one switch):Diagram1
A26 - Driver Controlled Locking Differential FR and RR Axle (Meritor w/ one sw):Diagram1
A26 - Driver Controlled Locking Differential FR and RR Axles (Dana w/ two sw):Diagram1
A26 - Driver Controlled Locking Differential FR and RR Axles (Meritor w/ two sw):Diagram1
A26 - Driver Controlled Locking Differential RR Axle (Dana w/ one sw):Diagram1
A26 - Driver Controlled Locking Differential RR Axle (Meritor w/ one sw):Diagram1
A26 - Fuel Heater (Vehicle Powered)(Davco):Diagram1
A26 - Fuel Heater (Vehicle Powered)(Davco):Diagram2
A26 - Fuel Heater (Vehicle Powered)(Davco):Diagram3
A26 - Fuel Heater (Vehicle Powered)(Davco):Diagram4
A26 - Fuel Heater (Vehicle Powered)(Davco):Diagram5
A26 - Fuel Heater (Vehicle Powered)(Davco):Diagram6
A26 - Fuel Heater (Vehicle Powered)(Davco):Diagram7
A26 - Fuel Heater (Vehicle Powered)(Davco):Diagram8
A26 - Fuel Heater (Vehicle Powered)(Davco):Diagram9
A26 - Hill Start Aid (Bendix):Diagram1
A26 - Hill Start Aid (Bendix):Diagram2
A26 - License Plate Light (LED BOX LAMP Daisy Chain Tail Light):Diagram1
A26 - License Plate Light (LED BOX LAMP Tail Light):Diagram1
A26 - License Plate Light (Tail Light Single Assembly):Diagram1
A26 - License Plate Light (Tail Light Single Assembly)Option2:Diagram1
A26 - License Plate Light (Tail Light Single Assembly)Option3:Diagram1

A26 - License Plate Light (Tail Light Single Assy.) W/Less Power Module (W/08TKC, 08THM):Diagram1
A26 - Lift Axle Controls (Center Pedestal Controls f/ 1 lift axle):Diagram1
A26 - Lift Axle Controls (Center Pedestal Controls f/ 1 lift axle):Diagram2
A26 - Lift Axle Controls (Center Pedestal Controls f/ 3 lift axles):Diagram1
A26 - Power Lift Gate:Diagram1
A26 - Rear Light (LED BOX LAMP Tail Light) W/08TPS, 08TPR:Diagram1
A26 - Rear Light (Tail Light) W/08THK:Diagram1
A26 - Rear Light (Tail Light) W/08TKB:Diagram1
A26 - Rear Light (Tail Light) W/08TKJ:Diagram1
A26 - Rear Light (Tail Light) W/Less Power Module (W/08TKC, 08THM):Diagram1
A26 - Rear Light (Tail Light) W_Daisy Chain pair of Box Lamps W/08TRS:Diagram1
A26 - Rear Lights Stop - Daisy Chain:Diagram1
A26 - Rear Lights Stop - Dual Assembly:Diagram1
A26 - Rear Lights Stop - Single Assemby:Diagram1
A26 - Rear Lights Stop - Single Assemby Jumper Harness W/08TKC, 08THM:Diagram1
A26 - Rear Lights Stop - Single Assemby W/08TKJ:Diagram1
A26 - Remote Start/Stop:Diagram1
A26 - Rightside Air Dryer:Diagram1
A26 - Rightside Air Dryer:Diagram2
A26 - Rightside Air Dryer:Diagram3
A26 - Rightside Air Dryer:Diagram4
A26 - Rightside Air Dryer:Diagram5
A26 - Rightside Air Dryer:Diagram6
A26 - Rightside Air Dryer:Diagram7
A26 - Rightside Air Dryer:Diagram8
A26 - Rightside Air Dryer:Diagram9
A26 - Rightside Air Dryer:Diagram10
A26 - Rightside Air Dryer:Diagram11
A26 - Separate Rear Lights (Stop) W/08TVH:Diagram1
A26 - Stability Control (Bendix Straight Truck J1939 Driven Lamp):Diagram3
A26 - Stability Control (Bendix Straight Truck J1939 Driven Lamp):Diagram4
A26 - TEM Electric Trailer Brake Controller Activated Stop LT:Diagram1

A26 - TEM Electric Trailer Brake Controller Activated Stop LT (Option2):Diagram1
A26 - Traction Control (Bendix):Diagram1
A26 - Traction Control (Bendix):Diagram2
A26 - WORK LIGHT 1 BULB:Diagram1
A26 - WORK LIGHT 1 BULB:Diagram2
A26 - WORK LIGHT W Backup 1 Bulb:Diagram1
A26 - WORK LIGHT W Backup 1 Bulb:Diagram2
A26 - WORK LIGHT W BackUP 1 BULB:Diagram1
A26 - WORK LIGHT W BackUP 1 BULB:Diagram2
A26 - WORK LIGHT W RKE 1 BULB:Diagram1
A26 - WORK LIGHT W RKE 1 BULB:Diagram2
A26 - Work Light W/ Backup 1 Bulb W/Automatic W/ RKE:Diagram1-Combination1
A26 - Work Light W/ Backup 1 Bulb W/Automatic W/ RKE:Diagram1-Combination2
A26 - Work Light W/ Backup 1 Bulb W/Manual W/ RKE:Diagram1-Combination1
A26 - Work Light W/ Backup 1 Bulb W/Manual W/ RKE:Diagram1-Combination2
A26 - Work Lights LED W/ Sw Pack - Day Cab:Diagram1
A26 - Work Lights LED W/ Sw Pack - Day Cab:Diagram2
A26/B6.7/L9 - Axle Lift Controls:Diagram1
A26/B6.7/L9 - Axle Lift Controls:Diagram2
A26/B6.7/L9 - Axle Lift Controls:Diagram3
A26/B6.7/L9 - Axle Lift Controls:Diagram4
A26/B6.7/L9 - Body Builder Aux Power (In Cab, BOC, or EOF):Diagram1-Option 2 (Back-of-Cab, W/08HAB)
A26/B6.7/L9 - Body Builder Aux Power (In Cab, BOC, or EOF):Diagram1-Option 3 (End-of-Frame, W/08HAE)
A26/B6.7/L9 - Rear Suspension Pressure Monitoring (Auxiliary Gauge):Diagram1
A26/B6.7/L9 - Rear Suspension Pressure Monitoring (Auxiliary Gauge):Diagram2
A26/B6.7/L9 - Rear Suspension Pressure Monitoring (Virtual Gauge):Diagram1
A26/B6.7/L9 - Rear Suspension Pressure Monitoring (Virtual Gauge):Diagram2
B6.7 - DLB - Remote Power Modules (1 RPM n/ Switch Packs):Diagram1
B6.7 - DLB - Remote Power Modules (1 RPM n/ Switch Packs):Diagram2
B6.7 - DLB - Remote Power Modules (1 RPM n/ Switch Packs):Diagram3

B6.7 - ABS Private J1939:B6.7 - ABS Private J1939
B6.7 - Axle Loading (Weight) Rear:Diagram1
B6.7 - Axle Loading (Weight) Rear:Diagram2
B6.7 - Body Builder Lighting - Combined Turn and Stop Lamps (Automatic):Diagram2
B6.7 - Body Builder Lighting - Combined Turn and Stop Lamps (Automatic):Diagram3
B6.7 - Body Builder Lighting - Combined Turn and Stop Lamps (Manual):Diagram2
B6.7 - Body Builder Lighting - Combined Turn and Stop Lamps (Manual):Diagram3
B6.7 - Body Builder Lighting - Separate Turn and Stop Lamps (Blunt Cut) Option 1:Diagram1
B6.7 - Body Builder Lighting - Separate Turn and Stop Lamps (Blunt Cut) Option 2:Diagram1
B6.7 - CAN Layout:ABS Proprietary J1939
B6.7 - CAN Layout:Powertrain Standard J1939 (500Kbps)
B6.7 - Directional Signal (Turn) W/ Less Power Module Tail Board W/Hazard SW W/PLOW LIGHTS:Diagram1
B6.7 - Directional Signal (Turn) W/ Less Power Module Tail Board W/Hazard SW W/PLOW LIGHTS:Diagram2
B6.7 - Directional Signal (Turn) W/ Less Power Module Tail Board W/Hazard SW W/PLOW LIGHTS:Diagram3
B6.7 - Directional Signal (Turn) W/ Less Power Module Tail Board W/Hazard SW W/PLOW LIGHTS:Diagram4
B6.7 - Directional Signal (Turn) W/ DAISY CHAIN BOX LAMPS:Diagram1
B6.7 - Directional Signal (Turn) W/ DAISY CHAIN BOX LAMPS:Diagram2
B6.7 - Directional Signal (Turn) W/ Daisy Chain Box Lamps W/ Plow Lights:Diagram1
B6.7 - Directional Signal (Turn) W/ Daisy Chain Box Lamps W/ Plow Lights:Diagram2
B6.7 - Directional Signal (Turn) W/ Daisy Chain Box Lamps W/ Plow Lights:Diagram3
B6.7 - Directional Signal (Turn) W/ Daisy Chain Box Lamps W/ Plow Lights:Diagram4
B6.7 - Directional Signal (Turn) W/ LED BOX LAMPS:Diagram1
B6.7 - Directional Signal (Turn) W/ LED BOX LAMPS:Diagram2
B6.7 - Directional Signal (Turn) W/ LED BOX LAMPS W/Plow Lights:Diagram1
B6.7 - Directional Signal (Turn) W/ LED BOX LAMPS W/Plow Lights:Diagram2

B6.7 - Directional Signal (Turn) W/ LED BOX LAMPS W/Plow Lights:Diagram3
B6.7 - Directional Signal (Turn) W/ LED BOX LAMPS W/Plow Lights:Diagram4
B6.7 - Directional Signal (Turn) W/ Less Power Module Tail Board W/Hazard SW:Diagram1
B6.7 - Directional Signal (Turn) W/ Less Power Module Tail Board W/Hazard SW:Diagram2
B6.7 - Directional Signal (Turn) W/ Single Tail Board W/Hazard SW:Diagram1
B6.7 - Directional Signal (Turn) W/ Single Tail Board W/Hazard SW:Diagram2
B6.7 - Directional Signal (Turn) W/ Single Tail Board W/Plow Lights:Diagram1
B6.7 - Directional Signal (Turn) W/ Single Tail Board W/Plow Lights:Diagram2
B6.7 - Directional Signal (Turn) W/ Single Tail Board W/Plow Lights:Diagram3
B6.7 - Directional Signal (Turn) W/ Single Tail Board W/Plow Lights:Diagram4
B6.7 - DLB - Remote Power Modules (1 RPM w/ Switch Packs):Diagram1
B6.7 - DLB - Remote Power Modules (1 RPM w/ Switch Packs):Diagram2
B6.7 - DLB - Remote Power Modules (1 RPM w/ Switch Packs):Diagram3
B6.7 - DLB - Remote Power Modules (2 RPM n/ Switch Pack):Diagram1
B6.7 - DLB - Remote Power Modules (2 RPM n/ Switch Pack):Diagram2
B6.7 - DLB - Remote Power Modules (2 RPM n/ Switch Pack):Diagram3
B6.7 - DLB - Remote Power Modules (2 RPM n/ Switch Pack):Diagram4
B6.7 - DLB - Remote Power Modules (2 RPM w/ Switch Packs):Diagram1
B6.7 - DLB - Remote Power Modules (2 RPM w/ Switch Packs):Diagram2
B6.7 - DLB - Remote Power Modules (2 RPM w/ Switch Packs):Diagram3
B6.7 - DLB - Remote Power Modules (2 RPM w/ Switch Packs):Diagram4
B6.7 - Drain Valve Heater:Diagram1
B6.7 - Drain Valve Heater:Diagram2

B6.7 - Drain Valve Heater:Diagram3
B6.7 - Drain Valve Heater:Diagram4
B6.7 - Drain Valve Heater:Diagram5
B6.7 - Drain Valve Heater:Diagram6
B6.7 - Drain Valve Heater:Diagram7
B6.7 - Power Lift Gate:Diagram1
B6.7 - Traction Control (Bendix):Diagram1
B6.7 - Traction Control (Bendix):Diagram2
B6.7 - Windshield Washer Pump:Diagram1
B6.7 - Windshield Washer Pump & Low Fluid Sensor:Diagram1
B6.7 - WORK LIGHT 1 BULB:Diagram1
B6.7 - WORK LIGHT W BackUP 1 BULB:Diagram1
B6.7 - WORK LIGHT W RKE 1 BULB:Diagram1
B6.7 - Work Lights LED W/ Sw Pack - Day Cab:Diagram1
L9 - 26 inch Fuel Tank:Diagram1
L9 - 26 inch Fuel Tank:Diagram2
L9 - 26 inch Fuel Tank:Diagram3
L9 - 26 inch Fuel Tank:Diagram4
L9 - 26 inch Fuel Tank:Diagram5
L9 - 26 inch Fuel Tank:Diagram6
L9 - 26 inch Fuel Tank - Secondary:Diagram1
L9 - 26 inch Fuel Tank - Secondary:Diagram2
L9 - 26 inch Fuel Tank - Secondary:Diagram3
L9 - 26 inch Fuel Tank - Secondary:Diagram4
L9 - 26 inch Fuel Tank - Secondary:Diagram5
L9 - 26 inch Fuel Tank - Secondary:Diagram6
L9 - 26 inch Fuel Tank - Secondary:Diagram7
L9 - ABS Private J1939:L9 - ABS Private J1939
L9 - Antilock Brake System (ABS) BENDIX 4 Channel Implemenation:Diagram1
L9 - Antilock Brake System (ABS) Bendix 6 Channel Implementation:Diagram1
L9 - Antilock Brake System (ABS) Bendix 6 Channel Implementation:Diagram2
L9 - Antilock Brake System (ABS) Bendix 6 Channel Implementation:Diagram3
L9 - Antilock Brake System (ABS) Bendix 6 Channel Implementation:Diagram4
L9 - Antilock Brake System (ABS) Bendix 6 Channel Implementation:Diagram5
L9 - Antilock Brake System (ABS) Bendix 6 Channel Implementation:Diagram6
L9 - Antilock Brake System (ABS) Bendix 6 Channel Implementation:Diagram7

L9 - Antilock Brake System (ABS) Bendix 6 Channel Implementation:Diagram8
L9 - Antilock Brake System (ABS) Bendix 6 Channel Implementation:Diagram9
L9 - Antilock Brake System (ABS) Wabco 4 Channel Implementation:Diagram1
L9 - Axle Lift Controls Option 2:Diagram1
L9 - Axle Lift Controls Option 2:Diagram2
L9 - Axle Temperature Monitoring (Tandem Rear Aux Gauge) Option 1:Diagram1
L9 - Axle Temperature Monitoring (Tandem Rear Aux Gauge) Option 2:Diagram1
L9 - Axle Temperature Monitoring (Tandem Rear Virtual Gauge) Option 1:Diagram1
L9 - Axle Temperature Monitoring (Tandem Rear Virtual Gauge) Option 2:Diagram1
L9 - Backup Light (Dual Daisy Reverse Light)Allison/ZF Trans 3K/4K:Diagram1
L9 - Backup Light (Dual Daisy Reverse Light)Allison/ZF Trans 3K/4K:Diagram2
L9 - Backup Light (Single Reverse Light) Allison 3K/4K Option 1:Diagram1
L9 - Backup Light (Single Reverse Light) Allison 3K/4K Option 1:Diagram2
L9 - Backup Light (Single Reverse Light) Allison 3K/4K Option 2:Diagram1
L9 - Backup Light (Single Reverse Light) Allison 3K/4K Option 2:Diagram2
L9 - Backup Light (Single Reverse Light) Allison 3K/4K Option 3:Diagram1
L9 - Backup Light (Single Reverse Light) Allison 3K/4K Option 3:Diagram2
L9 - Backup Light (Single Reverse Light)Allison:Diagram1
L9 - Backup Light (Single Reverse Light)Allison:Diagram2
L9 - Backup Lights (Dual Daisy Reverse Light) Eaton/Manual Trans:Diagram1
L9 - Backup Lights (Dual Daisy Reverse Light) Eaton/Manual Trans:Diagram2
L9 - Backup Lights (Dual Reverse Light) Eaton/Manual Trans:Diagram1
L9 - Backup Lights (Dual Reverse Light) Eaton/Manual Trans:Diagram2
L9 - Backup Lights (Single Reverse Light) Eaton/Manual Trans Option 1:Diagram1

L9 - Backup Lights (Single Reverse Light) Eaton/Manual Trans Option 1:Diagram2
L9 - Backup Lights (Single Reverse Light) Eaton/Manual Trans Option 2:Diagram1
L9 - Backup Lights (Single Reverse Light) Eaton/Manual Trans Option 2:Diagram2
L9 - Backup Lights (Single Reverse Light) Eaton/Manual Trans Option 3:Diagram1
L9 - Backup Lights (Single Reverse Light) Eaton/Manual Trans Option 3:Diagram2
L9 - Backup Lights (Single Reverse Light) Eaton/Manual Trans Option 4:Diagram1
L9 - Backup Lights (Single Reverse Light) Eaton/Manual Trans Option 4:Diagram2
L9 - Body Builder Lighting - Combined Turn and Stop Lamps (Manual):Diagram2
L9 - Body Builder Lighting - Combined Turn and Stop Lamps (Manual):Diagram3
L9 - Body Builder Lighting - Combined Turn and Stop Lamps (Manual):Diagram5
L9 - Body Builder Lighting - Combined Turn and Stop Lamps (Manual):Diagram6
L9 - CAN Layout:ABS Proprietary J1939
L9 - Directional Signal (Turn) W/ Less Power Module Tail Board W/Hazard SW W/PLOW LIGHTS:Diagram1
L9 - Directional Signal (Turn) W/ Less Power Module Tail Board W/Hazard SW W/PLOW LIGHTS:Diagram2
L9 - Directional Signal (Turn) W/ Less Power Module Tail Board W/Hazard SW W/PLOW LIGHTS:Diagram3
L9 - Directional Signal (Turn) W/ Less Power Module Tail Board W/Hazard SW W/PLOW LIGHTS:Diagram4
L9 - Directional Signal (Turn) W/ DAISY CHAIN BOX LAMPS:Diagram1
L9 - Directional Signal (Turn) W/ DAISY CHAIN BOX LAMPS:Diagram2
L9 - Directional Signal (Turn) W/ Daisy Chain Box Lamps W/ Plow Lights:Diagram1
L9 - Directional Signal (Turn) W/ Daisy Chain Box Lamps W/ Plow Lights:Diagram2
L9 - Directional Signal (Turn) W/ Daisy Chain Box Lamps W/ Plow Lights:Diagram3
L9 - Directional Signal (Turn) W/ Daisy Chain Box Lamps W/ Plow Lights:Diagram4
L9 - Directional Signal (Turn) W/ LED BOX LAMPS:Diagram1

L9 - Directional Signal (Turn) W/ LED BOX LAMPS:Diagram2
L9 - Directional Signal (Turn) W/ LED BOX LAMPS W/Plow Lights:Diagram1
L9 - Directional Signal (Turn) W/ LED BOX LAMPS W/Plow Lights:Diagram2
L9 - Directional Signal (Turn) W/ LED BOX LAMPS W/Plow Lights:Diagram3
L9 - Directional Signal (Turn) W/ LED BOX LAMPS W/Plow Lights:Diagram4
L9 - Directional Signal (Turn) W/ Less Power Module Tail Board W/Hazard SW:Diagram1
L9 - Directional Signal (Turn) W/ Less Power Module Tail Board W/Hazard SW:Diagram2
L9 - Directional Signal (Turn) W/ Single Tail Board W/Hazard SW:Diagram1
L9 - Directional Signal (Turn) W/ Single Tail Board W/Hazard SW:Diagram2
L9 - Directional Signal (Turn) W/ Single Tail Board W/Plow Lights:Diagram1
L9 - Directional Signal (Turn) W/ Single Tail Board W/Plow Lights:Diagram2
L9 - Directional Signal (Turn) W/ Single Tail Board W/Plow Lights:Diagram3
L9 - Directional Signal (Turn) W/ Single Tail Board W/Plow Lights:Diagram4
L9 - DLB - Remote Power Modules (1 RPM n/ Switch Packs):Diagram1
L9 - DLB - Remote Power Modules (1 RPM n/ Switch Packs):Diagram1-Combination3
L9 - DLB - Remote Power Modules (1 RPM n/ Switch Packs):Diagram2
L9 - DLB - Remote Power Modules (1 RPM w/ Switch Packs):Diagram1
L9 - DLB - Remote Power Modules (1 RPM w/ Switch Packs):Diagram2
L9 - DLB - Remote Power Modules (1 RPM w/ Switch Packs):Diagram3
L9 - DLB - Remote Power Modules (2 RPM n/ Switch Pack):Diagram1
L9 - DLB - Remote Power Modules (2 RPM n/ Switch Pack):Diagram2
L9 - DLB - Remote Power Modules (2 RPM n/ Switch Pack):Diagram3

L9 - DLB - Remote Power Modules (2 RPM n/ Switch Pack):Diagram4
L9 - DLB - Remote Power Modules (2 RPM w/ Switch Packs):Diagram1
L9 - DLB - Remote Power Modules (2 RPM w/ Switch Packs):Diagram2
L9 - DLB - Remote Power Modules (2 RPM w/ Switch Packs):Diagram3
L9 - DLB - Remote Power Modules (2 RPM w/ Switch Packs):Diagram4
L9 - Drain Valve Heater:Diagram1
L9 - Drain Valve Heater:Diagram2
L9 - Drain Valve Heater:Diagram3
L9 - Drain Valve Heater:Diagram4
L9 - Drain Valve Heater:Diagram5
L9 - Drain Valve Heater:Diagram7
L9 - Drain Valve Heater:Diagram8
L9 - Drain Valve Heater:Diagram9
L9 - Drain Valve Heater:Diagram10
L9 - Hill Start Aid (Bendix):Diagram1
L9 - Hill Start Aid (Bendix):Diagram2
L9 - Lift Axle Controls (Center Pedestal Controls f/ 1 lift axle):Diagram1
L9 - Lift Axle Controls (Center Pedestal Controls f/ 1 lift axle):Diagram2
L9 - Lift Axle Controls (Center Pedestal Controls f/ 2 Lift Axles):Diagram1
L9 - Lift Axle Controls (Center Pedestal Controls f/ 3 lift axles):Diagram1
L9 - Power Lift Gate:Diagram1
L9 - Rear Light (LED BOX LAMP Tail Light):Diagram1
L9 - Rear Light (Tail Light):Diagram1
L9 - Rear Light (Tail Light) W Daisy Chain pair of Box Lamps:Diagram1
L9 - Rear Lights Stop - Dual Assembly:Diagram1
L9 - Rear Lights Stop - Single Assemby:Diagram1
L9 - RIGHTSIDE AIR DRYER:Diagram1
L9 - RIGHTSIDE AIR DRYER:Diagram2
L9 - RIGHTSIDE AIR DRYER:Diagram3
L9 - RIGHTSIDE AIR DRYER:Diagram4
L9 - RIGHTSIDE AIR DRYER:Diagram5
L9 - RIGHTSIDE AIR DRYER:Diagram6
L9 - RIGHTSIDE AIR DRYER:Diagram7
L9 - RIGHTSIDE AIR DRYER:Diagram8

L9 - RIGHTSIDE AIR DRYER:Diagram9
L9 - RIGHTSIDE AIR DRYER:Diagram10
L9 - RIGHTSIDE AIR DRYER:Diagram11
L9 - Traction Control (Bendix):Diagram1
L9 - Windshield Washer Pump & Low Fluid Sensor:Diagram1
L9 - Windshield Washer Pump & Low Fluid Sensor:Diagram2
L9 - WORK LIGHT 1 BULB:Diagram1
L9 - WORK LIGHT 1 BULB:Diagram2
L9 - WORK LIGHT W BackUP 1 BULB Option 1:Diagram1
L9 - WORK LIGHT W BackUP 1 BULB Option 1:Diagram2
L9 - WORK LIGHT W BackUP 1 BULB Option 1:Diagram3
L9 - WORK LIGHT W BackUP 1 BULB Option 1:Diagram4
L9 - WORK LIGHT W BackUP 1 BULB Option 2:Diagram1
L9 - WORK LIGHT W BackUP 1 BULB Option 2:Diagram2
L9 - WORK LIGHT W RKE 1 BULB:Diagram1
L9 - WORK LIGHT W RKE 1 BULB:Diagram2
L9 - Work Lights LED W/ Sw Pack - Day Cab:Diagram1
L9 - Work Lights LED W/ Sw Pack - Day Cab:Diagram2

Mates 1701

Name	Terminal Part Number	V-Min	Name	Wire Part Number	Wire CSA	Wire Spec	Wire Material description	Wire Color Description	Wire Length	End2 Terminal Part Number	End2 Pin Name	End2 Connect or
1	-	-	RK71A	2643690 R1	1.91	14.0	Std. Wall XLPE Primary Cable	ORANGE	4380.0	-	1	9800
2	-	-	RK56	2643690 R1	1.91	14.0	Std. Wall XLPE Primary Cable	ORANGE	4380.0	-	2	9800
3	-	-	RK57	2643690 R1	1.91	14.0	Std. Wall XLPE Primary Cable	ORANGE	4380.0	-	3	9800
4	-	-	RK68	2643688 R1	1.91	14.0	Std. Wall XLPE Primary Cable	BROWN	4380.0	-	4	9800

Name	Terminal Part Number	V-Min	Name	Wire Part Number	Wire CSA	Wire Spec	Wire Material description	Wire Color Description	Wire Length	End2 Terminal Part Number	End2 Pin Name	End2 Connector
5	-	-	NC56T	2643802 R1	4.81	10.0	Std. Wall XLPE Primary Cable	YELLOW 2	4430.0	-	B	9716
6	-	-	NC57T	2643776 R1	4.81	10.0	Std. Wall XLPE Primary Cable	LIGHT GREEN	4430.0	-	C	9716
7	-	-	NC54T	2643779 R1	4.81	10.0	Std. Wall XLPE Primary Cable	BROWN	4430.0	-	A	9716
8	-	-	NC68T	2643779 R1	4.81	10.0	Std. Wall XLPE Primary Cable	BROWN	4455.0	-	B	9715
9	-	-	NC70T	2643698 R1	4.81	10.0	Std. Wall XLPE Primary Cable	RED	4455.0	-	A	9715
9	-	-	MZ70T	2643698 R1	4.81	10.0	Std. Wall XLPE Primary Cable	RED	0.0	-	1	-
10	-	-	NC94T	2643784 R1	4.81	10.0	Std. Wall XLPE Primary Cable	GREY	4455.0	-	C	9715
12	-	-	ND56BB	2643684 R1	1.16	16.0	Std. Wall XLPE Primary Cable	YELLOW 2	2230.0	-	B	N04_4450M

Name	Terminal Part Number	V-Min	Name	Wire Part Number	Wire CSA	Wire Spec	Wire Material description	Wire Color Description	Wire Length	End2 Terminal Part Number	End2 Pin Name	End2 Connector
12	-	-	PV56BB	2643684 R1	1.16	16.0	Std. Wall XLPE Primary Cable	YELLOW 2	4430.0	-	B	4450AM
12	-	-	ND56BB	2643684 R1	1.16	16.0	Std. Wall XLPE Primary Cable	YELLOW 2	2230.0	-	B	4450M
13	-	-	RX9	2643680 R1	1.16	16.0	Std. Wall XLPE Primary Cable	GREY	1780.0	-	-	-
13	-	-	SL9	2643680 R1	1.16	16.0	Std. Wall XLPE Primary Cable	GREY	2180.0	-	-	-
14	-	-	PR94BM	3510312 R1	1.16	16.0	Thin Wall XLPE Primary Cable	GREY	4380.0	-	24	9800
14	-	-	ZU94WL	3510312 R1	1.16	16.0	Thin Wall XLPE Primary Cable	GREY	4380.0	-	13	9800
15	-	-	PR94BN	3510312 R1	1.16	16.0	Thin Wall XLPE Primary Cable	GREY	4380.0	-	23	9800
15	-	-	ZU94WM	3510312 R1	1.16	16.0	Thin Wall XLPE Primary Cable	GREY	4380.0	-	14	9800

Name	Terminal Part Number	V-Min	Name	Wire Part Number	Wire CSA	Wire Spec	Wire Material description	Wire Color Description	Wire Length	End2 Terminal Part Number	End2 Pin Name	End2 Connector
16	-	-	MD94BE	2643680 R1	1.16	16.0	Std. Wall XLPE Primary Cable	GREY	4380.0	-	13	9800
16	-	-	ZU94WW	3510313 R1	1.91	14.0	Thin Wall XLPE Primary Cable	GREY	4380.0	-	22	9800
17	-	-	MD94BD	2643680 R1	1.16	16.0	Std. Wall XLPE Primary Cable	GREY	4380.0	-	14	9800
17	-	-	ZU94WU	3510313 R1	1.91	14.0	Thin Wall XLPE Primary Cable	GREY	4380.0	-	20	9800
18	-	-	MD94BH	3510312 R1	1.16	16.0	Thin Wall XLPE Primary Cable	GREY	4380.0	-	15	9800
18	-	-	ZU94WN	3510313 R1	1.91	14.0	Thin Wall XLPE Primary Cable	GREY	4380.0	-	17	9800
19	-	-	MD94BF	3510312 R1	1.16	16.0	Thin Wall XLPE Primary Cable	GREY	4380.0	-	16	9800
19	-	-	ZU94WR	3510313 R1	1.91	14.0	Thin Wall XLPE Primary Cable	GREY	4380.0	-	19	9800

Name	Terminal Part Number	V-Min	Name	Wire Part Number	Wire CSA	Wire Spec	Wire Material description	Wire Color Description	Wire Length	End2 Terminal Part Number	End2 Pin Name	End2 Connector
20	-	-	MD94BL	3510312 R1	1.16	16.0	Thin Wall XLPE Primary Cable	GREY	4380.0	-	22	9800
21	-	-	MD94BJ	3510312 R1	1.16	16.0	Thin Wall XLPE Primary Cable	GREY	4380.0	-	20	9800
22	-	-	MD94BK	3510312 R1	1.16	16.0	Thin Wall XLPE Primary Cable	GREY	4380.0	-	21	9800
22	-	-	ZU94WS	3510312 R1	1.16	16.0	Thin Wall XLPE Primary Cable	GREY	4380.0	-	15	9800
23	-	-	MD94BA	2643680 R1	1.16	16.0	Std. Wall XLPE Primary Cable	GREY	4380.0	-	17	9800
23	-	-	ZU94WT	3510312 R1	1.16	16.0	Thin Wall XLPE Primary Cable	GREY	4380.0	-	16	9800
24	-	-	MD94BB	3510312 R1	1.16	16.0	Thin Wall XLPE Primary Cable	GREY	4380.0	-	18	9800
24	-	-	ZU94-G7	3510313 R1	1.91	14.0	Thin Wall XLPE Primary Cable	GREY	4380.0	-	18	9800

Name	Terminal Part Number	V-Min	Name	Wire Part Number	Wire CSA	Wire Spec	Wire Material description	Wire Color Description	Wire Length	End2 Terminal Part Number	End2 Pin Name	End2 Connector
25	-	-	MD94BC	3510312 R1	1.16	16.0	Thin Wall XLPE Primary Cable	GREY	4380.0	-	19	9800
25	-	-	ZU94-G6	3510313 R1	1.91	14.0	Thin Wall XLPE Primary Cable	GREY	4380.0	-	21	9800
27	-	-	ZP36B	2643676 R1	0.79	18.0	Std. Wall XLPE Primary Cable	TAN	4240.0	-	A	9101
27	-	-	ZL36B	2643676 R1	0.79	18.0	Std. Wall XLPE Primary Cable	TAN	4135.0	-	A	9101
27	-	-	ZT36B	2643676 R1	0.79	18.0	Std. Wall XLPE Primary Cable	TAN	4510.0	-	A	9101
27	-	-	FG36B	2643676 R1	0.79	18.0	Std. Wall XLPE Primary Cable	TAN	5355.0	-	A	9101
27	-	-	ZX36B	2643676 R1	0.79	18.0	Std. Wall XLPE Primary Cable	TAN	4370.0	-	A	9101
27	-	-	ZV36B	2643676 R1	0.79	18.0	Std. Wall XLPE Primary Cable	TAN	6465.0	-	A	9101

Name	Terminal Part Number	V-Min	Name	Wire Part Number	Wire CSA	Wire Spec	Wire Material description	Wire Color Description	Wire Length	End2 Terminal Part Number	End2 Pin Name	End2 Connector
27	-	-	ZP36B	2643676 R1	0.79	18.0	Std. Wall XLPE Primary Cable	TAN	4240.0	-	A	9102C
27	-	-	ZV36B	2643676 R1	0.79	18.0	Std. Wall XLPE Primary Cable	TAN	6465.0	-	A	9102C
27	-	-	FG36B	2643676 R1	0.79	18.0	Std. Wall XLPE Primary Cable	TAN	5355.0	-	A	9102C
27	-	-	ZX36B	2643676 R1	0.79	18.0	Std. Wall XLPE Primary Cable	TAN	4370.0	-	A	9102C
27	-	-	ZT36B	2643676 R1	0.79	18.0	Std. Wall XLPE Primary Cable	TAN	4510.0	-	A	9102C
29	-	-	FC36A	2643676 R1	0.79	18.0	Std. Wall XLPE Primary Cable	TAN	3885.0	-	A	9101
29	-	-	FA36A	2643673 R1	0.79	18.0	Std. Wall XLPE Primary Cable	GREY	2495.0	-	A	9101
29	-	-	PL36A	2643673 R1	0.79	18.0	Std. Wall XLPE Primary Cable	GREY	4440.0	-	A	9101

Name	Terminal Part Number	V-Min	Name	Wire Part Number	Wire CSA	Wire Spec	Wire Material description	Wire Color Description	Wire Length	End2 Terminal Part Number	End2 Pin Name	End2 Connector
29	-	-	FB36A	2643676 R1	0.79	18.0	Std. Wall XLPE Primary Cable	TAN	4035.0	-	A	9101
29	-	-	FD36A	2643673 R1	0.79	18.0	Std. Wall XLPE Primary Cable	GREY	2125.0	-	A	9101
29	-	-	FF36A	2643673 R1	0.79	18.0	Std. Wall XLPE Primary Cable	GREY	4740.0	-	A	9101
29	-	-	FE36A	2643673 R1	0.79	18.0	Std. Wall XLPE Primary Cable	GREY	4075.0	-	A	9101
29	-	-	FA36A	2643673 R1	0.79	18.0	Std. Wall XLPE Primary Cable	GREY	2495.0	-	A	9100
29	-	-	FD36A	2643673 R1	0.79	18.0	Std. Wall XLPE Primary Cable	GREY	2125.0	-	A	9100A
29	-	-	FE36A	2643673 R1	0.79	18.0	Std. Wall XLPE Primary Cable	GREY	4075.0	-	A	9100
29	-	-	PL36A	2643673 R1	0.79	18.0	Std. Wall XLPE Primary Cable	GREY	4440.0	-	A	9100

Name	Terminal Part Number	V-Min	Name	Wire Part Number	Wire CSA	Wire Spec	Wire Material description	Wire Color Description	Wire Length	End2 Terminal Part Number	End2 Pin Name	End2 Connector
29	-	-	FF36A	2643673 R1	0.79	18.0	Std. Wall XLPE Primary Cable	GREY	4740.0	-	A	9100
29	-	-	FC36A	2643676 R1	0.79	18.0	Std. Wall XLPE Primary Cable	TAN	3885.0	-	A	9102C
31	-	-	ZN39B	2643673 R1	0.79	18.0	Std. Wall XLPE Primary Cable	GREY	4455.0	-	A	9900C
31	-	-	PN39B	2643680 R1	1.16	16.0	Std. Wall XLPE Primary Cable	GREY	4105.0	-	A	9900AA
31	-	-	PA39B	2643680 R1	1.16	16.0	Std. Wall XLPE Primary Cable	GREY	2805.0	-	A	9900E
31	-	-	NX39B	2643680 R1	1.16	16.0	Std. Wall XLPE Primary Cable	GREY	3410.0	-	A	9900G
31	-	-	NH39B	3510312 R1	1.16	16.0	Thin Wall XLPE Primary Cable	GREY	3060.0	-	A	9900A
31	-	-	BA39B	2643680 R1	1.16	16.0	Std. Wall XLPE Primary Cable	GREY	2580.0	-	A	9900D

Name	Terminal Part Number	V-Min	Name	Wire Part Number	Wire CSA	Wire Spec	Wire Material description	Wire Color Description	Wire Length	End2 Terminal Part Number	End2 Pin Name	End2 Connector
31	-	-	AR39B	2643680 R1	1.16	16.0	Std. Wall XLPE Primary Cable	GREY	3730.0	-	A	9900AR
31	-	-	AQ39B	2643680 R1	1.16	16.0	Std. Wall XLPE Primary Cable	GREY	4280.0	-	A	9900AQ
31	-	-	AP39B	2643680 R1	1.16	16.0	Std. Wall XLPE Primary Cable	GREY	4580.0	-	A	9900AP
31	-	-	AJ39B	2643680 R1	1.16	16.0	Std. Wall XLPE Primary Cable	GREY	2610.0	-	A	9900AJ
31	-	-	AC39B	2643680 R1	1.16	16.0	Std. Wall XLPE Primary Cable	GREY	3270.0	-	A	9900AC
32	-	-	NG59B	2643673 R1	0.79	18.0	Std. Wall XLPE Primary Cable	GREY	2155.0	-	B	9736
33	-	-	NG59C	2643673 R1	0.79	18.0	Std. Wall XLPE Primary Cable	GREY	2155.0	-	C	9736
34	-	-	NG59D	2643673 R1	0.79	18.0	Std. Wall XLPE Primary Cable	GREY	2155.0	-	D	9736

Name	Terminal Part Number	V-Min	Name	Wire Part Number	Wire CSA	Wire Spec	Wire Material description	Wire Color Description	Wire Length	End2 Terminal Part Number	End2 Pin Name	End2 Connector
35	-	-	NG59E	2643673 R1	0.79	18.0	Std. Wall XLPE Primary Cable	GREY	2155.0	-	E	9736
36	-	-	RE59G	2643689 R1	1.91	14.0	Std. Wall XLPE Primary Cable	WHITE	4035.0	-	B	9740D
36	-	-	NZ59G	2643673 R1	0.79	18.0	Std. Wall XLPE Primary Cable	GREY	5730.0	-	B	9740C
36	-	-	NU59G	2643673 R1	0.79	18.0	Std. Wall XLPE Primary Cable	GREY	5380.0	-	A	9740H
36	-	-	BU59G	2643673 R1	0.79	18.0	Std. Wall XLPE Primary Cable	GREY	4885.0	-	B	9740H
36	-	-	BV59G	2643673 R1	0.79	18.0	Std. Wall XLPE Primary Cable	GREY	6530.0	-	B	9740G
36	-	-	2A59G	2643673 R1	0.79	18.0	Std. Wall XLPE Primary Cable	GREY	4085.0	-	B	9740E
37	-	-	2A59H	2643673 R1	0.79	18.0	Std. Wall XLPE Primary Cable	GREY	4085.0	-	C	9740E

Name	Terminal Part Number	V-Min	Name	Wire Part Number	Wire CSA	Wire Spec	Wire Material description	Wire Color Description	Wire Length	End2 Terminal Part Number	End2 Pin Name	End2 Connector
37	-	-	BU59H	2643673 R1	0.79	18.0	Std. Wall XLPE Primary Cable	GREY	4885.0	-	C	9740H
37	-	-	BV59H	2643673 R1	0.79	18.0	Std. Wall XLPE Primary Cable	GREY	6530.0	-	C	9740G
37	-	-	NU59H	2643673 R1	0.79	18.0	Std. Wall XLPE Primary Cable	GREY	5380.0	-	B	9740H
37	-	-	RE59H	2643673 R1	0.79	18.0	Std. Wall XLPE Primary Cable	GREY	4035.0	-	C	9740D
37	-	-	NZ59H	2643673 R1	0.79	18.0	Std. Wall XLPE Primary Cable	GREY	5730.0	-	C	9740C
38	-	-	BV59J	2643673 R1	0.79	18.0	Std. Wall XLPE Primary Cable	GREY	6530.0	-	D	9740G
38	-	-	NZ59J	2643673 R1	0.79	18.0	Std. Wall XLPE Primary Cable	GREY	5730.0	-	D	9740C
38	-	-	RE59J	2643673 R1	0.79	18.0	Std. Wall XLPE Primary Cable	GREY	4035.0	-	D	9740D

Name	Terminal Part Number	V-Min	Name	Wire Part Number	Wire CSA	Wire Spec	Wire Material description	Wire Color Description	Wire Length	End2 Terminal Part Number	End2 Pin Name	End2 Connector
38	-	-	2A59J	2643673 R1	0.79	18.0	Std. Wall XLPE Primary Cable	GREY	4085.0	-	D	9740E
38	-	-	BU59J	2643673 R1	0.79	18.0	Std. Wall XLPE Primary Cable	GREY	4885.0	-	D	9740H
38	-	-	NU59J	2643673 R1	0.79	18.0	Std. Wall XLPE Primary Cable	GREY	5380.0	-	C	9740H
39	-	-	BU59K	2643673 R1	0.79	18.0	Std. Wall XLPE Primary Cable	GREY	4885.0	-	E	9740H
39	-	-	BV59K	2643673 R1	0.79	18.0	Std. Wall XLPE Primary Cable	GREY	6530.0	-	E	9740G
39	-	-	NU59K	2643673 R1	0.79	18.0	Std. Wall XLPE Primary Cable	GREY	5380.0	-	D	9740H
39	-	-	2A59K	2643673 R1	0.79	18.0	Std. Wall XLPE Primary Cable	GREY	4085.0	-	E	9740E
39	-	-	RE59K	2643673 R1	0.79	18.0	Std. Wall XLPE Primary Cable	GREY	4035.0	-	E	9740D

Name	Terminal Part Number	V-Min	Name	Wire Part Number	Wire CSA	Wire Spec	Wire Material description	Wire Color Description	Wire Length	End2 Terminal Part Number	End2 Pin Name	End2 Connect or
39	-	-	NZ59K	2643673 R1	0.79	18.0	Std. Wall XLPE Primary Cable	GREY	5730.0	-	E	9740C
40	-	-	NQ39A	2643673 R1	0.79	18.0	Std. Wall XLPE Primary Cable	GREY	4460.0	-	A	9200B
40	-	-	BZ39A	2643673 R1	0.79	18.0	Std. Wall XLPE Primary Cable	GREY	1885.0	-	A	9004
40	-	-	NU39A	2643673 R1	0.79	18.0	Std. Wall XLPE Primary Cable	GREY	6255.0	-	A	9002A
40	-	-	PS39A	2643673 R1	0.79	18.0	Std. Wall XLPE Primary Cable	GREY	5780.0	-	A	9200C
40	-	-	NN39A	2643673 R1	0.79	18.0	Std. Wall XLPE Primary Cable	GREY	3105.0	-	A	9002
40	-	-	NK39A	2643673 R1	0.79	18.0	Std. Wall XLPE Primary Cable	GREY	4005.0	-	A	9200A
40	-	-	AH39A	2643673 R1	0.79	18.0	Std. Wall XLPE Primary Cable	GREY	3290.0	-	A	9003

Name	Terminal Part Number	V-Min	Name	Wire Part Number	Wire CSA	Wire Spec	Wire Material description	Wire Color Description	Wire Length	End2 Terminal Part Number	End2 Pin Name	End2 Connector
40	-	-	2F39A	2643673 R1	0.79	18.0	Std. Wall XLPE Primary Cable	GREY	4465.0	-	A	9004
40	-	-	AH39A	2643673 R1	0.79	18.0	Std. Wall XLPE Primary Cable	GREY	3290.0	-	A	9004
40	-	-	BB39A	2643673 R1	0.79	18.0	Std. Wall XLPE Primary Cable	GREY	2805.0	-	A	9004
40	-	-	BC39A	2643673 R1	0.79	18.0	Std. Wall XLPE Primary Cable	GREY	5230.0	-	A	9004
40	-	-	NK39A	2643673 R1	0.79	18.0	Std. Wall XLPE Primary Cable	GREY	4005.0	-	A	9004
40	-	-	NN39A	2643673 R1	0.79	18.0	Std. Wall XLPE Primary Cable	GREY	3105.0	-	A	9004
40	-	-	NP39A	2643673 R1	0.79	18.0	Std. Wall XLPE Primary Cable	GREY	3005.0	-	A	9004
40	-	-	NQ39A	2643673 R1	0.79	18.0	Std. Wall XLPE Primary Cable	GREY	4460.0	-	A	9004

Name	Terminal Part Number	V-Min	Name	Wire Part Number	Wire CSA	Wire Spec	Wire Material description	Wire Color Description	Wire Length	End2 Terminal Part Number	End2 Pin Name	End2 Connector
40	-	-	PS39A	2643673 R1	0.79	18.0	Std. Wall XLPE Primary Cable	GREY	5780.0	-	A	9004
40	-	-	PS39A	2643673 R1	0.79	18.0	Std. Wall XLPE Primary Cable	GREY	5780.0	-	A	9200J
40	-	-	BB39A	2643673 R1	0.79	18.0	Std. Wall XLPE Primary Cable	GREY	2805.0	-	A	9005
40	-	-	2F39A	2643673 R1	0.79	18.0	Std. Wall XLPE Primary Cable	GREY	4465.0	-	A	9002A
40	-	-	BC39A	2643673 R1	0.79	18.0	Std. Wall XLPE Primary Cable	GREY	5230.0	-	A	9200C
40	-	-	NP39A	2643673 R1	0.79	18.0	Std. Wall XLPE Primary Cable	GREY	3005.0	-	A	9001
41	-	-	AK87EA	3510311 R1	0.79	18.0	Thin Wall XLPE Primary Cable	GREY	2000.0	-	1	9746A
41	-	-	PP87EA	3510311 R1	0.79	18.0	Thin Wall XLPE Primary Cable	GREY	2124.0	-	1	9746

Name	Terminal Part Number	V-Min	Name	Wire Part Number	Wire CSA	Wire Spec	Wire Material description	Wire Color Description	Wire Length	End2 Terminal Part Number	End2 Pin Name	End2 Connector
42	-	-	ND56BC	2643684 R1	1.16	16.0	Std. Wall XLPE Primary Cable	YELLOW 2	2385.0	-	A	N04_4460M
42	-	-	PV56BC	2643684 R1	1.16	16.0	Std. Wall XLPE Primary Cable	YELLOW 2	4405.0	-	A	4460AM
42	-	-	ND56BC	2643684 R1	1.16	16.0	Std. Wall XLPE Primary Cable	YELLOW 2	2385.0	-	A	4460M
43	-	-	SW104CA	3510354 R1	1.16	16.0	Thin Wall XLPE Primary Cable	DARK BLUE	4480.0	-	B	9778
43	-	-	MG32A	2643676 R1	0.79	18.0	Std. Wall XLPE Primary Cable	TAN	4380.0	-	5	9800
44	-	-	RH32	2643676 R1	0.79	18.0	Std. Wall XLPE Primary Cable	TAN	4380.0	-	6	9800
45	-	-	RL49A	2643673 R1	0.79	18.0	Std. Wall XLPE Primary Cable	GREY	4380.0	-	8	9800
49	-	-	VT94SJ	2643673 R1	0.79	18.0	Std. Wall XLPE Primary Cable	GREY	1660.0	-	1	9512C

Name	Terminal Part Number	V-Min	Name	Wire Part Number	Wire CSA	Wire Spec	Wire Material description	Wire Color Description	Wire Length	End2 Terminal Part Number	End2 Pin Name	End2 Connector
50	-	-	MJ49	2643673 R1	0.79	18.0	Std. Wall XLPE Primary Cable	GREY	4380.0	-	7	9800
51	-	-	ZE20	2643678 R1	1.16	16.0	Std. Wall XLPE Primary Cable	LIGHT GREEN	4280.0	-	6	4410F
51	-	-	RA20	2643678 R1	1.16	16.0	Std. Wall XLPE Primary Cable	LIGHT GREEN	3860.0	-	6	4410D
51	-	-	NT20	2643678 R1	1.16	16.0	Std. Wall XLPE Primary Cable	LIGHT GREEN	4405.0	-	6	4410H
51	-	-	ZE20	2643678 R1	1.16	16.0	Std. Wall XLPE Primary Cable	LIGHT GREEN	4280.0	-	6	4411M4
51	-	-	RB20	2643678 R1	1.16	16.0	Std. Wall XLPE Primary Cable	LIGHT GREEN	3110.0	-	6	4410G
51	-	-	RB20	2643678 R1	1.16	16.0	Std. Wall XLPE Primary Cable	LIGHT GREEN	3110.0	-	6	4410M
54	-	-	WIRE239188	-	0.0	-	-	-	0.0	-	1	9514D/9514F
54	-	-	TA94SAB	2643673 R1	0.79	18.0	Std. Wall XLPE Primary Cable	GREY	2985.0	-	1	9514D

Name	Terminal Part Number	V-Min	Name	Wire Part Number	Wire CSA	Wire Spec	Wire Material description	Wire Color Description	Wire Length	End2 Terminal Part Number	End2 Pin Name	End2 Connector
54	-	-	TG94SAB	2643673 R1	0.79	18.0	Std. Wall XLPE Primary Cable	GREY	4555.0	-	1	9514F
54	-	-	WIRE239 188	-	0.0	-	-	-	0.0	-	1	9514D
55	-	-	WIRE239 189	-	0.0	-	-	-	0.0	-	2	9514D/9 514F
55	-	-	TA94SCB	2643673 R1	0.79	18.0	Std. Wall XLPE Primary Cable	GREY	2985.0	-	2	9514D
55	-	-	TG94SCB	2643673 R1	0.79	18.0	Std. Wall XLPE Primary Cable	GREY	4555.0	-	2	9514F
55	-	-	PD61B	2643673 R1	0.79	18.0	Std. Wall XLPE Primary Cable	GREY	4405.0	-	C	9865M
55	-	-	WIRE239 189	-	0.0	-	-	-	0.0	-	2	9514D
56	-	-	WIRE239 190	-	0.0	-	-	-	0.0	-	3	9514D/9 514F
56	-	-	PD106B	2643673 R1	0.79	18.0	Std. Wall XLPE Primary Cable	GREY	4405.0	-	B	9865M
56	-	-	WIRE239 190	-	0.0	-	-	-	0.0	-	3	9514D
57	-	-	WIRE239 191	-	0.0	-	-	-	0.0	-	4	9514D/9 514F

Name	Terminal Part Number	V-Min	Name	Wire Part Number	Wire CSA	Wire Spec	Wire Material description	Wire Color Description	Wire Length	End2 Terminal Part Number	End2 Pin Name	End2 Connector
57	-	-	PD110B	2643673 R1	0.79	18.0	Std. Wall XLPE Primary Cable	GREY	4405.0	-	A	9865M
57	-	-	WIRE239 191	-	0.0	-	-	-	0.0	-	4	9514D
58	-	-	NY87DB	2643673 R1	0.79	18.0	Std. Wall XLPE Primary Cable	GREY	2120.0	-	2	9745
58	-	-	AB87DA	2643680 R1	1.16	16.0	Std. Wall XLPE Primary Cable	GREY	1875.0	-	2	9745A
58	-	-	AB87DA	2643680 R1	1.16	16.0	Std. Wall XLPE Primary Cable	GREY	1875.0	-	2	9745
59	-	-	NY87MB	2643680 R1	1.16	16.0	Std. Wall XLPE Primary Cable	GREY	2120.0	-	1	9745
59	-	-	AB87DB	2643673 R1	0.79	18.0	Std. Wall XLPE Primary Cable	GREY	1875.0	-	1	9745A
59	-	-	AB87DB	2643673 R1	0.79	18.0	Std. Wall XLPE Primary Cable	GREY	1875.0	-	1	9745
60	-	-	UC59EF	2643673 R1	0.79	18.0	Std. Wall XLPE Primary Cable	GREY	6680.0	-	A	9762

Name	Terminal Part Number	V-Min	Name	Wire Part Number	Wire CSA	Wire Spec	Wire Material description	Wire Color Description	Wire Length	End2 Terminal Part Number	End2 Pin Name	End2 Connector
60	-	-	SJ59ED	2643673 R1	0.79	18.0	Std. Wall XLPE Primary Cable	GREY	4430.0	-	A	9820M
61	-	-	UD59EC	2643673 R1	0.79	18.0	Std. Wall XLPE Primary Cable	GREY	4510.0	-	A	9763
61	-	-	AT94AA	2643680 R1	1.16	16.0	Std. Wall XLPE Primary Cable	GREY	3255.0	-	1	6925
61	-	-	ZJ94AA	2643680 R1	1.16	16.0	Std. Wall XLPE Primary Cable	GREY	2960.0	-	1	6925
61	-	-	AT94AA	2643680 R1	1.16	16.0	Std. Wall XLPE Primary Cable	GREY	3255.0	-	1	6925A
61	-	-	-	-	-	-	-	-	-	-	-	-
62	-	-	-	-	-	-	-	-	-	-	-	-
63	-	-	ND57BB	2643678 R1	1.16	16.0	Std. Wall XLPE Primary Cable	LIGHT GREEN	2230.0	-	C	N04_4450M
63	-	-	PV57BB	2643678 R1	1.16	16.0	Std. Wall XLPE Primary Cable	LIGHT GREEN	4430.0	-	C	4450AM
63	-	-	ND57BB	2643678 R1	1.16	16.0	Std. Wall XLPE Primary Cable	LIGHT GREEN	2230.0	-	C	4450M

Name	Terminal Part Number	V-Min	Name	Wire Part Number	Wire CSA	Wire Spec	Wire Material description	Wire Color Description	Wire Length	End2 Terminal Part Number	End2 Pin Name	End2 Connector
64	-	-	ND57BC	2643678 R1	1.16	16.0	Std. Wall XLPE Primary Cable	LIGHT GREEN	2385.0	-	B	N04_4460M
64	-	-	PV57BC	2643678 R1	1.16	16.0	Std. Wall XLPE Primary Cable	LIGHT GREEN	4405.0	-	B	4460AM
64	-	-	ND57BC	2643678 R1	1.16	16.0	Std. Wall XLPE Primary Cable	LIGHT GREEN	2385.0	-	B	4460M
65	-	-	AT94AB	2643680 R1	1.16	16.0	Std. Wall XLPE Primary Cable	GREY	3255.0	-	2	6925
65	-	-	ZJ94AB	2643680 R1	1.16	16.0	Std. Wall XLPE Primary Cable	GREY	2960.0	-	2	6925
65	-	-	AT94AB	2643680 R1	1.16	16.0	Std. Wall XLPE Primary Cable	GREY	3255.0	-	2	6925A
66	-	-	YL112	2643680 R1	1.16	16.0	Std. Wall XLPE Primary Cable	GREY	2385.0	-	1	7803
67	-	-	CB19	2643680 R1	1.16	16.0	Std. Wall XLPE Primary Cable	GREY	2660.0	-	A	9108N

Name	Terminal Part Number	V-Min	Name	Wire Part Number	Wire CSA	Wire Spec	Wire Material description	Wire Color Description	Wire Length	End2 Terminal Part Number	End2 Pin Name	End2 Connector
67	-	-	CG19	2643680 R1	1.16	16.0	Std. Wall XLPE Primary Cable	GREY	3535.0	-	A	9108N
67	-	-	CR19	2643680 R1	1.16	16.0	Std. Wall XLPE Primary Cable	GREY	3610.0	-	A	9108N
67	-	-	CT19	2643680 R1	1.16	16.0	Std. Wall XLPE Primary Cable	GREY	3785.0	-	A	9108N
67	-	-	CX19	2643680 R1	1.16	16.0	Std. Wall XLPE Primary Cable	GREY	4155.0	-	A	9108N
67	-	-	PU19	2643680 R1	1.16	16.0	Std. Wall XLPE Primary Cable	GREY	4205.0	-	A	9108N
67	-	-	CA19	2643680 R1	1.16	16.0	Std. Wall XLPE Primary Cable	GREY	3535.0	-	A	9108N
67	-	-	CV19	2643680 R1	1.16	16.0	Std. Wall XLPE Primary Cable	GREY	3955.0	-	A	9108N
67	-	-	CZ19	2643680 R1	1.16	16.0	Std. Wall XLPE Primary Cable	GREY	4805.0	-	A	9108N

Name	Terminal Part Number	V-Min	Name	Wire Part Number	Wire CSA	Wire Spec	Wire Material description	Wire Color Description	Wire Length	End2 Terminal Part Number	End2 Pin Name	End2 Connect or
68	-	-	UA65	2643682 R1	1.16	16.0	Std. Wall XLPE Primary Cable	ORANGE	4405.0	-	A	9766
68	-	-	NF65	2643682 R1	1.16	16.0	Std. Wall XLPE Primary Cable	ORANGE	2585.0	-	A	9718A
68	-	-	NF65	2643682 R1	1.16	16.0	Std. Wall XLPE Primary Cable	ORANGE	2585.0	-	A	9767
69	-	-	VT94SK	2643673 R1	0.79	18.0	Std. Wall XLPE Primary Cable	GREY	1660.0	-	2	9512C
70	-	-	RM71N	2643682 R1	1.16	16.0	Std. Wall XLPE Primary Cable	ORANGE	2751.0	-	E	9761F
71	-	-	PV68BB	2643688 R1	1.91	14.0	Std. Wall XLPE Primary Cable	BROWN	4430.0	-	A	4450AM
71	-	-	ND68BB	2643688 R1	1.91	14.0	Std. Wall XLPE Primary Cable	BROWN	2230.0	-	A	N04_4450M
71	-	-	ND68BB	2643688 R1	1.91	14.0	Std. Wall XLPE Primary Cable	BROWN	2230.0	-	A	4450M

Name	Terminal Part Number	V-Min	Name	Wire Part Number	Wire CSA	Wire Spec	Wire Material description	Wire Color Description	Wire Length	End2 Terminal Part Number	End2 Pin Name	End2 Connector
72	-	-	ND70BB	2643686 R1	1.91	14.0	Std. Wall XLPE Primary Cable	RED	2385.0	-	C	N04_4460M
72	-	-	PV70BB	2643686 R1	1.91	14.0	Std. Wall XLPE Primary Cable	RED	4405.0	-	C	4460AM
72	-	-	ND70BB	2643686 R1	1.91	14.0	Std. Wall XLPE Primary Cable	RED	2385.0	-	C	4460M
73	-	-	ND71BB	2643806 R1	1.16	16.0	Std. Wall XLPE Primary Cable	LIGHT BLUE	2230.0	-	E	N04_4450M
73	-	-	PV71BB	2643806 R1	1.16	16.0	Std. Wall XLPE Primary Cable	LIGHT BLUE	4430.0	-	E	4450AM
73	-	-	ND71BB	2643806 R1	1.16	16.0	Std. Wall XLPE Primary Cable	LIGHT BLUE	2230.0	-	E	4450M
74	-	-	ND54BB	2643688 R1	1.91	14.0	Std. Wall XLPE Primary Cable	BROWN	2230.0	-	D	N04_4450M
74	-	-	PV54BB	2643688 R1	1.91	14.0	Std. Wall XLPE Primary Cable	BROWN	4430.0	-	D	4450AM

Name	Terminal Part Number	V-Min	Name	Wire Part Number	Wire CSA	Wire Spec	Wire Material description	Wire Color Description	Wire Length	End2 Terminal Part Number	End2 Pin Name	End2 Connector
74	-	-	ND54BB	2643688 R1	1.91	14.0	Std. Wall XLPE Primary Cable	BROWN	2230.0	-	D	4450M
75	-	-	ND12BB	2643694 R1	1.91	14.0	Std. Wall XLPE Primary Cable	LIGHT BLUE	2260.0	-	F	N01-4450M
75	-	-	PV12BB	2643694 R1	1.91	14.0	Std. Wall XLPE Primary Cable	LIGHT BLUE	4484.0	-	F	4450AM

Connector Name 1701

Part Number RING-E-1-2_0

Instances B6.7 - Bosch LH160_LH200 Alternator:Diagram1
B6.7 - Bosch LH160_LH200 Alternator:Diagram2
B6.7 - Delco Remy 28SI Alternator W/Sensor Option 1:Diagram1
B6.7 - Delco Remy 28SI Alternator W/Sensor Option 2:Diagram1
B6.7 - Delco Remy 36SI Alternator W/Sensor:Diagram1
B6.7 - Delco Remy 40SI Alternator W/Sensor:Diagram1
B6.7 - Leece-Neville - LN 325A Alternator W/Sensor:Diagram1
B6.7 - Leece-Neville 320PAH Alternator:Diagram1
B6.7 - Leece-Neville AVI160 Alternator:Diagram1
B6.7 - Leece-Neville AVI160-210A/240A Alternator W/ Sensor:Diagram1

Mates MOT-STARTER-5024-01-04

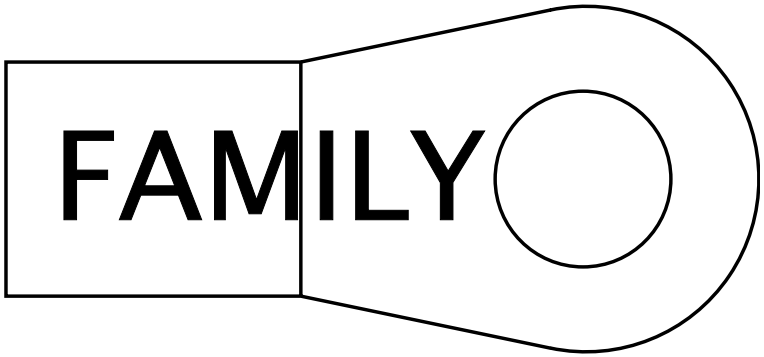

Name	Terminal Part Number	V-Min	Name	Wire Part Number	Wire CSA	Wire Spec	Wire Material description	Wire Color Description	Wire Length	End2 Terminal Part Number	End2 Pin Name	End2 Connect or
A	-	-	WU2-FL	2646034 R1	12.52	6.0	FUSELINK 105	TAN	700.0	-	X	-
A	-	-	WF2-FL	2646034 R1	12.52	6.0	FUSELINK 105	TAN	640.0	-	X	-
A	-	-	WK2-FLB	2643473 R1	4.81	10.0	FUSEABLE LINK	RUST	190.0	-	X	-
A	-	-	WW2-FLA	2643473 R1	4.81	10.0	FUSEABLE LINK	RUST	700.0	-	X	-
A	-	-	WW2-FLB	2643473 R1	4.81	10.0	FUSEABLE LINK	RUST	700.0	-	X	-
A	-	-	WK2-FLA	2643473 R1	4.81	10.0	FUSEABLE LINK	RUST	190.0	-	X	-
A	-	-	WA2-FLB	2643473 R1	4.81	10.0	FUSEABLE LINK	RUST	170.0	-	X	-
A	-	-	WM2-FLA	2643473 R1	4.81	10.0	FUSEABLE LINK	RUST	170.0	-	X	-

Name	Terminal Part Number	V-Min	Name	Wire Part Number	Wire CSA	Wire Spec	Wire Material description	Wire Color Description	Wire Length	End2 Terminal Part Number	End2 Pin Name	End2 Connector
A	-	-	WM2-FLB	2643473 R1	4.81	10.0	FUSEABLE LINK	RUST	170.0	-	X	-
A	-	-	WA2-FLA	2643473 R1	4.81	10.0	FUSEABLE LINK	RUST	190.0	-	X	-
A	-	-	WG2-FLA	3961608 R1	7.48	8.0	FUSEABLE LINK	LIGHT BLUE	190.0	-	X	-
A	-	-	WG2-FLB	3961608 R1	7.48	8.0	FUSEABLE LINK	LIGHT BLUE	190.0	-	X	-
A	-	-	WV2-FLB	2643473 R1	4.81	10.0	FUSEABLE LINK	RUST	170.0	-	X	-
A	-	-	WV2-FLA	2643473 R1	4.81	10.0	FUSEABLE LINK	RUST	170.0	-	X	-
A	-	-	WC2-FL	2645990 R1	32.19	2.0	FUSELINK 150	BLACK	640.0	-	X	-
A	-	-	WR2-FL	2645990 R1	32.19	2.0	FUSELINK 150	BLACK	700.0	-	X	-
A	-	-	WB2-FL	2646034 R1	12.52	6.0	FUSELINK 105	TAN	640.0	-	X	-
A	-	-	WP2-FL	2646034 R1	12.52	6.0	FUSELINK 105	TAN	700.0	-	X	-
A	-	-	WL2-FL	2645990 R1	32.19	2.0	FUSELINK 150	BLACK	640.0	-	X	-
A	-	-	WX2-FL	2645990 R1	32.19	2.0	FUSELINK 150	BLACK	700.0	-	X	-
A	-	-	WD2-FL	2646034 R1	12.52	6.0	FUSELINK 105	TAN	640.0	-	X	-
A	-	-	WS2-FL	2646034 R1	12.52	6.0	FUSELINK 105	TAN	700.0	-	X	-

Connector Name 1701
Part Number RING-M-12_0
Instances L9 - Leece-Neville - LN 325A Alternator W/Sensor:Diagram1

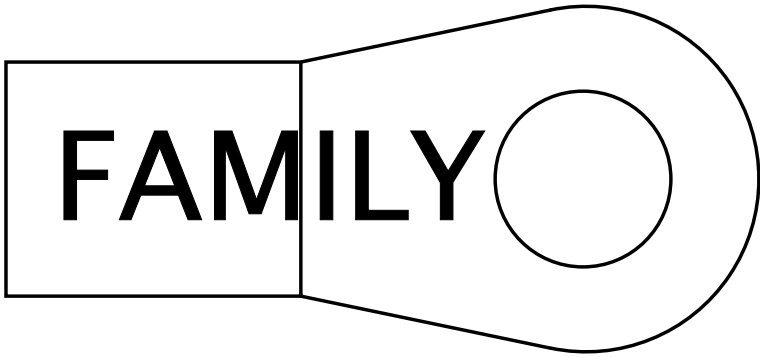

Name	Terminal Part Number	V-Min	Name	Wire Part Number	Wire CSA	Wire Spec	Wire Material description	Wire Color Description	Wire Length	End2 Terminal Part Number	End2 Pin Name	End2 Connector
A	-	-	WL2-FLA	2643473 R1	4.81	10.0	FUSEABLE LINK	RUST	190.0	-	X	-
A	-	-	WL2-FLB	2643473 R1	4.81	10.0	FUSEABLE LINK	RUST	190.0	-	X	-

Connector Name	1701
Part Number	3595623C1
Short Description	CENTER CHASSIS
Instances	A26 - Lift Axle Controls (Center Pedestal Controls f/ 2 Lift Axles):Diagram1 A26 - 26" Fuel Tank:Diagram1 A26 - 26" Fuel Tank:Diagram2 A26 - 26" Fuel Tank:Diagram3 A26 - 26" Fuel Tank:Diagram4 A26 - 26" Fuel Tank:Diagram5 A26 - 26" Fuel Tank - Secondary:Diagram1 A26 - 26" Fuel Tank - Secondary:Diagram2 A26 - 26" Fuel Tank - Secondary:Diagram3 A26 - 26" Fuel Tank - Secondary:Diagram4 A26 - 26" Fuel Tank - Secondary:Diagram5 A26 - 26" Fuel Tank - Secondary:Diagram6 A26 - 26" Fuel Tank - Secondary:Diagram7 A26 - ABS Private J1939:A26 - ABS Private J1939 A26 - Antilock Brake System (ABS) Bendix:Diagram1 A26 - Antilock Brake System (ABS) Bendix:Diagram2 A26 - Antilock Brake System (ABS) Bendix:Diagram3 A26 - Antilock Brake System (ABS)-Wabco 4 Channel Implementation:Diagram1 A26 - Auxiliary Air Solenoids Normally Closed:Diagram1 A26 - Auxillary Air Solenoids Normally Open:Combination1 A26 - Auxillary Air Solenoids Normally Open:Combination2 A26 - Auxillary Air Solenoids Normally Open:Combination3 A26 - Auxillary Air Solenoids Normally Open:Combination4 A26 - Auxillary Air Solenoids Normally Open:Combination5 A26 - Auxillary Air Solenoids Normally Open:Combination6 A26 - Axle Lift Controls:Diagram1 A26 - Axle Lift Controls:Diagram2 A26 - Axle Temperature Monitoring (Single Rear Aux Gauge):Diagram1 A26 - Axle Temperature Monitoring (Single Rear Virtual Gauge):Diagram1 A26 - Axle Temperature Monitoring (Tandem Rear Aux Gauge):Diagram1 A26 - Axle Temperature Monitoring (Tandem Rear Virtual Gauge):Diagram1 A26 - Back-Up Alarm (Automatic) W/ Tailboard:Diagram1 A26 - Back-Up Alarm (Automatic) W/O Tailboard:Diagram1 A26 - Back-Up Alarm (Manual) W/ Tailboard:Diagram1

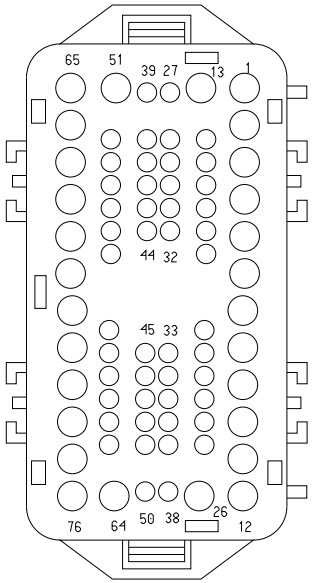

A26 - Back-Up Alarm (Manual) W/O Tailboard:Diagram1
A26 - Back-Up Alarm (Relay to 5 Pin 08TKC Tailboard to Alarm) (Automatic):Diagram1
A26 - Back-Up Alarm (Relay to 5 Pin 08TKC Tailboard. Alarm Plugs In) (Automatic):Diagram1
A26 - Backup Alarm (Switch to 5 Pin 08TKC Tailboard to Alarm) (Manual):Diagram1
A26 - Backup Alarm (Switch to 5 Pin 08TKC Tailboard. Alarm Plugs In) (Manual):Diagram1
A26 - Backup Light (Dual Daisy Reverse LT)Allison/ZF Trans 3K/4K:Diagram1
A26 - Backup Light (Dual Daisy Reverse LT)Allison/ZF Trans 3K/4K:Diagram2
A26 - Backup Light (Dual Reverse Light)Allison/ZF Trans 3K/4K:Diagram1
A26 - Backup Light (Dual Reverse Light)Allison/ZF Trans 3K/4K:Diagram2
A26 - Backup Light (Single Reverse Light) Allison 3K/4K:Diagram1
A26 - Backup Light (Single Reverse Light) Allison 3K/4K:Diagram2
A26 - Backup Light (Single Reverse Light) Allison 3K/4K Option2:Diagram1
A26 - Backup Light (Single Reverse Light) Allison 3K/4K Option2:Diagram2
A26 - Backup Light (Single Reverse Light) W/Less Power Module Allison 3K/4K:Diagram1-Combination1
A26 - Backup Light (Single Reverse Light) W/Less Power Module Allison 3K/4K:Diagram1-Combination2
A26 - Backup Light (Single Reverse Light)Allison 3K/4K:Diagram1
A26 - Backup Light (Single Reverse Light)Allison 3K/4K:Diagram2
A26 - Backup Lights (Dual Daisy Reverse Light) Eaton/Manual Trans:Diagram1
A26 - Backup Lights (Dual Reverse Light) Eaton/Manual Trans:Diagram1
A26 - Backup Lights (Reverse) W/Less Power Module Eaton/ Manual Trans:Diagram1
A26 - Backup Lights (Single Reverse Light) Eaton/Manual Trans:Diagram1
A26 - Backup Lights (Single Reverse Lights) Eaton/Manual Trans:Diagram1

A26 - Backup Lights (Single Reverse Lights) Eaton/Manual Trans Option2:Diagram1
A26 - Backup Lights (Single Reverse Lights) Eaton/Manual Transmission:Diagram1
A26 - Bendix Tractor or Towing Truck N/ Air SUSP J1939 Driven Lamp:Diagram3
A26 - Bendix Tractor or Towing Truck N/ Air SUSP J1939 Driven Lamp:Diagram4
A26 - Bendix Tractor or Towing Truck W/ Air SUSP J1939 Driven Lamp:Diagram3
A26 - Bendix Tractor or Towing Truck W/ Air SUSP J1939 Driven Lamp:Diagram4
A26 - Body Builder Lighting - Combined Turn and Stop Lamps (Automatic):Diagram1-Option 2 (Back-of-Cab, W/08HAB)
A26 - Body Builder Lighting - Combined Turn and Stop Lamps (Automatic):Diagram1-Option 3 (End-of-Frame, W/08HAE)
A26 - Body Builder Lighting - Combined Turn and Stop Lamps (Manual):Diagram1-Option 2 (Back-of-Cab, W/08HAB)
A26 - Body Builder Lighting - Combined Turn and Stop Lamps (Manual):Diagram1-Option 3 (End-of-Frame, W/08HAE)
A26 - Body Builder Lighting - Separate Turn and Stop Lamps (Blunt Cut) - Option 1:Diagram1-Option1 (R/D 9724)
A26 - Body Builder Lighting - Separate Turn and Stop Lamps (Blunt Cut) - Option 2:Diagram1-Option1 (R/D 9724A)
A26 - CAN Layout:ABS Proprietary J1939
A26 - Directional Signal (Turn) W/ Daisy Chain Box Lamps:Diagram1
A26 - Directional Signal (Turn) W/ Daisy Chain Box Lamps, W/ Plow Lights:Diagram1-Option 1 (Snow Plow #1)
A26 - Directional Signal (Turn) W/ Daisy Chain Box Lamps, W/ Plow Lights:Diagram1-Option 2 (Snow Plow #2)
A26 - Directional Signal (Turn) W/ LED BOX LAMPS:Diagram1
A26 - Directional Signal (Turn) W/ LED BOX LAMPS, W/Plow Lights:Diagram1-Option 1 (Snow Plow #1)
A26 - Directional Signal (Turn) W/ LED BOX LAMPS, W/Plow Lights:Diagram1-Option 2 (Snow Plow #2)
A26 - Directional Signal (Turn) W/ Less Power Module Tail Board, W/Hazard SW:Diagram1
A26 - Directional Signal (Turn) W/ Less Power Module Tail Board, W/Hazard SW, W/Plow Lights:Diagram1-Option 1 (Snow Plow #1)
A26 - Directional Signal (Turn) W/ Less Power Module Tail Board, W/Hazard SW, W/Plow Lights:Diagram1-Option 2 (Snow Plow #2)

A26 - Directional Signal (Turn) W/ Single Tail Board W/Hazard SW:Diagram1
A26 - Directional Signal (Turn) W/ Single Tail Board, W/Hazard SW, W/Plow Lights:Diagram1-Option 1 (Snow Plow #1)
A26 - Directional Signal (Turn) W/ Single Tail Board, W/Hazard SW, W/Plow Lights:Diagram1-Option 2 (Snow Plow #2)
A26 - DLB - Remote Power Module (3 RPM n/Switch Pack):Diagram1
A26 - DLB - Remote Power Module (3 RPM n/Switch Pack)Option2:Diagram1
A26 - DLB - Remote Power Module (3 RPM n/Switch Pack)Option2:Diagram2
A26 - DLB - Remote Power Modules (1 RPM n/ Switch Packs):Diagram1
A26 - DLB - Remote Power Modules (1 RPM n/ Switch Packs):Diagram2
A26 - DLB - Remote Power Modules (1 RPM n/ Switch Packs):Diagram3
A26 - DLB - Remote Power Modules (1 RPM w/ Switch Packs):Diagram1
A26 - DLB - Remote Power Modules (1 RPM w/ Switch Packs):Diagram2
A26 - DLB - Remote Power Modules (1 RPM w/ Switch Packs):Diagram3
A26 - DLB - Remote Power Modules (2 RPM n/ Switch Pack):Diagram1
A26 - DLB - Remote Power Modules (2 RPM n/ Switch Pack):Diagram2
A26 - DLB - Remote Power Modules (2 RPM n/ Switch Pack):Diagram3
A26 - DLB - Remote Power Modules (2 RPM n/ Switch Pack)Option2:Diagram1
A26 - DLB - Remote Power Modules (2 RPM w/ Switch Packs):Diagram1
A26 - DLB - Remote Power Modules (2 RPM w/ Switch Packs)Option2:Diagram1
A26 - DLB - Remote Power Modules (2 RPM w/ Switch Packs)Option2:Diagram2
A26 - DLB - Remote Power Modules (2 RPM w/ Switch Packs)Option2:Diagram3
A26 - DLB - Remote Power Modules (3 RPM w/ Swtich Packs):Diagram1
A26 - DLB - Remote Power Modules (3 RPM w/ Swtich Packs)Option2:Diagram1

A26 - DLB - Remote Power Modules (3 RPM w/ Swtich Packs)Option2:Diagram2
A26 - Drain Valve Heater:Diagram1
A26 - Drain Valve Heater:Diagram2
A26 - Drain Valve Heater:Diagram3
A26 - Drain Valve Heater:Diagram4
A26 - Drain Valve Heater:Diagram5
A26 - Drain Valve Heater:Diagram6
A26 - Drain Valve Heater:Diagram7
A26 - Drain Valve Heater:Diagram8
A26 - Drain Valve Heater:Diagram9
A26 - Drain Valve Heater:Diagram10
A26 - Driver Controlled Locking Differential FR and RR Axle (Dana w/ one switch):Diagram1
A26 - Driver Controlled Locking Differential FR and RR Axle (Meritor w/ one sw):Diagram1
A26 - Driver Controlled Locking Differential FR and RR Axles (Dana w/ two sw):Diagram1
A26 - Driver Controlled Locking Differential FR and RR Axles (Meritor w/ two sw):Diagram1
A26 - Driver Controlled Locking Differential RR Axle (Dana w/ one sw):Diagram1
A26 - Driver Controlled Locking Differential RR Axle (Meritor w/ one sw):Diagram1
A26 - Fuel Heater (Vehicle Powered)(Davco):Diagram1
A26 - Fuel Heater (Vehicle Powered)(Davco):Diagram2
A26 - Fuel Heater (Vehicle Powered)(Davco):Diagram3
A26 - Fuel Heater (Vehicle Powered)(Davco):Diagram4
A26 - Fuel Heater (Vehicle Powered)(Davco):Diagram5
A26 - Fuel Heater (Vehicle Powered)(Davco):Diagram6
A26 - Fuel Heater (Vehicle Powered)(Davco):Diagram7
A26 - Fuel Heater (Vehicle Powered)(Davco):Diagram8
A26 - Fuel Heater (Vehicle Powered)(Davco):Diagram9
A26 - Hill Start Aid (Bendix):Diagram1
A26 - Hill Start Aid (Bendix):Diagram2
A26 - License Plate Light (LED BOX LAMP Daisy Chain Tail Light):Diagram1
A26 - License Plate Light (LED BOX LAMP Tail Light):Diagram1
A26 - License Plate Light (Tail Light Single Assembly):Diagram1
A26 - License Plate Light (Tail Light Single Assembly)Option2:Diagram1
A26 - License Plate Light (Tail Light Single Assembly)Option3:Diagram1

A26 - License Plate Light (Tail Light Single Assy.) W/Less Power Module (W/08TKC, 08THM):Diagram1
A26 - Lift Axle Controls (Center Pedestal Controls f/ 1 lift axle):Diagram1
A26 - Lift Axle Controls (Center Pedestal Controls f/ 1 lift axle):Diagram2
A26 - Lift Axle Controls (Center Pedestal Controls f/ 3 lift axles):Diagram1
A26 - Power Lift Gate:Diagram1
A26 - Rear Light (LED BOX LAMP Tail Light) W/08TPS, 08TPR:Diagram1
A26 - Rear Light (Tail Light) W/08THK:Diagram1
A26 - Rear Light (Tail Light) W/08TKB:Diagram1
A26 - Rear Light (Tail Light) W/08TKJ:Diagram1
A26 - Rear Light (Tail Light) W/Less Power Module (W/08TKC, 08THM):Diagram1
A26 - Rear Light (Tail Light) W_Daisy Chain pair of Box Lamps W/08TRS:Diagram1
A26 - Rear Lights Stop - Daisy Chain:Diagram1
A26 - Rear Lights Stop - Dual Assembly:Diagram1
A26 - Rear Lights Stop - Single Assemby:Diagram1
A26 - Rear Lights Stop - Single Assemby Jumper Harness W/08TKC, 08THM:Diagram1
A26 - Rear Lights Stop - Single Assemby W/08TKJ:Diagram1
A26 - Remote Start/Stop:Diagram1
A26 - Rightside Air Dryer:Diagram1
A26 - Rightside Air Dryer:Diagram2
A26 - Rightside Air Dryer:Diagram3
A26 - Rightside Air Dryer:Diagram4
A26 - Rightside Air Dryer:Diagram5
A26 - Rightside Air Dryer:Diagram6
A26 - Rightside Air Dryer:Diagram7
A26 - Rightside Air Dryer:Diagram8
A26 - Rightside Air Dryer:Diagram9
A26 - Rightside Air Dryer:Diagram10
A26 - Rightside Air Dryer:Diagram11
A26 - Separate Rear Lights (Stop) W/08TVH:Diagram1
A26 - Stability Control (Bendix Straight Truck J1939 Driven Lamp):Diagram3
A26 - Stability Control (Bendix Straight Truck J1939 Driven Lamp):Diagram4
A26 - TEM Electric Trailer Brake Controller Activated Stop LT:Diagram1

A26 - TEM Electric Trailer Brake Controller Activated Stop LT (Option2):Diagram1
A26 - Traction Control (Bendix):Diagram1
A26 - Traction Control (Bendix):Diagram2
A26 - WORK LIGHT 1 BULB:Diagram1
A26 - WORK LIGHT 1 BULB:Diagram2
A26 - WORK LIGHT W Backup 1 Bulb:Diagram1
A26 - WORK LIGHT W Backup 1 Bulb:Diagram2
A26 - WORK LIGHT W BackUP 1 BULB:Diagram1
A26 - WORK LIGHT W BackUP 1 BULB:Diagram2
A26 - WORK LIGHT W RKE 1 BULB:Diagram1
A26 - WORK LIGHT W RKE 1 BULB:Diagram2
A26 - Work Light W/ Backup 1 Bulb W/Automatic W/ RKE:Diagram1-Combination1
A26 - Work Light W/ Backup 1 Bulb W/Automatic W/ RKE:Diagram1-Combination2
A26 - Work Light W/ Backup 1 Bulb W/Manual W/ RKE:Diagram1-Combination1
A26 - Work Light W/ Backup 1 Bulb W/Manual W/ RKE:Diagram1-Combination2
A26 - Work Lights LED W/ Sw Pack - Day Cab:Diagram1
A26 - Work Lights LED W/ Sw Pack - Day Cab:Diagram2
A26/B6.7/L9 - Axle Lift Controls:Diagram1
A26/B6.7/L9 - Axle Lift Controls:Diagram2
A26/B6.7/L9 - Axle Lift Controls:Diagram3
A26/B6.7/L9 - Axle Lift Controls:Diagram4
A26/B6.7/L9 - Body Builder Aux Power (In Cab, BOC, or EOF):Diagram1-Option 2 (Back-of-Cab, W/08HAB)
A26/B6.7/L9 - Body Builder Aux Power (In Cab, BOC, or EOF):Diagram1-Option 3 (End-of-Frame, W/08HAE)
A26/B6.7/L9 - Rear Suspension Pressure Monitoring (Auxiliary Gauge):Diagram1
A26/B6.7/L9 - Rear Suspension Pressure Monitoring (Auxiliary Gauge):Diagram2
A26/B6.7/L9 - Rear Suspension Pressure Monitoring (Virtual Gauge):Diagram1
A26/B6.7/L9 - Rear Suspension Pressure Monitoring (Virtual Gauge):Diagram2
B6.7 - DLB - Remote Power Modules (1 RPM n/ Switch Packs):Diagram1
B6.7 - DLB - Remote Power Modules (1 RPM n/ Switch Packs):Diagram2
B6.7 - DLB - Remote Power Modules (1 RPM n/ Switch Packs):Diagram3

B6.7 - ABS Private J1939:B6.7 - ABS Private J1939
B6.7 - Axle Loading (Weight) Rear:Diagram1
B6.7 - Axle Loading (Weight) Rear:Diagram2
B6.7 - Body Builder Lighting - Combined Turn and Stop Lamps (Automatic):Diagram2
B6.7 - Body Builder Lighting - Combined Turn and Stop Lamps (Automatic):Diagram3
B6.7 - Body Builder Lighting - Combined Turn and Stop Lamps (Manual):Diagram2
B6.7 - Body Builder Lighting - Combined Turn and Stop Lamps (Manual):Diagram3
B6.7 - Body Builder Lighting - Separate Turn and Stop Lamps (Blunt Cut) Option 1:Diagram1
B6.7 - Body Builder Lighting - Separate Turn and Stop Lamps (Blunt Cut) Option 2:Diagram1
B6.7 - CAN Layout:ABS Proprietary J1939
B6.7 - CAN Layout:Powertrain Standard J1939 (500Kbps)
B6.7 - Directional Signal (Turn) W/ Less Power Module Tail Board W/Hazard SW W/PLOW LIGHTS:Diagram1
B6.7 - Directional Signal (Turn) W/ Less Power Module Tail Board W/Hazard SW W/PLOW LIGHTS:Diagram2
B6.7 - Directional Signal (Turn) W/ Less Power Module Tail Board W/Hazard SW W/PLOW LIGHTS:Diagram3
B6.7 - Directional Signal (Turn) W/ Less Power Module Tail Board W/Hazard SW W/PLOW LIGHTS:Diagram4
B6.7 - Directional Signal (Turn) W/ DAISY CHAIN BOX LAMPS:Diagram1
B6.7 - Directional Signal (Turn) W/ DAISY CHAIN BOX LAMPS:Diagram2
B6.7 - Directional Signal (Turn) W/ Daisy Chain Box Lamps W/ Plow Lights:Diagram1
B6.7 - Directional Signal (Turn) W/ Daisy Chain Box Lamps W/ Plow Lights:Diagram2
B6.7 - Directional Signal (Turn) W/ Daisy Chain Box Lamps W/ Plow Lights:Diagram3
B6.7 - Directional Signal (Turn) W/ Daisy Chain Box Lamps W/ Plow Lights:Diagram4
B6.7 - Directional Signal (Turn) W/ LED BOX LAMPS:Diagram1
B6.7 - Directional Signal (Turn) W/ LED BOX LAMPS:Diagram2
B6.7 - Directional Signal (Turn) W/ LED BOX LAMPS W/Plow Lights:Diagram1
B6.7 - Directional Signal (Turn) W/ LED BOX LAMPS W/Plow Lights:Diagram2

B6.7 - Directional Signal (Turn) W/ LED BOX LAMPS W/Plow Lights:Diagram3
B6.7 - Directional Signal (Turn) W/ LED BOX LAMPS W/Plow Lights:Diagram4
B6.7 - Directional Signal (Turn) W/ Less Power Module Tail Board W/Hazard SW:Diagram1
B6.7 - Directional Signal (Turn) W/ Less Power Module Tail Board W/Hazard SW:Diagram2
B6.7 - Directional Signal (Turn) W/ Single Tail Board W/Hazard SW:Diagram1
B6.7 - Directional Signal (Turn) W/ Single Tail Board W/Hazard SW:Diagram2
B6.7 - Directional Signal (Turn) W/ Single Tail Board W/Plow Lights:Diagram1
B6.7 - Directional Signal (Turn) W/ Single Tail Board W/Plow Lights:Diagram2
B6.7 - Directional Signal (Turn) W/ Single Tail Board W/Plow Lights:Diagram3
B6.7 - Directional Signal (Turn) W/ Single Tail Board W/Plow Lights:Diagram4
B6.7 - DLB - Remote Power Modules (1 RPM w/ Switch Packs):Diagram1
B6.7 - DLB - Remote Power Modules (1 RPM w/ Switch Packs):Diagram2
B6.7 - DLB - Remote Power Modules (1 RPM w/ Switch Packs):Diagram3
B6.7 - DLB - Remote Power Modules (2 RPM n/ Switch Pack):Diagram1
B6.7 - DLB - Remote Power Modules (2 RPM n/ Switch Pack):Diagram2
B6.7 - DLB - Remote Power Modules (2 RPM n/ Switch Pack):Diagram3
B6.7 - DLB - Remote Power Modules (2 RPM n/ Switch Pack):Diagram4
B6.7 - DLB - Remote Power Modules (2 RPM w/ Switch Packs):Diagram1
B6.7 - DLB - Remote Power Modules (2 RPM w/ Switch Packs):Diagram2
B6.7 - DLB - Remote Power Modules (2 RPM w/ Switch Packs):Diagram3
B6.7 - DLB - Remote Power Modules (2 RPM w/ Switch Packs):Diagram4
B6.7 - Drain Valve Heater:Diagram1
B6.7 - Drain Valve Heater:Diagram2

B6.7 - Drain Valve Heater:Diagram3
B6.7 - Drain Valve Heater:Diagram4
B6.7 - Drain Valve Heater:Diagram5
B6.7 - Drain Valve Heater:Diagram6
B6.7 - Drain Valve Heater:Diagram7
B6.7 - Power Lift Gate:Diagram1
B6.7 - Traction Control (Bendix):Diagram1
B6.7 - Traction Control (Bendix):Diagram2
B6.7 - Windshield Washer Pump:Diagram1
B6.7 - Windshield Washer Pump & Low Fluid Sensor:Diagram1
B6.7 - WORK LIGHT 1 BULB:Diagram1
B6.7 - WORK LIGHT W BackUP 1 BULB:Diagram1
B6.7 - WORK LIGHT W RKE 1 BULB:Diagram1
B6.7 - Work Lights LED W/ Sw Pack - Day Cab:Diagram1
L9 - 26 inch Fuel Tank:Diagram1
L9 - 26 inch Fuel Tank:Diagram2
L9 - 26 inch Fuel Tank:Diagram3
L9 - 26 inch Fuel Tank:Diagram4
L9 - 26 inch Fuel Tank:Diagram5
L9 - 26 inch Fuel Tank:Diagram6
L9 - 26 inch Fuel Tank - Secondary:Diagram1
L9 - 26 inch Fuel Tank - Secondary:Diagram2
L9 - 26 inch Fuel Tank - Secondary:Diagram3
L9 - 26 inch Fuel Tank - Secondary:Diagram4
L9 - 26 inch Fuel Tank - Secondary:Diagram5
L9 - 26 inch Fuel Tank - Secondary:Diagram6
L9 - 26 inch Fuel Tank - Secondary:Diagram7
L9 - ABS Private J1939:L9 - ABS Private J1939
L9 - Antilock Brake System (ABS) BENDIX 4 Channel Implemenation:Diagram1
L9 - Antilock Brake System (ABS) Bendix 6 Channel Implementation:Diagram1
L9 - Antilock Brake System (ABS) Bendix 6 Channel Implementation:Diagram2
L9 - Antilock Brake System (ABS) Bendix 6 Channel Implementation:Diagram3
L9 - Antilock Brake System (ABS) Bendix 6 Channel Implementation:Diagram4
L9 - Antilock Brake System (ABS) Bendix 6 Channel Implementation:Diagram5
L9 - Antilock Brake System (ABS) Bendix 6 Channel Implementation:Diagram6
L9 - Antilock Brake System (ABS) Bendix 6 Channel Implementation:Diagram7

L9 - Antilock Brake System (ABS) Bendix 6 Channel Implementation:Diagram8
L9 - Antilock Brake System (ABS) Bendix 6 Channel Implementation:Diagram9
L9 - Antilock Brake System (ABS) Wabco 4 Channel Implementation:Diagram1
L9 - Axle Lift Controls Option 2:Diagram1
L9 - Axle Lift Controls Option 2:Diagram2
L9 - Axle Temperature Monitoring (Tandem Rear Aux Gauge) Option 1:Diagram1
L9 - Axle Temperature Monitoring (Tandem Rear Aux Gauge) Option 2:Diagram1
L9 - Axle Temperature Monitoring (Tandem Rear Virtual Gauge) Option 1:Diagram1
L9 - Axle Temperature Monitoring (Tandem Rear Virtual Gauge) Option 2:Diagram1
L9 - Backup Light (Dual Daisy Reverse Light)Allison/ZF Trans 3K/4K:Diagram1
L9 - Backup Light (Dual Daisy Reverse Light)Allison/ZF Trans 3K/4K:Diagram2
L9 - Backup Light (Single Reverse Light) Allison 3K/4K Option 1:Diagram1
L9 - Backup Light (Single Reverse Light) Allison 3K/4K Option 1:Diagram2
L9 - Backup Light (Single Reverse Light) Allison 3K/4K Option 2:Diagram1
L9 - Backup Light (Single Reverse Light) Allison 3K/4K Option 2:Diagram2
L9 - Backup Light (Single Reverse Light) Allison 3K/4K Option 3:Diagram1
L9 - Backup Light (Single Reverse Light) Allison 3K/4K Option 3:Diagram2
L9 - Backup Light (Single Reverse Light)Allison:Diagram1
L9 - Backup Light (Single Reverse Light)Allison:Diagram2
L9 - Backup Lights (Dual Daisy Reverse Light) Eaton/Manual Trans:Diagram1
L9 - Backup Lights (Dual Daisy Reverse Light) Eaton/Manual Trans:Diagram2
L9 - Backup Lights (Dual Reverse Light) Eaton/Manual Trans:Diagram1
L9 - Backup Lights (Dual Reverse Light) Eaton/Manual Trans:Diagram2
L9 - Backup Lights (Single Reverse Light) Eaton/Manual Trans Option 1:Diagram1

L9 - Backup Lights (Single Reverse Light) Eaton/Manual Trans Option 1:Diagram2
L9 - Backup Lights (Single Reverse Light) Eaton/Manual Trans Option 2:Diagram1
L9 - Backup Lights (Single Reverse Light) Eaton/Manual Trans Option 2:Diagram2
L9 - Backup Lights (Single Reverse Light) Eaton/Manual Trans Option 3:Diagram1
L9 - Backup Lights (Single Reverse Light) Eaton/Manual Trans Option 3:Diagram2
L9 - Backup Lights (Single Reverse Light) Eaton/Manual Trans Option 4:Diagram1
L9 - Backup Lights (Single Reverse Light) Eaton/Manual Trans Option 4:Diagram2
L9 - Body Builder Lighting - Combined Turn and Stop Lamps (Manual):Diagram2
L9 - Body Builder Lighting - Combined Turn and Stop Lamps (Manual):Diagram3
L9 - Body Builder Lighting - Combined Turn and Stop Lamps (Manual):Diagram5
L9 - Body Builder Lighting - Combined Turn and Stop Lamps (Manual):Diagram6
L9 - CAN Layout:ABS Proprietary J1939
L9 - Directional Signal (Turn) W/ Less Power Module Tail Board W/Hazard SW W/PLOW LIGHTS:Diagram1
L9 - Directional Signal (Turn) W/ Less Power Module Tail Board W/Hazard SW W/PLOW LIGHTS:Diagram2
L9 - Directional Signal (Turn) W/ Less Power Module Tail Board W/Hazard SW W/PLOW LIGHTS:Diagram3
L9 - Directional Signal (Turn) W/ Less Power Module Tail Board W/Hazard SW W/PLOW LIGHTS:Diagram4
L9 - Directional Signal (Turn) W/ DAISY CHAIN BOX LAMPS:Diagram1
L9 - Directional Signal (Turn) W/ DAISY CHAIN BOX LAMPS:Diagram2
L9 - Directional Signal (Turn) W/ Daisy Chain Box Lamps W/ Plow Lights:Diagram1
L9 - Directional Signal (Turn) W/ Daisy Chain Box Lamps W/ Plow Lights:Diagram2
L9 - Directional Signal (Turn) W/ Daisy Chain Box Lamps W/ Plow Lights:Diagram3
L9 - Directional Signal (Turn) W/ Daisy Chain Box Lamps W/ Plow Lights:Diagram4
L9 - Directional Signal (Turn) W/ LED BOX LAMPS:Diagram1

L9 - Directional Signal (Turn) W/ LED BOX LAMPS:Diagram2
L9 - Directional Signal (Turn) W/ LED BOX LAMPS W/Plow Lights:Diagram1
L9 - Directional Signal (Turn) W/ LED BOX LAMPS W/Plow Lights:Diagram2
L9 - Directional Signal (Turn) W/ LED BOX LAMPS W/Plow Lights:Diagram3
L9 - Directional Signal (Turn) W/ LED BOX LAMPS W/Plow Lights:Diagram4
L9 - Directional Signal (Turn) W/ Less Power Module Tail Board W/Hazard SW:Diagram1
L9 - Directional Signal (Turn) W/ Less Power Module Tail Board W/Hazard SW:Diagram2
L9 - Directional Signal (Turn) W/ Single Tail Board W/Hazard SW:Diagram1
L9 - Directional Signal (Turn) W/ Single Tail Board W/Hazard SW:Diagram2
L9 - Directional Signal (Turn) W/ Single Tail Board W/Plow Lights:Diagram1
L9 - Directional Signal (Turn) W/ Single Tail Board W/Plow Lights:Diagram2
L9 - Directional Signal (Turn) W/ Single Tail Board W/Plow Lights:Diagram3
L9 - Directional Signal (Turn) W/ Single Tail Board W/Plow Lights:Diagram4
L9 - DLB - Remote Power Modules (1 RPM n/ Switch Packs):Diagram1
L9 - DLB - Remote Power Modules (1 RPM n/ Switch Packs):Diagram1-Combination3
L9 - DLB - Remote Power Modules (1 RPM n/ Switch Packs):Diagram2
L9 - DLB - Remote Power Modules (1 RPM w/ Switch Packs):Diagram1
L9 - DLB - Remote Power Modules (1 RPM w/ Switch Packs):Diagram2
L9 - DLB - Remote Power Modules (1 RPM w/ Switch Packs):Diagram3
L9 - DLB - Remote Power Modules (2 RPM n/ Switch Pack):Diagram1
L9 - DLB - Remote Power Modules (2 RPM n/ Switch Pack):Diagram2
L9 - DLB - Remote Power Modules (2 RPM n/ Switch Pack):Diagram3

L9 - DLB - Remote Power Modules (2 RPM n/ Switch Pack):Diagram4
L9 - DLB - Remote Power Modules (2 RPM w/ Switch Packs):Diagram1
L9 - DLB - Remote Power Modules (2 RPM w/ Switch Packs):Diagram2
L9 - DLB - Remote Power Modules (2 RPM w/ Switch Packs):Diagram3
L9 - DLB - Remote Power Modules (2 RPM w/ Switch Packs):Diagram4
L9 - Drain Valve Heater:Diagram1
L9 - Drain Valve Heater:Diagram2
L9 - Drain Valve Heater:Diagram3
L9 - Drain Valve Heater:Diagram4
L9 - Drain Valve Heater:Diagram5
L9 - Drain Valve Heater:Diagram7
L9 - Drain Valve Heater:Diagram8
L9 - Drain Valve Heater:Diagram9
L9 - Drain Valve Heater:Diagram10
L9 - Hill Start Aid (Bendix):Diagram1
L9 - Hill Start Aid (Bendix):Diagram2
L9 - Lift Axle Controls (Center Pedestal Controls f/ 1 lift axle):Diagram1
L9 - Lift Axle Controls (Center Pedestal Controls f/ 1 lift axle):Diagram2
L9 - Lift Axle Controls (Center Pedestal Controls f/ 2 Lift Axles):Diagram1
L9 - Lift Axle Controls (Center Pedestal Controls f/ 3 lift axles):Diagram1
L9 - Power Lift Gate:Diagram1
L9 - Rear Light (LED BOX LAMP Tail Light):Diagram1
L9 - Rear Light (Tail Light):Diagram1
L9 - Rear Light (Tail Light) W Daisy Chain pair of Box Lamps:Diagram1
L9 - Rear Lights Stop - Dual Assembly:Diagram1
L9 - Rear Lights Stop - Single Assemby:Diagram1
L9 - RIGHTSIDE AIR DRYER:Diagram1
L9 - RIGHTSIDE AIR DRYER:Diagram2
L9 - RIGHTSIDE AIR DRYER:Diagram3
L9 - RIGHTSIDE AIR DRYER:Diagram4
L9 - RIGHTSIDE AIR DRYER:Diagram5
L9 - RIGHTSIDE AIR DRYER:Diagram6
L9 - RIGHTSIDE AIR DRYER:Diagram7
L9 - RIGHTSIDE AIR DRYER:Diagram8

L9 - RIGHTSIDE AIR DRYER:Diagram9
L9 - RIGHTSIDE AIR DRYER:Diagram10
L9 - RIGHTSIDE AIR DRYER:Diagram11
L9 - Traction Control (Bendix):Diagram1
L9 - Windshield Washer Pump & Low Fluid Sensor:Diagram1
L9 - Windshield Washer Pump & Low Fluid Sensor:Diagram2
L9 - WORK LIGHT 1 BULB:Diagram1
L9 - WORK LIGHT 1 BULB:Diagram2
L9 - WORK LIGHT W BackUP 1 BULB Option 1:Diagram1
L9 - WORK LIGHT W BackUP 1 BULB Option 1:Diagram2
L9 - WORK LIGHT W BackUP 1 BULB Option 1:Diagram3
L9 - WORK LIGHT W BackUP 1 BULB Option 1:Diagram4
L9 - WORK LIGHT W BackUP 1 BULB Option 2:Diagram1
L9 - WORK LIGHT W BackUP 1 BULB Option 2:Diagram2
L9 - WORK LIGHT W RKE 1 BULB:Diagram1
L9 - WORK LIGHT W RKE 1 BULB:Diagram2
L9 - Work Lights LED W/ Sw Pack - Day Cab:Diagram1
L9 - Work Lights LED W/ Sw Pack - Day Cab:Diagram2

Mates 1701F

Name	Terminal Part Number	V-Min	Name	Wire Part Number	Wire CSA	Wire Spec	Wire Material description	Wire Color Description	Wire Length	End2 Terminal Part Number	End2 Pin Name	End2 Connect or
1	-	-	ZA71BK	3510318 R1	1.16	16.0	Thin Wall XLPE Primary Cable	ORANGE	2855.0	-	44	1703M
1	-	-	ZG71BA	3510318 R1	1.16	16.0	Thin Wall XLPE Primary Cable	ORANGE	630.0	-	X	-
1	-	-	ZK71BA	3510318 R1	1.16	16.0	Thin Wall XLPE Primary Cable	ORANGE	175.0	-	X	-
1	-	-	ZA71A	3510318 R1	1.16	16.0	Thin Wall XLPE Primary Cable	ORANGE	805.0	-	-	-

Name	Terminal Part Number	V-Min	Name	Wire Part Number	Wire CSA	Wire Spec	Wire Material description	Wire Color Description	Wire Length	End2 Terminal Part Number	End2 Pin Name	End2 Connector
1	-	-	ZE71AD	3510318 R1	1.16	16.0	Thin Wall XLPE Primary Cable	ORANGE	805.0	-	-	-
1	-	-	ZC71BK	3510318 R1	1.16	16.0	Thin Wall XLPE Primary Cable	ORANGE	805.0	-	-	-
1	-	-	ZC71BA	3510318 R1	1.16	16.0	Thin Wall XLPE Primary Cable	ORANGE	2410.0	-	R2 - 87	1012
2	-	-	YM56A	3510319 R1	1.91	14.0	Thin Wall XLPE Primary Cable	ORANGE	720.0	-	D	J1-1603
2	-	-	YL57	3510318 R1	1.16	16.0	Thin Wall XLPE Primary Cable	ORANGE	1170.0	-	-	-
2	-	-	YN56A	3510319 R1	1.91	14.0	Thin Wall XLPE Primary Cable	ORANGE	720.0	-	D	J1-1603
2	-	-	YL56	3510318 R1	1.16	16.0	Thin Wall XLPE Primary Cable	ORANGE	1170.0	-	-	-
3	-	-	YM57A	3510319 R1	1.91	14.0	Thin Wall XLPE Primary Cable	ORANGE	720.0	-	M	J1-1603

Name	Terminal Part Number	V-Min	Name	Wire Part Number	Wire CSA	Wire Spec	Wire Material description	Wire Color Description	Wire Length	End2 Terminal Part Number	End2 Pin Name	End2 Connector
3	-	-	YN57A	3510319 R1	1.91	14.0	Thin Wall XLPE Primary Cable	ORANGE	720.0	-	M	J1-1603
3	-	-	YL56	3510318 R1	1.16	16.0	Thin Wall XLPE Primary Cable	ORANGE	1170.0	-	-	-
3	-	-	YL57	3510318 R1	1.16	16.0	Thin Wall XLPE Primary Cable	ORANGE	1170.0	-	-	-
4	-	-	ZN68	3510306 R1	1.16	16.0	Thin Wall XLPE Primary Cable	BROWN	1160.0	-	-	-
4	-	-	ZQ68A	3510306 R1	1.16	16.0	Thin Wall XLPE Primary Cable	BROWN	1310.0	-	-	-
4	-	-	ZP68A	3510306 R1	1.16	16.0	Thin Wall XLPE Primary Cable	BROWN	840.0	-	-	-
5	-	-	VG56T	3510339 R1	4.81	10.0	Thin Wall XLPE Primary Cable	YELLOW 2	720.0	-	B	J1-1603
6	-	-	VG57T	3510303 R1	4.81	10.0	Thin Wall XLPE Primary Cable	LIGHT GREEN	720.0	-	A	J1-1603

Name	Terminal Part Number	V-Min	Name	Wire Part Number	Wire CSA	Wire Spec	Wire Material description	Wire Color Description	Wire Length	End2 Terminal Part Number	End2 Pin Name	End2 Connector
7	-	-	VP58T	3510308 R1	3.01	12.0	Thin Wall XLPE Primary Cable	BROWN	300.0	-	X	-
7	-	-	VL58TA	3510308 R1	3.01	12.0	Thin Wall XLPE Primary Cable	BROWN	300.0	-	X	-
7	-	-	VG58T	3510308 R1	3.01	12.0	Thin Wall XLPE Primary Cable	BROWN	755.0	-	F	J2-1604
8	-	-	VG68T	3510308 R1	3.01	12.0	Thin Wall XLPE Primary Cable	BROWN	755.0	-	D	J2-1604
8	-	-	VR68TA	3510308 R1	3.01	12.0	Thin Wall XLPE Primary Cable	BROWN	270.0	-	X	-
8	-	-	VP68T	3510308 R1	3.01	12.0	Thin Wall XLPE Primary Cable	BROWN	270.0	-	X	-
9	-	-	TK70T	3510320 R1	3.01	12.0	Thin Wall XLPE Primary Cable	ORANGE	2315.0	-	R1 - 87	1011
10	-	-	TJ94T	3510357 R1	4.81	10.0	Thin Wall XLPE Primary Cable	DARK BLUE	1300.0	-	C	1923

Name	Terminal Part Number	V-Min	Name	Wire Part Number	Wire CSA	Wire Spec	Wire Material description	Wire Color Description	Wire Length	End2 Terminal Part Number	End2 Pin Name	End2 Connector
12	-	-	YV56BB	3510336 R1	1.16	16.0	Thin Wall XLPE Primary Cable	YELLOW 2	1170.0	-	-	-
13	-	-	KA9	3510311 R1	0.79	18.0	Thin Wall XLPE Primary Cable	GREY	770.0	-	X	-
14	-	-	XB94BM	3510312 R1	1.16	16.0	Thin Wall XLPE Primary Cable	GREY	2550.0	-	5	1400
14	-	-	XE94WL	3510311 R1	0.79	18.0	Thin Wall XLPE Primary Cable	GREY	2620.0	-	11	1421
15	-	-	XB94BN	3510312 R1	1.16	16.0	Thin Wall XLPE Primary Cable	GREY	2550.0	-	4	1400
15	-	-	XE94WM	3510311 R1	0.79	18.0	Thin Wall XLPE Primary Cable	GREY	2620.0	-	14	1421
16	-	-	XA94BE	3510312 R1	1.16	16.0	Thin Wall XLPE Primary Cable	GREY	2580.0	-	15	1401
16	-	-	XE94WW	2643782 R1	1.91	14.0	Std. Wall XLPE Primary Cable	GREY	2620.0	-	8	1421

Name	Terminal Part Number	V-Min	Name	Wire Part Number	Wire CSA	Wire Spec	Wire Material description	Wire Color Description	Wire Length	End2 Terminal Part Number	End2 Pin Name	End2 Connector
17	-	-	XA94BD	3510312 R1	1.16	16.0	Thin Wall XLPE Primary Cable	GREY	2580.0	-	18	1401
17	-	-	XE94WU	3510313 R1	1.91	14.0	Thin Wall XLPE Primary Cable	GREY	2620.0	-	9	1421
18	-	-	XA94BH	3510312 R1	1.16	16.0	Thin Wall XLPE Primary Cable	GREY	2550.0	-	10	1400
18	-	-	XE94WN	2643782 R1	1.91	14.0	Std. Wall XLPE Primary Cable	GREY	2620.0	-	5	1421
19	-	-	XA94BF	3510312 R1	1.16	16.0	Thin Wall XLPE Primary Cable	GREY	2550.0	-	11	1400
19	-	-	XE94WR	2643782 R1	1.91	14.0	Std. Wall XLPE Primary Cable	GREY	2620.0	-	2	1421
20	-	-	XA94BL	3510312 R1	1.16	16.0	Thin Wall XLPE Primary Cable	GREY	2580.0	-	10	1401
21	-	-	XA94BJ	3510312 R1	1.16	16.0	Thin Wall XLPE Primary Cable	GREY	2580.0	-	13	1401

Name	Terminal Part Number	V-Min	Name	Wire Part Number	Wire CSA	Wire Spec	Wire Material description	Wire Color Description	Wire Length	End2 Terminal Part Number	End2 Pin Name	End2 Connector
22	-	-	XA94BK	3510312 R1	1.16	16.0	Thin Wall XLPE Primary Cable	GREY	2580.0	-	9	1401
22	-	-	XE94WS	3510311 R1	0.79	18.0	Thin Wall XLPE Primary Cable	GREY	2620.0	-	17	1421
23	-	-	XA94BA	3510312 R1	1.16	16.0	Thin Wall XLPE Primary Cable	GREY	2580.0	-	17	1401
23	-	-	XE94WT	3510311 R1	0.79	18.0	Thin Wall XLPE Primary Cable	GREY	2620.0	-	18	1421
24	-	-	XA94BB	3510312 R1	1.16	16.0	Thin Wall XLPE Primary Cable	GREY	2580.0	-	12	1401
24	-	-	XE94G7	2643689 R1	1.91	14.0	Std. Wall XLPE Primary Cable	WHITE	415.0	-	-	-
24	-	-	XE94G7	2643689 R1	1.91	14.0	Std. Wall XLPE Primary Cable	WHITE	415.0	-	X	-
25	-	-	XA94BC	3510312 R1	1.16	16.0	Thin Wall XLPE Primary Cable	GREY	2580.0	-	16	1401

Name	Terminal Part Number	V-Min	Name	Wire Part Number	Wire CSA	Wire Spec	Wire Material description	Wire Color Description	Wire Length	End2 Terminal Part Number	End2 Pin Name	End2 Connector
25	-	-	XE94G6	2643689 R1	1.91	14.0	Std. Wall XLPE Primary Cable	WHITE	415.0	-	-	-
25	-	-	XE94G6	2643689 R1	1.91	14.0	Std. Wall XLPE Primary Cable	WHITE	415.0	-	X	-
27	-	-	AA36B	3510329 R1	0.79	18.0	Thin Wall XLPE Primary Cable	TAN	1060.0	-	B8	J3-1600
29	-	-	AA36A	3510329 R1	0.79	18.0	Thin Wall XLPE Primary Cable	TAN	1060.0	-	B9	J3-1600
31	-	-	KH39	3510312 R1	1.16	16.0	Thin Wall XLPE Primary Cable	GREY	2525.0	-	-	-
32	-	-	LS59A	3510311 R1	0.79	18.0	Thin Wall XLPE Primary Cable	GREY	1080.0	-	E12	J5-1602
33	-	-	LT59C	3510311 R1	0.79	18.0	Thin Wall XLPE Primary Cable	GREY	745.0	-	F10	J4-1601
34	-	-	LT59D	3510311 R1	0.79	18.0	Thin Wall XLPE Primary Cable	GREY	745.0	-	E12	J4-1601

Name	Terminal Part Number	V-Min	Name	Wire Part Number	Wire CSA	Wire Spec	Wire Material description	Wire Color Description	Wire Length	End2 Terminal Part Number	End2 Pin Name	End2 Connector
35	-	-	LU59E	3510311 R1	0.79	18.0	Thin Wall XLPE Primary Cable	GREY	745.0	-	F8	J4-1601
36	-	-	LY59G	3510311 R1	0.79	18.0	Thin Wall XLPE Primary Cable	GREY	745.0	-	E13	J4-1601
37	-	-	LY59H	3510311 R1	0.79	18.0	Thin Wall XLPE Primary Cable	GREY	745.0	-	F4	J4-1601
38	-	-	LY59J	3510311 R1	0.79	18.0	Thin Wall XLPE Primary Cable	GREY	745.0	-	E9	J4-1601
39	-	-	LY59K	3510311 R1	0.79	18.0	Thin Wall XLPE Primary Cable	GREY	745.0	-	F5	J4-1601
40	-	-	KH39A	3510312 R1	1.16	16.0	Thin Wall XLPE Primary Cable	GREY	2525.0	-	-	-
41	-	-	HE87EA	3510311 R1	0.79	18.0	Thin Wall XLPE Primary Cable	GREY	1060.0	-	A8	J3-1600
42	-	-	YX56BC	3510336 R1	1.16	16.0	Thin Wall XLPE Primary Cable	YELLOW 2	805.0	-	-	-

Name	Terminal Part Number	V-Min	Name	Wire Part Number	Wire CSA	Wire Spec	Wire Material description	Wire Color Description	Wire Length	End2 Terminal Part Number	End2 Pin Name	End2 Connector
43	-	-	LF104D	3510353 R1	0.79	18.0	Thin Wall XLPE Primary Cable	DARK BLUE	1080.0	-	F8	J5-1602
43	-	-	NN32B	3510329 R1	0.79	18.0	Thin Wall XLPE Primary Cable	TAN	1060.0	-	B10	J3-1600
44	-	-	NM32A	2643676 R1	0.79	18.0	Std. Wall XLPE Primary Cable	TAN	1060.0	-	B11	J3-1600
45	-	-	KN49	3510311 R1	0.79	18.0	Thin Wall XLPE Primary Cable	GREY	745.0	-	A3	J7-1607
49	-	-	XL94SJ	2643680 R1	1.16	16.0	Std. Wall XLPE Primary Cable	GREY	2520.0	-	5	1402
50	-	-	KN49A	3510311 R1	0.79	18.0	Thin Wall XLPE Primary Cable	GREY	745.0	-	A4	J7-1607
51	-	-	HN20	3510300 R1	1.16	16.0	Thin Wall XLPE Primary Cable	LIGHT GREEN	2305.0	-	-	-
54	-	-	WIRE239184	-	0.0	-	-	-	0.0	-	C	1410
54	-	-	XL94SA	3510310 R1	0.53	20.0	Thin Wall XLPE Primary Cable	GREY	1405.0	-	-	-

Name	Terminal Part Number	V-Min	Name	Wire Part Number	Wire CSA	Wire Spec	Wire Material description	Wire Color Description	Wire Length	End2 Terminal Part Number	End2 Pin Name	End2 Connector
55	-	-	WIRE239185	-	0.0	-	-	-	0.0	-	F	1410
55	-	-	XL94SC	3510310R1	0.53	20.0	Thin Wall XLPE Primary Cable	GREY	1405.0	-	-	-
55	-	-	ME61B	3510311R1	0.79	18.0	Thin Wall XLPE Primary Cable	GREY	1080.0	-	F7	J5-1602
56	-	-	WIRE239186	-	0.0	-	-	-	0.0	-	J	1410
56	-	-	ME106B	3510311R1	0.79	18.0	Thin Wall XLPE Primary Cable	GREY	1080.0	-	E8	J5-1602
57	-	-	WIRE239187	-	0.0	-	-	-	0.0	-	M	1410
57	-	-	ME110B	3510311R1	0.79	18.0	Thin Wall XLPE Primary Cable	GREY	990.0	-	-	-
58	-	-	HE87D	3510311R1	0.79	18.0	Thin Wall XLPE Primary Cable	GREY	540.0	-	X	-
59	-	-	HE87MB	3510311R1	0.79	18.0	Thin Wall XLPE Primary Cable	GREY	2525.0	-	-	-
60	-	-	KS59MB	3510311R1	0.79	18.0	Thin Wall XLPE Primary Cable	GREY	2180.0	-	1	1023A

Name	Terminal Part Number	V-Min	Name	Wire Part Number	Wire CSA	Wire Spec	Wire Material description	Wire Color Description	Wire Length	End2 Terminal Part Number	End2 Pin Name	End2 Connector
60	-	-	KT59MB	3510311 R1	0.79	18.0	Thin Wall XLPE Primary Cable	GREY	2180.0	-	1	1023A
61	-	-	KS59NB	3510311 R1	0.79	18.0	Thin Wall XLPE Primary Cable	GREY	2180.0	-	1	1023B
61	-	-	XQ94AA	2643782 R1	1.91	14.0	Std. Wall XLPE Primary Cable	GREY	2520.0	-	2	1402
61	-	-	WIRE735244	-	0.0	-	-	-	0.0	-	PIN1	-
62	-	-	WIRE735245	-	0.0	-	-	-	0.0	-	PIN1	-
63	-	-	YX57BB	3510300 R1	1.16	16.0	Thin Wall XLPE Primary Cable	LIGHT GREEN	1170.0	-	-	-
64	-	-	YV57BC	3510300 R1	1.16	16.0	Thin Wall XLPE Primary Cable	LIGHT GREEN	805.0	-	-	-
65	-	-	XP94AB	2643680 R1	1.16	16.0	Std. Wall XLPE Primary Cable	GREY	750.0	-	X	-
65	-	-	XN94AB	2643782 R1	1.91	14.0	Std. Wall XLPE Primary Cable	GREY	2520.0	-	3	1402

Name	Terminal Part Number	V-Min	Name	Wire Part Number	Wire CSA	Wire Spec	Wire Material description	Wire Color Description	Wire Length	End2 Terminal Part Number	End2 Pin Name	End2 Connector
66	-	-	KP112	3510312 R1	1.16	16.0	Thin Wall XLPE Primary Cable	GREY	720.0	-	J	J1-1603
67	-	-	KM18D	3510312 R1	1.16	16.0	Thin Wall XLPE Primary Cable	GREY	1180.0	-	X	-
68	-	-	ZT65	3510318 R1	1.16	16.0	Thin Wall XLPE Primary Cable	ORANGE	720.0	-	G	J1-1603
69	-	-	XM94SK	3510311 R1	0.79	18.0	Thin Wall XLPE Primary Cable	GREY	2520.0	-	3	1402
70	-	-	KQ71N	3510318 R1	1.16	16.0	Thin Wall XLPE Primary Cable	ORANGE	805.0	-	-	-
71	-	-	VL68TB	3510308 R1	3.01	12.0	Thin Wall XLPE Primary Cable	BROWN	270.0	-	X	-
71	-	-	VP68BB	3510308 R1	3.01	12.0	Thin Wall XLPE Primary Cable	BROWN	270.0	-	X	-
71	-	-	VR68TB	3510306 R1	1.16	16.0	Thin Wall XLPE Primary Cable	BROWN	270.0	-	X	-

Name	Terminal Part Number	V-Min	Name	Wire Part Number	Wire CSA	Wire Spec	Wire Material description	Wire Color Description	Wire Length	End2 Terminal Part Number	End2 Pin Name	End2 Connect or
71	-	-	ZP68TB	3510306 R1	1.16	16.0	Thin Wall XLPE Primary Cable	BROWN	840.0	-	-	-
72	-	-	VS70TA	3510320 R1	3.01	12.0	Thin Wall XLPE Primary Cable	ORANGE	2410.0	-	R5 - 87	1012
73	-	-	ZG71BB	3510318 R1	1.16	16.0	Thin Wall XLPE Primary Cable	ORANGE	630.0	-	X	-
74	-	-	VP58BB	3510308 R1	3.01	12.0	Thin Wall XLPE Primary Cable	BROWN	300.0	-	X	-
74	-	-	VL58TB	3510308 R1	3.01	12.0	Thin Wall XLPE Primary Cable	BROWN	300.0	-	X	-
74	-	-	VR58TB	3510308 R1	3.01	12.0	Thin Wall XLPE Primary Cable	BROWN	300.0	-	X	-
75	-	-	VP12BB	3510342 R1	1.16	16.0	Thin Wall XLPE Primary Cable	LIGHT BLUE	2410.0	-	R4 - 87	1012

Connector Name	1701
Part Number	3595623C1
Instances	A26 - Body Builder Lighting - BOC, 08HBX (Automatic):Diagram1 A26 - Body Builder Lighting - BOC, 08HBX (Manual):Diagram1 A26 - Body J1939 (250kbps):A26 - Body J1939 (250Kbps) A26 - CAN Layout:Body Standard J1939 (250Kbps) B6.7 - 26 inch Fuel Tank:Diagram1 B6.7 - 26 inch Fuel Tank:Diagram2 B6.7 - 26 inch Fuel Tank:Diagram3 B6.7 - 26 inch Fuel Tank - Secondary:Diagram1 B6.7 - Antilock Brake System (ABS) BENDIX 4 Channel Implemenation:Diagram1 B6.7 - Antilock Brake System (ABS) BENDIX 4 Channel Implemenation:Diagram2 B6.7 - Antilock Brake System (ABS) BENDIX 4 Channel Implemenation:Diagram3 B6.7 - Auxiliary Air Solenoids (1 Normally Closed) Option 1:Diagram1 B6.7 - Auxiliary Air Solenoids (1 Normally Closed) Option 2:Diagram1 B6.7 - Auxiliary Air Solenoids (1 Normally Closed) Option 2:Diagram2 B6.7 - Auxiliary Air Solenoids (1 Normally Closed) Option 2:Diagram3 B6.7 - Auxiliary Air Solenoids (1 Normally Closed) Option 3:Diagram1 B6.7 - Auxiliary Air Solenoids (1 Normally Closed) Option 3:Diagram2 B6.7 - Auxiliary Air Solenoids (1 Normally Closed) Option 3:Diagram3 B6.7 - Axle Temperature Monitoring (Single Rear Aux Gauge):Diagram1 B6.7 - Axle Temperature Monitoring (Single Rear Virtual Gauge):Diagram1 B6.7 - Back-Up Alarm (Automatic) W/ Tailboard:Diagram1 B6.7 - Back-Up Alarm (Automatic) W/O Tailboard:Diagram1 B6.7 - Back-Up Alarm (Manual) W/ Tailboard:Diagram1 B6.7 - Back-Up Alarm (Manual) W/O Tailboard:Diagram1 B6.7 - Backup Light (Dual Daisy Reverse LT)Allison/ZF Trans 1K/2K:Diagram1 B6.7 - Backup Light (Dual Daisy Reverse LT)Allison/ZF Trans 3K/4K:Diagram1

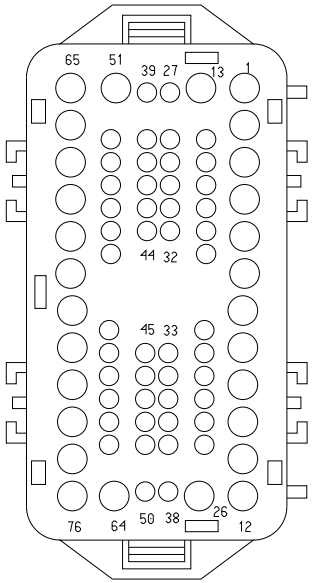

B6.7 - Backup Light (Dual Daisy Reverse LT)Allison/ZF Trans 3K/4K:Diagram2
B6.7 - Backup Light (Dual Reverse Light)Allison/ZF Trans 1K/2K:Diagram1
B6.7 - Backup Light (Dual Reverse Light)Allison/ZF Trans 3K/4K:Diagram1
B6.7 - Backup Light (Dual Reverse Light)Allison/ZF Trans 3K/4K:Diagram2
B6.7 - Backup Light (Single Reverse Light) Allison 1K/2K Option 1:Diagram1
B6.7 - Backup Light (Single Reverse Light) Allison 1K/2K Option 2:Diagram1
B6.7 - Backup Light (Single Reverse Light) Allison 1K/2K Option 3:Diagram1
B6.7 - Backup Light (Single Reverse Light) Allison 3K/4K Option 1:Diagram1
B6.7 - Backup Light (Single Reverse Light) Allison 3K/4K Option 1:Diagram2
B6.7 - Backup Light (Single Reverse Light) Allison 3K/4K Option 2:Diagram1
B6.7 - Backup Light (Single Reverse Light) Allison 3K/4K Option 2:Diagram2
B6.7 - Backup Light (Single Reverse Light) Allison 3K/4K Option 3:Diagram1
B6.7 - Backup Light (Single Reverse Light) Allison 3K/4K Option 3:Diagram2
B6.7 - Backup Lights (Dual Daisy Reverse Light) Eaton/Manual Trans:Diagram1
B6.7 - Backup Lights (Dual Reverse Light) Eaton/Manual Trans:Diagram1
B6.7 - Backup Lights (Single Reverse Light) Eaton/Manual Trans:Diagram1
B6.7 - Backup Lights (Single Reverse Lights) Eaton/Manual Trans Option 1:Diagram1
B6.7 - Backup Lights (Single Reverse Lights) Eaton/Manual Trans Option 2:Diagram1
B6.7 - Body J1939 (250kbps):B6.7 - Body J1939 (250Kbps)
B6.7 - CAN Layout:Body Standard J1939 (250Kbps)
B6.7 - DLB - Remote Power Module (3 RPM n/Switch Pack):Diagram1
B6.7 - DLB - Remote Power Modules (3 RPM w/ Swtich Packs):Diagram1
B6.7 - Driver Controlled Locking Differential - RR Axle (Dana w/ one sw):Diagram1

B6.7 - Driver Controlled Locking Differential - RR Axle (Meritor w/ one sw):Diagram1
B6.7 - Fuel Heater (Vehicle Powered)(Davco):Diagram1
B6.7 - Fuel Heater (Vehicle Powered)(Davco):Diagram2
B6.7 - Fuel Heater (Vehicle Powered)(Davco):Diagram3
B6.7 - Fuel Heater (Vehicle Powered)(Davco):Diagram4
B6.7 - Fuel Heater (Vehicle Powered)(Davco):Diagram5
B6.7 - Fuel Heater (Vehicle Powered)(Davco):Diagram6
B6.7 - Fuel Heater (Vehicle Powered)(Davco):Diagram7
B6.7 - Fuel Heater (Vehicle Powered)(Racor):Diagram1
B6.7 - Fuel Heater (Vehicle Powered)(Racor):Diagram2
B6.7 - Fuel Heater (Vehicle Powered)(Racor):Diagram3
B6.7 - Fuel Heater (Vehicle Powered)(Racor):Diagram4
B6.7 - Fuel Heater (Vehicle Powered)(Racor):Diagram5
B6.7 - Fuel Heater (Vehicle Powered)(Racor):Diagram6
B6.7 - Fuel Heater (Vehicle Powered)(Racor):Diagram7
B6.7 - License Plate Light (LED BOX LAMP Daisy Chain Tail Light):Diagram1
B6.7 - License Plate Light (LED BOX LAMP Tail Light):Diagram1
B6.7 - License Plate Light (Tail Light Single Assy) Option 1:Diagram1
B6.7 - License Plate Light (Tail Light Single Assy) Option 2:Diagram1
B6.7 - License Plate Light (Tail Light Single Assy) Option 3:Diagram1
B6.7 - License Plate Light (Tail Light Single Assy) Option 4:Diagram1
B6.7 - License Plate Light (Tail Light Single Assy) W/Less Power Module:Diagram1
B6.7 - Rear Light (LED BOX LAMP Tail Light):Diagram1
B6.7 - Rear Light (Tail Light) Option 1:Diagram1
B6.7 - Rear Light (Tail Light) Option 2:Diagram1
B6.7 - Rear Light (Tail Light) Option 3:Diagram1
B6.7 - Rear Light (Tail Light) Option 4:Diagram1
B6.7 - Rear Light (Tail Light) W_Daisy Chain pair of Box Lamps:Diagram1
B6.7 - Rear Lights Stop - Daisy Chain:Diagram1
B6.7 - Rear Lights Stop - Dual Assembly:Diagram1
B6.7 - Rear Lights Stop - Single Assemby:Diagram1
B6.7 - Remote Start/Stop:Diagram1
B6.7 - Remote Start/Stop w/ Emergency Pump:Diagram1
B6.7 - RIGHTSIDE AIR DRYER:Diagram1
B6.7 - RIGHTSIDE AIR DRYER:Diagram2
B6.7 - RIGHTSIDE AIR DRYER:Diagram3

B6.7 - RIGHTSIDE AIR DRYER:Diagram4
B6.7 - RIGHTSIDE AIR DRYER:Diagram5
B6.7 - RIGHTSIDE AIR DRYER:Diagram6
B6.7 - Stability Control (Bendix Straight Truck J1939 Driven Lamp):Diagram3
B6.7 - Stability Control (Bendix Straight Truck J1939 Driven Lamp):Diagram4
B6.7 - TEM Electric Trailer Brake Controller Activated Stop LT Option 2:Diagram1
B6.7 - TEM _Electric Trailer Brake Controller Activated Stop LT Option 1:Diagram1
B6.7 - Trailer Interface (Lighting) – BLUNT CUT (Part of Electric Trailer Brakes) Option 1:Diagram1
B6.7 - Trailer Interface (Lighting) – BLUNT CUT (Part of Electric Trailer Brakes) Option 2:Diagram1
L9 - Auxiliary Air Solenoids (1 Normally Closed):Diagram1
L9 - Auxillary Air Solenoids Normally Closed:Combination1
L9 - Auxillary Air Solenoids Normally Closed:Combination2
L9 - Auxillary Air Solenoids Normally Closed:Combination3
L9 - Auxillary Air Solenoids Normally Closed:Combination4
L9 - Auxillary Air Solenoids Normally Closed:Combination5
L9 - Auxillary Air Solenoids Normally Closed:Combination6
L9 - Axle Loading (Weight) Rear:Diagram1
L9 - Axle Loading (Weight) Rear:Diagram2
L9 - Back-Up Alarm (Automatic) W/ Tailboard:Diagram1
L9 - Back-Up Alarm (Automatic) W/O Tailboard:Diagram1
L9 - Back-Up Alarm (Manual) W/ Tailboard:Diagram1
L9 - Back-Up Alarm (Manual) W/ Tailboard:Diagram2
L9 - Back-Up Alarm (Manual) W/O Tailboard:Diagram1
L9 - Back-Up Alarm (Manual) W/O Tailboard:Diagram2
L9 - Body Builder Lighting - Combined Turn and Stop Lamps (Automatic):Diagram2
L9 - Body Builder Lighting - Combined Turn and Stop Lamps (Automatic):Diagram3
L9 - Body Builder Lighting - Separate Turn and Stop Lamps (Blunt Cut) Option 1:Diagram1
L9 - Body Builder Lighting - Separate Turn and Stop Lamps (Blunt Cut) Option 2:Diagram1
L9 - Body J1939 (250kbps):L9 - Body J1939 (250Kbps)
L9 - CAN Layout:Body Standard J1939 (250Kbps)
L9 - DLB - Remote Power Module (3 RPM n/Switch Pack):Diagram1
L9 - DLB - Remote Power Modules (3 RPM w/ Swtich Packs):Diagram1

L9 - Driver Controlled Locking Differential - FR and RR Axle (Dana w/ one sw):Diagram1
L9 - Driver Controlled Locking Differential - FR and RR Axle (Meritor w/ one sw):Diagram1
L9 - Driver Controlled Locking Differential - FR and RR Axles (Dana w/ two sw):Diagram1
L9 - Driver Controlled Locking Differential - FR and RR Axles (Meritor w/ two sw):Diagram1
L9 - Driver Controlled Locking Differential - RR Axle (Dana w/ one sw):Diagram1
L9 - Driver Controlled Locking Differential - RR Axle (Meritor w/ one sw):Diagram1
L9 - Four Auxillary Air Solenoids:Diagram1
L9 - Fuel Heater (Vehicle Powered)(Davco):Diagram1
L9 - Fuel Heater (Vehicle Powered)(Davco):Diagram2
L9 - Fuel Heater (Vehicle Powered)(Davco):Diagram3
L9 - Fuel Heater (Vehicle Powered)(Davco):Diagram4
L9 - Fuel Heater (Vehicle Powered)(Davco):Diagram5
L9 - Fuel Heater (Vehicle Powered)(Davco):Diagram6
L9 - Fuel Heater (Vehicle Powered)(Davco):Diagram7
L9 - Fuel Heater (Vehicle Powered)(Davco):Diagram8
L9 - Fuel Heater (Vehicle Powered)(Davco):Diagram9
L9 - Fuel Heater (Vehicle Powered)(Davco):Diagram10
L9 - Fuel Heater (Vehicle Powered)(Davco):Diagram11
L9 - Fuel Heater (Vehicle Powered)(Davco):Diagram12
L9 - Fuel Heater (Vehicle Powered)(Davco):Diagram13
L9 - Fuel Heater (Vehicle Powered)(Davco):Diagram14
L9 - Fuel Heater (Vehicle Powered)(Davco):Diagram15
L9 - Fuel Heater (Vehicle Powered)(Racor):Diagram1
L9 - Fuel Heater (Vehicle Powered)(Racor):Diagram2
L9 - Fuel Heater (Vehicle Powered)(Racor):Diagram3
L9 - Fuel Heater (Vehicle Powered)(Racor):Diagram4
L9 - Fuel Heater (Vehicle Powered)(Racor):Diagram5
L9 - Fuel Heater (Vehicle Powered)(Racor):Diagram6
L9 - Fuel Heater (Vehicle Powered)(Racor):Diagram7
L9 - Fuel Heater (Vehicle Powered)(Racor):Diagram8
L9 - License Plate Light (LED BOX LAMP Daisy Chain Tail Light):Diagram1
L9 - License Plate Light (LED BOX LAMP Tail Light):Diagram1
L9 - License Plate Light (Tail Light Single Assy) Option 1:Diagram1
L9 - License Plate Light (Tail Light Single Assy) Option 2:Diagram1

L9 - License Plate Light (Tail Light Single Assy) Option 3:Diagram1
L9 - License Plate Light (Tail Light Single Assy) Option 4:Diagram1
L9 - Rear Lights Stop - Daisy Chain:Diagram1
L9 - Remote Start/Stop:Diagram1
L9 - Remote Start/Stop w/ Emergency Pump:Diagram1
L9 - Stability Control (Bendix Straight Truck J1939 Driven Lamp):Diagram3
L9 - Stability Control (Bendix Straight Truck J1939 Driven Lamp):Diagram4
L9 - TEM Electric Trailer Brake Controller Activated Stop LT:Diagram1
L9 - Three Auxillary Air Solenoids:Diagram1
L9 - Three Auxillary Air Solenoids:Diagram2
L9 - Three Auxillary Air Solenoids:Diagram3
L9 - Trailer Interface (Lighting) – BLUNT CUT (Part of Electric Trailer Brakes) Option 1:Diagram1
L9 - Trailer Interface (Lighting) – BLUNT CUT (Part of Electric Trailer Brakes) Option 2:Diagram1

Mates 1701F

Name	Terminal Part Number	V-Min	Name	Wire Part Number	Wire CSA	Wire Spec	Wire Material description	Wire Color Description	Wire Length	End2 Terminal Part Number	End2 Pin Name	End2 Connector
1	-	-	ZC71BK	3510318 R1	1.16	16.0	Thin Wall XLPE Primary Cable	ORANGE	805.0	-	-	-
1	-	-	ZK71BA	3510318 R1	1.16	16.0	Thin Wall XLPE Primary Cable	ORANGE	175.0	-	X	-
1	-	-	ZG71BA	3510318 R1	1.16	16.0	Thin Wall XLPE Primary Cable	ORANGE	630.0	-	X	-
1	-	-	ZA71A	3510318 R1	1.16	16.0	Thin Wall XLPE Primary Cable	ORANGE	805.0	-	-	-

Name	Terminal Part Number	V-Min	Name	Wire Part Number	Wire CSA	Wire Spec	Wire Material description	Wire Color Description	Wire Length	End2 Terminal Part Number	End2 Pin Name	End2 Connector
2	-	-	YN56A	3510319 R1	1.91	14.0	Thin Wall XLPE Primary Cable	ORANGE	720.0	-	D	J1-1603
2	-	-	YL56	3510318 R1	1.16	16.0	Thin Wall XLPE Primary Cable	ORANGE	1170.0	-	-	-
2	-	-	YM56A	3510319 R1	1.91	14.0	Thin Wall XLPE Primary Cable	ORANGE	720.0	-	D	J1-1603
3	-	-	YL57	3510318 R1	1.16	16.0	Thin Wall XLPE Primary Cable	ORANGE	1170.0	-	-	-
3	-	-	YN57A	3510319 R1	1.91	14.0	Thin Wall XLPE Primary Cable	ORANGE	720.0	-	M	J1-1603
3	-	-	YM57A	3510319 R1	1.91	14.0	Thin Wall XLPE Primary Cable	ORANGE	720.0	-	M	J1-1603
4	-	-	ZN68	3510306 R1	1.16	16.0	Thin Wall XLPE Primary Cable	BROWN	1160.0	-	-	-
4	-	-	ZP68A	3510306 R1	1.16	16.0	Thin Wall XLPE Primary Cable	BROWN	840.0	-	-	-

Name	Terminal Part Number	V-Min	Name	Wire Part Number	Wire CSA	Wire Spec	Wire Material description	Wire Color Description	Wire Length	End2 Terminal Part Number	End2 Pin Name	End2 Connector
5	-	-	VG56T	3510339 R1	4.81	10.0	Thin Wall XLPE Primary Cable	YELLOW 2	720.0	-	B	J1-1603
6	-	-	VG57T	3510303 R1	4.81	10.0	Thin Wall XLPE Primary Cable	LIGHT GREEN	720.0	-	A	J1-1603
7	-	-	VL58TA	3510308 R1	3.01	12.0	Thin Wall XLPE Primary Cable	BROWN	300.0	-	X	-
7	-	-	VP58T	3510308 R1	3.01	12.0	Thin Wall XLPE Primary Cable	BROWN	300.0	-	X	-
7	-	-	VG58T	3510308 R1	3.01	12.0	Thin Wall XLPE Primary Cable	BROWN	755.0	-	F	J2-1604
8	-	-	VG68T	3510308 R1	3.01	12.0	Thin Wall XLPE Primary Cable	BROWN	755.0	-	D	J2-1604
8	-	-	VP68T	3510308 R1	3.01	12.0	Thin Wall XLPE Primary Cable	BROWN	270.0	-	X	-
8	-	-	VR68TA	3510308 R1	3.01	12.0	Thin Wall XLPE Primary Cable	BROWN	270.0	-	X	-

Name	Terminal Part Number	V-Min	Name	Wire Part Number	Wire CSA	Wire Spec	Wire Material description	Wire Color Description	Wire Length	End2 Terminal Part Number	End2 Pin Name	End2 Connector
9	-	-	TJ70T	3510369 R1	4.81	10.0	Thin Wall XLPE Primary Cable	RED	1120.0	-	X	-
9	-	-	TK70T	3510320 R1	3.01	12.0	Thin Wall XLPE Primary Cable	ORANGE	2315.0	-	R1 - 87	1011
10	-	-	TJ94T	3510357 R1	4.81	10.0	Thin Wall XLPE Primary Cable	DARK BLUE	1300.0	-	C	1923
12	-	-	YV56BB	3510336 R1	1.16	16.0	Thin Wall XLPE Primary Cable	YELLOW 2	1170.0	-	-	-
13	-	-	KA9	3510311 R1	0.79	18.0	Thin Wall XLPE Primary Cable	GREY	770.0	-	X	-
16	-	-	XA94BE	3510312 R1	1.16	16.0	Thin Wall XLPE Primary Cable	GREY	2580.0	-	15	1401
17	-	-	XA94BD	3510312 R1	1.16	16.0	Thin Wall XLPE Primary Cable	GREY	2580.0	-	18	1401
18	-	-	XA94BH	3510312 R1	1.16	16.0	Thin Wall XLPE Primary Cable	GREY	2550.0	-	10	1400

Name	Terminal Part Number	V-Min	Name	Wire Part Number	Wire CSA	Wire Spec	Wire Material description	Wire Color Description	Wire Length	End2 Terminal Part Number	End2 Pin Name	End2 Connector
19	-	-	XA94BF	3510312 R1	1.16	16.0	Thin Wall XLPE Primary Cable	GREY	2550.0	-	11	1400
20	-	-	XA94BL	3510312 R1	1.16	16.0	Thin Wall XLPE Primary Cable	GREY	2580.0	-	10	1401
21	-	-	XA94BJ	3510312 R1	1.16	16.0	Thin Wall XLPE Primary Cable	GREY	2580.0	-	13	1401
22	-	-	XA94BK	3510312 R1	1.16	16.0	Thin Wall XLPE Primary Cable	GREY	2580.0	-	9	1401
23	-	-	XA94BA	3510312 R1	1.16	16.0	Thin Wall XLPE Primary Cable	GREY	2580.0	-	17	1401
24	-	-	XA94BB	3510312 R1	1.16	16.0	Thin Wall XLPE Primary Cable	GREY	2580.0	-	12	1401
25	-	-	XA94BC	3510312 R1	1.16	16.0	Thin Wall XLPE Primary Cable	GREY	2580.0	-	16	1401
27	-	-	AA36B	3510329 R1	0.79	18.0	Thin Wall XLPE Primary Cable	TAN	1060.0	-	B8	J3-1600

Name	Terminal Part Number	V-Min	Name	Wire Part Number	Wire CSA	Wire Spec	Wire Material description	Wire Color Description	Wire Length	End2 Terminal Part Number	End2 Pin Name	End2 Connector
29	-	-	AA36A	3510329 R1	0.79	18.0	Thin Wall XLPE Primary Cable	TAN	1060.0	-	B9	J3-1600
31	-	-	KH39	3510312 R1	1.16	16.0	Thin Wall XLPE Primary Cable	GREY	2525.0	-	-	-
32	-	-	LS59A	3510311 R1	0.79	18.0	Thin Wall XLPE Primary Cable	GREY	1080.0	-	E12	J5-1602
33	-	-	LT59C	3510311 R1	0.79	18.0	Thin Wall XLPE Primary Cable	GREY	745.0	-	F10	J4-1601
34	-	-	LT59D	3510311 R1	0.79	18.0	Thin Wall XLPE Primary Cable	GREY	745.0	-	E12	J4-1601
35	-	-	LU59E	3510311 R1	0.79	18.0	Thin Wall XLPE Primary Cable	GREY	745.0	-	F8	J4-1601
36	-	-	LY59G	3510311 R1	0.79	18.0	Thin Wall XLPE Primary Cable	GREY	745.0	-	E13	J4-1601
37	-	-	LY59H	3510311 R1	0.79	18.0	Thin Wall XLPE Primary Cable	GREY	745.0	-	F4	J4-1601

Name	Terminal Part Number	V-Min	Name	Wire Part Number	Wire CSA	Wire Spec	Wire Material description	Wire Color Description	Wire Length	End2 Terminal Part Number	End2 Pin Name	End2 Connector
38	-	-	LY59J	3510311 R1	0.79	18.0	Thin Wall XLPE Primary Cable	GREY	745.0	-	E9	J4-1601
39	-	-	LY59K	3510311 R1	0.79	18.0	Thin Wall XLPE Primary Cable	GREY	745.0	-	F5	J4-1601
42	-	-	YX56BC	3510336 R1	1.16	16.0	Thin Wall XLPE Primary Cable	YELLOW 2	805.0	-	-	-
43	-	-	LF104D	3510353 R1	0.79	18.0	Thin Wall XLPE Primary Cable	DARK BLUE	1080.0	-	F8	J5-1602
44	-	-	LJ104DB	3510354 R1	1.16	16.0	Thin Wall XLPE Primary Cable	DARK BLUE	2410.0	-	R6 - 87	1012
44	-	-	NM32A	2643676 R1	0.79	18.0	Std. Wall XLPE Primary Cable	TAN	1060.0	-	B11	J3-1600
45	-	-	KN49	3510311 R1	0.79	18.0	Thin Wall XLPE Primary Cable	GREY	745.0	-	A3	J7-1607
46	-	-	LW59M	3510311 R1	0.79	18.0	Thin Wall XLPE Primary Cable	GREY	745.0	-	F6	J4-1601

Name	Terminal Part Number	V-Min	Name	Wire Part Number	Wire CSA	Wire Spec	Wire Material description	Wire Color Description	Wire Length	End2 Terminal Part Number	End2 Pin Name	End2 Connector
47	-	-	LW59N	3510311 R1	0.79	18.0	Thin Wall XLPE Primary Cable	GREY	745.0	-	F7	J4-1601
48	-	-	LW59P	3510311 R1	0.79	18.0	Thin Wall XLPE Primary Cable	GREY	745.0	-	F2	J4-1601
49	-	-	LW59Q	3510311 R1	0.79	18.0	Thin Wall XLPE Primary Cable	GREY	745.0	-	F3	J4-1601
49	-	-	XL94SJ	2643680 R1	1.16	16.0	Std. Wall XLPE Primary Cable	GREY	2520.0	-	5	1402
50	-	-	KN49A	3510311 R1	0.79	18.0	Thin Wall XLPE Primary Cable	GREY	745.0	-	A4	J7-1607
51	-	-	HN20	3510300 R1	1.16	16.0	Thin Wall XLPE Primary Cable	LIGHT GREEN	2305.0	-	-	-
52	-	-	WIRE722864	-	0.0	-	-	-	0.0	-	-	-
52	-	-	WIRE720008	-	0.0	-	-	-	0.0	-	PIN1	-
53	-	-	WIRE722866	-	0.0	-	-	-	0.0	-	-	-
53	-	-	WIRE720005	-	0.0	-	-	-	0.0	-	PIN1	-

Name	Terminal Part Number	V-Min	Name	Wire Part Number	Wire CSA	Wire Spec	Wire Material description	Wire Color Description	Wire Length	End2 Terminal Part Number	End2 Pin Name	End2 Connector
54	-	-	XF94SA	3510310 R1	0.53	20.0	Thin Wall XLPE Primary Cable	GREY	870.0	-	A	1820M
54	-	-	LZ59S	3510311 R1	0.79	18.0	Thin Wall XLPE Primary Cable	GREY	745.0	-	E10	J4-1601
55	-	-	XF94SC	3510310 R1	0.53	20.0	Thin Wall XLPE Primary Cable	GREY	870.0	-	C	1820M
55	-	-	LZ59T	3510311 R1	0.79	18.0	Thin Wall XLPE Primary Cable	GREY	745.0	-	E15	J4-1601
55	-	-	ME61B	3510311 R1	0.79	18.0	Thin Wall XLPE Primary Cable	GREY	1080.0	-	F7	J5-1602
56	-	-	LZ59V	3510311 R1	0.79	18.0	Thin Wall XLPE Primary Cable	GREY	745.0	-	F14	J4-1601
56	-	-	ME106B	3510311 R1	0.79	18.0	Thin Wall XLPE Primary Cable	GREY	1080.0	-	E8	J5-1602
57	-	-	LZ59W	3510311 R1	0.79	18.0	Thin Wall XLPE Primary Cable	GREY	745.0	-	F9	J4-1601

Name	Terminal Part Number	V-Min	Name	Wire Part Number	Wire CSA	Wire Spec	Wire Material description	Wire Color Description	Wire Length	End2 Terminal Part Number	End2 Pin Name	End2 Connector
57	-	-	ME110B	3510311 R1	0.79	18.0	Thin Wall XLPE Primary Cable	GREY	990.0	-	-	-
63	-	-	YX57BB	3510300 R1	1.16	16.0	Thin Wall XLPE Primary Cable	LIGHT GREEN	1170.0	-	-	-
64	-	-	YV57BC	3510300 R1	1.16	16.0	Thin Wall XLPE Primary Cable	LIGHT GREEN	805.0	-	-	-
67	-	-	KM18D	3510312 R1	1.16	16.0	Thin Wall XLPE Primary Cable	GREY	1180.0	-	X	-
69	-	-	XM94SK	3510311 R1	0.79	18.0	Thin Wall XLPE Primary Cable	GREY	2520.0	-	3	1402
71	-	-	VP68BB	3510308 R1	3.01	12.0	Thin Wall XLPE Primary Cable	BROWN	270.0	-	X	-
71	-	-	VR68TB	3510306 R1	1.16	16.0	Thin Wall XLPE Primary Cable	BROWN	270.0	-	X	-
72	-	-	VS70TA	3510320 R1	3.01	12.0	Thin Wall XLPE Primary Cable	ORANGE	2410.0	-	R5 - 87	1012

Name	Terminal Part Number	V-Min	Name	Wire Part Number	Wire CSA	Wire Spec	Wire Material description	Wire Color Description	Wire Length	End2 Terminal Part Number	End2 Pin Name	End2 Connect or
73	-	-	ZG71BB	3510318 R1	1.16	16.0	Thin Wall XLPE Primary Cable	ORANGE	630.0	-	X	-
74	-	-	VP58BB	3510308 R1	3.01	12.0	Thin Wall XLPE Primary Cable	BROWN	300.0	-	X	-
74	-	-	VR58TB	3510308 R1	3.01	12.0	Thin Wall XLPE Primary Cable	BROWN	300.0	-	X	-

Connector Name	1702
Part Number	RING-E-1-2_0
Instances	L9 - Cranking (Starter) GEN4 BCM W/O Thermal Overcrank:Diagram1
Mates	MOT-STARTER-5024-01-04

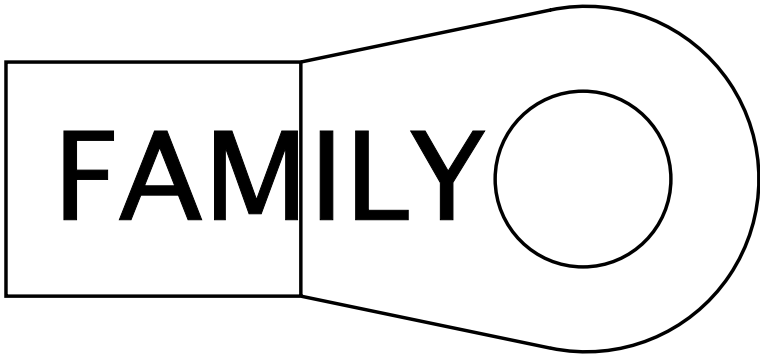

Name	Terminal Part Number	V-Min	Name	Wire Part Number	Wire CSA	Wire Spec	Wire Material description	Wire Color Description	Wire Length	End2 Terminal Part Number	End2 Pin Name	End2 Connect or
A	-	-	14	2645953 R1	18.94	4.0	SGX NFLEX 125	RED	3700.0	-	1	S97_9251
A	-	-	WB2-FLA	3961608 R1	7.48	8.0	FUSEABLE LINK	LIGHT BLUE	190.0	-	X	-
A	-	-	WB2-FLB	3961608 R1	7.48	8.0	FUSEABLE LINK	LIGHT BLUE	190.0	-	X	-

Connector Name	1702
Part Number	3595620C1
Short Description	DASH CONNECTOR
Instances	A26 - 2-Way Radio:Diagram1 A26 - 2-Way Radio:Diagram2 A26 - Ambient Air Temperature:Diagram1 A26 - Back-Up Alarm (Manual) W/ Tailboard:Diagram1 A26 - Back-Up Alarm (Manual) W/O Tailboard:Diagram1 A26 - Backup Alarm (Switch to 5 Pin 08TKC Tailboard to Alarm) (Manual):Diagram1 A26 - Backup Alarm (Switch to 5 Pin 08TKC Tailboard. Alarm Plugs In) (Manual):Diagram1 A26 - Backup Light (Dual Daisy Reverse LT)Allison/ZF Trans 3K/4K:Diagram1 A26 - Backup Light (Dual Daisy Reverse LT)Allison/ZF Trans 3K/4K:Diagram2 A26 - Backup Light (Dual Reverse Light)Allison/ZF Trans 3K/4K:Diagram1 A26 - Backup Light (Dual Reverse Light)Allison/ZF Trans 3K/4K:Diagram2 A26 - Backup Light (Single Reverse Light) Allison 3K/4K:Diagram1 A26 - Backup Light (Single Reverse Light) Allison 3K/4K:Diagram2 A26 - Backup Light (Single Reverse Light) Allison 3K/4K Option2:Diagram1 A26 - Backup Light (Single Reverse Light) Allison 3K/4K Option2:Diagram2 A26 - Backup Light (Single Reverse Light) W/Less Power Module Allison 3K/4K:Diagram1-Combination1 A26 - Backup Light (Single Reverse Light) W/Less Power Module Allison 3K/4K:Diagram1-Combination2 A26 - Backup Light (Single Reverse Light)Allison 3K/4K:Diagram1 A26 - Backup Light (Single Reverse Light)Allison 3K/4K:Diagram2 A26 - Backup Lights (Dual Daisy Reverse Light) Eaton/Manual Trans:Diagram1 A26 - Backup Lights (Dual Reverse Light) Eaton/Manual Trans:Diagram1 A26 - Backup Lights (Reverse) W/Less Power Module Eaton/ Manual Trans:Diagram1

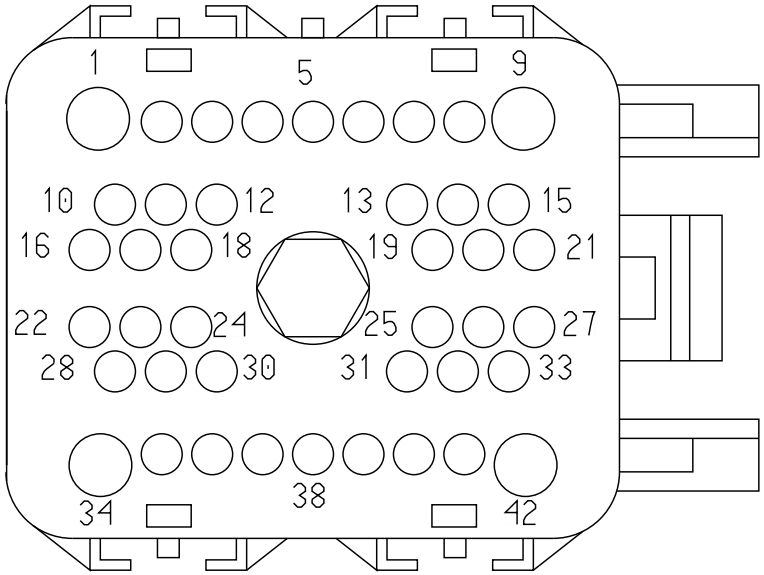

A26 - Backup Lights (Single Reverse Light) Eaton/Manual Trans:Diagram1
A26 - Backup Lights (Single Reverse Lights) Eaton/Manual Trans:Diagram1
A26 - Backup Lights (Single Reverse Lights) Eaton/Manual Trans Option2:Diagram1
A26 - Backup Lights (Single Reverse Lights) Eaton/Manual Transmission:Diagram1
A26 - Body Builder Lighting - BOC, 08HBX (Manual):Diagram1
A26 - CAN Layout:Powertrain Standard J1939 (500Kbps)
A26 - Cranking (Starter) GEN4 BCM W/ Thermal Overcrank:Diagram1
A26 - Cranking (Starter) GEN4 BCM W/ Thermal Overcrank:Diagram2
A26 - Cranking (Starter) GEN4 BCM W/ Thermal Overcrank:Diagram3
A26 - Cranking (Starter) GEN4 BCM W/ Thermal Overcrank:Diagram4
A26 - Cranking (Starter) GEN4 BCM W/ Thermal Overcrank:Diagram5
A26 - Cranking (Starter) GEN4 BCM W/ Thermal Overcrank:Diagram6
A26 - Cranking (Starter) GEN4 BCM W/O Thermal Overcrank:Diagram1
A26 - Cranking (Starter) GEN4 BCM W/O Thermal Overcrank:Diagram2
A26 - Cranking (Starter) GEN4 BCM W/O Thermal Overcrank:Diagram3
A26 - Cranking (Starter) GEN4 BCM W/O Thermal Overcrank:Diagram4
A26 - Cranking (Starter) GEN4 BCM W/O Thermal Overcrank:Diagram5
A26 - Cranking (Starter) GEN4 BCM W/O Thermal Overcrank:Diagram6
A26 - ECM:Diagram1
A26 - Heating Ventilation & Air Conditioning (HVAC):Diagram1
A26 - Heating Ventilation & Air Conditioning (HVAC) Auto Temp Control:Diagram1 - HVAC
A26 - Powertrain J1939 Allison 3k/4k:A26 - Powertrain J1939 Allison 3k/4k
A26 - Powertrain J1939 UltraShift Transmission:A26 - Powertrain J1939 UltraShift Transmission
A26 - Starter Interlock (BCM Controlled with Input from Allison 3K/4K TCM):Diagram1

A26 - Starter Interlock (BCM Controlled with Input from Allison 3K/4K TCM):Diagram2
A26 - Starter Interlock (BCM LSD Controlled w/ Relay & N/ Auto SS):Diagram1
A26 - Transmission Oil Temperature-Manual Trans:Diagram1
A26 - Transmission Oil Temperature-Manual Trans:Diagram2
A26 - Transmission Oil Temperature-Manual Trans w/Aux Gauge:Diagram1
A26 - Transmission Oil Temperature-Manual Trans w/Aux Gauge:Diagram2
A26 - Transmission Power Take Off (Auto Trans Dual PTO W/ 42 Parameters):Diagram1
A26 - Transmission Power Take Off (Auto Trans Single PTO w/21 Parameters):Diagram1
A26 - Transmission Power Take Off (Manual Trans Dual PTO W/ 42 Parameters):Diagram1
A26 - Transmission Power Take Off (Manual Trans Single PTO w/ 21 Parameters):Diagram1
A26 - Transmission Power Take Off (Single Input Configurable pull up or pull down):Diagram1
A26 - Transmission Shifter (Stalk Shifter Allison):Diagram1
A26 - Transmission Shifter (Stalk Shifter Allison):Diagram2
A26 - Ultrashift Plus:Diagram1
A26 - Vehicle Acceleration (w/ Two PWR Two GND & Two STS):Diagram1
A26 - WORK LIGHT W Backup 1 Bulb:Diagram1
A26 - WORK LIGHT W Backup 1 Bulb:Diagram2
A26 - Work Light W/ Backup 1 Bulb W/Manual W/ RKE:Diagram1-Combination1
A26 - Work Light W/ Backup 1 Bulb W/Manual W/ RKE:Diagram1-Combination2
B6.7 - Back-Up Alarm (Manual) W/ Tailboard:Diagram1
B6.7 - Back-Up Alarm (Manual) W/O Tailboard:Diagram1
B6.7 - Backup Light (Dual Daisy Reverse LT)Allison/ZF Trans 1K/2K:Diagram1
B6.7 - Backup Light (Dual Daisy Reverse LT)Allison/ZF Trans 3K/4K:Diagram1
B6.7 - Backup Light (Dual Daisy Reverse LT)Allison/ZF Trans 3K/4K:Diagram2
B6.7 - Backup Light (Dual Reverse Light)Allison/ZF Trans 1K/2K:Diagram1
B6.7 - Backup Light (Dual Reverse Light)Allison/ZF Trans 3K/4K:Diagram1

B6.7 - Backup Light (Dual Reverse Light)Allison/ZF Trans 3K/4K:Diagram2
B6.7 - Backup Light (Single Reverse Light) Allison 1K/2K Option 1:Diagram1
B6.7 - Backup Light (Single Reverse Light) Allison 1K/2K Option 2:Diagram1
B6.7 - Backup Light (Single Reverse Light) Allison 1K/2K Option 3:Diagram1
B6.7 - Backup Light (Single Reverse Light) Allison 3K/4K Option 1:Diagram1
B6.7 - Backup Light (Single Reverse Light) Allison 3K/4K Option 1:Diagram2
B6.7 - Backup Light (Single Reverse Light) Allison 3K/4K Option 2:Diagram1
B6.7 - Backup Light (Single Reverse Light) Allison 3K/4K Option 2:Diagram2
B6.7 - Backup Light (Single Reverse Light) Allison 3K/4K Option 3:Diagram1
B6.7 - Backup Light (Single Reverse Light) Allison 3K/4K Option 3:Diagram2
B6.7 - Backup Lights (Dual Daisy Reverse Light) Eaton/Manual Trans:Diagram1
B6.7 - Backup Lights (Dual Reverse Light) Eaton/Manual Trans:Diagram1
B6.7 - Backup Lights (Single Reverse Light) Eaton/Manual Trans:Diagram1
B6.7 - Backup Lights (Single Reverse Lights) Eaton/Manual Trans Option 1:Diagram1
B6.7 - Backup Lights (Single Reverse Lights) Eaton/Manual Trans Option 2:Diagram1
B6.7 - Body Builder Lighting - Combined Turn and Stop Lamps (Manual):Diagram1
B6.7 - Body Builder Lighting - Combined Turn and Stop Lamps (Manual):Diagram2
B6.7 - Body Builder Lighting - Combined Turn and Stop Lamps (Manual):Diagram3
B6.7 - CAN Layout:Powertrain Standard J1939 (500Kbps)
B6.7 - Cranking (Starter) GEN4 BCM W/O Thermal Overcrank:Diagram1
B6.7 - ECM Cummins CM2350A:Diagram 1
B6.7 - Heating Ventilation & Air Conditioning (HVAC):Diagram1
B6.7 - Heating Ventilation & Air Conditioning (HVAC) Auto Temp Control:Diagram1 - HVAC

B6.7 - Powertrain J1939 Allison 1k/2k:B6.7 - Allison 1k/2k Transmission
B6.7 - Powertrain J1939 Allison 3k/4k:B6.7 - Allison 3k/4k Transmission
B6.7 - Powertrain J1939 Manual Transmission:B6.7 - Manual Transmission
B6.7 - Range Inhibit (sixth gear inhibit switch):Diagram1
B6.7 - Starter Interlocks (BCM Controlled with Input from Allison 1K/2K TCM):Diagram1
B6.7 - Starter Interlocks (BCM Controlled with Input from Allison 3K/4K TCM):Diagram1
B6.7 - Starter Interlocks (BCM Controlled with Input from Allison 3K/4K TCM):Diagram2
B6.7 - Transmission (Allison 3K/4K):Diagram1
B6.7 - Transmission (Allison 3K/4K):Diagram2
B6.7 - Transmission Oil Temperature-Manual Trans:Diagram1
B6.7 - Transmission Oil Temperature-Manual Trans (w/Aux Gauge):Diagram1
B6.7 - Transmission Power Take Off (Auto Trans Single PTO w/21 Parameters):Diagram1
B6.7 - Transmission Power Take Off (Manual Trans Single PTO w/21 Parameters):Diagram1
B6.7 - Transmission Power Take Off (Single Input configurable pull up or pull down):Diagram1
B6.7 - Transmission Shifter (Stalk Shifter Allison):Diagram1
B6.7 - Transmission Shifter (Stalk Shifter Allison):Diagram2
B6.7 - Transmission Shifter Allison 5th Gen Push Button(SURHD):Diagram1
B6.7 - Transmission Shifter Allison 5th Gen Push Button(SURHD):Diagram2
B6.7 - Two Speed Axle (AirShift on Shifter):Diagram1
B6.7 - Vehicle Acceleration (w/ Two PWR Two GND & Two STS):Diagram1
B6.7 - WORK LIGHT W BackUP 1 BULB:Diagram1
L9 - Ambient Air Temperature:Diagram1
L9 - Auto Neutral (Allison with Multiplex Switch and Confirmation Telltale):Diagram1
L9 - Auto Neutral (Allison with Multiplex Switch and Confirmation Telltale):Diagram2
L9 - Auto Neutral (Allison without Multiplex Switch and Confirmation Telltale):Diagram1
L9 - Auto Neutral (Allison without Multiplex Switch and Confirmation Telltale):Diagram2
L9 - Back-Up Alarm (Manual) W/ Tailboard:Diagram1

L9 - Back-Up Alarm (Manual) W/ Tailboard:Diagram2
L9 - Back-Up Alarm (Manual) W/O Tailboard:Diagram1
L9 - Back-Up Alarm (Manual) W/O Tailboard:Diagram2
L9 - Backup Light (Dual Daisy Reverse Light)Allison/ZF Trans 3K/4K:Diagram1
L9 - Backup Light (Dual Daisy Reverse Light)Allison/ZF Trans 3K/4K:Diagram2
L9 - Backup Light (Single Reverse Light) Allison 3K/4K Option 1:Diagram1
L9 - Backup Light (Single Reverse Light) Allison 3K/4K Option 1:Diagram2
L9 - Backup Light (Single Reverse Light) Allison 3K/4K Option 2:Diagram1
L9 - Backup Light (Single Reverse Light) Allison 3K/4K Option 2:Diagram2
L9 - Backup Light (Single Reverse Light) Allison 3K/4K Option 3:Diagram1
L9 - Backup Light (Single Reverse Light) Allison 3K/4K Option 3:Diagram2
L9 - Backup Light (Single Reverse Light)Allison:Diagram1
L9 - Backup Light (Single Reverse Light)Allison:Diagram2
L9 - Backup Lights (Dual Daisy Reverse Light) Eaton/Manual Trans:Diagram1
L9 - Backup Lights (Dual Daisy Reverse Light) Eaton/Manual Trans:Diagram2
L9 - Backup Lights (Single Reverse Light) Eaton/Manual Trans Option 1:Diagram1
L9 - Backup Lights (Single Reverse Light) Eaton/Manual Trans Option 1:Diagram2
L9 - Backup Lights (Single Reverse Light) Eaton/Manual Trans Option 2:Diagram1
L9 - Backup Lights (Single Reverse Light) Eaton/Manual Trans Option 2:Diagram2
L9 - Backup Lights (Single Reverse Light) Eaton/Manual Trans Option 3:Diagram1
L9 - Backup Lights (Single Reverse Light) Eaton/Manual Trans Option 3:Diagram2
L9 - Backup Lights (Single Reverse Light) Eaton/Manual Trans Option 4:Diagram1
L9 - Backup Lights (Single Reverse Light) Eaton/Manual Trans Option 4:Diagram2
L9 - Body Builder Lighting - Combined Turn and Stop Lamps (Manual):Diagram1

L9 - Body Builder Lighting - Combined Turn and Stop Lamps (Manual):Diagram2
L9 - Body Builder Lighting - Combined Turn and Stop Lamps (Manual):Diagram3
L9 - Body Builder Lighting - Combined Turn and Stop Lamps (Manual):Diagram4
L9 - Body Builder Lighting - Combined Turn and Stop Lamps (Manual):Diagram5
L9 - Body Builder Lighting - Combined Turn and Stop Lamps (Manual):Diagram6
L9 - CAN Layout:Powertrain Standard J1939 (500kbps)
L9 - Cranking (Starter) GEN4 BCM W/ Thermal Overcrank - External Switch:Diagram1
L9 - Cranking (Starter) GEN4 BCM W/O Thermal Overcrank:Diagram1
L9 - ECM Cummins CM2350A:Diagram1
L9 - Heating Ventilation & Air Conditioning (HVAC):Diagram1
L9 - Heating Ventilation & Air Conditioning (HVAC) Auto Temp Control:Diagram1 - HVAC
L9 - Powertrain J1939 Allison 3k/4k:L9 - Powertrain J1939 Allison 3k/4k
L9 - Powertrain J1939 Eaton:L9 - Powertrain J1939 Eaton
L9 - Powertrain J1939 Manual Transmission:Powertrain Standard J1939 (500kbps)
L9 - Starter Interlock (BCM LSD Controlled w/ Relay & N/ Auto SS)_EATON XMSN:Diagram1
L9 - Starter Interlocks (BCM Controlled with Input from Allison 3K/4K TCM):Diagram1
L9 - Starter Interlocks (BCM Controlled with Input from Allison 3K/4K TCM):Diagram2
L9 - Transmission (Allison 3K/4K):Diagram1
L9 - Transmission (Allison 3K/4K):Diagram2
L9 - Transmission Oil Temperature-Manual Trans w/Aux Gauge:Diagram1-Combination1
L9 - Transmission Oil Temperature-Manual Transmission:Diagram1-Combination1
L9 - Transmission Power Take Off (Auto Trans Single PTO w/21 Parameters):Diagram1
L9 - Transmission Power Take Off (Auto Trans with Lectradrive):Diagram1
L9 - Transmission Power Take Off (Lectrashift PTO with Manual Trans):Diagram1
L9 - Transmission Power Take Off (Manual Trans Single PTO w/21 Parameters):Diagram1

L9 - Transmission Power Take Off (Single Input configurable pull up or pull down):Diagram1
L9 - Transmission Shifter (Stalk Shifter Allison):Diagram1
L9 - Transmission Shifter (Stalk Shifter Allison):Diagram2
L9 - Transmission Shifter Allison 5th Gen Push Button(SURHD):Diagram1
L9 - Two Speed Axle (AirShift on Shifter):Diagram1
L9 - Ultrashift Plus:Diagram1
L9 - Vehicle Acceleration (w/ Two PWR Two GND & Two STS):Diagram1
L9 - WORK LIGHT W BackUP 1 BULB Option 1:Diagram1
L9 - WORK LIGHT W BackUP 1 BULB Option 1:Diagram2
L9 - WORK LIGHT W BackUP 1 BULB Option 1:Diagram3
L9 - WORK LIGHT W BackUP 1 BULB Option 1:Diagram4

Mates 1702

Name	Terminal Part Number	V-Min	Name	Wire Part Number	Wire CSA	Wire Spec	Wire Material description	Wire Color Description	Wire Length	End2 Terminal Part Number	End2 Pin Name	End2 Connector
2	-	-	KA146-G	3510312 R1	1.16	16.0	Thin Wall XLPE Primary Cable	GREY	590.0	-	-	-
2	-	-	TC9E	3510311 R1	0.79	18.0	Thin Wall XLPE Primary Cable	GREY	1635.0	-	X	-
2	-	-	TC9E	3510311 R1	0.79	18.0	Thin Wall XLPE Primary Cable	GREY	1635.0	-	1	-
3	-	-	KK77A	3510299 R1	0.79	18.0	Thin Wall XLPE Primary Cable	LIGHT GREEN	2060.0	-	2	6201
3	-	-	SA6DBJ	3510310 R1	0.53	20.0	Thin Wall XLPE Primary Cable	GREY	1738.0	-	19	1703F

Name	Terminal Part Number	V-Min	Name	Wire Part Number	Wire CSA	Wire Spec	Wire Material description	Wire Color Description	Wire Length	End2 Terminal Part Number	End2 Pin Name	End2 Connector
3	-	-	SA6DBJ	3510310 R1	0.53	20.0	Thin Wall XLPE Primary Cable	GREY	1960.0	-	19	1703F
3	-	-	KK77A	3510299 R1	0.79	18.0	Thin Wall XLPE Primary Cable	LIGHT GREEN	2060.0	-	2	6201A
4	-	-	KK77B	3510299 R1	0.79	18.0	Thin Wall XLPE Primary Cable	LIGHT GREEN	2060.0	-	3	6201
4	-	-	SA77BJ	3510298 R1	0.53	20.0	Thin Wall XLPE Primary Cable	LIGHT GREEN	1738.0	-	20	1703F
4	-	-	SA77BJ	3510298 R1	0.53	20.0	Thin Wall XLPE Primary Cable	LIGHT GREEN	1960.0	-	20	1703F
4	-	-	KK77B	3510299 R1	0.79	18.0	Thin Wall XLPE Primary Cable	LIGHT GREEN	2060.0	-	3	6201A
6	-	-	KW71A	2643682 R1	1.16	16.0	Std. Wall XLPE Primary Cable	ORANGE	2850.0	-	1	7500M
6	-	-	MJ71A	2645921 R1	0.79	18.0	TXL 150C	ORANGE	1990.0	-	1	7500M
6	-	-	MJ71A	2645921 R1	0.79	18.0	TXL 150C	ORANGE	1990.0	-	1	P9074

Name	Terminal Part Number	V-Min	Name	Wire Part Number	Wire CSA	Wire Spec	Wire Material description	Wire Color Description	Wire Length	End2 Terminal Part Number	End2 Pin Name	End2 Connector
6	-	-	KH71	3510318 R1	1.16	16.0	Thin Wall XLPE Primary Cable	ORANGE	2310.0	-	1	P9073
6	-	-	ZA71BA	3510318 R1	1.16	16.0	Thin Wall XLPE Primary Cable	ORANGE	1960.0	-	66	1703F
6	-	-	KW71A	2643682 R1	1.16	16.0	Std. Wall XLPE Primary Cable	ORANGE	2850.0	-	1	7500W
6	-	-	MJ71A	2645921 R1	0.79	18.0	TXL 150C	ORANGE	1990.0	-	A	7500M
6	-	-	KH71	3510318 R1	1.16	16.0	Thin Wall XLPE Primary Cable	ORANGE	2310.0	-	A	7500W
7	-	-	KW71B	2643682 R1	1.16	16.0	Std. Wall XLPE Primary Cable	ORANGE	2850.0	-	2	7500M
7	-	-	PH92#165	3510329 R1	0.79	18.0	Thin Wall XLPE Primary Cable	TAN	2460.0	-	65	7151
7	-	-	PM92#165	3510329 R1	0.79	18.0	Thin Wall XLPE Primary Cable	TAN	2820.0	-	65	7500
7	-	-	SM92#165	3510329 R1	0.79	18.0	Thin Wall XLPE Primary Cable	TAN	3100.0	-	2	1502

Name	Terminal Part Number	V-Min	Name	Wire Part Number	Wire CSA	Wire Spec	Wire Material description	Wire Color Description	Wire Length	End2 Terminal Part Number	End2 Pin Name	End2 Connector
7	-	-	MJ71B	2645915 R1	0.79	18.0	TXL 150C	TAN	1990.0	-	2	7500M
7	-	-	MJ71B	2645915 R1	0.79	18.0	TXL 150C	TAN	1990.0	-	2	P9074
7	-	-	KH71A	3510318 R1	1.16	16.0	Thin Wall XLPE Primary Cable	ORANGE	2310.0	-	2	P9073
7	-	-	TD92#165	3510329 R1	0.79	18.0	Thin Wall XLPE Primary Cable	TAN	3555.0	-	65	7500
7	-	-	TZ92#165	3510329 R1	0.79	18.0	Thin Wall XLPE Primary Cable	TAN	2545.0	-	2	1502
7	-	-	KW71B	2643682 R1	1.16	16.0	Std. Wall XLPE Primary Cable	ORANGE	2850.0	-	2	7500W
7	-	-	ZA71BJ	3510318 R1	1.16	16.0	Thin Wall XLPE Primary Cable	ORANGE	1960.0	-	44	1703F
7	-	-	KH71A	3510318 R1	1.16	16.0	Thin Wall XLPE Primary Cable	ORANGE	2310.0	-	B	7500W
7	-	-	MJ71B	2645915 R1	0.79	18.0	TXL 150C	TAN	1990.0	-	2	7500
7	-	-	ZC92#165	3510329 R1	0.79	18.0	Thin Wall XLPE Primary Cable	TAN	1960.0	-	45	1703F

Name	Terminal Part Number	V-Min	Name	Wire Part Number	Wire CSA	Wire Spec	Wire Material description	Wire Color Description	Wire Length	End2 Terminal Part Number	End2 Pin Name	End2 Connector
7	-	-	MJ71B	2645915 R1	0.79	18.0	TXL 150C	TAN	1990.0	-	B	7500M
8	-	-	PM92#163	3510335 R1	0.79	18.0	Thin Wall XLPE Primary Cable	YELLOW 2	2820.0	-	63	7500
8	-	-	SM92#163	3510335 R1	0.79	18.0	Thin Wall XLPE Primary Cable	YELLOW 2	3100.0	-	18	1501
8	-	-	KH13A	2643691 R1	1.91	14.0	Std. Wall XLPE Primary Cable	PINK	3385.0	-	35	7105
9	-	-	SK14HC	3510367 R1	1.91	14.0	Thin Wall XLPE Primary Cable	RED	1505.0	-	A	1913
10	-	-	KK77	3510299 R1	0.79	18.0	Thin Wall XLPE Primary Cable	LIGHT GREEN	1860.0	-	B	6200
10	-	-	SA77J	2643678 R1	1.16	16.0	Std. Wall XLPE Primary Cable	LIGHT GREEN	1738.0	-	65	1703F
10	-	-	SA77J	2643678 R1	1.16	16.0	Std. Wall XLPE Primary Cable	LIGHT GREEN	1960.0	-	65	1703F
11	-	-	WIRE725694	-	0.0	-	-	-	0.0	-	1	-
11	-	-	WIRE735175	-	0.0	-	-	-	0.0	-	1	-

Name	Terminal Part Number	V-Min	Name	Wire Part Number	Wire CSA	Wire Spec	Wire Material description	Wire Color Description	Wire Length	End2 Terminal Part Number	End2 Pin Name	End2 Connector
11	-	-	WIRE725674	-	0.0	-	-	-	0.0	-	X	-
11	-	-	WIRE735171	-	0.0	-	-	-	0.0	-	1	-
11	-	-	WIRE720075	-	0.0	-	-	-	0.0	-	PIN1	-
11	-	-	WIRE870700	-	0.0	-	-	-	0.0	-	PIN1	-
11	-	-	WIRE870713	-	0.0	-	-	-	0.0	-	1	-
11	-	-	WIRE870800	-	0.0	-	-	-	0.0	-	PIN1	-
11	-	-	WIRE725661	-	0.0	-	-	-	0.0	-	X	-
11	-	-	WIRE725682	-	0.0	-	-	-	0.0	-	PIN1	-
11	-	-	WIRE725694	-	0.0	-	-	-	0.0	-	X	-
11	-	-	WIRE735171	-	0.0	-	-	-	0.0	-	PIN1	-
11	-	-	WIRE735175	-	0.0	-	-	-	0.0	-	X	-
12	-	-	PH92#161	3510329 R1	0.79	18.0	Thin Wall XLPE Primary Cable	TAN	2460.0	-	61	7151
13	-	-	CA31B	2645915 R1	0.79	18.0	TXL 150C	TAN	2580.0	-	1	7700M
13	-	-	CA31B	2645915 R1	0.79	18.0	TXL 150C	TAN	2580.0	-	1	7700K

Name	Terminal Part Number	V-Min	Name	Wire Part Number	Wire CSA	Wire Spec	Wire Material description	Wire Color Description	Wire Length	End2 Terminal Part Number	End2 Pin Name	End2 Connector
13	-	-	NJ31	3510329 R1	0.79	18.0	Thin Wall XLPE Primary Cable	TAN	1960.0	-	61	1703F
14	-	-	MA88	2643687 R1	1.91	14.0	Std. Wall XLPE Primary Cable	LIGHT GREEN	2640.0	-	A	7800
14	-	-	KM88	2643678 R1	1.16	16.0	Std. Wall XLPE Primary Cable	LIGHT GREEN	3850.0	-	A	7800
15	-	-	MB41E	3510329 R1	0.79	18.0	Thin Wall XLPE Primary Cable	TAN	1960.0	-	24	1703F
16	-	-	LA17B	3510324 R1	1.16	16.0	Thin Wall XLPE Primary Cable	PINK	315.0	-	X	-
16	-	-	GA17	2643752 R1	1.16	16.0	Std. Wall XLPE Primary Cable	PINK	1440.0	-	B	6316M
16	-	-	KA17A	3510324 R1	1.16	16.0	Thin Wall XLPE Primary Cable	PINK	2575.0	-	A	6306
16	-	-	GB17A	3510324 R1	1.16	16.0	Thin Wall XLPE Primary Cable	PINK	1220.0	-	A	6306
17	-	-	WIRE725695	-	0.0	-	-	-	0.0	-	1	-

Name	Terminal Part Number	V-Min	Name	Wire Part Number	Wire CSA	Wire Spec	Wire Material description	Wire Color Description	Wire Length	End2 Terminal Part Number	End2 Pin Name	End2 Connector
17	-	-	WIRE735165	-	0.0	-	-	-	0.0	-	1	-
17	-	-	WIRE725675	-	0.0	-	-	-	0.0	-	X	-
17	-	-	WIRE735158	-	0.0	-	-	-	0.0	-	1	-
17	-	-	WIRE720078	-	0.0	-	-	-	0.0	-	PIN1	-
17	-	-	WIRE870703	-	0.0	-	-	-	0.0	-	1	-
17	-	-	WIRE870710	-	0.0	-	-	-	0.0	-	1	-
17	-	-	WIRE870803	-	0.0	-	-	-	0.0	-	PIN1	-
17	-	-	WIRE725662	-	0.0	-	-	-	0.0	-	X	-
17	-	-	WIRE725683	-	0.0	-	-	-	0.0	-	PIN1	-
17	-	-	WIRE725695	-	0.0	-	-	-	0.0	-	PIN1	-
17	-	-	WIRE735158	-	0.0	-	-	-	0.0	-	PIN1	-
17	-	-	WIRE735165	-	0.0	-	-	-	0.0	-	PIN1	-
18	-	-	MB41D	3510329 R1	0.79	18.0	Thin Wall XLPE Primary Cable	TAN	1960.0	-	25	1703F
19	-	-	TZ92#134	3510329 R1	0.79	18.0	Thin Wall XLPE Primary Cable	TAN	2545.0	-	11	1501

Name	Terminal Part Number	V-Min	Name	Wire Part Number	Wire CSA	Wire Spec	Wire Material description	Wire Color Description	Wire Length	End2 Terminal Part Number	End2 Pin Name	End2 Connector
19	-	-	TD92#134	3510329 R1	0.79	18.0	Thin Wall XLPE Primary Cable	TAN	3555.0	-	34	7150
19	-	-	PM92#134	3510335 R1	0.79	18.0	Thin Wall XLPE Primary Cable	YELLOW 2	2820.0	-	34	7500
19	-	-	PV92#142	3510359 R1	0.79	18.0	Thin Wall XLPE Primary Cable	WHITE	2845.0	-	11	1501
19	-	-	SM92#134	3510335 R1	0.79	18.0	Thin Wall XLPE Primary Cable	YELLOW 2	3100.0	-	11	1501
19	-	-	UD92-GCJ	3510359 R1	0.79	18.0	Thin Wall XLPE Primary Cable	WHITE	1960.0	-	21	1703F
19	-	-	KH17-GC	2643794 R1	0.79	18.0	Std. Wall XLPE Primary Cable	PINK	3385.0	-	4	7105
19	-	-	PM92#134	3510335 R1	0.79	18.0	Thin Wall XLPE Primary Cable	YELLOW 2	2820.0	-	34	7150
20	-	-	SY92A141	3510329 R1	0.79	18.0	Thin Wall XLPE Primary Cable	TAN	3100.0	-	12	1501

Name	Terminal Part Number	V-Min	Name	Wire Part Number	Wire CSA	Wire Spec	Wire Material description	Wire Color Description	Wire Length	End2 Terminal Part Number	End2 Pin Name	End2 Connect or
20	-	-	RL92A141	3510329 R1	0.79	18.0	Thin Wall XLPE Primary Cable	TAN	2820.0	-	41	7500
20	-	-	UB92#141	3510329 R1	0.79	18.0	Thin Wall XLPE Primary Cable	TAN	1960.0	-	28	1703F
20	-	-	KH17B	2643794 R1	0.79	18.0	Std. Wall XLPE Primary Cable	PINK	3385.0	-	32	7105
20	-	-	UD92BJ	3510329 R1	0.79	18.0	Thin Wall XLPE Primary Cable	TAN	1960.0	-	28	1703F
20	-	-	PH92A141	3510329 R1	0.79	18.0	Thin Wall XLPE Primary Cable	TAN	2460.0	-	41	7151
21	-	-	PR92D103	3510335 R1	0.79	18.0	Thin Wall XLPE Primary Cable	YELLOW 2	1035.0	-	X	-
21	-	-	SR92D103	3510335 R1	0.79	18.0	Thin Wall XLPE Primary Cable	YELLOW 2	670.0	-	X	-
21	-	-	LA17C	3510324 R1	1.16	16.0	Thin Wall XLPE Primary Cable	PINK	315.0	-	X	-

Name	Terminal Part Number	V-Min	Name	Wire Part Number	Wire CSA	Wire Spec	Wire Material description	Wire Color Description	Wire Length	End2 Terminal Part Number	End2 Pin Name	End2 Connector
21	-	-	KH17C	3510324 R1	1.16	16.0	Thin Wall XLPE Primary Cable	PINK	3385.0	-	26	7105
22	-	-	KA97C	3510347 R1	0.79	18.0	Thin Wall XLPE Primary Cable	VIOLET	1375.0	-	6	6018
22	-	-	BE97CJ	3510347 R1	0.79	18.0	Thin Wall XLPE Primary Cable	VIOLET	1960.0	-	49	1703F
22	-	-	VJ97C	3510346 R1	0.53	20.0	Thin Wall XLPE Primary Cable	VIOLET	1330.0	-	9	6000
23	-	-	KA97B	3510347 R1	0.79	18.0	Thin Wall XLPE Primary Cable	VIOLET	1375.0	-	2	6018
23	-	-	BD97BJ	3510347 R1	0.79	18.0	Thin Wall XLPE Primary Cable	VIOLET	1960.0	-	36	1703F
23	-	-	VJ97B	3510346 R1	0.53	20.0	Thin Wall XLPE Primary Cable	VIOLET	1330.0	-	33	6000
24	-	-	KA97M	3510347 R1	0.79	18.0	Thin Wall XLPE Primary Cable	VIOLET	1375.0	-	57	6018

Name	Terminal Part Number	V-Min	Name	Wire Part Number	Wire CSA	Wire Spec	Wire Material description	Wire Color Description	Wire Length	End2 Terminal Part Number	End2 Pin Name	End2 Connector
25	-	-	TN92#117	3510341 R1	0.79	18.0	Thin Wall XLPE Primary Cable	LIGHT BLUE	3100.0	-	6	1501
25	-	-	RN92#117	3510341 R1	0.79	18.0	Thin Wall XLPE Primary Cable	LIGHT BLUE	2820.0	-	17	7500
25	-	-	TM92DL	3510341 R1	0.79	18.0	Thin Wall XLPE Primary Cable	LIGHT BLUE	2935.0	-	X	-
25	-	-	RM92DL	3510341 R1	0.79	18.0	Thin Wall XLPE Primary Cable	LIGHT BLUE	2640.0	-	X	-
28	-	-	KA99B	3510347 R1	0.79	18.0	Thin Wall XLPE Primary Cable	VIOLET	1375.0	-	33	6018
28	-	-	BE99BJ	3510347 R1	0.79	18.0	Thin Wall XLPE Primary Cable	VIOLET	1960.0	-	47	1703F
28	-	-	VJ99B	3510346 R1	0.53	20.0	Thin Wall XLPE Primary Cable	VIOLET	1330.0	-	10	6000
29	-	-	KA97N	3510347 R1	0.79	18.0	Thin Wall XLPE Primary Cable	VIOLET	1375.0	-	29	6018

Name	Terminal Part Number	V-Min	Name	Wire Part Number	Wire CSA	Wire Spec	Wire Material description	Wire Color Description	Wire Length	End2 Terminal Part Number	End2 Pin Name	End2 Connector
30	-	-	KA97P	3510329 R1	0.79	18.0	Thin Wall XLPE Primary Cable	TAN	1375.0	-	12	6018
30	-	-	BD97M	3510347 R1	0.79	18.0	Thin Wall XLPE Primary Cable	VIOLET	1960.0	-	38	1703F
30	-	-	BE97FU	3510348 R1	1.16	16.0	Thin Wall XLPE Primary Cable	VIOLET	1960.0	-	38	1703F
30	-	-	VX6B	3510311 R1	0.79	18.0	Thin Wall XLPE Primary Cable	GREY	800.0	-	X	-
32	-	-	BE97WC	3510347 R1	0.79	18.0	Thin Wall XLPE Primary Cable	VIOLET	1960.0	-	37	1703F
32	-	-	VJ97N	3510346 R1	0.53	20.0	Thin Wall XLPE Primary Cable	VIOLET	1330.0	-	61	6000
33	-	-	BE97M	3510347 R1	0.79	18.0	Thin Wall XLPE Primary Cable	VIOLET	1960.0	-	48	1703F
33	-	-	VJ97M	3510346 R1	0.53	20.0	Thin Wall XLPE Primary Cable	VIOLET	1330.0	-	64	6000

Name	Terminal Part Number	V-Min	Name	Wire Part Number	Wire CSA	Wire Spec	Wire Material description	Wire Color Description	Wire Length	End2 Terminal Part Number	End2 Pin Name	End2 Connect or
37	-	-	KA13	3510323 R1	0.79	18.0	Thin Wall XLPE Primary Cable	PINK	1375.0	-	17	6018
37	-	-	KV13	3510324 R1	1.16	16.0	Thin Wall XLPE Primary Cable	PINK	360.0	-	X	-
37	-	-	KA13	3510323 R1	0.79	18.0	Thin Wall XLPE Primary Cable	PINK	1375.0	-	X	-
39	-	-	ML93	2643676 R1	0.79	18.0	Std. Wall XLPE Primary Cable	TAN	2340.0	-	A	7103M
41	-	-	KN88A	2643678 R1	1.16	16.0	Std. Wall XLPE Primary Cable	LIGHT GREEN	3850.0	-	A	7801
42	-	-	RY14LSC	2643787 R1	3.01	12.0	Std. Wall XLPE Primary Cable	WHITE	2090.0	-	C	9913B

Connector Name	1702
Part Number	3595620C1
Instances	A26 - Body Builder Lighting - Combined Turn and Stop Lamps (Manual):Diagram1-Option 1 (In Cab, W/08HAU) A26 - Body Builder Lighting - Combined Turn and Stop Lamps (Manual):Diagram1-Option 2 (Back-of-Cab, W/08HAB) A26 - Body Builder Lighting - Combined Turn and Stop Lamps (Manual):Diagram1-Option 3 (End-of-Frame, W/08HAE)
Mates	1702

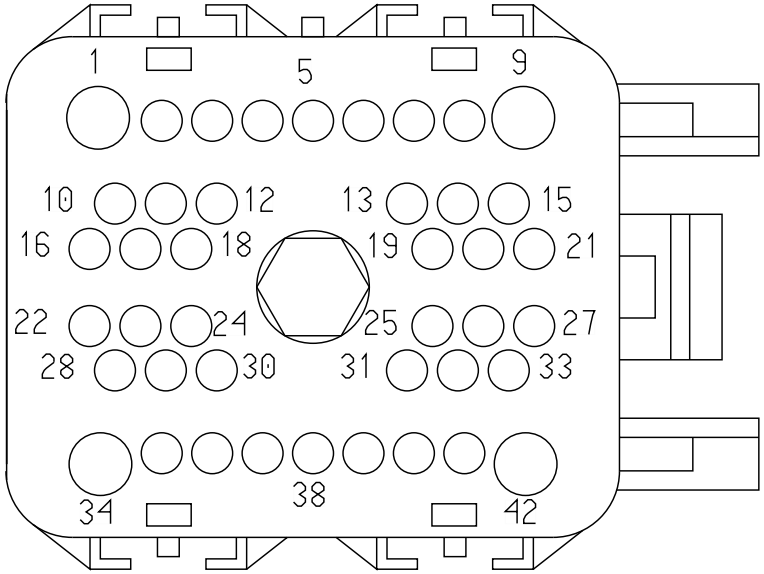

Name	Terminal Part Number	V-Min	Name	Wire Part Number	Wire CSA	Wire Spec	Wire Material description	Wire Color Description	Wire Length	End2 Terminal Part Number	End2 Pin Name	End2 Connect or
7	-	-	ZA71BJ	3510318 R1	1.16	16.0	Thin Wall XLPE Primary Cable	ORANGE	1960.0	-	44	1703F

Connector Name	1702
Part Number	3595620C1
Short Description	DASH CONNECTOR
Instances	L9 - Backup Lights (Dual Reverse Light) Eaton/Manual Trans:Diagram2
Mates	1702

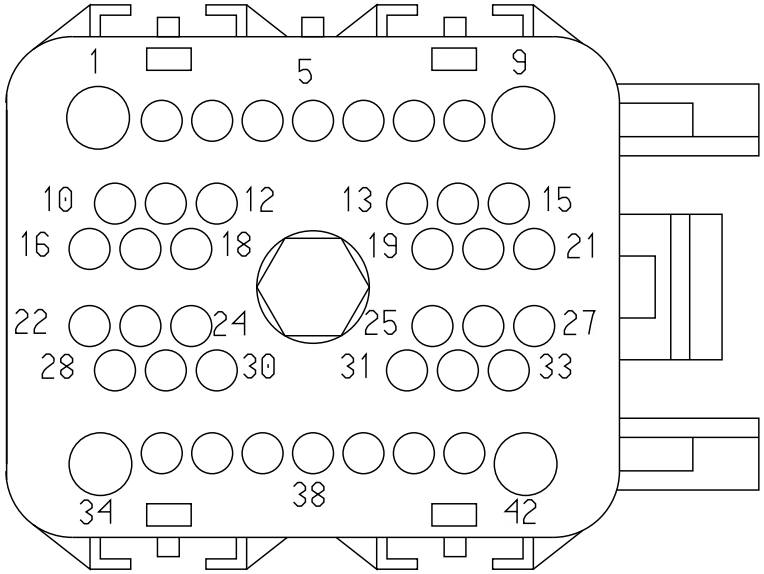

Name	Terminal Part Number	V-Min	Name	Wire Part Number	Wire CSA	Wire Spec	Wire Material description	Wire Color Description	Wire Length	End2 Terminal Part Number	End2 Pin Name	End2 Connect or
6	-	-	KH71	3510318 R1	1.16	16.0	Thin Wall XLPE Primary Cable	ORANGE	2310.0	-	1	P9073
7	-	-	KH71A	3510318 R1	1.16	16.0	Thin Wall XLPE Primary Cable	ORANGE	2310.0	-	2	P9073

Connector Name	1702
Part Number	3595620C1
Short Description	DASH CONNECTOR
Instances	L9 - Backup Lights (Dual Reverse Light) Eaton/Manual Trans:Diagram1
Mates	1702

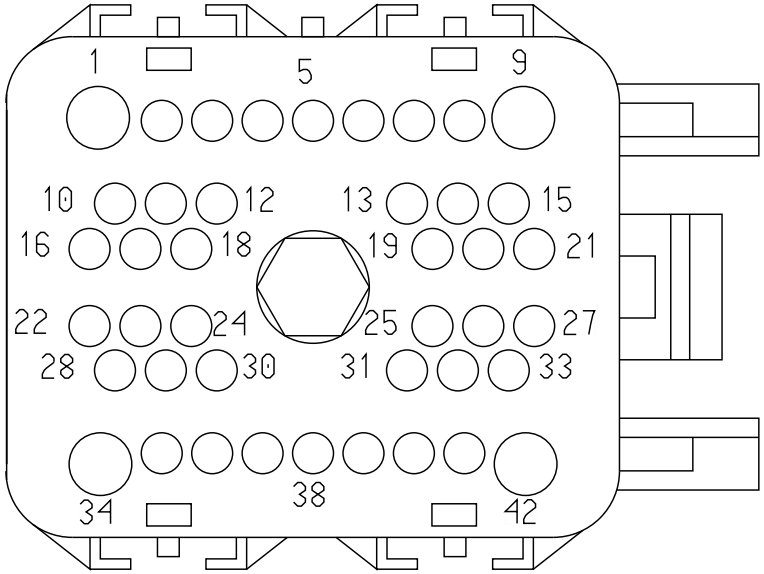

Name	Terminal Part Number	V-Min	Name	Wire Part Number	Wire CSA	Wire Spec	Wire Material description	Wire Color Description	Wire Length	End2 Terminal Part Number	End2 Pin Name	End2 Connect or
6	-	-	MJ71A	2645921 R1	0.79	18.0	TXL 150C	ORANGE	1990.0	-	1	P9074
7	-	-	MJ71B	2645915 R1	0.79	18.0	TXL 150C	TAN	1990.0	-	2	P9074

Connector Name	1702
Part Number	3595621C1
Short Description	IP / ENGINE INTERCONNECT
Instances	A26 - 2-Way Radio:Diagram1 A26 - 2-Way Radio:Diagram2 A26 - Ambient Air Temperature:Diagram1 A26 - Back-Up Alarm (Manual) W/ Tailboard:Diagram1 A26 - Back-Up Alarm (Manual) W/O Tailboard:Diagram1 A26 - Backup Alarm (Switch to 5 Pin 08TKC Tailboard to Alarm) (Manual):Diagram1 A26 - Backup Alarm (Switch to 5 Pin 08TKC Tailboard. Alarm Plugs In) (Manual):Diagram1 A26 - Backup Light (Dual Daisy Reverse LT)Allison/ZF Trans 3K/4K:Diagram1 A26 - Backup Light (Dual Daisy Reverse LT)Allison/ZF Trans 3K/4K:Diagram2 A26 - Backup Light (Dual Reverse Light)Allison/ZF Trans 3K/4K:Diagram1 A26 - Backup Light (Dual Reverse Light)Allison/ZF Trans 3K/4K:Diagram2 A26 - Backup Light (Single Reverse Light) Allison 3K/4K:Diagram1 A26 - Backup Light (Single Reverse Light) Allison 3K/4K:Diagram2 A26 - Backup Light (Single Reverse Light) Allison 3K/4K Option2:Diagram1 A26 - Backup Light (Single Reverse Light) Allison 3K/4K Option2:Diagram2 A26 - Backup Light (Single Reverse Light) W/Less Power Module Allison 3K/4K:Diagram1-Combination1 A26 - Backup Light (Single Reverse Light) W/Less Power Module Allison 3K/4K:Diagram1-Combination2 A26 - Backup Light (Single Reverse Light)Allison 3K/4K:Diagram1 A26 - Backup Light (Single Reverse Light)Allison 3K/4K:Diagram2 A26 - Backup Lights (Dual Daisy Reverse Light) Eaton/Manual Trans:Diagram1 A26 - Backup Lights (Dual Reverse Light) Eaton/Manual Trans:Diagram1 A26 - Backup Lights (Reverse) W/Less Power Module Eaton/ Manual Trans:Diagram1

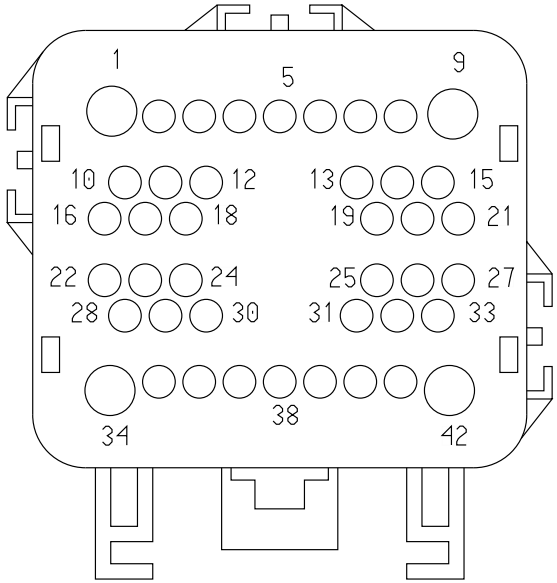

A26 - Backup Lights (Single Reverse Light) Eaton/Manual Trans:Diagram1
A26 - Backup Lights (Single Reverse Lights) Eaton/Manual Trans:Diagram1
A26 - Backup Lights (Single Reverse Lights) Eaton/Manual Trans Option2:Diagram1
A26 - Backup Lights (Single Reverse Lights) Eaton/Manual Transmission:Diagram1
A26 - Body Builder Lighting - BOC, 08HBX (Manual):Diagram1
A26 - CAN Layout:Powertrain Standard J1939 (500Kbps)
A26 - Cranking (Starter) GEN4 BCM W/ Thermal Overcrank:Diagram1
A26 - Cranking (Starter) GEN4 BCM W/ Thermal Overcrank:Diagram2
A26 - Cranking (Starter) GEN4 BCM W/ Thermal Overcrank:Diagram3
A26 - Cranking (Starter) GEN4 BCM W/ Thermal Overcrank:Diagram4
A26 - Cranking (Starter) GEN4 BCM W/ Thermal Overcrank:Diagram5
A26 - Cranking (Starter) GEN4 BCM W/ Thermal Overcrank:Diagram6
A26 - Cranking (Starter) GEN4 BCM W/O Thermal Overcrank:Diagram1
A26 - Cranking (Starter) GEN4 BCM W/O Thermal Overcrank:Diagram2
A26 - Cranking (Starter) GEN4 BCM W/O Thermal Overcrank:Diagram3
A26 - Cranking (Starter) GEN4 BCM W/O Thermal Overcrank:Diagram4
A26 - Cranking (Starter) GEN4 BCM W/O Thermal Overcrank:Diagram5
A26 - Cranking (Starter) GEN4 BCM W/O Thermal Overcrank:Diagram6
A26 - ECM:Diagram1
A26 - Heating Ventilation & Air Conditioning (HVAC):Diagram1
A26 - Heating Ventilation & Air Conditioning (HVAC) Auto Temp Control:Diagram1 - HVAC
A26 - Powertrain J1939 Allison 3k/4k:A26 - Powertrain J1939 Allison 3k/4k
A26 - Powertrain J1939 UltraShift Transmission:A26 - Powertrain J1939 UltraShift Transmission
A26 - Starter Interlock (BCM Controlled with Input from Allison 3K/4K TCM):Diagram1

A26 - Starter Interlock (BCM Controlled with Input from Allison 3K/4K TCM):Diagram2
A26 - Starter Interlock (BCM LSD Controlled w/ Relay & N/ Auto SS):Diagram1
A26 - Transmission Oil Temperature-Manual Trans:Diagram1
A26 - Transmission Oil Temperature-Manual Trans:Diagram2
A26 - Transmission Oil Temperature-Manual Trans w/Aux Gauge:Diagram1
A26 - Transmission Oil Temperature-Manual Trans w/Aux Gauge:Diagram2
A26 - Transmission Power Take Off (Auto Trans Dual PTO W/ 42 Parameters):Diagram1
A26 - Transmission Power Take Off (Auto Trans Single PTO w/21 Parameters):Diagram1
A26 - Transmission Power Take Off (Manual Trans Dual PTO W/ 42 Parameters):Diagram1
A26 - Transmission Power Take Off (Manual Trans Single PTO w/ 21 Parameters):Diagram1
A26 - Transmission Power Take Off (Single Input Configurable pull up or pull down):Diagram1
A26 - Transmission Shifter (Stalk Shifter Allison):Diagram1
A26 - Transmission Shifter (Stalk Shifter Allison):Diagram2
A26 - Ultrashift Plus:Diagram1
A26 - Vehicle Acceleration (w/ Two PWR Two GND & Two STS):Diagram1
A26 - WORK LIGHT W Backup 1 Bulb:Diagram1
A26 - WORK LIGHT W Backup 1 Bulb:Diagram2
A26 - Work Light W/ Backup 1 Bulb W/Manual W/ RKE:Diagram1-Combination1
A26 - Work Light W/ Backup 1 Bulb W/Manual W/ RKE:Diagram1-Combination2
B6.7 - Back-Up Alarm (Manual) W/ Tailboard:Diagram1
B6.7 - Back-Up Alarm (Manual) W/O Tailboard:Diagram1
B6.7 - Backup Light (Dual Daisy Reverse LT)Allison/ZF Trans 1K/2K:Diagram1
B6.7 - Backup Light (Dual Daisy Reverse LT)Allison/ZF Trans 3K/4K:Diagram1
B6.7 - Backup Light (Dual Daisy Reverse LT)Allison/ZF Trans 3K/4K:Diagram2
B6.7 - Backup Light (Dual Reverse Light)Allison/ZF Trans 1K/2K:Diagram1
B6.7 - Backup Light (Dual Reverse Light)Allison/ZF Trans 3K/4K:Diagram1

B6.7 - Backup Light (Dual Reverse Light)Allison/ZF Trans 3K/4K:Diagram2
B6.7 - Backup Light (Single Reverse Light) Allison 1K/2K Option 1:Diagram1
B6.7 - Backup Light (Single Reverse Light) Allison 1K/2K Option 2:Diagram1
B6.7 - Backup Light (Single Reverse Light) Allison 1K/2K Option 3:Diagram1
B6.7 - Backup Light (Single Reverse Light) Allison 3K/4K Option 1:Diagram1
B6.7 - Backup Light (Single Reverse Light) Allison 3K/4K Option 1:Diagram2
B6.7 - Backup Light (Single Reverse Light) Allison 3K/4K Option 2:Diagram1
B6.7 - Backup Light (Single Reverse Light) Allison 3K/4K Option 2:Diagram2
B6.7 - Backup Light (Single Reverse Light) Allison 3K/4K Option 3:Diagram1
B6.7 - Backup Light (Single Reverse Light) Allison 3K/4K Option 3:Diagram2
B6.7 - Backup Lights (Dual Daisy Reverse Light) Eaton/Manual Trans:Diagram1
B6.7 - Backup Lights (Dual Reverse Light) Eaton/Manual Trans:Diagram1
B6.7 - Backup Lights (Single Reverse Light) Eaton/Manual Trans:Diagram1
B6.7 - Backup Lights (Single Reverse Lights) Eaton/Manual Trans Option 1:Diagram1
B6.7 - Backup Lights (Single Reverse Lights) Eaton/Manual Trans Option 2:Diagram1
B6.7 - Body Builder Lighting - Combined Turn and Stop Lamps (Manual):Diagram1
B6.7 - Body Builder Lighting - Combined Turn and Stop Lamps (Manual):Diagram2
B6.7 - Body Builder Lighting - Combined Turn and Stop Lamps (Manual):Diagram3
B6.7 - CAN Layout:Powertrain Standard J1939 (500Kbps)
B6.7 - Cranking (Starter) GEN4 BCM W/O Thermal Overcrank:Diagram1
B6.7 - ECM Cummins CM2350A:Diagram 1
B6.7 - Heating Ventilation & Air Conditioning (HVAC):Diagram1
B6.7 - Heating Ventilation & Air Conditioning (HVAC) Auto Temp Control:Diagram1 - HVAC

B6.7 - Powertrain J1939 Allison 1k/2k:B6.7 - Allison 1k/2k Transmission
B6.7 - Powertrain J1939 Allison 3k/4k:B6.7 - Allison 3k/4k Transmission
B6.7 - Powertrain J1939 Manual Transmission:B6.7 - Manual Transmission
B6.7 - Range Inhibit (sixth gear inhibit switch):Diagram1
B6.7 - Starter Interlocks (BCM Controlled with Input from Allison 1K/2K TCM):Diagram1
B6.7 - Starter Interlocks (BCM Controlled with Input from Allison 3K/4K TCM):Diagram1
B6.7 - Starter Interlocks (BCM Controlled with Input from Allison 3K/4K TCM):Diagram2
B6.7 - Transmission (Allison 3K/4K):Diagram1
B6.7 - Transmission (Allison 3K/4K):Diagram2
B6.7 - Transmission Oil Temperature-Manual Trans:Diagram1
B6.7 - Transmission Oil Temperature-Manual Trans (w/Aux Gauge):Diagram1
B6.7 - Transmission Power Take Off (Auto Trans Single PTO w/21 Parameters):Diagram1
B6.7 - Transmission Power Take Off (Manual Trans Single PTO w/21 Parameters):Diagram1
B6.7 - Transmission Power Take Off (Single Input configurable pull up or pull down):Diagram1
B6.7 - Transmission Shifter (Stalk Shifter Allison):Diagram1
B6.7 - Transmission Shifter (Stalk Shifter Allison):Diagram2
B6.7 - Transmission Shifter Allison 5th Gen Push Button(SURHD):Diagram1
B6.7 - Transmission Shifter Allison 5th Gen Push Button(SURHD):Diagram2
B6.7 - Two Speed Axle (AirShift on Shifter):Diagram1
B6.7 - Vehicle Acceleration (w/ Two PWR Two GND & Two STS):Diagram1
B6.7 - WORK LIGHT W BackUP 1 BULB:Diagram1
L9 - Ambient Air Temperature:Diagram1
L9 - Auto Neutral (Allison with Multiplex Switch and Confirmation Telltale):Diagram1
L9 - Auto Neutral (Allison with Multiplex Switch and Confirmation Telltale):Diagram2
L9 - Auto Neutral (Allison without Multiplex Switch and Confirmation Telltale):Diagram1
L9 - Auto Neutral (Allison without Multiplex Switch and Confirmation Telltale):Diagram2
L9 - Back-Up Alarm (Manual) W/ Tailboard:Diagram1

L9 - Back-Up Alarm (Manual) W/ Tailboard:Diagram2
L9 - Back-Up Alarm (Manual) W/O Tailboard:Diagram1
L9 - Back-Up Alarm (Manual) W/O Tailboard:Diagram2
L9 - Backup Light (Dual Daisy Reverse Light)Allison/ZF Trans 3K/4K:Diagram1
L9 - Backup Light (Dual Daisy Reverse Light)Allison/ZF Trans 3K/4K:Diagram2
L9 - Backup Light (Single Reverse Light) Allison 3K/4K Option 1:Diagram1
L9 - Backup Light (Single Reverse Light) Allison 3K/4K Option 1:Diagram2
L9 - Backup Light (Single Reverse Light) Allison 3K/4K Option 2:Diagram1
L9 - Backup Light (Single Reverse Light) Allison 3K/4K Option 2:Diagram2
L9 - Backup Light (Single Reverse Light) Allison 3K/4K Option 3:Diagram1
L9 - Backup Light (Single Reverse Light) Allison 3K/4K Option 3:Diagram2
L9 - Backup Light (Single Reverse Light)Allison:Diagram1
L9 - Backup Light (Single Reverse Light)Allison:Diagram2
L9 - Backup Lights (Dual Daisy Reverse Light) Eaton/Manual Trans:Diagram1
L9 - Backup Lights (Dual Daisy Reverse Light) Eaton/Manual Trans:Diagram2
L9 - Backup Lights (Single Reverse Light) Eaton/Manual Trans Option 1:Diagram1
L9 - Backup Lights (Single Reverse Light) Eaton/Manual Trans Option 1:Diagram2
L9 - Backup Lights (Single Reverse Light) Eaton/Manual Trans Option 2:Diagram1
L9 - Backup Lights (Single Reverse Light) Eaton/Manual Trans Option 2:Diagram2
L9 - Backup Lights (Single Reverse Light) Eaton/Manual Trans Option 3:Diagram1
L9 - Backup Lights (Single Reverse Light) Eaton/Manual Trans Option 3:Diagram2
L9 - Backup Lights (Single Reverse Light) Eaton/Manual Trans Option 4:Diagram1
L9 - Backup Lights (Single Reverse Light) Eaton/Manual Trans Option 4:Diagram2
L9 - Body Builder Lighting - Combined Turn and Stop Lamps (Manual):Diagram1

L9 - Body Builder Lighting - Combined Turn and Stop Lamps (Manual):Diagram2
L9 - Body Builder Lighting - Combined Turn and Stop Lamps (Manual):Diagram3
L9 - Body Builder Lighting - Combined Turn and Stop Lamps (Manual):Diagram4
L9 - Body Builder Lighting - Combined Turn and Stop Lamps (Manual):Diagram5
L9 - Body Builder Lighting - Combined Turn and Stop Lamps (Manual):Diagram6
L9 - CAN Layout:Powertrain Standard J1939 (500kbps)
L9 - Cranking (Starter) GEN4 BCM W/ Thermal Overcrank - External Switch:Diagram1
L9 - Cranking (Starter) GEN4 BCM W/O Thermal Overcrank:Diagram1
L9 - ECM Cummins CM2350A:Diagram1
L9 - Heating Ventilation & Air Conditioning (HVAC):Diagram1
L9 - Heating Ventilation & Air Conditioning (HVAC) Auto Temp Control:Diagram1 - HVAC
L9 - Powertrain J1939 Allison 3k/4k:L9 - Powertrain J1939 Allison 3k/4k
L9 - Powertrain J1939 Eaton:L9 - Powertrain J1939 Eaton
L9 - Powertrain J1939 Manual Transmission:Powertrain Standard J1939 (500kbps)
L9 - Starter Interlock (BCM LSD Controlled w/ Relay & N/ Auto SS)_EATON XMSN:Diagram1
L9 - Starter Interlocks (BCM Controlled with Input from Allison 3K/4K TCM):Diagram1
L9 - Starter Interlocks (BCM Controlled with Input from Allison 3K/4K TCM):Diagram2
L9 - Transmission (Allison 3K/4K):Diagram1
L9 - Transmission (Allison 3K/4K):Diagram2
L9 - Transmission Oil Temperature-Manual Trans w/Aux Gauge:Diagram1-Combination1
L9 - Transmission Oil Temperature-Manual Transmission:Diagram1-Combination1
L9 - Transmission Power Take Off (Auto Trans Single PTO w/21 Parameters):Diagram1
L9 - Transmission Power Take Off (Auto Trans with Lectradrive):Diagram1
L9 - Transmission Power Take Off (Lectrashift PTO with Manual Trans):Diagram1
L9 - Transmission Power Take Off (Manual Trans Single PTO w/21 Parameters):Diagram1

L9 - Transmission Power Take Off (Single Input configurable pull up or pull down):Diagram1
L9 - Transmission Shifter (Stalk Shifter Allison):Diagram1
L9 - Transmission Shifter (Stalk Shifter Allison):Diagram2
L9 - Transmission Shifter Allison 5th Gen Push Button(SURHD):Diagram1
L9 - Two Speed Axle (AirShift on Shifter):Diagram1
L9 - Ultrashift Plus:Diagram1
L9 - Vehicle Acceleration (w/ Two PWR Two GND & Two STS):Diagram1
L9 - WORK LIGHT W BackUP 1 BULB Option 1:Diagram1
L9 - WORK LIGHT W BackUP 1 BULB Option 1:Diagram2
L9 - WORK LIGHT W BackUP 1 BULB Option 1:Diagram3
L9 - WORK LIGHT W BackUP 1 BULB Option 1:Diagram4

Mates 1702

Name	Terminal Part Number	V-Min	Name	Wire Part Number	Wire CSA	Wire Spec	Wire Material description	Wire Color Description	Wire Length	End2 Terminal Part Number	End2 Pin Name	End2 Connector
2	-	-	TD9E	3510311 R1	0.79	18.0	Thin Wall XLPE Primary Cable	GREY	1960.0	-	35	1703F
2	-	-	TC9E	3510311 R1	0.79	18.0	Thin Wall XLPE Primary Cable	GREY	1635.0	-	X	-
2	-	-	YK9AA	3510312 R1	1.16	16.0	Thin Wall XLPE Primary Cable	GREY	715.0	-	-	-
2	-	-	KA146-G	3510312 R1	1.16	16.0	Thin Wall XLPE Primary Cable	GREY	590.0	-	-	-
2	-	-	TC9E	3510311 R1	0.79	18.0	Thin Wall XLPE Primary Cable	GREY	1413.0	-	X	-

Name	Terminal Part Number	V-Min	Name	Wire Part Number	Wire CSA	Wire Spec	Wire Material description	Wire Color Description	Wire Length	End2 Terminal Part Number	End2 Pin Name	End2 Connector
3	-	-	SA6DBJ	3510310 R1	0.53	20.0	Thin Wall XLPE Primary Cable	GREY	1960.0	-	19	1703F
3	-	-	YM6DB	3510310 R1	0.53	20.0	Thin Wall XLPE Primary Cable	GREY	2670.0	-	2	6201A
3	-	-	KK77A	3510299 R1	0.79	18.0	Thin Wall XLPE Primary Cable	LIGHT GREEN	2060.0	-	2	6201A
4	-	-	SA77BJ	3510298 R1	0.53	20.0	Thin Wall XLPE Primary Cable	LIGHT GREEN	1960.0	-	20	1703F
4	-	-	YM77B	3510298 R1	0.53	20.0	Thin Wall XLPE Primary Cable	LIGHT GREEN	2670.0	-	3	6201A
4	-	-	KK77B	3510299 R1	0.79	18.0	Thin Wall XLPE Primary Cable	LIGHT GREEN	2060.0	-	3	6201A
6	-	-	ZH71	3510318 R1	1.16	16.0	Thin Wall XLPE Primary Cable	ORANGE	1960.0	-	66	1703F
6	-	-	ZA71BA	3510318 R1	1.16	16.0	Thin Wall XLPE Primary Cable	ORANGE	1960.0	-	66	1703F

Name	Terminal Part Number	V-Min	Name	Wire Part Number	Wire CSA	Wire Spec	Wire Material description	Wire Color Description	Wire Length	End2 Terminal Part Number	End2 Pin Name	End2 Connector
6	-	-	KW71A	2643682 R1	1.16	16.0	Std. Wall XLPE Primary Cable	ORANGE	2850.0	-	1	7500W
7	-	-	ZA71BJ	3510318 R1	1.16	16.0	Thin Wall XLPE Primary Cable	ORANGE	1960.0	-	44	1703F
7	-	-	ZL71AA	3510329 R1	0.79	18.0	Thin Wall XLPE Primary Cable	TAN	1960.0	-	45	1703F
7	-	-	ZJ92#165	3510329 R1	0.79	18.0	Thin Wall XLPE Primary Cable	TAN	1960.0	-	45	1703F
7	-	-	ZH71AB	3510318 R1	1.16	16.0	Thin Wall XLPE Primary Cable	ORANGE	1960.0	-	45	1703F
7	-	-	ZC92#165	3510329 R1	0.79	18.0	Thin Wall XLPE Primary Cable	TAN	1960.0	-	45	1703F
7	-	-	KW71B	2643682 R1	1.16	16.0	Std. Wall XLPE Primary Cable	ORANGE	2850.0	-	2	7500W
7	-	-	TZ92#165	3510329 R1	0.79	18.0	Thin Wall XLPE Primary Cable	TAN	2545.0	-	2	1502

Name	Terminal Part Number	V-Min	Name	Wire Part Number	Wire CSA	Wire Spec	Wire Material description	Wire Color Description	Wire Length	End2 Terminal Part Number	End2 Pin Name	End2 Connector
7	-	-	TD92#165	3510329 R1	0.79	18.0	Thin Wall XLPE Primary Cable	TAN	3555.0	-	65	7150
8	-	-	ub92#163	3510324 R1	1.16	16.0	Thin Wall XLPE Primary Cable	PINK	0.0	-	42	1703F
8	-	-	ud13aj	2643752 R1	1.16	16.0	Std. Wall XLPE Primary Cable	PINK	0.0	-	42	1703F
8	-	-	UF92#163	3510330 R1	1.16	16.0	Thin Wall XLPE Primary Cable	TAN	0.0	-	42	1703F
8	-	-	UL92#16 3B	3510324 R1	1.16	16.0	Thin Wall XLPE Primary Cable	PINK	0.0	-	42	1703F
8	-	-	UB92#163	3510324 R1	1.16	16.0	Thin Wall XLPE Primary Cable	PINK	0.0	-	42	1703F
8	-	-	UD13AJ	2643752 R1	1.16	16.0	Std. Wall XLPE Primary Cable	PINK	0.0	-	42	1703F
9	-	-	SK14HD	3510367 R1	1.91	14.0	Thin Wall XLPE Primary Cable	RED	1960.0	-	1	1703F

Name	Terminal Part Number	V-Min	Name	Wire Part Number	Wire CSA	Wire Spec	Wire Material description	Wire Color Description	Wire Length	End2 Terminal Part Number	End2 Pin Name	End2 Connector
9	-	-	ZL71BB	3510359 R1	0.79	18.0	Thin Wall XLPE Primary Cable	WHITE	1960.0	-	1	1703F
9	-	-	SL14HF	3510367 R1	1.91	14.0	Thin Wall XLPE Primary Cable	RED	1960.0	-	1	1703F
10	-	-	SA77J	2643678 R1	1.16	16.0	Std. Wall XLPE Primary Cable	LIGHT GREEN	1960.0	-	65	1703F
10	-	-	KA77	2643678 R1	1.16	16.0	Std. Wall XLPE Primary Cable	LIGHT GREEN	2065.0	-	B	6200
10	-	-	KK77	3510299 R1	0.79	18.0	Thin Wall XLPE Primary Cable	LIGHT GREEN	1860.0	-	B	6200
11	-	-	WIRE722702	-	0.0	-	-	-	0.0	-	53	1703F
11	-	-	WIRE720085	-	0.0	-	-	-	0.0	-	53	1703
12	-	-	UG92#161	3510329 R1	0.79	18.0	Thin Wall XLPE Primary Cable	TAN	1960.0	-	56	1703F
13	-	-	NJ31	3510329 R1	0.79	18.0	Thin Wall XLPE Primary Cable	TAN	1960.0	-	61	1703F

Name	Terminal Part Number	V-Min	Name	Wire Part Number	Wire CSA	Wire Spec	Wire Material description	Wire Color Description	Wire Length	End2 Terminal Part Number	End2 Pin Name	End2 Connector
13	-	-	KK31	2643676 R1	0.79	18.0	Std. Wall XLPE Primary Cable	TAN	2990.0	-	1	7700L
13	-	-	WP31	2643676 R1	0.79	18.0	Std. Wall XLPE Primary Cable	TAN	3520.0	-	1	7700L
14	-	-	LP88J	3510299 R1	0.79	18.0	Thin Wall XLPE Primary Cable	LIGHT GREEN	1960.0	-	60	1703F
15	-	-	WA41D	3510359 R1	0.79	18.0	Thin Wall XLPE Primary Cable	WHITE	660.0	-	X	-
16	-	-	KR17	2643752 R1	1.16	16.0	Std. Wall XLPE Primary Cable	PINK	3645.0	-	A	6306/6307
16	-	-	LA17B	3510324 R1	1.16	16.0	Thin Wall XLPE Primary Cable	PINK	315.0	-	X	-
16	-	-	LG17BA	3510324 R1	1.16	16.0	Thin Wall XLPE Primary Cable	PINK	1960.0	-	29	1703F
16	-	-	LB17	2643752 R1	1.16	16.0	Std. Wall XLPE Primary Cable	PINK	3440.0	-	B	6316M
17	-	-	WIRE722703	-	0.0	-	-	-	0.0	-	52	1703F

Name	Terminal Part Number	V-Min	Name	Wire Part Number	Wire CSA	Wire Spec	Wire Material description	Wire Color Description	Wire Length	End2 Terminal Part Number	End2 Pin Name	End2 Connector
17	-	-	WIRE720086	-	0.0	-	-	-	0.0	-	52	1703
18	-	-	VL41E	3510329 R1	0.79	18.0	Thin Wall XLPE Primary Cable	TAN	1375.0	-	9	6018
19	-	-	UL92#134	3510329 R1	0.79	18.0	Thin Wall XLPE Primary Cable	TAN	1960.0	-	21	1703F
19	-	-	UB92#134	3510329 R1	0.79	18.0	Thin Wall XLPE Primary Cable	TAN	1960.0	-	21	1703F
19	-	-	KH17-GC	2643794 R1	0.79	18.0	Std. Wall XLPE Primary Cable	PINK	3385.0	-	4	7105A
19	-	-	UD92-GCJ	3510359 R1	0.79	18.0	Thin Wall XLPE Primary Cable	WHITE	1960.0	-	21	1703F
20	-	-	UD92BJ	3510329 R1	0.79	18.0	Thin Wall XLPE Primary Cable	TAN	1960.0	-	28	1703F
20	-	-	UB92#141	3510329 R1	0.79	18.0	Thin Wall XLPE Primary Cable	TAN	1960.0	-	28	1703F
20	-	-	KH17B	2643794 R1	0.79	18.0	Std. Wall XLPE Primary Cable	PINK	3385.0	-	32	7105A

Name	Terminal Part Number	V-Min	Name	Wire Part Number	Wire CSA	Wire Spec	Wire Material description	Wire Color Description	Wire Length	End2 Terminal Part Number	End2 Pin Name	End2 Connector
20	-	-	TD92#141	3510329 R1	0.79	18.0	Thin Wall XLPE Primary Cable	TAN	3555.0	-	41	7150
20	-	-	TZ92#141	3510329 R1	0.79	18.0	Thin Wall XLPE Primary Cable	TAN	2545.0	-	12	1501
21	-	-	GZ92#103	3510329 R1	0.79	18.0	Thin Wall XLPE Primary Cable	TAN	1960.0	-	55	1703F
21	-	-	KH17C	3510324 R1	1.16	16.0	Thin Wall XLPE Primary Cable	PINK	3385.0	-	26	7105A
21	-	-	LA17C	3510324 R1	1.16	16.0	Thin Wall XLPE Primary Cable	PINK	315.0	-	X	-
22	-	-	BD97CJ	3510347 R1	0.79	18.0	Thin Wall XLPE Primary Cable	VIOLET	1960.0	-	49	1703F
22	-	-	VJ97C	3510346 R1	0.53	20.0	Thin Wall XLPE Primary Cable	VIOLET	1330.0	-	9	6000
23	-	-	BE97BJ	3510347 R1	0.79	18.0	Thin Wall XLPE Primary Cable	VIOLET	1960.0	-	36	1703F

Name	Terminal Part Number	V-Min	Name	Wire Part Number	Wire CSA	Wire Spec	Wire Material description	Wire Color Description	Wire Length	End2 Terminal Part Number	End2 Pin Name	End2 Connector
23	-	-	VJ97B	3510346 R1	0.53	20.0	Thin Wall XLPE Primary Cable	VIOLET	1330.0	-	33	6000
24	-	-	BD99D	3510347 R1	0.79	18.0	Thin Wall XLPE Primary Cable	VIOLET	1960.0	-	48	1703F
25	-	-	VA92#117	3510329 R1	0.79	18.0	Thin Wall XLPE Primary Cable	TAN	1960.0	-	43	1703F
28	-	-	BD99BJ	3510347 R1	0.79	18.0	Thin Wall XLPE Primary Cable	VIOLET	1960.0	-	47	1703F
28	-	-	VJ99B	3510346 R1	0.53	20.0	Thin Wall XLPE Primary Cable	VIOLET	1330.0	-	10	6000
29	-	-	BD97N	3510347 R1	0.79	18.0	Thin Wall XLPE Primary Cable	VIOLET	1960.0	-	37	1703F
30	-	-	BE97FU	3510348 R1	1.16	16.0	Thin Wall XLPE Primary Cable	VIOLET	1960.0	-	38	1703F
30	-	-	BD97M	3510347 R1	0.79	18.0	Thin Wall XLPE Primary Cable	VIOLET	1960.0	-	38	1703F

Name	Terminal Part Number	V-Min	Name	Wire Part Number	Wire CSA	Wire Spec	Wire Material description	Wire Color Description	Wire Length	End2 Terminal Part Number	End2 Pin Name	End2 Connector
30	-	-	KP6B	3510311 R1	0.79	18.0	Thin Wall XLPE Primary Cable	GREY	870.0	-	X	-
30	-	-	AB6B	3510311 R1	0.79	18.0	Thin Wall XLPE Primary Cable	GREY	870.0	-	X	-
30	-	-	VG6B	3510347 R1	0.79	18.0	Thin Wall XLPE Primary Cable	VIOLET	870.0	-	X	-
32	-	-	VJ97N	3510346 R1	0.53	20.0	Thin Wall XLPE Primary Cable	VIOLET	1330.0	-	61	6000
32	-	-	BE97WC	3510347 R1	0.79	18.0	Thin Wall XLPE Primary Cable	VIOLET	1960.0	-	37	1703F
33	-	-	VJ97M	3510346 R1	0.53	20.0	Thin Wall XLPE Primary Cable	VIOLET	1330.0	-	64	6000
33	-	-	BE97M	3510347 R1	0.79	18.0	Thin Wall XLPE Primary Cable	VIOLET	1960.0	-	48	1703F
37	-	-	MA97FA	3510348 R1	1.16	16.0	Thin Wall XLPE Primary Cable	VIOLET	1960.0	-	54	1703F

Name	Terminal Part Number	V-Min	Name	Wire Part Number	Wire CSA	Wire Spec	Wire Material description	Wire Color Description	Wire Length	End2 Terminal Part Number	End2 Pin Name	End2 Connector
39	-	-	UJ93	3510329 R1	0.79	18.0	Thin Wall XLPE Primary Cable	TAN	1960.0	-	56	1703F
41	-	-	LQ88AJ	3510299 R1	0.79	18.0	Thin Wall XLPE Primary Cable	LIGHT GREEN	1960.0	-	59	1703F
42	-	-	HW14LSD	3510368 R1	3.01	12.0	Thin Wall XLPE Primary Cable	RED	1960.0	-	12	1703F

Connector Name	1702
Part Number	3595621C1
Instances	A26 - Body Builder Lighting - Combined Turn and Stop Lamps (Manual):Diagram1-Option 1 (In Cab, W/08HAU) A26 - Body Builder Lighting - Combined Turn and Stop Lamps (Manual):Diagram1-Option 2 (Back-of-Cab, W/08HAB) A26 - Body Builder Lighting - Combined Turn and Stop Lamps (Manual):Diagram1-Option 3 (End-of-Frame, W/08HAE)
Mates	1702

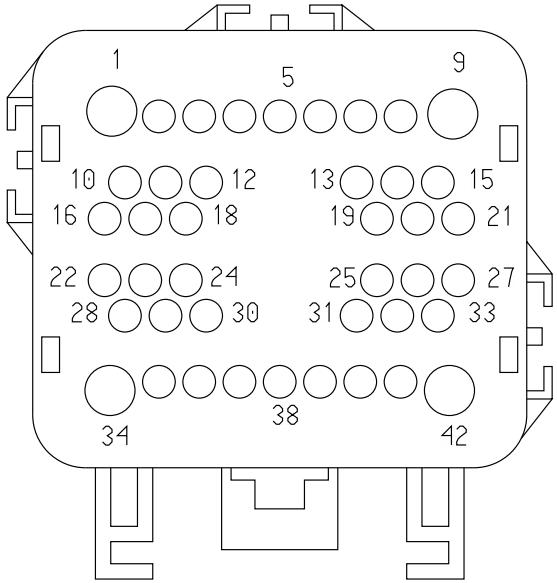

Name	Terminal Part Number	V-Min	Name	Wire Part Number	Wire CSA	Wire Spec	Wire Material description	Wire Color Description	Wire Length	End2 Terminal Part Number	End2 Pin Name	End2 Connect or
7	-	-	KW71B	2643682 R1	1.16	16.0	Std. Wall XLPE Primary Cable	ORANGE	2850.0	-	2	K20_7500W

Connector Name	1702
Part Number	3595621C1
Short Description	IP / ENGINE INTERCONNECT
Instances	L9 - Backup Lights (Dual Reverse Light) Eaton/Manual Trans:Diagram1
Mates	1702

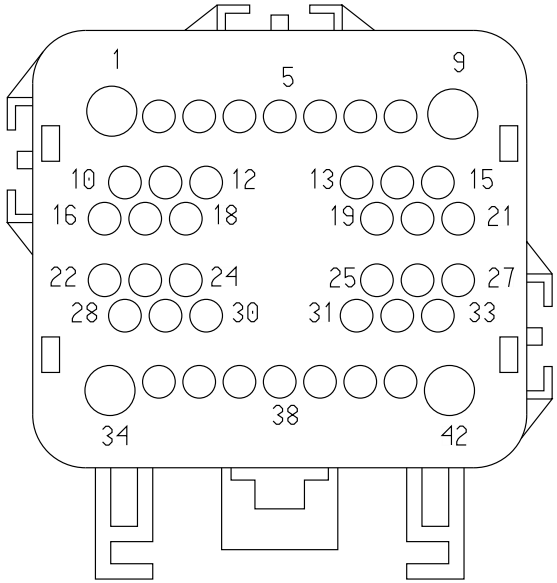

Name	Terminal Part Number	V-Min	Name	Wire Part Number	Wire CSA	Wire Spec	Wire Material description	Wire Color Description	Wire Length	End2 Terminal Part Number	End2 Pin Name	End2 Connector
6	-	-	ZH71	3510318 R1	1.16	16.0	Thin Wall XLPE Primary Cable	ORANGE	1960.0	-	66	1703F
6	-	-	ZA71BA	3510318 R1	1.16	16.0	Thin Wall XLPE Primary Cable	ORANGE	1960.0	-	66	1703F
7	-	-	ZH71AB	3510318 R1	1.16	16.0	Thin Wall XLPE Primary Cable	ORANGE	1960.0	-	45	1703F
7	-	-	ZA71BJ	3510318 R1	1.16	16.0	Thin Wall XLPE Primary Cable	ORANGE	1960.0	-	44	1703F

Name	Terminal Part Number	V-Min	Name	Wire Part Number	Wire CSA	Wire Spec	Wire Material description	Wire Color Description	Wire Length	End2 Terminal Part Number	End2 Pin Name	End2 Connector
7	-	-	ZJ92#165	3510329 R1	0.79	18.0	Thin Wall XLPE Primary Cable	TAN	1960.0	-	45	1703F
7	-	-	ZL71AA	3510329 R1	0.79	18.0	Thin Wall XLPE Primary Cable	TAN	1960.0	-	45	1703F

Connector Name	1702
Part Number	3595621C1
Short Description	IP / ENGINE INTERCONNECT
Instances	L9 - Backup Lights (Dual Reverse Light) Eaton/Manual Trans:Diagram2
Mates	1702

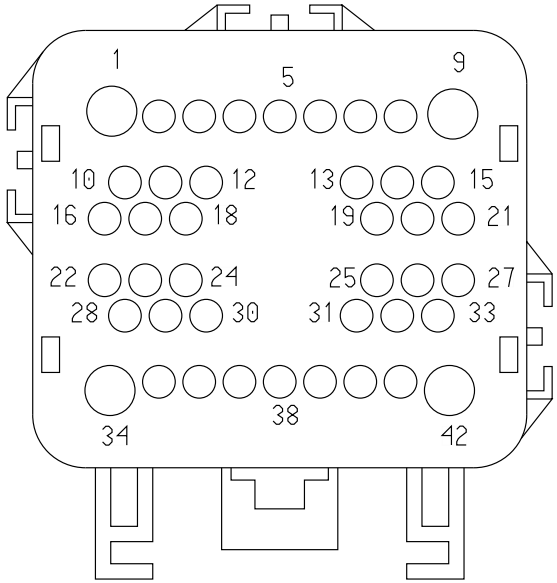

Name	Terminal Part Number	V-Min	Name	Wire Part Number	Wire CSA	Wire Spec	Wire Material description	Wire Color Description	Wire Length	End2 Terminal Part Number	End2 Pin Name	End2 Connect or
6	-	-	ZH71	3510318 R1	1.16	16.0	Thin Wall XLPE Primary Cable	ORANGE	1960.0	-	-	-
6	-	-	ZA71BA	3510318 R1	1.16	16.0	Thin Wall XLPE Primary Cable	ORANGE	1960.0	-	-	-
7	-	-	ZH71AB	3510318 R1	1.16	16.0	Thin Wall XLPE Primary Cable	ORANGE	1960.0	-	-	-
7	-	-	ZA71BJ	3510318 R1	1.16	16.0	Thin Wall XLPE Primary Cable	ORANGE	1960.0	-	-	-

Name	Terminal Part Number	V-Min	Name	Wire Part Number	Wire CSA	Wire Spec	Wire Material description	Wire Color Description	Wire Length	End2 Terminal Part Number	End2 Pin Name	End2 Connect or
7	-	-	ZJ92#165	3510329 R1	0.79	18.0	Thin Wall XLPE Primary Cable	TAN	1960.0	-	-	-
7	-	-	ZL71AA	3510329 R1	0.79	18.0	Thin Wall XLPE Primary Cable	TAN	1960.0	-	-	-

Connector Name	1703F
Part Number	3595624C1
Short Description	ENGINE/IP
Instances	A26 - Backup Light (Dual Daisy Reverse LT)Allison/ZF Trans 3K/4K:Diagram1 A26 - Backup Light (Dual Daisy Reverse LT)Allison/ZF Trans 3K/4K:Diagram2 A26 - Backup Light (Dual Reverse Light)Allison/ZF Trans 3K/4K:Diagram1 A26 - Backup Light (Dual Reverse Light)Allison/ZF Trans 3K/4K:Diagram2 A26 - Backup Light (Single Reverse Light) Allison 3K/4K:Diagram1 A26 - Backup Light (Single Reverse Light) Allison 3K/4K:Diagram2 A26 - Backup Light (Single Reverse Light) Allison 3K/4K Option2:Diagram1 A26 - Backup Light (Single Reverse Light) Allison 3K/4K Option2:Diagram2 A26 - Backup Light (Single Reverse Light)Allison 3K/4K:Diagram1 A26 - Backup Light (Single Reverse Light)Allison 3K/4K:Diagram2 A26 - Backup Lights (Dual Reverse Light) Eaton/Manual Trans:Diagram1 A26 - Backup Lights (Single Reverse Light) Eaton/Manual Trans:Diagram1 A26 - Backup Lights (Single Reverse Lights) Eaton/Manual Trans:Diagram1 A26 - Backup Lights (Single Reverse Lights) Eaton/Manual Trans Option2:Diagram1 A26 - Cranking (Starter) GEN4 BCM W/ Thermal Overcrank:Diagram1 A26 - Cranking (Starter) GEN4 BCM W/ Thermal Overcrank:Diagram2 A26 - Cranking (Starter) GEN4 BCM W/ Thermal Overcrank:Diagram3 A26 - Cranking (Starter) GEN4 BCM W/ Thermal Overcrank:Diagram4 A26 - Cranking (Starter) GEN4 BCM W/ Thermal Overcrank:Diagram5 A26 - Cranking (Starter) GEN4 BCM W/ Thermal Overcrank:Diagram6

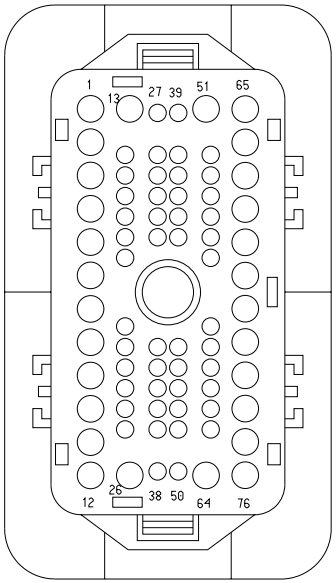

A26 - Cranking (Starter) GEN4 BCM W/O Thermal Overcrank:Diagram1
A26 - Cranking (Starter) GEN4 BCM W/O Thermal Overcrank:Diagram2
A26 - Cranking (Starter) GEN4 BCM W/O Thermal Overcrank:Diagram3
A26 - Cranking (Starter) GEN4 BCM W/O Thermal Overcrank:Diagram4
A26 - Cranking (Starter) GEN4 BCM W/O Thermal Overcrank:Diagram5
A26 - Cranking (Starter) GEN4 BCM W/O Thermal Overcrank:Diagram6
A26 - Heating Ventilation & Air Conditioning (HVAC) Auto Temp Control:Diagram1 - HVAC
A26 - Transmission Oil Temperature-Manual Trans:Diagram1
A26 - Transmission Oil Temperature-Manual Trans:Diagram2
A26 - Transmission Oil Temperature-Manual Trans w/Aux Gauge:Diagram1
A26 - Transmission Oil Temperature-Manual Trans w/Aux Gauge:Diagram2
A26 - Windshield Wipers:Diagram1
A26 - WORK LIGHT W Backup 1 Bulb:Diagram1
A26 - WORK LIGHT W Backup 1 Bulb:Diagram2
B6.7 - 2-Way Radio:Diagram1
B6.7 - 2-Way Radio:Diagram2
B6.7 - Back-Up Alarm (Manual) W/ Tailboard:Diagram1
B6.7 - Back-Up Alarm (Manual) W/O Tailboard:Diagram1
B6.7 - Backup Light (Dual Daisy Reverse LT)Allison/ZF Trans 1K/2K:Diagram1
B6.7 - Backup Light (Dual Daisy Reverse LT)Allison/ZF Trans 3K/4K:Diagram1
B6.7 - Backup Light (Dual Daisy Reverse LT)Allison/ZF Trans 3K/4K:Diagram2
B6.7 - Backup Light (Dual Reverse Light)Allison/ZF Trans 1K/2K:Diagram1
B6.7 - Backup Light (Dual Reverse Light)Allison/ZF Trans 3K/4K:Diagram1
B6.7 - Backup Light (Dual Reverse Light)Allison/ZF Trans 3K/4K:Diagram2
B6.7 - Backup Light (Single Reverse Light) Allison 1K/2K Option 1:Diagram1
B6.7 - Backup Light (Single Reverse Light) Allison 1K/2K Option 2:Diagram1

B6.7 - Backup Light (Single Reverse Light) Allison 1K/2K Option 3:Diagram1
B6.7 - Backup Light (Single Reverse Light) Allison 3K/4K Option 1:Diagram1
B6.7 - Backup Light (Single Reverse Light) Allison 3K/4K Option 1:Diagram2
B6.7 - Backup Light (Single Reverse Light) Allison 3K/4K Option 2:Diagram1
B6.7 - Backup Light (Single Reverse Light) Allison 3K/4K Option 2:Diagram2
B6.7 - Backup Light (Single Reverse Light) Allison 3K/4K Option 3:Diagram1
B6.7 - Backup Light (Single Reverse Light) Allison 3K/4K Option 3:Diagram2
B6.7 - Backup Lights (Dual Daisy Reverse Light) Eaton/Manual Trans:Diagram1
B6.7 - Backup Lights (Dual Reverse Light) Eaton/Manual Trans:Diagram1
B6.7 - Backup Lights (Single Reverse Light) Eaton/Manual Trans:Diagram1
B6.7 - Backup Lights (Single Reverse Lights) Eaton/Manual Trans Option 1:Diagram1
B6.7 - Backup Lights (Single Reverse Lights) Eaton/Manual Trans Option 2:Diagram1
B6.7 - Body Builder Lighting - Combined Turn and Stop Lamps (Manual):Diagram1
B6.7 - Body Builder Lighting - Combined Turn and Stop Lamps (Manual):Diagram2
B6.7 - Body Builder Lighting - Combined Turn and Stop Lamps (Manual):Diagram3
B6.7 - Body J1939 (250kbps):B6.7 - Body J1939 (250Kbps)
B6.7 - CAN Layout:Body Standard J1939 (250Kbps)
B6.7 - Cranking (Starter) GEN4 BCM W/O Thermal Overcrank:Diagram1
B6.7 - Current Monitoring (Ammeter):Diagram1
B6.7 - Current Monitoring (Ammeter):Diagram2
B6.7 - ECM Cummins CM2350A:Diagram 1
B6.7 - Heating Ventilation & Air Conditioning (HVAC):Diagram1
B6.7 - Heating Ventilation & Air Conditioning (HVAC) Auto Temp Control:Diagram1 - HVAC
B6.7 - Range Inhibit (sixth gear inhibit switch):Diagram1
B6.7 - Two Speed Axle (AirShift on Shifter):Diagram1
B6.7 - Vehicle Acceleration (w/ Two PWR Two GND & Two STS):Diagram1

B6.7 - Windshield Wipers:Diagram1
B6.7 - WORK LIGHT W BackUP 1 BULB:Diagram1
L9 - 2-Way Radio:Diagram1
L9 - 2-Way Radio:Diagram2
L9 - Ambient Air Temperature:Diagram1
L9 - Body Builder Lighting - Combined Turn and Stop Lamps (Manual):Diagram1
L9 - Body Builder Lighting - Combined Turn and Stop Lamps (Manual):Diagram2
L9 - Body Builder Lighting - Combined Turn and Stop Lamps (Manual):Diagram3
L9 - Body Builder Lighting - Combined Turn and Stop Lamps (Manual):Diagram4
L9 - Body Builder Lighting - Combined Turn and Stop Lamps (Manual):Diagram5
L9 - Body Builder Lighting - Combined Turn and Stop Lamps (Manual):Diagram6
L9 - Body J1939 (250kbps):L9 - Body J1939 (250Kbps)
L9 - CAN Layout:Body Standard J1939 (250Kbps)
L9 - Cranking (Starter) GEN4 BCM W/ Thermal Overcrank - External Switch:Diagram1
L9 - Cranking (Starter) GEN4 BCM W/O Thermal Overcrank:Diagram1
L9 - ECM Cummins CM2350A:Diagram1
L9 - Transmission Oil Temperature-Manual Trans w/Aux Gauge:Diagram1-Combination1
L9 - Transmission Oil Temperature-Manual Transmission:Diagram1-Combination1
L9 - Transmission Shifter (Stalk Shifter Allison):Diagram1
L9 - Transmission Shifter (Stalk Shifter Allison):Diagram2
L9 - Transmission Shifter Allison 5th Gen Push Button(SURHD):Diagram1
L9 - WORK LIGHT W BackUP 1 BULB Option 1:Diagram1
L9 - WORK LIGHT W BackUP 1 BULB Option 1:Diagram2
L9 - WORK LIGHT W BackUP 1 BULB Option 1:Diagram3
L9 - WORK LIGHT W BackUP 1 BULB Option 1:Diagram4

Mates 1703M

Name	Terminal Part Number	V-Min	Name	Wire Part Number	Wire CSA	Wire Spec	Wire Material description	Wire Color Description	Wire Length	End2 Terminal Part Number	End2 Pin Name	End2 Connector
1	-	-	SH14HC	3510367 R1	1.91	14.0	Thin Wall XLPE Primary Cable	RED	1955.0	-	4	4060A
1	-	-	SJ14HF	3510367 R1	1.91	14.0	Thin Wall XLPE Primary Cable	RED	1955.0	-	4	4060A
2	-	-	SJ11-G	3510361 R1	1.91	14.0	Thin Wall XLPE Primary Cable	WHITE	1955.0	-	5	4060A
2	-	-	SH11-GA	3510361 R1	1.91	14.0	Thin Wall XLPE Primary Cable	WHITE	1955.0	-	5	4060A
8	-	-	AA82-GJ	3510312 R1	1.16	16.0	Thin Wall XLPE Primary Cable	GREY	2080.0	-	C	4500
16	-	-	MH11-GBA	3510359 R1	0.79	18.0	Thin Wall XLPE Primary Cable	WHITE	1880.0	-	12	4087
16	-	-	MJ11-GBD	3510359 R1	0.79	18.0	Thin Wall XLPE Primary Cable	WHITE	2230.0	-	12	4087B
17	-	-	TB74J	3510299 R1	0.79	18.0	Thin Wall XLPE Primary Cable	LIGHT GREEN	1573.0	-	B	6202

Name	Terminal Part Number	V-Min	Name	Wire Part Number	Wire CSA	Wire Spec	Wire Material description	Wire Color Description	Wire Length	End2 Terminal Part Number	End2 Pin Name	End2 Connector
17	-	-	TB74J	3510299 R1	0.79	18.0	Thin Wall XLPE Primary Cable	LIGHT GREEN	1675.0	-	B	6202
19	-	-	SA6DBJ	3510310 R1	0.53	20.0	Thin Wall XLPE Primary Cable	GREY	1738.0	-	3	1702
19	-	-	SA6DBJ	3510310 R1	0.53	20.0	Thin Wall XLPE Primary Cable	GREY	1960.0	-	3	1702
20	-	-	SA77BJ	3510298 R1	0.53	20.0	Thin Wall XLPE Primary Cable	LIGHT GREEN	1738.0	-	4	1702
20	-	-	SA77BJ	3510298 R1	0.53	20.0	Thin Wall XLPE Primary Cable	LIGHT GREEN	1960.0	-	4	1702
21	-	-	UD92-GCJ	3510359 R1	0.79	18.0	Thin Wall XLPE Primary Cable	WHITE	1960.0	-	19	1702
21	-	-	UL92#134	3510329 R1	0.79	18.0	Thin Wall XLPE Primary Cable	TAN	1960.0	-	19	1702
24	-	-	MB41E	3510329 R1	0.79	18.0	Thin Wall XLPE Primary Cable	TAN	1960.0	-	15	1702

Name	Terminal Part Number	V-Min	Name	Wire Part Number	Wire CSA	Wire Spec	Wire Material description	Wire Color Description	Wire Length	End2 Terminal Part Number	End2 Pin Name	End2 Connector
25	-	-	MC41	3510329 R1	0.79	18.0	Thin Wall XLPE Primary Cable	TAN	1955.0	-	3	4060A
27	-	-	MH26DA	2643676 R1	0.79	18.0	Std. Wall XLPE Primary Cable	TAN	1880.0	-	6	4087
27	-	-	MJ26DA	2643676 R1	0.79	18.0	Std. Wall XLPE Primary Cable	TAN	2230.0	-	6	4087B
29	-	-	LA17A	3510324 R1	1.16	16.0	Thin Wall XLPE Primary Cable	PINK	1645.0	-	X	-
29	-	-	LG17BA	3510324 R1	1.16	16.0	Thin Wall XLPE Primary Cable	PINK	1960.0	-	16	1702
30	-	-	WIRE722782	-	0.0	-	-	-	0.0	-	7	4087B
30	-	-	WIRE722778	-	0.0	-	-	-	0.0	-	7	4087
32	-	-	WIRE722780	-	0.0	-	-	-	0.0	-	8	4087B
32	-	-	WIRE722781	-	0.0	-	-	-	0.0	-	8	4087
35	-	-	TC9AAJ	3510311 R1	0.79	18.0	Thin Wall XLPE Primary Cable	GREY	325.0	-	X	-

Name	Terminal Part Number	V-Min	Name	Wire Part Number	Wire CSA	Wire Spec	Wire Material description	Wire Color Description	Wire Length	End2 Terminal Part Number	End2 Pin Name	End2 Connector
35	-	-	TC9AAJ	3510311 R1	0.79	18.0	Thin Wall XLPE Primary Cable	GREY	325.0	-	1	-
36	-	-	BD97BJ	3510347 R1	0.79	18.0	Thin Wall XLPE Primary Cable	VIOLET	1960.0	-	23	1702
37	-	-	BE97WC	3510347 R1	0.79	18.0	Thin Wall XLPE Primary Cable	VIOLET	1960.0	-	32	1702
38	-	-	BD97M	3510347 R1	0.79	18.0	Thin Wall XLPE Primary Cable	VIOLET	1960.0	-	30	1702
38	-	-	BE97FU	3510348 R1	1.16	16.0	Thin Wall XLPE Primary Cable	VIOLET	1960.0	-	30	1702
44	-	-	ZA71BJ	3510318 R1	1.16	16.0	Thin Wall XLPE Primary Cable	ORANGE	1960.0	-	7	1702
45	-	-	ZL71AA	3510329 R1	0.79	18.0	Thin Wall XLPE Primary Cable	TAN	1960.0	-	7	1702
45	-	-	ZJ92#165	3510329 R1	0.79	18.0	Thin Wall XLPE Primary Cable	TAN	1960.0	-	7	1702

Name	Terminal Part Number	V-Min	Name	Wire Part Number	Wire CSA	Wire Spec	Wire Material description	Wire Color Description	Wire Length	End2 Terminal Part Number	End2 Pin Name	End2 Connector
45	-	-	ZH71AB	3510318 R1	1.16	16.0	Thin Wall XLPE Primary Cable	ORANGE	1960.0	-	7	1702
45	-	-	ZC92#165	3510329 R1	0.79	18.0	Thin Wall XLPE Primary Cable	TAN	1960.0	-	7	1702
47	-	-	BE99BJ	3510347 R1	0.79	18.0	Thin Wall XLPE Primary Cable	VIOLET	1960.0	-	28	1702
48	-	-	BE97M	3510347 R1	0.79	18.0	Thin Wall XLPE Primary Cable	VIOLET	1960.0	-	33	1702
49	-	-	BE97CJ	3510347 R1	0.79	18.0	Thin Wall XLPE Primary Cable	VIOLET	1960.0	-	22	1702
54	-	-	MA97FA	3510348 R1	1.16	16.0	Thin Wall XLPE Primary Cable	VIOLET	1960.0	-	37	1702
56	-	-	UG92#161	3510329 R1	0.79	18.0	Thin Wall XLPE Primary Cable	TAN	1960.0	-	12	1702
56	-	-	UJ93	3510329 R1	0.79	18.0	Thin Wall XLPE Primary Cable	TAN	1960.0	-	39	1702

Name	Terminal Part Number	V-Min	Name	Wire Part Number	Wire CSA	Wire Spec	Wire Material description	Wire Color Description	Wire Length	End2 Terminal Part Number	End2 Pin Name	End2 Connector
61	-	-	NJ31	3510329 R1	0.79	18.0	Thin Wall XLPE Primary Cable	TAN	1960.0	-	13	1702
65	-	-	SA77J	2643678 R1	1.16	16.0	Std. Wall XLPE Primary Cable	LIGHT GREEN	1738.0	-	10	1702
65	-	-	SA77J	2643678 R1	1.16	16.0	Std. Wall XLPE Primary Cable	LIGHT GREEN	1960.0	-	10	1702
66	-	-	ZH71	3510318 R1	1.16	16.0	Thin Wall XLPE Primary Cable	ORANGE	1960.0	-	6	1702
66	-	-	ZA71BA	3510318 R1	1.16	16.0	Thin Wall XLPE Primary Cable	ORANGE	1960.0	-	6	1702
69	-	-	AA82KJ	3510312 R1	1.16	16.0	Thin Wall XLPE Primary Cable	GREY	2080.0	-	D	4500
70	-	-	AA82LJ	3510312 R1	1.16	16.0	Thin Wall XLPE Primary Cable	GREY	2080.0	-	E	4500
72	-	-	AA82JJ	3510312 R1	1.16	16.0	Thin Wall XLPE Primary Cable	GREY	2080.0	-	B	4500
74	-	-	AA82DJ	3510312 R1	1.16	16.0	Thin Wall XLPE Primary Cable	GREY	2080.0	-	A	4500

Connector Name	1703F
Part Number	3595624C1
Short Description	ENGINE/IP
Instances	A26 - 2-Way Radio:Diagram1 A26 - 2-Way Radio:Diagram2 A26 - Ambient Air Temperature:Diagram1 A26 - Back-Up Alarm (Manual) W/ Tailboard:Diagram1 A26 - Back-Up Alarm (Manual) W/O Tailboard:Diagram1 A26 - Backup Alarm (Switch to 5 Pin 08TKC Tailboard to Alarm) (Manual):Diagram1 A26 - Backup Alarm (Switch to 5 Pin 08TKC Tailboard. Alarm Plugs In) (Manual):Diagram1 A26 - Backup Light (Single Reverse Light) W/Less Power Module Allison 3K/4K:Diagram1-Combination1 A26 - Backup Light (Single Reverse Light) W/Less Power Module Allison 3K/4K:Diagram1-Combination2 A26 - Backup Lights (Dual Daisy Reverse Light) Eaton/Manual Trans:Diagram1 A26 - Backup Lights (Reverse) W/Less Power Module Eaton/ Manual Trans:Diagram1 A26 - Backup Lights (Single Reverse Lights) Eaton/Manual Transmission:Diagram1 A26 - Body Builder Lighting - BOC, 08HBX (Manual):Diagram1 A26 - Body Builder Lighting - Combined Turn and Stop Lamps (Manual):Diagram1-Option 1 (In Cab, W/08HAU) A26 - Body Builder Lighting - Combined Turn and Stop Lamps (Manual):Diagram1-Option 2 (Back-of-Cab, W/08HAB) A26 - Body Builder Lighting - Combined Turn and Stop Lamps (Manual):Diagram1-Option 3 (End-of-Frame, W/08HAE) A26 - ECM:Diagram1 A26 - Heating Ventilation & Air Conditioning (HVAC):Diagram1 A26 - Powertrain J1939 Allison 3k/4k:A26 - Powertrain J1939 Allison 3k/4k A26 - Powertrain J1939 UltraShift Transmission:A26 - Powertrain J1939 UltraShift Transmission A26 - Snow Valve Control:Diagram1 A26 - Snow Valve Control:Diagram2 A26 - Starter Interlock (BCM Controlled with Input from Allison 3K/4K TCM):Diagram1 A26 - Starter Interlock (BCM Controlled with Input from Allison 3K/4K TCM):Diagram2 A26 - Starter Interlock (BCM LSD Controlled w/ Relay & N/ Auto SS):Diagram1

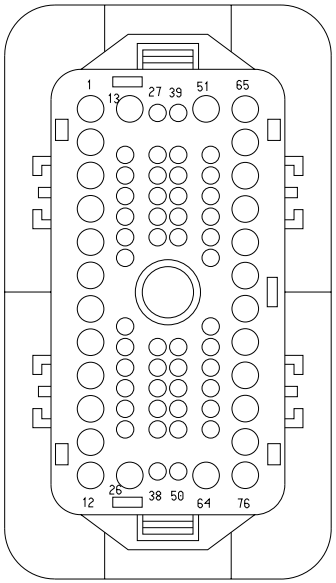

A26 - Transmission Power Take Off (Auto Trans Dual PTO W/ 42 Parameters):Diagram1
A26 - Transmission Power Take Off (Auto Trans Single PTO w/21 Parameters):Diagram1
A26 - Transmission Power Take Off (Manual Trans Dual PTO W/ 42 Parameters):Diagram1
A26 - Transmission Power Take Off (Manual Trans Single PTO w/ 21 Parameters):Diagram1
A26 - Transmission Power Take Off (Single Input Configurable pull up or pull down):Diagram1
A26 - Transmission Shifter (Stalk Shifter Allison):Diagram1
A26 - Transmission Shifter (Stalk Shifter Allison):Diagram2
A26 - Ultrashift Plus:Diagram1
A26 - Vehicle Acceleration (w/ Two PWR Two GND & Two STS):Diagram1
A26 - Work Light W/ Backup 1 Bulb W/Manual W/ RKE:Diagram1-Combination1
A26 - Work Light W/ Backup 1 Bulb W/Manual W/ RKE:Diagram1-Combination2
A26/B6.7/L9 - Snow Valve Control:Diagram1
B6.7 - Snow Valve Control:Diagram1
B6.7 - Snow Valve Control:Diagram2
B6.7 - CAN Layout:Powertrain Standard J1939 (500Kbps)
B6.7 - Powertrain J1939 Allison 1k/2k:B6.7 - Allison 1k/2k Transmission
B6.7 - Powertrain J1939 Allison 3k/4k:B6.7 - Allison 3k/4k Transmission
B6.7 - Powertrain J1939 Manual Transmission:B6.7 - Manual Transmission
B6.7 - Starter Interlocks (BCM Controlled with Input from Allison 1K/2K TCM):Diagram1
B6.7 - Starter Interlocks (BCM Controlled with Input from Allison 3K/4K TCM):Diagram1
B6.7 - Starter Interlocks (BCM Controlled with Input from Allison 3K/4K TCM):Diagram2
B6.7 - Transmission (Allison 3K/4K):Diagram1
B6.7 - Transmission (Allison 3K/4K):Diagram2
B6.7 - Transmission Oil Temperature-Manual Trans:Diagram1
B6.7 - Transmission Oil Temperature-Manual Trans (w/Aux Gauge):Diagram1
B6.7 - Transmission Power Take Off (Auto Trans Single PTO w/21 Parameters):Diagram1
B6.7 - Transmission Power Take Off (Manual Trans Single PTO w/21 Parameters):Diagram1

B6.7 - Transmission Power Take Off (Single Input configurable pull up or pull down):Diagram1
B6.7 - Transmission Shifter (Stalk Shifter Allison):Diagram1
B6.7 - Transmission Shifter (Stalk Shifter Allison):Diagram2
B6.7 - Transmission Shifter Allison 5th Gen Push Button(SURHD):Diagram1
B6.7 - Transmission Shifter Allison 5th Gen Push Button(SURHD):Diagram2
L9 - Auto Neutral (Allison with Multiplex Switch and Confirmation Telltale):Diagram1
L9 - Auto Neutral (Allison with Multiplex Switch and Confirmation Telltale):Diagram2
L9 - Auto Neutral (Allison without Multiplex Switch and Confirmation Telltale):Diagram1
L9 - Auto Neutral (Allison without Multiplex Switch and Confirmation Telltale):Diagram2
L9 - Back-Up Alarm (Manual) W/ Tailboard:Diagram1
L9 - Back-Up Alarm (Manual) W/ Tailboard:Diagram2
L9 - Back-Up Alarm (Manual) W/O Tailboard:Diagram1
L9 - Back-Up Alarm (Manual) W/O Tailboard:Diagram2
L9 - Backup Light (Dual Daisy Reverse Light)Allison/ZF Trans 3K/4K:Diagram1
L9 - Backup Light (Dual Daisy Reverse Light)Allison/ZF Trans 3K/4K:Diagram2
L9 - Backup Light (Single Reverse Light) Allison 3K/4K Option 1:Diagram1
L9 - Backup Light (Single Reverse Light) Allison 3K/4K Option 1:Diagram2
L9 - Backup Light (Single Reverse Light) Allison 3K/4K Option 2:Diagram1
L9 - Backup Light (Single Reverse Light) Allison 3K/4K Option 2:Diagram2
L9 - Backup Light (Single Reverse Light) Allison 3K/4K Option 3:Diagram1
L9 - Backup Light (Single Reverse Light) Allison 3K/4K Option 3:Diagram2
L9 - Backup Light (Single Reverse Light)Allison:Diagram1
L9 - Backup Light (Single Reverse Light)Allison:Diagram2
L9 - Backup Lights (Dual Daisy Reverse Light) Eaton/Manual Trans:Diagram1
L9 - Backup Lights (Dual Daisy Reverse Light) Eaton/Manual Trans:Diagram2
L9 - Backup Lights (Single Reverse Light) Eaton/Manual Trans Option 1:Diagram1

L9 - Backup Lights (Single Reverse Light) Eaton/Manual Trans Option 1:Diagram2
L9 - Backup Lights (Single Reverse Light) Eaton/Manual Trans Option 2:Diagram1
L9 - Backup Lights (Single Reverse Light) Eaton/Manual Trans Option 2:Diagram2
L9 - Backup Lights (Single Reverse Light) Eaton/Manual Trans Option 3:Diagram1
L9 - Backup Lights (Single Reverse Light) Eaton/Manual Trans Option 3:Diagram2
L9 - Backup Lights (Single Reverse Light) Eaton/Manual Trans Option 4:Diagram1
L9 - Backup Lights (Single Reverse Light) Eaton/Manual Trans Option 4:Diagram2
L9 - CAN Layout:Powertrain Standard J1939 (500kbps)
L9 - Heating Ventilation & Air Conditioning (HVAC):Diagram1
L9 - Heating Ventilation & Air Conditioning (HVAC) Auto Temp Control:Diagram1 - HVAC
L9 - Powertrain J1939 Allison 3k/4k:L9 - Powertrain J1939 Allison 3k/4k
L9 - Powertrain J1939 Eaton:L9 - Powertrain J1939 Eaton
L9 - Powertrain J1939 Manual Transmission:Powertrain Standard J1939 (500kbps)
L9 - Snow Valve Control:Diagram1
L9 - Snow Valve Control:Diagram2
L9 - Starter Interlock (BCM LSD Controlled w/ Relay & N/ Auto SS)_EATON XMSN:Diagram1
L9 - Starter Interlocks (BCM Controlled with Input from Allison 3K/4K TCM):Diagram1
L9 - Starter Interlocks (BCM Controlled with Input from Allison 3K/4K TCM):Diagram2
L9 - Transmission (Allison 3K/4K):Diagram1
L9 - Transmission (Allison 3K/4K):Diagram2
L9 - Transmission Power Take Off (Auto Trans Single PTO w/21 Parameters):Diagram1
L9 - Transmission Power Take Off (Auto Trans with Lectradrive):Diagram1
L9 - Transmission Power Take Off (Lectrashift PTO with Manual Trans):Diagram1
L9 - Transmission Power Take Off (Manual Trans Single PTO w/21 Parameters):Diagram1
L9 - Transmission Power Take Off (Single Input configurable pull up or pull down):Diagram1
L9 - Two Speed Axle (AirShift on Shifter):Diagram1

L9 - Ultrashift Plus:Diagram1
L9 - Vehicle Acceleration (w/ Two PWR Two GND & Two STS):Diagram1
L9 - Windshield Wipers:Diagram1

Mates 1703M

Name	Terminal Part Number	V-Min	Name	Wire Part Number	Wire CSA	Wire Spec	Wire Material description	Wire Color Description	Wire Length	End2 Terminal Part Number	End2 Pin Name	End2 Connect or
1	-	-	SK14HD	3510367 R1	1.91	14.0	Thin Wall XLPE Primary Cable	RED	1960.0	-	9	1702
1	-	-	ZL71BB	3510359 R1	0.79	18.0	Thin Wall XLPE Primary Cable	WHITE	1960.0	-	9	1702
1	-	-	SL14HF	3510367 R1	1.91	14.0	Thin Wall XLPE Primary Cable	RED	1960.0	-	9	1702
3	-	-	QA23E-G	3510329 R1	0.79	18.0	Thin Wall XLPE Primary Cable	TAN	2530.0	-	A	4120
3	-	-	QA23ED	3510329 R1	0.79	18.0	Thin Wall XLPE Primary Cable	TAN	2530.0	-	A	4120
4	-	-	QA23BE	3510329 R1	0.79	18.0	Thin Wall XLPE Primary Cable	TAN	2530.0	-	B	4120
5	-	-	QA23CB	3510329 R1	0.79	18.0	Thin Wall XLPE Primary Cable	TAN	2530.0	-	C	4120

Name	Terminal Part Number	V-Min	Name	Wire Part Number	Wire CSA	Wire Spec	Wire Material description	Wire Color Description	Wire Length	End2 Terminal Part Number	End2 Pin Name	End2 Connector
6	-	-	QA23DE	3510323 R1	0.79	18.0	Thin Wall XLPE Primary Cable	PINK	2530.0	-	D	4120
7	-	-	QA23EF	3510329 R1	0.79	18.0	Thin Wall XLPE Primary Cable	TAN	2530.0	-	E	4120
8	-	-	AA82-GJ	3510312 R1	1.16	16.0	Thin Wall XLPE Primary Cable	GREY	2080.0	-	C	4500
12	-	-	HW14LSD	3510368 R1	3.01	12.0	Thin Wall XLPE Primary Cable	RED	1960.0	-	42	1702
17	-	-	TB74J	3510299 R1	0.79	18.0	Thin Wall XLPE Primary Cable	LIGHT GREEN	1675.0	-	B	6202
19	-	-	SA6DBJ	3510310 R1	0.53	20.0	Thin Wall XLPE Primary Cable	GREY	1960.0	-	3	1702
20	-	-	SA77BJ	3510298 R1	0.53	20.0	Thin Wall XLPE Primary Cable	LIGHT GREEN	1960.0	-	4	1702
21	-	-	UL92#134	3510329 R1	0.79	18.0	Thin Wall XLPE Primary Cable	TAN	1960.0	-	19	1702

Name	Terminal Part Number	V-Min	Name	Wire Part Number	Wire CSA	Wire Spec	Wire Material description	Wire Color Description	Wire Length	End2 Terminal Part Number	End2 Pin Name	End2 Connector
21	-	-	UB92#134	3510329 R1	0.79	18.0	Thin Wall XLPE Primary Cable	TAN	1960.0	-	19	1702
21	-	-	UD92-GCJ	3510359 R1	0.79	18.0	Thin Wall XLPE Primary Cable	WHITE	1960.0	-	19	1702
24	-	-	MB41E	3510329 R1	0.79	18.0	Thin Wall XLPE Primary Cable	TAN	1960.0	-	15	1702
25	-	-	MB41D	3510329 R1	0.79	18.0	Thin Wall XLPE Primary Cable	TAN	1960.0	-	18	1702
28	-	-	UD92BJ	3510329 R1	0.79	18.0	Thin Wall XLPE Primary Cable	TAN	1960.0	-	20	1702
28	-	-	UB92#141	3510329 R1	0.79	18.0	Thin Wall XLPE Primary Cable	TAN	1960.0	-	20	1702
29	-	-	LA17A	3510324 R1	1.16	16.0	Thin Wall XLPE Primary Cable	PINK	1645.0	-	X	-
35	-	-	TC9AAJ	3510311 R1	0.79	18.0	Thin Wall XLPE Primary Cable	GREY	325.0	-	X	-

Name	Terminal Part Number	V-Min	Name	Wire Part Number	Wire CSA	Wire Spec	Wire Material description	Wire Color Description	Wire Length	End2 Terminal Part Number	End2 Pin Name	End2 Connector
35	-	-	TD9E	3510311 R1	0.79	18.0	Thin Wall XLPE Primary Cable	GREY	1960.0	-	2	1702
36	-	-	BE97BJ	3510347 R1	0.79	18.0	Thin Wall XLPE Primary Cable	VIOLET	1960.0	-	23	1702
37	-	-	BD97N	3510347 R1	0.79	18.0	Thin Wall XLPE Primary Cable	VIOLET	1960.0	-	29	1702
37	-	-	BE97WC	3510347 R1	0.79	18.0	Thin Wall XLPE Primary Cable	VIOLET	1960.0	-	32	1702
38	-	-	BE97FU	3510348 R1	1.16	16.0	Thin Wall XLPE Primary Cable	VIOLET	1960.0	-	30	1702
38	-	-	BD97M	3510347 R1	0.79	18.0	Thin Wall XLPE Primary Cable	VIOLET	1960.0	-	30	1702
42	-	-	ub92#163	3510324 R1	1.16	16.0	Thin Wall XLPE Primary Cable	PINK	0.0	-	8	1702
42	-	-	ud13aj	2643752 R1	1.16	16.0	Std. Wall XLPE Primary Cable	PINK	0.0	-	8	1702

Name	Terminal Part Number	V-Min	Name	Wire Part Number	Wire CSA	Wire Spec	Wire Material description	Wire Color Description	Wire Length	End2 Terminal Part Number	End2 Pin Name	End2 Connector
42	-	-	UF92#163	3510330 R1	1.16	16.0	Thin Wall XLPE Primary Cable	TAN	0.0	-	8	1702
42	-	-	UL92#16 3B	3510324 R1	1.16	16.0	Thin Wall XLPE Primary Cable	PINK	0.0	-	8	1702
42	-	-	UB92#163	3510324 R1	1.16	16.0	Thin Wall XLPE Primary Cable	PINK	0.0	-	8	1702
42	-	-	UD13AJ	2643752 R1	1.16	16.0	Std. Wall XLPE Primary Cable	PINK	0.0	-	8	1702
43	-	-	VA92#117	3510329 R1	0.79	18.0	Thin Wall XLPE Primary Cable	TAN	1960.0	-	25	1702
44	-	-	ZA71BJ	3510318 R1	1.16	16.0	Thin Wall XLPE Primary Cable	ORANGE	1960.0	-	7	1702
45	-	-	ZJ92#165	3510329 R1	0.79	18.0	Thin Wall XLPE Primary Cable	TAN	1960.0	-	7	1702
45	-	-	ZC92#165	3510329 R1	0.79	18.0	Thin Wall XLPE Primary Cable	TAN	1960.0	-	7	1702

Name	Terminal Part Number	V-Min	Name	Wire Part Number	Wire CSA	Wire Spec	Wire Material description	Wire Color Description	Wire Length	End2 Terminal Part Number	End2 Pin Name	End2 Connector
45	-	-	ZH71AB	3510318 R1	1.16	16.0	Thin Wall XLPE Primary Cable	ORANGE	1960.0	-	7	1702
45	-	-	ZL71AA	3510329 R1	0.79	18.0	Thin Wall XLPE Primary Cable	TAN	1960.0	-	7	1702
47	-	-	BD99BJ	3510347 R1	0.79	18.0	Thin Wall XLPE Primary Cable	VIOLET	1960.0	-	28	1702
48	-	-	BD99D	3510347 R1	0.79	18.0	Thin Wall XLPE Primary Cable	VIOLET	1960.0	-	24	1702
48	-	-	BE97M	3510347 R1	0.79	18.0	Thin Wall XLPE Primary Cable	VIOLET	1960.0	-	33	1702
49	-	-	BD97CJ	3510347 R1	0.79	18.0	Thin Wall XLPE Primary Cable	VIOLET	1960.0	-	22	1702
52	-	-	WIRE722703	-	0.0	-	-	-	0.0	-	17	1702
53	-	-	WIRE722702	-	0.0	-	-	-	0.0	-	11	1702
54	-	-	MA97FA	3510348 R1	1.16	16.0	Thin Wall XLPE Primary Cable	VIOLET	1960.0	-	37	1702

Name	Terminal Part Number	V-Min	Name	Wire Part Number	Wire CSA	Wire Spec	Wire Material description	Wire Color Description	Wire Length	End2 Terminal Part Number	End2 Pin Name	End2 Connector
55	-	-	GZ92#103	3510329 R1	0.79	18.0	Thin Wall XLPE Primary Cable	TAN	1960.0	-	21	1702
56	-	-	UJ93	3510329 R1	0.79	18.0	Thin Wall XLPE Primary Cable	TAN	1960.0	-	39	1702
59	-	-	LQ88AJ	3510299 R1	0.79	18.0	Thin Wall XLPE Primary Cable	LIGHT GREEN	1960.0	-	41	1702
60	-	-	LP88J	3510299 R1	0.79	18.0	Thin Wall XLPE Primary Cable	LIGHT GREEN	1960.0	-	14	1702
61	-	-	NJ31	3510329 R1	0.79	18.0	Thin Wall XLPE Primary Cable	TAN	1960.0	-	13	1702
65	-	-	SA77J	2643678 R1	1.16	16.0	Std. Wall XLPE Primary Cable	LIGHT GREEN	1960.0	-	10	1702
66	-	-	ZH71	3510318 R1	1.16	16.0	Thin Wall XLPE Primary Cable	ORANGE	1960.0	-	6	1702
66	-	-	ZA71BA	3510318 R1	1.16	16.0	Thin Wall XLPE Primary Cable	ORANGE	1960.0	-	6	1702

Name	Terminal Part Number	V-Min	Name	Wire Part Number	Wire CSA	Wire Spec	Wire Material description	Wire Color Description	Wire Length	End2 Terminal Part Number	End2 Pin Name	End2 Connector
69	-	-	AA82KJ	3510312 R1	1.16	16.0	Thin Wall XLPE Primary Cable	GREY	2080.0	-	D	4500
70	-	-	AA82LJ	3510312 R1	1.16	16.0	Thin Wall XLPE Primary Cable	GREY	2080.0	-	E	4500
72	-	-	AA82JJ	3510312 R1	1.16	16.0	Thin Wall XLPE Primary Cable	GREY	2080.0	-	B	4500
74	-	-	AA82DJ	3510312 R1	1.16	16.0	Thin Wall XLPE Primary Cable	GREY	2080.0	-	A	4500

Connector Name	1703F
Part Number	3595624C1
Short Description	ENGINE/IP
Instances	L9 - Backup Lights (Dual Reverse Light) Eaton/Manual Trans:Diagram1
Mates	1703M

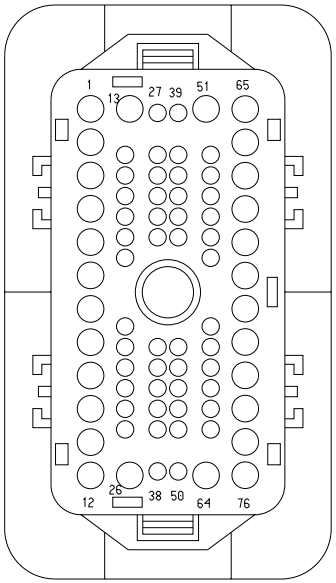

Name	Terminal Part Number	V-Min	Name	Wire Part Number	Wire CSA	Wire Spec	Wire Material description	Wire Color Description	Wire Length	End2 Terminal Part Number	End2 Pin Name	End2 Connect or
44	-	-	ZA71BJ	3510318 R1	1.16	16.0	Thin Wall XLPE Primary Cable	ORANGE	1960.0	-	7	1702
45	-	-	ZH71AB	3510318 R1	1.16	16.0	Thin Wall XLPE Primary Cable	ORANGE	1960.0	-	7	1702
45	-	-	ZJ92#165	3510329 R1	0.79	18.0	Thin Wall XLPE Primary Cable	TAN	1960.0	-	7	1702
45	-	-	ZL71AA	3510329 R1	0.79	18.0	Thin Wall XLPE Primary Cable	TAN	1960.0	-	7	1702

Name	Terminal Part Number	V-Min	Name	Wire Part Number	Wire CSA	Wire Spec	Wire Material description	Wire Color Description	Wire Length	End2 Terminal Part Number	End2 Pin Name	End2 Connect or
66	-	-	ZH71	3510318 R1	1.16	16.0	Thin Wall XLPE Primary Cable	ORANGE	1960.0	-	6	1702
66	-	-	ZA71BA	3510318 R1	1.16	16.0	Thin Wall XLPE Primary Cable	ORANGE	1960.0	-	6	1702

Connector Name	1703F
Part Number	3595624C1
Short Description	ENGINE/IP
Instances	L9 - Backup Lights (Dual Reverse Light) Eaton/Manual Trans:Diagram2
Mates	1703M

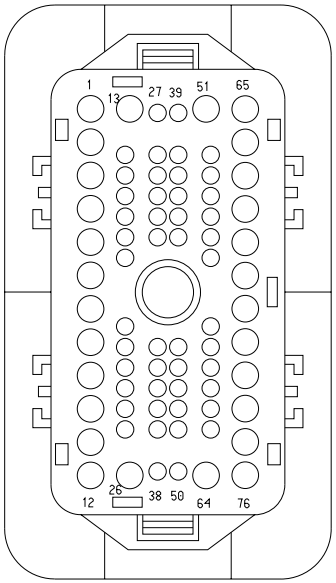

Name	Terminal Part Number	V-Min	Name	Wire Part Number	Wire CSA	Wire Spec	Wire Material description	Wire Color Description	Wire Length	End2 Terminal Part Number	End2 Pin Name	End2 Connect or
44	-	-	ZA71BJ	3510318 R1	1.16	16.0	Thin Wall XLPE Primary Cable	ORANGE	1960.0	-	-	-
45	-	-	ZH71AB	3510318 R1	1.16	16.0	Thin Wall XLPE Primary Cable	ORANGE	1960.0	-	-	-
45	-	-	ZJ92#165	3510329 R1	0.79	18.0	Thin Wall XLPE Primary Cable	TAN	1960.0	-	-	-
45	-	-	ZL71AA	3510329 R1	0.79	18.0	Thin Wall XLPE Primary Cable	TAN	1960.0	-	-	-

Name	Terminal Part Number	V-Min	Name	Wire Part Number	Wire CSA	Wire Spec	Wire Material description	Wire Color Description	Wire Length	End2 Terminal Part Number	End2 Pin Name	End2 Connector
66	-	-	ZH71	3510318 R1	1.16	16.0	Thin Wall XLPE Primary Cable	ORANGE	1960.0	-	-	-
66	-	-	ZA71BA	3510318 R1	1.16	16.0	Thin Wall XLPE Primary Cable	ORANGE	1960.0	-	-	-

Connector Name	1703M
Part Number	3595625C1
Short Description	IP/ENGINE
Instances	A26 - Backup Light (Dual Daisy Reverse LT)Allison/ZF Trans 3K/4K:Diagram1 A26 - Backup Light (Dual Daisy Reverse LT)Allison/ZF Trans 3K/4K:Diagram2 A26 - Backup Light (Dual Reverse Light)Allison/ZF Trans 3K/4K:Diagram1 A26 - Backup Light (Dual Reverse Light)Allison/ZF Trans 3K/4K:Diagram2 A26 - Backup Light (Single Reverse Light) Allison 3K/4K:Diagram1 A26 - Backup Light (Single Reverse Light) Allison 3K/4K:Diagram2 A26 - Backup Light (Single Reverse Light) Allison 3K/4K Option2:Diagram1 A26 - Backup Light (Single Reverse Light) Allison 3K/4K Option2:Diagram2 A26 - Backup Light (Single Reverse Light)Allison 3K/4K:Diagram1 A26 - Backup Light (Single Reverse Light)Allison 3K/4K:Diagram2 A26 - Backup Lights (Dual Reverse Light) Eaton/Manual Trans:Diagram1 A26 - Backup Lights (Single Reverse Light) Eaton/Manual Trans:Diagram1 A26 - Backup Lights (Single Reverse Lights) Eaton/Manual Trans:Diagram1 A26 - Backup Lights (Single Reverse Lights) Eaton/Manual Trans Option2:Diagram1 A26 - Cranking (Starter) GEN4 BCM W/ Thermal Overcrank:Diagram1 A26 - Cranking (Starter) GEN4 BCM W/ Thermal Overcrank:Diagram2 A26 - Cranking (Starter) GEN4 BCM W/ Thermal Overcrank:Diagram3 A26 - Cranking (Starter) GEN4 BCM W/ Thermal Overcrank:Diagram4 A26 - Cranking (Starter) GEN4 BCM W/ Thermal Overcrank:Diagram5 A26 - Cranking (Starter) GEN4 BCM W/ Thermal Overcrank:Diagram6

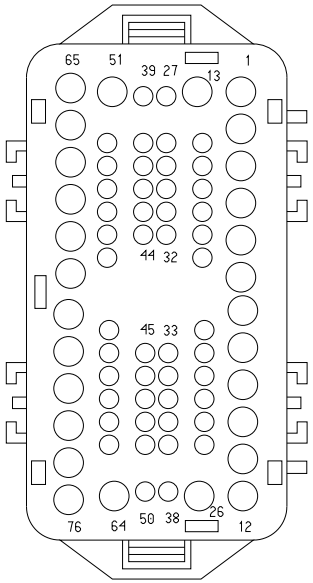

A26 - Cranking (Starter) GEN4 BCM W/O Thermal Overcrank:Diagram1
A26 - Cranking (Starter) GEN4 BCM W/O Thermal Overcrank:Diagram2
A26 - Cranking (Starter) GEN4 BCM W/O Thermal Overcrank:Diagram3
A26 - Cranking (Starter) GEN4 BCM W/O Thermal Overcrank:Diagram4
A26 - Cranking (Starter) GEN4 BCM W/O Thermal Overcrank:Diagram5
A26 - Cranking (Starter) GEN4 BCM W/O Thermal Overcrank:Diagram6
A26 - Heating Ventilation & Air Conditioning (HVAC) Auto Temp Control:Diagram1 - HVAC
A26 - Transmission Oil Temperature-Manual Trans:Diagram1
A26 - Transmission Oil Temperature-Manual Trans:Diagram2
A26 - Transmission Oil Temperature-Manual Trans w/Aux Gauge:Diagram1
A26 - Transmission Oil Temperature-Manual Trans w/Aux Gauge:Diagram2
A26 - Windshield Wipers:Diagram1
A26 - WORK LIGHT W Backup 1 Bulb:Diagram1
A26 - WORK LIGHT W Backup 1 Bulb:Diagram2
B6.7 - 2-Way Radio:Diagram1
B6.7 - 2-Way Radio:Diagram2
B6.7 - Back-Up Alarm (Manual) W/ Tailboard:Diagram1
B6.7 - Back-Up Alarm (Manual) W/O Tailboard:Diagram1
B6.7 - Backup Light (Dual Daisy Reverse LT)Allison/ZF Trans 1K/2K:Diagram1
B6.7 - Backup Light (Dual Daisy Reverse LT)Allison/ZF Trans 3K/4K:Diagram1
B6.7 - Backup Light (Dual Daisy Reverse LT)Allison/ZF Trans 3K/4K:Diagram2
B6.7 - Backup Light (Dual Reverse Light)Allison/ZF Trans 1K/2K:Diagram1
B6.7 - Backup Light (Dual Reverse Light)Allison/ZF Trans 3K/4K:Diagram1
B6.7 - Backup Light (Dual Reverse Light)Allison/ZF Trans 3K/4K:Diagram2
B6.7 - Backup Light (Single Reverse Light) Allison 1K/2K Option 1:Diagram1
B6.7 - Backup Light (Single Reverse Light) Allison 1K/2K Option 2:Diagram1

B6.7 - Backup Light (Single Reverse Light) Allison 1K/2K Option 3:Diagram1
B6.7 - Backup Light (Single Reverse Light) Allison 3K/4K Option 1:Diagram1
B6.7 - Backup Light (Single Reverse Light) Allison 3K/4K Option 1:Diagram2
B6.7 - Backup Light (Single Reverse Light) Allison 3K/4K Option 2:Diagram1
B6.7 - Backup Light (Single Reverse Light) Allison 3K/4K Option 2:Diagram2
B6.7 - Backup Light (Single Reverse Light) Allison 3K/4K Option 3:Diagram1
B6.7 - Backup Light (Single Reverse Light) Allison 3K/4K Option 3:Diagram2
B6.7 - Backup Lights (Dual Daisy Reverse Light) Eaton/Manual Trans:Diagram1
B6.7 - Backup Lights (Dual Reverse Light) Eaton/Manual Trans:Diagram1
B6.7 - Backup Lights (Single Reverse Light) Eaton/Manual Trans:Diagram1
B6.7 - Backup Lights (Single Reverse Lights) Eaton/Manual Trans Option 1:Diagram1
B6.7 - Backup Lights (Single Reverse Lights) Eaton/Manual Trans Option 2:Diagram1
B6.7 - Body Builder Lighting - Combined Turn and Stop Lamps (Manual):Diagram1
B6.7 - Body Builder Lighting - Combined Turn and Stop Lamps (Manual):Diagram2
B6.7 - Body Builder Lighting - Combined Turn and Stop Lamps (Manual):Diagram3
B6.7 - Body J1939 (250kbps):B6.7 - Body J1939 (250Kbps)
B6.7 - CAN Layout:Body Standard J1939 (250Kbps)
B6.7 - Cranking (Starter) GEN4 BCM W/O Thermal Overcrank:Diagram1
B6.7 - Current Monitoring (Ammeter):Diagram1
B6.7 - Current Monitoring (Ammeter):Diagram2
B6.7 - ECM Cummins CM2350A:Diagram 1
B6.7 - Heating Ventilation & Air Conditioning (HVAC):Diagram1
B6.7 - Heating Ventilation & Air Conditioning (HVAC) Auto Temp Control:Diagram1 - HVAC
B6.7 - Range Inhibit (sixth gear inhibit switch):Diagram1
B6.7 - Two Speed Axle (AirShift on Shifter):Diagram1
B6.7 - Vehicle Acceleration (w/ Two PWR Two GND & Two STS):Diagram1

B6.7 - Windshield Wipers:Diagram1
B6.7 - WORK LIGHT W BackUP 1 BULB:Diagram1
L9 - 2-Way Radio:Diagram1
L9 - 2-Way Radio:Diagram2
L9 - Ambient Air Temperature:Diagram1
L9 - Body Builder Lighting - Combined Turn and Stop Lamps (Manual):Diagram1
L9 - Body Builder Lighting - Combined Turn and Stop Lamps (Manual):Diagram2
L9 - Body Builder Lighting - Combined Turn and Stop Lamps (Manual):Diagram3
L9 - Body Builder Lighting - Combined Turn and Stop Lamps (Manual):Diagram4
L9 - Body Builder Lighting - Combined Turn and Stop Lamps (Manual):Diagram5
L9 - Body Builder Lighting - Combined Turn and Stop Lamps (Manual):Diagram6
L9 - Body J1939 (250kbps):L9 - Body J1939 (250Kbps)
L9 - CAN Layout:Body Standard J1939 (250Kbps)
L9 - Cranking (Starter) GEN4 BCM W/ Thermal Overcrank - External Switch:Diagram1
L9 - Cranking (Starter) GEN4 BCM W/O Thermal Overcrank:Diagram1
L9 - ECM Cummins CM2350A:Diagram1
L9 - Transmission Oil Temperature-Manual Trans w/Aux Gauge:Diagram1-Combination1
L9 - Transmission Oil Temperature-Manual Transmission:Diagram1-Combination1
L9 - Transmission Shifter (Stalk Shifter Allison):Diagram1
L9 - Transmission Shifter (Stalk Shifter Allison):Diagram2
L9 - Transmission Shifter Allison 5th Gen Push Button(SURHD):Diagram1
L9 - WORK LIGHT W BackUP 1 BULB Option 1:Diagram1
L9 - WORK LIGHT W BackUP 1 BULB Option 1:Diagram2
L9 - WORK LIGHT W BackUP 1 BULB Option 1:Diagram3
L9 - WORK LIGHT W BackUP 1 BULB Option 1:Diagram4

Mates 1703F

Name	Terminal Part Number	V-Min	Name	Wire Part Number	Wire CSA	Wire Spec	Wire Material description	Wire Color Description	Wire Length	End2 Terminal Part Number	End2 Pin Name	End2 Connector
1	-	-	SH14HCA	3510367 R1	1.91	14.0	Thin Wall XLPE Primary Cable	RED	4280.0	-	A	1913
1	-	-	SJ14HFA	3510367 R1	1.91	14.0	Thin Wall XLPE Primary Cable	RED	2785.0	-	A	6900
2	-	-	SJ11-GA	3510361 R1	1.91	14.0	Thin Wall XLPE Primary Cable	WHITE	2785.0	-	B	6900
2	-	-	SH11-GAP	3510361 R1	1.91	14.0	Thin Wall XLPE Primary Cable	WHITE	4280.0	-	C	1913
8	-	-	AE82-G	3510360 R1	1.16	16.0	Thin Wall XLPE Primary Cable	WHITE	2155.0	-	-	-
16	-	-	MH11-GBD	3510359 R1	0.79	18.0	Thin Wall XLPE Primary Cable	WHITE	1330.0	-	-	-
16	-	-	MJ11-GAD	3510359 R1	0.79	18.0	Thin Wall XLPE Primary Cable	WHITE	1330.0	-	-	-
17	-	-	TB74	3510299 R1	0.79	18.0	Thin Wall XLPE Primary Cable	LIGHT GREEN	3205.0	-	B5	J3-1600

Name	Terminal Part Number	V-Min	Name	Wire Part Number	Wire CSA	Wire Spec	Wire Material description	Wire Color Description	Wire Length	End2 Terminal Part Number	End2 Pin Name	End2 Connector
19	-	-	SA6DB	3510310 R1	0.53	20.0	Thin Wall XLPE Primary Cable	GREY	3175.0	-	E6	J5-1602
19	-	-	SA6DB	3510310 R1	0.53	20.0	Thin Wall XLPE Primary Cable	GREY	3225.0	-	E6	J5-1602
20	-	-	SA77B	3510310 R1	0.53	20.0	Thin Wall XLPE Primary Cable	GREY	3155.0	-	B12	J3-1600
20	-	-	SA77B	3510310 R1	0.53	20.0	Thin Wall XLPE Primary Cable	GREY	3205.0	-	B12	J3-1600
21	-	-	UL92#13 4A	3510329 R1	0.79	18.0	Thin Wall XLPE Primary Cable	TAN	1845.0	-	11	1852
21	-	-	UB92#13 4A	3510329 R1	0.79	18.0	Thin Wall XLPE Primary Cable	TAN	2395.0	-	B	7900F
24	-	-	MB41EJ	3510329 R1	0.79	18.0	Thin Wall XLPE Primary Cable	TAN	2785.0	-	F	3202L
24	-	-	MC41E	3510329 R1	0.79	18.0	Thin Wall XLPE Primary Cable	TAN	2785.0	-	F	3202L

Name	Terminal Part Number	V-Min	Name	Wire Part Number	Wire CSA	Wire Spec	Wire Material description	Wire Color Description	Wire Length	End2 Terminal Part Number	End2 Pin Name	End2 Connector
25	-	-	MC41D	3510329 R1	0.79	18.0	Thin Wall XLPE Primary Cable	TAN	2785.0	-	E	3202L
25	-	-	MB41DJ	3510329 R1	0.79	18.0	Thin Wall XLPE Primary Cable	TAN	2785.0	-	E	3202L
27	-	-	MH26D	2643676 R1	0.79	18.0	Std. Wall XLPE Primary Cable	TAN	3445.0	-	-	-
27	-	-	MJ26D	2643676 R1	0.79	18.0	Std. Wall XLPE Primary Cable	TAN	3445.0	-	-	-
29	-	-	LA17	3510324 R1	1.16	16.0	Thin Wall XLPE Primary Cable	PINK	3365.0	-	T	J6-1606
30	-	-	WIRE722775	-	0.0	-	-	-	0.0	-	L	1025
32	-	-	WIRE722776	-	0.0	-	-	-	0.0	-	B	1025
35	-	-	KA9AA	3510311 R1	0.79	18.0	Thin Wall XLPE Primary Cable	GREY	1915.0	-	X	-
35	-	-	KA9AA	3510311 R1	0.79	18.0	Thin Wall XLPE Primary Cable	GREY	1915.0	-	-	-

Name	Terminal Part Number	V-Min	Name	Wire Part Number	Wire CSA	Wire Spec	Wire Material description	Wire Color Description	Wire Length	End2 Terminal Part Number	End2 Pin Name	End2 Connector
36	-	-	BE97B	3510347 R1	0.79	18.0	Thin Wall XLPE Primary Cable	VIOLET	2270.0	-	B4	1800
37	-	-	BD97NA	3510347 R1	0.79	18.0	Thin Wall XLPE Primary Cable	VIOLET	2270.0	-	B6	1800
37	-	-	BE97WD	3510347 R1	0.79	18.0	Thin Wall XLPE Primary Cable	VIOLET	2270.0	-	B6	1800
38	-	-	BD97MA	3510347 R1	0.79	18.0	Thin Wall XLPE Primary Cable	VIOLET	2270.0	-	B5	1800
38	-	-	BE97F	3510348 R1	1.16	16.0	Thin Wall XLPE Primary Cable	VIOLET	2270.0	-	B5	1800
44	-	-	ZA71BK	3510318 R1	1.16	16.0	Thin Wall XLPE Primary Cable	ORANGE	2855.0	-	1	1701
44	-	-	ZA71BK	3510318 R1	1.16	16.0	Thin Wall XLPE Primary Cable	ORANGE	2855.0	-	-	-
45	-	-	ZJ92#16 5A	3510329 R1	0.79	18.0	Thin Wall XLPE Primary Cable	TAN	3505.0	-	R2 - 85	1012

Name	Terminal Part Number	V-Min	Name	Wire Part Number	Wire CSA	Wire Spec	Wire Material description	Wire Color Description	Wire Length	End2 Terminal Part Number	End2 Pin Name	End2 Connector
45	-	-	ZH71AC	3510318 R1	1.16	16.0	Thin Wall XLPE Primary Cable	ORANGE	2250.0	-	-	-
45	-	-	ZC92#16 5A	3510329 R1	0.79	18.0	Thin Wall XLPE Primary Cable	TAN	3505.0	-	R2 - 85	1012
47	-	-	BE99B	3510347 R1	0.79	18.0	Thin Wall XLPE Primary Cable	VIOLET	2270.0	-	C4	1800
48	-	-	BE97MA	3510347 R1	0.79	18.0	Thin Wall XLPE Primary Cable	VIOLET	2270.0	-	C6	1800
48	-	-	BD99DA	3510347 R1	0.79	18.0	Thin Wall XLPE Primary Cable	VIOLET	2270.0	-	C6	1800
49	-	-	BD97C	3510347 R1	0.79	18.0	Thin Wall XLPE Primary Cable	VIOLET	2270.0	-	C5	1800
54	-	-	MA97F	3510348 R1	1.16	16.0	Thin Wall XLPE Primary Cable	VIOLET	3620.0	-	-	-
56	-	-	UG92#16 1A	3510329 R1	0.79	18.0	Thin Wall XLPE Primary Cable	TAN	2890.0	-	E4	J4-1601

Name	Terminal Part Number	V-Min	Name	Wire Part Number	Wire CSA	Wire Spec	Wire Material description	Wire Color Description	Wire Length	End2 Terminal Part Number	End2 Pin Name	End2 Connector
56	-	-	UJ93A	3510329 R1	0.79	18.0	Thin Wall XLPE Primary Cable	TAN	3225.0	-	F11	J5-1602
61	-	-	NJ31J	3510329 R1	0.79	18.0	Thin Wall XLPE Primary Cable	TAN	3205.0	-	B7	J3-1600
65	-	-	SA77	2643678 R1	1.16	16.0	Std. Wall XLPE Primary Cable	LIGHT GREEN	2865.0	-	C	J1-1603
66	-	-	ZA71BB	3510318 R1	1.16	16.0	Thin Wall XLPE Primary Cable	ORANGE	3620.0	-	-	-
66	-	-	ZH71AA	3510318 R1	1.16	16.0	Thin Wall XLPE Primary Cable	ORANGE	3620.0	-	-	-
69	-	-	AA82K	3510312 R1	1.16	16.0	Thin Wall XLPE Primary Cable	GREY	3410.0	-	R5 - 87	1011
70	-	-	AA82L	3510312 R1	1.16	16.0	Thin Wall XLPE Primary Cable	GREY	3410.0	-	R5 - 87A	1011
72	-	-	AA82J	3510312 R1	1.16	16.0	Thin Wall XLPE Primary Cable	GREY	3410.0	-	R2 - 87A	1011
74	-	-	AA82D	3510312 R1	1.16	16.0	Thin Wall XLPE Primary Cable	GREY	3185.0	-	X	-

Connector Name	1703M
Part Number	3595625C1
Short Description	IP/ENGINE
Instances	A26 - 2-Way Radio:Diagram1 A26 - 2-Way Radio:Diagram2 A26 - Ambient Air Temperature:Diagram1 A26 - Back-Up Alarm (Manual) W/ Tailboard:Diagram1 A26 - Back-Up Alarm (Manual) W/O Tailboard:Diagram1 A26 - Backup Alarm (Switch to 5 Pin 08TKC Tailboard to Alarm) (Manual):Diagram1 A26 - Backup Alarm (Switch to 5 Pin 08TKC Tailboard. Alarm Plugs In) (Manual):Diagram1 A26 - Backup Light (Single Reverse Light) W/Less Power Module Allison 3K/4K:Diagram1-Combination1 A26 - Backup Light (Single Reverse Light) W/Less Power Module Allison 3K/4K:Diagram1-Combination2 A26 - Backup Lights (Dual Daisy Reverse Light) Eaton/Manual Trans:Diagram1 A26 - Backup Lights (Reverse) W/Less Power Module Eaton/ Manual Trans:Diagram1 A26 - Backup Lights (Single Reverse Lights) Eaton/Manual Transmission:Diagram1 A26 - Body Builder Lighting - BOC, 08HBX (Manual):Diagram1 A26 - Body Builder Lighting - Combined Turn and Stop Lamps (Manual):Diagram1-Option 1 (In Cab, W/08HAU) A26 - Body Builder Lighting - Combined Turn and Stop Lamps (Manual):Diagram1-Option 2 (Back-of-Cab, W/08HAB) A26 - Body Builder Lighting - Combined Turn and Stop Lamps (Manual):Diagram1-Option 3 (End-of-Frame, W/08HAE) A26 - ECM:Diagram1 A26 - Heating Ventilation & Air Conditioning (HVAC):Diagram1 A26 - Powertrain J1939 Allison 3k/4k:A26 - Powertrain J1939 Allison 3k/4k A26 - Powertrain J1939 UltraShift Transmission:A26 - Powertrain J1939 UltraShift Transmission A26 - Snow Valve Control:Diagram1 A26 - Snow Valve Control:Diagram2 A26 - Starter Interlock (BCM Controlled with Input from Allison 3K/4K TCM):Diagram1 A26 - Starter Interlock (BCM Controlled with Input from Allison 3K/4K TCM):Diagram2 A26 - Starter Interlock (BCM LSD Controlled w/ Relay & N/ Auto SS):Diagram1

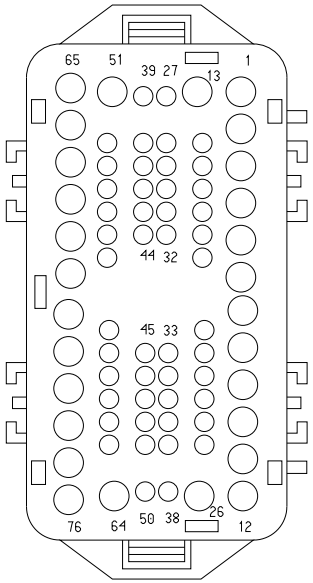

A26 - Transmission Power Take Off (Auto Trans Dual PTO W/ 42 Parameters):Diagram1
A26 - Transmission Power Take Off (Auto Trans Single PTO w/21 Parameters):Diagram1
A26 - Transmission Power Take Off (Manual Trans Dual PTO W/ 42 Parameters):Diagram1
A26 - Transmission Power Take Off (Manual Trans Single PTO w/ 21 Parameters):Diagram1
A26 - Transmission Power Take Off (Single Input Configurable pull up or pull down):Diagram1
A26 - Transmission Shifter (Stalk Shifter Allison):Diagram1
A26 - Transmission Shifter (Stalk Shifter Allison):Diagram2
A26 - Ultrashift Plus:Diagram1
A26 - Vehicle Acceleration (w/ Two PWR Two GND & Two STS):Diagram1
A26 - Work Light W/ Backup 1 Bulb W/Manual W/ RKE:Diagram1-Combination1
A26 - Work Light W/ Backup 1 Bulb W/Manual W/ RKE:Diagram1-Combination2
A26/B6.7/L9 - Snow Valve Control:Diagram1
B6.7 - Snow Valve Control:Diagram1
B6.7 - Snow Valve Control:Diagram2
B6.7 - CAN Layout:Powertrain Standard J1939 (500Kbps)
B6.7 - Powertrain J1939 Allison 1k/2k:B6.7 - Allison 1k/2k Transmission
B6.7 - Powertrain J1939 Allison 3k/4k:B6.7 - Allison 3k/4k Transmission
B6.7 - Powertrain J1939 Manual Transmission:B6.7 - Manual Transmission
B6.7 - Starter Interlocks (BCM Controlled with Input from Allison 1K/2K TCM):Diagram1
B6.7 - Starter Interlocks (BCM Controlled with Input from Allison 3K/4K TCM):Diagram1
B6.7 - Starter Interlocks (BCM Controlled with Input from Allison 3K/4K TCM):Diagram2
B6.7 - Transmission (Allison 3K/4K):Diagram1
B6.7 - Transmission (Allison 3K/4K):Diagram2
B6.7 - Transmission Oil Temperature-Manual Trans:Diagram1
B6.7 - Transmission Oil Temperature-Manual Trans (w/Aux Gauge):Diagram1
B6.7 - Transmission Power Take Off (Auto Trans Single PTO w/21 Parameters):Diagram1
B6.7 - Transmission Power Take Off (Manual Trans Single PTO w/21 Parameters):Diagram1

B6.7 - Transmission Power Take Off (Single Input configurable pull up or pull down):Diagram1
B6.7 - Transmission Shifter (Stalk Shifter Allison):Diagram1
B6.7 - Transmission Shifter (Stalk Shifter Allison):Diagram2
B6.7 - Transmission Shifter Allison 5th Gen Push Button(SURHD):Diagram1
B6.7 - Transmission Shifter Allison 5th Gen Push Button(SURHD):Diagram2
L9 - Auto Neutral (Allison with Multiplex Switch and Confirmation Telltale):Diagram1
L9 - Auto Neutral (Allison with Multiplex Switch and Confirmation Telltale):Diagram2
L9 - Auto Neutral (Allison without Multiplex Switch and Confirmation Telltale):Diagram1
L9 - Auto Neutral (Allison without Multiplex Switch and Confirmation Telltale):Diagram2
L9 - Back-Up Alarm (Manual) W/ Tailboard:Diagram1
L9 - Back-Up Alarm (Manual) W/ Tailboard:Diagram2
L9 - Back-Up Alarm (Manual) W/O Tailboard:Diagram1
L9 - Back-Up Alarm (Manual) W/O Tailboard:Diagram2
L9 - Backup Light (Dual Daisy Reverse Light)Allison/ZF Trans 3K/4K:Diagram1
L9 - Backup Light (Dual Daisy Reverse Light)Allison/ZF Trans 3K/4K:Diagram2
L9 - Backup Light (Single Reverse Light) Allison 3K/4K Option 1:Diagram1
L9 - Backup Light (Single Reverse Light) Allison 3K/4K Option 1:Diagram2
L9 - Backup Light (Single Reverse Light) Allison 3K/4K Option 2:Diagram1
L9 - Backup Light (Single Reverse Light) Allison 3K/4K Option 2:Diagram2
L9 - Backup Light (Single Reverse Light) Allison 3K/4K Option 3:Diagram1
L9 - Backup Light (Single Reverse Light) Allison 3K/4K Option 3:Diagram2
L9 - Backup Light (Single Reverse Light)Allison:Diagram1
L9 - Backup Light (Single Reverse Light)Allison:Diagram2
L9 - Backup Lights (Dual Daisy Reverse Light) Eaton/Manual Trans:Diagram1
L9 - Backup Lights (Dual Daisy Reverse Light) Eaton/Manual Trans:Diagram2
L9 - Backup Lights (Single Reverse Light) Eaton/Manual Trans Option 1:Diagram1

L9 - Backup Lights (Single Reverse Light) Eaton/Manual Trans Option 1:Diagram2
L9 - Backup Lights (Single Reverse Light) Eaton/Manual Trans Option 2:Diagram1
L9 - Backup Lights (Single Reverse Light) Eaton/Manual Trans Option 2:Diagram2
L9 - Backup Lights (Single Reverse Light) Eaton/Manual Trans Option 3:Diagram1
L9 - Backup Lights (Single Reverse Light) Eaton/Manual Trans Option 3:Diagram2
L9 - Backup Lights (Single Reverse Light) Eaton/Manual Trans Option 4:Diagram1
L9 - Backup Lights (Single Reverse Light) Eaton/Manual Trans Option 4:Diagram2
L9 - CAN Layout:Powertrain Standard J1939 (500kbps)
L9 - Heating Ventilation & Air Conditioning (HVAC):Diagram1
L9 - Heating Ventilation & Air Conditioning (HVAC) Auto Temp Control:Diagram1 - HVAC
L9 - Powertrain J1939 Allison 3k/4k:L9 - Powertrain J1939 Allison 3k/4k
L9 - Powertrain J1939 Eaton:L9 - Powertrain J1939 Eaton
L9 - Powertrain J1939 Manual Transmission:Powertrain Standard J1939 (500kbps)
L9 - Snow Valve Control:Diagram1
L9 - Snow Valve Control:Diagram2
L9 - Starter Interlock (BCM LSD Controlled w/ Relay & N/ Auto SS)_EATON XMSN:Diagram1
L9 - Starter Interlocks (BCM Controlled with Input from Allison 3K/4K TCM):Diagram1
L9 - Starter Interlocks (BCM Controlled with Input from Allison 3K/4K TCM):Diagram2
L9 - Transmission (Allison 3K/4K):Diagram1
L9 - Transmission (Allison 3K/4K):Diagram2
L9 - Transmission Power Take Off (Auto Trans Single PTO w/21 Parameters):Diagram1
L9 - Transmission Power Take Off (Auto Trans with Lectradrive):Diagram1
L9 - Transmission Power Take Off (Lectrashift PTO with Manual Trans):Diagram1
L9 - Transmission Power Take Off (Manual Trans Single PTO w/21 Parameters):Diagram1
L9 - Transmission Power Take Off (Single Input configurable pull up or pull down):Diagram1
L9 - Two Speed Axle (AirShift on Shifter):Diagram1

L9 - Ultrashift Plus:Diagram1
L9 - Vehicle Acceleration (w/ Two PWR Two GND & Two STS):Diagram1
L9 - Windshield Wipers:Diagram1

Mates 1703F

Name	Terminal Part Number	V-Min	Name	Wire Part Number	Wire CSA	Wire Spec	Wire Material description	Wire Color Description	Wire Length	End2 Terminal Part Number	End2 Pin Name	End2 Connect or
1	-	-	SL14HD	3510300 R1	1.16	16.0	Thin Wall XLPE Primary Cable	LIGHT GREEN	2785.0	-	A	6900
1	-	-	SK14HC	3510367 R1	1.91	14.0	Thin Wall XLPE Primary Cable	RED	1505.0	-	-	-
3	-	-	QA23-G	3510359 R1	0.79	18.0	Thin Wall XLPE Primary Cable	WHITE	2245.0	-	1	-
3	-	-	QA23-G	3510359 R1	0.79	18.0	Thin Wall XLPE Primary Cable	WHITE	2245.0	-	-	-
4	-	-	QA23BA	3510329 R1	0.79	18.0	Thin Wall XLPE Primary Cable	TAN	2005.0	-	J	J6-1606
4	-	-	QA23BA	3510329 R1	0.79	18.0	Thin Wall XLPE Primary Cable	TAN	2005.0	-	X	-
5	-	-	QA23CA	3510329 R1	0.79	18.0	Thin Wall XLPE Primary Cable	TAN	3520.0	-	F14	J5-1602

Name	Terminal Part Number	V-Min	Name	Wire Part Number	Wire CSA	Wire Spec	Wire Material description	Wire Color Description	Wire Length	End2 Terminal Part Number	End2 Pin Name	End2 Connector
5	-	-	QA23CA	3510329 R1	0.79	18.0	Thin Wall XLPE Primary Cable	TAN	3520.0	-	R5 - 86	1013
6	-	-	QA23DD	3510323 R1	0.79	18.0	Thin Wall XLPE Primary Cable	PINK	1090.0	-	W	J6-1606
6	-	-	QA23DD	3510323 R1	0.79	18.0	Thin Wall XLPE Primary Cable	PINK	1090.0	-	X	-
7	-	-	QA23EA	3510329 R1	0.79	18.0	Thin Wall XLPE Primary Cable	TAN	2035.0	-	F13	J5-1602
7	-	-	QA23EA	3510329 R1	0.79	18.0	Thin Wall XLPE Primary Cable	TAN	2035.0	-	X	-
8	-	-	AE82-G	3510360 R1	1.16	16.0	Thin Wall XLPE Primary Cable	WHITE	2155.0	-	-	-
12	-	-	HW14LSC	3510368 R1	3.01	12.0	Thin Wall XLPE Primary Cable	RED	2065.0	-	R1-87	1873
17	-	-	TB74	3510299 R1	0.79	18.0	Thin Wall XLPE Primary Cable	LIGHT GREEN	3205.0	-	B5	J3-1600

Name	Terminal Part Number	V-Min	Name	Wire Part Number	Wire CSA	Wire Spec	Wire Material description	Wire Color Description	Wire Length	End2 Terminal Part Number	End2 Pin Name	End2 Connector
19	-	-	SA6DB	3510310 R1	0.53	20.0	Thin Wall XLPE Primary Cable	GREY	3225.0	-	E6	J5-1602
20	-	-	SA77B	3510310 R1	0.53	20.0	Thin Wall XLPE Primary Cable	GREY	3205.0	-	B12	J3-1600
21	-	-	UB92#13 4A	3510329 R1	0.79	18.0	Thin Wall XLPE Primary Cable	TAN	2395.0	-	B	7900F
21	-	-	UL92#13 4A	3510329 R1	0.79	18.0	Thin Wall XLPE Primary Cable	TAN	1845.0	-	11	1852
21	-	-	UD92-GC	3510359 R1	0.79	18.0	Thin Wall XLPE Primary Cable	WHITE	3535.0	-	R2 - 85	1014
24	-	-	MB41EJ	3510329 R1	0.79	18.0	Thin Wall XLPE Primary Cable	TAN	2785.0	-	F	3200M
24	-	-	MC41E	3510329 R1	0.79	18.0	Thin Wall XLPE Primary Cable	TAN	2785.0	-	F	3200M
25	-	-	MB41DJ	3510329 R1	0.79	18.0	Thin Wall XLPE Primary Cable	TAN	2785.0	-	E	3200M

Name	Terminal Part Number	V-Min	Name	Wire Part Number	Wire CSA	Wire Spec	Wire Material description	Wire Color Description	Wire Length	End2 Terminal Part Number	End2 Pin Name	End2 Connector
25	-	-	MC41D	3510329 R1	0.79	18.0	Thin Wall XLPE Primary Cable	TAN	2785.0	-	E	3200M
28	-	-	UB92#14 1A	3510329 R1	0.79	18.0	Thin Wall XLPE Primary Cable	TAN	2890.0	-	M	J6-1606
28	-	-	UD92B	3510329 R1	0.79	18.0	Thin Wall XLPE Primary Cable	TAN	3535.0	-	R2 - 86	1014
28	-	-	UB92#14 1A	3510329 R1	0.79	18.0	Thin Wall XLPE Primary Cable	TAN	2890.0	-	B2	J7-1607
29	-	-	LA17	3510324 R1	1.16	16.0	Thin Wall XLPE Primary Cable	PINK	3365.0	-	T	J6-1606
35	-	-	KA9AA	3510311 R1	0.79	18.0	Thin Wall XLPE Primary Cable	GREY	1915.0	-	X	-
36	-	-	BE97B	3510347 R1	0.79	18.0	Thin Wall XLPE Primary Cable	VIOLET	2270.0	-	B4	1800
36	-	-	BE97B	3510347 R1	0.79	18.0	Thin Wall XLPE Primary Cable	VIOLET	2270.0	-	B4	1800F

Name	Terminal Part Number	V-Min	Name	Wire Part Number	Wire CSA	Wire Spec	Wire Material description	Wire Color Description	Wire Length	End2 Terminal Part Number	End2 Pin Name	End2 Connector
37	-	-	BE97WD	3510347 R1	0.79	18.0	Thin Wall XLPE Primary Cable	VIOLET	2270.0	-	B6	1800
37	-	-	BD97NA	3510347 R1	0.79	18.0	Thin Wall XLPE Primary Cable	VIOLET	2270.0	-	B6	1800
37	-	-	BD97NA	3510347 R1	0.79	18.0	Thin Wall XLPE Primary Cable	VIOLET	2270.0	-	B6	1800F
37	-	-	BE97WD	3510347 R1	0.79	18.0	Thin Wall XLPE Primary Cable	VIOLET	2270.0	-	B6	1800F
38	-	-	BE97F	3510348 R1	1.16	16.0	Thin Wall XLPE Primary Cable	VIOLET	2270.0	-	B5	1800
38	-	-	BD97MA	3510347 R1	0.79	18.0	Thin Wall XLPE Primary Cable	VIOLET	2270.0	-	B5	1800
38	-	-	BE97F	3510348 R1	1.16	16.0	Thin Wall XLPE Primary Cable	VIOLET	2270.0	-	B5	1800F
38	-	-	BD97MA	3510347 R1	0.79	18.0	Thin Wall XLPE Primary Cable	VIOLET	2270.0	-	B5	1800F

Name	Terminal Part Number	V-Min	Name	Wire Part Number	Wire CSA	Wire Spec	Wire Material description	Wire Color Description	Wire Length	End2 Terminal Part Number	End2 Pin Name	End2 Connector
42	-	-	UD13A	2643752 R1	1.16	16.0	Std. Wall XLPE Primary Cable	PINK	3640.0	-	-	-
42	-	-	UB92#16 3A	3510324 R1	1.16	16.0	Thin Wall XLPE Primary Cable	PINK	3640.0	-	-	-
43	-	-	VA92#11 7C	3510329 R1	0.79	18.0	Thin Wall XLPE Primary Cable	TAN	3410.0	-	R3 - 87	1011
44	-	-	ZA71BK	3510318 R1	1.16	16.0	Thin Wall XLPE Primary Cable	ORANGE	2855.0	-	-	-
44	-	-	ZA71BK	3510318 R1	1.16	16.0	Thin Wall XLPE Primary Cable	ORANGE	2855.0	-	1	1701
45	-	-	ZJ92#16 5A	3510329 R1	0.79	18.0	Thin Wall XLPE Primary Cable	TAN	3505.0	-	R2 - 85	1012
45	-	-	ZH71AC	3510318 R1	1.16	16.0	Thin Wall XLPE Primary Cable	ORANGE	2250.0	-	-	-
45	-	-	ZC92#16 5A	3510329 R1	0.79	18.0	Thin Wall XLPE Primary Cable	TAN	3505.0	-	R2 - 85	1012

Name	Terminal Part Number	V-Min	Name	Wire Part Number	Wire CSA	Wire Spec	Wire Material description	Wire Color Description	Wire Length	End2 Terminal Part Number	End2 Pin Name	End2 Connector
47	-	-	BE99B	3510347 R1	0.79	18.0	Thin Wall XLPE Primary Cable	VIOLET	2270.0	-	C4	1800
47	-	-	BD99B	3510347 R1	0.79	18.0	Thin Wall XLPE Primary Cable	VIOLET	2270.0	-	C4	1800F
48	-	-	BD99DA	3510347 R1	0.79	18.0	Thin Wall XLPE Primary Cable	VIOLET	2270.0	-	C6	1800
48	-	-	BE97MA	3510347 R1	0.79	18.0	Thin Wall XLPE Primary Cable	VIOLET	2270.0	-	C6	1800
48	-	-	BD99DA	3510347 R1	0.79	18.0	Thin Wall XLPE Primary Cable	VIOLET	2270.0	-	C6	1800F
48	-	-	BE97MA	3510347 R1	0.79	18.0	Thin Wall XLPE Primary Cable	VIOLET	2270.0	-	C6	1800F
49	-	-	BD97C	3510347 R1	0.79	18.0	Thin Wall XLPE Primary Cable	VIOLET	2270.0	-	C5	1800
49	-	-	BE97C	3510347 R1	0.79	18.0	Thin Wall XLPE Primary Cable	VIOLET	2270.0	-	C5	1800F
52	-	-	WIRE735277	-	0.0	-	-	-	0.0	-	PIN1	-

Name	Terminal Part Number	V-Min	Name	Wire Part Number	Wire CSA	Wire Spec	Wire Material description	Wire Color Description	Wire Length	End2 Terminal Part Number	End2 Pin Name	End2 Connector
52	-	-	WIRE735101	-	0.0	-	-	-	0.0	-	PIN1	-
53	-	-	WIRE735272	-	0.0	-	-	-	0.0	-	PIN1	-
53	-	-	WIRE735100	-	0.0	-	-	-	0.0	-	PIN1	-
54	-	-	MA97F	3510348 R1	1.16	16.0	Thin Wall XLPE Primary Cable	VIOLET	3620.0	-	-	-
55	-	-	GZ92#103C	3510329 R1	0.79	18.0	Thin Wall XLPE Primary Cable	TAN	2355.0	-	X	-
55	-	-	GX92#103B	3510329 R1	0.79	18.0	Thin Wall XLPE Primary Cable	TAN	3410.0	-	R3 - 30	1011
56	-	-	UJ93A	3510329 R1	0.79	18.0	Thin Wall XLPE Primary Cable	TAN	3225.0	-	F11	J5-1602
59	-	-	LQ88A	3510299 R1	0.79	18.0	Thin Wall XLPE Primary Cable	LIGHT GREEN	3225.0	-	F15	J5-1602
60	-	-	LP88	3510299 R1	0.79	18.0	Thin Wall XLPE Primary Cable	LIGHT GREEN	3225.0	-	E9	J5-1602
60	-	-	LP88	3510299 R1	0.79	18.0	Thin Wall XLPE Primary Cable	LIGHT GREEN	3225.0	-	F14	J5-1602

Name	Terminal Part Number	V-Min	Name	Wire Part Number	Wire CSA	Wire Spec	Wire Material description	Wire Color Description	Wire Length	End2 Terminal Part Number	End2 Pin Name	End2 Connector
61	-	-	NJ31J	3510329 R1	0.79	18.0	Thin Wall XLPE Primary Cable	TAN	3205.0	-	B7	J3-1600
65	-	-	SA77	2643678 R1	1.16	16.0	Std. Wall XLPE Primary Cable	LIGHT GREEN	2865.0	-	C	J1-1603
66	-	-	ZA71BB	3510318 R1	1.16	16.0	Thin Wall XLPE Primary Cable	ORANGE	3620.0	-	-	-
66	-	-	ZH71AA	3510318 R1	1.16	16.0	Thin Wall XLPE Primary Cable	ORANGE	3620.0	-	-	-
69	-	-	AA82K	3510312 R1	1.16	16.0	Thin Wall XLPE Primary Cable	GREY	3410.0	-	R5 - 87	1011
70	-	-	AA82L	3510312 R1	1.16	16.0	Thin Wall XLPE Primary Cable	GREY	3410.0	-	R5 - 87A	1011
72	-	-	AA82J	3510312 R1	1.16	16.0	Thin Wall XLPE Primary Cable	GREY	3410.0	-	R2 - 87A	1011
74	-	-	AA82D	3510312 R1	1.16	16.0	Thin Wall XLPE Primary Cable	GREY	3185.0	-	X	-

Connector Name	1703M
Part Number	3595625C1
Short Description	IP/ENGINE
Instances	L9 - Backup Lights (Dual Reverse Light) Eaton/Manual Trans:Diagram1
Mates	1703F

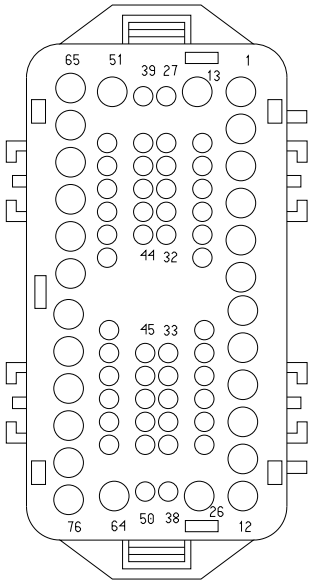

Name	Terminal Part Number	V-Min	Name	Wire Part Number	Wire CSA	Wire Spec	Wire Material description	Wire Color Description	Wire Length	End2 Terminal Part Number	End2 Pin Name	End2 Connector
44	-	-	ZA71BK	3510318 R1	1.16	16.0	Thin Wall XLPE Primary Cable	ORANGE	2855.0	-	44	1703M
45	-	-	ZH71AC	3510318 R1	1.16	16.0	Thin Wall XLPE Primary Cable	ORANGE	2250.0	-	45	1703M
66	-	-	ZH71AA	3510318 R1	1.16	16.0	Thin Wall XLPE Primary Cable	ORANGE	3620.0	-	66	1703M
66	-	-	ZA71BB	3510318 R1	1.16	16.0	Thin Wall XLPE Primary Cable	ORANGE	3620.0	-	66	1703M

Connector Name	1703M
Part Number	3595625C1
Short Description	IP/ENGINE
Instances	L9 - Backup Lights (Dual Reverse Light) Eaton/Manual Trans:Diagram2
Mates	1703F

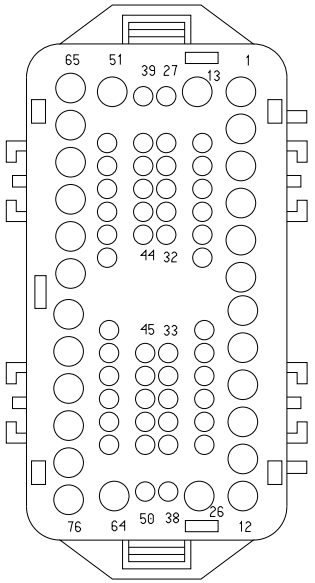

Name	Terminal Part Number	V-Min	Name	Wire Part Number	Wire CSA	Wire Spec	Wire Material description	Wire Color Description	Wire Length	End2 Terminal Part Number	End2 Pin Name	End2 Connect or
44	-	-	ZA71BK	3510318 R1	1.16	16.0	Thin Wall XLPE Primary Cable	ORANGE	2855.0	-	44	1703M
45	-	-	ZH71AC	3510318 R1	1.16	16.0	Thin Wall XLPE Primary Cable	ORANGE	2250.0	-	45	1703M
66	-	-	ZH71AA	3510318 R1	1.16	16.0	Thin Wall XLPE Primary Cable	ORANGE	3620.0	-	66	1703M
66	-	-	ZA71BB	3510318 R1	1.16	16.0	Thin Wall XLPE Primary Cable	ORANGE	3620.0	-	66	1703M

Connector Name 1703
Part Number RING-M-12_0
Instances L9 - Leece-Neville - LN 325A Alternator W/Sensor:Diagram1

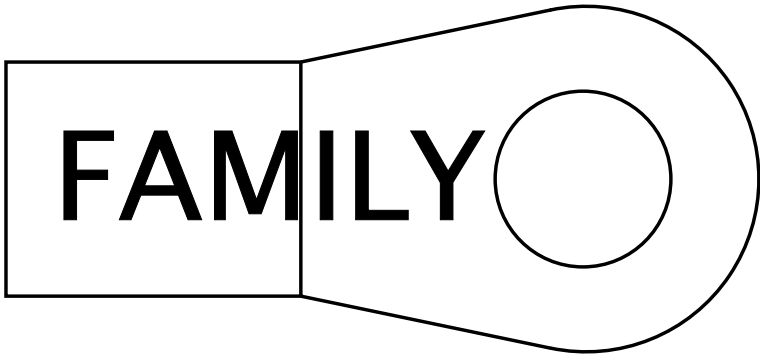

Name	Terminal Part Number	V-Min	Name	Wire Part Number	Wire CSA	Wire Spec	Wire Material description	Wire Color Description	Wire Length	End2 Terminal Part Number	End2 Pin Name	End2 Connect or
A	-	-	WL2-FLD	2643473 R1	4.81	10.0	FUSEABLE LINK	RUST	190.0	-	X	-
A	-	-	WL2-FLC	2643473 R1	4.81	10.0	FUSEABLE LINK	RUST	190.0	-	X	-

Connector Name 1703
Part Number 3595624C1
Instances A26 - CAN Layout:Powertrain Standard J1939 (500Kbps)
Mates 1703

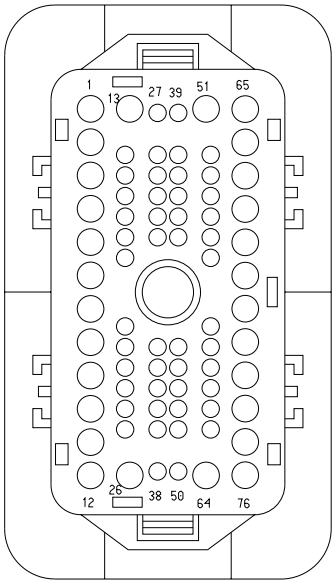

Name	Terminal Part Number	V-Min	Name	Wire Part Number	Wire CSA	Wire Spec	Wire Material description	Wire Color Description	Wire Length	End2 Terminal Part Number	End2 Pin Name	End2 Connect or
52	-	-	WIRE720086	-	0.0	-	-	-	0.0	-	17	1702
53	-	-	WIRE720085	-	0.0	-	-	-	0.0	-	11	1702

Connector Name 1703
Part Number 3595625C1
Instances A26 - CAN Layout:Powertrain Standard J1939 (500Kbps)
Mates 1703

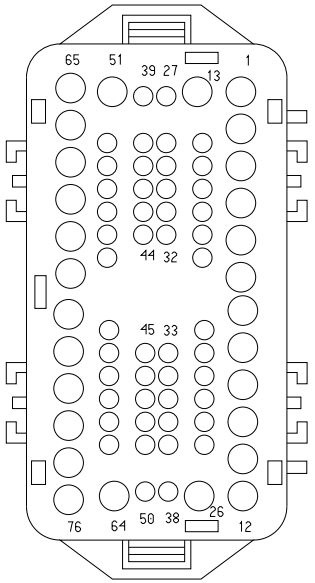

Name	Terminal Part Number	V-Min	Name	Wire Part Number	Wire CSA	Wire Spec	Wire Material description	Wire Color Description	Wire Length	End2 Terminal Part Number	End2 Pin Name	End2 Connect or
52	-	-	WIRE720096	-	0.0	-	-	-	0.0	-	PIN1	-
53	-	-	WIRE720099	-	0.0	-	-	-	0.0	-	PIN1	-

Connector Name	1800F
Part Number	3612512C1
Short Description	CAB HARNESS CONNECTOR
Instances	A26 - Bendix Tractor or Towing Truck N/ Air SUSP J1939 Driven Lamp:Diagram1 A26 - Bendix Tractor or Towing Truck N/ Air SUSP J1939 Driven Lamp:Diagram2 A26 - Bendix Tractor or Towing Truck N/ Air SUSP J1939 Driven Lamp:Diagram3 A26 - Bendix Tractor or Towing Truck N/ Air SUSP J1939 Driven Lamp:Diagram4 A26 - Bendix Tractor or Towing Truck W/ Air SUSP J1939 Driven Lamp:Diagram1 A26 - Bendix Tractor or Towing Truck W/ Air SUSP J1939 Driven Lamp:Diagram2 A26 - Bendix Tractor or Towing Truck W/ Air SUSP J1939 Driven Lamp:Diagram3 A26 - Bendix Tractor or Towing Truck W/ Air SUSP J1939 Driven Lamp:Diagram4 A26 - Brake Pressure (Auxiliary Gauge):Diagram1 A26 - Brake Pressure (Virtual Gauge):Diagram1 A26 - Brake Switch:Diagram1 A26 - City Horn (W/ 4PIN Park Brake):Diagram1 A26 - City Horn (W/ 4PIN Park Brake):Diagram2 A26 - City Horn (W/ 4PIN Park Brake):Diagram3 A26 - City Horn (W/ 4PIN Park Brake):Diagram4 A26 - City Horn (W/ 4PIN):Diagram1 A26 - City Horn (W/ 4PIN):Diagram2 A26 - City Horn (W/ 4PIN):Diagram3 A26 - City Horn (W/ 4PIN):Diagram4 A26 - City Horn (W/ 10PIN Park Brake):Diagram1 A26 - City Horn (W/ 10PIN Park Brake):Diagram2 A26 - City Horn (W/ 10PIN):Diagram1 A26 - City Horn (W/ 10PIN):Diagram2 A26 - Clutch Switch/Monitoring (High and Low Switch to BCM):Diagram1 A26 - Directional Signal (Turn) W/ Daisy Chain Box Lamps:Diagram1 A26 - Directional Signal (Turn) W/ Daisy Chain Box Lamps, W/ Plow Lights:Diagram1-Option 1 (Snow Plow #1) A26 - Directional Signal (Turn) W/ Daisy Chain Box Lamps, W/ Plow Lights:Diagram1-Option 2 (Snow Plow #2) A26 - Directional Signal (Turn) W/ LED BOX LAMPS:Diagram1

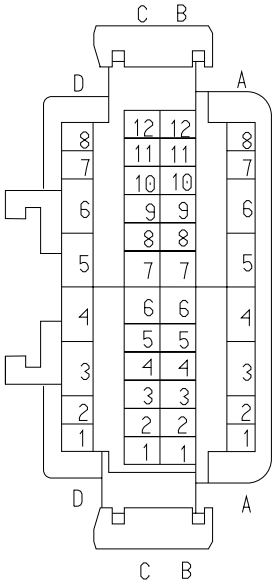

A26 - Directional Signal (Turn) W/ LED BOX LAMPS, W/Plow Lights:Diagram1-Option 1 (Snow Plow #1)
A26 - Directional Signal (Turn) W/ LED BOX LAMPS, W/Plow Lights:Diagram1-Option 2 (Snow Plow #2)
A26 - Directional Signal (Turn) W/ Single Tail Board W/Hazard SW:Diagram1
A26 - Directional Signal (Turn) W/ Single Tail Board, W/Hazard SW, W/Plow Lights:Diagram1-Option 1 (Snow Plow #1)
A26 - Directional Signal (Turn) W/ Single Tail Board, W/Hazard SW, W/Plow Lights:Diagram1-Option 2 (Snow Plow #2)
A26 - Headlight W/Plowlights, W/LOWW, W/O Interrupt:Diagram1-Combination1
A26 - Headlight W/Plowlights, W/LOWW, W/O Interrupt:Diagram1-Combination2
A26 - Headlight W/Plowlights, W/LOWW, W/O Interrupt:Diagram1-Combination3
A26 - Headlight W/Plowlights, W/LOWW, W/O Interrupt:Diagram1-Combination4
A26 - Headlight W/Plowlights, W/O LOWW, W/O Interrupt:Diagram1-Combination1
A26 - Headlight W/Plowlights, W/O LOWW, W/O Interrupt:Diagram1-Combination2
A26 - Headlight W/Plowlights, W/O LOWW, W/O Interrupt:Diagram1-Combination3
A26 - Headlight W/Plowlights, W/O LOWW, W/O Interrupt:Diagram1-Combination4
A26 - Headlights W/LOWW, W/Interrupt - 10 PIN CLK:Diagram1-Combination1
A26 - Headlights W/LOWW, W/Interrupt - 10 PIN CLK:Diagram1-Combination2
A26 - Headlights W/O LOWW, W/Interrupt - 10 PIN CLK:Diagram1-Combination1
A26 - Headlights W/O LOWW, W/Interrupt - 10 PIN CLK:Diagram1-Combination2
A26 - Headlights W/O LOWW, W/O Interrupt:Diagram1-Combination1
A26 - Headlights W/O LOWW, W/O Interrupt:Diagram1-Combination2
A26 - Headlights W/PlowLights, W/LOWW, W/Interrupt - 10 PIN CLK:Diagram1-Combination1
A26 - Headlights W/PlowLights, W/LOWW, W/Interrupt - 10 PIN CLK:Diagram1-Combination2
A26 - Headlights W/PlowLights, W/LOWW, W/Interrupt - 10 PIN CLK:Diagram1-Combination3

A26 - Headlights W/PlowLights, W/LOWW, W/Interrupt - 10 PIN CLK:Diagram1-Combination4
A26 - Headlights W/PlowLights, W/O LOWW, W/Interrupt - 10 PIN CLK:Diagram1-Combination1
A26 - Headlights W/PlowLights, W/O LOWW, W/Interrupt - 10 PIN CLK:Diagram1-Combination2
A26 - Headlights W/PlowLights, W/O LOWW, W/Interrupt - 10 PIN CLK:Diagram1-Combination3
A26 - Headlights W/PlowLights, W/O LOWW, W/Interrupt - 10 PIN CLK:Diagram1-Combination4
A26 - Park Brake Control (Monitoring)(GEN IV BCM):Diagram1
A26 - Stability Control (Bendix Straight Truck J1939 Driven Lamp):Diagram1
A26 - Stability Control (Bendix Straight Truck J1939 Driven Lamp):Diagram2
A26 - Stability Control (Bendix Straight Truck J1939 Driven Lamp):Diagram3
A26 - Stability Control (Bendix Straight Truck J1939 Driven Lamp):Diagram4
A26 - Vehicle Acceleration (w/ Two PWR Two GND & Two STS):Diagram1
A26 - Windshield Wipers:Diagram1
A26/B6.7/L9 - Adjustable Engine Speed Control (PTO) 4-pin:Diagram1
A26/B6.7/L9 - Adjustable Engine Speed Control (PTO) 10-pin:Diagram1
A26/B6.7/L9 - Adjustable Engine Speed Control (PTO) 10-pin:Diagram2
A26/B6.7/L9 - Compressed Air Supply:Diagram1
A26/B6.7/L9 - Cruise Control (W/ One Telltale 4 Pin):Diagram1
A26/B6.7/L9 - Cruise Control (W/ One Telltale 4 Pin):Diagram2
A26/B6.7/L9 - Cruise Control (W/ One Telltale 10 Pin):Diagram1
A26/B6.7/L9 - Cruise Control (W/ One Telltale 10 Pin):Diagram2
A26/B6.7/L9 - PARK LIGHTS - W/Marker Interrupt 4 pin clockspring:Diagram1
A26/B6.7/L9 - PARK LIGHTS - W/Marker Interrupt 4 pin clockspring:Diagram2
A26/B6.7/L9 - PARK LIGHTS - W/Marker Interrupt 10pin CLCKSPRING:Diagram1
A26/B6.7/L9 - PARK LIGHTS - W/Marker Interrupt 10pin CLCKSPRING:Diagram2
A26/B6.7/L9 - Radio w/Bluetooth:Diagram1
A26/B6.7/L9 - Radio w/Bluetooth:Diagram2
A26/B6.7/L9 - Radio w/Steering Wheel Pod:Diagram1

A26/B6.7/L9 - Radio w/Steering Wheel Pod:Diagram2
A26/B6.7/L9 - Vehicle Speed Control (Cruise Control) 4 Pin:Diagram1
A26/B6.7/L9 - Vehicle Speed Control (Cruise Control) 10 Pin:Diagram1
B6.7 - Brake Pressure (Auxiliary Gauge):Diagram1
B6.7 - Brake Pressure (Virtual Gauge):Diagram1
B6.7 - Brake Switch:Diagram1
B6.7 - City Horn (W/ 4PIN CLK & Park Brake):Diagram1
B6.7 - City Horn (W/ 4PIN CLK & Park Brake):Diagram2
B6.7 - City Horn (W/ 4PIN CLK & Park Brake):Diagram3
B6.7 - City Horn (W/ 4PIN CLK & Park Brake):Diagram4
B6.7 - City Horn (W/ 4PIN CLK & Park Brake):Diagram5
B6.7 - City Horn (W/ 4PIN CLK & Park Brake):Diagram6
B6.7 - City Horn (W/ 4PIN CLK):Diagram1
B6.7 - City Horn (W/ 4PIN CLK):Diagram2
B6.7 - City Horn (W/ 4PIN CLK):Diagram3
B6.7 - City Horn (W/ 4PIN CLK):Diagram4
B6.7 - City Horn (W/ 4PIN CLK):Diagram5
B6.7 - City Horn (W/ 4PIN CLK):Diagram6
B6.7 - City Horn (W/ 10PIN CLK & Park Brake):Diagram1
B6.7 - City Horn (W/ 10PIN CLK & Park Brake):Diagram2
B6.7 - City Horn (W/ 10PIN CLK & Park Brake):Diagram3
B6.7 - City Horn (W/ 10PIN CLK):Diagram1
B6.7 - City Horn (W/ 10PIN CLK):Diagram2
B6.7 - City Horn (W/ 10PIN CLK):Diagram3
B6.7 - Clutch Switch/Monitoring (High and Low Switch to BCM):Diagram1
B6.7 - Directional Signal (Turn) W/ Less Power Module Tail Board W/Hazard SW W/PLOW LIGHTS:Diagram1
B6.7 - Directional Signal (Turn) W/ Less Power Module Tail Board W/Hazard SW W/PLOW LIGHTS:Diagram2
B6.7 - Directional Signal (Turn) W/ Less Power Module Tail Board W/Hazard SW W/PLOW LIGHTS:Diagram3
B6.7 - Directional Signal (Turn) W/ Less Power Module Tail Board W/Hazard SW W/PLOW LIGHTS:Diagram4
B6.7 - Directional Signal (Turn) W/ DAISY CHAIN BOX LAMPS:Diagram1
B6.7 - Directional Signal (Turn) W/ DAISY CHAIN BOX LAMPS:Diagram2
B6.7 - Directional Signal (Turn) W/ Daisy Chain Box Lamps W/ Plow Lights:Diagram1
B6.7 - Directional Signal (Turn) W/ Daisy Chain Box Lamps W/ Plow Lights:Diagram2

B6.7 - Directional Signal (Turn) W/ Daisy Chain Box Lamps W/ Plow Lights:Diagram3
B6.7 - Directional Signal (Turn) W/ Daisy Chain Box Lamps W/ Plow Lights:Diagram4
B6.7 - Directional Signal (Turn) W/ LED BOX LAMPS:Diagram1
B6.7 - Directional Signal (Turn) W/ LED BOX LAMPS:Diagram2
B6.7 - Directional Signal (Turn) W/ LED BOX LAMPS W/Plow Lights:Diagram1
B6.7 - Directional Signal (Turn) W/ LED BOX LAMPS W/Plow Lights:Diagram2
B6.7 - Directional Signal (Turn) W/ LED BOX LAMPS W/Plow Lights:Diagram3
B6.7 - Directional Signal (Turn) W/ LED BOX LAMPS W/Plow Lights:Diagram4
B6.7 - Directional Signal (Turn) W/ Less Power Module Tail Board W/Hazard SW:Diagram1
B6.7 - Directional Signal (Turn) W/ Less Power Module Tail Board W/Hazard SW:Diagram2
B6.7 - Directional Signal (Turn) W/ Single Tail Board W/Hazard SW:Diagram1
B6.7 - Directional Signal (Turn) W/ Single Tail Board W/Hazard SW:Diagram2
B6.7 - Directional Signal (Turn) W/ Single Tail Board W/Plow Lights:Diagram1
B6.7 - Directional Signal (Turn) W/ Single Tail Board W/Plow Lights:Diagram2
B6.7 - Directional Signal (Turn) W/ Single Tail Board W/Plow Lights:Diagram3
B6.7 - Directional Signal (Turn) W/ Single Tail Board W/Plow Lights:Diagram4
B6.7 - Headlight W/Plowlights W/LOWW W/O Headlight Interrupt -10 PIN CLK:Diagram1
B6.7 - Headlight W/Plowlights W/LOWW W/O Headlight Interrupt -10 PIN CLK:Diagram2
B6.7 - Headlight W/Plowlights W/LOWW W/O Headlight Interrupt -10 PIN CLK:Diagram3
B6.7 - Headlight W/Plowlights W/LOWW W/O Headlight Interrupt -10 PIN CLK:Diagram4
B6.7 - Headlight W/Plowlights W/LOWW W/O Headlight Interrupt -10 PIN CLK:Diagram5
B6.7 - Headlight W/Plowlights W/LOWW W/O Headlight Interrupt -10 PIN CLK:Diagram6
B6.7 - Headlight W/Plowlights W/LOWW W/O Headlight Interrupt -10 PIN CLK:Diagram7

B6.7 - Headlight W/Plowlights W/LOWW W/O Headlight Interrupt -10 PIN CLK:Diagram8
B6.7 - Headlights W 10PIN CLK W/LOWW W/Interrupt:Diagram1
B6.7 - Headlights W 10PIN CLK W/LOWW W/Interrupt:Diagram2
B6.7 - Headlights W 10PIN CLK W/LOWW W/Interrupt:Diagram3
B6.7 - Headlights W 10PIN CLK W/LOWW W/Interrupt:Diagram4
B6.7 - Headlights W 10PIN CLK W/LOWW W/O Interrupt:Diagram1
B6.7 - Headlights W 10PIN CLK W/LOWW W/O Interrupt:Diagram2
B6.7 - Headlights W 10PIN CLK W/LOWW W/O Interrupt:Diagram3
B6.7 - Headlights W 10PIN CLK W/LOWW W/O Interrupt:Diagram4
B6.7 - Headlights W/O Lights ON With Wipers (LOWW) W/O Headlights Interrupt:Diagram1
B6.7 - Headlights W/O Lights ON With Wipers (LOWW) W/O Headlights Interrupt:Diagram2
B6.7 - Headlights W/O Lights ON With Wipers (LOWW) W/O Headlights Interrupt:Diagram3
B6.7 - Headlights W/O Lights ON With Wipers (LOWW) W/O Headlights Interrupt:Diagram4
B6.7 - Headlights W/O Lights ON with wipers (LOWW) W/ Headlights Interrupt:Diagram1
B6.7 - Headlights W/O Lights ON with wipers (LOWW) W/ Headlights Interrupt:Diagram2
B6.7 - Headlights W/O Lights ON with wipers (LOWW) W/ Headlights Interrupt:Diagram3
B6.7 - Headlights W/O Lights ON with wipers (LOWW) W/ Headlights Interrupt:Diagram4
B6.7 - Headlights W/PlowLights W/Headlight Interrupt -10PIN CLK W/LOWW W/Interrupt:Diagram1
B6.7 - Headlights W/PlowLights W/Headlight Interrupt -10PIN CLK W/LOWW W/Interrupt:Diagram2
B6.7 - Headlights W/PlowLights W/Headlight Interrupt -10PIN CLK W/LOWW W/Interrupt:Diagram3
B6.7 - Headlights W/PlowLights W/Headlight Interrupt -10PIN CLK W/LOWW W/Interrupt:Diagram4
B6.7 - Headlights W/PlowLights W/Headlight Interrupt -10PIN CLK W/LOWW W/Interrupt:Diagram5
B6.7 - Headlights W/PlowLights W/Headlight Interrupt -10PIN CLK W/LOWW W/Interrupt:Diagram6
B6.7 - Headlights W/PlowLights W/Headlight Interrupt -10PIN CLK W/LOWW W/Interrupt:Diagram7

B6.7 - Headlights W/PlowLights W/Headlight Interrupt -10PIN CLK W/LOWW W/Interrupt:Diagram8
B6.7 - Headlights W/Plowlights W/O Lights ON With Wipers (LOWW) W/O Headlights Interrupt:Diagram1
B6.7 - Headlights W/Plowlights W/O Lights ON With Wipers (LOWW) W/O Headlights Interrupt:Diagram2
B6.7 - Headlights W/Plowlights W/O Lights ON With Wipers (LOWW) W/O Headlights Interrupt:Diagram3
B6.7 - Headlights W/Plowlights W/O Lights ON With Wipers (LOWW) W/O Headlights Interrupt:Diagram4
B6.7 - Headlights W/Plowlights W/O Lights ON With Wipers (LOWW) W/O Headlights Interrupt:Diagram5
B6.7 - Headlights W/Plowlights W/O Lights ON With Wipers (LOWW) W/O Headlights Interrupt:Diagram6
B6.7 - Headlights W/Plowlights W/O Lights ON With Wipers (LOWW) W/O Headlights Interrupt:Diagram7
B6.7 - Headlights W/Plowlights W/O Lights ON With Wipers (LOWW) W/O Headlights Interrupt:Diagram8
B6.7 - Headlights W/PlowLights W/O Lights ON with wipers (LOWW) W/ Headlights Interrupt:Diagram1
B6.7 - Headlights W/PlowLights W/O Lights ON with wipers (LOWW) W/ Headlights Interrupt:Diagram2
B6.7 - Headlights W/PlowLights W/O Lights ON with wipers (LOWW) W/ Headlights Interrupt:Diagram3
B6.7 - Headlights W/PlowLights W/O Lights ON with wipers (LOWW) W/ Headlights Interrupt:Diagram4
B6.7 - Headlights W/PlowLights W/O Lights ON with wipers (LOWW) W/ Headlights Interrupt:Diagram5
B6.7 - Headlights W/PlowLights W/O Lights ON with wipers (LOWW) W/ Headlights Interrupt:Diagram6
B6.7 - Headlights W/PlowLights W/O Lights ON with wipers (LOWW) W/ Headlights Interrupt:Diagram7
B6.7 - Headlights W/PlowLights W/O Lights ON with wipers (LOWW) W/ Headlights Interrupt:Diagram8
B6.7 - Park Brake Controls (Monitoring) (Door Switch City Horn):Diagram1
B6.7 - Stability Control (Bendix Straight Truck J1939 Driven Lamp):Diagram1
B6.7 - Stability Control (Bendix Straight Truck J1939 Driven Lamp):Diagram2
B6.7 - Stability Control (Bendix Straight Truck J1939 Driven Lamp):Diagram3
B6.7 - Stability Control (Bendix Straight Truck J1939 Driven Lamp):Diagram4

B6.7 - Vehicle Acceleration (w/ Two PWR Two GND & Two STS):Diagram1
B6.7 - Windshield Washer Pump:Diagram1
B6.7 - Windshield Washer Pump & Low Fluid Sensor:Diagram1
B6.7 - Windshield Wipers:Diagram1
L9 - Bendix Tractor or Towing Truck W/ Air SUSP J1939 Driven Lamp:Diagram1
L9 - Bendix Tractor or Towing Truck W/ Air SUSP J1939 Driven Lamp:Diagram2
L9 - Brake Pressure (Auxiliary Gauge):Diagram1
L9 - Brake Pressure (Virtual Gauge):Diagram1
L9 - Brake Switch:Diagram1
L9 - City Horn (W/ 4PIN CLK & Park Brake):Diagram1
L9 - City Horn (W/ 4PIN CLK & Park Brake):Diagram2
L9 - City Horn (W/ 4PIN CLK & Park Brake):Diagram3
L9 - City Horn (W/ 4PIN CLK & Park Brake):Diagram4
L9 - City Horn (W/ 4PIN CLK):Diagram1
L9 - City Horn (W/ 4PIN CLK):Diagram2
L9 - City Horn (W/ 4PIN CLK):Diagram3
L9 - City Horn (W/ 4PIN CLK):Diagram4
L9 - City Horn (W/ 10PIN CLK & Park Brake):Diagram1
L9 - City Horn (W/ 10PIN CLK & Park Brake):Diagram2
L9 - City Horn (W/ 10PIN CLK):Diagram1
L9 - City Horn (W/ 10PIN CLK):Diagram2
L9 - Clutch Switch/Monitoring (High and Low Switch to BCM):Diagram1
L9 - Directional Signal (Turn) W/ Less Power Module Tail Board W/Hazard SW W/PLOW LIGHTS:Diagram1
L9 - Directional Signal (Turn) W/ Less Power Module Tail Board W/Hazard SW W/PLOW LIGHTS:Diagram2
L9 - Directional Signal (Turn) W/ Less Power Module Tail Board W/Hazard SW W/PLOW LIGHTS:Diagram3
L9 - Directional Signal (Turn) W/ Less Power Module Tail Board W/Hazard SW W/PLOW LIGHTS:Diagram4
L9 - Directional Signal (Turn) W/ DAISY CHAIN BOX LAMPS:Diagram1
L9 - Directional Signal (Turn) W/ DAISY CHAIN BOX LAMPS:Diagram2
L9 - Directional Signal (Turn) W/ Daisy Chain Box Lamps W/ Plow Lights:Diagram1
L9 - Directional Signal (Turn) W/ Daisy Chain Box Lamps W/ Plow Lights:Diagram2
L9 - Directional Signal (Turn) W/ Daisy Chain Box Lamps W/ Plow Lights:Diagram3

L9 - Directional Signal (Turn) W/ Daisy Chain Box Lamps W/ Plow Lights:Diagram4
L9 - Directional Signal (Turn) W/ LED BOX LAMPS:Diagram1
L9 - Directional Signal (Turn) W/ LED BOX LAMPS:Diagram2
L9 - Directional Signal (Turn) W/ LED BOX LAMPS W/Plow Lights:Diagram1
L9 - Directional Signal (Turn) W/ LED BOX LAMPS W/Plow Lights:Diagram2
L9 - Directional Signal (Turn) W/ LED BOX LAMPS W/Plow Lights:Diagram3
L9 - Directional Signal (Turn) W/ LED BOX LAMPS W/Plow Lights:Diagram4
L9 - Directional Signal (Turn) W/ Less Power Module Tail Board W/Hazard SW:Diagram1
L9 - Directional Signal (Turn) W/ Less Power Module Tail Board W/Hazard SW:Diagram2
L9 - Directional Signal (Turn) W/ Single Tail Board W/Hazard SW:Diagram1
L9 - Directional Signal (Turn) W/ Single Tail Board W/Hazard SW:Diagram2
L9 - Directional Signal (Turn) W/ Single Tail Board W/Plow Lights:Diagram1
L9 - Directional Signal (Turn) W/ Single Tail Board W/Plow Lights:Diagram2
L9 - Directional Signal (Turn) W/ Single Tail Board W/Plow Lights:Diagram3
L9 - Directional Signal (Turn) W/ Single Tail Board W/Plow Lights:Diagram4
L9 - Headlight W/Plowlights W/LOWW W/O Headlight Interrupt -10 PIN CLK:Diagram1
L9 - Headlight W/Plowlights W/LOWW W/O Headlight Interrupt -10 PIN CLK:Diagram2
L9 - Headlight W/Plowlights W/LOWW W/O Headlight Interrupt -10 PIN CLK:Diagram3
L9 - Headlight W/Plowlights W/LOWW W/O Headlight Interrupt -10 PIN CLK:Diagram4
L9 - Headlight W/Plowlights W/LOWW W/O Headlight Interrupt -10 PIN CLK:Diagram5
L9 - Headlight W/Plowlights W/LOWW W/O Headlight Interrupt -10 PIN CLK:Diagram6
L9 - Headlight W/Plowlights W/LOWW W/O Headlight Interrupt -10 PIN CLK:Diagram7
L9 - Headlight W/Plowlights W/LOWW W/O Headlight Interrupt -10 PIN CLK:Diagram8

L9 - Headlights W 10PIN CLK W/LOWW W/Interrupt:Diagram1
L9 - Headlights W 10PIN CLK W/LOWW W/Interrupt:Diagram2
L9 - Headlights W 10PIN CLK W/LOWW W/Interrupt:Diagram3
L9 - Headlights W 10PIN CLK W/LOWW W/Interrupt:Diagram4
L9 - Headlights W 10PIN CLK W/LOWW W/O Interrupt:Diagram1
L9 - Headlights W 10PIN CLK W/LOWW W/O Interrupt:Diagram2
L9 - Headlights W 10PIN CLK W/LOWW W/O Interrupt:Diagram3
L9 - Headlights W 10PIN CLK W/LOWW W/O Interrupt:Diagram4
L9 - Headlights W/O Lights ON With Wipers (LOWW) W/O Headlights Interrupt:Diagram1
L9 - Headlights W/O Lights ON With Wipers (LOWW) W/O Headlights Interrupt:Diagram2
L9 - Headlights W/O Lights ON With Wipers (LOWW) W/O Headlights Interrupt:Diagram3
L9 - Headlights W/O Lights ON With Wipers (LOWW) W/O Headlights Interrupt:Diagram4
L9 - Headlights W/O Lights ON with wipers (LOWW) W/ Headlights Interrupt:Diagram1
L9 - Headlights W/O Lights ON with wipers (LOWW) W/ Headlights Interrupt:Diagram2
L9 - Headlights W/O Lights ON with wipers (LOWW) W/ Headlights Interrupt:Diagram3
L9 - Headlights W/O Lights ON with wipers (LOWW) W/ Headlights Interrupt:Diagram4
L9 - Headlights W/PlowLights W/Headlight Interrupt -10PIN CLK W/LOWW W/Interrupt:Diagram1
L9 - Headlights W/PlowLights W/Headlight Interrupt -10PIN CLK W/LOWW W/Interrupt:Diagram2
L9 - Headlights W/PlowLights W/Headlight Interrupt -10PIN CLK W/LOWW W/Interrupt:Diagram3
L9 - Headlights W/PlowLights W/Headlight Interrupt -10PIN CLK W/LOWW W/Interrupt:Diagram4
L9 - Headlights W/PlowLights W/Headlight Interrupt -10PIN CLK W/LOWW W/Interrupt:Diagram5
L9 - Headlights W/PlowLights W/Headlight Interrupt -10PIN CLK W/LOWW W/Interrupt:Diagram6
L9 - Headlights W/PlowLights W/Headlight Interrupt -10PIN CLK W/LOWW W/Interrupt:Diagram7
L9 - Headlights W/PlowLights W/Headlight Interrupt -10PIN CLK W/LOWW W/Interrupt:Diagram8

L9 - Headlights W/Plowlights W/O Lights ON With Wipers (LOWW) W/O Headlights Interrupt:Diagram1
L9 - Headlights W/Plowlights W/O Lights ON With Wipers (LOWW) W/O Headlights Interrupt:Diagram2
L9 - Headlights W/Plowlights W/O Lights ON With Wipers (LOWW) W/O Headlights Interrupt:Diagram3
L9 - Headlights W/Plowlights W/O Lights ON With Wipers (LOWW) W/O Headlights Interrupt:Diagram4
L9 - Headlights W/Plowlights W/O Lights ON With Wipers (LOWW) W/O Headlights Interrupt:Diagram5
L9 - Headlights W/Plowlights W/O Lights ON With Wipers (LOWW) W/O Headlights Interrupt:Diagram6
L9 - Headlights W/Plowlights W/O Lights ON With Wipers (LOWW) W/O Headlights Interrupt:Diagram7
L9 - Headlights W/Plowlights W/O Lights ON With Wipers (LOWW) W/O Headlights Interrupt:Diagram8
L9 - Headlights W/PlowLights W/O Lights ON with wipers (LOWW) W/ Headlights Interrupt:Diagram1
L9 - Headlights W/PlowLights W/O Lights ON with wipers (LOWW) W/ Headlights Interrupt:Diagram2
L9 - Headlights W/PlowLights W/O Lights ON with wipers (LOWW) W/ Headlights Interrupt:Diagram3
L9 - Headlights W/PlowLights W/O Lights ON with wipers (LOWW) W/ Headlights Interrupt:Diagram4
L9 - Headlights W/PlowLights W/O Lights ON with wipers (LOWW) W/ Headlights Interrupt:Diagram5
L9 - Headlights W/PlowLights W/O Lights ON with wipers (LOWW) W/ Headlights Interrupt:Diagram6
L9 - Headlights W/PlowLights W/O Lights ON with wipers (LOWW) W/ Headlights Interrupt:Diagram7
L9 - Headlights W/PlowLights W/O Lights ON with wipers (LOWW) W/ Headlights Interrupt:Diagram8
L9 - Park Brake Control (Monitoring)(GEN IV BCM):Diagram1
L9 - Park Brake Controls (Monitoring) (Door Switch City Horn):Diagram1
L9 - Stability Control (Bendix Straight Truck J1939 Driven Lamp):Diagram1
L9 - Stability Control (Bendix Straight Truck J1939 Driven Lamp):Diagram2
L9 - Stability Control (Bendix Straight Truck J1939 Driven Lamp):Diagram3
L9 - Stability Control (Bendix Straight Truck J1939 Driven Lamp):Diagram4

L9 - Vehicle Acceleration (w/ Two PWR Two GND & Two STS):Diagram1
L9 - Windshield Washer Pump & Low Fluid Sensor:Diagram1
L9 - Windshield Washer Pump & Low Fluid Sensor:Diagram2
L9 - Windshield Wipers:Diagram1

Mates 1800

Name	Terminal Part Number	V-Min	Name	Wire Part Number	Wire CSA	Wire Spec	Wire Material description	Wire Color Description	Wire Length	End2 Terminal Part Number	End2 Pin Name	End2 Connector
A1	-	-	BB56A	3510317 R1	0.79	18.0	Thin Wall XLPE Primary Cable	ORANGE	1065.0	-	1	1810
A1	-	-	BB56A	3510317 R1	0.79	18.0	Thin Wall XLPE Primary Cable	ORANGE	1065.0	-	1	1801
A2	-	-	BB57A	3510317 R1	0.79	18.0	Thin Wall XLPE Primary Cable	ORANGE	1065.0	-	2	1810
A2	-	-	BB57A	3510317 R1	0.79	18.0	Thin Wall XLPE Primary Cable	ORANGE	1065.0	-	2	1801
A3	-	-	BL11-GAA	2643674 R1	0.79	18.0	Std. Wall XLPE Primary Cable	WHITE	550.0	-	X	-
A3	-	-	BG11-GAA	3510359 R1	0.79	18.0	Thin Wall XLPE Primary Cable	WHITE	1065.0	-	6	1810
A4	-	-	BL9V	2643673 R1	0.79	18.0	Std. Wall XLPE Primary Cable	GREY	450.0	-	X	-

Name	Terminal Part Number	V-Min	Name	Wire Part Number	Wire CSA	Wire Spec	Wire Material description	Wire Color Description	Wire Length	End2 Terminal Part Number	End2 Pin Name	End2 Connector
A4	-	-	BZ9V	3510311 R1	0.79	18.0	Thin Wall XLPE Primary Cable	GREY	450.0	-	X	-
A5	-	-	BB87A	3510311 R1	0.79	18.0	Thin Wall XLPE Primary Cable	GREY	1065.0	-	12	1810
A6	-	-	CA70A	3510317 R1	0.79	18.0	Thin Wall XLPE Primary Cable	ORANGE	775.0	-	C	1823
A6	-	-	BL70A	3510317 R1	0.79	18.0	Thin Wall XLPE Primary Cable	ORANGE	775.0	-	C	1806
A7	-	-	BB52A	3510335 R1	0.79	18.0	Thin Wall XLPE Primary Cable	YELLOW 2	1065.0	-	3	1810
A8	-	-	BB102A	3510335 R1	0.79	18.0	Thin Wall XLPE Primary Cable	YELLOW 2	1065.0	-	4	1810
B1	-	-	BB82B	3510311 R1	0.79	18.0	Thin Wall XLPE Primary Cable	GREY	1065.0	-	5	1801
B1	-	-	BB82B	3510311 R1	0.79	18.0	Thin Wall XLPE Primary Cable	GREY	1065.0	-	5	1810

Name	Terminal Part Number	V-Min	Name	Wire Part Number	Wire CSA	Wire Spec	Wire Material description	Wire Color Description	Wire Length	End2 Terminal Part Number	End2 Pin Name	End2 Connector
B2	-	-	BL40A	3510311 R1	0.79	18.0	Thin Wall XLPE Primary Cable	GREY	800.0	-	C	1812
B3	-	-	CB6H	2643673 R1	0.79	18.0	Std. Wall XLPE Primary Cable	GREY	550.0	-	X	-
B3	-	-	CC6HB	3510311 R1	0.79	18.0	Thin Wall XLPE Primary Cable	GREY	650.0	-	B	1811
B4	-	-	BB97Y	2643718 R1	0.79	18.0	Std. Wall XLPE Primary Cable	VIOLET	600.0	-	B	1804
B4	-	-	BE97B	3510347 R1	0.79	18.0	Thin Wall XLPE Primary Cable	VIOLET	2270.0	-	36	1703M
B5	-	-	BB99U	4092319 R1	0.79	18.0	Std. Wall XLPE Primary Cable	VIOLET/ WHITE	600.0	-	D	1804
B5	-	-	BE97F	3510348 R1	1.16	16.0	Thin Wall XLPE Primary Cable	VIOLET	2270.0	-	38	1703M
B5	-	-	BD97MA	3510347 R1	0.79	18.0	Thin Wall XLPE Primary Cable	VIOLET	2270.0	-	38	1703M

Name	Terminal Part Number	V-Min	Name	Wire Part Number	Wire CSA	Wire Spec	Wire Material description	Wire Color Description	Wire Length	End2 Terminal Part Number	End2 Pin Name	End2 Connector
B6	-	-	BB99W	2643718 R1	0.79	18.0	Std. Wall XLPE Primary Cable	VIOLET	600.0	-	E	1804
B6	-	-	BD97NA	3510347 R1	0.79	18.0	Thin Wall XLPE Primary Cable	VIOLET	2270.0	-	37	1703M
B6	-	-	BE97WD	3510347 R1	0.79	18.0	Thin Wall XLPE Primary Cable	VIOLET	2270.0	-	37	1703M
B7	-	-	CC44BB	3510311 R1	0.79	18.0	Thin Wall XLPE Primary Cable	GREY	725.0	-	C	1808
B7	-	-	BZ44BB	3510311 R1	0.79	18.0	Thin Wall XLPE Primary Cable	GREY	725.0	-	C	1808
B9	-	-	CB70	3510317 R1	0.79	18.0	Thin Wall XLPE Primary Cable	ORANGE	775.0	-	C	1824
B9	-	-	BG70	3510317 R1	0.79	18.0	Thin Wall XLPE Primary Cable	ORANGE	775.0	-	C	1806
B9	-	-	CA70	3510317 R1	0.79	18.0	Thin Wall XLPE Primary Cable	ORANGE	775.0	-	C	1824

Name	Terminal Part Number	V-Min	Name	Wire Part Number	Wire CSA	Wire Spec	Wire Material description	Wire Color Description	Wire Length	End2 Terminal Part Number	End2 Pin Name	End2 Connector
B10	-	-	CB85B	3510310 R1	0.53	20.0	Thin Wall XLPE Primary Cable	GREY	1125.0	-	B	1809
B10	-	-	BL85A	3510310 R1	0.53	20.0	Thin Wall XLPE Primary Cable	GREY	1125.0	-	3	1802
B10	-	-	BF85B	3510310 R1	0.53	20.0	Thin Wall XLPE Primary Cable	GREY	1125.0	-	B	1809
B11	-	-	BX100	3510310 R1	0.53	20.0	Thin Wall XLPE Primary Cable	GREY	1125.0	-	2	1802
B11	-	-	CA100	3510310 R1	0.53	20.0	Thin Wall XLPE Primary Cable	GREY	1125.0	-	2	1802
B11	-	-	BL100	3510310 R1	0.53	20.0	Thin Wall XLPE Primary Cable	GREY	1125.0	-	2	1802
B12	-	-	BZ97	3510310 R1	0.53	20.0	Thin Wall XLPE Primary Cable	GREY	1125.0	-	1	1802
B12	-	-	CB97	3510310 R1	0.53	20.0	Thin Wall XLPE Primary Cable	GREY	1125.0	-	A	1809

Name	Terminal Part Number	V-Min	Name	Wire Part Number	Wire CSA	Wire Spec	Wire Material description	Wire Color Description	Wire Length	End2 Terminal Part Number	End2 Pin Name	End2 Connector
C1	-	-	BB82A	3510311 R1	0.79	18.0	Thin Wall XLPE Primary Cable	GREY	1065.0	-	11	1801
C1	-	-	BB82A	3510311 R1	0.79	18.0	Thin Wall XLPE Primary Cable	GREY	1065.0	-	11	1810
C2	-	-	CB40F	3510311 R1	0.79	18.0	Thin Wall XLPE Primary Cable	GREY	775.0	-	C	1822
C3	-	-	BN94SV	2643673 R1	0.79	18.0	Std. Wall XLPE Primary Cable	GREY	425.0	-	X	-
C4	-	-	BB99V	4092319 R1	0.79	18.0	Std. Wall XLPE Primary Cable	VIOLET/ WHITE	600.0	-	A	1804
C4	-	-	BD99B	3510347 R1	0.79	18.0	Thin Wall XLPE Primary Cable	VIOLET	2270.0	-	47	1703M
C5	-	-	BB97P	4092323 R1	0.79	18.0	Std. Wall XLPE Primary Cable	VIOLET/ BLACK	600.0	-	C	1804
C5	-	-	BE97C	3510347 R1	0.79	18.0	Thin Wall XLPE Primary Cable	VIOLET	2270.0	-	49	1703M

Name	Terminal Part Number	V-Min	Name	Wire Part Number	Wire CSA	Wire Spec	Wire Material description	Wire Color Description	Wire Length	End2 Terminal Part Number	End2 Pin Name	End2 Connector
C6	-	-	BB99E	4092323 R1	0.79	18.0	Std. Wall XLPE Primary Cable	VIOLET/ BLACK	600.0	-	F	1804
C6	-	-	BD99DA	3510347 R1	0.79	18.0	Thin Wall XLPE Primary Cable	VIOLET	2270.0	-	48	1703M
C6	-	-	BE97MA	3510347 R1	0.79	18.0	Thin Wall XLPE Primary Cable	VIOLET	2270.0	-	48	1703M
C9	-	-	BB82	3510311 R1	0.79	18.0	Thin Wall XLPE Primary Cable	GREY	1065.0	-	8	1801
C9	-	-	BB82	3510311 R1	0.79	18.0	Thin Wall XLPE Primary Cable	GREY	1065.0	-	8	1810
C10	-	-	BN94SZ	2643673 R1	0.79	18.0	Std. Wall XLPE Primary Cable	GREY	475.0	-	X	-
C11	-	-	CF97A	2643718 R1	0.79	18.0	Std. Wall XLPE Primary Cable	VIOLET	550.0	-	C	1811
C12	-	-	CA40	3510311 R1	0.79	18.0	Thin Wall XLPE Primary Cable	GREY	650.0	-	C	1811

Name	Terminal Part Number	V-Min	Name	Wire Part Number	Wire CSA	Wire Spec	Wire Material description	Wire Color Description	Wire Length	End2 Terminal Part Number	End2 Pin Name	End2 Connector
D3	-	-	CA62DD	3510352 R1	0.53	20.0	Thin Wall XLPE Primary Cable	DARK BLUE	1125.0	-	5	1802
D3	-	-	CB62DD	3510352 R1	0.53	20.0	Thin Wall XLPE Primary Cable	DARK BLUE	1125.0	-	C	1809
D3	-	-	WIRE737520	3510352 R1	0.53	20.0	Thin Wall XLPE Primary Cable	DARK BLUE	1125.0	-	5	1802
D3	-	-	BL62DD	3510352 R1	0.53	20.0	Thin Wall XLPE Primary Cable	DARK BLUE	1125.0	-	5	1802
D5	-	-	BN94SE	2643673 R1	0.79	18.0	Std. Wall XLPE Primary Cable	GREY	700.0	-	C	1826
D5	-	-	BN94SE	2643673 R1	0.79	18.0	Std. Wall XLPE Primary Cable	GREY	700.0	-	C	9830
D6	-	-	BN94SF	2643673 R1	0.79	18.0	Std. Wall XLPE Primary Cable	GREY	600.0	-	C	1828
D6	-	-	BN94SF	2643673 R1	0.79	18.0	Std. Wall XLPE Primary Cable	GREY	600.0	-	C	9830

Name	Terminal Part Number	V-Min	Name	Wire Part Number	Wire CSA	Wire Spec	Wire Material description	Wire Color Description	Wire Length	End2 Terminal Part Number	End2 Pin Name	End2 Connect or
D7	-	-	CC17J	3510323 R1	0.79	18.0	Thin Wall XLPE Primary Cable	PINK	550.0	-	A	1811
D8	-	-	CB17H	3510323 R1	0.79	18.0	Thin Wall XLPE Primary Cable	PINK	550.0	-	B	1811

Connector Name	1800F
Part Number	3612512C1
Short Description	CAB HARNESS CONNECTOR
Instances	A26 - Directional Signal (Turn) W/ Less Power Module Tail Board, W/Hazard SW:Diagram1 A26 - Directional Signal (Turn) W/ Less Power Module Tail Board, W/Hazard SW, W/Plow Lights:Diagram1-Option 1 (Snow Plow #1) A26 - Directional Signal (Turn) W/ Less Power Module Tail Board, W/Hazard SW, W/Plow Lights:Diagram1-Option 2 (Snow Plow #2) A26 - Headlights W/LOWW, W/O Interrupt:Diagram1-Combination1 A26 - Headlights W/LOWW, W/O Interrupt:Diagram1-Combination2
Mates	1800

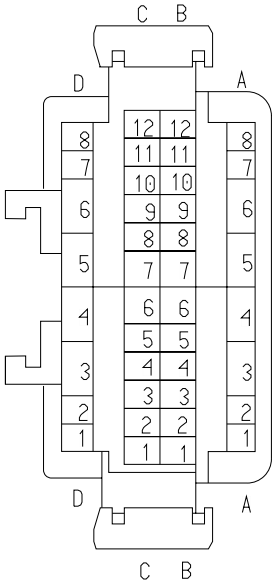

Name	Terminal Part Number	V-Min	Name	Wire Part Number	Wire CSA	Wire Spec	Wire Material description	Wire Color Description	Wire Length	End2 Terminal Part Number	End2 Pin Name	End2 Connect or
A1	-	-	BB56A	3510317 R1	0.79	18.0	Thin Wall XLPE Primary Cable	ORANGE	1065.0	-	1	1810
A2	-	-	BB57A	3510317 R1	0.79	18.0	Thin Wall XLPE Primary Cable	ORANGE	1065.0	-	2	1810
A4	-	-	BL9V	2643673 R1	0.79	18.0	Std. Wall XLPE Primary Cable	GREY	450.0	-	X	-
A7	-	-	BB52A	3510335 R1	0.79	18.0	Thin Wall XLPE Primary Cable	YELLOW 2	1065.0	-	3	1810

Name	Terminal Part Number	V-Min	Name	Wire Part Number	Wire CSA	Wire Spec	Wire Material description	Wire Color Description	Wire Length	End2 Terminal Part Number	End2 Pin Name	End2 Connect or
A8	-	-	BB102A	3510335 R1	0.79	18.0	Thin Wall XLPE Primary Cable	YELLOW 2	1065.0	-	4	1810

Connector Name	1800
Part Number	3553649C1
Short Description	DCM CONNECTOR
Instances	A26 - Bendix Tractor or Towing Truck N/ Air SUSP J1939 Driven Lamp:Diagram1 A26 - Bendix Tractor or Towing Truck N/ Air SUSP J1939 Driven Lamp:Diagram2 A26 - Bendix Tractor or Towing Truck N/ Air SUSP J1939 Driven Lamp:Diagram3 A26 - Bendix Tractor or Towing Truck N/ Air SUSP J1939 Driven Lamp:Diagram4 A26 - Bendix Tractor or Towing Truck W/ Air SUSP J1939 Driven Lamp:Diagram1 A26 - Bendix Tractor or Towing Truck W/ Air SUSP J1939 Driven Lamp:Diagram2 A26 - Bendix Tractor or Towing Truck W/ Air SUSP J1939 Driven Lamp:Diagram3 A26 - Bendix Tractor or Towing Truck W/ Air SUSP J1939 Driven Lamp:Diagram4 A26 - Brake Pressure (Auxiliary Gauge):Diagram1 A26 - Brake Pressure (Virtual Gauge):Diagram1 A26 - Brake Switch:Diagram1 A26 - City Horn (W/ 4PIN Park Brake):Diagram1 A26 - City Horn (W/ 4PIN Park Brake):Diagram2 A26 - City Horn (W/ 4PIN Park Brake):Diagram3 A26 - City Horn (W/ 4PIN Park Brake):Diagram4 A26 - City Horn (W/ 4PIN):Diagram1 A26 - City Horn (W/ 4PIN):Diagram2 A26 - City Horn (W/ 4PIN):Diagram3 A26 - City Horn (W/ 4PIN):Diagram4 A26 - City Horn (W/ 10PIN Park Brake):Diagram1 A26 - City Horn (W/ 10PIN Park Brake):Diagram2 A26 - City Horn (W/ 10PIN):Diagram1 A26 - City Horn (W/ 10PIN):Diagram2 A26 - Clutch Switch/Monitoring (High and Low Switch to BCM):Diagram1 A26 - Directional Signal (Turn) W/ Daisy Chain Box Lamps:Diagram1 A26 - Directional Signal (Turn) W/ Daisy Chain Box Lamps, W/ Plow Lights:Diagram1-Option 1 (Snow Plow #1) A26 - Directional Signal (Turn) W/ Daisy Chain Box Lamps, W/ Plow Lights:Diagram1-Option 2 (Snow Plow #2) A26 - Directional Signal (Turn) W/ LED BOX LAMPS:Diagram1

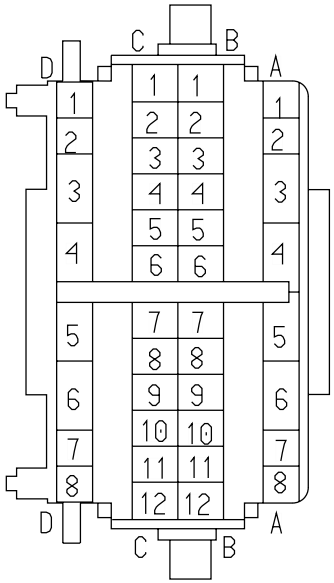

A26 - Directional Signal (Turn) W/ LED BOX LAMPS, W/Plow Lights:Diagram1-Option 1 (Snow Plow #1)
A26 - Directional Signal (Turn) W/ LED BOX LAMPS, W/Plow Lights:Diagram1-Option 2 (Snow Plow #2)
A26 - Directional Signal (Turn) W/ Single Tail Board W/Hazard SW:Diagram1
A26 - Directional Signal (Turn) W/ Single Tail Board, W/Hazard SW, W/Plow Lights:Diagram1-Option 1 (Snow Plow #1)
A26 - Directional Signal (Turn) W/ Single Tail Board, W/Hazard SW, W/Plow Lights:Diagram1-Option 2 (Snow Plow #2)
A26 - Headlight W/Plowlights, W/LOWW, W/O Interrupt:Diagram1-Combination1
A26 - Headlight W/Plowlights, W/LOWW, W/O Interrupt:Diagram1-Combination2
A26 - Headlight W/Plowlights, W/LOWW, W/O Interrupt:Diagram1-Combination3
A26 - Headlight W/Plowlights, W/LOWW, W/O Interrupt:Diagram1-Combination4
A26 - Headlight W/Plowlights, W/O LOWW, W/O Interrupt:Diagram1-Combination1
A26 - Headlight W/Plowlights, W/O LOWW, W/O Interrupt:Diagram1-Combination2
A26 - Headlight W/Plowlights, W/O LOWW, W/O Interrupt:Diagram1-Combination3
A26 - Headlight W/Plowlights, W/O LOWW, W/O Interrupt:Diagram1-Combination4
A26 - Headlights W/LOWW, W/Interrupt - 10 PIN CLK:Diagram1-Combination1
A26 - Headlights W/LOWW, W/Interrupt - 10 PIN CLK:Diagram1-Combination2
A26 - Headlights W/O LOWW, W/Interrupt - 10 PIN CLK:Diagram1-Combination1
A26 - Headlights W/O LOWW, W/Interrupt - 10 PIN CLK:Diagram1-Combination2
A26 - Headlights W/O LOWW, W/O Interrupt:Diagram1-Combination1
A26 - Headlights W/O LOWW, W/O Interrupt:Diagram1-Combination2
A26 - Headlights W/PlowLights, W/LOWW, W/Interrupt - 10 PIN CLK:Diagram1-Combination1
A26 - Headlights W/PlowLights, W/LOWW, W/Interrupt - 10 PIN CLK:Diagram1-Combination2
A26 - Headlights W/PlowLights, W/LOWW, W/Interrupt - 10 PIN CLK:Diagram1-Combination3

A26 - Headlights W/PlowLights, W/LOWW, W/Interrupt - 10 PIN CLK:Diagram1-Combination4
A26 - Headlights W/PlowLights, W/O LOWW, W/Interrupt - 10 PIN CLK:Diagram1-Combination1
A26 - Headlights W/PlowLights, W/O LOWW, W/Interrupt - 10 PIN CLK:Diagram1-Combination2
A26 - Headlights W/PlowLights, W/O LOWW, W/Interrupt - 10 PIN CLK:Diagram1-Combination3
A26 - Headlights W/PlowLights, W/O LOWW, W/Interrupt - 10 PIN CLK:Diagram1-Combination4
A26 - Park Brake Control (Monitoring)(GEN IV BCM):Diagram1
A26 - Stability Control (Bendix Straight Truck J1939 Driven Lamp):Diagram1
A26 - Stability Control (Bendix Straight Truck J1939 Driven Lamp):Diagram2
A26 - Stability Control (Bendix Straight Truck J1939 Driven Lamp):Diagram3
A26 - Stability Control (Bendix Straight Truck J1939 Driven Lamp):Diagram4
A26 - Vehicle Acceleration (w/ Two PWR Two GND & Two STS):Diagram1
A26 - Windshield Wipers:Diagram1
A26/B6.7/L9 - Adjustable Engine Speed Control (PTO) 4-pin:Diagram1
A26/B6.7/L9 - Adjustable Engine Speed Control (PTO) 10-pin:Diagram1
A26/B6.7/L9 - Adjustable Engine Speed Control (PTO) 10-pin:Diagram2
A26/B6.7/L9 - Compressed Air Supply:Diagram1
A26/B6.7/L9 - Cruise Control (W/ One Telltale 4 Pin):Diagram1
A26/B6.7/L9 - Cruise Control (W/ One Telltale 4 Pin):Diagram2
A26/B6.7/L9 - Cruise Control (W/ One Telltale 10 Pin):Diagram1
A26/B6.7/L9 - Cruise Control (W/ One Telltale 10 Pin):Diagram2
A26/B6.7/L9 - PARK LIGHTS - W/Marker Interrupt 4 pin clockspring:Diagram1
A26/B6.7/L9 - PARK LIGHTS - W/Marker Interrupt 4 pin clockspring:Diagram2
A26/B6.7/L9 - PARK LIGHTS - W/Marker Interrupt 10pin CLCKSPRING:Diagram1
A26/B6.7/L9 - PARK LIGHTS - W/Marker Interrupt 10pin CLCKSPRING:Diagram2
A26/B6.7/L9 - Radio w/Bluetooth:Diagram1
A26/B6.7/L9 - Radio w/Bluetooth:Diagram2
A26/B6.7/L9 - Radio w/Steering Wheel Pod:Diagram1

A26/B6.7/L9 - Radio w/Steering Wheel Pod:Diagram2
A26/B6.7/L9 - Vehicle Speed Control (Cruise Control) 4 Pin:Diagram1
A26/B6.7/L9 - Vehicle Speed Control (Cruise Control) 10 Pin:Diagram1
B6.7 - Brake Pressure (Auxiliary Gauge):Diagram1
B6.7 - Brake Pressure (Virtual Gauge):Diagram1
B6.7 - Brake Switch:Diagram1
B6.7 - City Horn (W/ 4PIN CLK & Park Brake):Diagram1
B6.7 - City Horn (W/ 4PIN CLK & Park Brake):Diagram2
B6.7 - City Horn (W/ 4PIN CLK & Park Brake):Diagram3
B6.7 - City Horn (W/ 4PIN CLK & Park Brake):Diagram4
B6.7 - City Horn (W/ 4PIN CLK & Park Brake):Diagram5
B6.7 - City Horn (W/ 4PIN CLK & Park Brake):Diagram6
B6.7 - City Horn (W/ 4PIN CLK):Diagram1
B6.7 - City Horn (W/ 4PIN CLK):Diagram2
B6.7 - City Horn (W/ 4PIN CLK):Diagram3
B6.7 - City Horn (W/ 4PIN CLK):Diagram4
B6.7 - City Horn (W/ 4PIN CLK):Diagram5
B6.7 - City Horn (W/ 4PIN CLK):Diagram6
B6.7 - City Horn (W/ 10PIN CLK & Park Brake):Diagram1
B6.7 - City Horn (W/ 10PIN CLK & Park Brake):Diagram2
B6.7 - City Horn (W/ 10PIN CLK & Park Brake):Diagram3
B6.7 - City Horn (W/ 10PIN CLK):Diagram1
B6.7 - City Horn (W/ 10PIN CLK):Diagram2
B6.7 - City Horn (W/ 10PIN CLK):Diagram3
B6.7 - Clutch Switch/Monitoring (High and Low Switch to BCM):Diagram1
B6.7 - Directional Signal (Turn) W/ Less Power Module Tail Board W/Hazard SW W/PLOW LIGHTS:Diagram1
B6.7 - Directional Signal (Turn) W/ Less Power Module Tail Board W/Hazard SW W/PLOW LIGHTS:Diagram2
B6.7 - Directional Signal (Turn) W/ Less Power Module Tail Board W/Hazard SW W/PLOW LIGHTS:Diagram3
B6.7 - Directional Signal (Turn) W/ Less Power Module Tail Board W/Hazard SW W/PLOW LIGHTS:Diagram4
B6.7 - Directional Signal (Turn) W/ DAISY CHAIN BOX LAMPS:Diagram1
B6.7 - Directional Signal (Turn) W/ DAISY CHAIN BOX LAMPS:Diagram2
B6.7 - Directional Signal (Turn) W/ Daisy Chain Box Lamps W/ Plow Lights:Diagram1
B6.7 - Directional Signal (Turn) W/ Daisy Chain Box Lamps W/ Plow Lights:Diagram2

B6.7 - Directional Signal (Turn) W/ Daisy Chain Box Lamps W/ Plow Lights:Diagram3
B6.7 - Directional Signal (Turn) W/ Daisy Chain Box Lamps W/ Plow Lights:Diagram4
B6.7 - Directional Signal (Turn) W/ LED BOX LAMPS:Diagram1
B6.7 - Directional Signal (Turn) W/ LED BOX LAMPS:Diagram2
B6.7 - Directional Signal (Turn) W/ LED BOX LAMPS W/Plow Lights:Diagram1
B6.7 - Directional Signal (Turn) W/ LED BOX LAMPS W/Plow Lights:Diagram2
B6.7 - Directional Signal (Turn) W/ LED BOX LAMPS W/Plow Lights:Diagram3
B6.7 - Directional Signal (Turn) W/ LED BOX LAMPS W/Plow Lights:Diagram4
B6.7 - Directional Signal (Turn) W/ Less Power Module Tail Board W/Hazard SW:Diagram1
B6.7 - Directional Signal (Turn) W/ Less Power Module Tail Board W/Hazard SW:Diagram2
B6.7 - Directional Signal (Turn) W/ Single Tail Board W/Hazard SW:Diagram1
B6.7 - Directional Signal (Turn) W/ Single Tail Board W/Hazard SW:Diagram2
B6.7 - Directional Signal (Turn) W/ Single Tail Board W/Plow Lights:Diagram1
B6.7 - Directional Signal (Turn) W/ Single Tail Board W/Plow Lights:Diagram2
B6.7 - Directional Signal (Turn) W/ Single Tail Board W/Plow Lights:Diagram3
B6.7 - Directional Signal (Turn) W/ Single Tail Board W/Plow Lights:Diagram4
B6.7 - Headlight W/Plowlights W/LOWW W/O Headlight Interrupt -10 PIN CLK:Diagram1
B6.7 - Headlight W/Plowlights W/LOWW W/O Headlight Interrupt -10 PIN CLK:Diagram2
B6.7 - Headlight W/Plowlights W/LOWW W/O Headlight Interrupt -10 PIN CLK:Diagram3
B6.7 - Headlight W/Plowlights W/LOWW W/O Headlight Interrupt -10 PIN CLK:Diagram4
B6.7 - Headlight W/Plowlights W/LOWW W/O Headlight Interrupt -10 PIN CLK:Diagram5
B6.7 - Headlight W/Plowlights W/LOWW W/O Headlight Interrupt -10 PIN CLK:Diagram6
B6.7 - Headlight W/Plowlights W/LOWW W/O Headlight Interrupt -10 PIN CLK:Diagram7

B6.7 - Headlight W/Plowlights W/LOWW W/O Headlight Interrupt -10 PIN CLK:Diagram8
B6.7 - Headlights W 10PIN CLK W/LOWW W/Interrupt:Diagram1
B6.7 - Headlights W 10PIN CLK W/LOWW W/Interrupt:Diagram2
B6.7 - Headlights W 10PIN CLK W/LOWW W/Interrupt:Diagram3
B6.7 - Headlights W 10PIN CLK W/LOWW W/Interrupt:Diagram4
B6.7 - Headlights W 10PIN CLK W/LOWW W/O Interrupt:Diagram1
B6.7 - Headlights W 10PIN CLK W/LOWW W/O Interrupt:Diagram2
B6.7 - Headlights W 10PIN CLK W/LOWW W/O Interrupt:Diagram3
B6.7 - Headlights W 10PIN CLK W/LOWW W/O Interrupt:Diagram4
B6.7 - Headlights W/O Lights ON With Wipers (LOWW) W/O Headlights Interrupt:Diagram1
B6.7 - Headlights W/O Lights ON With Wipers (LOWW) W/O Headlights Interrupt:Diagram2
B6.7 - Headlights W/O Lights ON With Wipers (LOWW) W/O Headlights Interrupt:Diagram3
B6.7 - Headlights W/O Lights ON With Wipers (LOWW) W/O Headlights Interrupt:Diagram4
B6.7 - Headlights W/O Lights ON with wipers (LOWW) W/ Headlights Interrupt:Diagram1
B6.7 - Headlights W/O Lights ON with wipers (LOWW) W/ Headlights Interrupt:Diagram2
B6.7 - Headlights W/O Lights ON with wipers (LOWW) W/ Headlights Interrupt:Diagram3
B6.7 - Headlights W/O Lights ON with wipers (LOWW) W/ Headlights Interrupt:Diagram4
B6.7 - Headlights W/PlowLights W/Headlight Interrupt -10PIN CLK W/LOWW W/Interrupt:Diagram1
B6.7 - Headlights W/PlowLights W/Headlight Interrupt -10PIN CLK W/LOWW W/Interrupt:Diagram2
B6.7 - Headlights W/PlowLights W/Headlight Interrupt -10PIN CLK W/LOWW W/Interrupt:Diagram3
B6.7 - Headlights W/PlowLights W/Headlight Interrupt -10PIN CLK W/LOWW W/Interrupt:Diagram4
B6.7 - Headlights W/PlowLights W/Headlight Interrupt -10PIN CLK W/LOWW W/Interrupt:Diagram5
B6.7 - Headlights W/PlowLights W/Headlight Interrupt -10PIN CLK W/LOWW W/Interrupt:Diagram6
B6.7 - Headlights W/PlowLights W/Headlight Interrupt -10PIN CLK W/LOWW W/Interrupt:Diagram7

B6.7 - Headlights W/PlowLights W/Headlight Interrupt -10PIN CLK W/LOWW W/Interrupt:Diagram8
B6.7 - Headlights W/Plowlights W/O Lights ON With Wipers (LOWW) W/O Headlights Interrupt:Diagram1
B6.7 - Headlights W/Plowlights W/O Lights ON With Wipers (LOWW) W/O Headlights Interrupt:Diagram2
B6.7 - Headlights W/Plowlights W/O Lights ON With Wipers (LOWW) W/O Headlights Interrupt:Diagram3
B6.7 - Headlights W/Plowlights W/O Lights ON With Wipers (LOWW) W/O Headlights Interrupt:Diagram4
B6.7 - Headlights W/Plowlights W/O Lights ON With Wipers (LOWW) W/O Headlights Interrupt:Diagram5
B6.7 - Headlights W/Plowlights W/O Lights ON With Wipers (LOWW) W/O Headlights Interrupt:Diagram6
B6.7 - Headlights W/Plowlights W/O Lights ON With Wipers (LOWW) W/O Headlights Interrupt:Diagram7
B6.7 - Headlights W/Plowlights W/O Lights ON With Wipers (LOWW) W/O Headlights Interrupt:Diagram8
B6.7 - Headlights W/PlowLights W/O Lights ON with wipers (LOWW) W/ Headlights Interrupt:Diagram1
B6.7 - Headlights W/PlowLights W/O Lights ON with wipers (LOWW) W/ Headlights Interrupt:Diagram2
B6.7 - Headlights W/PlowLights W/O Lights ON with wipers (LOWW) W/ Headlights Interrupt:Diagram3
B6.7 - Headlights W/PlowLights W/O Lights ON with wipers (LOWW) W/ Headlights Interrupt:Diagram4
B6.7 - Headlights W/PlowLights W/O Lights ON with wipers (LOWW) W/ Headlights Interrupt:Diagram5
B6.7 - Headlights W/PlowLights W/O Lights ON with wipers (LOWW) W/ Headlights Interrupt:Diagram6
B6.7 - Headlights W/PlowLights W/O Lights ON with wipers (LOWW) W/ Headlights Interrupt:Diagram7
B6.7 - Headlights W/PlowLights W/O Lights ON with wipers (LOWW) W/ Headlights Interrupt:Diagram8
B6.7 - Park Brake Controls (Monitoring) (Door Switch City Horn):Diagram1
B6.7 - Stability Control (Bendix Straight Truck J1939 Driven Lamp):Diagram1
B6.7 - Stability Control (Bendix Straight Truck J1939 Driven Lamp):Diagram2
B6.7 - Stability Control (Bendix Straight Truck J1939 Driven Lamp):Diagram3
B6.7 - Stability Control (Bendix Straight Truck J1939 Driven Lamp):Diagram4

B6.7 - Vehicle Acceleration (w/ Two PWR Two GND & Two STS):Diagram1
B6.7 - Windshield Washer Pump:Diagram1
B6.7 - Windshield Washer Pump & Low Fluid Sensor:Diagram1
B6.7 - Windshield Wipers:Diagram1
L9 - Bendix Tractor or Towing Truck W/ Air SUSP J1939 Driven Lamp:Diagram1
L9 - Bendix Tractor or Towing Truck W/ Air SUSP J1939 Driven Lamp:Diagram2
L9 - Brake Pressure (Auxiliary Gauge):Diagram1
L9 - Brake Pressure (Virtual Gauge):Diagram1
L9 - Brake Switch:Diagram1
L9 - City Horn (W/ 4PIN CLK & Park Brake):Diagram1
L9 - City Horn (W/ 4PIN CLK & Park Brake):Diagram2
L9 - City Horn (W/ 4PIN CLK & Park Brake):Diagram3
L9 - City Horn (W/ 4PIN CLK & Park Brake):Diagram4
L9 - City Horn (W/ 4PIN CLK):Diagram1
L9 - City Horn (W/ 4PIN CLK):Diagram2
L9 - City Horn (W/ 4PIN CLK):Diagram3
L9 - City Horn (W/ 4PIN CLK):Diagram4
L9 - City Horn (W/ 10PIN CLK & Park Brake):Diagram1
L9 - City Horn (W/ 10PIN CLK & Park Brake):Diagram2
L9 - City Horn (W/ 10PIN CLK):Diagram1
L9 - City Horn (W/ 10PIN CLK):Diagram2
L9 - Clutch Switch/Monitoring (High and Low Switch to BCM):Diagram1
L9 - Directional Signal (Turn) W/ Less Power Module Tail Board W/Hazard SW W/PLOW LIGHTS:Diagram1
L9 - Directional Signal (Turn) W/ Less Power Module Tail Board W/Hazard SW W/PLOW LIGHTS:Diagram2
L9 - Directional Signal (Turn) W/ Less Power Module Tail Board W/Hazard SW W/PLOW LIGHTS:Diagram3
L9 - Directional Signal (Turn) W/ Less Power Module Tail Board W/Hazard SW W/PLOW LIGHTS:Diagram4
L9 - Directional Signal (Turn) W/ DAISY CHAIN BOX LAMPS:Diagram1
L9 - Directional Signal (Turn) W/ DAISY CHAIN BOX LAMPS:Diagram2
L9 - Directional Signal (Turn) W/ Daisy Chain Box Lamps W/ Plow Lights:Diagram1
L9 - Directional Signal (Turn) W/ Daisy Chain Box Lamps W/ Plow Lights:Diagram2
L9 - Directional Signal (Turn) W/ Daisy Chain Box Lamps W/ Plow Lights:Diagram3

L9 - Directional Signal (Turn) W/ Daisy Chain Box Lamps W/ Plow Lights:Diagram4
L9 - Directional Signal (Turn) W/ LED BOX LAMPS:Diagram1
L9 - Directional Signal (Turn) W/ LED BOX LAMPS:Diagram2
L9 - Directional Signal (Turn) W/ LED BOX LAMPS W/Plow Lights:Diagram1
L9 - Directional Signal (Turn) W/ LED BOX LAMPS W/Plow Lights:Diagram2
L9 - Directional Signal (Turn) W/ LED BOX LAMPS W/Plow Lights:Diagram3
L9 - Directional Signal (Turn) W/ LED BOX LAMPS W/Plow Lights:Diagram4
L9 - Directional Signal (Turn) W/ Less Power Module Tail Board W/Hazard SW:Diagram1
L9 - Directional Signal (Turn) W/ Less Power Module Tail Board W/Hazard SW:Diagram2
L9 - Directional Signal (Turn) W/ Single Tail Board W/Hazard SW:Diagram1
L9 - Directional Signal (Turn) W/ Single Tail Board W/Hazard SW:Diagram2
L9 - Directional Signal (Turn) W/ Single Tail Board W/Plow Lights:Diagram1
L9 - Directional Signal (Turn) W/ Single Tail Board W/Plow Lights:Diagram2
L9 - Directional Signal (Turn) W/ Single Tail Board W/Plow Lights:Diagram3
L9 - Directional Signal (Turn) W/ Single Tail Board W/Plow Lights:Diagram4
L9 - Headlight W/Plowlights W/LOWW W/O Headlight Interrupt -10 PIN CLK:Diagram1
L9 - Headlight W/Plowlights W/LOWW W/O Headlight Interrupt -10 PIN CLK:Diagram2
L9 - Headlight W/Plowlights W/LOWW W/O Headlight Interrupt -10 PIN CLK:Diagram3
L9 - Headlight W/Plowlights W/LOWW W/O Headlight Interrupt -10 PIN CLK:Diagram4
L9 - Headlight W/Plowlights W/LOWW W/O Headlight Interrupt -10 PIN CLK:Diagram5
L9 - Headlight W/Plowlights W/LOWW W/O Headlight Interrupt -10 PIN CLK:Diagram6
L9 - Headlight W/Plowlights W/LOWW W/O Headlight Interrupt -10 PIN CLK:Diagram7
L9 - Headlight W/Plowlights W/LOWW W/O Headlight Interrupt -10 PIN CLK:Diagram8

L9 - Headlights W 10PIN CLK W/LOWW W/Interrupt:Diagram1
L9 - Headlights W 10PIN CLK W/LOWW W/Interrupt:Diagram2
L9 - Headlights W 10PIN CLK W/LOWW W/Interrupt:Diagram3
L9 - Headlights W 10PIN CLK W/LOWW W/Interrupt:Diagram4
L9 - Headlights W 10PIN CLK W/LOWW W/O Interrupt:Diagram1
L9 - Headlights W 10PIN CLK W/LOWW W/O Interrupt:Diagram2
L9 - Headlights W 10PIN CLK W/LOWW W/O Interrupt:Diagram3
L9 - Headlights W 10PIN CLK W/LOWW W/O Interrupt:Diagram4
L9 - Headlights W/O Lights ON With Wipers (LOWW) W/O Headlights Interrupt:Diagram1
L9 - Headlights W/O Lights ON With Wipers (LOWW) W/O Headlights Interrupt:Diagram2
L9 - Headlights W/O Lights ON With Wipers (LOWW) W/O Headlights Interrupt:Diagram3
L9 - Headlights W/O Lights ON With Wipers (LOWW) W/O Headlights Interrupt:Diagram4
L9 - Headlights W/O Lights ON with wipers (LOWW) W/ Headlights Interrupt:Diagram1
L9 - Headlights W/O Lights ON with wipers (LOWW) W/ Headlights Interrupt:Diagram2
L9 - Headlights W/O Lights ON with wipers (LOWW) W/ Headlights Interrupt:Diagram3
L9 - Headlights W/O Lights ON with wipers (LOWW) W/ Headlights Interrupt:Diagram4
L9 - Headlights W/PlowLights W/Headlight Interrupt -10PIN CLK W/LOWW W/Interrupt:Diagram1
L9 - Headlights W/PlowLights W/Headlight Interrupt -10PIN CLK W/LOWW W/Interrupt:Diagram2
L9 - Headlights W/PlowLights W/Headlight Interrupt -10PIN CLK W/LOWW W/Interrupt:Diagram3
L9 - Headlights W/PlowLights W/Headlight Interrupt -10PIN CLK W/LOWW W/Interrupt:Diagram4
L9 - Headlights W/PlowLights W/Headlight Interrupt -10PIN CLK W/LOWW W/Interrupt:Diagram5
L9 - Headlights W/PlowLights W/Headlight Interrupt -10PIN CLK W/LOWW W/Interrupt:Diagram6
L9 - Headlights W/PlowLights W/Headlight Interrupt -10PIN CLK W/LOWW W/Interrupt:Diagram7
L9 - Headlights W/PlowLights W/Headlight Interrupt -10PIN CLK W/LOWW W/Interrupt:Diagram8

L9 - Headlights W/Plowlights W/O Lights ON With Wipers (LOWW) W/O Headlights Interrupt:Diagram1
L9 - Headlights W/Plowlights W/O Lights ON With Wipers (LOWW) W/O Headlights Interrupt:Diagram2
L9 - Headlights W/Plowlights W/O Lights ON With Wipers (LOWW) W/O Headlights Interrupt:Diagram3
L9 - Headlights W/Plowlights W/O Lights ON With Wipers (LOWW) W/O Headlights Interrupt:Diagram4
L9 - Headlights W/Plowlights W/O Lights ON With Wipers (LOWW) W/O Headlights Interrupt:Diagram5
L9 - Headlights W/Plowlights W/O Lights ON With Wipers (LOWW) W/O Headlights Interrupt:Diagram6
L9 - Headlights W/Plowlights W/O Lights ON With Wipers (LOWW) W/O Headlights Interrupt:Diagram7
L9 - Headlights W/Plowlights W/O Lights ON With Wipers (LOWW) W/O Headlights Interrupt:Diagram8
L9 - Headlights W/PlowLights W/O Lights ON with wipers (LOWW) W/ Headlights Interrupt:Diagram1
L9 - Headlights W/PlowLights W/O Lights ON with wipers (LOWW) W/ Headlights Interrupt:Diagram2
L9 - Headlights W/PlowLights W/O Lights ON with wipers (LOWW) W/ Headlights Interrupt:Diagram3
L9 - Headlights W/PlowLights W/O Lights ON with wipers (LOWW) W/ Headlights Interrupt:Diagram4
L9 - Headlights W/PlowLights W/O Lights ON with wipers (LOWW) W/ Headlights Interrupt:Diagram5
L9 - Headlights W/PlowLights W/O Lights ON with wipers (LOWW) W/ Headlights Interrupt:Diagram6
L9 - Headlights W/PlowLights W/O Lights ON with wipers (LOWW) W/ Headlights Interrupt:Diagram7
L9 - Headlights W/PlowLights W/O Lights ON with wipers (LOWW) W/ Headlights Interrupt:Diagram8
L9 - Park Brake Control (Monitoring)(GEN IV BCM):Diagram1
L9 - Park Brake Controls (Monitoring) (Door Switch City Horn):Diagram1
L9 - Stability Control (Bendix Straight Truck J1939 Driven Lamp):Diagram1
L9 - Stability Control (Bendix Straight Truck J1939 Driven Lamp):Diagram2
L9 - Stability Control (Bendix Straight Truck J1939 Driven Lamp):Diagram3
L9 - Stability Control (Bendix Straight Truck J1939 Driven Lamp):Diagram4

L9 - Vehicle Acceleration (w/ Two PWR Two GND & Two STS):Diagram1
L9 - Windshield Washer Pump & Low Fluid Sensor:Diagram1
L9 - Windshield Washer Pump & Low Fluid Sensor:Diagram2
L9 - Windshield Wipers:Diagram1

Mates 1800F

Name	Terminal Part Number	V-Min	Name	Wire Part Number	Wire CSA	Wire Spec	Wire Material description	Wire Color Description	Wire Length	End2 Terminal Part Number	End2 Pin Name	End2 Connector
A1	-	-	AA56B	3510316 R1	0.53	20.0	Thin Wall XLPE Primary Cable	ORANGE	1365.0	-	A7	J3-1600
A2	-	-	AA57B	3510316 R1	0.53	20.0	Thin Wall XLPE Primary Cable	ORANGE	1365.0	-	A6	J3-1600
A3	-	-	AE87-GA	3510359 R1	0.79	18.0	Thin Wall XLPE Primary Cable	WHITE	430.0	-	-	-
A4	-	-	KA9C	3510311 R1	0.79	18.0	Thin Wall XLPE Primary Cable	GREY	355.0	-	X	-
A5	-	-	HE87A	3510310 R1	0.53	20.0	Thin Wall XLPE Primary Cable	GREY	475.0	-	X	-
A6	-	-	WB70A	3510364 R1	0.53	20.0	Thin Wall XLPE Primary Cable	RED	1385.0	-	E14	J5-1602
A7	-	-	AA52D	2643768 R1	0.53	20.0	Std. Wall XLPE Primary Cable	YELLOW 2	1365.0	-	A4	J3-1600

Name	Terminal Part Number	V-Min	Name	Wire Part Number	Wire CSA	Wire Spec	Wire Material description	Wire Color Description	Wire Length	End2 Terminal Part Number	End2 Pin Name	End2 Connector
A8	-	-	AA102A	3510334 R1	0.53	20.0	Thin Wall XLPE Primary Cable	YELLOW 2	1365.0	-	A14	J3-1600
B1	-	-	AA82C	3510310 R1	0.53	20.0	Thin Wall XLPE Primary Cable	GREY	1365.0	-	A11	J3-1600
B2	-	-	NK40A	2643673 R1	0.79	18.0	Std. Wall XLPE Primary Cable	GREY	1365.0	-	B3	J3-1600
B3	-	-	WC6	3510310 R1	0.53	20.0	Thin Wall XLPE Primary Cable	GREY	1385.0	-	E4	J5-1602
B3	-	-	NK6	2643673 R1	0.79	18.0	Std. Wall XLPE Primary Cable	GREY	1385.0	-	E4	J5-1602
B4	-	-	BE97B	3510347 R1	0.79	18.0	Thin Wall XLPE Primary Cable	VIOLET	2270.0	-	36	1703M
B4	-	-	BB97Y	2643718 R1	0.79	18.0	Std. Wall XLPE Primary Cable	VIOLET	600.0	-	B	1804
B5	-	-	BE97F	3510348 R1	1.16	16.0	Thin Wall XLPE Primary Cable	VIOLET	2270.0	-	38	1703M

Name	Terminal Part Number	V-Min	Name	Wire Part Number	Wire CSA	Wire Spec	Wire Material description	Wire Color Description	Wire Length	End2 Terminal Part Number	End2 Pin Name	End2 Connector
B5	-	-	BD97MA	3510347 R1	0.79	18.0	Thin Wall XLPE Primary Cable	VIOLET	2270.0	-	38	1703M
B5	-	-	BB99U	4092319 R1	0.79	18.0	Std. Wall XLPE Primary Cable	VIOLET/ WHITE	600.0	-	D	1804
B6	-	-	BE97WD	3510347 R1	0.79	18.0	Thin Wall XLPE Primary Cable	VIOLET	2270.0	-	37	1703M
B6	-	-	BD97NA	3510347 R1	0.79	18.0	Thin Wall XLPE Primary Cable	VIOLET	2270.0	-	37	1703M
B6	-	-	BB99W	2643718 R1	0.79	18.0	Std. Wall XLPE Primary Cable	VIOLET	600.0	-	E	1804
B7	-	-	WA44	3510312 R1	1.16	16.0	Thin Wall XLPE Primary Cable	GREY	1365.0	-	A12	J3-1600
B7	-	-	WE44AA	3510312 R1	1.16	16.0	Thin Wall XLPE Primary Cable	GREY	525.0	-	X	-
B9	-	-	XS70	3510311 R1	0.79	18.0	Thin Wall XLPE Primary Cable	GREY	1385.0	-	E15	J5-1602

Name	Terminal Part Number	V-Min	Name	Wire Part Number	Wire CSA	Wire Spec	Wire Material description	Wire Color Description	Wire Length	End2 Terminal Part Number	End2 Pin Name	End2 Connector
B9	-	-	WB70	3510364 R1	0.53	20.0	Thin Wall XLPE Primary Cable	RED	1385.0	-	E15	J5-1602
B10	-	-	AA85A	3510310 R1	0.53	20.0	Thin Wall XLPE Primary Cable	GREY	1365.0	-	A5	J3-1600
B11	-	-	AA150	3510310 R1	0.53	20.0	Thin Wall XLPE Primary Cable	GREY	1365.0	-	B16	J3-1600
B12	-	-	SN86A	3510311 R1	0.79	18.0	Thin Wall XLPE Primary Cable	GREY	1365.0	-	B1	J3-1600
C1	-	-	AA82B	3510310 R1	0.53	20.0	Thin Wall XLPE Primary Cable	GREY	1365.0	-	A10	J3-1600
C2	-	-	NK40BB	3510311 R1	0.79	18.0	Thin Wall XLPE Primary Cable	GREY	1365.0	-	B14	J3-1600
C3	-	-	XH94SV	3510311 R1	0.79	18.0	Thin Wall XLPE Primary Cable	GREY	2065.0	-	4	1403
C3	-	-	XK94SVE	3510311 R1	0.79	18.0	Thin Wall XLPE Primary Cable	GREY	1855.0	-	X	-

Name	Terminal Part Number	V-Min	Name	Wire Part Number	Wire CSA	Wire Spec	Wire Material description	Wire Color Description	Wire Length	End2 Terminal Part Number	End2 Pin Name	End2 Connector
C3	-	-	XF94SV	3510312 R1	1.16	16.0	Thin Wall XLPE Primary Cable	GREY	1855.0	-	X	-
C4	-	-	BE99B	3510347 R1	0.79	18.0	Thin Wall XLPE Primary Cable	VIOLET	2270.0	-	47	1703M
C4	-	-	BB99V	4092319 R1	0.79	18.0	Std. Wall XLPE Primary Cable	VIOLET/ WHITE	600.0	-	A	1804
C5	-	-	BD97C	3510347 R1	0.79	18.0	Thin Wall XLPE Primary Cable	VIOLET	2270.0	-	49	1703M
C5	-	-	BB97P	4092323 R1	0.79	18.0	Std. Wall XLPE Primary Cable	VIOLET/ BLACK	600.0	-	C	1804
C6	-	-	BD99DA	3510347 R1	0.79	18.0	Thin Wall XLPE Primary Cable	VIOLET	2270.0	-	48	1703M
C6	-	-	BE97MA	3510347 R1	0.79	18.0	Thin Wall XLPE Primary Cable	VIOLET	2270.0	-	48	1703M
C6	-	-	BB99E	4092323 R1	0.79	18.0	Std. Wall XLPE Primary Cable	VIOLET/ BLACK	600.0	-	F	1804

Name	Terminal Part Number	V-Min	Name	Wire Part Number	Wire CSA	Wire Spec	Wire Material description	Wire Color Description	Wire Length	End2 Terminal Part Number	End2 Pin Name	End2 Connector
C9	-	-	AA82A	3510310 R1	0.53	20.0	Thin Wall XLPE Primary Cable	GREY	1365.0	-	A9	J3-1600
C10	-	-	XH94SZ	3510311 R1	0.79	18.0	Thin Wall XLPE Primary Cable	GREY	2065.0	-	1	1403
C10	-	-	XK94SZE	3510311 R1	0.79	18.0	Thin Wall XLPE Primary Cable	GREY	1875.0	-	X	-
C10	-	-	XF94SZE	3510312 R1	1.16	16.0	Thin Wall XLPE Primary Cable	GREY	1875.0	-	X	-
C11	-	-	UA97A	3510347 R1	0.79	18.0	Thin Wall XLPE Primary Cable	VIOLET	1365.0	-	B4	J3-1600
C12	-	-	WC40	3510311 R1	0.79	18.0	Thin Wall XLPE Primary Cable	GREY	1365.0	-	B2	J3-1600
C12	-	-	NK40	2643673 R1	0.79	18.0	Std. Wall XLPE Primary Cable	GREY	1365.0	-	B2	J3-1600
D3	-	-	AB62DD	3510353 R1	0.79	18.0	Thin Wall XLPE Primary Cable	DARK BLUE	885.0	-	X	-

Name	Terminal Part Number	V-Min	Name	Wire Part Number	Wire CSA	Wire Spec	Wire Material description	Wire Color Description	Wire Length	End2 Terminal Part Number	End2 Pin Name	End2 Connector
D3	-	-	AC62DD	3510353 R1	0.79	18.0	Thin Wall XLPE Primary Cable	DARK BLUE	885.0	-	X	-
D5	-	-	XF94SE	3510311 R1	0.79	18.0	Thin Wall XLPE Primary Cable	GREY	2065.0	-	2	1403
D5	-	-	XL94SE	3510311 R1	0.79	18.0	Thin Wall XLPE Primary Cable	GREY	2065.0	-	2	1403
D6	-	-	XL94SF	3510311 R1	0.79	18.0	Thin Wall XLPE Primary Cable	GREY	2065.0	-	5	1403
D6	-	-	XF94SF	3510311 R1	0.79	18.0	Thin Wall XLPE Primary Cable	GREY	2065.0	-	5	1403
D7	-	-	LD149AC	3510311 R1	0.79	18.0	Thin Wall XLPE Primary Cable	GREY	555.0	-	X	-
D8	-	-	UA17B	3510323 R1	0.79	18.0	Thin Wall XLPE Primary Cable	PINK	1050.0	-	B2	J7-1607

Connector Name	1800
Part Number	3553649C1
Short Description	DCM CONNECTOR
Instances	A26 - Directional Signal (Turn) W/ Less Power Module Tail Board, W/Hazard SW:Diagram1 A26 - Directional Signal (Turn) W/ Less Power Module Tail Board, W/Hazard SW, W/Plow Lights:Diagram1-Option 1 (Snow Plow #1) A26 - Directional Signal (Turn) W/ Less Power Module Tail Board, W/Hazard SW, W/Plow Lights:Diagram1-Option 2 (Snow Plow #2) A26 - Headlights W/LOWW, W/O Interrupt:Diagram1-Combination1 A26 - Headlights W/LOWW, W/O Interrupt:Diagram1-Combination2
Mates	1800F

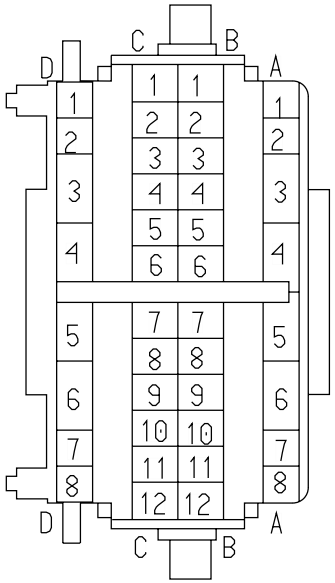

Name	Terminal Part Number	V-Min	Name	Wire Part Number	Wire CSA	Wire Spec	Wire Material description	Wire Color Description	Wire Length	End2 Terminal Part Number	End2 Pin Name	End2 Connect or
A1	-	-	AA56B	3510316 R1	0.53	20.0	Thin Wall XLPE Primary Cable	ORANGE	1365.0	-	A7	J3-1600
A2	-	-	AA57B	3510316 R1	0.53	20.0	Thin Wall XLPE Primary Cable	ORANGE	1365.0	-	A6	J3-1600
A4	-	-	KA9C	3510311 R1	0.79	18.0	Thin Wall XLPE Primary Cable	GREY	355.0	-	X	-
A7	-	-	AA52D	2643768 R1	0.53	20.0	Std. Wall XLPE Primary Cable	YELLOW 2	1365.0	-	A4	J3-1600

Name	Terminal Part Number	V-Min	Name	Wire Part Number	Wire CSA	Wire Spec	Wire Material description	Wire Color Description	Wire Length	End2 Terminal Part Number	End2 Pin Name	End2 Connector
A8	-	-	AA102A	3510334 R1	0.53	20.0	Thin Wall XLPE Primary Cable	YELLOW 2	1365.0	-	A14	J3-1600

Connector Name	1801
Part Number	3539212C1
Instances	A26 - Directional Signal (Turn) W/ Single Tail Board W/Hazard SW:Diagram1 A26 - Windshield Wipers:Diagram1
Mates	SW-MULTIFUNCTION-1016-01-0 4B

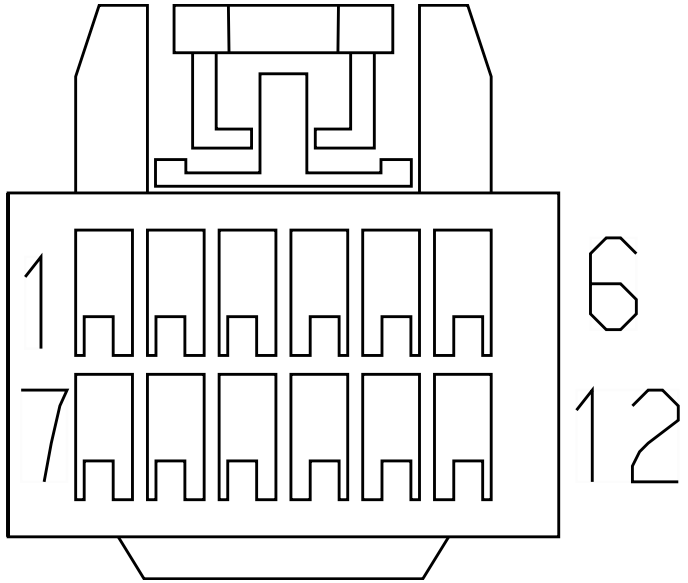

Name	Terminal Part Number	V-Min	Name	Wire Part Number	Wire CSA	Wire Spec	Wire Material description	Wire Color Description	Wire Length	End2 Terminal Part Number	End2 Pin Name	End2 Connect or
1	-	-	BB56A	3510317 R1	0.79	18.0	Thin Wall XLPE Primary Cable	ORANGE	1065.0	-	A1	1800F
2	-	-	BB57A	3510317 R1	0.79	18.0	Thin Wall XLPE Primary Cable	ORANGE	1065.0	-	A2	1800F
5	-	-	BB82B	3510311 R1	0.79	18.0	Thin Wall XLPE Primary Cable	GREY	1065.0	-	B1	1800F
7	-	-	BV9S	3510311 R1	0.79	18.0	Thin Wall XLPE Primary Cable	GREY	815.0	-	X	-

Name	Terminal Part Number	V-Min	Name	Wire Part Number	Wire CSA	Wire Spec	Wire Material description	Wire Color Description	Wire Length	End2 Terminal Part Number	End2 Pin Name	End2 Connect or
8	-	-	BB82	3510311 R1	0.79	18.0	Thin Wall XLPE Primary Cable	GREY	1065.0	-	C9	1800F
11	-	-	BB82A	3510311 R1	0.79	18.0	Thin Wall XLPE Primary Cable	GREY	1065.0	-	C1	1800F

Connector Name	1802
Part Number	3608496C1
Instances	A26 - City Horn (W/ 10PIN Park Brake):Diagram1 A26 - City Horn (W/ 10PIN Park Brake):Diagram2 A26 - City Horn (W/ 10PIN):Diagram1 A26 - City Horn (W/ 10PIN):Diagram2 A26 - Headlights W/LOWW, W/Interrupt - 10 PIN CLK:Diagram1-Combination1 A26 - Headlights W/LOWW, W/Interrupt - 10 PIN CLK:Diagram1-Combination2 A26 - Headlights W/O LOWW, W/Interrupt - 10 PIN CLK:Diagram1-Combination1 A26 - Headlights W/O LOWW, W/Interrupt - 10 PIN CLK:Diagram1-Combination2 A26 - Headlights W/PlowLights, W/LOWW, W/Interrupt - 10 PIN CLK:Diagram1-Combination1 A26 - Headlights W/PlowLights, W/LOWW, W/Interrupt - 10 PIN CLK:Diagram1-Combination2 A26 - Headlights W/PlowLights, W/LOWW, W/Interrupt - 10 PIN CLK:Diagram1-Combination3 A26 - Headlights W/PlowLights, W/LOWW, W/Interrupt - 10 PIN CLK:Diagram1-Combination4 A26 - Headlights W/PlowLights, W/O LOWW, W/Interrupt - 10 PIN CLK:Diagram1-Combination1 A26 - Headlights W/PlowLights, W/O LOWW, W/Interrupt - 10 PIN CLK:Diagram1-Combination2 A26 - Headlights W/PlowLights, W/O LOWW, W/Interrupt - 10 PIN CLK:Diagram1-Combination3 A26 - Headlights W/PlowLights, W/O LOWW, W/Interrupt - 10 PIN CLK:Diagram1-Combination4 A26/B6.7/L9 - Adjustable Engine Speed Control (PTO) 10-pin:Diagram1 A26/B6.7/L9 - Adjustable Engine Speed Control (PTO) 10-pin:Diagram2 A26/B6.7/L9 - Cruise Control (W/ One Telltale 10 Pin):Diagram1 A26/B6.7/L9 - Cruise Control (W/ One Telltale 10 Pin):Diagram2 A26/B6.7/L9 - PARK LIGHTS - W/Marker Interrupt 10pin CLCKSPRING:Diagram1 A26/B6.7/L9 - PARK LIGHTS - W/Marker Interrupt 10pin CLCKSPRING:Diagram2 A26/B6.7/L9 - Radio w/Bluetooth:Diagram1 A26/B6.7/L9 - Radio w/Bluetooth:Diagram2 A26/B6.7/L9 - Radio w/Steering Wheel Pod:Diagram1

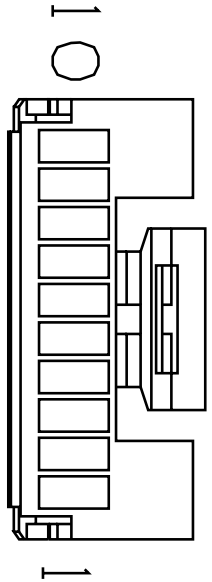

A26/B6.7/L9 - Radio w/Steering Wheel Pod:Diagram2
A26/B6.7/L9 - Vehicle Speed Control (Cruise Control) 10 Pin:Diagram1
B6.7 - City Horn (W/ 10PIN CLK & Park Brake):Diagram1
B6.7 - City Horn (W/ 10PIN CLK & Park Brake):Diagram2
B6.7 - City Horn (W/ 10PIN CLK & Park Brake):Diagram3
B6.7 - City Horn (W/ 10PIN CLK):Diagram1
B6.7 - City Horn (W/ 10PIN CLK):Diagram2
B6.7 - City Horn (W/ 10PIN CLK):Diagram3
B6.7 - Headlights W 10PIN CLK W/LOWW W/Interrupt:Diagram1
B6.7 - Headlights W 10PIN CLK W/LOWW W/Interrupt:Diagram2
B6.7 - Headlights W 10PIN CLK W/LOWW W/Interrupt:Diagram3
B6.7 - Headlights W 10PIN CLK W/LOWW W/Interrupt:Diagram4
B6.7 - Headlights W/O Lights ON with wipers (LOWW) W/ Headlights Interrupt:Diagram1
B6.7 - Headlights W/O Lights ON with wipers (LOWW) W/ Headlights Interrupt:Diagram2
B6.7 - Headlights W/O Lights ON with wipers (LOWW) W/ Headlights Interrupt:Diagram3
B6.7 - Headlights W/O Lights ON with wipers (LOWW) W/ Headlights Interrupt:Diagram4
B6.7 - Headlights W/PlowLights W/Headlight Interrupt -10PIN CLK W/LOWW W/Interrupt:Diagram1
B6.7 - Headlights W/PlowLights W/Headlight Interrupt -10PIN CLK W/LOWW W/Interrupt:Diagram2
B6.7 - Headlights W/PlowLights W/Headlight Interrupt -10PIN CLK W/LOWW W/Interrupt:Diagram3
B6.7 - Headlights W/PlowLights W/Headlight Interrupt -10PIN CLK W/LOWW W/Interrupt:Diagram4
B6.7 - Headlights W/PlowLights W/Headlight Interrupt -10PIN CLK W/LOWW W/Interrupt:Diagram5
B6.7 - Headlights W/PlowLights W/Headlight Interrupt -10PIN CLK W/LOWW W/Interrupt:Diagram6
B6.7 - Headlights W/PlowLights W/Headlight Interrupt -10PIN CLK W/LOWW W/Interrupt:Diagram7
B6.7 - Headlights W/PlowLights W/Headlight Interrupt -10PIN CLK W/LOWW W/Interrupt:Diagram8
B6.7 - Headlights W/PlowLights W/O Lights ON with wipers (LOWW) W/ Headlights Interrupt:Diagram1
B6.7 - Headlights W/PlowLights W/O Lights ON with wipers (LOWW) W/ Headlights Interrupt:Diagram2
B6.7 - Headlights W/PlowLights W/O Lights ON with wipers (LOWW) W/ Headlights Interrupt:Diagram3

B6.7 - Headlights W/PlowLights W/O Lights ON with wipers (LOWW) W/ Headlights Interrupt:Diagram4
B6.7 - Headlights W/PlowLights W/O Lights ON with wipers (LOWW) W/ Headlights Interrupt:Diagram5
B6.7 - Headlights W/PlowLights W/O Lights ON with wipers (LOWW) W/ Headlights Interrupt:Diagram6
B6.7 - Headlights W/PlowLights W/O Lights ON with wipers (LOWW) W/ Headlights Interrupt:Diagram7
B6.7 - Headlights W/PlowLights W/O Lights ON with wipers (LOWW) W/ Headlights Interrupt:Diagram8
L9 - City Horn (W/ 10PIN CLK & Park Brake):Diagram1
L9 - City Horn (W/ 10PIN CLK & Park Brake):Diagram2
L9 - City Horn (W/ 10PIN CLK):Diagram1
L9 - City Horn (W/ 10PIN CLK):Diagram2
L9 - Headlights W 10PIN CLK W/LOWW W/Interrupt:Diagram1
L9 - Headlights W 10PIN CLK W/LOWW W/Interrupt:Diagram2
L9 - Headlights W 10PIN CLK W/LOWW W/Interrupt:Diagram3
L9 - Headlights W 10PIN CLK W/LOWW W/Interrupt:Diagram4
L9 - Headlights W/O Lights ON with wipers (LOWW) W/ Headlights Interrupt:Diagram1
L9 - Headlights W/O Lights ON with wipers (LOWW) W/ Headlights Interrupt:Diagram2
L9 - Headlights W/O Lights ON with wipers (LOWW) W/ Headlights Interrupt:Diagram3
L9 - Headlights W/O Lights ON with wipers (LOWW) W/ Headlights Interrupt:Diagram4
L9 - Headlights W/PlowLights W/Headlight Interrupt -10PIN CLK W/LOWW W/Interrupt:Diagram1
L9 - Headlights W/PlowLights W/Headlight Interrupt -10PIN CLK W/LOWW W/Interrupt:Diagram2
L9 - Headlights W/PlowLights W/Headlight Interrupt -10PIN CLK W/LOWW W/Interrupt:Diagram3
L9 - Headlights W/PlowLights W/Headlight Interrupt -10PIN CLK W/LOWW W/Interrupt:Diagram4
L9 - Headlights W/PlowLights W/Headlight Interrupt -10PIN CLK W/LOWW W/Interrupt:Diagram5
L9 - Headlights W/PlowLights W/Headlight Interrupt -10PIN CLK W/LOWW W/Interrupt:Diagram6
L9 - Headlights W/PlowLights W/Headlight Interrupt -10PIN CLK W/LOWW W/Interrupt:Diagram7
L9 - Headlights W/PlowLights W/Headlight Interrupt -10PIN CLK W/LOWW W/Interrupt:Diagram8
L9 - Headlights W/PlowLights W/O Lights ON with wipers (LOWW) W/ Headlights Interrupt:Diagram1

L9 - Headlights W/PlowLights W/O Lights ON with wipers (LOWW) W/ Headlights Interrupt:Diagram2
L9 - Headlights W/PlowLights W/O Lights ON with wipers (LOWW) W/ Headlights Interrupt:Diagram3
L9 - Headlights W/PlowLights W/O Lights ON with wipers (LOWW) W/ Headlights Interrupt:Diagram4
L9 - Headlights W/PlowLights W/O Lights ON with wipers (LOWW) W/ Headlights Interrupt:Diagram5
L9 - Headlights W/PlowLights W/O Lights ON with wipers (LOWW) W/ Headlights Interrupt:Diagram6
L9 - Headlights W/PlowLights W/O Lights ON with wipers (LOWW) W/ Headlights Interrupt:Diagram7
L9 - Headlights W/PlowLights W/O Lights ON with wipers (LOWW) W/ Headlights Interrupt:Diagram8

Mates DEV-10PIN_CLKSPRING-1005-0 1-03

Name	Terminal Part Number	V-Min	Name	Wire Part Number	Wire CSA	Wire Spec	Wire Material description	Wire Color Description	Wire Length	End2 Terminal Part Number	End2 Pin Name	End2 Connector
1	-	-	BZ97	3510310 R1	0.53	20.0	Thin Wall XLPE Primary Cable	GREY	1125.0	-	B12	1800F
2	-	-	BX100	3510310 R1	0.53	20.0	Thin Wall XLPE Primary Cable	GREY	1125.0	-	B11	1800F
2	-	-	CA100	3510310 R1	0.53	20.0	Thin Wall XLPE Primary Cable	GREY	1125.0	-	B11	1800F
2	-	-	BL100	3510310 R1	0.53	20.0	Thin Wall XLPE Primary Cable	GREY	1125.0	-	B11	1800F
3	-	-	BL85A	3510310 R1	0.53	20.0	Thin Wall XLPE Primary Cable	GREY	1125.0	-	B10	1800F

Name	Terminal Part Number	V-Min	Name	Wire Part Number	Wire CSA	Wire Spec	Wire Material description	Wire Color Description	Wire Length	End2 Terminal Part Number	End2 Pin Name	End2 Connector
4	-	-	BZ9VA	3510310 R1	0.53	20.0	Thin Wall XLPE Primary Cable	GREY	875.0	-	X	-
4	-	-	CA9VA	3510310 R1	0.53	20.0	Thin Wall XLPE Primary Cable	GREY	875.0	-	X	-
4	-	-	BL9VA	3510310 R1	0.53	20.0	Thin Wall XLPE Primary Cable	GREY	875.0	-	X	-
5	-	-	CA62DD	3510352 R1	0.53	20.0	Thin Wall XLPE Primary Cable	DARK BLUE	1125.0	-	D3	1800F
5	-	-	WIRE737520	3510352 R1	0.53	20.0	Thin Wall XLPE Primary Cable	DARK BLUE	1125.0	-	D3	1800F
5	-	-	BL62DD	3510352 R1	0.53	20.0	Thin Wall XLPE Primary Cable	DARK BLUE	1125.0	-	D3	1800F
6	-	-	BL62-GDD	3510359 R1	0.79	18.0	Thin Wall XLPE Primary Cable	WHITE	575.0	-	X	-

Connector Name	1804
Part Number	1687790C1
Instances	A26 - Vehicle Acceleration (w/ Two PWR Two GND & Two STS):Diagram1 B6.7 - Vehicle Acceleration (w/ Two PWR Two GND & Two STS):Diagram1 L9 - Vehicle Acceleration (w/ Two PWR Two GND & Two STS):Diagram1
Mates	MODU-ACC_PEDAL-5075-01-01A

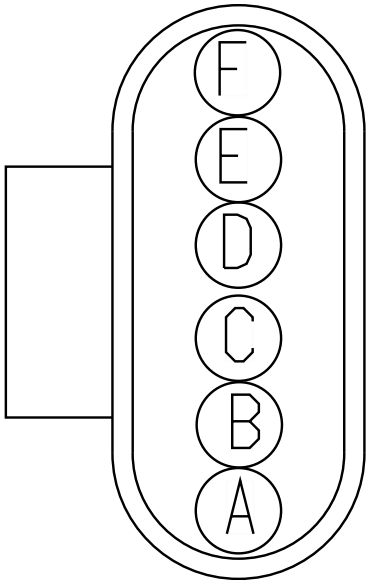

Name	Terminal Part Number	V-Min	Name	Wire Part Number	Wire CSA	Wire Spec	Wire Material description	Wire Color Description	Wire Length	End2 Terminal Part Number	End2 Pin Name	End2 Connect or
A	-	-	BB99V	4092319 R1	0.79	18.0	Std. Wall XLPE Primary Cable	VIOLET/ WHITE	600.0	-	C4	1800F
A	-	-	BB99V	4092319 R1	0.79	18.0	Std. Wall XLPE Primary Cable	VIOLET/ WHITE	600.0	-	C4	1800
B	-	-	BB97Y	2643718 R1	0.79	18.0	Std. Wall XLPE Primary Cable	VIOLET	600.0	-	B4	1800F
B	-	-	BB97Y	2643718 R1	0.79	18.0	Std. Wall XLPE Primary Cable	VIOLET	600.0	-	B4	1800

Name	Terminal Part Number	V-Min	Name	Wire Part Number	Wire CSA	Wire Spec	Wire Material description	Wire Color Description	Wire Length	End2 Terminal Part Number	End2 Pin Name	End2 Connector
C	-	-	BB97P	4092323 R1	0.79	18.0	Std. Wall XLPE Primary Cable	VIOLET/ BLACK	600.0	-	C5	1800F
C	-	-	BB97P	4092323 R1	0.79	18.0	Std. Wall XLPE Primary Cable	VIOLET/ BLACK	600.0	-	C5	1800
D	-	-	BB99U	4092319 R1	0.79	18.0	Std. Wall XLPE Primary Cable	VIOLET/ WHITE	600.0	-	B5	1800F
D	-	-	BB99U	4092319 R1	0.79	18.0	Std. Wall XLPE Primary Cable	VIOLET/ WHITE	600.0	-	B5	1800
E	-	-	BB99W	2643718 R1	0.79	18.0	Std. Wall XLPE Primary Cable	VIOLET	600.0	-	B6	1800F
E	-	-	BB99W	2643718 R1	0.79	18.0	Std. Wall XLPE Primary Cable	VIOLET	600.0	-	B6	1800
F	-	-	BB99E	4092323 R1	0.79	18.0	Std. Wall XLPE Primary Cable	VIOLET/ BLACK	600.0	-	C6	1800F
F	-	-	BB99E	4092323 R1	0.79	18.0	Std. Wall XLPE Primary Cable	VIOLET/ BLACK	600.0	-	C6	1800

Connector Name	1806
Part Number	1661777C1
Instances	A26 - Brake Switch:Diagram1
Mates	SW-BRAKE_SWITCH-3028-01-02A

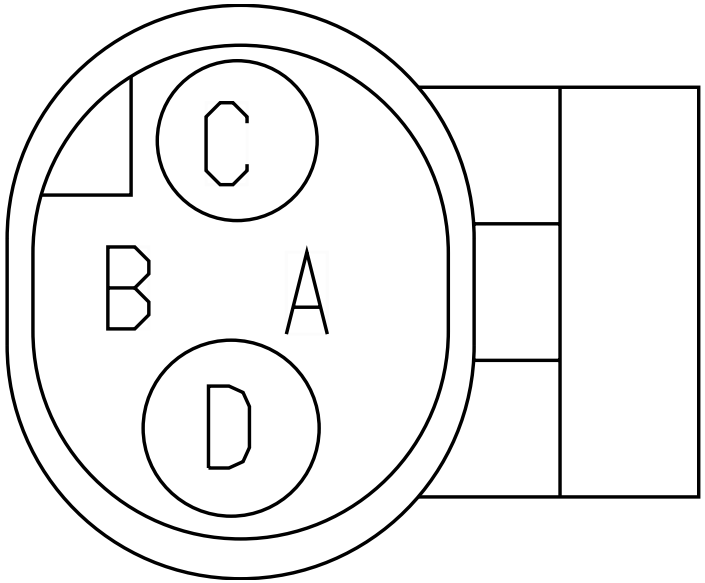

Name	Terminal Part Number	V-Min	Name	Wire Part Number	Wire CSA	Wire Spec	Wire Material description	Wire Color Description	Wire Length	End2 Terminal Part Number	End2 Pin Name	End2 Connect or
C	-	-	BL70A	3510317 R1	0.79	18.0	Thin Wall XLPE Primary Cable	ORANGE	775.0	-	A6	1800F
C	-	-	BG70	3510317 R1	0.79	18.0	Thin Wall XLPE Primary Cable	ORANGE	775.0	-	B9	1800F
D	-	-	CA9VG	3510311 R1	0.79	18.0	Thin Wall XLPE Primary Cable	GREY	525.0	-	X	-
D	-	-	CA9VH	3510311 R1	0.79	18.0	Thin Wall XLPE Primary Cable	GREY	525.0	-	X	-

Connector Name	1808
Part Number	1661777C1
Instances	A26 - Park Brake Control (Monitoring)(GEN IV BCM):Diagram1 B6.7 - Park Brake Controls (Monitoring) (Door Switch City Horn):Diagram1 L9 - Park Brake Control (Monitoring)(GEN IV BCM):Diagram1 L9 - Park Brake Controls (Monitoring) (Door Switch City Horn):Diagram1
Mates	SW-PARK BRAKE-3022-01-01A

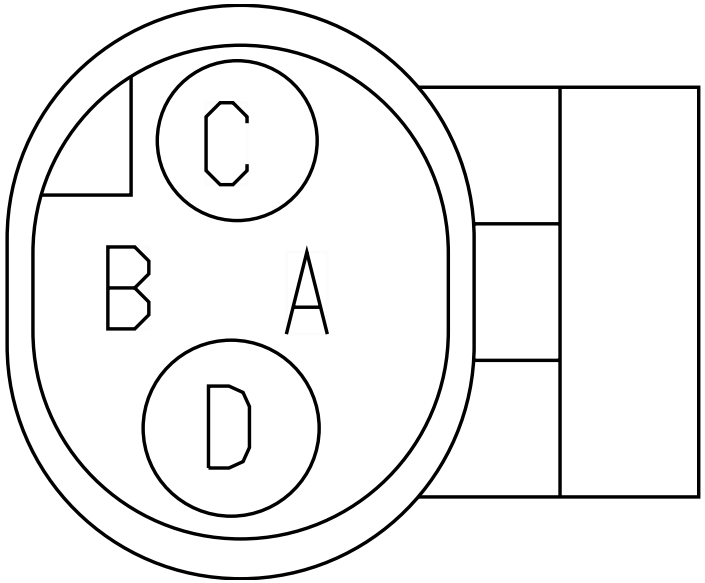

Name	Terminal Part Number	V-Min	Name	Wire Part Number	Wire CSA	Wire Spec	Wire Material description	Wire Color Description	Wire Length	End2 Terminal Part Number	End2 Pin Name	End2 Connect or
C	-	-	CC44BB	3510311 R1	0.79	18.0	Thin Wall XLPE Primary Cable	GREY	725.0	-	B7	1800F
C	-	-	BZ44BB	3510311 R1	0.79	18.0	Thin Wall XLPE Primary Cable	GREY	725.0	-	B7	1800F
D	-	-	BW9VD	3510311 R1	0.79	18.0	Thin Wall XLPE Primary Cable	GREY	275.0	-	X	-

Connector Name	1809
Part Number	3547870C1
Instances	A26 - City Horn (W/ 4PIN Park Brake):Diagram1 A26 - City Horn (W/ 4PIN Park Brake):Diagram2 A26 - City Horn (W/ 4PIN Park Brake):Diagram3 A26 - City Horn (W/ 4PIN Park Brake):Diagram4 A26 - City Horn (W/ 4PIN):Diagram1 A26 - City Horn (W/ 4PIN):Diagram2 A26 - City Horn (W/ 4PIN):Diagram3 A26 - City Horn (W/ 4PIN):Diagram4 A26/B6.7/L9 - Adjustable Engine Speed Control (PTO) 4-pin:Diagram1 A26/B6.7/L9 - Cruise Control (W/ One Telltale 4 Pin):Diagram1 A26/B6.7/L9 - Cruise Control (W/ One Telltale 4 Pin):Diagram2 A26/B6.7/L9 - PARK LIGHTS - W/Marker Interrupt 4 pin clockspring:Diagram1 A26/B6.7/L9 - PARK LIGHTS - W/Marker Interrupt 4 pin clockspring:Diagram2 A26/B6.7/L9 - Vehicle Speed Control (Cruise Control) 4 Pin:Diagram1 B6.7 - City Horn (W/ 4PIN CLK & Park Brake):Diagram1 B6.7 - City Horn (W/ 4PIN CLK & Park Brake):Diagram2 B6.7 - City Horn (W/ 4PIN CLK & Park Brake):Diagram3 B6.7 - City Horn (W/ 4PIN CLK & Park Brake):Diagram4 B6.7 - City Horn (W/ 4PIN CLK & Park Brake):Diagram5 B6.7 - City Horn (W/ 4PIN CLK & Park Brake):Diagram6 B6.7 - City Horn (W/ 4PIN CLK):Diagram1 B6.7 - City Horn (W/ 4PIN CLK):Diagram2 B6.7 - City Horn (W/ 4PIN CLK):Diagram3 B6.7 - City Horn (W/ 4PIN CLK):Diagram4 B6.7 - City Horn (W/ 4PIN CLK):Diagram5 B6.7 - City Horn (W/ 4PIN CLK):Diagram6 L9 - City Horn (W/ 4PIN CLK & Park Brake):Diagram1 L9 - City Horn (W/ 4PIN CLK & Park Brake):Diagram2 L9 - City Horn (W/ 4PIN CLK & Park Brake):Diagram3 L9 - City Horn (W/ 4PIN CLK & Park Brake):Diagram4 L9 - City Horn (W/ 4PIN CLK):Diagram1 L9 - City Horn (W/ 4PIN CLK):Diagram2 L9 - City Horn (W/ 4PIN CLK):Diagram3 L9 - City Horn (W/ 4PIN CLK):Diagram4
Mates	DEV-4PIN_CLCKSPRING-1005-0 1-04A

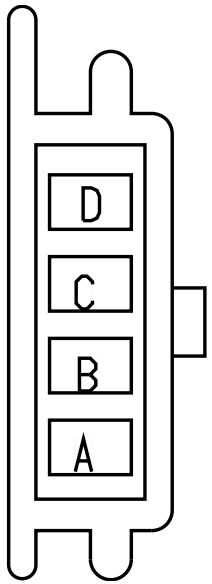

Name	Terminal Part Number	V-Min	Name	Wire Part Number	Wire CSA	Wire Spec	Wire Material description	Wire Color Description	Wire Length	End2 Terminal Part Number	End2 Pin Name	End2 Connector
A	-	-	CB97	3510310 R1	0.53	20.0	Thin Wall XLPE Primary Cable	GREY	1125.0	-	B12	1800F
B	-	-	CB85B	3510310 R1	0.53	20.0	Thin Wall XLPE Primary Cable	GREY	1125.0	-	B10	1800F
B	-	-	BF85B	3510310 R1	0.53	20.0	Thin Wall XLPE Primary Cable	GREY	1125.0	-	B10	1800F
C	-	-	CB62DD	3510352 R1	0.53	20.0	Thin Wall XLPE Primary Cable	DARK BLUE	1125.0	-	D3	1800F
D	-	-	CB9R	3510311 R1	0.79	18.0	Thin Wall XLPE Primary Cable	GREY	875.0	-	X	-

Connector Name	1810
Part Number	3539212C1
Instances	A26 - Directional Signal (Turn) W/ Daisy Chain Box Lamps:Diagram1 A26 - Directional Signal (Turn) W/ Daisy Chain Box Lamps, W/ Plow Lights:Diagram1-Option 1 (Snow Plow #1) A26 - Directional Signal (Turn) W/ Daisy Chain Box Lamps, W/ Plow Lights:Diagram1-Option 2 (Snow Plow #2) A26 - Directional Signal (Turn) W/ LED BOX LAMPS:Diagram1 A26 - Directional Signal (Turn) W/ LED BOX LAMPS, W/Plow Lights:Diagram1-Option 1 (Snow Plow #1) A26 - Directional Signal (Turn) W/ LED BOX LAMPS, W/Plow Lights:Diagram1-Option 2 (Snow Plow #2) A26 - Directional Signal (Turn) W/ Less Power Module Tail Board, W/Hazard SW:Diagram1 A26 - Directional Signal (Turn) W/ Less Power Module Tail Board, W/Hazard SW, W/Plow Lights:Diagram1-Option 1 (Snow Plow #1) A26 - Directional Signal (Turn) W/ Less Power Module Tail Board, W/Hazard SW, W/Plow Lights:Diagram1-Option 2 (Snow Plow #2) A26 - Directional Signal (Turn) W/ Single Tail Board, W/Hazard SW, W/Plow Lights:Diagram1-Option 1 (Snow Plow #1) A26 - Directional Signal (Turn) W/ Single Tail Board, W/Hazard SW, W/Plow Lights:Diagram1-Option 2 (Snow Plow #2) A26 - Headlight W/Plowlights, W/LOWW, W/O Interrupt:Diagram1-Combination1 A26 - Headlight W/Plowlights, W/LOWW, W/O Interrupt:Diagram1-Combination2 A26 - Headlight W/Plowlights, W/LOWW, W/O Interrupt:Diagram1-Combination3 A26 - Headlight W/Plowlights, W/LOWW, W/O Interrupt:Diagram1-Combination4 A26 - Headlight W/Plowlights, W/O LOWW, W/O Interrupt:Diagram1-Combination1 A26 - Headlight W/Plowlights, W/O LOWW, W/O Interrupt:Diagram1-Combination2 A26 - Headlight W/Plowlights, W/O LOWW, W/O Interrupt:Diagram1-Combination3 A26 - Headlight W/Plowlights, W/O LOWW, W/O Interrupt:Diagram1-Combination4 A26 - Headlights W/LOWW, W/Interrupt - 10 PIN CLK:Diagram1-Combination1

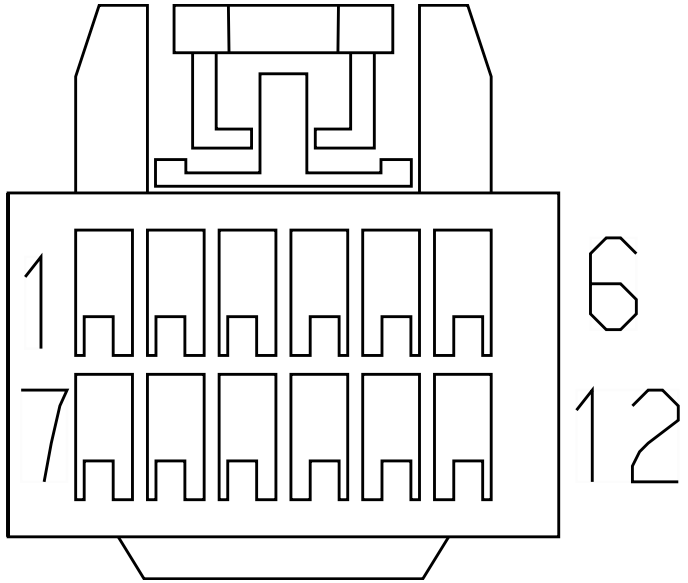

A26 - Headlights W/LOWW, W/Interrupt - 10 PIN CLK:Diagram1-Combination2
A26 - Headlights W/LOWW, W/O Interrupt:Diagram1-Combination1
A26 - Headlights W/LOWW, W/O Interrupt:Diagram1-Combination2
A26 - Headlights W/O LOWW, W/Interrupt - 10 PIN CLK:Diagram1-Combination1
A26 - Headlights W/O LOWW, W/Interrupt - 10 PIN CLK:Diagram1-Combination2
A26 - Headlights W/O LOWW, W/O Interrupt:Diagram1-Combination1
A26 - Headlights W/O LOWW, W/O Interrupt:Diagram1-Combination2
A26 - Headlights W/PlowLights, W/LOWW, W/Interrupt - 10 PIN CLK:Diagram1-Combination1
A26 - Headlights W/PlowLights, W/LOWW, W/Interrupt - 10 PIN CLK:Diagram1-Combination2
A26 - Headlights W/PlowLights, W/LOWW, W/Interrupt - 10 PIN CLK:Diagram1-Combination3
A26 - Headlights W/PlowLights, W/LOWW, W/Interrupt - 10 PIN CLK:Diagram1-Combination4
A26 - Headlights W/PlowLights, W/O LOWW, W/Interrupt - 10 PIN CLK:Diagram1-Combination1
A26 - Headlights W/PlowLights, W/O LOWW, W/Interrupt - 10 PIN CLK:Diagram1-Combination2
A26 - Headlights W/PlowLights, W/O LOWW, W/Interrupt - 10 PIN CLK:Diagram1-Combination3
A26 - Headlights W/PlowLights, W/O LOWW, W/Interrupt - 10 PIN CLK:Diagram1-Combination4
B6.7 - Directional Signal (Turn) W/ Less Power Module Tail Board W/Hazard SW W/PLOW LIGHTS:Diagram1
B6.7 - Directional Signal (Turn) W/ Less Power Module Tail Board W/Hazard SW W/PLOW LIGHTS:Diagram2
B6.7 - Directional Signal (Turn) W/ Less Power Module Tail Board W/Hazard SW W/PLOW LIGHTS:Diagram3
B6.7 - Directional Signal (Turn) W/ Less Power Module Tail Board W/Hazard SW W/PLOW LIGHTS:Diagram4
B6.7 - Directional Signal (Turn) W/ DAISY CHAIN BOX LAMPS:Diagram1
B6.7 - Directional Signal (Turn) W/ DAISY CHAIN BOX LAMPS:Diagram2
B6.7 - Directional Signal (Turn) W/ Daisy Chain Box Lamps W/ Plow Lights:Diagram1

B6.7 - Directional Signal (Turn) W/ Daisy Chain Box Lamps W/ Plow Lights:Diagram2
B6.7 - Directional Signal (Turn) W/ Daisy Chain Box Lamps W/ Plow Lights:Diagram3
B6.7 - Directional Signal (Turn) W/ Daisy Chain Box Lamps W/ Plow Lights:Diagram4
B6.7 - Directional Signal (Turn) W/ LED BOX LAMPS:Diagram1
B6.7 - Directional Signal (Turn) W/ LED BOX LAMPS:Diagram2
B6.7 - Directional Signal (Turn) W/ LED BOX LAMPS W/Plow Lights:Diagram1
B6.7 - Directional Signal (Turn) W/ LED BOX LAMPS W/Plow Lights:Diagram2
B6.7 - Directional Signal (Turn) W/ LED BOX LAMPS W/Plow Lights:Diagram3
B6.7 - Directional Signal (Turn) W/ LED BOX LAMPS W/Plow Lights:Diagram4
B6.7 - Directional Signal (Turn) W/ Less Power Module Tail Board W/Hazard SW:Diagram1
B6.7 - Directional Signal (Turn) W/ Less Power Module Tail Board W/Hazard SW:Diagram2
B6.7 - Directional Signal (Turn) W/ Single Tail Board W/Hazard SW:Diagram1
B6.7 - Directional Signal (Turn) W/ Single Tail Board W/Hazard SW:Diagram2
B6.7 - Directional Signal (Turn) W/ Single Tail Board W/Plow Lights:Diagram1
B6.7 - Directional Signal (Turn) W/ Single Tail Board W/Plow Lights:Diagram2
B6.7 - Directional Signal (Turn) W/ Single Tail Board W/Plow Lights:Diagram3
B6.7 - Directional Signal (Turn) W/ Single Tail Board W/Plow Lights:Diagram4
B6.7 - Headlight W/Plowlights W/LOWW W/O Headlight Interrupt -10 PIN CLK:Diagram1
B6.7 - Headlight W/Plowlights W/LOWW W/O Headlight Interrupt -10 PIN CLK:Diagram2
B6.7 - Headlight W/Plowlights W/LOWW W/O Headlight Interrupt -10 PIN CLK:Diagram3
B6.7 - Headlight W/Plowlights W/LOWW W/O Headlight Interrupt -10 PIN CLK:Diagram4
B6.7 - Headlight W/Plowlights W/LOWW W/O Headlight Interrupt -10 PIN CLK:Diagram5
B6.7 - Headlight W/Plowlights W/LOWW W/O Headlight Interrupt -10 PIN CLK:Diagram6

B6.7 - Headlight W/Plowlights W/LOWW W/O Headlight Interrupt -10 PIN CLK:Diagram7
B6.7 - Headlight W/Plowlights W/LOWW W/O Headlight Interrupt -10 PIN CLK:Diagram8
B6.7 - Headlights W 10PIN CLK W/LOWW W/Interrupt:Diagram1
B6.7 - Headlights W 10PIN CLK W/LOWW W/Interrupt:Diagram2
B6.7 - Headlights W 10PIN CLK W/LOWW W/Interrupt:Diagram3
B6.7 - Headlights W 10PIN CLK W/LOWW W/Interrupt:Diagram4
B6.7 - Headlights W 10PIN CLK W/LOWW W/O Interrupt:Diagram1
B6.7 - Headlights W 10PIN CLK W/LOWW W/O Interrupt:Diagram2
B6.7 - Headlights W 10PIN CLK W/LOWW W/O Interrupt:Diagram3
B6.7 - Headlights W 10PIN CLK W/LOWW W/O Interrupt:Diagram4
B6.7 - Headlights W/O Lights ON With Wipers (LOWW) W/O Headlights Interrupt:Diagram1
B6.7 - Headlights W/O Lights ON With Wipers (LOWW) W/O Headlights Interrupt:Diagram2
B6.7 - Headlights W/O Lights ON With Wipers (LOWW) W/O Headlights Interrupt:Diagram3
B6.7 - Headlights W/O Lights ON With Wipers (LOWW) W/O Headlights Interrupt:Diagram4
B6.7 - Headlights W/O Lights ON with wipers (LOWW) W/ Headlights Interrupt:Diagram1
B6.7 - Headlights W/O Lights ON with wipers (LOWW) W/ Headlights Interrupt:Diagram2
B6.7 - Headlights W/O Lights ON with wipers (LOWW) W/ Headlights Interrupt:Diagram3
B6.7 - Headlights W/O Lights ON with wipers (LOWW) W/ Headlights Interrupt:Diagram4
B6.7 - Headlights W/PlowLights W/Headlight Interrupt -10PIN CLK W/LOWW W/Interrupt:Diagram1
B6.7 - Headlights W/PlowLights W/Headlight Interrupt -10PIN CLK W/LOWW W/Interrupt:Diagram2
B6.7 - Headlights W/PlowLights W/Headlight Interrupt -10PIN CLK W/LOWW W/Interrupt:Diagram3
B6.7 - Headlights W/PlowLights W/Headlight Interrupt -10PIN CLK W/LOWW W/Interrupt:Diagram4
B6.7 - Headlights W/PlowLights W/Headlight Interrupt -10PIN CLK W/LOWW W/Interrupt:Diagram5
B6.7 - Headlights W/PlowLights W/Headlight Interrupt -10PIN CLK W/LOWW W/Interrupt:Diagram6

B6.7 - Headlights W/PlowLights W/Headlight Interrupt -10PIN CLK W/LOWW W/Interrupt:Diagram7
B6.7 - Headlights W/PlowLights W/Headlight Interrupt -10PIN CLK W/LOWW W/Interrupt:Diagram8
B6.7 - Headlights W/Plowlights W/O Lights ON With Wipers (LOWW) W/O Headlights Interrupt:Diagram1
B6.7 - Headlights W/Plowlights W/O Lights ON With Wipers (LOWW) W/O Headlights Interrupt:Diagram2
B6.7 - Headlights W/Plowlights W/O Lights ON With Wipers (LOWW) W/O Headlights Interrupt:Diagram3
B6.7 - Headlights W/Plowlights W/O Lights ON With Wipers (LOWW) W/O Headlights Interrupt:Diagram4
B6.7 - Headlights W/Plowlights W/O Lights ON With Wipers (LOWW) W/O Headlights Interrupt:Diagram5
B6.7 - Headlights W/Plowlights W/O Lights ON With Wipers (LOWW) W/O Headlights Interrupt:Diagram6
B6.7 - Headlights W/Plowlights W/O Lights ON With Wipers (LOWW) W/O Headlights Interrupt:Diagram7
B6.7 - Headlights W/Plowlights W/O Lights ON With Wipers (LOWW) W/O Headlights Interrupt:Diagram8
B6.7 - Headlights W/PlowLights W/O Lights ON with wipers (LOWW) W/ Headlights Interrupt:Diagram1
B6.7 - Headlights W/PlowLights W/O Lights ON with wipers (LOWW) W/ Headlights Interrupt:Diagram2
B6.7 - Headlights W/PlowLights W/O Lights ON with wipers (LOWW) W/ Headlights Interrupt:Diagram3
B6.7 - Headlights W/PlowLights W/O Lights ON with wipers (LOWW) W/ Headlights Interrupt:Diagram4
B6.7 - Headlights W/PlowLights W/O Lights ON with wipers (LOWW) W/ Headlights Interrupt:Diagram5
B6.7 - Headlights W/PlowLights W/O Lights ON with wipers (LOWW) W/ Headlights Interrupt:Diagram6
B6.7 - Headlights W/PlowLights W/O Lights ON with wipers (LOWW) W/ Headlights Interrupt:Diagram7
B6.7 - Headlights W/PlowLights W/O Lights ON with wipers (LOWW) W/ Headlights Interrupt:Diagram8
B6.7 - Windshield Washer Pump:Diagram1
B6.7 - Windshield Washer Pump & Low Fluid Sensor:Diagram1
B6.7 - Windshield Wipers:Diagram1
L9 - Directional Signal (Turn) W/ Less Power Module Tail Board W/Hazard SW W/PLOW LIGHTS:Diagram1
L9 - Directional Signal (Turn) W/ Less Power Module Tail Board W/Hazard SW W/PLOW LIGHTS:Diagram2

L9 - Directional Signal (Turn) W/ Less Power Module Tail Board W/Hazard SW W/PLOW LIGHTS:Diagram3
L9 - Directional Signal (Turn) W/ Less Power Module Tail Board W/Hazard SW W/PLOW LIGHTS:Diagram4
L9 - Directional Signal (Turn) W/ DAISY CHAIN BOX LAMPS:Diagram1
L9 - Directional Signal (Turn) W/ DAISY CHAIN BOX LAMPS:Diagram2
L9 - Directional Signal (Turn) W/ Daisy Chain Box Lamps W/ Plow Lights:Diagram1
L9 - Directional Signal (Turn) W/ Daisy Chain Box Lamps W/ Plow Lights:Diagram2
L9 - Directional Signal (Turn) W/ Daisy Chain Box Lamps W/ Plow Lights:Diagram3
L9 - Directional Signal (Turn) W/ Daisy Chain Box Lamps W/ Plow Lights:Diagram4
L9 - Directional Signal (Turn) W/ LED BOX LAMPS:Diagram1
L9 - Directional Signal (Turn) W/ LED BOX LAMPS:Diagram2
L9 - Directional Signal (Turn) W/ LED BOX LAMPS W/Plow Lights:Diagram1
L9 - Directional Signal (Turn) W/ LED BOX LAMPS W/Plow Lights:Diagram2
L9 - Directional Signal (Turn) W/ LED BOX LAMPS W/Plow Lights:Diagram3
L9 - Directional Signal (Turn) W/ LED BOX LAMPS W/Plow Lights:Diagram4
L9 - Directional Signal (Turn) W/ Less Power Module Tail Board W/Hazard SW:Diagram1
L9 - Directional Signal (Turn) W/ Less Power Module Tail Board W/Hazard SW:Diagram2
L9 - Directional Signal (Turn) W/ Single Tail Board W/Hazard SW:Diagram1
L9 - Directional Signal (Turn) W/ Single Tail Board W/Hazard SW:Diagram2
L9 - Directional Signal (Turn) W/ Single Tail Board W/Plow Lights:Diagram1
L9 - Directional Signal (Turn) W/ Single Tail Board W/Plow Lights:Diagram2
L9 - Directional Signal (Turn) W/ Single Tail Board W/Plow Lights:Diagram3
L9 - Directional Signal (Turn) W/ Single Tail Board W/Plow Lights:Diagram4
L9 - Headlight W/Plowlights W/LOWW W/O Headlight Interrupt -10 PIN CLK:Diagram1

L9 - Headlight W/Plowlights W/LOWW W/O Headlight Interrupt -10 PIN CLK:Diagram2
L9 - Headlight W/Plowlights W/LOWW W/O Headlight Interrupt -10 PIN CLK:Diagram3
L9 - Headlight W/Plowlights W/LOWW W/O Headlight Interrupt -10 PIN CLK:Diagram4
L9 - Headlight W/Plowlights W/LOWW W/O Headlight Interrupt -10 PIN CLK:Diagram5
L9 - Headlight W/Plowlights W/LOWW W/O Headlight Interrupt -10 PIN CLK:Diagram6
L9 - Headlight W/Plowlights W/LOWW W/O Headlight Interrupt -10 PIN CLK:Diagram7
L9 - Headlight W/Plowlights W/LOWW W/O Headlight Interrupt -10 PIN CLK:Diagram8
L9 - Headlights W 10PIN CLK W/LOWW W/Interrupt:Diagram1
L9 - Headlights W 10PIN CLK W/LOWW W/Interrupt:Diagram2
L9 - Headlights W 10PIN CLK W/LOWW W/Interrupt:Diagram3
L9 - Headlights W 10PIN CLK W/LOWW W/Interrupt:Diagram4
L9 - Headlights W 10PIN CLK W/LOWW W/O Interrupt:Diagram1
L9 - Headlights W 10PIN CLK W/LOWW W/O Interrupt:Diagram2
L9 - Headlights W 10PIN CLK W/LOWW W/O Interrupt:Diagram3
L9 - Headlights W 10PIN CLK W/LOWW W/O Interrupt:Diagram4
L9 - Headlights W/O Lights ON With Wipers (LOWW) W/O Headlights Interrupt:Diagram1
L9 - Headlights W/O Lights ON With Wipers (LOWW) W/O Headlights Interrupt:Diagram2
L9 - Headlights W/O Lights ON With Wipers (LOWW) W/O Headlights Interrupt:Diagram3
L9 - Headlights W/O Lights ON With Wipers (LOWW) W/O Headlights Interrupt:Diagram4
L9 - Headlights W/O Lights ON with wipers (LOWW) W/ Headlights Interrupt:Diagram1
L9 - Headlights W/O Lights ON with wipers (LOWW) W/ Headlights Interrupt:Diagram2
L9 - Headlights W/O Lights ON with wipers (LOWW) W/ Headlights Interrupt:Diagram3
L9 - Headlights W/O Lights ON with wipers (LOWW) W/ Headlights Interrupt:Diagram4
L9 - Headlights W/PlowLights W/Headlight Interrupt -10PIN CLK W/LOWW W/Interrupt:Diagram1

L9 - Headlights W/PlowLights W/Headlight Interrupt -10PIN CLK W/LOWW W/Interrupt:Diagram2
L9 - Headlights W/PlowLights W/Headlight Interrupt -10PIN CLK W/LOWW W/Interrupt:Diagram3
L9 - Headlights W/PlowLights W/Headlight Interrupt -10PIN CLK W/LOWW W/Interrupt:Diagram4
L9 - Headlights W/PlowLights W/Headlight Interrupt -10PIN CLK W/LOWW W/Interrupt:Diagram5
L9 - Headlights W/PlowLights W/Headlight Interrupt -10PIN CLK W/LOWW W/Interrupt:Diagram6
L9 - Headlights W/PlowLights W/Headlight Interrupt -10PIN CLK W/LOWW W/Interrupt:Diagram7
L9 - Headlights W/PlowLights W/Headlight Interrupt -10PIN CLK W/LOWW W/Interrupt:Diagram8
L9 - Headlights W/Plowlights W/O Lights ON With Wipers (LOWW) W/O Headlights Interrupt:Diagram1
L9 - Headlights W/Plowlights W/O Lights ON With Wipers (LOWW) W/O Headlights Interrupt:Diagram2
L9 - Headlights W/Plowlights W/O Lights ON With Wipers (LOWW) W/O Headlights Interrupt:Diagram3
L9 - Headlights W/Plowlights W/O Lights ON With Wipers (LOWW) W/O Headlights Interrupt:Diagram4
L9 - Headlights W/Plowlights W/O Lights ON With Wipers (LOWW) W/O Headlights Interrupt:Diagram5
L9 - Headlights W/Plowlights W/O Lights ON With Wipers (LOWW) W/O Headlights Interrupt:Diagram6
L9 - Headlights W/Plowlights W/O Lights ON With Wipers (LOWW) W/O Headlights Interrupt:Diagram7
L9 - Headlights W/Plowlights W/O Lights ON With Wipers (LOWW) W/O Headlights Interrupt:Diagram8
L9 - Headlights W/PlowLights W/O Lights ON with wipers (LOWW) W/ Headlights Interrupt:Diagram1
L9 - Headlights W/PlowLights W/O Lights ON with wipers (LOWW) W/ Headlights Interrupt:Diagram2
L9 - Headlights W/PlowLights W/O Lights ON with wipers (LOWW) W/ Headlights Interrupt:Diagram3
L9 - Headlights W/PlowLights W/O Lights ON with wipers (LOWW) W/ Headlights Interrupt:Diagram4
L9 - Headlights W/PlowLights W/O Lights ON with wipers (LOWW) W/ Headlights Interrupt:Diagram5
L9 - Headlights W/PlowLights W/O Lights ON with wipers (LOWW) W/ Headlights Interrupt:Diagram6
L9 - Headlights W/PlowLights W/O Lights ON with wipers (LOWW) W/ Headlights Interrupt:Diagram7

L9 - Headlights W/PlowLights W/O Lights ON with wipers (LOWW) W/ Headlights Interrupt:Diagram8
L9 - Windshield Washer Pump & Low Fluid Sensor:Diagram1
L9 - Windshield Washer Pump & Low Fluid Sensor:Diagram2
L9 - Windshield Wipers:Diagram1

Mates SW-MULTIFUNCTION-1016-01-0 4B

Name	Terminal Part Number	V-Min	Name	Wire Part Number	Wire CSA	Wire Spec	Wire Material description	Wire Color Description	Wire Length	End2 Terminal Part Number	End2 Pin Name	End2 Connector
1	-	-	BB56A	3510317 R1	0.79	18.0	Thin Wall XLPE Primary Cable	ORANGE	1065.0	-	A1	1800F
2	-	-	BB57A	3510317 R1	0.79	18.0	Thin Wall XLPE Primary Cable	ORANGE	1065.0	-	A2	1800F
3	-	-	BB52A	3510335 R1	0.79	18.0	Thin Wall XLPE Primary Cable	YELLOW 2	1065.0	-	A7	1800F
4	-	-	BB102A	3510335 R1	0.79	18.0	Thin Wall XLPE Primary Cable	YELLOW 2	1065.0	-	A8	1800F
5	-	-	BB82B	3510311 R1	0.79	18.0	Thin Wall XLPE Primary Cable	GREY	1065.0	-	B1	1800F
6	-	-	BE87-G	3510359 R1	0.79	18.0	Thin Wall XLPE Primary Cable	WHITE	515.0	-	X	-
6	-	-	BG11-GAA	3510359 R1	0.79	18.0	Thin Wall XLPE Primary Cable	WHITE	1065.0	-	A3	1800F

Name	Terminal Part Number	V-Min	Name	Wire Part Number	Wire CSA	Wire Spec	Wire Material description	Wire Color Description	Wire Length	End2 Terminal Part Number	End2 Pin Name	End2 Connector
7	-	-	BL9S	3510311 R1	0.79	18.0	Thin Wall XLPE Primary Cable	GREY	815.0	-	X	-
7	-	-	CB9S	3510311 R1	0.79	18.0	Thin Wall XLPE Primary Cable	GREY	815.0	-	X	-
7	-	-	CA9S	3510311 R1	0.79	18.0	Thin Wall XLPE Primary Cable	GREY	815.0	-	X	-
8	-	-	BB82	3510311 R1	0.79	18.0	Thin Wall XLPE Primary Cable	GREY	1065.0	-	C9	1800F
11	-	-	BB82A	3510311 R1	0.79	18.0	Thin Wall XLPE Primary Cable	GREY	1065.0	-	C1	1800F
12	-	-	BB87A	3510311 R1	0.79	18.0	Thin Wall XLPE Primary Cable	GREY	1065.0	-	A5	1800F

Connector Name	1811
Part Number	3540757C1
Instances	A26 - Clutch Switch/Monitoring (High and Low Switch to BCM):Diagram1 A26/B6.7/L9 - Compressed Air Supply:Diagram1 B6.7 - Clutch Switch/Monitoring (High and Low Switch to BCM):Diagram1 L9 - Clutch Switch/Monitoring (High and Low Switch to BCM):Diagram1
Mates	SNSR-PRIMARY_PT-3026-01-01A

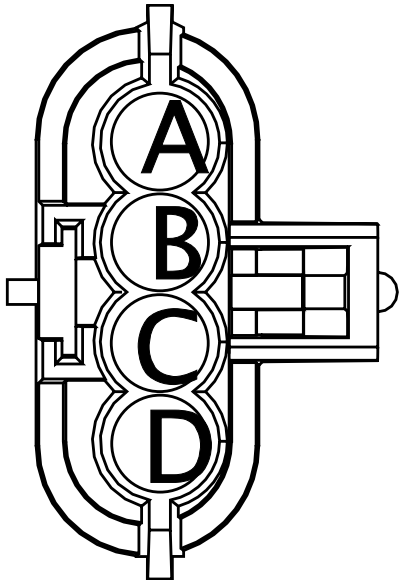

Name	Terminal Part Number	V-Min	Name	Wire Part Number	Wire CSA	Wire Spec	Wire Material description	Wire Color Description	Wire Length	End2 Terminal Part Number	End2 Pin Name	End2 Connect or
A	-	-	CC17J	3510323 R1	0.79	18.0	Thin Wall XLPE Primary Cable	PINK	550.0	-	D7	1800F
A	-	-	CA9VC	3510311 R1	0.79	18.0	Thin Wall XLPE Primary Cable	GREY	200.0	-	X	-
B	-	-	CB17H	3510323 R1	0.79	18.0	Thin Wall XLPE Primary Cable	PINK	550.0	-	D8	1800F
B	-	-	CA6HB	3510311 R1	0.79	18.0	Thin Wall XLPE Primary Cable	GREY	100.0	-	X	-

Name	Terminal Part Number	V-Min	Name	Wire Part Number	Wire CSA	Wire Spec	Wire Material description	Wire Color Description	Wire Length	End2 Terminal Part Number	End2 Pin Name	End2 Connect or
B	-	-	CC6HB	3510311 R1	0.79	18.0	Thin Wall XLPE Primary Cable	GREY	650.0	-	B3	1800F
C	-	-	CF97A	2643718 R1	0.79	18.0	Std. Wall XLPE Primary Cable	VIOLET	550.0	-	C11	1800F
C	-	-	CA40	3510311 R1	0.79	18.0	Thin Wall XLPE Primary Cable	GREY	650.0	-	C12	1800F
D	-	-	CC9VB	3510311 R1	0.79	18.0	Thin Wall XLPE Primary Cable	GREY	300.0	-	X	-

Connector Name	1812
Part Number	1678137C1
Instances	A26/B6.7/L9 - Compressed Air Supply:Diagram1
Mates	SNSR-SECONDARY_PT-3026-01- 01B

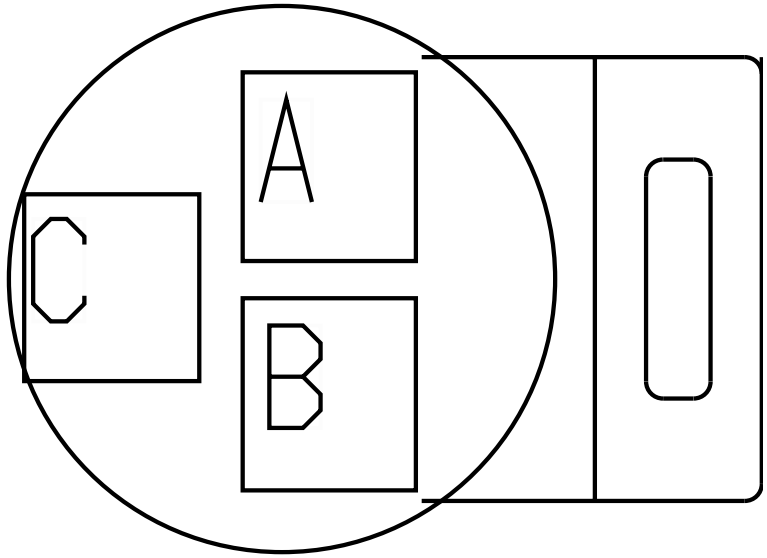

Name	Terminal Part Number	V-Min	Name	Wire Part Number	Wire CSA	Wire Spec	Wire Material description	Wire Color Description	Wire Length	End2 Terminal Part Number	End2 Pin Name	End2 Connect or
A	-	-	BL9VE	3510311 R1	0.79	18.0	Thin Wall XLPE Primary Cable	GREY	350.0	-	X	-
B	-	-	CB6HA	3510311 R1	0.79	18.0	Thin Wall XLPE Primary Cable	GREY	250.0	-	X	-
C	-	-	BL40A	3510311 R1	0.79	18.0	Thin Wall XLPE Primary Cable	GREY	800.0	-	B2	1800F

Connector Name	1820F
Part Number	1667529C1
Instances	A26 - ABS Private J1939:A26 - ABS Private J1939 A26 - Bendix Tractor or Towing Truck N/ Air SUSP J1939 Driven Lamp:Diagram1 A26 - Bendix Tractor or Towing Truck N/ Air SUSP J1939 Driven Lamp:Diagram2 A26 - Bendix Tractor or Towing Truck N/ Air SUSP J1939 Driven Lamp:Diagram3 A26 - Bendix Tractor or Towing Truck N/ Air SUSP J1939 Driven Lamp:Diagram4 A26 - Bendix Tractor or Towing Truck W/ Air SUSP J1939 Driven Lamp:Diagram1 A26 - Bendix Tractor or Towing Truck W/ Air SUSP J1939 Driven Lamp:Diagram2 A26 - Bendix Tractor or Towing Truck W/ Air SUSP J1939 Driven Lamp:Diagram3 A26 - Bendix Tractor or Towing Truck W/ Air SUSP J1939 Driven Lamp:Diagram4 A26 - CAN Layout:ABS Proprietary J1939 A26 - Stability Control (Bendix Straight Truck J1939 Driven Lamp):Diagram1 A26 - Stability Control (Bendix Straight Truck J1939 Driven Lamp):Diagram2 A26 - Stability Control (Bendix Straight Truck J1939 Driven Lamp):Diagram3 A26 - Stability Control (Bendix Straight Truck J1939 Driven Lamp):Diagram4 B6.7 - ABS Private J1939:B6.7 - ABS Private J1939 B6.7 - CAN Layout:ABS Proprietary J1939 B6.7 - Stability Control (Bendix Straight Truck J1939 Driven Lamp):Diagram1 B6.7 - Stability Control (Bendix Straight Truck J1939 Driven Lamp):Diagram2 B6.7 - Stability Control (Bendix Straight Truck J1939 Driven Lamp):Diagram3 B6.7 - Stability Control (Bendix Straight Truck J1939 Driven Lamp):Diagram4 L9 - ABS Private J1939:L9 - ABS Private J1939 L9 - Bendix Tractor or Towing Truck W/ Air SUSP J1939 Driven Lamp:Diagram1 L9 - Bendix Tractor or Towing Truck W/ Air SUSP J1939 Driven Lamp:Diagram2

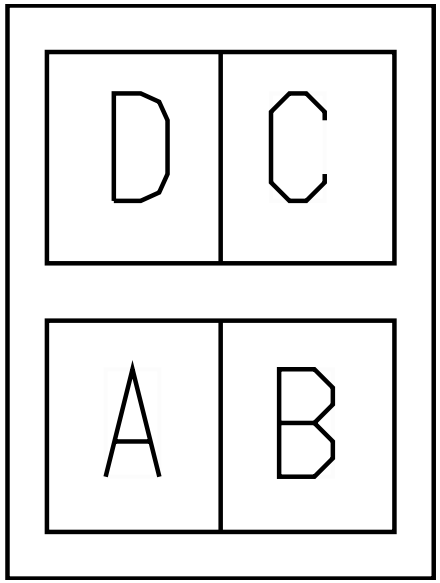

L9 - CAN Layout:ABS Proprietary J1939
L9 - Stability Control (Bendix Straight Truck J1939 Driven Lamp):Diagram1
L9 - Stability Control (Bendix Straight Truck J1939 Driven Lamp):Diagram2
L9 - Stability Control (Bendix Straight Truck J1939 Driven Lamp):Diagram3
L9 - Stability Control (Bendix Straight Truck J1939 Driven Lamp):Diagram4

Mates 1820M

Name	Terminal Part Number	V-Min	Name	Wire Part Number	Wire CSA	Wire Spec	Wire Material description	Wire Color Description	Wire Length	End2 Terminal Part Number	End2 Pin Name	End2 Connect or
A	-	-	BE94SD	3510310 R1	0.53	20.0	Thin Wall XLPE Primary Cable	GREY	0.0	-	2	1821
A	-	-	BN94SA	3510310 R1	0.53	20.0	Thin Wall XLPE Primary Cable	GREY	1195.0	-	2	1821
B	-	-	BE94SB	3510310 R1	0.53	20.0	Thin Wall XLPE Primary Cable	GREY	0.0	-	3	1821
C	-	-	BE94SC	3510310 R1	0.53	20.0	Thin Wall XLPE Primary Cable	GREY	0.0	-	1	1821
C	-	-	BN94SC	3510310 R1	0.53	20.0	Thin Wall XLPE Primary Cable	GREY	1195.0	-	1	1821
D	-	-	BE94SA	3510310 R1	0.53	20.0	Thin Wall XLPE Primary Cable	GREY	0.0	-	4	1821

Connector Name	1820M
Part Number	1667305C1
Instances	A26 - ABS Private J1939:A26 - ABS Private J1939 A26 - Bendix Tractor or Towing Truck N/ Air SUSP J1939 Driven Lamp:Diagram1 A26 - Bendix Tractor or Towing Truck N/ Air SUSP J1939 Driven Lamp:Diagram2 A26 - Bendix Tractor or Towing Truck N/ Air SUSP J1939 Driven Lamp:Diagram3 A26 - Bendix Tractor or Towing Truck N/ Air SUSP J1939 Driven Lamp:Diagram4 A26 - Bendix Tractor or Towing Truck W/ Air SUSP J1939 Driven Lamp:Diagram1 A26 - Bendix Tractor or Towing Truck W/ Air SUSP J1939 Driven Lamp:Diagram2 A26 - Bendix Tractor or Towing Truck W/ Air SUSP J1939 Driven Lamp:Diagram3 A26 - Bendix Tractor or Towing Truck W/ Air SUSP J1939 Driven Lamp:Diagram4 A26 - CAN Layout:ABS Proprietary J1939 A26 - Stability Control (Bendix Straight Truck J1939 Driven Lamp):Diagram1 A26 - Stability Control (Bendix Straight Truck J1939 Driven Lamp):Diagram2 A26 - Stability Control (Bendix Straight Truck J1939 Driven Lamp):Diagram3 A26 - Stability Control (Bendix Straight Truck J1939 Driven Lamp):Diagram4 B6.7 - ABS Private J1939:B6.7 - ABS Private J1939 B6.7 - CAN Layout:ABS Proprietary J1939 B6.7 - Stability Control (Bendix Straight Truck J1939 Driven Lamp):Diagram1 B6.7 - Stability Control (Bendix Straight Truck J1939 Driven Lamp):Diagram2 B6.7 - Stability Control (Bendix Straight Truck J1939 Driven Lamp):Diagram3 B6.7 - Stability Control (Bendix Straight Truck J1939 Driven Lamp):Diagram4 L9 - ABS Private J1939:L9 - ABS Private J1939 L9 - Bendix Tractor or Towing Truck W/ Air SUSP J1939 Driven Lamp:Diagram1 L9 - Bendix Tractor or Towing Truck W/ Air SUSP J1939 Driven Lamp:Diagram2

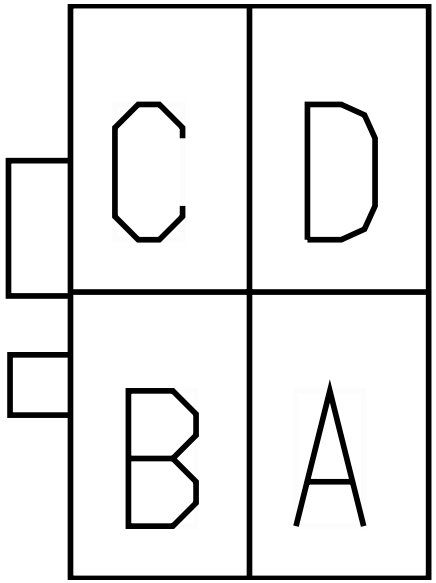

L9 - CAN Layout:ABS Proprietary J1939
L9 - Stability Control (Bendix Straight Truck J1939 Driven Lamp):Diagram1
L9 - Stability Control (Bendix Straight Truck J1939 Driven Lamp):Diagram2
L9 - Stability Control (Bendix Straight Truck J1939 Driven Lamp):Diagram3
L9 - Stability Control (Bendix Straight Truck J1939 Driven Lamp):Diagram4

Mates 1820F

Name	Terminal Part Number	V-Min	Name	Wire Part Number	Wire CSA	Wire Spec	Wire Material description	Wire Color Description	Wire Length	End2 Terminal Part Number	End2 Pin Name	End2 Connect or
A	-	-	WIRE239192	-	0.0	-	-	-	0.0	-	C	1410
A	-	-	WIRE239193	-	0.0	-	-	-	0.0	-	B	1410
A	-	-	XF94SA	3510310R1	0.53	20.0	Thin Wall XLPE Primary Cable	GREY	870.0	-	-	-
A	-	-	XF94SAB	3510311R1	0.79	18.0	Thin Wall XLPE Primary Cable	GREY	1325.0	-	50	1700
A	-	-	XF94SA	3510310R1	0.53	20.0	Thin Wall XLPE Primary Cable	GREY	870.0	-	54	1701
B	-	-	WIRE239196	-	0.0	-	-	-	0.0	-	H	1410
B	-	-	WIRE239197	-	0.0	-	-	-	0.0	-	J	1410
C	-	-	WIRE239194	-	0.0	-	-	-	0.0	-	E	1410
C	-	-	WIRE239195	-	0.0	-	-	-	0.0	-	F	1410

Name	Terminal Part Number	V-Min	Name	Wire Part Number	Wire CSA	Wire Spec	Wire Material description	Wire Color Description	Wire Length	End2 Terminal Part Number	End2 Pin Name	End2 Connect or
C	-	-	XF94SC	3510310 R1	0.53	20.0	Thin Wall XLPE Primary Cable	GREY	870.0	-	-	-
C	-	-	XF94SCB	3510311 R1	0.79	18.0	Thin Wall XLPE Primary Cable	GREY	1325.0	-	60	1700
C	-	-	XF94SC	3510310 R1	0.53	20.0	Thin Wall XLPE Primary Cable	GREY	870.0	-	55	1701
D	-	-	WIRE239 198	-	0.0	-	-	-	0.0	-	L	1410
D	-	-	WIRE239 199	-	0.0	-	-	-	0.0	-	M	1410

Connector Name	1821
Part Number	3601800C1
Instances	A26 - ABS Private J1939:A26 - ABS Private J1939 A26 - Bendix Tractor or Towing Truck N/ Air SUSP J1939 Driven Lamp:Diagram1 A26 - Bendix Tractor or Towing Truck N/ Air SUSP J1939 Driven Lamp:Diagram2 A26 - Bendix Tractor or Towing Truck N/ Air SUSP J1939 Driven Lamp:Diagram3 A26 - Bendix Tractor or Towing Truck N/ Air SUSP J1939 Driven Lamp:Diagram4 A26 - Bendix Tractor or Towing Truck W/ Air SUSP J1939 Driven Lamp:Diagram1 A26 - Bendix Tractor or Towing Truck W/ Air SUSP J1939 Driven Lamp:Diagram2 A26 - Bendix Tractor or Towing Truck W/ Air SUSP J1939 Driven Lamp:Diagram3 A26 - Bendix Tractor or Towing Truck W/ Air SUSP J1939 Driven Lamp:Diagram4 A26 - CAN Layout:ABS Proprietary J1939 A26 - Stability Control (Bendix Straight Truck J1939 Driven Lamp):Diagram1 A26 - Stability Control (Bendix Straight Truck J1939 Driven Lamp):Diagram2 A26 - Stability Control (Bendix Straight Truck J1939 Driven Lamp):Diagram3 A26 - Stability Control (Bendix Straight Truck J1939 Driven Lamp):Diagram4 B6.7 - ABS Private J1939:B6.7 - ABS Private J1939 B6.7 - CAN Layout:ABS Proprietary J1939 B6.7 - Stability Control (Bendix Straight Truck J1939 Driven Lamp):Diagram1 B6.7 - Stability Control (Bendix Straight Truck J1939 Driven Lamp):Diagram2 B6.7 - Stability Control (Bendix Straight Truck J1939 Driven Lamp):Diagram3 B6.7 - Stability Control (Bendix Straight Truck J1939 Driven Lamp):Diagram4 L9 - ABS Private J1939:L9 - ABS Private J1939 L9 - Bendix Tractor or Towing Truck W/ Air SUSP J1939 Driven Lamp:Diagram1 L9 - Bendix Tractor or Towing Truck W/ Air SUSP J1939 Driven Lamp:Diagram2

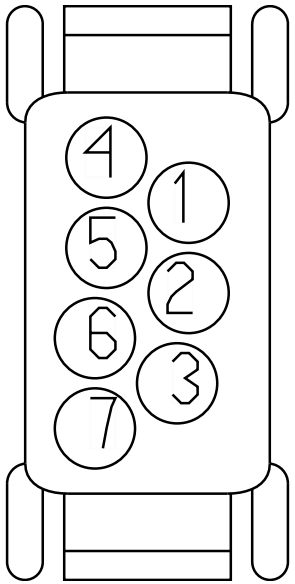

L9 - CAN Layout:ABS Proprietary J1939
L9 - Stability Control (Bendix Straight Truck J1939 Driven Lamp):Diagram1
L9 - Stability Control (Bendix Straight Truck J1939 Driven Lamp):Diagram2
L9 - Stability Control (Bendix Straight Truck J1939 Driven Lamp):Diagram3
L9 - Stability Control (Bendix Straight Truck J1939 Driven Lamp):Diagram4

Mates SNSR-STEERING_ANGLE-3026-0 1-01A

Name	Terminal Part Number	V-Min	Name	Wire Part Number	Wire CSA	Wire Spec	Wire Material description	Wire Color Description	Wire Length	End2 Terminal Part Number	End2 Pin Name	End2 Connect or
1	-	-	BE94SC	3510310 R1	0.53	20.0	Thin Wall XLPE Primary Cable	GREY	0.0	-	C	1820F
1	-	-	BN94SC	3510310 R1	0.53	20.0	Thin Wall XLPE Primary Cable	GREY	1195.0	-	C	1820F
2	-	-	BE94SD	3510310 R1	0.53	20.0	Thin Wall XLPE Primary Cable	GREY	0.0	-	A	1820F
2	-	-	BN94SA	3510310 R1	0.53	20.0	Thin Wall XLPE Primary Cable	GREY	1195.0	-	A	1820F
3	-	-	BE94SB	3510310 R1	0.53	20.0	Thin Wall XLPE Primary Cable	GREY	0.0	-	B	1820F
3	-	-	-	-	-	-	-	-	-	-	-	-
4	-	-	BE94SA	3510310 R1	0.53	20.0	Thin Wall XLPE Primary Cable	GREY	0.0	-	D	1820F

Name	Terminal Part Number	V-Min	Name	Wire Part Number	Wire CSA	Wire Spec	Wire Material description	Wire Color Description	Wire Length	End2 Terminal Part Number	End2 Pin Name	End2 Connect or
4	-	-	-	-	-	-	-	-	-	-	-	-

Connector Name	1822
Part Number	1678137C1
Instances	A26 - Brake Pressure (Auxiliary Gauge):Diagram1 A26 - Brake Pressure (Virtual Gauge):Diagram1 B6.7 - Brake Pressure (Auxiliary Gauge):Diagram1 B6.7 - Brake Pressure (Virtual Gauge):Diagram1 L9 - Brake Pressure (Auxiliary Gauge):Diagram1 L9 - Brake Pressure (Virtual Gauge):Diagram1
Mates	SNSR-BRAKE-3027-01-02A

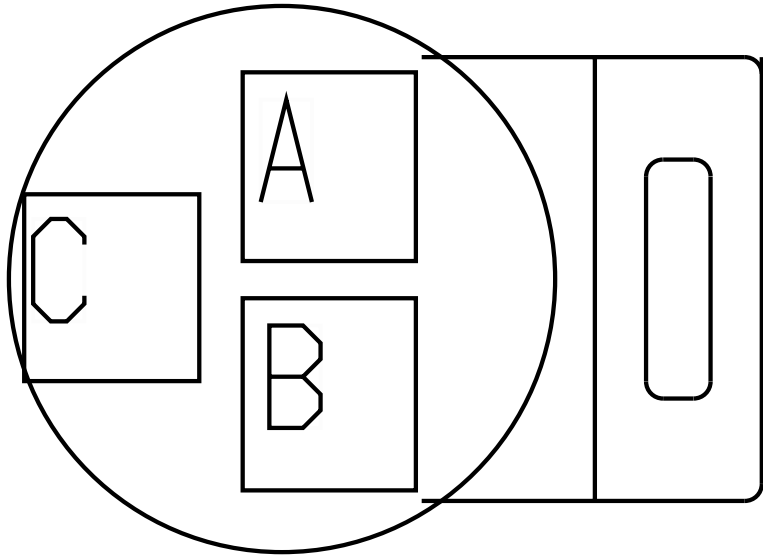

Name	Terminal Part Number	V-Min	Name	Wire Part Number	Wire CSA	Wire Spec	Wire Material description	Wire Color Description	Wire Length	End2 Terminal Part Number	End2 Pin Name	End2 Connector
A	-	-	CA9VF	3510311 R1	0.79	18.0	Thin Wall XLPE Primary Cable	GREY	525.0	-	X	-
B	-	-	CA6HC	3510311 R1	0.79	18.0	Thin Wall XLPE Primary Cable	GREY	625.0	-	X	-
C	-	-	CB40F	3510311 R1	0.79	18.0	Thin Wall XLPE Primary Cable	GREY	775.0	-	C2	1800F

Connector Name	1823
Part Number	1661777C1
Instances	B6.7 - Brake Switch:Diagram1 L9 - Brake Switch:Diagram1
Mates	SW-BRAKE_SWITCH-3028-01-02B

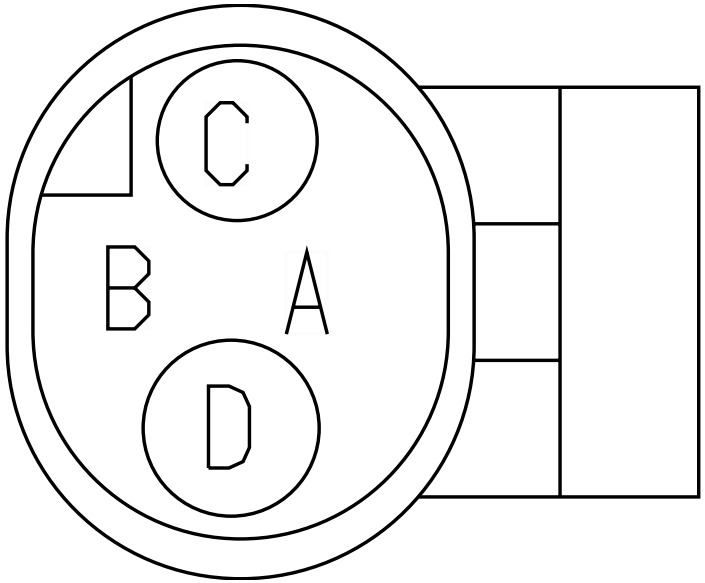

Name	Terminal Part Number	V-Min	Name	Wire Part Number	Wire CSA	Wire Spec	Wire Material description	Wire Color Description	Wire Length	End2 Terminal Part Number	End2 Pin Name	End2 Connect or
C	-	-	CA70A	3510317 R1	0.79	18.0	Thin Wall XLPE Primary Cable	ORANGE	775.0	-	A6	1800F
D	-	-	CA9VG	3510311 R1	0.79	18.0	Thin Wall XLPE Primary Cable	GREY	525.0	-	X	-

Connector Name	1824
Part Number	1661777C1
Instances	B6.7 - Brake Switch:Diagram1 L9 - Brake Switch:Diagram1
Mates	SW-BRAKE_SWITCH-3028-01-02A

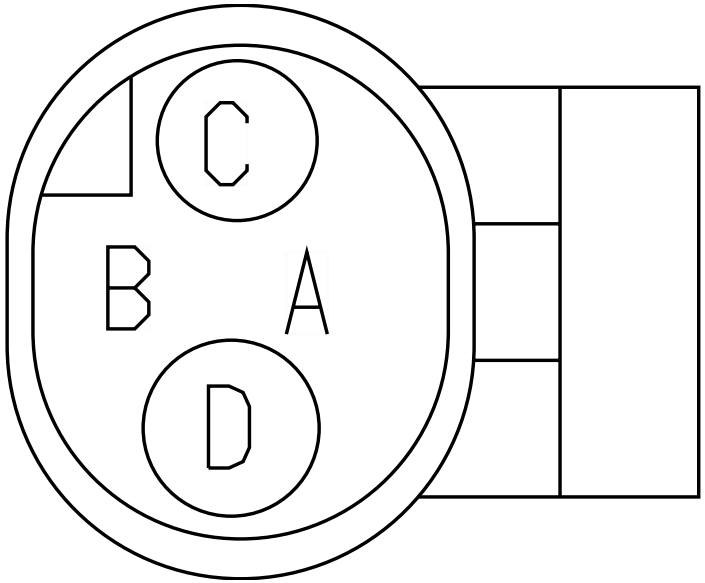

Name	Terminal Part Number	V-Min	Name	Wire Part Number	Wire CSA	Wire Spec	Wire Material description	Wire Color Description	Wire Length	End2 Terminal Part Number	End2 Pin Name	End2 Connect or
C	-	-	CB70	3510317 R1	0.79	18.0	Thin Wall XLPE Primary Cable	ORANGE	775.0	-	B9	1800F
C	-	-	CA70	3510317 R1	0.79	18.0	Thin Wall XLPE Primary Cable	ORANGE	775.0	-	B9	1800F
D	-	-	CA9VH	3510311 R1	0.79	18.0	Thin Wall XLPE Primary Cable	GREY	525.0	-	X	-

Connector Name 1825F

Part Number 4064551C1

Instances
A26 - Engine Brake W/ Stalk Shifter:Diagram1
A26 - Powertrain J1939 Allison 3k/4k:A26 - Powertrain J1939 Allison 3k/4k
A26 - Powertrain J1939 UltraShift Transmission:A26 - Powertrain J1939 UltraShift Transmission
A26 - Transmission Shifter (Stalk Shifter Allison):Diagram1
A26 - Transmission Shifter (Stalk Shifter Allison):Diagram2
B6.7 - CAN Layout:Powertrain Standard J1939 (500Kbps)
B6.7 - Powertrain J1939 Allison 1k/2k:B6.7 - Allison 1k/2k Transmission
B6.7 - Powertrain J1939 Allison 3k/4k:B6.7 - Allison 3k/4k Transmission
B6.7 - Powertrain J1939 Manual Transmission:B6.7 - Manual Transmission
B6.7 - Transmission Shifter (Stalk Shifter Allison):Diagram1
B6.7 - Transmission Shifter (Stalk Shifter Allison):Diagram2
B6.7/L9 - Engine Brake W/ Stalk Shifter:Diagram1
L9 - CAN Layout:Powertrain Standard J1939 (500kbps)
L9 - Powertrain J1939 Allison 3k/4k:L9 - Powertrain J1939 Allison 3k/4k
L9 - Powertrain J1939 Eaton:L9 - Powertrain J1939 Eaton
L9 - Powertrain J1939 Manual Transmission:Powertrain Standard J1939 (500kbps)
L9 - Transmission Shifter (Stalk Shifter Allison):Diagram1
L9 - Transmission Shifter (Stalk Shifter Allison):Diagram2

Mates MODU-SHF-5040-04-01A

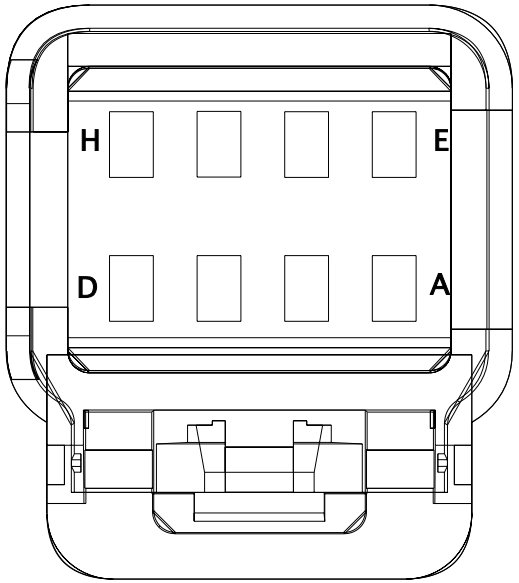

Name	Terminal Part Number	V-Min	Name	Wire Part Number	Wire CSA	Wire Spec	Wire Material description	Wire Color Description	Wire Length	End2 Terminal Part Number	End2 Pin Name	End2 Connector
B	-	-	BD92#134	3510329 R1	0.79	18.0	Thin Wall XLPE Primary Cable	TAN	1365.0	-	B	7900M
E	-	-	WIRE722746	-	0.0	-	-	-	0.0	-	E	7900M
E	-	-	-	-	-	-	-	-	-	-	-	-

Name	Terminal Part Number	V-Min	Name	Wire Part Number	Wire CSA	Wire Spec	Wire Material description	Wire Color Description	Wire Length	End2 Terminal Part Number	End2 Pin Name	End2 Connect or
E	-	-	WIRE722746	-	0.0	-	-	-	0.0	-	M	1025
E	-	-	WIRE722746	-	0.0	-	-	-	0.0	-	-	-
F	-	-	WIRE722747	-	0.0	-	-	-	0.0	-	F	7900M
F	-	-	-	-	-	-	-	-	-	-	-	-
G	-	-	BD62DC	3510353 R1	0.79	18.0	Thin Wall XLPE Primary Cable	DARK BLUE	1365.0	-	G	7900M
H	-	-	BD92-GAH	3510359 R1	0.79	18.0	Thin Wall XLPE Primary Cable	WHITE	1365.0	-	H	7900M

Connector Name	1825
Part Number	4064551C1
Instances	A26 - CAN Layout:Powertrain Standard J1939 (500Kbps)
Mates	MODU-SHF-5040-04-01A

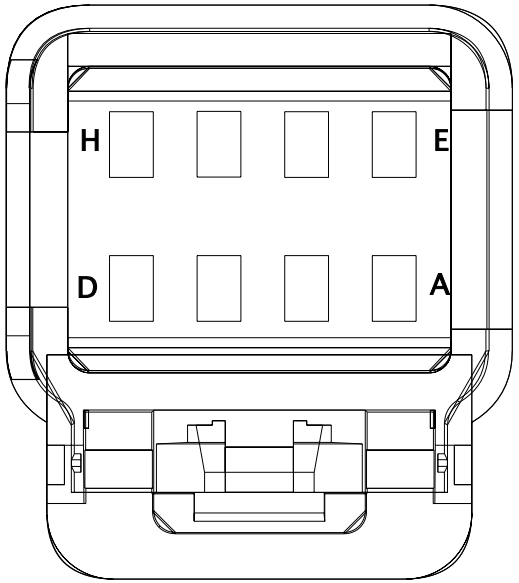

Name	Terminal Part Number	V-Min	Name	Wire Part Number	Wire CSA	Wire Spec	Wire Material description	Wire Color Description	Wire Length	End2 Terminal Part Number	End2 Pin Name	End2 Connect or
E	-	-	WIRE720115	-	0.0	-	-	-	0.0	-	E	7900M
F	-	-	WIRE720114	-	0.0	-	-	-	0.0	-	F	7900M

Connector Name 1826

Part Number 1678137C1

Instances A26 - Bendix Tractor or Towing Truck N/ Air SUSP J1939 Driven Lamp:Diagram1
A26 - Bendix Tractor or Towing Truck N/ Air SUSP J1939 Driven Lamp:Diagram2
A26 - Bendix Tractor or Towing Truck N/ Air SUSP J1939 Driven Lamp:Diagram3
A26 - Bendix Tractor or Towing Truck N/ Air SUSP J1939 Driven Lamp:Diagram4
A26 - Bendix Tractor or Towing Truck W/ Air SUSP J1939 Driven Lamp:Diagram1
A26 - Bendix Tractor or Towing Truck W/ Air SUSP J1939 Driven Lamp:Diagram2
A26 - Bendix Tractor or Towing Truck W/ Air SUSP J1939 Driven Lamp:Diagram3
A26 - Bendix Tractor or Towing Truck W/ Air SUSP J1939 Driven Lamp:Diagram4
A26 - Stability Control (Bendix Straight Truck J1939 Driven Lamp):Diagram1
A26 - Stability Control (Bendix Straight Truck J1939 Driven Lamp):Diagram2
A26 - Stability Control (Bendix Straight Truck J1939 Driven Lamp):Diagram3
A26 - Stability Control (Bendix Straight Truck J1939 Driven Lamp):Diagram4

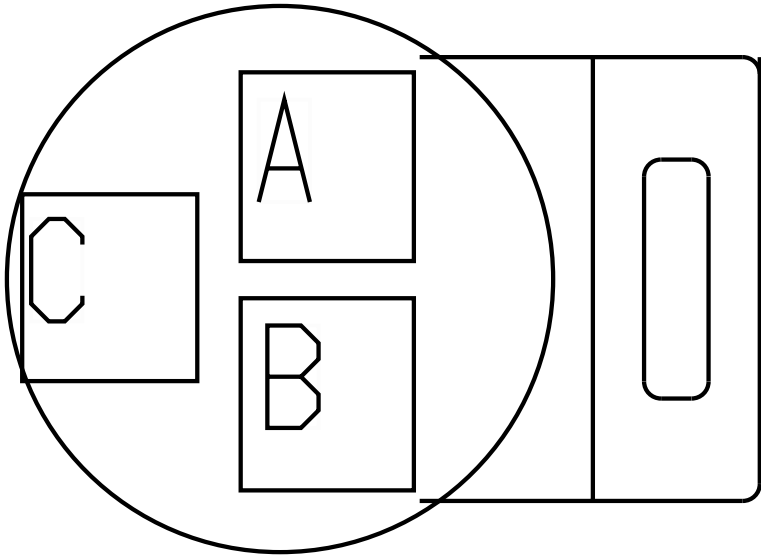

Mates SNSR-PRIMARY_PT-3026-01-01A

Name	Terminal Part Number	V-Min	Name	Wire Part Number	Wire CSA	Wire Spec	Wire Material description	Wire Color Description	Wire Length	End2 Terminal Part Number	End2 Pin Name	End2 Connect or
A	-	-	BN94SZA	2643673 R1	0.79	18.0	Std. Wall XLPE Primary Cable	GREY	475.0	-	X	-
B	-	-	BN94SVA	2643673 R1	0.79	18.0	Std. Wall XLPE Primary Cable	GREY	425.0	-	X	-

Name	Terminal Part Number	V-Min	Name	Wire Part Number	Wire CSA	Wire Spec	Wire Material description	Wire Color Description	Wire Length	End2 Terminal Part Number	End2 Pin Name	End2 Connect or
C	-	-	BN94SE	2643673 R1	0.79	18.0	Std. Wall XLPE Primary Cable	GREY	700.0	-	D5	1800F

Connector Name 1828

Part Number 1678137C1

Instances A26 - Bendix Tractor or Towing Truck N/ Air SUSP J1939 Driven Lamp:Diagram1
A26 - Bendix Tractor or Towing Truck N/ Air SUSP J1939 Driven Lamp:Diagram2
A26 - Bendix Tractor or Towing Truck N/ Air SUSP J1939 Driven Lamp:Diagram3
A26 - Bendix Tractor or Towing Truck N/ Air SUSP J1939 Driven Lamp:Diagram4
A26 - Bendix Tractor or Towing Truck W/ Air SUSP J1939 Driven Lamp:Diagram1
A26 - Bendix Tractor or Towing Truck W/ Air SUSP J1939 Driven Lamp:Diagram2
A26 - Bendix Tractor or Towing Truck W/ Air SUSP J1939 Driven Lamp:Diagram3
A26 - Bendix Tractor or Towing Truck W/ Air SUSP J1939 Driven Lamp:Diagram4
A26 - Stability Control (Bendix Straight Truck J1939 Driven Lamp):Diagram1
A26 - Stability Control (Bendix Straight Truck J1939 Driven Lamp):Diagram2
A26 - Stability Control (Bendix Straight Truck J1939 Driven Lamp):Diagram3
A26 - Stability Control (Bendix Straight Truck J1939 Driven Lamp):Diagram4

Mates SNSR-SECONDARY_PT-3026-01- 01B

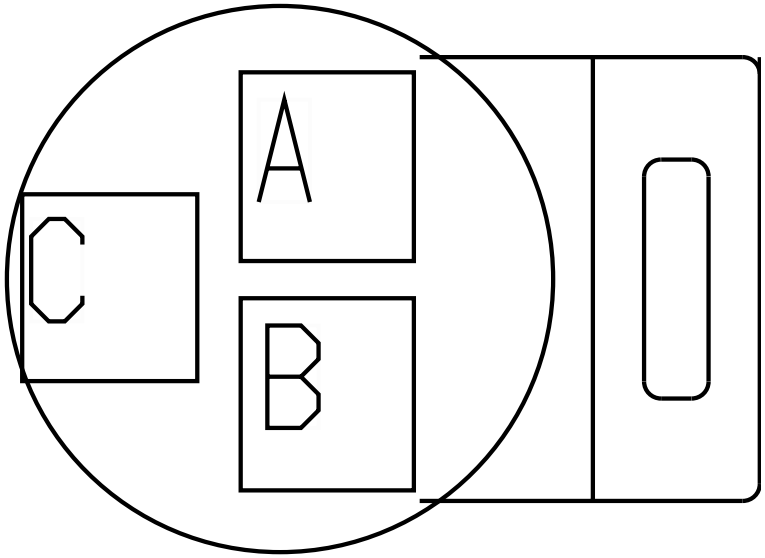

Name	Terminal Part Number	V-Min	Name	Wire Part Number	Wire CSA	Wire Spec	Wire Material description	Wire Color Description	Wire Length	End2 Terminal Part Number	End2 Pin Name	End2 Connect or
A	-	-	BN94SZB	2643673 R1	0.79	18.0	Std. Wall XLPE Primary Cable	GREY	125.0	-	X	-
B	-	-	BN94SVB	2643673 R1	0.79	18.0	Std. Wall XLPE Primary Cable	GREY	175.0	-	X	-

Name	Terminal Part Number	V-Min	Name	Wire Part Number	Wire CSA	Wire Spec	Wire Material description	Wire Color Description	Wire Length	End2 Terminal Part Number	End2 Pin Name	End2 Connect or
C	-	-	BN94SF	2643673 R1	0.79	18.0	Std. Wall XLPE Primary Cable	GREY	600.0	-	D6	1800F

Connector Name	1852
Part Number	3605445C91
Instances	B6.7 - Transmission Shifter Allison 5th Gen Push Button(SURHD):Diagram1 B6.7 - Transmission Shifter Allison 5th Gen Push Button(SURHD):Diagram2 L9 - Transmission Shifter Allison 5th Gen Push Button(SURHD):Diagram1
Mates	MODU-SHF-5040-02-02A

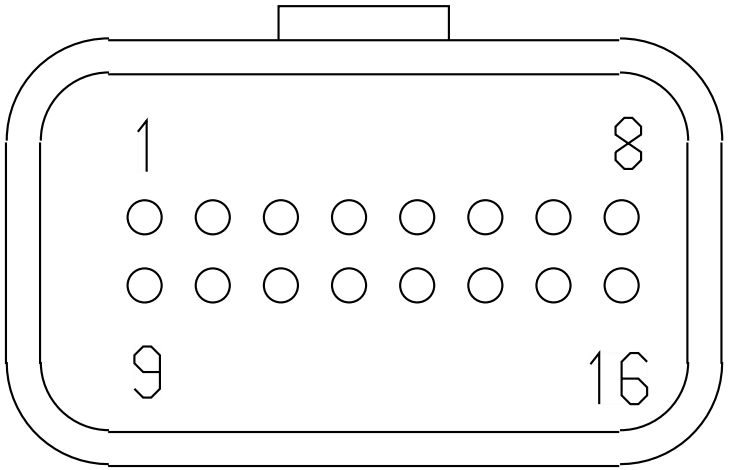

90°d DRESS

Name	Terminal Part Number	V-Min	Name	Wire Part Number	Wire CSA	Wire Spec	Wire Material description	Wire Color Description	Wire Length	End2 Terminal Part Number	End2 Pin Name	End2 Connect or
5	-	-	UL92-GAH	3510359 R1	0.79	18.0	Thin Wall XLPE Primary Cable	WHITE	715.0	-	-	-
8	-	-	-	-	-	-	-	-	-	-	-	-
11	-	-	UL92#13 4A	3510329 R1	0.79	18.0	Thin Wall XLPE Primary Cable	TAN	1845.0	-	21	1703M
12	-	-	UL92#163	3510329 R1	0.79	18.0	Thin Wall XLPE Primary Cable	TAN	2435.0	-	-	-
13	-	-	UL92BT	3510329 R1	0.79	18.0	Thin Wall XLPE Primary Cable	TAN	2195.0	-	-	-
15	-	-	-	-	-	-	-	-	-	-	-	-

Connector Name	1852
Part Number	3605446C91
Instances	B6.7 - CAN Layout:Powertrain Standard J1939 (500Kbps) B6.7 - Powertrain J1939 Allison 1k/2k:B6.7 - Allison 1k/2k Transmission B6.7 - Powertrain J1939 Allison 3k/4k:B6.7 - Allison 3k/4k Transmission B6.7 - Powertrain J1939 Manual Transmission:B6.7 - Manual Transmission
Mates	MODU-SHF-5040-02-02A

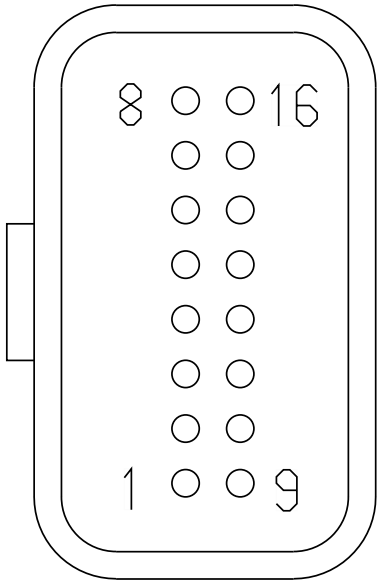

Name	Terminal Part Number	V-Min	Name	Wire Part Number	Wire CSA	Wire Spec	Wire Material description	Wire Color Description	Wire Length	End2 Terminal Part Number	End2 Pin Name	End2 Connect or
8	-	-	WIRE735240	-	0.0	-	-	-	0.0	-	PIN1	-
15	-	-	WIRE735241	-	0.0	-	-	-	0.0	-	PIN1	-

Connector Name	1873B
Part Number	593385C1
Instances	A26/B6.7/L9 - Auxiliary Power (40A) HSD:Diagram1
Mates	RLY-AUX_PWR-2055-04-01A

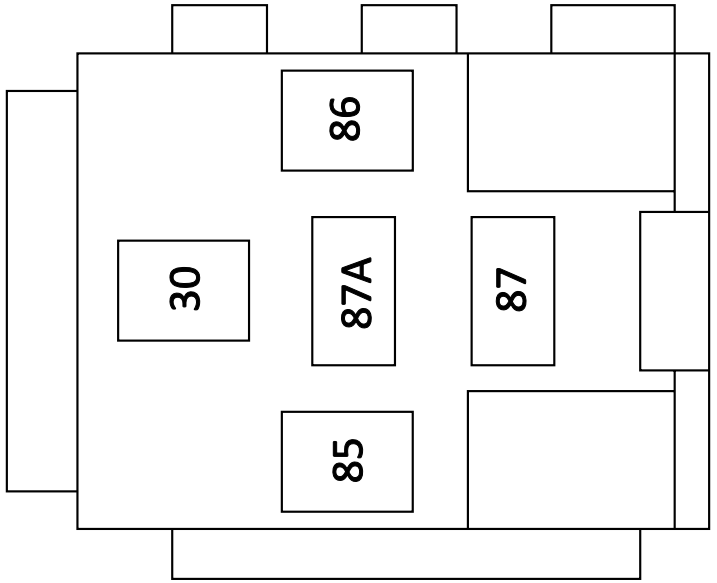

Name	Terminal Part Number	V-Min	Name	Wire Part Number	Wire CSA	Wire Spec	Wire Material description	Wire Color Description	Wire Length	End2 Terminal Part Number	End2 Pin Name	End2 Connect or
1	-	-	HU103C	2643776 R1	4.81	10.0	Std. Wall XLPE Primary Cable	LIGHT GREEN	1280.0	-	12	1700
2	-	-	HU103BA	2643678 R1	1.16	16.0	Std. Wall XLPE Primary Cable	LIGHT GREEN	1375.0	-	-	-
3	-	-	HU103AA	3510299 R1	0.79	18.0	Thin Wall XLPE Primary Cable	LIGHT GREEN	1395.0	-	E14	J4-1601
4	-	-	HU103D	3510302 R1	3.01	12.0	Thin Wall XLPE Primary Cable	LIGHT GREEN	1280.0	-	13	1700

Connector Name	1873D
Part Number	593385C1
Instances	A26 - Headlight W/Plowlights, W/LOWW, W/O Interrupt:Diagram1-Combination1 A26 - Headlight W/Plowlights, W/LOWW, W/O Interrupt:Diagram1-Combination2 A26 - Headlight W/Plowlights, W/LOWW, W/O Interrupt:Diagram1-Combination3 A26 - Headlight W/Plowlights, W/LOWW, W/O Interrupt:Diagram1-Combination4 A26 - Headlight W/Plowlights, W/O LOWW, W/O Interrupt:Diagram1-Combination1 A26 - Headlight W/Plowlights, W/O LOWW, W/O Interrupt:Diagram1-Combination2 A26 - Headlight W/Plowlights, W/O LOWW, W/O Interrupt:Diagram1-Combination3 A26 - Headlight W/Plowlights, W/O LOWW, W/O Interrupt:Diagram1-Combination4 A26 - Headlights W/PlowLights, W/LOWW, W/Interrupt - 10 PIN CLK:Diagram1-Combination1 A26 - Headlights W/PlowLights, W/LOWW, W/Interrupt - 10 PIN CLK:Diagram1-Combination2 A26 - Headlights W/PlowLights, W/LOWW, W/Interrupt - 10 PIN CLK:Diagram1-Combination3 A26 - Headlights W/PlowLights, W/LOWW, W/Interrupt - 10 PIN CLK:Diagram1-Combination4 A26 - Headlights W/PlowLights, W/O LOWW, W/Interrupt - 10 PIN CLK:Diagram1-Combination1 A26 - Headlights W/PlowLights, W/O LOWW, W/Interrupt - 10 PIN CLK:Diagram1-Combination2 A26 - Headlights W/PlowLights, W/O LOWW, W/Interrupt - 10 PIN CLK:Diagram1-Combination3 A26 - Headlights W/PlowLights, W/O LOWW, W/Interrupt - 10 PIN CLK:Diagram1-Combination4 B6.7 - Headlight W/Plowlights W/LOWW W/O Headlight Interrupt -10 PIN CLK:Diagram1 B6.7 - Headlight W/Plowlights W/LOWW W/O Headlight Interrupt -10 PIN CLK:Diagram2 B6.7 - Headlight W/Plowlights W/LOWW W/O Headlight Interrupt -10 PIN CLK:Diagram3 B6.7 - Headlight W/Plowlights W/LOWW W/O Headlight Interrupt -10 PIN CLK:Diagram4

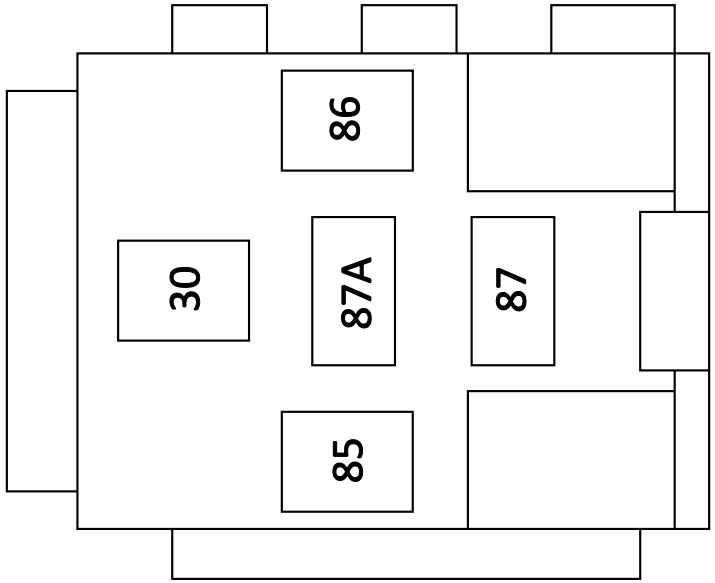

B6.7 - Headlight W/Plowlights W/LOWW W/O Headlight Interrupt -10 PIN CLK:Diagram5
B6.7 - Headlight W/Plowlights W/LOWW W/O Headlight Interrupt -10 PIN CLK:Diagram6
B6.7 - Headlight W/Plowlights W/LOWW W/O Headlight Interrupt -10 PIN CLK:Diagram7
B6.7 - Headlight W/Plowlights W/LOWW W/O Headlight Interrupt -10 PIN CLK:Diagram8
B6.7 - Headlights W/PlowLights W/Headlight Interrupt -10PIN CLK W/LOWW W/Interrupt:Diagram1
B6.7 - Headlights W/PlowLights W/Headlight Interrupt -10PIN CLK W/LOWW W/Interrupt:Diagram2
B6.7 - Headlights W/PlowLights W/Headlight Interrupt -10PIN CLK W/LOWW W/Interrupt:Diagram3
B6.7 - Headlights W/PlowLights W/Headlight Interrupt -10PIN CLK W/LOWW W/Interrupt:Diagram4
B6.7 - Headlights W/PlowLights W/Headlight Interrupt -10PIN CLK W/LOWW W/Interrupt:Diagram5
B6.7 - Headlights W/PlowLights W/Headlight Interrupt -10PIN CLK W/LOWW W/Interrupt:Diagram6
B6.7 - Headlights W/PlowLights W/Headlight Interrupt -10PIN CLK W/LOWW W/Interrupt:Diagram7
B6.7 - Headlights W/PlowLights W/Headlight Interrupt -10PIN CLK W/LOWW W/Interrupt:Diagram8
B6.7 - Headlights W/Plowlights W/O Lights ON With Wipers (LOWW) W/O Headlights Interrupt:Diagram1
B6.7 - Headlights W/Plowlights W/O Lights ON With Wipers (LOWW) W/O Headlights Interrupt:Diagram2
B6.7 - Headlights W/Plowlights W/O Lights ON With Wipers (LOWW) W/O Headlights Interrupt:Diagram3
B6.7 - Headlights W/Plowlights W/O Lights ON With Wipers (LOWW) W/O Headlights Interrupt:Diagram4
B6.7 - Headlights W/Plowlights W/O Lights ON With Wipers (LOWW) W/O Headlights Interrupt:Diagram5
B6.7 - Headlights W/Plowlights W/O Lights ON With Wipers (LOWW) W/O Headlights Interrupt:Diagram6
B6.7 - Headlights W/Plowlights W/O Lights ON With Wipers (LOWW) W/O Headlights Interrupt:Diagram7
B6.7 - Headlights W/Plowlights W/O Lights ON With Wipers (LOWW) W/O Headlights Interrupt:Diagram8
B6.7 - Headlights W/PlowLights W/O Lights ON with wipers (LOWW) W/ Headlights Interrupt:Diagram1
B6.7 - Headlights W/PlowLights W/O Lights ON with wipers (LOWW) W/ Headlights Interrupt:Diagram2

B6.7 - Headlights W/PlowLights W/O Lights ON with wipers (LOWW) W/ Headlights Interrupt:Diagram3
B6.7 - Headlights W/PlowLights W/O Lights ON with wipers (LOWW) W/ Headlights Interrupt:Diagram4
B6.7 - Headlights W/PlowLights W/O Lights ON with wipers (LOWW) W/ Headlights Interrupt:Diagram5
B6.7 - Headlights W/PlowLights W/O Lights ON with wipers (LOWW) W/ Headlights Interrupt:Diagram6
B6.7 - Headlights W/PlowLights W/O Lights ON with wipers (LOWW) W/ Headlights Interrupt:Diagram7
B6.7 - Headlights W/PlowLights W/O Lights ON with wipers (LOWW) W/ Headlights Interrupt:Diagram8
L9 - Headlight W/Plowlights W/LOWW W/O Headlight Interrupt -10 PIN CLK:Diagram1
L9 - Headlight W/Plowlights W/LOWW W/O Headlight Interrupt -10 PIN CLK:Diagram2
L9 - Headlight W/Plowlights W/LOWW W/O Headlight Interrupt -10 PIN CLK:Diagram3
L9 - Headlight W/Plowlights W/LOWW W/O Headlight Interrupt -10 PIN CLK:Diagram4
L9 - Headlight W/Plowlights W/LOWW W/O Headlight Interrupt -10 PIN CLK:Diagram5
L9 - Headlight W/Plowlights W/LOWW W/O Headlight Interrupt -10 PIN CLK:Diagram6
L9 - Headlight W/Plowlights W/LOWW W/O Headlight Interrupt -10 PIN CLK:Diagram7
L9 - Headlight W/Plowlights W/LOWW W/O Headlight Interrupt -10 PIN CLK:Diagram8
L9 - Headlights W/PlowLights W/Headlight Interrupt -10PIN CLK W/LOWW W/Interrupt:Diagram1
L9 - Headlights W/PlowLights W/Headlight Interrupt -10PIN CLK W/LOWW W/Interrupt:Diagram2
L9 - Headlights W/PlowLights W/Headlight Interrupt -10PIN CLK W/LOWW W/Interrupt:Diagram3
L9 - Headlights W/PlowLights W/Headlight Interrupt -10PIN CLK W/LOWW W/Interrupt:Diagram4
L9 - Headlights W/PlowLights W/Headlight Interrupt -10PIN CLK W/LOWW W/Interrupt:Diagram5
L9 - Headlights W/PlowLights W/Headlight Interrupt -10PIN CLK W/LOWW W/Interrupt:Diagram6
L9 - Headlights W/PlowLights W/Headlight Interrupt -10PIN CLK W/LOWW W/Interrupt:Diagram7
L9 - Headlights W/PlowLights W/Headlight Interrupt -10PIN CLK W/LOWW W/Interrupt:Diagram8

L9 - Headlights W/Plowlights W/O Lights ON With Wipers (LOWW) W/O Headlights Interrupt:Diagram1
L9 - Headlights W/Plowlights W/O Lights ON With Wipers (LOWW) W/O Headlights Interrupt:Diagram2
L9 - Headlights W/Plowlights W/O Lights ON With Wipers (LOWW) W/O Headlights Interrupt:Diagram3
L9 - Headlights W/Plowlights W/O Lights ON With Wipers (LOWW) W/O Headlights Interrupt:Diagram4
L9 - Headlights W/Plowlights W/O Lights ON With Wipers (LOWW) W/O Headlights Interrupt:Diagram5
L9 - Headlights W/Plowlights W/O Lights ON With Wipers (LOWW) W/O Headlights Interrupt:Diagram6
L9 - Headlights W/Plowlights W/O Lights ON With Wipers (LOWW) W/O Headlights Interrupt:Diagram7
L9 - Headlights W/Plowlights W/O Lights ON With Wipers (LOWW) W/O Headlights Interrupt:Diagram8
L9 - Headlights W/PlowLights W/O Lights ON with wipers (LOWW) W/ Headlights Interrupt:Diagram1
L9 - Headlights W/PlowLights W/O Lights ON with wipers (LOWW) W/ Headlights Interrupt:Diagram2
L9 - Headlights W/PlowLights W/O Lights ON with wipers (LOWW) W/ Headlights Interrupt:Diagram3
L9 - Headlights W/PlowLights W/O Lights ON with wipers (LOWW) W/ Headlights Interrupt:Diagram4
L9 - Headlights W/PlowLights W/O Lights ON with wipers (LOWW) W/ Headlights Interrupt:Diagram5
L9 - Headlights W/PlowLights W/O Lights ON with wipers (LOWW) W/ Headlights Interrupt:Diagram6
L9 - Headlights W/PlowLights W/O Lights ON with wipers (LOWW) W/ Headlights Interrupt:Diagram7
L9 - Headlights W/PlowLights W/O Lights ON with wipers (LOWW) W/ Headlights Interrupt:Diagram8

Mates RLY-L_HB-1034-01-01A

Name	Terminal Part Number	V-Min	Name	Wire Part Number	Wire CSA	Wire Spec	Wire Material description	Wire Color Description	Wire Length	End2 Terminal Part Number	End2 Pin Name	End2 Connect or
1	-	-	YG52A	3510337 R1	1.91	14.0	Thin Wall XLPE Primary Cable	YELLOW 2	1440.0	-	H	J1-1603

Name	Terminal Part Number	V-Min	Name	Wire Part Number	Wire CSA	Wire Spec	Wire Material description	Wire Color Description	Wire Length	End2 Terminal Part Number	End2 Pin Name	End2 Connect or
2	-	-	YG96-GD	3510335 R1	0.79	18.0	Thin Wall XLPE Primary Cable	YELLOW 2	645.0	-	X	-
3	-	-	YG96E	3510335 R1	0.79	18.0	Thin Wall XLPE Primary Cable	YELLOW 2	225.0	-	X	-
4	-	-	YG52AC	3510337 R1	1.91	14.0	Thin Wall XLPE Primary Cable	YELLOW 2	1350.0	-	10	1700
5	-	-	YG52AA	3510337 R1	1.91	14.0	Thin Wall XLPE Primary Cable	YELLOW 2	1350.0	-	1	1700

Connector Name	1873E
Part Number	593385C1
Instances	A26 - Headlight W/Plowlights, W/LOWW, W/O Interrupt:Diagram1-Combination1 A26 - Headlight W/Plowlights, W/LOWW, W/O Interrupt:Diagram1-Combination2 A26 - Headlight W/Plowlights, W/LOWW, W/O Interrupt:Diagram1-Combination3 A26 - Headlight W/Plowlights, W/LOWW, W/O Interrupt:Diagram1-Combination4 A26 - Headlight W/Plowlights, W/O LOWW, W/O Interrupt:Diagram1-Combination1 A26 - Headlight W/Plowlights, W/O LOWW, W/O Interrupt:Diagram1-Combination2 A26 - Headlight W/Plowlights, W/O LOWW, W/O Interrupt:Diagram1-Combination3 A26 - Headlight W/Plowlights, W/O LOWW, W/O Interrupt:Diagram1-Combination4 A26 - Headlights W/PlowLights, W/LOWW, W/Interrupt - 10 PIN CLK:Diagram1-Combination1 A26 - Headlights W/PlowLights, W/LOWW, W/Interrupt - 10 PIN CLK:Diagram1-Combination2 A26 - Headlights W/PlowLights, W/LOWW, W/Interrupt - 10 PIN CLK:Diagram1-Combination3 A26 - Headlights W/PlowLights, W/LOWW, W/Interrupt - 10 PIN CLK:Diagram1-Combination4 A26 - Headlights W/PlowLights, W/O LOWW, W/Interrupt - 10 PIN CLK:Diagram1-Combination1 A26 - Headlights W/PlowLights, W/O LOWW, W/Interrupt - 10 PIN CLK:Diagram1-Combination2 A26 - Headlights W/PlowLights, W/O LOWW, W/Interrupt - 10 PIN CLK:Diagram1-Combination3 A26 - Headlights W/PlowLights, W/O LOWW, W/Interrupt - 10 PIN CLK:Diagram1-Combination4 B6.7 - Headlight W/Plowlights W/LOWW W/O Headlight Interrupt -10 PIN CLK:Diagram1 B6.7 - Headlight W/Plowlights W/LOWW W/O Headlight Interrupt -10 PIN CLK:Diagram2 B6.7 - Headlight W/Plowlights W/LOWW W/O Headlight Interrupt -10 PIN CLK:Diagram3 B6.7 - Headlight W/Plowlights W/LOWW W/O Headlight Interrupt -10 PIN CLK:Diagram4

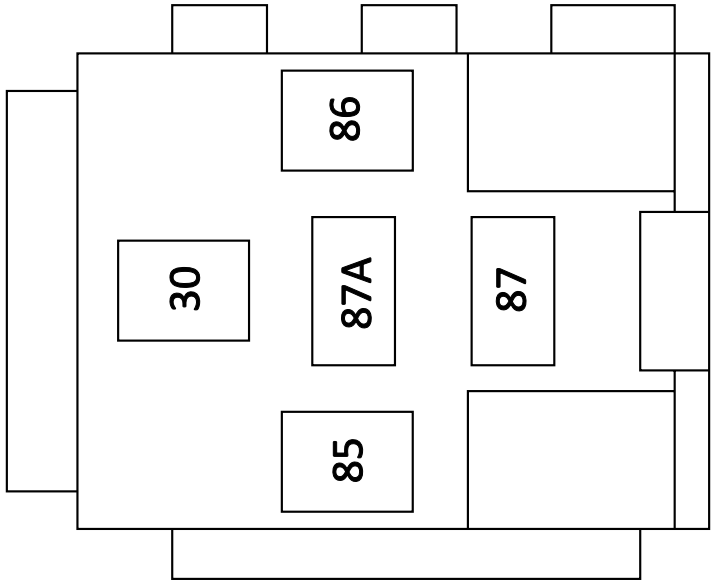

B6.7 - Headlight W/Plowlights W/LOWW W/O Headlight Interrupt -10 PIN CLK:Diagram5
B6.7 - Headlight W/Plowlights W/LOWW W/O Headlight Interrupt -10 PIN CLK:Diagram6
B6.7 - Headlight W/Plowlights W/LOWW W/O Headlight Interrupt -10 PIN CLK:Diagram7
B6.7 - Headlight W/Plowlights W/LOWW W/O Headlight Interrupt -10 PIN CLK:Diagram8
B6.7 - Headlights W/PlowLights W/Headlight Interrupt -10PIN CLK W/LOWW W/Interrupt:Diagram1
B6.7 - Headlights W/PlowLights W/Headlight Interrupt -10PIN CLK W/LOWW W/Interrupt:Diagram2
B6.7 - Headlights W/PlowLights W/Headlight Interrupt -10PIN CLK W/LOWW W/Interrupt:Diagram3
B6.7 - Headlights W/PlowLights W/Headlight Interrupt -10PIN CLK W/LOWW W/Interrupt:Diagram4
B6.7 - Headlights W/PlowLights W/Headlight Interrupt -10PIN CLK W/LOWW W/Interrupt:Diagram5
B6.7 - Headlights W/PlowLights W/Headlight Interrupt -10PIN CLK W/LOWW W/Interrupt:Diagram6
B6.7 - Headlights W/PlowLights W/Headlight Interrupt -10PIN CLK W/LOWW W/Interrupt:Diagram7
B6.7 - Headlights W/PlowLights W/Headlight Interrupt -10PIN CLK W/LOWW W/Interrupt:Diagram8
B6.7 - Headlights W/Plowlights W/O Lights ON With Wipers (LOWW) W/O Headlights Interrupt:Diagram1
B6.7 - Headlights W/Plowlights W/O Lights ON With Wipers (LOWW) W/O Headlights Interrupt:Diagram2
B6.7 - Headlights W/Plowlights W/O Lights ON With Wipers (LOWW) W/O Headlights Interrupt:Diagram3
B6.7 - Headlights W/Plowlights W/O Lights ON With Wipers (LOWW) W/O Headlights Interrupt:Diagram4
B6.7 - Headlights W/Plowlights W/O Lights ON With Wipers (LOWW) W/O Headlights Interrupt:Diagram5
B6.7 - Headlights W/Plowlights W/O Lights ON With Wipers (LOWW) W/O Headlights Interrupt:Diagram6
B6.7 - Headlights W/Plowlights W/O Lights ON With Wipers (LOWW) W/O Headlights Interrupt:Diagram7
B6.7 - Headlights W/Plowlights W/O Lights ON With Wipers (LOWW) W/O Headlights Interrupt:Diagram8
B6.7 - Headlights W/PlowLights W/O Lights ON with wipers (LOWW) W/ Headlights Interrupt:Diagram1
B6.7 - Headlights W/PlowLights W/O Lights ON with wipers (LOWW) W/ Headlights Interrupt:Diagram2

B6.7 - Headlights W/PlowLights W/O Lights ON with wipers (LOWW) W/ Headlights Interrupt:Diagram3
B6.7 - Headlights W/PlowLights W/O Lights ON with wipers (LOWW) W/ Headlights Interrupt:Diagram4
B6.7 - Headlights W/PlowLights W/O Lights ON with wipers (LOWW) W/ Headlights Interrupt:Diagram5
B6.7 - Headlights W/PlowLights W/O Lights ON with wipers (LOWW) W/ Headlights Interrupt:Diagram6
B6.7 - Headlights W/PlowLights W/O Lights ON with wipers (LOWW) W/ Headlights Interrupt:Diagram7
B6.7 - Headlights W/PlowLights W/O Lights ON with wipers (LOWW) W/ Headlights Interrupt:Diagram8
L9 - Headlight W/Plowlights W/LOWW W/O Headlight Interrupt -10 PIN CLK:Diagram1
L9 - Headlight W/Plowlights W/LOWW W/O Headlight Interrupt -10 PIN CLK:Diagram2
L9 - Headlight W/Plowlights W/LOWW W/O Headlight Interrupt -10 PIN CLK:Diagram3
L9 - Headlight W/Plowlights W/LOWW W/O Headlight Interrupt -10 PIN CLK:Diagram4
L9 - Headlight W/Plowlights W/LOWW W/O Headlight Interrupt -10 PIN CLK:Diagram5
L9 - Headlight W/Plowlights W/LOWW W/O Headlight Interrupt -10 PIN CLK:Diagram6
L9 - Headlight W/Plowlights W/LOWW W/O Headlight Interrupt -10 PIN CLK:Diagram7
L9 - Headlight W/Plowlights W/LOWW W/O Headlight Interrupt -10 PIN CLK:Diagram8
L9 - Headlights W/PlowLights W/Headlight Interrupt -10PIN CLK W/LOWW W/Interrupt:Diagram1
L9 - Headlights W/PlowLights W/Headlight Interrupt -10PIN CLK W/LOWW W/Interrupt:Diagram2
L9 - Headlights W/PlowLights W/Headlight Interrupt -10PIN CLK W/LOWW W/Interrupt:Diagram3
L9 - Headlights W/PlowLights W/Headlight Interrupt -10PIN CLK W/LOWW W/Interrupt:Diagram4
L9 - Headlights W/PlowLights W/Headlight Interrupt -10PIN CLK W/LOWW W/Interrupt:Diagram5
L9 - Headlights W/PlowLights W/Headlight Interrupt -10PIN CLK W/LOWW W/Interrupt:Diagram6
L9 - Headlights W/PlowLights W/Headlight Interrupt -10PIN CLK W/LOWW W/Interrupt:Diagram7
L9 - Headlights W/PlowLights W/Headlight Interrupt -10PIN CLK W/LOWW W/Interrupt:Diagram8

L9 - Headlights W/Plowlights W/O Lights ON With Wipers (LOWW) W/O Headlights Interrupt:Diagram1
L9 - Headlights W/Plowlights W/O Lights ON With Wipers (LOWW) W/O Headlights Interrupt:Diagram2
L9 - Headlights W/Plowlights W/O Lights ON With Wipers (LOWW) W/O Headlights Interrupt:Diagram3
L9 - Headlights W/Plowlights W/O Lights ON With Wipers (LOWW) W/O Headlights Interrupt:Diagram4
L9 - Headlights W/Plowlights W/O Lights ON With Wipers (LOWW) W/O Headlights Interrupt:Diagram5
L9 - Headlights W/Plowlights W/O Lights ON With Wipers (LOWW) W/O Headlights Interrupt:Diagram6
L9 - Headlights W/Plowlights W/O Lights ON With Wipers (LOWW) W/O Headlights Interrupt:Diagram7
L9 - Headlights W/Plowlights W/O Lights ON With Wipers (LOWW) W/O Headlights Interrupt:Diagram8
L9 - Headlights W/PlowLights W/O Lights ON with wipers (LOWW) W/ Headlights Interrupt:Diagram1
L9 - Headlights W/PlowLights W/O Lights ON with wipers (LOWW) W/ Headlights Interrupt:Diagram2
L9 - Headlights W/PlowLights W/O Lights ON with wipers (LOWW) W/ Headlights Interrupt:Diagram3
L9 - Headlights W/PlowLights W/O Lights ON with wipers (LOWW) W/ Headlights Interrupt:Diagram4
L9 - Headlights W/PlowLights W/O Lights ON with wipers (LOWW) W/ Headlights Interrupt:Diagram5
L9 - Headlights W/PlowLights W/O Lights ON with wipers (LOWW) W/ Headlights Interrupt:Diagram6
L9 - Headlights W/PlowLights W/O Lights ON with wipers (LOWW) W/ Headlights Interrupt:Diagram7
L9 - Headlights W/PlowLights W/O Lights ON with wipers (LOWW) W/ Headlights Interrupt:Diagram8

Mates RLY-R_HB-1034-01-01A

Name	Terminal Part Number	V-Min	Name	Wire Part Number	Wire CSA	Wire Spec	Wire Material description	Wire Color Description	Wire Length	End2 Terminal Part Number	End2 Pin Name	End2 Connect or
1	-	-	YG52B	3510337 R1	1.91	14.0	Thin Wall XLPE Primary Cable	YELLOW 2	1480.0	-	L	J1-1603

Name	Terminal Part Number	V-Min	Name	Wire Part Number	Wire CSA	Wire Spec	Wire Material description	Wire Color Description	Wire Length	End2 Terminal Part Number	End2 Pin Name	End2 Connector
2	-	-	YG96-GC	3510335 R1	0.79	18.0	Thin Wall XLPE Primary Cable	YELLOW 2	685.0	-	X	-
3	-	-	YG96D	3510335 R1	0.79	18.0	Thin Wall XLPE Primary Cable	YELLOW 2	265.0	-	X	-
4	-	-	YG52BC	3510337 R1	1.91	14.0	Thin Wall XLPE Primary Cable	YELLOW 2	1390.0	-	11	1700
5	-	-	YG52BA	3510337 R1	1.91	14.0	Thin Wall XLPE Primary Cable	YELLOW 2	1390.0	-	3	1700

Connector Name	1873F
Part Number	593385C1
Instances	A26 - Headlight W/Plowlights, W/LOWW, W/O Interrupt:Diagram1-Combination1 A26 - Headlight W/Plowlights, W/LOWW, W/O Interrupt:Diagram1-Combination2 A26 - Headlight W/Plowlights, W/LOWW, W/O Interrupt:Diagram1-Combination3 A26 - Headlight W/Plowlights, W/LOWW, W/O Interrupt:Diagram1-Combination4 A26 - Headlight W/Plowlights, W/O LOWW, W/O Interrupt:Diagram1-Combination1 A26 - Headlight W/Plowlights, W/O LOWW, W/O Interrupt:Diagram1-Combination2 A26 - Headlight W/Plowlights, W/O LOWW, W/O Interrupt:Diagram1-Combination3 A26 - Headlight W/Plowlights, W/O LOWW, W/O Interrupt:Diagram1-Combination4 A26 - Headlights W/PlowLights, W/LOWW, W/Interrupt - 10 PIN CLK:Diagram1-Combination1 A26 - Headlights W/PlowLights, W/LOWW, W/Interrupt - 10 PIN CLK:Diagram1-Combination2 A26 - Headlights W/PlowLights, W/LOWW, W/Interrupt - 10 PIN CLK:Diagram1-Combination3 A26 - Headlights W/PlowLights, W/LOWW, W/Interrupt - 10 PIN CLK:Diagram1-Combination4 A26 - Headlights W/PlowLights, W/O LOWW, W/Interrupt - 10 PIN CLK:Diagram1-Combination1 A26 - Headlights W/PlowLights, W/O LOWW, W/Interrupt - 10 PIN CLK:Diagram1-Combination2 A26 - Headlights W/PlowLights, W/O LOWW, W/Interrupt - 10 PIN CLK:Diagram1-Combination3 A26 - Headlights W/PlowLights, W/O LOWW, W/Interrupt - 10 PIN CLK:Diagram1-Combination4 B6.7 - Headlight W/Plowlights W/LOWW W/O Headlight Interrupt -10 PIN CLK:Diagram1 B6.7 - Headlight W/Plowlights W/LOWW W/O Headlight Interrupt -10 PIN CLK:Diagram2 B6.7 - Headlight W/Plowlights W/LOWW W/O Headlight Interrupt -10 PIN CLK:Diagram3 B6.7 - Headlight W/Plowlights W/LOWW W/O Headlight Interrupt -10 PIN CLK:Diagram4

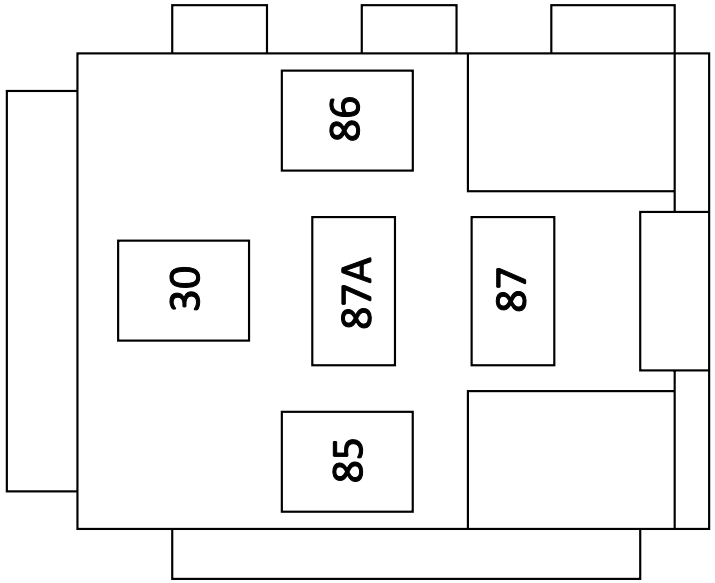

B6.7 - Headlight W/Plowlights W/LOWW W/O Headlight Interrupt -10 PIN CLK:Diagram5
B6.7 - Headlight W/Plowlights W/LOWW W/O Headlight Interrupt -10 PIN CLK:Diagram6
B6.7 - Headlight W/Plowlights W/LOWW W/O Headlight Interrupt -10 PIN CLK:Diagram7
B6.7 - Headlight W/Plowlights W/LOWW W/O Headlight Interrupt -10 PIN CLK:Diagram8
B6.7 - Headlights W/PlowLights W/Headlight Interrupt -10PIN CLK W/LOWW W/Interrupt:Diagram1
B6.7 - Headlights W/PlowLights W/Headlight Interrupt -10PIN CLK W/LOWW W/Interrupt:Diagram2
B6.7 - Headlights W/PlowLights W/Headlight Interrupt -10PIN CLK W/LOWW W/Interrupt:Diagram3
B6.7 - Headlights W/PlowLights W/Headlight Interrupt -10PIN CLK W/LOWW W/Interrupt:Diagram4
B6.7 - Headlights W/PlowLights W/Headlight Interrupt -10PIN CLK W/LOWW W/Interrupt:Diagram5
B6.7 - Headlights W/PlowLights W/Headlight Interrupt -10PIN CLK W/LOWW W/Interrupt:Diagram6
B6.7 - Headlights W/PlowLights W/Headlight Interrupt -10PIN CLK W/LOWW W/Interrupt:Diagram7
B6.7 - Headlights W/PlowLights W/Headlight Interrupt -10PIN CLK W/LOWW W/Interrupt:Diagram8
B6.7 - Headlights W/Plowlights W/O Lights ON With Wipers (LOWW) W/O Headlights Interrupt:Diagram1
B6.7 - Headlights W/Plowlights W/O Lights ON With Wipers (LOWW) W/O Headlights Interrupt:Diagram2
B6.7 - Headlights W/Plowlights W/O Lights ON With Wipers (LOWW) W/O Headlights Interrupt:Diagram3
B6.7 - Headlights W/Plowlights W/O Lights ON With Wipers (LOWW) W/O Headlights Interrupt:Diagram4
B6.7 - Headlights W/Plowlights W/O Lights ON With Wipers (LOWW) W/O Headlights Interrupt:Diagram5
B6.7 - Headlights W/Plowlights W/O Lights ON With Wipers (LOWW) W/O Headlights Interrupt:Diagram6
B6.7 - Headlights W/Plowlights W/O Lights ON With Wipers (LOWW) W/O Headlights Interrupt:Diagram7
B6.7 - Headlights W/Plowlights W/O Lights ON With Wipers (LOWW) W/O Headlights Interrupt:Diagram8
B6.7 - Headlights W/PlowLights W/O Lights ON with wipers (LOWW) W/ Headlights Interrupt:Diagram1
B6.7 - Headlights W/PlowLights W/O Lights ON with wipers (LOWW) W/ Headlights Interrupt:Diagram2

B6.7 - Headlights W/PlowLights W/O Lights ON with wipers (LOWW) W/ Headlights Interrupt:Diagram3
B6.7 - Headlights W/PlowLights W/O Lights ON with wipers (LOWW) W/ Headlights Interrupt:Diagram4
B6.7 - Headlights W/PlowLights W/O Lights ON with wipers (LOWW) W/ Headlights Interrupt:Diagram5
B6.7 - Headlights W/PlowLights W/O Lights ON with wipers (LOWW) W/ Headlights Interrupt:Diagram6
B6.7 - Headlights W/PlowLights W/O Lights ON with wipers (LOWW) W/ Headlights Interrupt:Diagram7
B6.7 - Headlights W/PlowLights W/O Lights ON with wipers (LOWW) W/ Headlights Interrupt:Diagram8
L9 - Headlight W/Plowlights W/LOWW W/O Headlight Interrupt -10 PIN CLK:Diagram1
L9 - Headlight W/Plowlights W/LOWW W/O Headlight Interrupt -10 PIN CLK:Diagram2
L9 - Headlight W/Plowlights W/LOWW W/O Headlight Interrupt -10 PIN CLK:Diagram3
L9 - Headlight W/Plowlights W/LOWW W/O Headlight Interrupt -10 PIN CLK:Diagram4
L9 - Headlight W/Plowlights W/LOWW W/O Headlight Interrupt -10 PIN CLK:Diagram5
L9 - Headlight W/Plowlights W/LOWW W/O Headlight Interrupt -10 PIN CLK:Diagram6
L9 - Headlight W/Plowlights W/LOWW W/O Headlight Interrupt -10 PIN CLK:Diagram7
L9 - Headlight W/Plowlights W/LOWW W/O Headlight Interrupt -10 PIN CLK:Diagram8
L9 - Headlights W/PlowLights W/Headlight Interrupt -10PIN CLK W/LOWW W/Interrupt:Diagram1
L9 - Headlights W/PlowLights W/Headlight Interrupt -10PIN CLK W/LOWW W/Interrupt:Diagram2
L9 - Headlights W/PlowLights W/Headlight Interrupt -10PIN CLK W/LOWW W/Interrupt:Diagram3
L9 - Headlights W/PlowLights W/Headlight Interrupt -10PIN CLK W/LOWW W/Interrupt:Diagram4
L9 - Headlights W/PlowLights W/Headlight Interrupt -10PIN CLK W/LOWW W/Interrupt:Diagram5
L9 - Headlights W/PlowLights W/Headlight Interrupt -10PIN CLK W/LOWW W/Interrupt:Diagram6
L9 - Headlights W/PlowLights W/Headlight Interrupt -10PIN CLK W/LOWW W/Interrupt:Diagram7
L9 - Headlights W/PlowLights W/Headlight Interrupt -10PIN CLK W/LOWW W/Interrupt:Diagram8

L9 - Headlights W/Plowlights W/O Lights ON With Wipers (LOWW) W/O Headlights Interrupt:Diagram1
L9 - Headlights W/Plowlights W/O Lights ON With Wipers (LOWW) W/O Headlights Interrupt:Diagram2
L9 - Headlights W/Plowlights W/O Lights ON With Wipers (LOWW) W/O Headlights Interrupt:Diagram3
L9 - Headlights W/Plowlights W/O Lights ON With Wipers (LOWW) W/O Headlights Interrupt:Diagram4
L9 - Headlights W/Plowlights W/O Lights ON With Wipers (LOWW) W/O Headlights Interrupt:Diagram5
L9 - Headlights W/Plowlights W/O Lights ON With Wipers (LOWW) W/O Headlights Interrupt:Diagram6
L9 - Headlights W/Plowlights W/O Lights ON With Wipers (LOWW) W/O Headlights Interrupt:Diagram7
L9 - Headlights W/Plowlights W/O Lights ON With Wipers (LOWW) W/O Headlights Interrupt:Diagram8
L9 - Headlights W/PlowLights W/O Lights ON with wipers (LOWW) W/ Headlights Interrupt:Diagram1
L9 - Headlights W/PlowLights W/O Lights ON with wipers (LOWW) W/ Headlights Interrupt:Diagram2
L9 - Headlights W/PlowLights W/O Lights ON with wipers (LOWW) W/ Headlights Interrupt:Diagram3
L9 - Headlights W/PlowLights W/O Lights ON with wipers (LOWW) W/ Headlights Interrupt:Diagram4
L9 - Headlights W/PlowLights W/O Lights ON with wipers (LOWW) W/ Headlights Interrupt:Diagram5
L9 - Headlights W/PlowLights W/O Lights ON with wipers (LOWW) W/ Headlights Interrupt:Diagram6
L9 - Headlights W/PlowLights W/O Lights ON with wipers (LOWW) W/ Headlights Interrupt:Diagram7
L9 - Headlights W/PlowLights W/O Lights ON with wipers (LOWW) W/ Headlights Interrupt:Diagram8

Mates RLY-L_LB-1034-01-01A

Name	Terminal Part Number	V-Min	Name	Wire Part Number	Wire CSA	Wire Spec	Wire Material description	Wire Color Description	Wire Length	End2 Terminal Part Number	End2 Pin Name	End2 Connect or
1	-	-	YG53A	3510337 R1	1.91	14.0	Thin Wall XLPE Primary Cable	YELLOW 2	1555.0	-	B	J2-1604

Name	Terminal Part Number	V-Min	Name	Wire Part Number	Wire CSA	Wire Spec	Wire Material description	Wire Color Description	Wire Length	End2 Terminal Part Number	End2 Pin Name	End2 Connect or
2	-	-	YG96-GB	3510335 R1	0.79	18.0	Thin Wall XLPE Primary Cable	YELLOW 2	725.0	-	X	-
3	-	-	YG96C	3510335 R1	0.79	18.0	Thin Wall XLPE Primary Cable	YELLOW 2	305.0	-	X	-
4	-	-	YG53AC	3510337 R1	1.91	14.0	Thin Wall XLPE Primary Cable	YELLOW 2	1430.0	-	8	1700
5	-	-	YG53AA	3510337 R1	1.91	14.0	Thin Wall XLPE Primary Cable	YELLOW 2	1430.0	-	2	1700

Connector Name	1873G
Part Number	593385C1
Instances	A26 - Headlight W/Plowlights, W/LOWW, W/O Interrupt:Diagram1-Combination1 A26 - Headlight W/Plowlights, W/LOWW, W/O Interrupt:Diagram1-Combination2 A26 - Headlight W/Plowlights, W/LOWW, W/O Interrupt:Diagram1-Combination3 A26 - Headlight W/Plowlights, W/LOWW, W/O Interrupt:Diagram1-Combination4 A26 - Headlight W/Plowlights, W/O LOWW, W/O Interrupt:Diagram1-Combination1 A26 - Headlight W/Plowlights, W/O LOWW, W/O Interrupt:Diagram1-Combination2 A26 - Headlight W/Plowlights, W/O LOWW, W/O Interrupt:Diagram1-Combination3 A26 - Headlight W/Plowlights, W/O LOWW, W/O Interrupt:Diagram1-Combination4 A26 - Headlights W/PlowLights, W/LOWW, W/Interrupt - 10 PIN CLK:Diagram1-Combination1 A26 - Headlights W/PlowLights, W/LOWW, W/Interrupt - 10 PIN CLK:Diagram1-Combination2 A26 - Headlights W/PlowLights, W/LOWW, W/Interrupt - 10 PIN CLK:Diagram1-Combination3 A26 - Headlights W/PlowLights, W/LOWW, W/Interrupt - 10 PIN CLK:Diagram1-Combination4 A26 - Headlights W/PlowLights, W/O LOWW, W/Interrupt - 10 PIN CLK:Diagram1-Combination1 A26 - Headlights W/PlowLights, W/O LOWW, W/Interrupt - 10 PIN CLK:Diagram1-Combination2 A26 - Headlights W/PlowLights, W/O LOWW, W/Interrupt - 10 PIN CLK:Diagram1-Combination3 A26 - Headlights W/PlowLights, W/O LOWW, W/Interrupt - 10 PIN CLK:Diagram1-Combination4 B6.7 - Headlight W/Plowlights W/LOWW W/O Headlight Interrupt -10 PIN CLK:Diagram1 B6.7 - Headlight W/Plowlights W/LOWW W/O Headlight Interrupt -10 PIN CLK:Diagram2 B6.7 - Headlight W/Plowlights W/LOWW W/O Headlight Interrupt -10 PIN CLK:Diagram3 B6.7 - Headlight W/Plowlights W/LOWW W/O Headlight Interrupt -10 PIN CLK:Diagram4

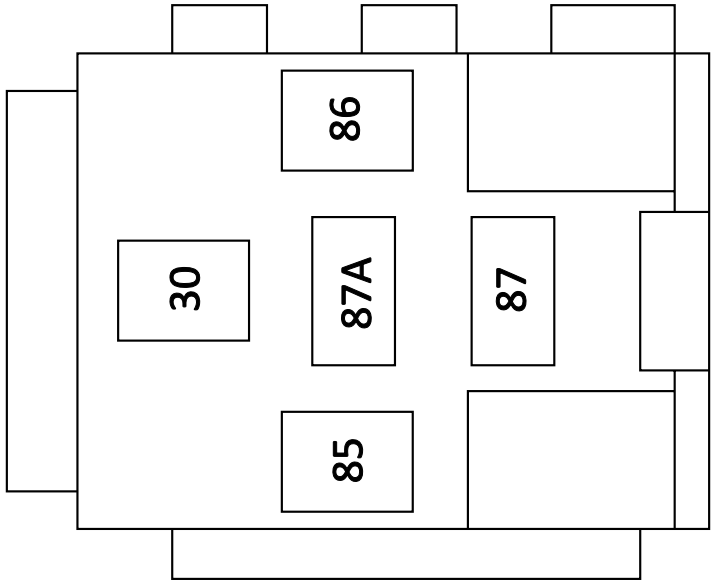

B6.7 - Headlight W/Plowlights W/LOWW W/O Headlight Interrupt -10 PIN CLK:Diagram5
B6.7 - Headlight W/Plowlights W/LOWW W/O Headlight Interrupt -10 PIN CLK:Diagram6
B6.7 - Headlight W/Plowlights W/LOWW W/O Headlight Interrupt -10 PIN CLK:Diagram7
B6.7 - Headlight W/Plowlights W/LOWW W/O Headlight Interrupt -10 PIN CLK:Diagram8
B6.7 - Headlights W/PlowLights W/Headlight Interrupt -10PIN CLK W/LOWW W/Interrupt:Diagram1
B6.7 - Headlights W/PlowLights W/Headlight Interrupt -10PIN CLK W/LOWW W/Interrupt:Diagram2
B6.7 - Headlights W/PlowLights W/Headlight Interrupt -10PIN CLK W/LOWW W/Interrupt:Diagram3
B6.7 - Headlights W/PlowLights W/Headlight Interrupt -10PIN CLK W/LOWW W/Interrupt:Diagram4
B6.7 - Headlights W/PlowLights W/Headlight Interrupt -10PIN CLK W/LOWW W/Interrupt:Diagram5
B6.7 - Headlights W/PlowLights W/Headlight Interrupt -10PIN CLK W/LOWW W/Interrupt:Diagram6
B6.7 - Headlights W/PlowLights W/Headlight Interrupt -10PIN CLK W/LOWW W/Interrupt:Diagram7
B6.7 - Headlights W/PlowLights W/Headlight Interrupt -10PIN CLK W/LOWW W/Interrupt:Diagram8
B6.7 - Headlights W/Plowlights W/O Lights ON With Wipers (LOWW) W/O Headlights Interrupt:Diagram1
B6.7 - Headlights W/Plowlights W/O Lights ON With Wipers (LOWW) W/O Headlights Interrupt:Diagram2
B6.7 - Headlights W/Plowlights W/O Lights ON With Wipers (LOWW) W/O Headlights Interrupt:Diagram3
B6.7 - Headlights W/Plowlights W/O Lights ON With Wipers (LOWW) W/O Headlights Interrupt:Diagram4
B6.7 - Headlights W/Plowlights W/O Lights ON With Wipers (LOWW) W/O Headlights Interrupt:Diagram5
B6.7 - Headlights W/Plowlights W/O Lights ON With Wipers (LOWW) W/O Headlights Interrupt:Diagram6
B6.7 - Headlights W/Plowlights W/O Lights ON With Wipers (LOWW) W/O Headlights Interrupt:Diagram7
B6.7 - Headlights W/Plowlights W/O Lights ON With Wipers (LOWW) W/O Headlights Interrupt:Diagram8
B6.7 - Headlights W/PlowLights W/O Lights ON with wipers (LOWW) W/ Headlights Interrupt:Diagram1
B6.7 - Headlights W/PlowLights W/O Lights ON with wipers (LOWW) W/ Headlights Interrupt:Diagram2

B6.7 - Headlights W/PlowLights W/O Lights ON with wipers (LOWW) W/ Headlights Interrupt:Diagram3
B6.7 - Headlights W/PlowLights W/O Lights ON with wipers (LOWW) W/ Headlights Interrupt:Diagram4
B6.7 - Headlights W/PlowLights W/O Lights ON with wipers (LOWW) W/ Headlights Interrupt:Diagram5
B6.7 - Headlights W/PlowLights W/O Lights ON with wipers (LOWW) W/ Headlights Interrupt:Diagram6
B6.7 - Headlights W/PlowLights W/O Lights ON with wipers (LOWW) W/ Headlights Interrupt:Diagram7
B6.7 - Headlights W/PlowLights W/O Lights ON with wipers (LOWW) W/ Headlights Interrupt:Diagram8
L9 - Headlight W/Plowlights W/LOWW W/O Headlight Interrupt -10 PIN CLK:Diagram1
L9 - Headlight W/Plowlights W/LOWW W/O Headlight Interrupt -10 PIN CLK:Diagram2
L9 - Headlight W/Plowlights W/LOWW W/O Headlight Interrupt -10 PIN CLK:Diagram3
L9 - Headlight W/Plowlights W/LOWW W/O Headlight Interrupt -10 PIN CLK:Diagram4
L9 - Headlight W/Plowlights W/LOWW W/O Headlight Interrupt -10 PIN CLK:Diagram5
L9 - Headlight W/Plowlights W/LOWW W/O Headlight Interrupt -10 PIN CLK:Diagram6
L9 - Headlight W/Plowlights W/LOWW W/O Headlight Interrupt -10 PIN CLK:Diagram7
L9 - Headlight W/Plowlights W/LOWW W/O Headlight Interrupt -10 PIN CLK:Diagram8
L9 - Headlights W/PlowLights W/Headlight Interrupt -10PIN CLK W/LOWW W/Interrupt:Diagram1
L9 - Headlights W/PlowLights W/Headlight Interrupt -10PIN CLK W/LOWW W/Interrupt:Diagram2
L9 - Headlights W/PlowLights W/Headlight Interrupt -10PIN CLK W/LOWW W/Interrupt:Diagram3
L9 - Headlights W/PlowLights W/Headlight Interrupt -10PIN CLK W/LOWW W/Interrupt:Diagram4
L9 - Headlights W/PlowLights W/Headlight Interrupt -10PIN CLK W/LOWW W/Interrupt:Diagram5
L9 - Headlights W/PlowLights W/Headlight Interrupt -10PIN CLK W/LOWW W/Interrupt:Diagram6
L9 - Headlights W/PlowLights W/Headlight Interrupt -10PIN CLK W/LOWW W/Interrupt:Diagram7
L9 - Headlights W/PlowLights W/Headlight Interrupt -10PIN CLK W/LOWW W/Interrupt:Diagram8

L9 - Headlights W/Plowlights W/O Lights ON With Wipers (LOWW) W/O Headlights Interrupt:Diagram1
L9 - Headlights W/Plowlights W/O Lights ON With Wipers (LOWW) W/O Headlights Interrupt:Diagram2
L9 - Headlights W/Plowlights W/O Lights ON With Wipers (LOWW) W/O Headlights Interrupt:Diagram3
L9 - Headlights W/Plowlights W/O Lights ON With Wipers (LOWW) W/O Headlights Interrupt:Diagram4
L9 - Headlights W/Plowlights W/O Lights ON With Wipers (LOWW) W/O Headlights Interrupt:Diagram5
L9 - Headlights W/Plowlights W/O Lights ON With Wipers (LOWW) W/O Headlights Interrupt:Diagram6
L9 - Headlights W/Plowlights W/O Lights ON With Wipers (LOWW) W/O Headlights Interrupt:Diagram7
L9 - Headlights W/Plowlights W/O Lights ON With Wipers (LOWW) W/O Headlights Interrupt:Diagram8
L9 - Headlights W/PlowLights W/O Lights ON with wipers (LOWW) W/ Headlights Interrupt:Diagram1
L9 - Headlights W/PlowLights W/O Lights ON with wipers (LOWW) W/ Headlights Interrupt:Diagram2
L9 - Headlights W/PlowLights W/O Lights ON with wipers (LOWW) W/ Headlights Interrupt:Diagram3
L9 - Headlights W/PlowLights W/O Lights ON with wipers (LOWW) W/ Headlights Interrupt:Diagram4
L9 - Headlights W/PlowLights W/O Lights ON with wipers (LOWW) W/ Headlights Interrupt:Diagram5
L9 - Headlights W/PlowLights W/O Lights ON with wipers (LOWW) W/ Headlights Interrupt:Diagram6
L9 - Headlights W/PlowLights W/O Lights ON with wipers (LOWW) W/ Headlights Interrupt:Diagram7
L9 - Headlights W/PlowLights W/O Lights ON with wipers (LOWW) W/ Headlights Interrupt:Diagram8

Mates RLY-R_LB-1034-01-01A

Name	Terminal Part Number	V-Min	Name	Wire Part Number	Wire CSA	Wire Spec	Wire Material description	Wire Color Description	Wire Length	End2 Terminal Part Number	End2 Pin Name	End2 Connect or
1	-	-	YG53B	3510337 R1	1.91	14.0	Thin Wall XLPE Primary Cable	YELLOW 2	1595.0	-	H	J2-1604

Name	Terminal Part Number	V-Min	Name	Wire Part Number	Wire CSA	Wire Spec	Wire Material description	Wire Color Description	Wire Length	End2 Terminal Part Number	End2 Pin Name	End2 Connect or
2	-	-	YG96-GA	3510335 R1	0.79	18.0	Thin Wall XLPE Primary Cable	YELLOW 2	765.0	-	X	-
3	-	-	YG96B	3510335 R1	0.79	18.0	Thin Wall XLPE Primary Cable	YELLOW 2	345.0	-	X	-
4	-	-	YG53BC	3510337 R1	1.91	14.0	Thin Wall XLPE Primary Cable	YELLOW 2	1470.0	-	9	1700
5	-	-	YG53BA	3510337 R1	1.91	14.0	Thin Wall XLPE Primary Cable	YELLOW 2	1470.0	-	4	1700

Connector Name	1873
Part Number	593385C1
Instances	L9 - Transmission Power Take Off (Auto Trans with Lectradrive):Diagram1 L9 - Transmission Power Take Off (Lectrashift PTO with Manual Trans):Diagram1
Mates	RLY_Lectrashift_PTO_5047-0 8-01A

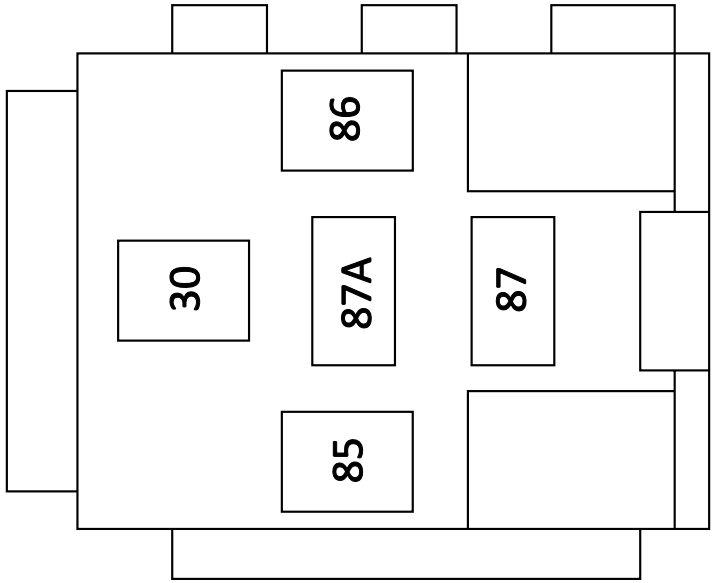

Name	Terminal Part Number	V-Min	Name	Wire Part Number	Wire CSA	Wire Spec	Wire Material description	Wire Color Description	Wire Length	End2 Terminal Part Number	End2 Pin Name	End2 Connect or
R1-30	-	-	HW14LP	2643698 R1	4.81	10.0	Std. Wall XLPE Primary Cable	RED	1310.0	-	12	1700
R1-85	-	-	HW12LC	3510323 R1	0.79	18.0	Thin Wall XLPE Primary Cable	PINK	1425.0	-	E11	J4-1601
R1-86	-	-	HW11-GCB	3510359 R1	0.79	18.0	Thin Wall XLPE Primary Cable	WHITE	970.0	-	-	-
R1-87	-	-	HW14LSC	3510368 R1	3.01	12.0	Thin Wall XLPE Primary Cable	RED	2065.0	-	12	1703M

Name	Terminal Part Number	V-Min	Name	Wire Part Number	Wire CSA	Wire Spec	Wire Material description	Wire Color Description	Wire Length	End2 Terminal Part Number	End2 Pin Name	End2 Connect or
R1-87	-	-	HW14BC	2643760 R1	1.16	16.0	Std. Wall XLPE Primary Cable	RED	640.0	-	1	9915

Connector Name	1874B
Part Number	3602747C1
Short Description	WORKSTAR WIF SENSOR
Instances	A26 - Water In Fuel (WIF) Davco N/ Heater:Diagram1 A26 - Water In Fuel (WIF) Davco N/ Heater:Diagram2 A26 - Water In Fuel (WIF) Davco N/ Heater:Diagram3 A26 - Water In Fuel (WIF) Davco N/ Heater:Diagram4 A26 - Water In Fuel (WIF) Davco N/ Heater:Diagram5 A26 - Water In Fuel (WIF) Davco N/ Heater:Diagram6 A26 - Water In Fuel (WIF) Davco N/ Heater:Diagram7 A26 - Water In Fuel (WIF) Davco N/ Heater:Diagram8 A26 - Water In Fuel (WIF) Davco N/ Heater:Diagram9 A26 - Water In Fuel (WIF) Davco W/ Heater:Diagram1 A26 - Water In Fuel (WIF) Davco W/ Heater:Diagram2 A26 - Water In Fuel (WIF) Davco W/ Heater:Diagram3 A26 - Water In Fuel (WIF) Davco W/ Heater:Diagram4 A26 - Water In Fuel (WIF) Davco W/ Heater:Diagram5 A26 - Water In Fuel (WIF) Davco W/ Heater:Diagram6 A26 - Water In Fuel (WIF) Davco W/ Heater:Diagram7 A26 - Water In Fuel (WIF) Davco W/ Heater:Diagram8 A26 - Water In Fuel (WIF) Davco W/ Heater:Diagram9
Mates	7112

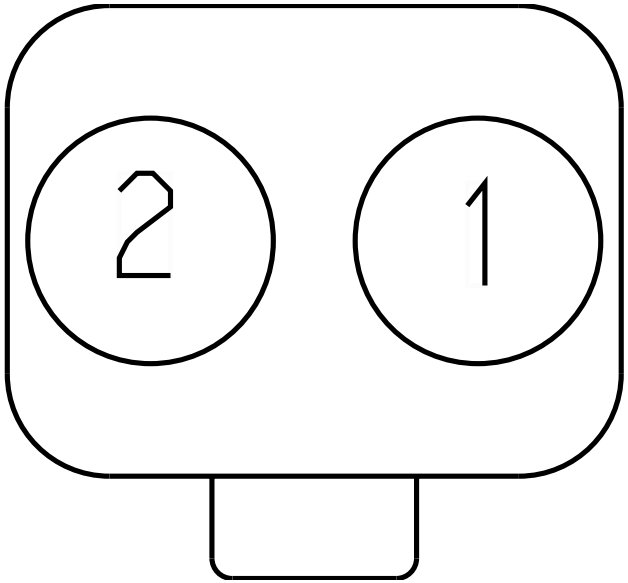

Name	Terminal Part Number	V-Min	Name	Wire Part Number	Wire CSA	Wire Spec	Wire Material description	Wire Color Description	Wire Length	End2 Terminal Part Number	End2 Pin Name	End2 Connect or
1	-	-	VB95W	3510329 R1	0.79	18.0	Thin Wall XLPE Primary Cable	TAN	1320.0	-	-	-
2	-	-	VB95-GF	3510359 R1	0.79	18.0	Thin Wall XLPE Primary Cable	WHITE	1750.0	-	55	6018

Connector Name 1901A
Part Number 4094648C1
Instances A26/B6.7/L9 - Cigar Lighter Aux APO:Diagram2
Mates DEV-APO-2002-01-01A

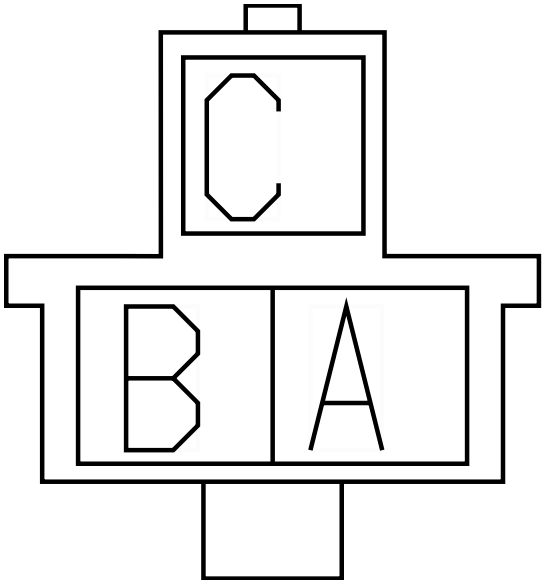

Name	Terminal Part Number	V-Min	Name	Wire Part Number	Wire CSA	Wire Spec	Wire Material description	Wire Color Description	Wire Length	End2 Terminal Part Number	End2 Pin Name	End2 Connect or
A	-	-	JE14UA	3510301 R1	1.91	14.0	Thin Wall XLPE Primary Cable	LIGHT GREEN	1465.0	-	-	-
C	-	-	JE11-GUD	3510358 R1	0.53	20.0	Thin Wall XLPE Primary Cable	WHITE	1760.0	-	-	-

Connector Name 1901

Part Number 3590298C1

Instances A26/B6.7/L9 - Standard APO Aux APO:Diagram1
A26/B6.7/L9 - Standard APO Aux APO:Diagram2
A26/B6.7/L9 - Standard APO Aux APO:Diagram3

Mates DEV-APO-2002-01-03A

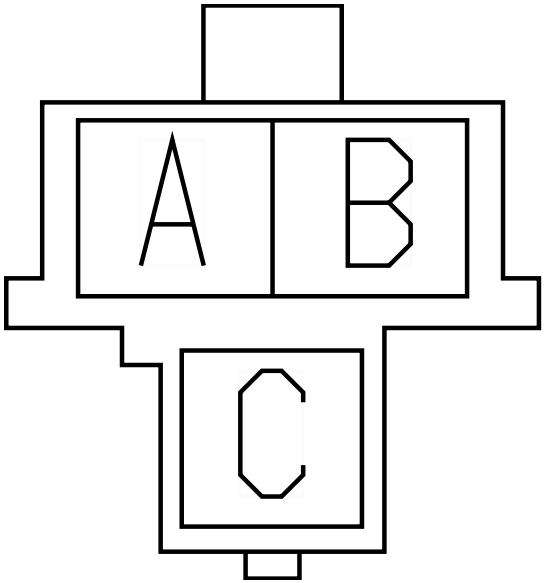

Name	Terminal Part Number	V-Min	Name	Wire Part Number	Wire CSA	Wire Spec	Wire Material description	Wire Color Description	Wire Length	End2 Terminal Part Number	End2 Pin Name	End2 Connect or
A	-	-	JE14UA	3510301 R1	1.91	14.0	Thin Wall XLPE Primary Cable	LIGHT GREEN	1465.0	-	-	-
A	-	-	JC84C	3510301 R1	1.91	14.0	Thin Wall XLPE Primary Cable	LIGHT GREEN	1715.0	-	-	-
A	-	-	JD86C2	3510301 R1	1.91	14.0	Thin Wall XLPE Primary Cable	LIGHT GREEN	1395.0	-	-	-
C	-	-	JC11-GAC	3510361 R1	1.91	14.0	Thin Wall XLPE Primary Cable	WHITE	1210.0	-	-	-

Name	Terminal Part Number	V-Min	Name	Wire Part Number	Wire CSA	Wire Spec	Wire Material description	Wire Color Description	Wire Length	End2 Terminal Part Number	End2 Pin Name	End2 Connector
C	-	-	JD11-GCE	3510361 R1	1.91	14.0	Thin Wall XLPE Primary Cable	WHITE	1270.0	-	-	-
C	-	-	JE11-GUD	3510358 R1	0.53	20.0	Thin Wall XLPE Primary Cable	WHITE	1760.0	-	-	-

Connector Name 1901
Part Number 4094648C1
Instances A26/B6.7/L9 - Cigar Lighter Aux APO:Diagram1
Mates DEV-APO-2002-01-03A

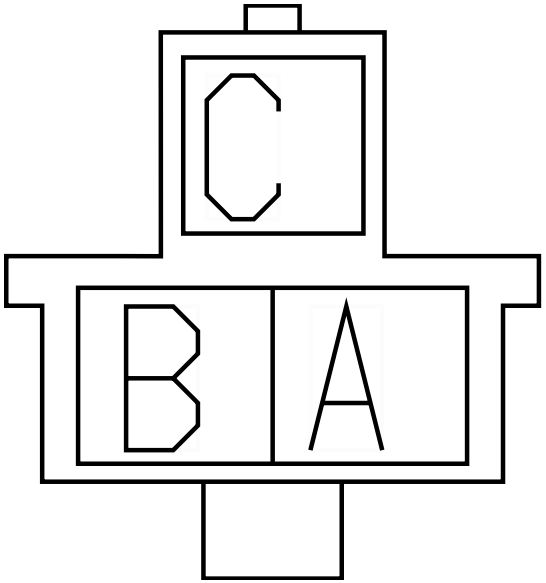

Name	Terminal Part Number	V-Min	Name	Wire Part Number	Wire CSA	Wire Spec	Wire Material description	Wire Color Description	Wire Length	End2 Terminal Part Number	End2 Pin Name	End2 Connect or
A	-	-	JC84C	3510301 R1	1.91	14.0	Thin Wall XLPE Primary Cable	LIGHT GREEN	1715.0	-	-	-
C	-	-	JC11-GAC	3510361 R1	1.91	14.0	Thin Wall XLPE Primary Cable	WHITE	1210.0	-	-	-

Connector Name	1902
Part Number	3517473C1
Instances	A26/B6.7/L9 - Banana Plugs Receptacle:Diagram1
Mates	DEV-Two_Post-2061-01-01A

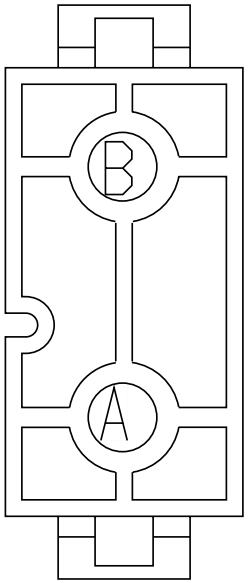

Name	Terminal Part Number	V-Min	Name	Wire Part Number	Wire CSA	Wire Spec	Wire Material description	Wire Color Description	Wire Length	End2 Terminal Part Number	End2 Pin Name	End2 Connect or
A	-	-	JB86C	3510301 R1	1.91	14.0	Thin Wall XLPE Primary Cable	LIGHT GREEN	1270.0	-	-	-
B	-	-	JB11-GCC	3510361 R1	1.91	14.0	Thin Wall XLPE Primary Cable	WHITE	2145.0	-	-	-

Connector Name 1903B
Part Number 4094648C1
Instances A26/B6.7/L9 - Cigar Lighter Aux APO:Diagram3

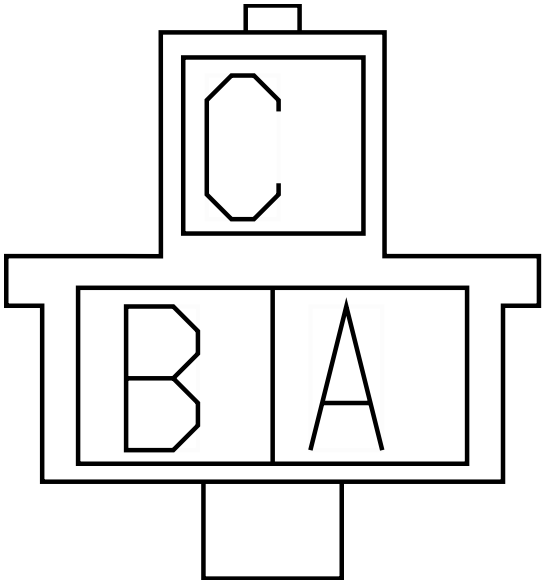

Name	Terminal Part Number	V-Min	Name	Wire Part Number	Wire CSA	Wire Spec	Wire Material description	Wire Color Description	Wire Length	End2 Terminal Part Number	End2 Pin Name	End2 Connect or
A	-	-	JD86C2	3510301 R1	1.91	14.0	Thin Wall XLPE Primary Cable	LIGHT GREEN	1395.0	-	-	-
C	-	-	JD11-GCE	3510361 R1	1.91	14.0	Thin Wall XLPE Primary Cable	WHITE	1270.0	-	-	-

Connector Name	1903
Part Number	3590298C1
Instances	A26/B6.7/L9 - Cigar Lighter:Diagram1 A26/B6.7/L9 - Standard APO:Diagram1 A26/B6.7/L9 - Standard APO Aux APO:Diagram1 A26/B6.7/L9 - Standard APO Aux APO:Diagram2 A26/B6.7/L9 - Standard APO Aux APO:Diagram3
Mates	DEV-APO-2002-01-01A

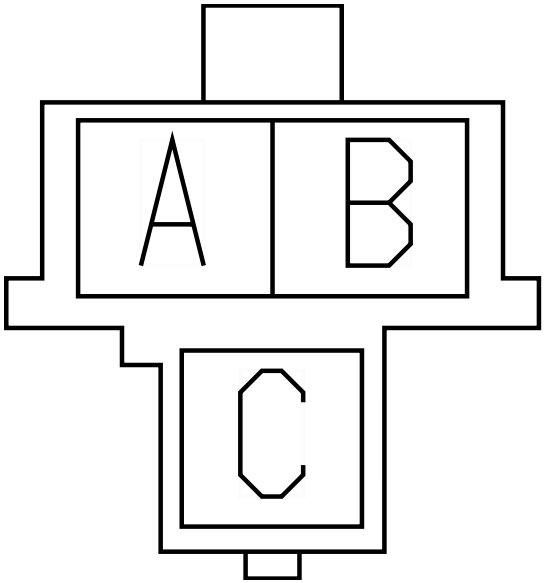

Name	Terminal Part Number	V-Min	Name	Wire Part Number	Wire CSA	Wire Spec	Wire Material description	Wire Color Description	Wire Length	End2 Terminal Part Number	End2 Pin Name	End2 Connect or
A	-	-	JA84	3510301 R1	1.91	14.0	Thin Wall XLPE Primary Cable	LIGHT GREEN	1420.0	-	-	-
C	-	-	JA11-GAF	3510361 R1	1.91	14.0	Thin Wall XLPE Primary Cable	WHITE	1910.0	-	-	-

Connector Name	1903
Part Number	4094648C1
Instances	A26/B6.7/L9 - Cigar Lighter Aux APO:Diagram1 A26/B6.7/L9 - Cigar Lighter Aux APO:Diagram2 A26/B6.7/L9 - Cigar Lighter Aux APO:Diagram3
Mates	DEV-Cigar_Lighter-2002-01- 02A

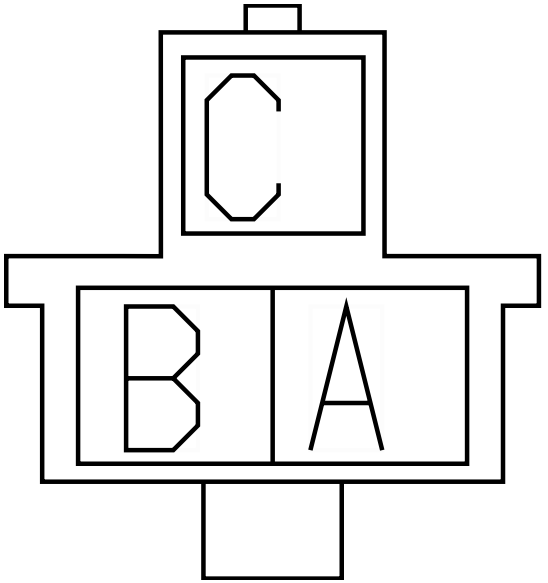

Name	Terminal Part Number	V-Min	Name	Wire Part Number	Wire CSA	Wire Spec	Wire Material description	Wire Color Description	Wire Length	End2 Terminal Part Number	End2 Pin Name	End2 Connect or
A	-	-	JA84	3510301 R1	1.91	14.0	Thin Wall XLPE Primary Cable	LIGHT GREEN	1420.0	-	-	-
C	-	-	JA11-GAF	3510361 R1	1.91	14.0	Thin Wall XLPE Primary Cable	WHITE	1910.0	-	-	-

Connector Name	1904
Part Number	3768147C1
Instances	A26/B6.7/L9 - One USB:Diagram1 A26/B6.7/L9 - Two USB:Diagram1 A26/B6.7/L9 - Two USB:Diagram2
Mates	DEV-USB-2060-01-01A

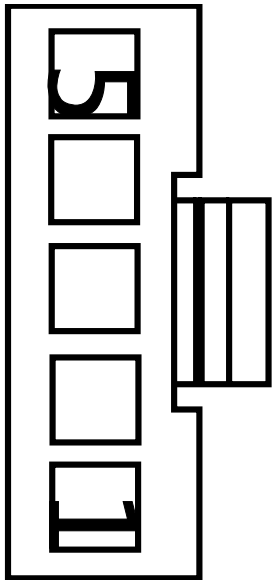

Name	Terminal Part Number	V-Min	Name	Wire Part Number	Wire CSA	Wire Spec	Wire Material description	Wire Color Description	Wire Length	End2 Terminal Part Number	End2 Pin Name	End2 Connect or
1	-	-	JA11-GUC	3510358 R1	0.53	20.0	Thin Wall XLPE Primary Cable	WHITE	1910.0	-	-	-
2	-	-	JA13UA	3510322 R1	0.53	20.0	Thin Wall XLPE Primary Cable	PINK	1615.0	-	-	-

Connector Name	1905A
Part Number	3768147C1
Instances	A26/B6.7/L9 - Two USB:Diagram1 A26/B6.7/L9 - Two USB:Diagram2
Mates	DEV-USB-2060-01-02A

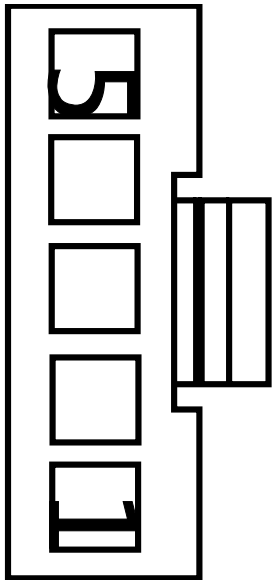

Name	Terminal Part Number	V-Min	Name	Wire Part Number	Wire CSA	Wire Spec	Wire Material description	Wire Color Description	Wire Length	End2 Terminal Part Number	End2 Pin Name	End2 Connect or
1	-	-	JC11-GUC	3510358 R1	0.53	20.0	Thin Wall XLPE Primary Cable	WHITE	1210.0	-	-	-
1	-	-	JE11-GUB	3510358 R1	0.53	20.0	Thin Wall XLPE Primary Cable	WHITE	1760.0	-	-	-
2	-	-	JE13U	3510322 R1	0.53	20.0	Thin Wall XLPE Primary Cable	PINK	1270.0	-	-	-
2	-	-	JC13UC	3510322 R1	0.53	20.0	Thin Wall XLPE Primary Cable	PINK	1520.0	-	-	-

Connector Name 1913A

Part Number BLUNT_SL_VC

Instances B6.7 - 2-Way Radio:Diagram2
L9 - 2-Way Radio:Diagram2

Name	Terminal Part Number	V-Min	Name	Wire Part Number	Wire CSA	Wire Spec	Wire Material description	Wire Color Description	Wire Length	End2 Terminal Part Number	End2 Pin Name	End2 Connect or
A	-	-	CZ14HC	2643760 R1	1.16	16.0	Std. Wall XLPE Primary Cable	RED	2620.0	-	A	6900
B	-	-	CZ86P	2643678 R1	1.16	16.0	Std. Wall XLPE Primary Cable	LIGHT GREEN	2620.0	-	C	6900
C	-	-	CZ11-GAP	2643681 R1	1.16	16.0	Std. Wall XLPE Primary Cable	WHITE	2620.0	-	B	6900

Connector Name 1913

Part Number BLUNT_SL_VC

Instances A26 - 2-Way Radio:Diagram1
A26 - 2-Way Radio:Diagram2
B6.7 - 2-Way Radio:Diagram1
L9 - 2-Way Radio:Diagram1

Mates BLNT 2-WAY RADIO 2022-01-01A

Name	Terminal Part Number	V-Min	Name	Wire Part Number	Wire CSA	Wire Spec	Wire Material description	Wire Color Description	Wire Length	End2 Terminal Part Number	End2 Pin Name	End2 Connector
A	-	-	SH14HCA	3510367 R1	1.91	14.0	Thin Wall XLPE Primary Cable	RED	4280.0	-	1	1703M
A	-	-	CZ14HC	2643760 R1	1.16	16.0	Std. Wall XLPE Primary Cable	RED	2620.0	-	A	6900
A	-	-	SK14HC	3510367 R1	1.91	14.0	Thin Wall XLPE Primary Cable	RED	1505.0	-	9	1702
B	-	-	SH86P	3510300 R1	1.16	16.0	Thin Wall XLPE Primary Cable	LIGHT GREEN	5440.0	-	-	-
B	-	-	CZ86P	2643678 R1	1.16	16.0	Std. Wall XLPE Primary Cable	LIGHT GREEN	2620.0	-	C	6900
C	-	-	SH11-GAP	3510361 R1	1.91	14.0	Thin Wall XLPE Primary Cable	WHITE	4280.0	-	2	1703M
C	-	-	CZ11-GAP	2643681 R1	1.16	16.0	Std. Wall XLPE Primary Cable	WHITE	2620.0	-	B	6900

Name	Terminal Part Number	V-Min	Name	Wire Part Number	Wire CSA	Wire Spec	Wire Material description	Wire Color Description	Wire Length	End2 Terminal Part Number	End2 Pin Name	End2 Connect or
C	-	-	SK11-GAP	3510361 R1	1.91	14.0	Thin Wall XLPE Primary Cable	WHITE	4525.0	-	B	6900

Connector Name 1916A

Part Number 2005836C1

Instances
B6.7 - Speaker:Four Speakers Daycab w/BT w/QC:Diagram1
B6.7 - Speakers:Four Speakers Daycab n/BT w/QC:Diagram1
B6.7 - Speakers:Two Speakers n/BT w/QC:Diagram1
B6.7 - Speakers:Two Speakers w/BT w/QC:Diagram1
L9 - Speaker:Four Speakers Daycab w/BT w/QC:Diagram1
L9 - Speakers:Four Speakers Daycab n/BT w/QC:Diagram1
L9 - Speakers:Two Speakers n/BT w/QC:Diagram1
L9 - Speakers:Two Speakers w/BT w/QC:Diagram1

Mates SW-SPKR-2033-01-02A

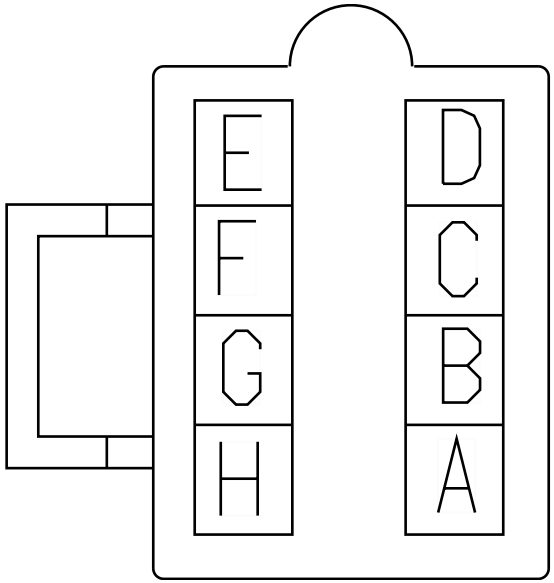

Name	Terminal Part Number	V-Min	Name	Wire Part Number	Wire CSA	Wire Spec	Wire Material description	Wire Color Description	Wire Length	End2 Terminal Part Number	End2 Pin Name	End2 Connect or
A	-	-	MQ86H	3510299 R1	0.79	18.0	Thin Wall XLPE Primary Cable	LIGHT GREEN	1265.0	-	13	1300
B	-	-	MQ86J	3510299 R1	0.79	18.0	Thin Wall XLPE Primary Cable	LIGHT GREEN	1265.0	-	14	1300
F	-	-	MQ86HB	3510299 R1	0.79	18.0	Thin Wall XLPE Primary Cable	LIGHT GREEN	270.0	-	C	3206M
G	-	-	MQ86JB	3510299 R1	0.79	18.0	Thin Wall XLPE Primary Cable	LIGHT GREEN	270.0	-	D	3206M

Connector Name	1917F
Part Number	188393R1
Instances	A26 - Lift Axle Controls (Center Pedestal Controls f/ 2 Lift Axles):Diagram1 A26 - Lift Axle Controls (Center Pedestal Controls f/ 1 lift axle):Diagram1 A26 - Lift Axle Controls (Center Pedestal Controls f/ 1 lift axle):Diagram2 A26 - Lift Axle Controls (Center Pedestal Controls f/ 3 lift axles):Diagram1 L9 - Lift Axle Controls (Center Pedestal Controls f/ 1 lift axle):Diagram1 L9 - Lift Axle Controls (Center Pedestal Controls f/ 1 lift axle):Diagram2 L9 - Lift Axle Controls (Center Pedestal Controls f/ 2 Lift Axles):Diagram1 L9 - Lift Axle Controls (Center Pedestal Controls f/ 3 lift axles):Diagram1
Mates	PAN-Lift_Axle_Controls-300 5-04-01A

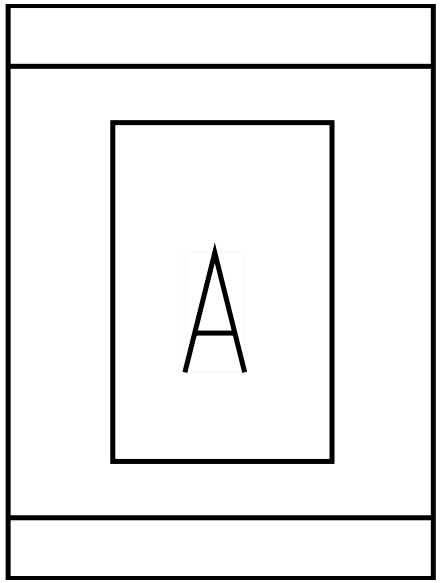

Name	Terminal Part Number	V-Min	Name	Wire Part Number	Wire CSA	Wire Spec	Wire Material description	Wire Color Description	Wire Length	End2 Terminal Part Number	End2 Pin Name	End2 Connect or
A	-	-	T71N	2643670 R1	0.79	18.0	Std. Wall XLPE Primary Cable	BLACK	2280.0	-	E	9761M

Connector Name 1923

Part Number BLUNT_SL_VC

Instances A26 - TEM Electric Trailer Brake Controller Activated Stop LT:Diagram1
A26 - TEM Electric Trailer Brake Controller Activated Stop LT (Option2):Diagram1
B6.7 - TEM Electric Trailer Brake Controller Activated Stop LT Option 2:Diagram1
B6.7 - TEM _Electric Trailer Brake Controller Activated Stop LT Option 1:Diagram1
L9 - TEM Electric Trailer Brake Controller Activated Stop LT:Diagram1

Mates BLUNT_CUST_ETB CONTROLLER_MODULE_3043-01- 01A

Name	Terminal Part Number	V-Min	Name	Wire Part Number	Wire CSA	Wire Spec	Wire Material description	Wire Color Description	Wire Length	End2 Terminal Part Number	End2 Pin Name	End2 Connect or
A	-	-	TJ14NS	3510296 R1	3.01	12.0	Thin Wall XLPE Primary Cable	BLACK	2050.0	-	-	-
B	-	-	TJ70E	3510369 R1	4.81	10.0	Thin Wall XLPE Primary Cable	RED	820.0	-	X	-
C	-	-	TJ94T	3510357 R1	4.81	10.0	Thin Wall XLPE Primary Cable	DARK BLUE	1300.0	-	10	1701
D	-	-	TJ11-GAM	3510360 R1	1.16	16.0	Thin Wall XLPE Primary Cable	WHITE	920.0	-	-	-

Connector Name	1926
Part Number	3544677C1
Instances	A26/B6.7/L9 - Driver and Passenger Seats - RollTek (Hard Wired):Diagram1 A26/B6.7/L9 - Seats (RollTek) Drivers Seat Only (Hard Wired) - Leather:Diagram1 A26/B6.7/L9 - Seats (RollTek) Drivers Seat Only (Hard Wired) - Mordular:Diagram1 A26/B6.7/L9 - Seats (RollTek) Drivers Seat Only (Hard Wired) - Vinyl:Diagram1
Mates	DEV-DRIVER_SEAT_ROLTEK-01

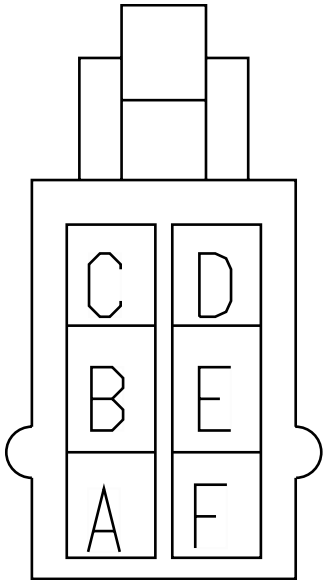

Name	Terminal Part Number	V-Min	Name	Wire Part Number	Wire CSA	Wire Spec	Wire Material description	Wire Color Description	Wire Length	End2 Terminal Part Number	End2 Pin Name	End2 Connector
A	-	-	DL13BA	3510323 R1	0.79	18.0	Thin Wall XLPE Primary Cable	PINK	3110.0	-	X	-
B	-	-	DL11-GAR	3510359 R1	0.79	18.0	Thin Wall XLPE Primary Cable	WHITE	3470.0	-	-	-
C	-	-	-	-	-	-	-	-	-	-	-	-
D	-	-	-	-	-	-	-	-	-	-	-	-
E	-	-	DL179	3510359 R1	0.79	18.0	Thin Wall XLPE Primary Cable	WHITE	2740.0	-	X	-

Connector Name	1935N
Part Number	3683465C1
Instances	A26 - Body J1939 (250kbps):A26 - Body J1939 (250Kbps) A26 - CAN Layout:Body Standard J1939 (250Kbps) B6.7 - Body J1939 (250kbps):B6.7 - Body J1939 (250Kbps) B6.7 - CAN Layout:Body Standard J1939 (250Kbps) L9 - Body J1939 (250kbps):L9 - Body J1939 (250Kbps) L9 - CAN Layout:Body Standard J1939 (250Kbps)
Mates	TERMINATING RESISTOR

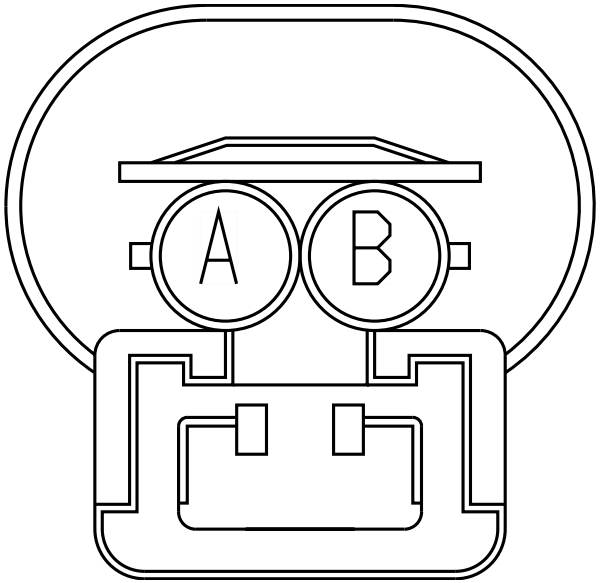

Name	Terminal Part Number	V-Min	Name	Wire Part Number	Wire CSA	Wire Spec	Wire Material description	Wire Color Description	Wire Length	End2 Terminal Part Number	End2 Pin Name	End2 Connect or
A	-	-	WIRE722750	-	0.0	-	-	-	0.0	-	-	-
A	-	-	WIRE728836	-	0.0	-	-	-	0.0	-	F	A01_250M
A	-	-	WIRE720117	-	0.0	-	-	-	0.0	-	G	1025
B	-	-	WIRE722748	-	0.0	-	-	-	0.0	-	-	-
B	-	-	WIRE728838	-	0.0	-	-	-	0.0	-	E	A01_250M
B	-	-	WIRE720116	-	0.0	-	-	-	0.0	-	F	1025

Connector Name	1938M
Part Number	3554818C1
Instances	A26 - Telematics (PEOPLE NET, DAYCAB):Diagram1 L9 - Telematics (PEOPLE NET DAYCAB):Diagram1
Mates	MODU-PEOPLENET_CONN-2035-0 5-05A

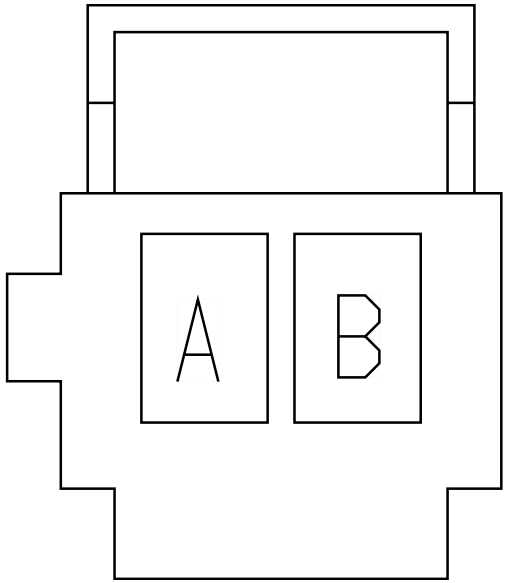

Name	Terminal Part Number	V-Min	Name	Wire Part Number	Wire CSA	Wire Spec	Wire Material description	Wire Color Description	Wire Length	End2 Terminal Part Number	End2 Pin Name	End2 Connect or
A	-	-	MM11-GBE	3510361 R1	1.91	14.0	Thin Wall XLPE Primary Cable	WHITE	685.0	-	-	-
B	-	-	MM14EA	2643686 R1	1.91	14.0	Std. Wall XLPE Primary Cable	RED	2820.0	-	X	-

Connector Name	1939M
Part Number	3553404C1
Instances	A26 - CAN Layout:Telematics J1708 A26 - Telematics (PEOPLE NET, DAYCAB):Diagram1 A26 - Telematics J1708 (9.6kbps):A26 - Telematics J1708 (9.6kbps) B6.7 - Body J1939 (250kbps):B6.7 - Body J1939 (250Kbps) B6.7 - CAN Layout:Body Standard J1939 (250Kbps) B6.7 - CAN Layout:Telematics J1708 B6.7 - Telematics J1708 (9.6kbps):B6.7 - Telematics J1708 L9 - Body J1939 (250kbps):L9 - Body J1939 (250Kbps) L9 - CAN Layout:Body Standard J1939 (250Kbps) L9 - CAN Layout:Telematics J1708 L9 - Telematics (PEOPLE NET DAYCAB):Diagram1 L9 - Telematics J1708 (9.6kbps):Telematics J1708 (9.6kbps)
Mates	MODU-PEOPLENET_VID-2035-05 -05A

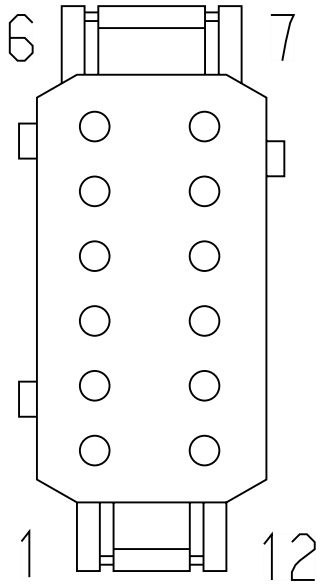

Name	Terminal Part Number	V-Min	Name	Wire Part Number	Wire CSA	Wire Spec	Wire Material description	Wire Color Description	Wire Length	End2 Terminal Part Number	End2 Pin Name	End2 Connect or
4	-	-	WIRE722853	-	0.0	-	-	-	0.0	-	E	1660
4	-	-	WIRE565820	-	0.0	-	-	-	0.0	-	E	1660
4	-	-	-	-	-	-	-	-	-	-	-	-
4	-	-	WIRE722853	-	0.0	-	-	-	0.0	-	-	-
5	-	-	WIRE722847	-	0.0	-	-	-	0.0	-	E	1661
5	-	-	WIRE565821	-	0.0	-	-	-	0.0	-	E	1661
5	-	-	-	-	-	-	-	-	-	-	-	-
11	-	-	WIRE722828	-	0.0	-	-	-	0.0	-	E	1025
11	-	-	WIRE565816	-	0.0	-	-	-	0.0	-	E	1025

Name	Terminal Part Number	V-Min	Name	Wire Part Number	Wire CSA	Wire Spec	Wire Material description	Wire Color Description	Wire Length	End2 Terminal Part Number	End2 Pin Name	End2 Connect or
11	-	-	-	-	-	-	-	-	-	-	-	-
12	-	-	WIRE722830	-	0.0	-	-	-	0.0	-	H	1025
12	-	-	WIRE565817	-	0.0	-	-	-	0.0	-	H	1025
12	-	-	-	-	-	-	-	-	-	-	-	-

Connector Name	1939-125A
Part Number	3683465C1
Instances	A26 - CAN Layout:HMI Standard J1939 (125Kbps) A26 - Low Speed J1939 (125Kbps):A26 - HMI J1939 (125Kbps) B6.7 - CAN Layout:HMI Standard J1939 (125Kbps) B6.7 - Low Speed J1939 (125kbps):B6.7 - Low Speed J1939 (125kbps) L9 - CAN Layout:HMI Standard J1939 (125Kbps) L9 - Low Speed J1939 (125kbps):L9 - Low Speed J1939 (125Kbps)

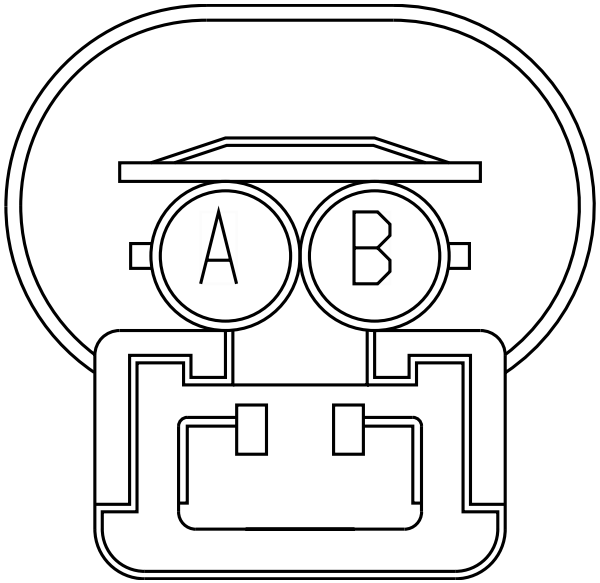

Name	Terminal Part Number	V-Min	Name	Wire Part Number	Wire CSA	Wire Spec	Wire Material description	Wire Color Description	Wire Length	End2 Terminal Part Number	End2 Pin Name	End2 Connect or
A	-	-	WIRE1637	-	0.0	-	-	-	0.0	-	PIN1	-
B	-	-	WIRE1638	-	0.0	-	-	-	0.0	-	PIN1	-

Connector Name 1939-125B

Part Number 3683465C1

Instances A26 - CAN Layout:HMI Standard J1939 (125Kbps)
A26 - Low Speed J1939 (125Kbps):A26 - HMI J1939 (125Kbps)
B6.7 - CAN Layout:HMI Standard J1939 (125Kbps)
B6.7 - Low Speed J1939 (125kbps):B6.7 - Low Speed J1939 (125kbps)
L9 - CAN Layout:HMI Standard J1939 (125Kbps)
L9 - Low Speed J1939 (125kbps):L9 - Low Speed J1939 (125Kbps)

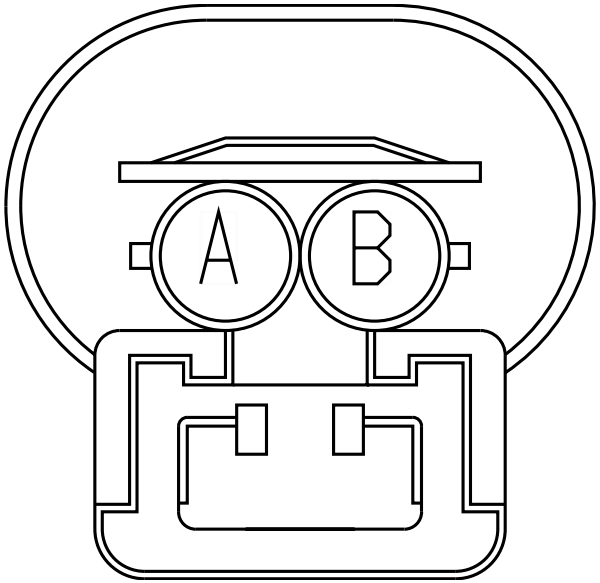

Name	Terminal Part Number	V-Min	Name	Wire Part Number	Wire CSA	Wire Spec	Wire Material description	Wire Color Description	Wire Length	End2 Terminal Part Number	End2 Pin Name	End2 Connect or
A	-	-	WIRE1655	-	0.0	-	-	-	0.0	-	PIN1	-
B	-	-	WIRE1656	-	0.0	-	-	-	0.0	-	PIN1	-

Connector Name 1939-125C

Part Number 3683465C1

Instances A26 - CAN Layout:HMI Standard J1939 (125Kbps)
A26 - Low Speed J1939 (125Kbps):A26 - HMI J1939 (125Kbps)
B6.7 - CAN Layout:HMI Standard J1939 (125Kbps)
B6.7 - Low Speed J1939 (125kbps):B6.7 - Low Speed J1939 (125kbps)
L9 - CAN Layout:HMI Standard J1939 (125Kbps)
L9 - Low Speed J1939 (125kbps):L9 - Low Speed J1939 (125Kbps)

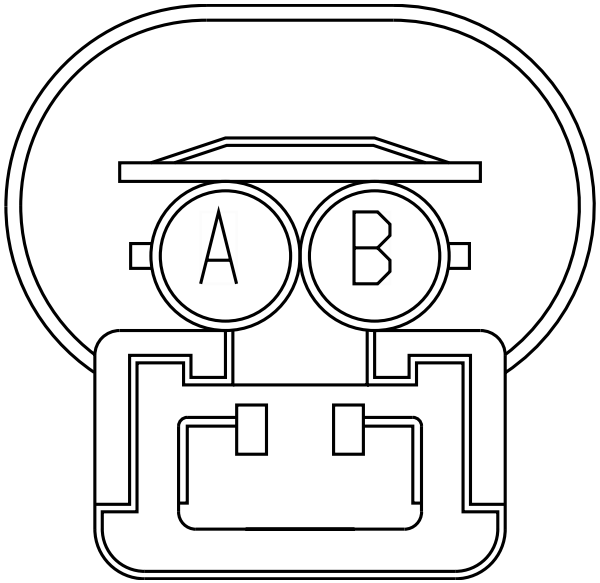

Name	Terminal Part Number	V-Min	Name	Wire Part Number	Wire CSA	Wire Spec	Wire Material description	Wire Color Description	Wire Length	End2 Terminal Part Number	End2 Pin Name	End2 Connect or
A	-	-	WIRE565809	-	0.0	-	-	-	0.0	-	X	-
A	-	-	WIRE722886	-	0.0	-	-	-	0.0	-	X	-
B	-	-	WIRE565808	-	0.0	-	-	-	0.0	-	X	-
B	-	-	WIRE722887	-	0.0	-	-	-	0.0	-	X	-

Connector Name 1939-250A

Part Number 3683465C1

Instances A26 - Cab J1939 (250Kbps):A26 - Cab J1939 (250Kbps)
A26 - CAN Layout:Cab Standard J1939 (250Kbps)
B6.7 - Cab J1939 (250kbps):B6.7 - Cab J1939 (250Kbps)
B6.7 - CAN Layout:Cab Standard J1939 (250Kbps)
L9 - Cab J1939 (250kbps):L9 - Cab J1939 (250Kbps)
L9 - CAN Layout:Cab Standard J1939 (250Kbps)

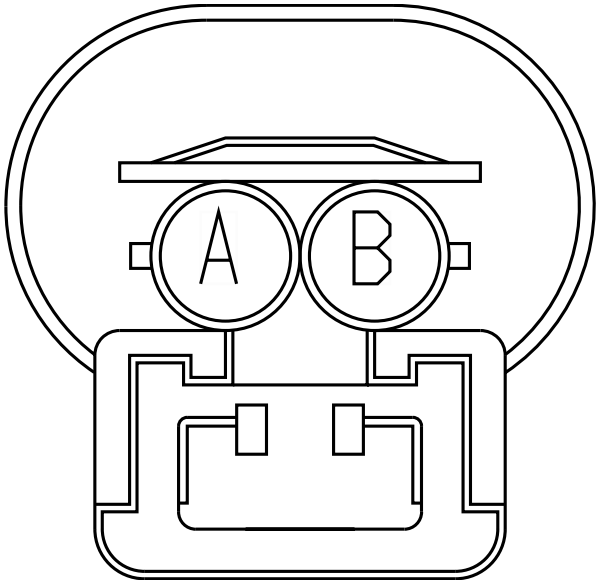

Name	Terminal Part Number	V-Min	Name	Wire Part Number	Wire CSA	Wire Spec	Wire Material description	Wire Color Description	Wire Length	End2 Terminal Part Number	End2 Pin Name	End2 Connect or
A	-	-	WIRE720028	-	0.0	-	-	-	0.0	-	PIN1	-
B	-	-	WIRE720030	-	0.0	-	-	-	0.0	-	PIN1	-

Connector Name 1939-250B

Part Number 3683465C1

Instances A26 - Cab J1939 (250Kbps):A26 - Cab J1939 (250Kbps)
A26 - CAN Layout:Cab Standard J1939 (250Kbps)
B6.7 - Cab J1939 (250kbps):B6.7 - Cab J1939 (250Kbps)
B6.7 - CAN Layout:Cab Standard J1939 (250Kbps)
L9 - Cab J1939 (250kbps):L9 - Cab J1939 (250Kbps)
L9 - CAN Layout:Cab Standard J1939 (250Kbps)

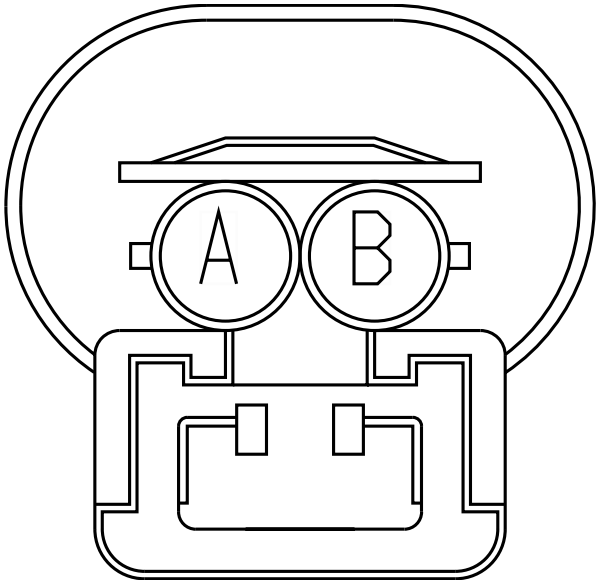

Name	Terminal Part Number	V-Min	Name	Wire Part Number	Wire CSA	Wire Spec	Wire Material description	Wire Color Description	Wire Length	End2 Terminal Part Number	End2 Pin Name	End2 Connect or
A	-	-	WIRE720041	-	0.0	-	-	-	0.0	-	PIN1	-
A	-	-	WIRE735286	-	0.0	-	-	-	0.0	-	PIN1	-
B	-	-	WIRE720046	-	0.0	-	-	-	0.0	-	PIN1	-
B	-	-	WIRE735287	-	0.0	-	-	-	0.0	-	PIN1	-

Connector Name	1939
Part Number	2011340C1
Instances	A26 - Telematics (PEOPLE NET, DAYCAB):Diagram1 L9 - Telematics (PEOPLE NET DAYCAB):Diagram1
Mates	MODU-PEOPLENET_COMM-2035-0 5-05A

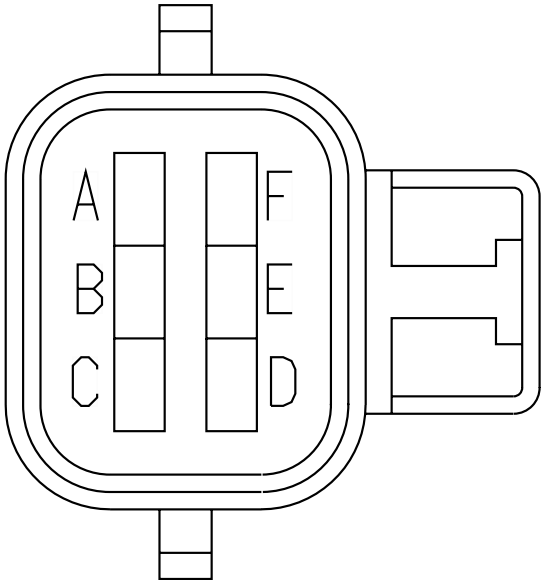

Name	Terminal Part Number	V-Min	Name	Wire Part Number	Wire CSA	Wire Spec	Wire Material description	Wire Color Description	Wire Length	End2 Terminal Part Number	End2 Pin Name	End2 Connect or
C	-	-	MM14ED	2643759 R1	0.79	18.0	Std. Wall XLPE Primary Cable	RED	4350.0	-	X	-
D	-	-	MM11-GBH	3510359 R1	0.79	18.0	Thin Wall XLPE Primary Cable	WHITE	2215.0	-	-	-
E	-	-	MM13EE	3510323 R1	0.79	18.0	Thin Wall XLPE Primary Cable	PINK	4955.0	-	-	-

Connector Name 1939_250C

Part Number 3683465C1

Instances B6.7 - Body J1939 (250kbps):B6.7 - Body J1939 (250Kbps)
B6.7 - CAN Layout:Body Standard J1939 (250Kbps)
L9 - Body J1939 (250kbps):L9 - Body J1939 (250Kbps)
L9 - CAN Layout:Body Standard J1939 (250Kbps)

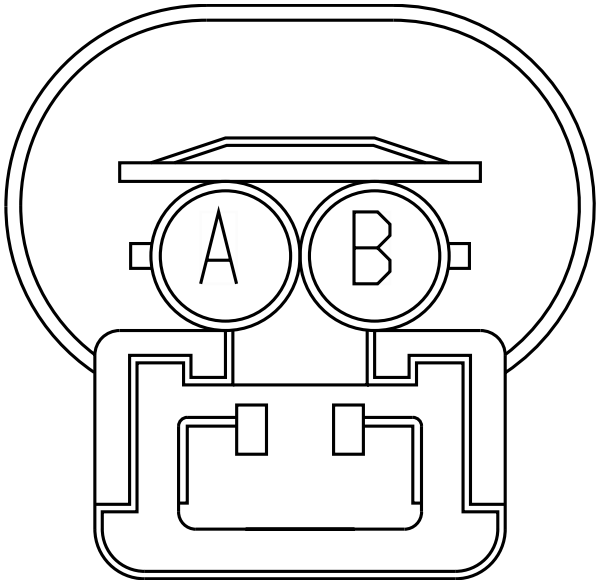

Name	Terminal Part Number	V-Min	Name	Wire Part Number	Wire CSA	Wire Spec	Wire Material description	Wire Color Description	Wire Length	End2 Terminal Part Number	End2 Pin Name	End2 Connect or
A	-	-	WIRE722863	-	0.0	-	-	-	0.0	-	-	-
B	-	-	WIRE722865	-	0.0	-	-	-	0.0	-	-	-

Connector Name 1939_500K-250K
Part Number 3683465C1
Instances A26 - CAN Layout:Powertrain Standard J1939 (500Kbps)

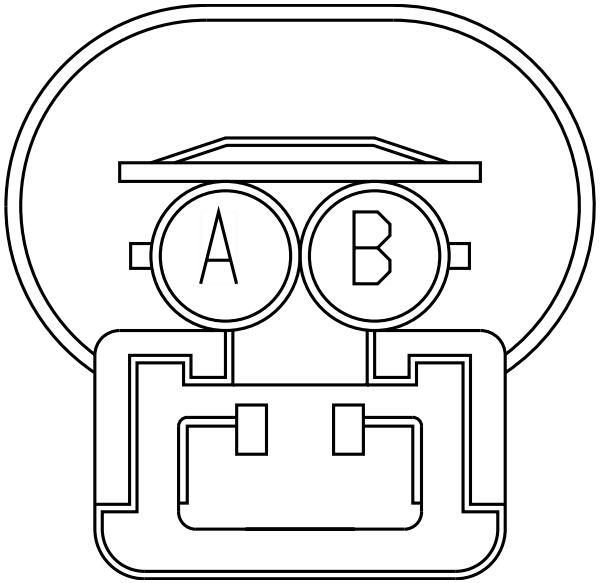

Name	Terminal Part Number	V-Min	Name	Wire Part Number	Wire CSA	Wire Spec	Wire Material description	Wire Color Description	Wire Length	End2 Terminal Part Number	End2 Pin Name	End2 Connect or
A	-	-	WIRE720112	-	0.0	-	-	-	0.0	-	PIN1	-
B	-	-	WIRE720110	-	0.0	-	-	-	0.0	-	PIN1	-

Connector Name 1940

Part Number BLUNT_SL_VC

Instances A26 - I/O Expansion:Diagram1
B6.7 - I/O Expansion:Diagram1
L9 - I/O Expansion:Diagram1

Mates BLNT-IO_EXPANDER-5083-01-0 1A

Name	Terminal Part Number	V-Min	Name	Wire Part Number	Wire CSA	Wire Spec	Wire Material description	Wire Color Description	Wire Length	End2 Terminal Part Number	End2 Pin Name	End2 Connector
A	-	-	VU103A	3510299 R1	0.79	18.0	Thin Wall XLPE Primary Cable	LIGHT GREEN	1125.0	-	F14	J5-1602
B	-	-	VU103B	3510299 R1	0.79	18.0	Thin Wall XLPE Primary Cable	LIGHT GREEN	1125.0	-	F12	J5-1602
C	-	-	VU103C	3510299 R1	0.79	18.0	Thin Wall XLPE Primary Cable	LIGHT GREEN	790.0	-	E2	J4-1601
D	-	-	VU103D	3510299 R1	0.79	18.0	Thin Wall XLPE Primary Cable	LIGHT GREEN	790.0	-	E1	J4-1601
E	-	-	VU9ZF	3510311 R1	0.79	18.0	Thin Wall XLPE Primary Cable	GREY	1035.0	-	-	-

Connector Name 1979A

Part Number 4061584C1

Instances A26 - Powertrain J1939 Allison 3k/4k:A26 - Powertrain J1939 Allison 3k/4k
A26 - Powertrain J1939 UltraShift Transmission:A26 - Powertrain J1939 UltraShift Transmission
B6.7 - CAN Layout:Powertrain Standard J1939 (500Kbps)
B6.7 - Powertrain J1939 Allison 1k/2k:B6.7 - Allison 1k/2k Transmission
B6.7 - Powertrain J1939 Allison 3k/4k:B6.7 - Allison 3k/4k Transmission
B6.7 - Powertrain J1939 Manual Transmission:B6.7 - Manual Transmission
L9 - CAN Layout:Powertrain Standard J1939 (500kbps)
L9 - Powertrain J1939 Allison 3k/4k:L9 - Powertrain J1939 Allison 3k/4k
L9 - Powertrain J1939 Eaton:L9 - Powertrain J1939 Eaton
L9 - Powertrain J1939 Manual Transmission:Powertrain Standard J1939 (500kbps)

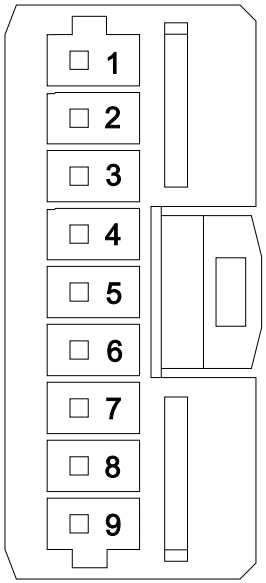

Mates DEV-BENDIX_FUSION_FLC_20-3 020-02-01A

Name	Terminal Part Number	V-Min	Name	Wire Part Number	Wire CSA	Wire Spec	Wire Material description	Wire Color Description	Wire Length	End2 Terminal Part Number	End2 Pin Name	End2 Connect or
3	-	-	WIRE735268	-	0.0	-	-	-	0.0	-	PIN1	-
3	-	-	WIRE735123	-	0.0	-	-	-	0.0	-	9	2000F
4	-	-	WIRE735269	-	0.0	-	-	-	0.0	-	PIN1	-
4	-	-	WIRE735124	-	0.0	-	-	-	0.0	-	10	2000F

Connector Name 1979

Part Number 3831401C1

Instances A26 - Powertrain J1939 Allison 3k/4k:A26 - Powertrain J1939 Allison 3k/4k
A26 - Powertrain J1939 UltraShift Transmission:A26 - Powertrain J1939 UltraShift Transmission
B6.7 - CAN Layout:Powertrain Standard J1939 (500Kbps)
B6.7 - Powertrain J1939 Allison 1k/2k:B6.7 - Allison 1k/2k Transmission
B6.7 - Powertrain J1939 Allison 3k/4k:B6.7 - Allison 3k/4k Transmission
B6.7 - Powertrain J1939 Manual Transmission:B6.7 - Manual Transmission
L9 - CAN Layout:Powertrain Standard J1939 (500kbps)
L9 - Powertrain J1939 Allison 3k/4k:L9 - Powertrain J1939 Allison 3k/4k
L9 - Powertrain J1939 Eaton:L9 - Powertrain J1939 Eaton
L9 - Powertrain J1939 Manual Transmission:Powertrain Standard J1939 (500kbps)

Mates MODU-BENDIX_FUSION_SAFETY_ DIRECT-3020-02-01A

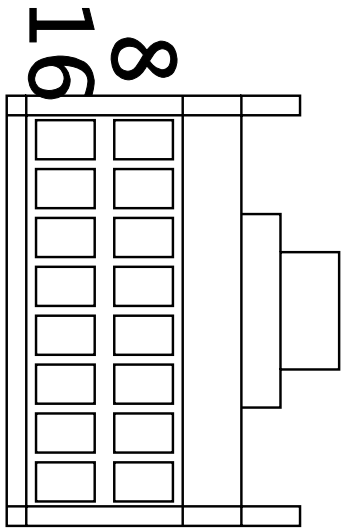

Name	Terminal Part Number	V-Min	Name	Wire Part Number	Wire CSA	Wire Spec	Wire Material description	Wire Color Description	Wire Length	End2 Terminal Part Number	End2 Pin Name	End2 Connect or
5	-	-	WIRE735265	-	0.0	-	-	-	0.0	-	PIN1	-
5	-	-	WIRE735132	-	0.0	-	-	-	0.0	-	K	16A
6	-	-	WIRE735264	-	0.0	-	-	-	0.0	-	PIN1	-
6	-	-	WIRE735133	-	0.0	-	-	-	0.0	-	J	16A

Connector Name	1
Part Number	RING-M-8_0
Instances	A26 - Power Lift Gate:Diagram1 B6.7 - Power Lift Gate:Diagram1 L9 - Power Lift Gate:Diagram1
Mates	RLY-Power_Lift_Gate_Relay- 2038-02-01B

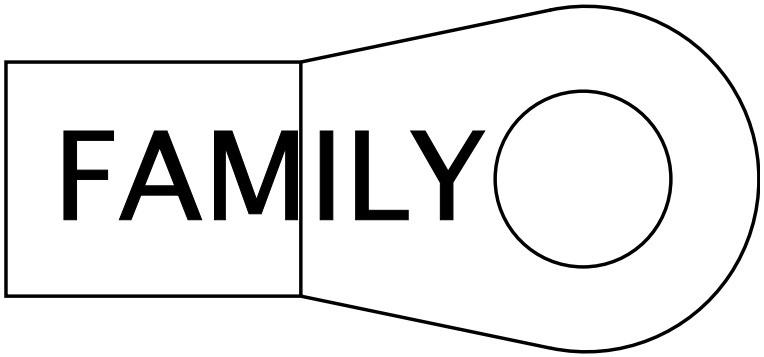

Name	Terminal Part Number	V-Min	Name	Wire Part Number	Wire CSA	Wire Spec	Wire Material description	Wire Color Description	Wire Length	End2 Terminal Part Number	End2 Pin Name	End2 Connect or
A	-	-	14A	2645964 R1	61.89	0.0	SGR 125	RED	8840.0	-	A	2

Connector Name	2F
Part Number	1667639C1
Instances	A26 - Bosch LIL165 LIL200 Alternator W/Sensor:Diagram2 A26 - Delco Remy 28SI Alternator W/Sensor:Diagram2 A26 - Delco Remy 36SI Alternator W/Sensor:Diagram2 A26 - Delco Remy 40SI Alternator W/Sensor:Diagram2 A26 - Leece-Neville - LN 325A Alternator W/Sensor:Diagram2 A26 - Leece-Neville AVI160-210A/240A Alternator W/ Sensor:Diagram2
Mates	DEV-FUSE_5A_Inline-4004-01 -04A

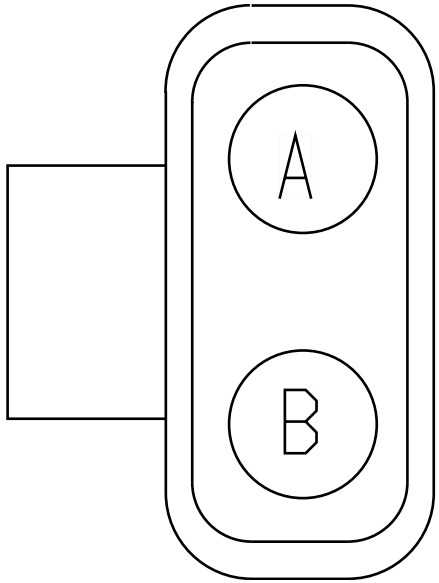

Name	Terminal Part Number	V-Min	Name	Wire Part Number	Wire CSA	Wire Spec	Wire Material description	Wire Color Description	Wire Length	End2 Terminal Part Number	End2 Pin Name	End2 Connect or
A	-	-	JT1B	2643692 R1	1.91	14.0	Std. Wall XLPE Primary Cable	TAN	310.0	-	1	7200
B	-	-	JT1A	2643694 R1	1.91	14.0	Std. Wall XLPE Primary Cable	LIGHT BLUE	3965.0	-	A	T14_7000
B	-	-	JT1A	2643694 R1	1.91	14.0	Std. Wall XLPE Primary Cable	LIGHT BLUE	3965.0	-	A	T15_7000
B	-	-	JT1A	2643694 R1	1.91	14.0	Std. Wall XLPE Primary Cable	LIGHT BLUE	3965.0	-	A	7000

Name	Terminal Part Number	V-Min	Name	Wire Part Number	Wire CSA	Wire Spec	Wire Material description	Wire Color Description	Wire Length	End2 Terminal Part Number	End2 Pin Name	End2 Connect or
B	-	-	JT1A	2643694 R1	1.91	14.0	Std. Wall XLPE Primary Cable	LIGHT BLUE	3965.0	-	A	T12_7000
B	-	-	JT1A	2643694 R1	1.91	14.0	Std. Wall XLPE Primary Cable	LIGHT BLUE	3965.0	-	A	T15_7000A

Connector Name	2000F
Part Number	3544687C1
Short Description	ROOF/IP CONNECTION
Instances	A26 - Powertrain J1939 Allison 3k/4k:A26 - Powertrain J1939 Allison 3k/4k A26 - Powertrain J1939 UltraShift Transmission:A26 - Powertrain J1939 UltraShift Transmission A26/B6.7/L9 - Cab Dome Light W/Classic Trim:Diagram1 A26/B6.7/L9 - Cab Dome Light W/ Combo in Diamond Trim:Diagram1 A26/B6.7/L9 - CB Radio - Power Only:Diagram1 A26/B6.7/L9 - CB Radio - Power Only (Single Antenna):Diagram1 A26/B6.7/L9 - Clearance and Identification Lights:Diagram1 A26/B6.7/L9 - Interior Task Lights (Map) - Dome Combo:Diagram1 A26/B6.7/L9 - Park / Turn Lights Splice Packs 1623/1625/400:Diagram1 B6.7 - CAN Layout:Powertrain Standard J1939 (500Kbps) B6.7 - Powertrain J1939 Allison 1k/2k:B6.7 - Allison 1k/2k Transmission B6.7 - Powertrain J1939 Allison 3k/4k:B6.7 - Allison 3k/4k Transmission B6.7 - Powertrain J1939 Manual Transmission:B6.7 - Manual Transmission L9 - CAN Layout:Powertrain Standard J1939 (500kbps) L9 - Powertrain J1939 Allison 3k/4k:L9 - Powertrain J1939 Allison 3k/4k L9 - Powertrain J1939 Eaton:L9 - Powertrain J1939 Eaton L9 - Powertrain J1939 Manual Transmission:Powertrain Standard J1939 (500kbps)
Mates	2000

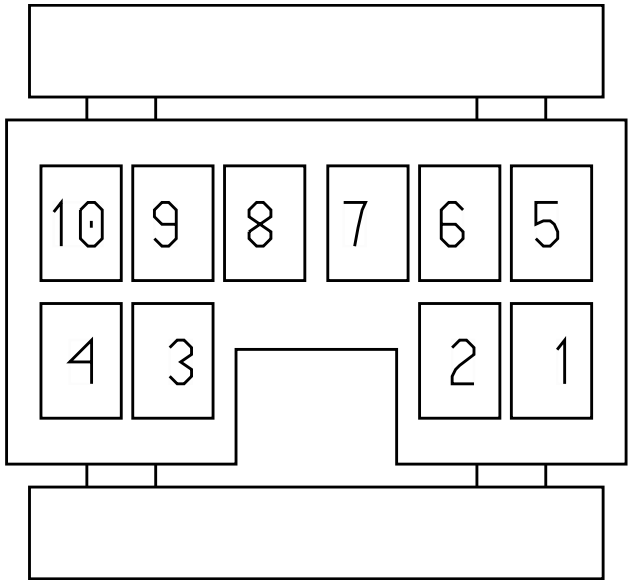

Name	Terminal Part Number	V-Min	Name	Wire Part Number	Wire CSA	Wire Spec	Wire Material description	Wire Color Description	Wire Length	End2 Terminal Part Number	End2 Pin Name	End2 Connect or
1	-	-	D58T	2643672 R1	0.79	18.0	Std. Wall XLPE Primary Cable	BROWN	2000.0	-	-	-

Name	Terminal Part Number	V-Min	Name	Wire Part Number	Wire CSA	Wire Spec	Wire Material description	Wire Color Description	Wire Length	End2 Terminal Part Number	End2 Pin Name	End2 Connector
2	-	-	D86F	2643678 R1	1.16	16.0	Std. Wall XLPE Primary Cable	LIGHT GREEN	1717.0	-	A	2500F
3	-	-	D63-GA	2643681 R1	1.16	16.0	Std. Wall XLPE Primary Cable	WHITE	1950.0	-	X	-
4	-	-	D63D	2643720 R1	0.79	18.0	Std. Wall XLPE Primary Cable	DARK BLUE	710.0	-	X	-
5	-	-	D63E	2643720 R1	0.79	18.0	Std. Wall XLPE Primary Cable	DARK BLUE	740.0	-	X	-
9	-	-	WIRE735266	-	0.0	-	-	-	0.0	-	PIN1	-
9	-	-	WIRE735123	-	0.0	-	-	-	0.0	-	3	1979A
10	-	-	WIRE735267	-	0.0	-	-	-	0.0	-	PIN1	-
10	-	-	WIRE735124	-	0.0	-	-	-	0.0	-	4	1979A

Connector Name	2000
Part Number	3544688C1
Short Description	IP/ROOF CONNECTION
Instances	A26 - Powertrain J1939 Allison 3k/4k:A26 - Powertrain J1939 Allison 3k/4k A26 - Powertrain J1939 UltraShift Transmission:A26 - Powertrain J1939 UltraShift Transmission A26/B6.7/L9 - Cab Dome Light W/Classic Trim:Diagram1 A26/B6.7/L9 - Cab Dome Light W/ Combo in Diamond Trim:Diagram1 A26/B6.7/L9 - CB Radio - Power Only:Diagram1 A26/B6.7/L9 - CB Radio - Power Only (Single Antenna):Diagram1 A26/B6.7/L9 - Clearance and Identification Lights:Diagram1 A26/B6.7/L9 - Interior Task Lights (Map) - Dome Combo:Diagram1 A26/B6.7/L9 - Park / Turn Lights Splice Packs 1623/1625/400:Diagram1 B6.7 - CAN Layout:Powertrain Standard J1939 (500Kbps) B6.7 - Powertrain J1939 Allison 1k/2k:B6.7 - Allison 1k/2k Transmission B6.7 - Powertrain J1939 Allison 3k/4k:B6.7 - Allison 3k/4k Transmission B6.7 - Powertrain J1939 Manual Transmission:B6.7 - Manual Transmission L9 - CAN Layout:Powertrain Standard J1939 (500kbps) L9 - Powertrain J1939 Allison 3k/4k:L9 - Powertrain J1939 Allison 3k/4k L9 - Powertrain J1939 Eaton:L9 - Powertrain J1939 Eaton L9 - Powertrain J1939 Manual Transmission:Powertrain Standard J1939 (500kbps)
Mates	2000F

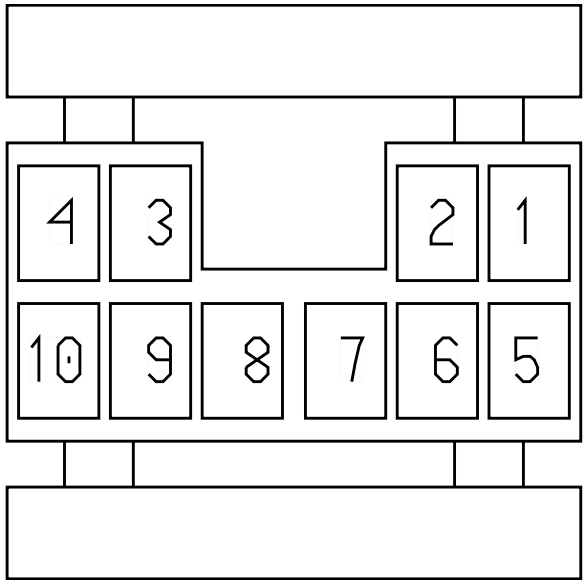

Name	Terminal Part Number	V-Min	Name	Wire Part Number	Wire CSA	Wire Spec	Wire Material description	Wire Color Description	Wire Length	End2 Terminal Part Number	End2 Pin Name	End2 Connector
1	-	-	YS58T	3510305 R1	0.79	18.0	Thin Wall XLPE Primary Cable	BROWN	925.0	-	D	1623

Name	Terminal Part Number	V-Min	Name	Wire Part Number	Wire CSA	Wire Spec	Wire Material description	Wire Color Description	Wire Length	End2 Terminal Part Number	End2 Pin Name	End2 Connect or
1	-	-	YP58T	3510305 R1	0.79	18.0	Thin Wall XLPE Primary Cable	BROWN	865.0	-	F	1623
2	-	-	SM86F	3510299 R1	0.79	18.0	Thin Wall XLPE Primary Cable	LIGHT GREEN	2275.0	-	-	-
3	-	-	AD63-GA	3510360 R1	1.16	16.0	Thin Wall XLPE Primary Cable	WHITE	510.0	-	-	-
4	-	-	WF63	3510353 R1	0.79	18.0	Thin Wall XLPE Primary Cable	DARK BLUE	680.0	-	J	J2-1604
5	-	-	AA63BD	3510353 R1	0.79	18.0	Thin Wall XLPE Primary Cable	DARK BLUE	2275.0	-	-	-
9	-	-	WIRE735126	-	0.0	-	-	-	0.0	-	PIN1	-
10	-	-	WIRE735125	-	0.0	-	-	-	0.0	-	PIN1	-

Connector Name	2002M
Part Number	1661259C1
Instances	A26/B6.7/L9 - Clearance and Identification Lights:Diagram1
Mates	LT-LEFT_CLEAR-1006-01-02A

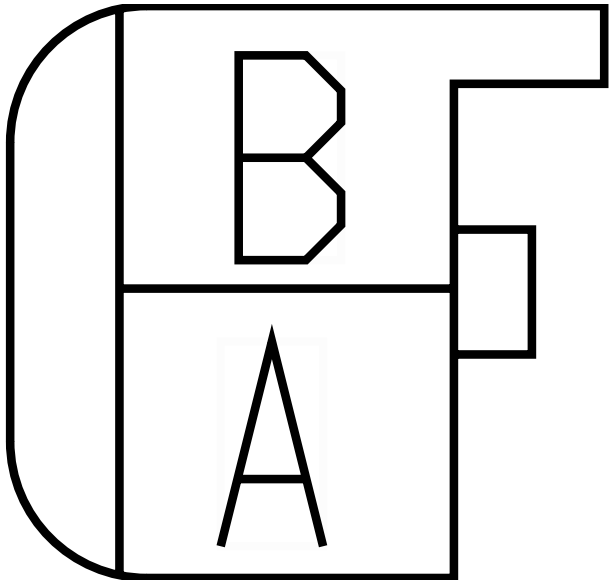

Name	Terminal Part Number	V-Min	Name	Wire Part Number	Wire CSA	Wire Spec	Wire Material description	Wire Color Description	Wire Length	End2 Terminal Part Number	End2 Pin Name	End2 Connect or
A	-	-	D58Z	2643672 R1	0.79	18.0	Std. Wall XLPE Primary Cable	BROWN	860.0	-	X	-
B	-	-	D58-GD	2643674 R1	0.79	18.0	Std. Wall XLPE Primary Cable	WHITE	810.0	-	X	-

Connector Name	2003M
Part Number	1661259C1
Instances	A26/B6.7/L9 - Clearance and Identification Lights:Diagram1
Mates	LT-LEFT_IDENT-1006-01-02A

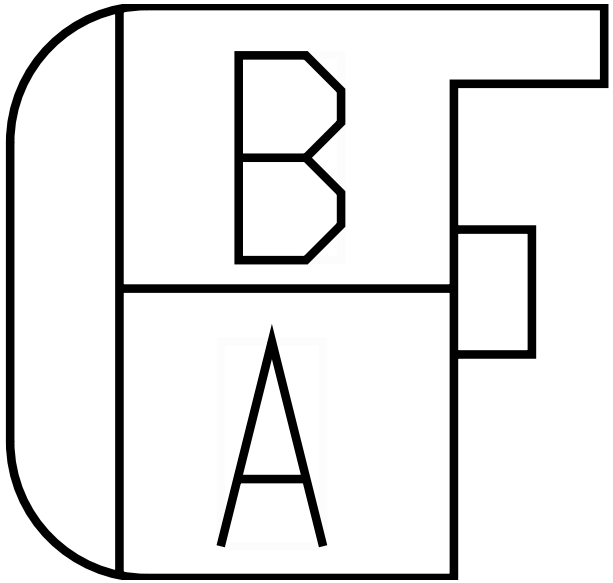

Name	Terminal Part Number	V-Min	Name	Wire Part Number	Wire CSA	Wire Spec	Wire Material description	Wire Color Description	Wire Length	End2 Terminal Part Number	End2 Pin Name	End2 Connect or
A	-	-	D58M	2643672 R1	0.79	18.0	Std. Wall XLPE Primary Cable	BROWN	360.0	-	X	-
B	-	-	D58-GE	2643674 R1	0.79	18.0	Std. Wall XLPE Primary Cable	WHITE	310.0	-	X	-

Connector Name	2004M
Part Number	1661259C1
Instances	A26/B6.7/L9 - Clearance and Identification Lights:Diagram1
Mates	LT-MID_IDENT-1006-01-02A

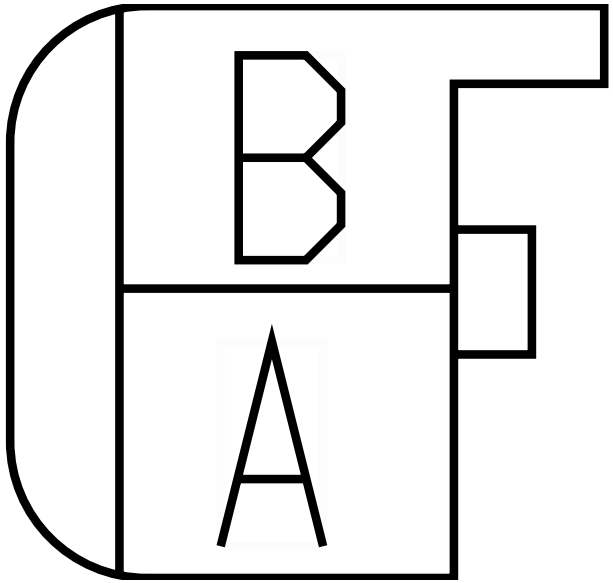

Name	Terminal Part Number	V-Min	Name	Wire Part Number	Wire CSA	Wire Spec	Wire Material description	Wire Color Description	Wire Length	End2 Terminal Part Number	End2 Pin Name	End2 Connect or
A	-	-	D58N	2643672 R1	0.79	18.0	Std. Wall XLPE Primary Cable	BROWN	475.0	-	X	-
B	-	-	D58-GF	2643674 R1	0.79	18.0	Std. Wall XLPE Primary Cable	WHITE	525.0	-	X	-

Connector Name	2005M
Part Number	1661259C1
Instances	A26/B6.7/L9 - Clearance and Identification Lights:Diagram1
Mates	LT-RIGHT_IDENT-1006-01-02A

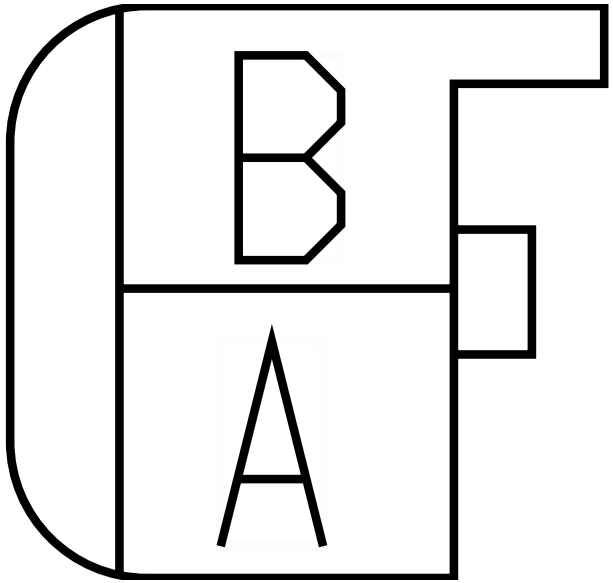

Name	Terminal Part Number	V-Min	Name	Wire Part Number	Wire CSA	Wire Spec	Wire Material description	Wire Color Description	Wire Length	End2 Terminal Part Number	End2 Pin Name	End2 Connect or
A	-	-	D58P	2643672 R1	0.79	18.0	Std. Wall XLPE Primary Cable	BROWN	625.0	-	X	-
B	-	-	D58-GH	2643674 R1	0.79	18.0	Std. Wall XLPE Primary Cable	WHITE	675.0	-	X	-

Connector Name	2006M
Part Number	1661259C1
Instances	A26/B6.7/L9 - Clearance and Identification Lights:Diagram1
Mates	LT-RIGHT_CLEAR-1006-01-02A

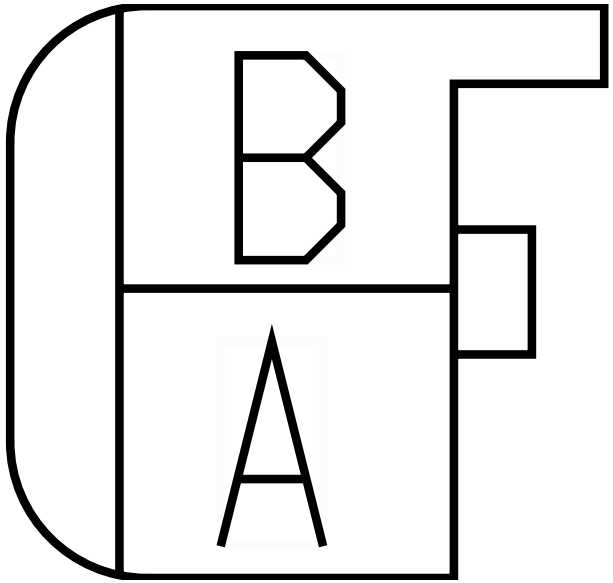

Name	Terminal Part Number	V-Min	Name	Wire Part Number	Wire CSA	Wire Spec	Wire Material description	Wire Color Description	Wire Length	End2 Terminal Part Number	End2 Pin Name	End2 Connect or
A	-	-	D58R	2643672 R1	0.79	18.0	Std. Wall XLPE Primary Cable	BROWN	1195.0	-	X	-
B	-	-	D58-GJ	2643674 R1	0.79	18.0	Std. Wall XLPE Primary Cable	WHITE	1245.0	-	X	-

Connector Name	200
Part Number	1661259C1
Instances	A26/B6.7/L9 - Driver and Passenger Seats - RollTek (Hard Wired):Diagram1
Mates	DEV-DRIVER_SEAT_ROLTEK-01

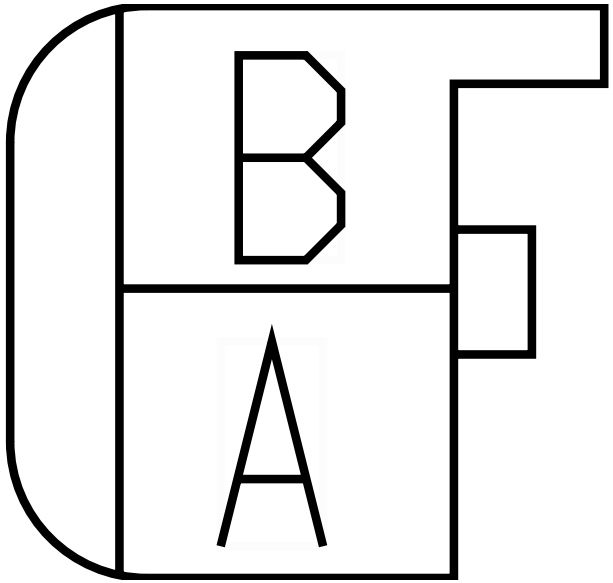

Name	Terminal Part Number	V-Min	Name	Wire Part Number	Wire CSA	Wire Spec	Wire Material description	Wire Color Description	Wire Length	End2 Terminal Part Number	End2 Pin Name	End2 Connect or
A	-	-	179SWCOM	3510346 R1	0.53	20.0	Thin Wall XLPE Primary Cable	VIOLET	1600.0	-	A	201
B	-	-	179SW(NO)	3510346 R1	0.53	20.0	Thin Wall XLPE Primary Cable	VIOLET	1600.0	-	B	201

Connector Name	201
Part Number	1661260C1
Instances	A26/B6.7/L9 - Driver and Passenger Seats - RollTek (Hard Wired):Diagram1
Mates	ROLLTEK_ECU_PASSENGER-2056 -02-01

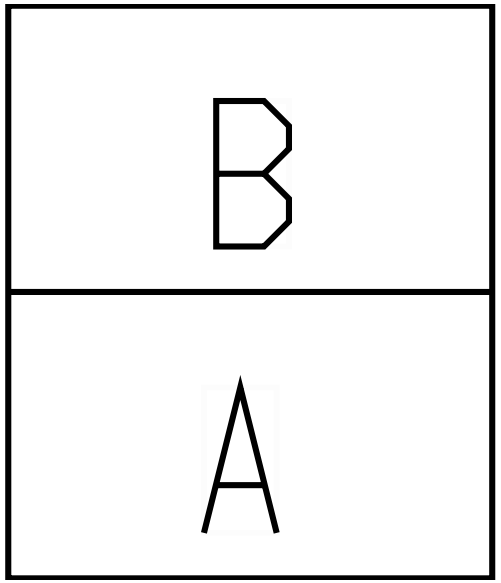

Name	Terminal Part Number	V-Min	Name	Wire Part Number	Wire CSA	Wire Spec	Wire Material description	Wire Color Description	Wire Length	End2 Terminal Part Number	End2 Pin Name	End2 Connect or
A	-	-	179SWCOM	3510346 R1	0.53	20.0	Thin Wall XLPE Primary Cable	VIOLET	1600.0	-	A	200
B	-	-	179SW(NO)	3510346 R1	0.53	20.0	Thin Wall XLPE Primary Cable	VIOLET	1600.0	-	B	200

Connector Name	2100M
Part Number	1661889C1
Instances	A26/B6.7/L9 - Cab Dome Light W/Classic Trim:Diagram1 A26/B6.7/L9 - Cab Dome Light W/ Combo in Diamond Trim:Diagram1 A26/B6.7/L9 - Interior Task Lights (Map) - Dome Combo:Diagram1
Mates	LT-Map_Dome_Combo-2003-01- 06A

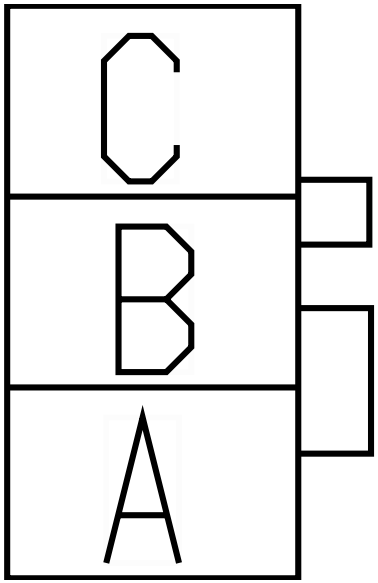

Name	Terminal Part Number	V-Min	Name	Wire Part Number	Wire CSA	Wire Spec	Wire Material description	Wire Color Description	Wire Length	End2 Terminal Part Number	End2 Pin Name	End2 Connect or
A	-	-	C63E	2643720 R1	0.79	18.0	Std. Wall XLPE Primary Cable	DARK BLUE	1150.0	-	D	2500M
B	-	-	C63-GE	2643674 R1	0.79	18.0	Std. Wall XLPE Primary Cable	WHITE	980.0	-	X	-
C	-	-	C63D	2643720 R1	0.79	18.0	Std. Wall XLPE Primary Cable	DARK BLUE	1150.0	-	C	2500M

Connector Name	2223
Part Number	1669972C1
Instances	A26 - (Rand Mcnallly) GPS Display:Diagram1
Mates	MODU-GPS-DISP-2034-02-01A

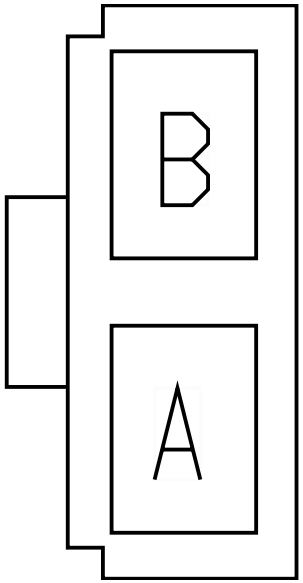

Name	Terminal Part Number	V-Min	Name	Wire Part Number	Wire CSA	Wire Spec	Wire Material description	Wire Color Description	Wire Length	End2 Terminal Part Number	End2 Pin Name	End2 Connect or
A	-	-	NF12A	3510341 R1	0.79	18.0	Thin Wall XLPE Primary Cable	LIGHT BLUE	2130.0	-	-	-
B	-	-	NF11-GAL	3510359 R1	0.79	18.0	Thin Wall XLPE Primary Cable	WHITE	1085.0	-	-	-

Connector Name	2224
Part Number	3833917C1
Instances	A26/B6.7/L9 - Vehicle Information Display (With Bluetooth):Diagram1 A26/B6.7/L9 - Vehicle Information Display (Without Bluetooth):Diagram1 A26/B6.7/L9 - Vehicle Information Display Premium w/ Wi-Fi (VID):Diagram1
Mates	MODU-VID-2025-01-01A

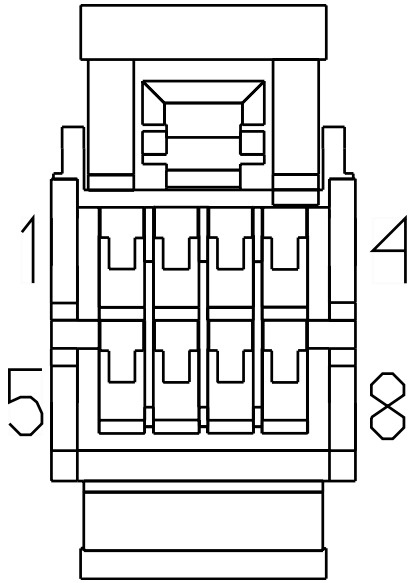

Name	Terminal Part Number	V-Min	Name	Wire Part Number	Wire CSA	Wire Spec	Wire Material description	Wire Color Description	Wire Length	End2 Terminal Part Number	End2 Pin Name	End2 Connect or
1	-	-	NE14A	3510322 R1	0.53	20.0	Thin Wall XLPE Primary Cable	PINK	2030.0	-	-	-
2	-	-	ND10AA	3510358 R1	0.53	20.0	Thin Wall XLPE Primary Cable	WHITE	125.0	-	X	-
3	-	-	NC12B	3510340 R1	0.53	20.0	Thin Wall XLPE Primary Cable	LIGHT BLUE	2030.0	-	-	-
5	-	-	ND10AB	3510358 R1	0.53	20.0	Thin Wall XLPE Primary Cable	WHITE	125.0	-	X	-

Connector Name 2225

Part Number 3834322C1

Instances A26 - Cab J1939 (250Kbps):A26 - Cab J1939 (250Kbps)
A26 - CAN Layout:Cab Standard J1939 (250Kbps)
A26/B6.7/L9 - Engine Usage Monitoring (VID Option):Diagram1
A26/B6.7/L9 - Trip Odometer w/VID:Diagram1
A26/B6.7/L9 - Vehicle Information Display (With Bluetooth):Diagram1
A26/B6.7/L9 - Vehicle Information Display (Without Bluetooth):Diagram1
A26/B6.7/L9 - Vehicle Information Display Premium w/ Wi-Fi (VID):Diagram1
B6.7 - Cab J1939 (250kbps):B6.7 - Cab J1939 (250Kbps)
B6.7 - CAN Layout:Cab Standard J1939 (250Kbps)
L9 - Cab J1939 (250kbps):L9 - Cab J1939 (250Kbps)
L9 - CAN Layout:Cab Standard J1939 (250Kbps)

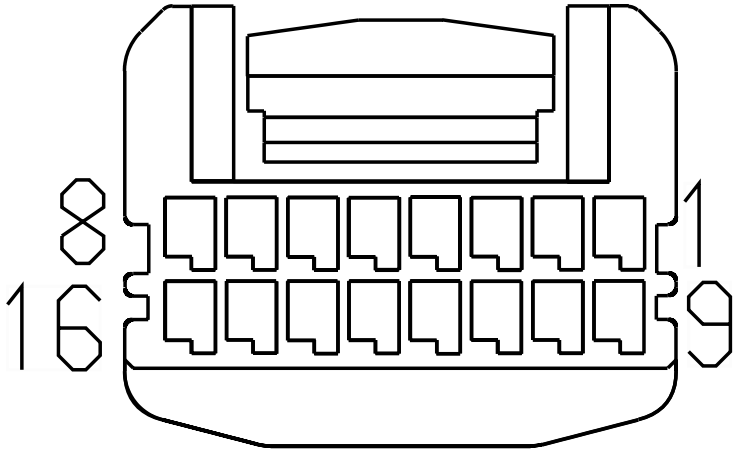

Mates MODU-VID-2025-01-01A

Name	Terminal Part Number	V-Min	Name	Wire Part Number	Wire CSA	Wire Spec	Wire Material description	Wire Color Description	Wire Length	End2 Terminal Part Number	End2 Pin Name	End2 Connect or
1	-	-	ND9A	3510358 R1	0.53	20.0	Thin Wall XLPE Primary Cable	WHITE	670.0	-	-	-
8	-	-	WIRE720 050	-	0.0	-	-	-	0.0	-	E	1026
8	-	-	-	-	-	-	-	-	-	-	-	-
8	-	-	WIRE720 049	-	0.0	-	-	-	0.0	-	H	1026
8	-	-	WIRE735 290	-	0.0	-	-	-	0.0	-	H	1026
10	-	-	ND10AC	3510358 R1	0.53	20.0	Thin Wall XLPE Primary Cable	WHITE	125.0	-	X	-

Name	Terminal Part Number	V-Min	Name	Wire Part Number	Wire CSA	Wire Spec	Wire Material description	Wire Color Description	Wire Length	End2 Terminal Part Number	End2 Pin Name	End2 Connect or
11	-	-	NE86AA	3510298 R1	0.53	20.0	Thin Wall XLPE Primary Cable	LIGHT GREEN	570.0	-	7	1301
12	-	-	NE86AB	3510298 R1	0.53	20.0	Thin Wall XLPE Primary Cable	LIGHT GREEN	570.0	-	10	1301
13	-	-	NE86AC	3510298 R1	0.53	20.0	Thin Wall XLPE Primary Cable	LIGHT GREEN	570.0	-	9	1301
14	-	-	NE86AD	3510298 R1	0.53	20.0	Thin Wall XLPE Primary Cable	LIGHT GREEN	570.0	-	11	1301
15	-	-	ND10AD	3510298 R1	0.53	20.0	Thin Wall XLPE Primary Cable	LIGHT GREEN	125.0	-	X	-
16	-	-	WIRE720049	-	0.0	-	-	-	0.0	-	H	1026
16	-	-	-	-	-	-	-	-	-	-	-	-
16	-	-	WIRE720050	-	0.0	-	-	-	0.0	-	E	1026
16	-	-	WIRE735291	-	0.0	-	-	-	0.0	-	E	1026

Connector Name	23XX
Part Number	3534156C1
Short Description	DOOR SW/SPEAKER JUMPER
Instances	A26/B6.7/L9 - Compressed Air Supply:Diagram1 A26/B6.7/L9 - Four Speakers Daycab BT n/QC:Diagram1 A26/B6.7/L9 - Four Speakers Daycab n/BT n/QC:Diagram1 B6.7 - Speaker:Four Speakers Daycab w/BT w/QC:Diagram1 B6.7 - Speakers:Four Speakers Daycab n/BT w/QC:Diagram1 L9 - Speaker:Four Speakers Daycab w/BT w/QC:Diagram1 L9 - Speakers:Four Speakers Daycab n/BT w/QC:Diagram1
Mates	2312

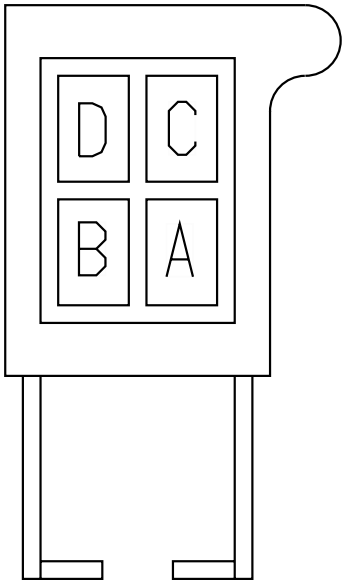

Name	Terminal Part Number	V-Min	Name	Wire Part Number	Wire CSA	Wire Spec	Wire Material description	Wire Color Description	Wire Length	End2 Terminal Part Number	End2 Pin Name	End2 Connect or
A	-	-	63	2643721 R1	1.16	16.0	Std. Wall XLPE Primary Cable	DARK BLUE	130.0	-	X	-
B	-	-	9	2643680 R1	1.16	16.0	Std. Wall XLPE Primary Cable	GREY	150.0	-	X	-
C	-	-	86BDA	3510299 R1	0.79	18.0	Thin Wall XLPE Primary Cable	LIGHT GREEN	2250.0	-	A	2300
C	-	-	86BDA	3510299 R1	0.79	18.0	Thin Wall XLPE Primary Cable	LIGHT GREEN	2250.0	-	A	2300_R

Name	Terminal Part Number	V-Min	Name	Wire Part Number	Wire CSA	Wire Spec	Wire Material description	Wire Color Description	Wire Length	End2 Terminal Part Number	End2 Pin Name	End2 Connector
C	-	-	86BDA	3510299 R1	0.79	18.0	Thin Wall XLPE Primary Cable	LIGHT GREEN	2250.0	-	-	-
D	-	-	86CEA	3510299 R1	0.79	18.0	Thin Wall XLPE Primary Cable	LIGHT GREEN	2250.0	-	-	-
D	-	-	86CEA	3510299 R1	0.79	18.0	Thin Wall XLPE Primary Cable	LIGHT GREEN	2250.0	-	B	2300_R
D	-	-	86CEA	3510299 R1	0.79	18.0	Thin Wall XLPE Primary Cable	LIGHT GREEN	2250.0	-	B	2300

Connector Name	23XX
Part Number	3534156C1
Instances	A26/B6.7/L9 - Door Ajar Reminder (Entry /Exit):4 Door:Diagram1 A26/B6.7/L9 - Door Ajar Reminder (Entry/Exit) 2 Door:Diagram1
Mates	2313

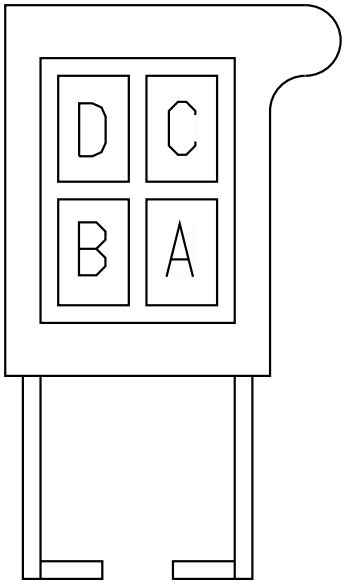

Name	Terminal Part Number	V-Min	Name	Wire Part Number	Wire CSA	Wire Spec	Wire Material description	Wire Color Description	Wire Length	End2 Terminal Part Number	End2 Pin Name	End2 Connect or
A	-	-	63	2643721 R1	1.16	16.0	Std. Wall XLPE Primary Cable	DARK BLUE	130.0	-	X	-
B	-	-	9	2643680 R1	1.16	16.0	Std. Wall XLPE Primary Cable	GREY	150.0	-	X	-

Connector Name 2300

Part Number 3535769C1

Instances A26/B6.7/L9 - Four Speakers Daycab BT n/QC:Diagram1
A26/B6.7/L9 - Four Speakers Daycab n/BT n/QC:Diagram1
B6.7 - Speaker:Four Speakers Daycab w/BT w/QC:Diagram1
B6.7 - Speakers:Four Speakers Daycab n/BT w/QC:Diagram1
L9 - Speaker:Four Speakers Daycab w/BT w/QC:Diagram1
L9 - Speakers:Four Speakers Daycab n/BT w/QC:Diagram1

Mates SPKR-LR-2058-01-01A

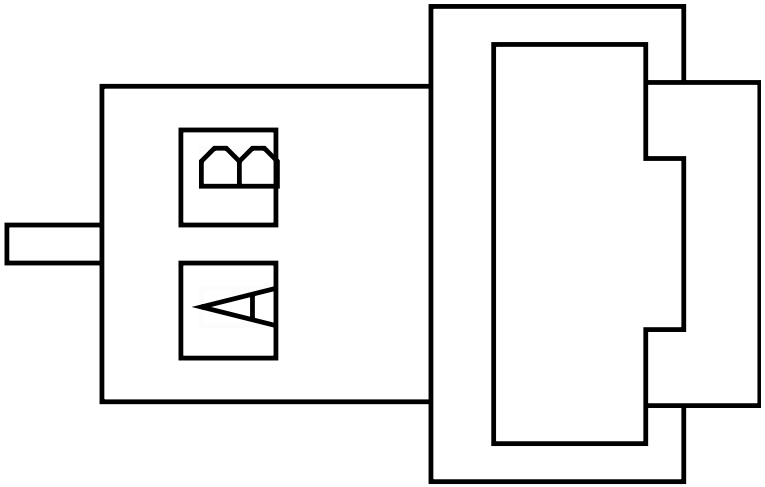

Name	Terminal Part Number	V-Min	Name	Wire Part Number	Wire CSA	Wire Spec	Wire Material description	Wire Color Description	Wire Length	End2 Terminal Part Number	End2 Pin Name	End2 Connect or
A	-	-	86BDA	3510299 R1	0.79	18.0	Thin Wall XLPE Primary Cable	LIGHT GREEN	2250.0	-	C	23XX
A	-	-	86BDA	3510299 R1	0.79	18.0	Thin Wall XLPE Primary Cable	LIGHT GREEN	2250.0	-	-	-
A	-	-	86BDA	3510299 R1	0.79	18.0	Thin Wall XLPE Primary Cable	LIGHT GREEN	2250.0	-	A	2300_R
B	-	-	86CEA	3510299 R1	0.79	18.0	Thin Wall XLPE Primary Cable	LIGHT GREEN	2250.0	-	B	2300_R

Name	Terminal Part Number	V-Min	Name	Wire Part Number	Wire CSA	Wire Spec	Wire Material description	Wire Color Description	Wire Length	End2 Terminal Part Number	End2 Pin Name	End2 Connect or
B	-	-	86CEA	3510299 R1	0.79	18.0	Thin Wall XLPE Primary Cable	LIGHT GREEN	2250.0	-	-	-
B	-	-	86CEA	3510299 R1	0.79	18.0	Thin Wall XLPE Primary Cable	LIGHT GREEN	2250.0	-	D	23XX

Connector Name	2300_R
Part Number	3535769C1
Instances	A26/B6.7/L9 - Four Speakers Daycab BT n/QC:Diagram1 A26/B6.7/L9 - Four Speakers Daycab n/BT n/QC:Diagram1 B6.7 - Speaker:Four Speakers Daycab w/BT w/QC:Diagram1 B6.7 - Speakers:Four Speakers Daycab n/BT w/QC:Diagram1 L9 - Speaker:Four Speakers Daycab w/BT w/QC:Diagram1 L9 - Speakers:Four Speakers Daycab n/BT w/QC:Diagram1
Mates	SPKR-RR-2058-01-01A

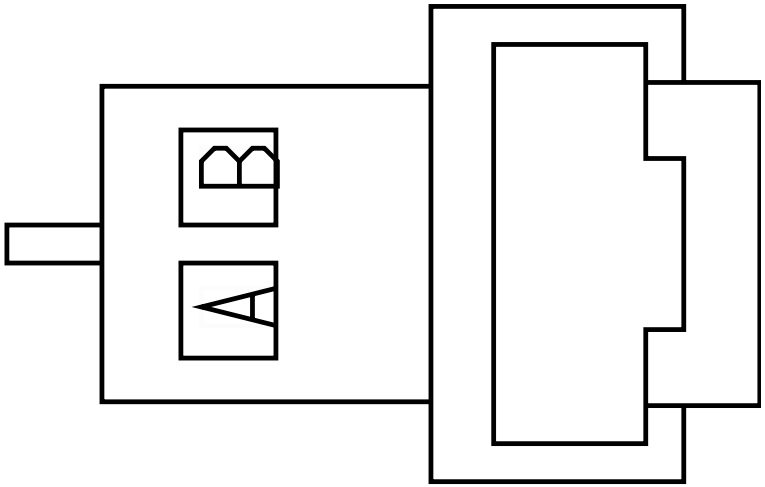

Name	Terminal Part Number	V-Min	Name	Wire Part Number	Wire CSA	Wire Spec	Wire Material description	Wire Color Description	Wire Length	End2 Terminal Part Number	End2 Pin Name	End2 Connect or
A	-	-	86BDA	3510299 R1	0.79	18.0	Thin Wall XLPE Primary Cable	LIGHT GREEN	2250.0	-	-	-
A	-	-	86BDA	3510299 R1	0.79	18.0	Thin Wall XLPE Primary Cable	LIGHT GREEN	2250.0	-	C	23XX
A	-	-	86BDA	3510299 R1	0.79	18.0	Thin Wall XLPE Primary Cable	LIGHT GREEN	2250.0	-	A	2300
B	-	-	86CEA	3510299 R1	0.79	18.0	Thin Wall XLPE Primary Cable	LIGHT GREEN	2250.0	-	B	2300

Name	Terminal Part Number	V-Min	Name	Wire Part Number	Wire CSA	Wire Spec	Wire Material description	Wire Color Description	Wire Length	End2 Terminal Part Number	End2 Pin Name	End2 Connect or
B	-	-	86CEA	3510299 R1	0.79	18.0	Thin Wall XLPE Primary Cable	LIGHT GREEN	2250.0	-	D	23XX
B	-	-	86CEA	3510299 R1	0.79	18.0	Thin Wall XLPE Primary Cable	LIGHT GREEN	2250.0	-	-	-

Connector Name	2303F
Part Number	1661196C1
Short Description	CB RADIO POWER
Instances	A26/B6.7/L9 - CB Radio - Power Only:Diagram1 A26/B6.7/L9 - CB Radio - Power Only (Single Antenna):Diagram1
Mates	2303M

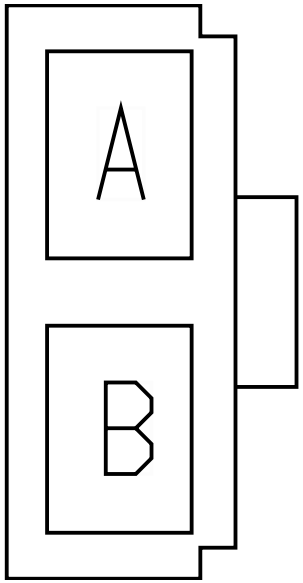

Name	Terminal Part Number	V-Min	Name	Wire Part Number	Wire CSA	Wire Spec	Wire Material description	Wire Color Description	Wire Length	End2 Terminal Part Number	End2 Pin Name	End2 Connect or
A	-	-	C86M	2643678 R1	1.16	16.0	Std. Wall XLPE Primary Cable	LIGHT GREEN	160.0	-	A	2310
B	-	-	C86-GG	2643681 R1	1.16	16.0	Std. Wall XLPE Primary Cable	WHITE	160.0	-	A	2311

Connector Name	2303M
Part Number	1661197C1
Short Description	CB RADIO POWER
Instances	A26/B6.7/L9 - CB Radio - Power Only:Diagram1 A26/B6.7/L9 - CB Radio - Power Only (Single Antenna):Diagram1
Mates	2303F

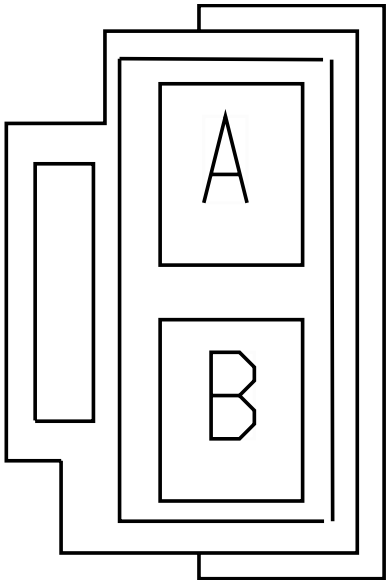

Name	Terminal Part Number	V-Min	Name	Wire Part Number	Wire CSA	Wire Spec	Wire Material description	Wire Color Description	Wire Length	End2 Terminal Part Number	End2 Pin Name	End2 Connect or
A	-	-	C86F	2643678 R1	1.16	16.0	Std. Wall XLPE Primary Cable	LIGHT GREEN	930.0	-	A	2500M
B	-	-	C86-GF	2643681 R1	1.16	16.0	Std. Wall XLPE Primary Cable	WHITE	760.0	-	X	-

Connector Name	2310
Part Number	BLUNT_SL_VC
Instances	A26/B6.7/L9 - CB Radio - Power Only:Diagram1 A26/B6.7/L9 - CB Radio - Power Only (Single Antenna):Diagram1
Mates	BLNT-CB+VE-2033-01-01A

Name	Terminal Part Number	V-Min	Name	Wire Part Number	Wire CSA	Wire Spec	Wire Material description	Wire Color Description	Wire Length	End2 Terminal Part Number	End2 Pin Name	End2 Connect or
A	-	-	C86M	2643678 R1	1.16	16.0	Std. Wall XLPE Primary Cable	LIGHT GREEN	160.0	-	A	2303F

Connector Name	2311
Part Number	BLUNT_SL_VC
Instances	A26/B6.7/L9 - CB Radio - Power Only:Diagram1 A26/B6.7/L9 - CB Radio - Power Only (Single Antenna):Diagram1
Mates	BLNT-CB-VE-2033-01-01A

Name	Terminal Part Number	V-Min	Name	Wire Part Number	Wire CSA	Wire Spec	Wire Material description	Wire Color Description	Wire Length	End2 Terminal Part Number	End2 Pin Name	End2 Connect or
A	-	-	C86-GG	2643681 R1	1.16	16.0	Std. Wall XLPE Primary Cable	WHITE	160.0	-	B	2303F

Connector Name	2312
Part Number	3533975C1
Short Description	DOOR SWITCH SPEAKER JUMPER
Instances	A26/B6.7/L9 - Compressed Air Supply:Diagram1 A26/B6.7/L9 - Four Speakers Daycab BT n/QC:Diagram1 A26/B6.7/L9 - Four Speakers Daycab n/BT n/QC:Diagram1 B6.7 - Speaker:Four Speakers Daycab w/BT w/QC:Diagram1 B6.7 - Speakers:Four Speakers Daycab n/BT w/QC:Diagram1 L9 - Speaker:Four Speakers Daycab w/BT w/QC:Diagram1 L9 - Speakers:Four Speakers Daycab n/BT w/QC:Diagram1
Mates	23XX

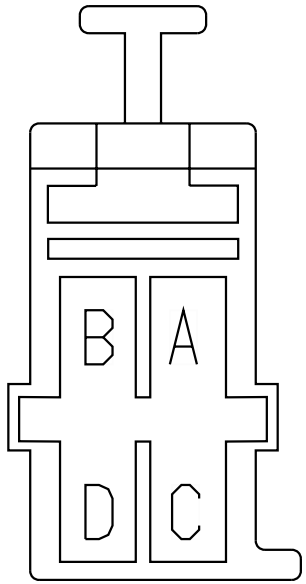

Name	Terminal Part Number	V-Min	Name	Wire Part Number	Wire CSA	Wire Spec	Wire Material description	Wire Color Description	Wire Length	End2 Terminal Part Number	End2 Pin Name	End2 Connect or
A	-	-	AA63B	3510354 R1	1.16	16.0	Thin Wall XLPE Primary Cable	DARK BLUE	616.0	-	X	-
A	-	-	AA63C	3510354 R1	1.16	16.0	Thin Wall XLPE Primary Cable	DARK BLUE	4994.0	-	X	-
B	-	-	AA9BAB	3510312 R1	1.16	16.0	Thin Wall XLPE Primary Cable	GREY	5024.0	-	X	-
B	-	-	AA9BAA	3510312 R1	1.16	16.0	Thin Wall XLPE Primary Cable	GREY	586.0	-	X	-

Name	Terminal Part Number	V-Min	Name	Wire Part Number	Wire CSA	Wire Spec	Wire Material description	Wire Color Description	Wire Length	End2 Terminal Part Number	End2 Pin Name	End2 Connect or
C	-	-	SP86BA	3510299 R1	0.79	18.0	Thin Wall XLPE Primary Cable	LIGHT GREEN	2730.0	-	15	1300
C	-	-	SP86DA	3510299 R1	0.79	18.0	Thin Wall XLPE Primary Cable	LIGHT GREEN	3320.0	-	9	1300
D	-	-	SP86EA	3510299 R1	0.79	18.0	Thin Wall XLPE Primary Cable	LIGHT GREEN	3320.0	-	10	1300
D	-	-	SP86CA	3510299 R1	0.79	18.0	Thin Wall XLPE Primary Cable	LIGHT GREEN	2730.0	-	16	1300

Connector Name 2313

Part Number 3533975C1

Instances A26/B6.7/L9 - Door Ajar Reminder (Entry /Exit):4 Door:Diagram1
A26/B6.7/L9 - Door Ajar Reminder (Entry/Exit) 2 Door:Diagram1

Mates 23XX

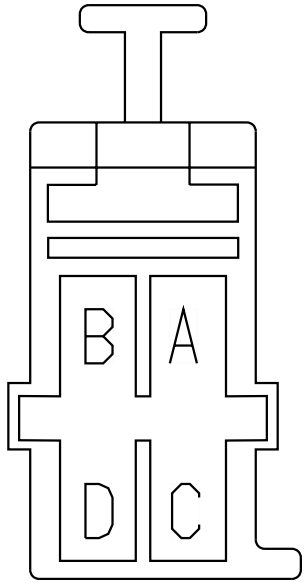

Name	Terminal Part Number	V-Min	Name	Wire Part Number	Wire CSA	Wire Spec	Wire Material description	Wire Color Description	Wire Length	End2 Terminal Part Number	End2 Pin Name	End2 Connect or
A	-	-	AA63C	3510354 R1	1.16	16.0	Thin Wall XLPE Primary Cable	DARK BLUE	4994.0	-	X	-
A	-	-	AA63B	3510354 R1	1.16	16.0	Thin Wall XLPE Primary Cable	DARK BLUE	616.0	-	X	-
B	-	-	AA9BAA	3510312 R1	1.16	16.0	Thin Wall XLPE Primary Cable	GREY	586.0	-	X	-
B	-	-	AA9BAB	3510312 R1	1.16	16.0	Thin Wall XLPE Primary Cable	GREY	5024.0	-	X	-

Connector Name	2500F
Part Number	3515763C1
Short Description	ROOF/CONSOLE CONNECTION
Instances	A26/B6.7/L9 - Cab Dome Light W/Classic Trim:Diagram1 A26/B6.7/L9 - Cab Dome Light W/ Combo in Diamond Trim:Diagram1 A26/B6.7/L9 - CB Radio - Power Only:Diagram1 A26/B6.7/L9 - CB Radio - Power Only (Single Antenna):Diagram1 A26/B6.7/L9 - Interior Task Lights (Map) - Dome Combo:Diagram1
Mates	2500M

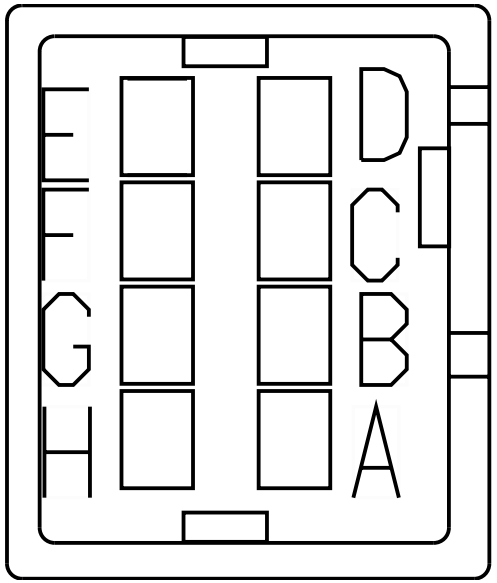

Name	Terminal Part Number	V-Min	Name	Wire Part Number	Wire CSA	Wire Spec	Wire Material description	Wire Color Description	Wire Length	End2 Terminal Part Number	End2 Pin Name	End2 Connect or
A	-	-	D86F	2643678 R1	1.16	16.0	Std. Wall XLPE Primary Cable	LIGHT GREEN	1717.0	-	2	2000F
B	-	-	D63-GL	2643681 R1	1.16	16.0	Std. Wall XLPE Primary Cable	WHITE	533.0	-	X	-
C	-	-	D63DA	2643720 R1	0.79	18.0	Std. Wall XLPE Primary Cable	DARK BLUE	1007.0	-	X	-
D	-	-	D63EA	2643720 R1	0.79	18.0	Std. Wall XLPE Primary Cable	DARK BLUE	977.0	-	X	-

Connector Name	2500M
Part Number	3515762C1
Short Description	CONSOLE/ROOF STANDARD
Instances	A26/B6.7/L9 - Cab Dome Light W/Classic Trim:Diagram1 A26/B6.7/L9 - Cab Dome Light W/ Combo in Diamond Trim:Diagram1 A26/B6.7/L9 - CB Radio - Power Only:Diagram1 A26/B6.7/L9 - CB Radio - Power Only (Single Antenna):Diagram1 A26/B6.7/L9 - Interior Task Lights (Map) - Dome Combo:Diagram1
Mates	2500F

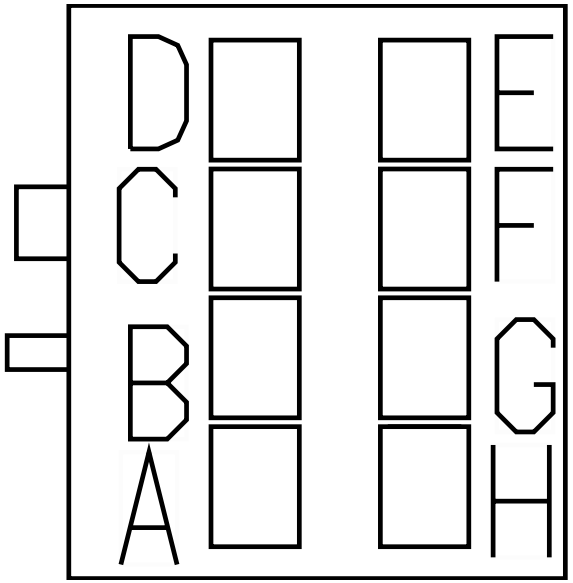

Name	Terminal Part Number	V-Min	Name	Wire Part Number	Wire CSA	Wire Spec	Wire Material description	Wire Color Description	Wire Length	End2 Terminal Part Number	End2 Pin Name	End2 Connect or
A	-	-	C86F	2643678 R1	1.16	16.0	Std. Wall XLPE Primary Cable	LIGHT GREEN	930.0	-	A	2303M
B	-	-	C63-GL	2643681 R1	1.16	16.0	Std. Wall XLPE Primary Cable	WHITE	170.0	-	X	-
C	-	-	C63D	2643720 R1	0.79	18.0	Std. Wall XLPE Primary Cable	DARK BLUE	1150.0	-	C	2100M
D	-	-	C63E	2643720 R1	0.79	18.0	Std. Wall XLPE Primary Cable	DARK BLUE	1150.0	-	A	2100M

Connector Name	2505M
Part Number	3811181C1
Short Description	BLUETOOTH MIC/IP
Instances	A26/B6.7/L9 - Radio w/Bluetooth:Diagram1 A26/B6.7/L9 - Radio w/Bluetooth:Diagram2 A26/B6.7/L9 - Radio w/Bluetooth without Steering Wheel Pod:Diagram1
Mates	2505

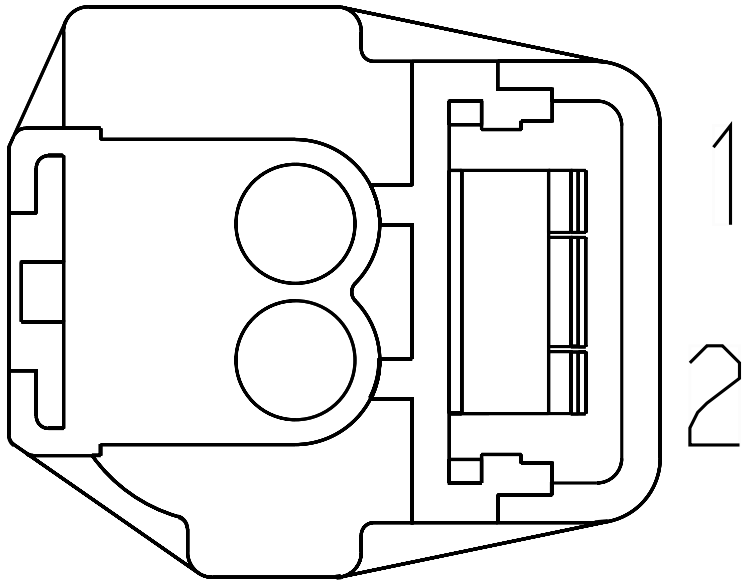

Name	Terminal Part Number	V-Min	Name	Wire Part Number	Wire CSA	Wire Spec	Wire Material description	Wire Color Description	Wire Length	End2 Terminal Part Number	End2 Pin Name	End2 Connect or
1	-	-	86A(-)	3510298 R1	0.53	20.0	Thin Wall XLPE Primary Cable	LIGHT GREEN	1200.0	-	3	100
2	-	-	86A(+)	3510298 R1	0.53	20.0	Thin Wall XLPE Primary Cable	LIGHT GREEN	1200.0	-	2	100

Connector Name	2505
Part Number	3811207C1
Short Description	BLUETOOTH MIC/IP ROOF CONNECTOR
Instances	A26/B6.7/L9 - Radio w/Bluetooth:Diagram1 A26/B6.7/L9 - Radio w/Bluetooth:Diagram2 A26/B6.7/L9 - Radio w/Bluetooth without Steering Wheel Pod:Diagram1
Mates	2505M

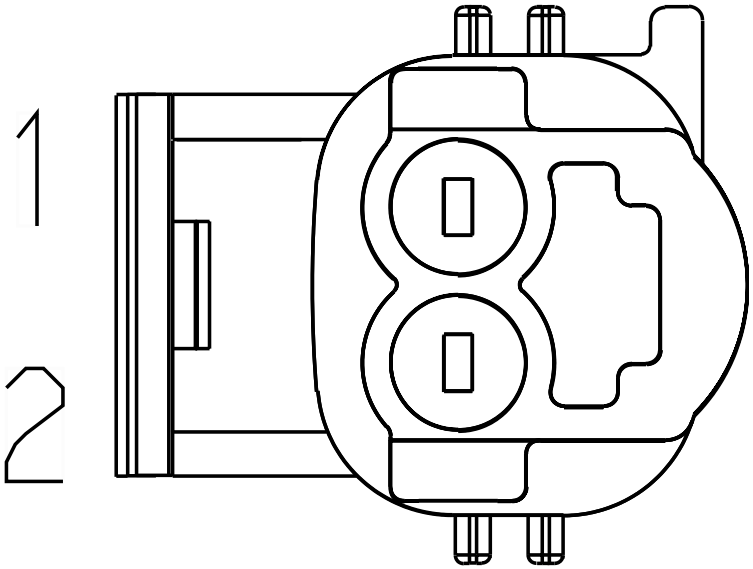

Name	Terminal Part Number	V-Min	Name	Wire Part Number	Wire CSA	Wire Spec	Wire Material description	Wire Color Description	Wire Length	End2 Terminal Part Number	End2 Pin Name	End2 Connect or
1	-	-	SR86A(-)	-	0.0	20.0	J1939 .46 WAL	GREEN	1265.0	-	16	1301
2	-	-	SR86A(+)	-	0.0	20.0	J1939 .46 WAL	YELLOW 2	1265.0	-	15	1301

Connector Name	254F
Part Number	3662108C1
Short Description	MIRROR SWITCH CONN
Instances	A26/B6.7/L9 - Power Mirrors (Control Switch Actuated):Diagram1
Mates	254M

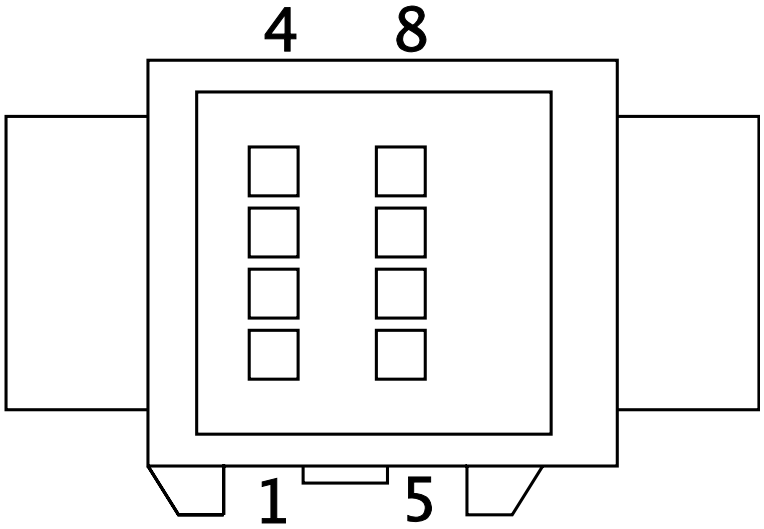

Name	Terminal Part Number	V-Min	Name	Wire Part Number	Wire CSA	Wire Spec	Wire Material description	Wire Color Description	Wire Length	End2 Terminal Part Number	End2 Pin Name	End2 Connect or
A1	-	-	RH62D	3510352 R1	0.53	20.0	Thin Wall XLPE Primary Cable	DARK BLUE	1660.0	-	1	254M
A2	-	-	RH78VB	3510364 R1	0.53	20.0	Thin Wall XLPE Primary Cable	RED	1660.0	-	2	254M
A3	-	-	RH78K	3510298 R1	0.53	20.0	Thin Wall XLPE Primary Cable	LIGHT GREEN	1660.0	-	3	254M
A4	-	-	RH78-GD	3510358 R1	0.53	20.0	Thin Wall XLPE Primary Cable	WHITE	1660.0	-	4	254M

Name	Terminal Part Number	V-Min	Name	Wire Part Number	Wire CSA	Wire Spec	Wire Material description	Wire Color Description	Wire Length	End2 Terminal Part Number	End2 Pin Name	End2 Connect or
B1	-	-	RH78JA	3510298 R1	0.53	20.0	Thin Wall XLPE Primary Cable	LIGHT GREEN	1660.0	-	5	254M
B2	-	-	RH78DB	3510298 R1	0.53	20.0	Thin Wall XLPE Primary Cable	LIGHT GREEN	1660.0	-	6	254M
B3	-	-	RH78C	3510298 R1	0.53	20.0	Thin Wall XLPE Primary Cable	LIGHT GREEN	1660.0	-	7	254M
B4	-	-	RH78EF	3510298 R1	0.53	20.0	Thin Wall XLPE Primary Cable	LIGHT GREEN	1660.0	-	8	254M

Connector Name	254M
Part Number	3510243C1
Short Description	MIRROR CONTROL SWITCH
Instances	A26/B6.7/L9 - Power Mirrors (Control Switch Actuated):Diagram1
Mates	254F

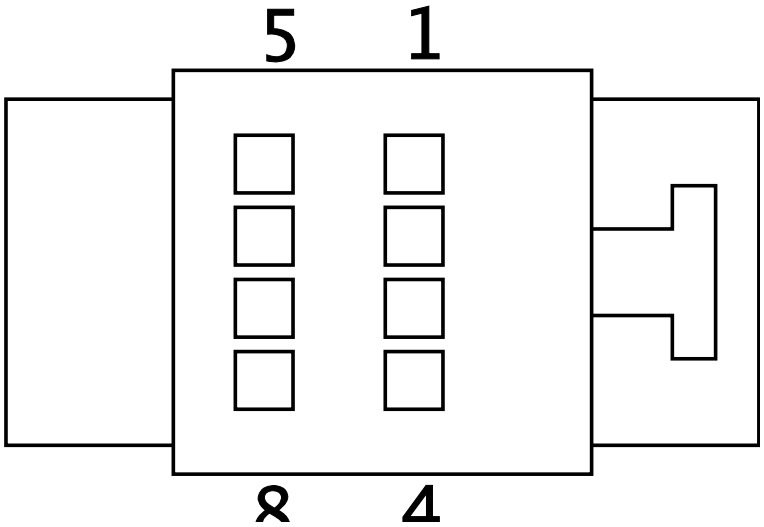

Name	Terminal Part Number	V-Min	Name	Wire Part Number	Wire CSA	Wire Spec	Wire Material description	Wire Color Description	Wire Length	End2 Terminal Part Number	End2 Pin Name	End2 Connect or
A1	-	-	EK62D	3510352 R1	0.53	20.0	Thin Wall XLPE Primary Cable	DARK BLUE	195.0	-	C	3000M
A2	-	-	EK78VB	3510298 R1	0.53	20.0	Thin Wall XLPE Primary Cable	LIGHT GREEN	240.0	-	C	3200F
A3	-	-	EK78K	3510298 R1	0.53	20.0	Thin Wall XLPE Primary Cable	LIGHT GREEN	175.0	-	X	-
A4	-	-	EK78-GD	3510358 R1	0.53	20.0	Thin Wall XLPE Primary Cable	WHITE	225.0	-	X	-

Name	Terminal Part Number	V-Min	Name	Wire Part Number	Wire CSA	Wire Spec	Wire Material description	Wire Color Description	Wire Length	End2 Terminal Part Number	End2 Pin Name	End2 Connect or
B1	-	-	EK78JA	3510298 R1	0.53	20.0	Thin Wall XLPE Primary Cable	LIGHT GREEN	1015.0	-	B	3000M
B2	-	-	EK78DB	3510298 R1	0.53	20.0	Thin Wall XLPE Primary Cable	LIGHT GREEN	195.0	-	D	3000M
B3	-	-	EK78CA	3510298 R1	0.53	20.0	Thin Wall XLPE Primary Cable	LIGHT GREEN	1015.0	-	A	3000M
B4	-	-	EK78EF	3510298 R1	0.53	20.0	Thin Wall XLPE Primary Cable	LIGHT GREEN	195.0	-	E	3000M

Connector Name 254M

Part Number 3510243C1

Instances A26/B6.7/L9 - Power Mirrors (Control Switch Actuated):Diagram1

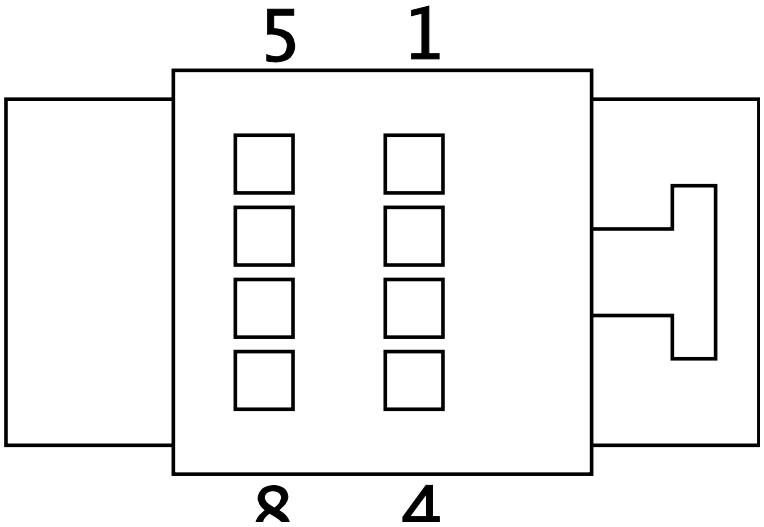

Name	Terminal Part Number	V-Min	Name	Wire Part Number	Wire CSA	Wire Spec	Wire Material description	Wire Color Description	Wire Length	End2 Terminal Part Number	End2 Pin Name	End2 Connect or
1	-	-	RH62D	3510352 R1	0.53	20.0	Thin Wall XLPE Primary Cable	DARK BLUE	1660.0	-	A1	254F
2	-	-	RH78VB	3510364 R1	0.53	20.0	Thin Wall XLPE Primary Cable	RED	1660.0	-	A2	254F
3	-	-	RH78K	3510298 R1	0.53	20.0	Thin Wall XLPE Primary Cable	LIGHT GREEN	1660.0	-	A3	254F
4	-	-	RH78-GD	3510358 R1	0.53	20.0	Thin Wall XLPE Primary Cable	WHITE	1660.0	-	A4	254F

Name	Terminal Part Number	V-Min	Name	Wire Part Number	Wire CSA	Wire Spec	Wire Material description	Wire Color Description	Wire Length	End2 Terminal Part Number	End2 Pin Name	End2 Connect or
5	-	-	RH78JA	3510298 R1	0.53	20.0	Thin Wall XLPE Primary Cable	LIGHT GREEN	1660.0	-	B1	254F
6	-	-	RH78DB	3510298 R1	0.53	20.0	Thin Wall XLPE Primary Cable	LIGHT GREEN	1660.0	-	B2	254F
7	-	-	RH78C	3510298 R1	0.53	20.0	Thin Wall XLPE Primary Cable	LIGHT GREEN	1660.0	-	B3	254F
8	-	-	RH78EF	3510298 R1	0.53	20.0	Thin Wall XLPE Primary Cable	LIGHT GREEN	1660.0	-	B4	254F

Connector Name	2600
Part Number	2005835C1
Short Description	IP INTERCONNECT
Instances	A26 - CAN Layout:HMI Standard J1939 (125Kbps) A26 - Low Speed J1939 (125Kbps):A26 - HMI J1939 (125Kbps) A26/B6.7/L9 - Courtesy Light 4 Door:Diagram1 A26/B6.7/L9 - Door Pod Module (4 Door):Diagram1 B6.7 - CAN Layout:HMI Standard J1939 (125Kbps) B6.7 - Low Speed J1939 (125kbps):B6.7 - Low Speed J1939 (125kbps) L9 - CAN Layout:HMI Standard J1939 (125Kbps) L9 - Low Speed J1939 (125kbps):L9 - Low Speed J1939 (125Kbps)
Mates	2600

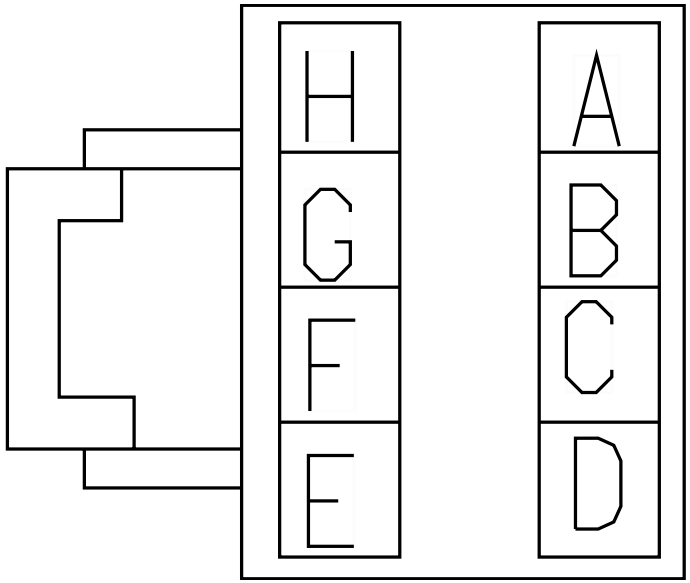

Name	Terminal Part Number	V-Min	Name	Wire Part Number	Wire CSA	Wire Spec	Wire Material description	Wire Color Description	Wire Length	End2 Terminal Part Number	End2 Pin Name	End2 Connector
A	-	-	WIRE565803	-	0.0	-	-	-	0.0	-	PIN1	-
A	-	-	WIRE565802	-	0.0	-	-	-	0.0	-	PIN1	-
B	-	-	WIRE565802	-	0.0	-	-	-	0.0	-	PIN1	-
B	-	-	WIRE565803	-	0.0	-	-	-	0.0	-	PIN1	-
C	-	-	81D	3510302R1	3.01	12.0	Thin Wall XLPE Primary Cable	LIGHT GREEN	950.0	-	C	3202L
D	-	-	81DA	3510302R1	3.01	12.0	Thin Wall XLPE Primary Cable	LIGHT GREEN	4900.0	-	C	3202L

Name	Terminal Part Number	V-Min	Name	Wire Part Number	Wire CSA	Wire Spec	Wire Material description	Wire Color Description	Wire Length	End2 Terminal Part Number	End2 Pin Name	End2 Connector
E	-	-	81-GD	3510362 R1	3.01	12.0	Thin Wall XLPE Primary Cable	WHITE	950.0	-	D	3202L
F	-	-	81-GDA	3510362 R1	3.01	12.0	Thin Wall XLPE Primary Cable	WHITE	4900.0	-	D	3202L
G	-	-	W63CA	3510354 R1	1.16	16.0	Thin Wall XLPE Primary Cable	DARK BLUE	330.0	-	X	-
H	-	-	W63-GC	3510360 R1	1.16	16.0	Thin Wall XLPE Primary Cable	WHITE	360.0	-	X	-

Connector Name	2600
Part Number	2005836C1
Short Description	DOOR / IP CREW
Instances	A26 - CAN Layout:HMI Standard J1939 (125Kbps) A26 - Low Speed J1939 (125Kbps):A26 - HMI J1939 (125Kbps) A26/B6.7/L9 - Courtesy Light 4 Door:Diagram1 A26/B6.7/L9 - Door Pod Module (4 Door):Diagram1 B6.7 - CAN Layout:HMI Standard J1939 (125Kbps) B6.7 - Low Speed J1939 (125kbps):B6.7 - Low Speed J1939 (125kbps) L9 - CAN Layout:HMI Standard J1939 (125Kbps) L9 - Low Speed J1939 (125kbps):L9 - Low Speed J1939 (125Kbps)
Mates	2600

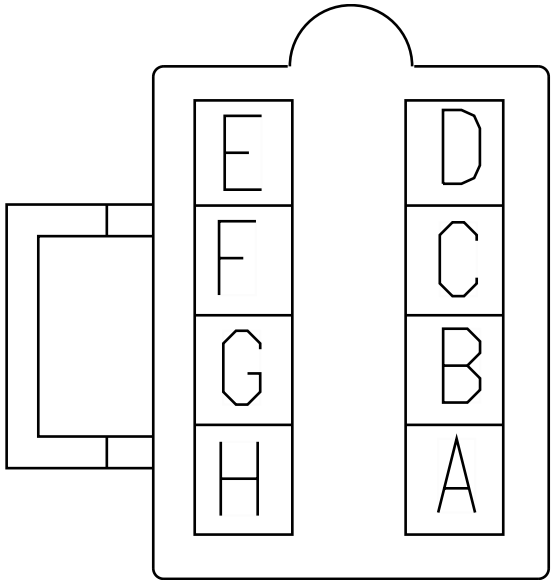

Name	Terminal Part Number	V-Min	Name	Wire Part Number	Wire CSA	Wire Spec	Wire Material description	Wire Color Description	Wire Length	End2 Terminal Part Number	End2 Pin Name	End2 Connect or
A	-	-	WIRE565800	-	0.0	-	-	-	0.0	-	PIN1	-
A	-	-	WIRE565801	-	0.0	-	-	-	0.0	-	PIN1	-
B	-	-	WIRE565801	-	0.0	-	-	-	0.0	-	PIN1	-
B	-	-	-	-	-	-	-	-	-	-	-	-
C	-	-	RD81D	3510368 R1	3.01	12.0	Thin Wall XLPE Primary Cable	RED	3945.0	-	-	-
D	-	-	RD81DA	3510368 R1	3.01	12.0	Thin Wall XLPE Primary Cable	RED	3945.0	-	-	-

Name	Terminal Part Number	V-Min	Name	Wire Part Number	Wire CSA	Wire Spec	Wire Material description	Wire Color Description	Wire Length	End2 Terminal Part Number	End2 Pin Name	End2 Connect or
E	-	-	RD81-GD	3510362 R1	3.01	12.0	Thin Wall XLPE Primary Cable	WHITE	1895.0	-	-	-
F	-	-	RD81-GDA	3510362 R1	3.01	12.0	Thin Wall XLPE Primary Cable	WHITE	1895.0	-	-	-
G	-	-	WJ63BE	3510353 R1	0.79	18.0	Thin Wall XLPE Primary Cable	DARK BLUE	1845.0	-	X	-
H	-	-	WJ63-GC	3510362 R1	3.01	12.0	Thin Wall XLPE Primary Cable	WHITE	1940.0	-	-	-

Connector Name	2990
Part Number	1661260C1
Instances	A26/B6.7/L9 - Seatbelt Reminder 6 Seats:Diagram1
Mates	DEV173300

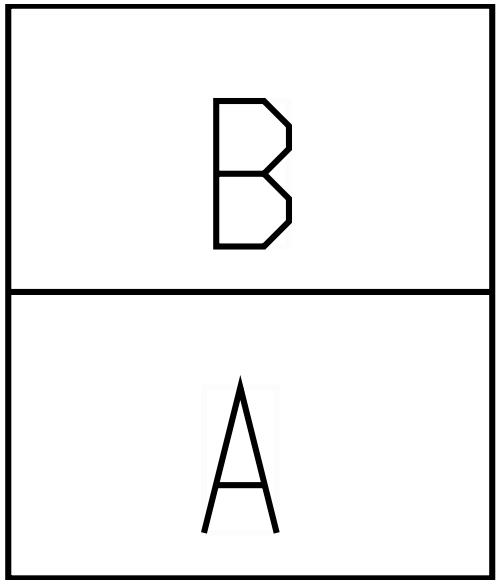

Name	Terminal Part Number	V-Min	Name	Wire Part Number	Wire CSA	Wire Spec	Wire Material description	Wire Color Description	Wire Length	End2 Terminal Part Number	End2 Pin Name	End2 Connect or
A	-	-	WIRE891614	-	0.0	-	-	-	0.0	-	PIN1	-
B	-	-	WIRE891602	-	0.0	-	-	-	0.0	-	8	8999

Connector Name	2991
Part Number	1661260C1
Instances	A26/B6.7/L9 - Seatbelt Reminder 6 Seats:Diagram1
Mates	DEV173301

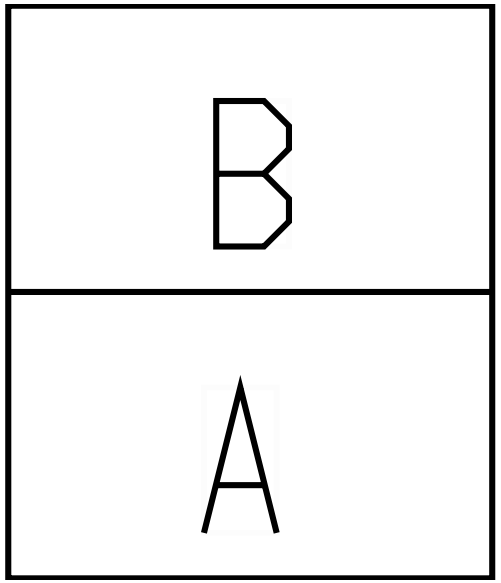

Name	Terminal Part Number	V-Min	Name	Wire Part Number	Wire CSA	Wire Spec	Wire Material description	Wire Color Description	Wire Length	End2 Terminal Part Number	End2 Pin Name	End2 Connect or
A	-	-	WIRE891615	-	0.0	-	-	-	0.0	-	PIN1	-
B	-	-	WIRE891603	-	0.0	-	-	-	0.0	-	5	8999

Connector Name	2992
Part Number	1661260C1
Instances	A26/B6.7/L9 - Seatbelt Reminder 6 Seats:Diagram1
Mates	SW-SEATBELT-2017-03-01A

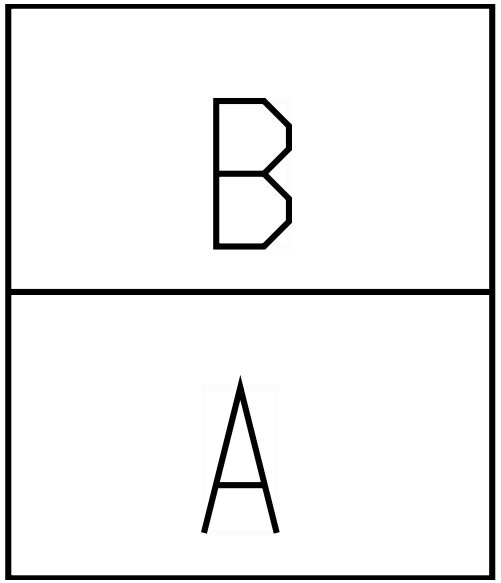

Name	Terminal Part Number	V-Min	Name	Wire Part Number	Wire CSA	Wire Spec	Wire Material description	Wire Color Description	Wire Length	End2 Terminal Part Number	End2 Pin Name	End2 Connect or
A	-	-	WIRE891612	-	0.0	-	-	-	0.0	-	PIN1	-
B	-	-	WIRE891600	-	0.0	-	-	-	0.0	-	9	8999

Connector Name	2993
Part Number	1661260C1
Instances	A26/B6.7/L9 - Seatbelt Reminder 6 Seats:Diagram1
Mates	SW-SEATBELT-2017-03-01B

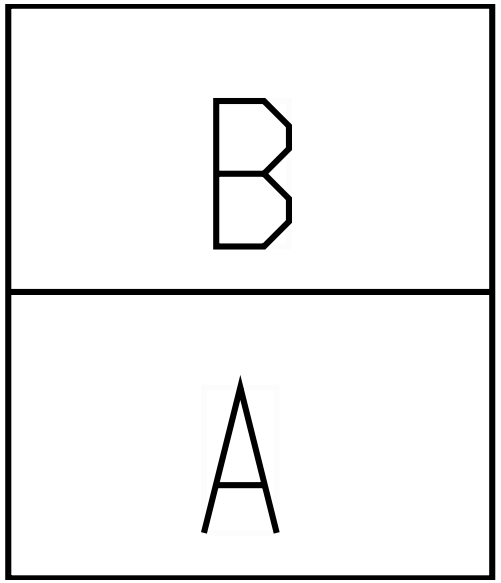

Name	Terminal Part Number	V-Min	Name	Wire Part Number	Wire CSA	Wire Spec	Wire Material description	Wire Color Description	Wire Length	End2 Terminal Part Number	End2 Pin Name	End2 Connect or
A	-	-	WIRE891613	-	0.0	-	-	-	0.0	-	PIN1	-
B	-	-	WIRE891601	-	0.0	-	-	-	0.0	-	4	8999

Connector Name	2994
Part Number	1661260C1
Instances	A26/B6.7/L9 - Seatbelt Reminder 6 Seats:Diagram1
Mates	DEV173302

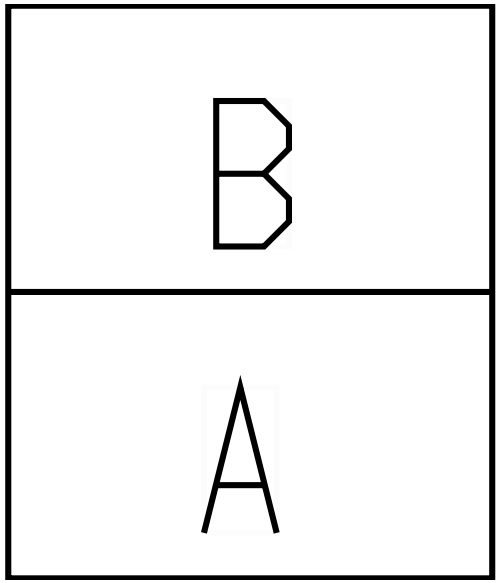

Name	Terminal Part Number	V-Min	Name	Wire Part Number	Wire CSA	Wire Spec	Wire Material description	Wire Color Description	Wire Length	End2 Terminal Part Number	End2 Pin Name	End2 Connect or
A	-	-	WIRE891616	-	0.0	-	-	-	0.0	-	PIN1	-
B	-	-	WIRE891604	-	0.0	-	-	-	0.0	-	10	8999

Connector Name	2995
Part Number	1661260C1
Instances	A26/B6.7/L9 - Seatbelt Reminder 6 Seats:Diagram1
Mates	DEV173303

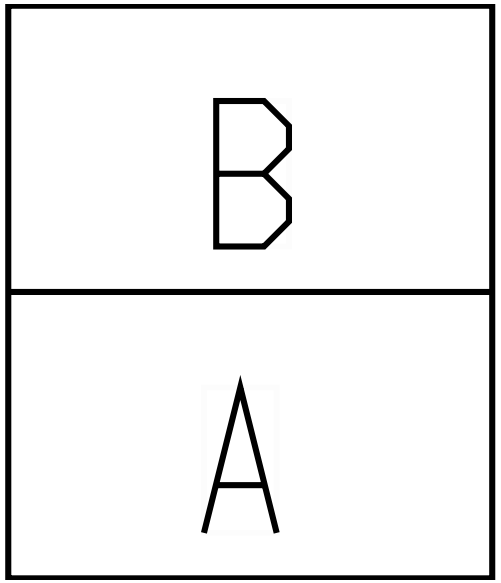

Name	Terminal Part Number	V-Min	Name	Wire Part Number	Wire CSA	Wire Spec	Wire Material description	Wire Color Description	Wire Length	End2 Terminal Part Number	End2 Pin Name	End2 Connect or
A	-	-	WIRE891617	-	0.0	-	-	-	0.0	-	PIN1	-
B	-	-	WIRE891605	-	0.0	-	-	-	0.0	-	3	8999

Connector Name	2996
Part Number	1661260C1
Instances	A26/B6.7/L9 - Seatbelt Reminder 6 Seats:Diagram1
Mates	DEV173324

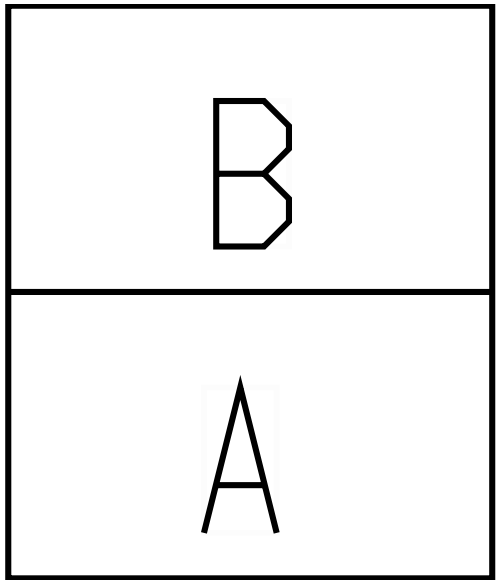

Name	Terminal Part Number	V-Min	Name	Wire Part Number	Wire CSA	Wire Spec	Wire Material description	Wire Color Description	Wire Length	End2 Terminal Part Number	End2 Pin Name	End2 Connect or
A	-	-	WIRE891622	-	0.0	-	-	-	0.0	-	PIN1	-
B	-	-	WIRE891610	-	0.0	-	-	-	0.0	-	12	8999

Connector Name	2997
Part Number	1661260C1
Instances	A26/B6.7/L9 - Seatbelt Reminder 6 Seats:Diagram1
Mates	DEV173308

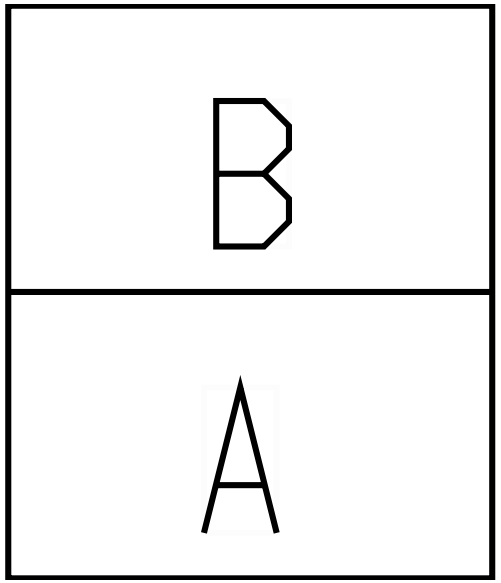

Name	Terminal Part Number	V-Min	Name	Wire Part Number	Wire CSA	Wire Spec	Wire Material description	Wire Color Description	Wire Length	End2 Terminal Part Number	End2 Pin Name	End2 Connect or
A	-	-	WIRE891623	-	0.0	-	-	-	0.0	-	PIN1	-
B	-	-	WIRE891611	-	0.0	-	-	-	0.0	-	1	8999

Connector Name	2998
Part Number	1661260C1
Instances	A26/B6.7/L9 - Seatbelt Reminder 6 Seats:Diagram1
Mates	DEV173325

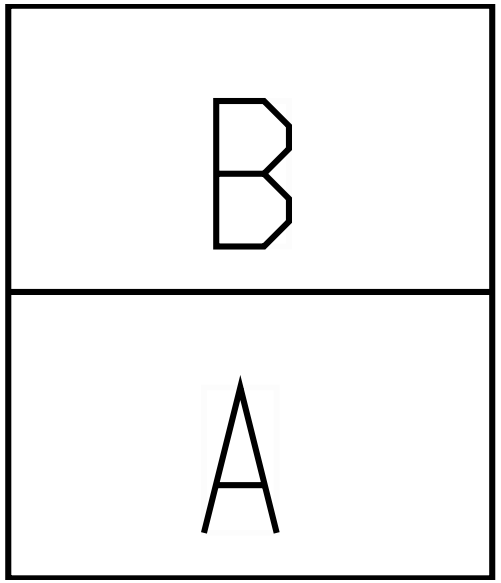

Name	Terminal Part Number	V-Min	Name	Wire Part Number	Wire CSA	Wire Spec	Wire Material description	Wire Color Description	Wire Length	End2 Terminal Part Number	End2 Pin Name	End2 Connect or
A	-	-	WIRE891620	-	0.0	-	-	-	0.0	-	PIN1	-
B	-	-	WIRE891608	-	0.0	-	-	-	0.0	-	11	8999

Connector Name	2999
Part Number	1661260C1
Instances	A26/B6.7/L9 - Seatbelt Reminder 6 Seats:Diagram1
Mates	DEV173306

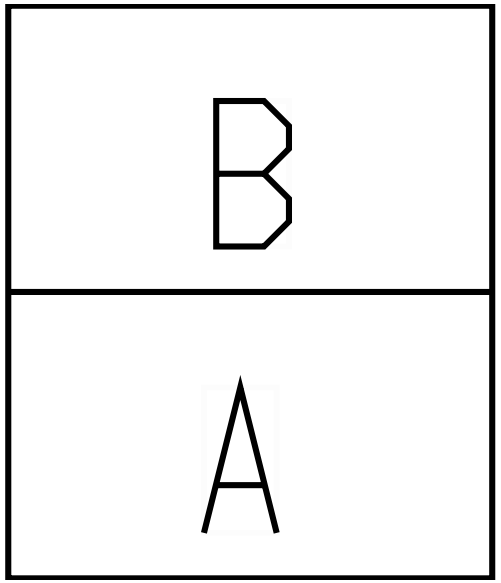

Name	Terminal Part Number	V-Min	Name	Wire Part Number	Wire CSA	Wire Spec	Wire Material description	Wire Color Description	Wire Length	End2 Terminal Part Number	End2 Pin Name	End2 Connect or
A	-	-	WIRE891621	-	0.0	-	-	-	0.0	-	PIN1	-
B	-	-	WIRE891609	-	0.0	-	-	-	0.0	-	2	8999

Connector Name 2

Part Number BLUNT_SL_VC

Instances A26 - Power Lift Gate:Diagram1
B6.7 - Power Lift Gate:Diagram1
L9 - Power Lift Gate:Diagram1

Mates BLNT-Lift_Gate_PWR-2038-02 -01B

Name	Terminal Part Number	V-Min	Name	Wire Part Number	Wire CSA	Wire Spec	Wire Material description	Wire Color Description	Wire Length	End2 Terminal Part Number	End2 Pin Name	End2 Connect or
A	-	-	14A	2645964 R1	61.89	0.0	SGR 125	RED	8840.0	-	A	1

Connector Name	2
Part Number	RING-M-8_0
Instances	A26 - Power Lift Gate:Diagram1 B6.7 - Power Lift Gate:Diagram1 L9 - Power Lift Gate:Diagram1
Mates	RLY-Power_Lift_Gate_Relay- 2038-02-01B

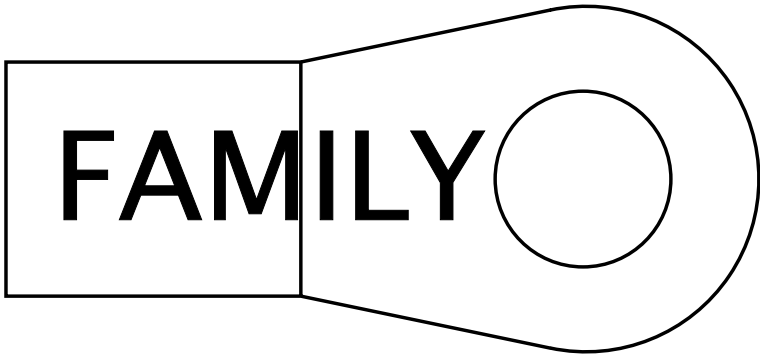

Name	Terminal Part Number	V-Min	Name	Wire Part Number	Wire CSA	Wire Spec	Wire Material description	Wire Color Description	Wire Length	End2 Terminal Part Number	End2 Pin Name	End2 Connect or
A	-	-	14B	2645970 R1	101.95	0.0	SGR 125	RED	300.0	-	-	-

Connector Name	3000F
Part Number	1661201C1
Short Description	IP/DOOR INTERCONNECT 1
Instances	A26 - Mirrors (Heat) Switch Pack Actuated includes Hood Mirrors:Diagram1 A26 - Mirrors (Heat) Switch Pack Actuated includes RT Hood Mirror:Diagram1 A26/B6.7/L9 - Mirrors (Heat) Switch Pack Actuated Relay Driven:Diagram1 A26/B6.7/L9 - Power Mirrors (Control Switch Actuated):Diagram1 A26/B6.7/L9 - Power Mirrors (Control Switch Actuated):Diagram2 B6.7 - Mirrors (Heat) Switch Pack Actuated includes Hood Mirrors:Diagram1 B6.7 - Mirrors (Heat) Switch Pack Actuated includes Hood Mirrors:Diagram2 B6.7 - Mirrors (Heat) Switch Pack Actuated includes RT Hood Mirror:Diagram1 B6.7 - Mirrors (Heat) Switch Pack Actuated includes RT Hood Mirror:Diagram2 B6.7 - Mirrors (Heat) Switch Pack Actuated includes RT Hood Mirror:Diagram3 B6.7 - Mirrors (Heat) Switch Pack Actuated includes RT Hood Mirror:Diagram4 L9 - Mirrors (Heat) Switch Pack Actuated includes Hood Mirrors:Diagram1 L9 - Mirrors (Heat) Switch Pack Actuated includes Hood Mirrors:Diagram2 L9 - Mirrors (Heat) Switch Pack Actuated includes Hood Mirrors:Diagram3 L9 - Mirrors (Heat) Switch Pack Actuated includes Hood Mirrors:Diagram4 L9 - Mirrors (Heat) Switch Pack Actuated includes RT Hood Mirror:Diagram1 L9 - Mirrors (Heat) Switch Pack Actuated includes RT Hood Mirror:Diagram2 L9 - Mirrors (Heat) Switch Pack Actuated includes RT Hood Mirror:Diagram3 L9 - Mirrors (Heat) Switch Pack Actuated includes RT Hood Mirror:Diagram4
Mates	3000M

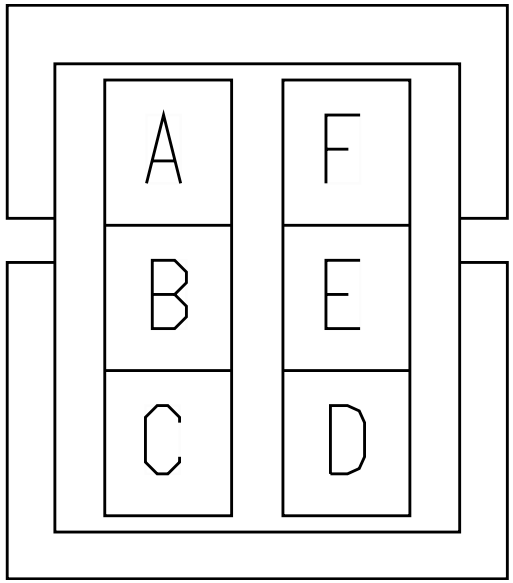

Name	Terminal Part Number	V-Min	Name	Wire Part Number	Wire CSA	Wire Spec	Wire Material description	Wire Color Description	Wire Length	End2 Terminal Part Number	End2 Pin Name	End2 Connect or
B	-	-	RF78RJ	3510300 R1	1.16	16.0	Thin Wall XLPE Primary Cable	LIGHT GREEN	1415.0	-	X	-
C	-	-	RG62DD	3510353 R1	0.79	18.0	Thin Wall XLPE Primary Cable	DARK BLUE	905.0	-	-	-
D	-	-	RG78J	3510299 R1	0.79	18.0	Thin Wall XLPE Primary Cable	LIGHT GREEN	2465.0	-	D	3100F
E	-	-	RG78M	3510299 R1	0.79	18.0	Thin Wall XLPE Primary Cable	LIGHT GREEN	2465.0	-	E	3100F
F	-	-	RG78L	3510299 R1	0.79	18.0	Thin Wall XLPE Primary Cable	LIGHT GREEN	2465.0	-	F	3100F

Connector Name	3000M
Part Number	1661200C1
Short Description	DOOR/IP INTERCONNECT
Instances	A26 - Mirrors (Heat) Switch Pack Actuated includes Hood Mirrors:Diagram1 A26 - Mirrors (Heat) Switch Pack Actuated includes RT Hood Mirror:Diagram1 A26/B6.7/L9 - Mirrors (Heat) Switch Pack Actuated Relay Driven:Diagram1 A26/B6.7/L9 - Power Mirrors (Control Switch Actuated):Diagram1 A26/B6.7/L9 - Power Mirrors (Control Switch Actuated):Diagram2 B6.7 - Mirrors (Heat) Switch Pack Actuated includes Hood Mirrors:Diagram1 B6.7 - Mirrors (Heat) Switch Pack Actuated includes Hood Mirrors:Diagram2 B6.7 - Mirrors (Heat) Switch Pack Actuated includes RT Hood Mirror:Diagram1 B6.7 - Mirrors (Heat) Switch Pack Actuated includes RT Hood Mirror:Diagram2 B6.7 - Mirrors (Heat) Switch Pack Actuated includes RT Hood Mirror:Diagram3 B6.7 - Mirrors (Heat) Switch Pack Actuated includes RT Hood Mirror:Diagram4 L9 - Mirrors (Heat) Switch Pack Actuated includes Hood Mirrors:Diagram1 L9 - Mirrors (Heat) Switch Pack Actuated includes Hood Mirrors:Diagram2 L9 - Mirrors (Heat) Switch Pack Actuated includes Hood Mirrors:Diagram3 L9 - Mirrors (Heat) Switch Pack Actuated includes Hood Mirrors:Diagram4 L9 - Mirrors (Heat) Switch Pack Actuated includes RT Hood Mirror:Diagram1 L9 - Mirrors (Heat) Switch Pack Actuated includes RT Hood Mirror:Diagram2 L9 - Mirrors (Heat) Switch Pack Actuated includes RT Hood Mirror:Diagram3 L9 - Mirrors (Heat) Switch Pack Actuated includes RT Hood Mirror:Diagram4
Mates	3100F

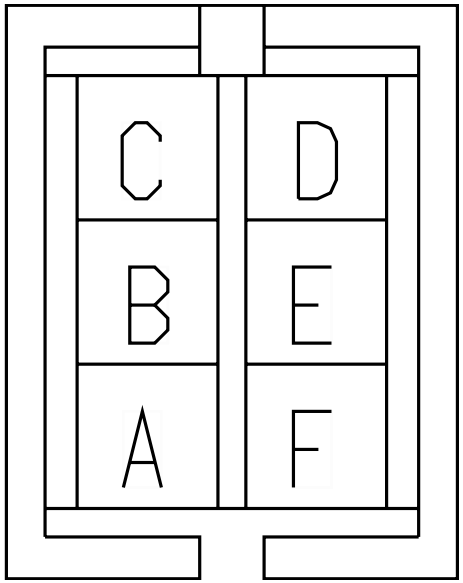

Name	Terminal Part Number	V-Min	Name	Wire Part Number	Wire CSA	Wire Spec	Wire Material description	Wire Color Description	Wire Length	End2 Terminal Part Number	End2 Pin Name	End2 Connect or
B	-	-	FK78A	2643671 R1	0.79	18.0	Std. Wall XLPE Primary Cable	LIGHT GREEN	980.0	-	G	3000M
D	-	-	FJ78D	3510299 R1	0.79	18.0	Thin Wall XLPE Primary Cable	LIGHT GREEN	980.0	-	B	3000M
E	-	-	FJ78E	3510299 R1	0.79	18.0	Thin Wall XLPE Primary Cable	LIGHT GREEN	980.0	-	A	3000M
F	-	-	FJ78F	2643671 R1	0.79	18.0	Std. Wall XLPE Primary Cable	LIGHT GREEN	980.0	-	F	3000M

Connector Name	3000M
Part Number	1661200C1
Short Description	DOOR/IP INTERCONNECT
Instances	A26 - Mirrors (Heat) Switch Pack Actuated includes Hood Mirrors:Diagram1 A26 - Mirrors (Heat) Switch Pack Actuated includes RT Hood Mirror:Diagram1 A26/B6.7/L9 - Mirrors (Heat) Switch Pack Actuated Relay Driven:Diagram1 A26/B6.7/L9 - Power Mirrors (Control Switch Actuated):Diagram1 A26/B6.7/L9 - Power Mirrors (Control Switch Actuated):Diagram2 B6.7 - Mirrors (Heat) Switch Pack Actuated includes Hood Mirrors:Diagram1 B6.7 - Mirrors (Heat) Switch Pack Actuated includes Hood Mirrors:Diagram2 B6.7 - Mirrors (Heat) Switch Pack Actuated includes RT Hood Mirror:Diagram1 B6.7 - Mirrors (Heat) Switch Pack Actuated includes RT Hood Mirror:Diagram2 B6.7 - Mirrors (Heat) Switch Pack Actuated includes RT Hood Mirror:Diagram3 B6.7 - Mirrors (Heat) Switch Pack Actuated includes RT Hood Mirror:Diagram4 L9 - Mirrors (Heat) Switch Pack Actuated includes Hood Mirrors:Diagram1 L9 - Mirrors (Heat) Switch Pack Actuated includes Hood Mirrors:Diagram2 L9 - Mirrors (Heat) Switch Pack Actuated includes Hood Mirrors:Diagram3 L9 - Mirrors (Heat) Switch Pack Actuated includes Hood Mirrors:Diagram4 L9 - Mirrors (Heat) Switch Pack Actuated includes RT Hood Mirror:Diagram1 L9 - Mirrors (Heat) Switch Pack Actuated includes RT Hood Mirror:Diagram2 L9 - Mirrors (Heat) Switch Pack Actuated includes RT Hood Mirror:Diagram3 L9 - Mirrors (Heat) Switch Pack Actuated includes RT Hood Mirror:Diagram4
Mates	3000F

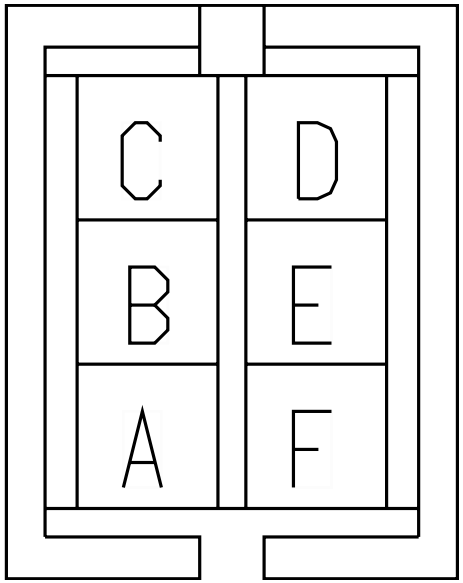

Name	Terminal Part Number	V-Min	Name	Wire Part Number	Wire CSA	Wire Spec	Wire Material description	Wire Color Description	Wire Length	End2 Terminal Part Number	End2 Pin Name	End2 Connector
B	-	-	EH78A	2643671 R1	0.79	18.0	Std. Wall XLPE Primary Cable	LIGHT GREEN	980.0	-	G	3000M
C	-	-	EJ62DD	3510353 R1	0.79	18.0	Thin Wall XLPE Primary Cable	DARK BLUE	780.0	-	X	-
C	-	-	EK62D	3510352 R1	0.53	20.0	Thin Wall XLPE Primary Cable	DARK BLUE	195.0	-	A1	254M
D	-	-	EK78DB	3510298 R1	0.53	20.0	Thin Wall XLPE Primary Cable	LIGHT GREEN	195.0	-	B2	254M
D	-	-	EJ78D	3510299 R1	0.79	18.0	Thin Wall XLPE Primary Cable	LIGHT GREEN	880.0	-	X	-
E	-	-	EK78EF	3510298 R1	0.53	20.0	Thin Wall XLPE Primary Cable	LIGHT GREEN	195.0	-	B4	254M
E	-	-	EJ78E	3510299 R1	0.79	18.0	Thin Wall XLPE Primary Cable	LIGHT GREEN	930.0	-	X	-
F	-	-	EJ78F	2643671 R1	0.79	18.0	Std. Wall XLPE Primary Cable	LIGHT GREEN	730.0	-	X	-
F	-	-	EK78FK	2643671 R1	0.79	18.0	Std. Wall XLPE Primary Cable	LIGHT GREEN	140.0	-	X	-

Connector Name	3000M
Part Number	3538634C1
Instances	A26/B6.7/L9 - Door Pod Module (2 Door):Diagram1
Mates	MODU-DS-MIRROR-1019-01-01A

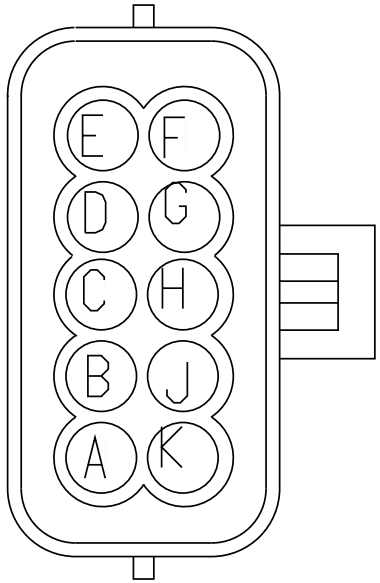

Name	Terminal Part Number	V-Min	Name	Wire Part Number	Wire CSA	Wire Spec	Wire Material description	Wire Color Description	Wire Length	End2 Terminal Part Number	End2 Pin Name	End2 Connect or
G	-	-	EA78AA	3510300 R1	1.16	16.0	Thin Wall XLPE Primary Cable	LIGHT GREEN	1130.0	-	1	3203M
H	-	-	EA78-GF	3510360 R1	1.16	16.0	Thin Wall XLPE Primary Cable	WHITE	1130.0	-	8	3203M

Connector Name	3000M
Part Number	3538634C1
Instances	A26/B6.7/L9 - Door Pod Module (2 Door):Diagram1
Mates	MODU-DS-MIRROR-1019-01-01A

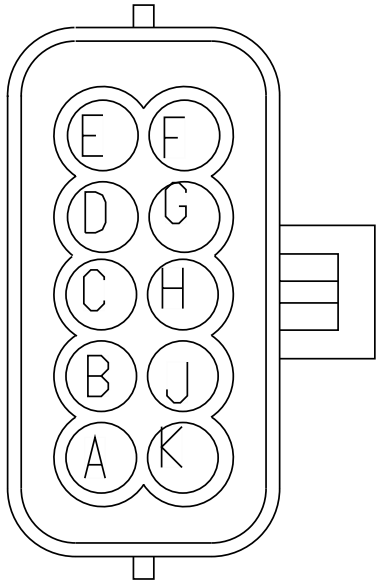

Name	Terminal Part Number	V-Min	Name	Wire Part Number	Wire CSA	Wire Spec	Wire Material description	Wire Color Description	Wire Length	End2 Terminal Part Number	End2 Pin Name	End2 Connect or
A	-	-	EB78G	2643671 R1	0.79	18.0	Std. Wall XLPE Primary Cable	LIGHT GREEN	1130.0	-	5	3203M
B	-	-	EB78C	2643671 R1	0.79	18.0	Std. Wall XLPE Primary Cable	LIGHT GREEN	1130.0	-	4	3203M
F	-	-	EB78H	3510334 R1	0.53	20.0	Thin Wall XLPE Primary Cable	YELLOW 2	1130.0	-	6	3203M

Connector Name	3000M
Part Number	3538634C1
Instances	A26/B6.7/L9 - Door Pod Module (2 Door):Diagram1
Mates	MODU-PS-MIRROR-1019-01-01A

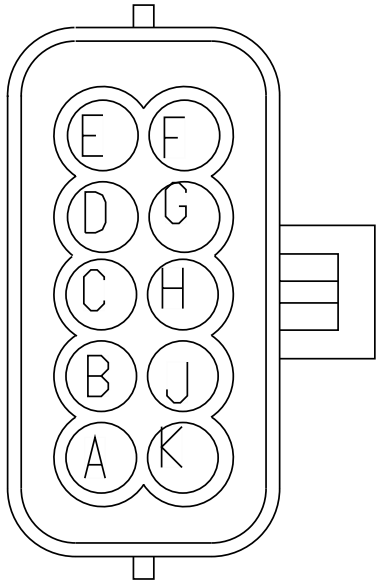

Name	Terminal Part Number	V-Min	Name	Wire Part Number	Wire CSA	Wire Spec	Wire Material description	Wire Color Description	Wire Length	End2 Terminal Part Number	End2 Pin Name	End2 Connect or
G	-	-	FA78AA	3510300 R1	1.16	16.0	Thin Wall XLPE Primary Cable	LIGHT GREEN	1130.0	-	1	3203M
H	-	-	FA78-GF	3510360 R1	1.16	16.0	Thin Wall XLPE Primary Cable	WHITE	1130.0	-	8	3203M

Connector Name	3000M
Part Number	3538634C1
Instances	A26/B6.7/L9 - Door Pod Module (2 Door):Diagram1
Mates	MODU-PS-MIRROR-1019-01-01A

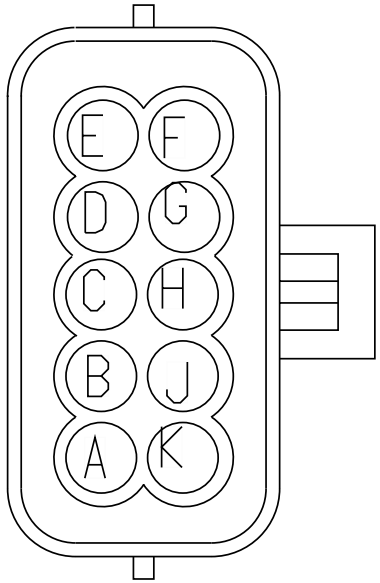

Name	Terminal Part Number	V-Min	Name	Wire Part Number	Wire CSA	Wire Spec	Wire Material description	Wire Color Description	Wire Length	End2 Terminal Part Number	End2 Pin Name	End2 Connect or
A	-	-	FB78G	2643671 R1	0.79	18.0	Std. Wall XLPE Primary Cable	LIGHT GREEN	1130.0	-	5	3203M
B	-	-	FB78C	2643671 R1	0.79	18.0	Std. Wall XLPE Primary Cable	LIGHT GREEN	1130.0	-	4	3203M
F	-	-	FB78H	3510334 R1	0.53	20.0	Thin Wall XLPE Primary Cable	YELLOW 2	1130.0	-	6	3203M

Connector Name	3000M
Part Number	3538634C1
Instances	A26 - Ambient Air Temperature:Diagram1 A26 - Heated Mirrors (Hood with Door Pods):Diagram1 A26 - Heated Mirrors (RT Hood with Door Pods):Diagram1 A26 - Mirrors (Heat) Switch Pack Actuated includes Hood Mirrors:Diagram1 A26 - Mirrors (Heat) Switch Pack Actuated includes RT Hood Mirror:Diagram1 A26/B6.7/L9 - Door Pod Module (4 Door):Diagram1 A26/B6.7/L9 - Mirrors (Heat) Switch Pack Actuated Relay Driven:Diagram1 A26/B6.7/L9 - Mirrors (Heated):Diagram1 A26/B6.7/L9 - Power Mirrors (Control Switch Actuated):Diagram1 A26/B6.7/L9 - Power Mirrors (Control Switch Actuated):Diagram2 B6.7 - Heated Mirrors (Hood with Door Pods):Diagram1 B6.7 - Heated Mirrors (Hood with Door Pods):Diagram2 B6.7 - Heated Mirrors (RT Hood with Door Pods):Diagram1 B6.7 - Heated Mirrors (RT Hood with Door Pods):Diagram2 B6.7 - Heated Mirrors (RT Hood with Door Pods):Diagram3 B6.7 - Heated Mirrors (RT Hood with Door Pods):Diagram4 B6.7 - Mirrors (Heat) Switch Pack Actuated includes Hood Mirrors:Diagram1 B6.7 - Mirrors (Heat) Switch Pack Actuated includes Hood Mirrors:Diagram2 B6.7 - Mirrors (Heat) Switch Pack Actuated includes RT Hood Mirror:Diagram1 B6.7 - Mirrors (Heat) Switch Pack Actuated includes RT Hood Mirror:Diagram2 B6.7 - Mirrors (Heat) Switch Pack Actuated includes RT Hood Mirror:Diagram3 B6.7 - Mirrors (Heat) Switch Pack Actuated includes RT Hood Mirror:Diagram4 L9 - Ambient Air Temperature:Diagram1 L9 - Heated Mirrors (Hood with Door Pods):Diagram1 L9 - Heated Mirrors (Hood with Door Pods):Diagram2 L9 - Heated Mirrors (Hood with Door Pods):Diagram3 L9 - Heated Mirrors (Hood with Door Pods):Diagram4 L9 - Heated Mirrors (RT Hood with Door Pods):Diagram1 L9 - Heated Mirrors (RT Hood with Door Pods):Diagram2 L9 - Heated Mirrors (RT Hood with Door Pods):Diagram3

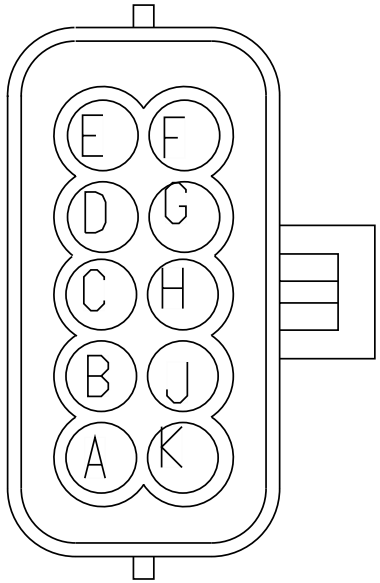

L9 - Heated Mirrors (RT Hood with Door Pods):Diagram4
L9 - Mirrors (Heat) Switch Pack Actuated includes Hood Mirrors:Diagram1
L9 - Mirrors (Heat) Switch Pack Actuated includes Hood Mirrors:Diagram2
L9 - Mirrors (Heat) Switch Pack Actuated includes Hood Mirrors:Diagram3
L9 - Mirrors (Heat) Switch Pack Actuated includes Hood Mirrors:Diagram4
L9 - Mirrors (Heat) Switch Pack Actuated includes RT Hood Mirror:Diagram1
L9 - Mirrors (Heat) Switch Pack Actuated includes RT Hood Mirror:Diagram2
L9 - Mirrors (Heat) Switch Pack Actuated includes RT Hood Mirror:Diagram3
L9 - Mirrors (Heat) Switch Pack Actuated includes RT Hood Mirror:Diagram4

Mates MODU-DS-MIRROR-1019-01-01A

Name	Terminal Part Number	V-Min	Name	Wire Part Number	Wire CSA	Wire Spec	Wire Material description	Wire Color Description	Wire Length	End2 Terminal Part Number	End2 Pin Name	End2 Connect or
A	-	-	EK78CA	3510298 R1	0.53	20.0	Thin Wall XLPE Primary Cable	LIGHT GREEN	1015.0	-	B3	254M
A	-	-	EJ78FB	2643761 R1	0.53	20.0	Std. Wall XLPE Primary Cable	LIGHT GREEN	650.0	-	X	-
A	-	-	EB78G	2643671 R1	0.79	18.0	Std. Wall XLPE Primary Cable	LIGHT GREEN	1130.0	-	5	3203M
B	-	-	EK78JA	3510298 R1	0.53	20.0	Thin Wall XLPE Primary Cable	LIGHT GREEN	1015.0	-	B1	254M

Name	Terminal Part Number	V-Min	Name	Wire Part Number	Wire CSA	Wire Spec	Wire Material description	Wire Color Description	Wire Length	End2 Terminal Part Number	End2 Pin Name	End2 Connector
B	-	-	EJ78J	3510298 R1	0.53	20.0	Thin Wall XLPE Primary Cable	LIGHT GREEN	1120.0	-	5	100
B	-	-	EB78C	2643671 R1	0.79	18.0	Std. Wall XLPE Primary Cable	LIGHT GREEN	1130.0	-	4	3203M
C	-	-	ET41D	3510329 R1	0.79	18.0	Thin Wall XLPE Primary Cable	TAN	1025.0	-	E	3200F
D	-	-	ET41E	3510329 R1	0.79	18.0	Thin Wall XLPE Primary Cable	TAN	1025.0	-	F	3200F
F	-	-	EJ78R	3510298 R1	0.53	20.0	Thin Wall XLPE Primary Cable	LIGHT GREEN	1120.0	-	7	100
F	-	-	EK78MK	3510298 R1	0.53	20.0	Thin Wall XLPE Primary Cable	LIGHT GREEN	840.0	-	X	-
F	-	-	EB78H	3510334 R1	0.53	20.0	Thin Wall XLPE Primary Cable	YELLOW 2	1130.0	-	6	3203M
G	-	-	EA78AA	3510300 R1	1.16	16.0	Thin Wall XLPE Primary Cable	LIGHT GREEN	1130.0	-	1	3203M

Name	Terminal Part Number	V-Min	Name	Wire Part Number	Wire CSA	Wire Spec	Wire Material description	Wire Color Description	Wire Length	End2 Terminal Part Number	End2 Pin Name	End2 Connect or
G	-	-	EH78A	2643671 R1	0.79	18.0	Std. Wall XLPE Primary Cable	LIGHT GREEN	980.0	-	B	3000M
H	-	-	EA78-GF	3510360 R1	1.16	16.0	Thin Wall XLPE Primary Cable	WHITE	1130.0	-	8	3203M
H	-	-	EH78-GE	3510360 R1	1.16	16.0	Thin Wall XLPE Primary Cable	WHITE	1025.0	-	D	3200F
H	-	-	EJ78-GB	3510360 R1	1.16	16.0	Thin Wall XLPE Primary Cable	WHITE	490.0	-	X	-
H	-	-	EK78-GH	3510360 R1	1.16	16.0	Thin Wall XLPE Primary Cable	WHITE	790.0	-	X	-

Connector Name	3000M
Part Number	3538634C1
Instances	A26 - Heated Mirrors (Hood with Door Pods):Diagram1 A26 - Heated Mirrors (RT Hood with Door Pods):Diagram1 A26 - Mirrors (Heat) Switch Pack Actuated includes Hood Mirrors:Diagram1 A26 - Mirrors (Heat) Switch Pack Actuated includes RT Hood Mirror:Diagram1 A26/B6.7/L9 - Door Pod Module (4 Door):Diagram1 A26/B6.7/L9 - Mirrors (Heat) Switch Pack Actuated Relay Driven:Diagram1 A26/B6.7/L9 - Mirrors (Heated):Diagram1 A26/B6.7/L9 - Power Mirrors (Control Switch Actuated):Diagram1 A26/B6.7/L9 - Power Mirrors (Control Switch Actuated):Diagram2 B6.7 - Heated Mirrors (Hood with Door Pods):Diagram1 B6.7 - Heated Mirrors (Hood with Door Pods):Diagram2 B6.7 - Heated Mirrors (RT Hood with Door Pods):Diagram1 B6.7 - Heated Mirrors (RT Hood with Door Pods):Diagram2 B6.7 - Heated Mirrors (RT Hood with Door Pods):Diagram3 B6.7 - Heated Mirrors (RT Hood with Door Pods):Diagram4 B6.7 - Mirrors (Heat) Switch Pack Actuated includes Hood Mirrors:Diagram1 B6.7 - Mirrors (Heat) Switch Pack Actuated includes Hood Mirrors:Diagram2 B6.7 - Mirrors (Heat) Switch Pack Actuated includes RT Hood Mirror:Diagram1 B6.7 - Mirrors (Heat) Switch Pack Actuated includes RT Hood Mirror:Diagram2 B6.7 - Mirrors (Heat) Switch Pack Actuated includes RT Hood Mirror:Diagram3 B6.7 - Mirrors (Heat) Switch Pack Actuated includes RT Hood Mirror:Diagram4 L9 - Heated Mirrors (Hood with Door Pods):Diagram1 L9 - Heated Mirrors (Hood with Door Pods):Diagram2 L9 - Heated Mirrors (Hood with Door Pods):Diagram3 L9 - Heated Mirrors (Hood with Door Pods):Diagram4 L9 - Heated Mirrors (RT Hood with Door Pods):Diagram1 L9 - Heated Mirrors (RT Hood with Door Pods):Diagram2 L9 - Heated Mirrors (RT Hood with Door Pods):Diagram3 L9 - Heated Mirrors (RT Hood with Door Pods):Diagram4

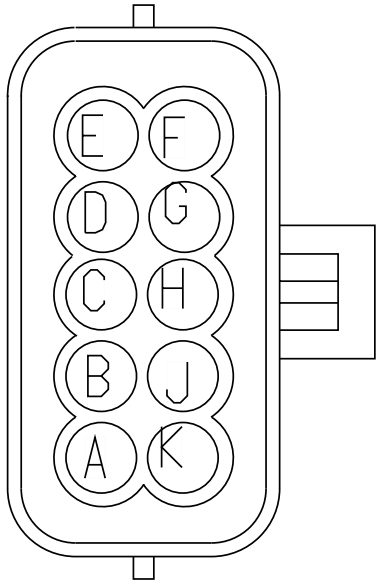

L9 - Mirrors (Heat) Switch Pack Actuated includes Hood Mirrors:Diagram1
L9 - Mirrors (Heat) Switch Pack Actuated includes Hood Mirrors:Diagram2
L9 - Mirrors (Heat) Switch Pack Actuated includes Hood Mirrors:Diagram3
L9 - Mirrors (Heat) Switch Pack Actuated includes Hood Mirrors:Diagram4
L9 - Mirrors (Heat) Switch Pack Actuated includes RT Hood Mirror:Diagram1
L9 - Mirrors (Heat) Switch Pack Actuated includes RT Hood Mirror:Diagram2
L9 - Mirrors (Heat) Switch Pack Actuated includes RT Hood Mirror:Diagram3
L9 - Mirrors (Heat) Switch Pack Actuated includes RT Hood Mirror:Diagram4

Mates MODU-PS-MIRROR-1019-01-01A

Name	Terminal Part Number	V-Min	Name	Wire Part Number	Wire CSA	Wire Spec	Wire Material description	Wire Color Description	Wire Length	End2 Terminal Part Number	End2 Pin Name	End2 Connect or
A	-	-	FJ78E	3510299 R1	0.79	18.0	Thin Wall XLPE Primary Cable	LIGHT GREEN	980.0	-	E	3000M
A	-	-	FB78G	2643671 R1	0.79	18.0	Std. Wall XLPE Primary Cable	LIGHT GREEN	1130.0	-	5	3203M
B	-	-	FJ78D	3510299 R1	0.79	18.0	Thin Wall XLPE Primary Cable	LIGHT GREEN	980.0	-	D	3000M
B	-	-	FB78C	2643671 R1	0.79	18.0	Std. Wall XLPE Primary Cable	LIGHT GREEN	1130.0	-	4	3203M

Name	Terminal Part Number	V-Min	Name	Wire Part Number	Wire CSA	Wire Spec	Wire Material description	Wire Color Description	Wire Length	End2 Terminal Part Number	End2 Pin Name	End2 Connect or
F	-	-	FJ78F	2643671 R1	0.79	18.0	Std. Wall XLPE Primary Cable	LIGHT GREEN	980.0	-	F	3000M
F	-	-	FB78H	3510334 R1	0.53	20.0	Thin Wall XLPE Primary Cable	YELLOW 2	1130.0	-	6	3203M
G	-	-	FA78AA	3510300 R1	1.16	16.0	Thin Wall XLPE Primary Cable	LIGHT GREEN	1130.0	-	1	3203M
G	-	-	FK78A	2643671 R1	0.79	18.0	Std. Wall XLPE Primary Cable	LIGHT GREEN	980.0	-	B	3000M
H	-	-	FA78-GF	3510360 R1	1.16	16.0	Thin Wall XLPE Primary Cable	WHITE	1130.0	-	8	3203M
H	-	-	FK78-GA	3510360 R1	1.16	16.0	Thin Wall XLPE Primary Cable	WHITE	1025.0	-	D	3200F

Connector Name	3000
Part Number	1661260C1
Instances	A26/B6.7/L9 - Seatbelt Reminder 6 Seats:Diagram1
Mates	DEV173304

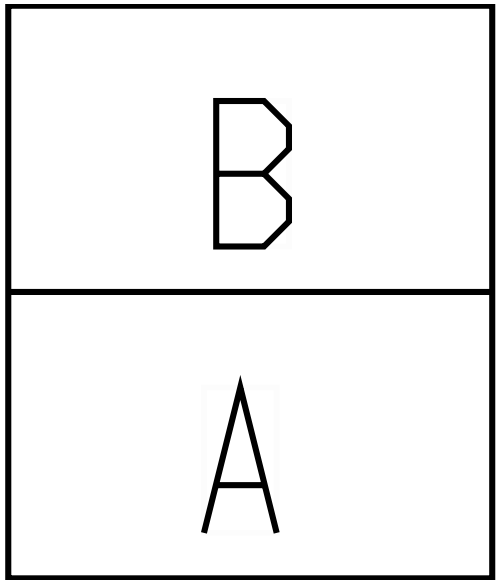

Name	Terminal Part Number	V-Min	Name	Wire Part Number	Wire CSA	Wire Spec	Wire Material description	Wire Color Description	Wire Length	End2 Terminal Part Number	End2 Pin Name	End2 Connect or
A	-	-	WIRE891618	-	0.0	-	-	-	0.0	-	PIN1	-
B	-	-	WIRE891606	-	0.0	-	-	-	0.0	-	7	8999

Connector Name	3001
Part Number	899167R1
Instances	A26/B6.7/L9 - Heated Windshield:Diagram1
Mates	HTR-WINDSHIELD-6001-01-01A

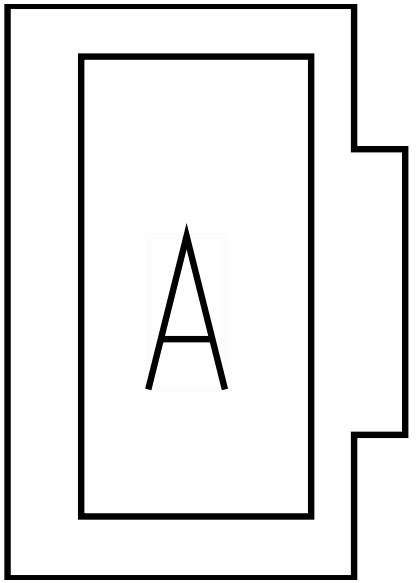

Name	Terminal Part Number	V-Min	Name	Wire Part Number	Wire CSA	Wire Spec	Wire Material description	Wire Color Description	Wire Length	End2 Terminal Part Number	End2 Pin Name	End2 Connect or
A	-	-	RK78D	3510295 R1	1.91	14.0	Thin Wall XLPE Primary Cable	BLACK	2460.0	-	R1 - 87	1014

Connector Name	3002M
Part Number	3767181C1
Instances	A26/B6.7/L9 - Door Pod Module (4 Door):Diagram1
Mates	MOT-DS_WINDOW-2013-01-01B

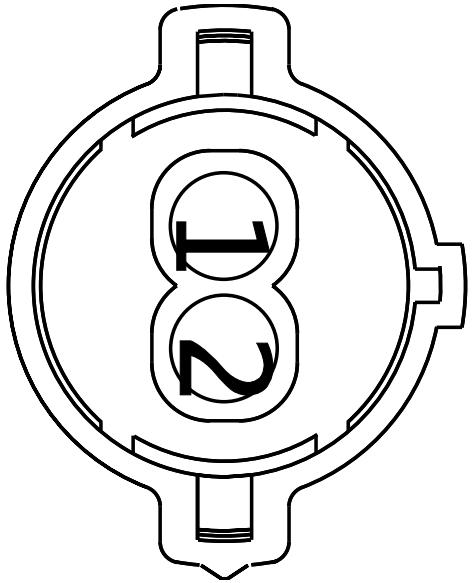

Name	Terminal Part Number	V-Min	Name	Wire Part Number	Wire CSA	Wire Spec	Wire Material description	Wire Color Description	Wire Length	End2 Terminal Part Number	End2 Pin Name	End2 Connect or
1	-	-	F83B	3510301 R1	1.91	14.0	Thin Wall XLPE Primary Cable	LIGHT GREEN	705.0	-	2	3201M
1	-	-	E83B	3510301 R1	1.91	14.0	Thin Wall XLPE Primary Cable	LIGHT GREEN	705.0	-	2	3209M
2	-	-	F83A	3510301 R1	1.91	14.0	Thin Wall XLPE Primary Cable	LIGHT GREEN	705.0	-	1	3201M
2	-	-	E83A	3510301 R1	1.91	14.0	Thin Wall XLPE Primary Cable	LIGHT GREEN	705.0	-	1	3209M

Connector Name	3002
Part Number	1661260C1
Instances	A26/B6.7/L9 - Seatbelt Reminder 6 Seats:Diagram1
Mates	DEV173305

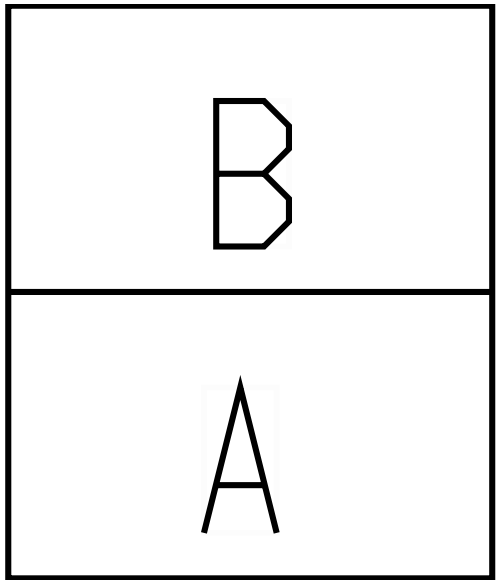

Name	Terminal Part Number	V-Min	Name	Wire Part Number	Wire CSA	Wire Spec	Wire Material description	Wire Color Description	Wire Length	End2 Terminal Part Number	End2 Pin Name	End2 Connect or
A	-	-	WIRE891619	-	0.0	-	-	-	0.0	-	PIN1	-
B	-	-	WIRE891607	-	0.0	-	-	-	0.0	-	6	8999

Connector Name	3004
Part Number	899167R1
Instances	A26/B6.7/L9 - Heated Windshield:Diagram1
Mates	HTR-WINDSHIELD-6001-01-01A

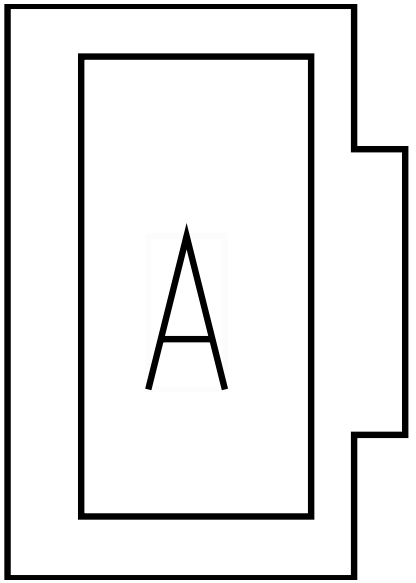

Name	Terminal Part Number	V-Min	Name	Wire Part Number	Wire CSA	Wire Spec	Wire Material description	Wire Color Description	Wire Length	End2 Terminal Part Number	End2 Pin Name	End2 Connect or
A	-	-	RK78B	3510295 R1	1.91	14.0	Thin Wall XLPE Primary Cable	BLACK	3595.0	-	R5 - 87	1014

Connector Name	3005
Part Number	899167R1
Instances	A26/B6.7/L9 - Heated Windshield:Diagram1
Mates	HTR-WINDSHIELD-6001-01-01A

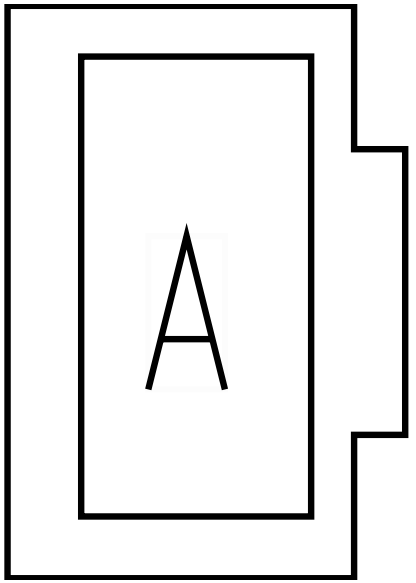

Name	Terminal Part Number	V-Min	Name	Wire Part Number	Wire CSA	Wire Spec	Wire Material description	Wire Color Description	Wire Length	End2 Terminal Part Number	End2 Pin Name	End2 Connect or
A	-	-	RK78-GB	3510362 R1	3.01	12.0	Thin Wall XLPE Primary Cable	WHITE	2505.0	-	-	-

Connector Name	3100F
Part Number	1661201C1
Short Description	IP/DOOR INTERCONNECT 2
Instances	A26 - Mirrors (Heat) Switch Pack Actuated includes Hood Mirrors:Diagram1 A26 - Mirrors (Heat) Switch Pack Actuated includes RT Hood Mirror:Diagram1 A26/B6.7/L9 - Mirrors (Heat) Switch Pack Actuated Relay Driven:Diagram1 A26/B6.7/L9 - Power Mirrors (Control Switch Actuated):Diagram1 A26/B6.7/L9 - Power Mirrors (Control Switch Actuated):Diagram2 B6.7 - Mirrors (Heat) Switch Pack Actuated includes Hood Mirrors:Diagram1 B6.7 - Mirrors (Heat) Switch Pack Actuated includes Hood Mirrors:Diagram2 B6.7 - Mirrors (Heat) Switch Pack Actuated includes RT Hood Mirror:Diagram1 B6.7 - Mirrors (Heat) Switch Pack Actuated includes RT Hood Mirror:Diagram2 B6.7 - Mirrors (Heat) Switch Pack Actuated includes RT Hood Mirror:Diagram3 B6.7 - Mirrors (Heat) Switch Pack Actuated includes RT Hood Mirror:Diagram4 L9 - Mirrors (Heat) Switch Pack Actuated includes Hood Mirrors:Diagram1 L9 - Mirrors (Heat) Switch Pack Actuated includes Hood Mirrors:Diagram2 L9 - Mirrors (Heat) Switch Pack Actuated includes Hood Mirrors:Diagram3 L9 - Mirrors (Heat) Switch Pack Actuated includes Hood Mirrors:Diagram4 L9 - Mirrors (Heat) Switch Pack Actuated includes RT Hood Mirror:Diagram1 L9 - Mirrors (Heat) Switch Pack Actuated includes RT Hood Mirror:Diagram2 L9 - Mirrors (Heat) Switch Pack Actuated includes RT Hood Mirror:Diagram3 L9 - Mirrors (Heat) Switch Pack Actuated includes RT Hood Mirror:Diagram4
Mates	3000M

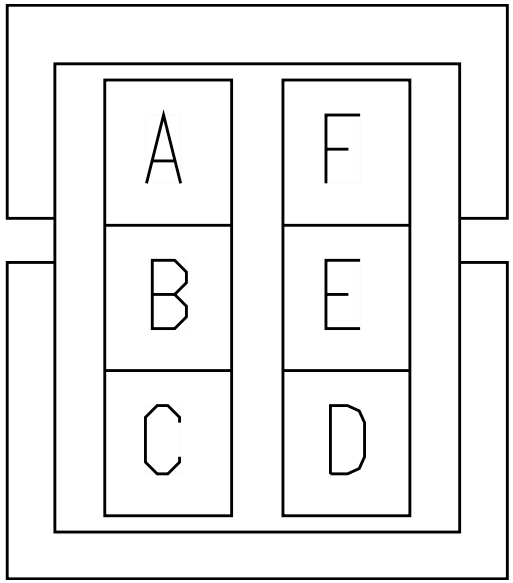

Name	Terminal Part Number	V-Min	Name	Wire Part Number	Wire CSA	Wire Spec	Wire Material description	Wire Color Description	Wire Length	End2 Terminal Part Number	End2 Pin Name	End2 Connect or
B	-	-	RF78B	3510300 R1	1.16	16.0	Thin Wall XLPE Primary Cable	LIGHT GREEN	1050.0	-	X	-
D	-	-	RG78J	3510299 R1	0.79	18.0	Thin Wall XLPE Primary Cable	LIGHT GREEN	2465.0	-	D	3000F
E	-	-	RG78M	3510299 R1	0.79	18.0	Thin Wall XLPE Primary Cable	LIGHT GREEN	2465.0	-	E	3000F
F	-	-	RG78L	3510299 R1	0.79	18.0	Thin Wall XLPE Primary Cable	LIGHT GREEN	2465.0	-	F	3000F

Connector Name	3100M
Part Number	3767181C1
Instances	A26/B6.7/L9 - Door Pod Module (2 Door):Diagram1
Mates	MOT-PS_WINDOW-2013-01-01A

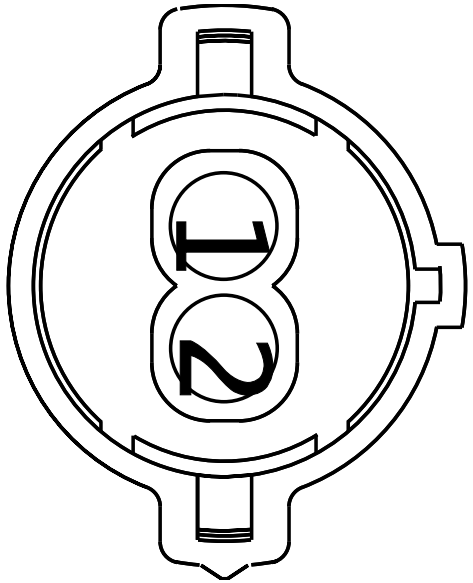

Name	Terminal Part Number	V-Min	Name	Wire Part Number	Wire CSA	Wire Spec	Wire Material description	Wire Color Description	Wire Length	End2 Terminal Part Number	End2 Pin Name	End2 Connect or
1	-	-	EC83B	3510301 R1	1.91	14.0	Thin Wall XLPE Primary Cable	LIGHT GREEN	1300.0	-	2	3201M
1	-	-	FC83B	3510301 R1	1.91	14.0	Thin Wall XLPE Primary Cable	LIGHT GREEN	1300.0	-	2	3201M
2	-	-	EC83A	3510301 R1	1.91	14.0	Thin Wall XLPE Primary Cable	LIGHT GREEN	1300.0	-	1	3201M
2	-	-	FC83A	3510301 R1	1.91	14.0	Thin Wall XLPE Primary Cable	LIGHT GREEN	1300.0	-	1	3201M

Connector Name	3100M
Part Number	3767181C1
Instances	A26/B6.7/L9 - Door Pod Module (4 Door):Diagram1
Mates	MOT-PS_WINDOW-2013-01-01A

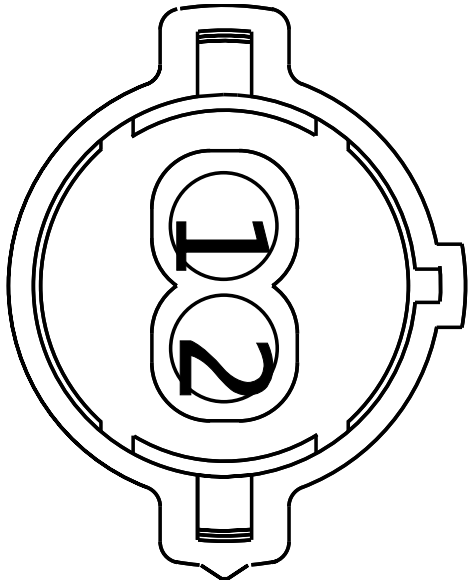

Name	Terminal Part Number	V-Min	Name	Wire Part Number	Wire CSA	Wire Spec	Wire Material description	Wire Color Description	Wire Length	End2 Terminal Part Number	End2 Pin Name	End2 Connect or
1	-	-	EC83B	3510301 R1	1.91	14.0	Thin Wall XLPE Primary Cable	LIGHT GREEN	1300.0	-	2	3201M
1	-	-	FC83B	3510301 R1	1.91	14.0	Thin Wall XLPE Primary Cable	LIGHT GREEN	1300.0	-	2	3201M
2	-	-	EC83A	3510301 R1	1.91	14.0	Thin Wall XLPE Primary Cable	LIGHT GREEN	1300.0	-	1	3201M
2	-	-	FC83A	3510301 R1	1.91	14.0	Thin Wall XLPE Primary Cable	LIGHT GREEN	1300.0	-	1	3201M

Connector Name	3112M
Part Number	1671610C1
Instances	A26/B6.7/L9 - Door Pod Module (4 Door):Diagram1
Mates	MOT-RR_DS_LOCK-2016-01-01A

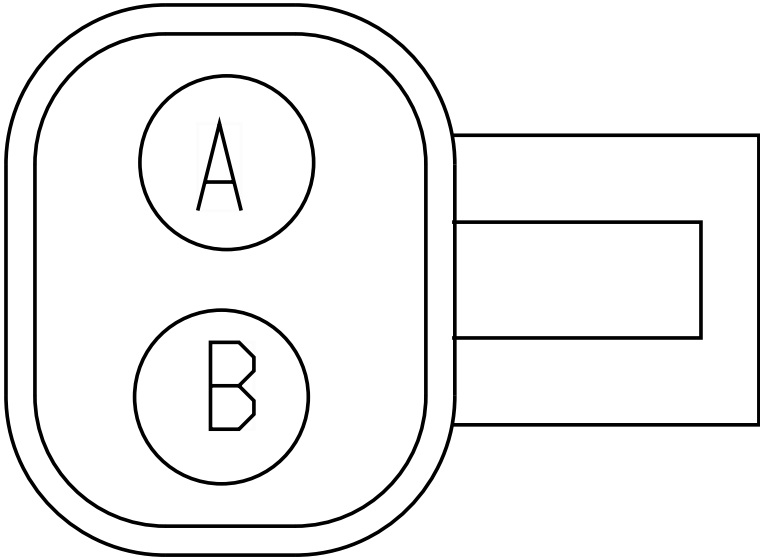

Name	Terminal Part Number	V-Min	Name	Wire Part Number	Wire CSA	Wire Spec	Wire Material description	Wire Color Description	Wire Length	End2 Terminal Part Number	End2 Pin Name	End2 Connect or
A	-	-	F81A	3510301 R1	1.91	14.0	Thin Wall XLPE Primary Cable	LIGHT GREEN	1130.0	-	3	3201M
B	-	-	F81B	3510301 R1	1.91	14.0	Thin Wall XLPE Primary Cable	LIGHT GREEN	1130.0	-	4	3201M

Connector Name	3200F
Part Number	1661201C1
Short Description	DOOR/IP INTERCONNECT
Instances	A26 - CAN Layout:HMI Standard J1939 (125Kbps) A26 - Low Speed J1939 (125Kbps):A26 - HMI J1939 (125Kbps) A26 - Mirrors (Heat) Switch Pack Actuated includes Hood Mirrors:Diagram1 A26 - Mirrors (Heat) Switch Pack Actuated includes RT Hood Mirror:Diagram1 A26/B6.7/L9 - Door Pod Module (2 Door):Diagram1 A26/B6.7/L9 - Door Pod Module (4 Door):Diagram1 A26/B6.7/L9 - Mirrors (Heat) Switch Pack Actuated Relay Driven:Diagram1 A26/B6.7/L9 - Mirrors (Heated):Diagram1 B6.7 - CAN Layout:HMI Standard J1939 (125Kbps) B6.7 - Low Speed J1939 (125kbps):B6.7 - Low Speed J1939 (125kbps) B6.7 - Mirrors (Heat) Switch Pack Actuated includes Hood Mirrors:Diagram1 B6.7 - Mirrors (Heat) Switch Pack Actuated includes Hood Mirrors:Diagram2 B6.7 - Mirrors (Heat) Switch Pack Actuated includes RT Hood Mirror:Diagram1 B6.7 - Mirrors (Heat) Switch Pack Actuated includes RT Hood Mirror:Diagram2 B6.7 - Mirrors (Heat) Switch Pack Actuated includes RT Hood Mirror:Diagram3 B6.7 - Mirrors (Heat) Switch Pack Actuated includes RT Hood Mirror:Diagram4 L9 - CAN Layout:HMI Standard J1939 (125Kbps) L9 - Low Speed J1939 (125kbps):L9 - Low Speed J1939 (125Kbps) L9 - Mirrors (Heat) Switch Pack Actuated includes Hood Mirrors:Diagram1 L9 - Mirrors (Heat) Switch Pack Actuated includes Hood Mirrors:Diagram2 L9 - Mirrors (Heat) Switch Pack Actuated includes Hood Mirrors:Diagram3 L9 - Mirrors (Heat) Switch Pack Actuated includes Hood Mirrors:Diagram4 L9 - Mirrors (Heat) Switch Pack Actuated includes RT Hood Mirror:Diagram1

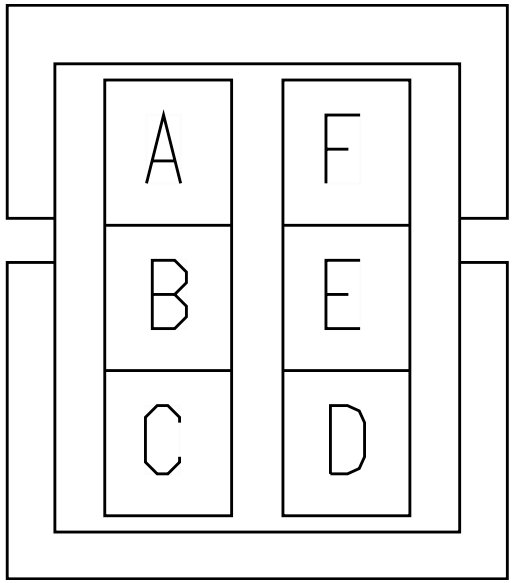

L9 - Mirrors (Heat) Switch Pack Actuated includes RT Hood Mirror:Diagram2
L9 - Mirrors (Heat) Switch Pack Actuated includes RT Hood Mirror:Diagram3
L9 - Mirrors (Heat) Switch Pack Actuated includes RT Hood Mirror:Diagram4

Mates 3204M

Name	Terminal Part Number	V-Min	Name	Wire Part Number	Wire CSA	Wire Spec	Wire Material description	Wire Color Description	Wire Length	End2 Terminal Part Number	End2 Pin Name	End2 Connector
A	-	-	WIRE196495	-	0.0	-	-	-	0.0	-	3	3202M
B	-	-	WIRE196494	-	0.0	-	-	-	0.0	-	2	3202M
C	-	-	FC81A	3510302 R1	3.01	12.0	Thin Wall XLPE Primary Cable	LIGHT GREEN	1245.0	-	1	3202M
D	-	-	FK78-GA	3510360 R1	1.16	16.0	Thin Wall XLPE Primary Cable	WHITE	1025.0	-	H	3000M
D	-	-	FC81-GB	3510362 R1	3.01	12.0	Thin Wall XLPE Primary Cable	WHITE	1245.0	-	4	3202M

Connector Name	3200F
Part Number	1661201C1
Short Description	DOOR/IP INTERCONNECT
Instances	A26 - Ambient Air Temperature:Diagram1 A26 - CAN Layout:HMI Standard J1939 (125Kbps) A26 - Low Speed J1939 (125Kbps):A26 - HMI J1939 (125Kbps) A26 - Mirrors (Heat) Switch Pack Actuated includes Hood Mirrors:Diagram1 A26 - Mirrors (Heat) Switch Pack Actuated includes RT Hood Mirror:Diagram1 A26/B6.7/L9 - Door Pod Module (2 Door):Diagram1 A26/B6.7/L9 - Mirrors (Heat) Switch Pack Actuated Relay Driven:Diagram1 A26/B6.7/L9 - Mirrors (Heated):Diagram1 A26/B6.7/L9 - Power Mirrors (Control Switch Actuated):Diagram1 A26/B6.7/L9 - Power Mirrors (Control Switch Actuated):Diagram2 B6.7 - CAN Layout:HMI Standard J1939 (125Kbps) B6.7 - Low Speed J1939 (125kbps):B6.7 - Low Speed J1939 (125kbps) B6.7 - Mirrors (Heat) Switch Pack Actuated includes Hood Mirrors:Diagram1 B6.7 - Mirrors (Heat) Switch Pack Actuated includes Hood Mirrors:Diagram2 B6.7 - Mirrors (Heat) Switch Pack Actuated includes RT Hood Mirror:Diagram1 B6.7 - Mirrors (Heat) Switch Pack Actuated includes RT Hood Mirror:Diagram2 B6.7 - Mirrors (Heat) Switch Pack Actuated includes RT Hood Mirror:Diagram3 B6.7 - Mirrors (Heat) Switch Pack Actuated includes RT Hood Mirror:Diagram4 L9 - CAN Layout:HMI Standard J1939 (125Kbps) L9 - Low Speed J1939 (125kbps):L9 - Low Speed J1939 (125Kbps) L9 - Mirrors (Heat) Switch Pack Actuated includes Hood Mirrors:Diagram1 L9 - Mirrors (Heat) Switch Pack Actuated includes Hood Mirrors:Diagram2 L9 - Mirrors (Heat) Switch Pack Actuated includes Hood Mirrors:Diagram3

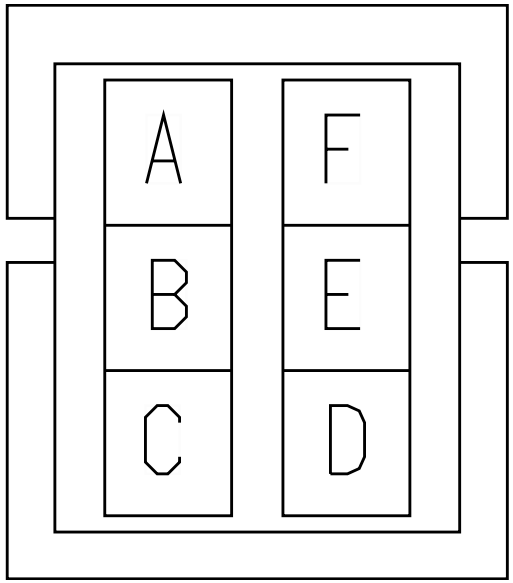

L9 - Mirrors (Heat) Switch Pack Actuated includes Hood Mirrors:Diagram4
L9 - Mirrors (Heat) Switch Pack Actuated includes RT Hood Mirror:Diagram1
L9 - Mirrors (Heat) Switch Pack Actuated includes RT Hood Mirror:Diagram2
L9 - Mirrors (Heat) Switch Pack Actuated includes RT Hood Mirror:Diagram3
L9 - Mirrors (Heat) Switch Pack Actuated includes RT Hood Mirror:Diagram4

Mates 3200M

Name	Terminal Part Number	V-Min	Name	Wire Part Number	Wire CSA	Wire Spec	Wire Material description	Wire Color Description	Wire Length	End2 Terminal Part Number	End2 Pin Name	End2 Connector
A	-	-	WIRE196493	-	0.0	-	-	-	0.0	-	3	3202M
B	-	-	WIRE196492	-	0.0	-	-	-	0.0	-	2	3202M
C	-	-	EJ78V	3510299 R1	0.79	18.0	Thin Wall XLPE Primary Cable	LIGHT GREEN	875.0	-	X	-
C	-	-	EK78VB	3510298 R1	0.53	20.0	Thin Wall XLPE Primary Cable	LIGHT GREEN	240.0	-	A2	254M
C	-	-	EC81B	3510302 R1	3.01	12.0	Thin Wall XLPE Primary Cable	LIGHT GREEN	1245.0	-	1	3202M
D	-	-	EH78-GE	3510360 R1	1.16	16.0	Thin Wall XLPE Primary Cable	WHITE	1025.0	-	H	3000M
D	-	-	EJ78-GA	3510360 R1	1.16	16.0	Thin Wall XLPE Primary Cable	WHITE	535.0	-	X	-

Name	Terminal Part Number	V-Min	Name	Wire Part Number	Wire CSA	Wire Spec	Wire Material description	Wire Color Description	Wire Length	End2 Terminal Part Number	End2 Pin Name	End2 Connect or
D	-	-	EK78-GJ	3510360 R1	1.16	16.0	Thin Wall XLPE Primary Cable	WHITE	235.0	-	X	-
D	-	-	EC81-GA	3510362 R1	3.01	12.0	Thin Wall XLPE Primary Cable	WHITE	1245.0	-	4	3202M
E	-	-	ET41D	3510329 R1	0.79	18.0	Thin Wall XLPE Primary Cable	TAN	1025.0	-	C	3000M
F	-	-	ET41E	3510329 R1	0.79	18.0	Thin Wall XLPE Primary Cable	TAN	1025.0	-	D	3000M

Connector Name	3200F
Part Number	1661201C1
Instances	A26 - Remote Keyless Access:Diagram1 A26/B6.7/L9 - Door Pod Module (4 Door):Diagram1 B6.7 - Remote Keyless Access:Diagram1 L9 - Ambient Air Temperature:Diagram1 L9 - Remote Keyless Access:Diagram1
Mates	3202L

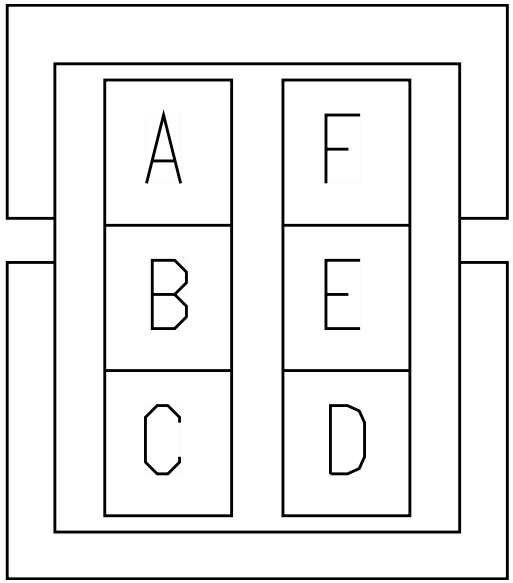

Name	Terminal Part Number	V-Min	Name	Wire Part Number	Wire CSA	Wire Spec	Wire Material description	Wire Color Description	Wire Length	End2 Terminal Part Number	End2 Pin Name	End2 Connect or
C	-	-	FC81A	3510302 R1	3.01	12.0	Thin Wall XLPE Primary Cable	LIGHT GREEN	1245.0	-	1	3202M
C	-	-	F81D	3510302 R1	3.01	12.0	Thin Wall XLPE Primary Cable	LIGHT GREEN	1175.0	-	1	3202M
C	-	-	E81D	3510302 R1	3.01	12.0	Thin Wall XLPE Primary Cable	LIGHT GREEN	1175.0	-	1	3210M
C	-	-	EC81B	3510302 R1	3.01	12.0	Thin Wall XLPE Primary Cable	LIGHT GREEN	1245.0	-	1	3202M

Name	Terminal Part Number	V-Min	Name	Wire Part Number	Wire CSA	Wire Spec	Wire Material description	Wire Color Description	Wire Length	End2 Terminal Part Number	End2 Pin Name	End2 Connector
D	-	-	FC81-GB	3510362 R1	3.01	12.0	Thin Wall XLPE Primary Cable	WHITE	1245.0	-	4	3202M
D	-	-	EC81-GA	3510362 R1	3.01	12.0	Thin Wall XLPE Primary Cable	WHITE	1245.0	-	4	3202M
D	-	-	F81-GB	3510362 R1	3.01	12.0	Thin Wall XLPE Primary Cable	WHITE	1175.0	-	4	3202M
D	-	-	E81-GB	3510362 R1	3.01	12.0	Thin Wall XLPE Primary Cable	WHITE	1175.0	-	4	3210M
E	-	-	ET41D	3510329 R1	0.79	18.0	Thin Wall XLPE Primary Cable	TAN	1025.0	-	C	3000M
F	-	-	ET41E	3510329 R1	0.79	18.0	Thin Wall XLPE Primary Cable	TAN	1025.0	-	D	3000M

Connector Name	3200M
Part Number	1661200C1
Short Description	IP/DOOR INTERCONNECT 2
Instances	A26 - Ambient Air Temperature:Diagram1 A26 - CAN Layout:HMI Standard J1939 (125Kbps) A26 - Low Speed J1939 (125Kbps):A26 - HMI J1939 (125Kbps) A26 - Mirrors (Heat) Switch Pack Actuated includes Hood Mirrors:Diagram1 A26 - Mirrors (Heat) Switch Pack Actuated includes RT Hood Mirror:Diagram1 A26/B6.7/L9 - Door Pod Module (2 Door):Diagram1 A26/B6.7/L9 - Mirrors (Heat) Switch Pack Actuated Relay Driven:Diagram1 A26/B6.7/L9 - Mirrors (Heated):Diagram1 A26/B6.7/L9 - Power Mirrors (Control Switch Actuated):Diagram1 A26/B6.7/L9 - Power Mirrors (Control Switch Actuated):Diagram2 B6.7 - CAN Layout:HMI Standard J1939 (125Kbps) B6.7 - Low Speed J1939 (125kbps):B6.7 - Low Speed J1939 (125kbps) B6.7 - Mirrors (Heat) Switch Pack Actuated includes Hood Mirrors:Diagram1 B6.7 - Mirrors (Heat) Switch Pack Actuated includes Hood Mirrors:Diagram2 B6.7 - Mirrors (Heat) Switch Pack Actuated includes RT Hood Mirror:Diagram1 B6.7 - Mirrors (Heat) Switch Pack Actuated includes RT Hood Mirror:Diagram2 B6.7 - Mirrors (Heat) Switch Pack Actuated includes RT Hood Mirror:Diagram3 B6.7 - Mirrors (Heat) Switch Pack Actuated includes RT Hood Mirror:Diagram4 L9 - CAN Layout:HMI Standard J1939 (125Kbps) L9 - Low Speed J1939 (125kbps):L9 - Low Speed J1939 (125Kbps) L9 - Mirrors (Heat) Switch Pack Actuated includes Hood Mirrors:Diagram1 L9 - Mirrors (Heat) Switch Pack Actuated includes Hood Mirrors:Diagram2 L9 - Mirrors (Heat) Switch Pack Actuated includes Hood Mirrors:Diagram3

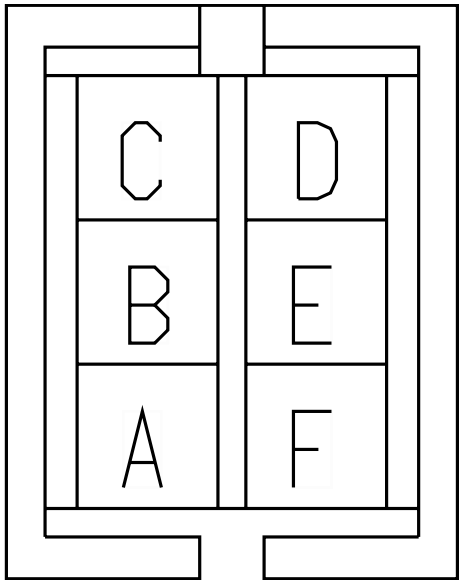

L9 - Mirrors (Heat) Switch Pack Actuated includes Hood Mirrors:Diagram4
L9 - Mirrors (Heat) Switch Pack Actuated includes RT Hood Mirror:Diagram1
L9 - Mirrors (Heat) Switch Pack Actuated includes RT Hood Mirror:Diagram2
L9 - Mirrors (Heat) Switch Pack Actuated includes RT Hood Mirror:Diagram3
L9 - Mirrors (Heat) Switch Pack Actuated includes RT Hood Mirror:Diagram4

Mates 3200F

Name	Terminal Part Number	V-Min	Name	Wire Part Number	Wire CSA	Wire Spec	Wire Material description	Wire Color Description	Wire Length	End2 Terminal Part Number	End2 Pin Name	End2 Connector
A	-	-	WIRE1644	-	0.0	-	-	-	0.0	-	PIN1	-
B	-	-	WIRE1643	-	0.0	-	-	-	0.0	-	PIN1	-
C	-	-	RD81B	3510368 R1	3.01	12.0	Thin Wall XLPE Primary Cable	RED	2235.0	-	-	-
C	-	-	RG78V	3510302 R1	3.01	12.0	Thin Wall XLPE Primary Cable	LIGHT GREEN	2235.0	-	-	-
D	-	-	RC81-GA	3510362 R1	3.01	12.0	Thin Wall XLPE Primary Cable	WHITE	425.0	-	-	-
D	-	-	RF78-GA	3510360 R1	1.16	16.0	Thin Wall XLPE Primary Cable	WHITE	2125.0	-	-	-
E	-	-	MB41DJ	3510329 R1	0.79	18.0	Thin Wall XLPE Primary Cable	TAN	2785.0	-	25	1703M

Name	Terminal Part Number	V-Min	Name	Wire Part Number	Wire CSA	Wire Spec	Wire Material description	Wire Color Description	Wire Length	End2 Terminal Part Number	End2 Pin Name	End2 Connect or
E	-	-	MC41D	3510329 R1	0.79	18.0	Thin Wall XLPE Primary Cable	TAN	2785.0	-	25	1703M
F	-	-	MB41EJ	3510329 R1	0.79	18.0	Thin Wall XLPE Primary Cable	TAN	2785.0	-	24	1703M
F	-	-	MC41E	3510329 R1	0.79	18.0	Thin Wall XLPE Primary Cable	TAN	2785.0	-	24	1703M

Connector Name	3201F
Part Number	1667529C1
Short Description	DOOR/ IP COURTESY LIGHT
Instances	A26/B6.7/L9 - Courtesy Light 4 Door:Diagram1
Mates	3400R

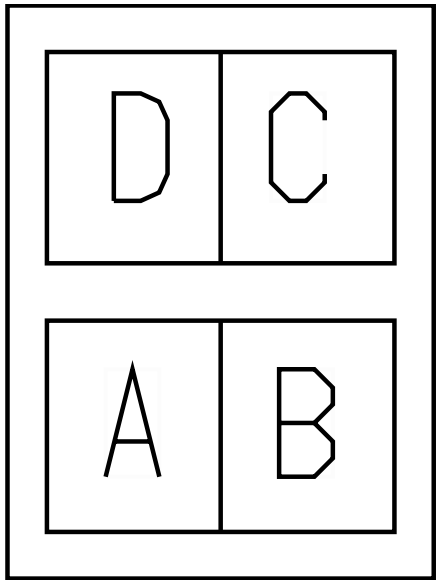

Name	Terminal Part Number	V-Min	Name	Wire Part Number	Wire CSA	Wire Spec	Wire Material description	Wire Color Description	Wire Length	End2 Terminal Part Number	End2 Pin Name	End2 Connect or
A	-	-	F63C	3510353 R1	0.79	18.0	Thin Wall XLPE Primary Cable	DARK BLUE	1500.0	-	A	3400
B	-	-	F63-G	3510359 R1	0.79	18.0	Thin Wall XLPE Primary Cable	WHITE	1500.0	-	B	3400

Connector Name	3201F
Part Number	1667529C1
Short Description	DOOR/ IP COURTESY LIGHT
Instances	A26/B6.7/L9 - Courtesy Light 4 Door:Diagram1
Mates	3400L

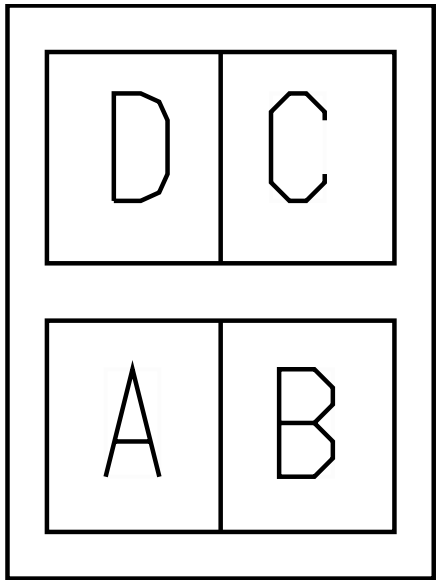

Name	Terminal Part Number	V-Min	Name	Wire Part Number	Wire CSA	Wire Spec	Wire Material description	Wire Color Description	Wire Length	End2 Terminal Part Number	End2 Pin Name	End2 Connect or
A	-	-	E63C	3510353 R1	0.79	18.0	Thin Wall XLPE Primary Cable	DARK BLUE	1500.0	-	A	3400
B	-	-	E63-G	3510359 R1	0.79	18.0	Thin Wall XLPE Primary Cable	WHITE	1500.0	-	B	3400

Connector Name 3201M
Part Number 3709437C1
Instances A26/B6.7/L9 - Door Pod Module (2 Door):Diagram1
Mates MODU-FRONT-DS_DOOR_POD-201 6-02-02A

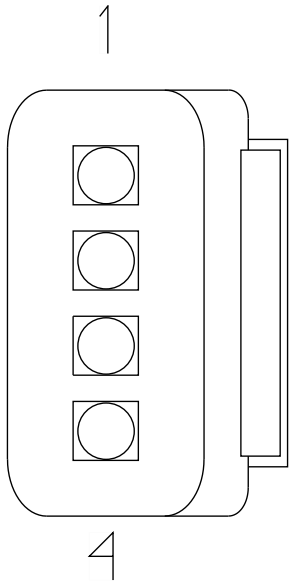

Name	Terminal Part Number	V-Min	Name	Wire Part Number	Wire CSA	Wire Spec	Wire Material description	Wire Color Description	Wire Length	End2 Terminal Part Number	End2 Pin Name	End2 Connect or
1	-	-	EC83A	3510301 R1	1.91	14.0	Thin Wall XLPE Primary Cable	LIGHT GREEN	1300.0	-	2	3100M
1	-	-	FC83A	3510301 R1	1.91	14.0	Thin Wall XLPE Primary Cable	LIGHT GREEN	1300.0	-	2	3100M
2	-	-	EC83B	3510301 R1	1.91	14.0	Thin Wall XLPE Primary Cable	LIGHT GREEN	1300.0	-	1	3100M
2	-	-	FC83B	3510301 R1	1.91	14.0	Thin Wall XLPE Primary Cable	LIGHT GREEN	1300.0	-	1	3100M

Name	Terminal Part Number	V-Min	Name	Wire Part Number	Wire CSA	Wire Spec	Wire Material description	Wire Color Description	Wire Length	End2 Terminal Part Number	End2 Pin Name	End2 Connect or
3	-	-	FC81RA	3510301 R1	1.91	14.0	Thin Wall XLPE Primary Cable	LIGHT GREEN	1760.0	-	A	4101
3	-	-	EC81LA	3510301 R1	1.91	14.0	Thin Wall XLPE Primary Cable	LIGHT GREEN	1760.0	-	A	4101
4	-	-	EC81LB	3510301 R1	1.91	14.0	Thin Wall XLPE Primary Cable	LIGHT GREEN	1760.0	-	B	4101
4	-	-	FC81RB	3510301 R1	1.91	14.0	Thin Wall XLPE Primary Cable	LIGHT GREEN	1760.0	-	B	4101

Connector Name	3201M
Part Number	3709437C1
Instances	A26/B6.7/L9 - Door Pod Module (4 Door):Diagram1
Mates	MODU-FRONT-DS_DOOR_POD-201 6-02-02A

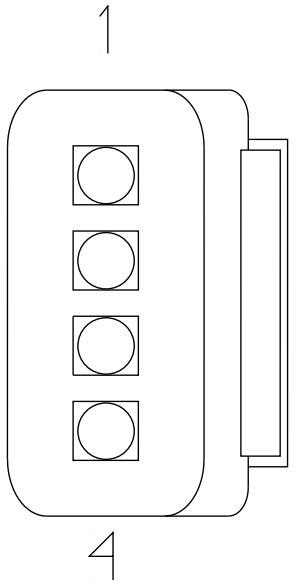

Name	Terminal Part Number	V-Min	Name	Wire Part Number	Wire CSA	Wire Spec	Wire Material description	Wire Color Description	Wire Length	End2 Terminal Part Number	End2 Pin Name	End2 Connect or
1	-	-	EC83A	3510301 R1	1.91	14.0	Thin Wall XLPE Primary Cable	LIGHT GREEN	1300.0	-	2	3100M
1	-	-	FC83A	3510301 R1	1.91	14.0	Thin Wall XLPE Primary Cable	LIGHT GREEN	1300.0	-	2	3100M
1	-	-	F83A	3510301 R1	1.91	14.0	Thin Wall XLPE Primary Cable	LIGHT GREEN	705.0	-	2	3002M
2	-	-	EC83B	3510301 R1	1.91	14.0	Thin Wall XLPE Primary Cable	LIGHT GREEN	1300.0	-	1	3100M

Name	Terminal Part Number	V-Min	Name	Wire Part Number	Wire CSA	Wire Spec	Wire Material description	Wire Color Description	Wire Length	End2 Terminal Part Number	End2 Pin Name	End2 Connector
2	-	-	FC83B	3510301 R1	1.91	14.0	Thin Wall XLPE Primary Cable	LIGHT GREEN	1300.0	-	1	3100M
2	-	-	F83B	3510301 R1	1.91	14.0	Thin Wall XLPE Primary Cable	LIGHT GREEN	705.0	-	1	3002M
3	-	-	F81A	3510301 R1	1.91	14.0	Thin Wall XLPE Primary Cable	LIGHT GREEN	1130.0	-	A	3112M
3	-	-	FC81RA	3510301 R1	1.91	14.0	Thin Wall XLPE Primary Cable	LIGHT GREEN	1760.0	-	A	4101
3	-	-	EC81LA	3510301 R1	1.91	14.0	Thin Wall XLPE Primary Cable	LIGHT GREEN	1760.0	-	A	4101
4	-	-	F81B	3510301 R1	1.91	14.0	Thin Wall XLPE Primary Cable	LIGHT GREEN	1130.0	-	B	3112M
4	-	-	EC81LB	3510301 R1	1.91	14.0	Thin Wall XLPE Primary Cable	LIGHT GREEN	1760.0	-	B	4101
4	-	-	FC81RB	3510301 R1	1.91	14.0	Thin Wall XLPE Primary Cable	LIGHT GREEN	1760.0	-	B	4101

Connector Name	3202L
Part Number	1661200C1
Instances	A26 - CAN Layout:HMI Standard J1939 (125Kbps)
Mates	3208F

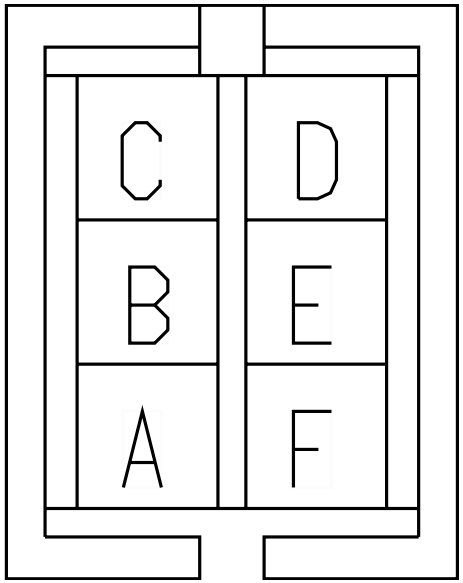

Name	Terminal Part Number	V-Min	Name	Wire Part Number	Wire CSA	Wire Spec	Wire Material description	Wire Color Description	Wire Length	End2 Terminal Part Number	End2 Pin Name	End2 Connect or
A	-	-	WIRE565807	-	0.0	-	-	-	0.0	-	PIN1	-
B	-	-	WIRE565806	-	0.0	-	-	-	0.0	-	PIN1	-

Connector Name	3202L
Part Number	1661200C1
Instances	B6.7 - CAN Layout:HMI Standard J1939 (125Kbps) B6.7 - Low Speed J1939 (125kbps):B6.7 - Low Speed J1939 (125kbps) L9 - CAN Layout:HMI Standard J1939 (125Kbps) L9 - Low Speed J1939 (125kbps):L9 - Low Speed J1939 (125Kbps)
Mates	3208F

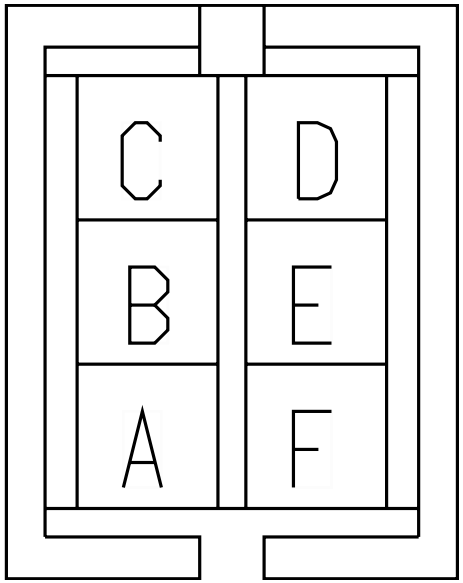

Name	Terminal Part Number	V-Min	Name	Wire Part Number	Wire CSA	Wire Spec	Wire Material description	Wire Color Description	Wire Length	End2 Terminal Part Number	End2 Pin Name	End2 Connect or
A	-	-	WIRE565807	-	0.0	-	-	-	0.0	-	PIN1	-
B	-	-	WIRE565806	-	0.0	-	-	-	0.0	-	PIN1	-

Connector Name	3202L
Part Number	1661200C1
Instances	A26 - Low Speed J1939 (125Kbps):A26 - HMI J1939 (125Kbps)
Mates	3208F

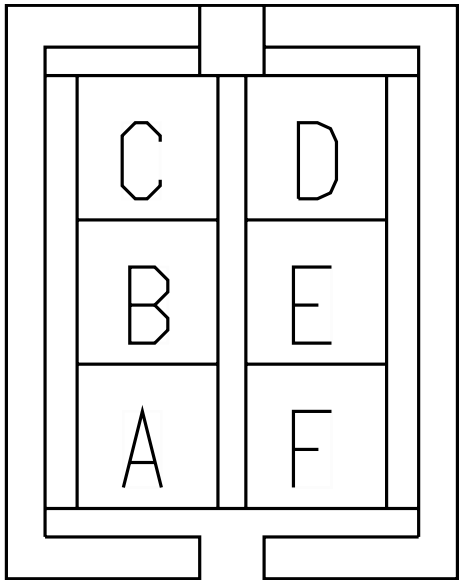

Name	Terminal Part Number	V-Min	Name	Wire Part Number	Wire CSA	Wire Spec	Wire Material description	Wire Color Description	Wire Length	End2 Terminal Part Number	End2 Pin Name	End2 Connect or
A	-	-	WIRE565807	-	0.0	-	-	-	0.0	-	PIN1	-
B	-	-	WIRE565806	-	0.0	-	-	-	0.0	-	PIN1	-

Connector Name	3202L
Part Number	1661200C1
Instances	A26 - Remote Keyless Access:Diagram1 A26/B6.7/L9 - Door Pod Module (4 Door):Diagram1 B6.7 - Remote Keyless Access:Diagram1 L9 - Ambient Air Temperature:Diagram1 L9 - Remote Keyless Access:Diagram1
Mates	3200F

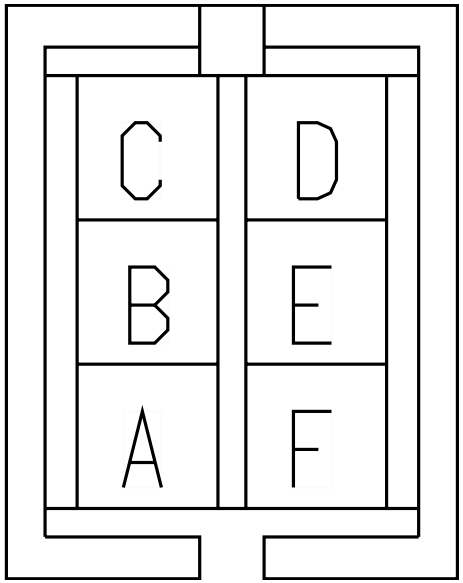

Name	Terminal Part Number	V-Min	Name	Wire Part Number	Wire CSA	Wire Spec	Wire Material description	Wire Color Description	Wire Length	End2 Terminal Part Number	End2 Pin Name	End2 Connect or
C	-	-	RC81A	3510302 R1	3.01	12.0	Thin Wall XLPE Primary Cable	LIGHT GREEN	3045.0	-	-	-
C	-	-	RD81B	3510368 R1	3.01	12.0	Thin Wall XLPE Primary Cable	RED	2235.0	-	-	-
C	-	-	81DA	3510302 R1	3.01	12.0	Thin Wall XLPE Primary Cable	LIGHT GREEN	4900.0	-	D	2600
C	-	-	81D	3510302 R1	3.01	12.0	Thin Wall XLPE Primary Cable	LIGHT GREEN	950.0	-	C	2600

Name	Terminal Part Number	V-Min	Name	Wire Part Number	Wire CSA	Wire Spec	Wire Material description	Wire Color Description	Wire Length	End2 Terminal Part Number	End2 Pin Name	End2 Connector
C	-	-	RG78V	3510302 R1	3.01	12.0	Thin Wall XLPE Primary Cable	LIGHT GREEN	2235.0	-	-	-
D	-	-	RC81-GB	3510362 R1	3.01	12.0	Thin Wall XLPE Primary Cable	WHITE	2005.0	-	-	-
D	-	-	81-GDA	3510362 R1	3.01	12.0	Thin Wall XLPE Primary Cable	WHITE	4900.0	-	F	2600
D	-	-	81-GD	3510362 R1	3.01	12.0	Thin Wall XLPE Primary Cable	WHITE	950.0	-	E	2600
D	-	-	RC81-GA	3510362 R1	3.01	12.0	Thin Wall XLPE Primary Cable	WHITE	425.0	-	-	-
D	-	-	RF78-GA	3510360 R1	1.16	16.0	Thin Wall XLPE Primary Cable	WHITE	2125.0	-	-	-
E	-	-	MC41D	3510329 R1	0.79	18.0	Thin Wall XLPE Primary Cable	TAN	2785.0	-	25	1703M
E	-	-	MB41DJ	3510329 R1	0.79	18.0	Thin Wall XLPE Primary Cable	TAN	2785.0	-	25	1703M

Name	Terminal Part Number	V-Min	Name	Wire Part Number	Wire CSA	Wire Spec	Wire Material description	Wire Color Description	Wire Length	End2 Terminal Part Number	End2 Pin Name	End2 Connect or
F	-	-	MB41EJ	3510329 R1	0.79	18.0	Thin Wall XLPE Primary Cable	TAN	2785.0	-	24	1703M
F	-	-	MC41E	3510329 R1	0.79	18.0	Thin Wall XLPE Primary Cable	TAN	2785.0	-	24	1703M

Connector Name	3202M
Part Number	3820176C1
Instances	A26 - CAN Layout:HMI Standard J1939 (125Kbps) A26 - Low Speed J1939 (125Kbps):A26 - HMI J1939 (125Kbps) A26/B6.7/L9 - Door Pod Module (2 Door):Diagram1 B6.7 - CAN Layout:HMI Standard J1939 (125Kbps) B6.7 - Low Speed J1939 (125kbps):B6.7 - Low Speed J1939 (125kbps) L9 - CAN Layout:HMI Standard J1939 (125Kbps) L9 - Low Speed J1939 (125kbps):L9 - Low Speed J1939 (125Kbps)
Mates	MODU-PS_DOOR_POD-2016-01-0 2A

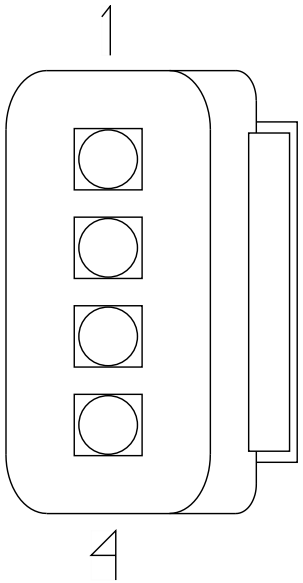

Name	Terminal Part Number	V-Min	Name	Wire Part Number	Wire CSA	Wire Spec	Wire Material description	Wire Color Description	Wire Length	End2 Terminal Part Number	End2 Pin Name	End2 Connect or
1	-	-	EC81B	3510302 R1	3.01	12.0	Thin Wall XLPE Primary Cable	LIGHT GREEN	1245.0	-	C	3200F
2	-	-	WIRE196 492	-	0.0	-	-	-	0.0	-	B	3200F
2	-	-	WIRE196 494	-	0.0	-	-	-	0.0	-	B	3200F
2	-	-	WIRE565 814	-	0.0	-	-	-	0.0	-	A	3208F
2	-	-	-	-	-	-	-	-	-	-	-	-
3	-	-	WIRE196 493	-	0.0	-	-	-	0.0	-	A	3200F
3	-	-	WIRE196 495	-	0.0	-	-	-	0.0	-	A	3200F
3	-	-	WIRE565 815	-	0.0	-	-	-	0.0	-	B	3208F

Name	Terminal Part Number	V-Min	Name	Wire Part Number	Wire CSA	Wire Spec	Wire Material description	Wire Color Description	Wire Length	End2 Terminal Part Number	End2 Pin Name	End2 Connect or
3	-	-	-	-	-	-	-	-	-	-	-	-
4	-	-	EC81-GA	3510362 R1	3.01	12.0	Thin Wall XLPE Primary Cable	WHITE	1245.0	-	D	3200F

Connector Name 3202M

Part Number 3820176C1

Instances
A26 - Heated Mirrors (Hood with Door Pods):Diagram1
A26 - Heated Mirrors (RT Hood with Door Pods):Diagram1
A26 - WORK LIGHT W RKE 1 BULB:Diagram1
A26 - WORK LIGHT W RKE 1 BULB:Diagram2
A26 - Work Lights LED W/ Sw Pack - Day Cab:Diagram1
A26 - Work Lights LED W/ Sw Pack - Day Cab:Diagram2
A26/B6.7/L9 - Door Pod Module (2 Door):Diagram1
A26/B6.7/L9 - Door Pod Module (4 Door):Diagram1
A26/B6.7/L9 - Mirrors (Heated):Diagram1
B6.7 - Heated Mirrors (Hood with Door Pods):Diagram1
B6.7 - Heated Mirrors (Hood with Door Pods):Diagram2
B6.7 - Heated Mirrors (RT Hood with Door Pods):Diagram1
B6.7 - Heated Mirrors (RT Hood with Door Pods):Diagram2
B6.7 - Heated Mirrors (RT Hood with Door Pods):Diagram3
B6.7 - Heated Mirrors (RT Hood with Door Pods):Diagram4
B6.7 - WORK LIGHT W RKE 1 BULB:Diagram1
B6.7 - Work Lights LED W/ Sw Pack - Day Cab:Diagram1
L9 - Heated Mirrors (Hood with Door Pods):Diagram1
L9 - Heated Mirrors (Hood with Door Pods):Diagram2
L9 - Heated Mirrors (Hood with Door Pods):Diagram3
L9 - Heated Mirrors (Hood with Door Pods):Diagram4
L9 - Heated Mirrors (RT Hood with Door Pods):Diagram1
L9 - Heated Mirrors (RT Hood with Door Pods):Diagram2
L9 - Heated Mirrors (RT Hood with Door Pods):Diagram3
L9 - Heated Mirrors (RT Hood with Door Pods):Diagram4
L9 - WORK LIGHT W RKE 1 BULB:Diagram1
L9 - WORK LIGHT W RKE 1 BULB:Diagram2
L9 - Work Lights LED W/ Sw Pack - Day Cab:Diagram1
L9 - Work Lights LED W/ Sw Pack - Day Cab:Diagram2

Mates MODU-FRONT-PS_DOOR_POD-201 6-01-02A

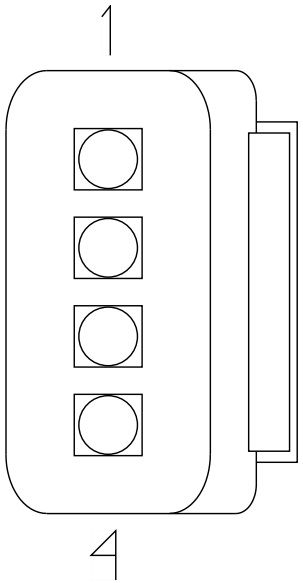

Name	Terminal Part Number	V-Min	Name	Wire Part Number	Wire CSA	Wire Spec	Wire Material description	Wire Color Description	Wire Length	End2 Terminal Part Number	End2 Pin Name	End2 Connector
1	-	-	EC81B	3510302 R1	3.01	12.0	Thin Wall XLPE Primary Cable	LIGHT GREEN	1245.0	-	C	3200F

Name	Terminal Part Number	V-Min	Name	Wire Part Number	Wire CSA	Wire Spec	Wire Material description	Wire Color Description	Wire Length	End2 Terminal Part Number	End2 Pin Name	End2 Connector
1	-	-	FC81A	3510302 R1	3.01	12.0	Thin Wall XLPE Primary Cable	LIGHT GREEN	1245.0	-	C	3200F
2	-	-	-	-	-	-	-	-	-	-	-	-
3	-	-	-	-	-	-	-	-	-	-	-	-
4	-	-	EC81-GA	3510362 R1	3.01	12.0	Thin Wall XLPE Primary Cable	WHITE	1245.0	-	D	3200F
4	-	-	FC81-GB	3510362 R1	3.01	12.0	Thin Wall XLPE Primary Cable	WHITE	1245.0	-	D	3200F

Connector Name	3202M
Part Number	3820176C1
Instances	A26 - Work Light W/ Backup 1 Bulb W/Automatic W/ RKE:Diagram1-Combination1 A26 - Work Light W/ Backup 1 Bulb W/Automatic W/ RKE:Diagram1-Combination2 A26 - Work Light W/ Backup 1 Bulb W/Manual W/ RKE:Diagram1-Combination1 A26 - Work Light W/ Backup 1 Bulb W/Manual W/ RKE:Diagram1-Combination2 A26/B6.7/L9 - Door Pod Module (4 Door):Diagram1 A26/B6.7/L9 - Mirrors (Heated):Diagram1
Mates	MODU-FRONT-PS_DOOR_POD-201 6-01-02A

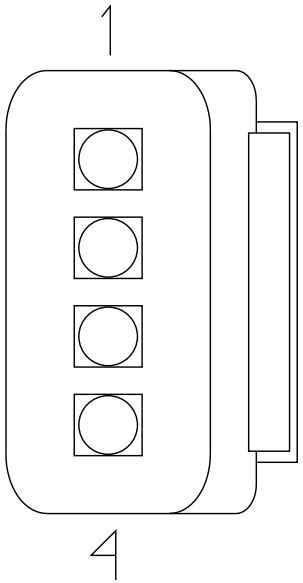

Name	Terminal Part Number	V-Min	Name	Wire Part Number	Wire CSA	Wire Spec	Wire Material description	Wire Color Description	Wire Length	End2 Terminal Part Number	End2 Pin Name	End2 Connect or
1	-	-	F81D	3510302 R1	3.01	12.0	Thin Wall XLPE Primary Cable	LIGHT GREEN	1175.0	-	C	3200F
1	-	-	FC81A	3510302 R1	3.01	12.0	Thin Wall XLPE Primary Cable	LIGHT GREEN	1245.0	-	C	3200F
1	-	-	EC81B	3510302 R1	3.01	12.0	Thin Wall XLPE Primary Cable	LIGHT GREEN	1245.0	-	C	3200F
2	-	-	-	-	-	-	-	-	-	-	-	-
3	-	-	-	-	-	-	-	-	-	-	-	-
4	-	-	FC81-GB	3510362 R1	3.01	12.0	Thin Wall XLPE Primary Cable	WHITE	1245.0	-	D	3200F

Name	Terminal Part Number	V-Min	Name	Wire Part Number	Wire CSA	Wire Spec	Wire Material description	Wire Color Description	Wire Length	End2 Terminal Part Number	End2 Pin Name	End2 Connect or
4	-	-	F81-GB	3510362 R1	3.01	12.0	Thin Wall XLPE Primary Cable	WHITE	1175.0	-	D	3200F
4	-	-	EC81-GA	3510362 R1	3.01	12.0	Thin Wall XLPE Primary Cable	WHITE	1245.0	-	D	3200F

Connector Name	3202M
Part Number	3820176C1
Instances	A26/B6.7/L9 - Mirrors (Heated):Diagram1 B6.7 - Remote Keyless Access:Diagram1 L9 - Remote Keyless Access:Diagram1
Mates	MODU-FRONT-PS_DOOR_POD-201 6-01-02A

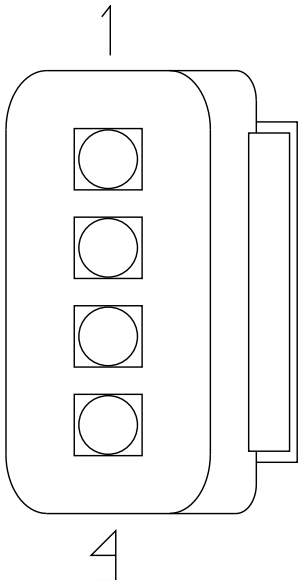

Name	Terminal Part Number	V-Min	Name	Wire Part Number	Wire CSA	Wire Spec	Wire Material description	Wire Color Description	Wire Length	End2 Terminal Part Number	End2 Pin Name	End2 Connect or
1	-	-	FC81A	3510302 R1	3.01	12.0	Thin Wall XLPE Primary Cable	LIGHT GREEN	1245.0	-	C	3200F
2	-	-	-	-	-	-	-	-	-	-	-	-
3	-	-	-	-	-	-	-	-	-	-	-	-
4	-	-	FC81-GB	3510362 R1	3.01	12.0	Thin Wall XLPE Primary Cable	WHITE	1245.0	-	D	3200F

Connector Name	3202M
Part Number	3820176C1
Instances	A26 - Remote Keyless Access:Diagram1
Mates	MODU-FRONT-PS_DOOR_POD-201 6-01-02A

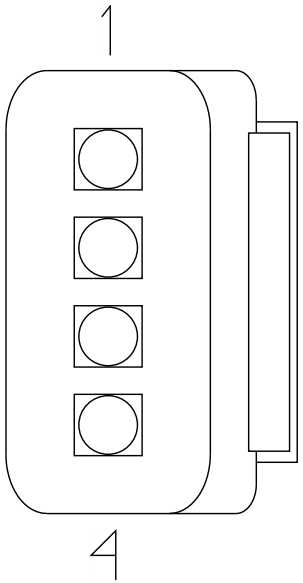

Name	Terminal Part Number	V-Min	Name	Wire Part Number	Wire CSA	Wire Spec	Wire Material description	Wire Color Description	Wire Length	End2 Terminal Part Number	End2 Pin Name	End2 Connect or
1	-	-	FC81A	3510302 R1	3.01	12.0	Thin Wall XLPE Primary Cable	LIGHT GREEN	1245.0	-	C	3200F
2	-	-	-	-	-	-	-	-	-	-	-	-
3	-	-	-	-	-	-	-	-	-	-	-	-
4	-	-	FC81-GB	3510362 R1	3.01	12.0	Thin Wall XLPE Primary Cable	WHITE	1245.0	-	D	3200F

Connector Name	3202R
Part Number	1661200C1
Instances	A26 - CAN Layout:HMI Standard J1939 (125Kbps) A26 - Low Speed J1939 (125Kbps):A26 - HMI J1939 (125Kbps) B6.7 - CAN Layout:HMI Standard J1939 (125Kbps) B6.7 - Low Speed J1939 (125kbps):B6.7 - Low Speed J1939 (125kbps) L9 - CAN Layout:HMI Standard J1939 (125Kbps) L9 - Low Speed J1939 (125kbps):L9 - Low Speed J1939 (125Kbps)
Mates	3208F

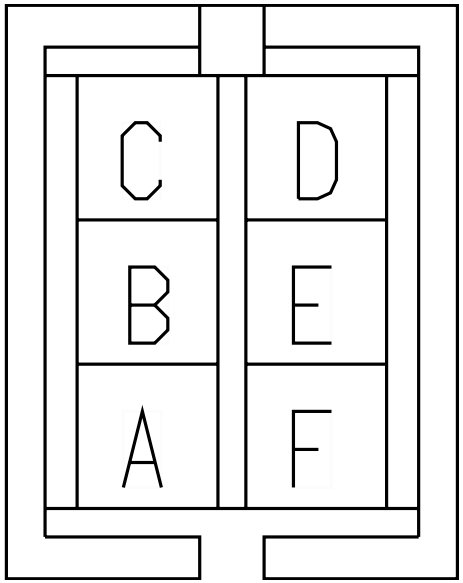

Name	Terminal Part Number	V-Min	Name	Wire Part Number	Wire CSA	Wire Spec	Wire Material description	Wire Color Description	Wire Length	End2 Terminal Part Number	End2 Pin Name	End2 Connect or
A	-	-	WIRE565812	-	0.0	-	-	-	0.0	-	X	-
B	-	-	WIRE565813	-	0.0	-	-	-	0.0	-	X	-

Connector Name	3203M
Part Number	3709924C1
Instances	A26/B6.7/L9 - Door Pod Module (2 Door):Diagram1
Mates	MODU-FRONT-DS_DOOR_POD-201 6-02-02A

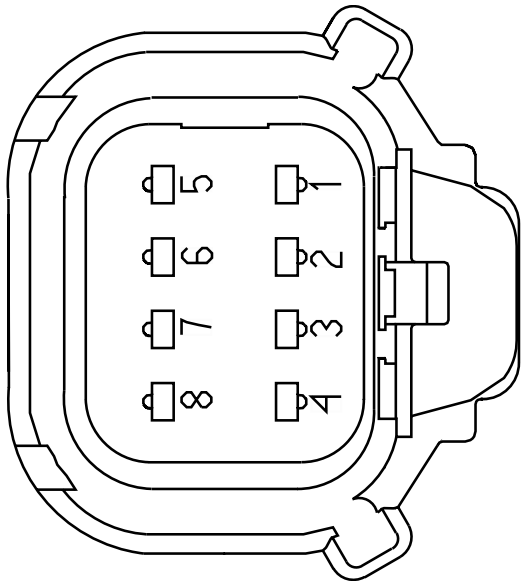

Name	Terminal Part Number	V-Min	Name	Wire Part Number	Wire CSA	Wire Spec	Wire Material description	Wire Color Description	Wire Length	End2 Terminal Part Number	End2 Pin Name	End2 Connect or
1	-	-	EA78AA	3510300 R1	1.16	16.0	Thin Wall XLPE Primary Cable	LIGHT GREEN	1130.0	-	G	3000M
4	-	-	EB78C	2643671 R1	0.79	18.0	Std. Wall XLPE Primary Cable	LIGHT GREEN	1130.0	-	B	3000M
5	-	-	EB78G	2643671 R1	0.79	18.0	Std. Wall XLPE Primary Cable	LIGHT GREEN	1130.0	-	A	3000M
6	-	-	EB78H	3510334 R1	0.53	20.0	Thin Wall XLPE Primary Cable	YELLOW 2	1130.0	-	F	3000M

Name	Terminal Part Number	V-Min	Name	Wire Part Number	Wire CSA	Wire Spec	Wire Material description	Wire Color Description	Wire Length	End2 Terminal Part Number	End2 Pin Name	End2 Connect or
8	-	-	EA78-GF	3510360 R1	1.16	16.0	Thin Wall XLPE Primary Cable	WHITE	1130.0	-	H	3000M

Connector Name	3203M
Part Number	3709924C1
Instances	A26/B6.7/L9 - Door Pod Module (2 Door):Diagram1
Mates	MODU-FRONT-PS_DOOR_POD-201 6-01-02A

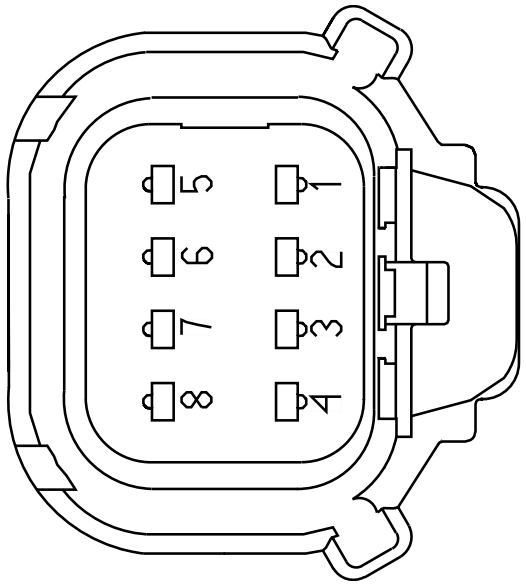

Name	Terminal Part Number	V-Min	Name	Wire Part Number	Wire CSA	Wire Spec	Wire Material description	Wire Color Description	Wire Length	End2 Terminal Part Number	End2 Pin Name	End2 Connect or
1	-	-	FA78AA	3510300 R1	1.16	16.0	Thin Wall XLPE Primary Cable	LIGHT GREEN	1130.0	-	G	3000M
4	-	-	FB78C	2643671 R1	0.79	18.0	Std. Wall XLPE Primary Cable	LIGHT GREEN	1130.0	-	B	3000M
5	-	-	FB78G	2643671 R1	0.79	18.0	Std. Wall XLPE Primary Cable	LIGHT GREEN	1130.0	-	A	3000M
6	-	-	FB78H	3510334 R1	0.53	20.0	Thin Wall XLPE Primary Cable	YELLOW 2	1130.0	-	F	3000M

Name	Terminal Part Number	V-Min	Name	Wire Part Number	Wire CSA	Wire Spec	Wire Material description	Wire Color Description	Wire Length	End2 Terminal Part Number	End2 Pin Name	End2 Connect or
8	-	-	FA78-GF	3510360 R1	1.16	16.0	Thin Wall XLPE Primary Cable	WHITE	1130.0	-	H	3000M

Connector Name 3203M

Part Number 3709924C1

Instances
A26 - Heated Mirrors (Hood with Door Pods):Diagram1
A26 - Heated Mirrors (RT Hood with Door Pods):Diagram1
A26/B6.7/L9 - Door Pod Module (4 Door):Diagram1
A26/B6.7/L9 - Mirrors (Heated):Diagram1
B6.7 - Heated Mirrors (Hood with Door Pods):Diagram1
B6.7 - Heated Mirrors (Hood with Door Pods):Diagram2
B6.7 - Heated Mirrors (RT Hood with Door Pods):Diagram1
B6.7 - Heated Mirrors (RT Hood with Door Pods):Diagram2
B6.7 - Heated Mirrors (RT Hood with Door Pods):Diagram3
B6.7 - Heated Mirrors (RT Hood with Door Pods):Diagram4
L9 - Heated Mirrors (Hood with Door Pods):Diagram1
L9 - Heated Mirrors (Hood with Door Pods):Diagram2
L9 - Heated Mirrors (Hood with Door Pods):Diagram3
L9 - Heated Mirrors (Hood with Door Pods):Diagram4
L9 - Heated Mirrors (RT Hood with Door Pods):Diagram1
L9 - Heated Mirrors (RT Hood with Door Pods):Diagram2
L9 - Heated Mirrors (RT Hood with Door Pods):Diagram3
L9 - Heated Mirrors (RT Hood with Door Pods):Diagram4

Mates MODU-FRONT-PS_DOOR_POD-201 6-01-02A

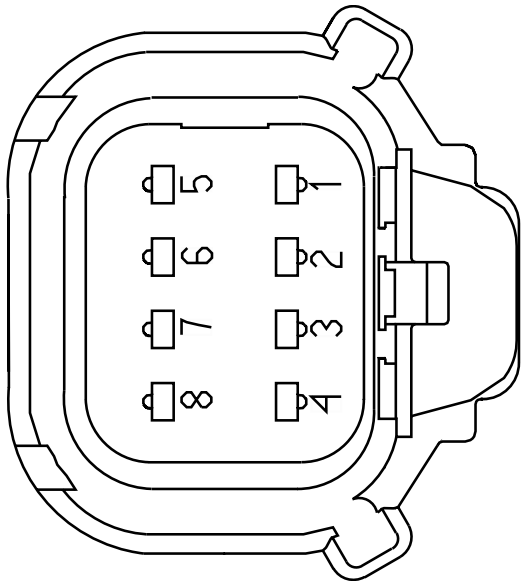

Name	Terminal Part Number	V-Min	Name	Wire Part Number	Wire CSA	Wire Spec	Wire Material description	Wire Color Description	Wire Length	End2 Terminal Part Number	End2 Pin Name	End2 Connector
1	-	-	EA78AA	3510300 R1	1.16	16.0	Thin Wall XLPE Primary Cable	LIGHT GREEN	1130.0	-	G	3000M
1	-	-	FA78AA	3510300 R1	1.16	16.0	Thin Wall XLPE Primary Cable	LIGHT GREEN	1130.0	-	G	3000M
4	-	-	FB78C	2643671 R1	0.79	18.0	Std. Wall XLPE Primary Cable	LIGHT GREEN	1130.0	-	B	3000M

Name	Terminal Part Number	V-Min	Name	Wire Part Number	Wire CSA	Wire Spec	Wire Material description	Wire Color Description	Wire Length	End2 Terminal Part Number	End2 Pin Name	End2 Connector
5	-	-	FB78G	2643671 R1	0.79	18.0	Std. Wall XLPE Primary Cable	LIGHT GREEN	1130.0	-	A	3000M
6	-	-	FB78H	3510334 R1	0.53	20.0	Thin Wall XLPE Primary Cable	YELLOW 2	1130.0	-	F	3000M
8	-	-	EA78-GF	3510360 R1	1.16	16.0	Thin Wall XLPE Primary Cable	WHITE	1130.0	-	H	3000M
8	-	-	FA78-GF	3510360 R1	1.16	16.0	Thin Wall XLPE Primary Cable	WHITE	1130.0	-	H	3000M

Connector Name 3203M

Part Number 3709924C1

Instances
A26 - Heated Mirrors (Hood with Door Pods):Diagram1
A26 - Heated Mirrors (RT Hood with Door Pods):Diagram1
A26/B6.7/L9 - Door Pod Module (4 Door):Diagram1
A26/B6.7/L9 - Mirrors (Heated):Diagram1
B6.7 - Heated Mirrors (Hood with Door Pods):Diagram1
B6.7 - Heated Mirrors (Hood with Door Pods):Diagram2
B6.7 - Heated Mirrors (RT Hood with Door Pods):Diagram1
B6.7 - Heated Mirrors (RT Hood with Door Pods):Diagram2
B6.7 - Heated Mirrors (RT Hood with Door Pods):Diagram3
B6.7 - Heated Mirrors (RT Hood with Door Pods):Diagram4
L9 - Heated Mirrors (Hood with Door Pods):Diagram1
L9 - Heated Mirrors (Hood with Door Pods):Diagram2
L9 - Heated Mirrors (Hood with Door Pods):Diagram3
L9 - Heated Mirrors (Hood with Door Pods):Diagram4
L9 - Heated Mirrors (RT Hood with Door Pods):Diagram1
L9 - Heated Mirrors (RT Hood with Door Pods):Diagram2
L9 - Heated Mirrors (RT Hood with Door Pods):Diagram3
L9 - Heated Mirrors (RT Hood with Door Pods):Diagram4

Mates MODU-FRONT-DS_DOOR_POD-201 6-02-02A

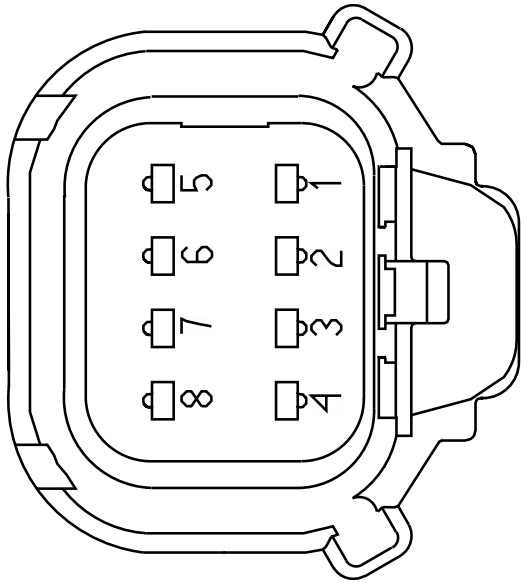

Name	Terminal Part Number	V-Min	Name	Wire Part Number	Wire CSA	Wire Spec	Wire Material description	Wire Color Description	Wire Length	End2 Terminal Part Number	End2 Pin Name	End2 Connector
1	-	-	FA78AA	3510300 R1	1.16	16.0	Thin Wall XLPE Primary Cable	LIGHT GREEN	1130.0	-	G	3000M
1	-	-	EA78AA	3510300 R1	1.16	16.0	Thin Wall XLPE Primary Cable	LIGHT GREEN	1130.0	-	G	3000M
4	-	-	EB78C	2643671 R1	0.79	18.0	Std. Wall XLPE Primary Cable	LIGHT GREEN	1130.0	-	B	3000M

Name	Terminal Part Number	V-Min	Name	Wire Part Number	Wire CSA	Wire Spec	Wire Material description	Wire Color Description	Wire Length	End2 Terminal Part Number	End2 Pin Name	End2 Connector
5	-	-	EB78G	2643671 R1	0.79	18.0	Std. Wall XLPE Primary Cable	LIGHT GREEN	1130.0	-	A	3000M
6	-	-	EB78H	3510334 R1	0.53	20.0	Thin Wall XLPE Primary Cable	YELLOW 2	1130.0	-	F	3000M
8	-	-	FA78-GF	3510360 R1	1.16	16.0	Thin Wall XLPE Primary Cable	WHITE	1130.0	-	H	3000M
8	-	-	EA78-GF	3510360 R1	1.16	16.0	Thin Wall XLPE Primary Cable	WHITE	1130.0	-	H	3000M

Connector Name	3204M
Part Number	1661200C1
Short Description	IP/DOOR INTERCONNECT 1
Instances	A26 - CAN Layout:HMI Standard J1939 (125Kbps) A26 - Low Speed J1939 (125Kbps):A26 - HMI J1939 (125Kbps) A26 - Mirrors (Heat) Switch Pack Actuated includes Hood Mirrors:Diagram1 A26 - Mirrors (Heat) Switch Pack Actuated includes RT Hood Mirror:Diagram1 A26/B6.7/L9 - Door Pod Module (2 Door):Diagram1 A26/B6.7/L9 - Door Pod Module (4 Door):Diagram1 A26/B6.7/L9 - Mirrors (Heat) Switch Pack Actuated Relay Driven:Diagram1 A26/B6.7/L9 - Mirrors (Heated):Diagram1 B6.7 - CAN Layout:HMI Standard J1939 (125Kbps) B6.7 - Low Speed J1939 (125kbps):B6.7 - Low Speed J1939 (125kbps) B6.7 - Mirrors (Heat) Switch Pack Actuated includes Hood Mirrors:Diagram1 B6.7 - Mirrors (Heat) Switch Pack Actuated includes Hood Mirrors:Diagram2 B6.7 - Mirrors (Heat) Switch Pack Actuated includes RT Hood Mirror:Diagram1 B6.7 - Mirrors (Heat) Switch Pack Actuated includes RT Hood Mirror:Diagram2 B6.7 - Mirrors (Heat) Switch Pack Actuated includes RT Hood Mirror:Diagram3 B6.7 - Mirrors (Heat) Switch Pack Actuated includes RT Hood Mirror:Diagram4 L9 - CAN Layout:HMI Standard J1939 (125Kbps) L9 - Low Speed J1939 (125kbps):L9 - Low Speed J1939 (125Kbps) L9 - Mirrors (Heat) Switch Pack Actuated includes Hood Mirrors:Diagram1 L9 - Mirrors (Heat) Switch Pack Actuated includes Hood Mirrors:Diagram2 L9 - Mirrors (Heat) Switch Pack Actuated includes Hood Mirrors:Diagram3 L9 - Mirrors (Heat) Switch Pack Actuated includes Hood Mirrors:Diagram4 L9 - Mirrors (Heat) Switch Pack Actuated includes RT Hood Mirror:Diagram1

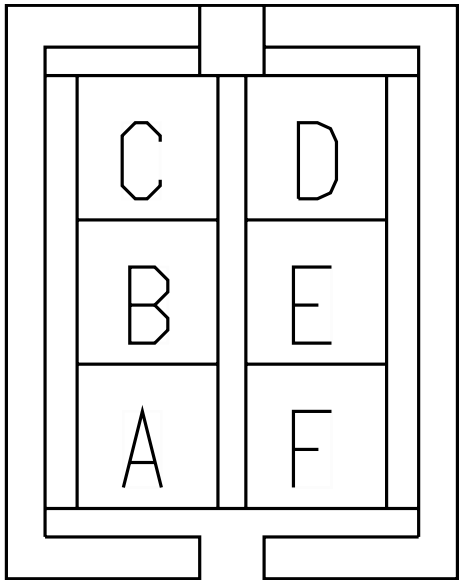

L9 - Mirrors (Heat) Switch Pack Actuated includes RT Hood Mirror:Diagram2
L9 - Mirrors (Heat) Switch Pack Actuated includes RT Hood Mirror:Diagram3
L9 - Mirrors (Heat) Switch Pack Actuated includes RT Hood Mirror:Diagram4

Mates 3200F

Name	Terminal Part Number	V-Min	Name	Wire Part Number	Wire CSA	Wire Spec	Wire Material description	Wire Color Description	Wire Length	End2 Terminal Part Number	End2 Pin Name	End2 Connector
A	-	-	WIRE1654	-	0.0	-	-	-	0.0	-	PIN1	-
B	-	-	WIRE1653	-	0.0	-	-	-	0.0	-	PIN1	-
C	-	-	RC81A	3510302 R1	3.01	12.0	Thin Wall XLPE Primary Cable	LIGHT GREEN	3045.0	-	-	-
D	-	-	RC81-GB	3510362 R1	3.01	12.0	Thin Wall XLPE Primary Cable	WHITE	2005.0	-	-	-
D	-	-	RF78-GB	3510360 R1	1.16	16.0	Thin Wall XLPE Primary Cable	WHITE	975.0	-	-	-

Connector Name	3205F
Part Number	1667529C1
Short Description	DOOR/ IP COURTESY LIGHT AND SPEAKER
Instances	A26/B6.7/L9 - Courtesy Light 4 Door:Diagram1 A26/B6.7/L9 - Courtesy Light Cab 2 door:Diagram1 A26/B6.7/L9 - Four Speakers Daycab BT n/QC:Diagram1 A26/B6.7/L9 - Four Speakers Daycab n/BT n/QC:Diagram1 A26/B6.7/L9 - Two Speakers Daycab BT n/QC:Diagram1 A26/B6.7/L9 - Two Speakers Daycab n/BT n/QC:Diagram1
Mates	3205M

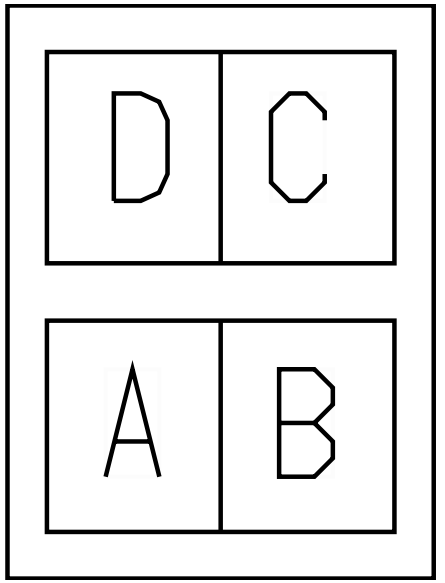

Name	Terminal Part Number	V-Min	Name	Wire Part Number	Wire CSA	Wire Spec	Wire Material description	Wire Color Description	Wire Length	End2 Terminal Part Number	End2 Pin Name	End2 Connect or
A	-	-	FD63BC	3510353 R1	0.79	18.0	Thin Wall XLPE Primary Cable	DARK BLUE	1200.0	-	A	3400
A	-	-	ED63BB	3510353 R1	0.79	18.0	Thin Wall XLPE Primary Cable	DARK BLUE	1200.0	-	A	3400
B	-	-	ED63-G	3510359 R1	0.79	18.0	Thin Wall XLPE Primary Cable	WHITE	1200.0	-	B	3400
B	-	-	FD63-GK	3510359 R1	0.79	18.0	Thin Wall XLPE Primary Cable	WHITE	1200.0	-	B	3400

Name	Terminal Part Number	V-Min	Name	Wire Part Number	Wire CSA	Wire Spec	Wire Material description	Wire Color Description	Wire Length	End2 Terminal Part Number	End2 Pin Name	End2 Connector
C	-	-	ES86H	2643671 R1	0.79	18.0	Std. Wall XLPE Primary Cable	LIGHT GREEN	1050.0	-	A	3300M
C	-	-	FS86K	2643671 R1	0.79	18.0	Std. Wall XLPE Primary Cable	LIGHT GREEN	1050.0	-	A	3300MR
D	-	-	FS86L	2643671 R1	0.79	18.0	Std. Wall XLPE Primary Cable	LIGHT GREEN	1050.0	-	B	3300MR
D	-	-	ES86J	2643671 R1	0.79	18.0	Std. Wall XLPE Primary Cable	LIGHT GREEN	1050.0	-	B	3300M

Connector Name	3205F
Part Number	1667529C1
Instances	B6.7 - Speaker:Four Speakers Daycab w/BT w/QC:Diagram1 B6.7 - Speakers:Four Speakers Daycab n/BT w/QC:Diagram1 B6.7 - Speakers:Two Speakers n/BT w/QC:Diagram1 B6.7 - Speakers:Two Speakers w/BT w/QC:Diagram1 L9 - Speaker:Four Speakers Daycab w/BT w/QC:Diagram1 L9 - Speakers:Four Speakers Daycab n/BT w/QC:Diagram1 L9 - Speakers:Two Speakers n/BT w/QC:Diagram1 L9 - Speakers:Two Speakers w/BT w/QC:Diagram1
Mates	3206M

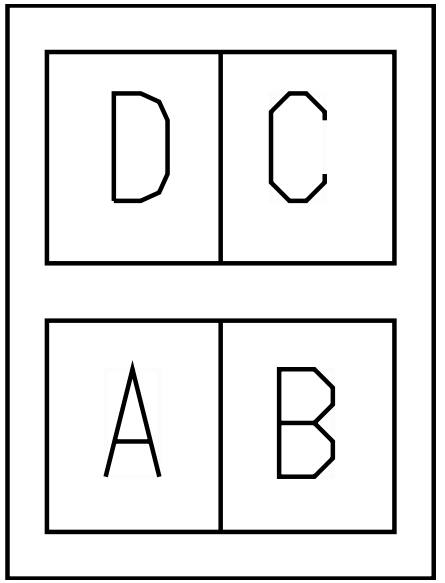

Name	Terminal Part Number	V-Min	Name	Wire Part Number	Wire CSA	Wire Spec	Wire Material description	Wire Color Description	Wire Length	End2 Terminal Part Number	End2 Pin Name	End2 Connect or
C	-	-	ES86H	2643671 R1	0.79	18.0	Std. Wall XLPE Primary Cable	LIGHT GREEN	1050.0	-	A	3300M
C	-	-	FS86K	2643671 R1	0.79	18.0	Std. Wall XLPE Primary Cable	LIGHT GREEN	1050.0	-	A	3300MR
D	-	-	FS86L	2643671 R1	0.79	18.0	Std. Wall XLPE Primary Cable	LIGHT GREEN	1050.0	-	B	3300MR
D	-	-	ES86J	2643671 R1	0.79	18.0	Std. Wall XLPE Primary Cable	LIGHT GREEN	1050.0	-	B	3300M

Connector Name	3205M
Part Number	1667305C1
Short Description	IP/DOOR COURTESY LIGHT & SPEAKER
Instances	A26/B6.7/L9 - Courtesy Light 4 Door:Diagram1 A26/B6.7/L9 - Courtesy Light Cab 2 door:Diagram1 A26/B6.7/L9 - Four Speakers Daycab BT n/QC:Diagram1 A26/B6.7/L9 - Four Speakers Daycab n/BT n/QC:Diagram1 A26/B6.7/L9 - Two Speakers Daycab BT n/QC:Diagram1 A26/B6.7/L9 - Two Speakers Daycab n/BT n/QC:Diagram1
Mates	3205F

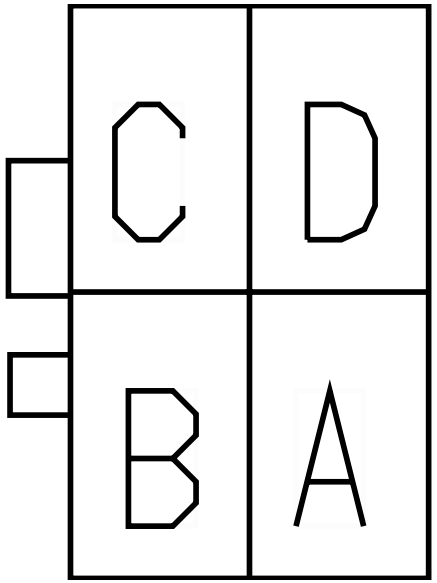

Name	Terminal Part Number	V-Min	Name	Wire Part Number	Wire CSA	Wire Spec	Wire Material description	Wire Color Description	Wire Length	End2 Terminal Part Number	End2 Pin Name	End2 Connect or
A	-	-	WJ63BC	3510353 R1	0.79	18.0	Thin Wall XLPE Primary Cable	DARK BLUE	2255.0	-	X	-
A	-	-	WG63BB	3510353 R1	0.79	18.0	Thin Wall XLPE Primary Cable	DARK BLUE	190.0	-	X	-
A	-	-	WJ63BB	3510353 R1	0.79	18.0	Thin Wall XLPE Primary Cable	DARK BLUE	190.0	-	X	-
B	-	-	AD11-G	3510359 R1	0.79	18.0	Thin Wall XLPE Primary Cable	WHITE	510.0	-	-	-

Name	Terminal Part Number	V-Min	Name	Wire Part Number	Wire CSA	Wire Spec	Wire Material description	Wire Color Description	Wire Length	End2 Terminal Part Number	End2 Pin Name	End2 Connect or
B	-	-	AE11-GK	3510359 R1	0.79	18.0	Thin Wall XLPE Primary Cable	WHITE	1935.0	-	-	-
C	-	-	MQ86K	3510299 R1	0.79	18.0	Thin Wall XLPE Primary Cable	LIGHT GREEN	1650.0	-	11	1300
C	-	-	SQ86H	3510299 R1	0.79	18.0	Thin Wall XLPE Primary Cable	LIGHT GREEN	1235.0	-	13	1300
D	-	-	SQ86L	3510299 R1	0.79	18.0	Thin Wall XLPE Primary Cable	LIGHT GREEN	1650.0	-	12	1300
D	-	-	SQ86J	3510299 R1	0.79	18.0	Thin Wall XLPE Primary Cable	LIGHT GREEN	1235.0	-	14	1300

Connector Name	3206M
Part Number	1667305C1
Instances	B6.7 - Speaker:Four Speakers Daycab w/BT w/QC:Diagram1 B6.7 - Speakers:Four Speakers Daycab n/BT w/QC:Diagram1 B6.7 - Speakers:Two Speakers n/BT w/QC:Diagram1 B6.7 - Speakers:Two Speakers w/BT w/QC:Diagram1 L9 - Speaker:Four Speakers Daycab w/BT w/QC:Diagram1 L9 - Speakers:Four Speakers Daycab n/BT w/QC:Diagram1 L9 - Speakers:Two Speakers n/BT w/QC:Diagram1 L9 - Speakers:Two Speakers w/BT w/QC:Diagram1
Mates	3205F

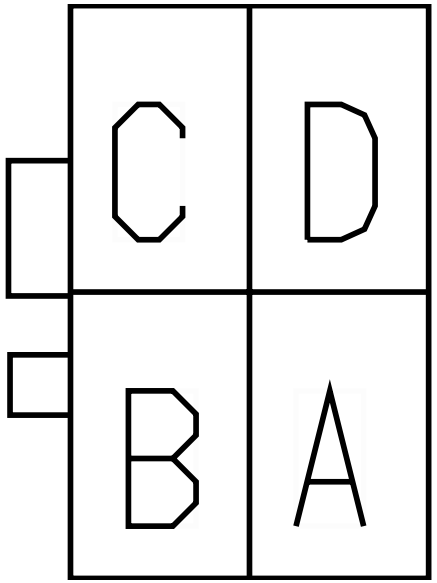

Name	Terminal Part Number	V-Min	Name	Wire Part Number	Wire CSA	Wire Spec	Wire Material description	Wire Color Description	Wire Length	End2 Terminal Part Number	End2 Pin Name	End2 Connect or
C	-	-	MQ86K	3510299 R1	0.79	18.0	Thin Wall XLPE Primary Cable	LIGHT GREEN	1650.0	-	11	1300
C	-	-	MQ86HB	3510299 R1	0.79	18.0	Thin Wall XLPE Primary Cable	LIGHT GREEN	270.0	-	F	1916A
D	-	-	MQ86JB	3510299 R1	0.79	18.0	Thin Wall XLPE Primary Cable	LIGHT GREEN	270.0	-	G	1916A
D	-	-	MQ86L	3510299 R1	0.79	18.0	Thin Wall XLPE Primary Cable	LIGHT GREEN	1650.0	-	12	1300

Connector Name	3208F
Part Number	1661201C1
Instances	A26 - CAN Layout:HMI Standard J1939 (125Kbps)
Mates	3202L

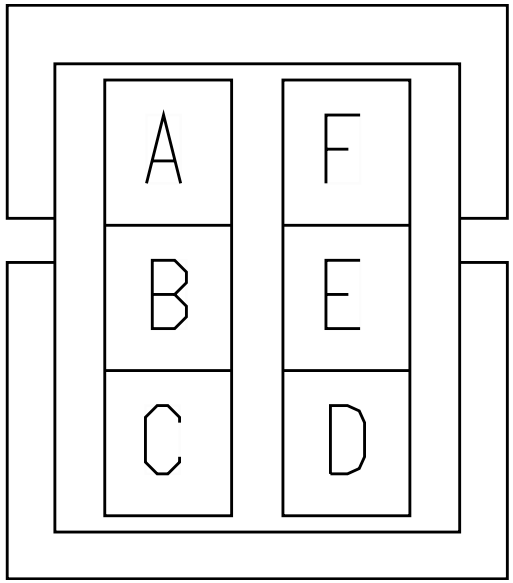

Name	Terminal Part Number	V-Min	Name	Wire Part Number	Wire CSA	Wire Spec	Wire Material description	Wire Color Description	Wire Length	End2 Terminal Part Number	End2 Pin Name	End2 Connect or
A	-	-	WIRE565811	-	0.0	-	-	-	0.0	-	2	3210M
B	-	-	WIRE565810	-	0.0	-	-	-	0.0	-	3	3210M

Connector Name	3208F
Part Number	1661201C1
Instances	A26 - CAN Layout:HMI Standard J1939 (125Kbps) A26 - Low Speed J1939 (125Kbps):A26 - HMI J1939 (125Kbps) B6.7 - CAN Layout:HMI Standard J1939 (125Kbps) B6.7 - Low Speed J1939 (125kbps):B6.7 - Low Speed J1939 (125kbps) L9 - CAN Layout:HMI Standard J1939 (125Kbps) L9 - Low Speed J1939 (125kbps):L9 - Low Speed J1939 (125Kbps)
Mates	3202R

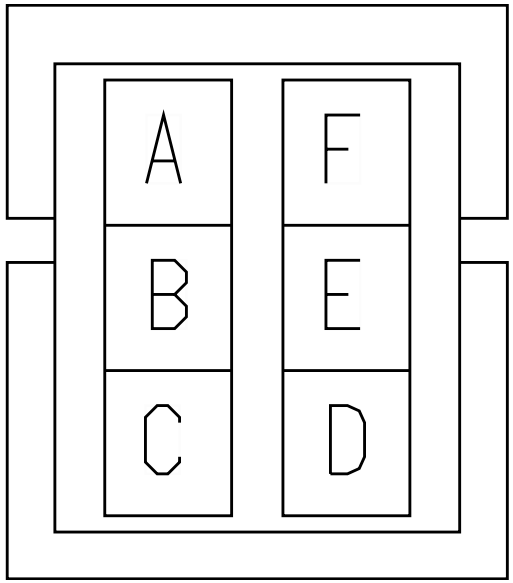

Name	Terminal Part Number	V-Min	Name	Wire Part Number	Wire CSA	Wire Spec	Wire Material description	Wire Color Description	Wire Length	End2 Terminal Part Number	End2 Pin Name	End2 Connect or
A	-	-	WIRE565814	-	0.0	-	-	-	0.0	-	2	3202M
B	-	-	WIRE565815	-	0.0	-	-	-	0.0	-	3	3202M

Connector Name	3208F
Part Number	1661201C1
Instances	B6.7 - CAN Layout:HMI Standard J1939 (125Kbps) B6.7 - Low Speed J1939 (125kbps):B6.7 - Low Speed J1939 (125kbps) L9 - CAN Layout:HMI Standard J1939 (125Kbps) L9 - Low Speed J1939 (125kbps):L9 - Low Speed J1939 (125Kbps)
Mates	3202L

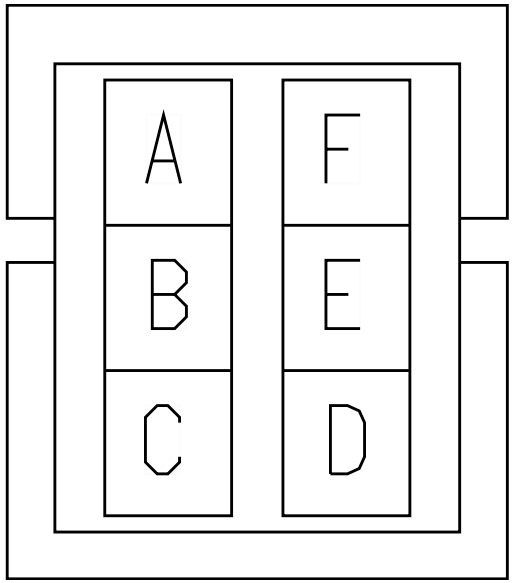

Name	Terminal Part Number	V-Min	Name	Wire Part Number	Wire CSA	Wire Spec	Wire Material description	Wire Color Description	Wire Length	End2 Terminal Part Number	End2 Pin Name	End2 Connect or
A	-	-	WIRE565811	-	0.0	-	-	-	0.0	-	2	3210M
B	-	-	WIRE565810	-	0.0	-	-	-	0.0	-	3	3210M

Connector Name	3208F
Part Number	1661201C1
Instances	A26 - Low Speed J1939 (125Kbps):A26 - HMI J1939 (125Kbps)
Mates	3202L

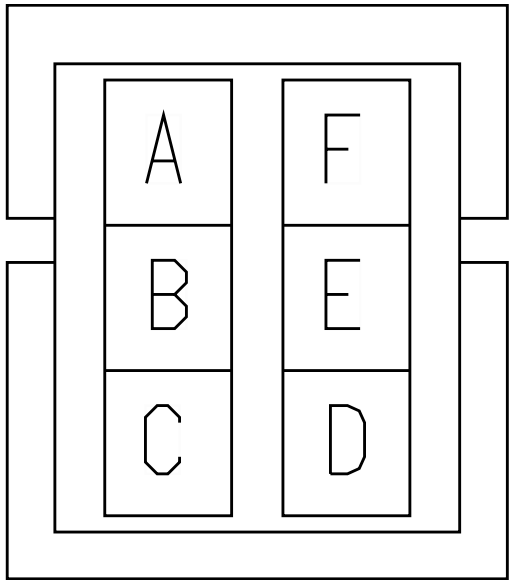

Name	Terminal Part Number	V-Min	Name	Wire Part Number	Wire CSA	Wire Spec	Wire Material description	Wire Color Description	Wire Length	End2 Terminal Part Number	End2 Pin Name	End2 Connect or
A	-	-	WIRE565811	-	0.0	-	-	-	0.0	-	2	3210M
B	-	-	WIRE565810	-	0.0	-	-	-	0.0	-	3	3210M

Connector Name	3209M
Part Number	3709437C1
Instances	A26/B6.7/L9 - Door Pod Module (4 Door):Diagram1
Mates	MODU-REAR-DS_DOOR_POD-2016 -02-02A

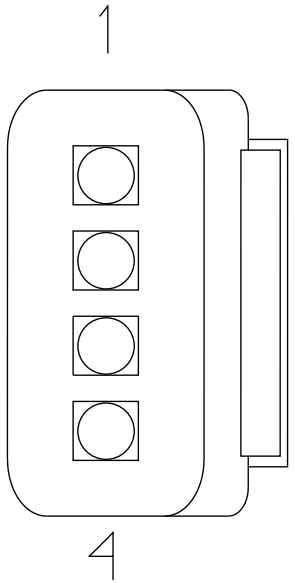

Name	Terminal Part Number	V-Min	Name	Wire Part Number	Wire CSA	Wire Spec	Wire Material description	Wire Color Description	Wire Length	End2 Terminal Part Number	End2 Pin Name	End2 Connect or
1	-	-	E83A	3510301 R1	1.91	14.0	Thin Wall XLPE Primary Cable	LIGHT GREEN	705.0	-	2	3002M
2	-	-	E83B	3510301 R1	1.91	14.0	Thin Wall XLPE Primary Cable	LIGHT GREEN	705.0	-	1	3002M
3	-	-	E81A	3510301 R1	1.91	14.0	Thin Wall XLPE Primary Cable	LIGHT GREEN	1130.0	-	A	4101
4	-	-	E81B	3510301 R1	1.91	14.0	Thin Wall XLPE Primary Cable	LIGHT GREEN	1130.0	-	B	4101

Connector Name	3210M
Part Number	3820176C1
Instances	A26 - CAN Layout:HMI Standard J1939 (125Kbps) A26 - Low Speed J1939 (125Kbps):A26 - HMI J1939 (125Kbps) A26/B6.7/L9 - Door Pod Module (4 Door):Diagram1 B6.7 - CAN Layout:HMI Standard J1939 (125Kbps) B6.7 - Low Speed J1939 (125kbps):B6.7 - Low Speed J1939 (125kbps) L9 - CAN Layout:HMI Standard J1939 (125Kbps) L9 - Low Speed J1939 (125kbps):L9 - Low Speed J1939 (125Kbps)
Mates	MODU-REAR-DS_DOOR_POD-2016 -02-02A

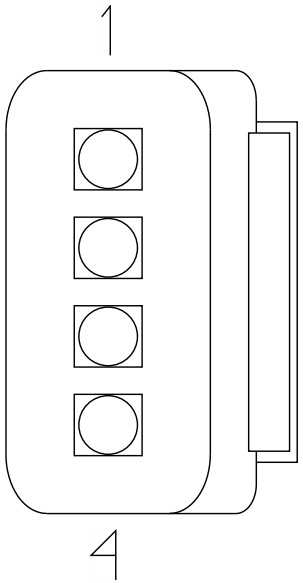

Name	Terminal Part Number	V-Min	Name	Wire Part Number	Wire CSA	Wire Spec	Wire Material description	Wire Color Description	Wire Length	End2 Terminal Part Number	End2 Pin Name	End2 Connect or
1	-	-	E81D	3510302 R1	3.01	12.0	Thin Wall XLPE Primary Cable	LIGHT GREEN	1175.0	-	C	3200F
2	-	-	WIRE565 811	-	0.0	-	-	-	0.0	-	A	3208F
2	-	-	-	-	-	-	-	-	-	-	-	-
3	-	-	WIRE565 810	-	0.0	-	-	-	0.0	-	B	3208F
3	-	-	-	-	-	-	-	-	-	-	-	-
4	-	-	E81-GB	3510362 R1	3.01	12.0	Thin Wall XLPE Primary Cable	WHITE	1175.0	-	D	3200F

Connector Name	3211M
Part Number	3709924C1
Instances	A26/B6.7/L9 - Door Pod Module (4 Door):Diagram1
Mates	MODU-REAR-DS_DOOR_POD-2016 -02-02A

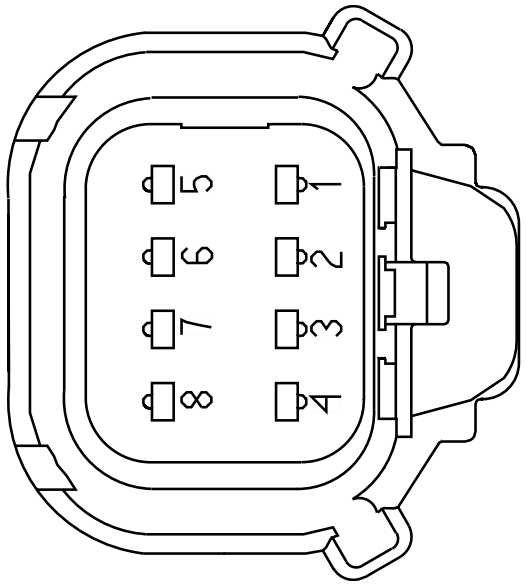

Name	Terminal Part Number	V-Min	Name	Wire Part Number	Wire CSA	Wire Spec	Wire Material description	Wire Color Description	Wire Length	End2 Terminal Part Number	End2 Pin Name	End2 Connect or
2	-	-	E11-G	3510359 R1	0.79	18.0	Thin Wall XLPE Primary Cable	WHITE	0.0	-	7	3211M
7	-	-	E11-G	3510359 R1	0.79	18.0	Thin Wall XLPE Primary Cable	WHITE	0.0	-	2	3211M

Connector Name	3300MR
Part Number	3535769C1
Instances	A26/B6.7/L9 - Four Speakers Daycab BT n/QC:Diagram1 A26/B6.7/L9 - Four Speakers Daycab n/BT n/QC:Diagram1 A26/B6.7/L9 - Two Speakers Daycab BT n/QC:Diagram1 A26/B6.7/L9 - Two Speakers Daycab n/BT n/QC:Diagram1 B6.7 - Speaker:Four Speakers Daycab w/BT w/QC:Diagram1 B6.7 - Speakers:Four Speakers Daycab n/BT w/QC:Diagram1 B6.7 - Speakers:Two Speakers n/BT w/QC:Diagram1 B6.7 - Speakers:Two Speakers w/BT w/QC:Diagram1 L9 - Speaker:Four Speakers Daycab w/BT w/QC:Diagram1 L9 - Speakers:Four Speakers Daycab n/BT w/QC:Diagram1 L9 - Speakers:Two Speakers n/BT w/QC:Diagram1 L9 - Speakers:Two Speakers w/BT w/QC:Diagram1
Mates	SPKR-RF-2058-01-01A

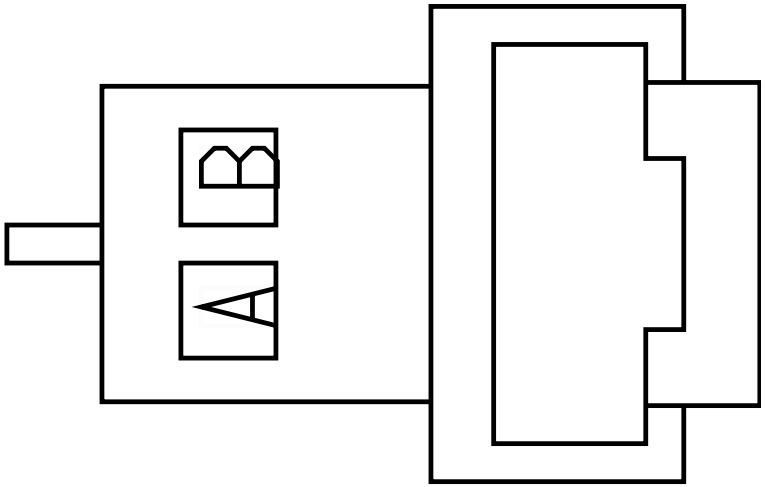

Name	Terminal Part Number	V-Min	Name	Wire Part Number	Wire CSA	Wire Spec	Wire Material description	Wire Color Description	Wire Length	End2 Terminal Part Number	End2 Pin Name	End2 Connect or
A	-	-	FS86K	2643671 R1	0.79	18.0	Std. Wall XLPE Primary Cable	LIGHT GREEN	1050.0	-	C	3205F
B	-	-	FS86L	2643671 R1	0.79	18.0	Std. Wall XLPE Primary Cable	LIGHT GREEN	1050.0	-	D	3205F

Connector Name	3300M
Part Number	3535769C1
Instances	A26/B6.7/L9 - Four Speakers Daycab BT n/QC:Diagram1 A26/B6.7/L9 - Four Speakers Daycab n/BT n/QC:Diagram1 A26/B6.7/L9 - Two Speakers Daycab BT n/QC:Diagram1 A26/B6.7/L9 - Two Speakers Daycab n/BT n/QC:Diagram1 B6.7 - Speaker:Four Speakers Daycab w/BT w/QC:Diagram1 B6.7 - Speakers:Four Speakers Daycab n/BT w/QC:Diagram1 B6.7 - Speakers:Two Speakers n/BT w/QC:Diagram1 B6.7 - Speakers:Two Speakers w/BT w/QC:Diagram1 L9 - Speaker:Four Speakers Daycab w/BT w/QC:Diagram1 L9 - Speakers:Four Speakers Daycab n/BT w/QC:Diagram1 L9 - Speakers:Two Speakers n/BT w/QC:Diagram1 L9 - Speakers:Two Speakers w/BT w/QC:Diagram1
Mates	SPKR-LF-2058-01-01A

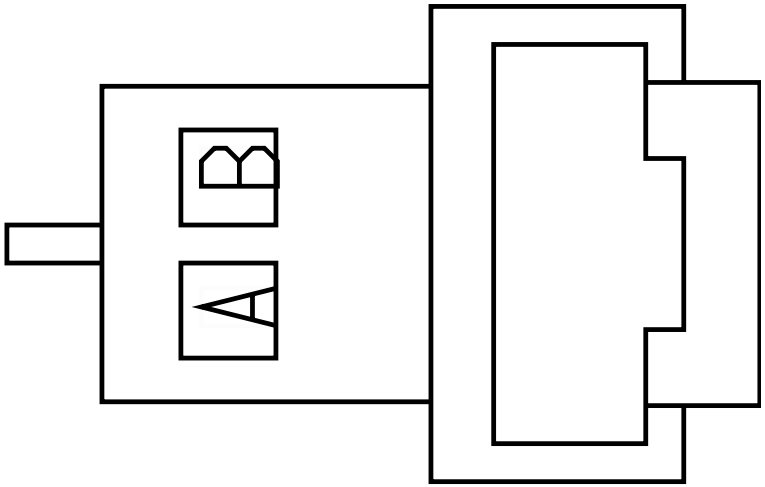

Name	Terminal Part Number	V-Min	Name	Wire Part Number	Wire CSA	Wire Spec	Wire Material description	Wire Color Description	Wire Length	End2 Terminal Part Number	End2 Pin Name	End2 Connect or
A	-	-	ES86H	2643671 R1	0.79	18.0	Std. Wall XLPE Primary Cable	LIGHT GREEN	1050.0	-	C	3205F
B	-	-	ES86J	2643671 R1	0.79	18.0	Std. Wall XLPE Primary Cable	LIGHT GREEN	1050.0	-	D	3205F

Connector Name	3400L
Part Number	1667305C1
Short Description	REAR LEFT DOOR #2
Instances	A26/B6.7/L9 - Courtesy Light 4 Door:Diagram1
Mates	3201F

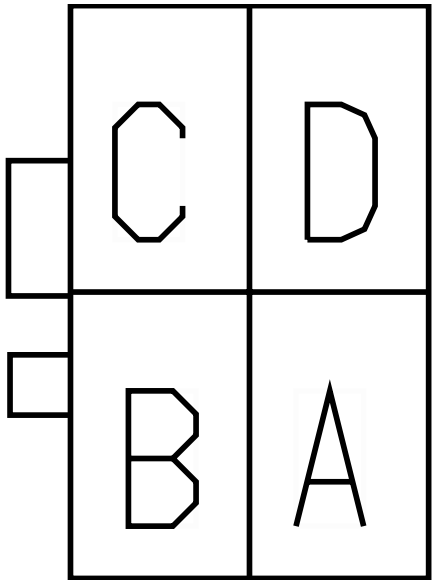

Name	Terminal Part Number	V-Min	Name	Wire Part Number	Wire CSA	Wire Spec	Wire Material description	Wire Color Description	Wire Length	End2 Terminal Part Number	End2 Pin Name	End2 Connect or
A	-	-	W63CB	3510353 R1	0.79	18.0	Thin Wall XLPE Primary Cable	DARK BLUE	620.0	-	X	-
B	-	-	W63-GD	3510359 R1	0.79	18.0	Thin Wall XLPE Primary Cable	WHITE	590.0	-	X	-

Connector Name	3400R
Part Number	1667305C1
Short Description	REAR RIGHT DOOR #2
Instances	A26/B6.7/L9 - Courtesy Light 4 Door:Diagram1
Mates	3201F

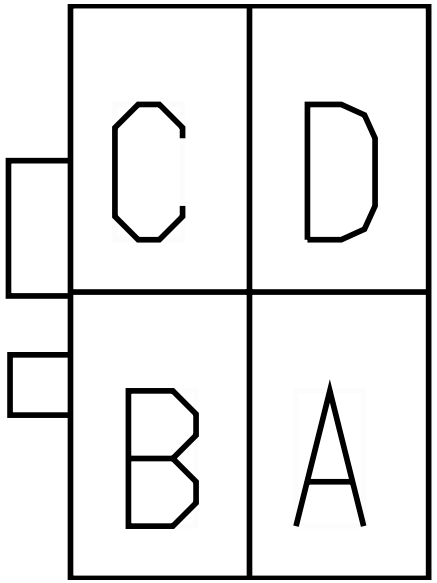

Name	Terminal Part Number	V-Min	Name	Wire Part Number	Wire CSA	Wire Spec	Wire Material description	Wire Color Description	Wire Length	End2 Terminal Part Number	End2 Pin Name	End2 Connect or
A	-	-	W63CC	3510353 R1	0.79	18.0	Thin Wall XLPE Primary Cable	DARK BLUE	4570.0	-	X	-
B	-	-	W63-GE	3510359 R1	0.79	18.0	Thin Wall XLPE Primary Cable	WHITE	4540.0	-	X	-

Connector Name	3400
Part Number	1661259C1
Instances	A26/B6.7/L9 - Courtesy Light 4 Door:Diagram1 A26/B6.7/L9 - Courtesy Light Cab 2 door:Diagram1
Mates	LT-LF_COURTESY-2006-01-01A

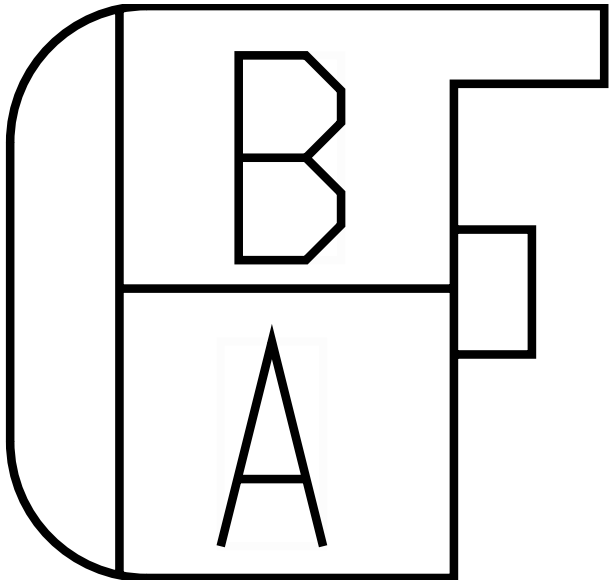

Name	Terminal Part Number	V-Min	Name	Wire Part Number	Wire CSA	Wire Spec	Wire Material description	Wire Color Description	Wire Length	End2 Terminal Part Number	End2 Pin Name	End2 Connect or
A	-	-	FD63BC	3510353 R1	0.79	18.0	Thin Wall XLPE Primary Cable	DARK BLUE	1200.0	-	A	3205F
A	-	-	ED63BB	3510353 R1	0.79	18.0	Thin Wall XLPE Primary Cable	DARK BLUE	1200.0	-	A	3205F
A	-	-	F63C	3510353 R1	0.79	18.0	Thin Wall XLPE Primary Cable	DARK BLUE	1500.0	-	A	3201F
A	-	-	E63C	3510353 R1	0.79	18.0	Thin Wall XLPE Primary Cable	DARK BLUE	1500.0	-	A	3201F

Name	Terminal Part Number	V-Min	Name	Wire Part Number	Wire CSA	Wire Spec	Wire Material description	Wire Color Description	Wire Length	End2 Terminal Part Number	End2 Pin Name	End2 Connect or
B	-	-	ED63-G	3510359 R1	0.79	18.0	Thin Wall XLPE Primary Cable	WHITE	1200.0	-	B	3205F
B	-	-	FD63-GK	3510359 R1	0.79	18.0	Thin Wall XLPE Primary Cable	WHITE	1200.0	-	B	3205F
B	-	-	F63-G	3510359 R1	0.79	18.0	Thin Wall XLPE Primary Cable	WHITE	1500.0	-	B	3201F
B	-	-	E63-G	3510359 R1	0.79	18.0	Thin Wall XLPE Primary Cable	WHITE	1500.0	-	B	3201F

Connector Name	3500B
Part Number	239808R1
Instances	A26/B6.7/L9 - Door Ajar Reminder (Entry /Exit):4 Door:Diagram1
Mates	SW-LR_DOOR-2030-01-02A

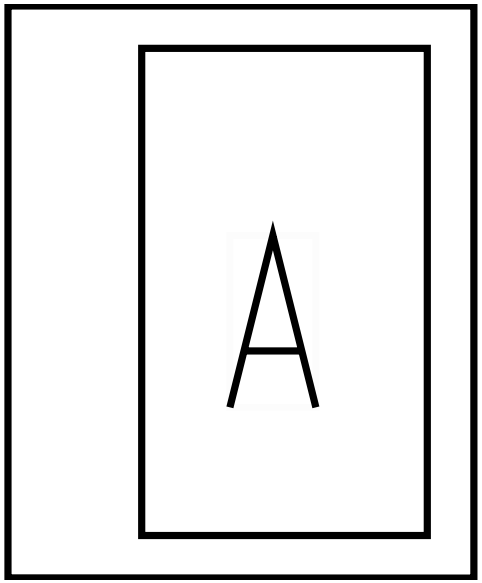

Name	Terminal Part Number	V-Min	Name	Wire Part Number	Wire CSA	Wire Spec	Wire Material description	Wire Color Description	Wire Length	End2 Terminal Part Number	End2 Pin Name	End2 Connect or
A	-	-	63A	2643721 R1	1.16	16.0	Std. Wall XLPE Primary Cable	DARK BLUE	2320.0	-	-	-

Connector Name	3500
Part Number	239808R1
Instances	A26/B6.7/L9 - Door Ajar Reminder (Entry /Exit):4 Door:Diagram1
Mates	SW-RR_DOOR-2030-01-02A

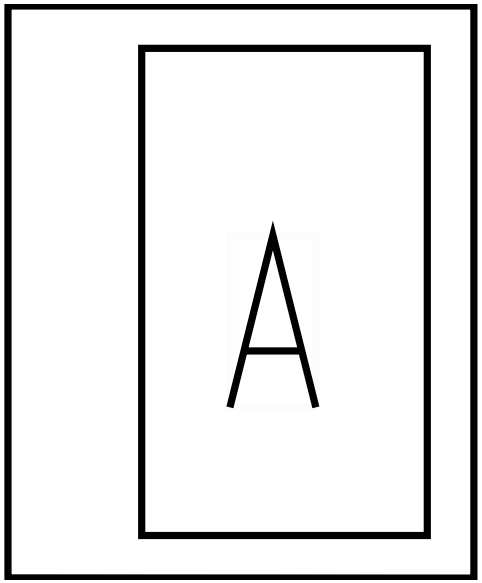

Name	Terminal Part Number	V-Min	Name	Wire Part Number	Wire CSA	Wire Spec	Wire Material description	Wire Color Description	Wire Length	End2 Terminal Part Number	End2 Pin Name	End2 Connect or
A	-	-	63A	2643721 R1	1.16	16.0	Std. Wall XLPE Primary Cable	DARK BLUE	2320.0	-	X	-

Connector Name	3501B
Part Number	239808R1
Instances	A26/B6.7/L9 - Door Ajar Reminder (Entry /Exit):4 Door:Diagram1
Mates	SW-LR_DOOR-2030-01-02A

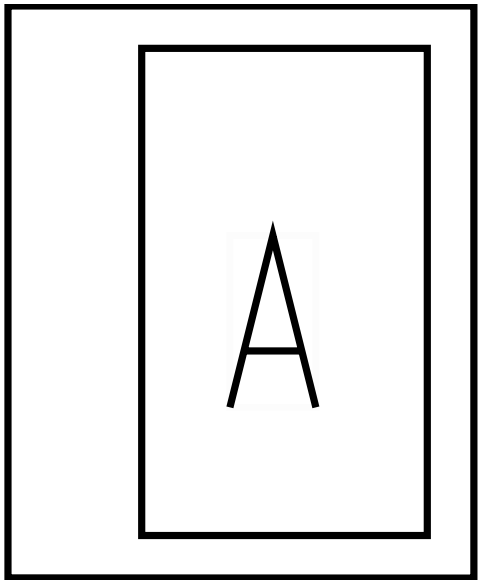

Name	Terminal Part Number	V-Min	Name	Wire Part Number	Wire CSA	Wire Spec	Wire Material description	Wire Color Description	Wire Length	End2 Terminal Part Number	End2 Pin Name	End2 Connect or
A	-	-	9A	2643680 R1	1.16	16.0	Std. Wall XLPE Primary Cable	GREY	2300.0	-	X	-

Connector Name	3501
Part Number	239808R1
Instances	A26/B6.7/L9 - Door Ajar Reminder (Entry /Exit):4 Door:Diagram1
Mates	SW-RR_DOOR-2030-01-02A

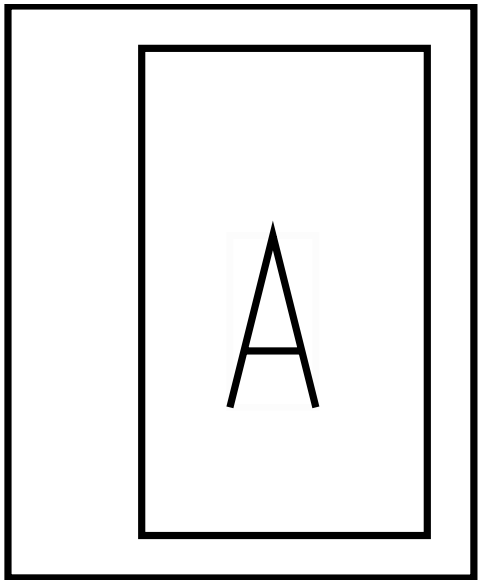

Name	Terminal Part Number	V-Min	Name	Wire Part Number	Wire CSA	Wire Spec	Wire Material description	Wire Color Description	Wire Length	End2 Terminal Part Number	End2 Pin Name	End2 Connect or
A	-	-	9A	2643680 R1	1.16	16.0	Std. Wall XLPE Primary Cable	GREY	2300.0	-	-	-

Connector Name	3502B
Part Number	239808R1
Instances	A26/B6.7/L9 - Compressed Air Supply:Diagram1 A26/B6.7/L9 - Door Ajar Reminder (Entry /Exit):4 Door:Diagram1 A26/B6.7/L9 - Door Ajar Reminder (Entry/Exit) 2 Door:Diagram1
Mates	SW-LF_DOOR-2030-01-01A

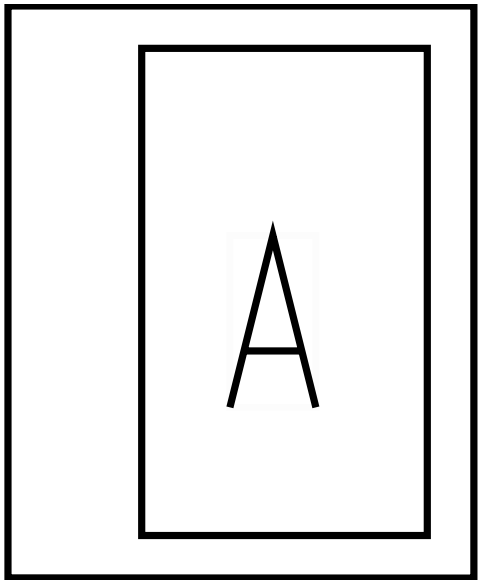

Name	Terminal Part Number	V-Min	Name	Wire Part Number	Wire CSA	Wire Spec	Wire Material description	Wire Color Description	Wire Length	End2 Terminal Part Number	End2 Pin Name	End2 Connect or
A	-	-	9B	2643680 R1	1.16	16.0	Std. Wall XLPE Primary Cable	GREY	1200.0	-	X	-
A	-	-	9B	2643680 R1	1.16	16.0	Std. Wall XLPE Primary Cable	GREY	1200.0	-	-	-

Connector Name	3502
Part Number	239808R1
Instances	A26/B6.7/L9 - Compressed Air Supply:Diagram1 A26/B6.7/L9 - Door Ajar Reminder (Entry /Exit):4 Door:Diagram1 A26/B6.7/L9 - Door Ajar Reminder (Entry/Exit) 2 Door:Diagram1
Mates	SW-RF_DOOR-2030-01-01A

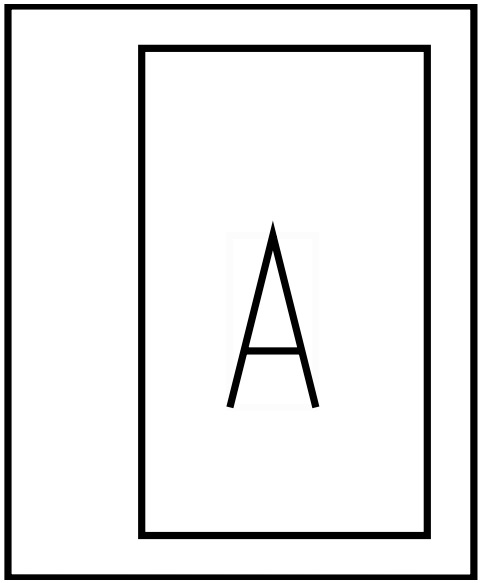

Name	Terminal Part Number	V-Min	Name	Wire Part Number	Wire CSA	Wire Spec	Wire Material description	Wire Color Description	Wire Length	End2 Terminal Part Number	End2 Pin Name	End2 Connect or
A	-	-	9B	2643680 R1	1.16	16.0	Std. Wall XLPE Primary Cable	GREY	1200.0	-	-	-
A	-	-	9B	2643680 R1	1.16	16.0	Std. Wall XLPE Primary Cable	GREY	1200.0	-	X	-

Connector Name	3503B
Part Number	239808R1
Instances	A26/B6.7/L9 - Compressed Air Supply:Diagram1 A26/B6.7/L9 - Door Ajar Reminder (Entry /Exit):4 Door:Diagram1 A26/B6.7/L9 - Door Ajar Reminder (Entry/Exit) 2 Door:Diagram1
Mates	SW-LF_DOOR-2030-01-01A

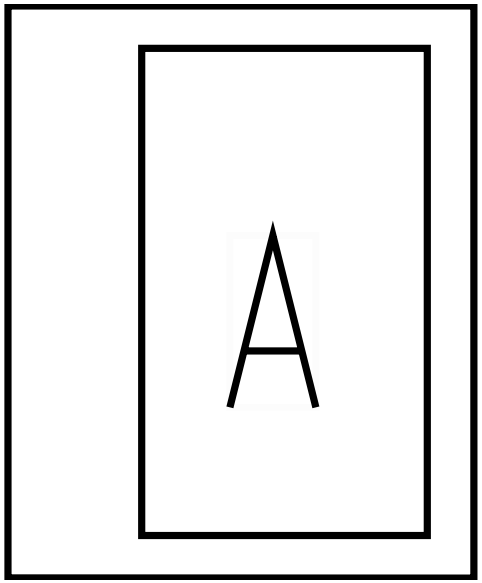

Name	Terminal Part Number	V-Min	Name	Wire Part Number	Wire CSA	Wire Spec	Wire Material description	Wire Color Description	Wire Length	End2 Terminal Part Number	End2 Pin Name	End2 Connect or
A	-	-	63B	2643721 R1	1.16	16.0	Std. Wall XLPE Primary Cable	DARK BLUE	1180.0	-	X	-

Connector Name	3503
Part Number	239808R1
Instances	A26/B6.7/L9 - Compressed Air Supply:Diagram1 A26/B6.7/L9 - Door Ajar Reminder (Entry /Exit):4 Door:Diagram1 A26/B6.7/L9 - Door Ajar Reminder (Entry/Exit) 2 Door:Diagram1
Mates	SW-RF_DOOR-2030-01-01A

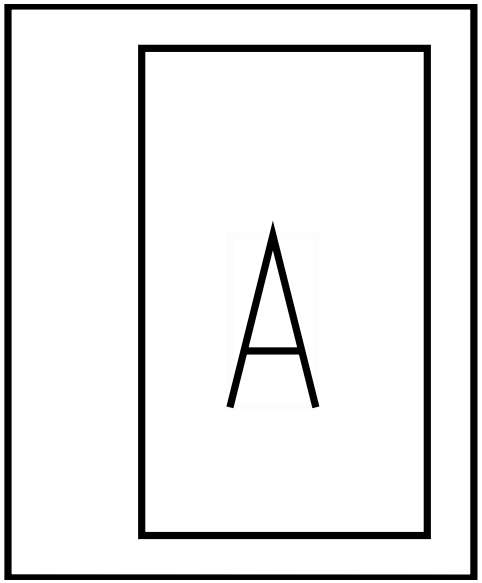

Name	Terminal Part Number	V-Min	Name	Wire Part Number	Wire CSA	Wire Spec	Wire Material description	Wire Color Description	Wire Length	End2 Terminal Part Number	End2 Pin Name	End2 Connect or
A	-	-	63B	2643721 R1	1.16	16.0	Std. Wall XLPE Primary Cable	DARK BLUE	1180.0	-	-	-

Connector Name 4004
Part Number 3525613C1
Instances A26 - Auxilary Power Fuse:Diagram1
Mates CP-PTO_MAXI_FUSE

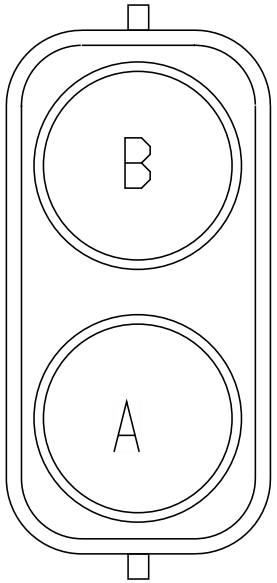

Name	Terminal Part Number	V-Min	Name	Wire Part Number	Wire CSA	Wire Spec	Wire Material description	Wire Color Description	Wire Length	End2 Terminal Part Number	End2 Pin Name	End2 Connect or
1	-	-	MG14L	3510369 R1	4.81	10.0	Thin Wall XLPE Primary Cable	RED	470.0	-	-	-
2	-	-	MH103C	3510302 R1	3.01	12.0	Thin Wall XLPE Primary Cable	LIGHT GREEN	470.0	-	-	-

Connector Name	4004
Part Number	3525613C1
Instances	B6.7 - Auxilary Power Fuse:Diagram1 L9 - Auxilary Power Fuse:Diagram1
Mates	CP-PTO_MAXI_FUSE

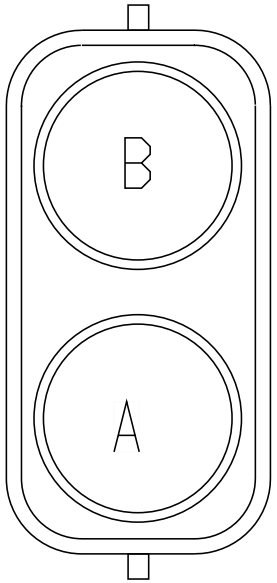

Name	Terminal Part Number	V-Min	Name	Wire Part Number	Wire CSA	Wire Spec	Wire Material description	Wire Color Description	Wire Length	End2 Terminal Part Number	End2 Pin Name	End2 Connect or
1	-	-	MG14L	2643698 R1	4.81	10.0	Std. Wall XLPE Primary Cable	RED	350.0	-	-	-
2	-	-	MG103C	3510302 R1	3.01	12.0	Thin Wall XLPE Primary Cable	LIGHT GREEN	470.0	-	-	-

Connector Name	400
Part Number	3543733C1
Instances	A26/B6.7/L9 - Park / Turn Lights Splice Packs 1623/1625/400:Diagram1
Mates	SP-TURN_SIGNAL_SPLICE_PACK -B000-10-A1

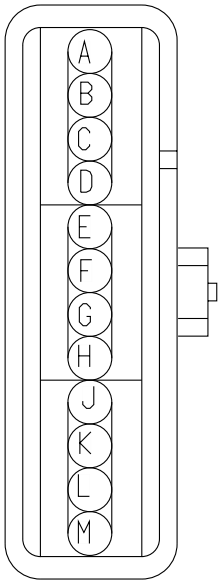

Name	Terminal Part Number	V-Min	Name	Wire Part Number	Wire CSA	Wire Spec	Wire Material description	Wire Color Description	Wire Length	End2 Terminal Part Number	End2 Pin Name	End2 Connect or
A	-	-	YU57A	3510318 R1	1.16	16.0	Thin Wall XLPE Primary Cable	ORANGE	815.0	-	-	-
C	-	-	YV57BC	3510300 R1	1.16	16.0	Thin Wall XLPE Primary Cable	LIGHT GREEN	805.0	-	-	-
C	-	-	YW57BC	3510300 R1	1.16	16.0	Thin Wall XLPE Primary Cable	LIGHT GREEN	3850.0	-	-	-
D	-	-	YY57	2643675 R1	0.79	18.0	Std. Wall XLPE Primary Cable	ORANGE	1870.0	-	-	-

Name	Terminal Part Number	V-Min	Name	Wire Part Number	Wire CSA	Wire Spec	Wire Material description	Wire Color Description	Wire Length	End2 Terminal Part Number	End2 Pin Name	End2 Connector
E	-	-	YT56AA	3510318 R1	1.16	16.0	Thin Wall XLPE Primary Cable	ORANGE	815.0	-	-	-
G	-	-	YW56BC	3510336 R1	1.16	16.0	Thin Wall XLPE Primary Cable	YELLOW 2	3850.0	-	-	-
H	-	-	YX56BC	3510336 R1	1.16	16.0	Thin Wall XLPE Primary Cable	YELLOW 2	805.0	-	-	-
J	-	-	ZH71AC	3510318 R1	1.16	16.0	Thin Wall XLPE Primary Cable	ORANGE	2250.0	-	-	-
J	-	-	ZJ71AB	3510318 R1	1.16	16.0	Thin Wall XLPE Primary Cable	ORANGE	1805.0	-	-	-
J	-	-	ZC71BA	3510318 R1	1.16	16.0	Thin Wall XLPE Primary Cable	ORANGE	2410.0	-	-	-
J	-	-	ZL71AC	3510318 R1	1.16	16.0	Thin Wall XLPE Primary Cable	ORANGE	1805.0	-	-	-
J	-	-	ZA71BK	3510318 R1	1.16	16.0	Thin Wall XLPE Primary Cable	ORANGE	2855.0	-	-	-

Name	Terminal Part Number	V-Min	Name	Wire Part Number	Wire CSA	Wire Spec	Wire Material description	Wire Color Description	Wire Length	End2 Terminal Part Number	End2 Pin Name	End2 Connector
K	-	-	ZG71BC	3510318 R1	1.16	16.0	Thin Wall XLPE Primary Cable	ORANGE	175.0	-	-	-
K	-	-	ZK71BA	3510318 R1	1.16	16.0	Thin Wall XLPE Primary Cable	ORANGE	175.0	-	-	-
K	-	-	ZK71CB	3510318 R1	1.16	16.0	Thin Wall XLPE Primary Cable	ORANGE	175.0	-	-	-
K	-	-	ZC71BK	3510318 R1	1.16	16.0	Thin Wall XLPE Primary Cable	ORANGE	805.0	-	-	-
K	-	-	ZA71A	3510318 R1	1.16	16.0	Thin Wall XLPE Primary Cable	ORANGE	805.0	-	-	-
K	-	-	ZE71AD	3510318 R1	1.16	16.0	Thin Wall XLPE Primary Cable	ORANGE	805.0	-	-	-
L	-	-	KQ71N	3510318 R1	1.16	16.0	Thin Wall XLPE Primary Cable	ORANGE	805.0	-	-	-
L	-	-	KS71P	3510311 R1	0.79	18.0	Thin Wall XLPE Primary Cable	GREY	1820.0	-	-	-

Name	Terminal Part Number	V-Min	Name	Wire Part Number	Wire CSA	Wire Spec	Wire Material description	Wire Color Description	Wire Length	End2 Terminal Part Number	End2 Pin Name	End2 Connector
L	-	-	KT71P	3510311 R1	0.79	18.0	Thin Wall XLPE Primary Cable	GREY	1820.0	-	-	-
M	-	-	ZU71D	3510317 R1	0.79	18.0	Thin Wall XLPE Primary Cable	ORANGE	1175.0	-	-	-

Connector Name	4028C
Part Number	RING-M-10_0
Instances	A26 - Chassis PDM:Diagram1
Mates	Chassis PDM

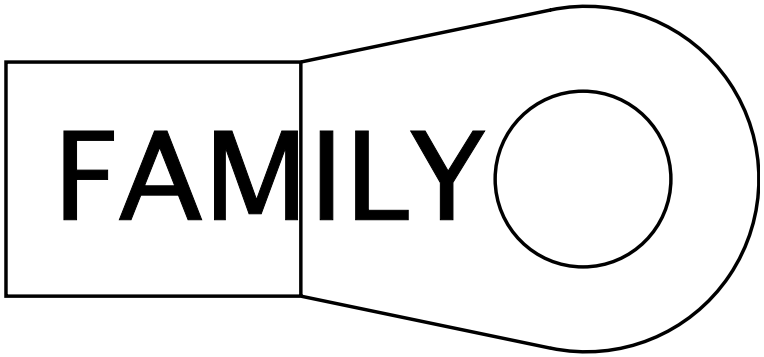

Name	Terminal Part Number	V-Min	Name	Wire Part Number	Wire CSA	Wire Spec	Wire Material description	Wire Color Description	Wire Length	End2 Terminal Part Number	End2 Pin Name	End2 Connect or
1	-	-	M14A-FL	2643473 R1	4.81	10.0	FUSEABLE LINK	RUST	150.0	-	X	-
1	-	-	N14X-FL	2643473 R1	4.81	10.0	FUSEABLE LINK	RUST	150.0	-	X	-
1	-	-	N14Y-FL	2643116 R1	3.01	12.0	FUSEABLE LINK	BLUE	150.0	-	X	-

Connector Name	4028C
Part Number	RING-M-10_0
Instances	B6.7/L9 - Chassis PDM:Diagram1
Mates	Chassis PDM

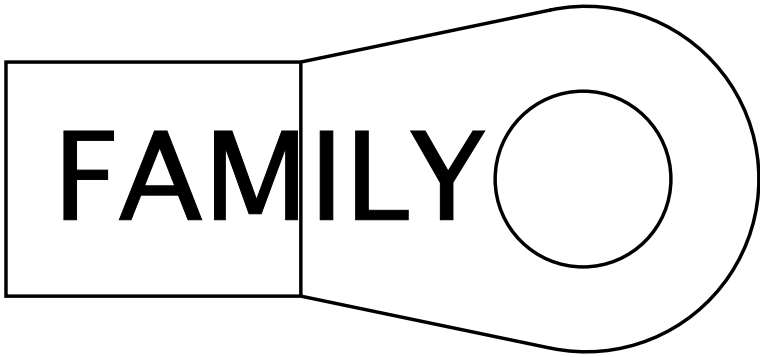

Name	Terminal Part Number	V-Min	Name	Wire Part Number	Wire CSA	Wire Spec	Wire Material description	Wire Color Description	Wire Length	End2 Terminal Part Number	End2 Pin Name	End2 Connect or
1	-	-	M14A-FL	2643473 R1	4.81	10.0	FUSEABLE LINK	RUST	150.0	-	X	-
1	-	-	N14X-FL	2643473 R1	4.81	10.0	FUSEABLE LINK	RUST	150.0	-	-	-
1	-	-	N14Y-FL	2643116 R1	3.01	12.0	FUSEABLE LINK	BLUE	150.0	-	X	-

Connector Name 4042A

Part Number 1671610C1

Instances B6.7 - Fuel Heater (Vehicle Powered)(Racor):Diagram1
L9 - Fuel Heater (Vehicle Powered)(Racor):Diagram1
L9 - Fuel Heater (Vehicle Powered)(Racor):Diagram2
L9 - Fuel Heater (Vehicle Powered)(Racor):Diagram3
L9 - Fuel Heater (Vehicle Powered)(Racor):Diagram4
L9 - Fuel Heater (Vehicle Powered)(Racor):Diagram5
L9 - Fuel Heater (Vehicle Powered)(Racor):Diagram6
L9 - Fuel Heater (Vehicle Powered)(Racor):Diagram7
L9 - Fuel Heater (Vehicle Powered)(Racor):Diagram8

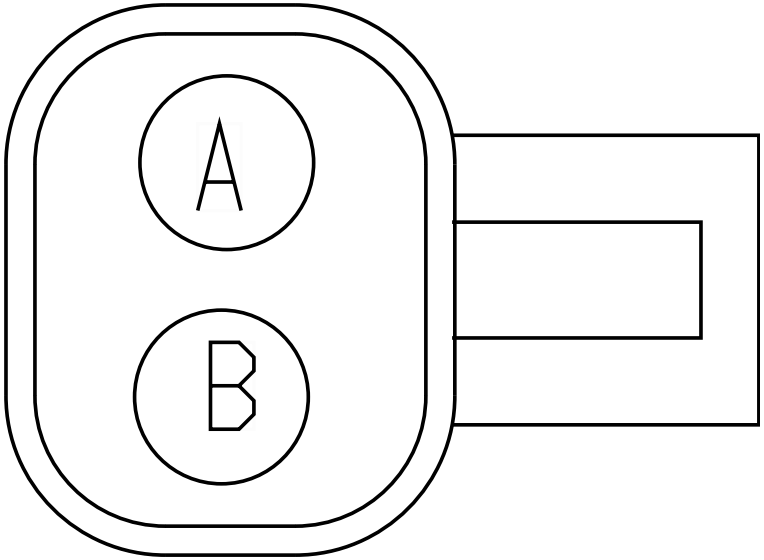

Name	Terminal Part Number	V-Min	Name	Wire Part Number	Wire CSA	Wire Spec	Wire Material description	Wire Color Description	Wire Length	End2 Terminal Part Number	End2 Pin Name	End2 Connect or
A	-	-	CJ19A	2643680 R1	1.16	16.0	Std. Wall XLPE Primary Cable	GREY	3710.0	-	67	1701F
A	-	-	CH19	2643680 R1	1.16	16.0	Std. Wall XLPE Primary Cable	GREY	2935.0	-	67	1701F
A	-	-	CP19	2643680 R1	1.16	16.0	Std. Wall XLPE Primary Cable	GREY	3210.0	-	67	1701F
A	-	-	CS19	2643680 R1	1.16	16.0	Std. Wall XLPE Primary Cable	GREY	3435.0	-	67	1701F

Name	Terminal Part Number	V-Min	Name	Wire Part Number	Wire CSA	Wire Spec	Wire Material description	Wire Color Description	Wire Length	End2 Terminal Part Number	End2 Pin Name	End2 Connector
A	-	-	CU19	2643680 R1	1.16	16.0	Std. Wall XLPE Primary Cable	GREY	3655.0	-	67	1701F
A	-	-	CW19	2643680 R1	1.16	16.0	Std. Wall XLPE Primary Cable	GREY	3955.0	-	67	1701F
A	-	-	CY19	2643680 R1	1.16	16.0	Std. Wall XLPE Primary Cable	GREY	4505.0	-	67	1701F
A	-	-	XA19	2643680 R1	1.16	16.0	Std. Wall XLPE Primary Cable	GREY	2845.0	-	67	1701F
A	-	-	XY19	2643680 R1	1.16	16.0	Std. Wall XLPE Primary Cable	GREY	3355.0	-	67	1701F
B	-	-	CJ19A-G	2643681 R1	1.16	16.0	Std. Wall XLPE Primary Cable	WHITE	850.0	-	-	-
B	-	-	CH19-G	3510360 R1	1.16	16.0	Thin Wall XLPE Primary Cable	WHITE	925.0	-	-	-
B	-	-	CU19-G	3510360 R1	1.16	16.0	Thin Wall XLPE Primary Cable	WHITE	845.0	-	-	-

Name	Terminal Part Number	V-Min	Name	Wire Part Number	Wire CSA	Wire Spec	Wire Material description	Wire Color Description	Wire Length	End2 Terminal Part Number	End2 Pin Name	End2 Connector
B	-	-	CY19-G	3510360 R1	1.16	16.0	Thin Wall XLPE Primary Cable	WHITE	1695.0	-	-	-
B	-	-	CP19-G	3510360 R1	1.16	16.0	Thin Wall XLPE Primary Cable	WHITE	750.0	-	-	-
B	-	-	CW19-G	3510360 R1	1.16	16.0	Thin Wall XLPE Primary Cable	WHITE	1145.0	-	-	-
B	-	-	XY19-G	3510360 R1	1.16	16.0	Thin Wall XLPE Primary Cable	WHITE	545.0	-	-	-
B	-	-	CS19-G	3510360 R1	1.16	16.0	Thin Wall XLPE Primary Cable	WHITE	625.0	-	-	-
B	-	-	XA19-G	3510360 R1	1.16	16.0	Thin Wall XLPE Primary Cable	WHITE	1235.0	-	-	-

Connector Name 4042B
Part Number 1671610C1
Instances B6.7 - Fuel Heater (Vehicle Powered)(Racor):Diagram2

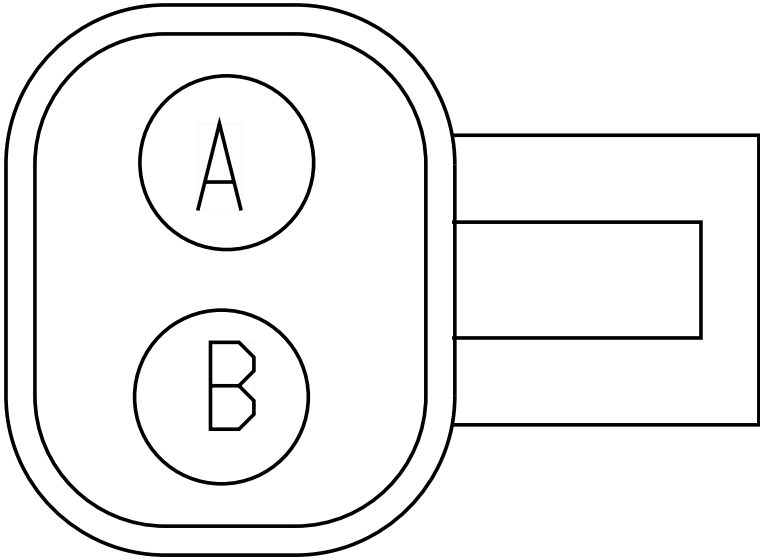

Name	Terminal Part Number	V-Min	Name	Wire Part Number	Wire CSA	Wire Spec	Wire Material description	Wire Color Description	Wire Length	End2 Terminal Part Number	End2 Pin Name	End2 Connect or
A	-	-	CK19B	2643680 R1	1.16	16.0	Std. Wall XLPE Primary Cable	GREY	4205.0	-	67	1701F
B	-	-	CK19B-G	2643681 R1	1.16	16.0	Std. Wall XLPE Primary Cable	WHITE	995.0	-	-	-

Connector Name	4042C
Part Number	1671610C1
Instances	B6.7 - Fuel Heater (Vehicle Powered)(Racor):Diagram3
Mates	DEV-FUEL FILTER ASSY-3036-01-03A

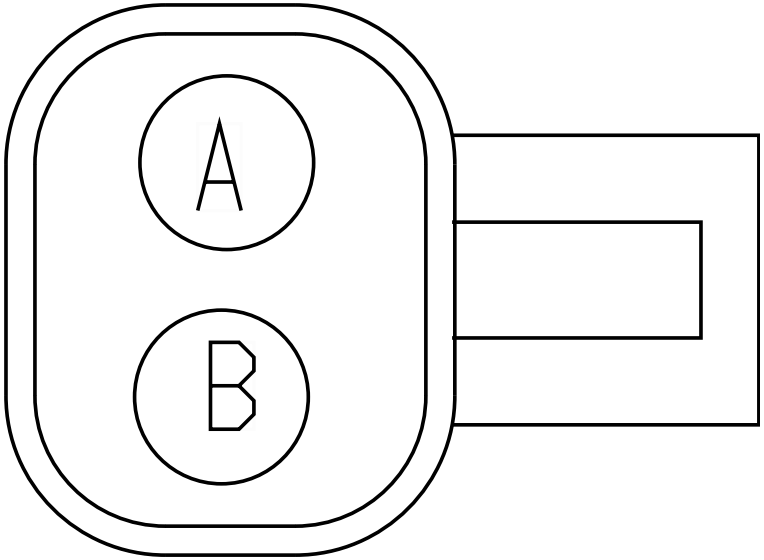

Name	Terminal Part Number	V-Min	Name	Wire Part Number	Wire CSA	Wire Spec	Wire Material description	Wire Color Description	Wire Length	End2 Terminal Part Number	End2 Pin Name	End2 Connect or
A	-	-	CL19C	2643680 R1	1.16	16.0	Std. Wall XLPE Primary Cable	GREY	4905.0	-	67	1701F
B	-	-	CL19C-G	2643681 R1	1.16	16.0	Std. Wall XLPE Primary Cable	WHITE	1695.0	-	-	-

Connector Name 4042D
Part Number 1671610C1
Instances B6.7 - Fuel Heater (Vehicle Powered)(Racor):Diagram4

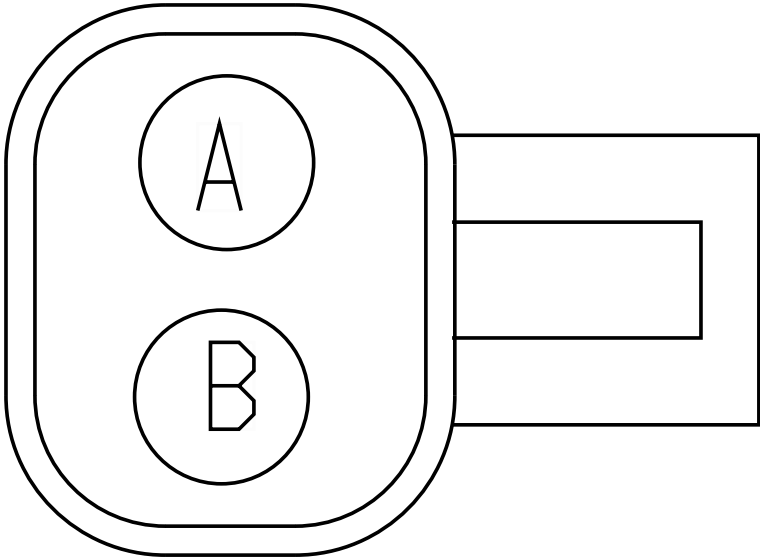

Name	Terminal Part Number	V-Min	Name	Wire Part Number	Wire CSA	Wire Spec	Wire Material description	Wire Color Description	Wire Length	End2 Terminal Part Number	End2 Pin Name	End2 Connect or
A	-	-	CP19D	2643680 R1	1.16	16.0	Std. Wall XLPE Primary Cable	GREY	3535.0	-	67	1701F
B	-	-	CP19D-G	2643681 R1	1.16	16.0	Std. Wall XLPE Primary Cable	WHITE	1125.0	-	-	-

Connector Name 4042E
Part Number 1671610C1
Instances B6.7 - Fuel Heater (Vehicle Powered)(Racor):Diagram5

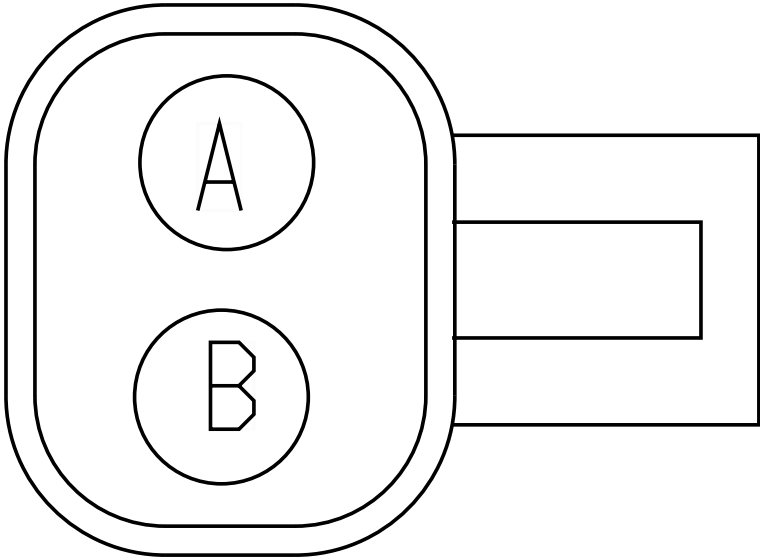

Name	Terminal Part Number	V-Min	Name	Wire Part Number	Wire CSA	Wire Spec	Wire Material description	Wire Color Description	Wire Length	End2 Terminal Part Number	End2 Pin Name	End2 Connect or
A	-	-	CH19E	2643680 R1	1.16	16.0	Std. Wall XLPE Primary Cable	GREY	3385.0	-	67	1701F
B	-	-	CH19E-G	2643681 R1	1.16	16.0	Std. Wall XLPE Primary Cable	WHITE	975.0	-	-	-

Connector Name 4042F
Part Number 1671610C1
Instances B6.7 - Fuel Heater (Vehicle Powered)(Racor):Diagram6

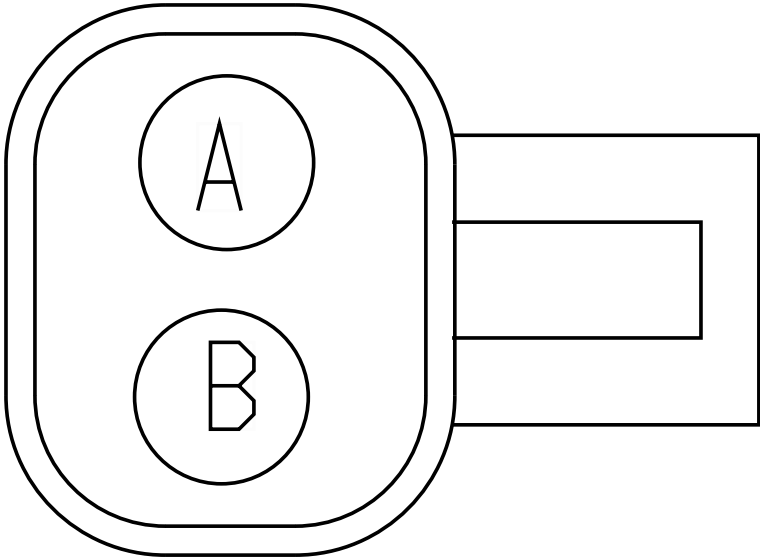

Name	Terminal Part Number	V-Min	Name	Wire Part Number	Wire CSA	Wire Spec	Wire Material description	Wire Color Description	Wire Length	End2 Terminal Part Number	End2 Pin Name	End2 Connect or
A	-	-	CM19F	2643680 R1	1.16	16.0	Std. Wall XLPE Primary Cable	GREY	3835.0	-	67	1701F
B	-	-	CM19F-G	2643681 R1	1.16	16.0	Std. Wall XLPE Primary Cable	WHITE	625.0	-	-	-

Connector Name 4042G
Part Number 1671610C1
Instances B6.7 - Fuel Heater (Vehicle Powered)(Racor):Diagram7

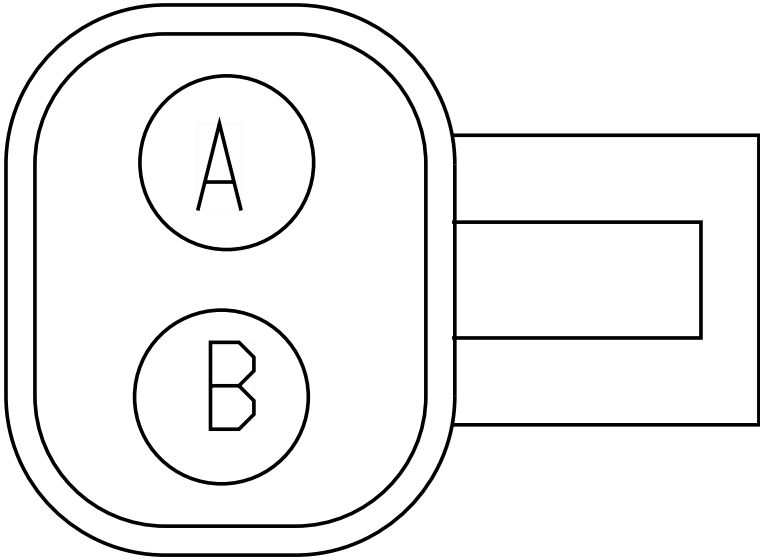

Name	Terminal Part Number	V-Min	Name	Wire Part Number	Wire CSA	Wire Spec	Wire Material description	Wire Color Description	Wire Length	End2 Terminal Part Number	End2 Pin Name	End2 Connect or
A	-	-	CR19H	2643680 R1	1.16	16.0	Std. Wall XLPE Primary Cable	GREY	4035.0	-	67	1701F
B	-	-	CR19H-G	2643681 R1	1.16	16.0	Std. Wall XLPE Primary Cable	WHITE	825.0	-	-	-

Connector Name	4060A
Part Number	3690369C1
Short Description	FUEL PUMP/AMMETER/TWO WAY RADIO
Instances	B6.7 - 2-Way Radio:Diagram1 B6.7 - 2-Way Radio:Diagram2 B6.7 - Current Monitoring (Ammeter):Diagram1 B6.7 - Current Monitoring (Ammeter):Diagram2 L9 - 2-Way Radio:Diagram1 L9 - 2-Way Radio:Diagram2 L9 - Ambient Air Temperature:Diagram1
Mates	4060

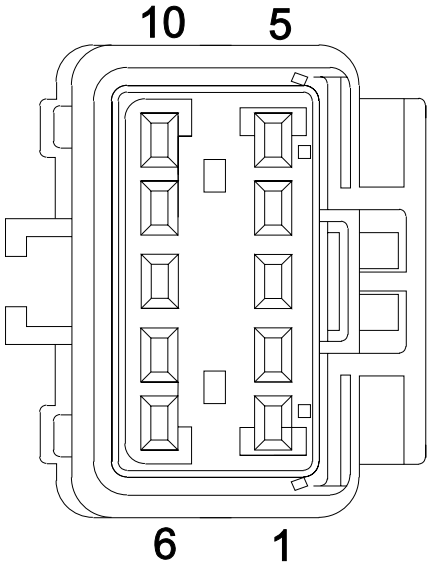

Name	Terminal Part Number	V-Min	Name	Wire Part Number	Wire CSA	Wire Spec	Wire Material description	Wire Color Description	Wire Length	End2 Terminal Part Number	End2 Pin Name	End2 Connect or
3	-	-	MC41	3510329 R1	0.79	18.0	Thin Wall XLPE Primary Cable	TAN	1955.0	-	25	1703F
4	-	-	SH14HC	3510367 R1	1.91	14.0	Thin Wall XLPE Primary Cable	RED	1955.0	-	1	1703F
4	-	-	SJ14HF	3510367 R1	1.91	14.0	Thin Wall XLPE Primary Cable	RED	1955.0	-	1	1703F
5	-	-	SJ11-G	3510361 R1	1.91	14.0	Thin Wall XLPE Primary Cable	WHITE	1955.0	-	2	1703F

Name	Terminal Part Number	V-Min	Name	Wire Part Number	Wire CSA	Wire Spec	Wire Material description	Wire Color Description	Wire Length	End2 Terminal Part Number	End2 Pin Name	End2 Connect or
5	-	-	SH11-GA	3510361 R1	1.91	14.0	Thin Wall XLPE Primary Cable	WHITE	1955.0	-	2	1703F
6	-	-	MH26A	3510329 R1	0.79	18.0	Thin Wall XLPE Primary Cable	TAN	1615.0	-	11	4087
6	-	-	MJ26A	3510329 R1	0.79	18.0	Thin Wall XLPE Primary Cable	TAN	625.0	-	11	4087B
7	-	-	MH26B	3510329 R1	0.79	18.0	Thin Wall XLPE Primary Cable	TAN	1615.0	-	10	4087
7	-	-	MJ26B	3510329 R1	0.79	18.0	Thin Wall XLPE Primary Cable	TAN	625.0	-	10	4087B

Connector Name	4060
Part Number	6112506C1
Short Description	AAT AMMETER
Instances	B6.7 - 2-Way Radio:Diagram1 B6.7 - 2-Way Radio:Diagram2 B6.7 - Current Monitoring (Ammeter):Diagram1 B6.7 - Current Monitoring (Ammeter):Diagram2 L9 - 2-Way Radio:Diagram1 L9 - 2-Way Radio:Diagram2 L9 - Ambient Air Temperature:Diagram1
Mates	4060A

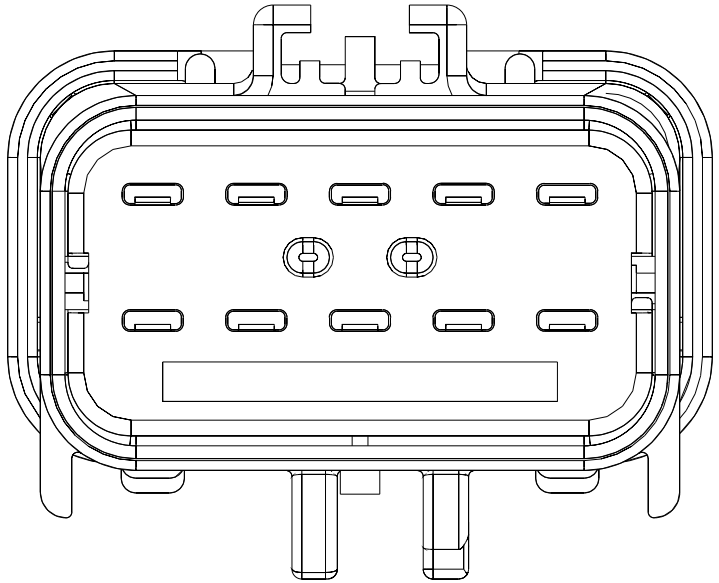

Name	Terminal Part Number	V-Min	Name	Wire Part Number	Wire CSA	Wire Spec	Wire Material description	Wire Color Description	Wire Length	End2 Terminal Part Number	End2 Pin Name	End2 Connect or
3	-	-	KA41	3510329 R1	0.79	18.0	Thin Wall XLPE Primary Cable	TAN	100.0	-	X	-
4	-	-	RA14A	3510368 R1	3.01	12.0	Thin Wall XLPE Primary Cable	RED	2130.0	-	A	9264M
5	-	-	RA14-G	3510362 R1	3.01	12.0	Thin Wall XLPE Primary Cable	WHITE	930.0	-	A	9263F
5	-	-	RA14-G	3510362 R1	3.01	12.0	Thin Wall XLPE Primary Cable	WHITE	930.0	-	-	-

Name	Terminal Part Number	V-Min	Name	Wire Part Number	Wire CSA	Wire Spec	Wire Material description	Wire Color Description	Wire Length	End2 Terminal Part Number	End2 Pin Name	End2 Connect or
6	-	-	AE26B	2643676 R1	0.79	18.0	Std. Wall XLPE Primary Cable	TAN	2675.0	-	A	6335
7	-	-	AE26A	2643676 R1	0.79	18.0	Std. Wall XLPE Primary Cable	TAN	2575.0	-	A	6332

Connector Name	4069
Part Number	BLUNT_SL_VC
Instances	A26/B6.7/L9 - Auxiliary Power (40A) HSD:Diagram1
Mates	BLUNT_AUX_PWR_BDY_BLDR_205 5-04-01A

Name	Terminal Part Number	V-Min	Name	Wire Part Number	Wire CSA	Wire Spec	Wire Material description	Wire Color Description	Wire Length	End2 Terminal Part Number	End2 Pin Name	End2 Connect or
A	-	-	MG103D	2643753 R1	3.01	12.0	Std. Wall XLPE Primary Cable	LIGHT GREEN	590.0	-	13	1700

Connector Name 4087B

Part Number 3553404C1

Instances B6.7 - Body J1939 (250kbps):B6.7 - Body J1939 (250Kbps)
B6.7 - CAN Layout:Body Standard J1939 (250Kbps)
B6.7 - Current Monitoring (Ammeter):Diagram2
L9 - Body J1939 (250kbps):L9 - Body J1939 (250Kbps)
L9 - CAN Layout:Body Standard J1939 (250Kbps)

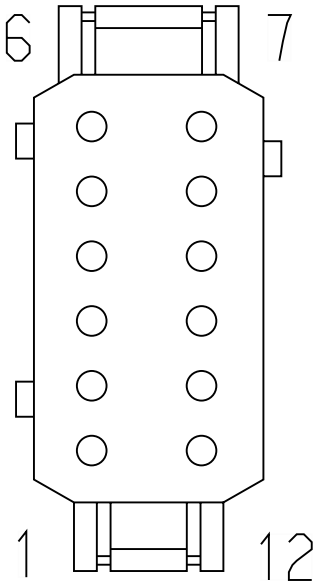

Name	Terminal Part Number	V-Min	Name	Wire Part Number	Wire CSA	Wire Spec	Wire Material description	Wire Color Description	Wire Length	End2 Terminal Part Number	End2 Pin Name	End2 Connector
6	-	-	MJ26DA	2643676 R1	0.79	18.0	Std. Wall XLPE Primary Cable	TAN	2230.0	-	27	1703F
7	-	-	WIRE722782	-	0.0	-	-	-	0.0	-	30	1703F
7	-	-	-	-	-	-	-	-	-	-	-	-
8	-	-	WIRE722780	-	0.0	-	-	-	0.0	-	32	1703F
8	-	-	-	-	-	-	-	-	-	-	-	-
10	-	-	MJ26B	3510329 R1	0.79	18.0	Thin Wall XLPE Primary Cable	TAN	625.0	-	7	4060A
11	-	-	MJ26A	3510329 R1	0.79	18.0	Thin Wall XLPE Primary Cable	TAN	625.0	-	6	4060A

Name	Terminal Part Number	V-Min	Name	Wire Part Number	Wire CSA	Wire Spec	Wire Material description	Wire Color Description	Wire Length	End2 Terminal Part Number	End2 Pin Name	End2 Connect or
12	-	-	MJ11-GBD	3510359 R1	0.79	18.0	Thin Wall XLPE Primary Cable	WHITE	2230.0	-	16	1703F

Connector Name	4087
Part Number	3553404C1
Instances	B6.7 - Body J1939 (250kbps):B6.7 - Body J1939 (250Kbps) B6.7 - CAN Layout:Body Standard J1939 (250Kbps) B6.7 - Current Monitoring (Ammeter):Diagram1 L9 - Body J1939 (250kbps):L9 - Body J1939 (250Kbps) L9 - CAN Layout:Body Standard J1939 (250Kbps)
Mates	MODU-PAM-2031-02-01A

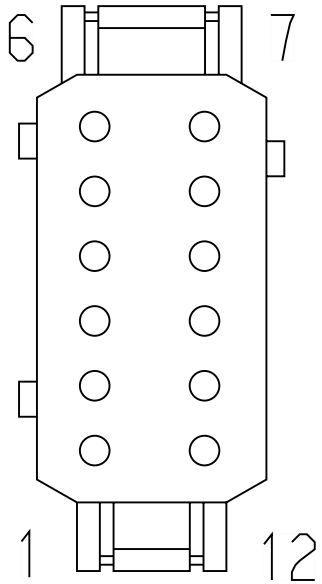

Name	Terminal Part Number	V-Min	Name	Wire Part Number	Wire CSA	Wire Spec	Wire Material description	Wire Color Description	Wire Length	End2 Terminal Part Number	End2 Pin Name	End2 Connector
6	-	-	MH26DA	2643676 R1	0.79	18.0	Std. Wall XLPE Primary Cable	TAN	1880.0	-	27	1703F
7	-	-	WIRE722778	-	0.0	-	-	-	0.0	-	30	1703F
7	-	-	-	-	-	-	-	-	-	-	-	-
8	-	-	WIRE722781	-	0.0	-	-	-	0.0	-	32	1703F
8	-	-	-	-	-	-	-	-	-	-	-	-
10	-	-	MH26B	3510329 R1	0.79	18.0	Thin Wall XLPE Primary Cable	TAN	1615.0	-	7	4060A
11	-	-	MH26A	3510329 R1	0.79	18.0	Thin Wall XLPE Primary Cable	TAN	1615.0	-	6	4060A

Name	Terminal Part Number	V-Min	Name	Wire Part Number	Wire CSA	Wire Spec	Wire Material description	Wire Color Description	Wire Length	End2 Terminal Part Number	End2 Pin Name	End2 Connect or
12	-	-	MH11-GBA	3510359 R1	0.79	18.0	Thin Wall XLPE Primary Cable	WHITE	1880.0	-	16	1703F

Connector Name 4101

Part Number 1671610C1

Instances A26/B6.7/L9 - Door Pod Module (2 Door):Diagram1
A26/B6.7/L9 - Door Pod Module (4 Door):Diagram1

Mates MOT-PS_LOCK-2016-01-01A

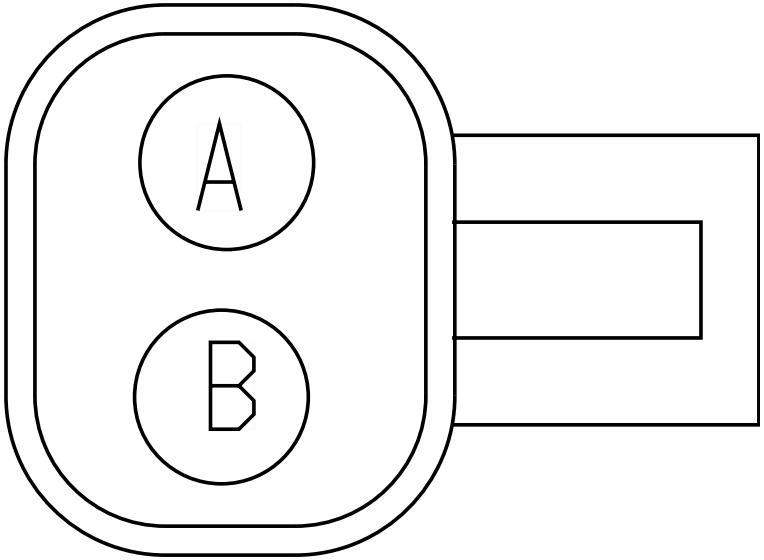

Name	Terminal Part Number	V-Min	Name	Wire Part Number	Wire CSA	Wire Spec	Wire Material description	Wire Color Description	Wire Length	End2 Terminal Part Number	End2 Pin Name	End2 Connect or
A	-	-	E81A	3510301 R1	1.91	14.0	Thin Wall XLPE Primary Cable	LIGHT GREEN	1130.0	-	3	3209M
A	-	-	FC81RA	3510301 R1	1.91	14.0	Thin Wall XLPE Primary Cable	LIGHT GREEN	1760.0	-	3	3201M
A	-	-	EC81LA	3510301 R1	1.91	14.0	Thin Wall XLPE Primary Cable	LIGHT GREEN	1760.0	-	3	3201M
B	-	-	E81B	3510301 R1	1.91	14.0	Thin Wall XLPE Primary Cable	LIGHT GREEN	1130.0	-	4	3209M

Name	Terminal Part Number	V-Min	Name	Wire Part Number	Wire CSA	Wire Spec	Wire Material description	Wire Color Description	Wire Length	End2 Terminal Part Number	End2 Pin Name	End2 Connect or
B	-	-	EC81LB	3510301 R1	1.91	14.0	Thin Wall XLPE Primary Cable	LIGHT GREEN	1760.0	-	4	3201M
B	-	-	FC81RB	3510301 R1	1.91	14.0	Thin Wall XLPE Primary Cable	LIGHT GREEN	1760.0	-	4	3201M

Connector Name	4120
Part Number	3522251C1
Instances	A26 - Snow Valve Control:Diagram1 A26 - Snow Valve Control:Diagram2 A26/B6.7/L9 - Snow Valve Control:Diagram1 B6.7 - Snow Valve Control:Diagram1 B6.7 - Snow Valve Control:Diagram2 L9 - Snow Valve Control:Diagram1 L9 - Snow Valve Control:Diagram2
Mates	MOT-Winter_Gear_Motor-5042 -01-02A

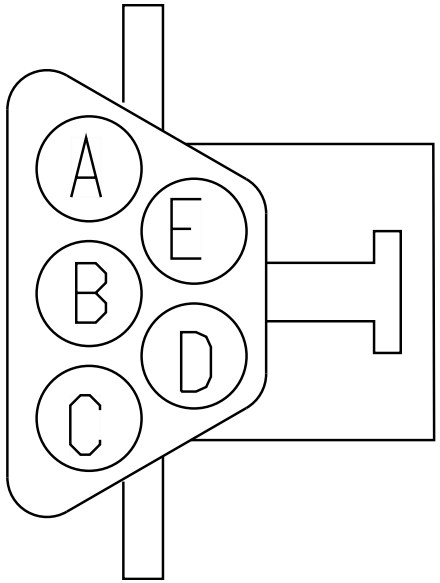

Name	Terminal Part Number	V-Min	Name	Wire Part Number	Wire CSA	Wire Spec	Wire Material description	Wire Color Description	Wire Length	End2 Terminal Part Number	End2 Pin Name	End2 Connect or
A	-	-	QA23E-G	3510329 R1	0.79	18.0	Thin Wall XLPE Primary Cable	TAN	2530.0	-	3	1703F
A	-	-	QA23ED	3510329 R1	0.79	18.0	Thin Wall XLPE Primary Cable	TAN	2530.0	-	3	1703F
B	-	-	QA23BE	3510329 R1	0.79	18.0	Thin Wall XLPE Primary Cable	TAN	2530.0	-	4	1703F
C	-	-	QA23CB	3510329 R1	0.79	18.0	Thin Wall XLPE Primary Cable	TAN	2530.0	-	5	1703F

Name	Terminal Part Number	V-Min	Name	Wire Part Number	Wire CSA	Wire Spec	Wire Material description	Wire Color Description	Wire Length	End2 Terminal Part Number	End2 Pin Name	End2 Connect or
D	-	-	QA23DE	3510323 R1	0.79	18.0	Thin Wall XLPE Primary Cable	PINK	2530.0	-	6	1703F
E	-	-	QA23EF	3510329 R1	0.79	18.0	Thin Wall XLPE Primary Cable	TAN	2530.0	-	7	1703F

Connector Name	422F
Part Number	3540756C1
Instances	B6.7 - T-Handle for Allison Without Park Position:Diagram1 B6.7 - T-Handle for Allison Without Park Position:Diagram2 B6.7 - Transmission Shifter (T-Handle for Allison With Park Position):Diagram1 B6.7 - Transmission Shifter (T-Handle for Allison With Park Position):Diagram2
Mates	MODU_T-HANDLE-SHIFTER-5040 -07-01A

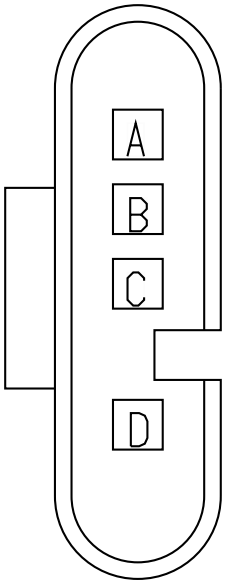

Name	Terminal Part Number	V-Min	Name	Wire Part Number	Wire CSA	Wire Spec	Wire Material description	Wire Color Description	Wire Length	End2 Terminal Part Number	End2 Pin Name	End2 Connect or
A	-	-	UF92#163A	3510330 R1	1.16	16.0	Thin Wall XLPE Primary Cable	TAN	515.0	-	X	-
B	-	-	UF92D	3510329 R1	0.79	18.0	Thin Wall XLPE Primary Cable	TAN	1900.0	-	E8	J4-1601
C	-	-	UF62A	3510353 R1	0.79	18.0	Thin Wall XLPE Primary Cable	DARK BLUE	1080.0	-	-	-
D	-	-	UF92-GAH	3510359 R1	0.79	18.0	Thin Wall XLPE Primary Cable	WHITE	1830.0	-	-	-

Connector Name 4307
Part Number 3581768C1
Short Description FORWARD GROUND
Instances L9 - Forward Chassis Ground Splice Packs 8800:Diagram1

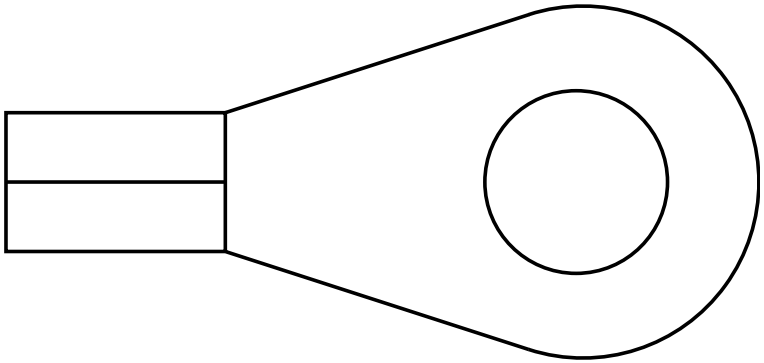

Name	Terminal Part Number	V-Min	Name	Wire Part Number	Wire CSA	Wire Spec	Wire Material description	Wire Color Description	Wire Length	End2 Terminal Part Number	End2 Pin Name	End2 Connect or
1	-	-	MZ11-G	3510362 R1	3.01	12.0	Thin Wall XLPE Primary Cable	WHITE	490.0	-	X	-
1	-	-	MY11-G	3510362 R1	3.01	12.0	Thin Wall XLPE Primary Cable	WHITE	490.0	-	X	-
1	-	-	TD11-G	3510362 R1	3.01	12.0	Thin Wall XLPE Primary Cable	WHITE	490.0	-	X	-
1	-	-	TC11-G	3510362 R1	3.01	12.0	Thin Wall XLPE Primary Cable	WHITE	490.0	-	X	-

Connector Name 4320M

Part Number 3517760C1

Instances A26 - DLB - Remote Power Modules (1 RPM n/ Switch Packs):Diagram1
A26 - DLB - Remote Power Modules (1 RPM w/ Switch Packs):Diagram1
A26 - DLB - Remote Power Modules (2 RPM n/ Switch Pack):Diagram1
A26 - DLB - Remote Power Modules (2 RPM n/ Switch Pack):Diagram2
A26 - DLB - Remote Power Modules (2 RPM n/ Switch Pack):Diagram3
A26 - DLB - Remote Power Modules (2 RPM w/ Switch Packs)Option2:Diagram1
A26 - DLB - Remote Power Modules (2 RPM w/ Switch Packs)Option2:Diagram2
A26 - DLB - Remote Power Modules (2 RPM w/ Switch Packs)Option2:Diagram3

Mates 4413F1

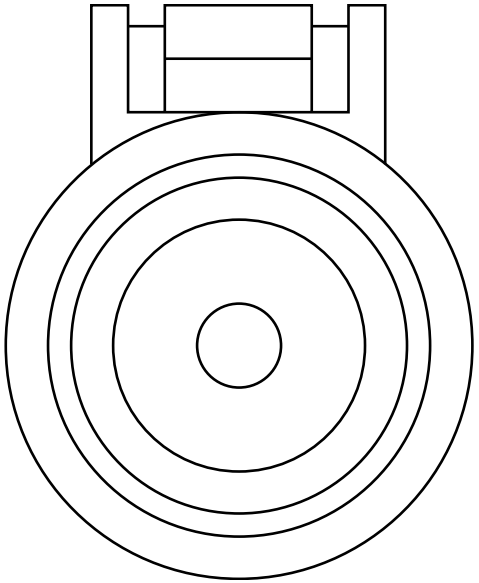

Name	Terminal Part Number	V-Min	Name	Wire Part Number	Wire CSA	Wire Spec	Wire Material description	Wire Color Description	Wire Length	End2 Terminal Part Number	End2 Pin Name	End2 Connect or
A	-	-	M14	2645255 R1	18.94	4.0	SGX FLEX 125C	RED	300.0	-	-	-
A	-	-	M14	2645255 R1	18.94	4.0	SGX FLEX 125C	RED	300.0	-	A	4320M

Connector Name	4320M
Part Number	3517760C1
Short Description	FWD REMOTE POSITIVE FEED
Instances	A26 - DLB - Remote Power Module (3 RPM n/Switch Pack):Diagram1 A26 - DLB - Remote Power Module (3 RPM n/Switch Pack)Option2:Diagram1 A26 - DLB - Remote Power Module (3 RPM n/Switch Pack)Option2:Diagram2 A26 - DLB - Remote Power Modules (1 RPM n/ Switch Packs):Diagram3 A26 - DLB - Remote Power Modules (1 RPM w/ Switch Packs):Diagram3 A26 - DLB - Remote Power Modules (3 RPM w/ Swtich Packs):Diagram1 A26 - DLB - Remote Power Modules (3 RPM w/ Swtich Packs)Option2:Diagram1 A26 - DLB - Remote Power Modules (3 RPM w/ Swtich Packs)Option2:Diagram2 B6.7 - DLB - Remote Power Modules (2 RPM n/ Switch Pack):Diagram4 B6.7 - DLB - Remote Power Modules (2 RPM w/ Switch Packs):Diagram3 B6.7 - DLB - Remote Power Modules (2 RPM w/ Switch Packs):Diagram4 L9 - DLB - Remote Power Modules (1 RPM n/ Switch Packs):Diagram1-Combination3 L9 - DLB - Remote Power Modules (1 RPM w/ Switch Packs):Diagram3 L9 - DLB - Remote Power Modules (2 RPM n/ Switch Pack):Diagram1 L9 - DLB - Remote Power Modules (2 RPM n/ Switch Pack):Diagram2 L9 - DLB - Remote Power Modules (2 RPM n/ Switch Pack):Diagram3 L9 - DLB - Remote Power Modules (2 RPM n/ Switch Pack):Diagram4 L9 - DLB - Remote Power Modules (2 RPM w/ Switch Packs):Diagram1 L9 - DLB - Remote Power Modules (2 RPM w/ Switch Packs):Diagram2 L9 - DLB - Remote Power Modules (2 RPM w/ Switch Packs):Diagram3

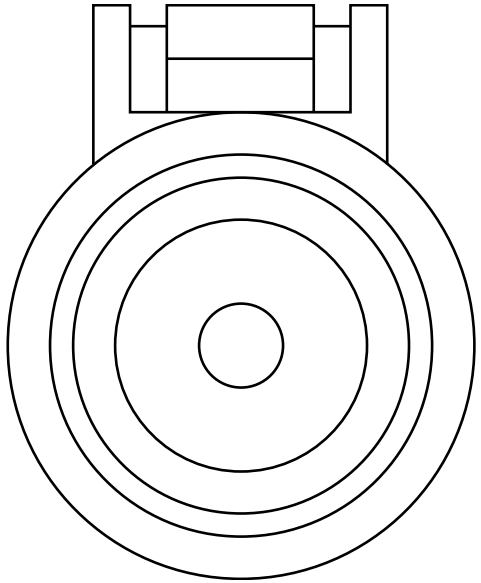

L9 - DLB - Remote Power Modules (2 RPM w/ Switch Packs):Diagram4

Mates 4412F

Name	Terminal Part Number	V-Min	Name	Wire Part Number	Wire CSA	Wire Spec	Wire Material description	Wire Color Description	Wire Length	End2 Terminal Part Number	End2 Pin Name	End2 Connect or
A	-	-	M14	2645255 R1	18.94	4.0	SGX FLEX 125C	RED	300.0	-	-	-
A	-	-	M14	2645255 R1	18.94	4.0	SGX FLEX 125C	RED	300.0	-	A	4320M

Connector Name	4320M
Part Number	3517760C1
Instances	A26 - DLB - Remote Power Modules (2 RPM n/ Switch Pack)Option2:Diagram1 A26 - DLB - Remote Power Modules (2 RPM w/ Switch Packs):Diagram1
Mates	4413F3

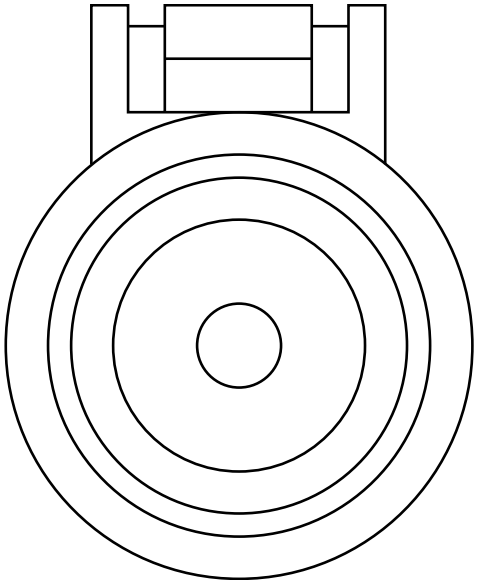

Name	Terminal Part Number	V-Min	Name	Wire Part Number	Wire CSA	Wire Spec	Wire Material description	Wire Color Description	Wire Length	End2 Terminal Part Number	End2 Pin Name	End2 Connect or
A	-	-	M14	2645255 R1	18.94	4.0	SGX FLEX 125C	RED	300.0	-	-	-

Connector Name 4320M

Part Number 3517760C1

Instances A26 - DLB - Remote Power Module (3 RPM n/Switch Pack)Option2:Diagram2
A26 - DLB - Remote Power Modules (3 RPM w/ Swtich Packs)Option2:Diagram2
B6.7 - DLB - Remote Power Modules (1 RPM n/ Switch Packs):Diagram3
B6.7 - DLB - Remote Power Module (3 RPM n/Switch Pack):Diagram1
B6.7 - DLB - Remote Power Modules (1 RPM w/ Switch Packs):Diagram3
B6.7 - DLB - Remote Power Modules (2 RPM n/ Switch Pack):Diagram3
B6.7 - DLB - Remote Power Modules (3 RPM w/ Swtich Packs):Diagram1
L9 - DLB - Remote Power Module (3 RPM n/Switch Pack):Diagram1
L9 - DLB - Remote Power Modules (3 RPM w/ Swtich Packs):Diagram1

Mates 4413F

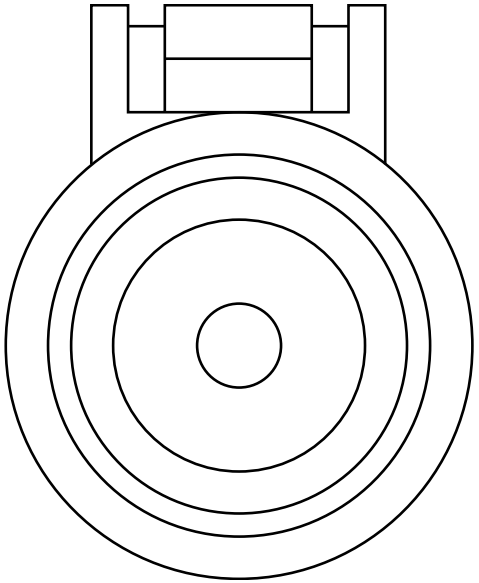

Name	Terminal Part Number	V-Min	Name	Wire Part Number	Wire CSA	Wire Spec	Wire Material description	Wire Color Description	Wire Length	End2 Terminal Part Number	End2 Pin Name	End2 Connect or
A	-	-	M14	2645255 R1	18.94	4.0	SGX FLEX 125C	RED	300.0	-	A	4320M
A	-	-	M14	2645255 R1	18.94	4.0	SGX FLEX 125C	RED	300.0	-	-	-

Connector Name 4320M

Part Number 3517760C1

Instances B6.7 - DLB - Remote Power Module (3 RPM n/Switch Pack):Diagram1
B6.7 - DLB - Remote Power Modules (2 RPM n/ Switch Pack):Diagram1
B6.7 - DLB - Remote Power Modules (2 RPM n/ Switch Pack):Diagram2
B6.7 - DLB - Remote Power Modules (2 RPM w/ Switch Packs):Diagram1
B6.7 - DLB - Remote Power Modules (2 RPM w/ Switch Packs):Diagram2
B6.7 - DLB - Remote Power Modules (3 RPM w/ Swtich Packs):Diagram1
L9 - DLB - Remote Power Module (3 RPM n/Switch Pack):Diagram1
L9 - DLB - Remote Power Modules (3 RPM w/ Swtich Packs):Diagram1

Mates 4413F2

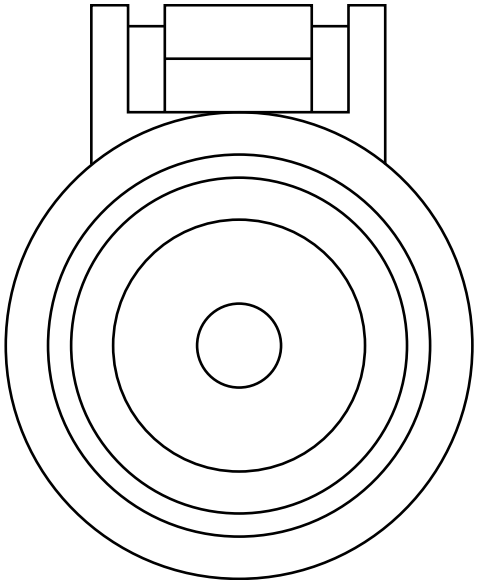

Name	Terminal Part Number	V-Min	Name	Wire Part Number	Wire CSA	Wire Spec	Wire Material description	Wire Color Description	Wire Length	End2 Terminal Part Number	End2 Pin Name	End2 Connect or
A	-	-	M14	2645255 R1	18.94	4.0	SGX FLEX 125C	RED	300.0	-	A	4320M

Connector Name	4328
Part Number	3602454C1
Instances	A26 - CAN Layout:Diagnostic Proprietary J1939 A26 - Diagnostic Private J1939:A26 - Diagnostic Private J1939
Mates	CONN-ENGINE_DIAGNOSTIC-000 8-01-01A

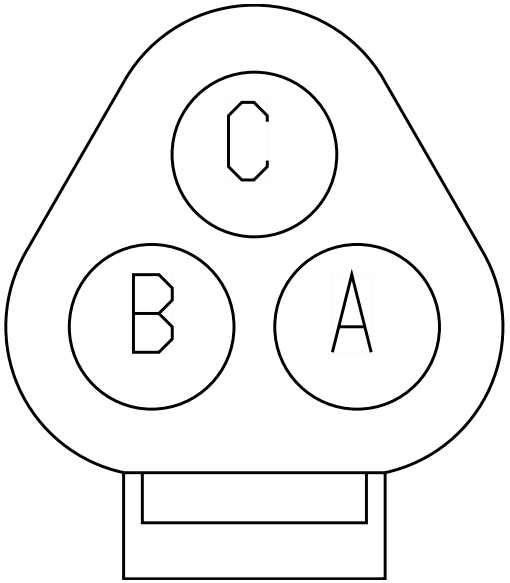

Name	Terminal Part Number	V-Min	Name	Wire Part Number	Wire CSA	Wire Spec	Wire Material description	Wire Color Description	Wire Length	End2 Terminal Part Number	End2 Pin Name	End2 Connect or
A	-	-	WIRE196466	-	0.0	-	-	-	0.0	-	85	6018
B	-	-	WIRE196467	-	0.0	-	-	-	0.0	-	61	6018

Connector Name 4410A

Part Number 3572899C1

Instances A26 - DLB - Remote Power Module (3 RPM n/Switch Pack)Option2:Diagram1
A26 - DLB - Remote Power Module (3 RPM n/Switch Pack)Option2:Diagram2
A26 - DLB - Remote Power Modules (2 RPM n/ Switch Pack):Diagram1
A26 - DLB - Remote Power Modules (2 RPM n/ Switch Pack):Diagram2
A26 - DLB - Remote Power Modules (2 RPM w/ Switch Packs)Option2:Diagram1
A26 - DLB - Remote Power Modules (2 RPM w/ Switch Packs)Option2:Diagram2
A26 - DLB - Remote Power Modules (2 RPM w/ Switch Packs)Option2:Diagram3
A26 - DLB - Remote Power Modules (3 RPM w/ Swtich Packs)Option2:Diagram1
A26 - DLB - Remote Power Modules (3 RPM w/ Swtich Packs)Option2:Diagram2

Mates MODU-RPM1-2050-01-01A

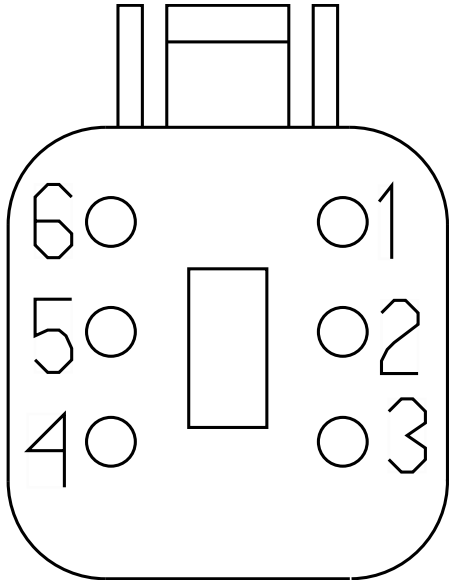

Name	Terminal Part Number	V-Min	Name	Wire Part Number	Wire CSA	Wire Spec	Wire Material description	Wire Color Description	Wire Length	End2 Terminal Part Number	End2 Pin Name	End2 Connector
2	-	-	RD10-GP	2643689 R1	1.91	14.0	Std. Wall XLPE Primary Cable	WHITE	3645.0	-	2	4410L
2	-	-	N11-GPM	2643689 R1	1.91	14.0	Std. Wall XLPE Primary Cable	WHITE	370.0	-	-	-
2	-	-	N11-GPM	2643689 R1	1.91	14.0	Std. Wall XLPE Primary Cable	WHITE	370.0	-	2	4410B

Name	Terminal Part Number	V-Min	Name	Wire Part Number	Wire CSA	Wire Spec	Wire Material description	Wire Color Description	Wire Length	End2 Terminal Part Number	End2 Pin Name	End2 Connector
2	-	-	RD10-GP	2643689 R1	1.91	14.0	Std. Wall XLPE Primary Cable	WHITE	3645.0	-	2	4410H
3	-	-	-	-	-	-	-	-	-	-	-	-
4	-	-	-	-	-	-	-	-	-	-	-	-
6	-	-	RD20A	2643678 R1	1.16	16.0	Std. Wall XLPE Primary Cable	LIGHT GREEN	3645.0	-	6	4410L
6	-	-	N14W	2643760 R1	1.16	16.0	Std. Wall XLPE Primary Cable	RED	370.0	-	-	-
6	-	-	N14W	2643760 R1	1.16	16.0	Std. Wall XLPE Primary Cable	RED	370.0	-	6	4410B
6	-	-	RD20A	2643678 R1	1.16	16.0	Std. Wall XLPE Primary Cable	LIGHT GREEN	3645.0	-	6	4410H

Connector Name 4410A

Part Number 3572899C1

Instances A26 - DLB - Remote Power Module (3 RPM n/Switch Pack):Diagram1
A26 - DLB - Remote Power Modules (2 RPM n/ Switch Pack):Diagram3
A26 - DLB - Remote Power Modules (3 RPM w/ Swtich Packs):Diagram1

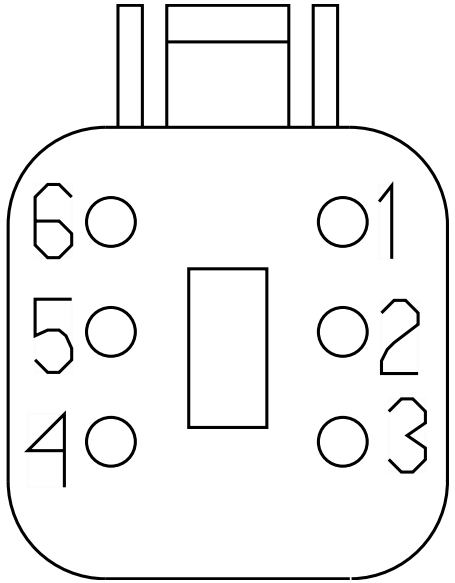

Name	Terminal Part Number	V-Min	Name	Wire Part Number	Wire CSA	Wire Spec	Wire Material description	Wire Color Description	Wire Length	End2 Terminal Part Number	End2 Pin Name	End2 Connect or
2	-	-	N11-GPM	2643689 R1	1.91	14.0	Std. Wall XLPE Primary Cable	WHITE	370.0	-	2	4410A
2	-	-	N11-GPM	2643689 R1	1.91	14.0	Std. Wall XLPE Primary Cable	WHITE	370.0	-	2	4410B
3	-	-	-	-	-	-	-	-	-	-	-	-
4	-	-	-	-	-	-	-	-	-	-	-	-
6	-	-	N14W	2643760 R1	1.16	16.0	Std. Wall XLPE Primary Cable	RED	370.0	-	6	4410A
6	-	-	N14W	2643760 R1	1.16	16.0	Std. Wall XLPE Primary Cable	RED	370.0	-	6	4410B

Connector Name	4410A
Part Number	3572899C1
Instances	A26 - DLB - Remote Power Modules (2 RPM n/ Switch Pack)Option2:Diagram1 A26 - DLB - Remote Power Modules (2 RPM w/ Switch Packs):Diagram1
Mates	MODU-RPM1-2050-01-01A

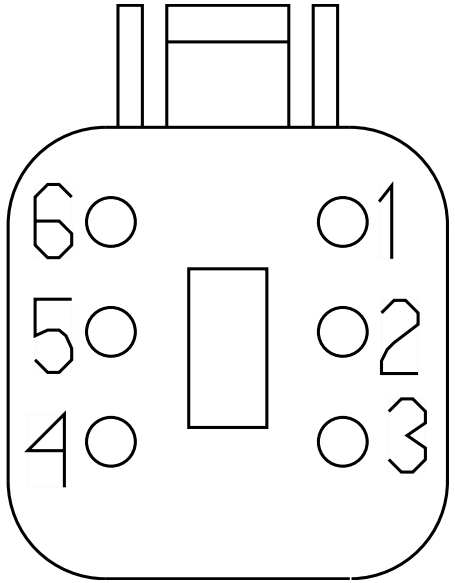

Name	Terminal Part Number	V-Min	Name	Wire Part Number	Wire CSA	Wire Spec	Wire Material description	Wire Color Description	Wire Length	End2 Terminal Part Number	End2 Pin Name	End2 Connect or
2	-	-	N11-GPM	2643689 R1	1.91	14.0	Std. Wall XLPE Primary Cable	WHITE	370.0	-	2	4410B
3	-	-	-	-	-	-	-	-	-	-	-	-
4	-	-	-	-	-	-	-	-	-	-	-	-
6	-	-	N14W	2643760 R1	1.16	16.0	Std. Wall XLPE Primary Cable	RED	370.0	-	6	4410B

Connector Name	4410A
Part Number	3572899C1
Instances	A26 - DLB - Remote Power Module (3 RPM n/Switch Pack):Diagram1 A26 - DLB - Remote Power Modules (3 RPM w/ Swtich Packs):Diagram1 B6.7 - DLB - Remote Power Modules (2 RPM n/ Switch Pack):Diagram2 B6.7 - DLB - Remote Power Modules (2 RPM w/ Switch Packs):Diagram2 L9 - DLB - Remote Power Modules (2 RPM n/ Switch Pack):Diagram2 L9 - DLB - Remote Power Modules (2 RPM w/ Switch Packs):Diagram2
Mates	MODU-RPM2-2050-01-02A

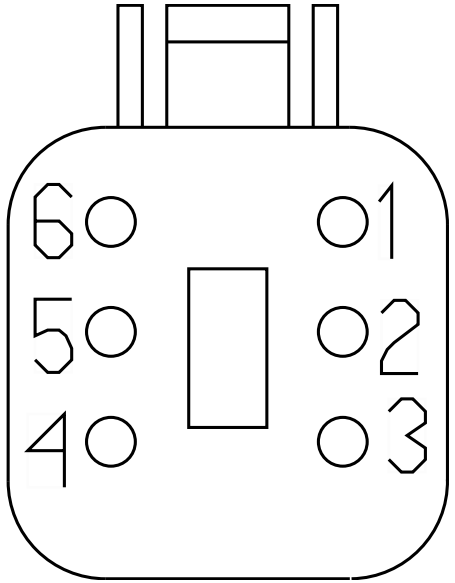

Name	Terminal Part Number	V-Min	Name	Wire Part Number	Wire CSA	Wire Spec	Wire Material description	Wire Color Description	Wire Length	End2 Terminal Part Number	End2 Pin Name	End2 Connect or
2	-	-	N11-GPM	2643689 R1	1.91	14.0	Std. Wall XLPE Primary Cable	WHITE	370.0	-	2	4410A
2	-	-	N11-GPM	2643689 R1	1.91	14.0	Std. Wall XLPE Primary Cable	WHITE	370.0	-	2	4410B
2	-	-	N11-GPM	2643689 R1	1.91	14.0	Std. Wall XLPE Primary Cable	WHITE	370.0	-	-	-
3	-	-	-	-	-	-	-	-	-	-	-	-
4	-	-	-	-	-	-	-	-	-	-	-	-
6	-	-	N14W	2643760 R1	1.16	16.0	Std. Wall XLPE Primary Cable	RED	370.0	-	6	4410A

Name	Terminal Part Number	V-Min	Name	Wire Part Number	Wire CSA	Wire Spec	Wire Material description	Wire Color Description	Wire Length	End2 Terminal Part Number	End2 Pin Name	End2 Connect or
6	-	-	N14W	2643760 R1	1.16	16.0	Std. Wall XLPE Primary Cable	RED	370.0	-	-	-

Connector Name	4410A
Part Number	3572899C1
Instances	A26 - DLB - Remote Power Module (3 RPM n/Switch Pack)Option2:Diagram1 A26 - DLB - Remote Power Module (3 RPM n/Switch Pack)Option2:Diagram2 A26 - DLB - Remote Power Modules (3 RPM w/ Swtich Packs)Option2:Diagram1 A26 - DLB - Remote Power Modules (3 RPM w/ Swtich Packs)Option2:Diagram2
Mates	MODU-RPM2-2050-01-02A

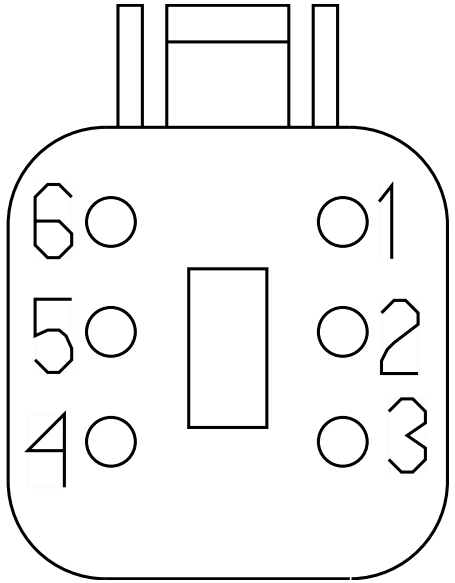

Name	Terminal Part Number	V-Min	Name	Wire Part Number	Wire CSA	Wire Spec	Wire Material description	Wire Color Description	Wire Length	End2 Terminal Part Number	End2 Pin Name	End2 Connect or
2	-	-	N11-GPM	2643689 R1	1.91	14.0	Std. Wall XLPE Primary Cable	WHITE	370.0	-	-	-
2	-	-	RD10-GP	2643689 R1	1.91	14.0	Std. Wall XLPE Primary Cable	WHITE	3645.0	-	2	4410L
6	-	-	RD20A	2643678 R1	1.16	16.0	Std. Wall XLPE Primary Cable	LIGHT GREEN	3645.0	-	6	4410L
6	-	-	N14W	2643760 R1	1.16	16.0	Std. Wall XLPE Primary Cable	RED	370.0	-	-	-

Connector Name 4410A

Part Number 3572899C1

Instances B6.7 - DLB - Remote Power Modules (2 RPM n/ Switch Pack):Diagram1
B6.7 - DLB - Remote Power Modules (2 RPM n/ Switch Pack):Diagram4
B6.7 - DLB - Remote Power Modules (2 RPM w/ Switch Packs):Diagram1
B6.7 - DLB - Remote Power Modules (2 RPM w/ Switch Packs):Diagram4
L9 - DLB - Remote Power Modules (2 RPM n/ Switch Pack):Diagram1
L9 - DLB - Remote Power Modules (2 RPM n/ Switch Pack):Diagram4
L9 - DLB - Remote Power Modules (2 RPM w/ Switch Packs):Diagram1
L9 - DLB - Remote Power Modules (2 RPM w/ Switch Packs):Diagram4

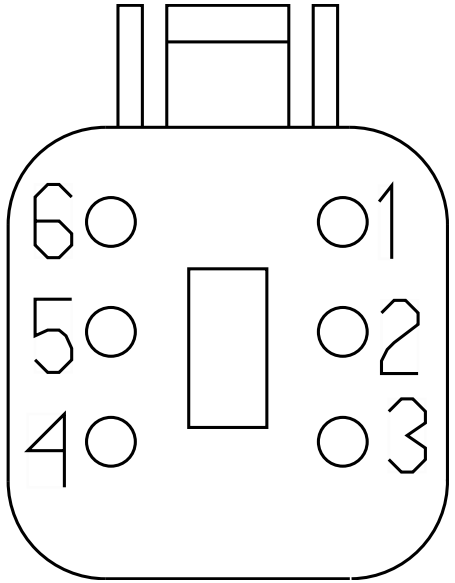

Name	Terminal Part Number	V-Min	Name	Wire Part Number	Wire CSA	Wire Spec	Wire Material description	Wire Color Description	Wire Length	End2 Terminal Part Number	End2 Pin Name	End2 Connector
2	-	-	RC10-GP	2643689 R1	1.91	14.0	Std. Wall XLPE Primary Cable	WHITE	3095.0	-	2	4410H
2	-	-	N11-GPM	2643689 R1	1.91	14.0	Std. Wall XLPE Primary Cable	WHITE	370.0	-	-	-
3	-	-	-	-	-	-	-	-	-	-	-	-
4	-	-	-	-	-	-	-	-	-	-	-	-
6	-	-	N14W	2643760 R1	1.16	16.0	Std. Wall XLPE Primary Cable	RED	370.0	-	6	4410A

Name	Terminal Part Number	V-Min	Name	Wire Part Number	Wire CSA	Wire Spec	Wire Material description	Wire Color Description	Wire Length	End2 Terminal Part Number	End2 Pin Name	End2 Connect or
6	-	-	RC20A	2643678 R1	1.16	16.0	Std. Wall XLPE Primary Cable	LIGHT GREEN	3095.0	-	6	4410H
6	-	-	N14W	2643760 R1	1.16	16.0	Std. Wall XLPE Primary Cable	RED	370.0	-	-	-

Connector Name 4410A

Part Number 3572899C1

Instances B6.7 - DLB - Remote Power Modules (2 RPM n/ Switch Pack):Diagram3
B6.7 - DLB - Remote Power Modules (2 RPM w/ Switch Packs):Diagram3
L9 - DLB - Remote Power Modules (2 RPM n/ Switch Pack):Diagram3
L9 - DLB - Remote Power Modules (2 RPM w/ Switch Packs):Diagram3

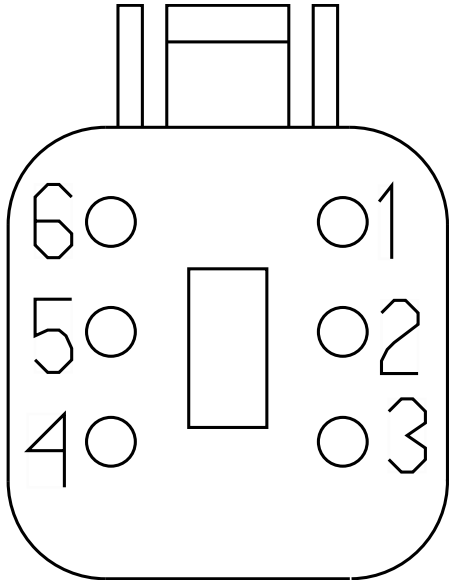

Name	Terminal Part Number	V-Min	Name	Wire Part Number	Wire CSA	Wire Spec	Wire Material description	Wire Color Description	Wire Length	End2 Terminal Part Number	End2 Pin Name	End2 Connect or
2	-	-	N11-GPM	2643689 R1	1.91	14.0	Std. Wall XLPE Primary Cable	WHITE	370.0	-	-	-
2	-	-	N11-GPM	2643689 R1	1.91	14.0	Std. Wall XLPE Primary Cable	WHITE	370.0	-	2	4410B
3	-	-	-	-	-	-	-	-	-	-	-	-
4	-	-	-	-	-	-	-	-	-	-	-	-
6	-	-	N14W	2643760 R1	1.16	16.0	Std. Wall XLPE Primary Cable	RED	370.0	-	-	-
6	-	-	N14W	2643760 R1	1.16	16.0	Std. Wall XLPE Primary Cable	RED	370.0	-	6	4410B

Connector Name	4410A
Part Number	3572899C1
Instances	B6.7 - DLB - Remote Power Module (3 RPM n/Switch Pack):Diagram1 B6.7 - DLB - Remote Power Modules (3 RPM w/ Swtich Packs):Diagram1 L9 - DLB - Remote Power Module (3 RPM n/Switch Pack):Diagram1 L9 - DLB - Remote Power Modules (3 RPM w/ Swtich Packs):Diagram1
Mates	MODU-RPM1-2050-01-01A

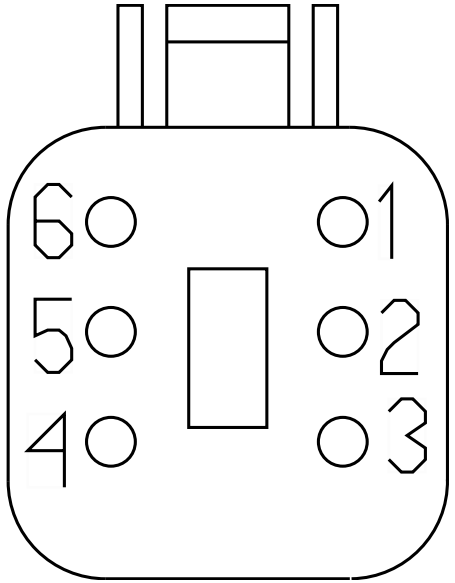

Name	Terminal Part Number	V-Min	Name	Wire Part Number	Wire CSA	Wire Spec	Wire Material description	Wire Color Description	Wire Length	End2 Terminal Part Number	End2 Pin Name	End2 Connect or
2	-	-	N11-GPM	2643689 R1	1.91	14.0	Std. Wall XLPE Primary Cable	WHITE	370.0	-	2	4410B
3	-	-	-	-	-	-	-	-	-	-	-	-
4	-	-	-	-	-	-	-	-	-	-	-	-
6	-	-	N14W	2643760 R1	1.16	16.0	Std. Wall XLPE Primary Cable	RED	370.0	-	6	4410B

Connector Name	4410BA
Part Number	3572899C1
Instances	A26 - DLB - Remote Power Module (3 RPM n/Switch Pack)Option2:Diagram1 A26 - DLB - Remote Power Modules (3 RPM w/ Swtich Packs)Option2:Diagram1
Mates	MODU-RPM3-2050-01-03A

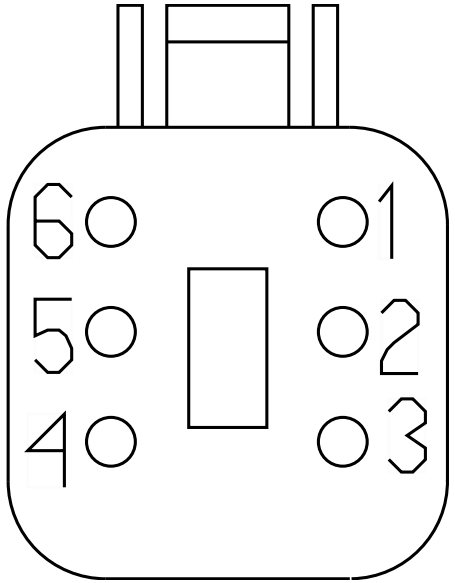

Name	Terminal Part Number	V-Min	Name	Wire Part Number	Wire CSA	Wire Spec	Wire Material description	Wire Color Description	Wire Length	End2 Terminal Part Number	End2 Pin Name	End2 Connect or
2	-	-	N11-GPM	2643689 R1	1.91	14.0	Std. Wall XLPE Primary Cable	WHITE	370.0	-	-	-
3	-	-	-	-	-	-	-	-	-	-	-	-
4	-	-	-	-	-	-	-	-	-	-	-	-
6	-	-	N14W	2643760 R1	1.16	16.0	Std. Wall XLPE Primary Cable	RED	370.0	-	-	-

Connector Name 4410B

Part Number 3572899C1

Instances A26 - DLB - Remote Power Module (3 RPM n/Switch Pack):Diagram1
A26 - DLB - Remote Power Modules (2 RPM n/ Switch Pack):Diagram3
A26 - DLB - Remote Power Modules (3 RPM w/ Swtich Packs):Diagram1

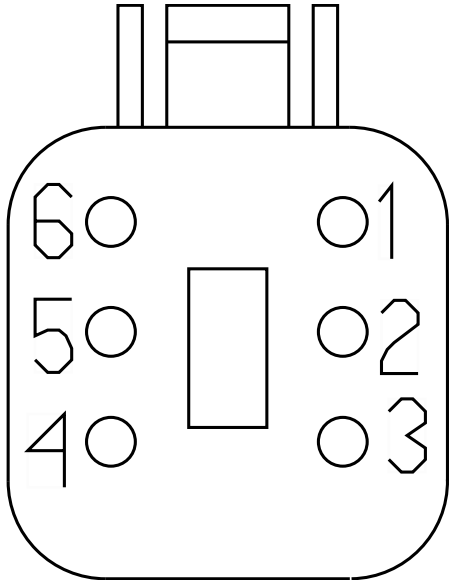

Name	Terminal Part Number	V-Min	Name	Wire Part Number	Wire CSA	Wire Spec	Wire Material description	Wire Color Description	Wire Length	End2 Terminal Part Number	End2 Pin Name	End2 Connect or
2	-	-	N11-GPM	2643689 R1	1.91	14.0	Std. Wall XLPE Primary Cable	WHITE	370.0	-	-	-
2	-	-	N11-GPM	2643689 R1	1.91	14.0	Std. Wall XLPE Primary Cable	WHITE	370.0	-	2	4410A
3	-	-	-	-	-	-	-	-	-	-	-	-
4	-	-	-	-	-	-	-	-	-	-	-	-
6	-	-	N14W	2643760 R1	1.16	16.0	Std. Wall XLPE Primary Cable	RED	370.0	-	-	-
6	-	-	N14W	2643760 R1	1.16	16.0	Std. Wall XLPE Primary Cable	RED	370.0	-	6	4410A

Connector Name 4410B

Part Number 3572899C1

Instances A26 - DLB - Remote Power Module (3 RPM n/Switch Pack)Option2:Diagram1
A26 - DLB - Remote Power Module (3 RPM n/Switch Pack)Option2:Diagram2
A26 - DLB - Remote Power Modules (2 RPM n/ Switch Pack):Diagram1
A26 - DLB - Remote Power Modules (2 RPM w/ Switch Packs)Option2:Diagram1
A26 - DLB - Remote Power Modules (2 RPM w/ Switch Packs)Option2:Diagram3
A26 - DLB - Remote Power Modules (3 RPM w/ Swtich Packs)Option2:Diagram1
A26 - DLB - Remote Power Modules (3 RPM w/ Swtich Packs)Option2:Diagram2

Mates MODU-RPM2-2050-01-02A

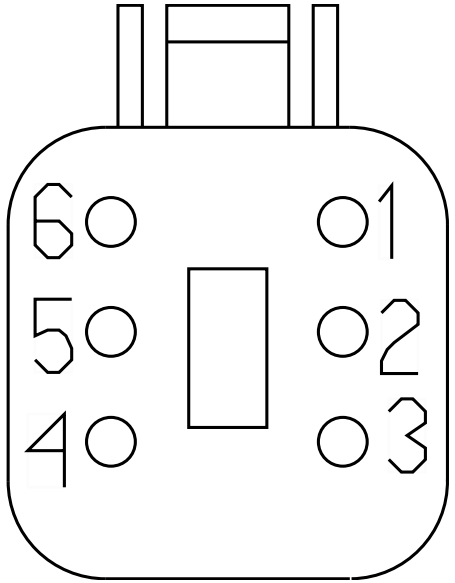

Name	Terminal Part Number	V-Min	Name	Wire Part Number	Wire CSA	Wire Spec	Wire Material description	Wire Color Description	Wire Length	End2 Terminal Part Number	End2 Pin Name	End2 Connect or
2	-	-	N11-GPM	2643689 R1	1.91	14.0	Std. Wall XLPE Primary Cable	WHITE	370.0	-	-	-
2	-	-	N11-GPM	2643689 R1	1.91	14.0	Std. Wall XLPE Primary Cable	WHITE	370.0	-	2	4410A
3	-	-	-	-	-	-	-	-	-	-	-	-
4	-	-	-	-	-	-	-	-	-	-	-	-
6	-	-	N14W	2643760 R1	1.16	16.0	Std. Wall XLPE Primary Cable	RED	370.0	-	-	-
6	-	-	N14W	2643760 R1	1.16	16.0	Std. Wall XLPE Primary Cable	RED	370.0	-	6	4410A

Connector Name	4410B
Part Number	3572899C1
Instances	A26 - DLB - Remote Power Modules (2 RPM n/ Switch Pack)Option2:Diagram1 A26 - DLB - Remote Power Modules (2 RPM w/ Switch Packs):Diagram1
Mates	MODU-RPM2-2050-01-02A

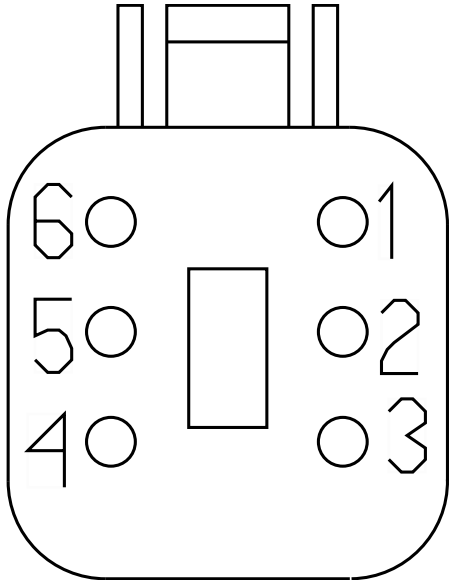

Name	Terminal Part Number	V-Min	Name	Wire Part Number	Wire CSA	Wire Spec	Wire Material description	Wire Color Description	Wire Length	End2 Terminal Part Number	End2 Pin Name	End2 Connect or
2	-	-	N11-GPM	2643689 R1	1.91	14.0	Std. Wall XLPE Primary Cable	WHITE	370.0	-	2	4410A
3	-	-	-	-	-	-	-	-	-	-	-	-
4	-	-	-	-	-	-	-	-	-	-	-	-
6	-	-	N14W	2643760 R1	1.16	16.0	Std. Wall XLPE Primary Cable	RED	370.0	-	6	4410A

Connector Name 4410B

Part Number 3572899C1

Instances A26 - DLB - Remote Power Module (3 RPM n/Switch Pack):Diagram1
A26 - DLB - Remote Power Modules (3 RPM w/ Swtich Packs):Diagram1
B6.7 - DLB - Remote Power Modules (2 RPM n/ Switch Pack):Diagram2
B6.7 - DLB - Remote Power Modules (2 RPM w/ Switch Packs):Diagram2
L9 - DLB - Remote Power Modules (2 RPM n/ Switch Pack):Diagram2
L9 - DLB - Remote Power Modules (2 RPM w/ Switch Packs):Diagram2

Mates MODU-RPM3-2050-01-03A

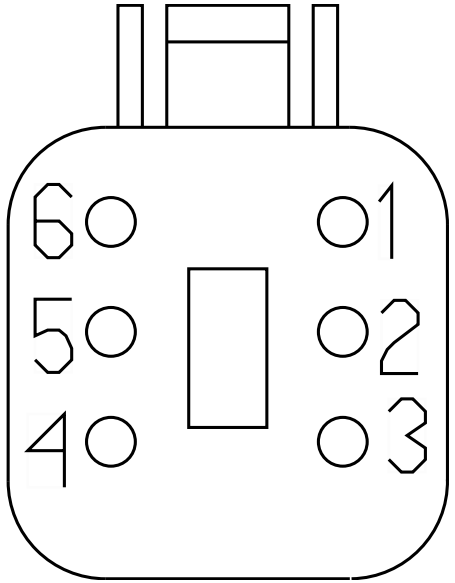

Name	Terminal Part Number	V-Min	Name	Wire Part Number	Wire CSA	Wire Spec	Wire Material description	Wire Color Description	Wire Length	End2 Terminal Part Number	End2 Pin Name	End2 Connect or
2	-	-	N11-GPM	2643689 R1	1.91	14.0	Std. Wall XLPE Primary Cable	WHITE	370.0	-	-	-
2	-	-	N11-GPM	2643689 R1	1.91	14.0	Std. Wall XLPE Primary Cable	WHITE	370.0	-	2	4410A
3	-	-	-	-	-	-	-	-	-	-	-	-
4	-	-	-	-	-	-	-	-	-	-	-	-
6	-	-	N14W	2643760 R1	1.16	16.0	Std. Wall XLPE Primary Cable	RED	370.0	-	-	-
6	-	-	N14W	2643760 R1	1.16	16.0	Std. Wall XLPE Primary Cable	RED	370.0	-	6	4410A

Connector Name 4410B

Part Number 3572899C1

Instances B6.7 - DLB - Remote Power Modules (2 RPM n/ Switch Pack):Diagram1
B6.7 - DLB - Remote Power Modules (2 RPM w/ Switch Packs):Diagram1
L9 - DLB - Remote Power Modules (2 RPM n/ Switch Pack):Diagram1
L9 - DLB - Remote Power Modules (2 RPM w/ Switch Packs):Diagram1

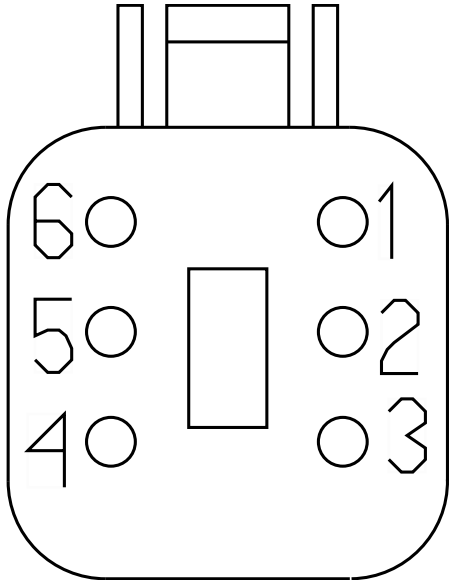

Name	Terminal Part Number	V-Min	Name	Wire Part Number	Wire CSA	Wire Spec	Wire Material description	Wire Color Description	Wire Length	End2 Terminal Part Number	End2 Pin Name	End2 Connect or
2	-	-	N11-GPM	2643689 R1	1.91	14.0	Std. Wall XLPE Primary Cable	WHITE	370.0	-	2	4410A
2	-	-	N11-GPM	2643689 R1	1.91	14.0	Std. Wall XLPE Primary Cable	WHITE	370.0	-	-	-
3	-	-	-	-	-	-	-	-	-	-	-	-
4	-	-	-	-	-	-	-	-	-	-	-	-
6	-	-	N14W	2643760 R1	1.16	16.0	Std. Wall XLPE Primary Cable	RED	370.0	-	-	-

Connector Name	4410B
Part Number	3572899C1
Instances	B6.7 - DLB - Remote Power Modules (2 RPM n/ Switch Pack):Diagram3 B6.7 - DLB - Remote Power Modules (2 RPM w/ Switch Packs):Diagram3 L9 - DLB - Remote Power Modules (2 RPM n/ Switch Pack):Diagram3 L9 - DLB - Remote Power Modules (2 RPM w/ Switch Packs):Diagram3
Mates	MODU-RPM2-2050-01-02A

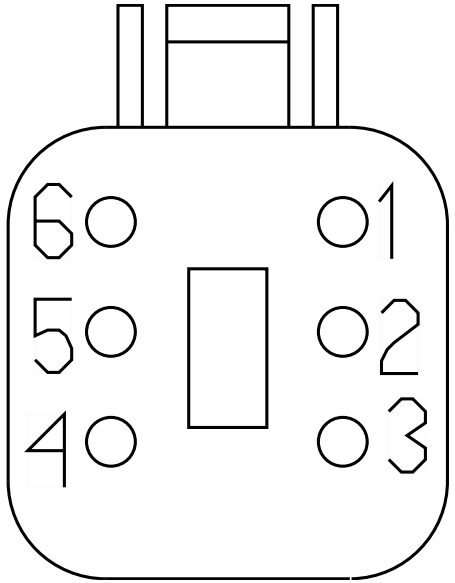

Name	Terminal Part Number	V-Min	Name	Wire Part Number	Wire CSA	Wire Spec	Wire Material description	Wire Color Description	Wire Length	End2 Terminal Part Number	End2 Pin Name	End2 Connect or
2	-	-	N11-GPM	2643689 R1	1.91	14.0	Std. Wall XLPE Primary Cable	WHITE	370.0	-	-	-
3	-	-	-	-	-	-	-	-	-	-	-	-
4	-	-	-	-	-	-	-	-	-	-	-	-
6	-	-	N14W	2643760 R1	1.16	16.0	Std. Wall XLPE Primary Cable	RED	370.0	-	-	-

Connector Name	4410B
Part Number	3572899C1
Instances	B6.7 - DLB - Remote Power Module (3 RPM n/Switch Pack):Diagram1 B6.7 - DLB - Remote Power Modules (3 RPM w/ Swtich Packs):Diagram1 L9 - DLB - Remote Power Module (3 RPM n/Switch Pack):Diagram1 L9 - DLB - Remote Power Modules (3 RPM w/ Swtich Packs):Diagram1
Mates	MODU-RPM2-2050-01-02A

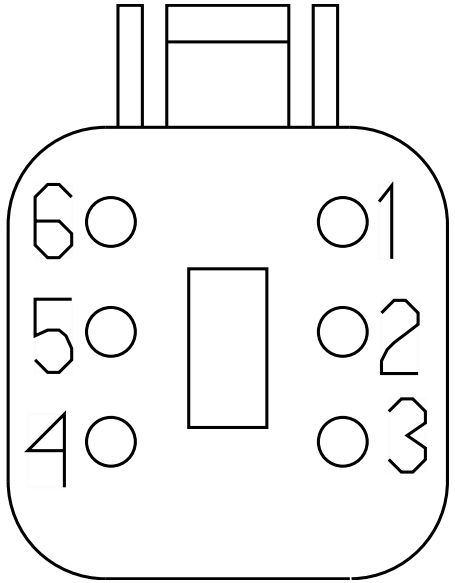

Name	Terminal Part Number	V-Min	Name	Wire Part Number	Wire CSA	Wire Spec	Wire Material description	Wire Color Description	Wire Length	End2 Terminal Part Number	End2 Pin Name	End2 Connect or
2	-	-	N11-GPM	2643689 R1	1.91	14.0	Std. Wall XLPE Primary Cable	WHITE	370.0	-	2	4410A
3	-	-	-	-	-	-	-	-	-	-	-	-
4	-	-	-	-	-	-	-	-	-	-	-	-
6	-	-	N14W	2643760 R1	1.16	16.0	Std. Wall XLPE Primary Cable	RED	370.0	-	6	4410A

Connector Name	4410DF
Part Number	3572900C1
Short Description	RPM DATA LINK & PWR-OUTSIDE CAB
Instances	A26 - DLB - Remote Power Module (3 RPM n/Switch Pack):Diagram1 A26 - DLB - Remote Power Modules (1 RPM n/ Switch Packs):Diagram3 A26 - DLB - Remote Power Modules (1 RPM w/ Switch Packs):Diagram3 A26 - DLB - Remote Power Modules (2 RPM n/ Switch Pack):Diagram3 A26 - DLB - Remote Power Modules (2 RPM w/ Switch Packs)Option2:Diagram3 A26 - DLB - Remote Power Modules (3 RPM w/ Swtich Packs):Diagram1
Mates	4410F

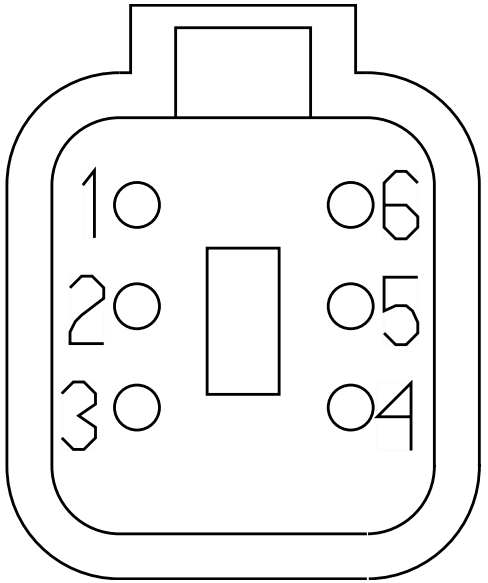

Name	Terminal Part Number	V-Min	Name	Wire Part Number	Wire CSA	Wire Spec	Wire Material description	Wire Color Description	Wire Length	End2 Terminal Part Number	End2 Pin Name	End2 Connect or
2	-	-	10-GR	2643689 R1	1.91	14.0	Std. Wall XLPE Primary Cable	WHITE	925.0	-	2	4410DM
2	-	-	10-GR	2643689 R1	1.91	14.0	Std. Wall XLPE Primary Cable	WHITE	925.0	-	2	4410M
6	-	-	14C	2643760 R1	1.16	16.0	Std. Wall XLPE Primary Cable	RED	925.0	-	6	4410DM
6	-	-	14C	2643760 R1	1.16	16.0	Std. Wall XLPE Primary Cable	RED	925.0	-	6	4410M

Connector Name 4410DM

Part Number 3572899C1

Instances A26 - DLB - Remote Power Module (3 RPM n/Switch Pack):Diagram1
A26 - DLB - Remote Power Modules (1 RPM n/ Switch Packs):Diagram3
A26 - DLB - Remote Power Modules (2 RPM n/ Switch Pack):Diagram3
A26 - DLB - Remote Power Modules (2 RPM w/ Switch Packs)Option2:Diagram3
A26 - DLB - Remote Power Modules (3 RPM w/ Swtich Packs):Diagram1

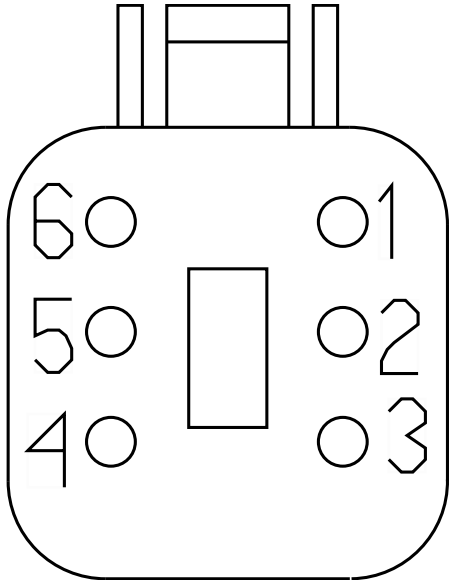

Name	Terminal Part Number	V-Min	Name	Wire Part Number	Wire CSA	Wire Spec	Wire Material description	Wire Color Description	Wire Length	End2 Terminal Part Number	End2 Pin Name	End2 Connect or
2	-	-	10-GR	2643689 R1	1.91	14.0	Std. Wall XLPE Primary Cable	WHITE	925.0	-	2	4410DF
3	-	-	-	-	-	-	-	-	-	-	-	-
4	-	-	-	-	-	-	-	-	-	-	-	-
6	-	-	14C	2643760 R1	1.16	16.0	Std. Wall XLPE Primary Cable	RED	925.0	-	6	4410DF

Connector Name	4410DM
Part Number	3572899C1
Instances	B6.7 - DLB - Remote Power Module (3 RPM n/Switch Pack):Diagram1 B6.7 - DLB - Remote Power Modules (3 RPM w/ Swtich Packs):Diagram1 L9 - DLB - Remote Power Module (3 RPM n/Switch Pack):Diagram1 L9 - DLB - Remote Power Modules (3 RPM w/ Swtich Packs):Diagram1
Mates	MODU-RPM1-2050-01-01A

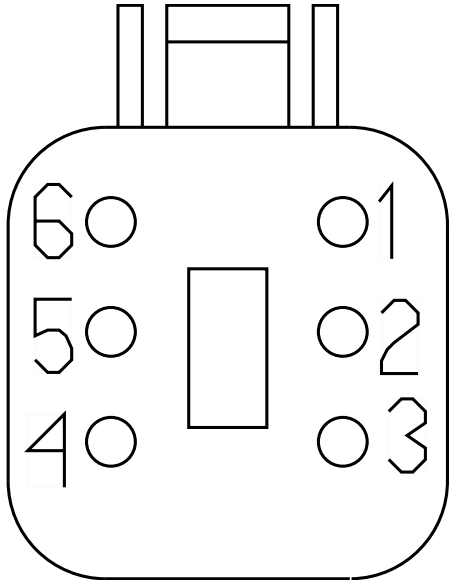

Name	Terminal Part Number	V-Min	Name	Wire Part Number	Wire CSA	Wire Spec	Wire Material description	Wire Color Description	Wire Length	End2 Terminal Part Number	End2 Pin Name	End2 Connect or
2	-	-	10-GR	2643689 R1	1.91	14.0	Std. Wall XLPE Primary Cable	WHITE	925.0	-	2	4411DM
6	-	-	14C	2643760 R1	1.16	16.0	Std. Wall XLPE Primary Cable	RED	925.0	-	6	4411DM

Connector Name 4410D

Part Number 3572899C1

Instances A26 - Body J1939 (250kbps):A26 - Body J1939 (250Kbps)
A26 - CAN Layout:Body Standard J1939 (250Kbps)
L9 - Body J1939 (250kbps):L9 - Body J1939 (250Kbps)
L9 - CAN Layout:Body Standard J1939 (250Kbps)

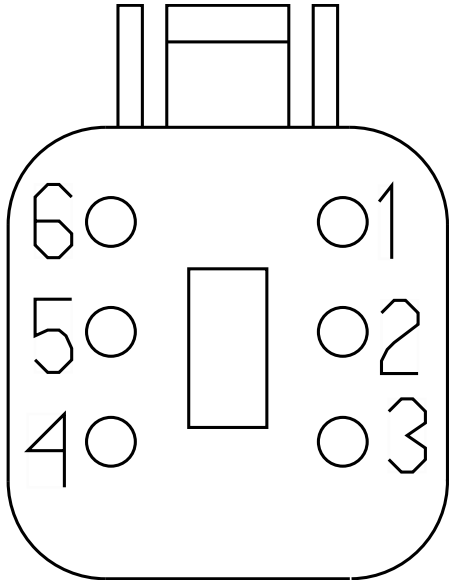

Name	Terminal Part Number	V-Min	Name	Wire Part Number	Wire CSA	Wire Spec	Wire Material description	Wire Color Description	Wire Length	End2 Terminal Part Number	End2 Pin Name	End2 Connect or
3	-	-	WIRE720126	-	0.0	-	-	-	0.0	-	-	-
3	-	-	WIRE722722	-	0.0	-	-	-	0.0	-	53	1701F
4	-	-	WIRE720134	-	0.0	-	-	-	0.0	-	-	-
4	-	-	WIRE722725	-	0.0	-	-	-	0.0	-	52	1701F

Connector Name 4410D

Part Number 3572899C1

Instances B6.7 - DLB - Remote Power Modules (1 RPM n/ Switch Packs):Diagram1
B6.7 - DLB - Remote Power Modules (1 RPM w/ Switch Packs):Diagram1
B6.7 - DLB - Remote Power Modules (2 RPM n/ Switch Pack):Diagram1
B6.7 - DLB - Remote Power Modules (2 RPM n/ Switch Pack):Diagram4
B6.7 - DLB - Remote Power Modules (2 RPM w/ Switch Packs):Diagram1
B6.7 - DLB - Remote Power Modules (2 RPM w/ Switch Packs):Diagram4
L9 - DLB - Remote Power Modules (1 RPM n/ Switch Packs):Diagram1
L9 - DLB - Remote Power Modules (1 RPM w/ Switch Packs):Diagram1
L9 - DLB - Remote Power Modules (2 RPM n/ Switch Pack):Diagram1
L9 - DLB - Remote Power Modules (2 RPM n/ Switch Pack):Diagram4
L9 - DLB - Remote Power Modules (2 RPM w/ Switch Packs):Diagram1
L9 - DLB - Remote Power Modules (2 RPM w/ Switch Packs):Diagram4

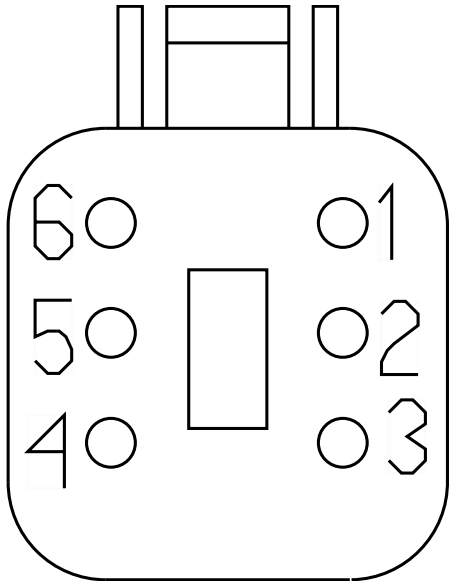

Name	Terminal Part Number	V-Min	Name	Wire Part Number	Wire CSA	Wire Spec	Wire Material description	Wire Color Description	Wire Length	End2 Terminal Part Number	End2 Pin Name	End2 Connector
2	-	-	RA10-GR	2643689 R1	1.91	14.0	Std. Wall XLPE Primary Cable	WHITE	1850.0	-	-	-
3	-	-	-	-	-	-	-	-	-	-	-	-
4	-	-	-	-	-	-	-	-	-	-	-	-
6	-	-	RA20	2643678 R1	1.16	16.0	Std. Wall XLPE Primary Cable	LIGHT GREEN	3860.0	-	51	1701F

Connector Name	4410D
Part Number	3572899C1
Short Description	REMOTE POWER MODULE DATALINK AND LOGIC POWER
Instances	B6.7 - DLB - Remote Power Module (3 RPM n/Switch Pack):Diagram1 B6.7 - DLB - Remote Power Modules (3 RPM w/ Swtich Packs):Diagram1 L9 - DLB - Remote Power Module (3 RPM n/Switch Pack):Diagram1 L9 - DLB - Remote Power Modules (3 RPM w/ Swtich Packs):Diagram1
Mates	4411DM

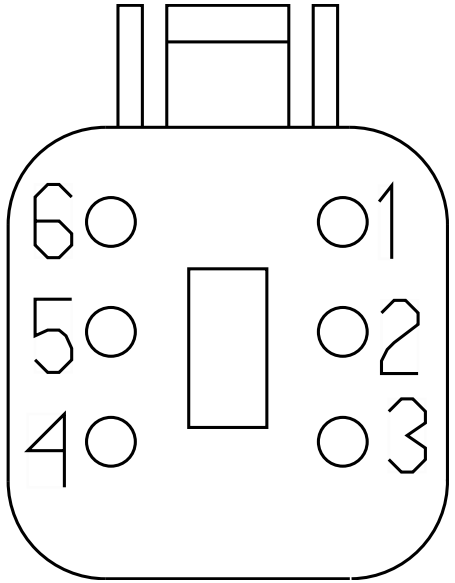

Name	Terminal Part Number	V-Min	Name	Wire Part Number	Wire CSA	Wire Spec	Wire Material description	Wire Color Description	Wire Length	End2 Terminal Part Number	End2 Pin Name	End2 Connect or
2	-	-	RA10-GR	2643689 R1	1.91	14.0	Std. Wall XLPE Primary Cable	WHITE	1850.0	-	-	-
6	-	-	RA20	2643678 R1	1.16	16.0	Std. Wall XLPE Primary Cable	LIGHT GREEN	3860.0	-	51	1701F

Connector Name	4410E
Part Number	3572899C1
Instances	B6.7 - DLB - Remote Power Module (3 RPM n/Switch Pack):Diagram1 B6.7 - DLB - Remote Power Modules (3 RPM w/ Swtich Packs):Diagram1 L9 - DLB - Remote Power Module (3 RPM n/Switch Pack):Diagram1 L9 - DLB - Remote Power Modules (3 RPM w/ Swtich Packs):Diagram1
Mates	MODU-RPM2-2050-01-02A

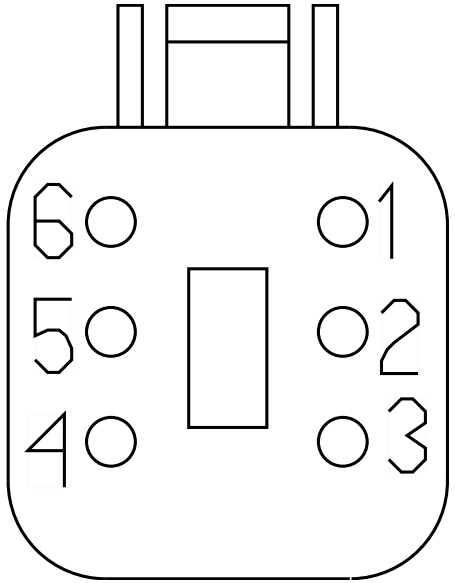

Name	Terminal Part Number	V-Min	Name	Wire Part Number	Wire CSA	Wire Spec	Wire Material description	Wire Color Description	Wire Length	End2 Terminal Part Number	End2 Pin Name	End2 Connect or
2	-	-	RC10-GP	2643689 R1	1.91	14.0	Std. Wall XLPE Primary Cable	WHITE	3095.0	-	2	4410H
6	-	-	RC20A	2643678 R1	1.16	16.0	Std. Wall XLPE Primary Cable	LIGHT GREEN	3095.0	-	6	4410H

Connector Name 4410F

Part Number 3572899C1

Instances A26 - Body J1939 (250kbps):A26 - Body J1939 (250Kbps)
A26 - CAN Layout:Body Standard J1939 (250Kbps)
L9 - Body J1939 (250kbps):L9 - Body J1939 (250Kbps)
L9 - CAN Layout:Body Standard J1939 (250Kbps)

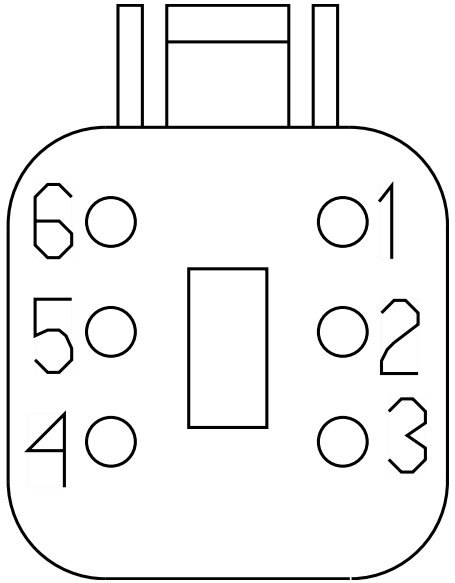

Name	Terminal Part Number	V-Min	Name	Wire Part Number	Wire CSA	Wire Spec	Wire Material description	Wire Color Description	Wire Length	End2 Terminal Part Number	End2 Pin Name	End2 Connect or
3	-	-	WIRE720130	-	0.0	-	-	-	0.0	-	-	-
3	-	-	WIRE722723	-	0.0	-	-	-	0.0	-	53	1701F
4	-	-	WIRE720138	-	0.0	-	-	-	0.0	-	-	-
4	-	-	WIRE722726	-	0.0	-	-	-	0.0	-	52	1701F

Connector Name	4410F
Part Number	3572899C1
Short Description	REMOTE POWER MODULE DATALINK AND LOGIC POWER
Instances	A26 - DLB - Remote Power Module (3 RPM n/Switch Pack):Diagram1 A26 - DLB - Remote Power Modules (1 RPM n/ Switch Packs):Diagram3 A26 - DLB - Remote Power Modules (1 RPM w/ Switch Packs):Diagram3 A26 - DLB - Remote Power Modules (2 RPM n/ Switch Pack):Diagram3 A26 - DLB - Remote Power Modules (2 RPM w/ Switch Packs)Option2:Diagram3 A26 - DLB - Remote Power Modules (3 RPM w/ Swtich Packs):Diagram1
Mates	4410DF

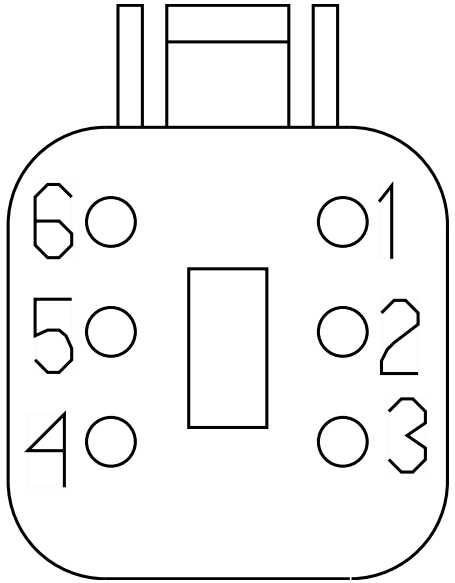

Name	Terminal Part Number	V-Min	Name	Wire Part Number	Wire CSA	Wire Spec	Wire Material description	Wire Color Description	Wire Length	End2 Terminal Part Number	End2 Pin Name	End2 Connect or
2	-	-	ZE10-GR	2643689 R1	1.91	14.0	Std. Wall XLPE Primary Cable	WHITE	3020.0	-	-	-
6	-	-	ZE20	2643678 R1	1.16	16.0	Std. Wall XLPE Primary Cable	LIGHT GREEN	4280.0	-	51	1701F

Connector Name	4410F
Part Number	3572900C1
Short Description	REMOTE POWER MODULE DATA LINK & LOGIC POWER
Instances	A26 - DLB - Remote Power Modules (1 RPM n/ Switch Packs):Diagram2 A26 - DLB - Remote Power Modules (1 RPM w/ Switch Packs):Diagram2 A26 - DLB - Remote Power Modules (2 RPM n/ Switch Pack)Option2:Diagram1 A26 - DLB - Remote Power Modules (2 RPM w/ Switch Packs):Diagram1 A26 - DLB - Remote Power Modules (2 RPM w/ Switch Packs)Option2:Diagram2 B6.7 - DLB - Remote Power Modules (1 RPM n/ Switch Packs):Diagram3 B6.7 - DLB - Remote Power Module (3 RPM n/Switch Pack):Diagram1 B6.7 - DLB - Remote Power Modules (1 RPM w/ Switch Packs):Diagram3 B6.7 - DLB - Remote Power Modules (2 RPM n/ Switch Pack):Diagram3 B6.7 - DLB - Remote Power Modules (2 RPM n/ Switch Pack):Diagram4 B6.7 - DLB - Remote Power Modules (2 RPM w/ Switch Packs):Diagram3 B6.7 - DLB - Remote Power Modules (2 RPM w/ Switch Packs):Diagram4 B6.7 - DLB - Remote Power Modules (3 RPM w/ Swtich Packs):Diagram1 L9 - DLB - Remote Power Module (3 RPM n/Switch Pack):Diagram1 L9 - DLB - Remote Power Modules (1 RPM n/ Switch Packs):Diagram1-Combination3 L9 - DLB - Remote Power Modules (1 RPM w/ Switch Packs):Diagram3 L9 - DLB - Remote Power Modules (2 RPM n/ Switch Pack):Diagram3 L9 - DLB - Remote Power Modules (2 RPM n/ Switch Pack):Diagram4 L9 - DLB - Remote Power Modules (2 RPM w/ Switch Packs):Diagram3 L9 - DLB - Remote Power Modules (2 RPM w/ Switch Packs):Diagram4

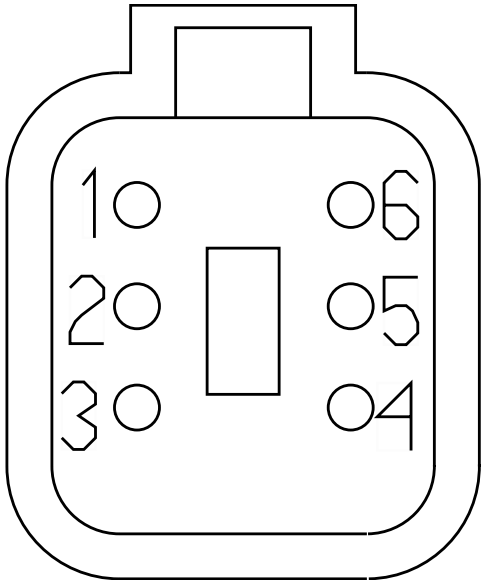

L9 - DLB - Remote Power Modules (3 RPM w/ Swtich Packs):Diagram1

Mates 4410H

Name	Terminal Part Number	V-Min	Name	Wire Part Number	Wire CSA	Wire Spec	Wire Material description	Wire Color Description	Wire Length	End2 Terminal Part Number	End2 Pin Name	End2 Connect or
2	-	-	RJ10-GPM	2643689 R1	1.91	14.0	Std. Wall XLPE Primary Cable	WHITE	2585.0	-	2	4410M
2	-	-	RJ10-GPM	2643689 R1	1.91	14.0	Std. Wall XLPE Primary Cable	WHITE	2585.0	-	6	4410M
6	-	-	RJ14	2643760 R1	1.16	16.0	Std. Wall XLPE Primary Cable	RED	2585.0	-	6	4410M
6	-	-	RJ14	2643760 R1	1.16	16.0	Std. Wall XLPE Primary Cable	RED	2585.0	-	2	4410M

Connector Name	4410F
Part Number	3572900C1
Instances	A26 - DLB - Remote Power Module (3 RPM n/Switch Pack)Option2:Diagram2 A26 - DLB - Remote Power Modules (2 RPM n/ Switch Pack):Diagram2 A26 - DLB - Remote Power Modules (3 RPM w/ Swtich Packs)Option2:Diagram2
Mates	4410L

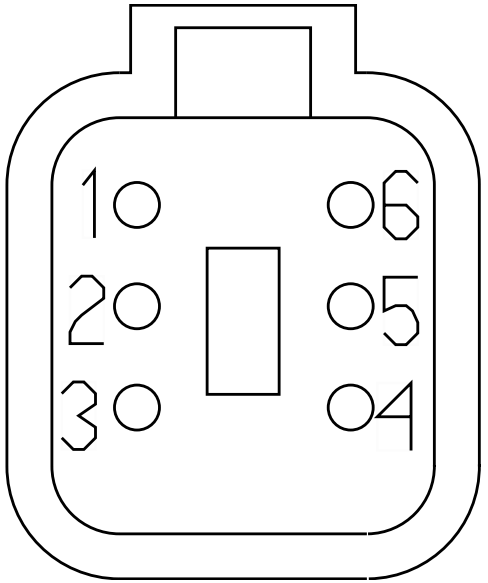

Name	Terminal Part Number	V-Min	Name	Wire Part Number	Wire CSA	Wire Spec	Wire Material description	Wire Color Description	Wire Length	End2 Terminal Part Number	End2 Pin Name	End2 Connect or
2	-	-	RJ10-GPM	2643689 R1	1.91	14.0	Std. Wall XLPE Primary Cable	WHITE	2585.0	-	2	4410M
6	-	-	RJ14	2643760 R1	1.16	16.0	Std. Wall XLPE Primary Cable	RED	2585.0	-	6	4410M

Connector Name 4410G

Part Number 3572899C1

Instances A26 - Body J1939 (250kbps):A26 - Body J1939 (250Kbps)
A26 - CAN Layout:Body Standard J1939 (250Kbps)
B6.7 - Body J1939 (250kbps):B6.7 - Body J1939 (250Kbps)
B6.7 - CAN Layout:Body Standard J1939 (250Kbps)
L9 - Body J1939 (250kbps):L9 - Body J1939 (250Kbps)
L9 - CAN Layout:Body Standard J1939 (250Kbps)

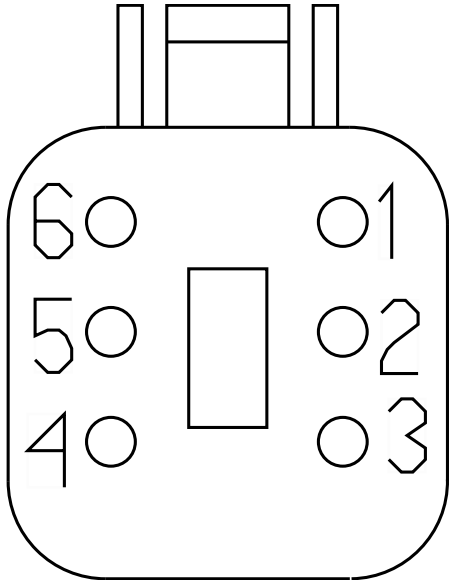

Name	Terminal Part Number	V-Min	Name	Wire Part Number	Wire CSA	Wire Spec	Wire Material description	Wire Color Description	Wire Length	End2 Terminal Part Number	End2 Pin Name	End2 Connect or
3	-	-	WIRE724014	-	0.0	-	-	-	0.0	-	53	1701F
3	-	-	WIRE720128	-	0.0	-	-	-	0.0	-	-	-
4	-	-	WIRE724015	-	0.0	-	-	-	0.0	-	52	1701F
4	-	-	WIRE720136	-	0.0	-	-	-	0.0	-	-	-

Connector Name 4410G

Part Number 3572899C1

Instances A26 - DLB - Remote Power Module (3 RPM n/Switch Pack)Option2:Diagram1
A26 - DLB - Remote Power Module (3 RPM n/Switch Pack)Option2:Diagram2
A26 - DLB - Remote Power Modules (1 RPM n/ Switch Packs):Diagram1
A26 - DLB - Remote Power Modules (2 RPM n/ Switch Pack):Diagram1
A26 - DLB - Remote Power Modules (2 RPM n/ Switch Pack):Diagram2
A26 - DLB - Remote Power Modules (2 RPM w/ Switch Packs)Option2:Diagram1
A26 - DLB - Remote Power Modules (2 RPM w/ Switch Packs)Option2:Diagram2
A26 - DLB - Remote Power Modules (3 RPM w/ Swtich Packs)Option2:Diagram1
A26 - DLB - Remote Power Modules (3 RPM w/ Swtich Packs)Option2:Diagram2

Mates MODU-RPM1-2050-01-01A

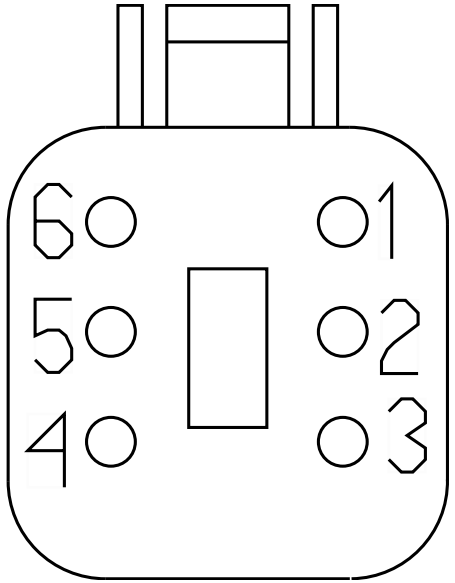

Name	Terminal Part Number	V-Min	Name	Wire Part Number	Wire CSA	Wire Spec	Wire Material description	Wire Color Description	Wire Length	End2 Terminal Part Number	End2 Pin Name	End2 Connector
2	-	-	RB10-GR	2643689 R1	1.91	14.0	Std. Wall XLPE Primary Cable	WHITE	1850.0	-	-	-
3	-	-	-	-	-	-	-	-	-	-	-	-
4	-	-	-	-	-	-	-	-	-	-	-	-
6	-	-	RB20	2643678 R1	1.16	16.0	Std. Wall XLPE Primary Cable	LIGHT GREEN	3110.0	-	51	1701F

Connector Name 4410H

Part Number 3572899C1

Instances A26 - Body J1939 (250kbps):A26 - Body J1939 (250Kbps)
A26 - CAN Layout:Body Standard J1939 (250Kbps)
L9 - Body J1939 (250kbps):L9 - Body J1939 (250Kbps)
L9 - CAN Layout:Body Standard J1939 (250Kbps)
L9 - Transmission Power Take Off (Auto Trans with Lectradrive):Diagram1
L9 - Transmission Power Take Off (Lectrashift PTO with Manual Trans):Diagram1
L9 - Transmission Power Take Off (Single PTO W/ RPM and Auto Trans):Diagram1
L9 - Transmission Power Take Off (Single PTO W/ RPM and Manual Trans):Diagram1

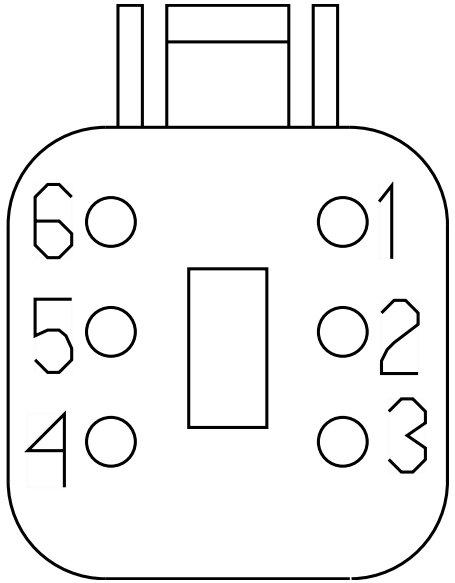

Name	Terminal Part Number	V-Min	Name	Wire Part Number	Wire CSA	Wire Spec	Wire Material description	Wire Color Description	Wire Length	End2 Terminal Part Number	End2 Pin Name	End2 Connect or
3	-	-	-	-	-	-	-	-	-	-	-	-
3	-	-	WIRE720124	-	0.0	-	-	-	0.0	-	-	-
3	-	-	WIRE722721	-	0.0	-	-	-	0.0	-	53	1701F
4	-	-	-	-	-	-	-	-	-	-	-	-
4	-	-	WIRE720132	-	0.0	-	-	-	0.0	-	-	-
4	-	-	WIRE722724	-	0.0	-	-	-	0.0	-	52	1701F

Connector Name	4410H
Part Number	3572899C1
Short Description	REMOTE POWER MODULE DATALINK AND LOGIC POWER
Instances	A26 - DLB - Remote Power Modules (1 RPM n/ Switch Packs):Diagram2 A26 - DLB - Remote Power Modules (1 RPM w/ Switch Packs):Diagram2 A26 - DLB - Remote Power Modules (2 RPM n/ Switch Pack)Option2:Diagram1 A26 - DLB - Remote Power Modules (2 RPM w/ Switch Packs):Diagram1 A26 - DLB - Remote Power Modules (2 RPM w/ Switch Packs)Option2:Diagram2 B6.7 - DLB - Remote Power Modules (1 RPM n/ Switch Packs):Diagram3 B6.7 - DLB - Remote Power Module (3 RPM n/Switch Pack):Diagram1 B6.7 - DLB - Remote Power Modules (1 RPM w/ Switch Packs):Diagram3 B6.7 - DLB - Remote Power Modules (2 RPM n/ Switch Pack):Diagram3 B6.7 - DLB - Remote Power Modules (2 RPM n/ Switch Pack):Diagram4 B6.7 - DLB - Remote Power Modules (2 RPM w/ Switch Packs):Diagram3 B6.7 - DLB - Remote Power Modules (2 RPM w/ Switch Packs):Diagram4 B6.7 - DLB - Remote Power Modules (3 RPM w/ Swtich Packs):Diagram1 L9 - DLB - Remote Power Module (3 RPM n/Switch Pack):Diagram1 L9 - DLB - Remote Power Modules (1 RPM n/ Switch Packs):Diagram1-Combination3 L9 - DLB - Remote Power Modules (1 RPM w/ Switch Packs):Diagram3 L9 - DLB - Remote Power Modules (2 RPM n/ Switch Pack):Diagram3 L9 - DLB - Remote Power Modules (2 RPM n/ Switch Pack):Diagram4 L9 - DLB - Remote Power Modules (2 RPM w/ Switch Packs):Diagram3 L9 - DLB - Remote Power Modules (2 RPM w/ Switch Packs):Diagram4

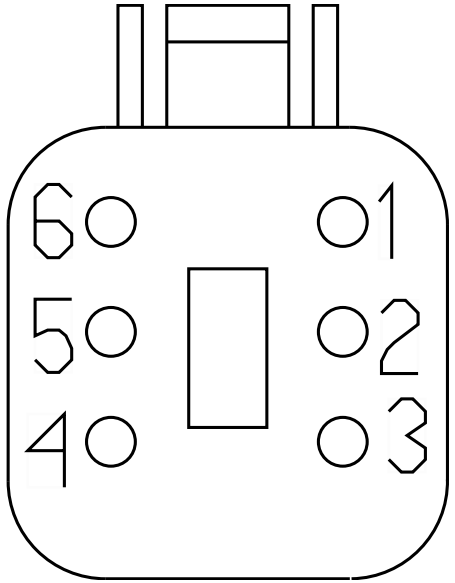

L9 - DLB - Remote Power Modules (3 RPM w/ Swtich Packs):Diagram1

Mates 4410F

Name	Terminal Part Number	V-Min	Name	Wire Part Number	Wire CSA	Wire Spec	Wire Material description	Wire Color Description	Wire Length	End2 Terminal Part Number	End2 Pin Name	End2 Connect or
2	-	-	RC10-GP	2643689 R1	1.91	14.0	Std. Wall XLPE Primary Cable	WHITE	3095.0	-	2	4410A
2	-	-	NT10-GS	2643689 R1	1.91	14.0	Std. Wall XLPE Primary Cable	WHITE	3145.0	-	-	-
2	-	-	RC10-GP	2643689 R1	1.91	14.0	Std. Wall XLPE Primary Cable	WHITE	3095.0	-	2	4410E
2	-	-	RD10-GP	2643689 R1	1.91	14.0	Std. Wall XLPE Primary Cable	WHITE	3645.0	-	2	4410A
6	-	-	NT20	2643678 R1	1.16	16.0	Std. Wall XLPE Primary Cable	LIGHT GREEN	4405.0	-	51	1701F
6	-	-	RC20A	2643678 R1	1.16	16.0	Std. Wall XLPE Primary Cable	LIGHT GREEN	3095.0	-	6	4410A
6	-	-	RC20A	2643678 R1	1.16	16.0	Std. Wall XLPE Primary Cable	LIGHT GREEN	3095.0	-	6	4410E
6	-	-	RD20A	2643678 R1	1.16	16.0	Std. Wall XLPE Primary Cable	LIGHT GREEN	3645.0	-	6	4410A

Connector Name 4410L

Part Number 3572899C1

Instances A26 - Body J1939 (250kbps):A26 - Body J1939 (250Kbps)
A26 - CAN Layout:Body Standard J1939 (250Kbps)
B6.7 - Body J1939 (250kbps):B6.7 - Body J1939 (250Kbps)
B6.7 - CAN Layout:Body Standard J1939 (250Kbps)
L9 - Body J1939 (250kbps):L9 - Body J1939 (250Kbps)
L9 - CAN Layout:Body Standard J1939 (250Kbps)

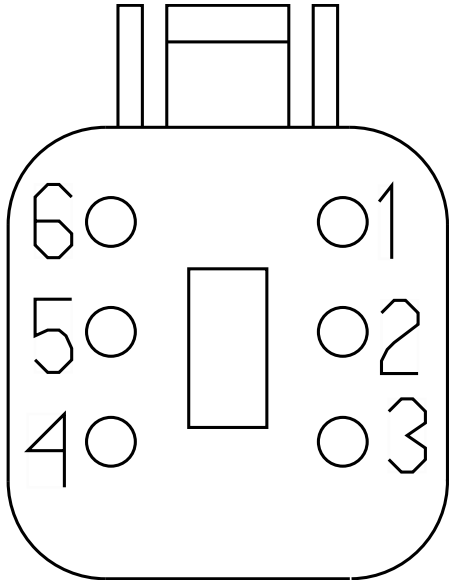

Name	Terminal Part Number	V-Min	Name	Wire Part Number	Wire CSA	Wire Spec	Wire Material description	Wire Color Description	Wire Length	End2 Terminal Part Number	End2 Pin Name	End2 Connect or
3	-	-	WIRE724013	-	0.0	-	-	-	0.0	-	53	1701F
3	-	-	WIRE720125	-	0.0	-	-	-	0.0	-	-	-
4	-	-	WIRE724016	-	0.0	-	-	-	0.0	-	52	1701F
4	-	-	WIRE720133	-	0.0	-	-	-	0.0	-	-	-

Connector Name	4410L
Part Number	3572899C1
Instances	A26 - DLB - Remote Power Module (3 RPM n/Switch Pack)Option2:Diagram2 A26 - DLB - Remote Power Modules (2 RPM n/ Switch Pack):Diagram2 A26 - DLB - Remote Power Modules (3 RPM w/ Swtich Packs)Option2:Diagram2
Mates	4410F

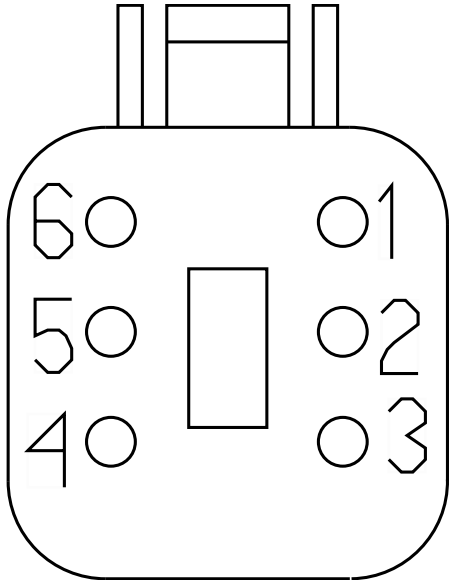

Name	Terminal Part Number	V-Min	Name	Wire Part Number	Wire CSA	Wire Spec	Wire Material description	Wire Color Description	Wire Length	End2 Terminal Part Number	End2 Pin Name	End2 Connect or
2	-	-	RD10-GP	2643689 R1	1.91	14.0	Std. Wall XLPE Primary Cable	WHITE	3645.0	-	2	4410A
6	-	-	RD20A	2643678 R1	1.16	16.0	Std. Wall XLPE Primary Cable	LIGHT GREEN	3645.0	-	6	4410A

Connector Name 4410M

Part Number 3572899C1

Instances A26 - DLB - Remote Power Module (3 RPM n/Switch Pack)Option2:Diagram2
A26 - DLB - Remote Power Modules (1 RPM n/ Switch Packs):Diagram2
A26 - DLB - Remote Power Modules (1 RPM w/ Switch Packs):Diagram1
A26 - DLB - Remote Power Modules (1 RPM w/ Switch Packs):Diagram2
A26 - DLB - Remote Power Modules (1 RPM w/ Switch Packs):Diagram3
A26 - DLB - Remote Power Modules (2 RPM n/ Switch Pack):Diagram2
A26 - DLB - Remote Power Modules (2 RPM n/ Switch Pack)Option2:Diagram1
A26 - DLB - Remote Power Modules (2 RPM w/ Switch Packs):Diagram1
A26 - DLB - Remote Power Modules (2 RPM w/ Switch Packs)Option2:Diagram2
A26 - DLB - Remote Power Modules (3 RPM w/ Swtich Packs)Option2:Diagram2

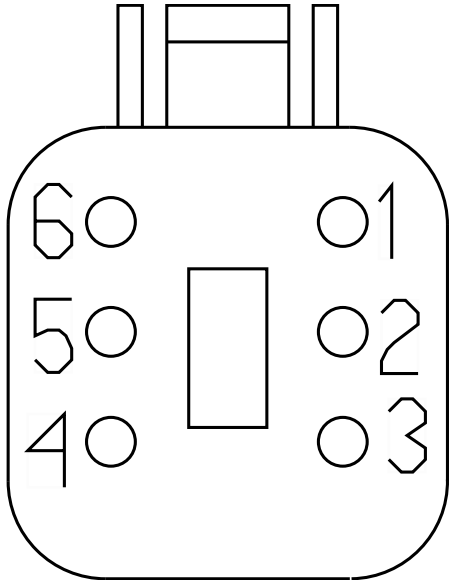

Name	Terminal Part Number	V-Min	Name	Wire Part Number	Wire CSA	Wire Spec	Wire Material description	Wire Color Description	Wire Length	End2 Terminal Part Number	End2 Pin Name	End2 Connector
2	-	-	RJ14	2643760 R1	1.16	16.0	Std. Wall XLPE Primary Cable	RED	2585.0	-	6	4410F
2	-	-	RJ10-GPM	2643689 R1	1.91	14.0	Std. Wall XLPE Primary Cable	WHITE	2585.0	-	2	4410F
2	-	-	RB10-GR	2643689 R1	1.91	14.0	Std. Wall XLPE Primary Cable	WHITE	1850.0	-	-	-

Name	Terminal Part Number	V-Min	Name	Wire Part Number	Wire CSA	Wire Spec	Wire Material description	Wire Color Description	Wire Length	End2 Terminal Part Number	End2 Pin Name	End2 Connector
2	-	-	10-GR	2643689 R1	1.91	14.0	Std. Wall XLPE Primary Cable	WHITE	925.0	-	2	4410DF
3	-	-	-	-	-	-	-	-	-	-	-	-
4	-	-	-	-	-	-	-	-	-	-	-	-
6	-	-	RJ10-GPM	2643689 R1	1.91	14.0	Std. Wall XLPE Primary Cable	WHITE	2585.0	-	2	4410F
6	-	-	RJ14	2643760 R1	1.16	16.0	Std. Wall XLPE Primary Cable	RED	2585.0	-	6	4410F
6	-	-	14C	2643760 R1	1.16	16.0	Std. Wall XLPE Primary Cable	RED	925.0	-	6	4410DF
6	-	-	RB20	2643678 R1	1.16	16.0	Std. Wall XLPE Primary Cable	LIGHT GREEN	3110.0	-	51	1701F

Connector Name	4410M
Part Number	3572899C1
Instances	B6.7 - DLB - Remote Power Modules (1 RPM n/ Switch Packs):Diagram3 B6.7 - DLB - Remote Power Module (3 RPM n/Switch Pack):Diagram1 B6.7 - DLB - Remote Power Modules (1 RPM w/ Switch Packs):Diagram3 B6.7 - DLB - Remote Power Modules (2 RPM n/ Switch Pack):Diagram3 B6.7 - DLB - Remote Power Modules (2 RPM n/ Switch Pack):Diagram4 B6.7 - DLB - Remote Power Modules (2 RPM w/ Switch Packs):Diagram3 B6.7 - DLB - Remote Power Modules (2 RPM w/ Switch Packs):Diagram4 B6.7 - DLB - Remote Power Modules (3 RPM w/ Swtich Packs):Diagram1 L9 - DLB - Remote Power Module (3 RPM n/Switch Pack):Diagram1 L9 - DLB - Remote Power Modules (1 RPM n/ Switch Packs):Diagram1-Combination3 L9 - DLB - Remote Power Modules (1 RPM w/ Switch Packs):Diagram3 L9 - DLB - Remote Power Modules (2 RPM n/ Switch Pack):Diagram3 L9 - DLB - Remote Power Modules (2 RPM n/ Switch Pack):Diagram4 L9 - DLB - Remote Power Modules (2 RPM w/ Switch Packs):Diagram3 L9 - DLB - Remote Power Modules (2 RPM w/ Switch Packs):Diagram4 L9 - DLB - Remote Power Modules (3 RPM w/ Swtich Packs):Diagram1

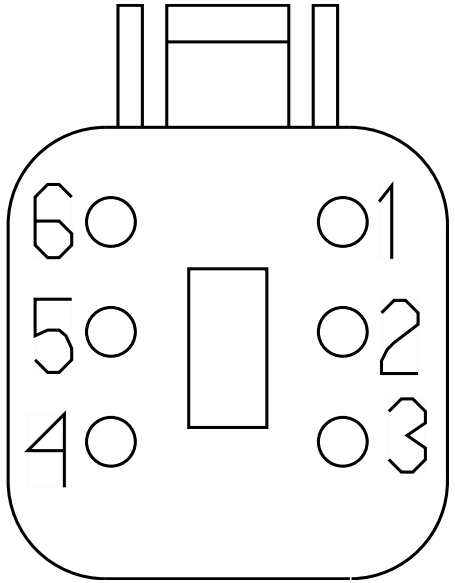

Name	Terminal Part Number	V-Min	Name	Wire Part Number	Wire CSA	Wire Spec	Wire Material description	Wire Color Description	Wire Length	End2 Terminal Part Number	End2 Pin Name	End2 Connect or
2	-	-	RJ10-GPM	2643689 R1	1.91	14.0	Std. Wall XLPE Primary Cable	WHITE	2585.0	-	2	4410F
3	-	-	-	-	-	-	-	-	-	-	-	-
4	-	-	-	-	-	-	-	-	-	-	-	-
6	-	-	RJ14	2643760 R1	1.16	16.0	Std. Wall XLPE Primary Cable	RED	2585.0	-	6	4410F

Connector Name	4411DM
Part Number	3572899C1
Short Description	RPM DATA LINK & PWR-BACK OF CAB
Instances	B6.7 - DLB - Remote Power Module (3 RPM n/Switch Pack):Diagram1 B6.7 - DLB - Remote Power Modules (3 RPM w/ Swtich Packs):Diagram1 L9 - DLB - Remote Power Module (3 RPM n/Switch Pack):Diagram1 L9 - DLB - Remote Power Modules (3 RPM w/ Swtich Packs):Diagram1
Mates	4410D

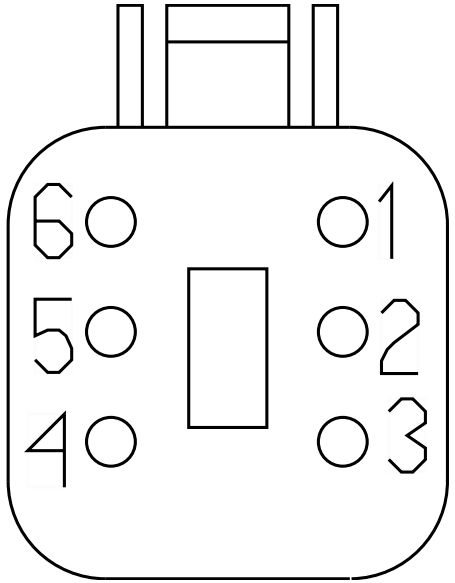

Name	Terminal Part Number	V-Min	Name	Wire Part Number	Wire CSA	Wire Spec	Wire Material description	Wire Color Description	Wire Length	End2 Terminal Part Number	End2 Pin Name	End2 Connect or
2	-	-	10-GR	2643689 R1	1.91	14.0	Std. Wall XLPE Primary Cable	WHITE	925.0	-	2	4410DM
6	-	-	14C	2643760 R1	1.16	16.0	Std. Wall XLPE Primary Cable	RED	925.0	-	6	4410DM

Connector Name	4411F
Part Number	3517759C1
Short Description	RPM 1 POSITIVE FEED-OUTSIDE CAB
Instances	A26 - DLB - Remote Power Module (3 RPM n/Switch Pack):Diagram1 A26 - DLB - Remote Power Modules (1 RPM n/ Switch Packs):Diagram3 A26 - DLB - Remote Power Modules (1 RPM w/ Switch Packs):Diagram3 A26 - DLB - Remote Power Modules (2 RPM n/ Switch Pack):Diagram3 A26 - DLB - Remote Power Modules (2 RPM w/ Switch Packs)Option2:Diagram3 A26 - DLB - Remote Power Modules (3 RPM w/ Swtich Packs):Diagram1 L9 - DLB - Remote Power Module (3 RPM n/Switch Pack):Diagram1
Mates	4411M5

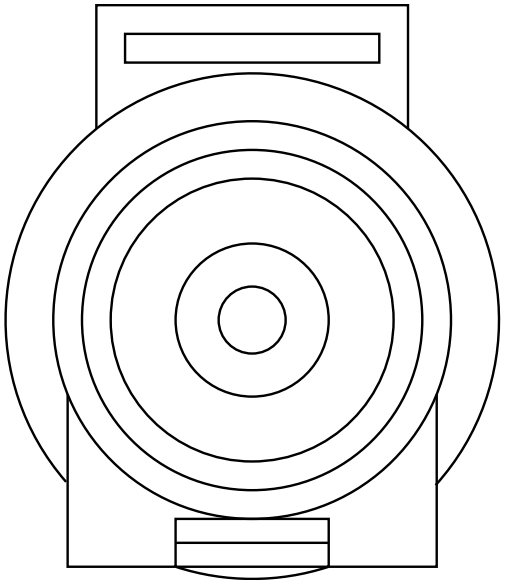

Name	Terminal Part Number	V-Min	Name	Wire Part Number	Wire CSA	Wire Spec	Wire Material description	Wire Color Description	Wire Length	End2 Terminal Part Number	End2 Pin Name	End2 Connect or
A	-	-	14	2645953 R1	18.94	4.0	SGX NFLEX 125	RED	3700.0	-	A	4411M
A	-	-	14	2645953 R1	18.94	4.0	SGX NFLEX 125	RED	3700.0	-	A	4411M_1

Connector Name	4411F
Part Number	3517759C1
Short Description	REMOTE POWER MODULE POSITIVE FEED
Instances	A26 - DLB - Remote Power Module (3 RPM n/Switch Pack)Option2:Diagram2 A26 - DLB - Remote Power Modules (1 RPM n/ Switch Packs):Diagram2 A26 - DLB - Remote Power Modules (1 RPM w/ Switch Packs):Diagram2 A26 - DLB - Remote Power Modules (2 RPM n/ Switch Pack):Diagram2 A26 - DLB - Remote Power Modules (2 RPM n/ Switch Pack)Option2:Diagram1 A26 - DLB - Remote Power Modules (2 RPM w/ Switch Packs):Diagram1 A26 - DLB - Remote Power Modules (2 RPM w/ Switch Packs)Option2:Diagram2 A26 - DLB - Remote Power Modules (3 RPM w/ Swtich Packs)Option2:Diagram2 B6.7 - DLB - Remote Power Modules (1 RPM n/ Switch Packs):Diagram3 B6.7 - DLB - Remote Power Module (3 RPM n/Switch Pack):Diagram1 B6.7 - DLB - Remote Power Modules (1 RPM w/ Switch Packs):Diagram3 B6.7 - DLB - Remote Power Modules (2 RPM n/ Switch Pack):Diagram3 B6.7 - DLB - Remote Power Modules (2 RPM n/ Switch Pack):Diagram4 B6.7 - DLB - Remote Power Modules (2 RPM w/ Switch Packs):Diagram3 B6.7 - DLB - Remote Power Modules (2 RPM w/ Switch Packs):Diagram4 B6.7 - DLB - Remote Power Modules (3 RPM w/ Swtich Packs):Diagram1 L9 - DLB - Remote Power Module (3 RPM n/Switch Pack):Diagram1 L9 - DLB - Remote Power Modules (1 RPM n/ Switch Packs):Diagram1-Combination3 L9 - DLB - Remote Power Modules (1 RPM w/ Switch Packs):Diagram3 L9 - DLB - Remote Power Modules (2 RPM n/ Switch Pack):Diagram3

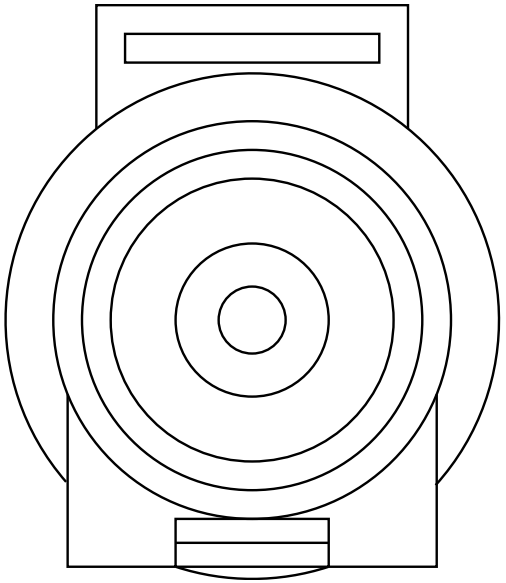

L9 - DLB - Remote Power Modules (2 RPM n/ Switch Pack):Diagram4
L9 - DLB - Remote Power Modules (2 RPM w/ Switch Packs):Diagram3
L9 - DLB - Remote Power Modules (2 RPM w/ Switch Packs):Diagram4
L9 - DLB - Remote Power Modules (3 RPM w/ Swtich Packs):Diagram1

Mates 4411

Name	Terminal Part Number	V-Min	Name	Wire Part Number	Wire CSA	Wire Spec	Wire Material description	Wire Color Description	Wire Length	End2 Terminal Part Number	End2 Pin Name	End2 Connect or
A	-	-	RH14	2644026 R1	18.94	4.0	Std. Wall XLPE Battery Cable	RED	2435.0	-	A	4411M
A	-	-	14	2645953 R1	18.94	4.0	SGX NFLEX 125	RED	3700.0	-	A	4411M

Connector Name	4411F
Part Number	3517759C1
Instances	B6.7 - DLB - Remote Power Module (3 RPM n/Switch Pack):Diagram1
Mates	4411M1

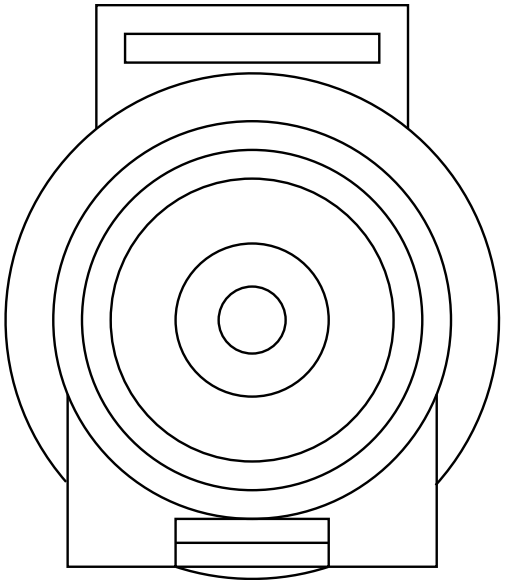

Name	Terminal Part Number	V-Min	Name	Wire Part Number	Wire CSA	Wire Spec	Wire Material description	Wire Color Description	Wire Length	End2 Terminal Part Number	End2 Pin Name	End2 Connect or
A	-	-	14	2645953 R1	18.94	4.0	SGX NFLEX 125	RED	3700.0	-	A	4411M

Connector Name	4411M1
Part Number	3517760C1
Instances	A26 - DLB - Remote Power Module (3 RPM n/Switch Pack)Option2:Diagram1 A26 - DLB - Remote Power Module (3 RPM n/Switch Pack)Option2:Diagram2 A26 - DLB - Remote Power Modules (1 RPM n/ Switch Packs):Diagram1 A26 - DLB - Remote Power Modules (2 RPM n/ Switch Pack):Diagram1 A26 - DLB - Remote Power Modules (2 RPM n/ Switch Pack):Diagram2 A26 - DLB - Remote Power Modules (3 RPM w/ Swtich Packs)Option2:Diagram1 A26 - DLB - Remote Power Modules (3 RPM w/ Swtich Packs)Option2:Diagram2
Mates	MODU-RPM1-2050-01-01A

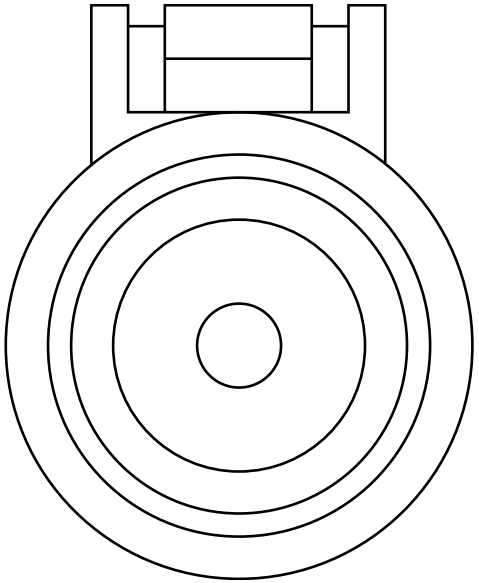

Name	Terminal Part Number	V-Min	Name	Wire Part Number	Wire CSA	Wire Spec	Wire Material description	Wire Color Description	Wire Length	End2 Terminal Part Number	End2 Pin Name	End2 Connect or
A	-	-	PB14CY	2644026 R1	18.94	4.0	Std. Wall XLPE Battery Cable	RED	2525.0	-	A	4413F1

Connector Name 4411M1

Part Number 3517760C1

Instances B6.7 - DLB - Remote Power Modules (1 RPM n/ Switch Packs):Diagram1
B6.7 - DLB - Remote Power Modules (1 RPM n/ Switch Packs):Diagram2
B6.7 - DLB - Remote Power Modules (1 RPM w/ Switch Packs):Diagram1
B6.7 - DLB - Remote Power Modules (2 RPM n/ Switch Pack):Diagram1
B6.7 - DLB - Remote Power Modules (2 RPM n/ Switch Pack):Diagram4
B6.7 - DLB - Remote Power Modules (2 RPM w/ Switch Packs):Diagram1
B6.7 - DLB - Remote Power Modules (2 RPM w/ Switch Packs):Diagram4
L9 - DLB - Remote Power Modules (1 RPM n/ Switch Packs):Diagram1
L9 - DLB - Remote Power Modules (1 RPM n/ Switch Packs):Diagram2
L9 - DLB - Remote Power Modules (1 RPM w/ Switch Packs):Diagram1
L9 - DLB - Remote Power Modules (2 RPM n/ Switch Pack):Diagram1
L9 - DLB - Remote Power Modules (2 RPM n/ Switch Pack):Diagram4
L9 - DLB - Remote Power Modules (2 RPM w/ Switch Packs):Diagram1
L9 - DLB - Remote Power Modules (2 RPM w/ Switch Packs):Diagram4

Mates MODU-RPM1-2050-01-01A

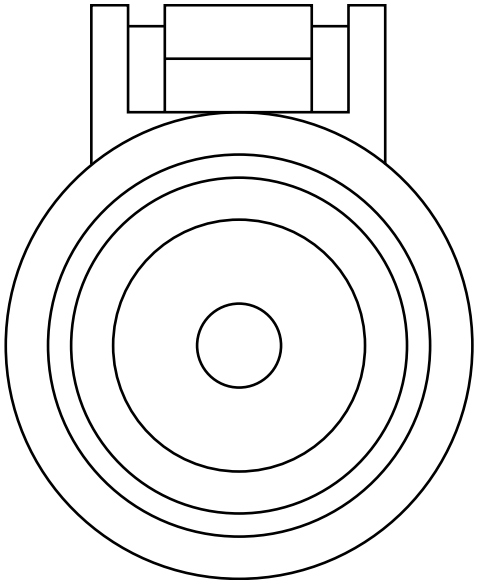

Name	Terminal Part Number	V-Min	Name	Wire Part Number	Wire CSA	Wire Spec	Wire Material description	Wire Color Description	Wire Length	End2 Terminal Part Number	End2 Pin Name	End2 Connect or
A	-	-	PB14CY	2644026 R1	18.94	4.0	Std. Wall XLPE Battery Cable	RED	2525.0	-	A	4413F

Name	Terminal Part Number	V-Min	Name	Wire Part Number	Wire CSA	Wire Spec	Wire Material description	Wire Color Description	Wire Length	End2 Terminal Part Number	End2 Pin Name	End2 Connect or
A	-	-	ZB14CZ	2644026 R1	18.94	4.0	Std. Wall XLPE Battery Cable	RED	3695.0	-	A	4413F
A	-	-	ZB14CZ	2644026 R1	18.94	4.0	Std. Wall XLPE Battery Cable	RED	3695.0	-	A	4413F1
A	-	-	PB14CY	2644026 R1	18.94	4.0	Std. Wall XLPE Battery Cable	RED	2525.0	-	A	4413F1

Connector Name	4411M1
Part Number	3517760C1
Short Description	REMOTE POWER MODULE POSITIVE FEED
Instances	B6.7 - DLB - Remote Power Module (3 RPM n/Switch Pack):Diagram1
Mates	4411F

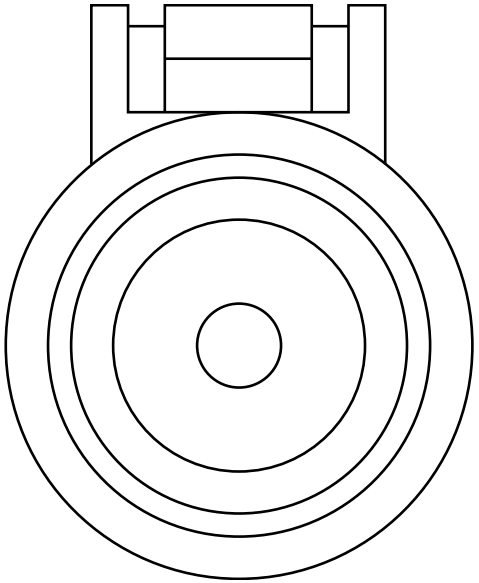

Name	Terminal Part Number	V-Min	Name	Wire Part Number	Wire CSA	Wire Spec	Wire Material description	Wire Color Description	Wire Length	End2 Terminal Part Number	End2 Pin Name	End2 Connect or
A	-	-	PB14CY	2644026 R1	18.94	4.0	Std. Wall XLPE Battery Cable	RED	2525.0	-	A	4413F1

Connector Name	4411M2
Part Number	3517760C1
Instances	A26 - DLB - Remote Power Module (3 RPM n/Switch Pack)Option2:Diagram1 A26 - DLB - Remote Power Modules (3 RPM w/ Swtich Packs)Option2:Diagram1
Mates	MODU-RPM3-2050-01-03A

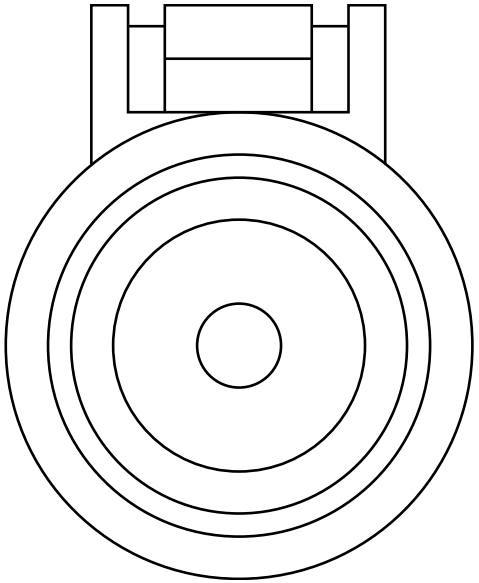

Name	Terminal Part Number	V-Min	Name	Wire Part Number	Wire CSA	Wire Spec	Wire Material description	Wire Color Description	Wire Length	End2 Terminal Part Number	End2 Pin Name	End2 Connect or
A	-	-	PE14E	2645255 R1	18.94	4.0	SGX FLEX 125C	RED	2525.0	-	A	4413F2

Connector Name 4411M2

Part Number 3517760C1

Instances B6.7 - DLB - Remote Power Modules (2 RPM n/ Switch Pack):Diagram1
B6.7 - DLB - Remote Power Modules (2 RPM w/ Switch Packs):Diagram1
L9 - DLB - Remote Power Modules (2 RPM n/ Switch Pack):Diagram1
L9 - DLB - Remote Power Modules (2 RPM w/ Switch Packs):Diagram1

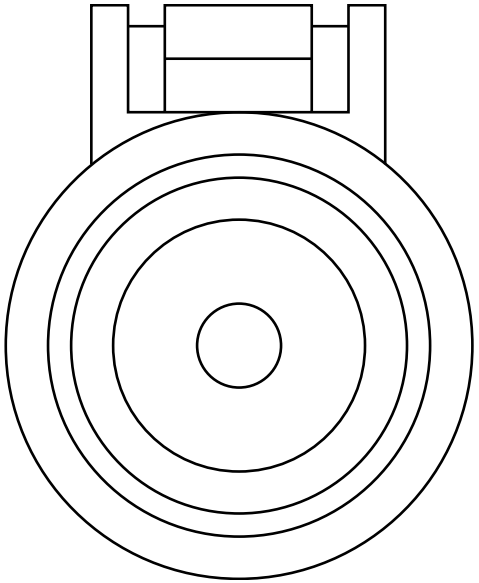

Name	Terminal Part Number	V-Min	Name	Wire Part Number	Wire CSA	Wire Spec	Wire Material description	Wire Color Description	Wire Length	End2 Terminal Part Number	End2 Pin Name	End2 Connect or
A	-	-	PC14H	2644026 R1	18.94	4.0	Std. Wall XLPE Battery Cable	RED	2525.0	-	A	4412F
A	-	-	PC14H	2644026 R1	18.94	4.0	Std. Wall XLPE Battery Cable	RED	2525.0	-	A	4413F2

Connector Name	4411M2
Part Number	3517760C1
Short Description	REMOTE POWER MODULE POSITIVE FEED
Instances	B6.7 - DLB - Remote Power Module (3 RPM n/Switch Pack):Diagram1 B6.7 - DLB - Remote Power Modules (3 RPM w/ Swtich Packs):Diagram1 L9 - DLB - Remote Power Module (3 RPM n/Switch Pack):Diagram1 L9 - DLB - Remote Power Modules (3 RPM w/ Swtich Packs):Diagram1
Mates	4412F

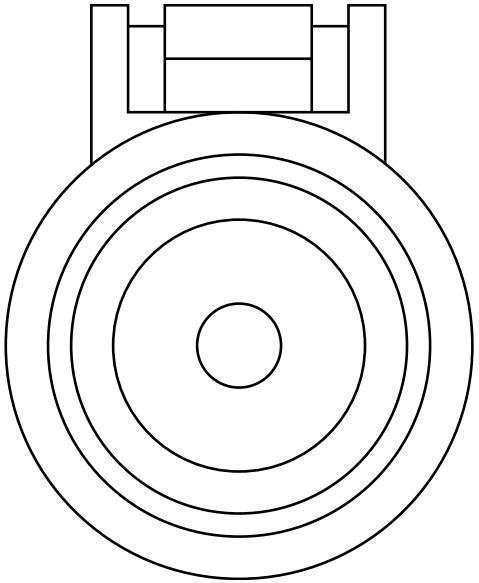

Name	Terminal Part Number	V-Min	Name	Wire Part Number	Wire CSA	Wire Spec	Wire Material description	Wire Color Description	Wire Length	End2 Terminal Part Number	End2 Pin Name	End2 Connect or
A	-	-	PC14H	2644026 R1	18.94	4.0	Std. Wall XLPE Battery Cable	RED	2525.0	-	A	4413F2

Connector Name	4411M4
Part Number	3517760C1
Short Description	REMOTE POWER MODULE POSITIVE FEED
Instances	A26 - DLB - Remote Power Module (3 RPM n/Switch Pack):Diagram1 A26 - DLB - Remote Power Modules (2 RPM n/ Switch Pack):Diagram3 A26 - DLB - Remote Power Modules (2 RPM w/ Switch Packs)Option2:Diagram3 A26 - DLB - Remote Power Modules (3 RPM w/ Swtich Packs):Diagram1
Mates	4412F

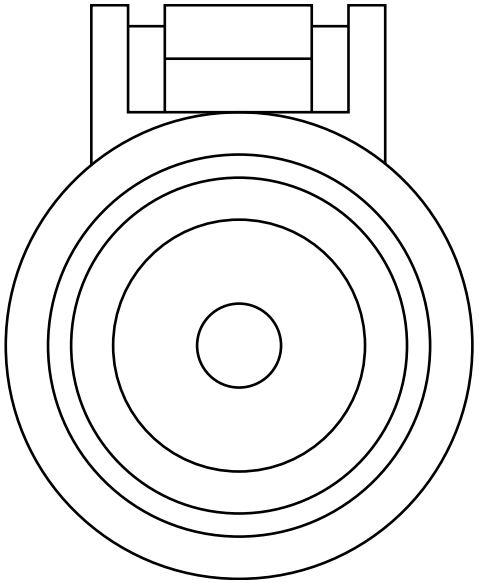

Name	Terminal Part Number	V-Min	Name	Wire Part Number	Wire CSA	Wire Spec	Wire Material description	Wire Color Description	Wire Length	End2 Terminal Part Number	End2 Pin Name	End2 Connect or
A	-	-	ZB14CZ	2644026 R1	18.94	4.0	Std. Wall XLPE Battery Cable	RED	3695.0	-	A	4413F1

Connector Name	4411M4
Part Number	3572899C1
Instances	B6.7 - DLB - Remote Power Modules (1 RPM n/ Switch Packs):Diagram2 B6.7 - DLB - Remote Power Modules (1 RPM w/ Switch Packs):Diagram2 B6.7 - DLB - Remote Power Modules (2 RPM n/ Switch Pack):Diagram2 B6.7 - DLB - Remote Power Modules (2 RPM w/ Switch Packs):Diagram2 L9 - DLB - Remote Power Modules (1 RPM n/ Switch Packs):Diagram2 L9 - DLB - Remote Power Modules (1 RPM w/ Switch Packs):Diagram2 L9 - DLB - Remote Power Modules (2 RPM n/ Switch Pack):Diagram2 L9 - DLB - Remote Power Modules (2 RPM w/ Switch Packs):Diagram2
Mates	MODU-RPM1-2050-01-01A

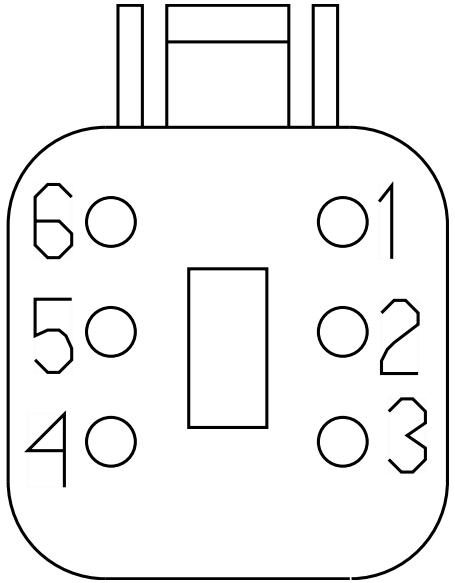

Name	Terminal Part Number	V-Min	Name	Wire Part Number	Wire CSA	Wire Spec	Wire Material description	Wire Color Description	Wire Length	End2 Terminal Part Number	End2 Pin Name	End2 Connector
2	-	-	ZE10-GR	2643689 R1	1.91	14.0	Std. Wall XLPE Primary Cable	WHITE	3020.0	-	-	-
3	-	-	-	-	-	-	-	-	-	-	-	-
4	-	-	-	-	-	-	-	-	-	-	-	-
6	-	-	ZE20	2643678 R1	1.16	16.0	Std. Wall XLPE Primary Cable	LIGHT GREEN	4280.0	-	51	1701F

Connector Name	4411M5
Part Number	3517760C1
Short Description	REMOTE POWER MODULE POSITIVE FEED
Instances	A26 - DLB - Remote Power Module (3 RPM n/Switch Pack):Diagram1 A26 - DLB - Remote Power Modules (1 RPM n/ Switch Packs):Diagram3 A26 - DLB - Remote Power Modules (1 RPM w/ Switch Packs):Diagram3 A26 - DLB - Remote Power Modules (2 RPM n/ Switch Pack):Diagram3 A26 - DLB - Remote Power Modules (2 RPM w/ Switch Packs)Option2:Diagram3 A26 - DLB - Remote Power Modules (3 RPM w/ Swtich Packs):Diagram1 L9 - DLB - Remote Power Module (3 RPM n/Switch Pack):Diagram1
Mates	4411F

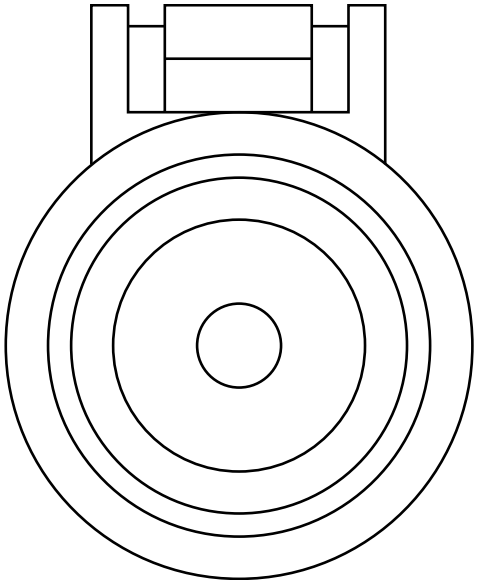

Name	Terminal Part Number	V-Min	Name	Wire Part Number	Wire CSA	Wire Spec	Wire Material description	Wire Color Description	Wire Length	End2 Terminal Part Number	End2 Pin Name	End2 Connect or
A	-	-	ZA14H	2644026 R1	18.94	4.0	Std. Wall XLPE Battery Cable	RED	3695.0	-	A	4412F
A	-	-	PB14CY	2644026 R1	18.94	4.0	Std. Wall XLPE Battery Cable	RED	2525.0	-	A	4413F

Connector Name	4411M5
Part Number	3517760C1
Instances	B6.7 - DLB - Remote Power Modules (2 RPM n/ Switch Pack):Diagram2 B6.7 - DLB - Remote Power Modules (2 RPM w/ Switch Packs):Diagram2 L9 - DLB - Remote Power Modules (2 RPM n/ Switch Pack):Diagram2 L9 - DLB - Remote Power Modules (2 RPM w/ Switch Packs):Diagram2

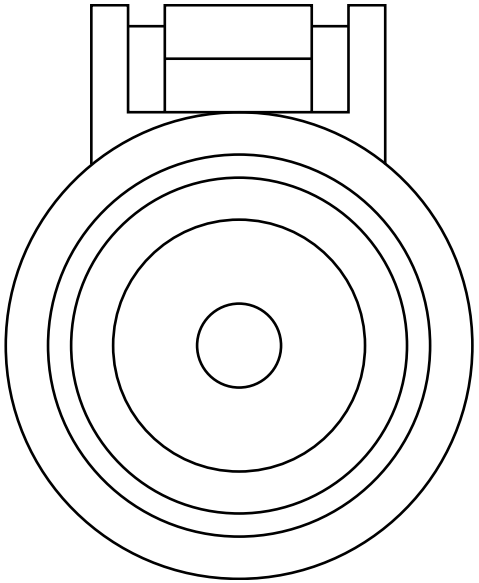

Name	Terminal Part Number	V-Min	Name	Wire Part Number	Wire CSA	Wire Spec	Wire Material description	Wire Color Description	Wire Length	End2 Terminal Part Number	End2 Pin Name	End2 Connect or
A	-	-	ZA14H	2644026 R1	18.94	4.0	Std. Wall XLPE Battery Cable	RED	3695.0	-	A	4412F
A	-	-	ZA14H	2644026 R1	18.94	4.0	Std. Wall XLPE Battery Cable	RED	3695.0	-	A	4413F2

Connector Name	4411M6
Part Number	3517760C1
Short Description	REMOTE POWER MODULE POSITIVE FEED
Instances	A26 - DLB - Remote Power Module (3 RPM n/Switch Pack):Diagram1 A26 - DLB - Remote Power Modules (3 RPM w/ Swtich Packs):Diagram1
Mates	4413F

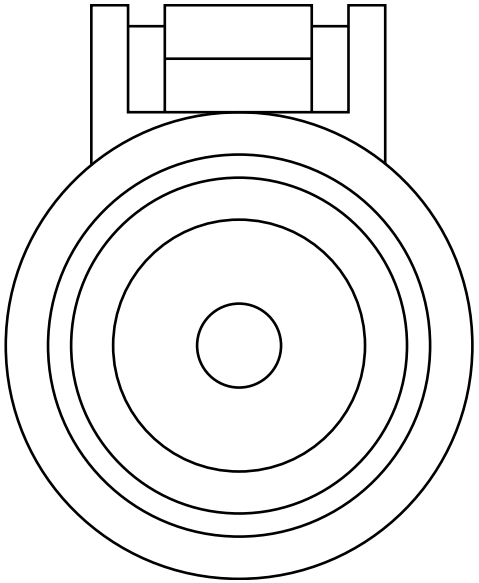

Name	Terminal Part Number	V-Min	Name	Wire Part Number	Wire CSA	Wire Spec	Wire Material description	Wire Color Description	Wire Length	End2 Terminal Part Number	End2 Pin Name	End2 Connect or
A	-	-	ZC14E	2644026 R1	18.94	4.0	Std. Wall XLPE Battery Cable	RED	3695.0	-	A	4413F2

Connector Name 4411M

Part Number 3517760C1

Instances A26 - DLB - Remote Power Module (3 RPM n/Switch Pack)Option2:Diagram2
A26 - DLB - Remote Power Modules (1 RPM n/ Switch Packs):Diagram2
A26 - DLB - Remote Power Modules (1 RPM w/ Switch Packs):Diagram1
A26 - DLB - Remote Power Modules (1 RPM w/ Switch Packs):Diagram2
A26 - DLB - Remote Power Modules (1 RPM w/ Switch Packs):Diagram3
A26 - DLB - Remote Power Modules (2 RPM n/ Switch Pack):Diagram2
A26 - DLB - Remote Power Modules (2 RPM n/ Switch Pack)Option2:Diagram1
A26 - DLB - Remote Power Modules (2 RPM w/ Switch Packs):Diagram1
A26 - DLB - Remote Power Modules (2 RPM w/ Switch Packs)Option2:Diagram2
A26 - DLB - Remote Power Modules (3 RPM w/ Swtich Packs)Option2:Diagram2

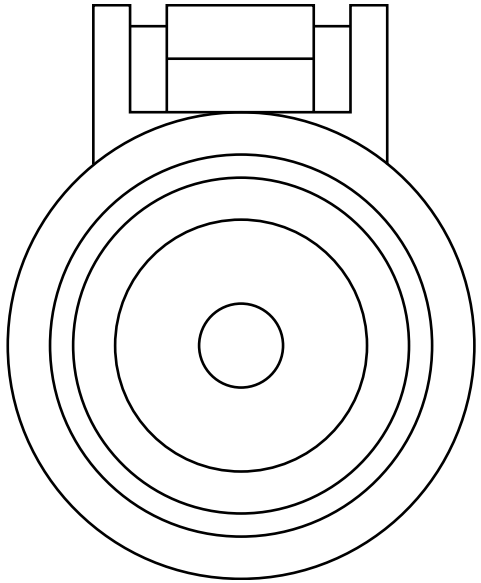

Name	Terminal Part Number	V-Min	Name	Wire Part Number	Wire CSA	Wire Spec	Wire Material description	Wire Color Description	Wire Length	End2 Terminal Part Number	End2 Pin Name	End2 Connector
A	-	-	RH14	2644026 R1	18.94	4.0	Std. Wall XLPE Battery Cable	RED	2435.0	-	A	4411F
A	-	-	14	2645953 R1	18.94	4.0	SGX NFLEX 125	RED	3700.0	-	A	4411F
A	-	-	PB14CY	2644026 R1	18.94	4.0	Std. Wall XLPE Battery Cable	RED	2525.0	-	A	4413F1

Connector Name 4411M

Part Number 3517760C1

Instances A26 - DLB - Remote Power Module (3 RPM n/Switch Pack)Option2:Diagram1
A26 - DLB - Remote Power Module (3 RPM n/Switch Pack)Option2:Diagram2
A26 - DLB - Remote Power Modules (2 RPM n/ Switch Pack):Diagram1
A26 - DLB - Remote Power Modules (2 RPM w/ Switch Packs)Option2:Diagram1
A26 - DLB - Remote Power Modules (2 RPM w/ Switch Packs)Option2:Diagram2
A26 - DLB - Remote Power Modules (3 RPM w/ Swtich Packs)Option2:Diagram1
A26 - DLB - Remote Power Modules (3 RPM w/ Swtich Packs)Option2:Diagram2

Mates MODU-RPM2-2050-01-02A

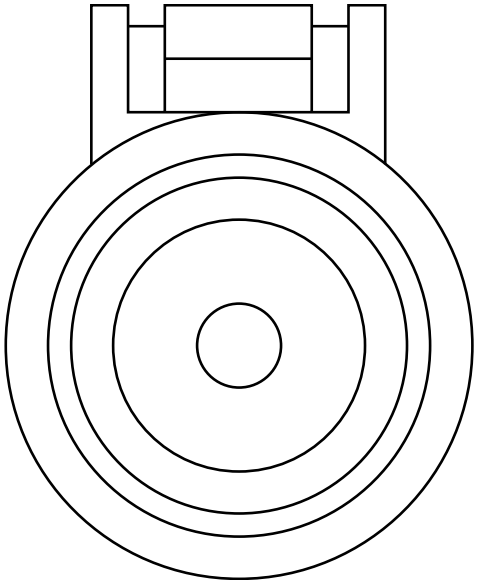

Name	Terminal Part Number	V-Min	Name	Wire Part Number	Wire CSA	Wire Spec	Wire Material description	Wire Color Description	Wire Length	End2 Terminal Part Number	End2 Pin Name	End2 Connect or
A	-	-	PC14H	2644026 R1	18.94	4.0	Std. Wall XLPE Battery Cable	RED	2525.0	-	A	4412F
A	-	-	PB14CY	2644026 R1	18.94	4.0	Std. Wall XLPE Battery Cable	RED	2525.0	-	A	4413F1

Connector Name 4411M

Part Number 3517760C1

Instances A26 - DLB - Remote Power Module (3 RPM n/Switch Pack):Diagram1
A26 - DLB - Remote Power Modules (2 RPM n/ Switch Pack):Diagram3
A26 - DLB - Remote Power Modules (2 RPM w/ Switch Packs)Option2:Diagram3
A26 - DLB - Remote Power Modules (3 RPM w/ Swtich Packs):Diagram1

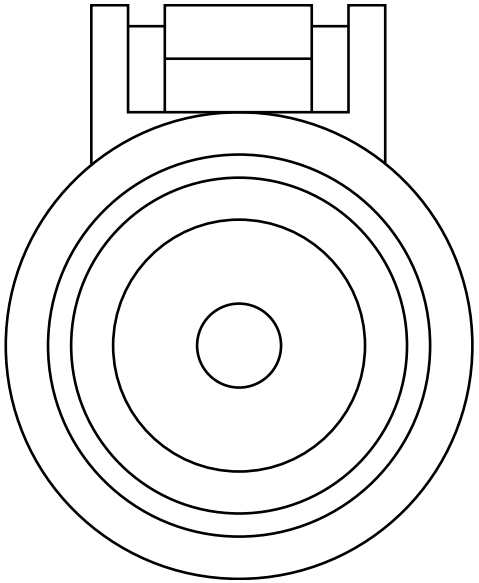

Name	Terminal Part Number	V-Min	Name	Wire Part Number	Wire CSA	Wire Spec	Wire Material description	Wire Color Description	Wire Length	End2 Terminal Part Number	End2 Pin Name	End2 Connect or
A	-	-	14	2645953 R1	18.94	4.0	SGX NFLEX 125	RED	3700.0	-	A	4411F

Connector Name 4411M

Part Number 3517760C1

Instances B6.7 - DLB - Remote Power Modules (1 RPM n/ Switch Packs):Diagram3
B6.7 - DLB - Remote Power Module (3 RPM n/Switch Pack):Diagram1
B6.7 - DLB - Remote Power Modules (1 RPM w/ Switch Packs):Diagram3
B6.7 - DLB - Remote Power Modules (2 RPM n/ Switch Pack):Diagram3
B6.7 - DLB - Remote Power Modules (2 RPM n/ Switch Pack):Diagram4
B6.7 - DLB - Remote Power Modules (2 RPM w/ Switch Packs):Diagram3
B6.7 - DLB - Remote Power Modules (2 RPM w/ Switch Packs):Diagram4
B6.7 - DLB - Remote Power Modules (3 RPM w/ Swtich Packs):Diagram1
L9 - DLB - Remote Power Module (3 RPM n/Switch Pack):Diagram1
L9 - DLB - Remote Power Modules (1 RPM n/ Switch Packs):Diagram1-Combination3
L9 - DLB - Remote Power Modules (1 RPM w/ Switch Packs):Diagram3
L9 - DLB - Remote Power Modules (2 RPM n/ Switch Pack):Diagram3
L9 - DLB - Remote Power Modules (2 RPM n/ Switch Pack):Diagram4
L9 - DLB - Remote Power Modules (2 RPM w/ Switch Packs):Diagram3
L9 - DLB - Remote Power Modules (2 RPM w/ Switch Packs):Diagram4
L9 - DLB - Remote Power Modules (3 RPM w/ Swtich Packs):Diagram1

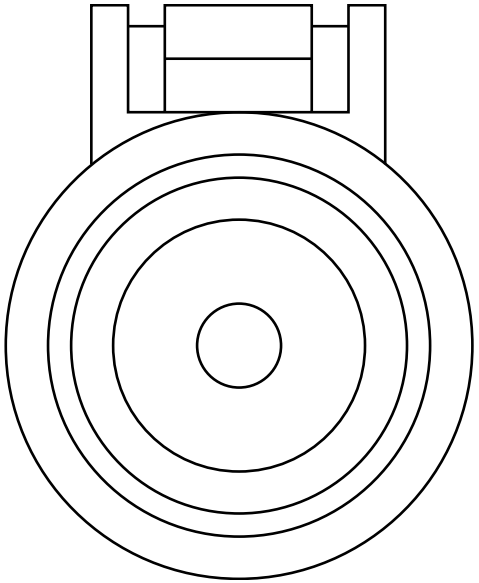

Name	Terminal Part Number	V-Min	Name	Wire Part Number	Wire CSA	Wire Spec	Wire Material description	Wire Color Description	Wire Length	End2 Terminal Part Number	End2 Pin Name	End2 Connect or
A	-	-	RH14	2644026 R1	18.94	4.0	Std. Wall XLPE Battery Cable	RED	2435.0	-	A	4411F

Connector Name 4411M

Part Number 3517760C1

Instances B6.7 - DLB - Remote Power Modules (1 RPM w/ Switch Packs):Diagram2
B6.7 - DLB - Remote Power Modules (2 RPM n/ Switch Pack):Diagram2
B6.7 - DLB - Remote Power Modules (2 RPM w/ Switch Packs):Diagram2
L9 - DLB - Remote Power Modules (1 RPM w/ Switch Packs):Diagram2
L9 - DLB - Remote Power Modules (2 RPM n/ Switch Pack):Diagram2
L9 - DLB - Remote Power Modules (2 RPM w/ Switch Packs):Diagram2

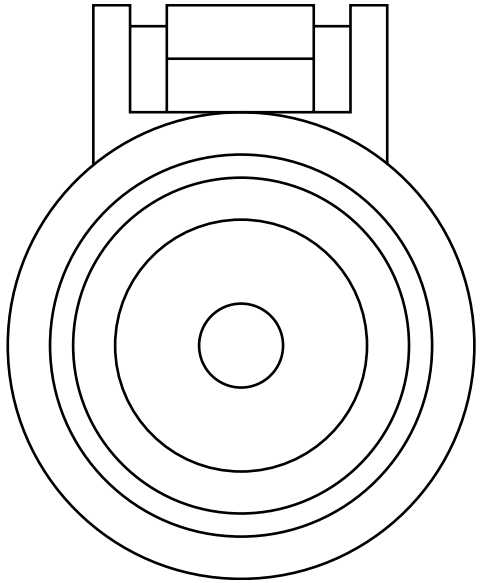

Name	Terminal Part Number	V-Min	Name	Wire Part Number	Wire CSA	Wire Spec	Wire Material description	Wire Color Description	Wire Length	End2 Terminal Part Number	End2 Pin Name	End2 Connect or
A	-	-	ZB14CZ	2644026 R1	18.94	4.0	Std. Wall XLPE Battery Cable	RED	3695.0	-	A	4413F
A	-	-	ZB14CZ	2644026 R1	18.94	4.0	Std. Wall XLPE Battery Cable	RED	3695.0	-	A	4413F1

Connector Name	4411M
Part Number	3517760C1
Instances	B6.7 - DLB - Remote Power Module (3 RPM n/Switch Pack):Diagram1 B6.7 - DLB - Remote Power Modules (3 RPM w/ Swtich Packs):Diagram1 L9 - DLB - Remote Power Module (3 RPM n/Switch Pack):Diagram1 L9 - DLB - Remote Power Modules (3 RPM w/ Swtich Packs):Diagram1
Mates	MODU-RPM1-2050-01-01A

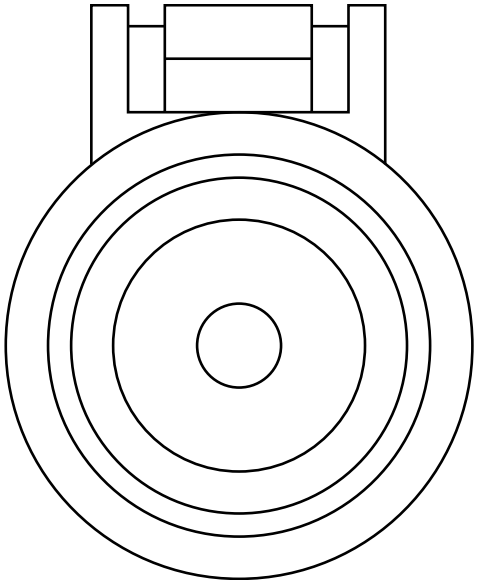

Name	Terminal Part Number	V-Min	Name	Wire Part Number	Wire CSA	Wire Spec	Wire Material description	Wire Color Description	Wire Length	End2 Terminal Part Number	End2 Pin Name	End2 Connect or
A	-	-	14	2645953 R1	18.94	4.0	SGX NFLEX 125	RED	3700.0	-	A	4411F

Connector Name 4411M_1

Part Number 3517760C1

Instances A26 - DLB - Remote Power Modules (1 RPM n/ Switch Packs):Diagram3

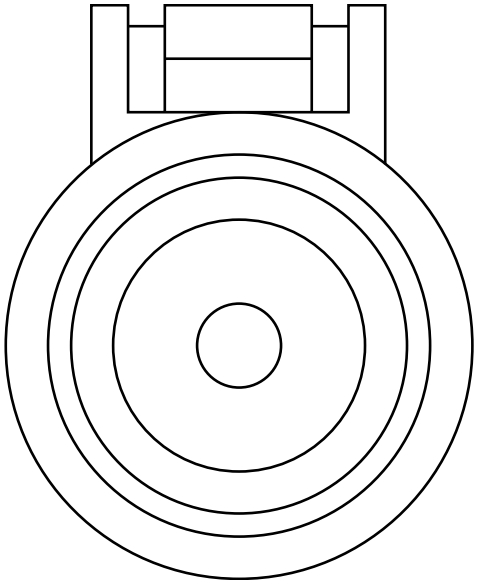

Name	Terminal Part Number	V-Min	Name	Wire Part Number	Wire CSA	Wire Spec	Wire Material description	Wire Color Description	Wire Length	End2 Terminal Part Number	End2 Pin Name	End2 Connect or
A	-	-	14	2645953 R1	18.94	4.0	SGX NFLEX 125	RED	3700.0	-	A	4411F

Connector Name	4411N
Part Number	3517759C1
Short Description	REMOTE POWER MODULE POSITIVE FEED
Instances	A26 - DLB - Remote Power Modules (2 RPM n/ Switch Pack)Option2:Diagram1 A26 - DLB - Remote Power Modules (2 RPM w/ Switch Packs):Diagram1 B6.7 - DLB - Remote Power Modules (2 RPM n/ Switch Pack):Diagram3 B6.7 - DLB - Remote Power Modules (2 RPM w/ Switch Packs):Diagram3 L9 - DLB - Remote Power Modules (2 RPM n/ Switch Pack):Diagram3 L9 - DLB - Remote Power Modules (2 RPM w/ Switch Packs):Diagram3
Mates	4414

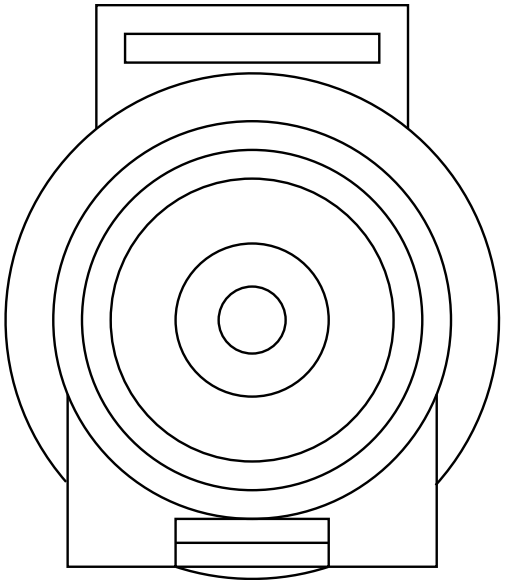

Name	Terminal Part Number	V-Min	Name	Wire Part Number	Wire CSA	Wire Spec	Wire Material description	Wire Color Description	Wire Length	End2 Terminal Part Number	End2 Pin Name	End2 Connect or
A	-	-	TT14	2644026 R1	18.94	4.0	Std. Wall XLPE Battery Cable	RED	2435.0	-	A	4411P

Connector Name	4411P
Part Number	3517760C1
Instances	A26 - DLB - Remote Power Modules (2 RPM n/ Switch Pack)Option2:Diagram1 A26 - DLB - Remote Power Modules (2 RPM w/ Switch Packs):Diagram1
Mates	MODU-RPM2-2050-01-02A

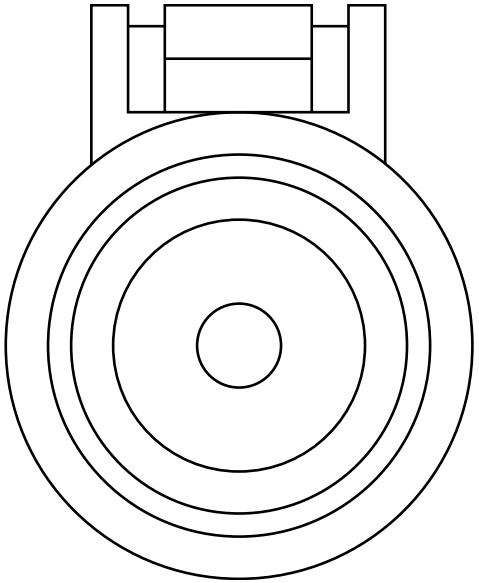

Name	Terminal Part Number	V-Min	Name	Wire Part Number	Wire CSA	Wire Spec	Wire Material description	Wire Color Description	Wire Length	End2 Terminal Part Number	End2 Pin Name	End2 Connect or
A	-	-	TT14	2644026 R1	18.94	4.0	Std. Wall XLPE Battery Cable	RED	2435.0	-	A	4411N

Connector Name	4411P
Part Number	3517760C1
Instances	B6.7 - DLB - Remote Power Modules (2 RPM n/ Switch Pack):Diagram3 B6.7 - DLB - Remote Power Modules (2 RPM w/ Switch Packs):Diagram3 L9 - DLB - Remote Power Modules (2 RPM n/ Switch Pack):Diagram3 L9 - DLB - Remote Power Modules (2 RPM w/ Switch Packs):Diagram3
Mates	MODU-RPM2-2050-01-02A

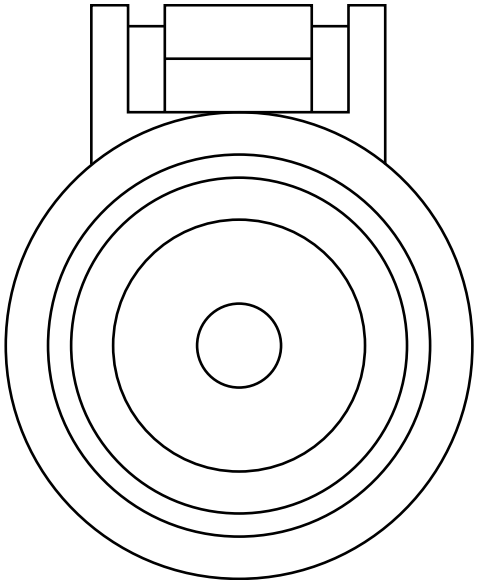

Name	Terminal Part Number	V-Min	Name	Wire Part Number	Wire CSA	Wire Spec	Wire Material description	Wire Color Description	Wire Length	End2 Terminal Part Number	End2 Pin Name	End2 Connect or
A	-	-	TT14	2644026 R1	18.94	4.0	Std. Wall XLPE Battery Cable	RED	2435.0	-	A	4411N

Connector Name	4411
Part Number	3517760C1
Short Description	REMOTE PWR MDL +VE FEED
Instances	A26 - DLB - Remote Power Module (3 RPM n/Switch Pack)Option2:Diagram2 A26 - DLB - Remote Power Modules (1 RPM n/ Switch Packs):Diagram2 A26 - DLB - Remote Power Modules (1 RPM w/ Switch Packs):Diagram2 A26 - DLB - Remote Power Modules (2 RPM n/ Switch Pack):Diagram2 A26 - DLB - Remote Power Modules (2 RPM n/ Switch Pack)Option2:Diagram1 A26 - DLB - Remote Power Modules (2 RPM w/ Switch Packs):Diagram1 A26 - DLB - Remote Power Modules (2 RPM w/ Switch Packs)Option2:Diagram2 A26 - DLB - Remote Power Modules (3 RPM w/ Swtich Packs)Option2:Diagram2 B6.7 - DLB - Remote Power Modules (1 RPM n/ Switch Packs):Diagram3 B6.7 - DLB - Remote Power Module (3 RPM n/Switch Pack):Diagram1 B6.7 - DLB - Remote Power Modules (1 RPM w/ Switch Packs):Diagram3 B6.7 - DLB - Remote Power Modules (2 RPM n/ Switch Pack):Diagram3 B6.7 - DLB - Remote Power Modules (2 RPM n/ Switch Pack):Diagram4 B6.7 - DLB - Remote Power Modules (2 RPM w/ Switch Packs):Diagram3 B6.7 - DLB - Remote Power Modules (2 RPM w/ Switch Packs):Diagram4 B6.7 - DLB - Remote Power Modules (3 RPM w/ Swtich Packs):Diagram1 L9 - DLB - Remote Power Module (3 RPM n/Switch Pack):Diagram1 L9 - DLB - Remote Power Modules (1 RPM n/ Switch Packs):Diagram1-Combination3 L9 - DLB - Remote Power Modules (1 RPM w/ Switch Packs):Diagram3 L9 - DLB - Remote Power Modules (2 RPM n/ Switch Pack):Diagram3

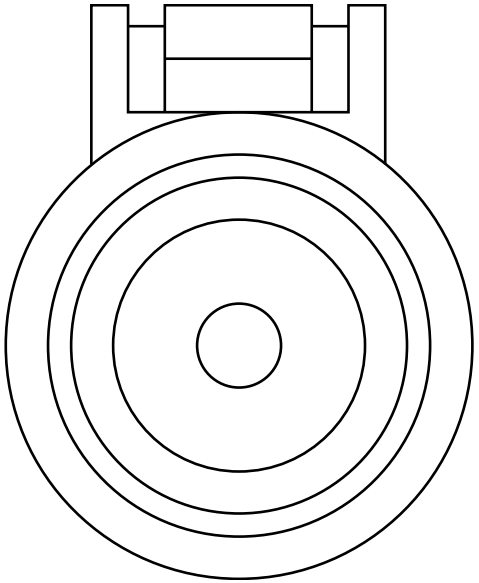

L9 - DLB - Remote Power Modules (2 RPM n/ Switch Pack):Diagram4
L9 - DLB - Remote Power Modules (2 RPM w/ Switch Packs):Diagram3
L9 - DLB - Remote Power Modules (2 RPM w/ Switch Packs):Diagram4
L9 - DLB - Remote Power Modules (3 RPM w/ Swtich Packs):Diagram1

Mates 4411F

Name	Terminal Part Number	V-Min	Name	Wire Part Number	Wire CSA	Wire Spec	Wire Material description	Wire Color Description	Wire Length	End2 Terminal Part Number	End2 Pin Name	End2 Connect or
A	-	-	MN14C	2644026 R1	18.94	4.0	Std. Wall XLPE Battery Cable	RED	3820.0	-	A	4412F
A	-	-	MN14C	2644026 R1	18.94	4.0	Std. Wall XLPE Battery Cable	RED	3820.0	-	A	4413F
A	-	-	PB14CY	2644026 R1	18.94	4.0	Std. Wall XLPE Battery Cable	RED	2525.0	-	A	4413F

Connector Name	4412F
Part Number	3517759C1
Short Description	REMOTE POWER MODULE POSITIVE FEED
Instances	A26 - DLB - Remote Power Module (3 RPM n/Switch Pack):Diagram1 A26 - DLB - Remote Power Module (3 RPM n/Switch Pack)Option2:Diagram1 A26 - DLB - Remote Power Module (3 RPM n/Switch Pack)Option2:Diagram2 A26 - DLB - Remote Power Modules (1 RPM n/ Switch Packs):Diagram3 A26 - DLB - Remote Power Modules (1 RPM w/ Switch Packs):Diagram3 A26 - DLB - Remote Power Modules (3 RPM w/ Swtich Packs):Diagram1 A26 - DLB - Remote Power Modules (3 RPM w/ Swtich Packs)Option2:Diagram1 A26 - DLB - Remote Power Modules (3 RPM w/ Swtich Packs)Option2:Diagram2 B6.7 - DLB - Remote Power Modules (2 RPM n/ Switch Pack):Diagram4 B6.7 - DLB - Remote Power Modules (2 RPM w/ Switch Packs):Diagram3 B6.7 - DLB - Remote Power Modules (2 RPM w/ Switch Packs):Diagram4 L9 - DLB - Remote Power Modules (1 RPM n/ Switch Packs):Diagram1-Combination3 L9 - DLB - Remote Power Modules (1 RPM w/ Switch Packs):Diagram3 L9 - DLB - Remote Power Modules (2 RPM n/ Switch Pack):Diagram1 L9 - DLB - Remote Power Modules (2 RPM n/ Switch Pack):Diagram2 L9 - DLB - Remote Power Modules (2 RPM n/ Switch Pack):Diagram3 L9 - DLB - Remote Power Modules (2 RPM n/ Switch Pack):Diagram4 L9 - DLB - Remote Power Modules (2 RPM w/ Switch Packs):Diagram1 L9 - DLB - Remote Power Modules (2 RPM w/ Switch Packs):Diagram2 L9 - DLB - Remote Power Modules (2 RPM w/ Switch Packs):Diagram3

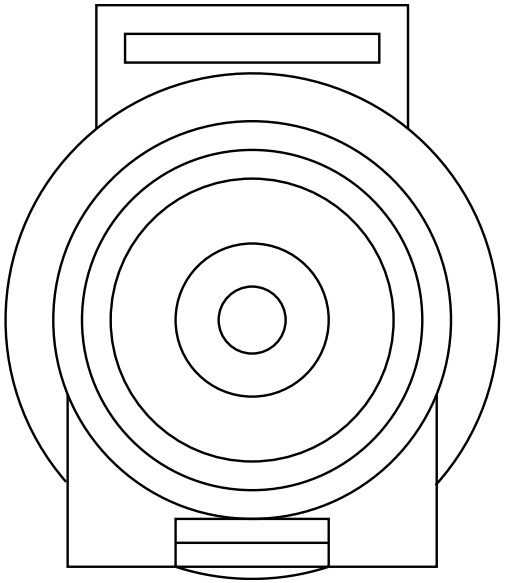

L9 - DLB - Remote Power Modules (2 RPM w/ Switch Packs):Diagram4

Mates 4320M

Name	Terminal Part Number	V-Min	Name	Wire Part Number	Wire CSA	Wire Spec	Wire Material description	Wire Color Description	Wire Length	End2 Terminal Part Number	End2 Pin Name	End2 Connect or
A	-	-	ZA14H	2644026 R1	18.94	4.0	Std. Wall XLPE Battery Cable	RED	3695.0	-	A	4411M5
A	-	-	PC14H	2644026 R1	18.94	4.0	Std. Wall XLPE Battery Cable	RED	2525.0	-	A	4411M2
A	-	-	MN14C	2644026 R1	18.94	4.0	Std. Wall XLPE Battery Cable	RED	3820.0	-	A	4411
A	-	-	PC14H	2644026 R1	18.94	4.0	Std. Wall XLPE Battery Cable	RED	2525.0	-	A	4411M

Connector Name	4412F
Part Number	3517759C1
Short Description	RPM 2 POSITIVE FEED-OUTSIDE CAB
Instances	A26 - DLB - Remote Power Module (3 RPM n/Switch Pack):Diagram1 A26 - DLB - Remote Power Modules (2 RPM n/ Switch Pack):Diagram3 A26 - DLB - Remote Power Modules (2 RPM w/ Switch Packs)Option2:Diagram3 A26 - DLB - Remote Power Modules (3 RPM w/ Swtich Packs):Diagram1
Mates	4411M4

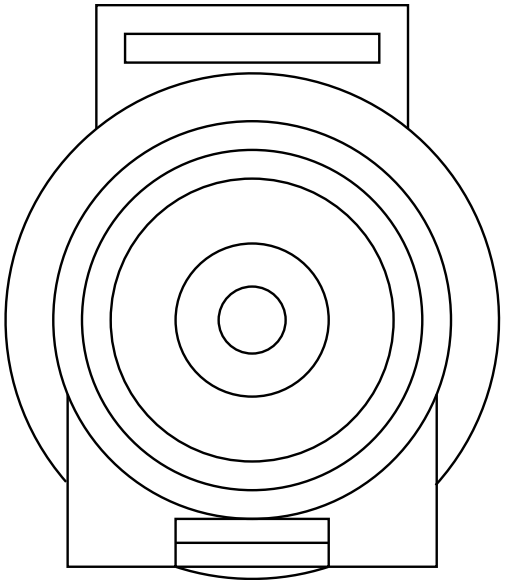

Name	Terminal Part Number	V-Min	Name	Wire Part Number	Wire CSA	Wire Spec	Wire Material description	Wire Color Description	Wire Length	End2 Terminal Part Number	End2 Pin Name	End2 Connect or
A	-	-	14D	2645255 R1	18.94	4.0	SGX FLEX 125C	RED	800.0	-	A	4412M

Connector Name	4412F
Part Number	3517759C1
Instances	A26 - DLB - Remote Power Modules (2 RPM n/ Switch Pack):Diagram1 A26 - DLB - Remote Power Modules (2 RPM n/ Switch Pack):Diagram3 A26 - DLB - Remote Power Modules (2 RPM w/ Switch Packs)Option2:Diagram1 A26 - DLB - Remote Power Modules (2 RPM w/ Switch Packs)Option2:Diagram3
Mates	4412M

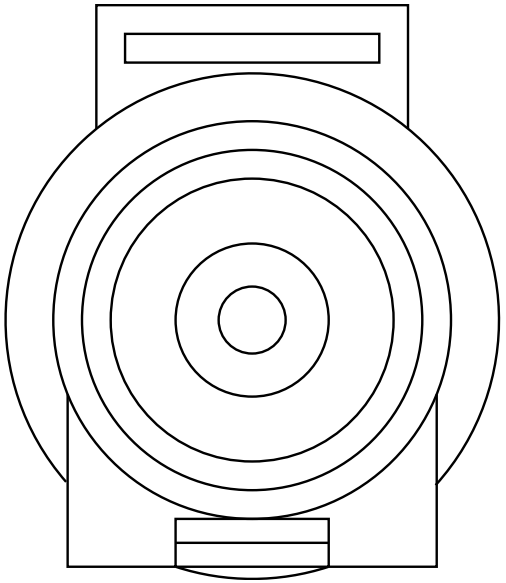

Name	Terminal Part Number	V-Min	Name	Wire Part Number	Wire CSA	Wire Spec	Wire Material description	Wire Color Description	Wire Length	End2 Terminal Part Number	End2 Pin Name	End2 Connect or
A	-	-	ZA14H	2644026 R1	18.94	4.0	Std. Wall XLPE Battery Cable	RED	3695.0	-	A	4411M5
A	-	-	PC14H	2644026 R1	18.94	4.0	Std. Wall XLPE Battery Cable	RED	2525.0	-	A	4411M

Connector Name	4412F
Part Number	3517759C1
Instances	B6.7 - DLB - Remote Power Module (3 RPM n/Switch Pack):Diagram1 B6.7 - DLB - Remote Power Modules (3 RPM w/ Swtich Packs):Diagram1 L9 - DLB - Remote Power Module (3 RPM n/Switch Pack):Diagram1 L9 - DLB - Remote Power Modules (3 RPM w/ Swtich Packs):Diagram1
Mates	4411M2

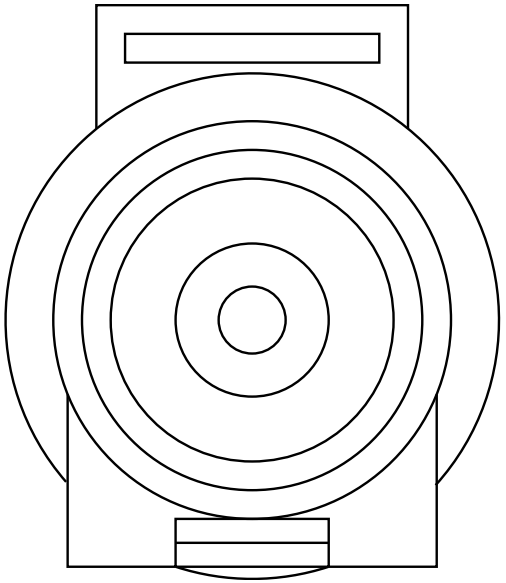

Name	Terminal Part Number	V-Min	Name	Wire Part Number	Wire CSA	Wire Spec	Wire Material description	Wire Color Description	Wire Length	End2 Terminal Part Number	End2 Pin Name	End2 Connect or
A	-	-	14D	2645255 R1	18.94	4.0	SGX FLEX 125C	RED	800.0	-	A	4412M

Connector Name	4412M
Part Number	3517760C1
Short Description	REMOTE POWER MODULE POSITIVE FEED
Instances	A26 - DLB - Remote Power Modules (1 RPM n/ Switch Packs):Diagram2 A26 - DLB - Remote Power Modules (1 RPM w/ Switch Packs):Diagram2 A26 - DLB - Remote Power Modules (2 RPM n/ Switch Pack):Diagram2 A26 - DLB - Remote Power Modules (2 RPM n/ Switch Pack)Option2:Diagram1 A26 - DLB - Remote Power Modules (2 RPM w/ Switch Packs):Diagram1 A26 - DLB - Remote Power Modules (2 RPM w/ Switch Packs)Option2:Diagram2 B6.7 - DLB - Remote Power Modules (2 RPM n/ Switch Pack):Diagram3 B6.7 - DLB - Remote Power Modules (2 RPM w/ Switch Packs):Diagram3 B6.7 - DLB - Remote Power Modules (2 RPM w/ Switch Packs):Diagram4 B6.7 - DLB - Remote Power Modules (3 RPM w/ Swtich Packs):Diagram1 L9 - DLB - Remote Power Module (3 RPM n/Switch Pack):Diagram1 L9 - DLB - Remote Power Modules (1 RPM n/ Switch Packs):Diagram1 L9 - DLB - Remote Power Modules (1 RPM n/ Switch Packs):Diagram2 L9 - DLB - Remote Power Modules (1 RPM w/ Switch Packs):Diagram1 L9 - DLB - Remote Power Modules (1 RPM w/ Switch Packs):Diagram2 L9 - DLB - Remote Power Modules (2 RPM n/ Switch Pack):Diagram1 L9 - DLB - Remote Power Modules (2 RPM n/ Switch Pack):Diagram2 L9 - DLB - Remote Power Modules (2 RPM n/ Switch Pack):Diagram3 L9 - DLB - Remote Power Modules (2 RPM n/ Switch Pack):Diagram4 L9 - DLB - Remote Power Modules (2 RPM w/ Switch Packs):Diagram1

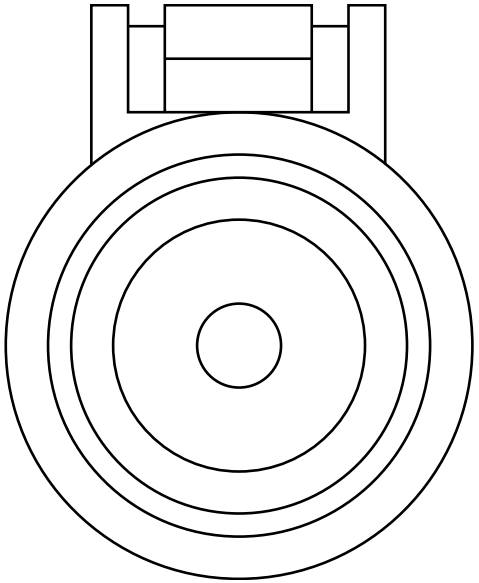

L9 - DLB - Remote Power Modules (2 RPM w/ Switch Packs):Diagram2
L9 - DLB - Remote Power Modules (2 RPM w/ Switch Packs):Diagram3
L9 - DLB - Remote Power Modules (2 RPM w/ Switch Packs):Diagram4
L9 - DLB - Remote Power Modules (3 RPM w/ Swtich Packs):Diagram1

Mates 4413F

Name	Terminal Part Number	V-Min	Name	Wire Part Number	Wire CSA	Wire Spec	Wire Material description	Wire Color Description	Wire Length	End2 Terminal Part Number	End2 Pin Name	End2 Connect or
A	-	-	N14Z	2645255 R1	18.94	4.0	SGX FLEX 125C	RED	300.0	-	-	-
A	-	-	N14Z	2645255 R1	18.94	4.0	SGX FLEX 125C	RED	300.0	-	A	4412M

Connector Name	4412M
Part Number	3517760C1
Instances	A26 - DLB - Remote Power Module (3 RPM n/Switch Pack):Diagram1 A26 - DLB - Remote Power Modules (2 RPM n/ Switch Pack):Diagram3 A26 - DLB - Remote Power Modules (2 RPM w/ Switch Packs)Option2:Diagram3 A26 - DLB - Remote Power Modules (3 RPM w/ Swtich Packs):Diagram1

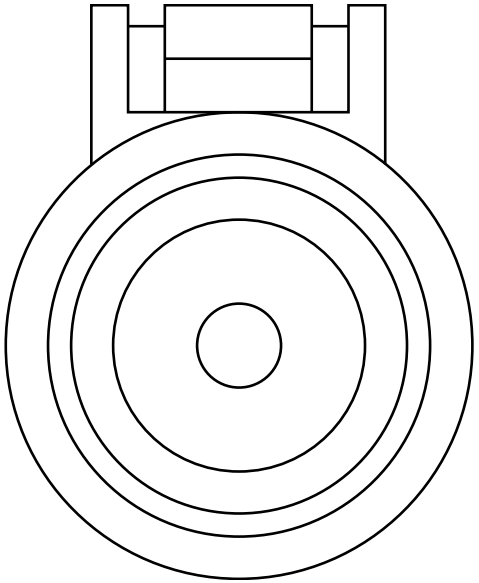

Name	Terminal Part Number	V-Min	Name	Wire Part Number	Wire CSA	Wire Spec	Wire Material description	Wire Color Description	Wire Length	End2 Terminal Part Number	End2 Pin Name	End2 Connect or
A	-	-	14D	2645255 R1	18.94	4.0	SGX FLEX 125C	RED	800.0	-	A	4412F

Connector Name	4412M
Part Number	3517760C1
Instances	A26 - DLB - Remote Power Modules (2 RPM n/ Switch Pack):Diagram1 A26 - DLB - Remote Power Modules (2 RPM n/ Switch Pack):Diagram3 A26 - DLB - Remote Power Modules (2 RPM w/ Switch Packs)Option2:Diagram1 A26 - DLB - Remote Power Modules (2 RPM w/ Switch Packs)Option2:Diagram3
Mates	4412F

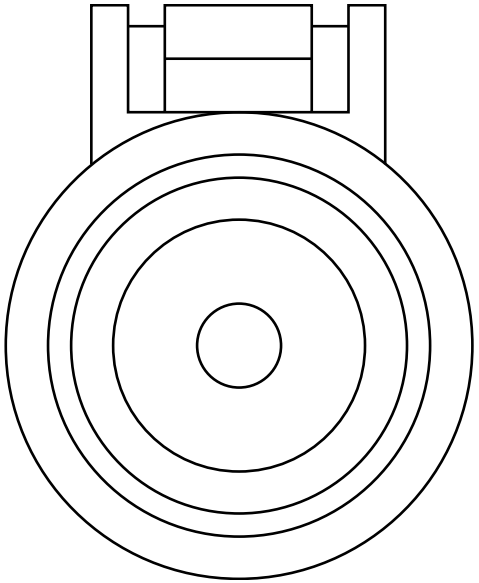

Name	Terminal Part Number	V-Min	Name	Wire Part Number	Wire CSA	Wire Spec	Wire Material description	Wire Color Description	Wire Length	End2 Terminal Part Number	End2 Pin Name	End2 Connect or
A	-	-	N14Z	2645255 R1	18.94	4.0	SGX FLEX 125C	RED	300.0	-	A	4412M

Connector Name	4412M
Part Number	3517760C1
Instances	A26 - DLB - Remote Power Module (3 RPM n/Switch Pack):Diagram1 A26 - DLB - Remote Power Modules (3 RPM w/ Swtich Packs):Diagram1 A26 - DLB - Remote Power Modules (3 RPM w/ Swtich Packs)Option2:Diagram1
Mates	4413F2

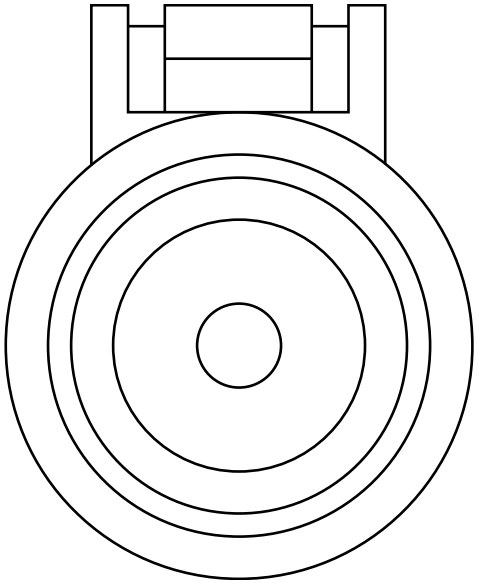

Name	Terminal Part Number	V-Min	Name	Wire Part Number	Wire CSA	Wire Spec	Wire Material description	Wire Color Description	Wire Length	End2 Terminal Part Number	End2 Pin Name	End2 Connect or
A	-	-	N14Z	2645255 R1	18.94	4.0	SGX FLEX 125C	RED	300.0	-	A	4412M

Connector Name	4412M
Part Number	3517760C1
Instances	A26 - DLB - Remote Power Module (3 RPM n/Switch Pack)Option2:Diagram1 A26 - DLB - Remote Power Module (3 RPM n/Switch Pack)Option2:Diagram2 A26 - DLB - Remote Power Modules (3 RPM w/ Swtich Packs):Diagram1 B6.7 - DLB - Remote Power Modules (2 RPM w/ Switch Packs):Diagram2
Mates	4413F1

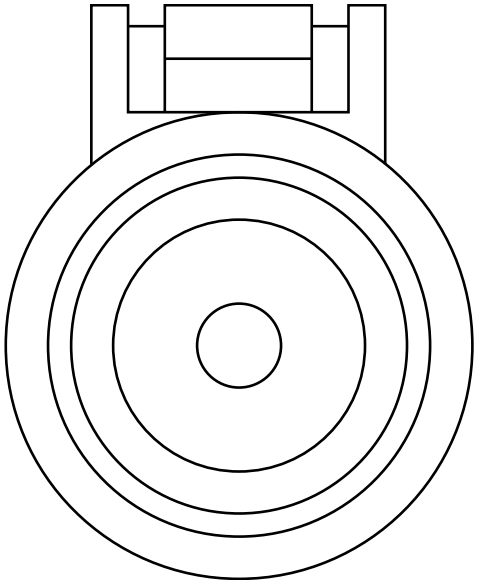

Name	Terminal Part Number	V-Min	Name	Wire Part Number	Wire CSA	Wire Spec	Wire Material description	Wire Color Description	Wire Length	End2 Terminal Part Number	End2 Pin Name	End2 Connect or
A	-	-	N14Z	2645255 R1	18.94	4.0	SGX FLEX 125C	RED	300.0	-	-	-
A	-	-	N14Z	2645255 R1	18.94	4.0	SGX FLEX 125C	RED	300.0	-	A	4412M

Connector Name 4412M

Part Number 3517760C1

Instances A26 - DLB - Remote Power Module (3 RPM n/Switch Pack):Diagram1
A26 - DLB - Remote Power Modules (3 RPM w/ Swtich Packs)Option2:Diagram1
A26 - DLB - Remote Power Modules (3 RPM w/ Swtich Packs)Option2:Diagram2
B6.7 - DLB - Remote Power Modules (1 RPM n/ Switch Packs):Diagram1
B6.7 - DLB - Remote Power Modules (1 RPM n/ Switch Packs):Diagram2
B6.7 - DLB - Remote Power Module (3 RPM n/Switch Pack):Diagram1
B6.7 - DLB - Remote Power Modules (1 RPM w/ Switch Packs):Diagram1
B6.7 - DLB - Remote Power Modules (1 RPM w/ Switch Packs):Diagram2
B6.7 - DLB - Remote Power Modules (2 RPM n/ Switch Pack):Diagram1
B6.7 - DLB - Remote Power Modules (2 RPM n/ Switch Pack):Diagram2
B6.7 - DLB - Remote Power Modules (2 RPM n/ Switch Pack):Diagram4
B6.7 - DLB - Remote Power Modules (2 RPM w/ Switch Packs):Diagram1

Mates 4413F1

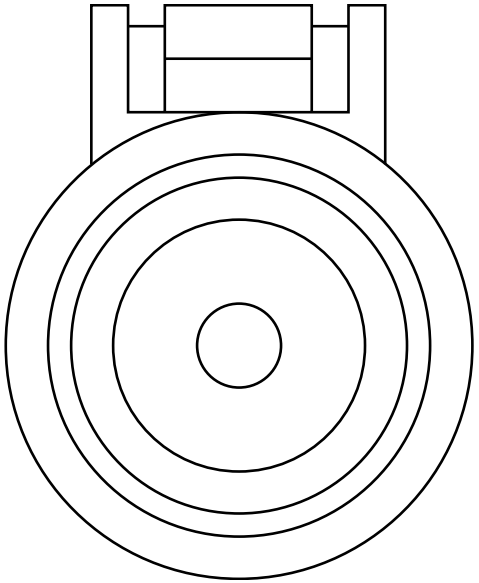

Name	Terminal Part Number	V-Min	Name	Wire Part Number	Wire CSA	Wire Spec	Wire Material description	Wire Color Description	Wire Length	End2 Terminal Part Number	End2 Pin Name	End2 Connect or
A	-	-	N14Z	2645255 R1	18.94	4.0	SGX FLEX 125C	RED	300.0	-	A	4412M
A	-	-	N14Z	2645255 R1	18.94	4.0	SGX FLEX 125C	RED	300.0	-	-	-

Connector Name	4412M
Part Number	3517760C1
Instances	A26 - DLB - Remote Power Module (3 RPM n/Switch Pack)Option2:Diagram1
Mates	4413F2

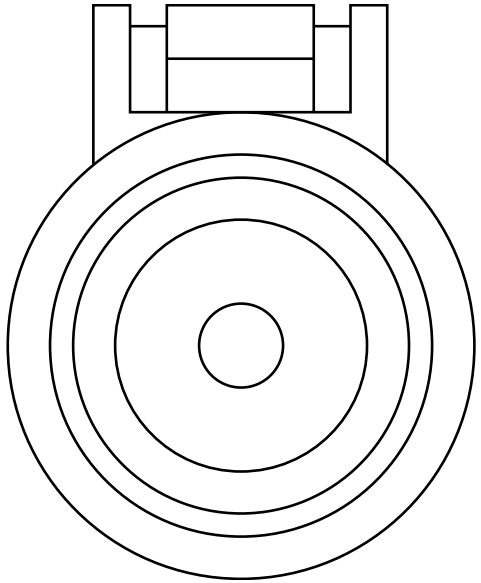

Name	Terminal Part Number	V-Min	Name	Wire Part Number	Wire CSA	Wire Spec	Wire Material description	Wire Color Description	Wire Length	End2 Terminal Part Number	End2 Pin Name	End2 Connect or
A	-	-	N14Z	2645255 R1	18.94	4.0	SGX FLEX 125C	RED	300.0	-	A	4412M

Connector Name	4412M
Part Number	3517760C1
Instances	B6.7 - DLB - Remote Power Module (3 RPM n/Switch Pack):Diagram1 B6.7 - DLB - Remote Power Modules (3 RPM w/ Swtich Packs):Diagram1 L9 - DLB - Remote Power Module (3 RPM n/Switch Pack):Diagram1 L9 - DLB - Remote Power Modules (3 RPM w/ Swtich Packs):Diagram1
Mates	MODU-RPM2-2050-01-02A

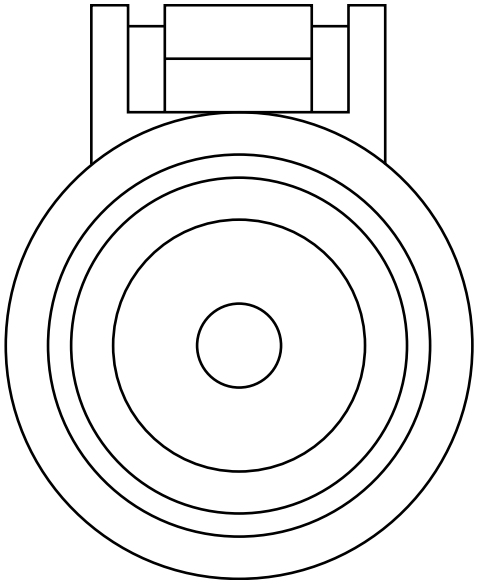

Name	Terminal Part Number	V-Min	Name	Wire Part Number	Wire CSA	Wire Spec	Wire Material description	Wire Color Description	Wire Length	End2 Terminal Part Number	End2 Pin Name	End2 Connect or
A	-	-	14D	2645255 R1	18.94	4.0	SGX FLEX 125C	RED	800.0	-	A	4412F

Connector Name 4413F1

Part Number 3517759C1

Instances A26 - DLB - Remote Power Modules (1 RPM n/ Switch Packs):Diagram1
A26 - DLB - Remote Power Modules (1 RPM w/ Switch Packs):Diagram1
A26 - DLB - Remote Power Modules (2 RPM n/ Switch Pack):Diagram1
A26 - DLB - Remote Power Modules (2 RPM n/ Switch Pack):Diagram2
A26 - DLB - Remote Power Modules (2 RPM n/ Switch Pack):Diagram3
A26 - DLB - Remote Power Modules (2 RPM w/ Switch Packs)Option2:Diagram1
A26 - DLB - Remote Power Modules (2 RPM w/ Switch Packs)Option2:Diagram2
A26 - DLB - Remote Power Modules (2 RPM w/ Switch Packs)Option2:Diagram3

Mates 4320M

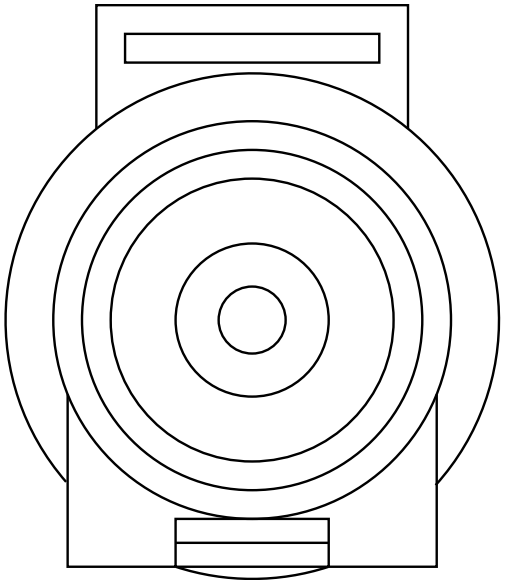

Name	Terminal Part Number	V-Min	Name	Wire Part Number	Wire CSA	Wire Spec	Wire Material description	Wire Color Description	Wire Length	End2 Terminal Part Number	End2 Pin Name	End2 Connector
A	-	-	ZB14CZ	2644026 R1	18.94	4.0	Std. Wall XLPE Battery Cable	RED	3695.0	-	A	4411M4
A	-	-	PB14CY	2644026 R1	18.94	4.0	Std. Wall XLPE Battery Cable	RED	2525.0	-	A	4411M1
A	-	-	PB14CY	2644026 R1	18.94	4.0	Std. Wall XLPE Battery Cable	RED	2525.0	-	A	4411M

Connector Name	4413F1
Part Number	3517759C1
Instances	A26 - DLB - Remote Power Module (3 RPM n/Switch Pack)Option2:Diagram1 A26 - DLB - Remote Power Module (3 RPM n/Switch Pack)Option2:Diagram2 A26 - DLB - Remote Power Modules (3 RPM w/ Swtich Packs):Diagram1 B6.7 - DLB - Remote Power Modules (2 RPM w/ Switch Packs):Diagram2
Mates	4412M

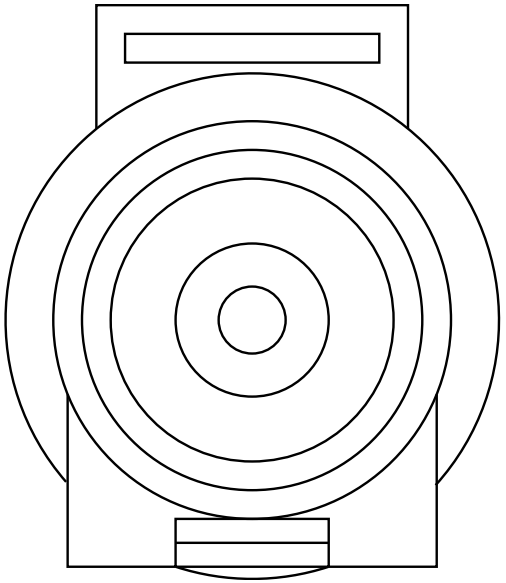

Name	Terminal Part Number	V-Min	Name	Wire Part Number	Wire CSA	Wire Spec	Wire Material description	Wire Color Description	Wire Length	End2 Terminal Part Number	End2 Pin Name	End2 Connect or
A	-	-	ZB14CZ	2644026 R1	18.94	4.0	Std. Wall XLPE Battery Cable	RED	3695.0	-	A	4411M
A	-	-	PB14CY	2644026 R1	18.94	4.0	Std. Wall XLPE Battery Cable	RED	2525.0	-	A	4411M1
A	-	-	ZB14CZ	2644026 R1	18.94	4.0	Std. Wall XLPE Battery Cable	RED	3695.0	-	A	4411M4

Connector Name 4413F1

Part Number 3517759C1

Short Description REMOTE POWER MODULE POSITIVE FEED

Instances A26 - DLB - Remote Power Module (3 RPM n/Switch Pack):Diagram1
A26 - DLB - Remote Power Modules (3 RPM w/ Swtich Packs)Option2:Diagram1
A26 - DLB - Remote Power Modules (3 RPM w/ Swtich Packs)Option2:Diagram2
B6.7 - DLB - Remote Power Modules (1 RPM n/ Switch Packs):Diagram1
B6.7 - DLB - Remote Power Modules (1 RPM n/ Switch Packs):Diagram2
B6.7 - DLB - Remote Power Module (3 RPM n/Switch Pack):Diagram1
B6.7 - DLB - Remote Power Modules (1 RPM w/ Switch Packs):Diagram1
B6.7 - DLB - Remote Power Modules (1 RPM w/ Switch Packs):Diagram2
B6.7 - DLB - Remote Power Modules (2 RPM n/ Switch Pack):Diagram1
B6.7 - DLB - Remote Power Modules (2 RPM n/ Switch Pack):Diagram2
B6.7 - DLB - Remote Power Modules (2 RPM n/ Switch Pack):Diagram4
B6.7 - DLB - Remote Power Modules (2 RPM w/ Switch Packs):Diagram1

Mates 4412M

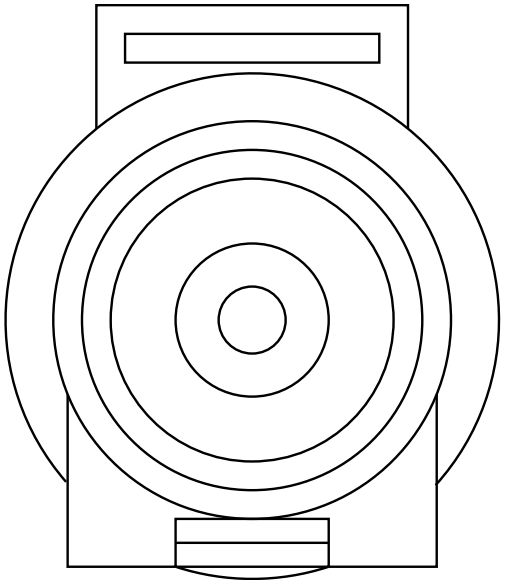

Name	Terminal Part Number	V-Min	Name	Wire Part Number	Wire CSA	Wire Spec	Wire Material description	Wire Color Description	Wire Length	End2 Terminal Part Number	End2 Pin Name	End2 Connect or
A	-	-	ZB14CZ	2644026 R1	18.94	4.0	Std. Wall XLPE Battery Cable	RED	3695.0	-	A	4411M4
A	-	-	ZB14CZ	2644026 R1	18.94	4.0	Std. Wall XLPE Battery Cable	RED	3695.0	-	A	4411M1

Name	Terminal Part Number	V-Min	Name	Wire Part Number	Wire CSA	Wire Spec	Wire Material description	Wire Color Description	Wire Length	End2 Terminal Part Number	End2 Pin Name	End2 Connect or
A	-	-	PB14CY	2644026 R1	18.94	4.0	Std. Wall XLPE Battery Cable	RED	2525.0	-	A	4411M1
A	-	-	PB14CY	2644026 R1	18.94	4.0	Std. Wall XLPE Battery Cable	RED	2525.0	-	-	-
A	-	-	ZB14CZ	2644026 R1	18.94	4.0	Std. Wall XLPE Battery Cable	RED	3695.0	-	A	4411M

Connector Name	4413F2
Part Number	3517759C1
Short Description	REMOTE POWER MODULE POSITIVE FEED
Instances	A26 - DLB - Remote Power Module (3 RPM n/Switch Pack):Diagram1 A26 - DLB - Remote Power Modules (3 RPM w/ Swtich Packs):Diagram1 A26 - DLB - Remote Power Modules (3 RPM w/ Swtich Packs)Option2:Diagram1
Mates	4412M

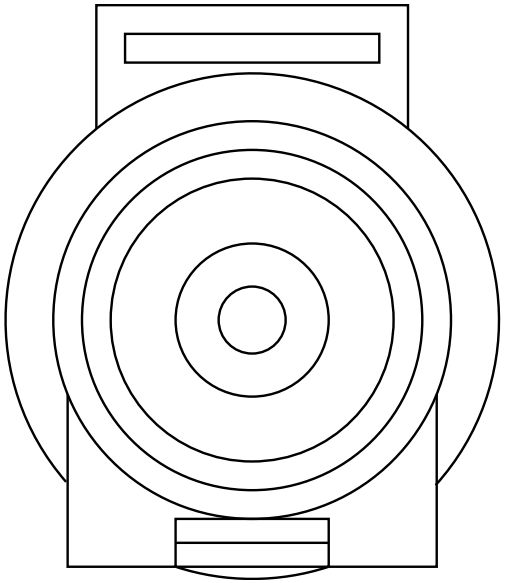

Name	Terminal Part Number	V-Min	Name	Wire Part Number	Wire CSA	Wire Spec	Wire Material description	Wire Color Description	Wire Length	End2 Terminal Part Number	End2 Pin Name	End2 Connect or
A	-	-	ZC14E	2644026 R1	18.94	4.0	Std. Wall XLPE Battery Cable	RED	3695.0	-	A	4411M6
A	-	-	PE14E	2645255 R1	18.94	4.0	SGX FLEX 125C	RED	2525.0	-	A	4411M2

Connector Name	4413F2
Part Number	3517759C1
Instances	A26 - DLB - Remote Power Module (3 RPM n/Switch Pack)Option2:Diagram1
Mates	4412M

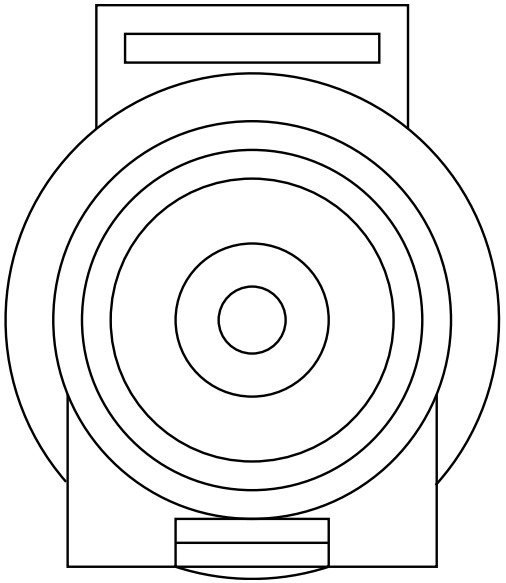

Name	Terminal Part Number	V-Min	Name	Wire Part Number	Wire CSA	Wire Spec	Wire Material description	Wire Color Description	Wire Length	End2 Terminal Part Number	End2 Pin Name	End2 Connect or
A	-	-	PE14E	2645255 R1	18.94	4.0	SGX FLEX 125C	RED	2525.0	-	A	4411M2

Connector Name 4413F2

Part Number 3517759C1

Instances B6.7 - DLB - Remote Power Module (3 RPM n/Switch Pack):Diagram1
B6.7 - DLB - Remote Power Modules (2 RPM n/ Switch Pack):Diagram1
B6.7 - DLB - Remote Power Modules (2 RPM n/ Switch Pack):Diagram2
B6.7 - DLB - Remote Power Modules (2 RPM w/ Switch Packs):Diagram1
B6.7 - DLB - Remote Power Modules (2 RPM w/ Switch Packs):Diagram2
B6.7 - DLB - Remote Power Modules (3 RPM w/ Swtich Packs):Diagram1
L9 - DLB - Remote Power Module (3 RPM n/Switch Pack):Diagram1
L9 - DLB - Remote Power Modules (3 RPM w/ Swtich Packs):Diagram1

Mates 4320M

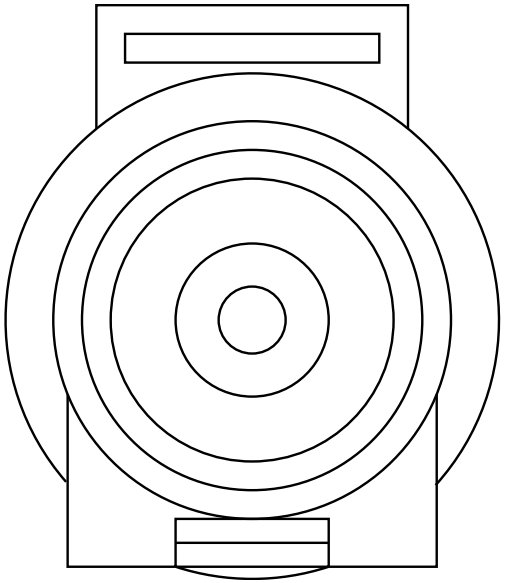

Name	Terminal Part Number	V-Min	Name	Wire Part Number	Wire CSA	Wire Spec	Wire Material description	Wire Color Description	Wire Length	End2 Terminal Part Number	End2 Pin Name	End2 Connect or
A	-	-	PC14H	2644026 R1	18.94	4.0	Std. Wall XLPE Battery Cable	RED	2525.0	-	A	4411M2
A	-	-	ZA14H	2644026 R1	18.94	4.0	Std. Wall XLPE Battery Cable	RED	3695.0	-	A	4411M5

Connector Name	4413F3
Part Number	3517759C1
Short Description	REMOTE POWER MODULE POSITIVE FEED
Instances	A26 - DLB - Remote Power Modules (2 RPM n/ Switch Pack)Option2:Diagram1 A26 - DLB - Remote Power Modules (2 RPM w/ Switch Packs):Diagram1
Mates	4320M

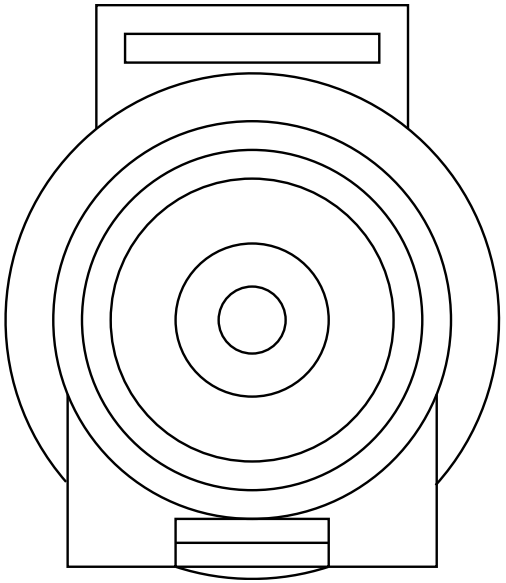

Name	Terminal Part Number	V-Min	Name	Wire Part Number	Wire CSA	Wire Spec	Wire Material description	Wire Color Description	Wire Length	End2 Terminal Part Number	End2 Pin Name	End2 Connect or
A	-	-	MU14CA	2645255 R1	18.94	4.0	SGX FLEX 125C	RED	3820.0	-	A	4414

Connector Name	4413F
Part Number	3517759C1
Short Description	REMOTE POWER MODULE POSITIVE FEED
Instances	A26 - DLB - Remote Power Modules (1 RPM n/ Switch Packs):Diagram2 A26 - DLB - Remote Power Modules (1 RPM w/ Switch Packs):Diagram2 A26 - DLB - Remote Power Modules (2 RPM n/ Switch Pack):Diagram2 A26 - DLB - Remote Power Modules (2 RPM n/ Switch Pack)Option2:Diagram1 A26 - DLB - Remote Power Modules (2 RPM w/ Switch Packs):Diagram1 A26 - DLB - Remote Power Modules (2 RPM w/ Switch Packs)Option2:Diagram2 B6.7 - DLB - Remote Power Modules (2 RPM n/ Switch Pack):Diagram3 B6.7 - DLB - Remote Power Modules (2 RPM w/ Switch Packs):Diagram3 B6.7 - DLB - Remote Power Modules (2 RPM w/ Switch Packs):Diagram4 B6.7 - DLB - Remote Power Modules (3 RPM w/ Swtich Packs):Diagram1 L9 - DLB - Remote Power Module (3 RPM n/Switch Pack):Diagram1 L9 - DLB - Remote Power Modules (1 RPM n/ Switch Packs):Diagram1 L9 - DLB - Remote Power Modules (1 RPM n/ Switch Packs):Diagram2 L9 - DLB - Remote Power Modules (1 RPM w/ Switch Packs):Diagram1 L9 - DLB - Remote Power Modules (1 RPM w/ Switch Packs):Diagram2 L9 - DLB - Remote Power Modules (2 RPM n/ Switch Pack):Diagram1 L9 - DLB - Remote Power Modules (2 RPM n/ Switch Pack):Diagram2 L9 - DLB - Remote Power Modules (2 RPM n/ Switch Pack):Diagram3 L9 - DLB - Remote Power Modules (2 RPM n/ Switch Pack):Diagram4 L9 - DLB - Remote Power Modules (2 RPM w/ Switch Packs):Diagram1

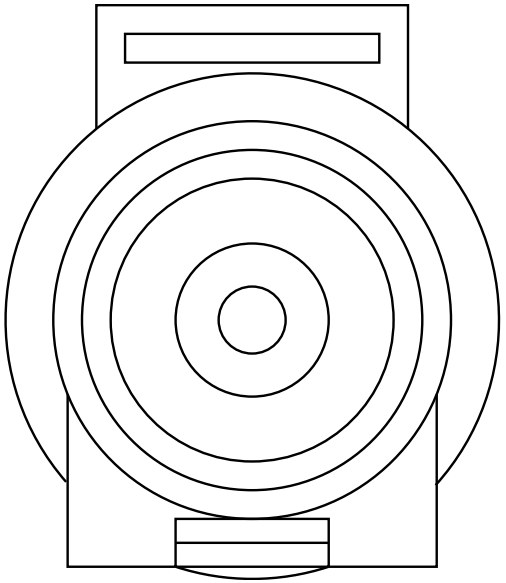

L9 - DLB - Remote Power Modules (2 RPM w/ Switch Packs):Diagram2
L9 - DLB - Remote Power Modules (2 RPM w/ Switch Packs):Diagram3
L9 - DLB - Remote Power Modules (2 RPM w/ Switch Packs):Diagram4
L9 - DLB - Remote Power Modules (3 RPM w/ Swtich Packs):Diagram1

Mates 4412M

Name	Terminal Part Number	V-Min	Name	Wire Part Number	Wire CSA	Wire Spec	Wire Material description	Wire Color Description	Wire Length	End2 Terminal Part Number	End2 Pin Name	End2 Connect or
A	-	-	ZB14CZ	2644026 R1	18.94	4.0	Std. Wall XLPE Battery Cable	RED	3695.0	-	A	4411M
A	-	-	PB14CY	2644026 R1	18.94	4.0	Std. Wall XLPE Battery Cable	RED	2525.0	-	A	4411M1
A	-	-	MU14CA	2645255 R1	18.94	4.0	SGX FLEX 125C	RED	3820.0	-	A	4414
A	-	-	PB14CY	2644026 R1	18.94	4.0	Std. Wall XLPE Battery Cable	RED	2525.0	-	A	4411M5
A	-	-	PB14CY	2644026 R1	18.94	4.0	Std. Wall XLPE Battery Cable	RED	2525.0	-	A	4411
A	-	-	ZB14CZ	2644026 R1	18.94	4.0	Std. Wall XLPE Battery Cable	RED	3695.0	-	A	4411M1
A	-	-	MN14C	2644026 R1	18.94	4.0	Std. Wall XLPE Battery Cable	RED	3820.0	-	A	4411

Connector Name	4413F
Part Number	3517759C1
Short Description	RPM 3 POSITIVE FEED-OUTSIDE CAB
Instances	A26 - DLB - Remote Power Module (3 RPM n/Switch Pack):Diagram1 A26 - DLB - Remote Power Modules (3 RPM w/ Swtich Packs):Diagram1
Mates	4411M6

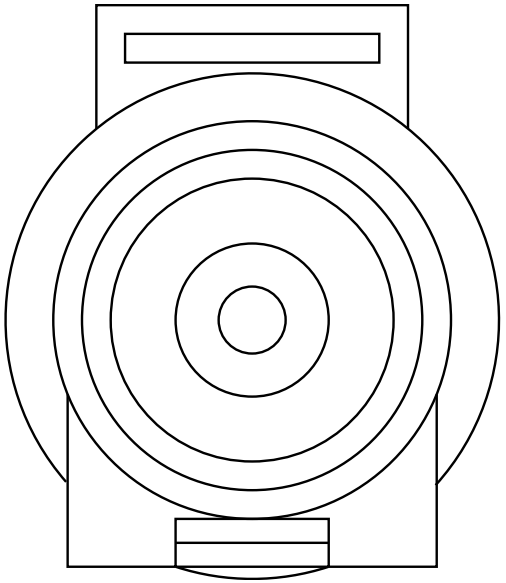

Name	Terminal Part Number	V-Min	Name	Wire Part Number	Wire CSA	Wire Spec	Wire Material description	Wire Color Description	Wire Length	End2 Terminal Part Number	End2 Pin Name	End2 Connect or
A	-	-	14E	2645255 R1	18.94	4.0	SGX FLEX 125C	RED	800.0	-	A	4413M

Connector Name 4413F

Part Number 3517759C1

Instances A26 - DLB - Remote Power Module (3 RPM n/Switch Pack)Option2:Diagram2
A26 - DLB - Remote Power Modules (3 RPM w/ Swtich Packs)Option2:Diagram2
B6.7 - DLB - Remote Power Modules (1 RPM n/ Switch Packs):Diagram3
B6.7 - DLB - Remote Power Module (3 RPM n/Switch Pack):Diagram1
B6.7 - DLB - Remote Power Modules (1 RPM w/ Switch Packs):Diagram3
B6.7 - DLB - Remote Power Modules (2 RPM n/ Switch Pack):Diagram3
B6.7 - DLB - Remote Power Modules (3 RPM w/ Swtich Packs):Diagram1
L9 - DLB - Remote Power Module (3 RPM n/Switch Pack):Diagram1
L9 - DLB - Remote Power Modules (3 RPM w/ Swtich Packs):Diagram1

Mates 4320M

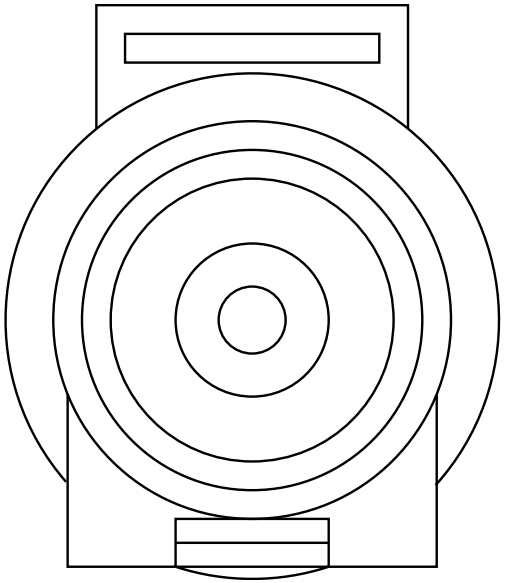

Name	Terminal Part Number	V-Min	Name	Wire Part Number	Wire CSA	Wire Spec	Wire Material description	Wire Color Description	Wire Length	End2 Terminal Part Number	End2 Pin Name	End2 Connect or
A	-	-	MN14C	2644026 R1	18.94	4.0	Std. Wall XLPE Battery Cable	RED	3820.0	-	A	4411
A	-	-	MN14C	2644026 R1	18.94	4.0	Std. Wall XLPE Battery Cable	RED	3820.0	-	-	-

Connector Name	4413M
Part Number	3517760C1
Instances	A26 - DLB - Remote Power Module (3 RPM n/Switch Pack):Diagram1 A26 - DLB - Remote Power Modules (3 RPM w/ Swtich Packs):Diagram1
Mates	MODU-RPM3-2050-01-03A

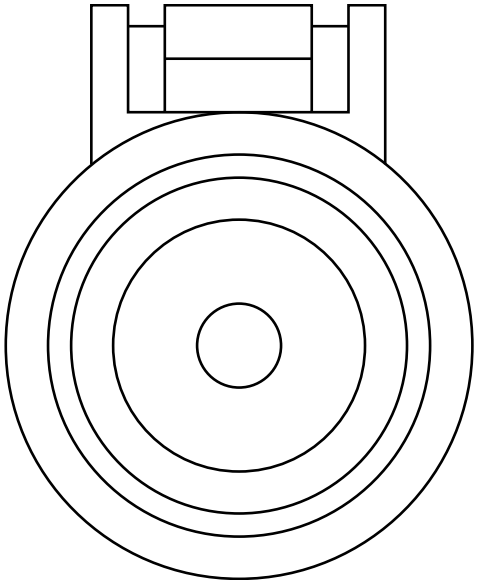

Name	Terminal Part Number	V-Min	Name	Wire Part Number	Wire CSA	Wire Spec	Wire Material description	Wire Color Description	Wire Length	End2 Terminal Part Number	End2 Pin Name	End2 Connect or
A	-	-	14E	2645255 R1	18.94	4.0	SGX FLEX 125C	RED	800.0	-	A	4413F

Connector Name	4414
Part Number	3517760C1
Short Description	REMOTE PWR MDL +VE FEED
Instances	A26 - DLB - Remote Power Modules (2 RPM n/ Switch Pack)Option2:Diagram1 A26 - DLB - Remote Power Modules (2 RPM w/ Switch Packs):Diagram1 B6.7 - DLB - Remote Power Modules (2 RPM n/ Switch Pack):Diagram3 B6.7 - DLB - Remote Power Modules (2 RPM w/ Switch Packs):Diagram3 L9 - DLB - Remote Power Modules (2 RPM n/ Switch Pack):Diagram3 L9 - DLB - Remote Power Modules (2 RPM w/ Switch Packs):Diagram3
Mates	4411N

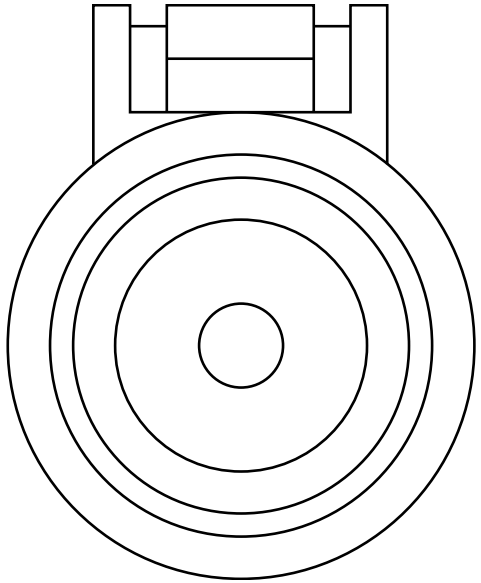

Name	Terminal Part Number	V-Min	Name	Wire Part Number	Wire CSA	Wire Spec	Wire Material description	Wire Color Description	Wire Length	End2 Terminal Part Number	End2 Pin Name	End2 Connect or
A	-	-	MU14CA	2645255 R1	18.94	4.0	SGX FLEX 125C	RED	3820.0	-	A	4413F
A	-	-	MU14CA	2645255 R1	18.94	4.0	SGX FLEX 125C	RED	3820.0	-	A	4413F3

Connector Name	4450AM
Part Number	2039311C91
Short Description	BODY BUILDER CONNECTION
Instances	A26 - Body Builder Lighting - Combined Turn and Stop Lamps (Automatic):Diagram1-Option 3 (End-of-Frame, W/08HAE) A26 - Body Builder Lighting - Combined Turn and Stop Lamps (Manual):Diagram1-Option 3 (End-of-Frame, W/08HAE) A26/B6.7/L9 - Body Builder Aux Power (In Cab, BOC, or EOF):Diagram1-Option 3 (End-of-Frame, W/08HAE) B6.7 - Body Builder Lighting - Combined Turn and Stop Lamps (Automatic):Diagram3 B6.7 - Body Builder Lighting - Combined Turn and Stop Lamps (Manual):Diagram3 L9 - Body Builder Lighting - Combined Turn and Stop Lamps (Automatic):Diagram3 L9 - Body Builder Lighting - Combined Turn and Stop Lamps (Manual):Diagram3 L9 - Body Builder Lighting - Combined Turn and Stop Lamps (Manual):Diagram6
Mates	4450BF

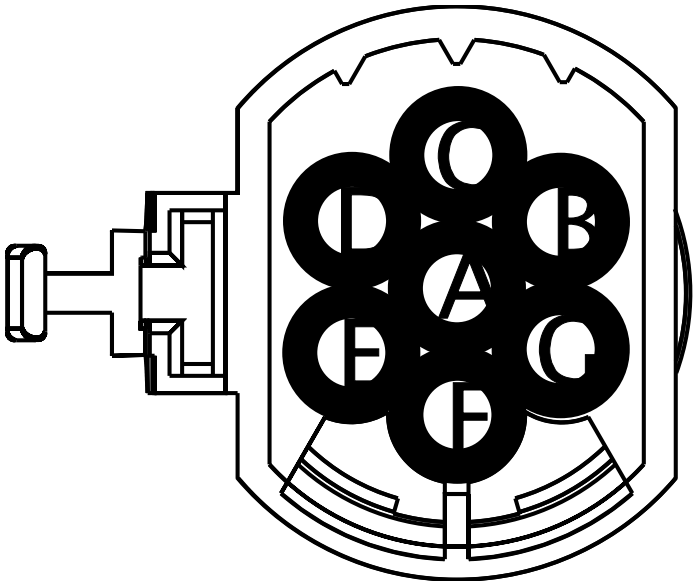

Name	Terminal Part Number	V-Min	Name	Wire Part Number	Wire CSA	Wire Spec	Wire Material description	Wire Color Description	Wire Length	End2 Terminal Part Number	End2 Pin Name	End2 Connector
A	-	-	PV68BB	2643688 R1	1.91	14.0	Std. Wall XLPE Primary Cable	BROWN	4430.0	-	71	1701F
B	-	-	PV56BB	2643684 R1	1.16	16.0	Std. Wall XLPE Primary Cable	YELLOW 2	4430.0	-	12	1701F
C	-	-	PV57BB	2643678 R1	1.16	16.0	Std. Wall XLPE Primary Cable	LIGHT GREEN	4430.0	-	63	1701F
D	-	-	PV54BB	2643688 R1	1.91	14.0	Std. Wall XLPE Primary Cable	BROWN	4430.0	-	74	1701F

Name	Terminal Part Number	V-Min	Name	Wire Part Number	Wire CSA	Wire Spec	Wire Material description	Wire Color Description	Wire Length	End2 Terminal Part Number	End2 Pin Name	End2 Connector
E	-	-	PV71BB	2643806 R1	1.16	16.0	Std. Wall XLPE Primary Cable	LIGHT BLUE	4430.0	-	73	1701F
F	-	-	PV12BB	2643694 R1	1.91	14.0	Std. Wall XLPE Primary Cable	LIGHT BLUE	4484.0	-	75	1701F
G	-	-	PV11-GBB	2643787 R1	3.01	12.0	Std. Wall XLPE Primary Cable	WHITE	2450.0	-	-	-

Connector Name	4450BF
Part Number	2039312C91
Short Description	BODY BUILDER CONNECTION
Instances	A26 - Body Builder Lighting - Combined Turn and Stop Lamps (Automatic):Diagram1-Option 3 (End-of-Frame, W/08HAE) A26 - Body Builder Lighting - Combined Turn and Stop Lamps (Manual):Diagram1-Option 3 (End-of-Frame, W/08HAE) A26/B6.7/L9 - Body Builder Aux Power (In Cab, BOC, or EOF):Diagram1-Option 3 (End-of-Frame, W/08HAE) B6.7 - Body Builder Lighting - Combined Turn and Stop Lamps (Automatic):Diagram3 B6.7 - Body Builder Lighting - Combined Turn and Stop Lamps (Manual):Diagram3 L9 - Body Builder Lighting - Combined Turn and Stop Lamps (Automatic):Diagram3 L9 - Body Builder Lighting - Combined Turn and Stop Lamps (Manual):Diagram3 L9 - Body Builder Lighting - Combined Turn and Stop Lamps (Manual):Diagram6
Mates	4450AM

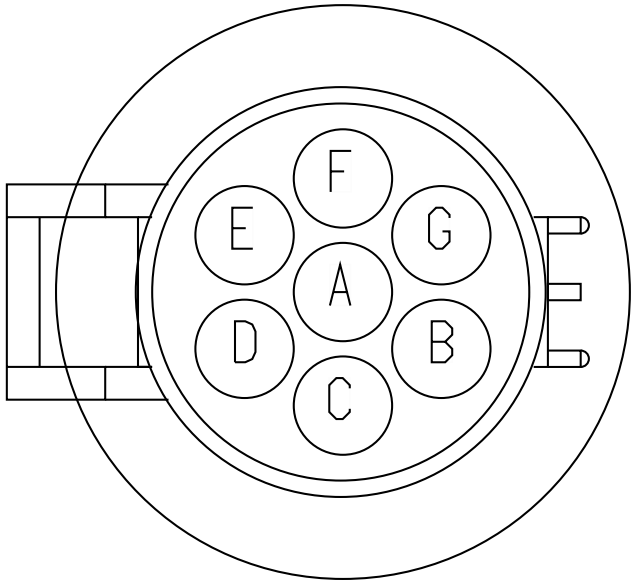

Name	Terminal Part Number	V-Min	Name	Wire Part Number	Wire CSA	Wire Spec	Wire Material description	Wire Color Description	Wire Length	End2 Terminal Part Number	End2 Pin Name	End2 Connector
A	-	-	RX68BB	2643688 R1	1.91	14.0	Std. Wall XLPE Primary Cable	BROWN	2625.0	-	A	R01-4460BM
A	-	-	RX68BB	2643688 R1	1.91	14.0	Std. Wall XLPE Primary Cable	BROWN	2625.0	-	A	4460BM
B	-	-	RX56BB	2643682 R1	1.16	16.0	Std. Wall XLPE Primary Cable	ORANGE	2625.0	-	B	R01-4460BM
B	-	-	RX56BB	2643682 R1	1.16	16.0	Std. Wall XLPE Primary Cable	ORANGE	2625.0	-	B	4460BM

Name	Terminal Part Number	V-Min	Name	Wire Part Number	Wire CSA	Wire Spec	Wire Material description	Wire Color Description	Wire Length	End2 Terminal Part Number	End2 Pin Name	End2 Connector
C	-	-	RX57BB	2643682 R1	1.16	16.0	Std. Wall XLPE Primary Cable	ORANGE	2625.0	-	C	R01-4460BM
C	-	-	RX57BB	2643682 R1	1.16	16.0	Std. Wall XLPE Primary Cable	ORANGE	2625.0	-	C	4460BM
D	-	-	RX58BB	2643688 R1	1.91	14.0	Std. Wall XLPE Primary Cable	BROWN	2625.0	-	D	R01-4460BM
D	-	-	RX58BB	2643688 R1	1.91	14.0	Std. Wall XLPE Primary Cable	BROWN	2625.0	-	D	4460BM
E	-	-	RX71BB	2643682 R1	1.16	16.0	Std. Wall XLPE Primary Cable	ORANGE	2625.0	-	E	R01-4460BM
E	-	-	RX71BB	2643682 R1	1.16	16.0	Std. Wall XLPE Primary Cable	ORANGE	2625.0	-	E	4460BM
F	-	-	RX12BB	2643694 R1	1.91	14.0	Std. Wall XLPE Primary Cable	LIGHT BLUE	2652.0	-	F	R01-4460BM
G	-	-	RX11-GBB	2643787 R1	3.01	12.0	Std. Wall XLPE Primary Cable	WHITE	2625.0	-	G	R01-4460BM
G	-	-	RX11-GBB	2643787 R1	3.01	12.0	Std. Wall XLPE Primary Cable	WHITE	2625.0	-	G	4460BM

Connector Name 4450BM

Part Number 1686834C1

Instances B6.7 - Body Builder Lighting - Combined Turn and Stop Lamps (Automatic):Diagram3
B6.7 - Body Builder Lighting - Combined Turn and Stop Lamps (Manual):Diagram3
L9 - Body Builder Lighting - Combined Turn and Stop Lamps (Automatic):Diagram3
L9 - Body Builder Lighting - Combined Turn and Stop Lamps (Manual):Diagram3
L9 - Body Builder Lighting - Combined Turn and Stop Lamps (Manual):Diagram6

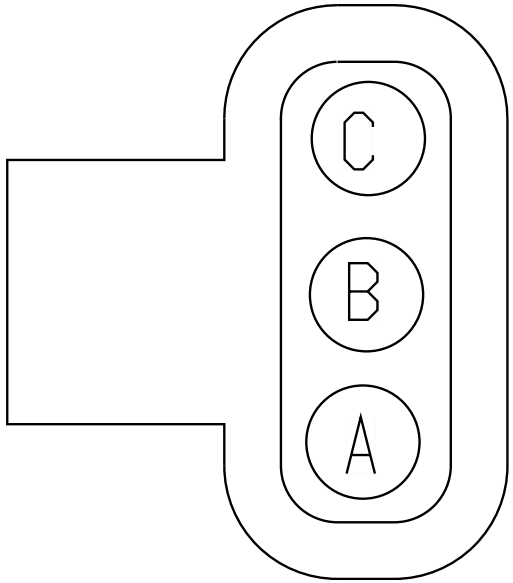

Name	Terminal Part Number	V-Min	Name	Wire Part Number	Wire CSA	Wire Spec	Wire Material description	Wire Color Description	Wire Length	End2 Terminal Part Number	End2 Pin Name	End2 Connector
A	-	-	RX56BC	2643682 R1	1.16	16.0	Std. Wall XLPE Primary Cable	ORANGE	2625.0	-	A	4460BF
B	-	-	RX57BC	2643682 R1	1.16	16.0	Std. Wall XLPE Primary Cable	ORANGE	2625.0	-	B	4460BF
C	-	-	RX70BB	2643690 R1	1.91	14.0	Std. Wall XLPE Primary Cable	ORANGE	2625.0	-	C	4460BF

Connector Name	4450D
Part Number	2039312C91
Short Description	BODY BUILDER CONNECTION
Instances	A26 - Body Builder Lighting - BOC, 08HBX (Automatic):Diagram1 A26 - Body Builder Lighting - BOC, 08HBX (Manual):Diagram1
Mates	4450M

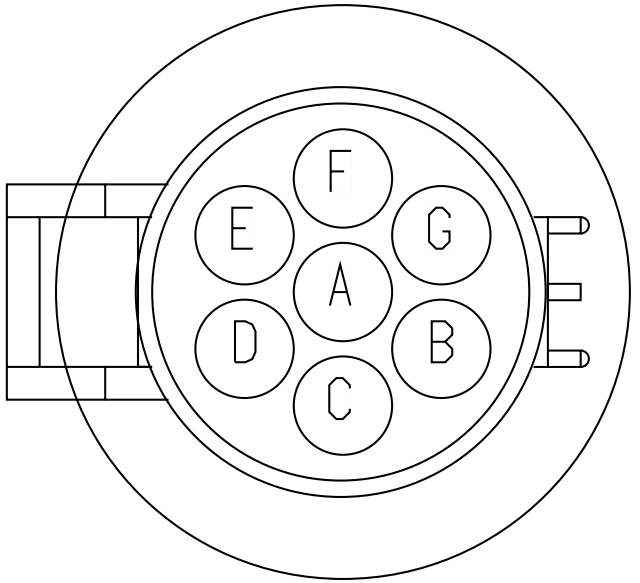

Name	Terminal Part Number	V-Min	Name	Wire Part Number	Wire CSA	Wire Spec	Wire Material description	Wire Color Description	Wire Length	End2 Terminal Part Number	End2 Pin Name	End2 Connect or
A	-	-	NV68BBA	2643688 R1	1.91	14.0	Std. Wall XLPE Primary Cable	BROWN	200.0	-	A	4450E
B	-	-	NV56BBA	2643684 R1	1.16	16.0	Std. Wall XLPE Primary Cable	YELLOW 2	200.0	-	B	4450E
C	-	-	NV57BBA	2643678 R1	1.16	16.0	Std. Wall XLPE Primary Cable	LIGHT GREEN	200.0	-	C	4450E
D	-	-	NV54BBA	2643688 R1	1.91	14.0	Std. Wall XLPE Primary Cable	BROWN	200.0	-	D	4450E

Name	Terminal Part Number	V-Min	Name	Wire Part Number	Wire CSA	Wire Spec	Wire Material description	Wire Color Description	Wire Length	End2 Terminal Part Number	End2 Pin Name	End2 Connect or
E	-	-	NV71BBA	2643806 R1	1.16	16.0	Std. Wall XLPE Primary Cable	LIGHT BLUE	200.0	-	E	4450E
G	-	-	NV11A-GD	2643787 R1	3.01	12.0	Std. Wall XLPE Primary Cable	WHITE	200.0	-	G	4450E

Connector Name 4450E

Part Number BLUNT_SL_VC

Instances A26 - Body Builder Lighting - BOC, 08HBX (Automatic):Diagram1
A26 - Body Builder Lighting - BOC, 08HBX (Manual):Diagram1

Mates BLNT-Body_Builder-1036-05- 05

Name	Terminal Part Number	V-Min	Name	Wire Part Number	Wire CSA	Wire Spec	Wire Material description	Wire Color Description	Wire Length	End2 Terminal Part Number	End2 Pin Name	End2 Connector
A	-	-	NV68BBA	2643688 R1	1.91	14.0	Std. Wall XLPE Primary Cable	BROWN	200.0	-	A	4450D
B	-	-	NV56BBA	2643684 R1	1.16	16.0	Std. Wall XLPE Primary Cable	YELLOW 2	200.0	-	B	4450D
C	-	-	NV57BBA	2643678 R1	1.16	16.0	Std. Wall XLPE Primary Cable	LIGHT GREEN	200.0	-	C	4450D
D	-	-	NV54BBA	2643688 R1	1.91	14.0	Std. Wall XLPE Primary Cable	BROWN	200.0	-	D	4450D
E	-	-	NV71BBA	2643806 R1	1.16	16.0	Std. Wall XLPE Primary Cable	LIGHT BLUE	200.0	-	E	4450D
G	-	-	NV11A-GD	2643787 R1	3.01	12.0	Std. Wall XLPE Primary Cable	WHITE	200.0	-	G	4450D

Connector Name	4450M
Part Number	2039311C91
Short Description	BODY BUILDER CONNECTION
Instances	A26 - Body Builder Lighting - BOC, 08HBX (Automatic):Diagram1 A26 - Body Builder Lighting - BOC, 08HBX (Manual):Diagram1
Mates	4450D

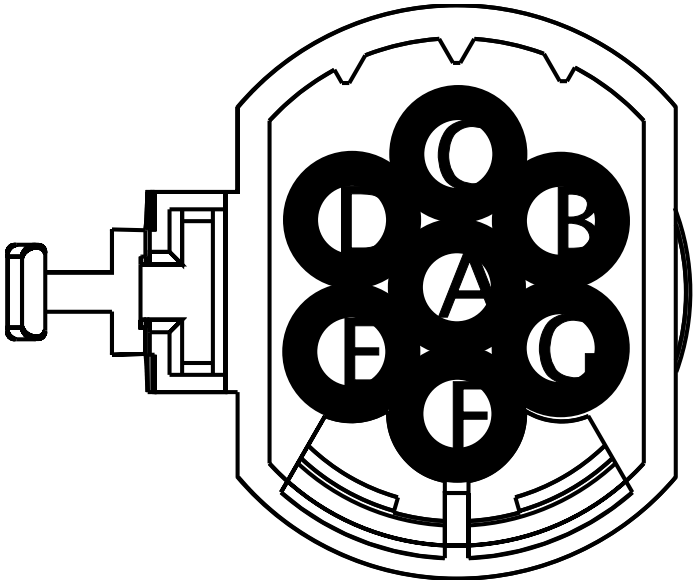

Name	Terminal Part Number	V-Min	Name	Wire Part Number	Wire CSA	Wire Spec	Wire Material description	Wire Color Description	Wire Length	End2 Terminal Part Number	End2 Pin Name	End2 Connect or
A	-	-	ND68BB	2643688 R1	1.91	14.0	Std. Wall XLPE Primary Cable	BROWN	2230.0	-	71	1701F
B	-	-	ND56BB	2643684 R1	1.16	16.0	Std. Wall XLPE Primary Cable	YELLOW 2	2230.0	-	12	1701F
C	-	-	ND57BB	2643678 R1	1.16	16.0	Std. Wall XLPE Primary Cable	LIGHT GREEN	2230.0	-	63	1701F
D	-	-	ND54BB	2643688 R1	1.91	14.0	Std. Wall XLPE Primary Cable	BROWN	2230.0	-	74	1701F

Name	Terminal Part Number	V-Min	Name	Wire Part Number	Wire CSA	Wire Spec	Wire Material description	Wire Color Description	Wire Length	End2 Terminal Part Number	End2 Pin Name	End2 Connect or
E	-	-	ND71BB	2643806 R1	1.16	16.0	Std. Wall XLPE Primary Cable	LIGHT BLUE	2230.0	-	73	1701F
G	-	-	ND11-GD	2643787 R1	3.01	12.0	Std. Wall XLPE Primary Cable	WHITE	250.0	-	-	-

Connector Name 4450M

Part Number 2039311C91

Instances B6.7 - Body Builder Lighting - Combined Turn and Stop Lamps (Automatic):Diagram1
B6.7 - Body Builder Lighting - Combined Turn and Stop Lamps (Manual):Diagram1
L9 - Body Builder Lighting - Combined Turn and Stop Lamps (Automatic):Diagram1
L9 - Body Builder Lighting - Combined Turn and Stop Lamps (Automatic):Diagram2
L9 - Body Builder Lighting - Combined Turn and Stop Lamps (Manual):Diagram1
L9 - Body Builder Lighting - Combined Turn and Stop Lamps (Manual):Diagram2
L9 - Body Builder Lighting - Combined Turn and Stop Lamps (Manual):Diagram4
L9 - Body Builder Lighting - Combined Turn and Stop Lamps (Manual):Diagram5

Mates CONN-BODY_BUILDER-1036-01- 02A

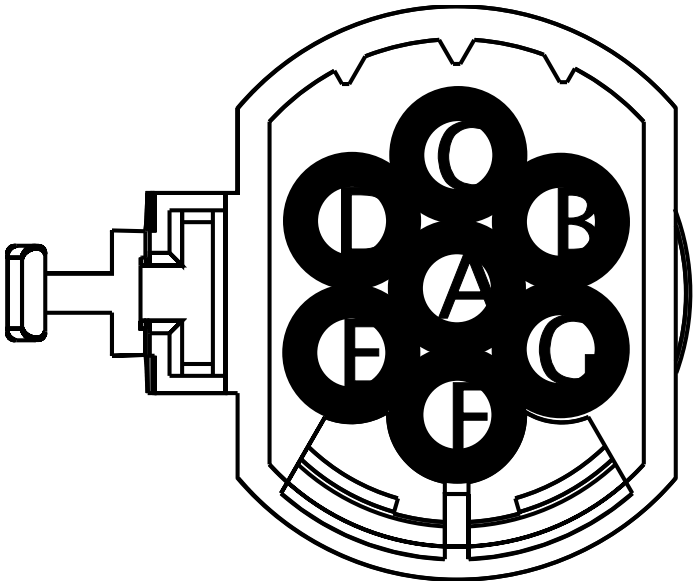

Name	Terminal Part Number	V-Min	Name	Wire Part Number	Wire CSA	Wire Spec	Wire Material description	Wire Color Description	Wire Length	End2 Terminal Part Number	End2 Pin Name	End2 Connect or
A	-	-	VT68TB	3510308 R1	3.01	12.0	Thin Wall XLPE Primary Cable	BROWN	4160.0	-	X	-
A	-	-	VM68TB	3510308 R1	3.01	12.0	Thin Wall XLPE Primary Cable	BROWN	4160.0	-	X	-
A	-	-	ND68BB	2643688 R1	1.91	14.0	Std. Wall XLPE Primary Cable	BROWN	2230.0	-	71	1701F
B	-	-	YW56BB	3510336 R1	1.16	16.0	Thin Wall XLPE Primary Cable	YELLOW 2	3420.0	-	-	-

Name	Terminal Part Number	V-Min	Name	Wire Part Number	Wire CSA	Wire Spec	Wire Material description	Wire Color Description	Wire Length	End2 Terminal Part Number	End2 Pin Name	End2 Connector
B	-	-	ND56BB	2643684 R1	1.16	16.0	Std. Wall XLPE Primary Cable	YELLOW 2	2230.0	-	12	1701F
C	-	-	YW57BB	3510300 R1	1.16	16.0	Thin Wall XLPE Primary Cable	LIGHT GREEN	3420.0	-	-	-
C	-	-	ND57BB	2643678 R1	1.16	16.0	Std. Wall XLPE Primary Cable	LIGHT GREEN	2230.0	-	63	1701F
D	-	-	VM58TB	3510308 R1	3.01	12.0	Thin Wall XLPE Primary Cable	BROWN	4130.0	-	X	-
D	-	-	VT58TB	3510308 R1	3.01	12.0	Thin Wall XLPE Primary Cable	BROWN	4130.0	-	X	-
D	-	-	ND54BB	2643688 R1	1.91	14.0	Std. Wall XLPE Primary Cable	BROWN	2230.0	-	74	1701F
E	-	-	ZK71BB	3510342 R1	1.16	16.0	Thin Wall XLPE Primary Cable	LIGHT BLUE	3800.0	-	X	-
E	-	-	ND71BB	2643806 R1	1.16	16.0	Std. Wall XLPE Primary Cable	LIGHT BLUE	2230.0	-	X	-

Name	Terminal Part Number	V-Min	Name	Wire Part Number	Wire CSA	Wire Spec	Wire Material description	Wire Color Description	Wire Length	End2 Terminal Part Number	End2 Pin Name	End2 Connect or
G	-	-	YZ11-GBJ	3510362 R1	3.01	12.0	Thin Wall XLPE Primary Cable	WHITE	4010.0	-	-	-
G	-	-	ND11-GD	2643787 R1	3.01	12.0	Std. Wall XLPE Primary Cable	WHITE	250.0	-	-	-

Connector Name 4450M

Part Number 2039311C91

Instances B6.7 - Body Builder Lighting - Combined Turn and Stop Lamps (Automatic):Diagram2
B6.7 - Body Builder Lighting - Combined Turn and Stop Lamps (Manual):Diagram2

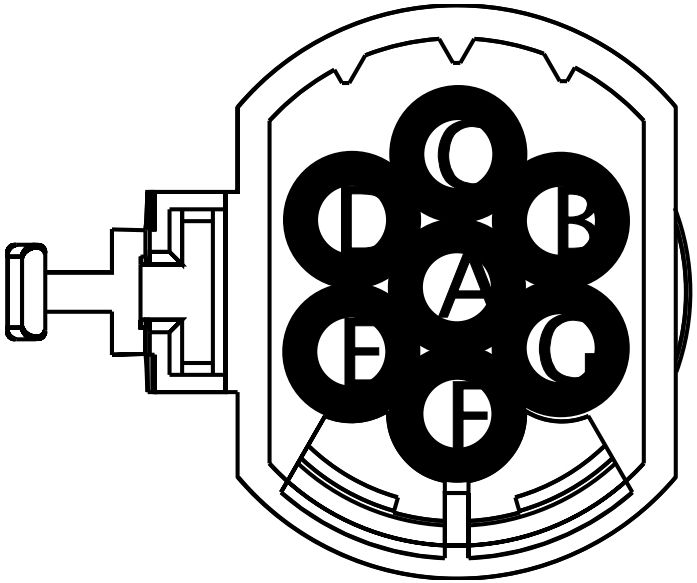

Name	Terminal Part Number	V-Min	Name	Wire Part Number	Wire CSA	Wire Spec	Wire Material description	Wire Color Description	Wire Length	End2 Terminal Part Number	End2 Pin Name	End2 Connect or
A	-	-	ND68BB	2643688 R1	1.91	14.0	Std. Wall XLPE Primary Cable	BROWN	2230.0	-	71	1701F
B	-	-	ND56BB	2643684 R1	1.16	16.0	Std. Wall XLPE Primary Cable	YELLOW 2	2230.0	-	12	1701F
C	-	-	ND57BB	2643678 R1	1.16	16.0	Std. Wall XLPE Primary Cable	LIGHT GREEN	2230.0	-	63	1701F
D	-	-	ND54BB	2643688 R1	1.91	14.0	Std. Wall XLPE Primary Cable	BROWN	2230.0	-	74	1701F

Name	Terminal Part Number	V-Min	Name	Wire Part Number	Wire CSA	Wire Spec	Wire Material description	Wire Color Description	Wire Length	End2 Terminal Part Number	End2 Pin Name	End2 Connect or
E	-	-	ND71BB	2643806 R1	1.16	16.0	Std. Wall XLPE Primary Cable	LIGHT BLUE	2230.0	-	73	1701F
G	-	-	ND11-GD	2643787 R1	3.01	12.0	Std. Wall XLPE Primary Cable	WHITE	250.0	-	-	-

Connector Name	4460AM
Part Number	1686834C1
Short Description	BODY BUILDER TURN/STOP
Instances	A26 - Body Builder Lighting - Combined Turn and Stop Lamps (Automatic):Diagram1-Option 3 (End-of-Frame, W/08HAE) A26 - Body Builder Lighting - Combined Turn and Stop Lamps (Manual):Diagram1-Option 3 (End-of-Frame, W/08HAE) B6.7 - Body Builder Lighting - Combined Turn and Stop Lamps (Automatic):Diagram3 B6.7 - Body Builder Lighting - Combined Turn and Stop Lamps (Manual):Diagram3 L9 - Body Builder Lighting - Combined Turn and Stop Lamps (Automatic):Diagram3 L9 - Body Builder Lighting - Combined Turn and Stop Lamps (Manual):Diagram3 L9 - Body Builder Lighting - Combined Turn and Stop Lamps (Manual):Diagram6
Mates	4460BF

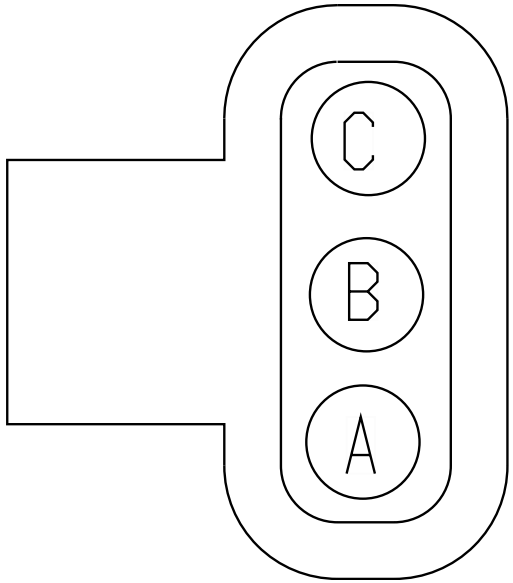

Name	Terminal Part Number	V-Min	Name	Wire Part Number	Wire CSA	Wire Spec	Wire Material description	Wire Color Description	Wire Length	End2 Terminal Part Number	End2 Pin Name	End2 Connect or
A	-	-	PV56BC	2643684 R1	1.16	16.0	Std. Wall XLPE Primary Cable	YELLOW 2	4405.0	-	42	1701F
B	-	-	PV57BC	2643678 R1	1.16	16.0	Std. Wall XLPE Primary Cable	LIGHT GREEN	4405.0	-	64	1701F
C	-	-	PV70BB	2643686 R1	1.91	14.0	Std. Wall XLPE Primary Cable	RED	4405.0	-	72	1701F

Connector Name	4460BF
Part Number	3553961C1
Short Description	BODY BUILDER TURN/STOP
Instances	A26 - Body Builder Lighting - Combined Turn and Stop Lamps (Automatic):Diagram1-Option 3 (End-of-Frame, W/08HAE) A26 - Body Builder Lighting - Combined Turn and Stop Lamps (Manual):Diagram1-Option 3 (End-of-Frame, W/08HAE) B6.7 - Body Builder Lighting - Combined Turn and Stop Lamps (Automatic):Diagram3 B6.7 - Body Builder Lighting - Combined Turn and Stop Lamps (Manual):Diagram3 L9 - Body Builder Lighting - Combined Turn and Stop Lamps (Automatic):Diagram3 L9 - Body Builder Lighting - Combined Turn and Stop Lamps (Manual):Diagram3 L9 - Body Builder Lighting - Combined Turn and Stop Lamps (Manual):Diagram6
Mates	4460AM

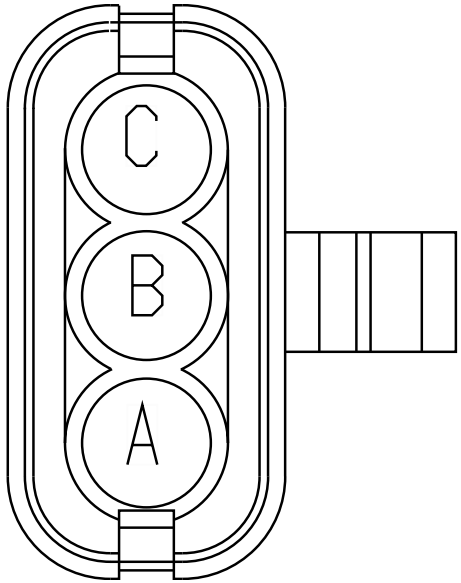

Name	Terminal Part Number	V-Min	Name	Wire Part Number	Wire CSA	Wire Spec	Wire Material description	Wire Color Description	Wire Length	End2 Terminal Part Number	End2 Pin Name	End2 Connector
A	-	-	RX56BC	2643682 R1	1.16	16.0	Std. Wall XLPE Primary Cable	ORANGE	2625.0	-	A	R01-4450BM
A	-	-	RX56BC	2643682 R1	1.16	16.0	Std. Wall XLPE Primary Cable	ORANGE	2625.0	-	A	4450BM
B	-	-	RX57BC	2643682 R1	1.16	16.0	Std. Wall XLPE Primary Cable	ORANGE	2625.0	-	B	R01-4450BM
B	-	-	RX57BC	2643682 R1	1.16	16.0	Std. Wall XLPE Primary Cable	ORANGE	2625.0	-	B	4450BM

Name	Terminal Part Number	V-Min	Name	Wire Part Number	Wire CSA	Wire Spec	Wire Material description	Wire Color Description	Wire Length	End2 Terminal Part Number	End2 Pin Name	End2 Connect or
C	-	-	RX70BB	2643690 R1	1.91	14.0	Std. Wall XLPE Primary Cable	ORANGE	2625.0	-	C	R01-4450BM
C	-	-	RX70BB	2643690 R1	1.91	14.0	Std. Wall XLPE Primary Cable	ORANGE	2625.0	-	C	4450BM

Connector Name 4460BM

Part Number 2039311C91

Instances B6.7 - Body Builder Lighting - Combined Turn and Stop Lamps (Automatic):Diagram3
B6.7 - Body Builder Lighting - Combined Turn and Stop Lamps (Manual):Diagram3
L9 - Body Builder Lighting - Combined Turn and Stop Lamps (Automatic):Diagram3
L9 - Body Builder Lighting - Combined Turn and Stop Lamps (Manual):Diagram3
L9 - Body Builder Lighting - Combined Turn and Stop Lamps (Manual):Diagram6

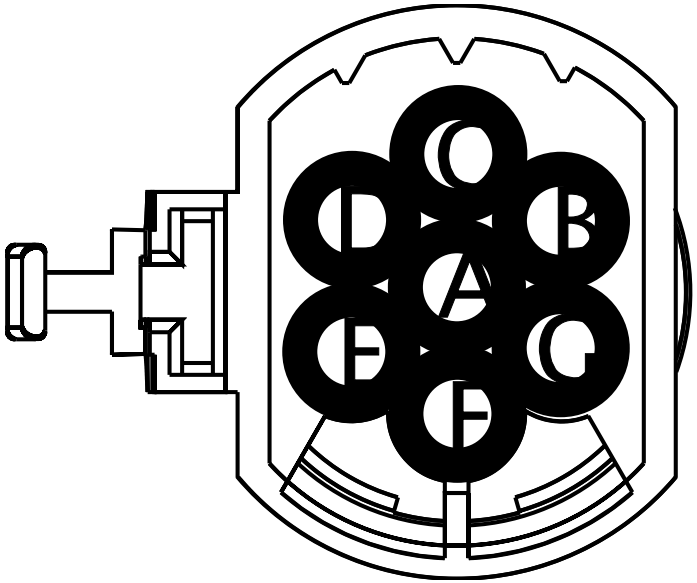

Name	Terminal Part Number	V-Min	Name	Wire Part Number	Wire CSA	Wire Spec	Wire Material description	Wire Color Description	Wire Length	End2 Terminal Part Number	End2 Pin Name	End2 Connect or
A	-	-	RX68BB	2643688 R1	1.91	14.0	Std. Wall XLPE Primary Cable	BROWN	2625.0	-	A	4450BF
B	-	-	RX56BB	2643682 R1	1.16	16.0	Std. Wall XLPE Primary Cable	ORANGE	2625.0	-	B	4450BF
C	-	-	RX57BB	2643682 R1	1.16	16.0	Std. Wall XLPE Primary Cable	ORANGE	2625.0	-	C	4450BF
D	-	-	RX58BB	2643688 R1	1.91	14.0	Std. Wall XLPE Primary Cable	BROWN	2625.0	-	D	4450BF

Name	Terminal Part Number	V-Min	Name	Wire Part Number	Wire CSA	Wire Spec	Wire Material description	Wire Color Description	Wire Length	End2 Terminal Part Number	End2 Pin Name	End2 Connector
E	-	-	RX71BB	2643682 R1	1.16	16.0	Std. Wall XLPE Primary Cable	ORANGE	2625.0	-	X	-
E	-	-	RX71BB	2643682 R1	1.16	16.0	Std. Wall XLPE Primary Cable	ORANGE	2625.0	-	E	4450BF
G	-	-	RX11-GBB	2643787 R1	3.01	12.0	Std. Wall XLPE Primary Cable	WHITE	2625.0	-	G	4450BF

Connector Name	4460D
Part Number	3553961C1
Short Description	BODY BUILDER TURN/STOP
Instances	A26 - Body Builder Lighting - BOC, 08HBX (Automatic):Diagram1 A26 - Body Builder Lighting - BOC, 08HBX (Manual):Diagram1
Mates	4460M

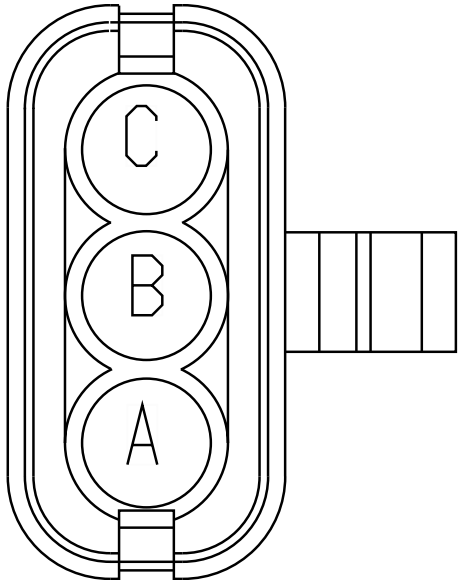

Name	Terminal Part Number	V-Min	Name	Wire Part Number	Wire CSA	Wire Spec	Wire Material description	Wire Color Description	Wire Length	End2 Terminal Part Number	End2 Pin Name	End2 Connect or
A	-	-	NV56BCA	2643684 R1	1.16	16.0	Std. Wall XLPE Primary Cable	YELLOW 2	200.0	-	A	4460E
B	-	-	NV57BCA	2643678 R1	1.16	16.0	Std. Wall XLPE Primary Cable	LIGHT GREEN	200.0	-	B	4460E
C	-	-	NV70BBA	2643686 R1	1.91	14.0	Std. Wall XLPE Primary Cable	RED	200.0	-	C	4460E

Connector Name 4460E

Part Number BLUNT_SL_VC

Instances A26 - Body Builder Lighting - BOC, 08HBX (Automatic):Diagram1
A26 - Body Builder Lighting - BOC, 08HBX (Manual):Diagram1

Mates BLNT-Body_Turn/Stop-1036-0 5-05

Name	Terminal Part Number	V-Min	Name	Wire Part Number	Wire CSA	Wire Spec	Wire Material description	Wire Color Description	Wire Length	End2 Terminal Part Number	End2 Pin Name	End2 Connect or
A	-	-	NV56BCA	2643684 R1	1.16	16.0	Std. Wall XLPE Primary Cable	YELLOW 2	200.0	-	A	4460D
B	-	-	NV57BCA	2643678 R1	1.16	16.0	Std. Wall XLPE Primary Cable	LIGHT GREEN	200.0	-	B	4460D
C	-	-	NV70BBA	2643686 R1	1.91	14.0	Std. Wall XLPE Primary Cable	RED	200.0	-	C	4460D

Connector Name	4460M
Part Number	1686834C1
Short Description	BODY BUILDER TURN/STOP
Instances	A26 - Body Builder Lighting - BOC, 08HBX (Automatic):Diagram1 A26 - Body Builder Lighting - BOC, 08HBX (Manual):Diagram1
Mates	4460D

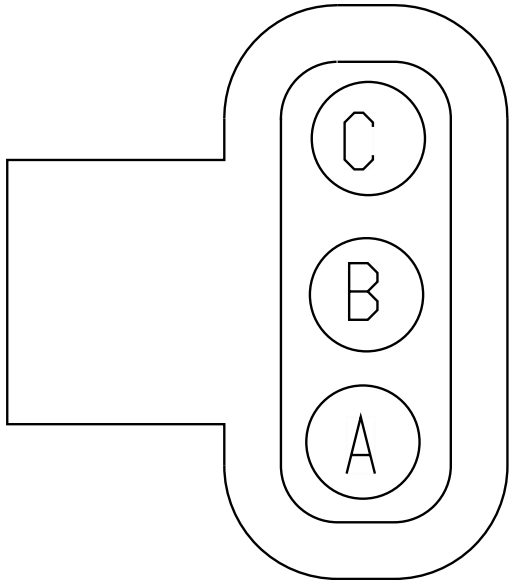

Name	Terminal Part Number	V-Min	Name	Wire Part Number	Wire CSA	Wire Spec	Wire Material description	Wire Color Description	Wire Length	End2 Terminal Part Number	End2 Pin Name	End2 Connect or
A	-	-	ND56BC	2643684 R1	1.16	16.0	Std. Wall XLPE Primary Cable	YELLOW 2	2385.0	-	42	1701F
B	-	-	ND57BC	2643678 R1	1.16	16.0	Std. Wall XLPE Primary Cable	LIGHT GREEN	2385.0	-	64	1701F
C	-	-	ND70BB	2643686 R1	1.91	14.0	Std. Wall XLPE Primary Cable	RED	2385.0	-	72	1701F

Connector Name 4460M

Part Number 1686834C1

Instances B6.7 - Body Builder Lighting - Combined Turn and Stop Lamps (Automatic):Diagram1
B6.7 - Body Builder Lighting - Combined Turn and Stop Lamps (Manual):Diagram1
L9 - Body Builder Lighting - Combined Turn and Stop Lamps (Automatic):Diagram1
L9 - Body Builder Lighting - Combined Turn and Stop Lamps (Automatic):Diagram2
L9 - Body Builder Lighting - Combined Turn and Stop Lamps (Manual):Diagram1
L9 - Body Builder Lighting - Combined Turn and Stop Lamps (Manual):Diagram2
L9 - Body Builder Lighting - Combined Turn and Stop Lamps (Manual):Diagram4
L9 - Body Builder Lighting - Combined Turn and Stop Lamps (Manual):Diagram5

Mates CONN-BB_TURN_STOP-1036-01- 02A

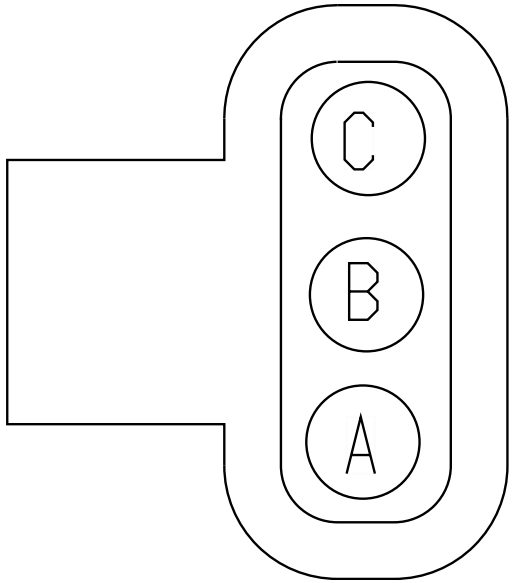

Name	Terminal Part Number	V-Min	Name	Wire Part Number	Wire CSA	Wire Spec	Wire Material description	Wire Color Description	Wire Length	End2 Terminal Part Number	End2 Pin Name	End2 Connector
A	-	-	ND56BC	2643684 R1	1.16	16.0	Std. Wall XLPE Primary Cable	YELLOW 2	2385.0	-	42	1701F
A	-	-	YW56BC	3510336 R1	1.16	16.0	Thin Wall XLPE Primary Cable	YELLOW 2	3850.0	-	-	-
B	-	-	YW57BC	3510300 R1	1.16	16.0	Thin Wall XLPE Primary Cable	LIGHT GREEN	3850.0	-	-	-
B	-	-	ND57BC	2643678 R1	1.16	16.0	Std. Wall XLPE Primary Cable	LIGHT GREEN	2385.0	-	64	1701F

Name	Terminal Part Number	V-Min	Name	Wire Part Number	Wire CSA	Wire Spec	Wire Material description	Wire Color Description	Wire Length	End2 Terminal Part Number	End2 Pin Name	End2 Connect or
C	-	-	VM70TA	3510320 R1	3.01	12.0	Thin Wall XLPE Primary Cable	ORANGE	5105.0	-	R5 - 87	1012
C	-	-	ND70BB	2643686 R1	1.91	14.0	Std. Wall XLPE Primary Cable	RED	2385.0	-	72	1701F

Connector Name 4460M

Part Number 1686834C1

Instances B6.7 - Body Builder Lighting - Combined Turn and Stop Lamps (Automatic):Diagram2
B6.7 - Body Builder Lighting - Combined Turn and Stop Lamps (Manual):Diagram2

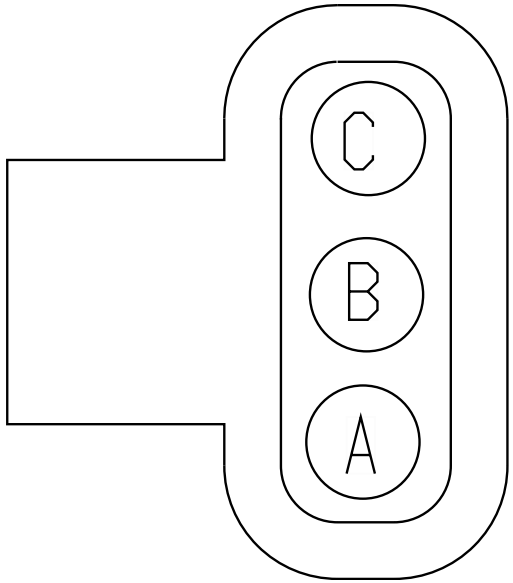

Name	Terminal Part Number	V-Min	Name	Wire Part Number	Wire CSA	Wire Spec	Wire Material description	Wire Color Description	Wire Length	End2 Terminal Part Number	End2 Pin Name	End2 Connect or
A	-	-	ND56BC	2643684 R1	1.16	16.0	Std. Wall XLPE Primary Cable	YELLOW 2	2385.0	-	42	1701F
B	-	-	ND57BC	2643678 R1	1.16	16.0	Std. Wall XLPE Primary Cable	LIGHT GREEN	2385.0	-	64	1701F
C	-	-	ND70BB	2643686 R1	1.91	14.0	Std. Wall XLPE Primary Cable	RED	2385.0	-	72	1701F

Connector Name	4500
Part Number	1661375C2
Instances	A26 - Windshield Wipers:Diagram1 B6.7 - Windshield Wipers:Diagram1 L9 - Windshield Wipers:Diagram1
Mates	MOT-WIPER-1031-03-01A

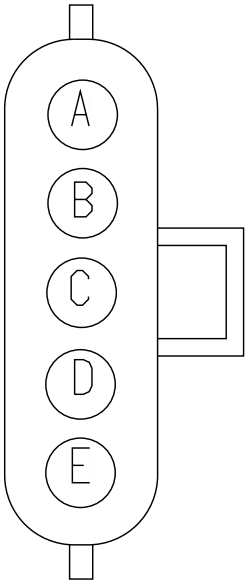

Name	Terminal Part Number	V-Min	Name	Wire Part Number	Wire CSA	Wire Spec	Wire Material description	Wire Color Description	Wire Length	End2 Terminal Part Number	End2 Pin Name	End2 Connect or
A	-	-	AA82DJ	3510312 R1	1.16	16.0	Thin Wall XLPE Primary Cable	GREY	2080.0	-	74	1703F
B	-	-	AA82JJ	3510312 R1	1.16	16.0	Thin Wall XLPE Primary Cable	GREY	2080.0	-	72	1703F
C	-	-	AA82-GJ	3510312 R1	1.16	16.0	Thin Wall XLPE Primary Cable	GREY	2080.0	-	8	1703F
D	-	-	AA82KJ	3510312 R1	1.16	16.0	Thin Wall XLPE Primary Cable	GREY	2080.0	-	69	1703F

Name	Terminal Part Number	V-Min	Name	Wire Part Number	Wire CSA	Wire Spec	Wire Material description	Wire Color Description	Wire Length	End2 Terminal Part Number	End2 Pin Name	End2 Connector
E	-	-	AA82LJ	3510312 R1	1.16	16.0	Thin Wall XLPE Primary Cable	GREY	2080.0	-	70	1703F

Connector Name	4705
Part Number	3538634C1
Instances	A26 - Body Builder - Powertrain:Diagram1
Mates	CONN-BODY_BUILDER_1-4009-0 1-01A

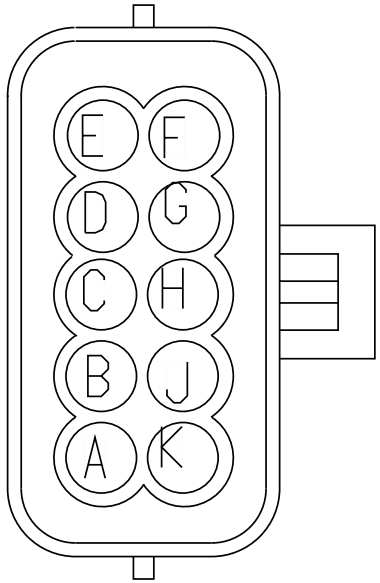

Name	Terminal Part Number	V-Min	Name	Wire Part Number	Wire CSA	Wire Spec	Wire Material description	Wire Color Description	Wire Length	End2 Terminal Part Number	End2 Pin Name	End2 Connector
A	-	-	ZS92A15	2643676 R1	0.79	18.0	Std. Wall XLPE Primary Cable	TAN	260.0	-	X	-
B	-	-	SG92A11	3510329 R1	0.79	18.0	Thin Wall XLPE Primary Cable	TAN	1025.0	-	66	6018
C	-	-	KJ92A12	3510329 R1	0.79	18.0	Thin Wall XLPE Primary Cable	TAN	1025.0	-	90	6018
D	-	-	KJ92A13	3510329 R1	0.79	18.0	Thin Wall XLPE Primary Cable	TAN	1025.0	-	40	6018

Name	Terminal Part Number	V-Min	Name	Wire Part Number	Wire CSA	Wire Spec	Wire Material description	Wire Color Description	Wire Length	End2 Terminal Part Number	End2 Pin Name	End2 Connect or
E	-	-	KJ92A9	3510329 R1	0.79	18.0	Thin Wall XLPE Primary Cable	TAN	1025.0	-	16	6018
F	-	-	KJ92A10	3510329 R1	0.79	18.0	Thin Wall XLPE Primary Cable	TAN	1025.0	-	78	6018
G	-	-	KJ92A8	3510329 R1	0.79	18.0	Thin Wall XLPE Primary Cable	TAN	1025.0	-	77	6018
H	-	-	KJ92A16	3510329 R1	0.79	18.0	Thin Wall XLPE Primary Cable	TAN	1025.0	-	46	6018
J	-	-	KJ92A17	3510329 R1	0.79	18.0	Thin Wall XLPE Primary Cable	TAN	1025.0	-	21	6018

Connector Name	4706
Part Number	3538635C1
Instances	A26 - Body Builder - Powertrain:Diagram1
Mates	CONN-BODY_BUILDER_2-4009-0 1-01A

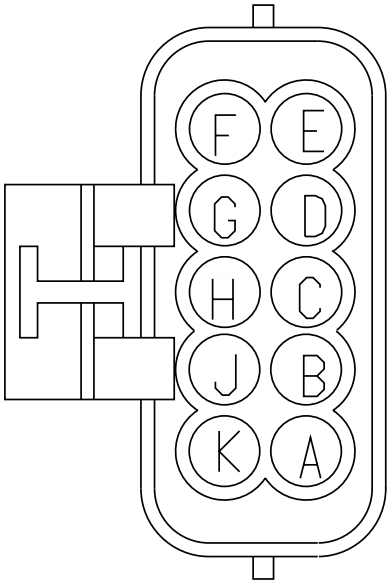

Name	Terminal Part Number	V-Min	Name	Wire Part Number	Wire CSA	Wire Spec	Wire Material description	Wire Color Description	Wire Length	End2 Terminal Part Number	End2 Pin Name	End2 Connect or
A	-	-	KJ92A5	3510329 R1	0.79	18.0	Thin Wall XLPE Primary Cable	TAN	1025.0	-	56	6018
B	-	-	ZV92A4	3510329 R1	0.79	18.0	Thin Wall XLPE Primary Cable	TAN	210.0	-	X	-
B	-	-	ZM92A4	3510329 R1	0.79	18.0	Thin Wall XLPE Primary Cable	TAN	210.0	-	X	-
C	-	-	SG92A3	3510329 R1	0.79	18.0	Thin Wall XLPE Primary Cable	TAN	595.0	-	-	-

Name	Terminal Part Number	V-Min	Name	Wire Part Number	Wire CSA	Wire Spec	Wire Material description	Wire Color Description	Wire Length	End2 Terminal Part Number	End2 Pin Name	End2 Connect or
D	-	-	KJ92A14	3510329 R1	0.79	18.0	Thin Wall XLPE Primary Cable	TAN	1025.0	-	22	6018
E	-	-	KJ92A2	3510329 R1	0.79	18.0	Thin Wall XLPE Primary Cable	TAN	1025.0	-	20	6018
F	-	-	KJ92A6	3510329 R1	0.79	18.0	Thin Wall XLPE Primary Cable	TAN	1025.0	-	23	6018
G	-	-	KJ92A7	3510329 R1	0.79	18.0	Thin Wall XLPE Primary Cable	TAN	1025.0	-	65	6018
H	-	-	KJ92A1	3510329 R1	0.79	18.0	Thin Wall XLPE Primary Cable	TAN	1025.0	-	39	6018
J	-	-	KJ92A19	3510329 R1	0.79	18.0	Thin Wall XLPE Primary Cable	TAN	1025.0	-	14	6018

Connector Name	4800
Part Number	373756C2
Instances	A26 - Underhood PDM:A26 - UNDERHOOD PDM B6.7/L9 - Underhood PDM:PDM - UNDERHOOD
Mates	MODU-PDM_UNDERHOOD-0003-00 -04

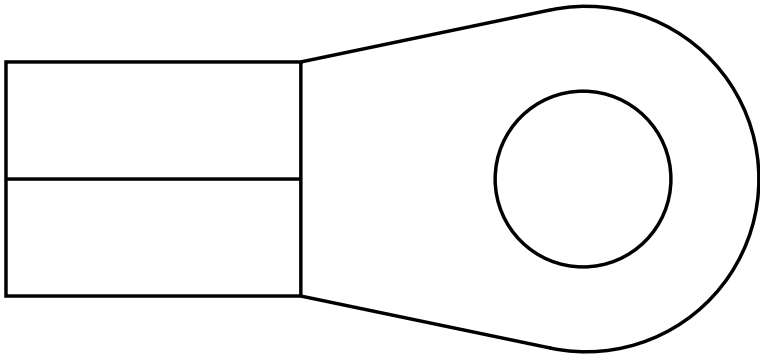

Name	Terminal Part Number	V-Min	Name	Wire Part Number	Wire CSA	Wire Spec	Wire Material description	Wire Color Description	Wire Length	End2 Terminal Part Number	End2 Pin Name	End2 Connect or
A	-	-	MG14L	2643698 R1	4.81	10.0	Std. Wall XLPE Primary Cable	RED	350.0	-	-	-
A	-	-	HZ14-FL	3961608 R1	7.48	8.0	FUSEABLE LINK	LIGHT BLUE	110.0	-	-	-
A	-	-	MG14L	3510369 R1	4.81	10.0	Thin Wall XLPE Primary Cable	RED	470.0	-	-	-

Connector Name	4952
Part Number	3678796C1
Instances	A26 - Traction Control (Bendix):Diagram1 A26 - Traction Control (Bendix):Diagram2
Mates	SOL-TCV_BENDIX-3033-01-01A

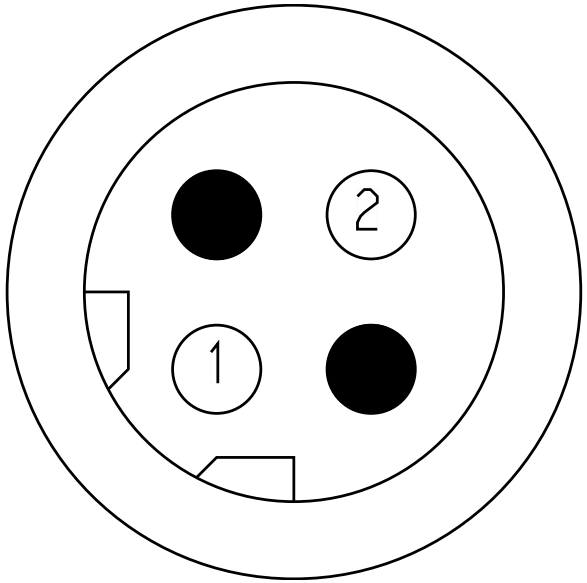

Name	Terminal Part Number	V-Min	Name	Wire Part Number	Wire CSA	Wire Spec	Wire Material description	Wire Color Description	Wire Length	End2 Terminal Part Number	End2 Pin Name	End2 Connect or
1	-	-	RD94BE	3510336 R1	1.16	16.0	Thin Wall XLPE Primary Cable	YELLOW 2	410.0	-	24	9800
1	-	-	UD94BE	3510336 R1	1.16	16.0	Thin Wall XLPE Primary Cable	YELLOW 2	1865.0	-	24	9800
2	-	-	RD94BD	3510306 R1	1.16	16.0	Thin Wall XLPE Primary Cable	BROWN	410.0	-	23	9800
2	-	-	UD94BD	3510306 R1	1.16	16.0	Thin Wall XLPE Primary Cable	BROWN	1865.0	-	23	9800

Connector Name 500

Part Number 1667732C1

Instances B6.7 - Powertrain Splice Pack 6704:Diagram1
B6.7 - Transmission (Allison 1K/2K):Diagram1
B6.7 - Transmission (Allison 3K/4K):Diagram1
B6.7 - Transmission (Allison 3K/4K):Diagram2
L9 - Powertrain Splice Pack 6704 & 6704B:Diagram1

Mates 9260

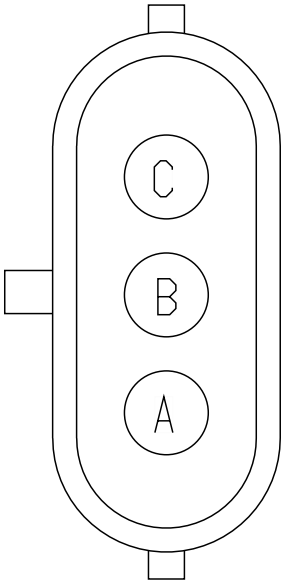

Name	Terminal Part Number	V-Min	Name	Wire Part Number	Wire CSA	Wire Spec	Wire Material description	Wire Color Description	Wire Length	End2 Terminal Part Number	End2 Pin Name	End2 Connect or
A	-	-	KS10-G1	3510363 R1	4.81	10.0	Thin Wall XLPE Primary Cable	WHITE	2285.0	-	A	6704
A	-	-	KD10-G5	3510363 R1	4.81	10.0	Thin Wall XLPE Primary Cable	WHITE	1350.0	-	A	6704
B	-	-	KE10A	2643773 R1	4.81	10.0	Std. Wall XLPE Primary Cable	BLACK	3645.0	-	X	-
B	-	-	KS10-G6	3510363 R1	4.81	10.0	Thin Wall XLPE Primary Cable	WHITE	1105.0	-	A	6704B

Name	Terminal Part Number	V-Min	Name	Wire Part Number	Wire CSA	Wire Spec	Wire Material description	Wire Color Description	Wire Length	End2 Terminal Part Number	End2 Pin Name	End2 Connector
B	-	-	LA10-GG	2643788 R1	4.81	10.0	Std. Wall XLPE Primary Cable	WHITE	3850.0	-	X	-
B	-	-	LB10-GG	2643788 R1	4.81	10.0	Std. Wall XLPE Primary Cable	WHITE	3850.0	-	X	-

Connector Name	6000
Part Number	3945694C1
Instances	A26 - Engine Speed (Tachometer):Diagram1 A26/B6.7/L9 - Adjustable Engine Speed Control (PTO) 4-pin:Diagram1 A26/B6.7/L9 - Adjustable Engine Speed Control (PTO) 10-pin:Diagram1 A26/B6.7/L9 - Adjustable Engine Speed Control (PTO) 10-pin:Diagram2 A26/B6.7/L9 - Crank Inhibit (Engine Speed Inhibit Only):Diagram1 A26/B6.7/L9 - Cruise Control (W/ One Telltale 4 Pin):Diagram1 A26/B6.7/L9 - Cruise Control (W/ One Telltale 4 Pin):Diagram2 A26/B6.7/L9 - Cruise Control (W/ One Telltale 10 Pin):Diagram1 A26/B6.7/L9 - Cruise Control (W/ One Telltale 10 Pin):Diagram2 A26/B6.7/L9 - DEF Economy Monitor (GEN IV):Diagram1 A26/B6.7/L9 - Door Pod Module (4 Door):Diagram1 A26/B6.7/L9 - DPF Regen Switch Only:Diagram1 A26/B6.7/L9 - DPF With Bistable Inhibit Switch:Diagram1 A26/B6.7/L9 - DPF With Monostable Inhibit Switch:Diagram1 A26/B6.7/L9 - Driver and Passenger Seats - RollTek (Hard Wired):Diagram1 A26/B6.7/L9 - Engine Oil Level Monitoring:Diagram1 A26/B6.7/L9 - Engine Oil Pressure:Diagram1 A26/B6.7/L9 - Engine Oil Temperature (NA Mux):Diagram1 A26/B6.7/L9 - Engine Oil Temperature(NA MUX AUX Gauge):Diagram1 A26/B6.7/L9 - Engine Usage Monitoring (Base) NA:Diagram1 A26/B6.7/L9 - Engine Usage Monitoring (VID Option):Diagram1 A26/B6.7/L9 - Engine Warning_MUX:Diagram1 A26/B6.7/L9 - Fifth Wheel Slide:Diagram1 A26/B6.7/L9 - Fuel Economy Monitor:Diagram1 A26/B6.7/L9 - Height Control:Diagram1 A26/B6.7/L9 - High Exhaust System Temperature (HEST) Monitoring:Diagram1 A26/B6.7/L9 - Jaw Unlock Control:Diagram1 A26/B6.7/L9 - Jaw Unlock Control W/ SOLENOIDS W/SWITCH PACKS:Diagram1 A26/B6.7/L9 - Odometer (via BCM/EGC):Diagram1 A26/B6.7/L9 - Power Divider Lock Control and Monitoring:Diagram1 A26/B6.7/L9 - PTO Hour Meter:Diagram1

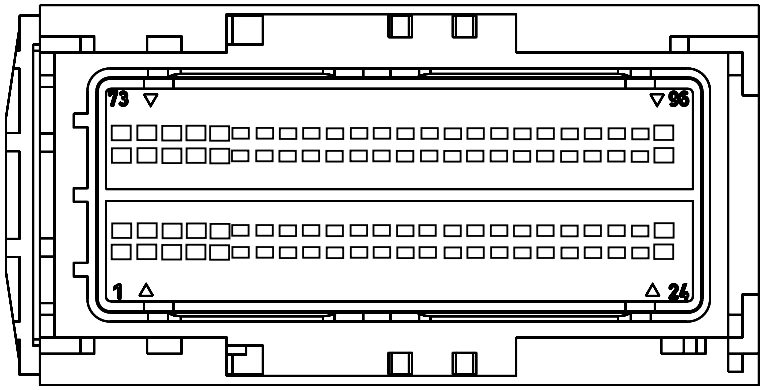

A26/B6.7/L9 - Seats (RollTek) Drivers Seat Only (Hard Wired) - Leather:Diagram1
A26/B6.7/L9 - Seats (RollTek) Drivers Seat Only (Hard Wired) - Mordular:Diagram1
A26/B6.7/L9 - Seats (RollTek) Drivers Seat Only (Hard Wired) - Vinyl:Diagram1
A26/B6.7/L9 - Theft Deterrent (Grid Controlled):Diagram1
A26/B6.7/L9 - Transfer Case - High/Low Air Sol:Diagram1
A26/B6.7/L9 - Transfer Case - High/Neu/Low Air Sol:Diagram1
A26/B6.7/L9 - Trip Odometer (w/ECM & TCM):Diagram1
A26/B6.7/L9 - Trip Odometer (Gen 4 Cluster):Diagram1
A26/B6.7/L9 - Trip Odometer w/VID:Diagram1
A26/B6.7/L9 - Up Shift Indicator:Diagram1
A26/B6.7/L9 - Vehicle Speed Control (Cruise Control) 4 Pin:Diagram1
A26/B6.7/L9 - Vehicle Speed Control (Cruise Control) 10 Pin:Diagram1
A26/B6.7/L9 - Vehicle Speed Limit Override:Diagram1
A26/B6.7/L9 - Vehicle Speedometer System (Automatic XMSN):Diagram1
B6.7 & L9 - Engine Speed (Tachometer):Diagram1
B6.7 - Snow Valve Control:Diagram1
B6.7 - Snow Valve Control:Diagram2
B6.7 - 26 inch Fuel Tank:Diagram1
B6.7 - 26 inch Fuel Tank:Diagram2
B6.7 - 26 inch Fuel Tank:Diagram3
B6.7 - 26 inch Fuel Tank - Secondary:Diagram1
B6.7 - Brake Switch:Diagram1
B6.7 - CAN Layout:Powertrain Standard J1939 (500Kbps)
B6.7 - Coolant Level Monitoring (No Coolant Module):Diagram1
B6.7 - Driver Controlled Locking Differential - RR Axle (Dana w/ one sw):Diagram1
B6.7 - Driver Controlled Locking Differential - RR Axle (Meritor w/ one sw):Diagram1
B6.7 - Exhaust Brake (Cummins):Diagram1
B6.7 - Power Lift Gate:Diagram1
B6.7 - Powertrain J1939 Allison 1k/2k:B6.7 - Allison 1k/2k Transmission
B6.7 - Powertrain J1939 Allison 3k/4k:B6.7 - Allison 3k/4k Transmission
B6.7 - Powertrain J1939 Manual Transmission:B6.7 - Manual Transmission
B6.7 - Rear Lights Stop - Daisy Chain:Diagram1
B6.7 - Rear Lights Stop - Dual Assembly:Diagram1

B6.7 - Rear Lights Stop - Single Assemby:Diagram1
B6.7 - Remote Start/Stop:Diagram1
B6.7 - Remote Start/Stop w/ Emergency Pump:Diagram1
B6.7 - Selective Catalytic Reduction (SCR):Diagram1
B6.7 - Selective Catalytic Reduction (SCR):Diagram2
B6.7 - Traction Control (Bendix):Diagram1
B6.7 - Traction Control (Bendix):Diagram2
B6.7 - Transmission Power Take Off (Auto Trans Single PTO w/21 Parameters):Diagram1
B6.7 - Two Speed Axle (AirShift on Shifter):Diagram1
B6.7 - Vehicle Speedometer System (Manual XMSN):Diagram1
B6.7/L9 - Engine Brake Mux Switch:Diagram1
B6.7/L9 - Engine Brake W/ Stalk Shifter:Diagram1
HV B6.7 - Coolant Level Monitoring (With Coolant Module):Diagram1
HV L9 - Coolant Level Monitoring (With Coolant Module):Diagram1
L9 - 26 inch Fuel Tank:Diagram1
L9 - 26 inch Fuel Tank:Diagram2
L9 - 26 inch Fuel Tank:Diagram3
L9 - 26 inch Fuel Tank:Diagram4
L9 - 26 inch Fuel Tank:Diagram5
L9 - 26 inch Fuel Tank:Diagram6
L9 - 26 inch Fuel Tank - Secondary:Diagram1
L9 - 26 inch Fuel Tank - Secondary:Diagram2
L9 - 26 inch Fuel Tank - Secondary:Diagram3
L9 - 26 inch Fuel Tank - Secondary:Diagram4
L9 - 26 inch Fuel Tank - Secondary:Diagram5
L9 - 26 inch Fuel Tank - Secondary:Diagram6
L9 - 26 inch Fuel Tank - Secondary:Diagram7
L9 - Ambient Air Temperature:Diagram1
L9 - Brake Switch:Diagram1
L9 - CAN Layout:Powertrain Standard J1939 (500kbps)
L9 - Coolant Level Monitoring (No Coolant Module):Diagram1
L9 - Coolant Temperature Monitoring (J1939 Comm):Diagram1
L9 - Driver Controlled Locking Differential - FR and RR Axle (Dana w/ one sw):Diagram1
L9 - Driver Controlled Locking Differential - FR and RR Axle (Meritor w/ one sw):Diagram1
L9 - Driver Controlled Locking Differential - FR and RR Axles (Dana w/ two sw):Diagram1
L9 - Driver Controlled Locking Differential - FR and RR Axles (Meritor w/ two sw):Diagram1

	L9 - Driver Controlled Locking Differential - RR Axle (Dana w/ one sw):Diagram1 L9 - Driver Controlled Locking Differential - RR Axle (Meritor w/ one sw):Diagram1 L9 - Exhaust Brake (Cummins):Diagram1 L9 - Power Lift Gate:Diagram1 L9 - Powertrain J1939 Allison 3k/4k:L9 - Powertrain J1939 Allison 3k/4k L9 - Powertrain J1939 Eaton:L9 - Powertrain J1939 Eaton L9 - Powertrain J1939 Manual Transmission:Powertrain Standard J1939 (500kbps) L9 - Rear Axle Load Distribution:Diagram1 L9 - Rear Lights Stop - Daisy Chain:Diagram1 L9 - Rear Lights Stop - Dual Assembly:Diagram1 L9 - Rear Lights Stop - Single Assemby:Diagram1 L9 - Remote Start/Stop:Diagram1 L9 - Remote Start/Stop w/ Emergency Pump:Diagram1 L9 - Selective Catalytic Reduction (SCR):Diagram1 L9 - Selective Catalytic Reduction (SCR):Diagram2 L9 - Snow Valve Control:Diagram1 L9 - Snow Valve Control:Diagram2 L9 - Traction Control (Bendix):Diagram1 L9 - Transmission Power Take Off (Auto Trans Single PTO w/21 Parameters):Diagram1 L9 - Transmission Power Take Off (Auto Trans with Lectradrive):Diagram1 L9 - Transmission Power Take Off (Lectrashift PTO with Manual Trans):Diagram1 L9 - Transmission Power Take Off (Manual Trans Single PTO w/21 Parameters):Diagram1 L9 - Transmission Power Take Off (Single PTO W/ RPM and Auto Trans):Diagram1 L9 - Transmission Power Take Off (Single PTO W/ RPM and Manual Trans):Diagram1 L9 - Two Speed Axle (AirShift on Shifter):Diagram1 L9 - Two Speed Axle (Multiplex SW on Dash):Diagram1 L9 - Vehicle Speedometer System (Manual XMSN):Diagram1
Mates	MODU-ECM-A001-10-01A

Name	Terminal Part Number	V-Min	Name	Wire Part Number	Wire CSA	Wire Spec	Wire Material description	Wire Color Description	Wire Length	End2 Terminal Part Number	End2 Pin Name	End2 Connector
3	-	-	KA95GBE	3510329 R1	0.79	18.0	Thin Wall XLPE Primary Cable	TAN	1710.0	-	X	-
6	-	-	VL95F	3510328 R1	0.53	20.0	Thin Wall XLPE Primary Cable	TAN	1665.0	-	2	674
8	-	-	VX6A	3510310 R1	0.53	20.0	Thin Wall XLPE Primary Cable	GREY	530.0	-	X	-
8	-	-	VG6A	3510346 R1	0.53	20.0	Thin Wall XLPE Primary Cable	VIOLET	460.0	-	X	-
8	-	-	AF6A	3510310 R1	0.53	20.0	Thin Wall XLPE Primary Cable	GREY	460.0	-	X	-
8	-	-	KP6A	3510310 R1	0.53	20.0	Thin Wall XLPE Primary Cable	GREY	460.0	-	X	-
8	-	-	AH6A	3510310 R1	0.53	20.0	Thin Wall XLPE Primary Cable	GREY	460.0	-	X	-
8	-	-	AB6A	3510310 R1	0.53	20.0	Thin Wall XLPE Primary Cable	GREY	460.0	-	X	-
16	-	-	VK95K	4073403 R1	0.53	20.0	TXL 150C	TAN	2265.0	-	8	670A
22	-	-	-	-	-	-	-	-	-	-	-	-

Name	Terminal Part Number	V-Min	Name	Wire Part Number	Wire CSA	Wire Spec	Wire Material description	Wire Color Description	Wire Length	End2 Terminal Part Number	End2 Pin Name	End2 Connector
22	-	-	WIRE725696	-	0.0	-	-	-	0.0	-	1	-
22	-	-	WIRE735176	-	0.0	-	-	-	0.0	-	1	-
22	-	-	WIRE725667	-	0.0	-	-	-	0.0	-	X	-
22	-	-	WIRE735170	-	0.0	-	-	-	0.0	-	1	-
22	-	-	WIRE725658	-	0.0	-	-	-	0.0	-	X	-
22	-	-	WIRE755204	-	0.0	-	-	-	0.0	-	PIN1	-
22	-	-	WIRE755205	-	0.0	-	-	-	0.0	-	X	-
22	-	-	WIRE725692	-	0.0	-	-	-	0.0	-	PIN1	-
22	-	-	WIRE725696	-	0.0	-	-	-	0.0	-	X	-
22	-	-	WIRE735170	-	0.0	-	-	-	0.0	-	PIN1	-
22	-	-	WIRE735176	-	0.0	-	-	-	0.0	-	X	-
32	-	-	KT9A	3510310R1	0.53	20.0	Thin Wall XLPE Primary Cable	GREY	590.0	-	X	-
32	-	-	KZ9A	3510310R1	0.53	20.0	Thin Wall XLPE Primary Cable	GREY	590.0	-	X	-

Name	Terminal Part Number	V-Min	Name	Wire Part Number	Wire CSA	Wire Spec	Wire Material description	Wire Color Description	Wire Length	End2 Terminal Part Number	End2 Pin Name	End2 Connector
35	-	-	KT34	3510328 R1	0.53	20.0	Thin Wall XLPE Primary Cable	TAN	970.0	-	X	-
35	-	-	KZ34A	3510328 R1	0.53	20.0	Thin Wall XLPE Primary Cable	TAN	1470.0	-	C	6401M
38	-	-	VL95AT2	3510328 R1	0.53	20.0	Thin Wall XLPE Primary Cable	TAN	1030.0	-	X	-
39	-	-	VL95AS2	3510328 R1	0.53	20.0	Thin Wall XLPE Primary Cable	TAN	1000.0	-	X	-
40	-	-	VL95AU2	3510328 R1	0.53	20.0	Thin Wall XLPE Primary Cable	TAN	1115.0	-	X	-
41	-	-	VK95BA	4073403 R1	0.53	20.0	TXL 150C	TAN	2265.0	-	3	670A
42	-	-	VK95BC	4073403 R1	0.53	20.0	TXL 150C	TAN	2265.0	-	4	670A
46	-	-	-	-	-	-	-	-	-	-	-	-
46	-	-	WIRE725697	-	0.0	-	-	-	0.0	-	1	-
46	-	-	WIRE735164	-	0.0	-	-	-	0.0	-	1	-
46	-	-	WIRE725670	-	0.0	-	-	-	0.0	-	X	-
46	-	-	WIRE725693	-	0.0	-	-	-	0.0	-	1	-

Name	Terminal Part Number	V-Min	Name	Wire Part Number	Wire CSA	Wire Spec	Wire Material description	Wire Color Description	Wire Length	End2 Terminal Part Number	End2 Pin Name	End2 Connector
46	-	-	WIRE725660	-	0.0	-	-	-	0.0	-	X	-
46	-	-	WIRE755200	-	0.0	-	-	-	0.0	-	PIN1	-
46	-	-	WIRE755201	-	0.0	-	-	-	0.0	-	PIN1	-
46	-	-	WIRE725693	-	0.0	-	-	-	0.0	-	PIN1	-
46	-	-	WIRE725697	-	0.0	-	-	-	0.0	-	PIN1	-
46	-	-	WIRE735164	-	0.0	-	-	-	0.0	-	PIN1	-
53	-	-	VK95DVL	4073403 R1	0.53	20.0	TXL 150C	TAN	2265.0	-	1	670A
54	-	-	VL95E	3510328 R1	0.53	20.0	Thin Wall XLPE Primary Cable	TAN	1665.0	-	1	674
57	-	-	AC23-G1	3510328 R1	0.53	20.0	Thin Wall XLPE Primary Cable	TAN	430.0	-	X	-
57	-	-	AA95AA	3510328 R1	0.53	20.0	Thin Wall XLPE Primary Cable	TAN	1665.0	-	6	674
59	-	-	KM47C	3510310 R1	0.53	20.0	Thin Wall XLPE Primary Cable	GREY	1460.0	-	B	7600
59	-	-	KM47C	3510310 R1	0.53	20.0	Thin Wall XLPE Primary Cable	GREY	1460.0	-	B	6401

Name	Terminal Part Number	V-Min	Name	Wire Part Number	Wire CSA	Wire Spec	Wire Material description	Wire Color Description	Wire Length	End2 Terminal Part Number	End2 Pin Name	End2 Connect or
60	-	-	KM47B	3510310 R1	0.53	20.0	Thin Wall XLPE Primary Cable	GREY	1460.0	-	A	7600
60	-	-	KM47B	3510310 R1	0.53	20.0	Thin Wall XLPE Primary Cable	GREY	1460.0	-	A	6401
62	-	-	KB9-G	3510310 R1	0.53	20.0	Thin Wall XLPE Primary Cable	GREY	1470.0	-	-	-
65	-	-	KA41A	3510328 R1	0.53	20.0	Thin Wall XLPE Primary Cable	TAN	1450.0	-	X	-
77	-	-	VK95DVH	4073403 R1	0.53	20.0	TXL 150C	TAN	2265.0	-	2	670A
79	-	-	KA95SB	3510328 R1	0.53	20.0	Thin Wall XLPE Primary Cable	TAN	2205.0	-	A12	690
82	-	-	VL95AC	3510328 R1	0.53	20.0	Thin Wall XLPE Primary Cable	TAN	1665.0	-	5	674

Connector Name 6000

Part Number 3945694C1

Instances
B6.7 - ECM Cummins CM2350A:Diagram 1
B6.7 - Starting Aid (Grid Heater):Diagram1
B6.7 - Water In Fuel (WIF) Racor N/ Heater:Diagram1
B6.7 - Water In Fuel (WIF) Racor N/ Heater:Diagram2
B6.7 - Water In Fuel (WIF) Racor N/ Heater:Diagram3
B6.7 - Water In Fuel (WIF) Racor N/ Heater:Diagram4
B6.7 - Water In Fuel (WIF) Racor N/ Heater:Diagram5
B6.7 - Water In Fuel (WIF) Racor N/ Heater:Diagram6
B6.7 - Water In Fuel (WIF) Racor N/ Heater:Diagram7
B6.7 - Water In Fuel (WIF) Racor W/ Heater:Diagram1
B6.7 - Water In Fuel (WIF) Racor W/ Heater:Diagram2
B6.7 - Water In Fuel (WIF) Racor W/ Heater:Diagram3
B6.7 - Water In Fuel (WIF) Racor W/ Heater:Diagram4
B6.7 - Water In Fuel (WIF) Racor W/ Heater:Diagram5
B6.7 - Water In Fuel (WIF) Racor W/ Heater:Diagram6
B6.7 - Water In Fuel (WIF) Racor W/ Heater:Diagram7
L9 - Starting Aid (Grid Heater):Diagram1

Mates MODU-ECM-A001-10-01A

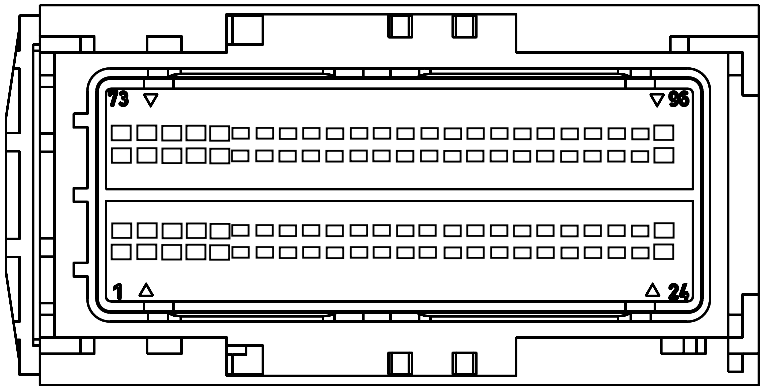

Name	Terminal Part Number	V-Min	Name	Wire Part Number	Wire CSA	Wire Spec	Wire Material description	Wire Color Description	Wire Length	End2 Terminal Part Number	End2 Pin Name	End2 Connect or
1	-	-	KA14A5	3510366 R1	1.16	16.0	Thin Wall XLPE Primary Cable	RED	490.0	-	X	-
3	-	-	KA95GBE	3510329 R1	0.79	18.0	Thin Wall XLPE Primary Cable	TAN	1710.0	-	-	-
5	-	-	KA13B	3510323 R1	0.79	18.0	Thin Wall XLPE Primary Cable	PINK	125.0	-	X	-
6	-	-	VJ95F	3510328 R1	0.53	20.0	Thin Wall XLPE Primary Cable	TAN	2705.0	-	-	-

Name	Terminal Part Number	V-Min	Name	Wire Part Number	Wire CSA	Wire Spec	Wire Material description	Wire Color Description	Wire Length	End2 Terminal Part Number	End2 Pin Name	End2 Connector
8	-	-	VG6A	3510346 R1	0.53	20.0	Thin Wall XLPE Primary Cable	VIOLET	460.0	-	-	-
8	-	-	AF6A	3510310 R1	0.53	20.0	Thin Wall XLPE Primary Cable	GREY	460.0	-	-	-
8	-	-	AB6A	3510310 R1	0.53	20.0	Thin Wall XLPE Primary Cable	GREY	460.0	-	-	-
8	-	-	KP6A	3510310 R1	0.53	20.0	Thin Wall XLPE Primary Cable	GREY	460.0	-	-	-
9	-	-	VJ97C	3510346 R1	0.53	20.0	Thin Wall XLPE Primary Cable	VIOLET	1330.0	-	-	-
10	-	-	VJ99B	3510346 R1	0.53	20.0	Thin Wall XLPE Primary Cable	VIOLET	1330.0	-	-	-
12	-	-	KR46B	3510310 R1	0.53	20.0	Thin Wall XLPE Primary Cable	GREY	1345.0	-	-	-
13	-	-	VA95	3510328 R1	0.53	20.0	Thin Wall XLPE Primary Cable	TAN	1295.0	-	X	-

Name	Terminal Part Number	V-Min	Name	Wire Part Number	Wire CSA	Wire Spec	Wire Material description	Wire Color Description	Wire Length	End2 Terminal Part Number	End2 Pin Name	End2 Connect or
13	-	-	VA95	3510328 R1	0.53	20.0	Thin Wall XLPE Primary Cable	TAN	1295.0	-	-	-
13	-	-	VB95	3510328 R1	0.53	20.0	Thin Wall XLPE Primary Cable	TAN	475.0	-	-	-
16	-	-	VJ95K	4073403 R1	0.53	20.0	TXL 150C	TAN	3555.0	-	-	-
19	-	-	KR46A	3510310 R1	0.53	20.0	Thin Wall XLPE Primary Cable	GREY	1345.0	-	-	-
22	-	-	-	-	-	-	-	-	-	-	-	-
25	-	-	KA14A4	3510366 R1	1.16	16.0	Thin Wall XLPE Primary Cable	RED	490.0	-	X	-
26	-	-	KA14A3	3510366 R1	1.16	16.0	Thin Wall XLPE Primary Cable	RED	490.0	-	X	-
27	-	-	KA14A2	3510366 R1	1.16	16.0	Thin Wall XLPE Primary Cable	RED	590.0	-	X	-
28	-	-	KA14A1	3510366 R1	1.16	16.0	Thin Wall XLPE Primary Cable	RED	590.0	-	X	-
30	-	-	KR97AR	3510346 R1	0.53	20.0	Thin Wall XLPE Primary Cable	VIOLET	1345.0	-	-	-

Name	Terminal Part Number	V-Min	Name	Wire Part Number	Wire CSA	Wire Spec	Wire Material description	Wire Color Description	Wire Length	End2 Terminal Part Number	End2 Pin Name	End2 Connector
32	-	-	KT9A	3510310 R1	0.53	20.0	Thin Wall XLPE Primary Cable	GREY	590.0	-	-	-
32	-	-	KZ9A	3510310 R1	0.53	20.0	Thin Wall XLPE Primary Cable	GREY	590.0	-	-	-
33	-	-	VJ97B	3510346 R1	0.53	20.0	Thin Wall XLPE Primary Cable	VIOLET	1330.0	-	-	-
35	-	-	KT34	3510328 R1	0.53	20.0	Thin Wall XLPE Primary Cable	TAN	970.0	-	-	-
46	-	-	-	-	-	-	-	-	-	-	-	-
49	-	-	KA10-GA	3510360 R1	1.16	16.0	Thin Wall XLPE Primary Cable	WHITE	310.0	-	X	-
50	-	-	KA10-GB	3510360 R1	1.16	16.0	Thin Wall XLPE Primary Cable	WHITE	310.0	-	X	-
51	-	-	KA10-GC	3510360 R1	1.16	16.0	Thin Wall XLPE Primary Cable	WHITE	190.0	-	X	-
52	-	-	KA10-GD	3510360 R1	1.16	16.0	Thin Wall XLPE Primary Cable	WHITE	190.0	-	X	-
53	-	-	VJ95EL	2645915 R1	0.79	18.0	TXL 150C	TAN	3555.0	-	-	-

Name	Terminal Part Number	V-Min	Name	Wire Part Number	Wire CSA	Wire Spec	Wire Material description	Wire Color Description	Wire Length	End2 Terminal Part Number	End2 Pin Name	End2 Connector
54	-	-	VJ95N	3510328 R1	0.53	20.0	Thin Wall XLPE Primary Cable	TAN	2705.0	-	-	-
57	-	-	KA95AA	3510328 R1	0.53	20.0	Thin Wall XLPE Primary Cable	TAN	1160.0	-	-	-
59	-	-	KM47C	3510310 R1	0.53	20.0	Thin Wall XLPE Primary Cable	GREY	1460.0	-	-	-
60	-	-	KM47B	3510310 R1	0.53	20.0	Thin Wall XLPE Primary Cable	GREY	1460.0	-	-	-
61	-	-	VJ97N	3510346 R1	0.53	20.0	Thin Wall XLPE Primary Cable	VIOLET	1330.0	-	-	-
62	-	-	KB9-G	3510310 R1	0.53	20.0	Thin Wall XLPE Primary Cable	GREY	1470.0	-	-	-
63	-	-	KR99A	3510346 R1	0.53	20.0	Thin Wall XLPE Primary Cable	VIOLET	1345.0	-	-	-
64	-	-	VJ97M	3510346 R1	0.53	20.0	Thin Wall XLPE Primary Cable	VIOLET	1330.0	-	-	-

Name	Terminal Part Number	V-Min	Name	Wire Part Number	Wire CSA	Wire Spec	Wire Material description	Wire Color Description	Wire Length	End2 Terminal Part Number	End2 Pin Name	End2 Connector
65	-	-	AD41A	3510328 R1	0.53	20.0	Thin Wall XLPE Primary Cable	TAN	1340.0	-	X	-
66	-	-	KR97XG	3510310 R1	0.53	20.0	Thin Wall XLPE Primary Cable	GREY	1345.0	-	-	-
67	-	-	KR99F	3510346 R1	0.53	20.0	Thin Wall XLPE Primary Cable	VIOLET	1345.0	-	-	-
70	-	-	KR97XC	3510328 R1	0.53	20.0	Thin Wall XLPE Primary Cable	TAN	1345.0	-	-	-
73	-	-	KA10-GE	3510360 R1	1.16	16.0	Thin Wall XLPE Primary Cable	WHITE	190.0	-	X	-
75	-	-	KA18	3510323 R1	0.79	18.0	Thin Wall XLPE Primary Cable	PINK	1490.0	-	-	-
75	-	-	KA18	3510323 R1	0.79	18.0	Thin Wall XLPE Primary Cable	PINK	1490.0	-	A	K19-2000
75	-	-	KA18	3510323 R1	0.79	18.0	Thin Wall XLPE Primary Cable	PINK	1490.0	-	A	K22-2000

Name	Terminal Part Number	V-Min	Name	Wire Part Number	Wire CSA	Wire Spec	Wire Material description	Wire Color Description	Wire Length	End2 Terminal Part Number	End2 Pin Name	End2 Connector
76	-	-	KA18R	3510323 R1	0.79	18.0	Thin Wall XLPE Primary Cable	PINK	155.0	-	-	-
76	-	-	KA18R	3510323 R1	0.79	18.0	Thin Wall XLPE Primary Cable	PINK	155.0	-	X	-
76	-	-	KA18R	3510323 R1	0.79	18.0	Thin Wall XLPE Primary Cable	PINK	155.0	-	A	K22-2001
77	-	-	VJ95EH	2645915 R1	0.79	18.0	TXL 150C	TAN	3555.0	-	-	-
78	-	-	AC23	3510328 R1	0.53	20.0	Thin Wall XLPE Primary Cable	TAN	1090.0	-	-	-
82	-	-	VJ95AB	3510328 R1	0.53	20.0	Thin Wall XLPE Primary Cable	TAN	2705.0	-	-	-
83	-	-	KF97XH	3510346 R1	0.53	20.0	Thin Wall XLPE Primary Cable	VIOLET	1345.0	-	-	-
90	-	-	KF46C	3510310 R1	0.53	20.0	Thin Wall XLPE Primary Cable	GREY	1345.0	-	-	-
94	-	-	KR99C	3510346 R1	0.53	20.0	Thin Wall XLPE Primary Cable	VIOLET	1345.0	-	-	-

Connector Name 6000

Part Number 3945694C1

Instances
L9 - ECM Cummins CM2350A:Diagram1
L9 - Vehicle Acceleration (w/ Two PWR Two GND & Two STS):Diagram1
L9 - Water In Fuel (WIF) Davco N/ Heater:Diagram1
L9 - Water In Fuel (WIF) Davco N/ Heater:Diagram2
L9 - Water In Fuel (WIF) Davco N/ Heater:Diagram3
L9 - Water In Fuel (WIF) Davco N/ Heater:Diagram4
L9 - Water In Fuel (WIF) Davco N/ Heater:Diagram5
L9 - Water In Fuel (WIF) Davco N/ Heater:Diagram6
L9 - Water In Fuel (WIF) Davco N/ Heater:Diagram7
L9 - Water In Fuel (WIF) Davco N/ Heater:Diagram8
L9 - Water In Fuel (WIF) Davco N/ Heater:Diagram9
L9 - Water In Fuel (WIF) Davco W/ Heater:Diagram1
L9 - Water In Fuel (WIF) Davco W/ Heater:Diagram2
L9 - Water In Fuel (WIF) Davco W/ Heater:Diagram3
L9 - Water In Fuel (WIF) Davco W/ Heater:Diagram4
L9 - Water In Fuel (WIF) Davco W/ Heater:Diagram5
L9 - Water In Fuel (WIF) Davco W/ Heater:Diagram6
L9 - Water In Fuel (WIF) Davco W/ Heater:Diagram7
L9 - Water In Fuel (WIF) Davco W/ Heater:Diagram8
L9 - Water In Fuel (WIF) Davco W/ Heater:Diagram9

Mates MODU-ECM-A001-10-01A

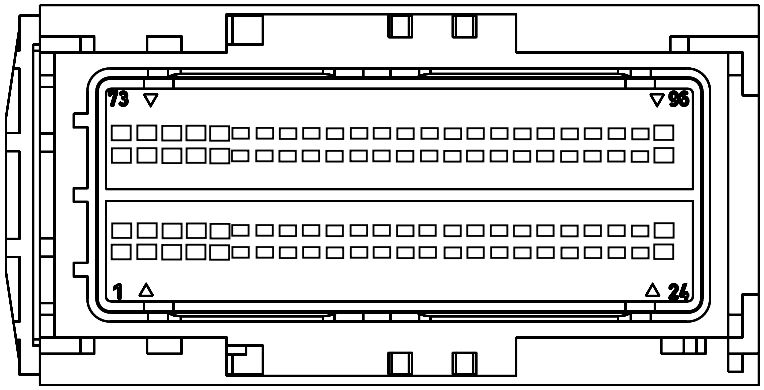

Name	Terminal Part Number	V-Min	Name	Wire Part Number	Wire CSA	Wire Spec	Wire Material description	Wire Color Description	Wire Length	End2 Terminal Part Number	End2 Pin Name	End2 Connect or
1	-	-	KA14A5	3510366 R1	1.16	16.0	Thin Wall XLPE Primary Cable	RED	490.0	-	X	-
3	-	-	KA95GBE	3510329 R1	0.79	18.0	Thin Wall XLPE Primary Cable	TAN	1710.0	-	-	-
5	-	-	KA13B	3510323 R1	0.79	18.0	Thin Wall XLPE Primary Cable	PINK	125.0	-	X	-

Name	Terminal Part Number	V-Min	Name	Wire Part Number	Wire CSA	Wire Spec	Wire Material description	Wire Color Description	Wire Length	End2 Terminal Part Number	End2 Pin Name	End2 Connector
6	-	-	VL95F	3510328 R1	0.53	20.0	Thin Wall XLPE Primary Cable	TAN	1665.0	-	-	-
8	-	-	KP6A	3510310 R1	0.53	20.0	Thin Wall XLPE Primary Cable	GREY	460.0	-	-	-
8	-	-	AB6A	3510310 R1	0.53	20.0	Thin Wall XLPE Primary Cable	GREY	460.0	-	-	-
8	-	-	AF6A	3510310 R1	0.53	20.0	Thin Wall XLPE Primary Cable	GREY	460.0	-	-	-
8	-	-	VX6A	3510310 R1	0.53	20.0	Thin Wall XLPE Primary Cable	GREY	530.0	-	-	-
8	-	-	VG6A	3510346 R1	0.53	20.0	Thin Wall XLPE Primary Cable	VIOLET	460.0	-	-	-
8	-	-	AH6A	3510310 R1	0.53	20.0	Thin Wall XLPE Primary Cable	GREY	460.0	-	-	-
8	-	-	VX6A	3510310 R1	0.53	20.0	Thin Wall XLPE Primary Cable	GREY	530.0	-	X	-

Name	Terminal Part Number	V-Min	Name	Wire Part Number	Wire CSA	Wire Spec	Wire Material description	Wire Color Description	Wire Length	End2 Terminal Part Number	End2 Pin Name	End2 Connector
9	-	-	VJ97C	3510346 R1	0.53	20.0	Thin Wall XLPE Primary Cable	VIOLET	1330.0	-	-	-
9	-	-	VJ97C	3510346 R1	0.53	20.0	Thin Wall XLPE Primary Cable	VIOLET	1330.0	-	22	1702
10	-	-	VJ99B	3510346 R1	0.53	20.0	Thin Wall XLPE Primary Cable	VIOLET	1330.0	-	-	-
10	-	-	VJ99B	3510346 R1	0.53	20.0	Thin Wall XLPE Primary Cable	VIOLET	1330.0	-	28	1702
12	-	-	VW46B	3510310 R1	0.53	20.0	Thin Wall XLPE Primary Cable	GREY	1345.0	-	-	-
12	-	-	KR46B	3510310 R1	0.53	20.0	Thin Wall XLPE Primary Cable	GREY	1345.0	-	-	-
12	-	-	KY46B	3510310 R1	0.53	20.0	Thin Wall XLPE Primary Cable	GREY	1345.0	-	-	-
13	-	-	VA95	3510328 R1	0.53	20.0	Thin Wall XLPE Primary Cable	TAN	1295.0	-	X	-

Name	Terminal Part Number	V-Min	Name	Wire Part Number	Wire CSA	Wire Spec	Wire Material description	Wire Color Description	Wire Length	End2 Terminal Part Number	End2 Pin Name	End2 Connector
13	-	-	VA95	3510328 R1	0.53	20.0	Thin Wall XLPE Primary Cable	TAN	1295.0	-	-	-
16	-	-	VK95K	4073403 R1	0.53	20.0	TXL 150C	TAN	2265.0	-	-	-
19	-	-	VW46A	3510310 R1	0.53	20.0	Thin Wall XLPE Primary Cable	GREY	1345.0	-	-	-
19	-	-	KY46A	3510310 R1	0.53	20.0	Thin Wall XLPE Primary Cable	GREY	1345.0	-	-	-
19	-	-	KR46A	3510310 R1	0.53	20.0	Thin Wall XLPE Primary Cable	GREY	1345.0	-	-	-
22	-	-	-	-	-	-	-	-	-	-	-	-
25	-	-	KA14A4	3510366 R1	1.16	16.0	Thin Wall XLPE Primary Cable	RED	490.0	-	X	-
26	-	-	KA14A3	3510366 R1	1.16	16.0	Thin Wall XLPE Primary Cable	RED	490.0	-	X	-
27	-	-	KA14A2	3510366 R1	1.16	16.0	Thin Wall XLPE Primary Cable	RED	590.0	-	X	-
28	-	-	KA14A1	3510366 R1	1.16	16.0	Thin Wall XLPE Primary Cable	RED	590.0	-	X	-

Name	Terminal Part Number	V-Min	Name	Wire Part Number	Wire CSA	Wire Spec	Wire Material description	Wire Color Description	Wire Length	End2 Terminal Part Number	End2 Pin Name	End2 Connector
30	-	-	KR97AR	3510346 R1	0.53	20.0	Thin Wall XLPE Primary Cable	VIOLET	1345.0	-	-	-
30	-	-	KY97AR	3510346 R1	0.53	20.0	Thin Wall XLPE Primary Cable	VIOLET	1345.0	-	-	-
30	-	-	VW97AR	3510346 R1	0.53	20.0	Thin Wall XLPE Primary Cable	VIOLET	1345.0	-	-	-
32	-	-	KT9A	3510310 R1	0.53	20.0	Thin Wall XLPE Primary Cable	GREY	590.0	-	-	-
32	-	-	KZ9A	3510310 R1	0.53	20.0	Thin Wall XLPE Primary Cable	GREY	590.0	-	-	-
33	-	-	VJ97B	3510346 R1	0.53	20.0	Thin Wall XLPE Primary Cable	VIOLET	1330.0	-	-	-
33	-	-	VJ97B	3510346 R1	0.53	20.0	Thin Wall XLPE Primary Cable	VIOLET	1330.0	-	23	1702
35	-	-	KT34	3510328 R1	0.53	20.0	Thin Wall XLPE Primary Cable	TAN	970.0	-	-	-

Name	Terminal Part Number	V-Min	Name	Wire Part Number	Wire CSA	Wire Spec	Wire Material description	Wire Color Description	Wire Length	End2 Terminal Part Number	End2 Pin Name	End2 Connector
35	-	-	KZ34A	3510328 R1	0.53	20.0	Thin Wall XLPE Primary Cable	TAN	1470.0	-	-	-
38	-	-	VL95AT2	3510328 R1	0.53	20.0	Thin Wall XLPE Primary Cable	TAN	1030.0	-	-	-
39	-	-	VL95AS2	3510328 R1	0.53	20.0	Thin Wall XLPE Primary Cable	TAN	1000.0	-	-	-
40	-	-	VL95AU2	3510328 R1	0.53	20.0	Thin Wall XLPE Primary Cable	TAN	1115.0	-	-	-
41	-	-	VK95BA	4073403 R1	0.53	20.0	TXL 150C	TAN	2265.0	-	-	-
42	-	-	VK95BC	4073403 R1	0.53	20.0	TXL 150C	TAN	2265.0	-	-	-
46	-	-	-	-	-	-	-	-	-	-	-	-
49	-	-	KA10-GA	3510360 R1	1.16	16.0	Thin Wall XLPE Primary Cable	WHITE	310.0	-	X	-
50	-	-	KA10-GB	3510360 R1	1.16	16.0	Thin Wall XLPE Primary Cable	WHITE	310.0	-	X	-
51	-	-	KA10-GC	3510360 R1	1.16	16.0	Thin Wall XLPE Primary Cable	WHITE	190.0	-	X	-

Name	Terminal Part Number	V-Min	Name	Wire Part Number	Wire CSA	Wire Spec	Wire Material description	Wire Color Description	Wire Length	End2 Terminal Part Number	End2 Pin Name	End2 Connector
52	-	-	KA10-GD	3510360 R1	1.16	16.0	Thin Wall XLPE Primary Cable	WHITE	190.0	-	X	-
53	-	-	VK95DVL	4073403 R1	0.53	20.0	TXL 150C	TAN	2265.0	-	-	-
54	-	-	VL95E	3510328 R1	0.53	20.0	Thin Wall XLPE Primary Cable	TAN	1665.0	-	-	-
57	-	-	AC23-G1	3510328 R1	0.53	20.0	Thin Wall XLPE Primary Cable	TAN	430.0	-	-	-
57	-	-	AA95AA	3510328 R1	0.53	20.0	Thin Wall XLPE Primary Cable	TAN	1665.0	-	-	-
59	-	-	BA47A	3510310 R1	0.53	20.0	Thin Wall XLPE Primary Cable	GREY	2535.0	-	-	-
59	-	-	KM47C	3510310 R1	0.53	20.0	Thin Wall XLPE Primary Cable	GREY	1460.0	-	-	-
60	-	-	KM47B	3510310 R1	0.53	20.0	Thin Wall XLPE Primary Cable	GREY	1460.0	-	-	-
60	-	-	BA47	3510310 R1	0.53	20.0	Thin Wall XLPE Primary Cable	GREY	2535.0	-	-	-

Name	Terminal Part Number	V-Min	Name	Wire Part Number	Wire CSA	Wire Spec	Wire Material description	Wire Color Description	Wire Length	End2 Terminal Part Number	End2 Pin Name	End2 Connector
61	-	-	VJ97N	3510346 R1	0.53	20.0	Thin Wall XLPE Primary Cable	VIOLET	1330.0	-	-	-
61	-	-	VJ97N	3510346 R1	0.53	20.0	Thin Wall XLPE Primary Cable	VIOLET	1330.0	-	32	1702
62	-	-	KB9-G	3510310 R1	0.53	20.0	Thin Wall XLPE Primary Cable	GREY	1470.0	-	-	-
63	-	-	VW99A	3510346 R1	0.53	20.0	Thin Wall XLPE Primary Cable	VIOLET	1345.0	-	-	-
63	-	-	KR99A	3510346 R1	0.53	20.0	Thin Wall XLPE Primary Cable	VIOLET	1345.0	-	-	-
63	-	-	KY99A	3510346 R1	0.53	20.0	Thin Wall XLPE Primary Cable	VIOLET	1345.0	-	-	-
64	-	-	VJ97M	3510346 R1	0.53	20.0	Thin Wall XLPE Primary Cable	VIOLET	1330.0	-	-	-
64	-	-	VJ97M	3510346 R1	0.53	20.0	Thin Wall XLPE Primary Cable	VIOLET	1330.0	-	33	1702

Name	Terminal Part Number	V-Min	Name	Wire Part Number	Wire CSA	Wire Spec	Wire Material description	Wire Color Description	Wire Length	End2 Terminal Part Number	End2 Pin Name	End2 Connector
65	-	-	KA41A	3510328 R1	0.53	20.0	Thin Wall XLPE Primary Cable	TAN	1450.0	-	-	-
66	-	-	VW97XG	3510310 R1	0.53	20.0	Thin Wall XLPE Primary Cable	GREY	1345.0	-	-	-
66	-	-	KY97XG	3510310 R1	0.53	20.0	Thin Wall XLPE Primary Cable	GREY	1345.0	-	-	-
66	-	-	KR97XG	3510310 R1	0.53	20.0	Thin Wall XLPE Primary Cable	GREY	1345.0	-	-	-
67	-	-	KY99F	3510346 R1	0.53	20.0	Thin Wall XLPE Primary Cable	VIOLET	1345.0	-	-	-
67	-	-	VW99F	3510346 R1	0.53	20.0	Thin Wall XLPE Primary Cable	VIOLET	1345.0	-	-	-
67	-	-	KR99F	3510346 R1	0.53	20.0	Thin Wall XLPE Primary Cable	VIOLET	1345.0	-	-	-
70	-	-	VW97XC	3510328 R1	0.53	20.0	Thin Wall XLPE Primary Cable	TAN	1345.0	-	-	-

Name	Terminal Part Number	V-Min	Name	Wire Part Number	Wire CSA	Wire Spec	Wire Material description	Wire Color Description	Wire Length	End2 Terminal Part Number	End2 Pin Name	End2 Connector
70	-	-	KY97XC	3510328 R1	0.53	20.0	Thin Wall XLPE Primary Cable	TAN	1345.0	-	-	-
70	-	-	KR97XC	3510328 R1	0.53	20.0	Thin Wall XLPE Primary Cable	TAN	1345.0	-	-	-
73	-	-	KA10-GE	3510360 R1	1.16	16.0	Thin Wall XLPE Primary Cable	WHITE	190.0	-	X	-
75	-	-	KA18	3510323 R1	0.79	18.0	Thin Wall XLPE Primary Cable	PINK	1490.0	-	-	-
76	-	-	KA18R	3510323 R1	0.79	18.0	Thin Wall XLPE Primary Cable	PINK	155.0	-	-	-
77	-	-	VK95DVH	4073403 R1	0.53	20.0	TXL 150C	TAN	2265.0	-	-	-
78	-	-	AC23	3510328 R1	0.53	20.0	Thin Wall XLPE Primary Cable	TAN	1090.0	-	-	-
79	-	-	KA95SB	3510328 R1	0.53	20.0	Thin Wall XLPE Primary Cable	TAN	2205.0	-	-	-
82	-	-	VL95AC	3510328 R1	0.53	20.0	Thin Wall XLPE Primary Cable	TAN	1665.0	-	-	-

Name	Terminal Part Number	V-Min	Name	Wire Part Number	Wire CSA	Wire Spec	Wire Material description	Wire Color Description	Wire Length	End2 Terminal Part Number	End2 Pin Name	End2 Connector
83	-	-	VW97XH	3510346 R1	0.53	20.0	Thin Wall XLPE Primary Cable	VIOLET	1345.0	-	-	-
83	-	-	KF97XH	3510346 R1	0.53	20.0	Thin Wall XLPE Primary Cable	VIOLET	1345.0	-	-	-
90	-	-	VW99B	3510310 R1	0.53	20.0	Thin Wall XLPE Primary Cable	GREY	1345.0	-	-	-
90	-	-	KY99B	3510346 R1	0.53	20.0	Thin Wall XLPE Primary Cable	VIOLET	1345.0	-	-	-
90	-	-	KF46C	3510310 R1	0.53	20.0	Thin Wall XLPE Primary Cable	GREY	1345.0	-	-	-
94	-	-	VW99C	3510346 R1	0.53	20.0	Thin Wall XLPE Primary Cable	VIOLET	1345.0	-	-	-
94	-	-	KR99C	3510346 R1	0.53	20.0	Thin Wall XLPE Primary Cable	VIOLET	1345.0	-	-	-
94	-	-	KY99C	3510346 R1	0.53	20.0	Thin Wall XLPE Primary Cable	VIOLET	1345.0	-	-	-

Connector Name	6000
Part Number	3945694C1
Instances	A26/B6.7/L9 - Snow Valve Control:Diagram1 B6.7 - Cooling Fan Control Two-Speed:Diagram1 B6.7 - Cooling Fan Control Two-Speed:Diagram2 B6.7 - Vehicle Acceleration (w/ Two PWR Two GND & Two STS):Diagram1
Mates	MODU-ECM-A001-10-01A

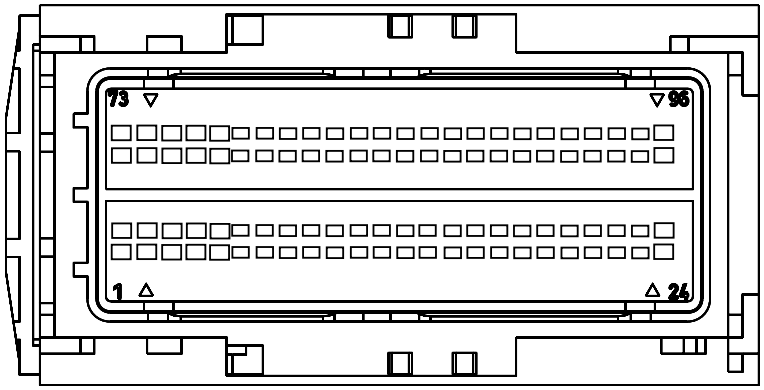

Name	Terminal Part Number	V-Min	Name	Wire Part Number	Wire CSA	Wire Spec	Wire Material description	Wire Color Description	Wire Length	End2 Terminal Part Number	End2 Pin Name	End2 Connect or
8	-	-	KP6A	3510310 R1	0.53	20.0	Thin Wall XLPE Primary Cable	GREY	460.0	-	X	-
8	-	-	AB6A	3510310 R1	0.53	20.0	Thin Wall XLPE Primary Cable	GREY	460.0	-	X	-
8	-	-	VG6A	3510346 R1	0.53	20.0	Thin Wall XLPE Primary Cable	VIOLET	460.0	-	X	-
9	-	-	VJ97C	3510346 R1	0.53	20.0	Thin Wall XLPE Primary Cable	VIOLET	1330.0	-	22	1702

Name	Terminal Part Number	V-Min	Name	Wire Part Number	Wire CSA	Wire Spec	Wire Material description	Wire Color Description	Wire Length	End2 Terminal Part Number	End2 Pin Name	End2 Connector
10	-	-	VJ99B	3510346 R1	0.53	20.0	Thin Wall XLPE Primary Cable	VIOLET	1330.0	-	28	1702
22	-	-	-	-	-	-	-	-	-	-	-	-
33	-	-	VJ97B	3510346 R1	0.53	20.0	Thin Wall XLPE Primary Cable	VIOLET	1330.0	-	23	1702
46	-	-	-	-	-	-	-	-	-	-	-	-
57	-	-	KA95AA	3510328 R1	0.53	20.0	Thin Wall XLPE Primary Cable	TAN	1160.0	-	-	-
61	-	-	VJ97N	3510346 R1	0.53	20.0	Thin Wall XLPE Primary Cable	VIOLET	1330.0	-	32	1702
64	-	-	VJ97M	3510346 R1	0.53	20.0	Thin Wall XLPE Primary Cable	VIOLET	1330.0	-	33	1702
78	-	-	AC23	3510328 R1	0.53	20.0	Thin Wall XLPE Primary Cable	TAN	1090.0	-	A	600

Connector Name	600
Part Number	3522068C1
Instances	B6.7 - Cooling Fan Control Two-Speed:Diagram1 B6.7 - Cooling Fan Control Two-Speed:Diagram2
Mates	SOL-FAN_2SPEED-5014-01-04A

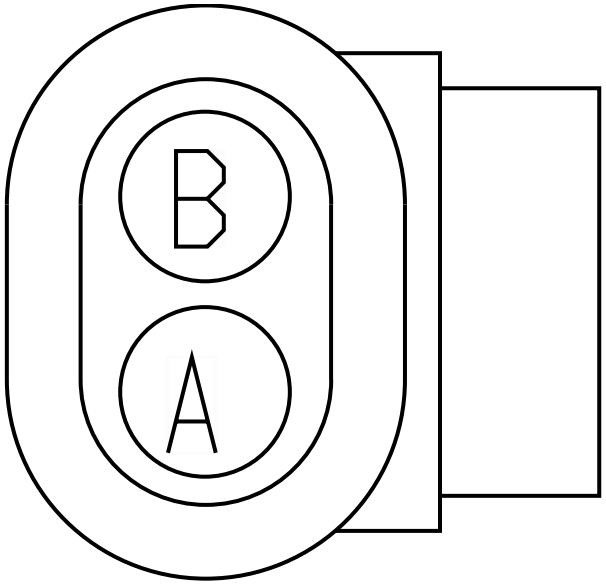

Name	Terminal Part Number	V-Min	Name	Wire Part Number	Wire CSA	Wire Spec	Wire Material description	Wire Color Description	Wire Length	End2 Terminal Part Number	End2 Pin Name	End2 Connect or
A	-	-	AC23	3510328 R1	0.53	20.0	Thin Wall XLPE Primary Cable	TAN	1090.0	-	78	6000
B	-	-	AC23-G	3510328 R1	0.53	20.0	Thin Wall XLPE Primary Cable	TAN	660.0	-	-	-

Connector Name	6018
Part Number	3952655C1
Instances	A26 - Ambient Air Temperature:Diagram1 A26 - Ambient Temperature Monitoring:Diagram1 A26 - CAN Layout:Diagnostic Proprietary J1939 A26 - CAN Layout:Engine Proprietary J1939 A26 - CAN Layout:Powertrain Standard J1939 (500Kbps) A26 - Diagnostic Private J1939:A26 - Diagnostic Private J1939 A26 - Driver Controlled Locking Differential FR and RR Axle (Dana w/ one switch):Diagram1 A26 - Driver Controlled Locking Differential FR and RR Axle (Meritor w/ one sw):Diagram1 A26 - Driver Controlled Locking Differential FR and RR Axles (Dana w/ two sw):Diagram1 A26 - Driver Controlled Locking Differential FR and RR Axles (Meritor w/ two sw):Diagram1 A26 - Driver Controlled Locking Differential RR Axle (Dana w/ one sw):Diagram1 A26 - Driver Controlled Locking Differential RR Axle (Meritor w/ one sw):Diagram1 A26 - Engine Brake Mux Switch:Diagram1 A26 - Engine Brake W/ Stalk Shifter:Diagram1 A26 - Engine Private J1939 (250kbps):A26 - Engine Private J1939 (250kbps) A26 - Engine Speed (Tachometer):Diagram1 A26 - Exhaust Brake:Diagram1 A26 - Power Lift Gate:Diagram1 A26 - Powertrain J1939 Allison 3k/4k:A26 - Powertrain J1939 Allison 3k/4k A26 - Powertrain J1939 UltraShift Transmission:A26 - Powertrain J1939 UltraShift Transmission A26 - Rear Lights Stop - Daisy Chain:Diagram1 A26 - Rear Lights Stop - Single Assemby Jumper Harness W/08TKC, 08THM:Diagram1 A26 - Rear Lights Stop - Single Assemby W/08TKJ:Diagram1 A26 - Remote Start/Stop:Diagram1 A26 - Separate Rear Lights (Stop) W/08TVH:Diagram1 A26 - Traction Control (Bendix):Diagram1 A26 - Traction Control (Bendix):Diagram2 A26 - Transmission Power Take Off (Auto Trans Dual PTO W/ 42 Parameters):Diagram1 A26 - Transmission Power Take Off (Auto Trans Single PTO w/21 Parameters):Diagram1

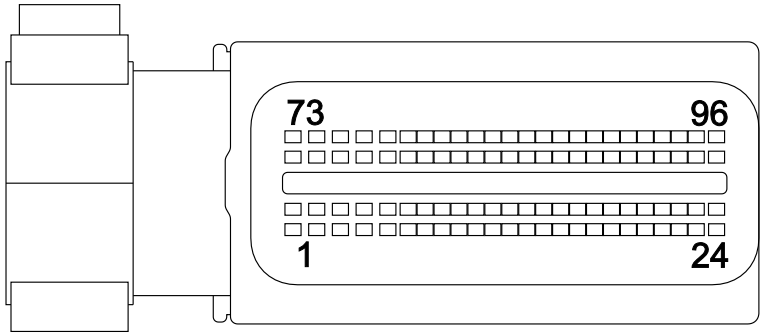

A26 - Transmission Power Take Off (Manual Trans Dual PTO W/ 42 Parameters):Diagram1
A26 - Transmission Power Take Off (Manual Trans Single PTO w/ 21 Parameters):Diagram1
A26 - Two Speed Axle (Multiplex SW on Dash):Diagram1
A26/B6.7/L9 - A26 - Adaptive Cruise Control w/o Display (Bendix):Diagram1
A26/B6.7/L9 - Cruise Control (W/ One Telltale 4 Pin):Diagram1
A26/B6.7/L9 - Cruise Control (W/ One Telltale 4 Pin):Diagram2
A26/B6.7/L9 - Cruise Control (W/ One Telltale 10 Pin):Diagram1
A26/B6.7/L9 - Cruise Control (W/ One Telltale 10 Pin):Diagram2
A26/B6.7/L9 - DEF Economy Monitor (GEN IV):Diagram1
A26/B6.7/L9 - Door Pod Module (4 Door):Diagram1
A26/B6.7/L9 - DPF Regen Switch Only:Diagram1
A26/B6.7/L9 - DPF With Bistable Inhibit Switch:Diagram1
A26/B6.7/L9 - DPF With Monostable Inhibit Switch:Diagram1
A26/B6.7/L9 - Engine Oil Level Monitoring:Diagram1
A26/B6.7/L9 - Engine Oil Pressure:Diagram1
A26/B6.7/L9 - Engine Oil Temperature (NA Mux):Diagram1
A26/B6.7/L9 - Engine Oil Temperature(NA MUX AUX Gauge):Diagram1
A26/B6.7/L9 - Engine Usage Monitoring (Base) NA:Diagram1
A26/B6.7/L9 - Engine Usage Monitoring (VID Option):Diagram1
A26/B6.7/L9 - Engine Warning_MUX:Diagram1
A26/B6.7/L9 - Fifth Wheel Slide:Diagram1
A26/B6.7/L9 - Fuel Economy Monitor:Diagram1
A26/B6.7/L9 - Height Control:Diagram1
A26/B6.7/L9 - High Exhaust System Temperature (HEST) Monitoring:Diagram1
A26/B6.7/L9 - Jaw Unlock Control:Diagram1
A26/B6.7/L9 - Jaw Unlock Control W/ SOLENOIDS W/SWITCH PACKS:Diagram1
A26/B6.7/L9 - Power Divider Lock Control and Monitoring:Diagram1
A26/B6.7/L9 - Trip Odometer (w/ECM & TCM):Diagram1
A26/B6.7/L9 - Trip Odometer (Gen 4 Cluster):Diagram1
A26/B6.7/L9 - Trip Odometer w/VID:Diagram1
A26/B6.7/L9 - Up Shift Indicator:Diagram1
A26/B6.7/L9 - Vehicle Speed Control (Cruise Control) 4 Pin:Diagram1
A26/B6.7/L9 - Vehicle Speed Control (Cruise Control) 10 Pin:Diagram1
B6.7 - Transmission Power Take Off (Manual Trans Single PTO w/21 Parameters):Diagram1

Name	Terminal Part Number	V-Min	Name	Wire Part Number	Wire CSA	Wire Spec	Wire Material description	Wire Color Description	Wire Length	End2 Terminal Part Number	End2 Pin Name	End2 Connect or
9	-	-	VL41E	3510329 R1	0.79	18.0	Thin Wall XLPE Primary Cable	TAN	1375.0	-	18	1702
9	-	-	VL41E	3510329 R1	0.79	18.0	Thin Wall XLPE Primary Cable	TAN	1375.0	-	-	-
22	-	-	-	-	-	-	-	-	-	-	-	-
46	-	-	-	-	-	-	-	-	-	-	-	-
59	-	-	-	-	-	-	-	-	-	-	-	-
59	-	-	WIRE720 072	-	0.0	-	-	-	0.0	-	PIN1	-
59	-	-	WIRE870 704	-	0.0	-	-	-	0.0	-	1	-
59	-	-	WIRE870 712	-	0.0	-	-	-	0.0	-	1	-
59	-	-	WIRE870 808	-	0.0	-	-	-	0.0	-	PIN1	-
60	-	-	WIRE239 164	-	0.0	-	-	-	0.0	-	PIN1	-
61	-	-	WIRE196 467	-	0.0	-	-	-	0.0	-	B	4328
63	-	-	AY9A	3510329 R1	0.79	18.0	Thin Wall XLPE Primary Cable	TAN	160.0	-	X	-
63	-	-	AP9A	3510329 R1	0.79	18.0	Thin Wall XLPE Primary Cable	TAN	160.0	-	-	-
83	-	-	-	-	-	-	-	-	-	-	-	-

Name	Terminal Part Number	V-Min	Name	Wire Part Number	Wire CSA	Wire Spec	Wire Material description	Wire Color Description	Wire Length	End2 Terminal Part Number	End2 Pin Name	End2 Connector
83	-	-	WIRE720071	-	0.0	-	-	-	0.0	-	PIN1	-
83	-	-	WIRE870705	-	0.0	-	-	-	0.0	-	PIN1	-
83	-	-	WIRE870715	-	0.0	-	-	-	0.0	-	1	-
83	-	-	WIRE870809	-	0.0	-	-	-	0.0	-	PIN1	-
84	-	-	WIRE239162	-	0.0	-	-	-	0.0	-	PIN1	-
85	-	-	WIRE196466	-	0.0	-	-	-	0.0	-	A	4328

Connector Name	6018
Part Number	3952655C1
Instances	A26 - 26" Fuel Tank:Diagram1 A26 - 26" Fuel Tank:Diagram2 A26 - 26" Fuel Tank:Diagram3 A26 - 26" Fuel Tank:Diagram4 A26 - 26" Fuel Tank:Diagram5 A26 - 26" Fuel Tank - Secondary:Diagram1 A26 - 26" Fuel Tank - Secondary:Diagram2 A26 - 26" Fuel Tank - Secondary:Diagram3 A26 - 26" Fuel Tank - Secondary:Diagram4 A26 - 26" Fuel Tank - Secondary:Diagram5 A26 - 26" Fuel Tank - Secondary:Diagram6 A26 - 26" Fuel Tank - Secondary:Diagram7 A26 - Body Builder - Powertrain:Diagram1 A26 - Brake Switch:Diagram1 A26 - Coolant Level Monitoring (No Coolant Module):Diagram1 A26 - Cooling Fan Control Two-Speed:Diagram1 A26 - ECM:Diagram1 A26 - Rear Lights Stop - Dual Assembly:Diagram1 A26 - Rear Lights Stop - Single Assemby:Diagram1 A26 - Selective Catalytic Reduction (SCR):Diagram1-Combination1 A26 - Selective Catalytic Reduction (SCR):Diagram1-Combination2 A26 - Selective Catalytic Reduction (SCR):Diagram2-Combination1 A26 - Selective Catalytic Reduction (SCR):Diagram2-Combination2 A26 - Snow Valve Control:Diagram1 A26 - Snow Valve Control:Diagram2 A26 - Starting Aid (Flame Start):Diagram1 A26 - Vehicle Acceleration (w/ Two PWR Two GND & Two STS):Diagram1 A26 - Vehicle Speedometer System (Manual XMSN):Diagram1 A26 - Water In Fuel (WIF) Davco N/ Heater:Diagram1 A26 - Water In Fuel (WIF) Davco N/ Heater:Diagram2 A26 - Water In Fuel (WIF) Davco N/ Heater:Diagram3 A26 - Water In Fuel (WIF) Davco N/ Heater:Diagram4 A26 - Water In Fuel (WIF) Davco N/ Heater:Diagram5 A26 - Water In Fuel (WIF) Davco N/ Heater:Diagram6 A26 - Water In Fuel (WIF) Davco N/ Heater:Diagram7 A26 - Water In Fuel (WIF) Davco N/ Heater:Diagram8

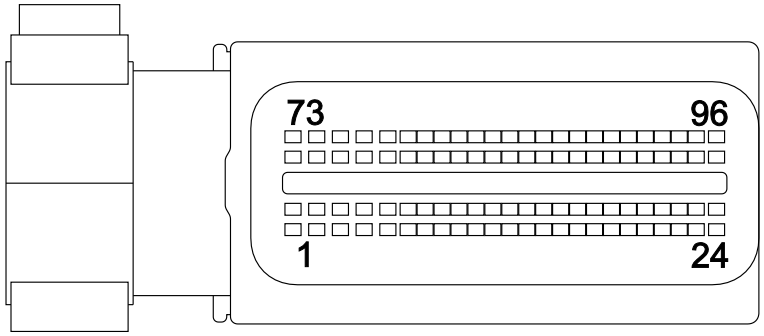

A26 - Water In Fuel (WIF) Davco N/ Heater:Diagram9
A26 - Water In Fuel (WIF) Davco W/ Heater:Diagram1
A26 - Water In Fuel (WIF) Davco W/ Heater:Diagram2
A26 - Water In Fuel (WIF) Davco W/ Heater:Diagram3
A26 - Water In Fuel (WIF) Davco W/ Heater:Diagram4
A26 - Water In Fuel (WIF) Davco W/ Heater:Diagram5
A26 - Water In Fuel (WIF) Davco W/ Heater:Diagram6
A26 - Water In Fuel (WIF) Davco W/ Heater:Diagram7
A26 - Water In Fuel (WIF) Davco W/ Heater:Diagram8
A26 - Water In Fuel (WIF) Davco W/ Heater:Diagram9
A26/B6.7/L9 - Adjustable Engine Speed Control (PTO) 4-pin:Diagram1
A26/B6.7/L9 - Adjustable Engine Speed Control (PTO) 10-pin:Diagram1
A26/B6.7/L9 - Adjustable Engine Speed Control (PTO) 10-pin:Diagram2
A26/B6.7/L9 - Driver and Passenger Seats - RollTek (Hard Wired):Diagram1
A26/B6.7/L9 - Odometer (via BCM/EGC):Diagram1
A26/B6.7/L9 - PTO Hour Meter:Diagram1
A26/B6.7/L9 - Seats (RollTek) Drivers Seat Only (Hard Wired) - Leather:Diagram1
A26/B6.7/L9 - Seats (RollTek) Drivers Seat Only (Hard Wired) - Mordular:Diagram1
A26/B6.7/L9 - Seats (RollTek) Drivers Seat Only (Hard Wired) - Vinyl:Diagram1
A26/B6.7/L9 - Snow Valve Control:Diagram1
A26/B6.7/L9 - Transfer Case - High/Low Air Sol:Diagram1
A26/B6.7/L9 - Transfer Case - High/Neu/Low Air Sol:Diagram1
A26/B6.7/L9 - Vehicle Speed Limit Override:Diagram1
A26/B6.7/L9 - Vehicle Speedometer System (Automatic XMSN):Diagram1

Mates MODU-ECM-A001-10-02A

Name	Terminal Part Number	V-Min	Name	Wire Part Number	Wire CSA	Wire Spec	Wire Material description	Wire Color Description	Wire Length	End2 Terminal Part Number	End2 Pin Name	End2 Connector
1	-	-	CD95GE	3510329 R1	0.79	18.0	Thin Wall XLPE Primary Cable	TAN	210.0	-	X	-

Name	Terminal Part Number	V-Min	Name	Wire Part Number	Wire CSA	Wire Spec	Wire Material description	Wire Color Description	Wire Length	End2 Terminal Part Number	End2 Pin Name	End2 Connector
1	-	-	CG95GE	3510329 R1	0.79	18.0	Thin Wall XLPE Primary Cable	TAN	210.0	-	X	-
1	-	-	CC95GE	3510329 R1	0.79	18.0	Thin Wall XLPE Primary Cable	TAN	210.0	-	X	-
1	-	-	CF95GE	3510329 R1	0.79	18.0	Thin Wall XLPE Primary Cable	TAN	3240.0	-	5	674
1	-	-	CA95GE	3510329 R1	0.79	18.0	Thin Wall XLPE Primary Cable	TAN	2512.0	-	5	674
2	-	-	KA97B	3510347 R1	0.79	18.0	Thin Wall XLPE Primary Cable	VIOLET	1375.0	-	23	1702
4	-	-	AH95F	3510329 R1	0.79	18.0	Thin Wall XLPE Primary Cable	TAN	3240.0	-	2	674
4	-	-	AJ95F	3510329 R1	0.79	18.0	Thin Wall XLPE Primary Cable	TAN	2512.0	-	2	674
5	-	-	KA95-GC	3510293 R1	0.79	18.0	Thin Wall XLPE Primary Cable	BLACK	2020.0	-	B10	690

Name	Terminal Part Number	V-Min	Name	Wire Part Number	Wire CSA	Wire Spec	Wire Material description	Wire Color Description	Wire Length	End2 Terminal Part Number	End2 Pin Name	End2 Connector
6	-	-	KA97C	3510347 R1	0.79	18.0	Thin Wall XLPE Primary Cable	VIOLET	1375.0	-	22	1702
7	-	-	AY95BC	2645915 R1	0.79	18.0	TXL 150C	TAN	4240.0	-	4	670B
8	-	-	KC34D	3510329 R1	0.79	18.0	Thin Wall XLPE Primary Cable	TAN	2795.0	-	1	6407
10	-	-	AY95BA	2645915 R1	0.79	18.0	TXL 150C	TAN	4240.0	-	3	670B
11	-	-	KA41-GA	3510359 R1	0.79	18.0	Thin Wall XLPE Primary Cable	WHITE	1490.0	-	-	-
12	-	-	KA97P	3510329 R1	0.79	18.0	Thin Wall XLPE Primary Cable	TAN	1375.0	-	30	1702
14	-	-	KJ92A19	3510329 R1	0.79	18.0	Thin Wall XLPE Primary Cable	TAN	1025.0	-	J	4706
16	-	-	KJ92A9	3510329 R1	0.79	18.0	Thin Wall XLPE Primary Cable	TAN	1025.0	-	E	4705
17	-	-	KA13	3510323 R1	0.79	18.0	Thin Wall XLPE Primary Cable	PINK	1375.0	-	37	1702

Name	Terminal Part Number	V-Min	Name	Wire Part Number	Wire CSA	Wire Spec	Wire Material description	Wire Color Description	Wire Length	End2 Terminal Part Number	End2 Pin Name	End2 Connector
20	-	-	KJ92A2	3510329 R1	0.79	18.0	Thin Wall XLPE Primary Cable	TAN	1025.0	-	E	4706
21	-	-	KJ92A17	3510329 R1	0.79	18.0	Thin Wall XLPE Primary Cable	TAN	1025.0	-	J	4705
22	-	-	KJ92A14	3510329 R1	0.79	18.0	Thin Wall XLPE Primary Cable	TAN	1025.0	-	D	4706
23	-	-	KJ92A6	3510329 R1	0.79	18.0	Thin Wall XLPE Primary Cable	TAN	1025.0	-	F	4706
24	-	-	KA95GBE	3510329 R1	0.79	18.0	Thin Wall XLPE Primary Cable	TAN	1710.0	-	X	-
25	-	-	ZS23A	3510329 R1	0.79	18.0	Thin Wall XLPE Primary Cable	TAN	765.0	-	X	-
25	-	-	ZT23A	3510329 R1	0.79	18.0	Thin Wall XLPE Primary Cable	TAN	1185.0	-	A	6400
28	-	-	AH95AB	3510329 R1	0.79	18.0	Thin Wall XLPE Primary Cable	TAN	3240.0	-	6	674

Name	Terminal Part Number	V-Min	Name	Wire Part Number	Wire CSA	Wire Spec	Wire Material description	Wire Color Description	Wire Length	End2 Terminal Part Number	End2 Pin Name	End2 Connector
28	-	-	AJ95AB	3510329 R1	0.79	18.0	Thin Wall XLPE Primary Cable	TAN	2512.0	-	6	674
29	-	-	KA97N	3510347 R1	0.79	18.0	Thin Wall XLPE Primary Cable	VIOLET	1375.0	-	29	1702
33	-	-	KA99B	3510347 R1	0.79	18.0	Thin Wall XLPE Primary Cable	VIOLET	1375.0	-	28	1702
34	-	-	AY95K	2645915 R1	0.79	18.0	TXL 150C	TAN	4240.0	-	8	670B
36	-	-	ZV95DA	3510329 R1	0.79	18.0	Thin Wall XLPE Primary Cable	TAN	815.0	-	X	-
36	-	-	ZM95DA	3510329 R1	0.79	18.0	Thin Wall XLPE Primary Cable	TAN	815.0	-	X	-
36	-	-	ZW95DA	2645915 R1	0.79	18.0	TXL 150C	TAN	4240.0	-	5	670B
36	-	-	ZX95DA	3510329 R1	0.79	18.0	Thin Wall XLPE Primary Cable	TAN	815.0	-	X	-
39	-	-	KJ92A1	3510329 R1	0.79	18.0	Thin Wall XLPE Primary Cable	TAN	1025.0	-	H	4706

Name	Terminal Part Number	V-Min	Name	Wire Part Number	Wire CSA	Wire Spec	Wire Material description	Wire Color Description	Wire Length	End2 Terminal Part Number	End2 Pin Name	End2 Connector
40	-	-	KJ92A13	3510329 R1	0.79	18.0	Thin Wall XLPE Primary Cable	TAN	1025.0	-	D	4705
46	-	-	KJ92A16	3510329 R1	0.79	18.0	Thin Wall XLPE Primary Cable	TAN	1025.0	-	H	4705
50	-	-	CD99D	3510347 R1	0.79	18.0	Thin Wall XLPE Primary Cable	VIOLET	1640.0	-	1	6104
55	-	-	VB95-GF	3510359 R1	0.79	18.0	Thin Wall XLPE Primary Cable	WHITE	1750.0	-	2	1874B
56	-	-	KJ92A5	3510329 R1	0.79	18.0	Thin Wall XLPE Primary Cable	TAN	1025.0	-	A	4706
57	-	-	KA97M	3510347 R1	0.79	18.0	Thin Wall XLPE Primary Cable	VIOLET	1375.0	-	24	1702
58	-	-	AH95H	3510329 R1	0.79	18.0	Thin Wall XLPE Primary Cable	TAN	3240.0	-	3	674
58	-	-	AJ95H	3510329 R1	0.79	18.0	Thin Wall XLPE Primary Cable	TAN	2512.0	-	3	674
59	-	-	-	-	-	-	-	-	-	-	-	-

Name	Terminal Part Number	V-Min	Name	Wire Part Number	Wire CSA	Wire Spec	Wire Material description	Wire Color Description	Wire Length	End2 Terminal Part Number	End2 Pin Name	End2 Connector
63	-	-	AP9A	3510329 R1	0.79	18.0	Thin Wall XLPE Primary Cable	TAN	160.0	-	-	-
63	-	-	AY9A	3510329 R1	0.79	18.0	Thin Wall XLPE Primary Cable	TAN	160.0	-	X	-
64	-	-	AH95AT2	3510329 R1	0.79	18.0	Thin Wall XLPE Primary Cable	TAN	900.0	-	X	-
64	-	-	AJ95AT2	3510329 R1	0.79	18.0	Thin Wall XLPE Primary Cable	TAN	900.0	-	X	-
65	-	-	KJ92A7	3510329 R1	0.79	18.0	Thin Wall XLPE Primary Cable	TAN	1025.0	-	G	4706
66	-	-	SG92A11	3510329 R1	0.79	18.0	Thin Wall XLPE Primary Cable	TAN	1025.0	-	B	4705
67	-	-	AH95AR2	3510329 R1	0.79	18.0	Thin Wall XLPE Primary Cable	TAN	1020.0	-	X	-
67	-	-	AJ95AR2	3510365 R1	0.79	18.0	Thin Wall XLPE Primary Cable	RED	1020.0	-	X	-

Name	Terminal Part Number	V-Min	Name	Wire Part Number	Wire CSA	Wire Spec	Wire Material description	Wire Color Description	Wire Length	End2 Terminal Part Number	End2 Pin Name	End2 Connector
67	-	-	AK95AR2	3510365 R1	0.79	18.0	Thin Wall XLPE Primary Cable	RED	1020.0	-	X	-
69	-	-	AH95AU2	3510329 R1	0.79	18.0	Thin Wall XLPE Primary Cable	TAN	870.0	-	X	-
69	-	-	AJ95AU2	3510329 R1	0.79	18.0	Thin Wall XLPE Primary Cable	TAN	870.0	-	X	-
72	-	-	KA95TB	3510311 R1	0.79	18.0	Thin Wall XLPE Primary Cable	GREY	2020.0	-	E10	690
76	-	-	ZR23-G	3510359 R1	0.79	18.0	Thin Wall XLPE Primary Cable	WHITE	1185.0	-	B	6400
77	-	-	KJ92A8	3510329 R1	0.79	18.0	Thin Wall XLPE Primary Cable	TAN	1025.0	-	G	4705
78	-	-	KJ92A10	3510329 R1	0.79	18.0	Thin Wall XLPE Primary Cable	TAN	1025.0	-	F	4705
83	-	-	-	-	-	-	-	-	-	-	-	-
87	-	-	AH95AS2	3510329 R1	0.79	18.0	Thin Wall XLPE Primary Cable	TAN	990.0	-	X	-

Name	Terminal Part Number	V-Min	Name	Wire Part Number	Wire CSA	Wire Spec	Wire Material description	Wire Color Description	Wire Length	End2 Terminal Part Number	End2 Pin Name	End2 Connect or
87	-	-	AJ95AS2	3510329 R1	0.79	18.0	Thin Wall XLPE Primary Cable	TAN	990.0	-	X	-
90	-	-	KJ92A12	3510329 R1	0.79	18.0	Thin Wall XLPE Primary Cable	TAN	1025.0	-	C	4705
91	-	-	XN47	3510311 R1	0.79	18.0	Thin Wall XLPE Primary Cable	GREY	2695.0	-	A	7600
92	-	-	XN47A	3510311 R1	0.79	18.0	Thin Wall XLPE Primary Cable	GREY	2695.0	-	B	7600

Connector Name	6018
Part Number	3952655C1
Instances	A26/B6.7/L9 - Theft Deterrent (Grid Controlled):Diagram1
Mates	MODU-ECM-A001-10-00A A26

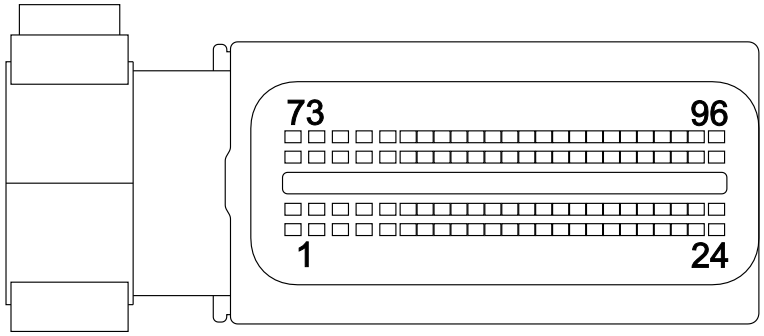

Name	Terminal Part Number	V-Min	Name	Wire Part Number	Wire CSA	Wire Spec	Wire Material description	Wire Color Description	Wire Length	End2 Terminal Part Number	End2 Pin Name	End2 Connect or
59	-	-	-	-	-	-	-	-	-	-	-	-
83	-	-	-	-	-	-	-	-	-	-	-	-

Connector Name	6019
Part Number	3952656C1
Instances	A26 - ECM:Diagram1 A26 - Selective Catalytic Reduction (SCR):Diagram1-Combination1 A26 - Selective Catalytic Reduction (SCR):Diagram1-Combination2
Mates	MODU-ECM-A001-10-02A

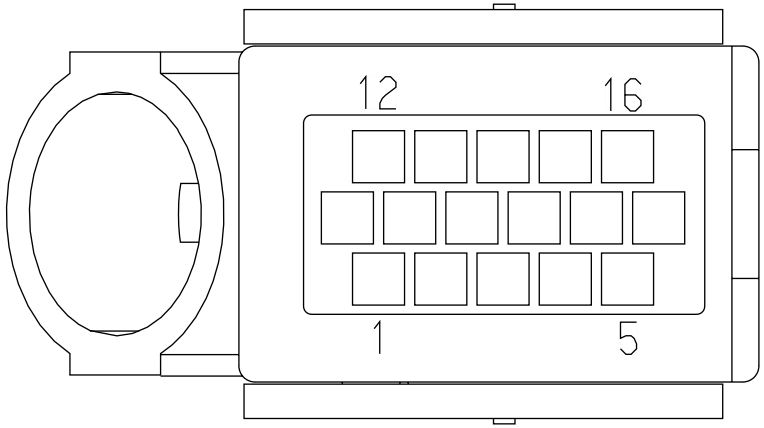

Name	Terminal Part Number	V-Min	Name	Wire Part Number	Wire CSA	Wire Spec	Wire Material description	Wire Color Description	Wire Length	End2 Terminal Part Number	End2 Pin Name	End2 Connector
1	-	-	AY95DVH	4073403 R1	0.53	20.0	TXL 150C	TAN	4425.0	-	2	670B
2	-	-	AH95E	3510328 R1	0.53	20.0	Thin Wall XLPE Primary Cable	TAN	3425.0	-	-	-
2	-	-	AJ95E	3510328 R1	0.53	20.0	Thin Wall XLPE Primary Cable	TAN	2697.0	-	-	-
2	-	-	AH95E	3510328 R1	0.53	20.0	Thin Wall XLPE Primary Cable	TAN	3425.0	-	1	674
2	-	-	AJ95E	3510328 R1	0.53	20.0	Thin Wall XLPE Primary Cable	TAN	2697.0	-	1	674

Name	Terminal Part Number	V-Min	Name	Wire Part Number	Wire CSA	Wire Spec	Wire Material description	Wire Color Description	Wire Length	End2 Terminal Part Number	End2 Pin Name	End2 Connector
3	-	-	KA14G	3510367 R1	1.91	14.0	Thin Wall XLPE Primary Cable	RED	505.0	-	X	-
4	-	-	KA92D16	3510361 R1	1.91	14.0	Thin Wall XLPE Primary Cable	WHITE	265.0	-	X	-
6	-	-	AY95DVL	4073403 R1	0.53	20.0	TXL 150C	TAN	4425.0	-	1	670B
7	-	-	KA92BA16	3510361 R1	1.91	14.0	Thin Wall XLPE Primary Cable	WHITE	265.0	-	X	-
8	-	-	KA14HC	3510367 R1	1.91	14.0	Thin Wall XLPE Primary Cable	RED	505.0	-	X	-
9	-	-	KA14K	3510367 R1	1.91	14.0	Thin Wall XLPE Primary Cable	RED	505.0	-	X	-
10	-	-	KA92C16	3510361 R1	1.91	14.0	Thin Wall XLPE Primary Cable	WHITE	265.0	-	X	-
11	-	-	KA95SB	3510328 R1	0.53	20.0	Thin Wall XLPE Primary Cable	TAN	2205.0	-	A12	690
13	-	-	KA92BB16	3510361 R1	1.91	14.0	Thin Wall XLPE Primary Cable	WHITE	345.0	-	X	-

Name	Terminal Part Number	V-Min	Name	Wire Part Number	Wire CSA	Wire Spec	Wire Material description	Wire Color Description	Wire Length	End2 Terminal Part Number	End2 Pin Name	End2 Connect or
14	-	-	KA14KAA	3510367 R1	1.91	14.0	Thin Wall XLPE Primary Cable	RED	535.0	-	X	-
15	-	-	KA14H	3510367 R1	1.91	14.0	Thin Wall XLPE Primary Cable	RED	535.0	-	X	-
16	-	-	KA92E16	3510361 R1	1.91	14.0	Thin Wall XLPE Primary Cable	WHITE	345.0	-	X	-

Connector Name	6033
Part Number	3917967C1
Instances	A26 - Selective Catalytic Reduction (SCR):Diagram1-Combination1 A26 - Selective Catalytic Reduction (SCR):Diagram1-Combination2 A26 - Starting Aid (Flame Start):Diagram1
Mates	CONN-ENGINE_INTERFACE-5057 -01-01A

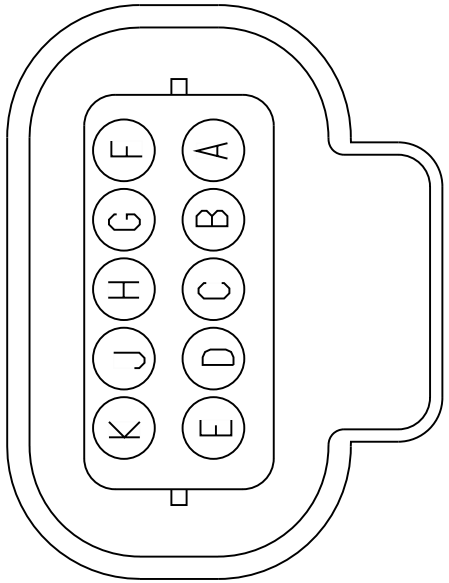

Name	Terminal Part Number	V-Min	Name	Wire Part Number	Wire CSA	Wire Spec	Wire Material description	Wire Color Description	Wire Length	End2 Terminal Part Number	End2 Pin Name	End2 Connect or
A	-	-	CD21B1	3510329 R1	0.79	18.0	Thin Wall XLPE Primary Cable	TAN	1280.0	-	6	8410
B	-	-	CD21B2	3510329 R1	0.79	18.0	Thin Wall XLPE Primary Cable	TAN	1280.0	-	7	8410
C	-	-	CD21B3	3510329 R1	0.79	18.0	Thin Wall XLPE Primary Cable	TAN	1280.0	-	8	8410
D	-	-	AN13AB	3510365 R1	0.79	18.0	Thin Wall XLPE Primary Cable	RED	1430.0	-	X	-

Name	Terminal Part Number	V-Min	Name	Wire Part Number	Wire CSA	Wire Spec	Wire Material description	Wire Color Description	Wire Length	End2 Terminal Part Number	End2 Pin Name	End2 Connector
D	-	-	AR13AB	3510365 R1	0.79	18.0	Thin Wall XLPE Primary Cable	RED	1430.0	-	X	-
D	-	-	AV13AB	3510365 R1	0.79	18.0	Thin Wall XLPE Primary Cable	RED	1430.0	-	X	-
D	-	-	AL13AB	3510365 R1	0.79	18.0	Thin Wall XLPE Primary Cable	RED	1430.0	-	X	-
D	-	-	AM13AB	3510365 R1	0.79	18.0	Thin Wall XLPE Primary Cable	RED	1430.0	-	X	-
D	-	-	AT13AB	3510365 R1	0.79	18.0	Thin Wall XLPE Primary Cable	RED	1430.0	-	X	-
D	-	-	AS13AB	3510365 R1	0.79	18.0	Thin Wall XLPE Primary Cable	RED	1430.0	-	X	-
G	-	-	KA41-GB	3510359 R1	0.79	18.0	Thin Wall XLPE Primary Cable	WHITE	1665.0	-	X	-
H	-	-	KA41-GC	3510359 R1	0.79	18.0	Thin Wall XLPE Primary Cable	WHITE	1665.0	-	X	-

Connector Name	6049
Part Number	3866817C1
Instances	A26 - Battery International (4) 12V:Diagram1 B6.7 - Battery International (4) 12V:Diagram1 L9 - Battery International (4) 12V:Diagram1
Mates	BTRY-925CCA_1-4005-01-01D

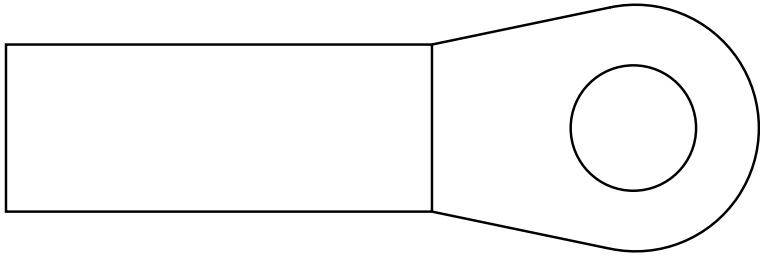

Name	Terminal Part Number	V-Min	Name	Wire Part Number	Wire CSA	Wire Spec	Wire Material description	Wire Color Description	Wire Length	End2 Terminal Part Number	End2 Pin Name	End2 Connect or
1	-	-	14-G	2645235 R1	49.99	0.0	SGX FLEX 125C	BLACK	360.0	-	1	S96_9256
1	-	-	14-G	2645235 R1	49.99	0.0	SGX FLEX 125C	BLACK	360.0	-	1	S96_9257

Connector Name	6051
Part Number	3866817C1
Instances	A26 - Battery International (4) 12V:Diagram1 B6.7 - Battery International (4) 12V:Diagram1 L9 - Battery International (4) 12V:Diagram1
Mates	BTRY-925CCA_1-4005-01-01C

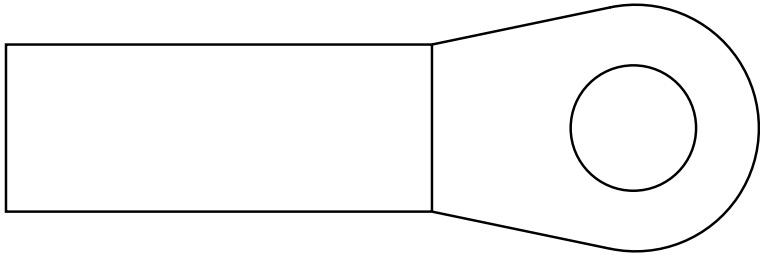

Name	Terminal Part Number	V-Min	Name	Wire Part Number	Wire CSA	Wire Spec	Wire Material description	Wire Color Description	Wire Length	End2 Terminal Part Number	End2 Pin Name	End2 Connect or
1	-	-	14	2645953 R1	18.94	4.0	SGX NFLEX 125	RED	3700.0	-	1	S97_9251
1	-	-	14	2645953 R1	18.94	4.0	SGX NFLEX 125	RED	3700.0	-	-	-

Connector Name 6100
Part Number 1667639C1
Instances B6.7 - ECM Cummins CM2350A:Diagram 1
Mates CP-ECM_MAXI_FUSE

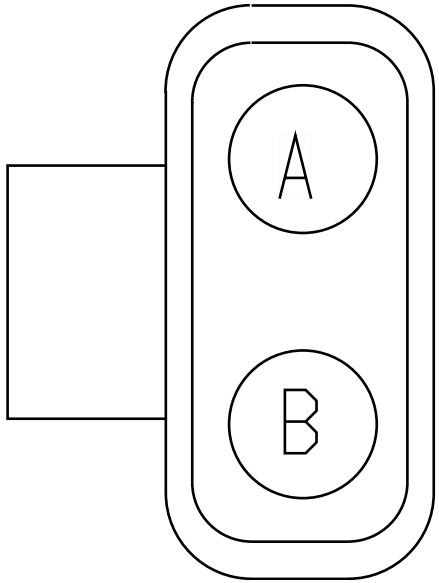

Name	Terminal Part Number	V-Min	Name	Wire Part Number	Wire CSA	Wire Spec	Wire Material description	Wire Color Description	Wire Length	End2 Terminal Part Number	End2 Pin Name	End2 Connect or
1	-	-	KA13C	2643691 R1	1.91	14.0	Std. Wall XLPE Primary Cable	PINK	130.0	-	X	-
2	-	-	KA13A	2643691 R1	1.91	14.0	Std. Wall XLPE Primary Cable	PINK	915.0	-	X	-

Connector Name 6100
Part Number 1667639C1
Instances L9 - ECM Cummins CM2350A:Diagram1
Mates CP-ECM_MAXI_FUSE

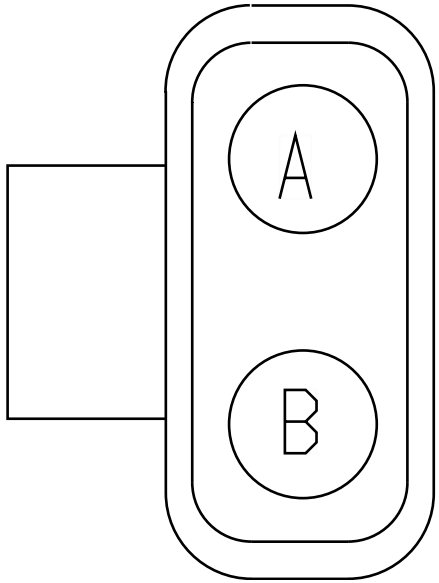

Name	Terminal Part Number	V-Min	Name	Wire Part Number	Wire CSA	Wire Spec	Wire Material description	Wire Color Description	Wire Length	End2 Terminal Part Number	End2 Pin Name	End2 Connect or
1	-	-	KV13C	2643691 R1	1.91	14.0	Std. Wall XLPE Primary Cable	PINK	130.0	-	X	-
2	-	-	KA13A	2643691 R1	1.91	14.0	Std. Wall XLPE Primary Cable	PINK	915.0	-	X	-

Connector Name	6101A
Part Number	RING-M-6_0
Instances	A26 - Bosch LIL165 LIL200 Alternator W/Sensor:Diagram1 A26 - Bosch LIL165 LIL200 Alternator W/Sensor:Diagram2
Mates	DEV-Bosch_LIL165_LIL200_Al ternator-4004-01-08A

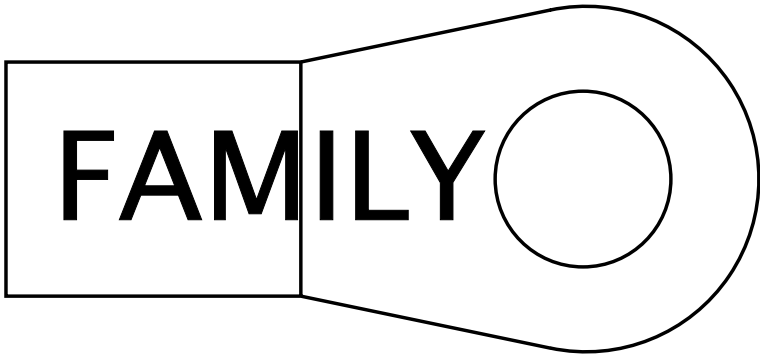

Name	Terminal Part Number	V-Min	Name	Wire Part Number	Wire CSA	Wire Spec	Wire Material description	Wire Color Description	Wire Length	End2 Terminal Part Number	End2 Pin Name	End2 Connect or
A	-	-	VM2-G	2645931 R1	32.19	2.0	SGR 125	BLACK	2900.0	-	1	6314

Connector Name	6101DA
Part Number	RING-M-8_0
Instances	A26 - Bosch LIL165 LIL200 Alternator W/Sensor:Diagram1 A26 - Bosch LIL165 LIL200 Alternator W/Sensor:Diagram2
Mates	DEV-Bosch_LIL165_LIL200_Al ternator-4004-01-08A

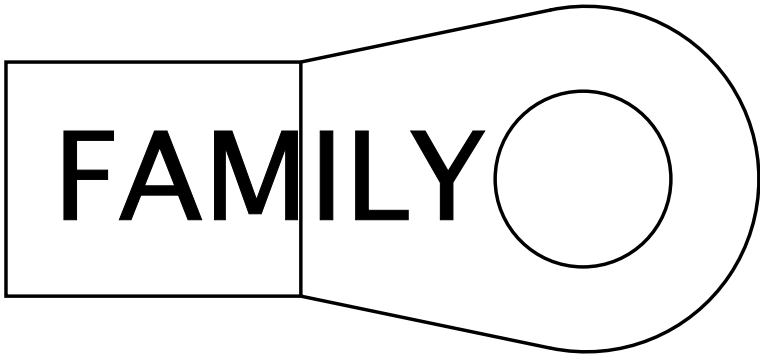

Name	Terminal Part Number	V-Min	Name	Wire Part Number	Wire CSA	Wire Spec	Wire Material description	Wire Color Description	Wire Length	End2 Terminal Part Number	End2 Pin Name	End2 Connect or
A	-	-	VM2	2645955 R1	32.19	2.0	SGR 125	RED	2910.0	-	X	-

Connector Name 6104
Part Number 6113104C1
Instances A26 - Starting Aid (Flame Start):Diagram1
Mates SOL-COLD_START-5022-02-01A

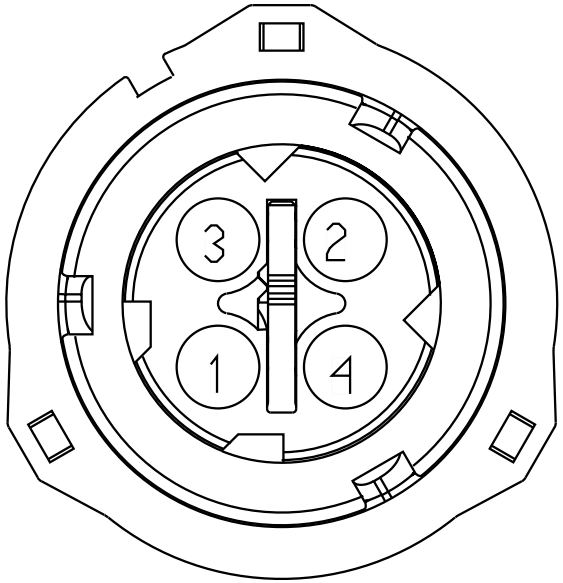

Name	Terminal Part Number	V-Min	Name	Wire Part Number	Wire CSA	Wire Spec	Wire Material description	Wire Color Description	Wire Length	End2 Terminal Part Number	End2 Pin Name	End2 Connect or
1	-	-	CD99D	3510347 R1	0.79	18.0	Thin Wall XLPE Primary Cable	VIOLET	1640.0	-	50	6018
2	-	-	CG95GC	2645627 R1	0.35	22.0	Thin Wall XLPE Primary Cable	VIOLET	1430.0	-	X	-
2	-	-	CC95GC	2643718 R1	0.79	18.0	Std. Wall XLPE Primary Cable	VIOLET	1430.0	-	X	-
2	-	-	CD95GC	2643718 R1	0.79	18.0	Std. Wall XLPE Primary Cable	VIOLET	1430.0	-	X	-

Connector Name	6200
Part Number	1671610C1
Instances	A26 - Heating Ventilation & Air Conditioning (HVAC) Auto Temp Control:Diagram1 - HVAC B6.7 - Heating Ventilation & Air Conditioning (HVAC) Auto Temp Control:Diagram1 - HVAC L9 - Heating Ventilation & Air Conditioning (HVAC) Auto Temp Control:Diagram1 - HVAC
Mates	DEV-FREON_COMPRESSOR-01

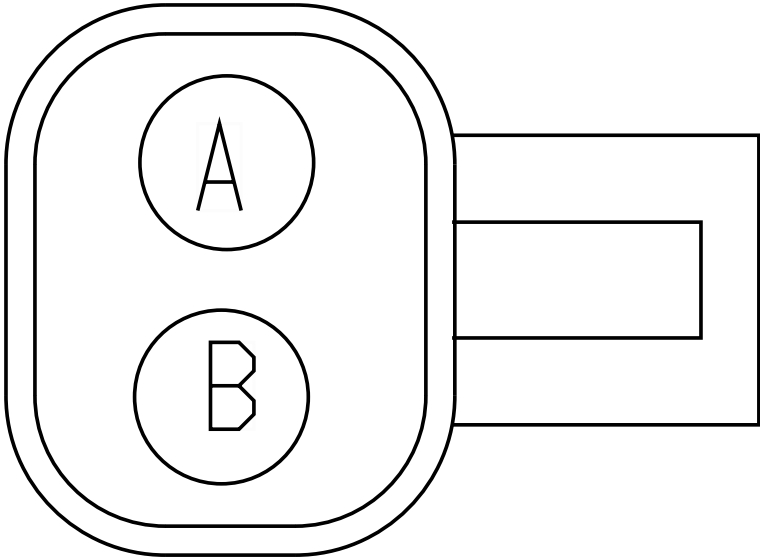

Name	Terminal Part Number	V-Min	Name	Wire Part Number	Wire CSA	Wire Spec	Wire Material description	Wire Color Description	Wire Length	End2 Terminal Part Number	End2 Pin Name	End2 Connect or
A	-	-	KK77-G	3510299 R1	0.79	18.0	Thin Wall XLPE Primary Cable	LIGHT GREEN	890.0	-	-	-
A	-	-	WA10-GA	2643681 R1	1.16	16.0	Std. Wall XLPE Primary Cable	WHITE	4705.0	-	-	-
A	-	-	AG77-G	3510359 R1	0.79	18.0	Thin Wall XLPE Primary Cable	WHITE	1410.0	-	-	-
B	-	-	KK77	3510299 R1	0.79	18.0	Thin Wall XLPE Primary Cable	LIGHT GREEN	1860.0	-	10	1702

Name	Terminal Part Number	V-Min	Name	Wire Part Number	Wire CSA	Wire Spec	Wire Material description	Wire Color Description	Wire Length	End2 Terminal Part Number	End2 Pin Name	End2 Connect or
B	-	-	KA77	2643678 R1	1.16	16.0	Std. Wall XLPE Primary Cable	LIGHT GREEN	2065.0	-	10	1702

Connector Name	6200
Part Number	1671610C1
Instances	A26 - Heating Ventilation & Air Conditioning (HVAC):Diagram1 L9 - Heating Ventilation & Air Conditioning (HVAC):Diagram1
Mates	DEV-FREON_COMPRESSOR-6003- 04-04A

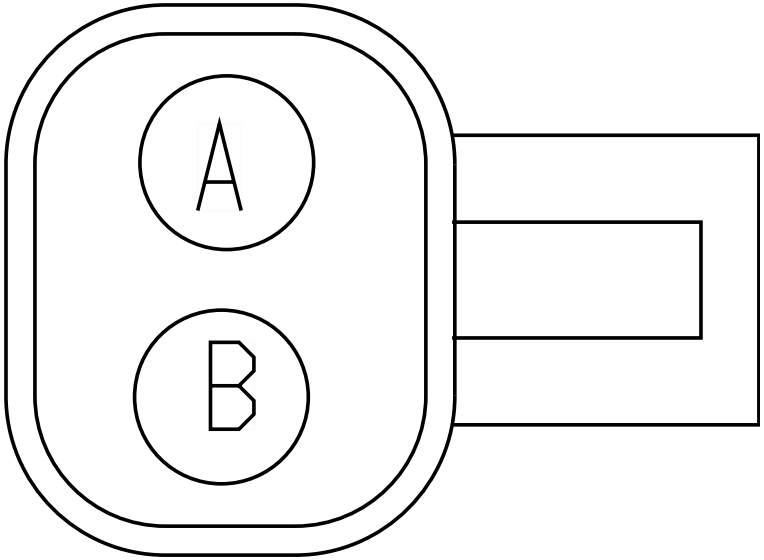

Name	Terminal Part Number	V-Min	Name	Wire Part Number	Wire CSA	Wire Spec	Wire Material description	Wire Color Description	Wire Length	End2 Terminal Part Number	End2 Pin Name	End2 Connect or
A	-	-	WA10-GA	2643681 R1	1.16	16.0	Std. Wall XLPE Primary Cable	WHITE	4705.0	-	-	-
A	-	-	WC10-GA	2643787 R1	3.01	12.0	Std. Wall XLPE Primary Cable	WHITE	4570.0	-	-	-
A	-	-	KK77-G	3510299 R1	0.79	18.0	Thin Wall XLPE Primary Cable	LIGHT GREEN	890.0	-	-	-
B	-	-	KA77	2643678 R1	1.16	16.0	Std. Wall XLPE Primary Cable	LIGHT GREEN	2065.0	-	10	1702

Name	Terminal Part Number	V-Min	Name	Wire Part Number	Wire CSA	Wire Spec	Wire Material description	Wire Color Description	Wire Length	End2 Terminal Part Number	End2 Pin Name	End2 Connect or
B	-	-	KK77	3510299 R1	0.79	18.0	Thin Wall XLPE Primary Cable	LIGHT GREEN	1860.0	-	10	1702

Connector Name	6200
Part Number	1671610C1
Instances	B6.7 - Heating Ventilation & Air Conditioning (HVAC):Diagram1
Mates	DEV-FREON_COMPRESSOR-6003- 04-04A

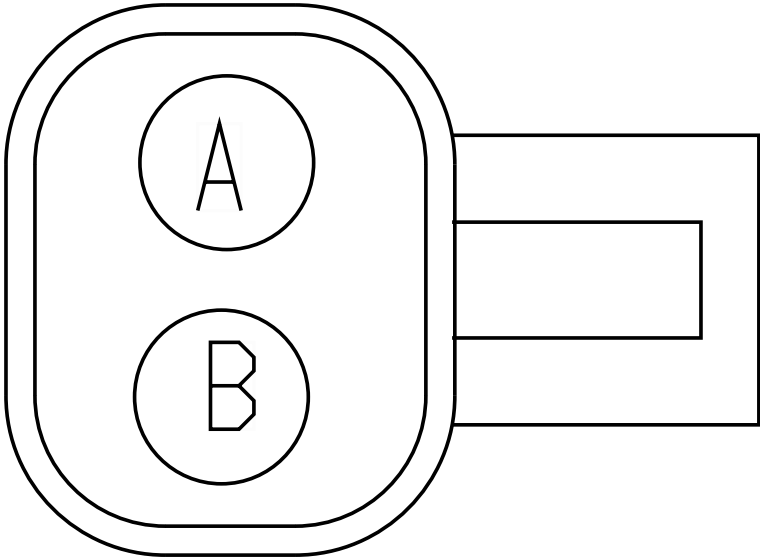

Name	Terminal Part Number	V-Min	Name	Wire Part Number	Wire CSA	Wire Spec	Wire Material description	Wire Color Description	Wire Length	End2 Terminal Part Number	End2 Pin Name	End2 Connect or
A	-	-	AG77-G	3510359 R1	0.79	18.0	Thin Wall XLPE Primary Cable	WHITE	1410.0	-	-	-
A	-	-	AH77-G	3510359 R1	0.79	18.0	Thin Wall XLPE Primary Cable	WHITE	2300.0	-	-	-
B	-	-	KK77	3510299 R1	0.79	18.0	Thin Wall XLPE Primary Cable	LIGHT GREEN	1860.0	-	10	1702

Connector Name 6201A

Part Number 3662921C1

Instances A26 - Heating Ventilation & Air Conditioning (HVAC) Auto Temp Control:Diagram1 - HVAC

Mates DEV-PRESSURE_TRANSDUCER-01

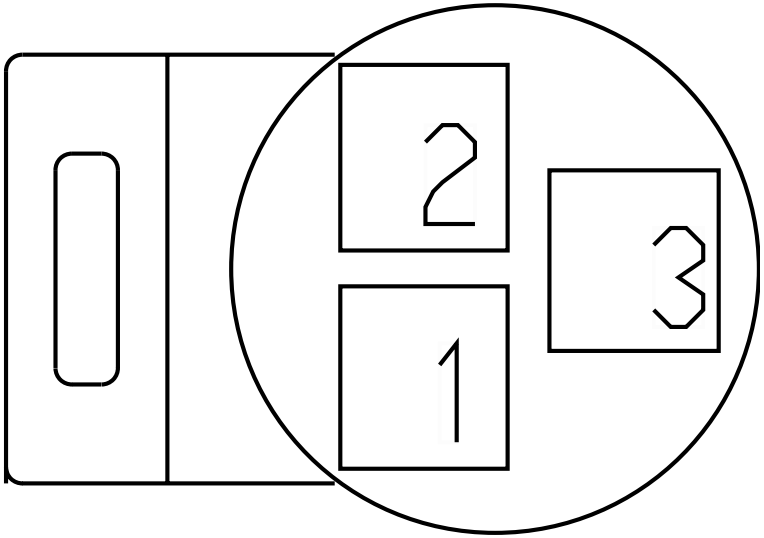

Name	Terminal Part Number	V-Min	Name	Wire Part Number	Wire CSA	Wire Spec	Wire Material description	Wire Color Description	Wire Length	End2 Terminal Part Number	End2 Pin Name	End2 Connect or
1	-	-	YM9AB	3510310 R1	0.53	20.0	Thin Wall XLPE Primary Cable	GREY	2155.0	-	-	-
2	-	-	YM6DB	3510310 R1	0.53	20.0	Thin Wall XLPE Primary Cable	GREY	2670.0	-	3	1702
3	-	-	YM77B	3510298 R1	0.53	20.0	Thin Wall XLPE Primary Cable	LIGHT GREEN	2670.0	-	4	1702

Connector Name	6201A
Part Number	3662921C1
Instances	A26 - Heating Ventilation & Air Conditioning (HVAC):Diagram1 B6.7 - Heating Ventilation & Air Conditioning (HVAC):Diagram1 L9 - Heating Ventilation & Air Conditioning (HVAC):Diagram1
Mates	SNSR-PRESSURE TRANSDUCER-6003-05-01A

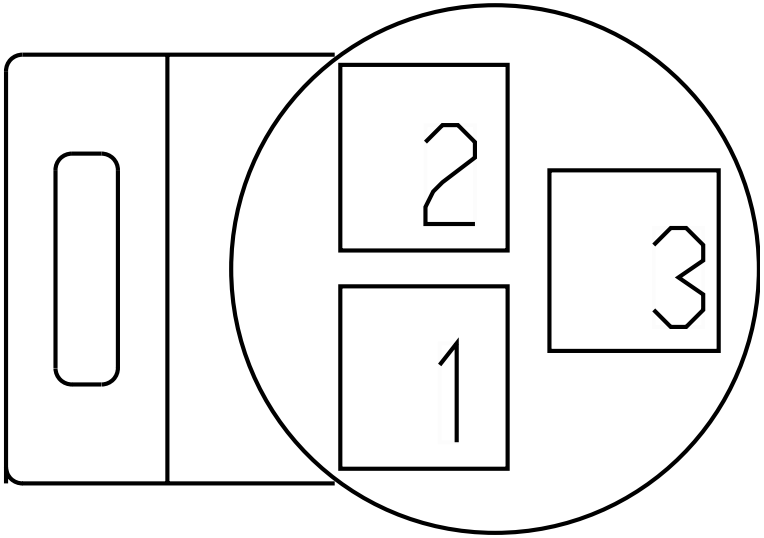

Name	Terminal Part Number	V-Min	Name	Wire Part Number	Wire CSA	Wire Spec	Wire Material description	Wire Color Description	Wire Length	End2 Terminal Part Number	End2 Pin Name	End2 Connect or
1	-	-	KK77-ZV	3510299 R1	0.79	18.0	Thin Wall XLPE Primary Cable	LIGHT GREEN	2035.0	-	-	-
1	-	-	YM9AB	3510310 R1	0.53	20.0	Thin Wall XLPE Primary Cable	GREY	2155.0	-	-	-
2	-	-	KK77A	3510299 R1	0.79	18.0	Thin Wall XLPE Primary Cable	LIGHT GREEN	2060.0	-	3	1702
2	-	-	YM6DB	3510310 R1	0.53	20.0	Thin Wall XLPE Primary Cable	GREY	2670.0	-	3	1702

Name	Terminal Part Number	V-Min	Name	Wire Part Number	Wire CSA	Wire Spec	Wire Material description	Wire Color Description	Wire Length	End2 Terminal Part Number	End2 Pin Name	End2 Connect or
3	-	-	KK77B	3510299 R1	0.79	18.0	Thin Wall XLPE Primary Cable	LIGHT GREEN	2060.0	-	4	1702
3	-	-	YM77B	3510298 R1	0.53	20.0	Thin Wall XLPE Primary Cable	LIGHT GREEN	2670.0	-	4	1702

Connector Name 6201

Part Number 3662921C1

Instances B6.7 - Heating Ventilation & Air Conditioning (HVAC) Auto Temp Control:Diagram1 - HVAC
L9 - Heating Ventilation & Air Conditioning (HVAC) Auto Temp Control:Diagram1 - HVAC

Mates DEV-PRESSURE_TRANSDUCER-01

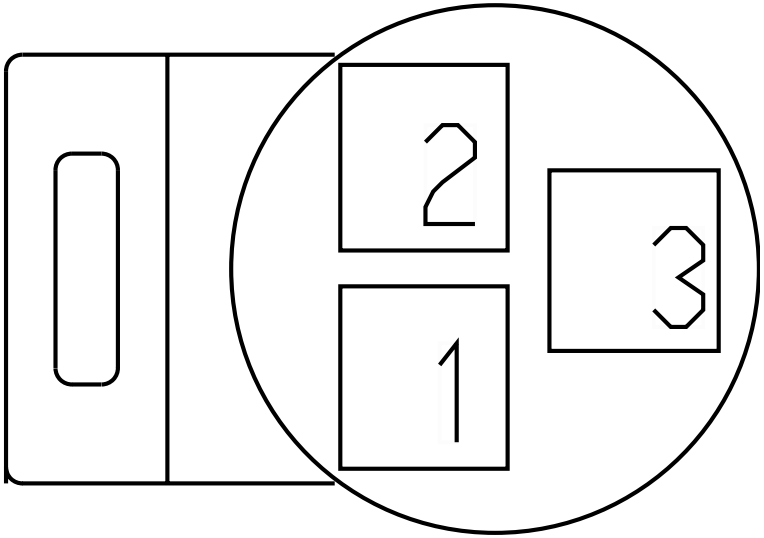

Name	Terminal Part Number	V-Min	Name	Wire Part Number	Wire CSA	Wire Spec	Wire Material description	Wire Color Description	Wire Length	End2 Terminal Part Number	End2 Pin Name	End2 Connect or
1	-	-	KK77-ZV	3510299 R1	0.79	18.0	Thin Wall XLPE Primary Cable	LIGHT GREEN	2035.0	-	-	-
2	-	-	KK77A	3510299 R1	0.79	18.0	Thin Wall XLPE Primary Cable	LIGHT GREEN	2060.0	-	3	1702
3	-	-	KK77B	3510299 R1	0.79	18.0	Thin Wall XLPE Primary Cable	LIGHT GREEN	2060.0	-	4	1702

Connector Name	6202
Part Number	3590299C1
Instances	A26 - Heating Ventilation & Air Conditioning (HVAC) Auto Temp Control:Diagram1 - HVAC B6.7 - Heating Ventilation & Air Conditioning (HVAC) Auto Temp Control:Diagram1 - HVAC L9 - Heating Ventilation & Air Conditioning (HVAC) Auto Temp Control:Diagram1 - HVAC
Mates	DEV-LOW_PRESSURE_SWITCH-01

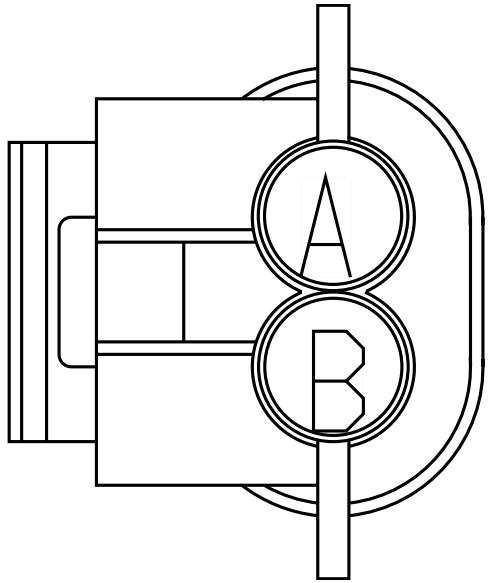

Name	Terminal Part Number	V-Min	Name	Wire Part Number	Wire CSA	Wire Spec	Wire Material description	Wire Color Description	Wire Length	End2 Terminal Part Number	End2 Pin Name	End2 Connect or
A	-	-	TC9AE	3510311 R1	0.79	18.0	Thin Wall XLPE Primary Cable	GREY	1350.0	-	X	-
B	-	-	TB74J	3510299 R1	0.79	18.0	Thin Wall XLPE Primary Cable	LIGHT GREEN	1675.0	-	17	1703F
B	-	-	TB74J	3510299 R1	0.79	18.0	Thin Wall XLPE Primary Cable	LIGHT GREEN	1573.0	-	17	1703F

Connector Name	6202
Part Number	3590299C1
Instances	A26 - Heating Ventilation & Air Conditioning (HVAC):Diagram1 B6.7 - Heating Ventilation & Air Conditioning (HVAC):Diagram1 L9 - Heating Ventilation & Air Conditioning (HVAC):Diagram1
Mates	SNSR-LOW PRESSURE-6003-05-01B

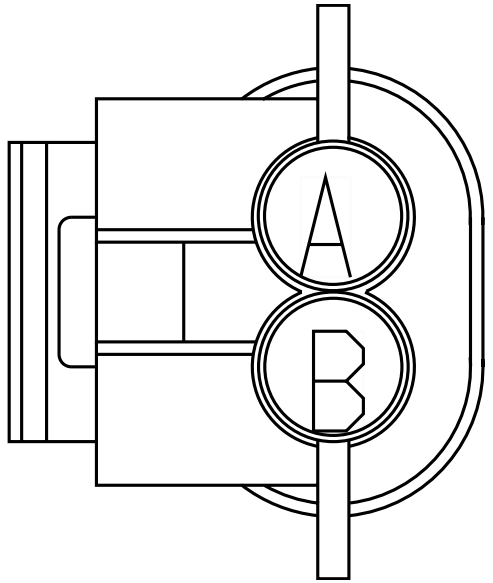

Name	Terminal Part Number	V-Min	Name	Wire Part Number	Wire CSA	Wire Spec	Wire Material description	Wire Color Description	Wire Length	End2 Terminal Part Number	End2 Pin Name	End2 Connect or
A	-	-	TC9AE	3510311 R1	0.79	18.0	Thin Wall XLPE Primary Cable	GREY	1350.0	-	X	-
B	-	-	TB74J	3510299 R1	0.79	18.0	Thin Wall XLPE Primary Cable	LIGHT GREEN	1675.0	-	17	1703F

Connector Name 6301E

Part Number RING-E-1-2_0

Instances A26 - Cranking (Starter) GEN4 BCM W/O Thermal Overcrank:Diagram1
A26 - Cranking (Starter) GEN4 BCM W/O Thermal Overcrank:Diagram2
A26 - Cranking (Starter) GEN4 BCM W/O Thermal Overcrank:Diagram3
A26 - Cranking (Starter) GEN4 BCM W/O Thermal Overcrank:Diagram4
A26 - Cranking (Starter) GEN4 BCM W/O Thermal Overcrank:Diagram5
A26 - Cranking (Starter) GEN4 BCM W/O Thermal Overcrank:Diagram6

Mates MOT-STARTER-5024-01-04

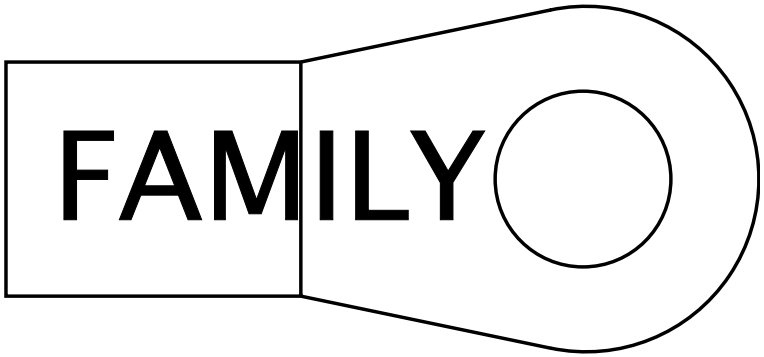

Name	Terminal Part Number	V-Min	Name	Wire Part Number	Wire CSA	Wire Spec	Wire Material description	Wire Color Description	Wire Length	End2 Terminal Part Number	End2 Pin Name	End2 Connect or
A	-	-	14	2645953 R1	18.94	4.0	SGX NFLEX 125	RED	3700.0	-	1	S97_9251
A	-	-	K2C-FL	2643473 R1	4.81	10.0	FUSEABLE LINK	RUST	210.0	-	X	-
A	-	-	K2B-FL	2643473 R1	4.81	10.0	FUSEABLE LINK	RUST	210.0	-	X	-
A	-	-	VH2B-FL	2643473 R1	4.81	10.0	FUSEABLE LINK	RUST	210.0	-	X	-
A	-	-	VG2A-FL	2643473 R1	4.81	10.0	FUSEABLE LINK	RUST	210.0	-	X	-
A	-	-	VG2B-FL	2643473 R1	4.81	10.0	FUSEABLE LINK	RUST	210.0	-	X	-
A	-	-	K2D-FL	2643473 R1	4.81	10.0	FUSEABLE LINK	RUST	210.0	-	X	-
A	-	-	VH2A-FL	2643473 R1	4.81	10.0	FUSEABLE LINK	RUST	210.0	-	X	-

Name	Terminal Part Number	V-Min	Name	Wire Part Number	Wire CSA	Wire Spec	Wire Material description	Wire Color Description	Wire Length	End2 Terminal Part Number	End2 Pin Name	End2 Connector
A	-	-	VH2C-FL	2643473 R1	4.81	10.0	FUSEABLE LINK	RUST	210.0	-	X	-
A	-	-	VM2A-FL	2643473 R1	4.81	10.0	FUSEABLE LINK	RUST	205.0	-	X	-
A	-	-	K2A-FL	2643473 R1	4.81	10.0	FUSEABLE LINK	RUST	210.0	-	X	-

Connector Name 6305

Part Number RING-M-12_0

Instances A26 - Cranking (Starter) GEN4 BCM W/ Thermal Overcrank:Diagram1
A26 - Cranking (Starter) GEN4 BCM W/ Thermal Overcrank:Diagram2
A26 - Cranking (Starter) GEN4 BCM W/ Thermal Overcrank:Diagram3
A26 - Cranking (Starter) GEN4 BCM W/ Thermal Overcrank:Diagram4
A26 - Cranking (Starter) GEN4 BCM W/ Thermal Overcrank:Diagram5
A26 - Cranking (Starter) GEN4 BCM W/ Thermal Overcrank:Diagram6
B6.7/L9 - Chassis PDM:Diagram1
L9 - Cranking (Starter) GEN4 BCM W/ Thermal Overcrank - External Switch:Diagram1

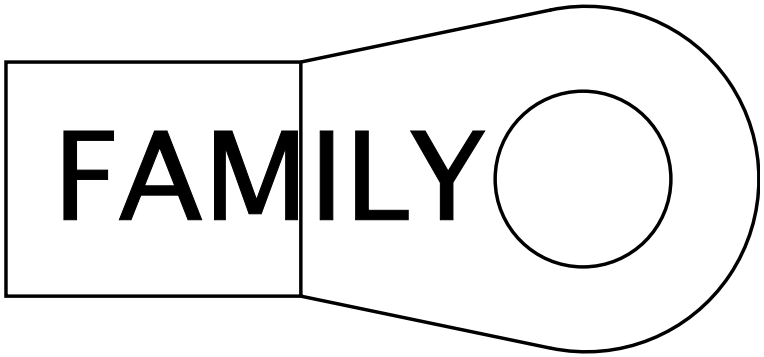

Mates MOT-STARTER-5024-01-04

Name	Terminal Part Number	V-Min	Name	Wire Part Number	Wire CSA	Wire Spec	Wire Material description	Wire Color Description	Wire Length	End2 Terminal Part Number	End2 Pin Name	End2 Connect or
1	-	-	14	2645953 R1	18.94	4.0	SGX NFLEX 125	RED	3700.0	-	1	S97_9251
1	-	-	WB2-FLA	3961608 R1	7.48	8.0	FUSEABLE LINK	LIGHT BLUE	190.0	-	X	-
1	-	-	WB2-FLB	3961608 R1	7.48	8.0	FUSEABLE LINK	LIGHT BLUE	190.0	-	X	-
1	-	-	14	2645953 R1	18.94	4.0	SGX NFLEX 125	RED	3700.0	-	A	S97_9251
1	-	-	K2D-FL	2643473 R1	4.81	10.0	FUSEABLE LINK	RUST	210.0	-	X	-
1	-	-	LD2B-FL	2643473 R1	4.81	10.0	FUSEABLE LINK	RUST	210.0	-	X	-
1	-	-	LD2A-FL	2643473 R1	4.81	10.0	FUSEABLE LINK	RUST	210.0	-	X	-

Name	Terminal Part Number	V-Min	Name	Wire Part Number	Wire CSA	Wire Spec	Wire Material description	Wire Color Description	Wire Length	End2 Terminal Part Number	End2 Pin Name	End2 Connector
1	-	-	K2C-FL	2643473 R1	4.81	10.0	FUSEABLE LINK	RUST	210.0	-	X	-
1	-	-	VM2B-FL	2643473 R1	4.81	10.0	FUSEABLE LINK	RUST	205.0	-	X	-
1	-	-	LC2A-FL	2643473 R1	4.81	10.0	FUSEABLE LINK	RUST	175.0	-	X	-
1	-	-	LC2C-FL	2643473 R1	4.81	10.0	FUSEABLE LINK	RUST	175.0	-	X	-
1	-	-	K2B-FL	2643473 R1	4.81	10.0	FUSEABLE LINK	RUST	210.0	-	X	-
1	-	-	K2A-FL	2643473 R1	4.81	10.0	FUSEABLE LINK	RUST	210.0	-	X	-
1	-	-	VM2A-FL	2643473 R1	4.81	10.0	FUSEABLE LINK	RUST	205.0	-	X	-
1	-	-	VG2A-FL	2643473 R1	4.81	10.0	FUSEABLE LINK	RUST	210.0	-	X	-
1	-	-	LC2B-FL	2643473 R1	4.81	10.0	FUSEABLE LINK	RUST	175.0	-	X	-
1	-	-	VG2B-FL	2643473 R1	4.81	10.0	FUSEABLE LINK	RUST	210.0	-	X	-
1	-	-	VH2A-FL	2643473 R1	4.81	10.0	FUSEABLE LINK	RUST	210.0	-	X	-
1	-	-	VH2B-FL	2643473 R1	4.81	10.0	FUSEABLE LINK	RUST	210.0	-	X	-
1	-	-	VH2C-FL	2643473 R1	4.81	10.0	FUSEABLE LINK	RUST	210.0	-	X	-
A	-	-	14	2645248 R1	49.99	0.0	SGX FLEX 125C	RED	360.0	-	A	M8 B

Connector Name	6306/6307
Part Number	RING-M-6_0
Instances	A26 - Cranking (Starter) GEN4 BCM W/O Thermal Overcrank:Diagram1 A26 - Cranking (Starter) GEN4 BCM W/O Thermal Overcrank:Diagram2 A26 - Cranking (Starter) GEN4 BCM W/O Thermal Overcrank:Diagram3 A26 - Cranking (Starter) GEN4 BCM W/O Thermal Overcrank:Diagram4 A26 - Cranking (Starter) GEN4 BCM W/O Thermal Overcrank:Diagram5 A26 - Cranking (Starter) GEN4 BCM W/O Thermal Overcrank:Diagram6
Mates	MOT-STARTER-5024-01-04

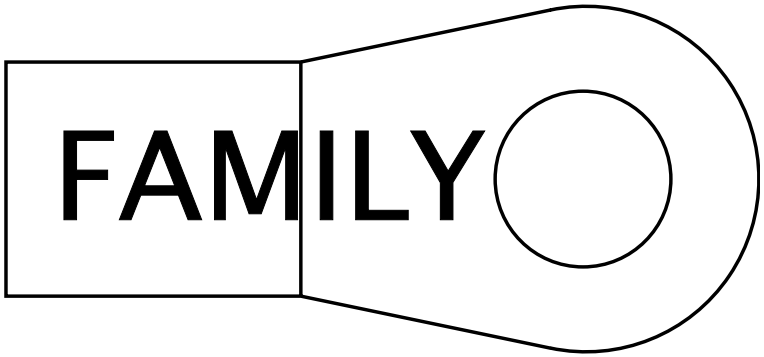

Name	Terminal Part Number	V-Min	Name	Wire Part Number	Wire CSA	Wire Spec	Wire Material description	Wire Color Description	Wire Length	End2 Terminal Part Number	End2 Pin Name	End2 Connect or
A	-	-	KR17	2643752 R1	1.16	16.0	Std. Wall XLPE Primary Cable	PINK	3645.0	-	16	1702

Connector Name	6306
Part Number	RING-M-6_0
Instances	B6.7 - Cranking (Starter) GEN4 BCM W/O Thermal Overcrank:Diagram1 L9 - Cranking (Starter) GEN4 BCM W/O Thermal Overcrank:Diagram1
Mates	MOT-STARTER-5024-01-04

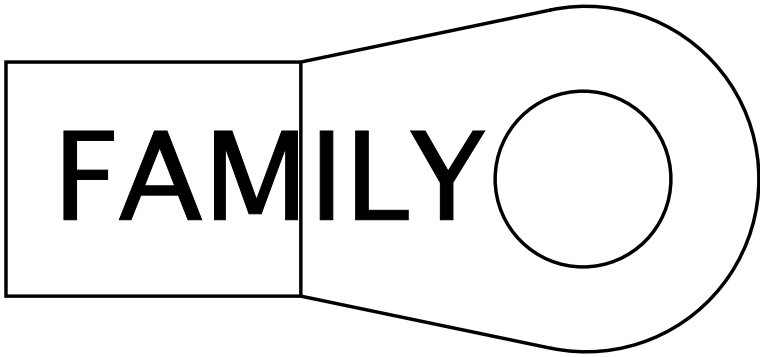

Name	Terminal Part Number	V-Min	Name	Wire Part Number	Wire CSA	Wire Spec	Wire Material description	Wire Color Description	Wire Length	End2 Terminal Part Number	End2 Pin Name	End2 Connect or
A	-	-	KA17A	3510324 R1	1.16	16.0	Thin Wall XLPE Primary Cable	PINK	2575.0	-	16	1702
A	-	-	GB17A	3510324 R1	1.16	16.0	Thin Wall XLPE Primary Cable	PINK	1220.0	-	16	1702

Connector Name	6316M
Part Number	2036583C1
Instances	A26 - Cranking (Starter) GEN4 BCM W/ Thermal Overcrank:Diagram1 A26 - Cranking (Starter) GEN4 BCM W/ Thermal Overcrank:Diagram2 A26 - Cranking (Starter) GEN4 BCM W/ Thermal Overcrank:Diagram3 A26 - Cranking (Starter) GEN4 BCM W/ Thermal Overcrank:Diagram4 A26 - Cranking (Starter) GEN4 BCM W/ Thermal Overcrank:Diagram5 A26 - Cranking (Starter) GEN4 BCM W/ Thermal Overcrank:Diagram6
Mates	MOT-STARTER-5024-01-03

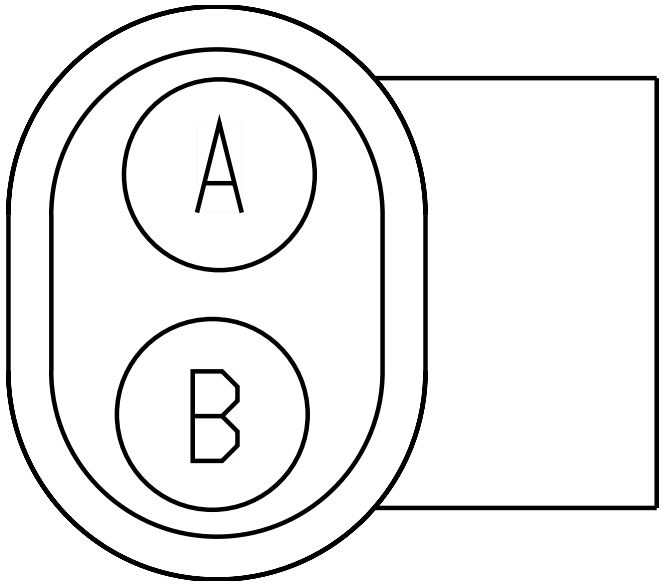

Name	Terminal Part Number	V-Min	Name	Wire Part Number	Wire CSA	Wire Spec	Wire Material description	Wire Color Description	Wire Length	End2 Terminal Part Number	End2 Pin Name	End2 Connect or
A	-	-	LB17D	2643752 R1	1.16	16.0	Std. Wall XLPE Primary Cable	PINK	1285.0	-	1	6317
B	-	-	LB17	2643752 R1	1.16	16.0	Std. Wall XLPE Primary Cable	PINK	3440.0	-	16	1702

Connector Name	6316M
Part Number	2036583C1
Instances	L9 - Cranking (Starter) GEN4 BCM W/ Thermal Overcrank - External Switch:Diagram1
Mates	MOT-STARTER-5024-01-03

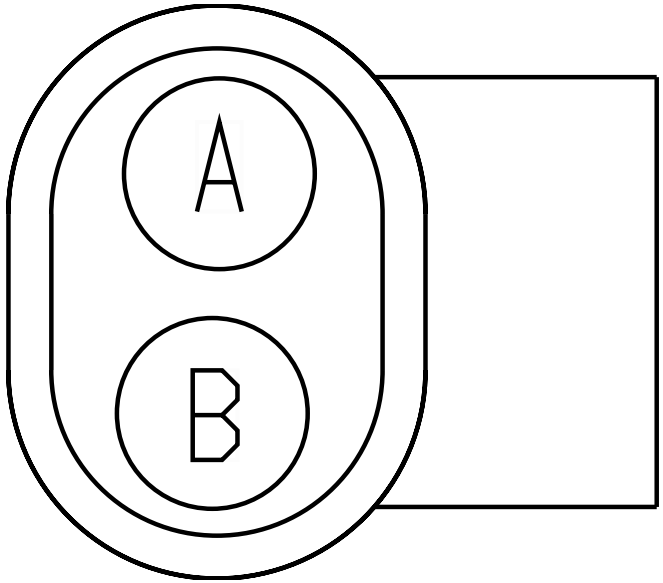

Name	Terminal Part Number	V-Min	Name	Wire Part Number	Wire CSA	Wire Spec	Wire Material description	Wire Color Description	Wire Length	End2 Terminal Part Number	End2 Pin Name	End2 Connect or
A	-	-	GA17D	2643752 R1	1.16	16.0	Std. Wall XLPE Primary Cable	PINK	860.0	-	A	K22_6305M
B	-	-	GA17	2643752 R1	1.16	16.0	Std. Wall XLPE Primary Cable	PINK	1440.0	-	16	1702

Connector Name	6317
Part Number	RING-M-5_0
Instances	A26 - Cranking (Starter) GEN4 BCM W/ Thermal Overcrank:Diagram1 A26 - Cranking (Starter) GEN4 BCM W/ Thermal Overcrank:Diagram2 A26 - Cranking (Starter) GEN4 BCM W/ Thermal Overcrank:Diagram3 A26 - Cranking (Starter) GEN4 BCM W/ Thermal Overcrank:Diagram4 A26 - Cranking (Starter) GEN4 BCM W/ Thermal Overcrank:Diagram5 A26 - Cranking (Starter) GEN4 BCM W/ Thermal Overcrank:Diagram6
Mates	MOT-STARTER-5024-01-03

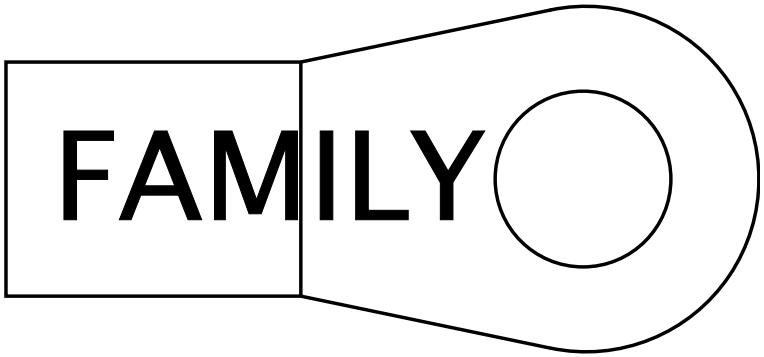

Name	Terminal Part Number	V-Min	Name	Wire Part Number	Wire CSA	Wire Spec	Wire Material description	Wire Color Description	Wire Length	End2 Terminal Part Number	End2 Pin Name	End2 Connect or
1	-	-	LB17D	2643752 R1	1.16	16.0	Std. Wall XLPE Primary Cable	PINK	1285.0	-	A	6316M

Connector Name	6332M
Part Number	1664531C1
Short Description	ENG HARNESS AMMETER SENSE
Instances	B6.7 - Current Monitoring (Ammeter):Diagram1 B6.7 - Current Monitoring (Ammeter):Diagram2
Mates	9262F

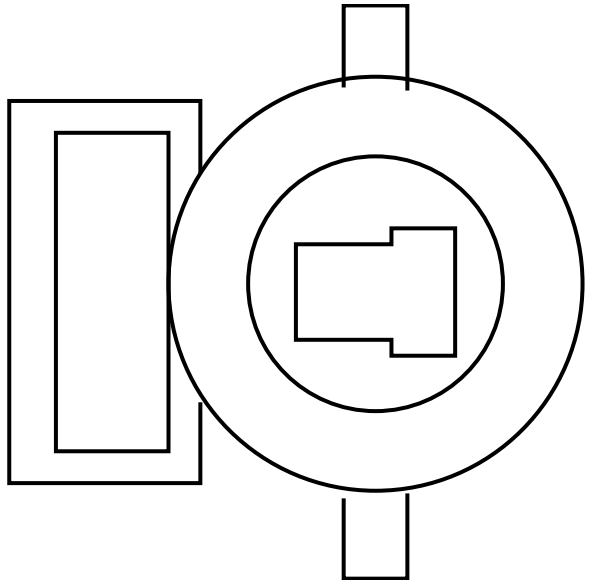

Name	Terminal Part Number	V-Min	Name	Wire Part Number	Wire CSA	Wire Spec	Wire Material description	Wire Color Description	Wire Length	End2 Terminal Part Number	End2 Pin Name	End2 Connect or
A	-	-	N26B	3510333 R1	4.81	10.0	Thin Wall XLPE Primary Cable	TAN	255.0	-	-	-

Connector Name	6332
Part Number	1664531C1
Short Description	AMMETER
Instances	B6.7 - Current Monitoring (Ammeter):Diagram1 B6.7 - Current Monitoring (Ammeter):Diagram2
Mates	9262M

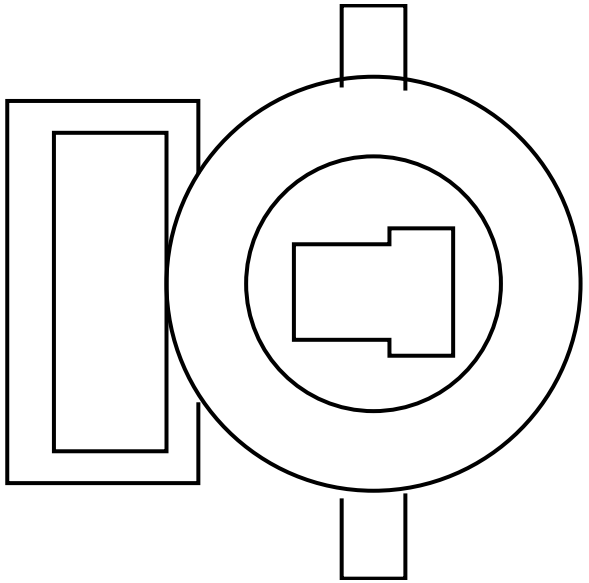

Name	Terminal Part Number	V-Min	Name	Wire Part Number	Wire CSA	Wire Spec	Wire Material description	Wire Color Description	Wire Length	End2 Terminal Part Number	End2 Pin Name	End2 Connect or
A	-	-	AE26A	2643676 R1	0.79	18.0	Std. Wall XLPE Primary Cable	TAN	2575.0	-	7	4060

Connector Name 6335

Part Number RING-M-12_0

Instances B6.7 - Current Monitoring (Ammeter):Diagram1
B6.7 - Current Monitoring (Ammeter):Diagram2
L9 - Cranking (Starter) GEN4 BCM W/ Thermal Overcrank - External Switch:Diagram1

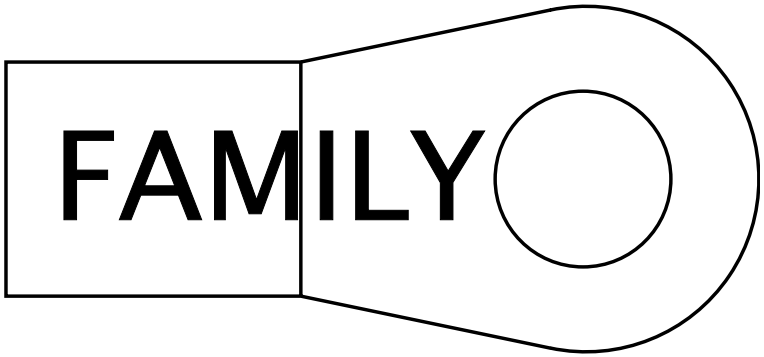

Name	Terminal Part Number	V-Min	Name	Wire Part Number	Wire CSA	Wire Spec	Wire Material description	Wire Color Description	Wire Length	End2 Terminal Part Number	End2 Pin Name	End2 Connect or
A	-	-	WB2-G	3592742 R1	39.43	1.0	Std. Wall XLPE Battery Cable	WHITE	2615.0	-	A	1010
A	-	-	14-G	2645235 R1	49.99	0.0	SGX FLEX 125C	BLACK	360.0	-	1	S96_9257
A	-	-	AE26B	2643676 R1	0.79	18.0	Std. Wall XLPE Primary Cable	TAN	2675.0	-	6	4060

Connector Name 6400
Part Number 3522068C1
Instances A26 - Cooling Fan Control Two-Speed:Diagram1
Mates SOL-FAN_2SPEED-5014-01-04A

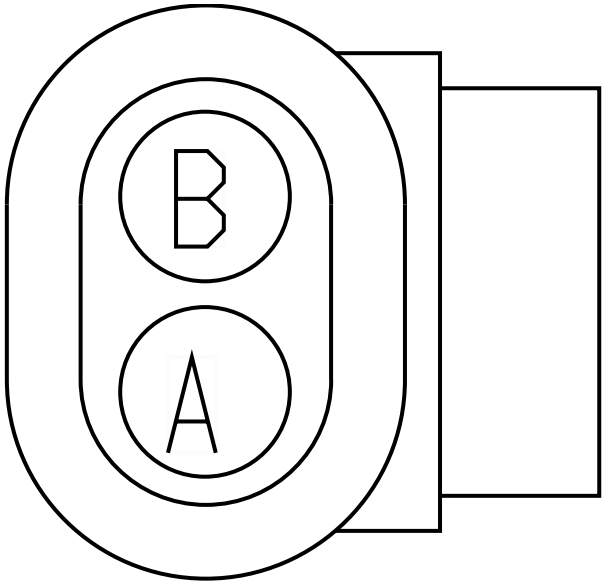

Name	Terminal Part Number	V-Min	Name	Wire Part Number	Wire CSA	Wire Spec	Wire Material description	Wire Color Description	Wire Length	End2 Terminal Part Number	End2 Pin Name	End2 Connect or
A	-	-	ZT23A	3510329 R1	0.79	18.0	Thin Wall XLPE Primary Cable	TAN	1185.0	-	25	6018
A	-	-	ZS23B	3510329 R1	0.79	18.0	Thin Wall XLPE Primary Cable	TAN	420.0	-	X	-
B	-	-	ZR23-G	3510359 R1	0.79	18.0	Thin Wall XLPE Primary Cable	WHITE	1185.0	-	76	6018

Connector Name	6401M
Part Number	1687789C1
Instances	HV B6.7 - Coolant Level Monitoring (With Coolant Module):Diagram1
Mates	MODU-COOLANT-LEV-5012-05-0 3A

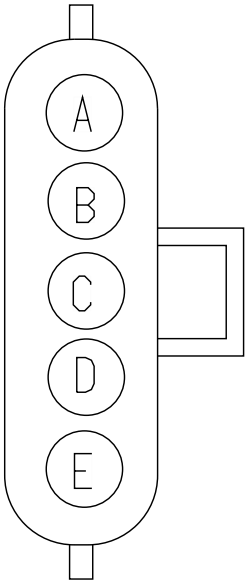

Name	Terminal Part Number	V-Min	Name	Wire Part Number	Wire CSA	Wire Spec	Wire Material description	Wire Color Description	Wire Length	End2 Terminal Part Number	End2 Pin Name	End2 Connect or
A	-	-	AB6G	3510311 R1	0.79	18.0	Thin Wall XLPE Primary Cable	GREY	1010.0	-	X	-
A	-	-	AF6G	3510311 R1	0.79	18.0	Thin Wall XLPE Primary Cable	GREY	1010.0	-	X	-
B	-	-	KZ34	2643683 R1	1.16	16.0	Std. Wall XLPE Primary Cable	TAN	1455.0	-	A	6401R
C	-	-	KZ34A	3510328 R1	0.53	20.0	Thin Wall XLPE Primary Cable	TAN	1470.0	-	35	6000

Name	Terminal Part Number	V-Min	Name	Wire Part Number	Wire CSA	Wire Spec	Wire Material description	Wire Color Description	Wire Length	End2 Terminal Part Number	End2 Pin Name	End2 Connect or
D	-	-	KZ9B	3510311 R1	0.79	18.0	Thin Wall XLPE Primary Cable	GREY	1260.0	-	X	-
E	-	-	KZ34B	2643683 R1	1.16	16.0	Std. Wall XLPE Primary Cable	TAN	1455.0	-	B	6401R

Connector Name	6401M
Part Number	1687789C1
Instances	HV L9 - Coolant Level Monitoring (With Coolant Module):Diagram1
Mates	MODU-COOLANT-LEV-5012-05-0 3A

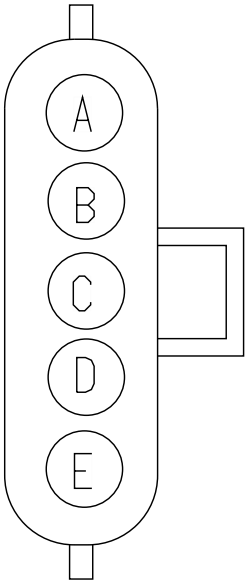

Name	Terminal Part Number	V-Min	Name	Wire Part Number	Wire CSA	Wire Spec	Wire Material description	Wire Color Description	Wire Length	End2 Terminal Part Number	End2 Pin Name	End2 Connect or
A	-	-	AB6G	3510311 R1	0.79	18.0	Thin Wall XLPE Primary Cable	GREY	1010.0	-	X	-
A	-	-	AF6G	3510311 R1	0.79	18.0	Thin Wall XLPE Primary Cable	GREY	1010.0	-	X	-
B	-	-	KZ34	2643683 R1	1.16	16.0	Std. Wall XLPE Primary Cable	TAN	1455.0	-	A	6401R
C	-	-	KZ34A	3510328 R1	0.53	20.0	Thin Wall XLPE Primary Cable	TAN	1470.0	-	35	6000

Name	Terminal Part Number	V-Min	Name	Wire Part Number	Wire CSA	Wire Spec	Wire Material description	Wire Color Description	Wire Length	End2 Terminal Part Number	End2 Pin Name	End2 Connect or
D	-	-	KZ9B	3510311 R1	0.79	18.0	Thin Wall XLPE Primary Cable	GREY	1260.0	-	X	-
E	-	-	KZ34B	2643683 R1	1.16	16.0	Std. Wall XLPE Primary Cable	TAN	1455.0	-	B	6401R

Connector Name	6401R
Part Number	1671610C1
Instances	HV B6.7 - Coolant Level Monitoring (With Coolant Module):Diagram1
Mates	SNSR-COOLANT-LEV-5012-02-02

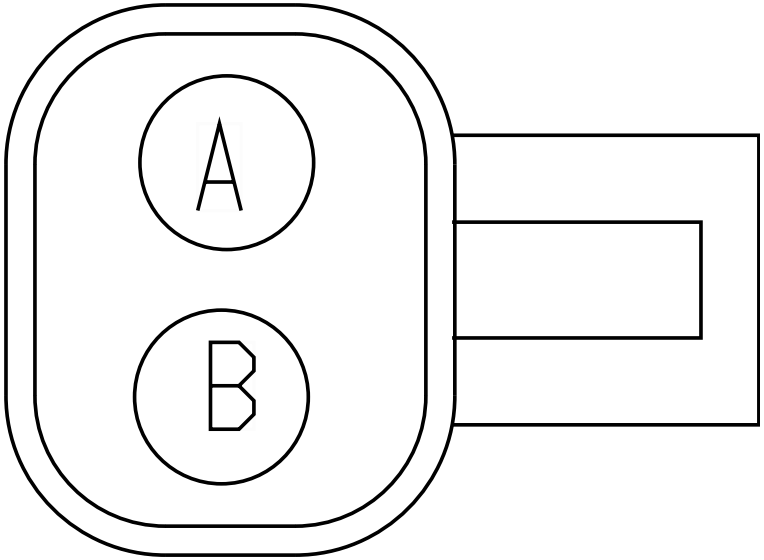

Name	Terminal Part Number	V-Min	Name	Wire Part Number	Wire CSA	Wire Spec	Wire Material description	Wire Color Description	Wire Length	End2 Terminal Part Number	End2 Pin Name	End2 Connect or
A	-	-	KZ34	2643683 R1	1.16	16.0	Std. Wall XLPE Primary Cable	TAN	1455.0	-	B	6401M
B	-	-	KZ34B	2643683 R1	1.16	16.0	Std. Wall XLPE Primary Cable	TAN	1455.0	-	E	6401M

Connector Name	6401R
Part Number	1671610C1
Instances	HV L9 - Coolant Level Monitoring (With Coolant Module):Diagram1
Mates	SNSR-COOLANT-LEV-5012-02-02

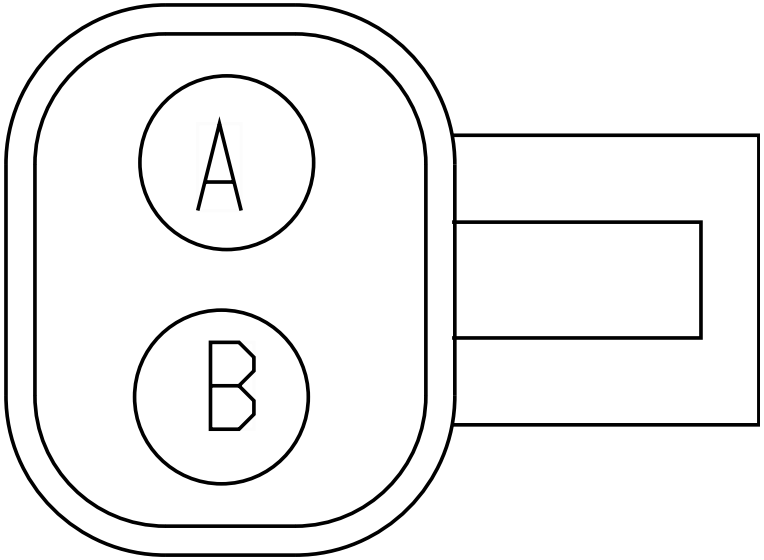

Name	Terminal Part Number	V-Min	Name	Wire Part Number	Wire CSA	Wire Spec	Wire Material description	Wire Color Description	Wire Length	End2 Terminal Part Number	End2 Pin Name	End2 Connect or
A	-	-	KZ34	2643683 R1	1.16	16.0	Std. Wall XLPE Primary Cable	TAN	1455.0	-	B	6401M
B	-	-	KZ34B	2643683 R1	1.16	16.0	Std. Wall XLPE Primary Cable	TAN	1455.0	-	E	6401M

Connector Name 6401
Part Number 3662425C1
Instances B6.7 - Coolant Level Monitoring (No Coolant Module):Diagram1
Mates SNSR-COOLANT-LEV-5012-04-0 1A

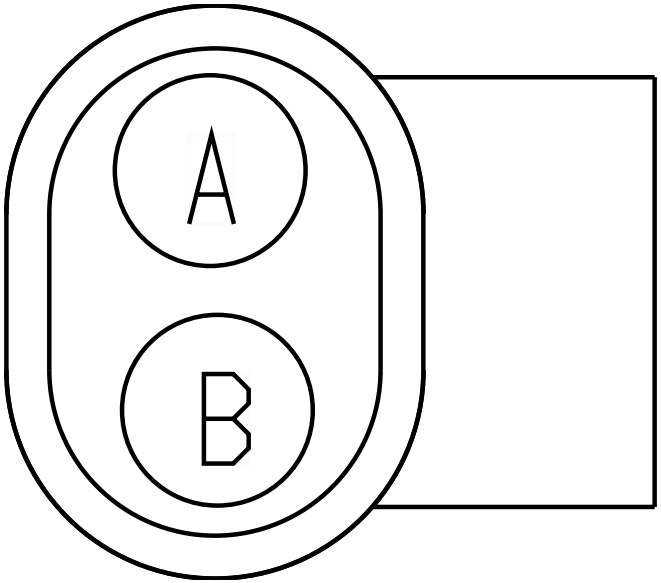

Name	Terminal Part Number	V-Min	Name	Wire Part Number	Wire CSA	Wire Spec	Wire Material description	Wire Color Description	Wire Length	End2 Terminal Part Number	End2 Pin Name	End2 Connect or
1	-	-	KT34A	3510329 R1	0.79	18.0	Thin Wall XLPE Primary Cable	TAN	900.0	-	X	-
2	-	-	KT34-G	3510329 R1	0.79	18.0	Thin Wall XLPE Primary Cable	TAN	1900.0	-	-	-

Connector Name	6401
Part Number	3662425C1
Instances	L9 - Vehicle Speedometer System (Manual XMSN):Diagram1
Mates	SNSR-VSS-5055-01-01A

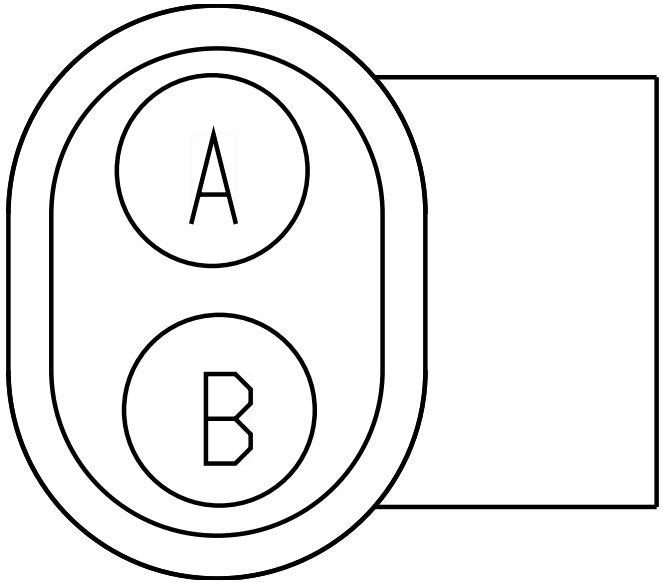

Name	Terminal Part Number	V-Min	Name	Wire Part Number	Wire CSA	Wire Spec	Wire Material description	Wire Color Description	Wire Length	End2 Terminal Part Number	End2 Pin Name	End2 Connect or
A	-	-	KM47B	3510310 R1	0.53	20.0	Thin Wall XLPE Primary Cable	GREY	1460.0	-	60	6000
B	-	-	KM47C	3510310 R1	0.53	20.0	Thin Wall XLPE Primary Cable	GREY	1460.0	-	59	6000

Connector Name 6407
Part Number 3662425C1
Instances A26 - Coolant Level Monitoring (No Coolant Module):Diagram1
Mates SNSR-COOLANT-LEV-5012-04-0 1A

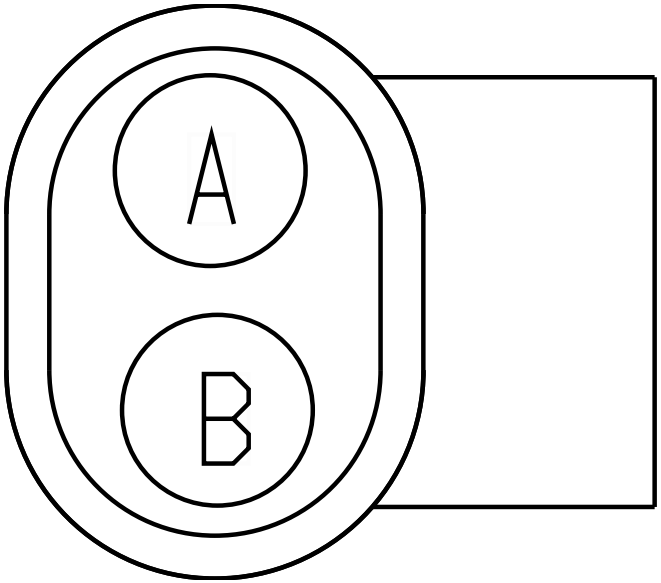

Name	Terminal Part Number	V-Min	Name	Wire Part Number	Wire CSA	Wire Spec	Wire Material description	Wire Color Description	Wire Length	End2 Terminal Part Number	End2 Pin Name	End2 Connect or
1	-	-	KC34D	3510329 R1	0.79	18.0	Thin Wall XLPE Primary Cable	TAN	2795.0	-	8	6018
2	-	-	KC34B	3510329 R1	0.79	18.0	Thin Wall XLPE Primary Cable	TAN	2365.0	-	-	-

Connector Name	6407
Part Number	3662425C1
Instances	L9 - Coolant Level Monitoring (No Coolant Module):Diagram1
Mates	SNSR-COOLANT-LEV-5012-04-0 1A

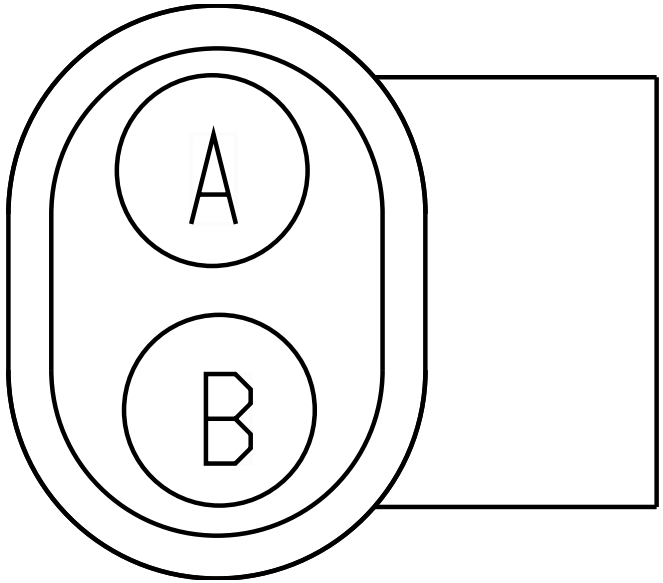

Name	Terminal Part Number	V-Min	Name	Wire Part Number	Wire CSA	Wire Spec	Wire Material description	Wire Color Description	Wire Length	End2 Terminal Part Number	End2 Pin Name	End2 Connect or
1	-	-	KT34A	3510329 R1	0.79	18.0	Thin Wall XLPE Primary Cable	TAN	900.0	-	X	-
2	-	-	KT34-G	3510329 R1	0.79	18.0	Thin Wall XLPE Primary Cable	TAN	1900.0	-	-	-

Connector Name	6564
Part Number	374377C2
Instances	A26 - Starting Aid (Flame Start):Diagram1
Mates	DEV-FLAME_START_GLOW-5022- 02-01A

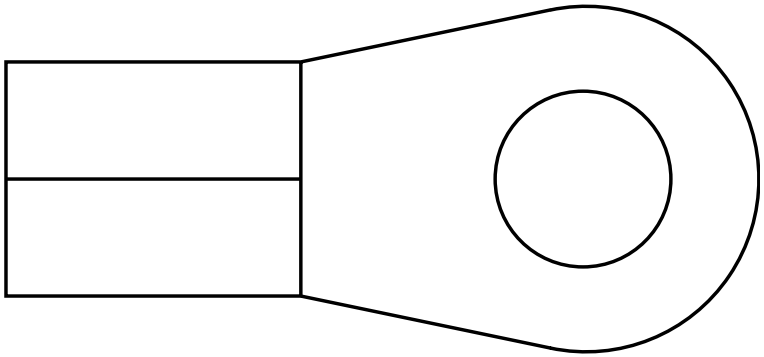

Name	Terminal Part Number	V-Min	Name	Wire Part Number	Wire CSA	Wire Spec	Wire Material description	Wire Color Description	Wire Length	End2 Terminal Part Number	End2 Pin Name	End2 Connect or
A	-	-	CD21A2	2643797 R1	3.01	12.0	Std. Wall XLPE Primary Cable	TAN	1350.0	-	2	8410
A	-	-	CG21A1	3510332 R1	3.01	12.0	Thin Wall XLPE Primary Cable	TAN	1350.0	-	1	8410

Connector Name	6565
Part Number	3752570C1
Instances	A26 - Underhood PDM:A26 - UNDERHOOD PDM
Mates	MODU-PDM_UNDERHOOD-0003-00 -04

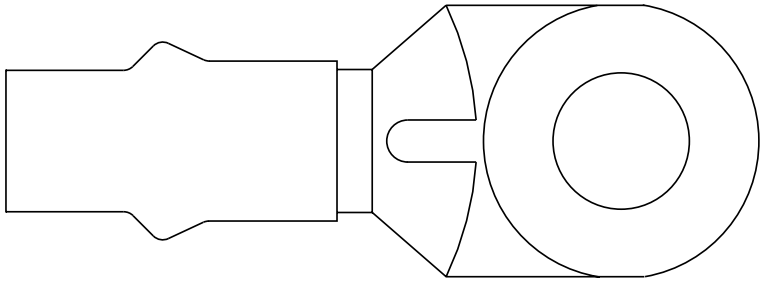

Name	Terminal Part Number	V-Min	Name	Wire Part Number	Wire CSA	Wire Spec	Wire Material description	Wire Color Description	Wire Length	End2 Terminal Part Number	End2 Pin Name	End2 Connect or
A	-	-	CD14A	3525611 R1	7.48	8.0	Thin Wall XLPE Primary Cable	RED	1720.0	-	-	-

Connector Name	6566
Part Number	6113338C1
Instances	A26 - Underhood PDM:A26 - UNDERHOOD PDM B6.7/L9 - Underhood PDM:PDM - UNDERHOOD
Mates	MODU-PDM_UNDERHOOD-0003-00 -04

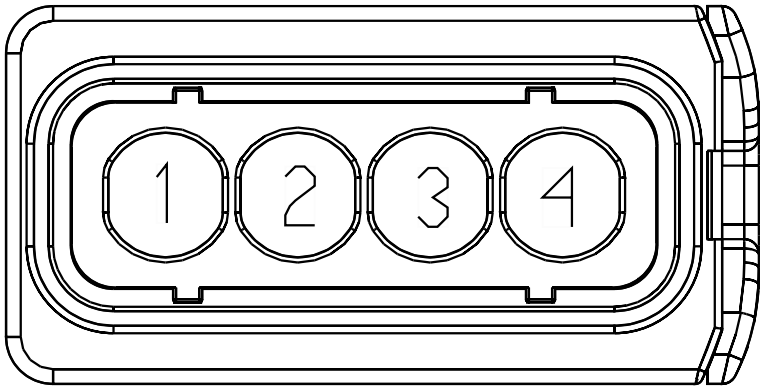

Name	Terminal Part Number	V-Min	Name	Wire Part Number	Wire CSA	Wire Spec	Wire Material description	Wire Color Description	Wire Length	End2 Terminal Part Number	End2 Pin Name	End2 Connect or
1	-	-	KA14A	3510365 R1	0.79	18.0	Thin Wall XLPE Primary Cable	RED	250.0	-	-	-
1	-	-	KA14J2	2643698 R1	4.81	10.0	Std. Wall XLPE Primary Cable	RED	1590.0	-	-	-
3	-	-	KH14S	2643698 R1	4.81	10.0	Std. Wall XLPE Primary Cable	RED	1425.0	-	-	-
3	-	-	VV14N	2643698 R1	4.81	10.0	Std. Wall XLPE Primary Cable	RED	4495.0	-	-	-

Connector Name	6567
Part Number	6113341C1
Instances	A26 - Underhood PDM:A26 - UNDERHOOD PDM B6.7/L9 - Underhood PDM:PDM - UNDERHOOD
Mates	MODU-PDM_UNDERHOOD-0003-00 -04

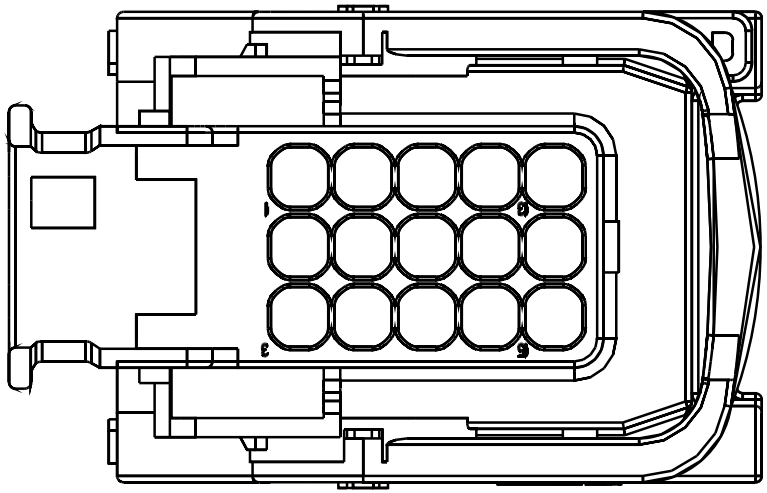

Name	Terminal Part Number	V-Min	Name	Wire Part Number	Wire CSA	Wire Spec	Wire Material description	Wire Color Description	Wire Length	End2 Terminal Part Number	End2 Pin Name	End2 Connect or
1	-	-	VJ14B	3510366 R1	1.16	16.0	Thin Wall XLPE Primary Cable	RED	450.0	-	-	-
7	-	-	SM14A	3510368 R1	3.01	12.0	Thin Wall XLPE Primary Cable	RED	3025.0	-	-	-
7	-	-	PM14A	3510368 R1	3.01	12.0	Thin Wall XLPE Primary Cable	RED	2025.0	-	-	-
7	-	-	PH14A	3510368 R1	3.01	12.0	Thin Wall XLPE Primary Cable	RED	2605.0	-	-	-

Name	Terminal Part Number	V-Min	Name	Wire Part Number	Wire CSA	Wire Spec	Wire Material description	Wire Color Description	Wire Length	End2 Terminal Part Number	End2 Pin Name	End2 Connector
7	-	-	KH14A	3510368 R1	3.01	12.0	Thin Wall XLPE Primary Cable	RED	2870.0	-	-	-
7	-	-	TZ92A170	2643686 R1	1.91	14.0	Std. Wall XLPE Primary Cable	RED	2850.0	-	-	-
7	-	-	TD92A170	2643686 R1	1.91	14.0	Std. Wall XLPE Primary Cable	RED	3915.0	-	-	-
7	-	-	LJ14A	3510368 R1	3.01	12.0	Thin Wall XLPE Primary Cable	RED	3890.0	-	-	-
10	-	-	SK14HC	3510367 R1	1.91	14.0	Thin Wall XLPE Primary Cable	RED	1505.0	-	-	-
13	-	-	VJ14A	3510368 R1	3.01	12.0	Thin Wall XLPE Primary Cable	RED	100.0	-	-	-
13	-	-	KA14B	3510366 R1	1.16	16.0	Thin Wall XLPE Primary Cable	RED	540.0	-	-	-
13	-	-	KA14D	3510368 R1	3.01	12.0	Thin Wall XLPE Primary Cable	RED	290.0	-	-	-
14	-	-	-	-	-	-	-	-	-	-	-	-

Connector Name	670A/670B
Part Number	3573078C1
Instances	A26 - CAN Layout:Engine Proprietary J1939 A26 - Engine Private J1939 (250kbps):A26 - Engine Private J1939 (250kbps) B6.7 - CAN Layout:Engine Proprietary J1939 B6.7 - Engine Private J1939 (250kbps):B6.7 - Engine Private J1939 L9 - CAN Layout:Engine Proprietary J1939 L9 - Engine Private J1939 (250kbps):L9 - Engine Private J1939
Mates	670A/670B

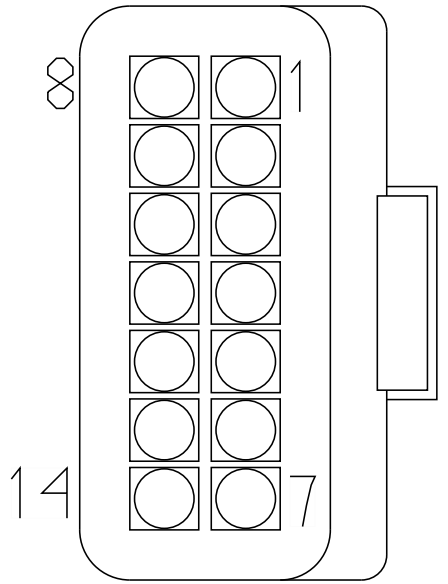

Name	Terminal Part Number	V-Min	Name	Wire Part Number	Wire CSA	Wire Spec	Wire Material description	Wire Color Description	Wire Length	End2 Terminal Part Number	End2 Pin Name	End2 Connect or
9	-	-	WIRE1721	-	0.0	-	-	-	0.0	-	2	8500
9	-	-	WIRE239163	-	0.0	-	-	-	0.0	-	PIN1	-
10	-	-	WIRE1722	-	0.0	-	-	-	0.0	-	9	8500
10	-	-	WIRE239165	-	0.0	-	-	-	0.0	-	PIN1	-
13	-	-	WIRE1719	-	0.0	-	-	-	0.0	-	13	674B
14	-	-	WIRE1720	-	0.0	-	-	-	0.0	-	14	674B

Connector Name 670A

Part Number 3573078C1

Instances B6.7 - Selective Catalytic Reduction (SCR):Diagram1
L9 - Selective Catalytic Reduction (SCR):Diagram1

Mates DPF-SENSRTABLE-5041-01-01A

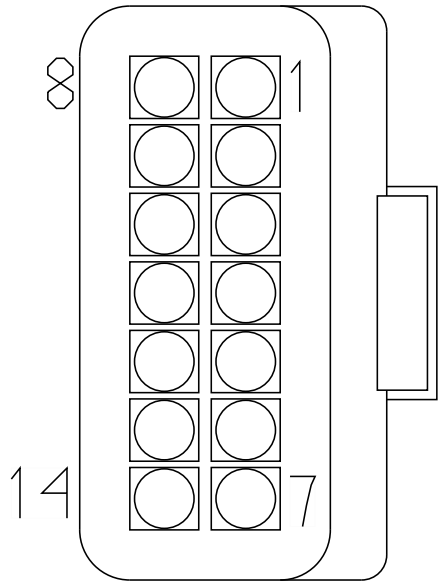

Name	Terminal Part Number	V-Min	Name	Wire Part Number	Wire CSA	Wire Spec	Wire Material description	Wire Color Description	Wire Length	End2 Terminal Part Number	End2 Pin Name	End2 Connector
1	-	-	VK95DVL	4073403 R1	0.53	20.0	TXL 150C	TAN	2265.0	-	53	6000
2	-	-	VK95DVH	4073403 R1	0.53	20.0	TXL 150C	TAN	2265.0	-	77	6000
3	-	-	VK95BA	4073403 R1	0.53	20.0	TXL 150C	TAN	2265.0	-	41	6000
4	-	-	VK95BC	4073403 R1	0.53	20.0	TXL 150C	TAN	2265.0	-	42	6000
5	-	-	VX6D	2645915 R1	0.79	18.0	TXL 150C	TAN	1995.0	-	X	-
5	-	-	AF6D	2645915 R1	0.79	18.0	TXL 150C	TAN	1925.0	-	X	-
5	-	-	KP6D	2645915 R1	0.79	18.0	TXL 150C	TAN	1925.0	-	X	-
5	-	-	AB6D	2645915 R1	0.79	18.0	TXL 150C	TAN	1925.0	-	X	-

Name	Terminal Part Number	V-Min	Name	Wire Part Number	Wire CSA	Wire Spec	Wire Material description	Wire Color Description	Wire Length	End2 Terminal Part Number	End2 Pin Name	End2 Connector
5	-	-	AH6D	2645915 R1	0.79	18.0	TXL 150C	TAN	1925.0	-	X	-
5	-	-	VG6D	2645915 R1	0.79	18.0	TXL 150C	TAN	1925.0	-	X	-
7	-	-	KT9	2645914 R1	0.79	18.0	TXL 150C	GREY	1675.0	-	X	-
7	-	-	KZ9	2645914 R1	0.79	18.0	TXL 150C	GREY	1675.0	-	X	-
8	-	-	VK95K	4073403 R1	0.53	20.0	TXL 150C	TAN	2265.0	-	16	6000
11	-	-	VJ10-G2	2645973 R1	1.91	14.0	TXL 150C	WHITE	2040.0	-	-	-
12	-	-	VJ13RA	4085639 R1	3.01	12.0	TXL 150C	PINK	700.0	-	X	-

Connector Name	670B
Part Number	3573078C1
Instances	A26 - Selective Catalytic Reduction (SCR):Diagram1-Combination1 A26 - Selective Catalytic Reduction (SCR):Diagram1-Combination2
Mates	DPF-SENSRTABLE-5041-01-01A

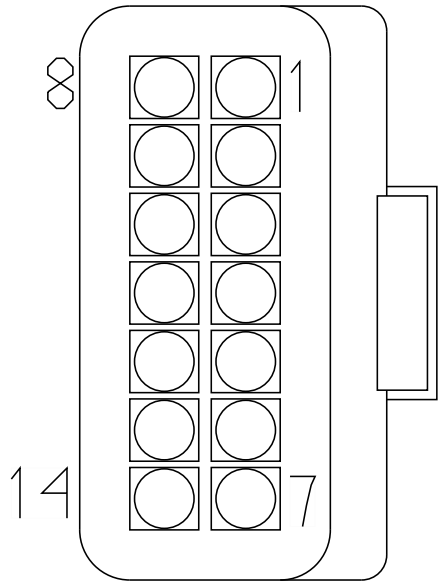

Name	Terminal Part Number	V-Min	Name	Wire Part Number	Wire CSA	Wire Spec	Wire Material description	Wire Color Description	Wire Length	End2 Terminal Part Number	End2 Pin Name	End2 Connect or
1	-	-	AY95DVL	4073403 R1	0.53	20.0	TXL 150C	TAN	4425.0	-	6	6019
2	-	-	AY95DVH	4073403 R1	0.53	20.0	TXL 150C	TAN	4425.0	-	1	6019
3	-	-	AY95BA	2645915 R1	0.79	18.0	TXL 150C	TAN	4240.0	-	10	6018
4	-	-	AY95BC	2645915 R1	0.79	18.0	TXL 150C	TAN	4240.0	-	7	6018
5	-	-	ZW95DA	2645915 R1	0.79	18.0	TXL 150C	TAN	4240.0	-	36	6018
5	-	-	ZX95DB	4073403 R1	0.53	20.0	TXL 150C	TAN	4035.0	-	X	-
7	-	-	AY9	4073403 R1	0.53	20.0	TXL 150C	TAN	4080.0	-	X	-
8	-	-	AY95K	2645915 R1	0.79	18.0	TXL 150C	TAN	4240.0	-	34	6018

Name	Terminal Part Number	V-Min	Name	Wire Part Number	Wire CSA	Wire Spec	Wire Material description	Wire Color Description	Wire Length	End2 Terminal Part Number	End2 Pin Name	End2 Connector
11	-	-	AN10-AG	4085637 R1	3.01	12.0	TXL 150C	WHITE	3120.0	-	X	-
12	-	-	AN13R	4085639 R1	3.01	12.0	TXL 150C	PINK	3090.0	-	X	-

Connector Name	6702
Part Number	3543729C1
Instances	A26 - ZVR Splice Packs 6702 & 6704B:Diagram1
Mates	SP-ZVR-B000-12-A1-A

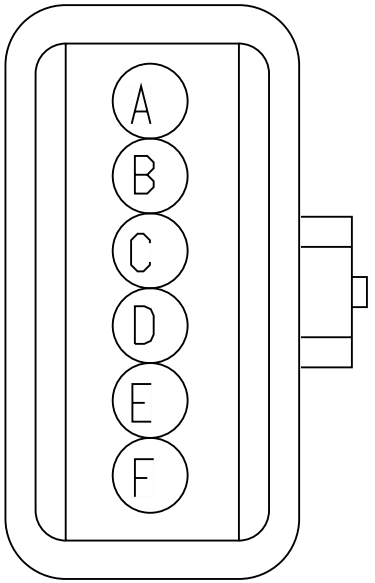

Name	Terminal Part Number	V-Min	Name	Wire Part Number	Wire CSA	Wire Spec	Wire Material description	Wire Color Description	Wire Length	End2 Terminal Part Number	End2 Pin Name	End2 Connect or
A	-	-	YK9AA	3510312 R1	1.16	16.0	Thin Wall XLPE Primary Cable	GREY	715.0	-	-	-
B	-	-	YM9AB	3510310 R1	0.53	20.0	Thin Wall XLPE Primary Cable	GREY	2155.0	-	-	-
C	-	-	WP9AAD	2643673 R1	0.79	18.0	Std. Wall XLPE Primary Cable	GREY	3235.0	-	-	-
C	-	-	KK9AAD	2643673 R1	0.79	18.0	Std. Wall XLPE Primary Cable	GREY	2705.0	-	-	-

Name	Terminal Part Number	V-Min	Name	Wire Part Number	Wire CSA	Wire Spec	Wire Material description	Wire Color Description	Wire Length	End2 Terminal Part Number	End2 Pin Name	End2 Connector
D	-	-	WW9AAB	2643673 R1	0.79	18.0	Std. Wall XLPE Primary Cable	GREY	1110.0	-	-	-

Connector Name 6704B
Part Number 3551896C1
Instances A26 - ZVR Splice Packs 6702 & 6704B:Diagram1
Mates SP-ZVR-B000-12-A1-B

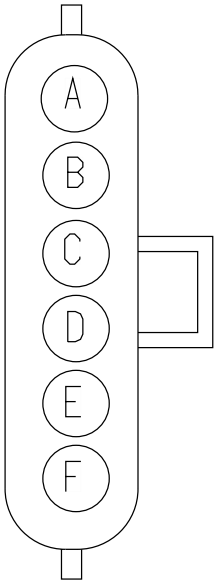

Name	Terminal Part Number	V-Min	Name	Wire Part Number	Wire CSA	Wire Spec	Wire Material description	Wire Color Description	Wire Length	End2 Terminal Part Number	End2 Pin Name	End2 Connect or
A	-	-	AP9B	3510347 R1	0.79	18.0	Thin Wall XLPE Primary Cable	VIOLET	430.0	-	X	-
A	-	-	AY9B	3510347 R1	0.79	18.0	Thin Wall XLPE Primary Cable	VIOLET	430.0	-	-	-
B	-	-	WA92B20	3510329 R1	0.79	18.0	Thin Wall XLPE Primary Cable	TAN	285.0	-	-	-
C	-	-	SG92A3	3510329 R1	0.79	18.0	Thin Wall XLPE Primary Cable	TAN	595.0	-	-	-

Name	Terminal Part Number	V-Min	Name	Wire Part Number	Wire CSA	Wire Spec	Wire Material description	Wire Color Description	Wire Length	End2 Terminal Part Number	End2 Pin Name	End2 Connect or
D	-	-	VB95W	3510329 R1	0.79	18.0	Thin Wall XLPE Primary Cable	TAN	1320.0	-	-	-
F	-	-	KC34B	3510329 R1	0.79	18.0	Thin Wall XLPE Primary Cable	TAN	2365.0	-	-	-

Connector Name	6704B
Part Number	3551896C1
Instances	L9 - Powertrain Splice Pack 6704 & 6704B:Diagram1
Mates	SP-GROUND_CLEAN-0003-00-10 -K0B

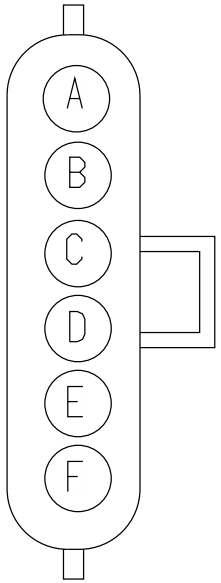

Name	Terminal Part Number	V-Min	Name	Wire Part Number	Wire CSA	Wire Spec	Wire Material description	Wire Color Description	Wire Length	End2 Terminal Part Number	End2 Pin Name	End2 Connect or
A	-	-	KS10-G6	3510363 R1	4.81	10.0	Thin Wall XLPE Primary Cable	WHITE	1105.0	-	B	500
B	-	-	VJ10-G1	2643681 R1	1.16	16.0	Std. Wall XLPE Primary Cable	WHITE	1440.0	-	-	-
C	-	-	VJ10-G2	2645973 R1	1.91	14.0	TXL 150C	WHITE	2040.0	-	-	-
D	-	-	VJ10-G3	2643681 R1	1.16	16.0	Std. Wall XLPE Primary Cable	WHITE	1370.0	-	-	-
E	-	-	VJ10-G4	2643681 R1	1.16	16.0	Std. Wall XLPE Primary Cable	WHITE	1440.0	-	-	-

Name	Terminal Part Number	V-Min	Name	Wire Part Number	Wire CSA	Wire Spec	Wire Material description	Wire Color Description	Wire Length	End2 Terminal Part Number	End2 Pin Name	End2 Connector
F	-	-	VJ10-G5	3510294 R1	1.16	16.0	Thin Wall XLPE Primary Cable	BLACK	505.0	-	-	-

Connector Name	6704
Part Number	3551896C1
Instances	A26 - Powertrain Splice Pack 6704:Diagram1
Mates	SP-GROUND-0003-00-10-K1

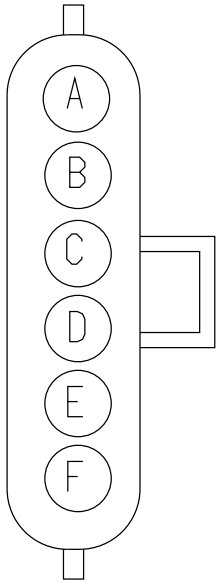

Name	Terminal Part Number	V-Min	Name	Wire Part Number	Wire CSA	Wire Spec	Wire Material description	Wire Color Description	Wire Length	End2 Terminal Part Number	End2 Pin Name	End2 Connect or
A	-	-	KA92F16	3510361 R1	1.91	14.0	Thin Wall XLPE Primary Cable	WHITE	1185.0	-	-	-
B	-	-	AN10-H	3510363 R1	4.81	10.0	Thin Wall XLPE Primary Cable	WHITE	375.0	-	-	-
B	-	-	AL10-H	3510363 R1	4.81	10.0	Thin Wall XLPE Primary Cable	WHITE	375.0	-	-	-
B	-	-	AR10-H	3510363 R1	4.81	10.0	Thin Wall XLPE Primary Cable	WHITE	375.0	-	-	-

Name	Terminal Part Number	V-Min	Name	Wire Part Number	Wire CSA	Wire Spec	Wire Material description	Wire Color Description	Wire Length	End2 Terminal Part Number	End2 Pin Name	End2 Connector
B	-	-	AS10-H	3510363 R1	4.81	10.0	Thin Wall XLPE Primary Cable	WHITE	375.0	-	-	-
B	-	-	AT10-H	3510363 R1	4.81	10.0	Thin Wall XLPE Primary Cable	WHITE	375.0	-	-	-
C	-	-	KA41-GD	2643787 R1	3.01	12.0	Std. Wall XLPE Primary Cable	WHITE	110.0	-	-	-
D	-	-	TZ92-G	2643689 R1	1.91	14.0	Std. Wall XLPE Primary Cable	WHITE	810.0	-	-	-
D	-	-	TD92-G	2643689 R1	1.91	14.0	Std. Wall XLPE Primary Cable	WHITE	1875.0	-	-	-
E	-	-	YB41-GE	3510363 R1	4.81	10.0	Thin Wall XLPE Primary Cable	WHITE	85.0	-	X	-
E	-	-	YA41-GE	3510363 R1	4.81	10.0	Thin Wall XLPE Primary Cable	WHITE	185.0	-	X	-
F	-	-	YB41-GF	3510363 R1	4.81	10.0	Thin Wall XLPE Primary Cable	WHITE	85.0	-	X	-
F	-	-	YA41-GF	3510363 R1	4.81	10.0	Thin Wall XLPE Primary Cable	WHITE	185.0	-	X	-

Connector Name	6704
Part Number	3551896C1
Short Description	GROUND SPLICE
Instances	B6.7 - Powertrain Splice Pack 6704:Diagram1 L9 - Powertrain Splice Pack 6704 & 6704B:Diagram1
Mates	SP-GROUND_CLEAN-0003-00-10 -K0

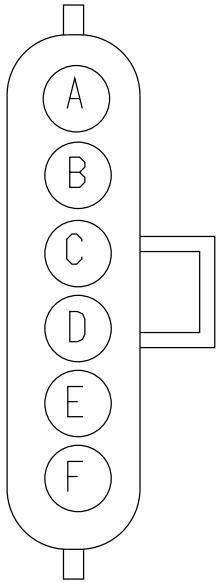

Name	Terminal Part Number	V-Min	Name	Wire Part Number	Wire CSA	Wire Spec	Wire Material description	Wire Color Description	Wire Length	End2 Terminal Part Number	End2 Pin Name	End2 Connect or
A	-	-	KS10-G1	3510363 R1	4.81	10.0	Thin Wall XLPE Primary Cable	WHITE	2285.0	-	A	500
A	-	-	KD10-G5	3510363 R1	4.81	10.0	Thin Wall XLPE Primary Cable	WHITE	1350.0	-	A	500
B	-	-	VJ10-G1	2643681 R1	1.16	16.0	Std. Wall XLPE Primary Cable	WHITE	1440.0	-	-	-
B	-	-	KG31R	2643673 R1	0.79	18.0	Std. Wall XLPE Primary Cable	GREY	2620.0	-	-	-

Name	Terminal Part Number	V-Min	Name	Wire Part Number	Wire CSA	Wire Spec	Wire Material description	Wire Color Description	Wire Length	End2 Terminal Part Number	End2 Pin Name	End2 Connector
B	-	-	KJ31R	2643673 R1	0.79	18.0	Std. Wall XLPE Primary Cable	GREY	2060.0	-	-	-
C	-	-	VJ10-G2	2645973 R1	1.91	14.0	TXL 150C	WHITE	2040.0	-	-	-
D	-	-	VJ10-G3	2643681 R1	1.16	16.0	Std. Wall XLPE Primary Cable	WHITE	1370.0	-	-	-
D	-	-	PM92#109	3510359 R1	0.79	18.0	Thin Wall XLPE Primary Cable	WHITE	2310.0	-	-	-
D	-	-	SM92#109	3510359 R1	0.79	18.0	Thin Wall XLPE Primary Cable	WHITE	2590.0	-	-	-
E	-	-	VJ10-G4	2643681 R1	1.16	16.0	Std. Wall XLPE Primary Cable	WHITE	1440.0	-	-	-
E	-	-	SM92#169	3510359 R1	0.79	18.0	Thin Wall XLPE Primary Cable	WHITE	2590.0	-	-	-
E	-	-	PM92#169	3510359 R1	0.79	18.0	Thin Wall XLPE Primary Cable	WHITE	2310.0	-	-	-
F	-	-	VJ10-G5	3510294 R1	1.16	16.0	Thin Wall XLPE Primary Cable	BLACK	505.0	-	-	-

Name	Terminal Part Number	V-Min	Name	Wire Part Number	Wire CSA	Wire Spec	Wire Material description	Wire Color Description	Wire Length	End2 Terminal Part Number	End2 Pin Name	End2 Connector
F	-	-	RA14-G	3510362 R1	3.01	12.0	Thin Wall XLPE Primary Cable	WHITE	930.0	-	-	-

Connector Name	674B
Part Number	6114577C1
Instances	A26 - CAN Layout:Engine Proprietary J1939 A26 - Engine Private J1939 (250kbps):A26 - Engine Private J1939 (250kbps) B6.7 - CAN Layout:Engine Proprietary J1939 B6.7 - Engine Private J1939 (250kbps):B6.7 - Engine Private J1939 L9 - CAN Layout:Engine Proprietary J1939 L9 - Engine Private J1939 (250kbps):L9 - Engine Private J1939
Mates	674

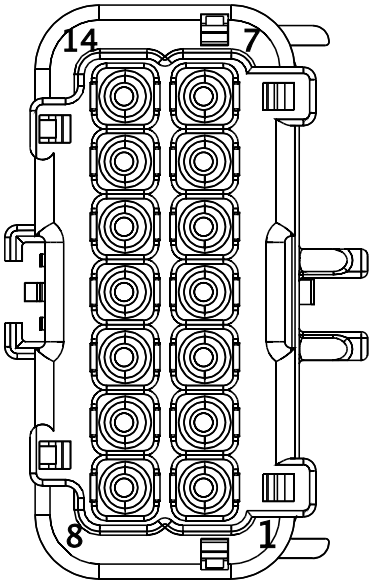

Name	Terminal Part Number	V-Min	Name	Wire Part Number	Wire CSA	Wire Spec	Wire Material description	Wire Color Description	Wire Length	End2 Terminal Part Number	End2 Pin Name	End2 Connect or
13	-	-	WIRE1719	-	0.0	-	-	-	0.0	-	13	670A/670B
14	-	-	WIRE1720	-	0.0	-	-	-	0.0	-	14	670A/670B

Connector Name	6747
Part Number	3543733C1
Instances	B6.7 - ZVR Splice Pack - 6747:Diagram1 L9 - ZVR Splice Pack - 6747:Diagram1
Mates	SP-ZVR_SPLICE_PACK-B000-11 -A1

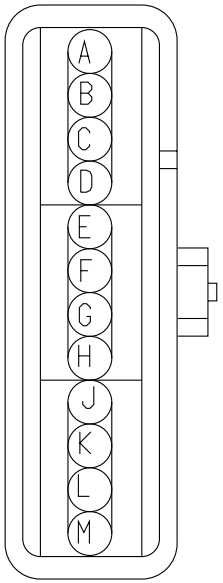

Name	Terminal Part Number	V-Min	Name	Wire Part Number	Wire CSA	Wire Spec	Wire Material description	Wire Color Description	Wire Length	End2 Terminal Part Number	End2 Pin Name	End2 Connect or
A	-	-	KB9-G	3510310 R1	0.53	20.0	Thin Wall XLPE Primary Cable	GREY	1470.0	-	-	-
B	-	-	VA95-G	2643674 R1	0.79	18.0	Std. Wall XLPE Primary Cable	WHITE	1625.0	-	-	-
C	-	-	KT34-G	3510329 R1	0.79	18.0	Thin Wall XLPE Primary Cable	TAN	1900.0	-	-	-
D	-	-	KA41-G	3510329 R1	0.79	18.0	Thin Wall XLPE Primary Cable	TAN	1140.0	-	-	-

Name	Terminal Part Number	V-Min	Name	Wire Part Number	Wire CSA	Wire Spec	Wire Material description	Wire Color Description	Wire Length	End2 Terminal Part Number	End2 Pin Name	End2 Connector
E	-	-	KH11-G1	3510360 R1	1.16	16.0	Thin Wall XLPE Primary Cable	WHITE	2445.0	-	-	-
E	-	-	KE11-G1	3510360 R1	1.16	16.0	Thin Wall XLPE Primary Cable	WHITE	1460.0	-	-	-
E	-	-	KA95AA	3510328 R1	0.53	20.0	Thin Wall XLPE Primary Cable	TAN	1160.0	-	-	-
F	-	-	KK77-G	3510299 R1	0.79	18.0	Thin Wall XLPE Primary Cable	LIGHT GREEN	890.0	-	-	-
G	-	-	AC23-G	3510328 R1	0.53	20.0	Thin Wall XLPE Primary Cable	TAN	660.0	-	-	-
J	-	-	KA146-G	3510312 R1	1.16	16.0	Thin Wall XLPE Primary Cable	GREY	590.0	-	-	-
K	-	-	ML9TS	3510311 R1	0.79	18.0	Thin Wall XLPE Primary Cable	GREY	2480.0	-	-	-
L	-	-	KK77-ZV	3510299 R1	0.79	18.0	Thin Wall XLPE Primary Cable	LIGHT GREEN	2035.0	-	-	-
M	-	-	CA9T	2645914 R1	0.79	18.0	TXL 150C	GREY	2720.0	-	-	-

Connector Name	6748
Part Number	3602454C1
Short Description	EGNR DIAGNOSTIC CONNECTOR
Instances	A26 - CAN Layout:Engine Proprietary J1939 A26 - Engine Private J1939 (250kbps):A26 - Engine Private J1939 (250kbps)
Mates	CONN-EGNR_DIAGNOSTIC-0008- 01-02A

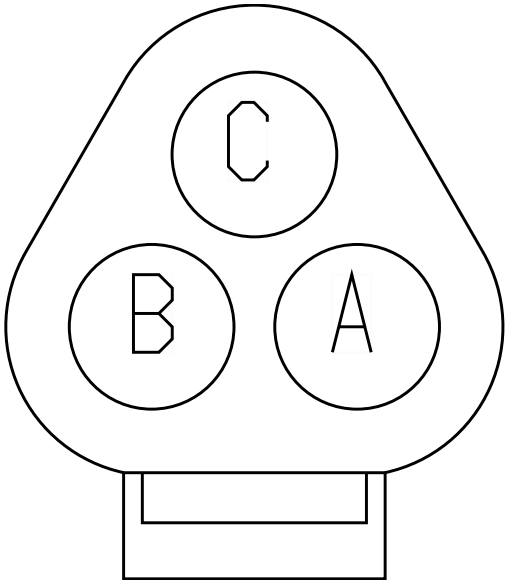

Name	Terminal Part Number	V-Min	Name	Wire Part Number	Wire CSA	Wire Spec	Wire Material description	Wire Color Description	Wire Length	End2 Terminal Part Number	End2 Pin Name	End2 Connect or
A	-	-	WIRE239167	-	0.0	-	-	-	0.0	-	PIN1	-
B	-	-	WIRE239166	-	0.0	-	-	-	0.0	-	PIN1	-

Connector Name	674
Part Number	6114576C1
Instances	A26 - CAN Layout:Engine Proprietary J1939 A26 - Engine Private J1939 (250kbps):A26 - Engine Private J1939 (250kbps) B6.7 - CAN Layout:Engine Proprietary J1939 B6.7 - Engine Private J1939 (250kbps):B6.7 - Engine Private J1939 L9 - CAN Layout:Engine Proprietary J1939 L9 - Engine Private J1939 (250kbps):L9 - Engine Private J1939
Mates	674B

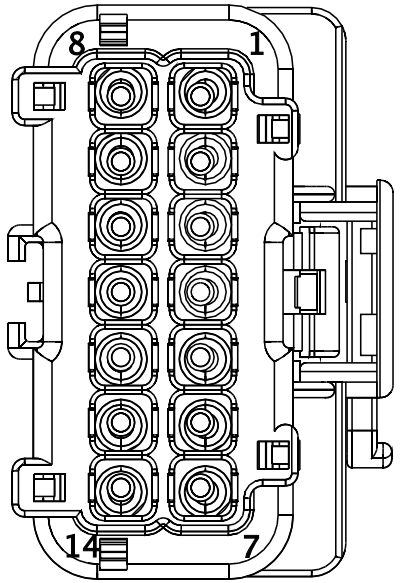

Name	Terminal Part Number	V-Min	Name	Wire Part Number	Wire CSA	Wire Spec	Wire Material description	Wire Color Description	Wire Length	End2 Terminal Part Number	End2 Pin Name	End2 Connect or
13	-	-	WIRE1717	-	0.0	-	-	-	0.0	-	PIN1	-
14	-	-	WIRE1718	-	0.0	-	-	-	0.0	-	PIN1	-

Connector Name	674
Part Number	6114576C1
Short Description	DEF HARNESS INTERCONNECT
Instances	A26 - Selective Catalytic Reduction (SCR):Diagram1-Combination1 A26 - Selective Catalytic Reduction (SCR):Diagram2-Combination1
Mates	674

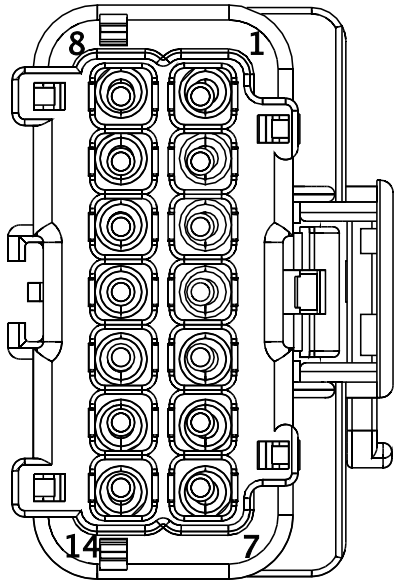

Name	Terminal Part Number	V-Min	Name	Wire Part Number	Wire CSA	Wire Spec	Wire Material description	Wire Color Description	Wire Length	End2 Terminal Part Number	End2 Pin Name	End2 Connect or
1	-	-	95E	3510329 R1	0.79	18.0	Thin Wall XLPE Primary Cable	TAN	670.0	-	-	-
2	-	-	95F	3510329 R1	0.79	18.0	Thin Wall XLPE Primary Cable	TAN	670.0	-	-	-
3	-	-	95H	3510329 R1	0.79	18.0	Thin Wall XLPE Primary Cable	TAN	670.0	-	-	-
4	-	-	95AR	3510329 R1	0.79	18.0	Thin Wall XLPE Primary Cable	TAN	670.0	-	-	-

Name	Terminal Part Number	V-Min	Name	Wire Part Number	Wire CSA	Wire Spec	Wire Material description	Wire Color Description	Wire Length	End2 Terminal Part Number	End2 Pin Name	End2 Connector
5	-	-	95AC	3510329 R1	0.79	18.0	Thin Wall XLPE Primary Cable	TAN	690.0	-	-	-
6	-	-	95AB	3510347 R1	0.79	18.0	Thin Wall XLPE Primary Cable	VIOLET	690.0	-	-	-
7	-	-	95AS	3510330 R1	1.16	16.0	Thin Wall XLPE Primary Cable	TAN	635.0	-	-	-
8	-	-	95AT	3510330 R1	1.16	16.0	Thin Wall XLPE Primary Cable	TAN	670.0	-	-	-
9	-	-	95AU	3510330 R1	1.16	16.0	Thin Wall XLPE Primary Cable	TAN	670.0	-	-	-
10	-	-	95-G	3510330 R1	1.16	16.0	Thin Wall XLPE Primary Cable	TAN	720.0	-	-	-
11	-	-	10-GL	3510359 R1	0.79	18.0	Thin Wall XLPE Primary Cable	WHITE	875.0	-	11	674
12	-	-	13A	3510323 R1	0.79	18.0	Thin Wall XLPE Primary Cable	PINK	675.0	-	12	674

Connector Name	674
Part Number	6114576C1
Short Description	DEF HARNESS INTERCONNECT
Instances	A26 - Selective Catalytic Reduction (SCR):Diagram1-Combination2 A26 - Selective Catalytic Reduction (SCR):Diagram2-Combination2 B6.7 - Selective Catalytic Reduction (SCR):Diagram1 B6.7 - Selective Catalytic Reduction (SCR):Diagram2 L9 - Selective Catalytic Reduction (SCR):Diagram1 L9 - Selective Catalytic Reduction (SCR):Diagram2
Mates	674

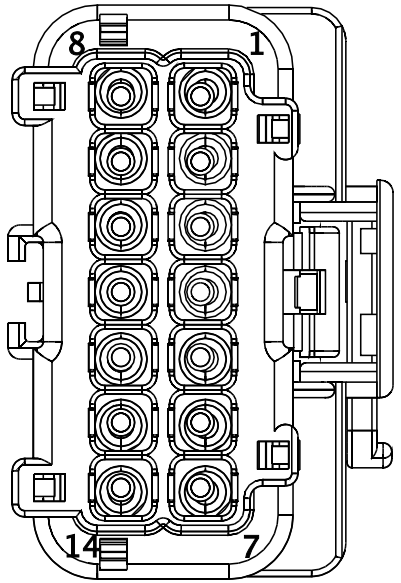

Name	Terminal Part Number	V-Min	Name	Wire Part Number	Wire CSA	Wire Spec	Wire Material description	Wire Color Description	Wire Length	End2 Terminal Part Number	End2 Pin Name	End2 Connect or
1	-	-	95E	3510329 R1	0.79	18.0	Thin Wall XLPE Primary Cable	TAN	670.0	-	4	680
2	-	-	95F	3510329 R1	0.79	18.0	Thin Wall XLPE Primary Cable	TAN	670.0	-	3	680
3	-	-	95H	3510329 R1	0.79	18.0	Thin Wall XLPE Primary Cable	TAN	670.0	-	1	680
4	-	-	95AR	3510329 R1	0.79	18.0	Thin Wall XLPE Primary Cable	TAN	670.0	-	2	680

Name	Terminal Part Number	V-Min	Name	Wire Part Number	Wire CSA	Wire Spec	Wire Material description	Wire Color Description	Wire Length	End2 Terminal Part Number	End2 Pin Name	End2 Connector
5	-	-	95AC	3510329 R1	0.79	18.0	Thin Wall XLPE Primary Cable	TAN	690.0	-	1	691
6	-	-	95AB	3510347 R1	0.79	18.0	Thin Wall XLPE Primary Cable	VIOLET	690.0	-	4	691
7	-	-	95AS	3510330 R1	1.16	16.0	Thin Wall XLPE Primary Cable	TAN	635.0	-	1	675
8	-	-	95AT	3510330 R1	1.16	16.0	Thin Wall XLPE Primary Cable	TAN	670.0	-	1	676
9	-	-	95AU	3510330 R1	1.16	16.0	Thin Wall XLPE Primary Cable	TAN	670.0	-	1	677
10	-	-	95-G	3510330 R1	1.16	16.0	Thin Wall XLPE Primary Cable	TAN	720.0	-	X	-
11	-	-	10-GL	3510359 R1	0.79	18.0	Thin Wall XLPE Primary Cable	WHITE	875.0	-	3	678
11	-	-	10-GL	3510359 R1	0.79	18.0	Thin Wall XLPE Primary Cable	WHITE	875.0	-	11	674

Name	Terminal Part Number	V-Min	Name	Wire Part Number	Wire CSA	Wire Spec	Wire Material description	Wire Color Description	Wire Length	End2 Terminal Part Number	End2 Pin Name	End2 Connect or
12	-	-	13A	3510323 R1	0.79	18.0	Thin Wall XLPE Primary Cable	PINK	675.0	-	4	678
12	-	-	13A	3510323 R1	0.79	18.0	Thin Wall XLPE Primary Cable	PINK	675.0	-	12	674

Connector Name	674
Part Number	6114577C1
Short Description	DEF TANK HARNESS CONNECTOR
Instances	A26 - Selective Catalytic Reduction (SCR):Diagram1-Combination2 A26 - Selective Catalytic Reduction (SCR):Diagram2-Combination2 B6.7 - Selective Catalytic Reduction (SCR):Diagram1 B6.7 - Selective Catalytic Reduction (SCR):Diagram2 L9 - Selective Catalytic Reduction (SCR):Diagram1 L9 - Selective Catalytic Reduction (SCR):Diagram2
Mates	674

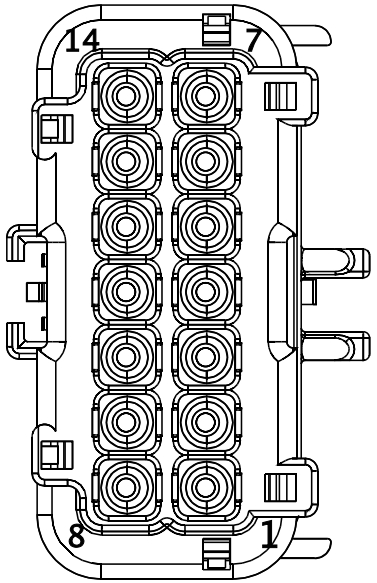

Name	Terminal Part Number	V-Min	Name	Wire Part Number	Wire CSA	Wire Spec	Wire Material description	Wire Color Description	Wire Length	End2 Terminal Part Number	End2 Pin Name	End2 Connect or
1	-	-	VL95E	3510328 R1	0.53	20.0	Thin Wall XLPE Primary Cable	TAN	1665.0	-	54	6000
1	-	-	AJ95E	3510328 R1	0.53	20.0	Thin Wall XLPE Primary Cable	TAN	2697.0	-	2	6019
2	-	-	VL95F	3510328 R1	0.53	20.0	Thin Wall XLPE Primary Cable	TAN	1665.0	-	6	6000
2	-	-	AJ95F	3510329 R1	0.79	18.0	Thin Wall XLPE Primary Cable	TAN	2512.0	-	4	6018

Name	Terminal Part Number	V-Min	Name	Wire Part Number	Wire CSA	Wire Spec	Wire Material description	Wire Color Description	Wire Length	End2 Terminal Part Number	End2 Pin Name	End2 Connect or
3	-	-	VL95H	3510329 R1	0.79	18.0	Thin Wall XLPE Primary Cable	TAN	1595.0	-	1	8500
3	-	-	AJ95H	3510329 R1	0.79	18.0	Thin Wall XLPE Primary Cable	TAN	2512.0	-	58	6018
4	-	-	VL95AR1	3510329 R1	0.79	18.0	Thin Wall XLPE Primary Cable	TAN	1835.0	-	X	-
4	-	-	AJ95AR1	3510329 R1	0.79	18.0	Thin Wall XLPE Primary Cable	TAN	1492.0	-	X	-
5	-	-	VL95AC	3510328 R1	0.53	20.0	Thin Wall XLPE Primary Cable	TAN	1665.0	-	82	6000
5	-	-	CA95GE	3510329 R1	0.79	18.0	Thin Wall XLPE Primary Cable	TAN	2512.0	-	1	6018
5	-	-	CC95AC	3510328 R1	0.53	20.0	Thin Wall XLPE Primary Cable	TAN	2302.0	-	X	-
6	-	-	AC95AB	3510328 R1	0.53	20.0	Thin Wall XLPE Primary Cable	TAN	1295.0	-	X	-

Name	Terminal Part Number	V-Min	Name	Wire Part Number	Wire CSA	Wire Spec	Wire Material description	Wire Color Description	Wire Length	End2 Terminal Part Number	End2 Pin Name	End2 Connect or
6	-	-	AA95AA	3510328 R1	0.53	20.0	Thin Wall XLPE Primary Cable	TAN	1665.0	-	57	6000
6	-	-	AJ95AB	3510329 R1	0.79	18.0	Thin Wall XLPE Primary Cable	TAN	2512.0	-	28	6018
7	-	-	VL95AS1	3510329 R1	0.79	18.0	Thin Wall XLPE Primary Cable	TAN	1865.0	-	X	-
7	-	-	AJ95AS1	3510329 R1	0.79	18.0	Thin Wall XLPE Primary Cable	TAN	1522.0	-	X	-
8	-	-	VL95AT1	3510329 R1	0.79	18.0	Thin Wall XLPE Primary Cable	TAN	1895.0	-	X	-
8	-	-	AJ95AT1	3510329 R1	0.79	18.0	Thin Wall XLPE Primary Cable	TAN	1612.0	-	X	-
9	-	-	VL95AU1	3510329 R1	0.79	18.0	Thin Wall XLPE Primary Cable	TAN	1980.0	-	X	-
9	-	-	AJ95AU1	3510329 R1	0.79	18.0	Thin Wall XLPE Primary Cable	TAN	1642.0	-	X	-

Name	Terminal Part Number	V-Min	Name	Wire Part Number	Wire CSA	Wire Spec	Wire Material description	Wire Color Description	Wire Length	End2 Terminal Part Number	End2 Pin Name	End2 Connector
10	-	-	VJ10-G4	2643681 R1	1.16	16.0	Std. Wall XLPE Primary Cable	WHITE	1440.0	-	-	-
10	-	-	AL95-GB	3510294 R1	1.16	16.0	Thin Wall XLPE Primary Cable	BLACK	1582.0	-	X	-
10	-	-	AT95-GB	3510294 R1	1.16	16.0	Thin Wall XLPE Primary Cable	BLACK	1582.0	-	X	-
11	-	-	VJ10-G1	2643681 R1	1.16	16.0	Std. Wall XLPE Primary Cable	WHITE	1440.0	-	-	-
11	-	-	AL95-GL	3510294 R1	1.16	16.0	Thin Wall XLPE Primary Cable	BLACK	1582.0	-	X	-
12	-	-	VJ13AA	3510323 R1	0.79	18.0	Thin Wall XLPE Primary Cable	PINK	400.0	-	X	-
12	-	-	AL13AA	3510365 R1	0.79	18.0	Thin Wall XLPE Primary Cable	RED	1552.0	-	X	-
12	-	-	AT13AA	3510365 R1	0.79	18.0	Thin Wall XLPE Primary Cable	RED	1552.0	-	X	-

Connector Name	674
Part Number	6114577C1
Short Description	DEF TANK HARNESS CONNECTOR
Instances	A26 - Selective Catalytic Reduction (SCR):Diagram1-Combination1 A26 - Selective Catalytic Reduction (SCR):Diagram2-Combination1
Mates	674

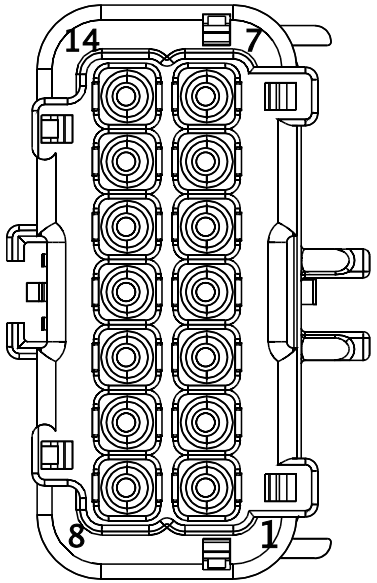

Name	Terminal Part Number	V-Min	Name	Wire Part Number	Wire CSA	Wire Spec	Wire Material description	Wire Color Description	Wire Length	End2 Terminal Part Number	End2 Pin Name	End2 Connect or
1	-	-	AH95E	3510328 R1	0.53	20.0	Thin Wall XLPE Primary Cable	TAN	3425.0	-	2	6019
2	-	-	AH95F	3510329 R1	0.79	18.0	Thin Wall XLPE Primary Cable	TAN	3240.0	-	4	6018
3	-	-	AH95H	3510329 R1	0.79	18.0	Thin Wall XLPE Primary Cable	TAN	3240.0	-	58	6018
4	-	-	AH95AR1	3510329 R1	0.79	18.0	Thin Wall XLPE Primary Cable	TAN	2220.0	-	X	-

Name	Terminal Part Number	V-Min	Name	Wire Part Number	Wire CSA	Wire Spec	Wire Material description	Wire Color Description	Wire Length	End2 Terminal Part Number	End2 Pin Name	End2 Connector
5	-	-	CG95AC	3510329 R1	0.79	18.0	Thin Wall XLPE Primary Cable	TAN	3030.0	-	X	-
5	-	-	CF95GE	3510329 R1	0.79	18.0	Thin Wall XLPE Primary Cable	TAN	3240.0	-	1	6018
6	-	-	AH95AB	3510329 R1	0.79	18.0	Thin Wall XLPE Primary Cable	TAN	3240.0	-	28	6018
7	-	-	AH95AS1	3510329 R1	0.79	18.0	Thin Wall XLPE Primary Cable	TAN	2250.0	-	X	-
8	-	-	AH95AT1	3510329 R1	0.79	18.0	Thin Wall XLPE Primary Cable	TAN	2340.0	-	X	-
9	-	-	AH95AU1	3510329 R1	0.79	18.0	Thin Wall XLPE Primary Cable	TAN	2370.0	-	X	-
10	-	-	AS95-GB	3510294 R1	1.16	16.0	Thin Wall XLPE Primary Cable	BLACK	2310.0	-	X	-
10	-	-	AR95-GB	3510294 R1	1.16	16.0	Thin Wall XLPE Primary Cable	BLACK	2310.0	-	X	-

Name	Terminal Part Number	V-Min	Name	Wire Part Number	Wire CSA	Wire Spec	Wire Material description	Wire Color Description	Wire Length	End2 Terminal Part Number	End2 Pin Name	End2 Connector
11	-	-	AR95-GL	3510294 R1	1.16	16.0	Thin Wall XLPE Primary Cable	BLACK	2310.0	-	X	-
12	-	-	AR13AA	3510365 R1	0.79	18.0	Thin Wall XLPE Primary Cable	RED	2280.0	-	X	-
12	-	-	AS13AA	3510365 R1	0.79	18.0	Thin Wall XLPE Primary Cable	RED	2280.0	-	X	-

Connector Name	675
Part Number	3854665C91
Instances	A26 - Selective Catalytic Reduction (SCR):Diagram2-Combination2
Mates	HTR-BACKFLOW-5041-01-01A

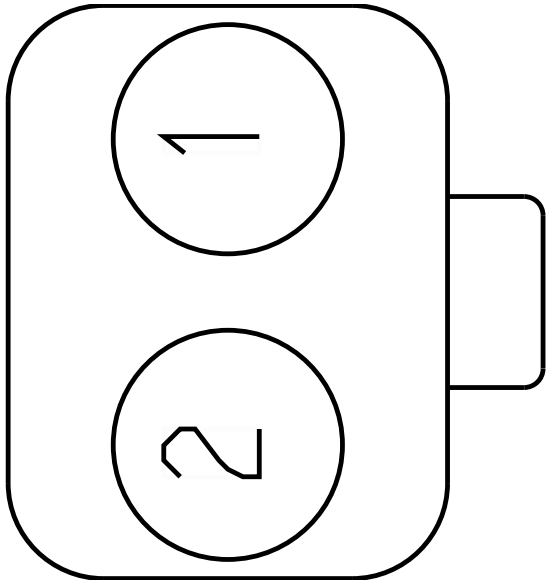

Name	Terminal Part Number	V-Min	Name	Wire Part Number	Wire CSA	Wire Spec	Wire Material description	Wire Color Description	Wire Length	End2 Terminal Part Number	End2 Pin Name	End2 Connect or
1	-	-	95AS	3510330 R1	1.16	16.0	Thin Wall XLPE Primary Cable	TAN	635.0	-	7	674
2	-	-	95-GA	3510330 R1	1.16	16.0	Thin Wall XLPE Primary Cable	TAN	305.0	-	X	-

Connector Name 675

Part Number 3854665C91

Instances A26 - Selective Catalytic Reduction (SCR):Diagram2-Combination1

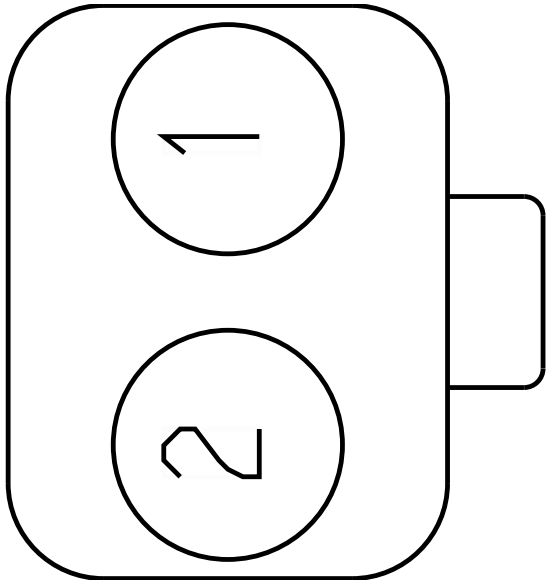

Name	Terminal Part Number	V-Min	Name	Wire Part Number	Wire CSA	Wire Spec	Wire Material description	Wire Color Description	Wire Length	End2 Terminal Part Number	End2 Pin Name	End2 Connect or
1	-	-	95AS	3510330 R1	1.16	16.0	Thin Wall XLPE Primary Cable	TAN	635.0	-	-	-
2	-	-	95-GA	3510330 R1	1.16	16.0	Thin Wall XLPE Primary Cable	TAN	305.0	-	-	-

Connector Name	675
Part Number	3854665C91
Instances	B6.7 - Selective Catalytic Reduction (SCR):Diagram2 L9 - Selective Catalytic Reduction (SCR):Diagram2
Mates	HTR-BACKFLOW-5041-01-01A

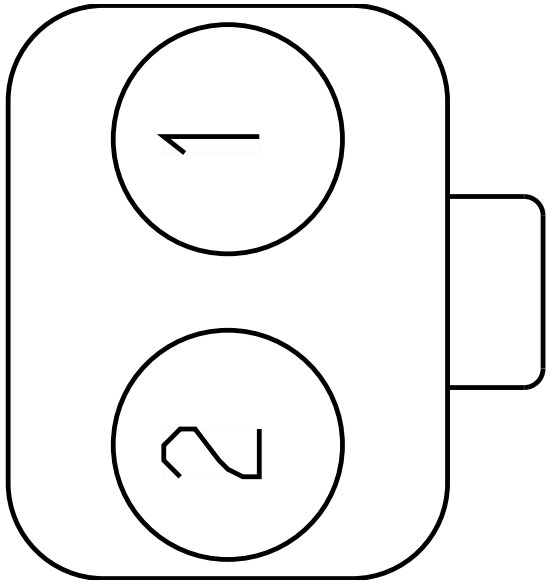

Name	Terminal Part Number	V-Min	Name	Wire Part Number	Wire CSA	Wire Spec	Wire Material description	Wire Color Description	Wire Length	End2 Terminal Part Number	End2 Pin Name	End2 Connect or
1	-	-	95AS	3510330 R1	1.16	16.0	Thin Wall XLPE Primary Cable	TAN	635.0	-	7	674
2	-	-	95-GA	3510330 R1	1.16	16.0	Thin Wall XLPE Primary Cable	TAN	305.0	-	X	-

Connector Name 676

Part Number 3854666C91

Instances A26 - Selective Catalytic Reduction (SCR):Diagram2-Combination1

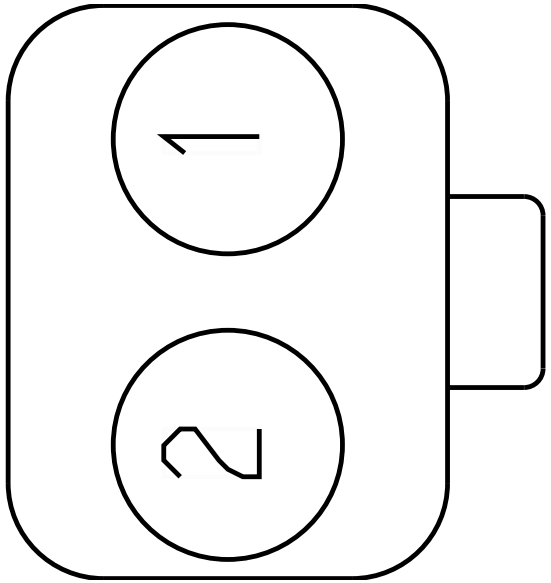

Name	Terminal Part Number	V-Min	Name	Wire Part Number	Wire CSA	Wire Spec	Wire Material description	Wire Color Description	Wire Length	End2 Terminal Part Number	End2 Pin Name	End2 Connect or
1	-	-	95AT	3510330 R1	1.16	16.0	Thin Wall XLPE Primary Cable	TAN	670.0	-	-	-
2	-	-	95-GB	3510330 R1	1.16	16.0	Thin Wall XLPE Primary Cable	TAN	240.0	-	-	-

Connector Name	676
Part Number	3854666C91
Instances	A26 - Selective Catalytic Reduction (SCR):Diagram2-Combination2
Mates	HTR-PRESSURE-5041-01-01A

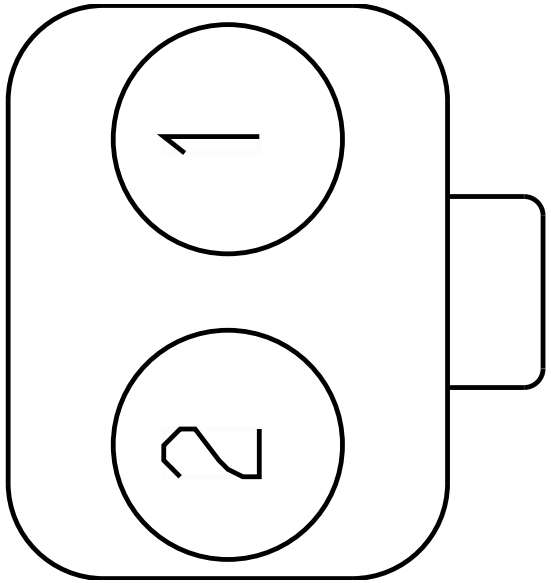

Name	Terminal Part Number	V-Min	Name	Wire Part Number	Wire CSA	Wire Spec	Wire Material description	Wire Color Description	Wire Length	End2 Terminal Part Number	End2 Pin Name	End2 Connect or
1	-	-	95AT	3510330 R1	1.16	16.0	Thin Wall XLPE Primary Cable	TAN	670.0	-	8	674
2	-	-	95-GB	3510330 R1	1.16	16.0	Thin Wall XLPE Primary Cable	TAN	240.0	-	X	-

Connector Name	676
Part Number	3854666C91
Instances	B6.7 - Selective Catalytic Reduction (SCR):Diagram2 L9 - Selective Catalytic Reduction (SCR):Diagram2
Mates	HTR-PRESSURE-5041-01-01A

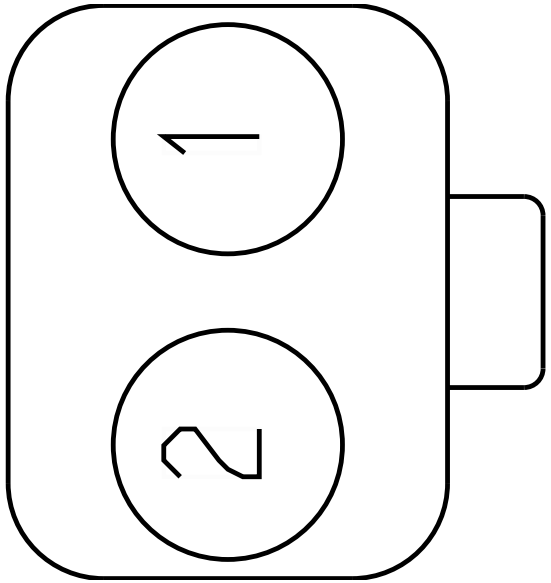

Name	Terminal Part Number	V-Min	Name	Wire Part Number	Wire CSA	Wire Spec	Wire Material description	Wire Color Description	Wire Length	End2 Terminal Part Number	End2 Pin Name	End2 Connect or
1	-	-	95AT	3510330 R1	1.16	16.0	Thin Wall XLPE Primary Cable	TAN	670.0	-	8	674
2	-	-	95-GB	3510330 R1	1.16	16.0	Thin Wall XLPE Primary Cable	TAN	240.0	-	X	-

Connector Name 677

Part Number 3854645C91

Instances A26 - Selective Catalytic Reduction (SCR):Diagram2-Combination1

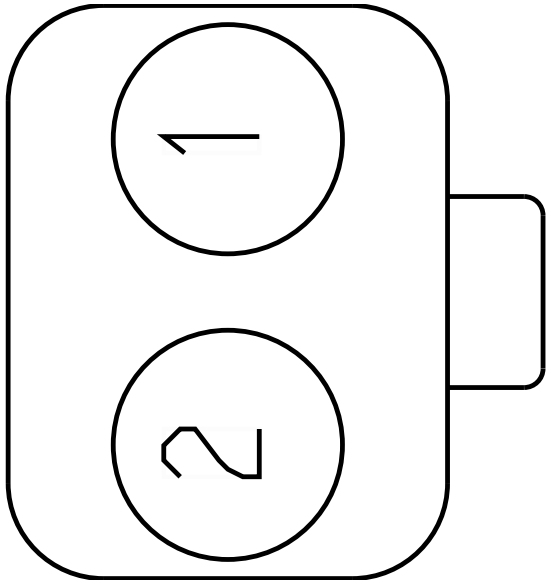

Name	Terminal Part Number	V-Min	Name	Wire Part Number	Wire CSA	Wire Spec	Wire Material description	Wire Color Description	Wire Length	End2 Terminal Part Number	End2 Pin Name	End2 Connect or
1	-	-	95AU	3510330 R1	1.16	16.0	Thin Wall XLPE Primary Cable	TAN	670.0	-	-	-
2	-	-	95-GC	3510330 R1	1.16	16.0	Thin Wall XLPE Primary Cable	TAN	240.0	-	-	-

Connector Name	677
Part Number	3854645C91
Instances	A26 - Selective Catalytic Reduction (SCR):Diagram2-Combination2
Mates	HTR-SUCTION-5041-01-01A

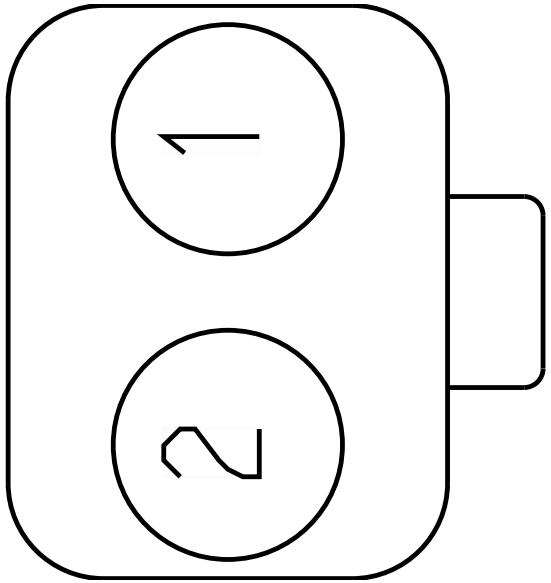

Name	Terminal Part Number	V-Min	Name	Wire Part Number	Wire CSA	Wire Spec	Wire Material description	Wire Color Description	Wire Length	End2 Terminal Part Number	End2 Pin Name	End2 Connect or
1	-	-	95AU	3510330 R1	1.16	16.0	Thin Wall XLPE Primary Cable	TAN	670.0	-	9	674
2	-	-	95-GC	3510330 R1	1.16	16.0	Thin Wall XLPE Primary Cable	TAN	240.0	-	X	-

Connector Name	677
Part Number	3854645C91
Instances	B6.7 - Selective Catalytic Reduction (SCR):Diagram2 L9 - Selective Catalytic Reduction (SCR):Diagram2
Mates	HTR-SUCTION-5041-01-01A

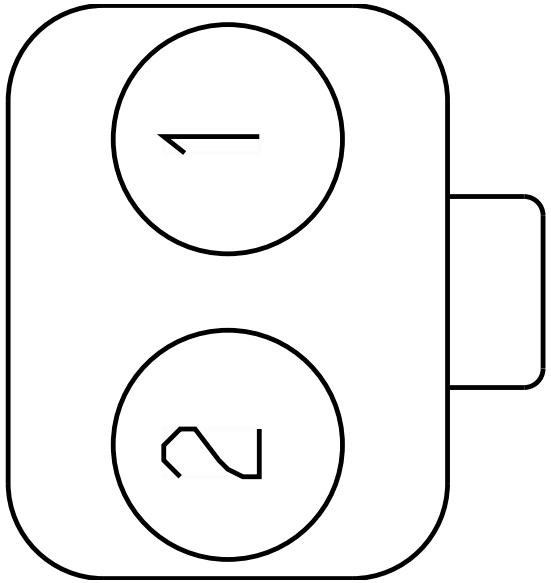

Name	Terminal Part Number	V-Min	Name	Wire Part Number	Wire CSA	Wire Spec	Wire Material description	Wire Color Description	Wire Length	End2 Terminal Part Number	End2 Pin Name	End2 Connect or
1	-	-	95AU	3510330 R1	1.16	16.0	Thin Wall XLPE Primary Cable	TAN	670.0	-	9	674
2	-	-	95-GC	3510330 R1	1.16	16.0	Thin Wall XLPE Primary Cable	TAN	240.0	-	X	-

Connector Name 678

Part Number 3991593C1

Instances A26 - CAN Layout:Engine Proprietary J1939
A26 - Engine Private J1939 (250kbps):A26 - Engine Private J1939 (250kbps)
A26 - Selective Catalytic Reduction (SCR):Diagram1-Combination1
B6.7 - CAN Layout:Engine Proprietary J1939
B6.7 - Engine Private J1939 (250kbps):B6.7 - Engine Private J1939
B6.7 - Selective Catalytic Reduction (SCR):Diagram1
L9 - CAN Layout:Engine Proprietary J1939
L9 - Engine Private J1939 (250kbps):L9 - Engine Private J1939
L9 - Selective Catalytic Reduction (SCR):Diagram1

Mates SNSR-DEF_TANK_QUAL-5041-01 -01A

Name	Terminal Part Number	V-Min	Name	Wire Part Number	Wire CSA	Wire Spec	Wire Material description	Wire Color Description	Wire Length	End2 Terminal Part Number	End2 Pin Name	End2 Connector
1	-	-	-	-	-	-	-	-	-	-	-	-
1	-	-	WIRE1716	-	0.0	-	-	-	0.0	-	PIN1	-
2	-	-	-	-	-	-	-	-	-	-	-	-
2	-	-	WIRE1715	-	0.0	-	-	-	0.0	-	PIN1	-
3	-	-	10-GL	3510359 R1	0.79	18.0	Thin Wall XLPE Primary Cable	WHITE	875.0	-	11	674
3	-	-	10-GL	3510359 R1	0.79	18.0	Thin Wall XLPE Primary Cable	WHITE	875.0	-	-	-
4	-	-	13A	3510323 R1	0.79	18.0	Thin Wall XLPE Primary Cable	PINK	675.0	-	12	674
4	-	-	13A	3510323 R1	0.79	18.0	Thin Wall XLPE Primary Cable	PINK	675.0	-	-	-

Connector Name	678
Part Number	3991593C1
Instances	A26 - Selective Catalytic Reduction (SCR):Diagram1-Combination2
Mates	SNSR-DEF_TANK_QUAL-5041-01 -01A

Name	Terminal Part Number	V-Min	Name	Wire Part Number	Wire CSA	Wire Spec	Wire Material description	Wire Color Description	Wire Length	End2 Terminal Part Number	End2 Pin Name	End2 Connect or
1	-	-	-	-	-	-	-	-	-	-	-	-
2	-	-	-	-	-	-	-	-	-	-	-	-
3	-	-	10-GL	3510359 R1	0.79	18.0	Thin Wall XLPE Primary Cable	WHITE	875.0	-	-	-
4	-	-	13A	3510323 R1	0.79	18.0	Thin Wall XLPE Primary Cable	PINK	675.0	-	-	-

Connector Name 680

Part Number 3993814C1

Instances A26 - Selective Catalytic Reduction (SCR):Diagram1-Combination1

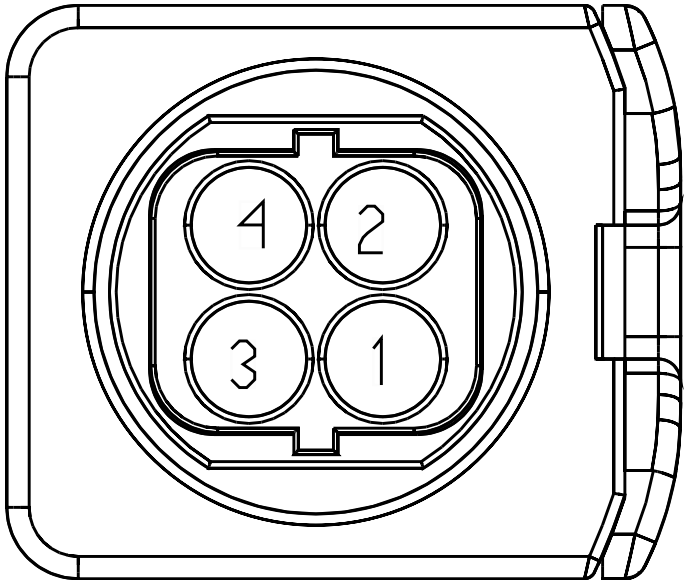

Name	Terminal Part Number	V-Min	Name	Wire Part Number	Wire CSA	Wire Spec	Wire Material description	Wire Color Description	Wire Length	End2 Terminal Part Number	End2 Pin Name	End2 Connect or
1	-	-	95H	3510329 R1	0.79	18.0	Thin Wall XLPE Primary Cable	TAN	670.0	-	-	-
2	-	-	95AR	3510329 R1	0.79	18.0	Thin Wall XLPE Primary Cable	TAN	670.0	-	-	-
3	-	-	95F	3510329 R1	0.79	18.0	Thin Wall XLPE Primary Cable	TAN	670.0	-	-	-
4	-	-	95E	3510329 R1	0.79	18.0	Thin Wall XLPE Primary Cable	TAN	670.0	-	-	-

Connector Name	680
Part Number	3993814C1
Instances	A26 - Selective Catalytic Reduction (SCR):Diagram1-Combination2
Mates	MODU-SUPPLY-5041-01-01A

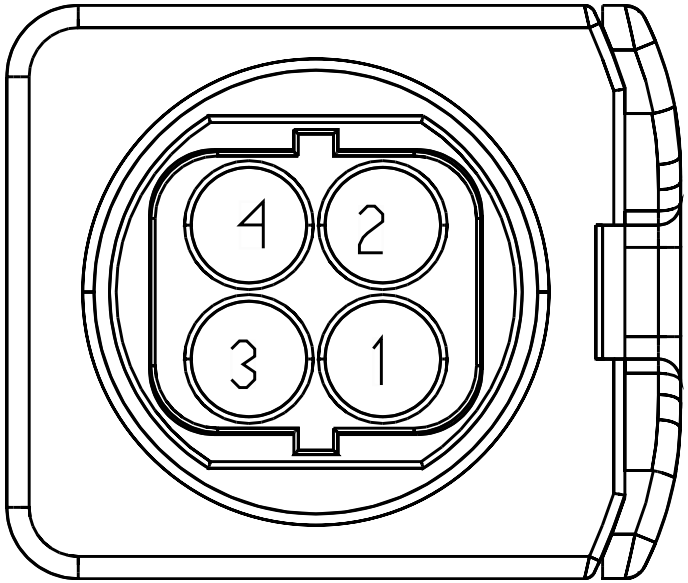

Name	Terminal Part Number	V-Min	Name	Wire Part Number	Wire CSA	Wire Spec	Wire Material description	Wire Color Description	Wire Length	End2 Terminal Part Number	End2 Pin Name	End2 Connect or
1	-	-	95H	3510329 R1	0.79	18.0	Thin Wall XLPE Primary Cable	TAN	670.0	-	3	674
2	-	-	95AR	3510329 R1	0.79	18.0	Thin Wall XLPE Primary Cable	TAN	670.0	-	4	674
3	-	-	95F	3510329 R1	0.79	18.0	Thin Wall XLPE Primary Cable	TAN	670.0	-	2	674
4	-	-	95E	3510329 R1	0.79	18.0	Thin Wall XLPE Primary Cable	TAN	670.0	-	1	674

Connector Name	680
Part Number	3993814C1
Instances	B6.7 - Selective Catalytic Reduction (SCR):Diagram1 L9 - Selective Catalytic Reduction (SCR):Diagram1
Mates	MODU-SUPPLY-5041-01-01A

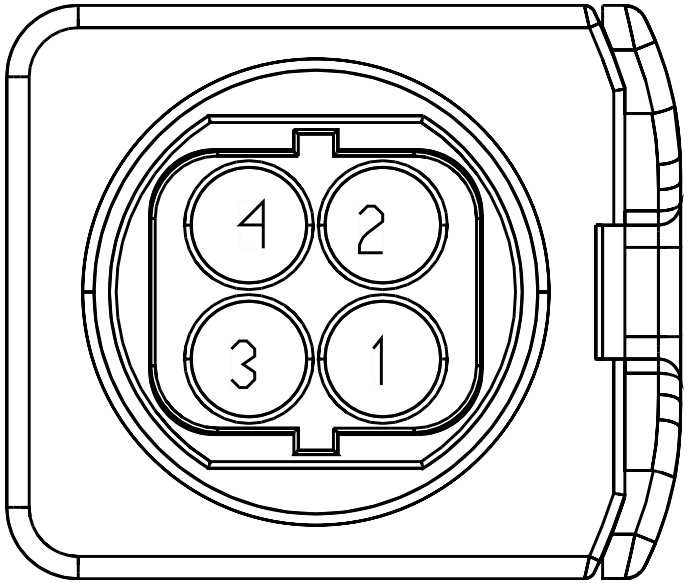

Name	Terminal Part Number	V-Min	Name	Wire Part Number	Wire CSA	Wire Spec	Wire Material description	Wire Color Description	Wire Length	End2 Terminal Part Number	End2 Pin Name	End2 Connect or
1	-	-	95H	3510329 R1	0.79	18.0	Thin Wall XLPE Primary Cable	TAN	670.0	-	3	674
2	-	-	95AR	3510329 R1	0.79	18.0	Thin Wall XLPE Primary Cable	TAN	670.0	-	4	674
3	-	-	95F	3510329 R1	0.79	18.0	Thin Wall XLPE Primary Cable	TAN	670.0	-	2	674
4	-	-	95E	3510329 R1	0.79	18.0	Thin Wall XLPE Primary Cable	TAN	670.0	-	1	674

Connector Name	681
Part Number	3683465C1
Short Description	TERMINATING RESISTOR
Instances	A26 - CAN Layout:Engine Proprietary J1939 A26 - Engine Private J1939 (250kbps):A26 - Engine Private J1939 (250kbps) B6.7 - CAN Layout:Engine Proprietary J1939 B6.7 - Engine Private J1939 (250kbps):B6.7 - Engine Private J1939 L9 - CAN Layout:Engine Proprietary J1939 L9 - Engine Private J1939 (250kbps):L9 - Engine Private J1939

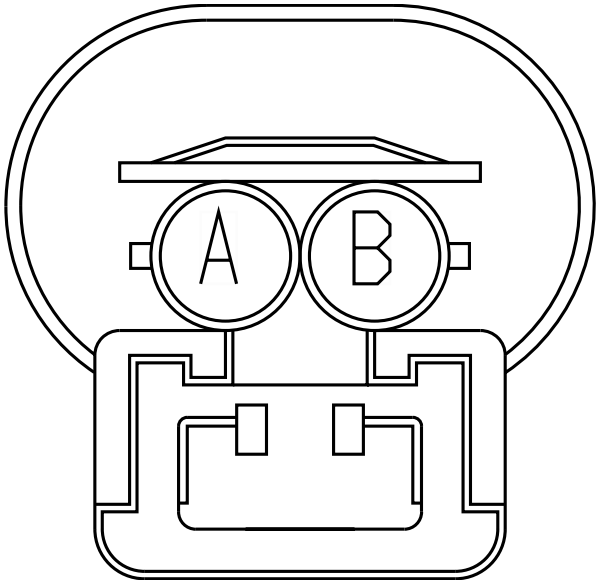

Name	Terminal Part Number	V-Min	Name	Wire Part Number	Wire CSA	Wire Spec	Wire Material description	Wire Color Description	Wire Length	End2 Terminal Part Number	End2 Pin Name	End2 Connect or
A	-	-	WIRE1713	-	0.0	-	-	-	0.0	-	PIN1	-
B	-	-	WIRE1714	-	0.0	-	-	-	0.0	-	PIN1	-

Connector Name	6900
Part Number	1661198C1
Short Description	2 WAY RADIO OVERHEAD
Instances	A26 - 2-Way Radio:Diagram2 B6.7 - 2-Way Radio:Diagram2 L9 - 2-Way Radio:Diagram2
Mates	6900

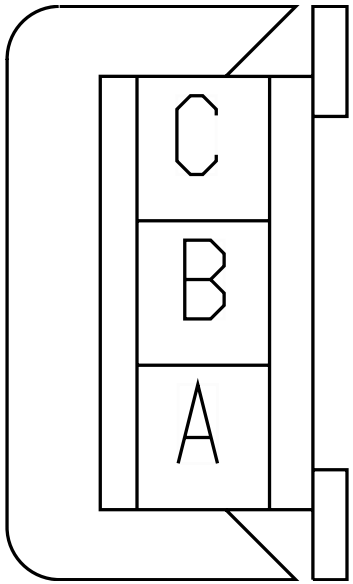

Name	Terminal Part Number	V-Min	Name	Wire Part Number	Wire CSA	Wire Spec	Wire Material description	Wire Color Description	Wire Length	End2 Terminal Part Number	End2 Pin Name	End2 Connect or
A	-	-	SJ14HFA	3510367 R1	1.91	14.0	Thin Wall XLPE Primary Cable	RED	2785.0	-	1	1703M
A	-	-	SL14HD	3510300 R1	1.16	16.0	Thin Wall XLPE Primary Cable	LIGHT GREEN	2785.0	-	1	1703M
B	-	-	SJ11-GA	3510361 R1	1.91	14.0	Thin Wall XLPE Primary Cable	WHITE	2785.0	-	2	1703M
B	-	-	SK11-GAP	3510361 R1	1.91	14.0	Thin Wall XLPE Primary Cable	WHITE	4525.0	-	C	1913

Name	Terminal Part Number	V-Min	Name	Wire Part Number	Wire CSA	Wire Spec	Wire Material description	Wire Color Description	Wire Length	End2 Terminal Part Number	End2 Pin Name	End2 Connect or
C	-	-	SJ86P	3510300 R1	1.16	16.0	Thin Wall XLPE Primary Cable	LIGHT GREEN	2455.0	-	-	-
C	-	-	SL86P	3510300 R1	1.16	16.0	Thin Wall XLPE Primary Cable	LIGHT GREEN	2455.0	-	-	-

Connector Name	6900
Part Number	1661199C1
Short Description	2-WAY RADIO PROVISION
Instances	A26 - 2-Way Radio:Diagram2 B6.7 - 2-Way Radio:Diagram2 L9 - 2-Way Radio:Diagram2
Mates	6900

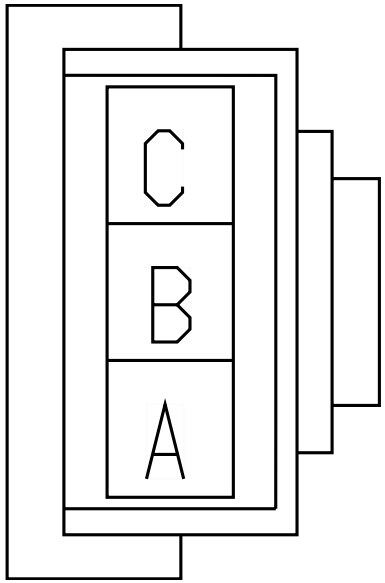

Name	Terminal Part Number	V-Min	Name	Wire Part Number	Wire CSA	Wire Spec	Wire Material description	Wire Color Description	Wire Length	End2 Terminal Part Number	End2 Pin Name	End2 Connect or
A	-	-	CZ14HC	2643760 R1	1.16	16.0	Std. Wall XLPE Primary Cable	RED	2620.0	-	A	1913A
A	-	-	CZ14HC	2643760 R1	1.16	16.0	Std. Wall XLPE Primary Cable	RED	2620.0	-	A	1913
B	-	-	CZ11-GAP	2643681 R1	1.16	16.0	Std. Wall XLPE Primary Cable	WHITE	2620.0	-	C	1913A
B	-	-	CZ11-GAP	2643681 R1	1.16	16.0	Std. Wall XLPE Primary Cable	WHITE	2620.0	-	C	1913

Name	Terminal Part Number	V-Min	Name	Wire Part Number	Wire CSA	Wire Spec	Wire Material description	Wire Color Description	Wire Length	End2 Terminal Part Number	End2 Pin Name	End2 Connect or
C	-	-	CZ86P	2643678 R1	1.16	16.0	Std. Wall XLPE Primary Cable	LIGHT GREEN	2620.0	-	B	1913A
C	-	-	CZ86P	2643678 R1	1.16	16.0	Std. Wall XLPE Primary Cable	LIGHT GREEN	2620.0	-	B	1913

Connector Name 690

Part Number 3765646C91

Instances A26 - Aftertreatment PDM:Diagram1
B6.7 - Selective Catalytic Reduction (SCR):Diagram1
B6.7 - Selective Catalytic Reduction (SCR):Diagram2
L9 - Selective Catalytic Reduction (SCR):Diagram1
L9 - Selective Catalytic Reduction (SCR):Diagram2

Mates Aftertreatment PDM

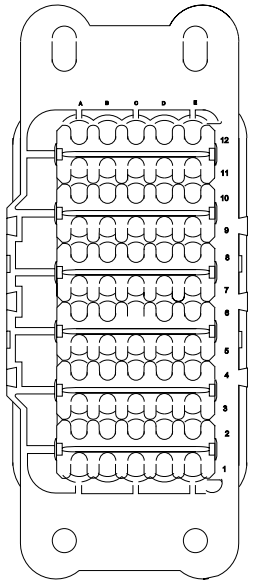

Name	Terminal Part Number	V-Min	Name	Wire Part Number	Wire CSA	Wire Spec	Wire Material description	Wire Color Description	Wire Length	End2 Terminal Part Number	End2 Pin Name	End2 Connect or
A1	-	-	KA95H1	3510323 R1	0.79	18.0	Thin Wall XLPE Primary Cable	PINK	280.0	-	X	-
A3	-	-	KA95H2	3510323 R1	0.79	18.0	Thin Wall XLPE Primary Cable	PINK	280.0	-	X	-
A4	-	-	KA95H3	3510323 R1	0.79	18.0	Thin Wall XLPE Primary Cable	PINK	280.0	-	X	-
A6	-	-	KA95H4	3510323 R1	0.79	18.0	Thin Wall XLPE Primary Cable	PINK	280.0	-	X	-

Name	Terminal Part Number	V-Min	Name	Wire Part Number	Wire CSA	Wire Spec	Wire Material description	Wire Color Description	Wire Length	End2 Terminal Part Number	End2 Pin Name	End2 Connector
A7	-	-	KA95H5	3510323 R1	0.79	18.0	Thin Wall XLPE Primary Cable	PINK	280.0	-	X	-
A9	-	-	KA95H6	3510323 R1	0.79	18.0	Thin Wall XLPE Primary Cable	PINK	280.0	-	X	-
A10	-	-	KA95P	3510365 R1	0.79	18.0	Thin Wall XLPE Primary Cable	RED	0.0	-	-	-
A12	-	-	KA95SB	3510328 R1	0.53	20.0	Thin Wall XLPE Primary Cable	TAN	2205.0	-	79	6000
B1	-	-	KA95GBA	3510293 R1	0.79	18.0	Thin Wall XLPE Primary Cable	BLACK	190.0	-	X	-
B3	-	-	VL95AS3	3510329 R1	0.79	18.0	Thin Wall XLPE Primary Cable	TAN	595.0	-	X	-
B4	-	-	KA95GBB	3510293 R1	0.79	18.0	Thin Wall XLPE Primary Cable	BLACK	190.0	-	X	-
B6	-	-	VL95AT3	3510329 R1	0.79	18.0	Thin Wall XLPE Primary Cable	TAN	565.0	-	X	-

Name	Terminal Part Number	V-Min	Name	Wire Part Number	Wire CSA	Wire Spec	Wire Material description	Wire Color Description	Wire Length	End2 Terminal Part Number	End2 Pin Name	End2 Connector
B7	-	-	KA95GBD	3510293 R1	0.79	18.0	Thin Wall XLPE Primary Cable	BLACK	310.0	-	X	-
B9	-	-	VL95AU3	3510329 R1	0.79	18.0	Thin Wall XLPE Primary Cable	TAN	480.0	-	X	-
B10	-	-	VJ10-G3	2643681 R1	1.16	16.0	Std. Wall XLPE Primary Cable	WHITE	1370.0	-	-	-
B12	-	-	VL95AR3	3510329 R1	0.79	18.0	Thin Wall XLPE Primary Cable	TAN	625.0	-	X	-
D10	-	-	KA95PA	3510327 R1	4.81	10.0	Thin Wall XLPE Primary Cable	PINK	220.0	-	X	-
D12	-	-	KA95PC	3510323 R1	0.79	18.0	Thin Wall XLPE Primary Cable	PINK	220.0	-	X	-
E1	-	-	KA95H7	3510323 R1	0.79	18.0	Thin Wall XLPE Primary Cable	PINK	280.0	-	-	-
E2	-	-	KA14A	3510365 R1	0.79	18.0	Thin Wall XLPE Primary Cable	RED	250.0	-	X	-

Name	Terminal Part Number	V-Min	Name	Wire Part Number	Wire CSA	Wire Spec	Wire Material description	Wire Color Description	Wire Length	End2 Terminal Part Number	End2 Pin Name	End2 Connect or
E3	-	-	KA95P	3510365 R1	0.79	18.0	Thin Wall XLPE Primary Cable	RED	0.0	-	-	-
E4	-	-	KA14B	3510366 R1	1.16	16.0	Thin Wall XLPE Primary Cable	RED	540.0	-	-	-
E5	-	-	KA95PB	3510327 R1	4.81	10.0	Thin Wall XLPE Primary Cable	PINK	220.0	-	-	-
E6	-	-	KA14C	3510369 R1	4.81	10.0	Thin Wall XLPE Primary Cable	RED	250.0	-	X	-
E10	-	-	KA95TB	3510311 R1	0.79	18.0	Thin Wall XLPE Primary Cable	GREY	2020.0	-	5	8500
E12	-	-	VJ95KD	3510333 R1	4.81	10.0	Thin Wall XLPE Primary Cable	TAN	2060.0	-	X	-

Connector Name 690

Part Number 3765646C91

Instances A26 - Selective Catalytic Reduction (SCR):Diagram1-Combination1
A26 - Selective Catalytic Reduction (SCR):Diagram1-Combination2
A26 - Selective Catalytic Reduction (SCR):Diagram2-Combination1
A26 - Selective Catalytic Reduction (SCR):Diagram2-Combination2

Mates DEF PDM

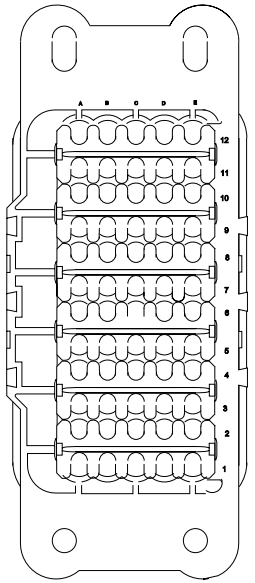

Name	Terminal Part Number	V-Min	Name	Wire Part Number	Wire CSA	Wire Spec	Wire Material description	Wire Color Description	Wire Length	End2 Terminal Part Number	End2 Pin Name	End2 Connect or
A1	-	-	KA95H1	3510323 R1	0.79	18.0	Thin Wall XLPE Primary Cable	PINK	280.0	-	X	-
A3	-	-	KA95H2	3510323 R1	0.79	18.0	Thin Wall XLPE Primary Cable	PINK	280.0	-	X	-
A4	-	-	KA95H3	3510323 R1	0.79	18.0	Thin Wall XLPE Primary Cable	PINK	280.0	-	X	-
A6	-	-	KA95H4	3510323 R1	0.79	18.0	Thin Wall XLPE Primary Cable	PINK	280.0	-	X	-

Name	Terminal Part Number	V-Min	Name	Wire Part Number	Wire CSA	Wire Spec	Wire Material description	Wire Color Description	Wire Length	End2 Terminal Part Number	End2 Pin Name	End2 Connector
A7	-	-	KA95H5	3510323 R1	0.79	18.0	Thin Wall XLPE Primary Cable	PINK	280.0	-	X	-
A9	-	-	KA95H6	3510323 R1	0.79	18.0	Thin Wall XLPE Primary Cable	PINK	280.0	-	X	-
A10	-	-	KA95P	3510365 R1	0.79	18.0	Thin Wall XLPE Primary Cable	RED	0.0	-	-	-
A12	-	-	KA95SB	3510328 R1	0.53	20.0	Thin Wall XLPE Primary Cable	TAN	2205.0	-	11	6019
B1	-	-	KA95GBA	3510293 R1	0.79	18.0	Thin Wall XLPE Primary Cable	BLACK	190.0	-	X	-
B3	-	-	AH95AS3	3510329 R1	0.79	18.0	Thin Wall XLPE Primary Cable	TAN	1990.0	-	X	-
B3	-	-	AJ95AS3	3510329 R1	0.79	18.0	Thin Wall XLPE Primary Cable	TAN	1990.0	-	X	-
B4	-	-	KA95GBB	3510293 R1	0.79	18.0	Thin Wall XLPE Primary Cable	BLACK	190.0	-	X	-

Name	Terminal Part Number	V-Min	Name	Wire Part Number	Wire CSA	Wire Spec	Wire Material description	Wire Color Description	Wire Length	End2 Terminal Part Number	End2 Pin Name	End2 Connect or
B6	-	-	AH95AT3	3510329 R1	0.79	18.0	Thin Wall XLPE Primary Cable	TAN	1900.0	-	X	-
B6	-	-	AJ95AT3	3510329 R1	0.79	18.0	Thin Wall XLPE Primary Cable	TAN	1900.0	-	X	-
B7	-	-	KA95GBD	3510293 R1	0.79	18.0	Thin Wall XLPE Primary Cable	BLACK	310.0	-	X	-
B9	-	-	AH95AU3	3510329 R1	0.79	18.0	Thin Wall XLPE Primary Cable	TAN	1870.0	-	X	-
B9	-	-	AJ95AU3	3510329 R1	0.79	18.0	Thin Wall XLPE Primary Cable	TAN	1870.0	-	X	-
B10	-	-	KA95-GC	3510293 R1	0.79	18.0	Thin Wall XLPE Primary Cable	BLACK	2020.0	-	5	6018
B12	-	-	AH95AR3	3510329 R1	0.79	18.0	Thin Wall XLPE Primary Cable	TAN	2020.0	-	X	-
B12	-	-	AJ95AR3	3510329 R1	0.79	18.0	Thin Wall XLPE Primary Cable	TAN	2020.0	-	X	-

Name	Terminal Part Number	V-Min	Name	Wire Part Number	Wire CSA	Wire Spec	Wire Material description	Wire Color Description	Wire Length	End2 Terminal Part Number	End2 Pin Name	End2 Connector
B12	-	-	AK95AR3	3510293 R1	0.79	18.0	Thin Wall XLPE Primary Cable	BLACK	2020.0	-	X	-
D10	-	-	KA95PA	3510327 R1	4.81	10.0	Thin Wall XLPE Primary Cable	PINK	220.0	-	X	-
D12	-	-	KA95PC	3510323 R1	0.79	18.0	Thin Wall XLPE Primary Cable	PINK	220.0	-	X	-
E10	-	-	KA95TB	3510311 R1	0.79	18.0	Thin Wall XLPE Primary Cable	GREY	2020.0	-	72	6018
E12	-	-	AR95KD	3510333 R1	4.81	10.0	Thin Wall XLPE Primary Cable	TAN	1960.0	-	X	-
E12	-	-	AN95KD	3510369 R1	4.81	10.0	Thin Wall XLPE Primary Cable	RED	1960.0	-	X	-
E12	-	-	AV95KD	3510369 R1	4.81	10.0	Thin Wall XLPE Primary Cable	RED	1960.0	-	X	-
E12	-	-	AL95KD	3510333 R1	4.81	10.0	Thin Wall XLPE Primary Cable	TAN	1960.0	-	X	-

Name	Terminal Part Number	V-Min	Name	Wire Part Number	Wire CSA	Wire Spec	Wire Material description	Wire Color Description	Wire Length	End2 Terminal Part Number	End2 Pin Name	End2 Connector
E12	-	-	AM95KD	3510369 R1	4.81	10.0	Thin Wall XLPE Primary Cable	RED	1960.0	-	X	-
E12	-	-	AT95KD	3510333 R1	4.81	10.0	Thin Wall XLPE Primary Cable	TAN	1960.0	-	X	-
E12	-	-	AS95KD	3510333 R1	4.81	10.0	Thin Wall XLPE Primary Cable	TAN	1960.0	-	X	-

Connector Name	690
Part Number	3765646C92
Instances	B6.7 - Aftertreatment PDM:Diagram1 L9 - Aftertreatment PDM:Diagram1
Mates	DEF PDM

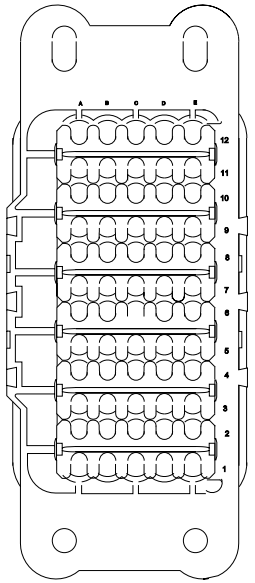

Name	Terminal Part Number	V-Min	Name	Wire Part Number	Wire CSA	Wire Spec	Wire Material description	Wire Color Description	Wire Length	End2 Terminal Part Number	End2 Pin Name	End2 Connect or
E1	-	-	KA95H7	3510323 R1	0.79	18.0	Thin Wall XLPE Primary Cable	PINK	280.0	-	-	-
E2	-	-	VJ14	3510366 R1	1.16	16.0	Thin Wall XLPE Primary Cable	RED	350.0	-	X	-
E2	-	-	KA14AA	3510365 R1	0.79	18.0	Thin Wall XLPE Primary Cable	RED	220.0	-	X	-
E3	-	-	KA95P	3510365 R1	0.79	18.0	Thin Wall XLPE Primary Cable	RED	0.0	-	-	-

Name	Terminal Part Number	V-Min	Name	Wire Part Number	Wire CSA	Wire Spec	Wire Material description	Wire Color Description	Wire Length	End2 Terminal Part Number	End2 Pin Name	End2 Connector
E4	-	-	VJ14B	3510366 R1	1.16	16.0	Thin Wall XLPE Primary Cable	RED	450.0	-	-	-
E4	-	-	KA14B	3510366 R1	1.16	16.0	Thin Wall XLPE Primary Cable	RED	540.0	-	-	-
E5	-	-	KA95PB	3510327 R1	4.81	10.0	Thin Wall XLPE Primary Cable	PINK	220.0	-	-	-
E6	-	-	VJ14C	3510367 R1	1.91	14.0	Thin Wall XLPE Primary Cable	RED	350.0	-	X	-
E6	-	-	KA14C	3510369 R1	4.81	10.0	Thin Wall XLPE Primary Cable	RED	250.0	-	X	-

Connector Name 691

Part Number 3714731C1

Instances A26 - Selective Catalytic Reduction (SCR):Diagram1-Combination1

Name	Terminal Part Number	V-Min	Name	Wire Part Number	Wire CSA	Wire Spec	Wire Material description	Wire Color Description	Wire Length	End2 Terminal Part Number	End2 Pin Name	End2 Connect or
1	-	-	95AC	3510329 R1	0.79	18.0	Thin Wall XLPE Primary Cable	TAN	690.0	-	-	-
4	-	-	95AB	3510347 R1	0.79	18.0	Thin Wall XLPE Primary Cable	VIOLET	690.0	-	-	-

Connector Name	691
Part Number	3714731C1
Instances	A26 - Selective Catalytic Reduction (SCR):Diagram1-Combination2
Mates	VALV-DEF_TANK_HT-5041-01-0 1A

Name	Terminal Part Number	V-Min	Name	Wire Part Number	Wire CSA	Wire Spec	Wire Material description	Wire Color Description	Wire Length	End2 Terminal Part Number	End2 Pin Name	End2 Connect or
1	-	-	95AC	3510329 R1	0.79	18.0	Thin Wall XLPE Primary Cable	TAN	690.0	-	5	674
4	-	-	95AB	3510347 R1	0.79	18.0	Thin Wall XLPE Primary Cable	VIOLET	690.0	-	6	674

Connector Name 691

Part Number 3714731C1

Instances B6.7 - Selective Catalytic Reduction (SCR):Diagram1
L9 - Selective Catalytic Reduction (SCR):Diagram1

Mates VALV-DEF_TANK_HT-5041-01-0 1A

Name	Terminal Part Number	V-Min	Name	Wire Part Number	Wire CSA	Wire Spec	Wire Material description	Wire Color Description	Wire Length	End2 Terminal Part Number	End2 Pin Name	End2 Connect or
1	-	-	95AC	3510329 R1	0.79	18.0	Thin Wall XLPE Primary Cable	TAN	690.0	-	5	674
4	-	-	95AB	3510347 R1	0.79	18.0	Thin Wall XLPE Primary Cable	VIOLET	690.0	-	6	674

Connector Name	6925A
Part Number	3678796C1
Instances	L9 - Hill Start Aid (Bendix):Diagram2
Mates	SOL-HSA-3019-01-02A

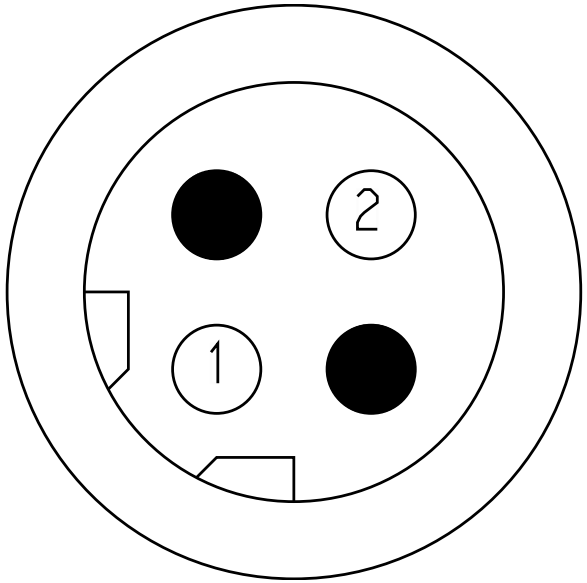

Name	Terminal Part Number	V-Min	Name	Wire Part Number	Wire CSA	Wire Spec	Wire Material description	Wire Color Description	Wire Length	End2 Terminal Part Number	End2 Pin Name	End2 Connect or
1	-	-	AT94AA	2643680 R1	1.16	16.0	Std. Wall XLPE Primary Cable	GREY	3255.0	-	61	1701F
2	-	-	AT94AB	2643680 R1	1.16	16.0	Std. Wall XLPE Primary Cable	GREY	3255.0	-	65	1701F

Connector Name	6925
Part Number	3678796C1
Instances	A26 - Hill Start Aid (Bendix):Diagram1 A26 - Hill Start Aid (Bendix):Diagram2 L9 - Hill Start Aid (Bendix):Diagram1
Mates	SOL-HSA-3019-01-02A

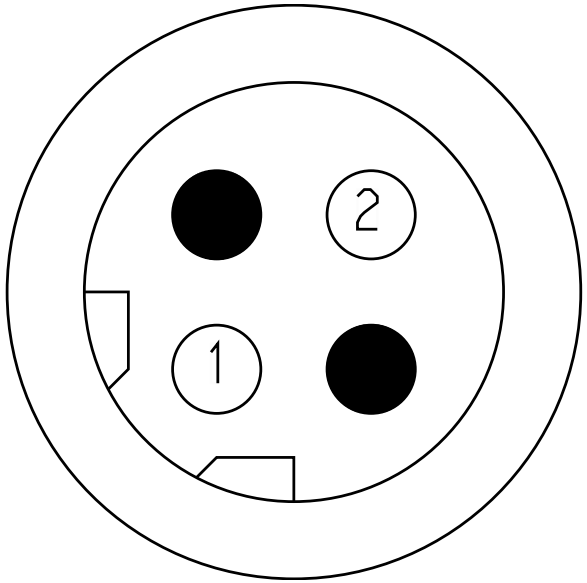

Name	Terminal Part Number	V-Min	Name	Wire Part Number	Wire CSA	Wire Spec	Wire Material description	Wire Color Description	Wire Length	End2 Terminal Part Number	End2 Pin Name	End2 Connect or
1	-	-	AT94AA	2643680 R1	1.16	16.0	Std. Wall XLPE Primary Cable	GREY	3255.0	-	61	1701F
1	-	-	ZJ94AA	2643680 R1	1.16	16.0	Std. Wall XLPE Primary Cable	GREY	2960.0	-	61	1701F
2	-	-	AT94AB	2643680 R1	1.16	16.0	Std. Wall XLPE Primary Cable	GREY	3255.0	-	65	1701F
2	-	-	ZJ94AB	2643680 R1	1.16	16.0	Std. Wall XLPE Primary Cable	GREY	2960.0	-	65	1701F

Connector Name	7000
Part Number	RING-M-5_0
Instances	A26 - Bosch LIL165 LIL200 Alternator W/Sensor:Diagram1 A26 - Bosch LIL165 LIL200 Alternator W/Sensor:Diagram2
Mates	DEV-Bosch_LIL165_LIL200_Al ternator-4004-01-08A

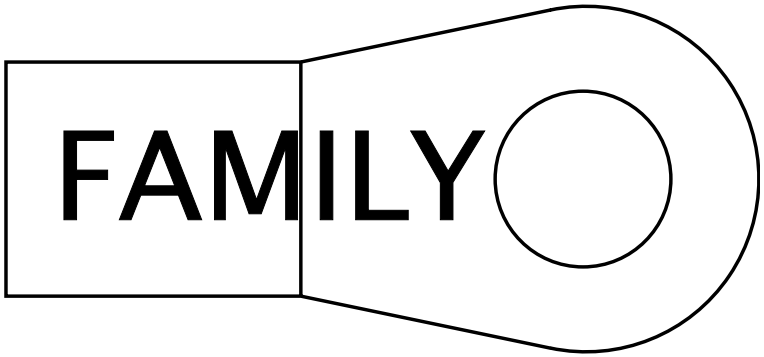

Name	Terminal Part Number	V-Min	Name	Wire Part Number	Wire CSA	Wire Spec	Wire Material description	Wire Color Description	Wire Length	End2 Terminal Part Number	End2 Pin Name	End2 Connect or
A	-	-	JS1A	2643694 R1	1.91	14.0	Std. Wall XLPE Primary Cable	LIGHT BLUE	3975.0	-	B	1F
A	-	-	JT1A	2643694 R1	1.91	14.0	Std. Wall XLPE Primary Cable	LIGHT BLUE	3965.0	-	B	2F

Connector Name	7000
Part Number	RING-M-5_0
Instances	L9 - Delco Remy 28SI Alternator W/Sensor:Diagram1 L9 - Delco Remy 36SI Alternator W/Sensor:Diagram1 L9 - Leece-Neville - LN 325A Alternator W/Sensor:Diagram1 L9 - Leece-Neville AVI160-210A/240A Alternator W/ Sensor:Diagram1
Mates	DEV-Delco_Remy_28SI_Altern ator-4004-01-05A

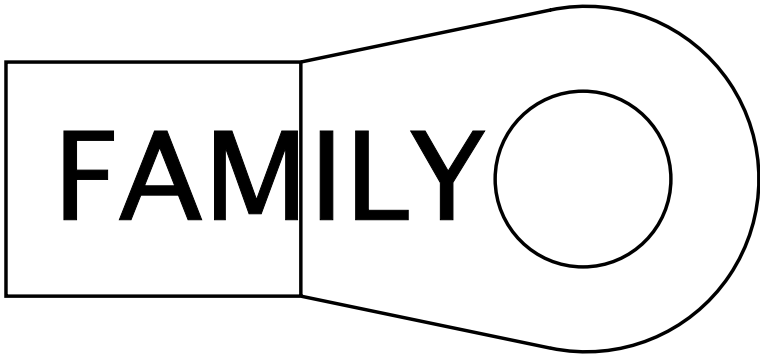

Name	Terminal Part Number	V-Min	Name	Wire Part Number	Wire CSA	Wire Spec	Wire Material description	Wire Color Description	Wire Length	End2 Terminal Part Number	End2 Pin Name	End2 Connect or
A	-	-	JS1A	3510366 R1	1.16	16.0	Thin Wall XLPE Primary Cable	RED	3020.0	-	B	1F

Connector Name	7000
Part Number	RING-10_0
Instances	A26 - Delco Remy 40SI Alternator W/Sensor:Diagram1 A26 - Delco Remy 40SI Alternator W/Sensor:Diagram2 L9 - Delco Remy 40SI Alternator W/Sensor:Diagram1
Mates	DEV-Delco_Remy_40SI_Altern ator-4004-01-06A

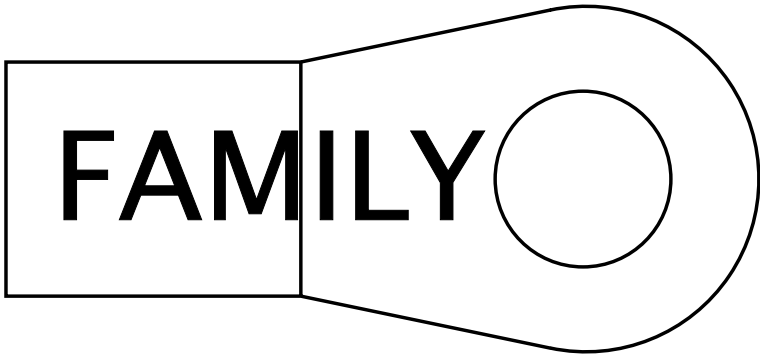

Name	Terminal Part Number	V-Min	Name	Wire Part Number	Wire CSA	Wire Spec	Wire Material description	Wire Color Description	Wire Length	End2 Terminal Part Number	End2 Pin Name	End2 Connect or
A	-	-	JS1A	3510366 R1	1.16	16.0	Thin Wall XLPE Primary Cable	RED	3020.0	-	B	1F
A	-	-	JS1A	2643694 R1	1.91	14.0	Std. Wall XLPE Primary Cable	LIGHT BLUE	3975.0	-	B	1F
A	-	-	JT1A	2643694 R1	1.91	14.0	Std. Wall XLPE Primary Cable	LIGHT BLUE	3965.0	-	B	2F

Connector Name	7100
Part Number	3866817C1
Instances	L9 - Delco Remy 28SI Alternator W/Sensor:Diagram1 L9 - Delco Remy 36SI Alternator W/Sensor:Diagram1 L9 - Delco Remy 40SI Alternator W/Sensor:Diagram1 L9 - Leece-Neville - LN 325A Alternator W/Sensor:Diagram1 L9 - Leece-Neville AVI160-210A/240A Alternator W/ Sensor:Diagram1
Mates	BTRY-925CCA_1-4005-01-01D

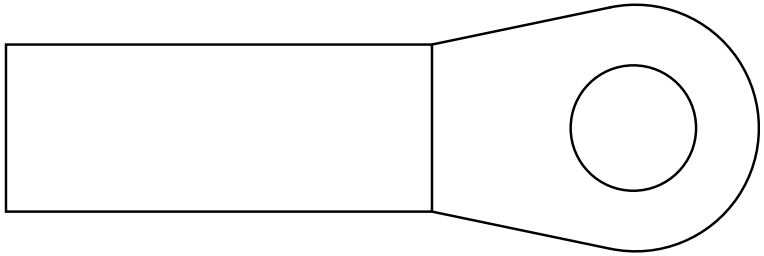

Name	Terminal Part Number	V-Min	Name	Wire Part Number	Wire CSA	Wire Spec	Wire Material description	Wire Color Description	Wire Length	End2 Terminal Part Number	End2 Pin Name	End2 Connect or
A	-	-	JS1B	3510366 R1	1.16	16.0	Thin Wall XLPE Primary Cable	RED	320.0	-	A	1F

Connector Name 7103M
Part Number 1661198C1
Instances B6.7 - Two Speed Axle (AirShift on Shifter):Diagram1
Mates SW-2SPD_Manual_Pressure-50 00-02-01A

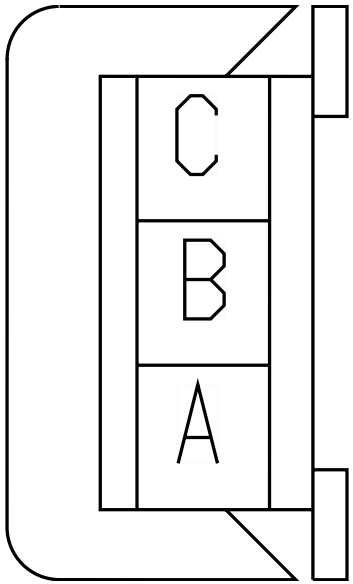

Name	Terminal Part Number	V-Min	Name	Wire Part Number	Wire CSA	Wire Spec	Wire Material description	Wire Color Description	Wire Length	End2 Terminal Part Number	End2 Pin Name	End2 Connect or
A	-	-	ML93	2643676 R1	0.79	18.0	Std. Wall XLPE Primary Cable	TAN	2340.0	-	39	1702
C	-	-	ML9TS	3510311 R1	0.79	18.0	Thin Wall XLPE Primary Cable	GREY	2480.0	-	-	-

Connector Name 7103M
Part Number 1661198C1
Instances L9 - Two Speed Axle (AirShift on Shifter):Diagram1
Mates SW-2SPD_Manual_Pressure-50 00-02-01A

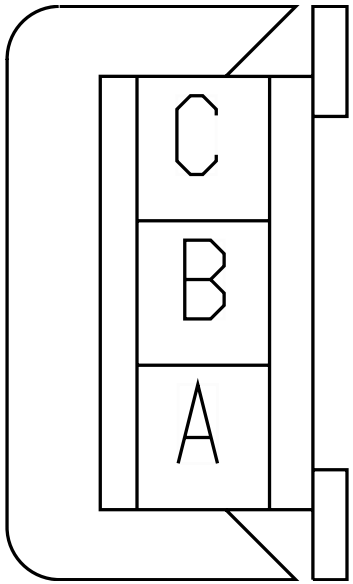

Name	Terminal Part Number	V-Min	Name	Wire Part Number	Wire CSA	Wire Spec	Wire Material description	Wire Color Description	Wire Length	End2 Terminal Part Number	End2 Pin Name	End2 Connect or
A	-	-	ML93	2643676 R1	0.79	18.0	Std. Wall XLPE Primary Cable	TAN	2340.0	-	39	1702
C	-	-	ML9TS	3510311 R1	0.79	18.0	Thin Wall XLPE Primary Cable	GREY	2480.0	-	-	-

Connector Name	7105A
Part Number	3599542C1
Instances	A26 - Starter Interlock (BCM LSD Controlled w/ Relay & N/ Auto SS):Diagram1
Mates	MODU-TCM-A002-10-01A

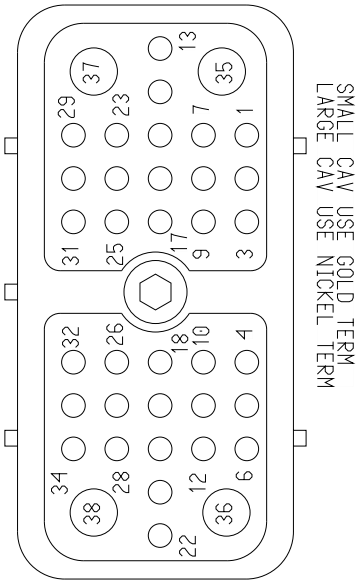

Name	Terminal Part Number	V-Min	Name	Wire Part Number	Wire CSA	Wire Spec	Wire Material description	Wire Color Description	Wire Length	End2 Terminal Part Number	End2 Pin Name	End2 Connect or
4	-	-	KH17-GC	2643794 R1	0.79	18.0	Std. Wall XLPE Primary Cable	PINK	3385.0	-	19	1702
26	-	-	KH17C	3510324 R1	1.16	16.0	Thin Wall XLPE Primary Cable	PINK	3385.0	-	21	1702
32	-	-	KH17B	2643794 R1	0.79	18.0	Std. Wall XLPE Primary Cable	PINK	3385.0	-	20	1702

Connector Name	7105
Part Number	3599542C1
Instances	A26 - CAN Layout:Powertrain Standard J1939 (500Kbps) A26 - Hill Start Aid (Bendix):Diagram1 A26 - Hill Start Aid (Bendix):Diagram2 A26 - Rear Lights Stop - Daisy Chain:Diagram1 A26 - Rear Lights Stop - Dual Assembly:Diagram1 A26 - Rear Lights Stop - Single Assemby:Diagram1 A26 - Rear Lights Stop - Single Assemby Jumper Harness W/08TKC, 08THM:Diagram1 A26 - Rear Lights Stop - Single Assemby W/08TKJ:Diagram1 A26 - Remote Start/Stop:Diagram1 A26 - Separate Rear Lights (Stop) W/08TVH:Diagram1 A26 - Transmission Power Take Off (Auto Trans Dual PTO W/ 42 Parameters):Diagram1 A26 - Transmission Power Take Off (Auto Trans Single PTO w/21 Parameters):Diagram1 A26 - Transmissions Electrical I/O (Eaton Ultrashift):Diagram1 A26 - Ultrashift Plus:Diagram1 A26/B6.7/L9 - Trans Range Inhibit (J1939 Comm):Diagram1 A26/B6.7/L9 - Transfer Case - High/Low Air Sol:Diagram1 A26/B6.7/L9 - Transfer Case - High/Neu/Low Air Sol:Diagram1 A26/B6.7/L9 - Transmission - MODE Selection:Diagram1 A26/B6.7/L9 - Trip Odometer (w/ECM & TCM):Diagram1 A26/B6.7/L9 - Vehicle Speedometer System (Automatic XMSN):Diagram1 L9 - CAN Layout:Powertrain Standard J1939 (500kbps) L9 - Hill Start Aid (Bendix):Diagram1 L9 - Hill Start Aid (Bendix):Diagram2 L9 - Hill Start Aid (WABCO):Diagram1 L9 - Powertrain J1939 Eaton:L9 - Powertrain J1939 Eaton L9 - Rear Lights Stop - Daisy Chain:Diagram1 L9 - Rear Lights Stop - Dual Assembly:Diagram1 L9 - Rear Lights Stop - Single Assemby:Diagram1 L9 - Remote Start/Stop:Diagram1 L9 - Remote Start/Stop w/ Emergency Pump:Diagram1 L9 - Starter Interlock (BCM LSD Controlled w/ Relay & N/ Auto SS)_EATON XMSN:Diagram1 L9 - Transmission Oil Temperature-Automatic Trans:Diagram1 L9 - Transmission Oil Temperature-Automatic Trans w/Aux Gauge:Diagram1 L9 - Transmission Power Take Off (Auto Trans Single PTO w/21 Parameters):Diagram1

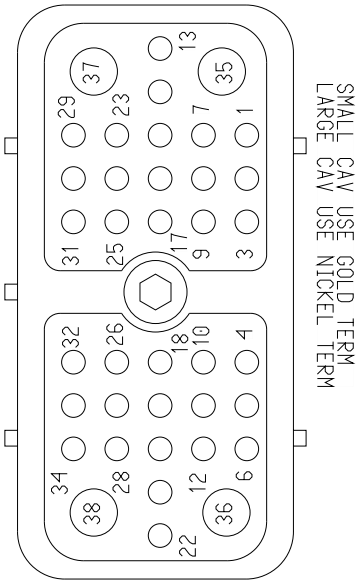

L9 - Transmission Power Take Off (Auto Trans with Lectradrive):Diagram1
L9 - Transmission Power Take Off (Single PTO W/ RPM and Auto Trans):Diagram1
L9 - Ultrashift Plus:Diagram1

Mates MODU-TCM-A002-10-01A

Name	Terminal Part Number	V-Min	Name	Wire Part Number	Wire CSA	Wire Spec	Wire Material description	Wire Color Description	Wire Length	End2 Terminal Part Number	End2 Pin Name	End2 Connector
2	-	-	-	-	-	-	-	-	-	-	-	-
2	-	-	WIRE755300	-	0.0	-	-	-	0.0	-	X	-
2	-	-	WIRE720070	-	0.0	-	-	-	0.0	-	PIN1	-
2	-	-	WIRE725673	-	0.0	-	-	-	0.0	-	X	-
3	-	-	-	-	-	-	-	-	-	-	-	-
3	-	-	WIRE755301	-	0.0	-	-	-	0.0	-	X	-
3	-	-	WIRE720069	-	0.0	-	-	-	0.0	-	PIN1	-
3	-	-	WIRE725671	-	0.0	-	-	-	0.0	-	X	-
4	-	-	KH17-GC	2643794 R1	0.79	18.0	Std. Wall XLPE Primary Cable	PINK	3385.0	-	-	-
4	-	-	KH17-GC	2643794 R1	0.79	18.0	Std. Wall XLPE Primary Cable	PINK	3385.0	-	19	1702
7	-	-	-	-	-	-	-	-	-	-	-	-
8	-	-	-	-	-	-	-	-	-	-	-	-

Name	Terminal Part Number	V-Min	Name	Wire Part Number	Wire CSA	Wire Spec	Wire Material description	Wire Color Description	Wire Length	End2 Terminal Part Number	End2 Pin Name	End2 Connector
16	-	-	TH92J	2643676 R1	0.79	18.0	Std. Wall XLPE Primary Cable	TAN	3385.0	-	-	-
17	-	-	TH98GN	-	0.0	-	-	-	3385.0	-	-	-
18	-	-	VY92DP	2643676 R1	0.79	18.0	Std. Wall XLPE Primary Cable	TAN	285.0	-	-	-
18	-	-	VY92DP	2643676 R1	0.79	18.0	Std. Wall XLPE Primary Cable	TAN	285.0	-	A	7502
24	-	-	SH92DN	2643676 R1	0.79	18.0	Std. Wall XLPE Primary Cable	TAN	3385.0	-	-	-
25	-	-	KH92J	3510329 R1	0.79	18.0	Thin Wall XLPE Primary Cable	TAN	2755.0	-	-	-
26	-	-	KH17C	3510324 R1	1.16	16.0	Thin Wall XLPE Primary Cable	PINK	3385.0	-	-	-
26	-	-	KH17C	3510324 R1	1.16	16.0	Thin Wall XLPE Primary Cable	PINK	3385.0	-	21	1702
31	-	-	KH92ER	3510329 R1	0.79	18.0	Thin Wall XLPE Primary Cable	TAN	2755.0	-	-	-

Name	Terminal Part Number	V-Min	Name	Wire Part Number	Wire CSA	Wire Spec	Wire Material description	Wire Color Description	Wire Length	End2 Terminal Part Number	End2 Pin Name	End2 Connect or
31	-	-	TH92ER	2643676 R1	0.79	18.0	Std. Wall XLPE Primary Cable	TAN	3385.0	-	-	-
32	-	-	KH17B	2643794 R1	0.79	18.0	Std. Wall XLPE Primary Cable	PINK	3385.0	-	-	-
32	-	-	KH17B	2643794 R1	0.79	18.0	Std. Wall XLPE Primary Cable	PINK	3385.0	-	20	1702
34	-	-	VY92DR	2643676 R1	0.79	18.0	Std. Wall XLPE Primary Cable	TAN	285.0	-	-	-
34	-	-	VY92DR	2643676 R1	0.79	18.0	Std. Wall XLPE Primary Cable	TAN	285.0	-	B	7502
35	-	-	KH13A	2643691 R1	1.91	14.0	Std. Wall XLPE Primary Cable	PINK	3385.0	-	8	1702
36	-	-	KH10-GE	3510361 R1	1.91	14.0	Thin Wall XLPE Primary Cable	WHITE	450.0	-	X	-
36	-	-	WC10-GE	2643787 R1	3.01	12.0	Std. Wall XLPE Primary Cable	WHITE	185.0	-	X	-

Name	Terminal Part Number	V-Min	Name	Wire Part Number	Wire CSA	Wire Spec	Wire Material description	Wire Color Description	Wire Length	End2 Terminal Part Number	End2 Pin Name	End2 Connect or
38	-	-	KH14A	3510368 R1	3.01	12.0	Thin Wall XLPE Primary Cable	RED	2870.0	-	-	-
38	-	-	LJ14A	3510368 R1	3.01	12.0	Thin Wall XLPE Primary Cable	RED	3890.0	-	-	-

Connector Name	7105
Part Number	3599542C1
Instances	A26 - Powertrain J1939 UltraShift Transmission:A26 - Powertrain J1939 UltraShift Transmission
Mates	MODU-TCM-A002-10-01A

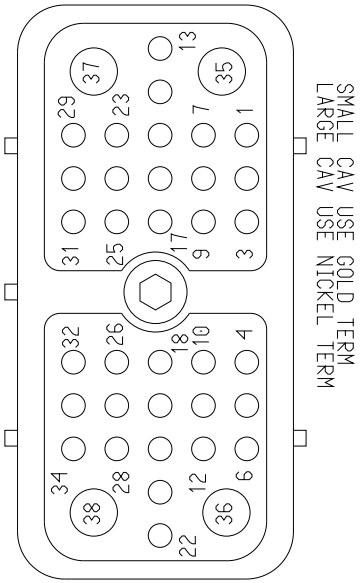

Name	Terminal Part Number	V-Min	Name	Wire Part Number	Wire CSA	Wire Spec	Wire Material description	Wire Color Description	Wire Length	End2 Terminal Part Number	End2 Pin Name	End2 Connect or
2	-	-	WIRE870806	-	0.0	-	-	-	0.0	-	PIN1	-
3	-	-	WIRE870807	-	0.0	-	-	-	0.0	-	PIN1	-

Connector Name 7110

Part Number 3683465C1

Instances A26 - CAN Layout:Powertrain Standard J1939 (500Kbps)
A26 - Powertrain J1939 Allison 3k/4k:A26 - Powertrain J1939 Allison 3k/4k
A26 - Powertrain J1939 UltraShift Transmission:A26 - Powertrain J1939 UltraShift Transmission

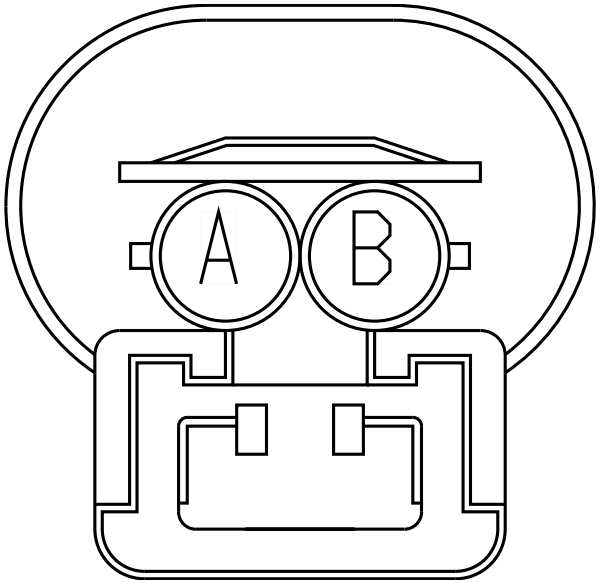

Name	Terminal Part Number	V-Min	Name	Wire Part Number	Wire CSA	Wire Spec	Wire Material description	Wire Color Description	Wire Length	End2 Terminal Part Number	End2 Pin Name	End2 Connect or
A	-	-	WIRE239160	-	0.0	-	-	-	0.0	-	PIN1	-
A	-	-	WIRE870709	-	0.0	-	-	-	0.0	-	1	-
A	-	-	WIRE870719	-	0.0	-	-	-	0.0	-	X	-
A	-	-	WIRE870805	-	0.0	-	-	-	0.0	-	PIN1	-
B	-	-	WIRE239153	-	0.0	-	-	-	0.0	-	PIN1	-
B	-	-	WIRE870702	-	0.0	-	-	-	0.0	-	X	-
B	-	-	WIRE870720	-	0.0	-	-	-	0.0	-	PIN1	-
B	-	-	WIRE870802	-	0.0	-	-	-	0.0	-	PIN1	-

Connector Name	7112
Part Number	3539778C1
Short Description	POWERTRAIN/CTR CHASSIS WIF CONNECTION
Instances	A26 - Water In Fuel (WIF) Davco N/ Heater:Diagram1 A26 - Water In Fuel (WIF) Davco N/ Heater:Diagram2 A26 - Water In Fuel (WIF) Davco N/ Heater:Diagram3 A26 - Water In Fuel (WIF) Davco N/ Heater:Diagram4 A26 - Water In Fuel (WIF) Davco N/ Heater:Diagram5 A26 - Water In Fuel (WIF) Davco N/ Heater:Diagram6 A26 - Water In Fuel (WIF) Davco N/ Heater:Diagram7 A26 - Water In Fuel (WIF) Davco N/ Heater:Diagram8 A26 - Water In Fuel (WIF) Davco N/ Heater:Diagram9 A26 - Water In Fuel (WIF) Davco W/ Heater:Diagram1 A26 - Water In Fuel (WIF) Davco W/ Heater:Diagram2 A26 - Water In Fuel (WIF) Davco W/ Heater:Diagram3 A26 - Water In Fuel (WIF) Davco W/ Heater:Diagram4 A26 - Water In Fuel (WIF) Davco W/ Heater:Diagram5 A26 - Water In Fuel (WIF) Davco W/ Heater:Diagram6 A26 - Water In Fuel (WIF) Davco W/ Heater:Diagram7 A26 - Water In Fuel (WIF) Davco W/ Heater:Diagram8 A26 - Water In Fuel (WIF) Davco W/ Heater:Diagram9
Mates	1874B

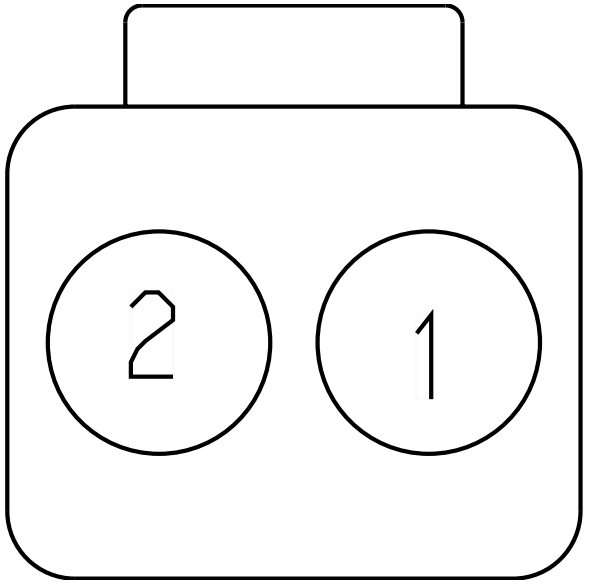

Name	Terminal Part Number	V-Min	Name	Wire Part Number	Wire CSA	Wire Spec	Wire Material description	Wire Color Description	Wire Length	End2 Terminal Part Number	End2 Pin Name	End2 Connect or
1	-	-	AU162A	2643674 R1	0.79	18.0	Std. Wall XLPE Primary Cable	WHITE	2885.0	-	2	7113
1	-	-	VX95A	2643676 R1	0.79	18.0	Std. Wall XLPE Primary Cable	TAN	3575.0	-	2	7113
1	-	-	BD162A	2643674 R1	0.79	18.0	Std. Wall XLPE Primary Cable	WHITE	3545.0	-	2	7113

Name	Terminal Part Number	V-Min	Name	Wire Part Number	Wire CSA	Wire Spec	Wire Material description	Wire Color Description	Wire Length	End2 Terminal Part Number	End2 Pin Name	End2 Connector
1	-	-	AZ162A	2643674 R1	0.79	18.0	Std. Wall XLPE Primary Cable	WHITE	4070.0	-	2	7113
1	-	-	VW95A	2643676 R1	0.79	18.0	Std. Wall XLPE Primary Cable	TAN	2800.0	-	2	7113
1	-	-	AX162A	2643674 R1	0.79	18.0	Std. Wall XLPE Primary Cable	WHITE	3120.0	-	2	7113
1	-	-	AV162A	2643674 R1	0.79	18.0	Std. Wall XLPE Primary Cable	WHITE	3125.0	-	2	7113
1	-	-	AW162A	2643674 R1	0.79	18.0	Std. Wall XLPE Primary Cable	WHITE	3325.0	-	2	7113
1	-	-	AY162A	2643674 R1	0.79	18.0	Std. Wall XLPE Primary Cable	WHITE	3845.0	-	2	7113
2	-	-	VW95-GA	2643674 R1	0.79	18.0	Std. Wall XLPE Primary Cable	WHITE	2800.0	-	1	7113
2	-	-	AU162-GA	2643674 R1	0.79	18.0	Std. Wall XLPE Primary Cable	WHITE	2885.0	-	1	7113

Name	Terminal Part Number	V-Min	Name	Wire Part Number	Wire CSA	Wire Spec	Wire Material description	Wire Color Description	Wire Length	End2 Terminal Part Number	End2 Pin Name	End2 Connect or
2	-	-	AV162-GA	2643674 R1	0.79	18.0	Std. Wall XLPE Primary Cable	WHITE	3125.0	-	1	7113
2	-	-	AW162-GA	2643674 R1	0.79	18.0	Std. Wall XLPE Primary Cable	WHITE	3325.0	-	1	7113
2	-	-	AX162-GA	2643674 R1	0.79	18.0	Std. Wall XLPE Primary Cable	WHITE	3120.0	-	1	7113
2	-	-	AY162-GA	2643674 R1	0.79	18.0	Std. Wall XLPE Primary Cable	WHITE	3845.0	-	1	7113
2	-	-	AZ162-GA	2643674 R1	0.79	18.0	Std. Wall XLPE Primary Cable	WHITE	4070.0	-	1	7113
2	-	-	BD162-GA	2643674 R1	0.79	18.0	Std. Wall XLPE Primary Cable	WHITE	3545.0	-	1	7113
2	-	-	VX95-GA	2643674 R1	0.79	18.0	Std. Wall XLPE Primary Cable	WHITE	3575.0	-	1	7113

Connector Name	7112
Part Number	3539778C1
Short Description	POWERTRAIN/CTR CHASSIS WIF CONNECTION
Instances	B6.7 - Water In Fuel (WIF) Racor N/ Heater:Diagram1 B6.7 - Water In Fuel (WIF) Racor N/ Heater:Diagram2 B6.7 - Water In Fuel (WIF) Racor N/ Heater:Diagram3 B6.7 - Water In Fuel (WIF) Racor N/ Heater:Diagram4 B6.7 - Water In Fuel (WIF) Racor N/ Heater:Diagram5 B6.7 - Water In Fuel (WIF) Racor N/ Heater:Diagram6 B6.7 - Water In Fuel (WIF) Racor N/ Heater:Diagram7 B6.7 - Water In Fuel (WIF) Racor W/ Heater:Diagram1 B6.7 - Water In Fuel (WIF) Racor W/ Heater:Diagram2 B6.7 - Water In Fuel (WIF) Racor W/ Heater:Diagram3 B6.7 - Water In Fuel (WIF) Racor W/ Heater:Diagram4 B6.7 - Water In Fuel (WIF) Racor W/ Heater:Diagram5 B6.7 - Water In Fuel (WIF) Racor W/ Heater:Diagram6 B6.7 - Water In Fuel (WIF) Racor W/ Heater:Diagram7 L9 - Water In Fuel (WIF) Davco N/ Heater:Diagram1 L9 - Water In Fuel (WIF) Davco N/ Heater:Diagram2 L9 - Water In Fuel (WIF) Davco N/ Heater:Diagram3 L9 - Water In Fuel (WIF) Davco N/ Heater:Diagram4 L9 - Water In Fuel (WIF) Davco N/ Heater:Diagram5 L9 - Water In Fuel (WIF) Davco N/ Heater:Diagram6 L9 - Water In Fuel (WIF) Davco N/ Heater:Diagram7 L9 - Water In Fuel (WIF) Davco N/ Heater:Diagram8 L9 - Water In Fuel (WIF) Davco N/ Heater:Diagram9 L9 - Water In Fuel (WIF) Davco W/ Heater:Diagram1 L9 - Water In Fuel (WIF) Davco W/ Heater:Diagram2 L9 - Water In Fuel (WIF) Davco W/ Heater:Diagram3 L9 - Water In Fuel (WIF) Davco W/ Heater:Diagram4 L9 - Water In Fuel (WIF) Davco W/ Heater:Diagram5 L9 - Water In Fuel (WIF) Davco W/ Heater:Diagram6 L9 - Water In Fuel (WIF) Davco W/ Heater:Diagram7 L9 - Water In Fuel (WIF) Davco W/ Heater:Diagram8 L9 - Water In Fuel (WIF) Davco W/ Heater:Diagram9
Mates	7112

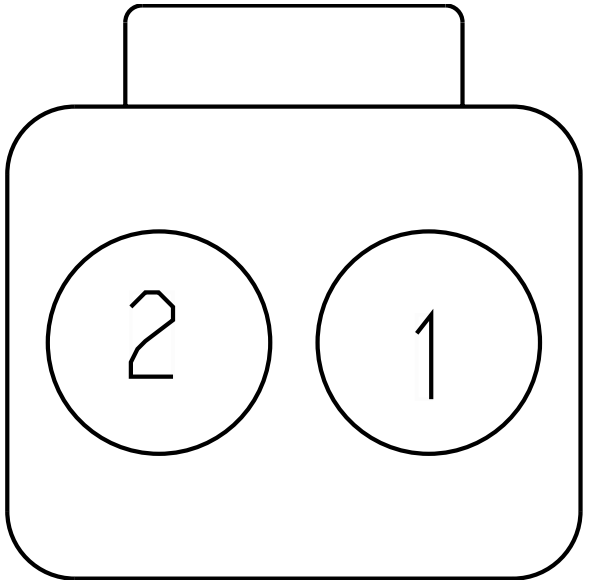

Name	Terminal Part Number	V-Min	Name	Wire Part Number	Wire CSA	Wire Spec	Wire Material description	Wire Color Description	Wire Length	End2 Terminal Part Number	End2 Pin Name	End2 Connector
1	-	-	AY162A	2643674 R1	0.79	18.0	Std. Wall XLPE Primary Cable	WHITE	3845.0	-	1	7113W
1	-	-	AW162A	2643674 R1	0.79	18.0	Std. Wall XLPE Primary Cable	WHITE	3325.0	-	1	7113U
1	-	-	VX95A	2643676 R1	0.79	18.0	Std. Wall XLPE Primary Cable	TAN	3575.0	-	1	7113A
1	-	-	VW95A	2643676 R1	0.79	18.0	Std. Wall XLPE Primary Cable	TAN	2800.0	-	1	7113
1	-	-	BD162A	2643674 R1	0.79	18.0	Std. Wall XLPE Primary Cable	WHITE	3545.0	-	1	7113Y
1	-	-	AZ162A	2643674 R1	0.79	18.0	Std. Wall XLPE Primary Cable	WHITE	4070.0	-	1	7113X
1	-	-	AU162A	2643674 R1	0.79	18.0	Std. Wall XLPE Primary Cable	WHITE	2885.0	-	1	7113S
1	-	-	AX162A	2643674 R1	0.79	18.0	Std. Wall XLPE Primary Cable	WHITE	3120.0	-	1	7113V

Name	Terminal Part Number	V-Min	Name	Wire Part Number	Wire CSA	Wire Spec	Wire Material description	Wire Color Description	Wire Length	End2 Terminal Part Number	End2 Pin Name	End2 Connect or
1	-	-	AV162A	2643674 R1	0.79	18.0	Std. Wall XLPE Primary Cable	WHITE	3125.0	-	1	7113T
1	-	-	VN95A	2643676 R1	0.79	18.0	Std. Wall XLPE Primary Cable	TAN	3765.0	-	1	7113L
1	-	-	VL95A	2643676 R1	0.79	18.0	Std. Wall XLPE Primary Cable	TAN	3335.0	-	1	7113J
1	-	-	VF95A	2643676 R1	0.79	18.0	Std. Wall XLPE Primary Cable	TAN	4305.0	-	1	7113C
1	-	-	VG95A	2643676 R1	0.79	18.0	Std. Wall XLPE Primary Cable	TAN	5005.0	-	1	7113E
1	-	-	VE95A	2643676 R1	0.79	18.0	Std. Wall XLPE Primary Cable	TAN	3860.0	-	1	7113A
1	-	-	VH95A	2643676 R1	0.79	18.0	Std. Wall XLPE Primary Cable	TAN	3635.0	-	1	7113G
1	-	-	VS95A	2643676 R1	0.79	18.0	Std. Wall XLPE Primary Cable	TAN	3955.0	-	1	7113N

Name	Terminal Part Number	V-Min	Name	Wire Part Number	Wire CSA	Wire Spec	Wire Material description	Wire Color Description	Wire Length	End2 Terminal Part Number	End2 Pin Name	End2 Connector
2	-	-	AU162-GA	2643674 R1	0.79	18.0	Std. Wall XLPE Primary Cable	WHITE	2885.0	-	2	7113S
2	-	-	VX95-GA	2643674 R1	0.79	18.0	Std. Wall XLPE Primary Cable	WHITE	3575.0	-	2	7113A
2	-	-	AX162-GA	2643674 R1	0.79	18.0	Std. Wall XLPE Primary Cable	WHITE	3120.0	-	2	7113V
2	-	-	AY162-GA	2643674 R1	0.79	18.0	Std. Wall XLPE Primary Cable	WHITE	3845.0	-	2	7113W
2	-	-	AZ162-GA	2643674 R1	0.79	18.0	Std. Wall XLPE Primary Cable	WHITE	4070.0	-	2	7113X
2	-	-	BD162-GA	2643674 R1	0.79	18.0	Std. Wall XLPE Primary Cable	WHITE	3545.0	-	2	7113Y
2	-	-	VW95-GA	2643674 R1	0.79	18.0	Std. Wall XLPE Primary Cable	WHITE	2800.0	-	2	7113
2	-	-	AW162-GA	2643674 R1	0.79	18.0	Std. Wall XLPE Primary Cable	WHITE	3325.0	-	2	7113U

Name	Terminal Part Number	V-Min	Name	Wire Part Number	Wire CSA	Wire Spec	Wire Material description	Wire Color Description	Wire Length	End2 Terminal Part Number	End2 Pin Name	End2 Connector
2	-	-	AV162-GA	2643674 R1	0.79	18.0	Std. Wall XLPE Primary Cable	WHITE	3125.0	-	2	7113T
2	-	-	VL95-GA	2643674 R1	0.79	18.0	Std. Wall XLPE Primary Cable	WHITE	3335.0	-	2	7113J
2	-	-	VH95-GA	2643674 R1	0.79	18.0	Std. Wall XLPE Primary Cable	WHITE	3635.0	-	2	7113G
2	-	-	VE95-GA	2643674 R1	0.79	18.0	Std. Wall XLPE Primary Cable	WHITE	3860.0	-	2	7113A
2	-	-	VG95-GA	2643674 R1	0.79	18.0	Std. Wall XLPE Primary Cable	WHITE	5005.0	-	2	7113E
2	-	-	VN95-GA	2643674 R1	0.79	18.0	Std. Wall XLPE Primary Cable	WHITE	3765.0	-	2	7113L
2	-	-	VS95-GA	2643674 R1	0.79	18.0	Std. Wall XLPE Primary Cable	WHITE	3955.0	-	2	7113N
2	-	-	VF95-GA	2643674 R1	0.79	18.0	Std. Wall XLPE Primary Cable	WHITE	4305.0	-	2	7113C

Connector Name	7112
Part Number	3854645C91
Short Description	REMOTE WIF
Instances	B6.7 - Water In Fuel (WIF) Racor N/ Heater:Diagram1 B6.7 - Water In Fuel (WIF) Racor N/ Heater:Diagram2 B6.7 - Water In Fuel (WIF) Racor N/ Heater:Diagram3 B6.7 - Water In Fuel (WIF) Racor N/ Heater:Diagram4 B6.7 - Water In Fuel (WIF) Racor N/ Heater:Diagram5 B6.7 - Water In Fuel (WIF) Racor N/ Heater:Diagram6 B6.7 - Water In Fuel (WIF) Racor N/ Heater:Diagram7 B6.7 - Water In Fuel (WIF) Racor W/ Heater:Diagram1 B6.7 - Water In Fuel (WIF) Racor W/ Heater:Diagram2 B6.7 - Water In Fuel (WIF) Racor W/ Heater:Diagram3 B6.7 - Water In Fuel (WIF) Racor W/ Heater:Diagram4 B6.7 - Water In Fuel (WIF) Racor W/ Heater:Diagram5 B6.7 - Water In Fuel (WIF) Racor W/ Heater:Diagram6 B6.7 - Water In Fuel (WIF) Racor W/ Heater:Diagram7 L9 - Water In Fuel (WIF) Davco N/ Heater:Diagram1 L9 - Water In Fuel (WIF) Davco N/ Heater:Diagram2 L9 - Water In Fuel (WIF) Davco N/ Heater:Diagram3 L9 - Water In Fuel (WIF) Davco N/ Heater:Diagram4 L9 - Water In Fuel (WIF) Davco N/ Heater:Diagram5 L9 - Water In Fuel (WIF) Davco N/ Heater:Diagram6 L9 - Water In Fuel (WIF) Davco N/ Heater:Diagram7 L9 - Water In Fuel (WIF) Davco N/ Heater:Diagram8 L9 - Water In Fuel (WIF) Davco N/ Heater:Diagram9 L9 - Water In Fuel (WIF) Davco W/ Heater:Diagram1 L9 - Water In Fuel (WIF) Davco W/ Heater:Diagram2 L9 - Water In Fuel (WIF) Davco W/ Heater:Diagram3 L9 - Water In Fuel (WIF) Davco W/ Heater:Diagram4 L9 - Water In Fuel (WIF) Davco W/ Heater:Diagram5 L9 - Water In Fuel (WIF) Davco W/ Heater:Diagram6 L9 - Water In Fuel (WIF) Davco W/ Heater:Diagram7 L9 - Water In Fuel (WIF) Davco W/ Heater:Diagram8 L9 - Water In Fuel (WIF) Davco W/ Heater:Diagram9
Mates	7112

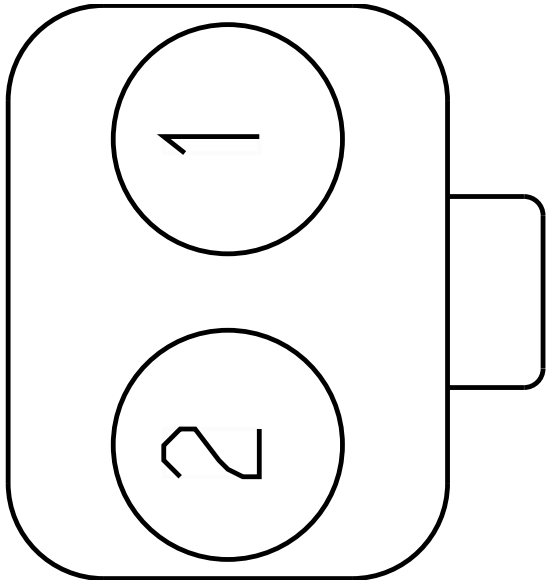

Name	Terminal Part Number	V-Min	Name	Wire Part Number	Wire CSA	Wire Spec	Wire Material description	Wire Color Description	Wire Length	End2 Terminal Part Number	End2 Pin Name	End2 Connect or
1	-	-	VA95A	2643676 R1	0.79	18.0	Std. Wall XLPE Primary Cable	TAN	300.0	-	X	-
2	-	-	VA95-G	2643674 R1	0.79	18.0	Std. Wall XLPE Primary Cable	WHITE	1625.0	-	-	-

Connector Name	7113A
Part Number	3590390C1
Instances	L9 - Water In Fuel (WIF) Davco N/ Heater:Diagram2 L9 - Water In Fuel (WIF) Davco W/ Heater:Diagram2
Mates	DEV-FUEL FILTER ASSY-3036-01-04A-7113A

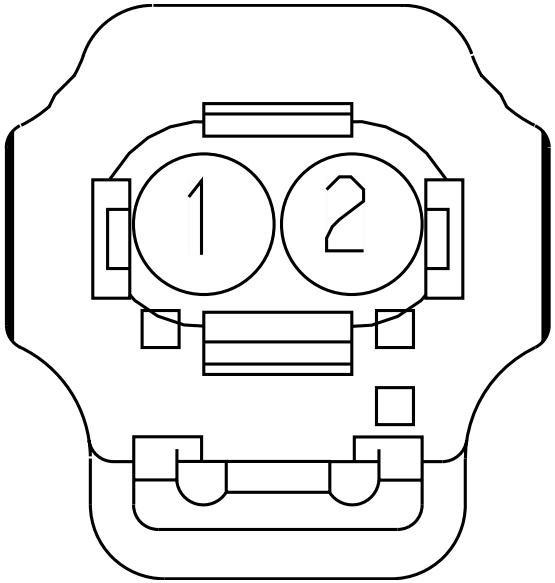

Name	Terminal Part Number	V-Min	Name	Wire Part Number	Wire CSA	Wire Spec	Wire Material description	Wire Color Description	Wire Length	End2 Terminal Part Number	End2 Pin Name	End2 Connect or
1	-	-	VX95A	2643676 R1	0.79	18.0	Std. Wall XLPE Primary Cable	TAN	3575.0	-	1	7112
2	-	-	VX95-GA	2643674 R1	0.79	18.0	Std. Wall XLPE Primary Cable	WHITE	3575.0	-	2	7112

Connector Name 7113A

Part Number 3977821C1

Instances B6.7 - Water In Fuel (WIF) Racor N/ Heater:Diagram1
B6.7 - Water In Fuel (WIF) Racor W/ Heater:Diagram1

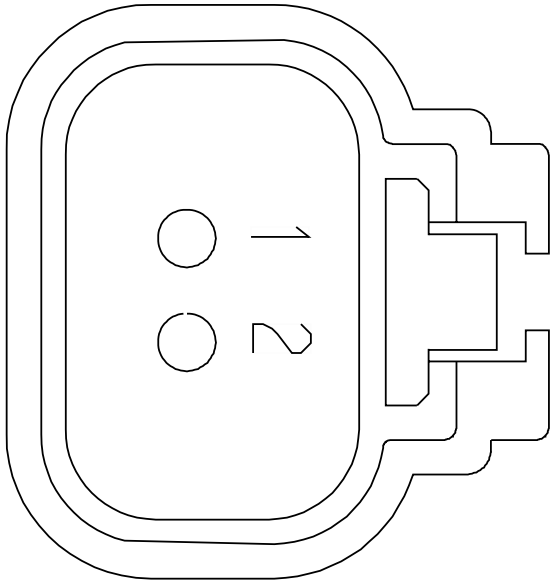

Name	Terminal Part Number	V-Min	Name	Wire Part Number	Wire CSA	Wire Spec	Wire Material description	Wire Color Description	Wire Length	End2 Terminal Part Number	End2 Pin Name	End2 Connect or
1	-	-	VE95A	2643676 R1	0.79	18.0	Std. Wall XLPE Primary Cable	TAN	3860.0	-	1	7112
2	-	-	VE95-GA	2643674 R1	0.79	18.0	Std. Wall XLPE Primary Cable	WHITE	3860.0	-	2	7112

Connector Name 7113C

Part Number 3977821C1

Instances B6.7 - Water In Fuel (WIF) Racor N/ Heater:Diagram2
B6.7 - Water In Fuel (WIF) Racor W/ Heater:Diagram2

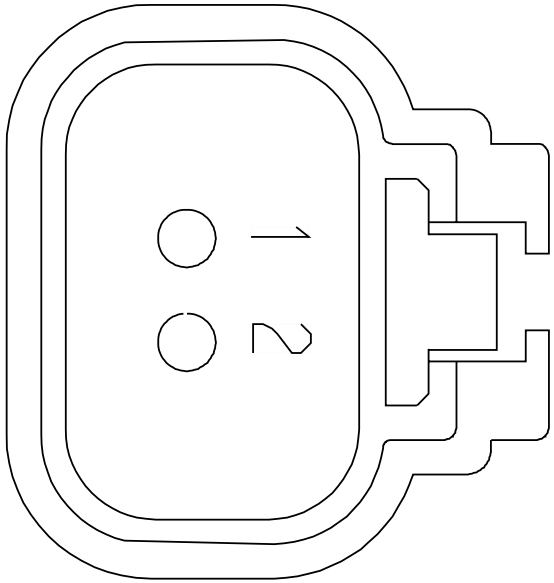

Name	Terminal Part Number	V-Min	Name	Wire Part Number	Wire CSA	Wire Spec	Wire Material description	Wire Color Description	Wire Length	End2 Terminal Part Number	End2 Pin Name	End2 Connect or
1	-	-	VF95A	2643676 R1	0.79	18.0	Std. Wall XLPE Primary Cable	TAN	4305.0	-	1	7112
2	-	-	VF95-GA	2643674 R1	0.79	18.0	Std. Wall XLPE Primary Cable	WHITE	4305.0	-	2	7112

Connector Name 7113E

Part Number 3977821C1

Instances B6.7 - Water In Fuel (WIF) Racor N/ Heater:Diagram3
B6.7 - Water In Fuel (WIF) Racor W/ Heater:Diagram3

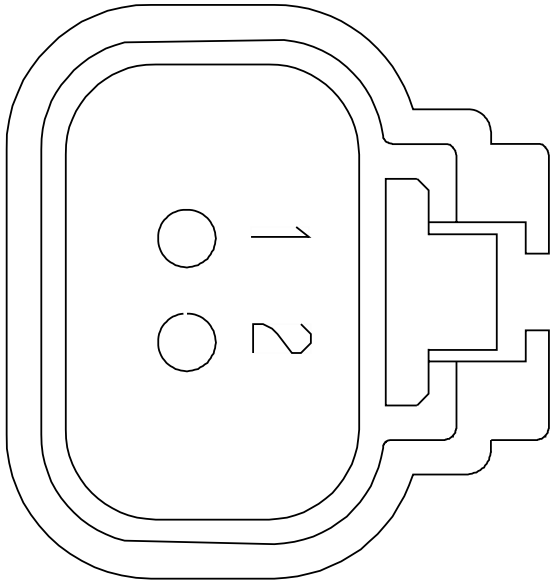

Name	Terminal Part Number	V-Min	Name	Wire Part Number	Wire CSA	Wire Spec	Wire Material description	Wire Color Description	Wire Length	End2 Terminal Part Number	End2 Pin Name	End2 Connect or
1	-	-	VG95A	2643676 R1	0.79	18.0	Std. Wall XLPE Primary Cable	TAN	5005.0	-	1	7112
2	-	-	VG95-GA	2643674 R1	0.79	18.0	Std. Wall XLPE Primary Cable	WHITE	5005.0	-	2	7112

Connector Name	7113G
Part Number	3977821C1
Instances	B6.7 - Water In Fuel (WIF) Racor N/ Heater:Diagram4 B6.7 - Water In Fuel (WIF) Racor W/ Heater:Diagram4
Mates	DEV-FUEL FILTER ASSY-3036-01-05A

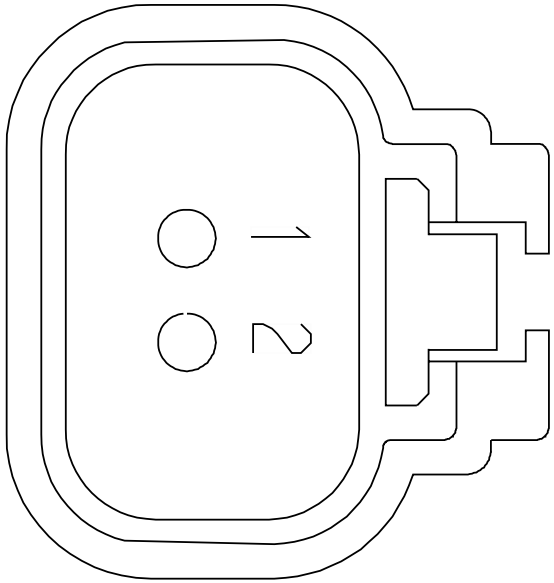

Name	Terminal Part Number	V-Min	Name	Wire Part Number	Wire CSA	Wire Spec	Wire Material description	Wire Color Description	Wire Length	End2 Terminal Part Number	End2 Pin Name	End2 Connect or
1	-	-	VH95A	2643676 R1	0.79	18.0	Std. Wall XLPE Primary Cable	TAN	3635.0	-	1	7112
2	-	-	VH95-GA	2643674 R1	0.79	18.0	Std. Wall XLPE Primary Cable	WHITE	3635.0	-	2	7112

Connector Name 7113J

Part Number 3977821C1

Instances B6.7 - Water In Fuel (WIF) Racor N/ Heater:Diagram5
B6.7 - Water In Fuel (WIF) Racor W/ Heater:Diagram5

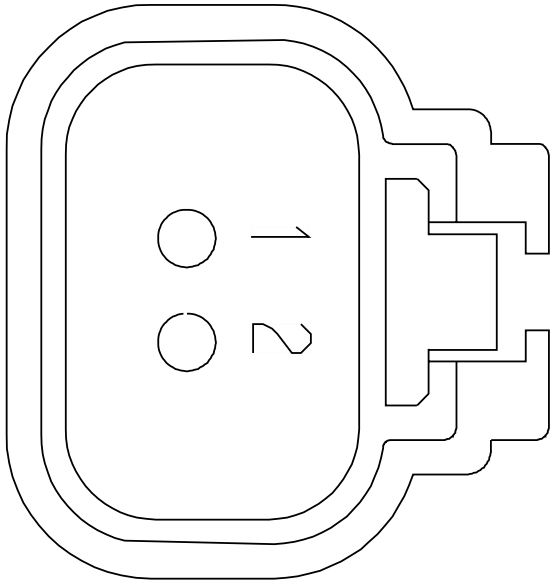

Name	Terminal Part Number	V-Min	Name	Wire Part Number	Wire CSA	Wire Spec	Wire Material description	Wire Color Description	Wire Length	End2 Terminal Part Number	End2 Pin Name	End2 Connect or
1	-	-	VL95A	2643676 R1	0.79	18.0	Std. Wall XLPE Primary Cable	TAN	3335.0	-	1	7112
2	-	-	VL95-GA	2643674 R1	0.79	18.0	Std. Wall XLPE Primary Cable	WHITE	3335.0	-	2	7112

Connector Name 7113L

Part Number 3977821C1

Instances B6.7 - Water In Fuel (WIF) Racor N/ Heater:Diagram6
B6.7 - Water In Fuel (WIF) Racor W/ Heater:Diagram6

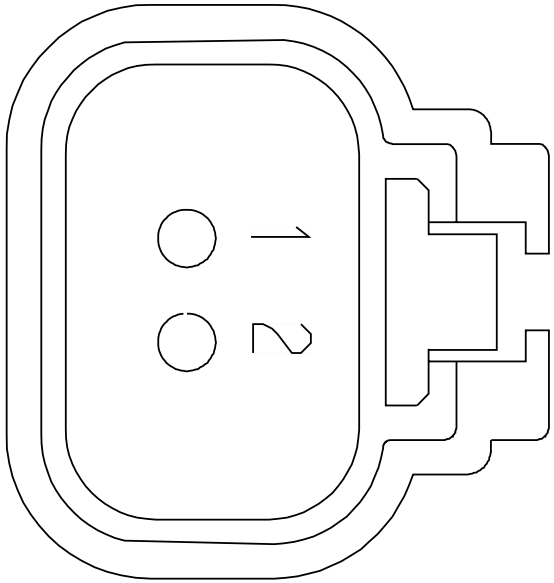

Name	Terminal Part Number	V-Min	Name	Wire Part Number	Wire CSA	Wire Spec	Wire Material description	Wire Color Description	Wire Length	End2 Terminal Part Number	End2 Pin Name	End2 Connect or
1	-	-	VN95A	2643676 R1	0.79	18.0	Std. Wall XLPE Primary Cable	TAN	3765.0	-	1	7112
2	-	-	VN95-GA	2643674 R1	0.79	18.0	Std. Wall XLPE Primary Cable	WHITE	3765.0	-	2	7112

Connector Name 7113N

Part Number 3977821C1

Instances B6.7 - Water In Fuel (WIF) Racor N/ Heater:Diagram7
B6.7 - Water In Fuel (WIF) Racor W/ Heater:Diagram7

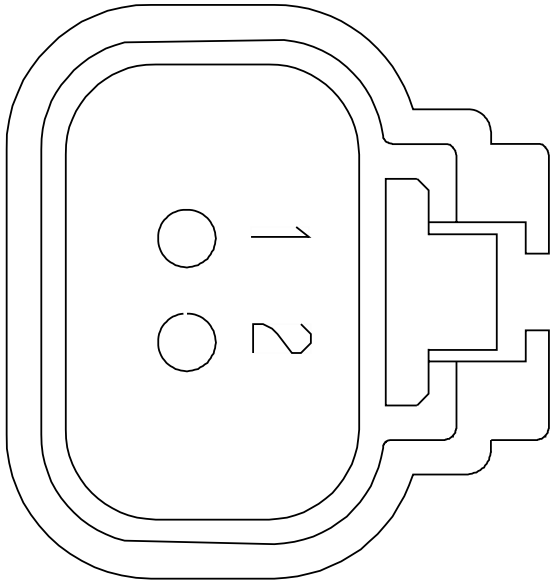

Name	Terminal Part Number	V-Min	Name	Wire Part Number	Wire CSA	Wire Spec	Wire Material description	Wire Color Description	Wire Length	End2 Terminal Part Number	End2 Pin Name	End2 Connect or
1	-	-	VS95A	2643676 R1	0.79	18.0	Std. Wall XLPE Primary Cable	TAN	3955.0	-	1	7112
2	-	-	VS95-GA	2643674 R1	0.79	18.0	Std. Wall XLPE Primary Cable	WHITE	3955.0	-	2	7112

Connector Name	7113S
Part Number	3590390C1
Instances	L9 - Water In Fuel (WIF) Davco N/ Heater:Diagram3 L9 - Water In Fuel (WIF) Davco W/ Heater:Diagram3
Mates	DEV-FUEL FILTER ASSY-3036-01-04A-7113S

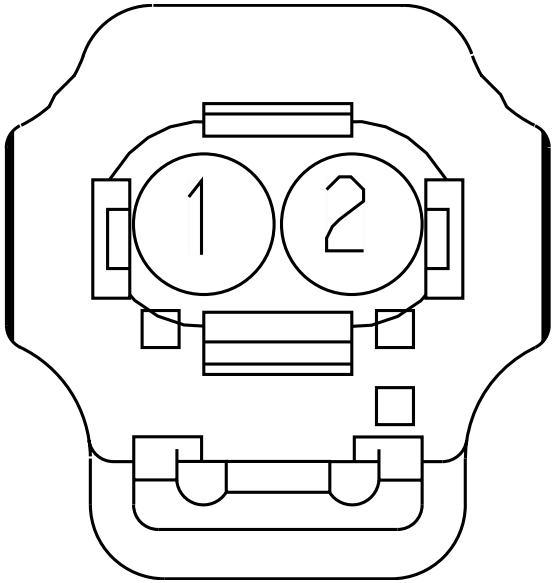

Name	Terminal Part Number	V-Min	Name	Wire Part Number	Wire CSA	Wire Spec	Wire Material description	Wire Color Description	Wire Length	End2 Terminal Part Number	End2 Pin Name	End2 Connect or
1	-	-	AU162A	2643674 R1	0.79	18.0	Std. Wall XLPE Primary Cable	WHITE	2885.0	-	1	7112
2	-	-	AU162-GA	2643674 R1	0.79	18.0	Std. Wall XLPE Primary Cable	WHITE	2885.0	-	2	7112

Connector Name	7113T
Part Number	3590390C1
Instances	L9 - Water In Fuel (WIF) Davco N/ Heater:Diagram4 L9 - Water In Fuel (WIF) Davco W/ Heater:Diagram4
Mates	DEV-FUEL FILTER ASSY-3036-01-04A-7113T

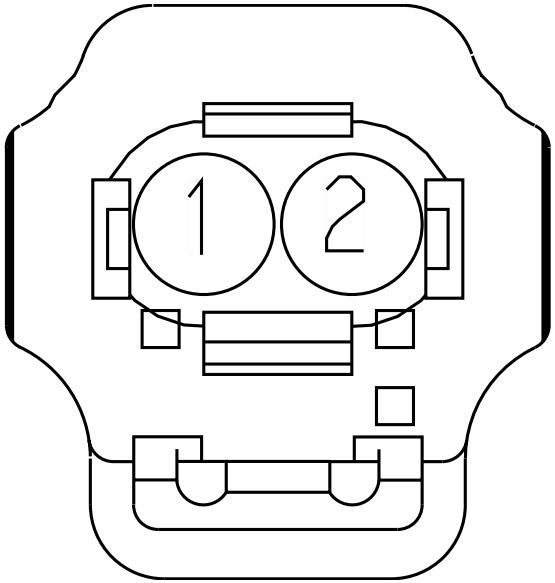

Name	Terminal Part Number	V-Min	Name	Wire Part Number	Wire CSA	Wire Spec	Wire Material description	Wire Color Description	Wire Length	End2 Terminal Part Number	End2 Pin Name	End2 Connect or
1	-	-	AV162A	2643674 R1	0.79	18.0	Std. Wall XLPE Primary Cable	WHITE	3125.0	-	1	7112
2	-	-	AV162-GA	2643674 R1	0.79	18.0	Std. Wall XLPE Primary Cable	WHITE	3125.0	-	2	7112

Connector Name	7113U
Part Number	3590390C1
Instances	L9 - Water In Fuel (WIF) Davco N/ Heater:Diagram5 L9 - Water In Fuel (WIF) Davco W/ Heater:Diagram5
Mates	DEV-FUEL FILTER ASSY-3036-01-04A-7113U

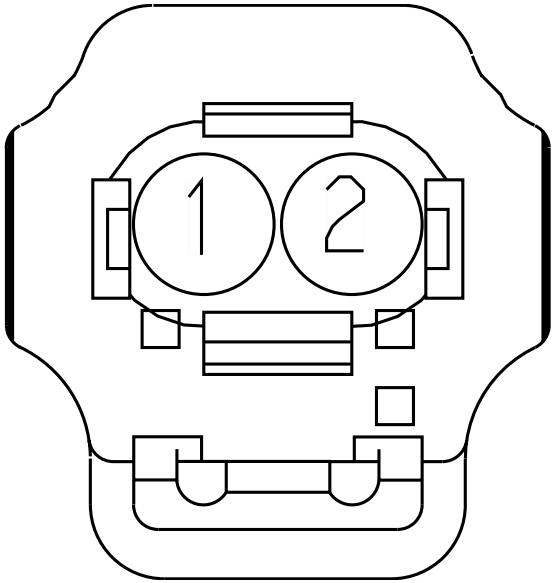

Name	Terminal Part Number	V-Min	Name	Wire Part Number	Wire CSA	Wire Spec	Wire Material description	Wire Color Description	Wire Length	End2 Terminal Part Number	End2 Pin Name	End2 Connect or
1	-	-	AW162A	2643674 R1	0.79	18.0	Std. Wall XLPE Primary Cable	WHITE	3325.0	-	1	7112
2	-	-	AW162-GA	2643674 R1	0.79	18.0	Std. Wall XLPE Primary Cable	WHITE	3325.0	-	2	7112

Connector Name	7113V
Part Number	3590390C1
Instances	L9 - Water In Fuel (WIF) Davco N/ Heater:Diagram6 L9 - Water In Fuel (WIF) Davco W/ Heater:Diagram6
Mates	DEV-FUEL FILTER ASSY-3036-01-04A-7113V

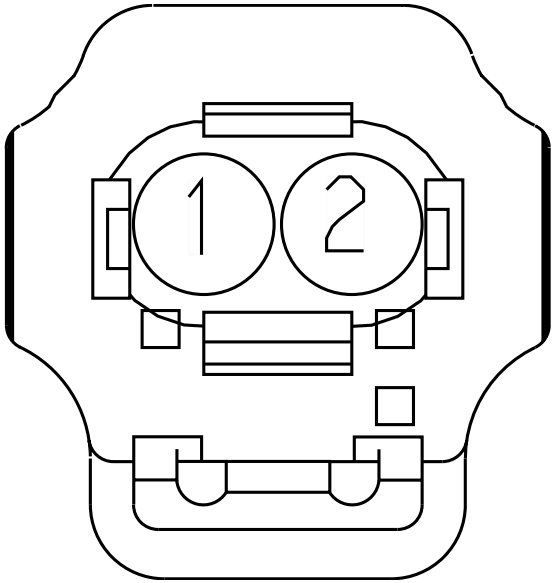

Name	Terminal Part Number	V-Min	Name	Wire Part Number	Wire CSA	Wire Spec	Wire Material description	Wire Color Description	Wire Length	End2 Terminal Part Number	End2 Pin Name	End2 Connect or
1	-	-	AX162A	2643674 R1	0.79	18.0	Std. Wall XLPE Primary Cable	WHITE	3120.0	-	1	7112
2	-	-	AX162-GA	2643674 R1	0.79	18.0	Std. Wall XLPE Primary Cable	WHITE	3120.0	-	2	7112

Connector Name	7113W
Part Number	3590390C1
Instances	L9 - Water In Fuel (WIF) Davco N/ Heater:Diagram7 L9 - Water In Fuel (WIF) Davco W/ Heater:Diagram7
Mates	DEV-FUEL FILTER ASSY-3036-01-04A-7113W

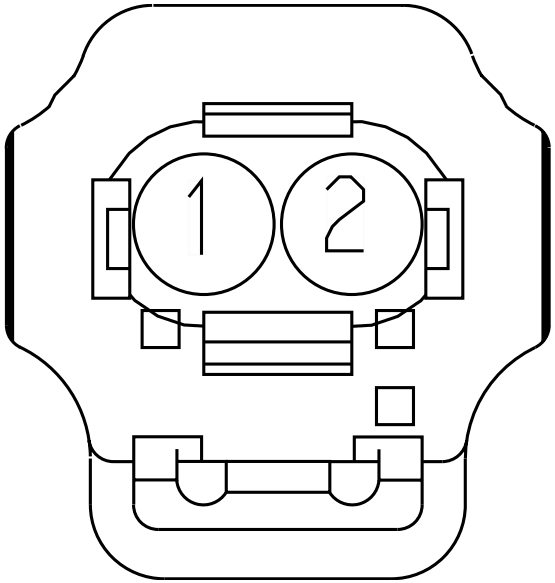

Name	Terminal Part Number	V-Min	Name	Wire Part Number	Wire CSA	Wire Spec	Wire Material description	Wire Color Description	Wire Length	End2 Terminal Part Number	End2 Pin Name	End2 Connect or
1	-	-	AY162A	2643674 R1	0.79	18.0	Std. Wall XLPE Primary Cable	WHITE	3845.0	-	1	7112
2	-	-	AY162-GA	2643674 R1	0.79	18.0	Std. Wall XLPE Primary Cable	WHITE	3845.0	-	2	7112

Connector Name	7113X
Part Number	3590390C1
Instances	L9 - Water In Fuel (WIF) Davco N/ Heater:Diagram8 L9 - Water In Fuel (WIF) Davco W/ Heater:Diagram8
Mates	DEV-FUEL FILTER ASSY-3036-01-04A-7113X

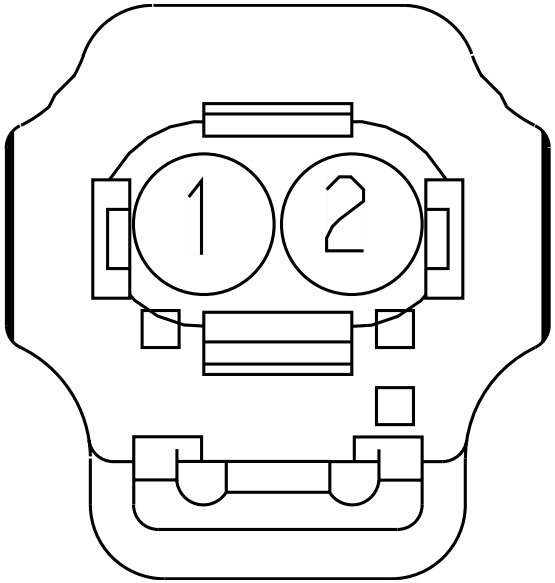

Name	Terminal Part Number	V-Min	Name	Wire Part Number	Wire CSA	Wire Spec	Wire Material description	Wire Color Description	Wire Length	End2 Terminal Part Number	End2 Pin Name	End2 Connect or
1	-	-	AZ162A	2643674 R1	0.79	18.0	Std. Wall XLPE Primary Cable	WHITE	4070.0	-	1	7112
2	-	-	AZ162-GA	2643674 R1	0.79	18.0	Std. Wall XLPE Primary Cable	WHITE	4070.0	-	2	7112

Connector Name	7113Y
Part Number	3590390C1
Instances	L9 - Water In Fuel (WIF) Davco N/ Heater:Diagram9 L9 - Water In Fuel (WIF) Davco W/ Heater:Diagram9
Mates	DEV-FUEL FILTER ASSY-3036-01-04A-7113Y

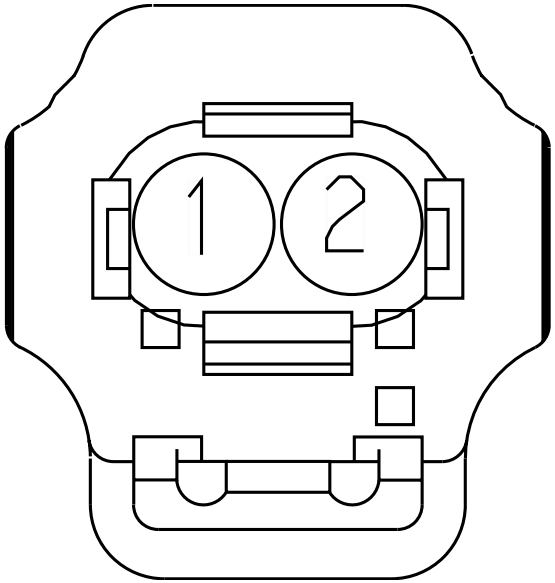

Name	Terminal Part Number	V-Min	Name	Wire Part Number	Wire CSA	Wire Spec	Wire Material description	Wire Color Description	Wire Length	End2 Terminal Part Number	End2 Pin Name	End2 Connect or
1	-	-	BD162A	2643674 R1	0.79	18.0	Std. Wall XLPE Primary Cable	WHITE	3545.0	-	1	7112
2	-	-	BD162-GA	2643674 R1	0.79	18.0	Std. Wall XLPE Primary Cable	WHITE	3545.0	-	2	7112

Connector Name 7113

Part Number 3590390C1

Instances
A26 - Water In Fuel (WIF) Davco N/ Heater:Diagram1
A26 - Water In Fuel (WIF) Davco N/ Heater:Diagram2
A26 - Water In Fuel (WIF) Davco N/ Heater:Diagram3
A26 - Water In Fuel (WIF) Davco N/ Heater:Diagram4
A26 - Water In Fuel (WIF) Davco N/ Heater:Diagram5
A26 - Water In Fuel (WIF) Davco N/ Heater:Diagram6
A26 - Water In Fuel (WIF) Davco N/ Heater:Diagram7
A26 - Water In Fuel (WIF) Davco N/ Heater:Diagram8
A26 - Water In Fuel (WIF) Davco N/ Heater:Diagram9
A26 - Water In Fuel (WIF) Davco W/ Heater:Diagram1
A26 - Water In Fuel (WIF) Davco W/ Heater:Diagram2
A26 - Water In Fuel (WIF) Davco W/ Heater:Diagram3
A26 - Water In Fuel (WIF) Davco W/ Heater:Diagram4
A26 - Water In Fuel (WIF) Davco W/ Heater:Diagram5
A26 - Water In Fuel (WIF) Davco W/ Heater:Diagram6
A26 - Water In Fuel (WIF) Davco W/ Heater:Diagram7
A26 - Water In Fuel (WIF) Davco W/ Heater:Diagram8
A26 - Water In Fuel (WIF) Davco W/ Heater:Diagram9
L9 - Water In Fuel (WIF) Davco N/ Heater:Diagram1
L9 - Water In Fuel (WIF) Davco W/ Heater:Diagram1

Mates DEV- FUEL FILTER ASSY-3036-01-09A

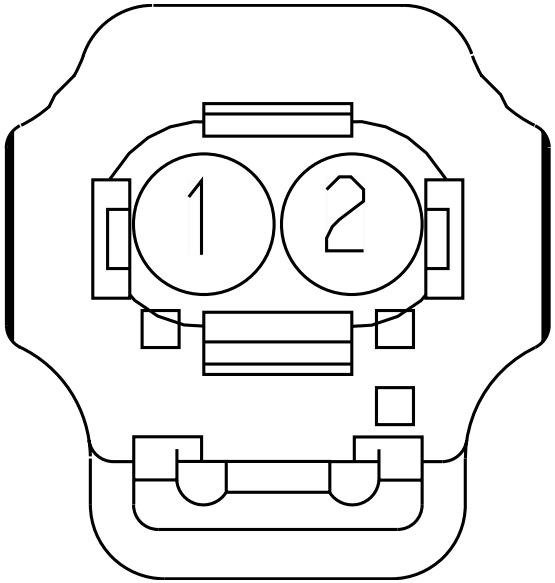

Name	Terminal Part Number	V-Min	Name	Wire Part Number	Wire CSA	Wire Spec	Wire Material description	Wire Color Description	Wire Length	End2 Terminal Part Number	End2 Pin Name	End2 Connector
1	-	-	VW95A	2643676 R1	0.79	18.0	Std. Wall XLPE Primary Cable	TAN	2800.0	-	1	7112
1	-	-	VW95-GA	2643674 R1	0.79	18.0	Std. Wall XLPE Primary Cable	WHITE	2800.0	-	2	7112
1	-	-	AU162-GA	2643674 R1	0.79	18.0	Std. Wall XLPE Primary Cable	WHITE	2885.0	-	2	7112

Name	Terminal Part Number	V-Min	Name	Wire Part Number	Wire CSA	Wire Spec	Wire Material description	Wire Color Description	Wire Length	End2 Terminal Part Number	End2 Pin Name	End2 Connector
1	-	-	AV162-GA	2643674 R1	0.79	18.0	Std. Wall XLPE Primary Cable	WHITE	3125.0	-	2	7112
1	-	-	AW162-GA	2643674 R1	0.79	18.0	Std. Wall XLPE Primary Cable	WHITE	3325.0	-	2	7112
1	-	-	AX162-GA	2643674 R1	0.79	18.0	Std. Wall XLPE Primary Cable	WHITE	3120.0	-	2	7112
1	-	-	AY162-GA	2643674 R1	0.79	18.0	Std. Wall XLPE Primary Cable	WHITE	3845.0	-	2	7112
1	-	-	AZ162-GA	2643674 R1	0.79	18.0	Std. Wall XLPE Primary Cable	WHITE	4070.0	-	2	7112
1	-	-	BD162-GA	2643674 R1	0.79	18.0	Std. Wall XLPE Primary Cable	WHITE	3545.0	-	2	7112
1	-	-	VX95-GA	2643674 R1	0.79	18.0	Std. Wall XLPE Primary Cable	WHITE	3575.0	-	2	7112
2	-	-	VW95-GA	2643674 R1	0.79	18.0	Std. Wall XLPE Primary Cable	WHITE	2800.0	-	2	7112

Name	Terminal Part Number	V-Min	Name	Wire Part Number	Wire CSA	Wire Spec	Wire Material description	Wire Color Description	Wire Length	End2 Terminal Part Number	End2 Pin Name	End2 Connector
2	-	-	AU162A	2643674 R1	0.79	18.0	Std. Wall XLPE Primary Cable	WHITE	2885.0	-	1	7112
2	-	-	VX95A	2643676 R1	0.79	18.0	Std. Wall XLPE Primary Cable	TAN	3575.0	-	1	7112
2	-	-	BD162A	2643674 R1	0.79	18.0	Std. Wall XLPE Primary Cable	WHITE	3545.0	-	1	7112
2	-	-	AZ162A	2643674 R1	0.79	18.0	Std. Wall XLPE Primary Cable	WHITE	4070.0	-	1	7112
2	-	-	VW95A	2643676 R1	0.79	18.0	Std. Wall XLPE Primary Cable	TAN	2800.0	-	1	7112
2	-	-	AX162A	2643674 R1	0.79	18.0	Std. Wall XLPE Primary Cable	WHITE	3120.0	-	1	7112
2	-	-	AV162A	2643674 R1	0.79	18.0	Std. Wall XLPE Primary Cable	WHITE	3125.0	-	1	7112
2	-	-	AW162A	2643674 R1	0.79	18.0	Std. Wall XLPE Primary Cable	WHITE	3325.0	-	1	7112
2	-	-	AY162A	2643674 R1	0.79	18.0	Std. Wall XLPE Primary Cable	WHITE	3845.0	-	1	7112

Connector Name 7150

Part Number 3605713C1

Instances A26 - Backup Light (Single Reverse Light) W/Less Power Module Allison 3K/4K:Diagram1-Combination2
A26 - CAN Layout:Powertrain Standard J1939 (500Kbps)
A26 - Hill Start Aid (Bendix):Diagram1
A26 - Hill Start Aid (Bendix):Diagram2
A26 - Powertrain J1939 Allison 3k/4k:A26 - Powertrain J1939 Allison 3k/4k
A26 - Transmission (Allison 3K/4K):Diagram2
A26 - Transmission Power Take Off (Auto Trans Dual PTO W/ 42 Parameters):Diagram1
A26 - Transmission Power Take Off (Auto Trans Single PTO w/21 Parameters):Diagram1
A26 - Transmission Shifter (Stalk Shifter Allison):Diagram2
A26/B6.7/L9 - Transfer Case - High/Low Air Sol:Diagram1
A26/B6.7/L9 - Transfer Case - High/Neu/Low Air Sol:Diagram1
A26/B6.7/L9 - Transmission - MODE Selection:Diagram1

Mates MODU-TCM-A002-10-03

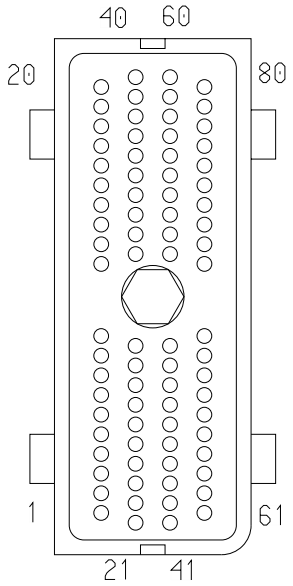

Name	Terminal Part Number	V-Min	Name	Wire Part Number	Wire CSA	Wire Spec	Wire Material description	Wire Color Description	Wire Length	End2 Terminal Part Number	End2 Pin Name	End2 Connector
1	-	-	TD92#101	3510341 R1	0.79	18.0	Thin Wall XLPE Primary Cable	LIGHT BLUE	3180.0	-	-	-
3	-	-	TT92#103	3510335 R1	0.79	18.0	Thin Wall XLPE Primary Cable	YELLOW 2	2650.0	-	X	-
3	-	-	TW92#103	3510335 R1	0.79	18.0	Thin Wall XLPE Primary Cable	YELLOW 2	2795.0	-	X	-
5	-	-	TD92#105	3510329 R1	0.79	18.0	Thin Wall XLPE Primary Cable	TAN	3180.0	-	-	-

Name	Terminal Part Number	V-Min	Name	Wire Part Number	Wire CSA	Wire Spec	Wire Material description	Wire Color Description	Wire Length	End2 Terminal Part Number	End2 Pin Name	End2 Connector
6	-	-	-	-	-	-	-	-	-	-	-	-
6	-	-	WIRE565868	-	0.0	-	-	-	0.0	-	PIN1	-
6	-	-	WIRE870708	-	0.0	-	-	-	0.0	-	X	-
9	-	-	TD92#109	3510311R1	0.79	18.0	Thin Wall XLPE Primary Cable	GREY	120.0	-	X	-
10	-	-	TD92#110	3510323R1	0.79	18.0	Thin Wall XLPE Primary Cable	PINK	145.0	-	X	-
11	-	-	TD92#111	3510317R1	0.79	18.0	Thin Wall XLPE Primary Cable	ORANGE	1125.0	-	-	-
12	-	-	TW92#112	3510329R1	0.79	18.0	Thin Wall XLPE Primary Cable	TAN	1125.0	-	-	-
12	-	-	TT92#112	3510329R1	0.79	18.0	Thin Wall XLPE Primary Cable	TAN	900.0	-	X	-
15	-	-	TT92#115	3510359R1	0.79	18.0	Thin Wall XLPE Primary Cable	WHITE	1020.0	-	-	-
16	-	-	TD92#116	3510341R1	0.79	18.0	Thin Wall XLPE Primary Cable	LIGHT BLUE	1125.0	-	-	-

Name	Terminal Part Number	V-Min	Name	Wire Part Number	Wire CSA	Wire Spec	Wire Material description	Wire Color Description	Wire Length	End2 Terminal Part Number	End2 Pin Name	End2 Connector
17	-	-	SD92#117	3510329 R1	0.79	18.0	Thin Wall XLPE Primary Cable	TAN	3555.0	-	-	-
17	-	-	SA92#117	3510329 R1	0.79	18.0	Thin Wall XLPE Primary Cable	TAN	3180.0	-	-	-
17	-	-	SC92A117	3510329 R1	0.79	18.0	Thin Wall XLPE Primary Cable	TAN	170.0	-	X	-
18	-	-	TD92#118	3510329 R1	0.79	18.0	Thin Wall XLPE Primary Cable	TAN	1125.0	-	-	-
19	-	-	TT92#119	3510341 R1	0.79	18.0	Thin Wall XLPE Primary Cable	LIGHT BLUE	935.0	-	X	-
20	-	-	TE92#120	3510353 R1	0.79	18.0	Thin Wall XLPE Primary Cable	DARK BLUE	1210.0	-	-	-
20	-	-	TP92#120	3510341 R1	0.79	18.0	Thin Wall XLPE Primary Cable	LIGHT BLUE	1125.0	-	-	-
22	-	-	TD92#122	3510335 R1	0.79	18.0	Thin Wall XLPE Primary Cable	YELLOW 2	3180.0	-	-	-

Name	Terminal Part Number	V-Min	Name	Wire Part Number	Wire CSA	Wire Spec	Wire Material description	Wire Color Description	Wire Length	End2 Terminal Part Number	End2 Pin Name	End2 Connector
23	-	-	TD92#123	3510341 R1	0.79	18.0	Thin Wall XLPE Primary Cable	LIGHT BLUE	3180.0	-	-	-
24	-	-	TW92#124	3510329 R1	0.79	18.0	Thin Wall XLPE Primary Cable	TAN	3180.0	-	-	-
24	-	-	TT92#124	3510329 R1	0.79	18.0	Thin Wall XLPE Primary Cable	TAN	3555.0	-	-	-
25	-	-	XP47A125	3510329 R1	0.79	18.0	Thin Wall XLPE Primary Cable	TAN	3200.0	-	-	-
27	-	-	-	-	-	-	-	-	-	-	-	-
27	-	-	WIRE565869	-	0.0	-	-	-	0.0	-	PIN1	-
27	-	-	WIRE870707	-	0.0	-	-	-	0.0	-	1	-
30	-	-	TD92#130	3510359 R1	0.79	18.0	Thin Wall XLPE Primary Cable	WHITE	3180.0	-	-	-
31	-	-	TU92#131	3510335 R1	0.79	18.0	Thin Wall XLPE Primary Cable	YELLOW 2	1125.0	-	-	-
31	-	-	TV92#131	3510335 R1	0.79	18.0	Thin Wall XLPE Primary Cable	YELLOW 2	695.0	-	X	-

Name	Terminal Part Number	V-Min	Name	Wire Part Number	Wire CSA	Wire Spec	Wire Material description	Wire Color Description	Wire Length	End2 Terminal Part Number	End2 Pin Name	End2 Connector
33	-	-	TD92#133	3510335 R1	0.79	18.0	Thin Wall XLPE Primary Cable	YELLOW 2	1125.0	-	-	-
34	-	-	TD92#134	3510329 R1	0.79	18.0	Thin Wall XLPE Primary Cable	TAN	3555.0	-	19	1702
34	-	-	TD92#134	3510329 R1	0.79	18.0	Thin Wall XLPE Primary Cable	TAN	3555.0	-	-	-
36	-	-	TD92#136	3510317 R1	0.79	18.0	Thin Wall XLPE Primary Cable	ORANGE	1125.0	-	-	-
37	-	-	TD92#137	3510329 R1	0.79	18.0	Thin Wall XLPE Primary Cable	TAN	1125.0	-	-	-
39	-	-	TP48#139	3510317 R1	0.79	18.0	Thin Wall XLPE Primary Cable	ORANGE	1580.0	-	-	-
39	-	-	TE48#139	3510317 R1	0.79	18.0	Thin Wall XLPE Primary Cable	ORANGE	1585.0	-	-	-
40	-	-	TD47#140	3510299 R1	0.79	18.0	Thin Wall XLPE Primary Cable	LIGHT GREEN	1085.0	-	-	-

Name	Terminal Part Number	V-Min	Name	Wire Part Number	Wire CSA	Wire Spec	Wire Material description	Wire Color Description	Wire Length	End2 Terminal Part Number	End2 Pin Name	End2 Connector
41	-	-	TD92#141	3510329 R1	0.79	18.0	Thin Wall XLPE Primary Cable	TAN	3555.0	-	-	-
42	-	-	SC92#142	3510329 R1	0.79	18.0	Thin Wall XLPE Primary Cable	TAN	170.0	-	X	-
42	-	-	VX92#142	3510359 R1	0.79	18.0	Thin Wall XLPE Primary Cable	WHITE	3180.0	-	-	-
42	-	-	TW92#161	3510329 R1	0.79	18.0	Thin Wall XLPE Primary Cable	TAN	3180.0	-	-	-
43	-	-	TD92#143	3510341 R1	0.79	18.0	Thin Wall XLPE Primary Cable	LIGHT BLUE	3180.0	-	-	-
45	-	-	SC92#145	3510317 R1	0.79	18.0	Thin Wall XLPE Primary Cable	ORANGE	3555.0	-	-	-
45	-	-	SD92#145	3510317 R1	0.79	18.0	Thin Wall XLPE Primary Cable	ORANGE	3555.0	-	-	-
45	-	-	SA92#145	3510317 R1	0.79	18.0	Thin Wall XLPE Primary Cable	ORANGE	3180.0	-	-	-

Name	Terminal Part Number	V-Min	Name	Wire Part Number	Wire CSA	Wire Spec	Wire Material description	Wire Color Description	Wire Length	End2 Terminal Part Number	End2 Pin Name	End2 Connector
51	-	-	TD92#151	3510359 R1	0.79	18.0	Thin Wall XLPE Primary Cable	WHITE	1125.0	-	-	-
52	-	-	TD92#152	3510299 R1	0.79	18.0	Thin Wall XLPE Primary Cable	LIGHT GREEN	1125.0	-	-	-
54	-	-	TD92#154	3510329 R1	0.79	18.0	Thin Wall XLPE Primary Cable	TAN	1125.0	-	-	-
55	-	-	TD92#155	3510329 R1	0.79	18.0	Thin Wall XLPE Primary Cable	TAN	1125.0	-	-	-
56	-	-	TT92#156	3510329 R1	0.79	18.0	Thin Wall XLPE Primary Cable	TAN	3555.0	-	-	-
57	-	-	TD92#157	3510359 R1	0.79	18.0	Thin Wall XLPE Primary Cable	WHITE	3180.0	-	-	-
58	-	-	TU92#158	3510299 R1	0.79	18.0	Thin Wall XLPE Primary Cable	LIGHT GREEN	1125.0	-	-	-
58	-	-	TV92#158	3510299 R1	0.79	18.0	Thin Wall XLPE Primary Cable	LIGHT GREEN	720.0	-	X	-

Name	Terminal Part Number	V-Min	Name	Wire Part Number	Wire CSA	Wire Spec	Wire Material description	Wire Color Description	Wire Length	End2 Terminal Part Number	End2 Pin Name	End2 Connector
59	-	-	TP48#159	3510329 R1	0.79	18.0	Thin Wall XLPE Primary Cable	TAN	1580.0	-	-	-
59	-	-	TE48#159	3510329 R1	0.79	18.0	Thin Wall XLPE Primary Cable	TAN	1585.0	-	-	-
60	-	-	TD47#160	3510335 R1	0.79	18.0	Thin Wall XLPE Primary Cable	YELLOW 2	1085.0	-	-	-
61	-	-	TT92#161	3510329 R1	0.79	18.0	Thin Wall XLPE Primary Cable	TAN	3555.0	-	-	-
62	-	-	TD92#162	3510335 R1	0.79	18.0	Thin Wall XLPE Primary Cable	YELLOW 2	3180.0	-	-	-
63	-	-	TD92#163	3510329 R1	0.79	18.0	Thin Wall XLPE Primary Cable	TAN	3555.0	-	-	-
64	-	-	TD92#164	3510341 R1	0.79	18.0	Thin Wall XLPE Primary Cable	LIGHT BLUE	3180.0	-	-	-
65	-	-	TD92#165	3510329 R1	0.79	18.0	Thin Wall XLPE Primary Cable	TAN	3555.0	-	-	-

Name	Terminal Part Number	V-Min	Name	Wire Part Number	Wire CSA	Wire Spec	Wire Material description	Wire Color Description	Wire Length	End2 Terminal Part Number	End2 Pin Name	End2 Connector
65	-	-	TD92#165	3510329 R1	0.79	18.0	Thin Wall XLPE Primary Cable	TAN	3555.0	-	7	1702
69	-	-	TD92#169	3510329 R1	0.79	18.0	Thin Wall XLPE Primary Cable	TAN	120.0	-	X	-
70	-	-	TD92#170	3510329 R1	0.79	18.0	Thin Wall XLPE Primary Cable	TAN	145.0	-	X	-
71	-	-	TD92#171	3510329 R1	0.79	18.0	Thin Wall XLPE Primary Cable	TAN	1125.0	-	-	-
74	-	-	TD92#174	3510329 R1	0.79	18.0	Thin Wall XLPE Primary Cable	TAN	1125.0	-	-	-
75	-	-	TT92#175	3510317 R1	0.79	18.0	Thin Wall XLPE Primary Cable	ORANGE	870.0	-	-	-
76	-	-	TD92#176	3510335 R1	0.79	18.0	Thin Wall XLPE Primary Cable	YELLOW 2	1125.0	-	-	-
77	-	-	TD92#177	3510299 R1	0.79	18.0	Thin Wall XLPE Primary Cable	LIGHT GREEN	1125.0	-	-	-

Name	Terminal Part Number	V-Min	Name	Wire Part Number	Wire CSA	Wire Spec	Wire Material description	Wire Color Description	Wire Length	End2 Terminal Part Number	End2 Pin Name	End2 Connect or
80	-	-	TE92#180	3510317 R1	0.79	18.0	Thin Wall XLPE Primary Cable	ORANGE	1210.0	-	-	-
80	-	-	TP92#180	3510329 R1	0.79	18.0	Thin Wall XLPE Primary Cable	TAN	1125.0	-	-	-

Connector Name	7150
Part Number	3605713C1
Instances	L9 - Transmission Shifter Allison 5th Gen Push Button(SURHD):Diagram1
Mates	MODU-TCM-A002-10-03

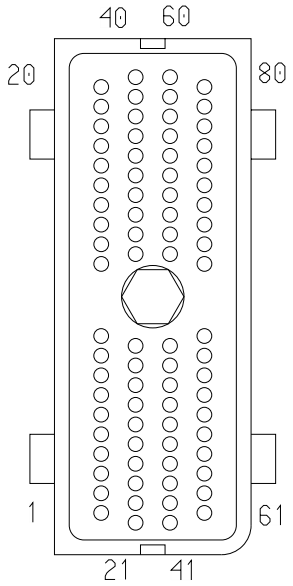

Name	Terminal Part Number	V-Min	Name	Wire Part Number	Wire CSA	Wire Spec	Wire Material description	Wire Color Description	Wire Length	End2 Terminal Part Number	End2 Pin Name	End2 Connect or
6	-	-	-	-	-	-	-	-	-	-	-	-
27	-	-	-	-	-	-	-	-	-	-	-	-
34	-	-	PM92#134	3510335 R1	0.79	18.0	Thin Wall XLPE Primary Cable	YELLOW 2	2820.0	-	19	1702

Connector Name	7150
Part Number	3605713C1
Instances	A26 - Starter Interlock (BCM Controlled with Input from Allison 3K/4K TCM):Diagram1 A26 - Starter Interlock (BCM Controlled with Input from Allison 3K/4K TCM):Diagram2
Mates	MODU-TCM-A002-10-03

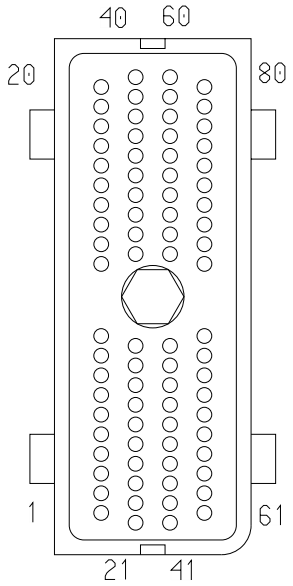

Name	Terminal Part Number	V-Min	Name	Wire Part Number	Wire CSA	Wire Spec	Wire Material description	Wire Color Description	Wire Length	End2 Terminal Part Number	End2 Pin Name	End2 Connect or
41	-	-	A92#141	3510329 R1	0.79	18.0	Thin Wall XLPE Primary Cable	TAN	370.0	-	12	1235
41	-	-	TD92#141	3510329 R1	0.79	18.0	Thin Wall XLPE Primary Cable	TAN	3555.0	-	20	1702

Connector Name 7151

Part Number 3605713C1

Instances
A26/B6.7/L9 - Trans Range Inhibit (J1939 Comm):Diagram1
A26/B6.7/L9 - Transfer Case - High/Low Air Sol:Diagram1
A26/B6.7/L9 - Transfer Case - High/Neu/Low Air Sol:Diagram1
A26/B6.7/L9 - Transmission - MODE Selection:Diagram1
A26/B6.7/L9 - Vehicle Speedometer System (Automatic XMSN):Diagram1
B6.7 - CAN Layout:Powertrain Standard J1939 (500Kbps)
B6.7 - Powertrain J1939 Allison 1k/2k:B6.7 - Allison 1k/2k Transmission
B6.7 - Range Inhibit (sixth gear inhibit switch):Diagram1
B6.7 - Rear Lights Stop - Daisy Chain:Diagram1
B6.7 - Rear Lights Stop - Dual Assembly:Diagram1
B6.7 - Rear Lights Stop - Single Assemby:Diagram1
B6.7 - Remote Start/Stop:Diagram1
B6.7 - Remote Start/Stop w/ Emergency Pump:Diagram1
B6.7 - Starter Interlocks (BCM Controlled with Input from Allison 1K/2K TCM):Diagram1
B6.7 - T-Handle for Allison Without Park Position:Diagram1
B6.7 - T-Handle for Allison Without Park Position:Diagram2
B6.7 - Transmission (Allison 1K/2K):Diagram1
B6.7 - Transmission Power Take Off (Auto Trans Single PTO w/21 Parameters):Diagram1
B6.7 - Transmission Shifter (T-Handle for Allison With Park Position):Diagram1
B6.7 - Transmission Shifter (T-Handle for Allison With Park Position):Diagram2

Mates MODU-TCM-A002-10-02

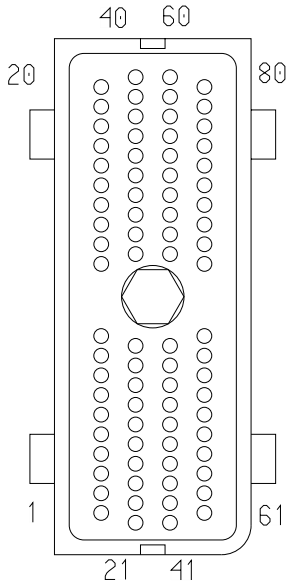

Name	Terminal Part Number	V-Min	Name	Wire Part Number	Wire CSA	Wire Spec	Wire Material description	Wire Color Description	Wire Length	End2 Terminal Part Number	End2 Pin Name	End2 Connector
1	-	-	PK92#101	3510341 R1	0.79	18.0	Thin Wall XLPE Primary Cable	LIGHT BLUE	2795.0	-	-	-
3	-	-	PK92#103	3510335 R1	0.79	18.0	Thin Wall XLPE Primary Cable	YELLOW 2	2305.0	-	X	-

Name	Terminal Part Number	V-Min	Name	Wire Part Number	Wire CSA	Wire Spec	Wire Material description	Wire Color Description	Wire Length	End2 Terminal Part Number	End2 Pin Name	End2 Connector
5	-	-	PK92#105	3510317 R1	0.79	18.0	Thin Wall XLPE Primary Cable	ORANGE	2795.0	-	-	-
6	-	-	WIRE735 174	-	0.0	-	-	-	0.0	-	1	-
6	-	-	-	-	-	-	-	-	-	-	-	-
6	-	-	WIRE735 174	-	0.0	-	-	-	0.0	-	X	-
9	-	-	KE10B	3510293 R1	0.79	18.0	Thin Wall XLPE Primary Cable	BLACK	410.0	-	X	-
10	-	-	PH14B	3510365 R1	0.79	18.0	Thin Wall XLPE Primary Cable	RED	370.0	-	X	-
11	-	-	PH92#111	3510317 R1	0.79	18.0	Thin Wall XLPE Primary Cable	ORANGE	614.0	-	-	-
14	-	-	PH92#114	3510311 R1	0.79	18.0	Thin Wall XLPE Primary Cable	GREY	614.0	-	-	-
17	-	-	PH92#117	3510341 R1	0.79	18.0	Thin Wall XLPE Primary Cable	LIGHT BLUE	614.0	-	-	-
20	-	-	PH92#120	3510341 R1	0.79	18.0	Thin Wall XLPE Primary Cable	LIGHT BLUE	1125.0	-	-	-

Name	Terminal Part Number	V-Min	Name	Wire Part Number	Wire CSA	Wire Spec	Wire Material description	Wire Color Description	Wire Length	End2 Terminal Part Number	End2 Pin Name	End2 Connector
23	-	-	PG92#123	3510299 R1	0.79	18.0	Thin Wall XLPE Primary Cable	LIGHT GREEN	2625.0	-	X	-
27	-	-	WIRE735 166	-	0.0	-	-	-	0.0	-	1	-
27	-	-	-	-	-	-	-	-	-	-	-	-
27	-	-	WIRE735 166	-	0.0	-	-	-	0.0	-	X	-
31	-	-	PH92A131	3510335 R1	0.79	18.0	Thin Wall XLPE Primary Cable	YELLOW 2	614.0	-	-	-
33	-	-	PH92#133	3510335 R1	0.79	18.0	Thin Wall XLPE Primary Cable	YELLOW 2	614.0	-	-	-
34	-	-	PH92#134	3510359 R1	0.79	18.0	Thin Wall XLPE Primary Cable	WHITE	614.0	-	-	-
36	-	-	PH92#136	3510317 R1	0.79	18.0	Thin Wall XLPE Primary Cable	ORANGE	614.0	-	-	-
37	-	-	PH92A137	3510359 R1	0.79	18.0	Thin Wall XLPE Primary Cable	WHITE	614.0	-	-	-
38	-	-	PH92#138	3510317 R1	0.79	18.0	Thin Wall XLPE Primary Cable	ORANGE	614.0	-	-	-

Name	Terminal Part Number	V-Min	Name	Wire Part Number	Wire CSA	Wire Spec	Wire Material description	Wire Color Description	Wire Length	End2 Terminal Part Number	End2 Pin Name	End2 Connector
39	-	-	PH92#139	3510317 R1	0.79	18.0	Thin Wall XLPE Primary Cable	ORANGE	1325.0	-	-	-
40	-	-	PH92#140	3510299 R1	0.79	18.0	Thin Wall XLPE Primary Cable	LIGHT GREEN	900.0	-	-	-
41	-	-	PH92A141	3510329 R1	0.79	18.0	Thin Wall XLPE Primary Cable	TAN	2460.0	-	-	-
41	-	-	PH92A141	3510329 R1	0.79	18.0	Thin Wall XLPE Primary Cable	TAN	2460.0	-	20	1702
42	-	-	PH92#142	3510359 R1	0.79	18.0	Thin Wall XLPE Primary Cable	WHITE	2460.0	-	-	-
43	-	-	PK92#143	3510341 R1	0.79	18.0	Thin Wall XLPE Primary Cable	LIGHT BLUE	2795.0	-	-	-
45	-	-	PG92#145	3510317 R1	0.79	18.0	Thin Wall XLPE Primary Cable	ORANGE	2675.0	-	X	-
50	-	-	PK92#150	3510323 R1	0.79	18.0	Thin Wall XLPE Primary Cable	PINK	2795.0	-	-	-

Name	Terminal Part Number	V-Min	Name	Wire Part Number	Wire CSA	Wire Spec	Wire Material description	Wire Color Description	Wire Length	End2 Terminal Part Number	End2 Pin Name	End2 Connector
51	-	-	PH92#151	3510359 R1	0.79	18.0	Thin Wall XLPE Primary Cable	WHITE	614.0	-	-	-
52	-	-	PH92#152	3510299 R1	0.79	18.0	Thin Wall XLPE Primary Cable	LIGHT GREEN	614.0	-	-	-
53	-	-	PH92#153	3510335 R1	0.79	18.0	Thin Wall XLPE Primary Cable	YELLOW 2	614.0	-	-	-
54	-	-	PH92#154	3510329 R1	0.79	18.0	Thin Wall XLPE Primary Cable	TAN	614.0	-	-	-
55	-	-	PH92#155	3510359 R1	0.79	18.0	Thin Wall XLPE Primary Cable	WHITE	614.0	-	-	-
57	-	-	PH92#157	3510359 R1	0.79	18.0	Thin Wall XLPE Primary Cable	WHITE	614.0	-	-	-
58	-	-	PH92#158	3510299 R1	0.79	18.0	Thin Wall XLPE Primary Cable	LIGHT GREEN	614.0	-	-	-
59	-	-	PH92#159	3510329 R1	0.79	18.0	Thin Wall XLPE Primary Cable	TAN	1325.0	-	-	-

Name	Terminal Part Number	V-Min	Name	Wire Part Number	Wire CSA	Wire Spec	Wire Material description	Wire Color Description	Wire Length	End2 Terminal Part Number	End2 Pin Name	End2 Connector
60	-	-	PH92#160	3510335 R1	0.79	18.0	Thin Wall XLPE Primary Cable	YELLOW 2	900.0	-	-	-
61	-	-	PH92#161	3510329 R1	0.79	18.0	Thin Wall XLPE Primary Cable	TAN	2460.0	-	-	-
61	-	-	PH92#161	3510329 R1	0.79	18.0	Thin Wall XLPE Primary Cable	TAN	2460.0	-	12	1702
63	-	-	PH92#163	3510335 R1	0.79	18.0	Thin Wall XLPE Primary Cable	YELLOW 2	2460.0	-	-	-
65	-	-	PH92#165	3510329 R1	0.79	18.0	Thin Wall XLPE Primary Cable	TAN	2460.0	-	-	-
69	-	-	KE10C	3510293 R1	0.79	18.0	Thin Wall XLPE Primary Cable	BLACK	410.0	-	X	-
70	-	-	PH14C	3510365 R1	0.79	18.0	Thin Wall XLPE Primary Cable	RED	370.0	-	X	-
71	-	-	PH92#171	3510335 R1	0.79	18.0	Thin Wall XLPE Primary Cable	YELLOW 2	614.0	-	-	-

Name	Terminal Part Number	V-Min	Name	Wire Part Number	Wire CSA	Wire Spec	Wire Material description	Wire Color Description	Wire Length	End2 Terminal Part Number	End2 Pin Name	End2 Connector
73	-	-	PH92#173	3510341 R1	0.79	18.0	Thin Wall XLPE Primary Cable	LIGHT BLUE	614.0	-	-	-
74	-	-	PH92#174	3510341 R1	0.79	18.0	Thin Wall XLPE Primary Cable	LIGHT BLUE	614.0	-	-	-
76	-	-	PH92#176	3510335 R1	0.79	18.0	Thin Wall XLPE Primary Cable	YELLOW 2	614.0	-	-	-
77	-	-	PH92#177	3510341 R1	0.79	18.0	Thin Wall XLPE Primary Cable	LIGHT BLUE	614.0	-	-	-
78	-	-	PH92#178	3510359 R1	0.79	18.0	Thin Wall XLPE Primary Cable	WHITE	614.0	-	-	-
79	-	-	PH92#179	3510323 R1	0.79	18.0	Thin Wall XLPE Primary Cable	PINK	614.0	-	-	-
80	-	-	PH92#180	3510317 R1	0.79	18.0	Thin Wall XLPE Primary Cable	ORANGE	1125.0	-	-	-

Connector Name	7151
Part Number	3605713C1
Instances	B6.7 - Backup Light (Dual Daisy Reverse LT)Allison/ZF Trans 1K/2K:Diagram1 B6.7 - Backup Light (Dual Reverse Light)Allison/ZF Trans 1K/2K:Diagram1 B6.7 - Backup Light (Single Reverse Light) Allison 1K/2K Option 1:Diagram1 B6.7 - Backup Light (Single Reverse Light) Allison 1K/2K Option 2:Diagram1 B6.7 - Backup Light (Single Reverse Light) Allison 1K/2K Option 3:Diagram1
Mates	MODU-TCM-A002-10-02

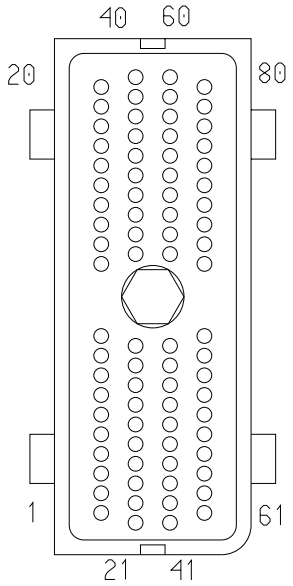

Name	Terminal Part Number	V-Min	Name	Wire Part Number	Wire CSA	Wire Spec	Wire Material description	Wire Color Description	Wire Length	End2 Terminal Part Number	End2 Pin Name	End2 Connect or
65	-	-	PH92#165	3510329 R1	0.79	18.0	Thin Wall XLPE Primary Cable	TAN	2460.0	-	7	1702

Connector Name	71
Part Number	1661375C2
Instances	A26 - Backup Light (Dual Daisy Reverse LT)Allison/ZF Trans 3K/4K:Diagram1 A26 - Backup Light (Dual Daisy Reverse LT)Allison/ZF Trans 3K/4K:Diagram2 A26 - Backup Lights (Dual Daisy Reverse Light) Eaton/Manual Trans:Diagram1 A26 - License Plate Light (LED BOX LAMP Daisy Chain Tail Light):Diagram1 A26 - Rear Light (Tail Light) W_Daisy Chain pair of Box Lamps W/08TRS:Diagram1 A26 - Rear Lights Stop - Daisy Chain:Diagram1 B6.7 - Backup Light (Dual Daisy Reverse LT)Allison/ZF Trans 1K/2K:Diagram1 B6.7 - Backup Light (Dual Daisy Reverse LT)Allison/ZF Trans 3K/4K:Diagram1 B6.7 - Backup Light (Dual Daisy Reverse LT)Allison/ZF Trans 3K/4K:Diagram2 B6.7 - Backup Lights (Dual Daisy Reverse Light) Eaton/Manual Trans:Diagram1 B6.7 - Directional Signal (Turn) W/ DAISY CHAIN BOX LAMPS:Diagram1 B6.7 - Directional Signal (Turn) W/ DAISY CHAIN BOX LAMPS:Diagram2 B6.7 - Directional Signal (Turn) W/ Daisy Chain Box Lamps W/ Plow Lights:Diagram1 B6.7 - Directional Signal (Turn) W/ Daisy Chain Box Lamps W/ Plow Lights:Diagram2 B6.7 - Directional Signal (Turn) W/ Daisy Chain Box Lamps W/ Plow Lights:Diagram3 B6.7 - Directional Signal (Turn) W/ Daisy Chain Box Lamps W/ Plow Lights:Diagram4 B6.7 - License Plate Light (LED BOX LAMP Daisy Chain Tail Light):Diagram1 B6.7 - Rear Light (Tail Light) W_Daisy Chain pair of Box Lamps:Diagram1 B6.7 - Rear Lights Stop - Daisy Chain:Diagram1 L9 - Backup Light (Dual Daisy Reverse Light)Allison/ZF Trans 3K/4K:Diagram1 L9 - Backup Light (Dual Daisy Reverse Light)Allison/ZF Trans 3K/4K:Diagram2

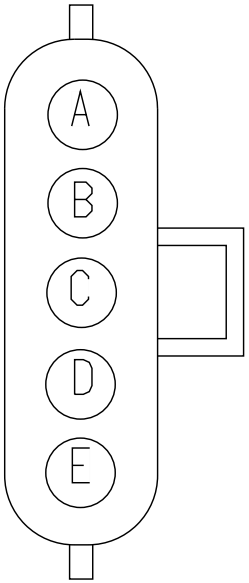

L9 - Backup Lights (Dual Daisy Reverse Light) Eaton/Manual Trans:Diagram1
L9 - Backup Lights (Dual Daisy Reverse Light) Eaton/Manual Trans:Diagram2
L9 - Directional Signal (Turn) W/ DAISY CHAIN BOX LAMPS:Diagram1
L9 - Directional Signal (Turn) W/ DAISY CHAIN BOX LAMPS:Diagram2
L9 - Directional Signal (Turn) W/ Daisy Chain Box Lamps W/ Plow Lights:Diagram1
L9 - Directional Signal (Turn) W/ Daisy Chain Box Lamps W/ Plow Lights:Diagram2
L9 - Directional Signal (Turn) W/ Daisy Chain Box Lamps W/ Plow Lights:Diagram3
L9 - Directional Signal (Turn) W/ Daisy Chain Box Lamps W/ Plow Lights:Diagram4
L9 - License Plate Light (LED BOX LAMP Daisy Chain Tail Light):Diagram1
L9 - Rear Light (Tail Light) W Daisy Chain pair of Box Lamps:Diagram1
L9 - Rear Lights Stop - Daisy Chain:Diagram1

Mates LT-LS_DAISY_10PIN_TAIL_ASS Y-1002-02-02A

Name	Terminal Part Number	V-Min	Name	Wire Part Number	Wire CSA	Wire Spec	Wire Material description	Wire Color Description	Wire Length	End2 Terminal Part Number	End2 Pin Name	End2 Connector
A	-	-	S71C	2643694 R1	1.91	14.0	Std. Wall XLPE Primary Cable	LIGHT BLUE	1385.0	-	A	72
B	-	-	S68C	2643688 R1	1.91	14.0	Std. Wall XLPE Primary Cable	BROWN	1385.0	-	B	72
C	-	-	S57B	2643687 R1	1.91	14.0	Std. Wall XLPE Primary Cable	LIGHT GREEN	1385.0	-	C	72

Name	Terminal Part Number	V-Min	Name	Wire Part Number	Wire CSA	Wire Spec	Wire Material description	Wire Color Description	Wire Length	End2 Terminal Part Number	End2 Pin Name	End2 Connect or
E	-	-	S10-GC	2643689 R1	1.91	14.0	Std. Wall XLPE Primary Cable	WHITE	1385.0	-	E	72

Connector Name	71
Part Number	1661375C2
Instances	A26 - Directional Signal (Turn) W/ Daisy Chain Box Lamps:Diagram1 A26 - Directional Signal (Turn) W/ Daisy Chain Box Lamps, W/ Plow Lights:Diagram1-Option 1 (Snow Plow #1) A26 - Directional Signal (Turn) W/ Daisy Chain Box Lamps, W/ Plow Lights:Diagram1-Option 2 (Snow Plow #2)
Mates	LT-LS_DAISY_10PIN_TAIL_ASS Y-1002-02-02A

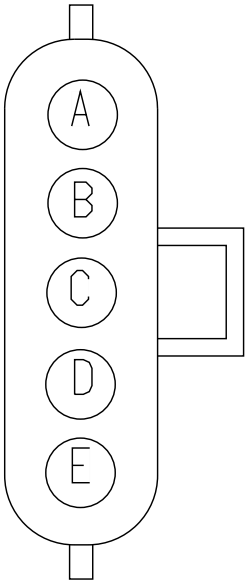

Name	Terminal Part Number	V-Min	Name	Wire Part Number	Wire CSA	Wire Spec	Wire Material description	Wire Color Description	Wire Length	End2 Terminal Part Number	End2 Pin Name	End2 Connect or
C	-	-	S57B	2643687 R1	1.91	14.0	Std. Wall XLPE Primary Cable	LIGHT GREEN	1385.0	-	C	72
E	-	-	S10-GC	2643689 R1	1.91	14.0	Std. Wall XLPE Primary Cable	WHITE	1385.0	-	E	72

Connector Name	71
Part Number	1677851C1
Short Description	CHASSIS TAIL LIGHT
Instances	A26 - Backup Light (Dual Reverse Light)Allison/ZF Trans 3K/4K:Diagram1 A26 - Backup Light (Dual Reverse Light)Allison/ZF Trans 3K/4K:Diagram2 A26 - Backup Lights (Dual Reverse Light) Eaton/Manual Trans:Diagram1 A26 - License Plate Light (LED BOX LAMP Tail Light):Diagram1 A26 - Rear Light (LED BOX LAMP Tail Light) W/08TPS, 08TPR:Diagram1 A26 - Rear Lights Stop - Dual Assembly:Diagram1 B6.7 - Backup Light (Dual Reverse Light)Allison/ZF Trans 1K/2K:Diagram1 B6.7 - Backup Light (Dual Reverse Light)Allison/ZF Trans 3K/4K:Diagram1 B6.7 - Backup Light (Dual Reverse Light)Allison/ZF Trans 3K/4K:Diagram2 B6.7 - Backup Lights (Dual Reverse Light) Eaton/Manual Trans:Diagram1 B6.7 - Directional Signal (Turn) W/ LED BOX LAMPS:Diagram1 B6.7 - Directional Signal (Turn) W/ LED BOX LAMPS:Diagram2 B6.7 - Directional Signal (Turn) W/ LED BOX LAMPS W/Plow Lights:Diagram1 B6.7 - Directional Signal (Turn) W/ LED BOX LAMPS W/Plow Lights:Diagram2 B6.7 - Directional Signal (Turn) W/ LED BOX LAMPS W/Plow Lights:Diagram3 B6.7 - Directional Signal (Turn) W/ LED BOX LAMPS W/Plow Lights:Diagram4 B6.7 - License Plate Light (LED BOX LAMP Tail Light):Diagram1 B6.7 - Rear Light (LED BOX LAMP Tail Light):Diagram1 B6.7 - Rear Lights Stop - Dual Assembly:Diagram1 L9 - Backup Lights (Dual Reverse Light) Eaton/Manual Trans:Diagram1 L9 - Backup Lights (Dual Reverse Light) Eaton/Manual Trans:Diagram2 L9 - Directional Signal (Turn) W/ LED BOX LAMPS:Diagram1 L9 - Directional Signal (Turn) W/ LED BOX LAMPS:Diagram2 L9 - Directional Signal (Turn) W/ LED BOX LAMPS W/Plow Lights:Diagram1

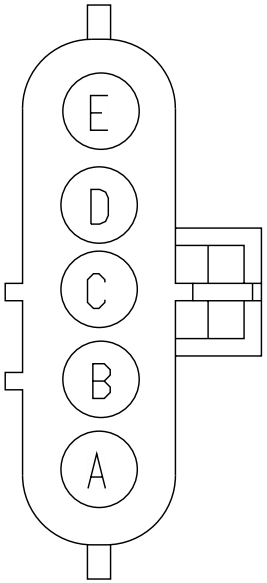

L9 - Directional Signal (Turn) W/ LED BOX LAMPS W/Plow Lights:Diagram2
L9 - Directional Signal (Turn) W/ LED BOX LAMPS W/Plow Lights:Diagram3
L9 - Directional Signal (Turn) W/ LED BOX LAMPS W/Plow Lights:Diagram4
L9 - License Plate Light (LED BOX LAMP Tail Light):Diagram1
L9 - Rear Light (LED BOX LAMP Tail Light):Diagram1
L9 - Rear Light (Tail Light):Diagram1
L9 - Rear Lights Stop - Dual Assembly:Diagram1

Mates 9303A

Name	Terminal Part Number	V-Min	Name	Wire Part Number	Wire CSA	Wire Spec	Wire Material description	Wire Color Description	Wire Length	End2 Terminal Part Number	End2 Pin Name	End2 Connector
A	-	-	71	2643690 R1	1.91	14.0	Std. Wall XLPE Primary Cable	ORANGE	190.0	-	X	-
B	-	-	56	2643690 R1	1.91	14.0	Std. Wall XLPE Primary Cable	ORANGE	740.0	-	B	73
C	-	-	57	2643690 R1	1.91	14.0	Std. Wall XLPE Primary Cable	ORANGE	1390.0	-	C	72
D	-	-	68	2643688 R1	1.91	14.0	Std. Wall XLPE Primary Cable	BROWN	190.0	-	X	-
E	-	-	10-G	2643689 R1	1.91	14.0	Std. Wall XLPE Primary Cable	WHITE	190.0	-	X	-

Connector Name	71
Part Number	1677851C1
Short Description	CHASSIS TAIL LIGHT
Instances	A26 - Directional Signal (Turn) W/ LED BOX LAMPS:Diagram1 A26 - Directional Signal (Turn) W/ LED BOX LAMPS, W/Plow Lights:Diagram1-Option 1 (Snow Plow #1) A26 - Directional Signal (Turn) W/ LED BOX LAMPS, W/Plow Lights:Diagram1-Option 2 (Snow Plow #2)
Mates	9303A

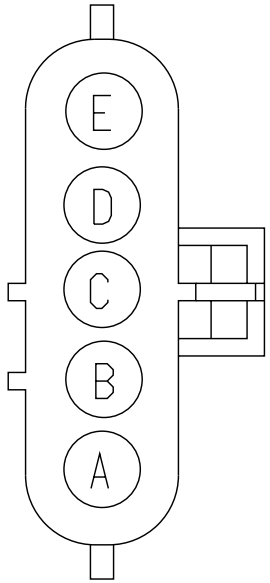

Name	Terminal Part Number	V-Min	Name	Wire Part Number	Wire CSA	Wire Spec	Wire Material description	Wire Color Description	Wire Length	End2 Terminal Part Number	End2 Pin Name	End2 Connect or
B	-	-	56	2643690 R1	1.91	14.0	Std. Wall XLPE Primary Cable	ORANGE	740.0	-	B	73
C	-	-	57	2643690 R1	1.91	14.0	Std. Wall XLPE Primary Cable	ORANGE	1390.0	-	C	72
E	-	-	10-G	2643689 R1	1.91	14.0	Std. Wall XLPE Primary Cable	WHITE	190.0	-	X	-

Connector Name	7200
Part Number	3626435C1
Short Description	REMOTE SENSE
Instances	A26 - Bosch LIL165 LIL200 Alternator W/Sensor:Diagram2 A26 - Delco Remy 28SI Alternator W/Sensor:Diagram2 A26 - Delco Remy 36SI Alternator W/Sensor:Diagram2 A26 - Delco Remy 40SI Alternator W/Sensor:Diagram2 A26 - Leece-Neville - LN 325A Alternator W/Sensor:Diagram2 A26 - Leece-Neville AVI160-210A/240A Alternator W/ Sensor:Diagram2
Mates	123

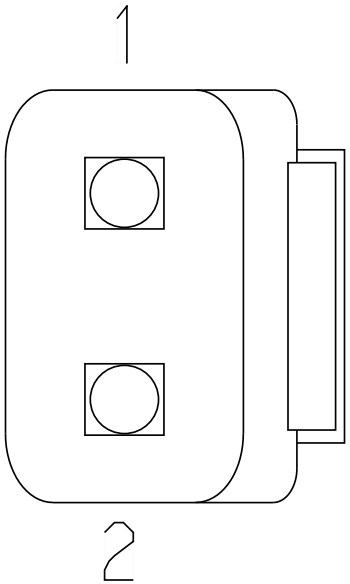

Name	Terminal Part Number	V-Min	Name	Wire Part Number	Wire CSA	Wire Spec	Wire Material description	Wire Color Description	Wire Length	End2 Terminal Part Number	End2 Pin Name	End2 Connect or
1	-	-	JT1B	2643692 R1	1.91	14.0	Std. Wall XLPE Primary Cable	TAN	310.0	-	A	2F

Connector Name	72
Part Number	1661375C2
Instances	A26 - Backup Light (Dual Daisy Reverse LT)Allison/ZF Trans 3K/4K:Diagram1 A26 - Backup Light (Dual Daisy Reverse LT)Allison/ZF Trans 3K/4K:Diagram2 A26 - Backup Lights (Dual Daisy Reverse Light) Eaton/Manual Trans:Diagram1 A26 - License Plate Light (LED BOX LAMP Daisy Chain Tail Light):Diagram1 A26 - Rear Light (Tail Light) W_Daisy Chain pair of Box Lamps W/08TRS:Diagram1 A26 - Rear Lights Stop - Daisy Chain:Diagram1 B6.7 - Backup Light (Dual Daisy Reverse LT)Allison/ZF Trans 1K/2K:Diagram1 B6.7 - Backup Light (Dual Daisy Reverse LT)Allison/ZF Trans 3K/4K:Diagram1 B6.7 - Backup Light (Dual Daisy Reverse LT)Allison/ZF Trans 3K/4K:Diagram2 B6.7 - Backup Lights (Dual Daisy Reverse Light) Eaton/Manual Trans:Diagram1 B6.7 - Directional Signal (Turn) W/ DAISY CHAIN BOX LAMPS:Diagram1 B6.7 - Directional Signal (Turn) W/ DAISY CHAIN BOX LAMPS:Diagram2 B6.7 - Directional Signal (Turn) W/ Daisy Chain Box Lamps W/ Plow Lights:Diagram1 B6.7 - Directional Signal (Turn) W/ Daisy Chain Box Lamps W/ Plow Lights:Diagram2 B6.7 - Directional Signal (Turn) W/ Daisy Chain Box Lamps W/ Plow Lights:Diagram3 B6.7 - Directional Signal (Turn) W/ Daisy Chain Box Lamps W/ Plow Lights:Diagram4 B6.7 - License Plate Light (LED BOX LAMP Daisy Chain Tail Light):Diagram1 B6.7 - Rear Light (Tail Light) W_Daisy Chain pair of Box Lamps:Diagram1 B6.7 - Rear Lights Stop - Daisy Chain:Diagram1 L9 - Backup Light (Dual Daisy Reverse Light)Allison/ZF Trans 3K/4K:Diagram1 L9 - Backup Light (Dual Daisy Reverse Light)Allison/ZF Trans 3K/4K:Diagram2

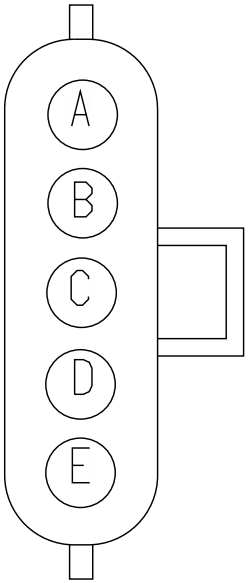

L9 - Backup Lights (Dual Daisy Reverse Light) Eaton/Manual Trans:Diagram1
L9 - Backup Lights (Dual Daisy Reverse Light) Eaton/Manual Trans:Diagram2
L9 - Directional Signal (Turn) W/ DAISY CHAIN BOX LAMPS:Diagram1
L9 - Directional Signal (Turn) W/ DAISY CHAIN BOX LAMPS:Diagram2
L9 - Directional Signal (Turn) W/ Daisy Chain Box Lamps W/ Plow Lights:Diagram1
L9 - Directional Signal (Turn) W/ Daisy Chain Box Lamps W/ Plow Lights:Diagram2
L9 - Directional Signal (Turn) W/ Daisy Chain Box Lamps W/ Plow Lights:Diagram3
L9 - Directional Signal (Turn) W/ Daisy Chain Box Lamps W/ Plow Lights:Diagram4
L9 - License Plate Light (LED BOX LAMP Daisy Chain Tail Light):Diagram1
L9 - Rear Light (Tail Light) W Daisy Chain pair of Box Lamps:Diagram1
L9 - Rear Lights Stop - Daisy Chain:Diagram1

Mates LT-RS_DAISY_5PIN_TAIL_ASSY -1002-02-02A

Name	Terminal Part Number	V-Min	Name	Wire Part Number	Wire CSA	Wire Spec	Wire Material description	Wire Color Description	Wire Length	End2 Terminal Part Number	End2 Pin Name	End2 Connector
A	-	-	S71C	2643694 R1	1.91	14.0	Std. Wall XLPE Primary Cable	LIGHT BLUE	1385.0	-	A	71
B	-	-	S68C	2643688 R1	1.91	14.0	Std. Wall XLPE Primary Cable	BROWN	1385.0	-	B	71
C	-	-	S57B	2643687 R1	1.91	14.0	Std. Wall XLPE Primary Cable	LIGHT GREEN	1385.0	-	C	71

Name	Terminal Part Number	V-Min	Name	Wire Part Number	Wire CSA	Wire Spec	Wire Material description	Wire Color Description	Wire Length	End2 Terminal Part Number	End2 Pin Name	End2 Connect or
E	-	-	S10-GC	2643689 R1	1.91	14.0	Std. Wall XLPE Primary Cable	WHITE	1385.0	-	E	71

Connector Name	72
Part Number	1661375C2
Instances	A26 - Backup Light (Dual Reverse Light)Allison/ZF Trans 3K/4K:Diagram1 A26 - Backup Light (Dual Reverse Light)Allison/ZF Trans 3K/4K:Diagram2 A26 - Backup Lights (Dual Reverse Light) Eaton/Manual Trans:Diagram1 A26 - License Plate Light (LED BOX LAMP Tail Light):Diagram1 A26 - Rear Light (LED BOX LAMP Tail Light) W/08TPS, 08TPR:Diagram1 A26 - Rear Lights Stop - Dual Assembly:Diagram1 B6.7 - Backup Light (Dual Reverse Light)Allison/ZF Trans 1K/2K:Diagram1 B6.7 - Backup Light (Dual Reverse Light)Allison/ZF Trans 3K/4K:Diagram1 B6.7 - Backup Light (Dual Reverse Light)Allison/ZF Trans 3K/4K:Diagram2 B6.7 - Backup Lights (Dual Reverse Light) Eaton/Manual Trans:Diagram1 B6.7 - Directional Signal (Turn) W/ LED BOX LAMPS:Diagram1 B6.7 - Directional Signal (Turn) W/ LED BOX LAMPS:Diagram2 B6.7 - Directional Signal (Turn) W/ LED BOX LAMPS W/Plow Lights:Diagram1 B6.7 - Directional Signal (Turn) W/ LED BOX LAMPS W/Plow Lights:Diagram2 B6.7 - Directional Signal (Turn) W/ LED BOX LAMPS W/Plow Lights:Diagram3 B6.7 - Directional Signal (Turn) W/ LED BOX LAMPS W/Plow Lights:Diagram4 B6.7 - License Plate Light (LED BOX LAMP Tail Light):Diagram1 B6.7 - Rear Light (LED BOX LAMP Tail Light):Diagram1 B6.7 - Rear Lights Stop - Dual Assembly:Diagram1 L9 - Backup Lights (Dual Reverse Light) Eaton/Manual Trans:Diagram1 L9 - Backup Lights (Dual Reverse Light) Eaton/Manual Trans:Diagram2 L9 - Directional Signal (Turn) W/ LED BOX LAMPS:Diagram1 L9 - Directional Signal (Turn) W/ LED BOX LAMPS:Diagram2 L9 - Directional Signal (Turn) W/ LED BOX LAMPS W/Plow Lights:Diagram1 L9 - Directional Signal (Turn) W/ LED BOX LAMPS W/Plow Lights:Diagram2

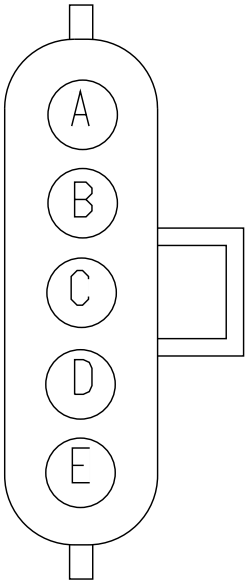

L9 - Directional Signal (Turn) W/ LED BOX LAMPS W/Plow Lights:Diagram3
L9 - Directional Signal (Turn) W/ LED BOX LAMPS W/Plow Lights:Diagram4
L9 - License Plate Light (LED BOX LAMP Tail Light):Diagram1
L9 - Rear Light (LED BOX LAMP Tail Light):Diagram1
L9 - Rear Light (Tail Light):Diagram1
L9 - Rear Lights Stop - Dual Assembly:Diagram1

Mates LT-RS_TAIL_ASSY-1002-02-01A

Name	Terminal Part Number	V-Min	Name	Wire Part Number	Wire CSA	Wire Spec	Wire Material description	Wire Color Description	Wire Length	End2 Terminal Part Number	End2 Pin Name	End2 Connect or
A	-	-	71B	2643690 R1	1.91	14.0	Std. Wall XLPE Primary Cable	ORANGE	1200.0	-	X	-
C	-	-	57	2643690 R1	1.91	14.0	Std. Wall XLPE Primary Cable	ORANGE	1390.0	-	C	71
D	-	-	68B	2643688 R1	1.91	14.0	Std. Wall XLPE Primary Cable	BROWN	1200.0	-	X	-
E	-	-	10-GB	2643689 R1	1.91	14.0	Std. Wall XLPE Primary Cable	WHITE	1200.0	-	X	-

Connector Name	72
Part Number	1661375C2
Instances	A26 - Directional Signal (Turn) W/ Daisy Chain Box Lamps:Diagram1 A26 - Directional Signal (Turn) W/ Daisy Chain Box Lamps, W/ Plow Lights:Diagram1-Option 1 (Snow Plow #1) A26 - Directional Signal (Turn) W/ Daisy Chain Box Lamps, W/ Plow Lights:Diagram1-Option 2 (Snow Plow #2)
Mates	LT-RS_DAISY_5PIN_TAIL_ASSY -1002-02-02A

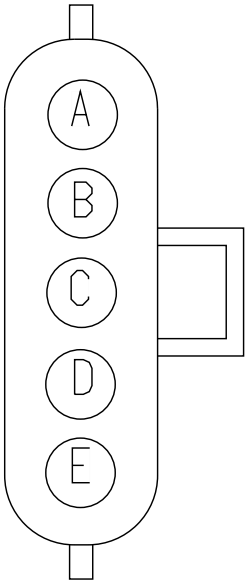

Name	Terminal Part Number	V-Min	Name	Wire Part Number	Wire CSA	Wire Spec	Wire Material description	Wire Color Description	Wire Length	End2 Terminal Part Number	End2 Pin Name	End2 Connect or
C	-	-	S57B	2643687 R1	1.91	14.0	Std. Wall XLPE Primary Cable	LIGHT GREEN	1385.0	-	C	71
E	-	-	S10-GC	2643689 R1	1.91	14.0	Std. Wall XLPE Primary Cable	WHITE	1385.0	-	E	71

Connector Name	72
Part Number	1661375C2
Instances	A26 - Directional Signal (Turn) W/ LED BOX LAMPS:Diagram1 A26 - Directional Signal (Turn) W/ LED BOX LAMPS, W/Plow Lights:Diagram1-Option 1 (Snow Plow #1) A26 - Directional Signal (Turn) W/ LED BOX LAMPS, W/Plow Lights:Diagram1-Option 2 (Snow Plow #2)
Mates	LT-RS_TAIL_ASSY-1002-02-01A

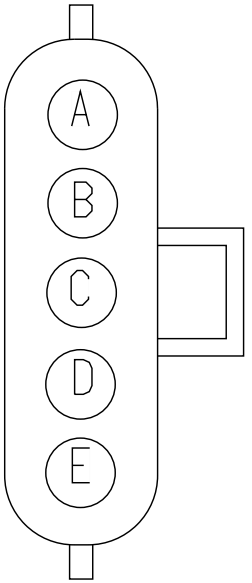

Name	Terminal Part Number	V-Min	Name	Wire Part Number	Wire CSA	Wire Spec	Wire Material description	Wire Color Description	Wire Length	End2 Terminal Part Number	End2 Pin Name	End2 Connect or
C	-	-	57	2643690 R1	1.91	14.0	Std. Wall XLPE Primary Cable	ORANGE	1390.0	-	C	71
E	-	-	10-GB	2643689 R1	1.91	14.0	Std. Wall XLPE Primary Cable	WHITE	1200.0	-	X	-

Connector Name	73
Part Number	1661375C2
Instances	A26 - Backup Light (Dual Reverse Light)Allison/ZF Trans 3K/4K:Diagram1 A26 - Backup Light (Dual Reverse Light)Allison/ZF Trans 3K/4K:Diagram2 A26 - Backup Lights (Dual Reverse Light) Eaton/Manual Trans:Diagram1 A26 - License Plate Light (LED BOX LAMP Tail Light):Diagram1 A26 - Rear Light (LED BOX LAMP Tail Light) W/08TPS, 08TPR:Diagram1 A26 - Rear Lights Stop - Dual Assembly:Diagram1 B6.7 - Backup Light (Dual Reverse Light)Allison/ZF Trans 1K/2K:Diagram1 B6.7 - Backup Light (Dual Reverse Light)Allison/ZF Trans 3K/4K:Diagram1 B6.7 - Backup Light (Dual Reverse Light)Allison/ZF Trans 3K/4K:Diagram2 B6.7 - Backup Lights (Dual Reverse Light) Eaton/Manual Trans:Diagram1 B6.7 - Directional Signal (Turn) W/ LED BOX LAMPS:Diagram1 B6.7 - Directional Signal (Turn) W/ LED BOX LAMPS:Diagram2 B6.7 - Directional Signal (Turn) W/ LED BOX LAMPS W/Plow Lights:Diagram1 B6.7 - Directional Signal (Turn) W/ LED BOX LAMPS W/Plow Lights:Diagram2 B6.7 - Directional Signal (Turn) W/ LED BOX LAMPS W/Plow Lights:Diagram3 B6.7 - Directional Signal (Turn) W/ LED BOX LAMPS W/Plow Lights:Diagram4 B6.7 - License Plate Light (LED BOX LAMP Tail Light):Diagram1 B6.7 - Rear Light (LED BOX LAMP Tail Light):Diagram1 B6.7 - Rear Lights Stop - Dual Assembly:Diagram1 L9 - Backup Lights (Dual Reverse Light) Eaton/Manual Trans:Diagram1 L9 - Backup Lights (Dual Reverse Light) Eaton/Manual Trans:Diagram2 L9 - Directional Signal (Turn) W/ LED BOX LAMPS:Diagram1 L9 - Directional Signal (Turn) W/ LED BOX LAMPS:Diagram2 L9 - Directional Signal (Turn) W/ LED BOX LAMPS W/Plow Lights:Diagram1 L9 - Directional Signal (Turn) W/ LED BOX LAMPS W/Plow Lights:Diagram2

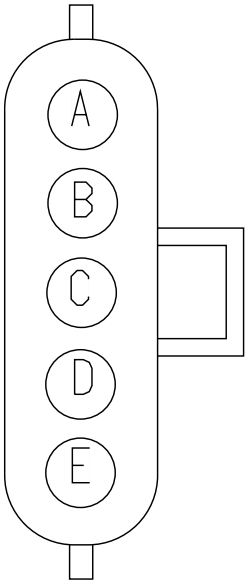

L9 - Directional Signal (Turn) W/ LED BOX LAMPS W/Plow Lights:Diagram3
L9 - Directional Signal (Turn) W/ LED BOX LAMPS W/Plow Lights:Diagram4
L9 - License Plate Light (LED BOX LAMP Tail Light):Diagram1
L9 - Rear Light (LED BOX LAMP Tail Light):Diagram1
L9 - Rear Light (Tail Light):Diagram1
L9 - Rear Lights Stop - Dual Assembly:Diagram1

Mates LT-LS_TAIL_ASSY-1002-02-01A

Name	Terminal Part Number	V-Min	Name	Wire Part Number	Wire CSA	Wire Spec	Wire Material description	Wire Color Description	Wire Length	End2 Terminal Part Number	End2 Pin Name	End2 Connect or
A	-	-	71A	2643690 R1	1.91	14.0	Std. Wall XLPE Primary Cable	ORANGE	550.0	-	X	-
B	-	-	56	2643690 R1	1.91	14.0	Std. Wall XLPE Primary Cable	ORANGE	740.0	-	B	71
D	-	-	68A	2643688 R1	1.91	14.0	Std. Wall XLPE Primary Cable	BROWN	550.0	-	X	-
E	-	-	10-GA	2643689 R1	1.91	14.0	Std. Wall XLPE Primary Cable	WHITE	550.0	-	X	-

Connector Name	73
Part Number	1661375C2
Instances	A26 - Directional Signal (Turn) W/ LED BOX LAMPS:Diagram1 A26 - Directional Signal (Turn) W/ LED BOX LAMPS, W/Plow Lights:Diagram1-Option 1 (Snow Plow #1) A26 - Directional Signal (Turn) W/ LED BOX LAMPS, W/Plow Lights:Diagram1-Option 2 (Snow Plow #2)
Mates	LT-LS_TAIL_ASSY-1002-02-01A

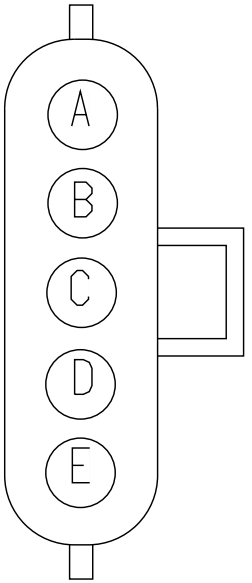

Name	Terminal Part Number	V-Min	Name	Wire Part Number	Wire CSA	Wire Spec	Wire Material description	Wire Color Description	Wire Length	End2 Terminal Part Number	End2 Pin Name	End2 Connect or
B	-	-	56	2643690 R1	1.91	14.0	Std. Wall XLPE Primary Cable	ORANGE	740.0	-	B	71
E	-	-	10-GA	2643689 R1	1.91	14.0	Std. Wall XLPE Primary Cable	WHITE	550.0	-	X	-

Connector Name 7500M

Part Number 1661778C1

Instances B6.7 - Body Builder Lighting - Combined Turn and Stop Lamps (Manual):Diagram1
B6.7 - Body Builder Lighting - Combined Turn and Stop Lamps (Manual):Diagram2
B6.7 - Body Builder Lighting - Combined Turn and Stop Lamps (Manual):Diagram3
B6.7 - WORK LIGHT W BackUP 1 BULB:Diagram1
L9 - Back-Up Alarm (Manual) W/ Tailboard:Diagram1
L9 - Back-Up Alarm (Manual) W/O Tailboard:Diagram1
L9 - Body Builder Lighting - Combined Turn and Stop Lamps (Manual):Diagram1
L9 - Body Builder Lighting - Combined Turn and Stop Lamps (Manual):Diagram2
L9 - Body Builder Lighting - Combined Turn and Stop Lamps (Manual):Diagram3

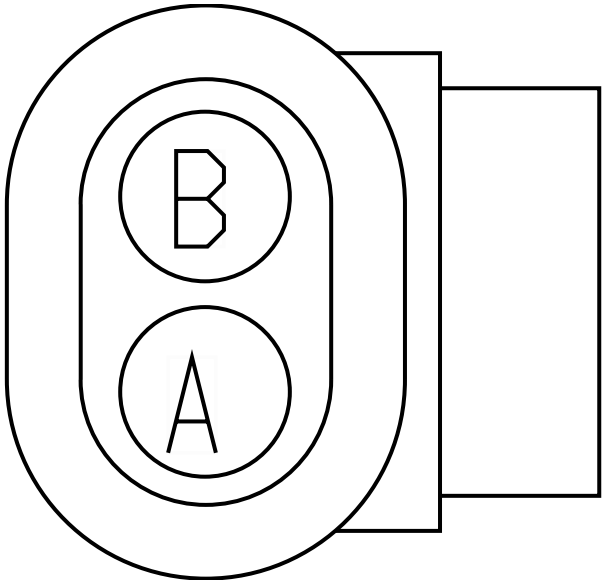

Name	Terminal Part Number	V-Min	Name	Wire Part Number	Wire CSA	Wire Spec	Wire Material description	Wire Color Description	Wire Length	End2 Terminal Part Number	End2 Pin Name	End2 Connect or
2	-	-	MJ71B	2645915 R1	0.79	18.0	TXL 150C	TAN	1990.0	-	7	1702
A	-	-	MJ71A	2645921 R1	0.79	18.0	TXL 150C	ORANGE	1990.0	-	6	1702
B	-	-	MJ71B	2645915 R1	0.79	18.0	TXL 150C	TAN	1990.0	-	7	1702

Connector Name	7500M
Part Number	1661778C1
Instances	A26 - Backup Lights (Dual Reverse Light) Eaton/Manual Trans:Diagram1 A26 - Backup Lights (Single Reverse Light) Eaton/Manual Trans:Diagram1 A26 - Backup Lights (Single Reverse Lights) Eaton/Manual Trans:Diagram1 A26 - Backup Lights (Single Reverse Lights) Eaton/Manual Trans Option2:Diagram1
Mates	SW-TRANSSWITCH-1023-01-02A

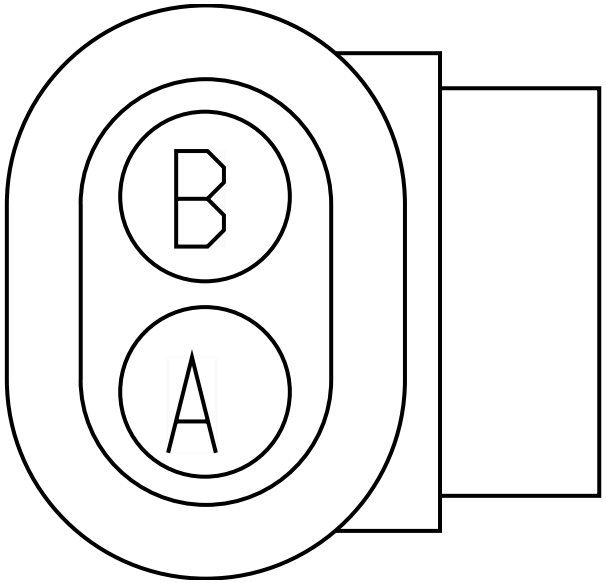

Name	Terminal Part Number	V-Min	Name	Wire Part Number	Wire CSA	Wire Spec	Wire Material description	Wire Color Description	Wire Length	End2 Terminal Part Number	End2 Pin Name	End2 Connect or
1	-	-	KW71A	2643682 R1	1.16	16.0	Std. Wall XLPE Primary Cable	ORANGE	2850.0	-	6	1702
2	-	-	KW71B	2643682 R1	1.16	16.0	Std. Wall XLPE Primary Cable	ORANGE	2850.0	-	7	1702

Connector Name	7500M
Part Number	1661778C1
Instances	B6.7 - Backup Lights (Dual Daisy Reverse Light) Eaton/Manual Trans:Diagram1 B6.7 - Backup Lights (Dual Reverse Light) Eaton/Manual Trans:Diagram1 B6.7 - Backup Lights (Single Reverse Light) Eaton/Manual Trans:Diagram1 B6.7 - Backup Lights (Single Reverse Lights) Eaton/Manual Trans Option 1:Diagram1 B6.7 - Backup Lights (Single Reverse Lights) Eaton/Manual Trans Option 2:Diagram1
Mates	SW-TRANSSWITCH-1023-01-02A

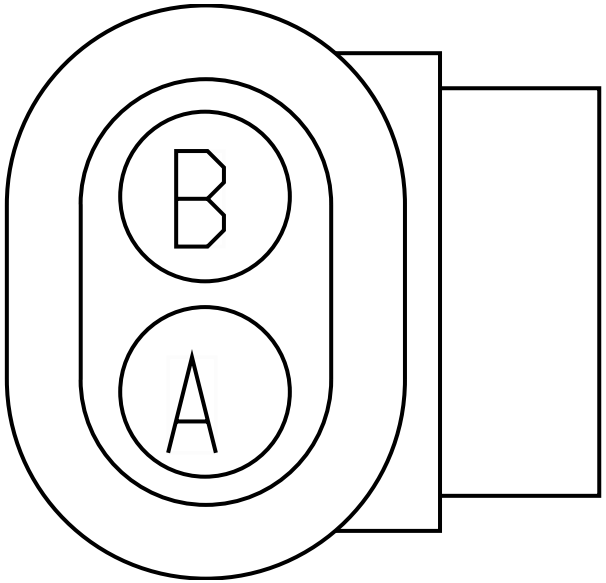

Name	Terminal Part Number	V-Min	Name	Wire Part Number	Wire CSA	Wire Spec	Wire Material description	Wire Color Description	Wire Length	End2 Terminal Part Number	End2 Pin Name	End2 Connect or
1	-	-	MJ71A	2645921 R1	0.79	18.0	TXL 150C	ORANGE	1990.0	-	6	1702
2	-	-	MJ71B	2645915 R1	0.79	18.0	TXL 150C	TAN	1990.0	-	7	1702

Connector Name	7500W
Part Number	1661778C1
Instances	A26 - Back-Up Alarm (Manual) W/ Tailboard:Diagram1 A26 - Back-Up Alarm (Manual) W/O Tailboard:Diagram1 A26 - Backup Alarm (Switch to 5 Pin 08TKC Tailboard to Alarm) (Manual):Diagram1 A26 - Backup Alarm (Switch to 5 Pin 08TKC Tailboard. Alarm Plugs In) (Manual):Diagram1 A26 - Backup Lights (Reverse) W/Less Power Module Eaton/ Manual Trans:Diagram1 A26 - Backup Lights (Single Reverse Lights) Eaton/Manual Transmission:Diagram1 A26 - Body Builder Lighting - BOC, 08HBX (Manual):Diagram1 A26 - Work Light W/ Backup 1 Bulb W/Manual W/ RKE:Diagram1-Combination2
Mates	SW-TRANSSWITCH-1023-01-02A

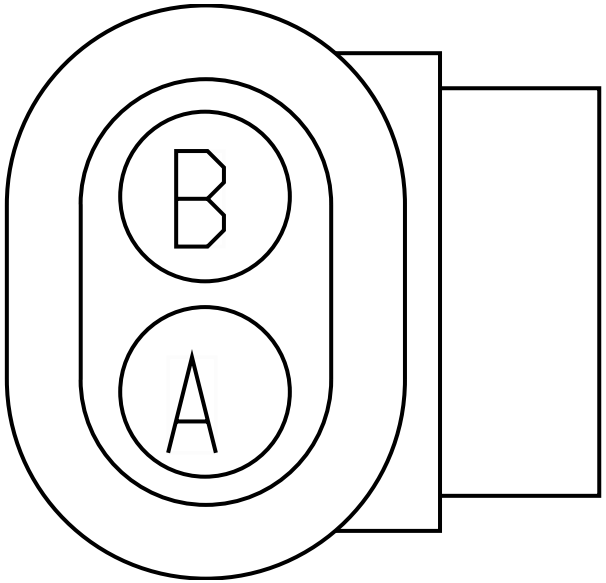

Name	Terminal Part Number	V-Min	Name	Wire Part Number	Wire CSA	Wire Spec	Wire Material description	Wire Color Description	Wire Length	End2 Terminal Part Number	End2 Pin Name	End2 Connect or
1	-	-	KW71A	2643682 R1	1.16	16.0	Std. Wall XLPE Primary Cable	ORANGE	2850.0	-	6	1702
2	-	-	KW71B	2643682 R1	1.16	16.0	Std. Wall XLPE Primary Cable	ORANGE	2850.0	-	7	1702

Connector Name	7500W
Part Number	1661778C1
Instances	L9 - Back-Up Alarm (Manual) W/ Tailboard:Diagram2 L9 - Back-Up Alarm (Manual) W/O Tailboard:Diagram2 L9 - Body Builder Lighting - Combined Turn and Stop Lamps (Manual):Diagram4 L9 - Body Builder Lighting - Combined Turn and Stop Lamps (Manual):Diagram5 L9 - Body Builder Lighting - Combined Turn and Stop Lamps (Manual):Diagram6
Mates	SW-TRANSSWITCH-1023-01-02A

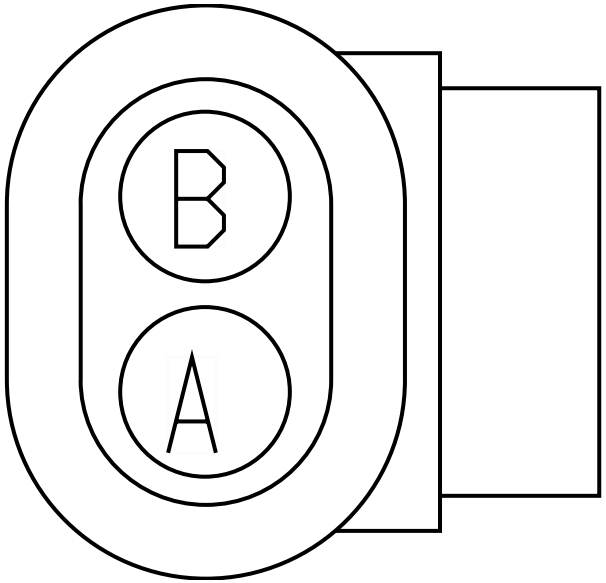

Name	Terminal Part Number	V-Min	Name	Wire Part Number	Wire CSA	Wire Spec	Wire Material description	Wire Color Description	Wire Length	End2 Terminal Part Number	End2 Pin Name	End2 Connect or
A	-	-	KH71	3510318 R1	1.16	16.0	Thin Wall XLPE Primary Cable	ORANGE	2310.0	-	6	1702
B	-	-	KH71A	3510318 R1	1.16	16.0	Thin Wall XLPE Primary Cable	ORANGE	2310.0	-	7	1702

Connector Name	7500W
Part Number	1661778C1
Instances	A26 - Backup Lights (Dual Daisy Reverse Light) Eaton/Manual Trans:Diagram1 A26 - WORK LIGHT W Backup 1 Bulb:Diagram1 A26 - WORK LIGHT W Backup 1 Bulb:Diagram2
Mates	SW-TRANSSWITCH-1023-01-02A

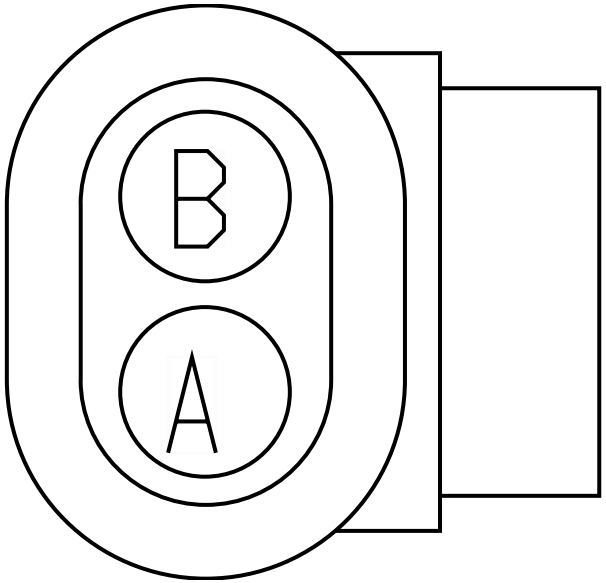

Name	Terminal Part Number	V-Min	Name	Wire Part Number	Wire CSA	Wire Spec	Wire Material description	Wire Color Description	Wire Length	End2 Terminal Part Number	End2 Pin Name	End2 Connect or
1	-	-	KW71A	2643682 R1	1.16	16.0	Std. Wall XLPE Primary Cable	ORANGE	2850.0	-	6	1702
2	-	-	KW71B	2643682 R1	1.16	16.0	Std. Wall XLPE Primary Cable	ORANGE	2850.0	-	7	1702

Connector Name	7500W
Part Number	1661778C1
Instances	A26 - Work Light W/ Backup 1 Bulb W/Manual W/ RKE:Diagram1-Combination1

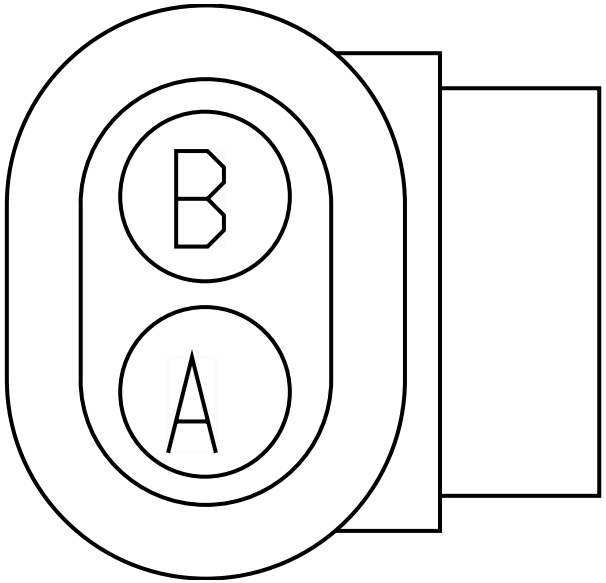

Name	Terminal Part Number	V-Min	Name	Wire Part Number	Wire CSA	Wire Spec	Wire Material description	Wire Color Description	Wire Length	End2 Terminal Part Number	End2 Pin Name	End2 Connect or
2	-	-	KW71B	2643682 R1	1.16	16.0	Std. Wall XLPE Primary Cable	ORANGE	2850.0	-	-	-

Connector Name	7500
Part Number	3605713C1
Instances	A26 - Rear Lights Stop - Daisy Chain:Diagram1 A26 - Rear Lights Stop - Dual Assembly:Diagram1 A26 - Rear Lights Stop - Single Assemby:Diagram1 A26 - Rear Lights Stop - Single Assemby Jumper Harness W/08TKC, 08THM:Diagram1 A26 - Rear Lights Stop - Single Assemby W/08TKJ:Diagram1 A26 - Remote Start/Stop:Diagram1 A26/B6.7/L9 - Trans Range Inhibit (J1939 Comm):Diagram1 A26/B6.7/L9 - Transfer Case - High/Low Air Sol:Diagram1 A26/B6.7/L9 - Transfer Case - High/Neu/Low Air Sol:Diagram1 A26/B6.7/L9 - Transmission - MODE Selection:Diagram1 A26/B6.7/L9 - Trip Odometer (w/ECM & TCM):Diagram1 A26/B6.7/L9 - Vehicle Speedometer System (Automatic XMSN):Diagram1 B6.7 - Back-Up Alarm (Manual) W/ Tailboard:Diagram1 B6.7 - Back-Up Alarm (Manual) W/O Tailboard:Diagram1 B6.7 - CAN Layout:Powertrain Standard J1939 (500Kbps) B6.7 - Powertrain J1939 Allison 3k/4k:B6.7 - Allison 3k/4k Transmission B6.7 - Rear Lights Stop - Daisy Chain:Diagram1 B6.7 - Rear Lights Stop - Dual Assembly:Diagram1 B6.7 - Rear Lights Stop - Single Assemby:Diagram1 B6.7 - Remote Start/Stop:Diagram1 B6.7 - Remote Start/Stop w/ Emergency Pump:Diagram1 B6.7 - Starter Interlocks (BCM Controlled with Input from Allison 3K/4K TCM):Diagram2 B6.7 - T-Handle for Allison Without Park Position:Diagram1 B6.7 - T-Handle for Allison Without Park Position:Diagram2 B6.7 - Transmission (Allison 3K/4K):Diagram2 B6.7 - Transmission Power Take Off (Auto Trans Single PTO w/21 Parameters):Diagram1 B6.7 - Transmission Shifter (Stalk Shifter Allison):Diagram1 B6.7 - Transmission Shifter (T-Handle for Allison With Park Position):Diagram1 B6.7 - Transmission Shifter (T-Handle for Allison With Park Position):Diagram2 B6.7 - Transmission Shifter Allison 5th Gen Push Button(SURHD):Diagram1 L9 - Auto Neutral (Allison with Multiplex Switch and Confirmation Telltale):Diagram2

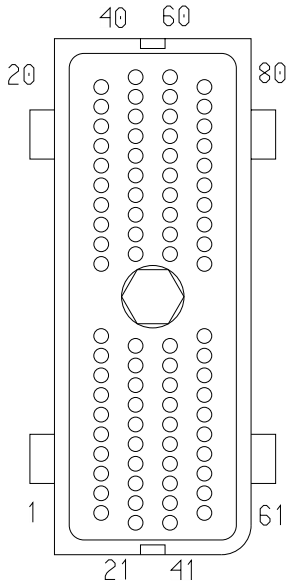

L9 - Auto Neutral (Allison without Multiplex Switch and Confirmation Telltale):Diagram2
L9 - Backup Light (Dual Daisy Reverse Light)Allison/ZF Trans 3K/4K:Diagram2
L9 - Backup Light (Single Reverse Light) Allison 3K/4K Option 1:Diagram2
L9 - Backup Light (Single Reverse Light) Allison 3K/4K Option 2:Diagram2
L9 - Backup Light (Single Reverse Light) Allison 3K/4K Option 3:Diagram2
L9 - Backup Light (Single Reverse Light)Allison:Diagram2
L9 - CAN Layout:Powertrain Standard J1939 (500kbps)
L9 - Hill Start Aid (Bendix):Diagram1
L9 - Hill Start Aid (Bendix):Diagram2
L9 - Hill Start Aid (WABCO):Diagram1
L9 - Powertrain J1939 Allison 3k/4k:L9 - Powertrain J1939 Allison 3k/4k
L9 - Rear Lights Stop - Daisy Chain:Diagram1
L9 - Rear Lights Stop - Dual Assembly:Diagram1
L9 - Rear Lights Stop - Single Assemby:Diagram1
L9 - Remote Start/Stop:Diagram1
L9 - Remote Start/Stop w/ Emergency Pump:Diagram1
L9 - Starter Interlocks (BCM Controlled with Input from Allison 3K/4K TCM):Diagram2
L9 - Transmission (Allison 3K/4K):Diagram1
L9 - Transmission Oil Temperature-Automatic Trans:Diagram1
L9 - Transmission Oil Temperature-Automatic Trans w/Aux Gauge:Diagram1
L9 - Transmission Power Take Off (Auto Trans Single PTO w/21 Parameters):Diagram1
L9 - Transmission Power Take Off (Auto Trans with Lectradrive):Diagram1
L9 - Transmission Power Take Off (Single PTO W/ RPM and Auto Trans):Diagram1
L9 - Transmission Shifter (Stalk Shifter Allison):Diagram1

Name	Terminal Part Number	V-Min	Name	Wire Part Number	Wire CSA	Wire Spec	Wire Material description	Wire Color Description	Wire Length	End2 Terminal Part Number	End2 Pin Name	End2 Connector
1	-	-	PR92#101	3510341 R1	0.79	18.0	Thin Wall XLPE Primary Cable	LIGHT BLUE	2785.0	-	-	-
1	-	-	PN92#101	3510341 R1	0.79	18.0	Thin Wall XLPE Primary Cable	LIGHT BLUE	2785.0	-	-	-
2	-	-	MJ71B	2645915 R1	0.79	18.0	TXL 150C	TAN	1990.0	-	7	1702
3	-	-	PR92#103	3510335 R1	0.79	18.0	Thin Wall XLPE Primary Cable	YELLOW 2	2635.0	-	X	-
3	-	-	PN92#103	3510335 R1	0.79	18.0	Thin Wall XLPE Primary Cable	YELLOW 2	2635.0	-	X	-
5	-	-	PM92#105	3510317 R1	0.79	18.0	Thin Wall XLPE Primary Cable	ORANGE	2785.0	-	-	-
6	-	-	-	-	-	-	-	-	-	-	-	-
6	-	-	WIRE735168	-	0.0	-	-	-	0.0	-	1	-
6	-	-	WIRE755206	-	0.0	-	-	-	0.0	-	PIN1	-
6	-	-	WIRE725680	-	0.0	-	-	-	0.0	-	PIN1	-
6	-	-	WIRE735168	-	0.0	-	-	-	0.0	-	PIN1	-

Name	Terminal Part Number	V-Min	Name	Wire Part Number	Wire CSA	Wire Spec	Wire Material description	Wire Color Description	Wire Length	End2 Terminal Part Number	End2 Pin Name	End2 Connector
9	-	-	PM92#109	3510359 R1	0.79	18.0	Thin Wall XLPE Primary Cable	WHITE	2310.0	-	-	-
9	-	-	LA92#109	3510359 R1	0.79	18.0	Thin Wall XLPE Primary Cable	WHITE	310.0	-	X	-
10	-	-	PM92#110	3510365 R1	0.79	18.0	Thin Wall XLPE Primary Cable	RED	910.0	-	X	-
11	-	-	PW92#111	2645921 R1	0.79	18.0	TXL 150C	ORANGE	520.0	-	-	-
12	-	-	PT92A112	2645918 R1	0.79	18.0	TXL 150C	PINK	520.0	-	-	-
12	-	-	PR92A112	3510323 R1	0.79	18.0	Thin Wall XLPE Primary Cable	PINK	310.0	-	X	-
15	-	-	PR92#115	3510359 R1	0.79	18.0	Thin Wall XLPE Primary Cable	WHITE	570.0	-	-	-
16	-	-	PW92#116	2645922 R1	0.79	18.0	TXL 150C	LIGHT BLUE	520.0	-	-	-
17	-	-	RN92#117	3510341 R1	0.79	18.0	Thin Wall XLPE Primary Cable	LIGHT BLUE	2820.0	-	-	-
17	-	-	RM92A117	3510341 R1	0.79	18.0	Thin Wall XLPE Primary Cable	LIGHT BLUE	180.0	-	X	-

Name	Terminal Part Number	V-Min	Name	Wire Part Number	Wire CSA	Wire Spec	Wire Material description	Wire Color Description	Wire Length	End2 Terminal Part Number	End2 Pin Name	End2 Connector
17	-	-	RL92#117	3510341 R1	0.79	18.0	Thin Wall XLPE Primary Cable	LIGHT BLUE	2785.0	-	-	-
17	-	-	RN92#117	3510341 R1	0.79	18.0	Thin Wall XLPE Primary Cable	LIGHT BLUE	2820.0	-	25	1702
18	-	-	PW92#118	2645914 R1	0.79	18.0	TXL 150C	GREY	520.0	-	-	-
19	-	-	PR92#119	3510341 R1	0.79	18.0	Thin Wall XLPE Primary Cable	LIGHT BLUE	630.0	-	-	-
20	-	-	PE92#120	3510353 R1	0.79	18.0	Thin Wall XLPE Primary Cable	DARK BLUE	785.0	-	-	-
20	-	-	PB92A120	2645922 R1	0.79	18.0	TXL 150C	LIGHT BLUE	520.0	-	-	-
20	-	-	PW92A120	2645922 R1	0.79	18.0	TXL 150C	LIGHT BLUE	520.0	-	-	-
22	-	-	PM92#122	3510335 R1	0.79	18.0	Thin Wall XLPE Primary Cable	YELLOW 2	2785.0	-	-	-
23	-	-	PM92#123	3510299 R1	0.79	18.0	Thin Wall XLPE Primary Cable	LIGHT GREEN	2785.0	-	-	-
24	-	-	PR92#124	3510359 R1	0.79	18.0	Thin Wall XLPE Primary Cable	WHITE	2820.0	-	-	-

Name	Terminal Part Number	V-Min	Name	Wire Part Number	Wire CSA	Wire Spec	Wire Material description	Wire Color Description	Wire Length	End2 Terminal Part Number	End2 Pin Name	End2 Connector
25	-	-	PW47#125	3510311 R1	0.79	18.0	Thin Wall XLPE Primary Cable	GREY	2820.0	-	-	-
25	-	-	KH47#125	3510311 R1	0.79	18.0	Thin Wall XLPE Primary Cable	GREY	2565.0	-	-	-
27	-	-	-	-	-	-	-	-	-	-	-	-
27	-	-	WIRE735 160	-	0.0	-	-	-	0.0	-	1	-
27	-	-	WIRE755 207	-	0.0	-	-	-	0.0	-	PIN1	-
27	-	-	WIRE725 681	-	0.0	-	-	-	0.0	-	PIN1	-
27	-	-	WIRE735 160	-	0.0	-	-	-	0.0	-	PIN1	-
30	-	-	PM92#130	3510335 R1	0.79	18.0	Thin Wall XLPE Primary Cable	YELLOW 2	2785.0	-	-	-
31	-	-	PT92#131	2645910 R1	0.79	18.0	TXL 150C	YELLOW 2	520.0	-	-	-
31	-	-	PR92A131	3510335 R1	0.79	18.0	Thin Wall XLPE Primary Cable	YELLOW 2	335.0	-	X	-
33	-	-	PW92#133	2645910 R1	0.79	18.0	TXL 150C	YELLOW 2	520.0	-	-	-
34	-	-	PM92#134	3510335 R1	0.79	18.0	Thin Wall XLPE Primary Cable	YELLOW 2	2820.0	-	-	-

Name	Terminal Part Number	V-Min	Name	Wire Part Number	Wire CSA	Wire Spec	Wire Material description	Wire Color Description	Wire Length	End2 Terminal Part Number	End2 Pin Name	End2 Connector
34	-	-	PM92#134	3510335 R1	0.79	18.0	Thin Wall XLPE Primary Cable	YELLOW 2	2820.0	-	19	1702
36	-	-	PW92#136	2645921 R1	0.79	18.0	TXL 150C	ORANGE	520.0	-	-	-
37	-	-	PW92#137	2645919 R1	0.79	18.0	TXL 150C	WHITE	520.0	-	-	-
39	-	-	PD48#139	3510317 R1	0.79	18.0	Thin Wall XLPE Primary Cable	ORANGE	1140.0	-	-	-
39	-	-	PB48#139	2645921 R1	0.79	18.0	TXL 150C	ORANGE	2410.0	-	-	-
39	-	-	PW48#139	2645921 R1	0.79	18.0	TXL 150C	ORANGE	2180.0	-	-	-
40	-	-	PW47#140	3510299 R1	0.79	18.0	Thin Wall XLPE Primary Cable	LIGHT GREEN	620.0	-	-	-
41	-	-	RL92A141	3510329 R1	0.79	18.0	Thin Wall XLPE Primary Cable	TAN	2820.0	-	-	-
42	-	-	RL92#142	3510359 R1	0.79	18.0	Thin Wall XLPE Primary Cable	WHITE	2785.0	-	-	-
42	-	-	RM92A142	3510359 R1	0.79	18.0	Thin Wall XLPE Primary Cable	WHITE	180.0	-	X	-

Name	Terminal Part Number	V-Min	Name	Wire Part Number	Wire CSA	Wire Spec	Wire Material description	Wire Color Description	Wire Length	End2 Terminal Part Number	End2 Pin Name	End2 Connector
43	-	-	PM92#143	3510341 R1	0.79	18.0	Thin Wall XLPE Primary Cable	LIGHT BLUE	2785.0	-	-	-
45	-	-	RL92#145	3510317 R1	0.79	18.0	Thin Wall XLPE Primary Cable	ORANGE	2785.0	-	-	-
45	-	-	PY92#145	3510317 R1	0.79	18.0	Thin Wall XLPE Primary Cable	ORANGE	2820.0	-	-	-
51	-	-	PW92#151	2645919 R1	0.79	18.0	TXL 150C	WHITE	520.0	-	-	-
52	-	-	PW92#152	2645920 R1	0.79	18.0	TXL 150C	LIGHT GREEN	520.0	-	-	-
54	-	-	PW31#154	2645915 R1	0.79	18.0	TXL 150C	TAN	520.0	-	-	-
55	-	-	PW92#155	2645919 R1	0.79	18.0	TXL 150C	WHITE	520.0	-	-	-
56	-	-	PR92#156	3510323 R1	0.79	18.0	Thin Wall XLPE Primary Cable	PINK	2820.0	-	-	-
58	-	-	PR92A158	3510299 R1	0.79	18.0	Thin Wall XLPE Primary Cable	LIGHT GREEN	360.0	-	X	-
58	-	-	PT92#158	2645920 R1	0.79	18.0	TXL 150C	LIGHT GREEN	520.0	-	-	-
59	-	-	PD48#159	3510329 R1	0.79	18.0	Thin Wall XLPE Primary Cable	TAN	1140.0	-	-	-

Name	Terminal Part Number	V-Min	Name	Wire Part Number	Wire CSA	Wire Spec	Wire Material description	Wire Color Description	Wire Length	End2 Terminal Part Number	End2 Pin Name	End2 Connector
59	-	-	PB48#159	2645915 R1	0.79	18.0	TXL 150C	TAN	2410.0	-	-	-
59	-	-	PW48#159	2645915 R1	0.79	18.0	TXL 150C	TAN	2180.0	-	-	-
60	-	-	PW47#160	3510335 R1	0.79	18.0	Thin Wall XLPE Primary Cable	YELLOW 2	620.0	-	-	-
61	-	-	PR92#161	3510317 R1	0.79	18.0	Thin Wall XLPE Primary Cable	ORANGE	2820.0	-	-	-
62	-	-	PM92#162	3510335 R1	0.79	18.0	Thin Wall XLPE Primary Cable	YELLOW 2	2785.0	-	-	-
63	-	-	PM92#163	3510335 R1	0.79	18.0	Thin Wall XLPE Primary Cable	YELLOW 2	2820.0	-	8	1702
64	-	-	PM92#164	3510341 R1	0.79	18.0	Thin Wall XLPE Primary Cable	LIGHT BLUE	2785.0	-	-	-
65	-	-	PM92#165	3510329 R1	0.79	18.0	Thin Wall XLPE Primary Cable	TAN	2820.0	-	7	1702
65	-	-	PM92#165	3510329 R1	0.79	18.0	Thin Wall XLPE Primary Cable	TAN	2820.0	-	-	-

Name	Terminal Part Number	V-Min	Name	Wire Part Number	Wire CSA	Wire Spec	Wire Material description	Wire Color Description	Wire Length	End2 Terminal Part Number	End2 Pin Name	End2 Connector
69	-	-	PM92#169	3510359 R1	0.79	18.0	Thin Wall XLPE Primary Cable	WHITE	2310.0	-	-	-
69	-	-	LA92#169	3510359 R1	0.79	18.0	Thin Wall XLPE Primary Cable	WHITE	310.0	-	X	-
70	-	-	PM92#170	3510365 R1	0.79	18.0	Thin Wall XLPE Primary Cable	RED	910.0	-	X	-
71	-	-	PW92#171	2645910 R1	0.79	18.0	TXL 150C	YELLOW 2	520.0	-	-	-
74	-	-	PW92#174	2645922 R1	0.79	18.0	TXL 150C	LIGHT BLUE	520.0	-	-	-
75	-	-	PR92#175	3510317 R1	0.79	18.0	Thin Wall XLPE Primary Cable	ORANGE	520.0	-	X	-
76	-	-	PW92#176	2645910 R1	0.79	18.0	TXL 150C	YELLOW 2	520.0	-	-	-
77	-	-	PW92#177	2645920 R1	0.79	18.0	TXL 150C	LIGHT GREEN	520.0	-	-	-
80	-	-	PB92#180	2645921 R1	0.79	18.0	TXL 150C	ORANGE	520.0	-	-	-
80	-	-	PE92#180	3510317 R1	0.79	18.0	Thin Wall XLPE Primary Cable	ORANGE	785.0	-	-	-
80	-	-	PW92#180	2645921 R1	0.79	18.0	TXL 150C	ORANGE	520.0	-	-	-

Connector Name	7500
Part Number	3605713C1
Instances	A26 - Backup Light (Dual Daisy Reverse LT)Allison/ZF Trans 3K/4K:Diagram2 A26 - Backup Light (Dual Reverse Light)Allison/ZF Trans 3K/4K:Diagram2 A26 - Backup Light (Single Reverse Light) Allison 3K/4K:Diagram2 A26 - Backup Light (Single Reverse Light) Allison 3K/4K Option2:Diagram2 A26 - Backup Light (Single Reverse Light)Allison 3K/4K:Diagram2 B6.7 - Backup Light (Dual Reverse Light)Allison/ZF Trans 3K/4K:Diagram2
Mates	MODU-TCM-A002-10-03

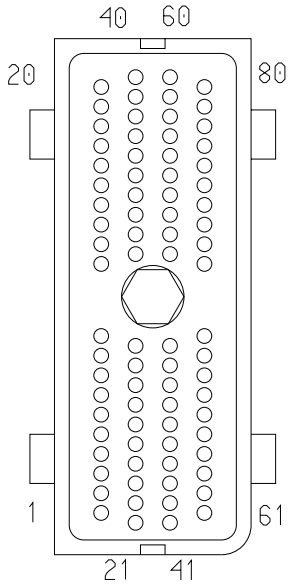

Name	Terminal Part Number	V-Min	Name	Wire Part Number	Wire CSA	Wire Spec	Wire Material description	Wire Color Description	Wire Length	End2 Terminal Part Number	End2 Pin Name	End2 Connect or
65	-	-	PM92#165	3510329 R1	0.79	18.0	Thin Wall XLPE Primary Cable	TAN	2820.0	-	7	1702
65	-	-	TD92#165	3510329 R1	0.79	18.0	Thin Wall XLPE Primary Cable	TAN	3555.0	-	7	1702

Connector Name	7500
Part Number	3605713C1
Instances	B6.7 - Backup Light (Dual Daisy Reverse LT)Allison/ZF Trans 3K/4K:Diagram2 B6.7 - Backup Light (Single Reverse Light) Allison 3K/4K Option 1:Diagram2 B6.7 - Backup Light (Single Reverse Light) Allison 3K/4K Option 2:Diagram2 B6.7 - Backup Light (Single Reverse Light) Allison 3K/4K Option 3:Diagram2
Mates	MODU-TCM-A002-10-03

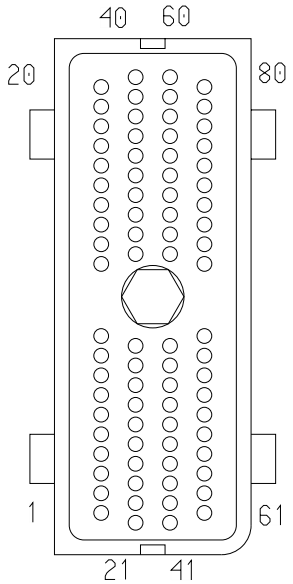

Name	Terminal Part Number	V-Min	Name	Wire Part Number	Wire CSA	Wire Spec	Wire Material description	Wire Color Description	Wire Length	End2 Terminal Part Number	End2 Pin Name	End2 Connect or
65	-	-	PM92#165	3510329 R1	0.79	18.0	Thin Wall XLPE Primary Cable	TAN	2820.0	-	7	1702

Connector Name	7500
Part Number	3605713C1
Instances	A26 - Separate Rear Lights (Stop) W/08TVH:Diagram1 B6.7 - Starter Interlocks (BCM Controlled with Input from Allison 3K/4K TCM):Diagram2 L9 - Starter Interlocks (BCM Controlled with Input from Allison 3K/4K TCM):Diagram2
Mates	MODU-TCM-A002-10-03

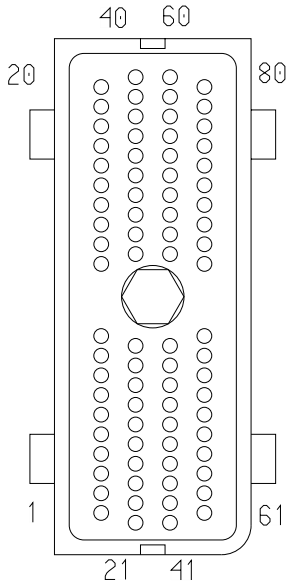

Name	Terminal Part Number	V-Min	Name	Wire Part Number	Wire CSA	Wire Spec	Wire Material description	Wire Color Description	Wire Length	End2 Terminal Part Number	End2 Pin Name	End2 Connect or
6	-	-	-	-	-	-	-	-	-	-	-	-
27	-	-	-	-	-	-	-	-	-	-	-	-
41	-	-	RL92A141	3510329 R1	0.79	18.0	Thin Wall XLPE Primary Cable	TAN	2820.0	-	20	1702

Connector Name	7501
Part Number	3577412C1
Instances	A26 - Transmissions Electrical I/O (Eaton Ultrashift):Diagram1
Mates	DEV-Electronic_Clutch_Actu ator-5045-01-02A

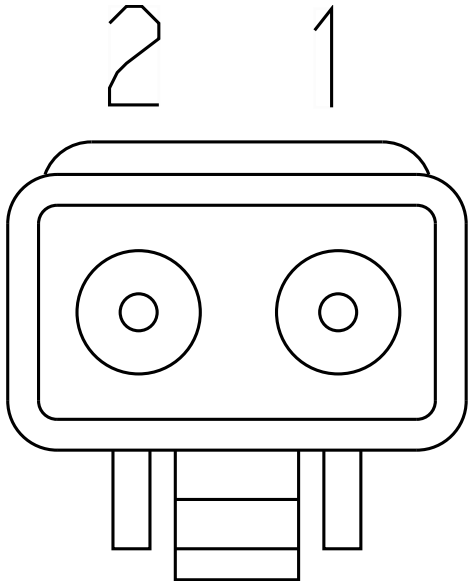

Name	Terminal Part Number	V-Min	Name	Wire Part Number	Wire CSA	Wire Spec	Wire Material description	Wire Color Description	Wire Length	End2 Terminal Part Number	End2 Pin Name	End2 Connect or
1	-	-	WC11-G	3510363 R1	4.81	10.0	Thin Wall XLPE Primary Cable	WHITE	700.0	-	X	-
2	-	-	VV14N	2643698 R1	4.81	10.0	Std. Wall XLPE Primary Cable	RED	4495.0	-	-	-

Connector Name	7501
Part Number	3577412C1
Instances	L9 - Transmissions Electrical I/O (Eaton Ultrashift):Diagram1
Mates	DEV-Electronic_Clutch_Actu ator-5045-01-02A

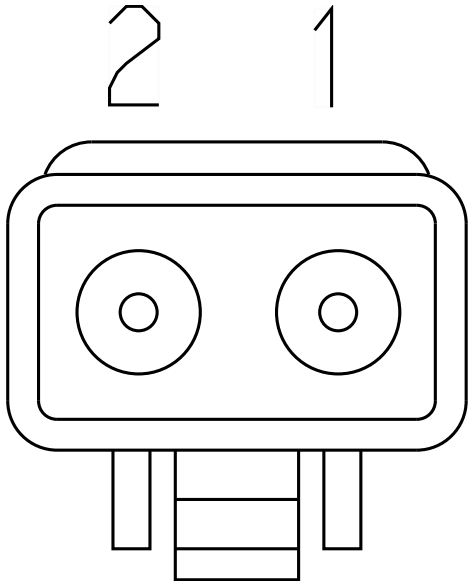

Name	Terminal Part Number	V-Min	Name	Wire Part Number	Wire CSA	Wire Spec	Wire Material description	Wire Color Description	Wire Length	End2 Terminal Part Number	End2 Pin Name	End2 Connect or
1	-	-	KH10-G	3510363 R1	4.81	10.0	Thin Wall XLPE Primary Cable	WHITE	775.0	-	X	-
2	-	-	KH14SA	3510369 R1	4.81	10.0	Thin Wall XLPE Primary Cable	RED	1810.0	-	X	-

Connector Name	7502
Part Number	587567C91
Instances	A26 - Transmissions Electrical I/O (Eaton Ultrashift):Diagram1
Mates	CONN-BODY_BUILDER-5045-01- 02A

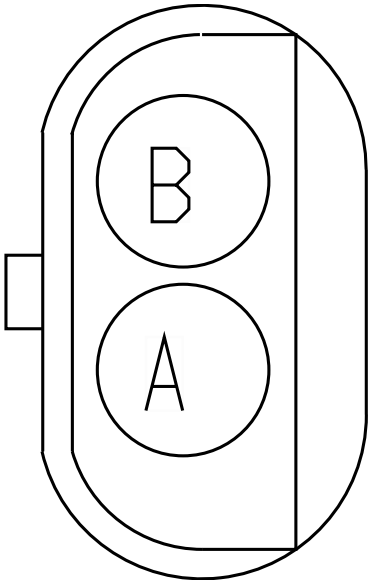

Name	Terminal Part Number	V-Min	Name	Wire Part Number	Wire CSA	Wire Spec	Wire Material description	Wire Color Description	Wire Length	End2 Terminal Part Number	End2 Pin Name	End2 Connect or
A	-	-	VY92DP	2643676 R1	0.79	18.0	Std. Wall XLPE Primary Cable	TAN	285.0	-	18	7105
B	-	-	VY92DR	2643676 R1	0.79	18.0	Std. Wall XLPE Primary Cable	TAN	285.0	-	34	7105

Connector Name	7600
Part Number	3662425C1
Instances	A26 - Vehicle Speedometer System (Manual XMSN):Diagram1
Mates	SNSR-VSS-5055-01-01A

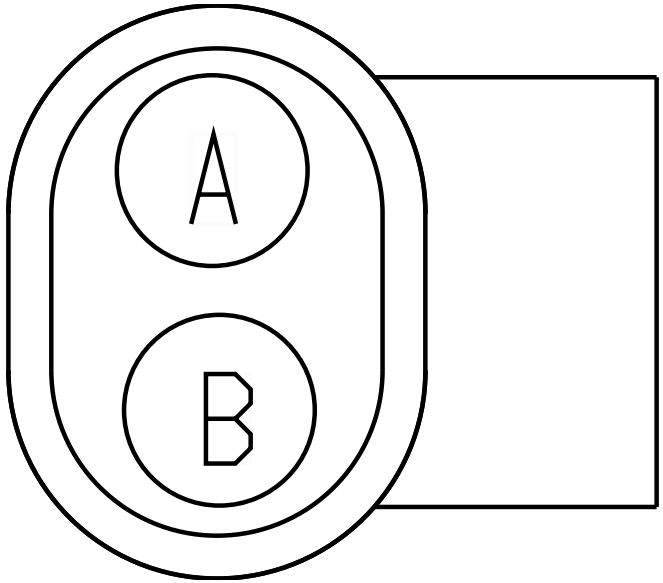

Name	Terminal Part Number	V-Min	Name	Wire Part Number	Wire CSA	Wire Spec	Wire Material description	Wire Color Description	Wire Length	End2 Terminal Part Number	End2 Pin Name	End2 Connect or
A	-	-	XN47	3510311 R1	0.79	18.0	Thin Wall XLPE Primary Cable	GREY	2695.0	-	91	6018
B	-	-	XN47A	3510311 R1	0.79	18.0	Thin Wall XLPE Primary Cable	GREY	2695.0	-	92	6018

Connector Name	7600
Part Number	3662425C1
Instances	B6.7 - Vehicle Speedometer System (Manual XMSN):Diagram1
Mates	SNSR-VSS-5055-01-01A

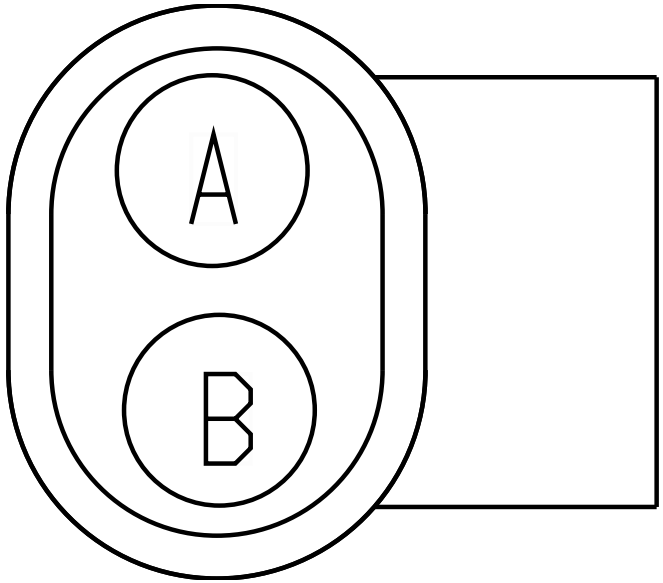

Name	Terminal Part Number	V-Min	Name	Wire Part Number	Wire CSA	Wire Spec	Wire Material description	Wire Color Description	Wire Length	End2 Terminal Part Number	End2 Pin Name	End2 Connect or
A	-	-	KM47B	3510310 R1	0.53	20.0	Thin Wall XLPE Primary Cable	GREY	1460.0	-	60	6000
B	-	-	KM47C	3510310 R1	0.53	20.0	Thin Wall XLPE Primary Cable	GREY	1460.0	-	59	6000

Connector Name	7700K
Part Number	3536864C1
Instances	L9 - Transmission Oil Temperature-Manual Trans w/Aux Gauge:Diagram1-Combination1 L9 - Transmission Oil Temperature-Manual Transmission:Diagram1-Combination1
Mates	SNSR-TRANS_OIL_TEMP-5046-0 1-01A

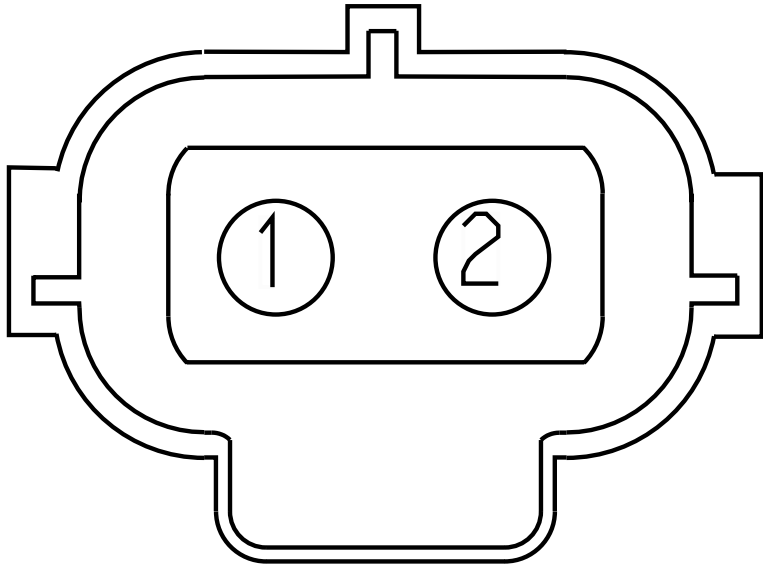

Name	Terminal Part Number	V-Min	Name	Wire Part Number	Wire CSA	Wire Spec	Wire Material description	Wire Color Description	Wire Length	End2 Terminal Part Number	End2 Pin Name	End2 Connect or
1	-	-	CA31B	2645915 R1	0.79	18.0	TXL 150C	TAN	2580.0	-	13	1702
2	-	-	CA9T	2645914 R1	0.79	18.0	TXL 150C	GREY	2720.0	-	-	-

Connector Name	7700L
Part Number	3536864C1
Instances	A26 - Transmission Oil Temperature-Manual Trans:Diagram1 A26 - Transmission Oil Temperature-Manual Trans:Diagram2 A26 - Transmission Oil Temperature-Manual Trans w/Aux Gauge:Diagram1 A26 - Transmission Oil Temperature-Manual Trans w/Aux Gauge:Diagram2
Mates	SNSR-TRANS_OIL_TEMP-5046-0 1-01A

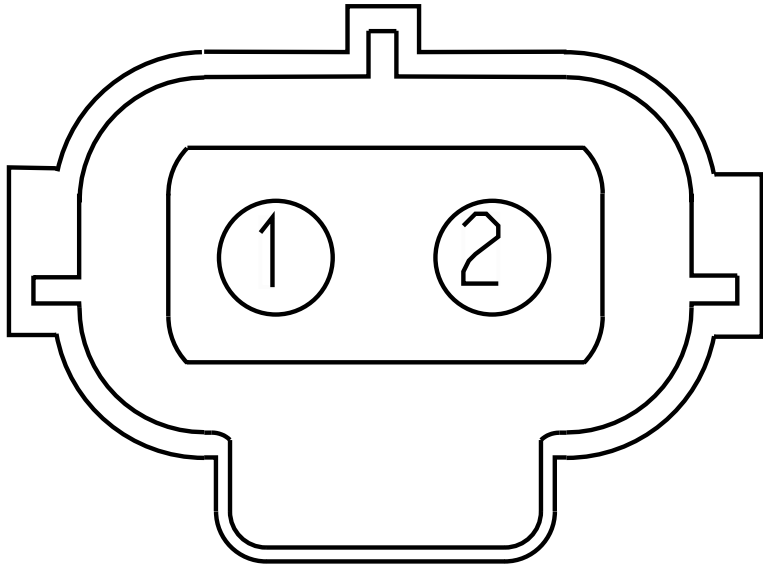

Name	Terminal Part Number	V-Min	Name	Wire Part Number	Wire CSA	Wire Spec	Wire Material description	Wire Color Description	Wire Length	End2 Terminal Part Number	End2 Pin Name	End2 Connect or
1	-	-	KK31	2643676 R1	0.79	18.0	Std. Wall XLPE Primary Cable	TAN	2990.0	-	13	1702
1	-	-	WP31	2643676 R1	0.79	18.0	Std. Wall XLPE Primary Cable	TAN	3520.0	-	13	1702
2	-	-	WP9AAD	2643673 R1	0.79	18.0	Std. Wall XLPE Primary Cable	GREY	3235.0	-	-	-
2	-	-	KK9AAD	2643673 R1	0.79	18.0	Std. Wall XLPE Primary Cable	GREY	2705.0	-	-	-

Connector Name	7700M
Part Number	3536864C1
Instances	B6.7 - Transmission Oil Temperature-Manual Trans:Diagram1 B6.7 - Transmission Oil Temperature-Manual Trans (w/Aux Gauge):Diagram1
Mates	SNSR-TRANS_OIL_TEMP-5046-0 1-01A

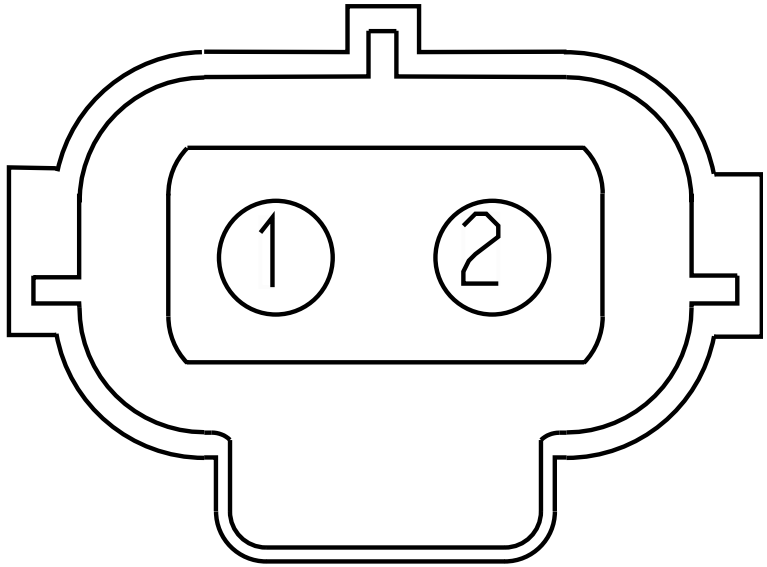

Name	Terminal Part Number	V-Min	Name	Wire Part Number	Wire CSA	Wire Spec	Wire Material description	Wire Color Description	Wire Length	End2 Terminal Part Number	End2 Pin Name	End2 Connect or
1	-	-	CA31B	2645915 R1	0.79	18.0	TXL 150C	TAN	2580.0	-	13	1702
2	-	-	CA9T	2645914 R1	0.79	18.0	TXL 150C	GREY	2720.0	-	-	-

Connector Name	7800
Part Number	BLUNT_SL_VC
Instances	A26 - Transmission Power Take Off (Auto Trans Dual PTO W/ 42 Parameters):Diagram1 A26 - Transmission Power Take Off (Auto Trans Single PTO w/21 Parameters):Diagram1 A26 - Transmission Power Take Off (Manual Trans Dual PTO W/ 42 Parameters):Diagram1 A26 - Transmission Power Take Off (Manual Trans Single PTO w/ 21 Parameters):Diagram1 A26 - Transmission Power Take Off (Single Input Configurable pull up or pull down):Diagram1 B6.7 - Transmission Power Take Off (Auto Trans Single PTO w/21 Parameters):Diagram1 B6.7 - Transmission Power Take Off (Manual Trans Single PTO w/21 Parameters):Diagram1 B6.7 - Transmission Power Take Off (Single Input configurable pull up or pull down):Diagram1 L9 - Transmission Power Take Off (Auto Trans Single PTO w/21 Parameters):Diagram1 L9 - Transmission Power Take Off (Manual Trans Single PTO w/21 Parameters):Diagram1 L9 - Transmission Power Take Off (Single Input configurable pull up or pull down):Diagram1
Mates	BLUNT-PTO-5047-03-01A

Name	Terminal Part Number	V-Min	Name	Wire Part Number	Wire CSA	Wire Spec	Wire Material description	Wire Color Description	Wire Length	End2 Terminal Part Number	End2 Pin Name	End2 Connect or
A	-	-	MA88	2643687 R1	1.91	14.0	Std. Wall XLPE Primary Cable	LIGHT GREEN	2640.0	-	14	1702
A	-	-	KM88	2643678 R1	1.16	16.0	Std. Wall XLPE Primary Cable	LIGHT GREEN	3850.0	-	14	1702

Connector Name 7801A

Part Number 3683465C1

Instances B6.7 - CAN Layout:Powertrain Standard J1939 (500Kbps)
B6.7 - Powertrain J1939 Manual Transmission:B6.7 - Manual Transmission
L9 - CAN Layout:Powertrain Standard J1939 (500kbps)
L9 - Powertrain J1939 Manual Transmission:Powertrain Standard J1939 (500kbps)

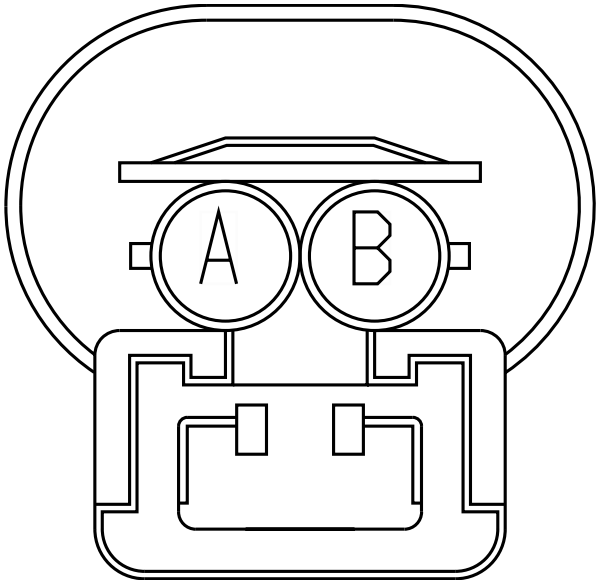

Name	Terminal Part Number	V-Min	Name	Wire Part Number	Wire CSA	Wire Spec	Wire Material description	Wire Color Description	Wire Length	End2 Terminal Part Number	End2 Pin Name	End2 Connect or
A	-	-	WIRE725657	-	0.0	-	-	-	0.0	-	X	-
B	-	-	WIRE725659	-	0.0	-	-	-	0.0	-	X	-

Connector Name	7801B
Part Number	3683465C1
Instances	B6.7 - CAN Layout:Powertrain Standard J1939 (500Kbps) B6.7 - Powertrain J1939 Allison 1k/2k:B6.7 - Allison 1k/2k Transmission B6.7 - Powertrain J1939 Allison 3k/4k:B6.7 - Allison 3k/4k Transmission
Mates	RES-TERMINATING-POWERTRAIN -500K-0002-00-02A

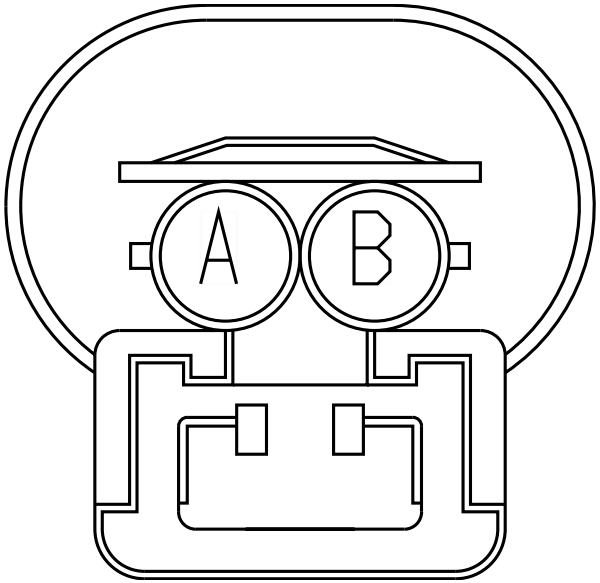

Name	Terminal Part Number	V-Min	Name	Wire Part Number	Wire CSA	Wire Spec	Wire Material description	Wire Color Description	Wire Length	End2 Terminal Part Number	End2 Pin Name	End2 Connect or
A	-	-	WIRE735172	-	0.0	-	-	-	0.0	-	1	-
A	-	-	WIRE735167	-	0.0	-	-	-	0.0	-	1	-
A	-	-	WIRE735167	-	0.0	-	-	-	0.0	-	PIN1	-
A	-	-	WIRE735172	-	0.0	-	-	-	0.0	-	X	-
B	-	-	WIRE735162	-	0.0	-	-	-	0.0	-	1	-
B	-	-	WIRE735161	-	0.0	-	-	-	0.0	-	1	-
B	-	-	WIRE735161	-	0.0	-	-	-	0.0	-	PIN1	-
B	-	-	WIRE735162	-	0.0	-	-	-	0.0	-	X	-

Connector Name	7801M
Part Number	3683465C1
Instances	B6.7 - CAN Layout:Powertrain Standard J1939 (500Kbps) B6.7 - Powertrain J1939 Allison 1k/2k:B6.7 - Allison 1k/2k Transmission B6.7 - Powertrain J1939 Allison 3k/4k:B6.7 - Allison 3k/4k Transmission L9 - CAN Layout:Powertrain Standard J1939 (500kbps) L9 - Powertrain J1939 Allison 3k/4k:L9 - Powertrain J1939 Allison 3k/4k L9 - Powertrain J1939 Eaton:L9 - Powertrain J1939 Eaton
Mates	RES-TERMINATING-ENGINE-250 K-0002-00-02A

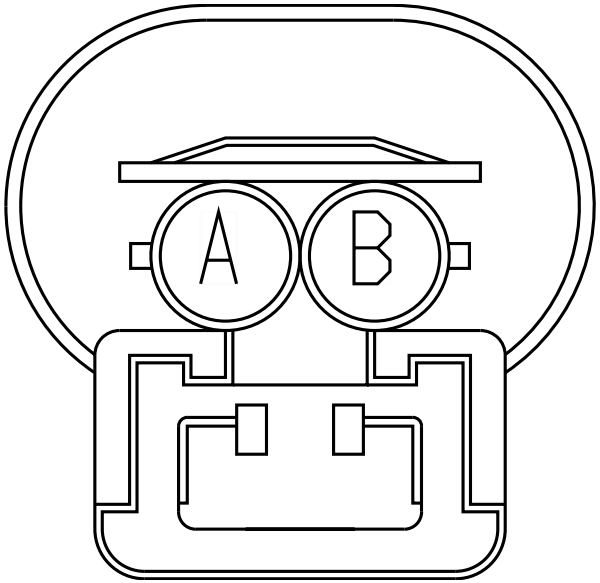

Name	Terminal Part Number	V-Min	Name	Wire Part Number	Wire CSA	Wire Spec	Wire Material description	Wire Color Description	Wire Length	End2 Terminal Part Number	End2 Pin Name	End2 Connect or
A	-	-	WIRE725686	-	0.0	-	-	-	0.0	-	1	-
A	-	-	WIRE725663	-	0.0	-	-	-	0.0	-	X	-
A	-	-	WIRE725676	-	0.0	-	-	-	0.0	-	PIN1	-
A	-	-	WIRE725686	-	0.0	-	-	-	0.0	-	X	-
B	-	-	WIRE725687	-	0.0	-	-	-	0.0	-	1	-
B	-	-	WIRE725664	-	0.0	-	-	-	0.0	-	X	-
B	-	-	WIRE725677	-	0.0	-	-	-	0.0	-	PIN1	-
B	-	-	WIRE725687	-	0.0	-	-	-	0.0	-	PIN1	-

Connector Name	7801
Part Number	BLUNT_SL_VC
Instances	A26 - Transmission Power Take Off (Auto Trans Dual PTO W/ 42 Parameters):Diagram1 A26 - Transmission Power Take Off (Manual Trans Dual PTO W/ 42 Parameters):Diagram1
Mates	BLUNT-PTO-5047-03-01B

Name	Terminal Part Number	V-Min	Name	Wire Part Number	Wire CSA	Wire Spec	Wire Material description	Wire Color Description	Wire Length	End2 Terminal Part Number	End2 Pin Name	End2 Connect or
A	-	-	KN88A	2643678 R1	1.16	16.0	Std. Wall XLPE Primary Cable	LIGHT GREEN	3850.0	-	41	1702

Connector Name	7803
Part Number	3950690C1
Instances	A26 - Power Lift Gate:Diagram1 B6.7 - Power Lift Gate:Diagram1 L9 - Power Lift Gate:Diagram1
Mates	RLY-Power_Lift_Gate_Relay- 2038-02-01B

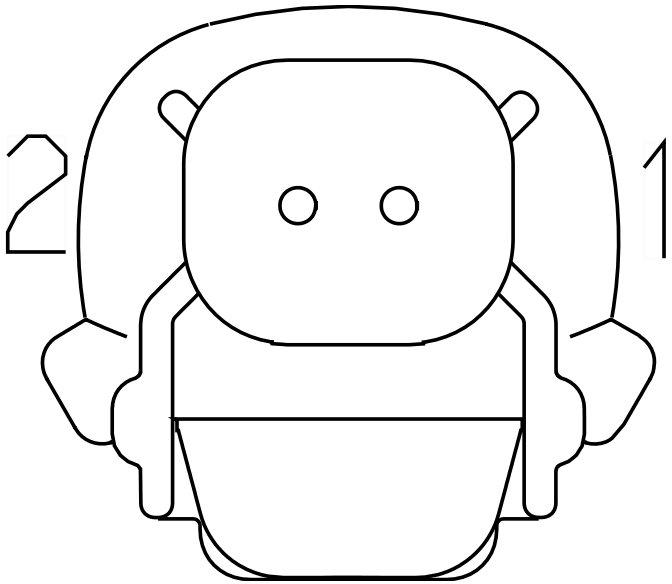

Name	Terminal Part Number	V-Min	Name	Wire Part Number	Wire CSA	Wire Spec	Wire Material description	Wire Color Description	Wire Length	End2 Terminal Part Number	End2 Pin Name	End2 Connect or
1	-	-	YL112	2643680 R1	1.16	16.0	Std. Wall XLPE Primary Cable	GREY	2385.0	-	66	1701F
2	-	-	YH112-GD	3510360 R1	1.16	16.0	Thin Wall XLPE Primary Cable	WHITE	1125.0	-	-	-
2	-	-	YK112-GD	3510360 R1	1.16	16.0	Thin Wall XLPE Primary Cable	WHITE	910.0	-	X	-
2	-	-	YJ112-GD	2643681 R1	1.16	16.0	Std. Wall XLPE Primary Cable	WHITE	945.0	-	X	-

Connector Name	7900F
Part Number	4064551C1
Instances	A26 - CAN Layout:Powertrain Standard J1939 (500Kbps)
Mates	7900M

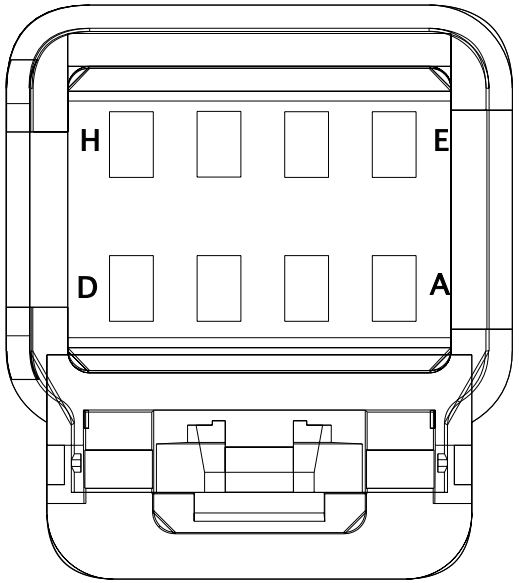

Name	Terminal Part Number	V-Min	Name	Wire Part Number	Wire CSA	Wire Spec	Wire Material description	Wire Color Description	Wire Length	End2 Terminal Part Number	End2 Pin Name	End2 Connect or
E	-	-	WIRE720101	-	0.0	-	-	-	0.0	-	PIN1	-
F	-	-	WIRE720100	-	0.0	-	-	-	0.0	-	PIN1	-

Connector Name	7900F
Part Number	4064551C1
Short Description	DCM SHIFTER
Instances	A26 - Powertrain J1939 Allison 3k/4k:A26 - Powertrain J1939 Allison 3k/4k A26 - Powertrain J1939 UltraShift Transmission:A26 - Powertrain J1939 UltraShift Transmission A26 - Transmission Shifter (Stalk Shifter Allison):Diagram1 A26 - Transmission Shifter (Stalk Shifter Allison):Diagram2 B6.7 - CAN Layout:Powertrain Standard J1939 (500Kbps) B6.7 - Powertrain J1939 Allison 1k/2k:B6.7 - Allison 1k/2k Transmission B6.7 - Powertrain J1939 Allison 3k/4k:B6.7 - Allison 3k/4k Transmission B6.7 - Powertrain J1939 Manual Transmission:B6.7 - Manual Transmission B6.7 - Transmission Shifter (Stalk Shifter Allison):Diagram1 B6.7 - Transmission Shifter (Stalk Shifter Allison):Diagram2 L9 - CAN Layout:Powertrain Standard J1939 (500kbps) L9 - Powertrain J1939 Allison 3k/4k:L9 - Powertrain J1939 Allison 3k/4k L9 - Powertrain J1939 Eaton:L9 - Powertrain J1939 Eaton L9 - Powertrain J1939 Manual Transmission:Powertrain Standard J1939 (500kbps) L9 - Transmission Shifter (Stalk Shifter Allison):Diagram1 L9 - Transmission Shifter (Stalk Shifter Allison):Diagram2
Mates	7900M

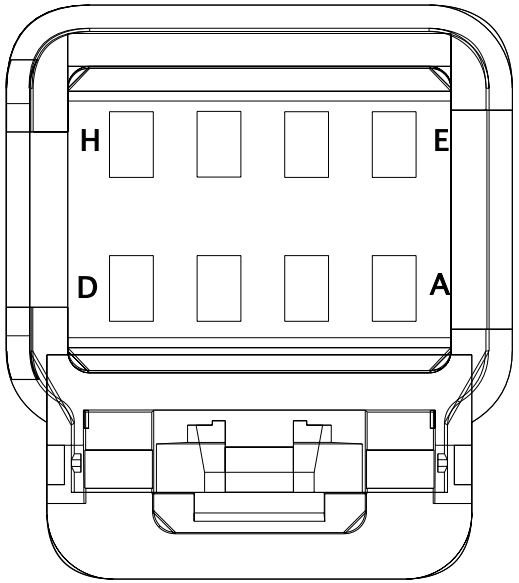

Name	Terminal Part Number	V-Min	Name	Wire Part Number	Wire CSA	Wire Spec	Wire Material description	Wire Color Description	Wire Length	End2 Terminal Part Number	End2 Pin Name	End2 Connector
B	-	-	UB92#13 4A	3510329 R1	0.79	18.0	Thin Wall XLPE Primary Cable	TAN	2395.0	-	21	1703M
E	-	-	WIRE735 113	-	0.0	-	-	-	0.0	-	PIN1	-
F	-	-	WIRE735 114	-	0.0	-	-	-	0.0	-	PIN1	-

Name	Terminal Part Number	V-Min	Name	Wire Part Number	Wire CSA	Wire Spec	Wire Material description	Wire Color Description	Wire Length	End2 Terminal Part Number	End2 Pin Name	End2 Connect or
G	-	-	UC92DC	3510329 R1	0.79	18.0	Thin Wall XLPE Primary Cable	TAN	1845.0	-	-	-
H	-	-	UC92-GAH	3510359 R1	0.79	18.0	Thin Wall XLPE Primary Cable	WHITE	1265.0	-	-	-

Connector Name	7900M
Part Number	4064552C1
Instances	A26 - CAN Layout:Powertrain Standard J1939 (500Kbps)
Mates	7900F

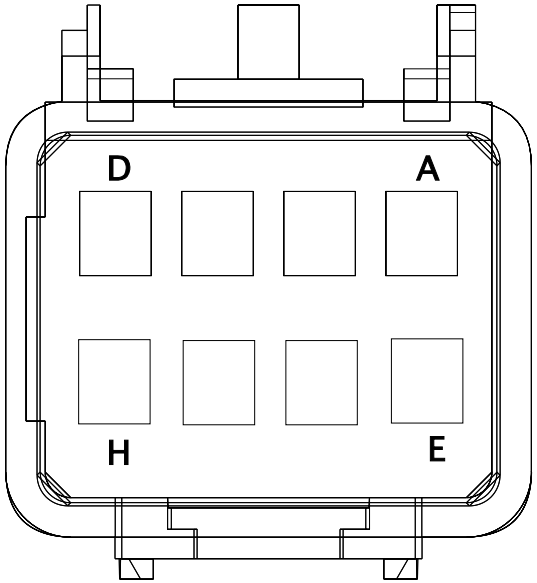

Name	Terminal Part Number	V-Min	Name	Wire Part Number	Wire CSA	Wire Spec	Wire Material description	Wire Color Description	Wire Length	End2 Terminal Part Number	End2 Pin Name	End2 Connect or
E	-	-	WIRE720115	-	0.0	-	-	-	0.0	-	E	1825
F	-	-	WIRE720114	-	0.0	-	-	-	0.0	-	F	1825

Connector Name	7900M
Part Number	4064552C1
Short Description	STALK SHIFTER CONN
Instances	A26 - Powertrain J1939 Allison 3k/4k:A26 - Powertrain J1939 Allison 3k/4k A26 - Powertrain J1939 UltraShift Transmission:A26 - Powertrain J1939 UltraShift Transmission A26 - Transmission Shifter (Stalk Shifter Allison):Diagram1 A26 - Transmission Shifter (Stalk Shifter Allison):Diagram2 B6.7 - CAN Layout:Powertrain Standard J1939 (500Kbps) B6.7 - Powertrain J1939 Allison 1k/2k:B6.7 - Allison 1k/2k Transmission B6.7 - Powertrain J1939 Allison 3k/4k:B6.7 - Allison 3k/4k Transmission B6.7 - Powertrain J1939 Manual Transmission:B6.7 - Manual Transmission B6.7 - Transmission Shifter (Stalk Shifter Allison):Diagram1 B6.7 - Transmission Shifter (Stalk Shifter Allison):Diagram2 L9 - CAN Layout:Powertrain Standard J1939 (500kbps) L9 - Powertrain J1939 Allison 3k/4k:L9 - Powertrain J1939 Allison 3k/4k L9 - Powertrain J1939 Eaton:L9 - Powertrain J1939 Eaton L9 - Powertrain J1939 Manual Transmission:Powertrain Standard J1939 (500kbps) L9 - Transmission Shifter (Stalk Shifter Allison):Diagram1 L9 - Transmission Shifter (Stalk Shifter Allison):Diagram2
Mates	7900F

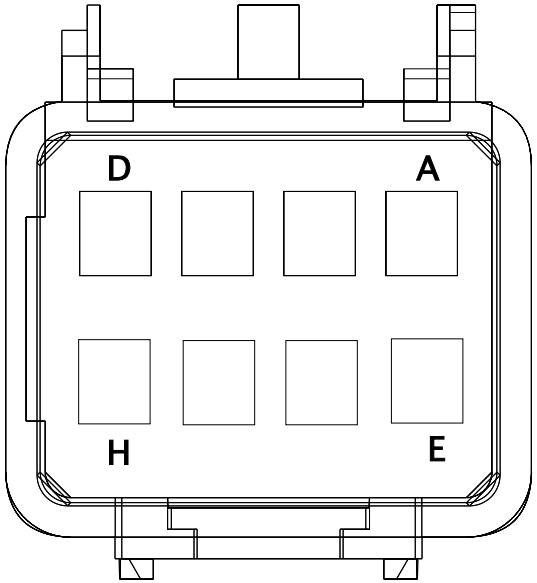

Name	Terminal Part Number	V-Min	Name	Wire Part Number	Wire CSA	Wire Spec	Wire Material description	Wire Color Description	Wire Length	End2 Terminal Part Number	End2 Pin Name	End2 Connector
B	-	-	BD92#134	3510329 R1	0.79	18.0	Thin Wall XLPE Primary Cable	TAN	1365.0	-	B	1825F
E	-	-	WIRE722746	-	0.0	-	-	-	0.0	-	E	1825F
E	-	-	WIRE722746	-	0.0	-	-	-	0.0	-	-	-

Name	Terminal Part Number	V-Min	Name	Wire Part Number	Wire CSA	Wire Spec	Wire Material description	Wire Color Description	Wire Length	End2 Terminal Part Number	End2 Pin Name	End2 Connector
E	-	-	WIRE722746	-	0.0	-	-	-	0.0	-	M	1025
F	-	-	WIRE722747	-	0.0	-	-	-	0.0	-	F	1825F
G	-	-	BD62DC	3510353 R1	0.79	18.0	Thin Wall XLPE Primary Cable	DARK BLUE	1365.0	-	G	1825F
H	-	-	BD92-GAH	3510359 R1	0.79	18.0	Thin Wall XLPE Primary Cable	WHITE	1365.0	-	H	1825F

Connector Name	8000A-RT
Part Number	1677851C1
Instances	B6.7 - Directional Signal (Turn) W/ DAISY CHAIN BOX LAMPS:Diagram2 B6.7 - Directional Signal (Turn) W/ Daisy Chain Box Lamps W/ Plow Lights:Diagram1 B6.7 - Directional Signal (Turn) W/ Daisy Chain Box Lamps W/ Plow Lights:Diagram2 B6.7 - Directional Signal (Turn) W/ Daisy Chain Box Lamps W/ Plow Lights:Diagram3 B6.7 - Directional Signal (Turn) W/ Daisy Chain Box Lamps W/ Plow Lights:Diagram4 B6.7 - Directional Signal (Turn) W/ LED BOX LAMPS:Diagram2 B6.7 - Directional Signal (Turn) W/ Less Power Module Tail Board W/Hazard SW:Diagram2 B6.7 - Directional Signal (Turn) W/ Single Tail Board W/Hazard SW:Diagram2 B6.7 - Directional Signal (Turn) W/ Single Tail Board W/Plow Lights:Diagram1 B6.7 - Directional Signal (Turn) W/ Single Tail Board W/Plow Lights:Diagram2 B6.7 - Directional Signal (Turn) W/ Single Tail Board W/Plow Lights:Diagram3 B6.7 - Directional Signal (Turn) W/ Single Tail Board W/Plow Lights:Diagram4 B6.7 - Front Marker Lights - With Plow Lights:Diagram1 B6.7 - Front Marker Lights - With Plow Lights:Diagram2 B6.7 - Front Marker Lights - With Plow Lights:Diagram3 B6.7 - Front Marker Lights - With Plow Lights:Diagram4 B6.7 - Headlight W/Plowlights W/LOWW W/O Headlight Interrupt -10 PIN CLK:Diagram3 B6.7 - Headlight W/Plowlights W/LOWW W/O Headlight Interrupt -10 PIN CLK:Diagram4 B6.7 - Headlight W/Plowlights W/LOWW W/O Headlight Interrupt -10 PIN CLK:Diagram7 B6.7 - Headlight W/Plowlights W/LOWW W/O Headlight Interrupt -10 PIN CLK:Diagram8 B6.7 - Headlights W 10PIN CLK W/LOWW W/Interrupt:Diagram3 B6.7 - Headlights W 10PIN CLK W/LOWW W/Interrupt:Diagram4 B6.7 - Headlights W 10PIN CLK W/LOWW W/O Interrupt:Diagram3 B6.7 - Headlights W 10PIN CLK W/LOWW W/O Interrupt:Diagram4

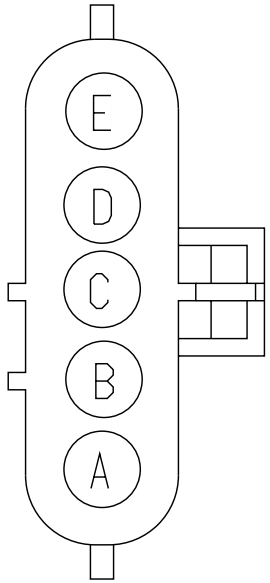

B6.7 - Headlights W/O Lights ON With Wipers (LOWW) W/O Headlights Interrupt:Diagram3
B6.7 - Headlights W/O Lights ON With Wipers (LOWW) W/O Headlights Interrupt:Diagram4
B6.7 - Headlights W/O Lights ON with wipers (LOWW) W/ Headlights Interrupt:Diagram3
B6.7 - Headlights W/O Lights ON with wipers (LOWW) W/ Headlights Interrupt:Diagram4
B6.7 - Headlights W/PlowLights W/Headlight Interrupt -10PIN CLK W/LOWW W/Interrupt:Diagram3
B6.7 - Headlights W/PlowLights W/Headlight Interrupt -10PIN CLK W/LOWW W/Interrupt:Diagram4
B6.7 - Headlights W/PlowLights W/Headlight Interrupt -10PIN CLK W/LOWW W/Interrupt:Diagram7
B6.7 - Headlights W/PlowLights W/Headlight Interrupt -10PIN CLK W/LOWW W/Interrupt:Diagram8
B6.7 - Headlights W/Plowlights W/O Lights ON With Wipers (LOWW) W/O Headlights Interrupt:Diagram3
B6.7 - Headlights W/Plowlights W/O Lights ON With Wipers (LOWW) W/O Headlights Interrupt:Diagram4
B6.7 - Headlights W/Plowlights W/O Lights ON With Wipers (LOWW) W/O Headlights Interrupt:Diagram7
B6.7 - Headlights W/Plowlights W/O Lights ON With Wipers (LOWW) W/O Headlights Interrupt:Diagram8
B6.7 - Headlights W/PlowLights W/O Lights ON with wipers (LOWW) W/ Headlights Interrupt:Diagram3
B6.7 - Headlights W/PlowLights W/O Lights ON with wipers (LOWW) W/ Headlights Interrupt:Diagram4
B6.7 - Headlights W/PlowLights W/O Lights ON with wipers (LOWW) W/ Headlights Interrupt:Diagram7
B6.7 - Headlights W/PlowLights W/O Lights ON with wipers (LOWW) W/ Headlights Interrupt:Diagram8
L9 - Directional Signal (Turn) W/ DAISY CHAIN BOX LAMPS:Diagram2
L9 - Directional Signal (Turn) W/ Daisy Chain Box Lamps W/ Plow Lights:Diagram1
L9 - Directional Signal (Turn) W/ Daisy Chain Box Lamps W/ Plow Lights:Diagram2
L9 - Directional Signal (Turn) W/ Daisy Chain Box Lamps W/ Plow Lights:Diagram3
L9 - Directional Signal (Turn) W/ Daisy Chain Box Lamps W/ Plow Lights:Diagram4
L9 - Directional Signal (Turn) W/ LED BOX LAMPS:Diagram2

L9 - Directional Signal (Turn) W/ Less Power Module Tail Board W/Hazard SW:Diagram2
L9 - Directional Signal (Turn) W/ Single Tail Board W/Hazard SW:Diagram2
L9 - Directional Signal (Turn) W/ Single Tail Board W/Plow Lights:Diagram1
L9 - Directional Signal (Turn) W/ Single Tail Board W/Plow Lights:Diagram2
L9 - Directional Signal (Turn) W/ Single Tail Board W/Plow Lights:Diagram3
L9 - Directional Signal (Turn) W/ Single Tail Board W/Plow Lights:Diagram4
L9 - Front Marker Lights - With Plow Lights:Diagram1
L9 - Front Marker Lights - With Plow Lights:Diagram2
L9 - Front Marker Lights - With Plow Lights:Diagram3
L9 - Front Marker Lights - With Plow Lights:Diagram4
L9 - Headlight W/Plowlights W/LOWW W/O Headlight Interrupt -10 PIN CLK:Diagram3
L9 - Headlight W/Plowlights W/LOWW W/O Headlight Interrupt -10 PIN CLK:Diagram4
L9 - Headlight W/Plowlights W/LOWW W/O Headlight Interrupt -10 PIN CLK:Diagram7
L9 - Headlight W/Plowlights W/LOWW W/O Headlight Interrupt -10 PIN CLK:Diagram8
L9 - Headlights W 10PIN CLK W/LOWW W/Interrupt:Diagram3
L9 - Headlights W 10PIN CLK W/LOWW W/Interrupt:Diagram4
L9 - Headlights W 10PIN CLK W/LOWW W/O Interrupt:Diagram3
L9 - Headlights W 10PIN CLK W/LOWW W/O Interrupt:Diagram4
L9 - Headlights W/O Lights ON With Wipers (LOWW) W/O Headlights Interrupt:Diagram3
L9 - Headlights W/O Lights ON With Wipers (LOWW) W/O Headlights Interrupt:Diagram4
L9 - Headlights W/O Lights ON with wipers (LOWW) W/ Headlights Interrupt:Diagram3
L9 - Headlights W/O Lights ON with wipers (LOWW) W/ Headlights Interrupt:Diagram4
L9 - Headlights W/PlowLights W/Headlight Interrupt -10PIN CLK W/LOWW W/Interrupt:Diagram3
L9 - Headlights W/PlowLights W/Headlight Interrupt -10PIN CLK W/LOWW W/Interrupt:Diagram4
L9 - Headlights W/PlowLights W/Headlight Interrupt -10PIN CLK W/LOWW W/Interrupt:Diagram7

L9 - Headlights W/PlowLights W/Headlight Interrupt -10PIN CLK W/LOWW W/Interrupt:Diagram8
L9 - Headlights W/Plowlights W/O Lights ON With Wipers (LOWW) W/O Headlights Interrupt:Diagram3
L9 - Headlights W/Plowlights W/O Lights ON With Wipers (LOWW) W/O Headlights Interrupt:Diagram4
L9 - Headlights W/Plowlights W/O Lights ON With Wipers (LOWW) W/O Headlights Interrupt:Diagram7
L9 - Headlights W/Plowlights W/O Lights ON With Wipers (LOWW) W/O Headlights Interrupt:Diagram8
L9 - Headlights W/PlowLights W/O Lights ON with wipers (LOWW) W/ Headlights Interrupt:Diagram3
L9 - Headlights W/PlowLights W/O Lights ON with wipers (LOWW) W/ Headlights Interrupt:Diagram4
L9 - Headlights W/PlowLights W/O Lights ON with wipers (LOWW) W/ Headlights Interrupt:Diagram7
L9 - Headlights W/PlowLights W/O Lights ON with wipers (LOWW) W/ Headlights Interrupt:Diagram8

Mates LT-RS_HEADLIGHT_HAL-1016-1 0-03A

Name	Terminal Part Number	V-Min	Name	Wire Part Number	Wire CSA	Wire Spec	Wire Material description	Wire Color Description	Wire Length	End2 Terminal Part Number	End2 Pin Name	End2 Connect or
A	-	-	RD52D	2643693 R1	1.91	14.0	Std. Wall XLPE Primary Cable	YELLOW 2	3710.0	-	3	1700
A	-	-	ML52D	2643693 R1	1.91	14.0	Std. Wall XLPE Primary Cable	YELLOW 2	3710.0	-	3	1700
A	-	-	NF52D	2643693 R1	1.91	14.0	Std. Wall XLPE Primary Cable	YELLOW 2	3710.0	-	3	1700
B	-	-	MY11-GA	2643689 R1	1.91	14.0	Std. Wall XLPE Primary Cable	WHITE	4300.0	-	-	-

Name	Terminal Part Number	V-Min	Name	Wire Part Number	Wire CSA	Wire Spec	Wire Material description	Wire Color Description	Wire Length	End2 Terminal Part Number	End2 Pin Name	End2 Connector
B	-	-	MZ11-GA	2643689 R1	1.91	14.0	Std. Wall XLPE Primary Cable	WHITE	4300.0	-	-	-
B	-	-	MY11-GA	2643689 R1	1.91	14.0	Std. Wall XLPE Primary Cable	WHITE	4300.0	-	X	-
B	-	-	TD11-GA	2643689 R1	1.91	14.0	Std. Wall XLPE Primary Cable	WHITE	4300.0	-	-	-
B	-	-	TC11-GA	2643689 R1	1.91	14.0	Std. Wall XLPE Primary Cable	WHITE	4300.0	-	-	-
C	-	-	ML53B	2643693 R1	1.91	14.0	Std. Wall XLPE Primary Cable	YELLOW 2	3710.0	-	4	1700
C	-	-	RD53B	2643693 R1	1.91	14.0	Std. Wall XLPE Primary Cable	YELLOW 2	3710.0	-	4	1700
D	-	-	MU57C	3510318 R1	1.16	16.0	Thin Wall XLPE Primary Cable	ORANGE	2245.0	-	X	-
D	-	-	MN57C	2643682 R1	1.16	16.0	Std. Wall XLPE Primary Cable	ORANGE	2145.0	-	X	-

Name	Terminal Part Number	V-Min	Name	Wire Part Number	Wire CSA	Wire Spec	Wire Material description	Wire Color Description	Wire Length	End2 Terminal Part Number	End2 Pin Name	End2 Connector
D	-	-	RB57C	2643682 R1	1.16	16.0	Std. Wall XLPE Primary Cable	ORANGE	2045.0	-	X	-
D	-	-	NF57C	3510318 R1	1.16	16.0	Thin Wall XLPE Primary Cable	ORANGE	2145.0	-	X	-
D	-	-	MA57B	3510318 R1	1.16	16.0	Thin Wall XLPE Primary Cable	ORANGE	4640.0	-	15	1700
D	-	-	RD57C	3510318 R1	1.16	16.0	Thin Wall XLPE Primary Cable	ORANGE	2145.0	-	X	-
D	-	-	ML57C	3510318 R1	1.16	16.0	Thin Wall XLPE Primary Cable	ORANGE	2245.0	-	X	-
D	-	-	MW57C	2643682 R1	1.16	16.0	Std. Wall XLPE Primary Cable	ORANGE	2045.0	-	X	-
D	-	-	MC57C	2643682 R1	1.16	16.0	Std. Wall XLPE Primary Cable	ORANGE	2145.0	-	X	-
D	-	-	MJ57B	3510318 R1	1.16	16.0	Thin Wall XLPE Primary Cable	ORANGE	3710.0	-	15	1700

Name	Terminal Part Number	V-Min	Name	Wire Part Number	Wire CSA	Wire Spec	Wire Material description	Wire Color Description	Wire Length	End2 Terminal Part Number	End2 Pin Name	End2 Connect or
D	-	-	MF57B	3510318 R1	1.16	16.0	Thin Wall XLPE Primary Cable	ORANGE	3710.0	-	15	1700
E	-	-	MC54D	2643688 R1	1.91	14.0	Std. Wall XLPE Primary Cable	BROWN	1535.0	-	X	-
E	-	-	MW54D	2643688 R1	1.91	14.0	Std. Wall XLPE Primary Cable	BROWN	1685.0	-	X	-
E	-	-	MU54D	2643688 R1	1.91	14.0	Std. Wall XLPE Primary Cable	BROWN	1635.0	-	X	-
E	-	-	NF54D	2643688 R1	1.91	14.0	Std. Wall XLPE Primary Cable	BROWN	1785.0	-	X	-

Connector Name	8000A
Part Number	1677851C1
Instances	B6.7 - Front Marker Lights - Without Snow Plow Lights:Diagram2 L9 - Front Marker Lights - Without Snow Plow Lights:Diagram2
Mates	LT-RS_HEADLIGHT_HAL-1016-1 0-03A

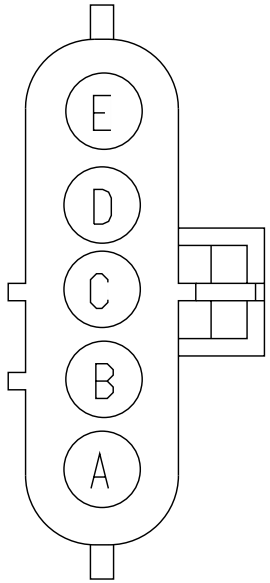

Name	Terminal Part Number	V-Min	Name	Wire Part Number	Wire CSA	Wire Spec	Wire Material description	Wire Color Description	Wire Length	End2 Terminal Part Number	End2 Pin Name	End2 Connect or
B	-	-	MY11-GA	2643689 R1	1.91	14.0	Std. Wall XLPE Primary Cable	WHITE	4300.0	-	-	-
E	-	-	ML54D	2643688 R1	1.91	14.0	Std. Wall XLPE Primary Cable	BROWN	1635.0	-	X	-

Connector Name	8000-RT
Part Number	1677851C1
Instances	B6.7 - Directional Signal (Turn) W/ Less Power Module Tail Board W/Hazard SW W/PLOW LIGHTS:Diagram1 B6.7 - Directional Signal (Turn) W/ Less Power Module Tail Board W/Hazard SW W/PLOW LIGHTS:Diagram2 B6.7 - Directional Signal (Turn) W/ Less Power Module Tail Board W/Hazard SW W/PLOW LIGHTS:Diagram3 B6.7 - Directional Signal (Turn) W/ Less Power Module Tail Board W/Hazard SW W/PLOW LIGHTS:Diagram4 B6.7 - Directional Signal (Turn) W/ DAISY CHAIN BOX LAMPS:Diagram1 B6.7 - Directional Signal (Turn) W/ LED BOX LAMPS:Diagram1 B6.7 - Directional Signal (Turn) W/ LED BOX LAMPS W/Plow Lights:Diagram1 B6.7 - Directional Signal (Turn) W/ LED BOX LAMPS W/Plow Lights:Diagram2 B6.7 - Directional Signal (Turn) W/ LED BOX LAMPS W/Plow Lights:Diagram3 B6.7 - Directional Signal (Turn) W/ LED BOX LAMPS W/Plow Lights:Diagram4 B6.7 - Directional Signal (Turn) W/ Less Power Module Tail Board W/Hazard SW:Diagram1 B6.7 - Directional Signal (Turn) W/ Single Tail Board W/Hazard SW:Diagram1 B6.7 - Headlight W/Plowlights W/LOWW W/O Headlight Interrupt -10 PIN CLK:Diagram1 B6.7 - Headlight W/Plowlights W/LOWW W/O Headlight Interrupt -10 PIN CLK:Diagram2 B6.7 - Headlight W/Plowlights W/LOWW W/O Headlight Interrupt -10 PIN CLK:Diagram5 B6.7 - Headlight W/Plowlights W/LOWW W/O Headlight Interrupt -10 PIN CLK:Diagram6 B6.7 - Headlights W 10PIN CLK W/LOWW W/Interrupt:Diagram1 B6.7 - Headlights W 10PIN CLK W/LOWW W/Interrupt:Diagram2 B6.7 - Headlights W 10PIN CLK W/LOWW W/O Interrupt:Diagram1 B6.7 - Headlights W 10PIN CLK W/LOWW W/O Interrupt:Diagram2 B6.7 - Headlights W/O Lights ON With Wipers (LOWW) W/O Headlights Interrupt:Diagram1 B6.7 - Headlights W/O Lights ON With Wipers (LOWW) W/O Headlights Interrupt:Diagram2

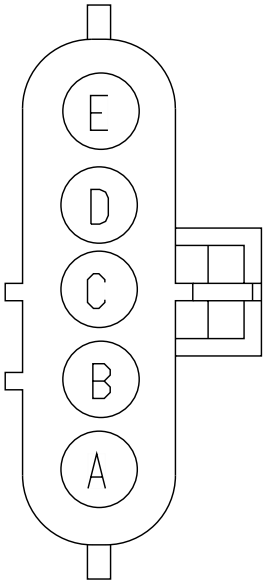

B6.7 - Headlights W/O Lights ON with wipers (LOWW) W/ Headlights Interrupt:Diagram1
B6.7 - Headlights W/O Lights ON with wipers (LOWW) W/ Headlights Interrupt:Diagram2
B6.7 - Headlights W/PlowLights W/Headlight Interrupt -10PIN CLK W/LOWW W/Interrupt:Diagram1
B6.7 - Headlights W/PlowLights W/Headlight Interrupt -10PIN CLK W/LOWW W/Interrupt:Diagram2
B6.7 - Headlights W/PlowLights W/Headlight Interrupt -10PIN CLK W/LOWW W/Interrupt:Diagram5
B6.7 - Headlights W/PlowLights W/Headlight Interrupt -10PIN CLK W/LOWW W/Interrupt:Diagram6
B6.7 - Headlights W/Plowlights W/O Lights ON With Wipers (LOWW) W/O Headlights Interrupt:Diagram1
B6.7 - Headlights W/Plowlights W/O Lights ON With Wipers (LOWW) W/O Headlights Interrupt:Diagram2
B6.7 - Headlights W/Plowlights W/O Lights ON With Wipers (LOWW) W/O Headlights Interrupt:Diagram5
B6.7 - Headlights W/Plowlights W/O Lights ON With Wipers (LOWW) W/O Headlights Interrupt:Diagram6
B6.7 - Headlights W/PlowLights W/O Lights ON with wipers (LOWW) W/ Headlights Interrupt:Diagram1
B6.7 - Headlights W/PlowLights W/O Lights ON with wipers (LOWW) W/ Headlights Interrupt:Diagram2
B6.7 - Headlights W/PlowLights W/O Lights ON with wipers (LOWW) W/ Headlights Interrupt:Diagram5
B6.7 - Headlights W/PlowLights W/O Lights ON with wipers (LOWW) W/ Headlights Interrupt:Diagram6
L9 - Directional Signal (Turn) W/ Less Power Module Tail Board W/Hazard SW W/PLOW LIGHTS:Diagram1
L9 - Directional Signal (Turn) W/ Less Power Module Tail Board W/Hazard SW W/PLOW LIGHTS:Diagram2
L9 - Directional Signal (Turn) W/ Less Power Module Tail Board W/Hazard SW W/PLOW LIGHTS:Diagram3
L9 - Directional Signal (Turn) W/ Less Power Module Tail Board W/Hazard SW W/PLOW LIGHTS:Diagram4
L9 - Directional Signal (Turn) W/ DAISY CHAIN BOX LAMPS:Diagram1
L9 - Directional Signal (Turn) W/ LED BOX LAMPS:Diagram1
L9 - Directional Signal (Turn) W/ LED BOX LAMPS W/Plow Lights:Diagram1
L9 - Directional Signal (Turn) W/ LED BOX LAMPS W/Plow Lights:Diagram2

L9 - Directional Signal (Turn) W/ LED BOX LAMPS W/Plow Lights:Diagram3
L9 - Directional Signal (Turn) W/ LED BOX LAMPS W/Plow Lights:Diagram4
L9 - Directional Signal (Turn) W/ Less Power Module Tail Board W/Hazard SW:Diagram1
L9 - Directional Signal (Turn) W/ Single Tail Board W/Hazard SW:Diagram1
L9 - Headlight W/Plowlights W/LOWW W/O Headlight Interrupt -10 PIN CLK:Diagram1
L9 - Headlight W/Plowlights W/LOWW W/O Headlight Interrupt -10 PIN CLK:Diagram2
L9 - Headlight W/Plowlights W/LOWW W/O Headlight Interrupt -10 PIN CLK:Diagram5
L9 - Headlight W/Plowlights W/LOWW W/O Headlight Interrupt -10 PIN CLK:Diagram6
L9 - Headlights W 10PIN CLK W/LOWW W/Interrupt:Diagram1
L9 - Headlights W 10PIN CLK W/LOWW W/Interrupt:Diagram2
L9 - Headlights W 10PIN CLK W/LOWW W/O Interrupt:Diagram1
L9 - Headlights W 10PIN CLK W/LOWW W/O Interrupt:Diagram2
L9 - Headlights W/O Lights ON With Wipers (LOWW) W/O Headlights Interrupt:Diagram1
L9 - Headlights W/O Lights ON With Wipers (LOWW) W/O Headlights Interrupt:Diagram2
L9 - Headlights W/O Lights ON with wipers (LOWW) W/ Headlights Interrupt:Diagram1
L9 - Headlights W/O Lights ON with wipers (LOWW) W/ Headlights Interrupt:Diagram2
L9 - Headlights W/PlowLights W/Headlight Interrupt -10PIN CLK W/LOWW W/Interrupt:Diagram1
L9 - Headlights W/PlowLights W/Headlight Interrupt -10PIN CLK W/LOWW W/Interrupt:Diagram2
L9 - Headlights W/PlowLights W/Headlight Interrupt -10PIN CLK W/LOWW W/Interrupt:Diagram5
L9 - Headlights W/PlowLights W/Headlight Interrupt -10PIN CLK W/LOWW W/Interrupt:Diagram6
L9 - Headlights W/Plowlights W/O Lights ON With Wipers (LOWW) W/O Headlights Interrupt:Diagram1
L9 - Headlights W/Plowlights W/O Lights ON With Wipers (LOWW) W/O Headlights Interrupt:Diagram2
L9 - Headlights W/Plowlights W/O Lights ON With Wipers (LOWW) W/O Headlights Interrupt:Diagram5

L9 - Headlights W/Plowlights W/O Lights ON With Wipers (LOWW) W/O Headlights Interrupt:Diagram6
L9 - Headlights W/PlowLights W/O Lights ON with wipers (LOWW) W/ Headlights Interrupt:Diagram1
L9 - Headlights W/PlowLights W/O Lights ON with wipers (LOWW) W/ Headlights Interrupt:Diagram2
L9 - Headlights W/PlowLights W/O Lights ON with wipers (LOWW) W/ Headlights Interrupt:Diagram5
L9 - Headlights W/PlowLights W/O Lights ON with wipers (LOWW) W/ Headlights Interrupt:Diagram6

Name	Terminal Part Number	V-Min	Name	Wire Part Number	Wire CSA	Wire Spec	Wire Material description	Wire Color Description	Wire Length	End2 Terminal Part Number	End2 Pin Name	End2 Connect or
A	-	-	RB52D	2643693 R1	1.91	14.0	Std. Wall XLPE Primary Cable	YELLOW 2	3610.0	-	3	1700
A	-	-	MC52D	2643693 R1	1.91	14.0	Std. Wall XLPE Primary Cable	YELLOW 2	3610.0	-	3	1700
A	-	-	MW52D	2643693 R1	1.91	14.0	Std. Wall XLPE Primary Cable	YELLOW 2	3610.0	-	3	1700
B	-	-	TC11-GA	2643689 R1	1.91	14.0	Std. Wall XLPE Primary Cable	WHITE	4300.0	-	-	-
B	-	-	TD11-GA	2643689 R1	1.91	14.0	Std. Wall XLPE Primary Cable	WHITE	4300.0	-	-	-
B	-	-	MY11-GA	2643689 R1	1.91	14.0	Std. Wall XLPE Primary Cable	WHITE	4300.0	-	-	-

Name	Terminal Part Number	V-Min	Name	Wire Part Number	Wire CSA	Wire Spec	Wire Material description	Wire Color Description	Wire Length	End2 Terminal Part Number	End2 Pin Name	End2 Connector
C	-	-	MC53B	2643693 R1	1.91	14.0	Std. Wall XLPE Primary Cable	YELLOW 2	3610.0	-	4	1700
C	-	-	RB53B	2643693 R1	1.91	14.0	Std. Wall XLPE Primary Cable	YELLOW 2	3610.0	-	4	1700
C	-	-	MW53B	2643693 R1	1.91	14.0	Std. Wall XLPE Primary Cable	YELLOW 2	3610.0	-	4	1700
D	-	-	MF57B	3510318 R1	1.16	16.0	Thin Wall XLPE Primary Cable	ORANGE	3710.0	-	15	1700
D	-	-	MU57C	3510318 R1	1.16	16.0	Thin Wall XLPE Primary Cable	ORANGE	2245.0	-	X	-
D	-	-	MN57C	2643682 R1	1.16	16.0	Std. Wall XLPE Primary Cable	ORANGE	2145.0	-	X	-
D	-	-	RB57C	2643682 R1	1.16	16.0	Std. Wall XLPE Primary Cable	ORANGE	2045.0	-	X	-
D	-	-	NF57C	3510318 R1	1.16	16.0	Thin Wall XLPE Primary Cable	ORANGE	2145.0	-	X	-

Name	Terminal Part Number	V-Min	Name	Wire Part Number	Wire CSA	Wire Spec	Wire Material description	Wire Color Description	Wire Length	End2 Terminal Part Number	End2 Pin Name	End2 Connector
D	-	-	RD57C	3510318 R1	1.16	16.0	Thin Wall XLPE Primary Cable	ORANGE	2145.0	-	X	-
D	-	-	ML57C	3510318 R1	1.16	16.0	Thin Wall XLPE Primary Cable	ORANGE	2245.0	-	X	-
D	-	-	MW57C	2643682 R1	1.16	16.0	Std. Wall XLPE Primary Cable	ORANGE	2045.0	-	X	-
D	-	-	MC57C	2643682 R1	1.16	16.0	Std. Wall XLPE Primary Cable	ORANGE	2145.0	-	X	-
D	-	-	MA57B	3510318 R1	1.16	16.0	Thin Wall XLPE Primary Cable	ORANGE	4640.0	-	15	1700
D	-	-	MJ57B	3510318 R1	1.16	16.0	Thin Wall XLPE Primary Cable	ORANGE	3710.0	-	15	1700

Connector Name	8000
Part Number	1677851C1
Instances	A26 - Directional Signal (Turn) W/ Daisy Chain Box Lamps:Diagram1 A26 - Directional Signal (Turn) W/ Daisy Chain Box Lamps, W/ Plow Lights:Diagram1-Option 1 (Snow Plow #1) A26 - Directional Signal (Turn) W/ Daisy Chain Box Lamps, W/ Plow Lights:Diagram1-Option 2 (Snow Plow #2) A26 - Directional Signal (Turn) W/ LED BOX LAMPS:Diagram1 A26 - Directional Signal (Turn) W/ LED BOX LAMPS, W/Plow Lights:Diagram1-Option 1 (Snow Plow #1) A26 - Directional Signal (Turn) W/ LED BOX LAMPS, W/Plow Lights:Diagram1-Option 2 (Snow Plow #2) A26 - Directional Signal (Turn) W/ Less Power Module Tail Board, W/Hazard SW:Diagram1 A26 - Directional Signal (Turn) W/ Less Power Module Tail Board, W/Hazard SW, W/Plow Lights:Diagram1-Option 1 (Snow Plow #1) A26 - Directional Signal (Turn) W/ Less Power Module Tail Board, W/Hazard SW, W/Plow Lights:Diagram1-Option 2 (Snow Plow #2) A26 - Directional Signal (Turn) W/ Single Tail Board, W/Hazard SW, W/Plow Lights:Diagram1-Option 1 (Snow Plow #1) A26 - Directional Signal (Turn) W/ Single Tail Board, W/Hazard SW, W/Plow Lights:Diagram1-Option 2 (Snow Plow #2) A26 - Front Marker Lights:Diagram1 A26 - Front Marker Lights W/Plow Lights:Diagram1-Combination1 A26 - Front Marker Lights W/Plow Lights:Diagram1-Combination2 A26 - Headlight W/Plowlights, W/LOWW, W/O Interrupt:Diagram1-Combination1 A26 - Headlight W/Plowlights, W/LOWW, W/O Interrupt:Diagram1-Combination2 A26 - Headlight W/Plowlights, W/LOWW, W/O Interrupt:Diagram1-Combination3 A26 - Headlight W/Plowlights, W/LOWW, W/O Interrupt:Diagram1-Combination4 A26 - Headlight W/Plowlights, W/O LOWW, W/O Interrupt:Diagram1-Combination1 A26 - Headlight W/Plowlights, W/O LOWW, W/O Interrupt:Diagram1-Combination2

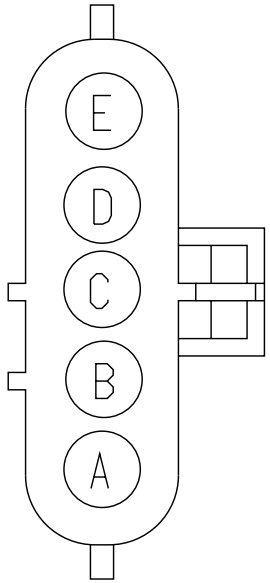

	A26 - Headlight W/Plowlights, W/O LOWW, W/O Interrupt:Diagram1-Combination3 A26 - Headlight W/Plowlights, W/O LOWW, W/O Interrupt:Diagram1-Combination4 A26 - Headlights W/LOWW, W/Interrupt - 10 PIN CLK:Diagram1-Combination1 A26 - Headlights W/LOWW, W/Interrupt - 10 PIN CLK:Diagram1-Combination2 A26 - Headlights W/LOWW, W/O Interrupt:Diagram1-Combination1 A26 - Headlights W/LOWW, W/O Interrupt:Diagram1-Combination2 A26 - Headlights W/O LOWW, W/Interrupt - 10 PIN CLK:Diagram1-Combination1 A26 - Headlights W/O LOWW, W/Interrupt - 10 PIN CLK:Diagram1-Combination2 A26 - Headlights W/O LOWW, W/O Interrupt:Diagram1-Combination1 A26 - Headlights W/O LOWW, W/O Interrupt:Diagram1-Combination2 A26 - Headlights W/PlowLights, W/LOWW, W/Interrupt - 10 PIN CLK:Diagram1-Combination1 A26 - Headlights W/PlowLights, W/LOWW, W/Interrupt - 10 PIN CLK:Diagram1-Combination2 A26 - Headlights W/PlowLights, W/LOWW, W/Interrupt - 10 PIN CLK:Diagram1-Combination3 A26 - Headlights W/PlowLights, W/LOWW, W/Interrupt - 10 PIN CLK:Diagram1-Combination4 A26 - Headlights W/PlowLights, W/O LOWW, W/Interrupt - 10 PIN CLK:Diagram1-Combination1 A26 - Headlights W/PlowLights, W/O LOWW, W/Interrupt - 10 PIN CLK:Diagram1-Combination2 A26 - Headlights W/PlowLights, W/O LOWW, W/Interrupt - 10 PIN CLK:Diagram1-Combination3 A26 - Headlights W/PlowLights, W/O LOWW, W/Interrupt - 10 PIN CLK:Diagram1-Combination4
Mates	LT-RS_HEADLIGHT_HAL-1016-1 0-03A

Name	Terminal Part Number	V-Min	Name	Wire Part Number	Wire CSA	Wire Spec	Wire Material description	Wire Color Description	Wire Length	End2 Terminal Part Number	End2 Pin Name	End2 Connector
A	-	-	MA52D	2643693 R1	1.91	14.0	Std. Wall XLPE Primary Cable	YELLOW 2	3610.0	-	3	1700
A	-	-	MC52D	2643693 R1	1.91	14.0	Std. Wall XLPE Primary Cable	YELLOW 2	3610.0	-	3	1700
A	-	-	RB52D	2643693 R1	1.91	14.0	Std. Wall XLPE Primary Cable	YELLOW 2	3610.0	-	3	1700
B	-	-	TD11-GA	2643689 R1	1.91	14.0	Std. Wall XLPE Primary Cable	WHITE	4300.0	-	-	-
C	-	-	MA53B	2643693 R1	1.91	14.0	Std. Wall XLPE Primary Cable	YELLOW 2	3610.0	-	4	1700
C	-	-	MC53B	2643693 R1	1.91	14.0	Std. Wall XLPE Primary Cable	YELLOW 2	3610.0	-	4	1700
C	-	-	RB53B	2643693 R1	1.91	14.0	Std. Wall XLPE Primary Cable	YELLOW 2	3610.0	-	4	1700
D	-	-	MC57C	2643682 R1	1.16	16.0	Std. Wall XLPE Primary Cable	ORANGE	2145.0	-	X	-

Name	Terminal Part Number	V-Min	Name	Wire Part Number	Wire CSA	Wire Spec	Wire Material description	Wire Color Description	Wire Length	End2 Terminal Part Number	End2 Pin Name	End2 Connector
D	-	-	RB57C	2643682 R1	1.16	16.0	Std. Wall XLPE Primary Cable	ORANGE	2045.0	-	X	-
D	-	-	MA57B	3510318 R1	1.16	16.0	Thin Wall XLPE Primary Cable	ORANGE	4640.0	-	15	1700
E	-	-	MC54D	2643688 R1	1.91	14.0	Std. Wall XLPE Primary Cable	BROWN	1535.0	-	X	-
E	-	-	RB54D	2643688 R1	1.91	14.0	Std. Wall XLPE Primary Cable	BROWN	1685.0	-	X	-
E	-	-	MA54D	2643688 R1	1.91	14.0	Std. Wall XLPE Primary Cable	BROWN	1785.0	-	X	-

Connector Name	8000
Part Number	1677851C1
Instances	A26 - Directional Signal (Turn) W/ Single Tail Board W/Hazard SW:Diagram1
Mates	LT-RS_HEADLIGHT_HAL-1016-1 0-03A

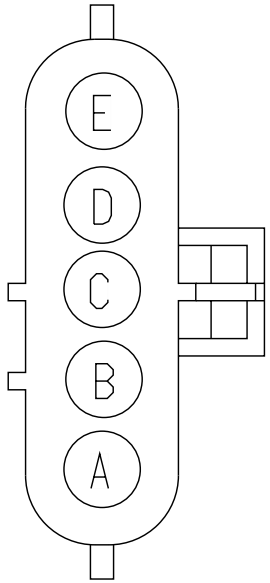

Name	Terminal Part Number	V-Min	Name	Wire Part Number	Wire CSA	Wire Spec	Wire Material description	Wire Color Description	Wire Length	End2 Terminal Part Number	End2 Pin Name	End2 Connect or
B	-	-	MY11-GA	2643689 R1	1.91	14.0	Std. Wall XLPE Primary Cable	WHITE	4300.0	-	-	-
D	-	-	MA57B	3510318 R1	1.16	16.0	Thin Wall XLPE Primary Cable	ORANGE	4640.0	-	15	1700

Connector Name 8000

Part Number 1677851C1

Instances B6.7 - Front Marker Lights - Without Snow Plow Lights:Diagram1
L9 - Front Marker Lights - Without Snow Plow Lights:Diagram1

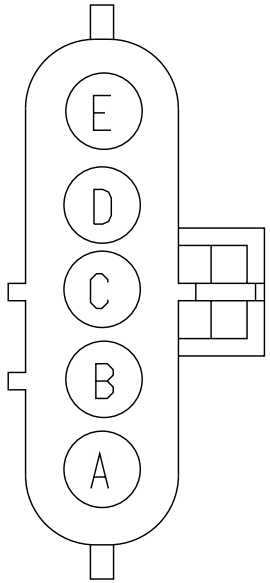

Name	Terminal Part Number	V-Min	Name	Wire Part Number	Wire CSA	Wire Spec	Wire Material description	Wire Color Description	Wire Length	End2 Terminal Part Number	End2 Pin Name	End2 Connect or
B	-	-	TC11-GA	2643689 R1	1.91	14.0	Std. Wall XLPE Primary Cable	WHITE	4300.0	-	-	-
E	-	-	MN54D	2643688 R1	1.91	14.0	Std. Wall XLPE Primary Cable	BROWN	1535.0	-	X	-

Connector Name	8001A-LF
Part Number	1677851C1
Instances	B6.7 - Directional Signal (Turn) W/ DAISY CHAIN BOX LAMPS:Diagram2 B6.7 - Directional Signal (Turn) W/ Daisy Chain Box Lamps W/ Plow Lights:Diagram1 B6.7 - Directional Signal (Turn) W/ Daisy Chain Box Lamps W/ Plow Lights:Diagram2 B6.7 - Directional Signal (Turn) W/ Daisy Chain Box Lamps W/ Plow Lights:Diagram3 B6.7 - Directional Signal (Turn) W/ Daisy Chain Box Lamps W/ Plow Lights:Diagram4 B6.7 - Directional Signal (Turn) W/ LED BOX LAMPS:Diagram2 B6.7 - Directional Signal (Turn) W/ Less Power Module Tail Board W/Hazard SW:Diagram2 B6.7 - Directional Signal (Turn) W/ Single Tail Board W/Hazard SW:Diagram2 B6.7 - Directional Signal (Turn) W/ Single Tail Board W/Plow Lights:Diagram3 B6.7 - Directional Signal (Turn) W/ Single Tail Board W/Plow Lights:Diagram4 B6.7 - Headlight W/Plowlights W/LOWW W/O Headlight Interrupt -10 PIN CLK:Diagram3 B6.7 - Headlight W/Plowlights W/LOWW W/O Headlight Interrupt -10 PIN CLK:Diagram4 B6.7 - Headlight W/Plowlights W/LOWW W/O Headlight Interrupt -10 PIN CLK:Diagram7 B6.7 - Headlight W/Plowlights W/LOWW W/O Headlight Interrupt -10 PIN CLK:Diagram8 B6.7 - Headlights W 10PIN CLK W/LOWW W/Interrupt:Diagram3 B6.7 - Headlights W 10PIN CLK W/LOWW W/Interrupt:Diagram4 B6.7 - Headlights W 10PIN CLK W/LOWW W/O Interrupt:Diagram3 B6.7 - Headlights W 10PIN CLK W/LOWW W/O Interrupt:Diagram4 B6.7 - Headlights W/O Lights ON With Wipers (LOWW) W/O Headlights Interrupt:Diagram3 B6.7 - Headlights W/O Lights ON With Wipers (LOWW) W/O Headlights Interrupt:Diagram4 B6.7 - Headlights W/O Lights ON with wipers (LOWW) W/ Headlights Interrupt:Diagram3 B6.7 - Headlights W/O Lights ON with wipers (LOWW) W/ Headlights Interrupt:Diagram4

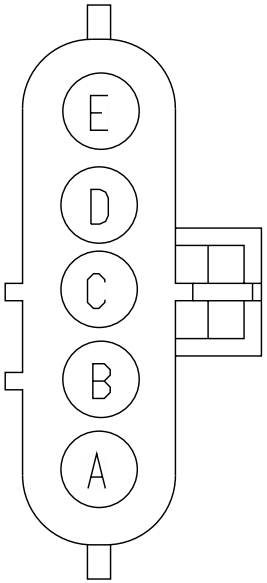

B6.7 - Headlights W/PlowLights W/Headlight Interrupt -10PIN CLK W/LOWW W/Interrupt:Diagram3
B6.7 - Headlights W/PlowLights W/Headlight Interrupt -10PIN CLK W/LOWW W/Interrupt:Diagram4
B6.7 - Headlights W/PlowLights W/Headlight Interrupt -10PIN CLK W/LOWW W/Interrupt:Diagram7
B6.7 - Headlights W/PlowLights W/Headlight Interrupt -10PIN CLK W/LOWW W/Interrupt:Diagram8
B6.7 - Headlights W/Plowlights W/O Lights ON With Wipers (LOWW) W/O Headlights Interrupt:Diagram3
B6.7 - Headlights W/Plowlights W/O Lights ON With Wipers (LOWW) W/O Headlights Interrupt:Diagram4
B6.7 - Headlights W/Plowlights W/O Lights ON With Wipers (LOWW) W/O Headlights Interrupt:Diagram7
B6.7 - Headlights W/Plowlights W/O Lights ON With Wipers (LOWW) W/O Headlights Interrupt:Diagram8
B6.7 - Headlights W/PlowLights W/O Lights ON with wipers (LOWW) W/ Headlights Interrupt:Diagram3
B6.7 - Headlights W/PlowLights W/O Lights ON with wipers (LOWW) W/ Headlights Interrupt:Diagram4
B6.7 - Headlights W/PlowLights W/O Lights ON with wipers (LOWW) W/ Headlights Interrupt:Diagram7
B6.7 - Headlights W/PlowLights W/O Lights ON with wipers (LOWW) W/ Headlights Interrupt:Diagram8
L9 - Directional Signal (Turn) W/ DAISY CHAIN BOX LAMPS:Diagram2
L9 - Directional Signal (Turn) W/ Daisy Chain Box Lamps W/ Plow Lights:Diagram1
L9 - Directional Signal (Turn) W/ Daisy Chain Box Lamps W/ Plow Lights:Diagram2
L9 - Directional Signal (Turn) W/ Daisy Chain Box Lamps W/ Plow Lights:Diagram3
L9 - Directional Signal (Turn) W/ Daisy Chain Box Lamps W/ Plow Lights:Diagram4
L9 - Directional Signal (Turn) W/ LED BOX LAMPS:Diagram2
L9 - Directional Signal (Turn) W/ Less Power Module Tail Board W/Hazard SW:Diagram2
L9 - Directional Signal (Turn) W/ Single Tail Board W/Hazard SW:Diagram2
L9 - Directional Signal (Turn) W/ Single Tail Board W/Plow Lights:Diagram3
L9 - Directional Signal (Turn) W/ Single Tail Board W/Plow Lights:Diagram4

L9 - Headlight W/Plowlights W/LOWW W/O Headlight Interrupt -10 PIN CLK:Diagram3
L9 - Headlight W/Plowlights W/LOWW W/O Headlight Interrupt -10 PIN CLK:Diagram4
L9 - Headlight W/Plowlights W/LOWW W/O Headlight Interrupt -10 PIN CLK:Diagram7
L9 - Headlight W/Plowlights W/LOWW W/O Headlight Interrupt -10 PIN CLK:Diagram8
L9 - Headlights W 10PIN CLK W/LOWW W/Interrupt:Diagram3
L9 - Headlights W 10PIN CLK W/LOWW W/Interrupt:Diagram4
L9 - Headlights W 10PIN CLK W/LOWW W/O Interrupt:Diagram3
L9 - Headlights W 10PIN CLK W/LOWW W/O Interrupt:Diagram4
L9 - Headlights W/O Lights ON With Wipers (LOWW) W/O Headlights Interrupt:Diagram3
L9 - Headlights W/O Lights ON With Wipers (LOWW) W/O Headlights Interrupt:Diagram4
L9 - Headlights W/O Lights ON with wipers (LOWW) W/ Headlights Interrupt:Diagram3
L9 - Headlights W/O Lights ON with wipers (LOWW) W/ Headlights Interrupt:Diagram4
L9 - Headlights W/PlowLights W/Headlight Interrupt -10PIN CLK W/LOWW W/Interrupt:Diagram3
L9 - Headlights W/PlowLights W/Headlight Interrupt -10PIN CLK W/LOWW W/Interrupt:Diagram4
L9 - Headlights W/PlowLights W/Headlight Interrupt -10PIN CLK W/LOWW W/Interrupt:Diagram7
L9 - Headlights W/PlowLights W/Headlight Interrupt -10PIN CLK W/LOWW W/Interrupt:Diagram8
L9 - Headlights W/Plowlights W/O Lights ON With Wipers (LOWW) W/O Headlights Interrupt:Diagram3
L9 - Headlights W/Plowlights W/O Lights ON With Wipers (LOWW) W/O Headlights Interrupt:Diagram4
L9 - Headlights W/Plowlights W/O Lights ON With Wipers (LOWW) W/O Headlights Interrupt:Diagram7
L9 - Headlights W/Plowlights W/O Lights ON With Wipers (LOWW) W/O Headlights Interrupt:Diagram8
L9 - Headlights W/PlowLights W/O Lights ON with wipers (LOWW) W/ Headlights Interrupt:Diagram3
L9 - Headlights W/PlowLights W/O Lights ON with wipers (LOWW) W/ Headlights Interrupt:Diagram4
L9 - Headlights W/PlowLights W/O Lights ON with wipers (LOWW) W/ Headlights Interrupt:Diagram7

L9 - Headlights W/PlowLights W/O Lights ON with wipers (LOWW) W/ Headlights Interrupt:Diagram8

Mates LT-LS_HEADLIGHT_HAL-1016-1 0-03A

Name	Terminal Part Number	V-Min	Name	Wire Part Number	Wire CSA	Wire Spec	Wire Material description	Wire Color Description	Wire Length	End2 Terminal Part Number	End2 Pin Name	End2 Connect or
A	-	-	ML52	2643693 R1	1.91	14.0	Std. Wall XLPE Primary Cable	YELLOW 2	2975.0	-	1	1700
A	-	-	RD52	2643693 R1	1.91	14.0	Std. Wall XLPE Primary Cable	YELLOW 2	2975.0	-	1	1700
B	-	-	MZ11-GB	2643689 R1	1.91	14.0	Std. Wall XLPE Primary Cable	WHITE	3015.0	-	-	-
B	-	-	MY11-GB	2643689 R1	1.91	14.0	Std. Wall XLPE Primary Cable	WHITE	3015.0	-	-	-
B	-	-	MZ11-GB	2643689 R1	1.91	14.0	Std. Wall XLPE Primary Cable	WHITE	3015.0	-	X	-
B	-	-	MY11-GB	2643689 R1	1.91	14.0	Std. Wall XLPE Primary Cable	WHITE	3015.0	-	X	-
B	-	-	TC11-GB	2643689 R1	1.91	14.0	Std. Wall XLPE Primary Cable	WHITE	3015.0	-	-	-
B	-	-	TD11-GB	2643689 R1	1.91	14.0	Std. Wall XLPE Primary Cable	WHITE	3015.0	-	-	-

Name	Terminal Part Number	V-Min	Name	Wire Part Number	Wire CSA	Wire Spec	Wire Material description	Wire Color Description	Wire Length	End2 Terminal Part Number	End2 Pin Name	End2 Connector
C	-	-	ML53	2643693 R1	1.91	14.0	Std. Wall XLPE Primary Cable	YELLOW 2	2975.0	-	2	1700
C	-	-	RD53	2643693 R1	1.91	14.0	Std. Wall XLPE Primary Cable	YELLOW 2	2975.0	-	2	1700
C	-	-	MF53	2643693 R1	1.91	14.0	Std. Wall XLPE Primary Cable	YELLOW 2	2975.0	-	2	1700
D	-	-	MU56C	3510318 R1	1.16	16.0	Thin Wall XLPE Primary Cable	ORANGE	1240.0	-	X	-
D	-	-	NF56C	3510318 R1	1.16	16.0	Thin Wall XLPE Primary Cable	ORANGE	1290.0	-	X	-
D	-	-	RD56C	3510318 R1	1.16	16.0	Thin Wall XLPE Primary Cable	ORANGE	1290.0	-	X	-
D	-	-	ML56C	3510318 R1	1.16	16.0	Thin Wall XLPE Primary Cable	ORANGE	1240.0	-	X	-
D	-	-	MN56C	2643682 R1	1.16	16.0	Std. Wall XLPE Primary Cable	ORANGE	625.0	-	X	-

Name	Terminal Part Number	V-Min	Name	Wire Part Number	Wire CSA	Wire Spec	Wire Material description	Wire Color Description	Wire Length	End2 Terminal Part Number	End2 Pin Name	End2 Connector
D	-	-	MC56C	2643682 R1	1.16	16.0	Std. Wall XLPE Primary Cable	ORANGE	625.0	-	X	-
D	-	-	RB56C	2643682 R1	1.16	16.0	Std. Wall XLPE Primary Cable	ORANGE	795.0	-	X	-
D	-	-	MW56C	2643682 R1	1.16	16.0	Std. Wall XLPE Primary Cable	ORANGE	675.0	-	X	-
D	-	-	MF56B	3510318 R1	1.16	16.0	Thin Wall XLPE Primary Cable	ORANGE	2975.0	-	14	1700

Connector Name	8001A
Part Number	1677851C1
Instances	B6.7 - Front Marker Lights - Without Snow Plow Lights:Diagram2 L9 - Front Marker Lights - Without Snow Plow Lights:Diagram2
Mates	LT-LS_HEADLIGHT_HAL-1016-1 0-03A

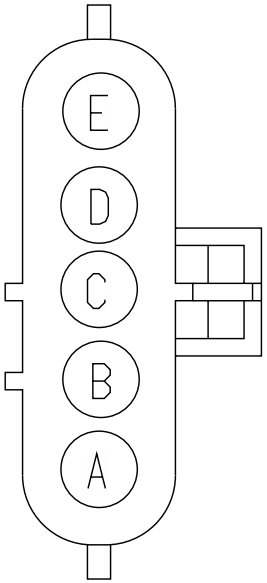

Name	Terminal Part Number	V-Min	Name	Wire Part Number	Wire CSA	Wire Spec	Wire Material description	Wire Color Description	Wire Length	End2 Terminal Part Number	End2 Pin Name	End2 Connect or
B	-	-	MY11-GB	2643689 R1	1.91	14.0	Std. Wall XLPE Primary Cable	WHITE	3015.0	-	-	-
E	-	-	ML54C	2643688 R1	1.91	14.0	Std. Wall XLPE Primary Cable	BROWN	900.0	-	X	-

Connector Name	8001-LF
Part Number	1677851C1
Instances	B6.7 - Directional Signal (Turn) W/ Less Power Module Tail Board W/Hazard SW W/PLOW LIGHTS:Diagram1 B6.7 - Directional Signal (Turn) W/ Less Power Module Tail Board W/Hazard SW W/PLOW LIGHTS:Diagram2 B6.7 - Directional Signal (Turn) W/ Less Power Module Tail Board W/Hazard SW W/PLOW LIGHTS:Diagram3 B6.7 - Directional Signal (Turn) W/ Less Power Module Tail Board W/Hazard SW W/PLOW LIGHTS:Diagram4 B6.7 - Directional Signal (Turn) W/ DAISY CHAIN BOX LAMPS:Diagram1 B6.7 - Directional Signal (Turn) W/ LED BOX LAMPS:Diagram1 B6.7 - Directional Signal (Turn) W/ LED BOX LAMPS W/Plow Lights:Diagram1 B6.7 - Directional Signal (Turn) W/ LED BOX LAMPS W/Plow Lights:Diagram2 B6.7 - Directional Signal (Turn) W/ LED BOX LAMPS W/Plow Lights:Diagram3 B6.7 - Directional Signal (Turn) W/ LED BOX LAMPS W/Plow Lights:Diagram4 B6.7 - Directional Signal (Turn) W/ Less Power Module Tail Board W/Hazard SW:Diagram1 B6.7 - Directional Signal (Turn) W/ Single Tail Board W/Hazard SW:Diagram1 B6.7 - Directional Signal (Turn) W/ Single Tail Board W/Plow Lights:Diagram1 B6.7 - Directional Signal (Turn) W/ Single Tail Board W/Plow Lights:Diagram2 B6.7 - Front Marker Lights - With Plow Lights:Diagram1 B6.7 - Front Marker Lights - With Plow Lights:Diagram2 B6.7 - Front Marker Lights - With Plow Lights:Diagram3 B6.7 - Front Marker Lights - With Plow Lights:Diagram4 B6.7 - Headlight W/Plowlights W/LOWW W/O Headlight Interrupt -10 PIN CLK:Diagram1 B6.7 - Headlight W/Plowlights W/LOWW W/O Headlight Interrupt -10 PIN CLK:Diagram2 B6.7 - Headlight W/Plowlights W/LOWW W/O Headlight Interrupt -10 PIN CLK:Diagram5 B6.7 - Headlight W/Plowlights W/LOWW W/O Headlight Interrupt -10 PIN CLK:Diagram6 B6.7 - Headlights W 10PIN CLK W/LOWW W/Interrupt:Diagram1 B6.7 - Headlights W 10PIN CLK W/LOWW W/Interrupt:Diagram2

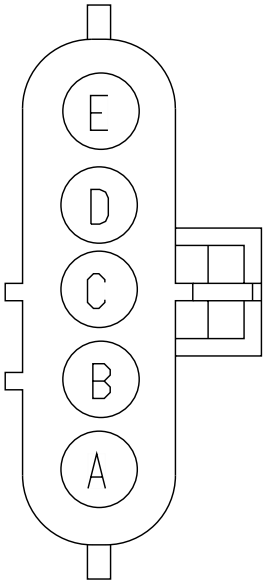

B6.7 - Headlights W 10PIN CLK W/LOWW W/O Interrupt:Diagram1
B6.7 - Headlights W 10PIN CLK W/LOWW W/O Interrupt:Diagram2
B6.7 - Headlights W/O Lights ON With Wipers (LOWW) W/O Headlights Interrupt:Diagram1
B6.7 - Headlights W/O Lights ON With Wipers (LOWW) W/O Headlights Interrupt:Diagram2
B6.7 - Headlights W/O Lights ON with wipers (LOWW) W/ Headlights Interrupt:Diagram1
B6.7 - Headlights W/O Lights ON with wipers (LOWW) W/ Headlights Interrupt:Diagram2
B6.7 - Headlights W/PlowLights W/Headlight Interrupt -10PIN CLK W/LOWW W/Interrupt:Diagram1
B6.7 - Headlights W/PlowLights W/Headlight Interrupt -10PIN CLK W/LOWW W/Interrupt:Diagram2
B6.7 - Headlights W/PlowLights W/Headlight Interrupt -10PIN CLK W/LOWW W/Interrupt:Diagram5
B6.7 - Headlights W/PlowLights W/Headlight Interrupt -10PIN CLK W/LOWW W/Interrupt:Diagram6
B6.7 - Headlights W/Plowlights W/O Lights ON With Wipers (LOWW) W/O Headlights Interrupt:Diagram1
B6.7 - Headlights W/Plowlights W/O Lights ON With Wipers (LOWW) W/O Headlights Interrupt:Diagram2
B6.7 - Headlights W/Plowlights W/O Lights ON With Wipers (LOWW) W/O Headlights Interrupt:Diagram5
B6.7 - Headlights W/Plowlights W/O Lights ON With Wipers (LOWW) W/O Headlights Interrupt:Diagram6
B6.7 - Headlights W/PlowLights W/O Lights ON with wipers (LOWW) W/ Headlights Interrupt:Diagram1
B6.7 - Headlights W/PlowLights W/O Lights ON with wipers (LOWW) W/ Headlights Interrupt:Diagram2
B6.7 - Headlights W/PlowLights W/O Lights ON with wipers (LOWW) W/ Headlights Interrupt:Diagram5
B6.7 - Headlights W/PlowLights W/O Lights ON with wipers (LOWW) W/ Headlights Interrupt:Diagram6
L9 - Directional Signal (Turn) W/ Less Power Module Tail Board W/Hazard SW W/PLOW LIGHTS:Diagram1
L9 - Directional Signal (Turn) W/ Less Power Module Tail Board W/Hazard SW W/PLOW LIGHTS:Diagram2
L9 - Directional Signal (Turn) W/ Less Power Module Tail Board W/Hazard SW W/PLOW LIGHTS:Diagram3
L9 - Directional Signal (Turn) W/ Less Power Module Tail Board W/Hazard SW W/PLOW LIGHTS:Diagram4

L9 - Directional Signal (Turn) W/ DAISY CHAIN BOX LAMPS:Diagram1
L9 - Directional Signal (Turn) W/ LED BOX LAMPS:Diagram1
L9 - Directional Signal (Turn) W/ LED BOX LAMPS W/Plow Lights:Diagram1
L9 - Directional Signal (Turn) W/ LED BOX LAMPS W/Plow Lights:Diagram2
L9 - Directional Signal (Turn) W/ LED BOX LAMPS W/Plow Lights:Diagram3
L9 - Directional Signal (Turn) W/ LED BOX LAMPS W/Plow Lights:Diagram4
L9 - Directional Signal (Turn) W/ Less Power Module Tail Board W/Hazard SW:Diagram1
L9 - Directional Signal (Turn) W/ Single Tail Board W/Hazard SW:Diagram1
L9 - Directional Signal (Turn) W/ Single Tail Board W/Plow Lights:Diagram1
L9 - Directional Signal (Turn) W/ Single Tail Board W/Plow Lights:Diagram2
L9 - Front Marker Lights - With Plow Lights:Diagram1
L9 - Front Marker Lights - With Plow Lights:Diagram2
L9 - Front Marker Lights - With Plow Lights:Diagram3
L9 - Front Marker Lights - With Plow Lights:Diagram4
L9 - Headlight W/Plowlights W/LOWW W/O Headlight Interrupt -10 PIN CLK:Diagram1
L9 - Headlight W/Plowlights W/LOWW W/O Headlight Interrupt -10 PIN CLK:Diagram2
L9 - Headlight W/Plowlights W/LOWW W/O Headlight Interrupt -10 PIN CLK:Diagram5
L9 - Headlight W/Plowlights W/LOWW W/O Headlight Interrupt -10 PIN CLK:Diagram6
L9 - Headlights W 10PIN CLK W/LOWW W/Interrupt:Diagram1
L9 - Headlights W 10PIN CLK W/LOWW W/Interrupt:Diagram2
L9 - Headlights W 10PIN CLK W/LOWW W/O Interrupt:Diagram1
L9 - Headlights W 10PIN CLK W/LOWW W/O Interrupt:Diagram2
L9 - Headlights W/O Lights ON With Wipers (LOWW) W/O Headlights Interrupt:Diagram1
L9 - Headlights W/O Lights ON With Wipers (LOWW) W/O Headlights Interrupt:Diagram2
L9 - Headlights W/O Lights ON with wipers (LOWW) W/ Headlights Interrupt:Diagram1

L9 - Headlights W/O Lights ON with wipers (LOWW) W/ Headlights Interrupt:Diagram2
L9 - Headlights W/PlowLights W/Headlight Interrupt -10PIN CLK W/LOWW W/Interrupt:Diagram1
L9 - Headlights W/PlowLights W/Headlight Interrupt -10PIN CLK W/LOWW W/Interrupt:Diagram2
L9 - Headlights W/PlowLights W/Headlight Interrupt -10PIN CLK W/LOWW W/Interrupt:Diagram5
L9 - Headlights W/PlowLights W/Headlight Interrupt -10PIN CLK W/LOWW W/Interrupt:Diagram6
L9 - Headlights W/Plowlights W/O Lights ON With Wipers (LOWW) W/O Headlights Interrupt:Diagram1
L9 - Headlights W/Plowlights W/O Lights ON With Wipers (LOWW) W/O Headlights Interrupt:Diagram2
L9 - Headlights W/Plowlights W/O Lights ON With Wipers (LOWW) W/O Headlights Interrupt:Diagram5
L9 - Headlights W/Plowlights W/O Lights ON With Wipers (LOWW) W/O Headlights Interrupt:Diagram6
L9 - Headlights W/PlowLights W/O Lights ON with wipers (LOWW) W/ Headlights Interrupt:Diagram1
L9 - Headlights W/PlowLights W/O Lights ON with wipers (LOWW) W/ Headlights Interrupt:Diagram2
L9 - Headlights W/PlowLights W/O Lights ON with wipers (LOWW) W/ Headlights Interrupt:Diagram5
L9 - Headlights W/PlowLights W/O Lights ON with wipers (LOWW) W/ Headlights Interrupt:Diagram6

Name	Terminal Part Number	V-Min	Name	Wire Part Number	Wire CSA	Wire Spec	Wire Material description	Wire Color Description	Wire Length	End2 Terminal Part Number	End2 Pin Name	End2 Connect or
A	-	-	RB52	2643693 R1	1.91	14.0	Std. Wall XLPE Primary Cable	YELLOW 2	2360.0	-	1	1700
A	-	-	MC52	2643693 R1	1.91	14.0	Std. Wall XLPE Primary Cable	YELLOW 2	2360.0	-	1	1700

Name	Terminal Part Number	V-Min	Name	Wire Part Number	Wire CSA	Wire Spec	Wire Material description	Wire Color Description	Wire Length	End2 Terminal Part Number	End2 Pin Name	End2 Connector
A	-	-	MB52	2643693 R1	1.91	14.0	Std. Wall XLPE Primary Cable	YELLOW 2	2360.0	-	1	1700
B	-	-	TC11-GB	2643689 R1	1.91	14.0	Std. Wall XLPE Primary Cable	WHITE	3015.0	-	-	-
B	-	-	TD11-GB	2643689 R1	1.91	14.0	Std. Wall XLPE Primary Cable	WHITE	3015.0	-	-	-
B	-	-	MZ11-GB	2643689 R1	1.91	14.0	Std. Wall XLPE Primary Cable	WHITE	3015.0	-	-	-
B	-	-	MY11-GB	2643689 R1	1.91	14.0	Std. Wall XLPE Primary Cable	WHITE	3015.0	-	-	-
C	-	-	RB53	2643693 R1	1.91	14.0	Std. Wall XLPE Primary Cable	YELLOW 2	2360.0	-	2	1700
C	-	-	MC53	2643693 R1	1.91	14.0	Std. Wall XLPE Primary Cable	YELLOW 2	2360.0	-	2	1700
C	-	-	MA53	2643693 R1	1.91	14.0	Std. Wall XLPE Primary Cable	YELLOW 2	2360.0	-	2	1700

Name	Terminal Part Number	V-Min	Name	Wire Part Number	Wire CSA	Wire Spec	Wire Material description	Wire Color Description	Wire Length	End2 Terminal Part Number	End2 Pin Name	End2 Connector
D	-	-	MN56C	2643682 R1	1.16	16.0	Std. Wall XLPE Primary Cable	ORANGE	625.0	-	X	-
D	-	-	MC56C	2643682 R1	1.16	16.0	Std. Wall XLPE Primary Cable	ORANGE	625.0	-	X	-
D	-	-	MB56B	3510318 R1	1.16	16.0	Thin Wall XLPE Primary Cable	ORANGE	2360.0	-	14	1700
D	-	-	RB56C	2643682 R1	1.16	16.0	Std. Wall XLPE Primary Cable	ORANGE	795.0	-	X	-
D	-	-	MW56C	2643682 R1	1.16	16.0	Std. Wall XLPE Primary Cable	ORANGE	675.0	-	X	-
D	-	-	MU56C	3510318 R1	1.16	16.0	Thin Wall XLPE Primary Cable	ORANGE	1240.0	-	X	-
D	-	-	NF56C	3510318 R1	1.16	16.0	Thin Wall XLPE Primary Cable	ORANGE	1290.0	-	X	-
D	-	-	RD56C	3510318 R1	1.16	16.0	Thin Wall XLPE Primary Cable	ORANGE	1290.0	-	X	-

Name	Terminal Part Number	V-Min	Name	Wire Part Number	Wire CSA	Wire Spec	Wire Material description	Wire Color Description	Wire Length	End2 Terminal Part Number	End2 Pin Name	End2 Connector
D	-	-	ML56C	3510318 R1	1.16	16.0	Thin Wall XLPE Primary Cable	ORANGE	1240.0	-	X	-
D	-	-	MA56B	3510318 R1	1.16	16.0	Thin Wall XLPE Primary Cable	ORANGE	2360.0	-	14	1700
D	-	-	MF56B	3510318 R1	1.16	16.0	Thin Wall XLPE Primary Cable	ORANGE	2975.0	-	14	1700
E	-	-	MC54C	2643688 R1	1.91	14.0	Std. Wall XLPE Primary Cable	BROWN	865.0	-	X	-
E	-	-	MW54C	2643688 R1	1.91	14.0	Std. Wall XLPE Primary Cable	BROWN	715.0	-	X	-
E	-	-	MU54C	2643688 R1	1.91	14.0	Std. Wall XLPE Primary Cable	BROWN	900.0	-	X	-
E	-	-	NF54C	2643688 R1	1.91	14.0	Std. Wall XLPE Primary Cable	BROWN	1050.0	-	X	-

Connector Name	8001
Part Number	1677851C1
Instances	A26 - Directional Signal (Turn) W/ Daisy Chain Box Lamps:Diagram1 A26 - Directional Signal (Turn) W/ Daisy Chain Box Lamps, W/ Plow Lights:Diagram1-Option 1 (Snow Plow #1) A26 - Directional Signal (Turn) W/ Daisy Chain Box Lamps, W/ Plow Lights:Diagram1-Option 2 (Snow Plow #2) A26 - Directional Signal (Turn) W/ LED BOX LAMPS:Diagram1 A26 - Directional Signal (Turn) W/ LED BOX LAMPS, W/Plow Lights:Diagram1-Option 1 (Snow Plow #1) A26 - Directional Signal (Turn) W/ LED BOX LAMPS, W/Plow Lights:Diagram1-Option 2 (Snow Plow #2) A26 - Directional Signal (Turn) W/ Less Power Module Tail Board, W/Hazard SW:Diagram1 A26 - Directional Signal (Turn) W/ Less Power Module Tail Board, W/Hazard SW, W/Plow Lights:Diagram1-Option 1 (Snow Plow #1) A26 - Directional Signal (Turn) W/ Less Power Module Tail Board, W/Hazard SW, W/Plow Lights:Diagram1-Option 2 (Snow Plow #2) A26 - Directional Signal (Turn) W/ Single Tail Board, W/Hazard SW, W/Plow Lights:Diagram1-Option 1 (Snow Plow #1) A26 - Directional Signal (Turn) W/ Single Tail Board, W/Hazard SW, W/Plow Lights:Diagram1-Option 2 (Snow Plow #2) A26 - Front Marker Lights:Diagram1 A26 - Front Marker Lights W/Plow Lights:Diagram1-Combination1 A26 - Front Marker Lights W/Plow Lights:Diagram1-Combination2 A26 - Headlight W/Plowlights, W/LOWW, W/O Interrupt:Diagram1-Combination1 A26 - Headlight W/Plowlights, W/LOWW, W/O Interrupt:Diagram1-Combination2 A26 - Headlight W/Plowlights, W/LOWW, W/O Interrupt:Diagram1-Combination3 A26 - Headlight W/Plowlights, W/LOWW, W/O Interrupt:Diagram1-Combination4 A26 - Headlight W/Plowlights, W/O LOWW, W/O Interrupt:Diagram1-Combination1 A26 - Headlight W/Plowlights, W/O LOWW, W/O Interrupt:Diagram1-Combination2

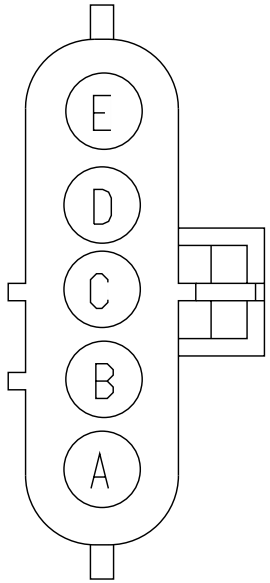

	A26 - Headlight W/Plowlights, W/O LOWW, W/O Interrupt:Diagram1-Combination3 A26 - Headlight W/Plowlights, W/O LOWW, W/O Interrupt:Diagram1-Combination4 A26 - Headlights W/LOWW, W/Interrupt - 10 PIN CLK:Diagram1-Combination1 A26 - Headlights W/LOWW, W/Interrupt - 10 PIN CLK:Diagram1-Combination2 A26 - Headlights W/LOWW, W/O Interrupt:Diagram1-Combination1 A26 - Headlights W/LOWW, W/O Interrupt:Diagram1-Combination2 A26 - Headlights W/O LOWW, W/Interrupt - 10 PIN CLK:Diagram1-Combination1 A26 - Headlights W/O LOWW, W/Interrupt - 10 PIN CLK:Diagram1-Combination2 A26 - Headlights W/O LOWW, W/O Interrupt:Diagram1-Combination1 A26 - Headlights W/O LOWW, W/O Interrupt:Diagram1-Combination2 A26 - Headlights W/PlowLights, W/LOWW, W/Interrupt - 10 PIN CLK:Diagram1-Combination1 A26 - Headlights W/PlowLights, W/LOWW, W/Interrupt - 10 PIN CLK:Diagram1-Combination2 A26 - Headlights W/PlowLights, W/LOWW, W/Interrupt - 10 PIN CLK:Diagram1-Combination3 A26 - Headlights W/PlowLights, W/LOWW, W/Interrupt - 10 PIN CLK:Diagram1-Combination4 A26 - Headlights W/PlowLights, W/O LOWW, W/Interrupt - 10 PIN CLK:Diagram1-Combination1 A26 - Headlights W/PlowLights, W/O LOWW, W/Interrupt - 10 PIN CLK:Diagram1-Combination2 A26 - Headlights W/PlowLights, W/O LOWW, W/Interrupt - 10 PIN CLK:Diagram1-Combination3 A26 - Headlights W/PlowLights, W/O LOWW, W/Interrupt - 10 PIN CLK:Diagram1-Combination4
Mates	LT-LS_HEADLIGHT_HAL-1016-1 0-03A

Name	Terminal Part Number	V-Min	Name	Wire Part Number	Wire CSA	Wire Spec	Wire Material description	Wire Color Description	Wire Length	End2 Terminal Part Number	End2 Pin Name	End2 Connector
A	-	-	MA52	2643693 R1	1.91	14.0	Std. Wall XLPE Primary Cable	YELLOW 2	2360.0	-	1	1700
A	-	-	RB52	2643693 R1	1.91	14.0	Std. Wall XLPE Primary Cable	YELLOW 2	2360.0	-	1	1700
A	-	-	MC52	2643693 R1	1.91	14.0	Std. Wall XLPE Primary Cable	YELLOW 2	2360.0	-	1	1700
B	-	-	TD11-GB	2643689 R1	1.91	14.0	Std. Wall XLPE Primary Cable	WHITE	3015.0	-	-	-
C	-	-	MA53	2643693 R1	1.91	14.0	Std. Wall XLPE Primary Cable	YELLOW 2	2360.0	-	2	1700
C	-	-	MC53	2643693 R1	1.91	14.0	Std. Wall XLPE Primary Cable	YELLOW 2	2360.0	-	2	1700
C	-	-	RB53	2643693 R1	1.91	14.0	Std. Wall XLPE Primary Cable	YELLOW 2	2360.0	-	2	1700
D	-	-	MC56C	2643682 R1	1.16	16.0	Std. Wall XLPE Primary Cable	ORANGE	625.0	-	X	-

Name	Terminal Part Number	V-Min	Name	Wire Part Number	Wire CSA	Wire Spec	Wire Material description	Wire Color Description	Wire Length	End2 Terminal Part Number	End2 Pin Name	End2 Connect or
D	-	-	RB56C	2643682 R1	1.16	16.0	Std. Wall XLPE Primary Cable	ORANGE	795.0	-	X	-
D	-	-	MA56B	3510318 R1	1.16	16.0	Thin Wall XLPE Primary Cable	ORANGE	2360.0	-	14	1700
E	-	-	RB54C	2643688 R1	1.91	14.0	Std. Wall XLPE Primary Cable	BROWN	715.0	-	X	-
E	-	-	MC54C	2643688 R1	1.91	14.0	Std. Wall XLPE Primary Cable	BROWN	865.0	-	X	-
E	-	-	MA54C	2643688 R1	1.91	14.0	Std. Wall XLPE Primary Cable	BROWN	615.0	-	X	-

Connector Name	8001
Part Number	1677851C1
Instances	A26 - Directional Signal (Turn) W/ Single Tail Board W/Hazard SW:Diagram1
Mates	LT-LS_HEADLIGHT_HAL-1016-1 0-03A

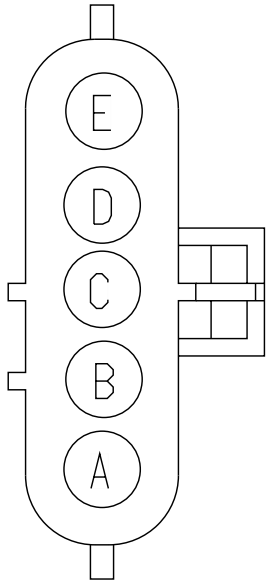

Name	Terminal Part Number	V-Min	Name	Wire Part Number	Wire CSA	Wire Spec	Wire Material description	Wire Color Description	Wire Length	End2 Terminal Part Number	End2 Pin Name	End2 Connect or
B	-	-	MY11-GB	2643689 R1	1.91	14.0	Std. Wall XLPE Primary Cable	WHITE	3015.0	-	-	-
D	-	-	RB56C	2643682 R1	1.16	16.0	Std. Wall XLPE Primary Cable	ORANGE	795.0	-	X	-

Connector Name 8001

Part Number 1677851C1

Instances B6.7 - Front Marker Lights - Without Snow Plow Lights:Diagram1
L9 - Front Marker Lights - Without Snow Plow Lights:Diagram1

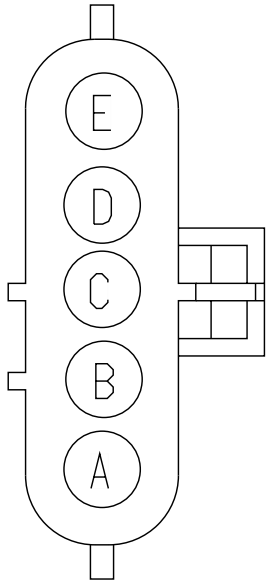

Name	Terminal Part Number	V-Min	Name	Wire Part Number	Wire CSA	Wire Spec	Wire Material description	Wire Color Description	Wire Length	End2 Terminal Part Number	End2 Pin Name	End2 Connect or
B	-	-	TC11-GB	2643689 R1	1.91	14.0	Std. Wall XLPE Primary Cable	WHITE	3015.0	-	-	-
E	-	-	MN54C	2643688 R1	1.91	14.0	Std. Wall XLPE Primary Cable	BROWN	865.0	-	X	-

Connector Name	8102A
Part Number	2039311C91
Instances	B6.7 - Directional Signal (Turn) W/ Less Power Module Tail Board W/Hazard SW W/PLOW LIGHTS:Diagram3 B6.7 - Directional Signal (Turn) W/ Daisy Chain Box Lamps W/ Plow Lights:Diagram3 B6.7 - Directional Signal (Turn) W/ LED BOX LAMPS W/Plow Lights:Diagram3 B6.7 - Directional Signal (Turn) W/ Single Tail Board W/Plow Lights:Diagram3 B6.7 - Front Marker Lights - With Plow Lights:Diagram3 B6.7 - Headlight W/Plowlights W/LOWW W/O Headlight Interrupt -10 PIN CLK:Diagram3 B6.7 - Headlight W/Plowlights W/LOWW W/O Headlight Interrupt -10 PIN CLK:Diagram7 B6.7 - Headlights W/PlowLights W/Headlight Interrupt -10PIN CLK W/LOWW W/Interrupt:Diagram3 B6.7 - Headlights W/PlowLights W/Headlight Interrupt -10PIN CLK W/LOWW W/Interrupt:Diagram7 B6.7 - Headlights W/Plowlights W/O Lights ON With Wipers (LOWW) W/O Headlights Interrupt:Diagram3 B6.7 - Headlights W/Plowlights W/O Lights ON With Wipers (LOWW) W/O Headlights Interrupt:Diagram7 B6.7 - Headlights W/PlowLights W/O Lights ON with wipers (LOWW) W/ Headlights Interrupt:Diagram3 B6.7 - Headlights W/PlowLights W/O Lights ON with wipers (LOWW) W/ Headlights Interrupt:Diagram7 L9 - Directional Signal (Turn) W/ Less Power Module Tail Board W/Hazard SW W/PLOW LIGHTS:Diagram3 L9 - Directional Signal (Turn) W/ Daisy Chain Box Lamps W/ Plow Lights:Diagram3 L9 - Directional Signal (Turn) W/ LED BOX LAMPS W/Plow Lights:Diagram3 L9 - Directional Signal (Turn) W/ Single Tail Board W/Plow Lights:Diagram3 L9 - Front Marker Lights - With Plow Lights:Diagram3 L9 - Headlight W/Plowlights W/LOWW W/O Headlight Interrupt -10 PIN CLK:Diagram3 L9 - Headlight W/Plowlights W/LOWW W/O Headlight Interrupt -10 PIN CLK:Diagram7 L9 - Headlights W/PlowLights W/Headlight Interrupt -10PIN CLK W/LOWW W/Interrupt:Diagram3

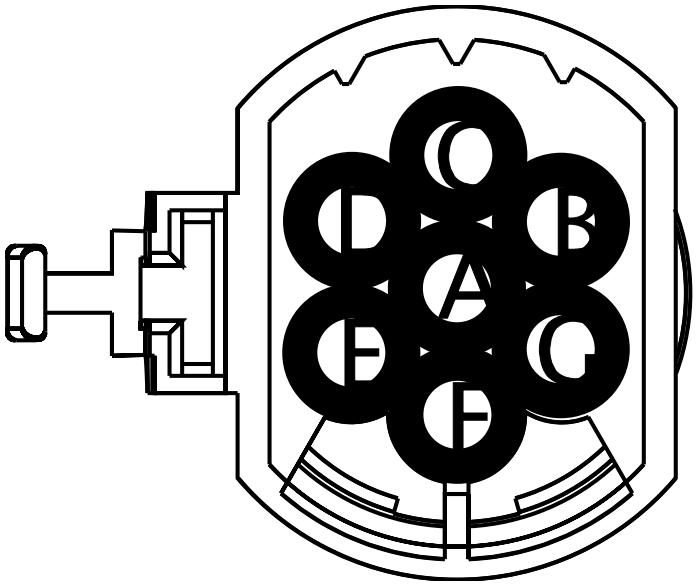

L9 - Headlights W/PlowLights W/Headlight Interrupt -10PIN CLK W/LOWW W/Interrupt:Diagram7
L9 - Headlights W/Plowlights W/O Lights ON With Wipers (LOWW) W/O Headlights Interrupt:Diagram3
L9 - Headlights W/Plowlights W/O Lights ON With Wipers (LOWW) W/O Headlights Interrupt:Diagram7
L9 - Headlights W/PlowLights W/O Lights ON with wipers (LOWW) W/ Headlights Interrupt:Diagram3
L9 - Headlights W/PlowLights W/O Lights ON with wipers (LOWW) W/ Headlights Interrupt:Diagram7

Mates VD-SNOW_PLOW_LT-1016-12-01A

Name	Terminal Part Number	V-Min	Name	Wire Part Number	Wire CSA	Wire Spec	Wire Material description	Wire Color Description	Wire Length	End2 Terminal Part Number	End2 Pin Name	End2 Connect or
A	-	-	ML64HI	2643693 R1	1.91	14.0	Std. Wall XLPE Primary Cable	YELLOW 2	2005.0	-	X	-
B	-	-	ML11-GE	2643689 R1	1.91	14.0	Std. Wall XLPE Primary Cable	WHITE	2005.0	-	-	-
C	-	-	ML64LO	2643693 R1	1.91	14.0	Std. Wall XLPE Primary Cable	YELLOW 2	2105.0	-	X	-
D	-	-	MU56D	3510318 R1	1.16	16.0	Thin Wall XLPE Primary Cable	ORANGE	990.0	-	X	-
D	-	-	ML56D	3510318 R1	1.16	16.0	Thin Wall XLPE Primary Cable	ORANGE	990.0	-	X	-
E	-	-	MU54F	2643688 R1	1.91	14.0	Std. Wall XLPE Primary Cable	BROWN	650.0	-	X	-

Name	Terminal Part Number	V-Min	Name	Wire Part Number	Wire CSA	Wire Spec	Wire Material description	Wire Color Description	Wire Length	End2 Terminal Part Number	End2 Pin Name	End2 Connect or
F	-	-	MU57D	2643690 R1	1.91	14.0	Std. Wall XLPE Primary Cable	ORANGE	1260.0	-	X	-
F	-	-	ML57D	2643690 R1	1.91	14.0	Std. Wall XLPE Primary Cable	ORANGE	1260.0	-	X	-

Connector Name 8102

Part Number 2039311C91

Instances A26 - Directional Signal (Turn) W/ Daisy Chain Box Lamps, W/ Plow Lights:Diagram1-Option 1 (Snow Plow #1)
A26 - Directional Signal (Turn) W/ LED BOX LAMPS, W/Plow Lights:Diagram1-Option 1 (Snow Plow #1)
A26 - Directional Signal (Turn) W/ Less Power Module Tail Board, W/Hazard SW, W/Plow Lights:Diagram1-Option 1 (Snow Plow #1)
A26 - Directional Signal (Turn) W/ Single Tail Board, W/Hazard SW, W/Plow Lights:Diagram1-Option 1 (Snow Plow #1)
A26 - Front Marker Lights W/Plow Lights:Diagram1-Combination1
A26 - Headlight W/Plowlights, W/LOWW, W/O Interrupt:Diagram1-Combination1
A26 - Headlight W/Plowlights, W/LOWW, W/O Interrupt:Diagram1-Combination3
A26 - Headlight W/Plowlights, W/O LOWW, W/O Interrupt:Diagram1-Combination1
A26 - Headlight W/Plowlights, W/O LOWW, W/O Interrupt:Diagram1-Combination3
A26 - Headlights W/PlowLights, W/LOWW, W/Interrupt - 10 PIN CLK:Diagram1-Combination1
A26 - Headlights W/PlowLights, W/LOWW, W/Interrupt - 10 PIN CLK:Diagram1-Combination3
A26 - Headlights W/PlowLights, W/O LOWW, W/Interrupt - 10 PIN CLK:Diagram1-Combination1
A26 - Headlights W/PlowLights, W/O LOWW, W/Interrupt - 10 PIN CLK:Diagram1-Combination3

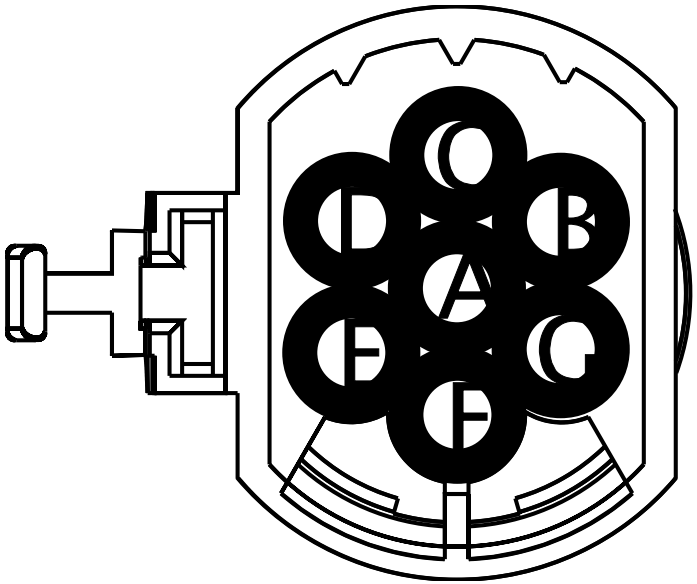

Name	Terminal Part Number	V-Min	Name	Wire Part Number	Wire CSA	Wire Spec	Wire Material description	Wire Color Description	Wire Length	End2 Terminal Part Number	End2 Pin Name	End2 Connector
A	-	-	WC64HI	3510337 R1	1.91	14.0	Thin Wall XLPE Primary Cable	YELLOW 2	1825.0	-	X	-
B	-	-	MC11-GE	2643689 R1	1.91	14.0	Std. Wall XLPE Primary Cable	WHITE	1640.0	-	-	-

Name	Terminal Part Number	V-Min	Name	Wire Part Number	Wire CSA	Wire Spec	Wire Material description	Wire Color Description	Wire Length	End2 Terminal Part Number	End2 Pin Name	End2 Connector
C	-	-	WC64LO	3510337 R1	1.91	14.0	Thin Wall XLPE Primary Cable	YELLOW 2	1725.0	-	X	-
D	-	-	MC56D	2643682 R1	1.16	16.0	Std. Wall XLPE Primary Cable	ORANGE	625.0	-	X	-
E	-	-	MC54F	2643688 R1	1.91	14.0	Std. Wall XLPE Primary Cable	BROWN	865.0	-	X	-
F	-	-	MC57D	2643682 R1	1.16	16.0	Std. Wall XLPE Primary Cable	ORANGE	895.0	-	X	-

Connector Name	8102
Part Number	2039311C91
Instances	B6.7 - Directional Signal (Turn) W/ Less Power Module Tail Board W/Hazard SW W/PLOW LIGHTS:Diagram1 B6.7 - Directional Signal (Turn) W/ Daisy Chain Box Lamps W/ Plow Lights:Diagram1 B6.7 - Directional Signal (Turn) W/ LED BOX LAMPS W/Plow Lights:Diagram1 B6.7 - Directional Signal (Turn) W/ Single Tail Board W/Plow Lights:Diagram1 B6.7 - Front Marker Lights - With Plow Lights:Diagram1 B6.7 - Headlight W/Plowlights W/LOWW W/O Headlight Interrupt -10 PIN CLK:Diagram1 B6.7 - Headlight W/Plowlights W/LOWW W/O Headlight Interrupt -10 PIN CLK:Diagram5 B6.7 - Headlights W/PlowLights W/Headlight Interrupt -10PIN CLK W/LOWW W/Interrupt:Diagram1 B6.7 - Headlights W/PlowLights W/Headlight Interrupt -10PIN CLK W/LOWW W/Interrupt:Diagram5 B6.7 - Headlights W/Plowlights W/O Lights ON With Wipers (LOWW) W/O Headlights Interrupt:Diagram1 B6.7 - Headlights W/Plowlights W/O Lights ON With Wipers (LOWW) W/O Headlights Interrupt:Diagram5 B6.7 - Headlights W/PlowLights W/O Lights ON with wipers (LOWW) W/ Headlights Interrupt:Diagram1 B6.7 - Headlights W/PlowLights W/O Lights ON with wipers (LOWW) W/ Headlights Interrupt:Diagram5 L9 - Directional Signal (Turn) W/ Less Power Module Tail Board W/Hazard SW W/PLOW LIGHTS:Diagram1 L9 - Directional Signal (Turn) W/ Daisy Chain Box Lamps W/ Plow Lights:Diagram1 L9 - Directional Signal (Turn) W/ LED BOX LAMPS W/Plow Lights:Diagram1 L9 - Directional Signal (Turn) W/ Single Tail Board W/Plow Lights:Diagram1 L9 - Front Marker Lights - With Plow Lights:Diagram1 L9 - Headlight W/Plowlights W/LOWW W/O Headlight Interrupt -10 PIN CLK:Diagram1 L9 - Headlight W/Plowlights W/LOWW W/O Headlight Interrupt -10 PIN CLK:Diagram5 L9 - Headlights W/PlowLights W/Headlight Interrupt -10PIN CLK W/LOWW W/Interrupt:Diagram1

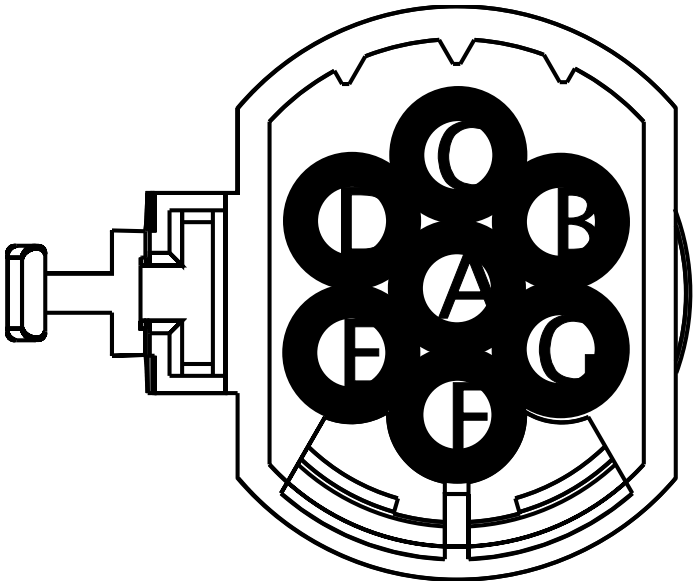

L9 - Headlights W/PlowLights W/Headlight Interrupt -10PIN CLK W/LOWW W/Interrupt:Diagram5
L9 - Headlights W/Plowlights W/O Lights ON With Wipers (LOWW) W/O Headlights Interrupt:Diagram1
L9 - Headlights W/Plowlights W/O Lights ON With Wipers (LOWW) W/O Headlights Interrupt:Diagram5
L9 - Headlights W/PlowLights W/O Lights ON with wipers (LOWW) W/ Headlights Interrupt:Diagram1
L9 - Headlights W/PlowLights W/O Lights ON with wipers (LOWW) W/ Headlights Interrupt:Diagram5

Name	Terminal Part Number	V-Min	Name	Wire Part Number	Wire CSA	Wire Spec	Wire Material description	Wire Color Description	Wire Length	End2 Terminal Part Number	End2 Pin Name	End2 Connect or
A	-	-	MC64HI	2643693 R1	1.91	14.0	Std. Wall XLPE Primary Cable	YELLOW 2	1640.0	-	X	-
B	-	-	MC11-GE	2643689 R1	1.91	14.0	Std. Wall XLPE Primary Cable	WHITE	1640.0	-	-	-
C	-	-	MC64LO	2643693 R1	1.91	14.0	Std. Wall XLPE Primary Cable	YELLOW 2	1740.0	-	X	-
D	-	-	MC56D	2643682 R1	1.16	16.0	Std. Wall XLPE Primary Cable	ORANGE	625.0	-	X	-
D	-	-	MN56D	2643682 R1	1.16	16.0	Std. Wall XLPE Primary Cable	ORANGE	625.0	-	X	-
E	-	-	MC54F	2643688 R1	1.91	14.0	Std. Wall XLPE Primary Cable	BROWN	865.0	-	X	-

Name	Terminal Part Number	V-Min	Name	Wire Part Number	Wire CSA	Wire Spec	Wire Material description	Wire Color Description	Wire Length	End2 Terminal Part Number	End2 Pin Name	End2 Connect or
F	-	-	MC57D	2643682 R1	1.16	16.0	Std. Wall XLPE Primary Cable	ORANGE	895.0	-	X	-
F	-	-	MN57D	2643682 R1	1.16	16.0	Std. Wall XLPE Primary Cable	ORANGE	895.0	-	X	-

Connector Name	8103A
Part Number	2039311C91
Instances	B6.7 - Directional Signal (Turn) W/ Less Power Module Tail Board W/Hazard SW W/PLOW LIGHTS:Diagram4 B6.7 - Directional Signal (Turn) W/ Daisy Chain Box Lamps W/ Plow Lights:Diagram4 B6.7 - Directional Signal (Turn) W/ LED BOX LAMPS W/Plow Lights:Diagram4 B6.7 - Directional Signal (Turn) W/ Single Tail Board W/Plow Lights:Diagram4 B6.7 - Front Marker Lights - With Plow Lights:Diagram4 B6.7 - Headlight W/Plowlights W/LOWW W/O Headlight Interrupt -10 PIN CLK:Diagram4 B6.7 - Headlight W/Plowlights W/LOWW W/O Headlight Interrupt -10 PIN CLK:Diagram8 B6.7 - Headlights W/PlowLights W/Headlight Interrupt -10PIN CLK W/LOWW W/Interrupt:Diagram4 B6.7 - Headlights W/PlowLights W/Headlight Interrupt -10PIN CLK W/LOWW W/Interrupt:Diagram8 B6.7 - Headlights W/Plowlights W/O Lights ON With Wipers (LOWW) W/O Headlights Interrupt:Diagram4 B6.7 - Headlights W/Plowlights W/O Lights ON With Wipers (LOWW) W/O Headlights Interrupt:Diagram8 B6.7 - Headlights W/PlowLights W/O Lights ON with wipers (LOWW) W/ Headlights Interrupt:Diagram4 B6.7 - Headlights W/PlowLights W/O Lights ON with wipers (LOWW) W/ Headlights Interrupt:Diagram8 L9 - Directional Signal (Turn) W/ Less Power Module Tail Board W/Hazard SW W/PLOW LIGHTS:Diagram4 L9 - Directional Signal (Turn) W/ Daisy Chain Box Lamps W/ Plow Lights:Diagram4 L9 - Directional Signal (Turn) W/ LED BOX LAMPS W/Plow Lights:Diagram4 L9 - Directional Signal (Turn) W/ Single Tail Board W/Plow Lights:Diagram4 L9 - Front Marker Lights - With Plow Lights:Diagram4 L9 - Headlight W/Plowlights W/LOWW W/O Headlight Interrupt -10 PIN CLK:Diagram4 L9 - Headlight W/Plowlights W/LOWW W/O Headlight Interrupt -10 PIN CLK:Diagram8 L9 - Headlights W/PlowLights W/Headlight Interrupt -10PIN CLK W/LOWW W/Interrupt:Diagram4

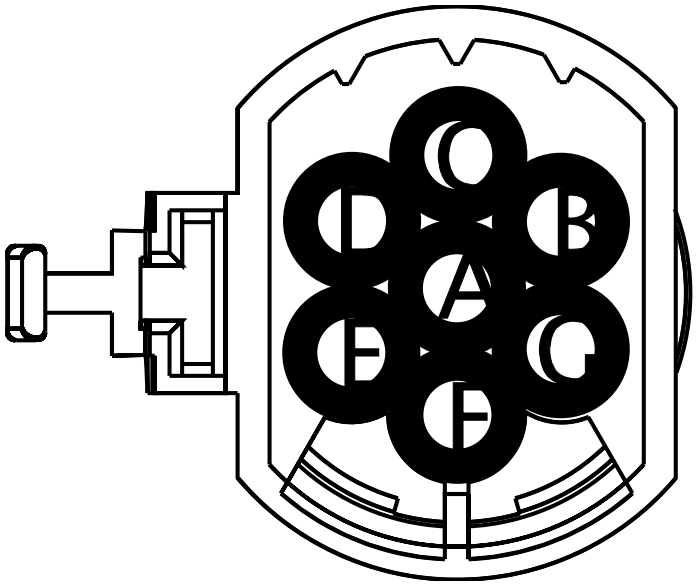

L9 - Headlights W/PlowLights W/Headlight Interrupt -10PIN CLK W/LOWW W/Interrupt:Diagram8
L9 - Headlights W/Plowlights W/O Lights ON With Wipers (LOWW) W/O Headlights Interrupt:Diagram4
L9 - Headlights W/Plowlights W/O Lights ON With Wipers (LOWW) W/O Headlights Interrupt:Diagram8
L9 - Headlights W/PlowLights W/O Lights ON with wipers (LOWW) W/ Headlights Interrupt:Diagram4
L9 - Headlights W/PlowLights W/O Lights ON with wipers (LOWW) W/ Headlights Interrupt:Diagram8

Name	Terminal Part Number	V-Min	Name	Wire Part Number	Wire CSA	Wire Spec	Wire Material description	Wire Color Description	Wire Length	End2 Terminal Part Number	End2 Pin Name	End2 Connector
A	-	-	RD64HI	2643693 R1	1.91	14.0	Std. Wall XLPE Primary Cable	YELLOW 2	2900.0	-	X	-
B	-	-	RD11-GE	2643689 R1	1.91	14.0	Std. Wall XLPE Primary Cable	WHITE	2950.0	-	-	-
C	-	-	RD64LO	2643693 R1	1.91	14.0	Std. Wall XLPE Primary Cable	YELLOW 2	3000.0	-	X	-
D	-	-	NF56D	3510318 R1	1.16	16.0	Thin Wall XLPE Primary Cable	ORANGE	1985.0	-	X	-
D	-	-	RD56D	3510318 R1	1.16	16.0	Thin Wall XLPE Primary Cable	ORANGE	1985.0	-	X	-
E	-	-	NF54F	2643688 R1	1.91	14.0	Std. Wall XLPE Primary Cable	BROWN	1745.0	-	X	-

Name	Terminal Part Number	V-Min	Name	Wire Part Number	Wire CSA	Wire Spec	Wire Material description	Wire Color Description	Wire Length	End2 Terminal Part Number	End2 Pin Name	End2 Connector
F	-	-	NF57D	2643682 R1	1.16	16.0	Std. Wall XLPE Primary Cable	ORANGE	2105.0	-	X	-
F	-	-	RD57D	2643682 R1	1.16	16.0	Std. Wall XLPE Primary Cable	ORANGE	2105.0	-	X	-

Connector Name 8103

Part Number 2039311C91

Instances
A26 - Directional Signal (Turn) W/ Daisy Chain Box Lamps, W/ Plow Lights:Diagram1-Option 2 (Snow Plow #2)
A26 - Directional Signal (Turn) W/ LED BOX LAMPS, W/Plow Lights:Diagram1-Option 2 (Snow Plow #2)
A26 - Directional Signal (Turn) W/ Less Power Module Tail Board, W/Hazard SW, W/Plow Lights:Diagram1-Option 2 (Snow Plow #2)
A26 - Directional Signal (Turn) W/ Single Tail Board, W/Hazard SW, W/Plow Lights:Diagram1-Option 2 (Snow Plow #2)
A26 - Front Marker Lights W/Plow Lights:Diagram1-Combination2
A26 - Headlight W/Plowlights, W/LOWW, W/O Interrupt:Diagram1-Combination2
A26 - Headlight W/Plowlights, W/LOWW, W/O Interrupt:Diagram1-Combination4
A26 - Headlight W/Plowlights, W/O LOWW, W/O Interrupt:Diagram1-Combination2
A26 - Headlight W/Plowlights, W/O LOWW, W/O Interrupt:Diagram1-Combination4
A26 - Headlights W/PlowLights, W/LOWW, W/Interrupt - 10 PIN CLK:Diagram1-Combination2
A26 - Headlights W/PlowLights, W/LOWW, W/Interrupt - 10 PIN CLK:Diagram1-Combination4
A26 - Headlights W/PlowLights, W/O LOWW, W/Interrupt - 10 PIN CLK:Diagram1-Combination2
A26 - Headlights W/PlowLights, W/O LOWW, W/Interrupt - 10 PIN CLK:Diagram1-Combination4

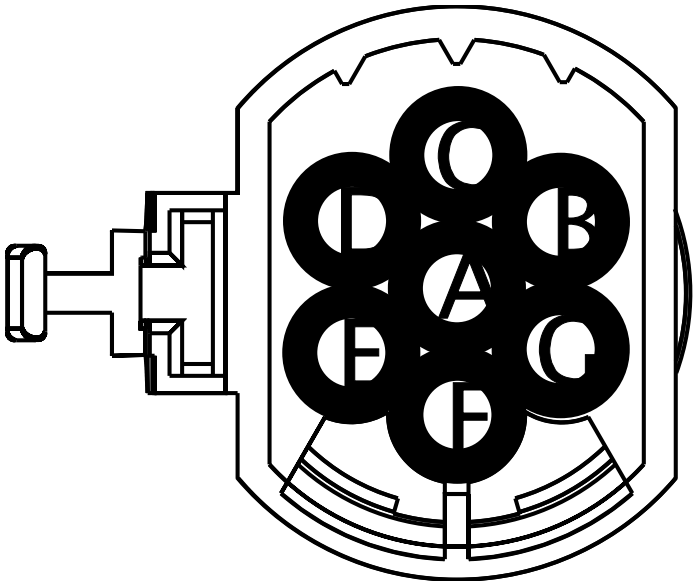

Mates VD-SNOW_PLOW_LT-1016-12-01A

Name	Terminal Part Number	V-Min	Name	Wire Part Number	Wire CSA	Wire Spec	Wire Material description	Wire Color Description	Wire Length	End2 Terminal Part Number	End2 Pin Name	End2 Connect or
A	-	-	WB64HI	3510337 R1	1.91	14.0	Thin Wall XLPE Primary Cable	YELLOW 2	2820.0	-	X	-

Name	Terminal Part Number	V-Min	Name	Wire Part Number	Wire CSA	Wire Spec	Wire Material description	Wire Color Description	Wire Length	End2 Terminal Part Number	End2 Pin Name	End2 Connector
B	-	-	RB11-GE	2643689 R1	1.91	14.0	Std. Wall XLPE Primary Cable	WHITE	2680.0	-	-	-
C	-	-	WB64LO	3510337 R1	1.91	14.0	Thin Wall XLPE Primary Cable	YELLOW 2	2720.0	-	X	-
D	-	-	RB56D	2643682 R1	1.16	16.0	Std. Wall XLPE Primary Cable	ORANGE	1620.0	-	X	-
E	-	-	RB54F	2643688 R1	1.91	14.0	Std. Wall XLPE Primary Cable	BROWN	1660.0	-	X	-
F	-	-	RB57D	2643682 R1	1.16	16.0	Std. Wall XLPE Primary Cable	ORANGE	1740.0	-	X	-

Connector Name	8103
Part Number	2039311C91
Instances	B6.7 - Directional Signal (Turn) W/ Less Power Module Tail Board W/Hazard SW W/PLOW LIGHTS:Diagram2 B6.7 - Directional Signal (Turn) W/ Daisy Chain Box Lamps W/ Plow Lights:Diagram2 B6.7 - Directional Signal (Turn) W/ LED BOX LAMPS W/Plow Lights:Diagram2 B6.7 - Directional Signal (Turn) W/ Single Tail Board W/Plow Lights:Diagram2 B6.7 - Front Marker Lights - With Plow Lights:Diagram2 B6.7 - Headlight W/Plowlights W/LOWW W/O Headlight Interrupt -10 PIN CLK:Diagram2 B6.7 - Headlight W/Plowlights W/LOWW W/O Headlight Interrupt -10 PIN CLK:Diagram6 B6.7 - Headlights W/PlowLights W/Headlight Interrupt -10PIN CLK W/LOWW W/Interrupt:Diagram2 B6.7 - Headlights W/PlowLights W/Headlight Interrupt -10PIN CLK W/LOWW W/Interrupt:Diagram6 B6.7 - Headlights W/Plowlights W/O Lights ON With Wipers (LOWW) W/O Headlights Interrupt:Diagram2 B6.7 - Headlights W/Plowlights W/O Lights ON With Wipers (LOWW) W/O Headlights Interrupt:Diagram6 B6.7 - Headlights W/PlowLights W/O Lights ON with wipers (LOWW) W/ Headlights Interrupt:Diagram2 B6.7 - Headlights W/PlowLights W/O Lights ON with wipers (LOWW) W/ Headlights Interrupt:Diagram6 L9 - Directional Signal (Turn) W/ Less Power Module Tail Board W/Hazard SW W/PLOW LIGHTS:Diagram2 L9 - Directional Signal (Turn) W/ Daisy Chain Box Lamps W/ Plow Lights:Diagram2 L9 - Directional Signal (Turn) W/ LED BOX LAMPS W/Plow Lights:Diagram2 L9 - Directional Signal (Turn) W/ Single Tail Board W/Plow Lights:Diagram2 L9 - Front Marker Lights - With Plow Lights:Diagram2 L9 - Headlight W/Plowlights W/LOWW W/O Headlight Interrupt -10 PIN CLK:Diagram2 L9 - Headlight W/Plowlights W/LOWW W/O Headlight Interrupt -10 PIN CLK:Diagram6 L9 - Headlights W/PlowLights W/Headlight Interrupt -10PIN CLK W/LOWW W/Interrupt:Diagram2

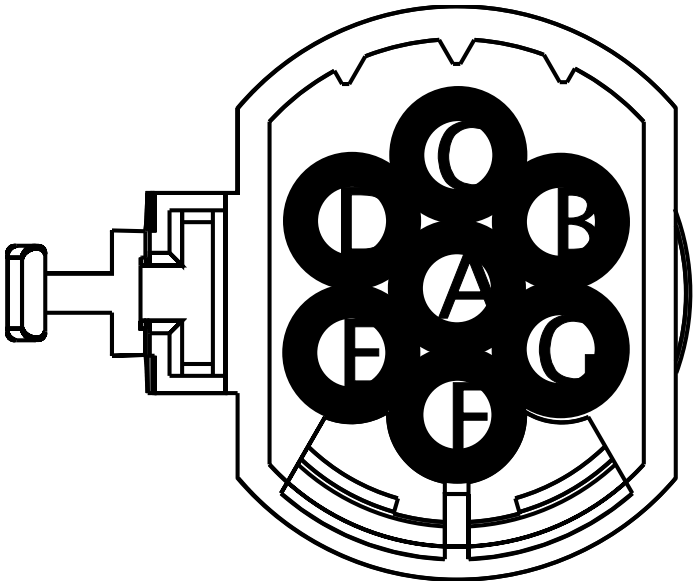

L9 - Headlights W/PlowLights W/Headlight Interrupt -10PIN CLK W/LOWW W/Interrupt:Diagram6
L9 - Headlights W/Plowlights W/O Lights ON With Wipers (LOWW) W/O Headlights Interrupt:Diagram2
L9 - Headlights W/Plowlights W/O Lights ON With Wipers (LOWW) W/O Headlights Interrupt:Diagram6
L9 - Headlights W/PlowLights W/O Lights ON with wipers (LOWW) W/ Headlights Interrupt:Diagram2
L9 - Headlights W/PlowLights W/O Lights ON with wipers (LOWW) W/ Headlights Interrupt:Diagram6

Name	Terminal Part Number	V-Min	Name	Wire Part Number	Wire CSA	Wire Spec	Wire Material description	Wire Color Description	Wire Length	End2 Terminal Part Number	End2 Pin Name	End2 Connect or
A	-	-	RB64HI	2643693 R1	1.91	14.0	Std. Wall XLPE Primary Cable	YELLOW 2	2535.0	-	X	-
B	-	-	RB11-GE	2643689 R1	1.91	14.0	Std. Wall XLPE Primary Cable	WHITE	2680.0	-	-	-
C	-	-	RB64LO	2643693 R1	1.91	14.0	Std. Wall XLPE Primary Cable	YELLOW 2	2635.0	-	X	-
D	-	-	MW56D	2643682 R1	1.16	16.0	Std. Wall XLPE Primary Cable	ORANGE	1620.0	-	X	-
D	-	-	RB56D	2643682 R1	1.16	16.0	Std. Wall XLPE Primary Cable	ORANGE	1620.0	-	X	-
E	-	-	MW54F	2643688 R1	1.91	14.0	Std. Wall XLPE Primary Cable	BROWN	1660.0	-	X	-

Name	Terminal Part Number	V-Min	Name	Wire Part Number	Wire CSA	Wire Spec	Wire Material description	Wire Color Description	Wire Length	End2 Terminal Part Number	End2 Pin Name	End2 Connector
F	-	-	MW57D	2643682 R1	1.16	16.0	Std. Wall XLPE Primary Cable	ORANGE	1740.0	-	X	-
F	-	-	RB57D	2643682 R1	1.16	16.0	Std. Wall XLPE Primary Cable	ORANGE	1740.0	-	X	-

Connector Name	8200A
Part Number	587567C91
Instances	A26 - Front Fog Lights W CONNECTOR Halogen:Diagram1 A26 - Front Fog Lights W CONNECTOR Halogen:Diagram2
Mates	LT-RS_FOG_FRT-1012-03-07A

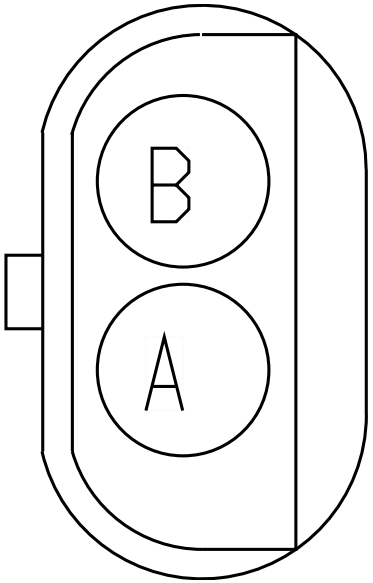

Name	Terminal Part Number	V-Min	Name	Wire Part Number	Wire CSA	Wire Spec	Wire Material description	Wire Color Description	Wire Length	End2 Terminal Part Number	End2 Pin Name	End2 Connect or
A	-	-	XK64B	3510336 R1	1.16	16.0	Thin Wall XLPE Primary Cable	YELLOW 2	4750.0	-	23	1700
A	-	-	XH64B	3510336 R1	1.16	16.0	Thin Wall XLPE Primary Cable	YELLOW 2	5350.0	-	23	1700
B	-	-	XK64-GB	3510360 R1	1.16	16.0	Thin Wall XLPE Primary Cable	WHITE	3130.0	-	-	-
B	-	-	XH64-GB	3510360 R1	1.16	16.0	Thin Wall XLPE Primary Cable	WHITE	3730.0	-	-	-

Connector Name	8200A
Part Number	6131286C1
Instances	B6.7 - Fog Lights (Halogen White):Diagram1 B6.7 - Fog Lights (LED White):Diagram1 B6.7 - Front Fog Lamps:Diagram1 L9 - Fog Lights (Halogen White):Diagram1 L9 - Fog Lights (LED White):Diagram1
Mates	LT-RS_FOG_FRT-1012-03-02A

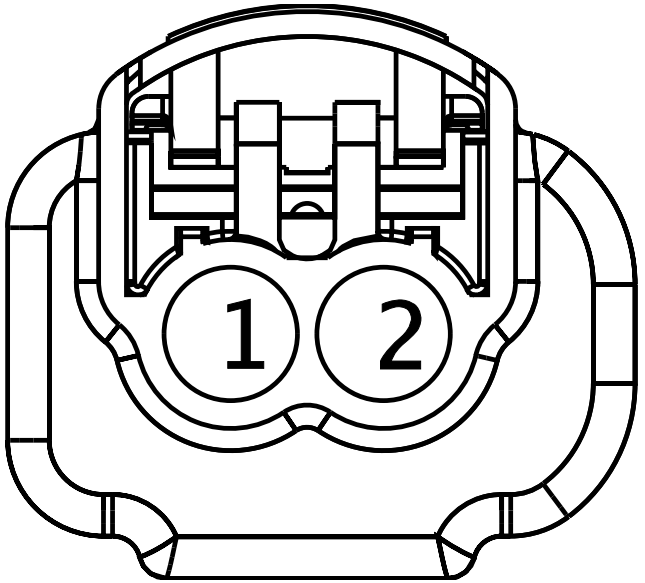

Name	Terminal Part Number	V-Min	Name	Wire Part Number	Wire CSA	Wire Spec	Wire Material description	Wire Color Description	Wire Length	End2 Terminal Part Number	End2 Pin Name	End2 Connect or
1	-	-	TH64B	3510336 R1	1.16	16.0	Thin Wall XLPE Primary Cable	YELLOW 2	3310.0	-	23	1700
1	-	-	TJ64B	3510336 R1	1.16	16.0	Thin Wall XLPE Primary Cable	YELLOW 2	3160.0	-	23	1700
2	-	-	TH64-GB	3510360 R1	1.16	16.0	Thin Wall XLPE Primary Cable	WHITE	2590.0	-	-	-
2	-	-	TJ64-GB	3510360 R1	1.16	16.0	Thin Wall XLPE Primary Cable	WHITE	2440.0	-	-	-

Connector Name 8200B

Part Number 6131286C1

Instances B6.7 - Fog Lights (Halogen White):Diagram2
B6.7 - Fog Lights (LED White):Diagram2
B6.7 - Front Fog Lamps:Diagram2
L9 - Fog Lights (Halogen White):Diagram2
L9 - Fog Lights (LED White):Diagram2

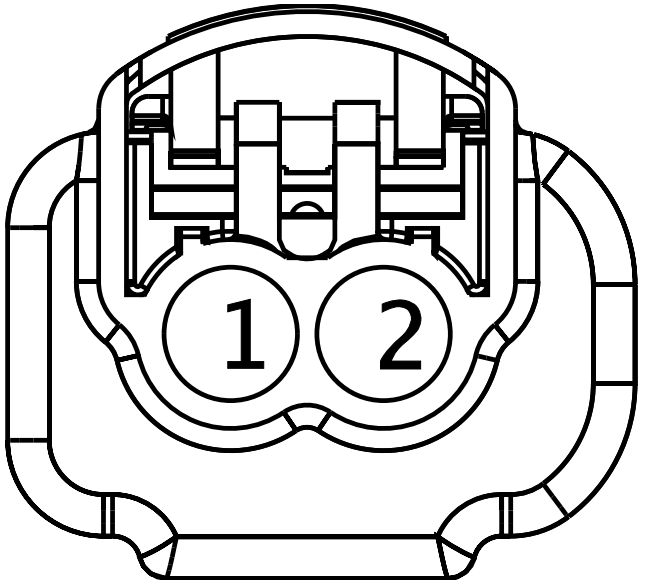

Name	Terminal Part Number	V-Min	Name	Wire Part Number	Wire CSA	Wire Spec	Wire Material description	Wire Color Description	Wire Length	End2 Terminal Part Number	End2 Pin Name	End2 Connect or
1	-	-	TK64B	3510336 R1	1.16	16.0	Thin Wall XLPE Primary Cable	YELLOW 2	3760.0	-	23	1700
2	-	-	TK64-GB	3510360 R1	1.16	16.0	Thin Wall XLPE Primary Cable	WHITE	3040.0	-	-	-

Connector Name 8200C

Part Number 6131286C1

Instances B6.7 - Fog Lights (Halogen White):Diagram3
B6.7 - Fog Lights (LED White):Diagram3
B6.7 - Front Fog Lamps:Diagram3

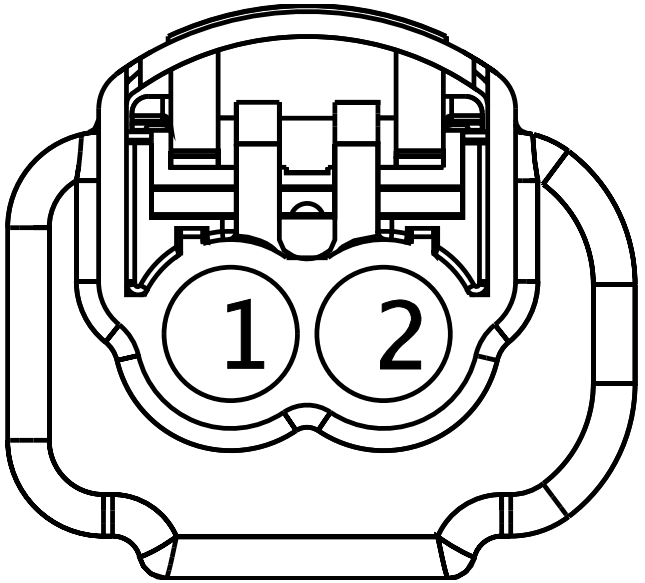

Name	Terminal Part Number	V-Min	Name	Wire Part Number	Wire CSA	Wire Spec	Wire Material description	Wire Color Description	Wire Length	End2 Terminal Part Number	End2 Pin Name	End2 Connect or
1	-	-	TM64B	3510336 R1	1.16	16.0	Thin Wall XLPE Primary Cable	YELLOW 2	3160.0	-	23	1700
2	-	-	TM64-GB	3510360 R1	1.16	16.0	Thin Wall XLPE Primary Cable	WHITE	2440.0	-	-	-

Connector Name 8200X

Part Number 587567C91

Instances B6.7 - Front Fog Lights W CONNECTOR:Diagram2
L9 - Front Fog Lights W CONNECTOR:Diagram1

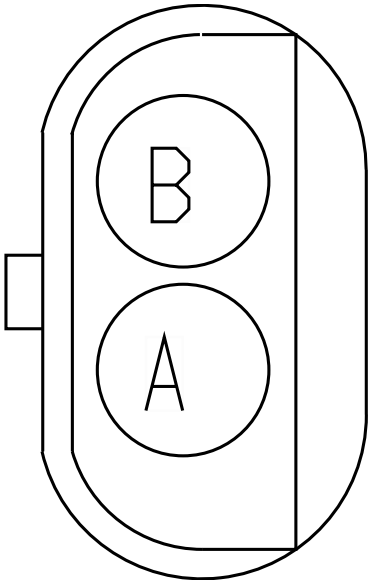

Name	Terminal Part Number	V-Min	Name	Wire Part Number	Wire CSA	Wire Spec	Wire Material description	Wire Color Description	Wire Length	End2 Terminal Part Number	End2 Pin Name	End2 Connect or
A	-	-	TG64B	2643684 R1	1.16	16.0	Std. Wall XLPE Primary Cable	YELLOW 2	4740.0	-	23	1700
B	-	-	TG64-GB	3510360 R1	1.16	16.0	Thin Wall XLPE Primary Cable	WHITE	3120.0	-	-	-

Connector Name	8200X
Part Number	6131286C1
Instances	A26 - Front Fog Lamps LED:Diagram1 A26 - Front Fog Lamps LED:Diagram2
Mates	LT-RS_FOG_FRT-1012-03-03A

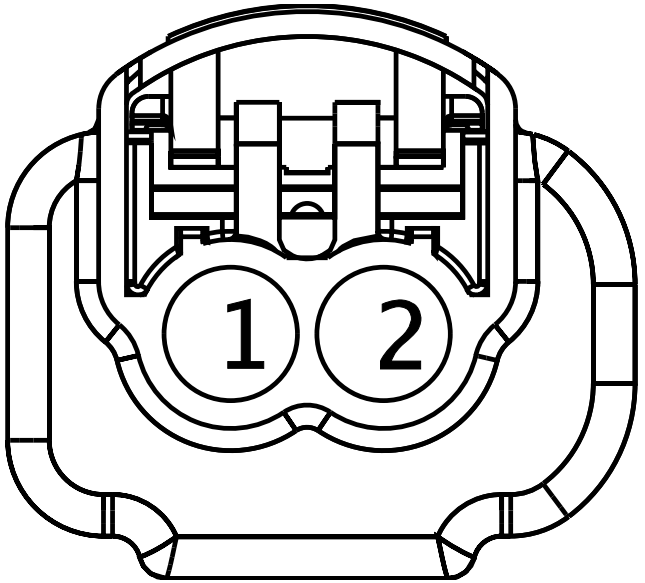

Name	Terminal Part Number	V-Min	Name	Wire Part Number	Wire CSA	Wire Spec	Wire Material description	Wire Color Description	Wire Length	End2 Terminal Part Number	End2 Pin Name	End2 Connect or
1	-	-	MD64B	3510336 R1	1.16	16.0	Thin Wall XLPE Primary Cable	YELLOW 2	4140.0	-	23	1700
1	-	-	TG64B	2643684 R1	1.16	16.0	Std. Wall XLPE Primary Cable	YELLOW 2	4740.0	-	23	1700
2	-	-	TG64-GB	3510360 R1	1.16	16.0	Thin Wall XLPE Primary Cable	WHITE	3120.0	-	-	-
2	-	-	MD64-GB	3510360 R1	1.16	16.0	Thin Wall XLPE Primary Cable	WHITE	2520.0	-	-	-

Connector Name 8200

Part Number 587567C91

Instances B6.7 - Front Fog Lights W CONNECTOR:Diagram1
L9 - Front Fog Lights W CONNECTOR:Diagram2

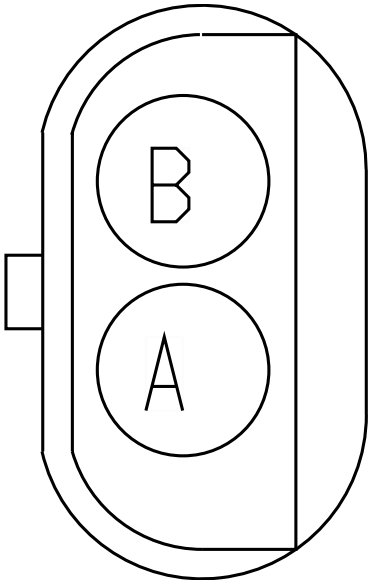

Name	Terminal Part Number	V-Min	Name	Wire Part Number	Wire CSA	Wire Spec	Wire Material description	Wire Color Description	Wire Length	End2 Terminal Part Number	End2 Pin Name	End2 Connect or
A	-	-	MD64B	3510336 R1	1.16	16.0	Thin Wall XLPE Primary Cable	YELLOW 2	4140.0	-	23	1700
B	-	-	MD64-GB	3510360 R1	1.16	16.0	Thin Wall XLPE Primary Cable	WHITE	2520.0	-	-	-

Connector Name	8201A
Part Number	587567C91
Instances	A26 - Front Fog Lights W CONNECTOR Halogen:Diagram1 A26 - Front Fog Lights W CONNECTOR Halogen:Diagram2
Mates	LT-LS_FOG_FRT-1012-03-07A

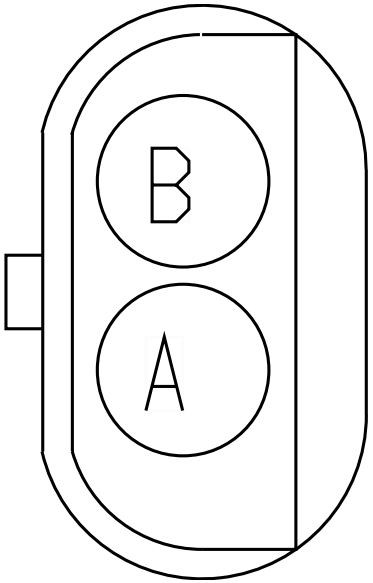

Name	Terminal Part Number	V-Min	Name	Wire Part Number	Wire CSA	Wire Spec	Wire Material description	Wire Color Description	Wire Length	End2 Terminal Part Number	End2 Pin Name	End2 Connect or
A	-	-	XH64A	3510336 R1	1.16	16.0	Thin Wall XLPE Primary Cable	YELLOW 2	4610.0	-	22	1700
A	-	-	XK64A	3510336 R1	1.16	16.0	Thin Wall XLPE Primary Cable	YELLOW 2	4010.0	-	22	1700
B	-	-	XH64-GA	3510360 R1	1.16	16.0	Thin Wall XLPE Primary Cable	WHITE	2990.0	-	-	-
B	-	-	XK64-GA	3510360 R1	1.16	16.0	Thin Wall XLPE Primary Cable	WHITE	2390.0	-	-	-

Connector Name	8201A
Part Number	6131286C1
Instances	B6.7 - Fog Lights (Halogen White):Diagram1 B6.7 - Fog Lights (LED White):Diagram1 B6.7 - Front Fog Lamps:Diagram1 L9 - Fog Lights (Halogen White):Diagram1 L9 - Fog Lights (LED White):Diagram1
Mates	LT-LS_FOG_FRT-1012-03-02A

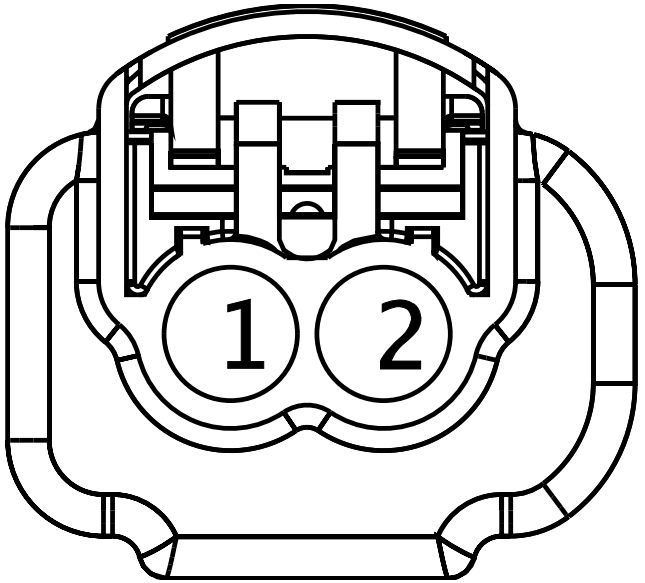

Name	Terminal Part Number	V-Min	Name	Wire Part Number	Wire CSA	Wire Spec	Wire Material description	Wire Color Description	Wire Length	End2 Terminal Part Number	End2 Pin Name	End2 Connect or
1	-	-	TH64A	3510336 R1	1.16	16.0	Thin Wall XLPE Primary Cable	YELLOW 2	2550.0	-	22	1700
1	-	-	TJ64A	3510336 R1	1.16	16.0	Thin Wall XLPE Primary Cable	YELLOW 2	2400.0	-	22	1700
2	-	-	TH64-GA	3510360 R1	1.16	16.0	Thin Wall XLPE Primary Cable	WHITE	1830.0	-	-	-
2	-	-	TJ64-GA	3510360 R1	1.16	16.0	Thin Wall XLPE Primary Cable	WHITE	1680.0	-	-	-

Connector Name 8201B

Part Number 6131286C1

Instances B6.7 - Fog Lights (Halogen White):Diagram2
B6.7 - Fog Lights (LED White):Diagram2
B6.7 - Front Fog Lamps:Diagram2
L9 - Fog Lights (Halogen White):Diagram2
L9 - Fog Lights (LED White):Diagram2

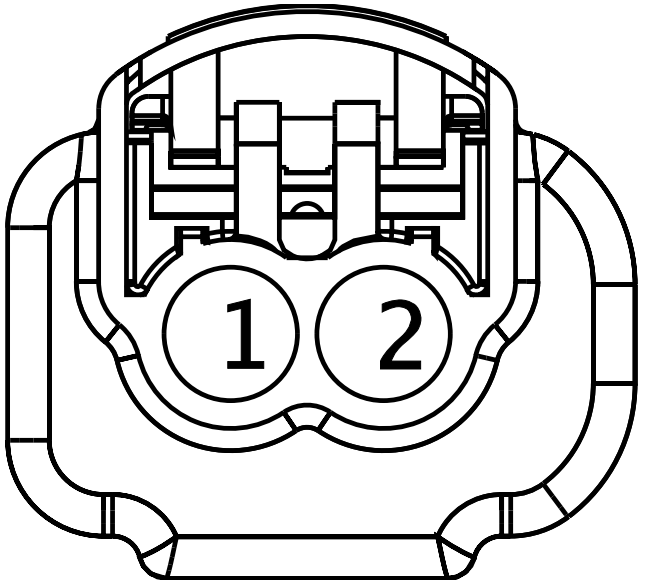

Name	Terminal Part Number	V-Min	Name	Wire Part Number	Wire CSA	Wire Spec	Wire Material description	Wire Color Description	Wire Length	End2 Terminal Part Number	End2 Pin Name	End2 Connect or
1	-	-	TK64A	3510336 R1	1.16	16.0	Thin Wall XLPE Primary Cable	YELLOW 2	3150.0	-	22	1700
2	-	-	TK64-GA	3510360 R1	1.16	16.0	Thin Wall XLPE Primary Cable	WHITE	2280.0	-	-	-

Connector Name 8201C

Part Number 6131286C1

Instances B6.7 - Fog Lights (Halogen White):Diagram3
B6.7 - Fog Lights (LED White):Diagram3
B6.7 - Front Fog Lamps:Diagram3

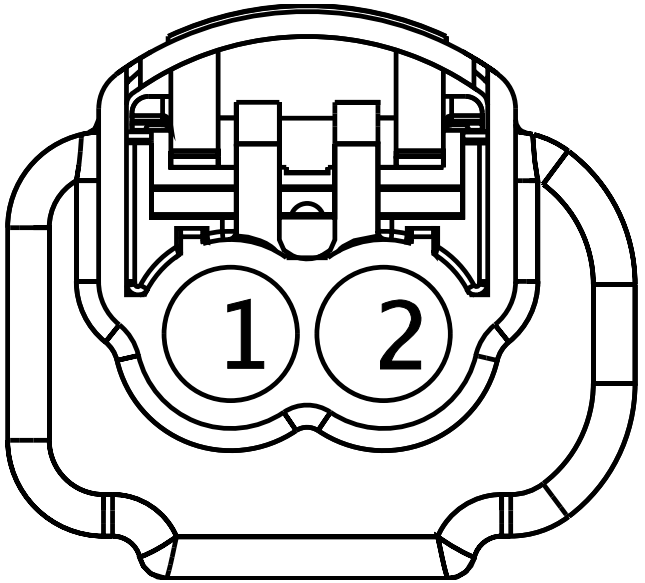

Name	Terminal Part Number	V-Min	Name	Wire Part Number	Wire CSA	Wire Spec	Wire Material description	Wire Color Description	Wire Length	End2 Terminal Part Number	End2 Pin Name	End2 Connect or
1	-	-	TM64A	3510336 R1	1.16	16.0	Thin Wall XLPE Primary Cable	YELLOW 2	2400.0	-	22	1700
2	-	-	TM64-GA	3510360 R1	1.16	16.0	Thin Wall XLPE Primary Cable	WHITE	1680.0	-	-	-

Connector Name	8201X
Part Number	587567C91
Instances	B6.7 - Front Fog Lights W CONNECTOR:Diagram2 L9 - Front Fog Lights W CONNECTOR:Diagram1
Mates	LT-RS_FOG_FRT-1012-03-07A

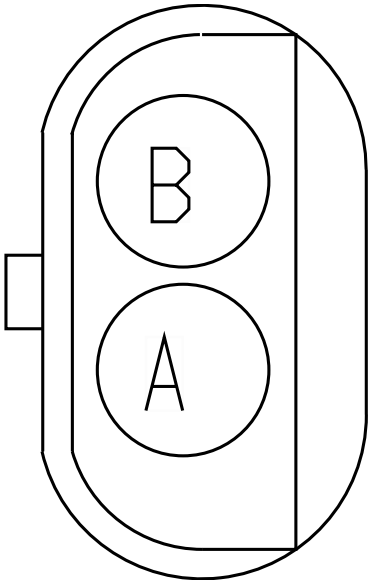

Name	Terminal Part Number	V-Min	Name	Wire Part Number	Wire CSA	Wire Spec	Wire Material description	Wire Color Description	Wire Length	End2 Terminal Part Number	End2 Pin Name	End2 Connect or
A	-	-	TG64A	2643684 R1	1.16	16.0	Std. Wall XLPE Primary Cable	YELLOW 2	4000.0	-	22	1700
B	-	-	TG64-GA	3510360 R1	1.16	16.0	Thin Wall XLPE Primary Cable	WHITE	2380.0	-	-	-

Connector Name	8201X
Part Number	6131286C1
Instances	A26 - Front Fog Lamps LED:Diagram1 A26 - Front Fog Lamps LED:Diagram2
Mates	LT-LS_FOG_FRT-1012-03-03A

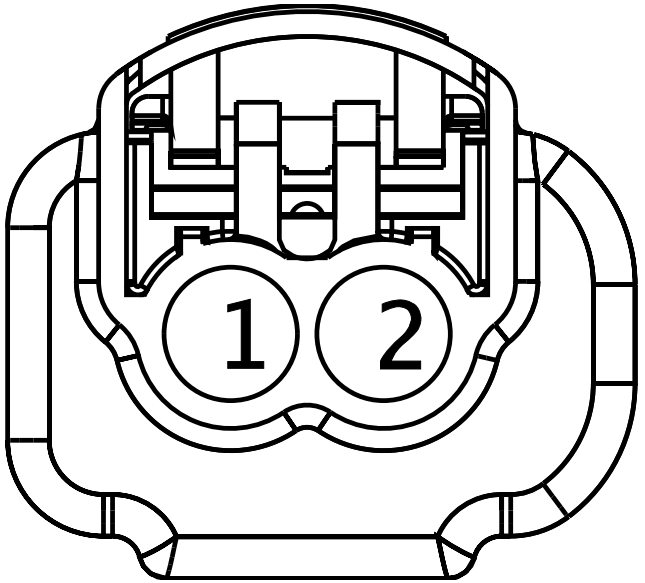

Name	Terminal Part Number	V-Min	Name	Wire Part Number	Wire CSA	Wire Spec	Wire Material description	Wire Color Description	Wire Length	End2 Terminal Part Number	End2 Pin Name	End2 Connect or
1	-	-	MD64A	3510336 R1	1.16	16.0	Thin Wall XLPE Primary Cable	YELLOW 2	3400.0	-	22	1700
1	-	-	TG64A	2643684 R1	1.16	16.0	Std. Wall XLPE Primary Cable	YELLOW 2	4000.0	-	22	1700
2	-	-	TG64-GA	3510360 R1	1.16	16.0	Thin Wall XLPE Primary Cable	WHITE	2380.0	-	-	-
2	-	-	MD64-GA	3510360 R1	1.16	16.0	Thin Wall XLPE Primary Cable	WHITE	1780.0	-	-	-

Connector Name 8201

Part Number 587567C91

Instances B6.7 - Front Fog Lights W CONNECTOR:Diagram1
L9 - Front Fog Lights W CONNECTOR:Diagram2

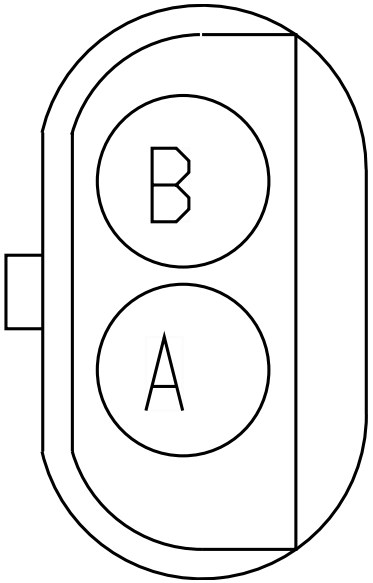

Name	Terminal Part Number	V-Min	Name	Wire Part Number	Wire CSA	Wire Spec	Wire Material description	Wire Color Description	Wire Length	End2 Terminal Part Number	End2 Pin Name	End2 Connect or
A	-	-	MD64A	3510336 R1	1.16	16.0	Thin Wall XLPE Primary Cable	YELLOW 2	3400.0	-	22	1700
B	-	-	MD64-GA	3510360 R1	1.16	16.0	Thin Wall XLPE Primary Cable	WHITE	1780.0	-	-	-

Connector Name	828
Part Number	1671611C1
Instances	A26 - Back-Up Alarm (Relay to 5 Pin 08TKC Tailboard to Alarm) (Automatic):Diagram1 A26 - Backup Alarm (Switch to 5 Pin 08TKC Tailboard to Alarm) (Manual):Diagram1
Mates	LT-TAIL-ASSY-Less_Power_Mo dule

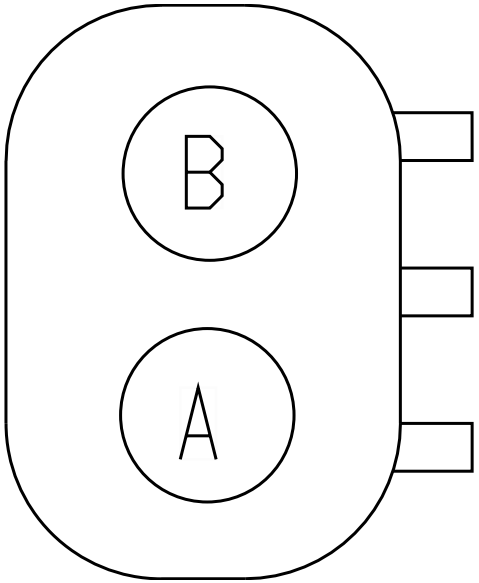

Name	Terminal Part Number	V-Min	Name	Wire Part Number	Wire CSA	Wire Spec	Wire Material description	Wire Color Description	Wire Length	End2 Terminal Part Number	End2 Pin Name	End2 Connect or
A	-	-	RD	2643686 R1	1.91	14.0	Std. Wall XLPE Primary Cable	RED	400.0	-	A	P1L-829
B	-	-	WH	2643689 R1	1.91	14.0	Std. Wall XLPE Primary Cable	WHITE	400.0	-	A	P1L-830

Connector Name 8301A

Part Number 1661778C1

Instances
B6.7 - City Horn (W/ 4PIN CLK & Park Brake):Diagram2
B6.7 - City Horn (W/ 4PIN CLK & Park Brake):Diagram5
B6.7 - City Horn (W/ 4PIN CLK):Diagram2
B6.7 - City Horn (W/ 4PIN CLK):Diagram5
B6.7 - City Horn (W/ 10PIN CLK & Park Brake):Diagram2
B6.7 - City Horn (W/ 10PIN CLK):Diagram2

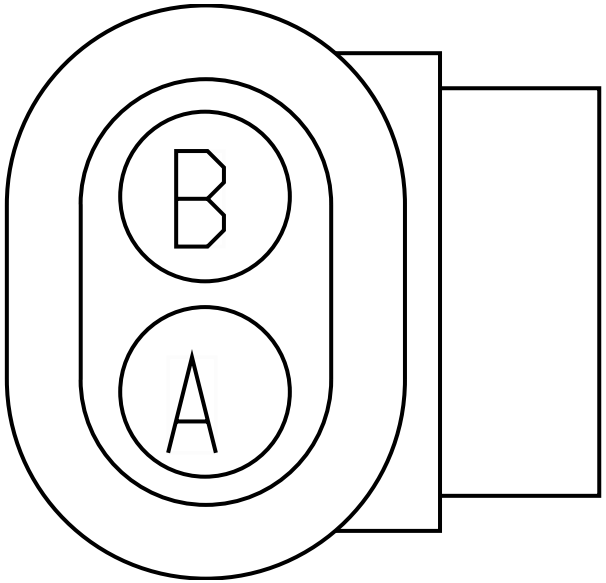

Name	Terminal Part Number	V-Min	Name	Wire Part Number	Wire CSA	Wire Spec	Wire Material description	Wire Color Description	Wire Length	End2 Terminal Part Number	End2 Pin Name	End2 Connect or
A	-	-	TB85E	2643680 R1	1.16	16.0	Std. Wall XLPE Primary Cable	GREY	2005.0	-	21	1700
B	-	-	TC85-GC	2643681 R1	1.16	16.0	Std. Wall XLPE Primary Cable	WHITE	1665.0	-	-	-

Connector Name 8301A

Part Number 1661778C1

Instances L9 - City Horn (W/ 4PIN CLK & Park Brake):Diagram2
L9 - City Horn (W/ 4PIN CLK & Park Brake):Diagram4
L9 - City Horn (W/ 4PIN CLK):Diagram2
L9 - City Horn (W/ 4PIN CLK):Diagram4
L9 - City Horn (W/ 10PIN CLK & Park Brake):Diagram2
L9 - City Horn (W/ 10PIN CLK):Diagram2

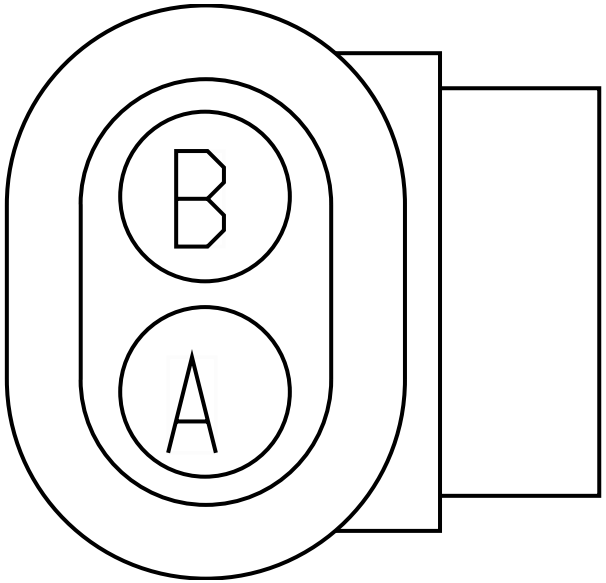

Name	Terminal Part Number	V-Min	Name	Wire Part Number	Wire CSA	Wire Spec	Wire Material description	Wire Color Description	Wire Length	End2 Terminal Part Number	End2 Pin Name	End2 Connect or
A	-	-	TB85E	2643680 R1	1.16	16.0	Std. Wall XLPE Primary Cable	GREY	2005.0	-	21	1700
B	-	-	TC85-GC	2643681 R1	1.16	16.0	Std. Wall XLPE Primary Cable	WHITE	1665.0	-	-	-
B	-	-	TD85-GC	2643681 R1	1.16	16.0	Std. Wall XLPE Primary Cable	WHITE	1665.0	-	-	-

Connector Name 8301b

Part Number 1661778C1

Instances
B6.7 - City Horn (W/ 4PIN CLK & Park Brake):Diagram3
B6.7 - City Horn (W/ 4PIN CLK & Park Brake):Diagram6
B6.7 - City Horn (W/ 4PIN CLK):Diagram3
B6.7 - City Horn (W/ 4PIN CLK):Diagram6
B6.7 - City Horn (W/ 10PIN CLK & Park Brake):Diagram3
B6.7 - City Horn (W/ 10PIN CLK):Diagram3

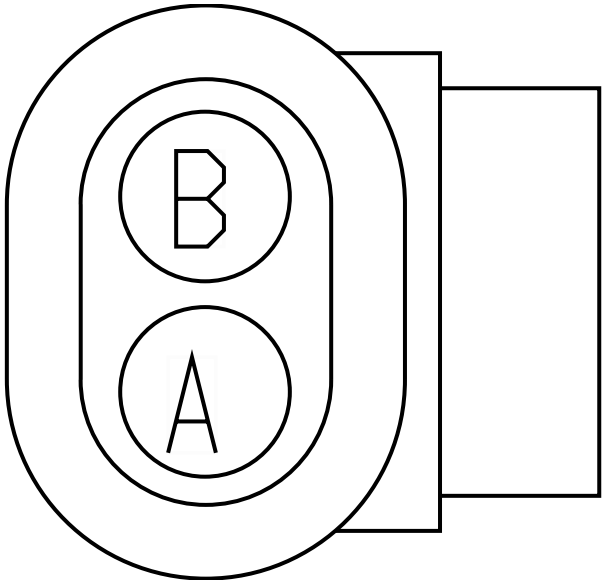

Name	Terminal Part Number	V-Min	Name	Wire Part Number	Wire CSA	Wire Spec	Wire Material description	Wire Color Description	Wire Length	End2 Terminal Part Number	End2 Pin Name	End2 Connect or
A	-	-	MX85E	2643680 R1	1.16	16.0	Std. Wall XLPE Primary Cable	GREY	1880.0	-	21	1700
B	-	-	MY85-GA	2643681 R1	1.16	16.0	Std. Wall XLPE Primary Cable	WHITE	1590.0	-	B	8301
B	-	-	WIRE735 516	2643681 R1	1.16	16.0	Std. Wall XLPE Primary Cable	WHITE	1590.0	-	-	-

Connector Name 8301

Part Number 1661778C1

Instances
A26 - City Horn (W/ 4PIN Park Brake):Diagram1
A26 - City Horn (W/ 4PIN Park Brake):Diagram2
A26 - City Horn (W/ 4PIN Park Brake):Diagram3
A26 - City Horn (W/ 4PIN Park Brake):Diagram4
A26 - City Horn (W/ 4PIN):Diagram1
A26 - City Horn (W/ 4PIN):Diagram2
A26 - City Horn (W/ 4PIN):Diagram3
A26 - City Horn (W/ 4PIN):Diagram4
A26 - City Horn (W/ 10PIN Park Brake):Diagram1
A26 - City Horn (W/ 10PIN Park Brake):Diagram2
A26 - City Horn (W/ 10PIN):Diagram1
A26 - City Horn (W/ 10PIN):Diagram2
B6.7 - City Horn (W/ 4PIN CLK & Park Brake):Diagram1
B6.7 - City Horn (W/ 4PIN CLK & Park Brake):Diagram4
B6.7 - City Horn (W/ 4PIN CLK):Diagram1
B6.7 - City Horn (W/ 4PIN CLK):Diagram4
B6.7 - City Horn (W/ 10PIN CLK & Park Brake):Diagram1
B6.7 - City Horn (W/ 10PIN CLK):Diagram1

Mates HORN-CITYHORN-1005-01-01A

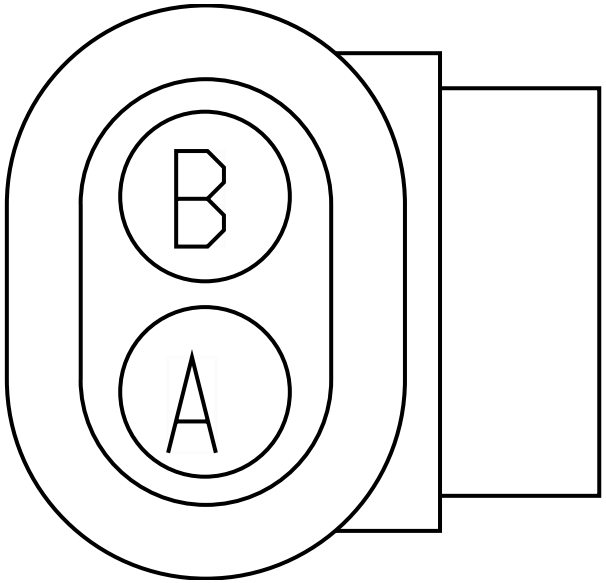

Name	Terminal Part Number	V-Min	Name	Wire Part Number	Wire CSA	Wire Spec	Wire Material description	Wire Color Description	Wire Length	End2 Terminal Part Number	End2 Pin Name	End2 Connector
A	-	-	MR85E	2643680 R1	1.16	16.0	Std. Wall XLPE Primary Cable	GREY	1930.0	-	21	1700
A	-	-	TB85E	2643680 R1	1.16	16.0	Std. Wall XLPE Primary Cable	GREY	2005.0	-	21	1700
B	-	-	MY85-GA	2643681 R1	1.16	16.0	Std. Wall XLPE Primary Cable	WHITE	1590.0	-	B	8301b

Name	Terminal Part Number	V-Min	Name	Wire Part Number	Wire CSA	Wire Spec	Wire Material description	Wire Color Description	Wire Length	End2 Terminal Part Number	End2 Pin Name	End2 Connector
B	-	-	TD85-GC	2643681 R1	1.16	16.0	Std. Wall XLPE Primary Cable	WHITE	1665.0	-	-	-
B	-	-	MY85-GA	2643681 R1	1.16	16.0	Std. Wall XLPE Primary Cable	WHITE	1590.0	-	-	-
B	-	-	TC85-GC	2643681 R1	1.16	16.0	Std. Wall XLPE Primary Cable	WHITE	1665.0	-	-	-

Connector Name	8301
Part Number	1661778C1
Instances	L9 - City Horn (W/ 4PIN CLK & Park Brake):Diagram1 L9 - City Horn (W/ 4PIN CLK & Park Brake):Diagram3 L9 - City Horn (W/ 4PIN CLK):Diagram1 L9 - City Horn (W/ 4PIN CLK):Diagram3
Mates	HORN-CITYHORN-1005-01-01A

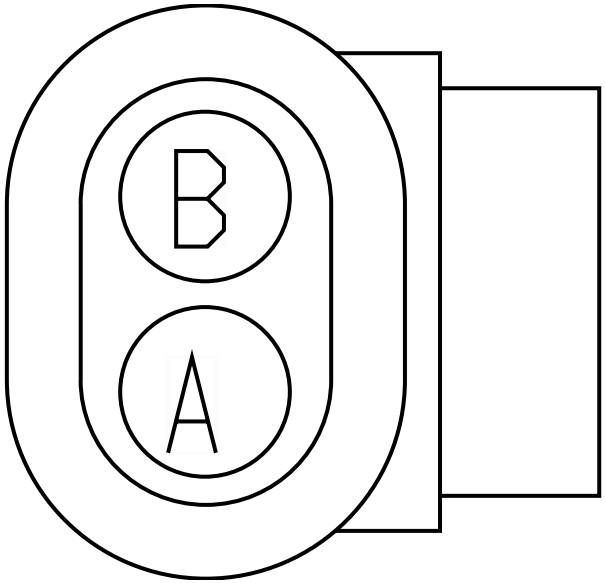

Name	Terminal Part Number	V-Min	Name	Wire Part Number	Wire CSA	Wire Spec	Wire Material description	Wire Color Description	Wire Length	End2 Terminal Part Number	End2 Pin Name	End2 Connect or
A	-	-	MR85E	2643680 R1	1.16	16.0	Std. Wall XLPE Primary Cable	GREY	1930.0	-	21	1700
B	-	-	MY85-GA	2643681 R1	1.16	16.0	Std. Wall XLPE Primary Cable	WHITE	1590.0	-	-	-

Connector Name	8410
Part Number	3664985C1
Instances	A26 - Starting Aid (Flame Start):Diagram1
Mates	RLY-FLAME_START-5022-02-01A

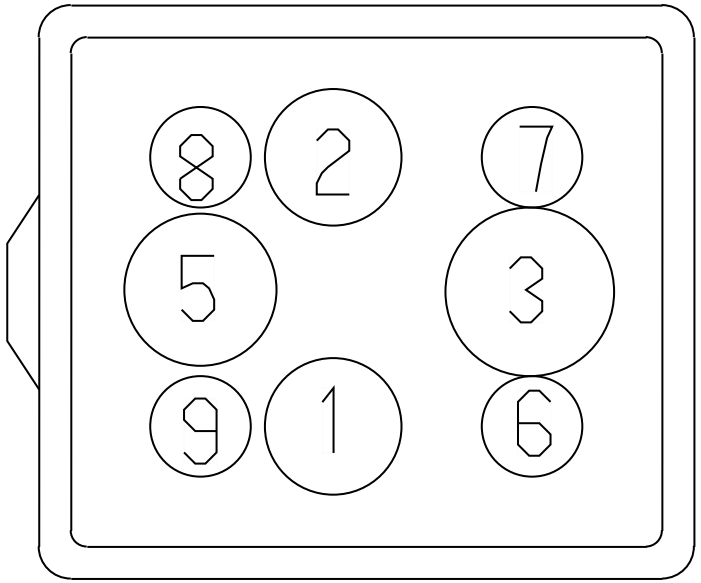

Name	Terminal Part Number	V-Min	Name	Wire Part Number	Wire CSA	Wire Spec	Wire Material description	Wire Color Description	Wire Length	End2 Terminal Part Number	End2 Pin Name	End2 Connect or
1	-	-	CG21A1	3510332 R1	3.01	12.0	Thin Wall XLPE Primary Cable	TAN	1350.0	-	A	6564
2	-	-	CD21A2	2643797 R1	3.01	12.0	Std. Wall XLPE Primary Cable	TAN	1350.0	-	A	6564
3	-	-	CD14A	3525611 R1	7.48	8.0	Thin Wall XLPE Primary Cable	RED	1720.0	-	-	-
6	-	-	CD21B1	3510329 R1	0.79	18.0	Thin Wall XLPE Primary Cable	TAN	1280.0	-	A	6033

Name	Terminal Part Number	V-Min	Name	Wire Part Number	Wire CSA	Wire Spec	Wire Material description	Wire Color Description	Wire Length	End2 Terminal Part Number	End2 Pin Name	End2 Connect or
7	-	-	CD21B2	3510329 R1	0.79	18.0	Thin Wall XLPE Primary Cable	TAN	1280.0	-	B	6033
8	-	-	CD21B3	3510329 R1	0.79	18.0	Thin Wall XLPE Primary Cable	TAN	1280.0	-	C	6033

Connector Name	8500
Part Number	1686834C1
Instances	A26 - Antilock Brake System (ABS) Bendix:Diagram1 A26 - Antilock Brake System (ABS) Bendix:Diagram2 A26 - Antilock Brake System (ABS) Bendix:Diagram3 L9 - Antilock Brake System (ABS) BENDIX 4 Channel Implemenation:Diagram1
Mates	MDL-ABS-3003-01-03C

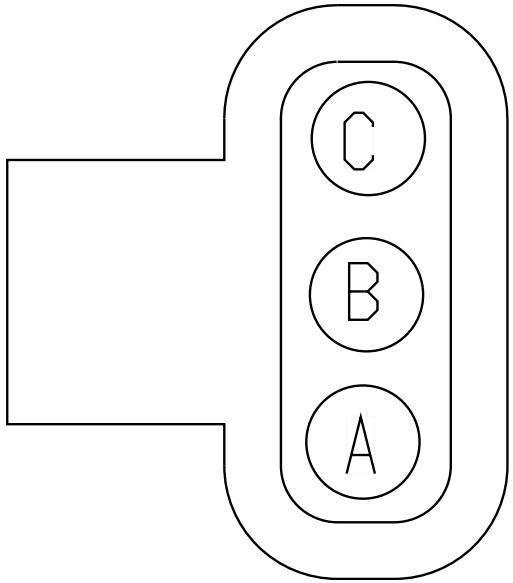

Name	Terminal Part Number	V-Min	Name	Wire Part Number	Wire CSA	Wire Spec	Wire Material description	Wire Color Description	Wire Length	End2 Terminal Part Number	End2 Pin Name	End2 Connect or
A	-	-	ME94	2643673 R1	0.79	18.0	Std. Wall XLPE Primary Cable	GREY	1670.0	-	27	1700
B	-	-	ME94A	2643673 R1	0.79	18.0	Std. Wall XLPE Primary Cable	GREY	1670.0	-	28	1700
C	-	-	ME94B	2643673 R1	0.79	18.0	Std. Wall XLPE Primary Cable	GREY	1670.0	-	29	1700

Connector Name	8500
Part Number	1686834C1
Instances	B6.7 - Antilock Brake System (ABS) BENDIX 4 Channel Implemenation:Diagram1 B6.7 - Antilock Brake System (ABS) BENDIX 4 Channel Implemenation:Diagram2 B6.7 - Antilock Brake System (ABS) BENDIX 4 Channel Implemenation:Diagram3
Mates	MDL-ABS-3003-01-03C

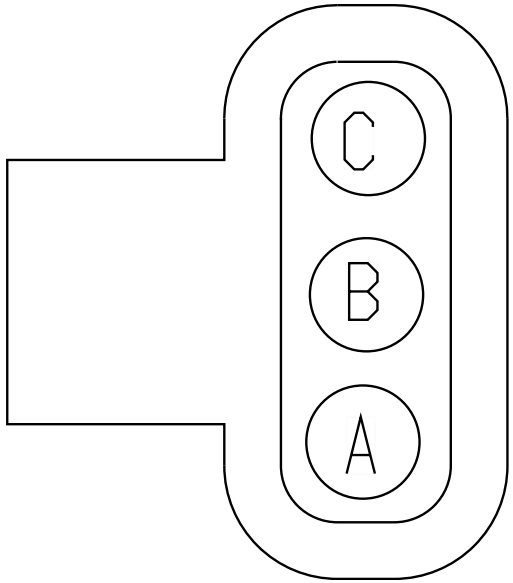

Name	Terminal Part Number	V-Min	Name	Wire Part Number	Wire CSA	Wire Spec	Wire Material description	Wire Color Description	Wire Length	End2 Terminal Part Number	End2 Pin Name	End2 Connect or
A	-	-	ME94	2643673 R1	0.79	18.0	Std. Wall XLPE Primary Cable	GREY	1670.0	-	27	1700
B	-	-	ME94A	2643673 R1	0.79	18.0	Std. Wall XLPE Primary Cable	GREY	1670.0	-	28	1700
C	-	-	ME94B	2643673 R1	0.79	18.0	Std. Wall XLPE Primary Cable	GREY	1670.0	-	29	1700

Connector Name 8500

Part Number 1686834C1

Instances L9 - Antilock Brake System (ABS) Bendix 6 Channel Implementation:Diagram1
L9 - Antilock Brake System (ABS) Bendix 6 Channel Implementation:Diagram2
L9 - Antilock Brake System (ABS) Bendix 6 Channel Implementation:Diagram3
L9 - Antilock Brake System (ABS) Bendix 6 Channel Implementation:Diagram4
L9 - Antilock Brake System (ABS) Bendix 6 Channel Implementation:Diagram5
L9 - Antilock Brake System (ABS) Bendix 6 Channel Implementation:Diagram6
L9 - Antilock Brake System (ABS) Bendix 6 Channel Implementation:Diagram7
L9 - Antilock Brake System (ABS) Bendix 6 Channel Implementation:Diagram8
L9 - Antilock Brake System (ABS) Bendix 6 Channel Implementation:Diagram9

Mates MDL-ABS-3003-01-03C

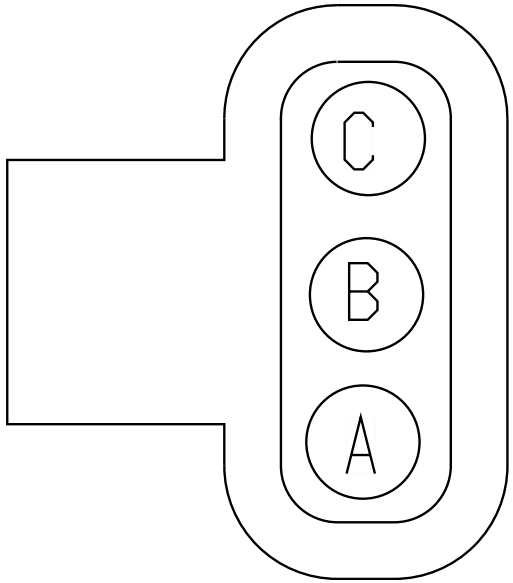

Name	Terminal Part Number	V-Min	Name	Wire Part Number	Wire CSA	Wire Spec	Wire Material description	Wire Color Description	Wire Length	End2 Terminal Part Number	End2 Pin Name	End2 Connector
A	-	-	ME94	2643673 R1	0.79	18.0	Std. Wall XLPE Primary Cable	GREY	1670.0	-	27	1700
B	-	-	ME94A	2643673 R1	0.79	18.0	Std. Wall XLPE Primary Cable	GREY	1670.0	-	28	1700
C	-	-	ME94B	2643673 R1	0.79	18.0	Std. Wall XLPE Primary Cable	GREY	1670.0	-	29	1700

Connector Name	8500
Part Number	6114576C1
Instances	B6.7 - Selective Catalytic Reduction (SCR):Diagram1 L9 - Selective Catalytic Reduction (SCR):Diagram1
Mates	DEV-ISX ENG-5041-02-02A

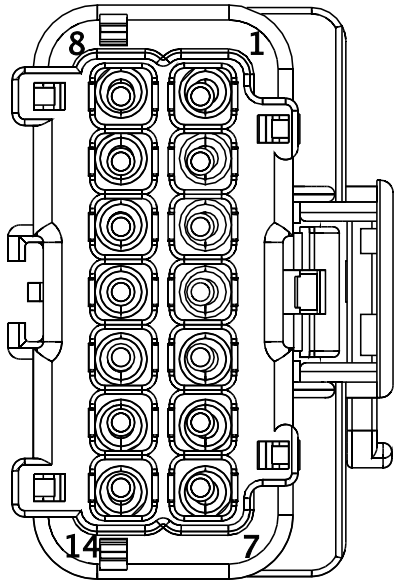

Name	Terminal Part Number	V-Min	Name	Wire Part Number	Wire CSA	Wire Spec	Wire Material description	Wire Color Description	Wire Length	End2 Terminal Part Number	End2 Pin Name	End2 Connect or
1	-	-	VL95H	3510329 R1	0.79	18.0	Thin Wall XLPE Primary Cable	TAN	1595.0	-	3	674
2	-	-	-	-	-	-	-	-	-	-	-	-
5	-	-	KA95TB	3510311 R1	0.79	18.0	Thin Wall XLPE Primary Cable	GREY	2020.0	-	E10	690
6	-	-	VJ13AB	3510365 R1	0.79	18.0	Thin Wall XLPE Primary Cable	RED	1195.0	-	X	-
8	-	-	VL95AR2	3510365 R1	0.79	18.0	Thin Wall XLPE Primary Cable	RED	900.0	-	X	-
9	-	-	-	-	-	-	-	-	-	-	-	-

Name	Terminal Part Number	V-Min	Name	Wire Part Number	Wire CSA	Wire Spec	Wire Material description	Wire Color Description	Wire Length	End2 Terminal Part Number	End2 Pin Name	End2 Connector
13	-	-	VJ10-G5	3510294 R1	1.16	16.0	Thin Wall XLPE Primary Cable	BLACK	505.0	-	-	-

Connector Name	8501
Part Number	1686834C1
Instances	A26 - Antilock Brake System (ABS) Bendix:Diagram1 A26 - Antilock Brake System (ABS) Bendix:Diagram2 A26 - Antilock Brake System (ABS) Bendix:Diagram3 L9 - Antilock Brake System (ABS) BENDIX 4 Channel Implemenation:Diagram1
Mates	MDL-ABS-3003-01-03D

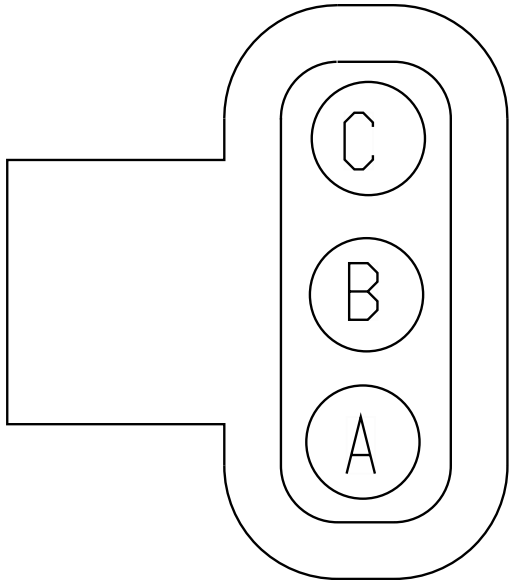

Name	Terminal Part Number	V-Min	Name	Wire Part Number	Wire CSA	Wire Spec	Wire Material description	Wire Color Description	Wire Length	End2 Terminal Part Number	End2 Pin Name	End2 Connector
A	-	-	ME94H	2643673 R1	0.79	18.0	Std. Wall XLPE Primary Cable	GREY	5680.0	-	34	1700
B	-	-	ME94J	2643673 R1	0.79	18.0	Std. Wall XLPE Primary Cable	GREY	5680.0	-	35	1700
C	-	-	ME94K	2643673 R1	0.79	18.0	Std. Wall XLPE Primary Cable	GREY	5680.0	-	36	1700

Connector Name	8501
Part Number	1686834C1
Instances	B6.7 - Antilock Brake System (ABS) BENDIX 4 Channel Implemenation:Diagram1 B6.7 - Antilock Brake System (ABS) BENDIX 4 Channel Implemenation:Diagram2 B6.7 - Antilock Brake System (ABS) BENDIX 4 Channel Implemenation:Diagram3
Mates	MDL-ABS-3003-01-03D

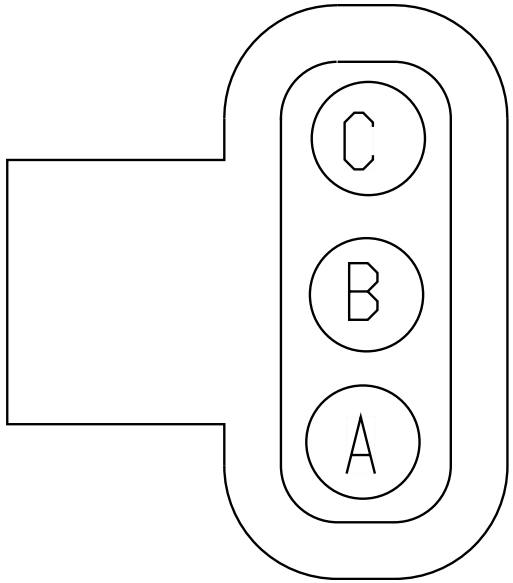

Name	Terminal Part Number	V-Min	Name	Wire Part Number	Wire CSA	Wire Spec	Wire Material description	Wire Color Description	Wire Length	End2 Terminal Part Number	End2 Pin Name	End2 Connect or
A	-	-	ME94H	2643673 R1	0.79	18.0	Std. Wall XLPE Primary Cable	GREY	5680.0	-	34	1700
B	-	-	ME94J	2643673 R1	0.79	18.0	Std. Wall XLPE Primary Cable	GREY	5680.0	-	35	1700
C	-	-	ME94K	2643673 R1	0.79	18.0	Std. Wall XLPE Primary Cable	GREY	5680.0	-	36	1700

Connector Name 8501

Part Number 1686834C1

Instances L9 - Antilock Brake System (ABS) Bendix 6 Channel Implementation:Diagram1
L9 - Antilock Brake System (ABS) Bendix 6 Channel Implementation:Diagram2
L9 - Antilock Brake System (ABS) Bendix 6 Channel Implementation:Diagram3
L9 - Antilock Brake System (ABS) Bendix 6 Channel Implementation:Diagram4
L9 - Antilock Brake System (ABS) Bendix 6 Channel Implementation:Diagram5
L9 - Antilock Brake System (ABS) Bendix 6 Channel Implementation:Diagram6
L9 - Antilock Brake System (ABS) Bendix 6 Channel Implementation:Diagram7
L9 - Antilock Brake System (ABS) Bendix 6 Channel Implementation:Diagram8
L9 - Antilock Brake System (ABS) Bendix 6 Channel Implementation:Diagram9

Mates MDL-ABS-3003-01-03D

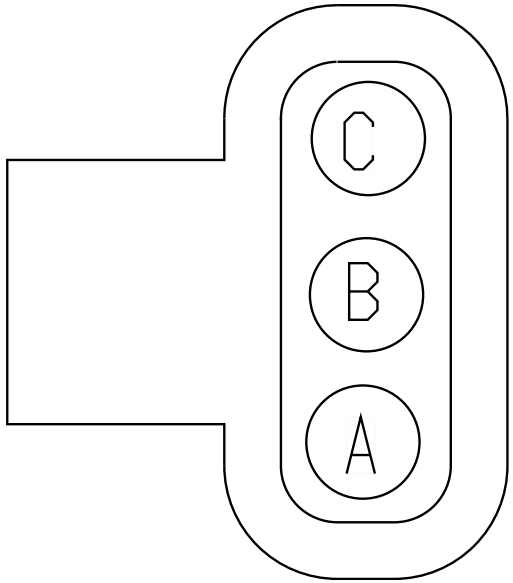

Name	Terminal Part Number	V-Min	Name	Wire Part Number	Wire CSA	Wire Spec	Wire Material description	Wire Color Description	Wire Length	End2 Terminal Part Number	End2 Pin Name	End2 Connector
A	-	-	ME94H	2643673 R1	0.79	18.0	Std. Wall XLPE Primary Cable	GREY	5680.0	-	34	1700
B	-	-	ME94J	2643673 R1	0.79	18.0	Std. Wall XLPE Primary Cable	GREY	5680.0	-	35	1700
C	-	-	ME94K	2643673 R1	0.79	18.0	Std. Wall XLPE Primary Cable	GREY	5680.0	-	36	1700

Connector Name	8502A
Part Number	1684261C1
Instances	A26 - Antilock Brake System (ABS) Bendix:Diagram1 A26 - Antilock Brake System (ABS) Bendix:Diagram2 A26 - Antilock Brake System (ABS) Bendix:Diagram3 L9 - Antilock Brake System (ABS) BENDIX 4 Channel Implemenation:Diagram1 L9 - Antilock Brake System (ABS) Bendix 6 Channel Implementation:Diagram1 L9 - Antilock Brake System (ABS) Bendix 6 Channel Implementation:Diagram2 L9 - Antilock Brake System (ABS) Bendix 6 Channel Implementation:Diagram3 L9 - Antilock Brake System (ABS) Bendix 6 Channel Implementation:Diagram4 L9 - Antilock Brake System (ABS) Bendix 6 Channel Implementation:Diagram5 L9 - Antilock Brake System (ABS) Bendix 6 Channel Implementation:Diagram6 L9 - Antilock Brake System (ABS) Bendix 6 Channel Implementation:Diagram7 L9 - Antilock Brake System (ABS) Bendix 6 Channel Implementation:Diagram8 L9 - Antilock Brake System (ABS) Bendix 6 Channel Implementation:Diagram9
Mates	SNSR-WS-3003-01-03D

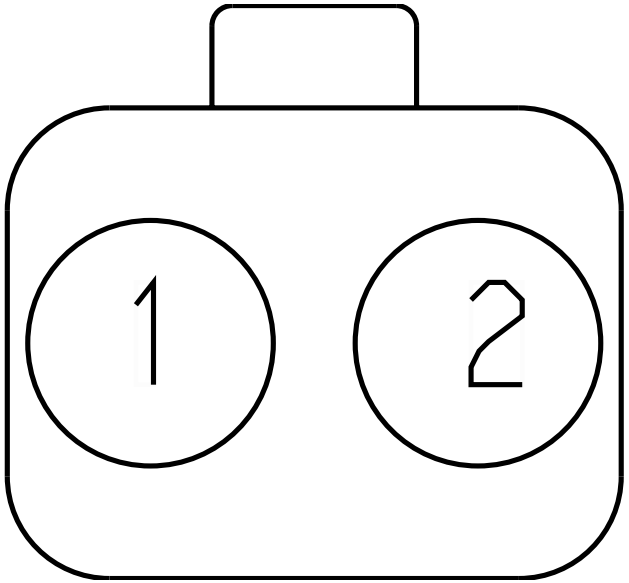

Name	Terminal Part Number	V-Min	Name	Wire Part Number	Wire CSA	Wire Spec	Wire Material description	Wire Color Description	Wire Length	End2 Terminal Part Number	End2 Pin Name	End2 Connect or
1	-	-	FB94C	2643673 R1	0.79	18.0	Std. Wall XLPE Primary Cable	GREY	1170.0	-	30	1700
1	-	-	ME94C	2643673 R1	0.79	18.0	Std. Wall XLPE Primary Cable	GREY	1615.0	-	30	1700

Name	Terminal Part Number	V-Min	Name	Wire Part Number	Wire CSA	Wire Spec	Wire Material description	Wire Color Description	Wire Length	End2 Terminal Part Number	End2 Pin Name	End2 Connector
1	-	-	FA94C	2643673 R1	0.79	18.0	Std. Wall XLPE Primary Cable	GREY	1170.0	-	30	1700
1	-	-	FL94C	2643673 R1	0.79	18.0	Std. Wall XLPE Primary Cable	GREY	1170.0	-	30	1700
2	-	-	FL94D	2643673 R1	0.79	18.0	Std. Wall XLPE Primary Cable	GREY	1170.0	-	31	1700
2	-	-	ME94D	2643673 R1	0.79	18.0	Std. Wall XLPE Primary Cable	GREY	1615.0	-	31	1700
2	-	-	FA94D	2643673 R1	0.79	18.0	Std. Wall XLPE Primary Cable	GREY	1170.0	-	31	1700
2	-	-	FB94D	2643673 R1	0.79	18.0	Std. Wall XLPE Primary Cable	GREY	1170.0	-	31	1700

Connector Name	8502
Part Number	3539777C1
Instances	B6.7 - Antilock Brake System (ABS) BENDIX 4 Channel Implemenation:Diagram1 B6.7 - Antilock Brake System (ABS) BENDIX 4 Channel Implemenation:Diagram2 B6.7 - Antilock Brake System (ABS) BENDIX 4 Channel Implemenation:Diagram3
Mates	SNSR-WS-3003-01-03D_

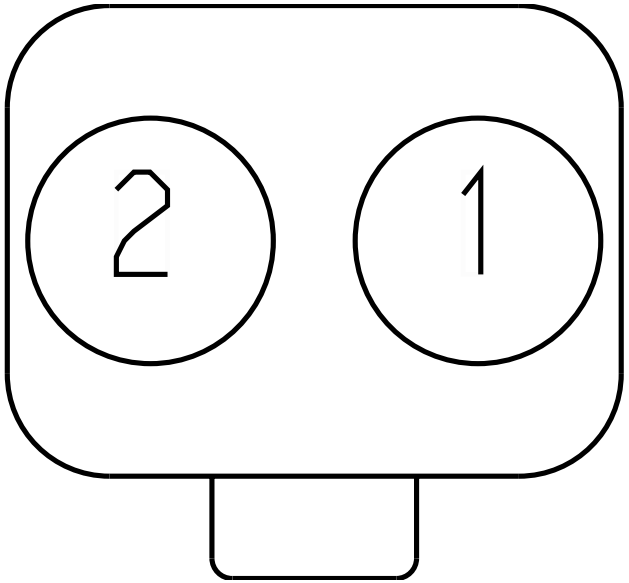

Name	Terminal Part Number	V-Min	Name	Wire Part Number	Wire CSA	Wire Spec	Wire Material description	Wire Color Description	Wire Length	End2 Terminal Part Number	End2 Pin Name	End2 Connect or
1	-	-	FB94C	2643673 R1	0.79	18.0	Std. Wall XLPE Primary Cable	GREY	1170.0	-	30	1700
1	-	-	FA94C	2643673 R1	0.79	18.0	Std. Wall XLPE Primary Cable	GREY	1170.0	-	30	1700
1	-	-	FL94C	2643673 R1	0.79	18.0	Std. Wall XLPE Primary Cable	GREY	1170.0	-	30	1700
2	-	-	FA94D	2643673 R1	0.79	18.0	Std. Wall XLPE Primary Cable	GREY	1170.0	-	31	1700

Name	Terminal Part Number	V-Min	Name	Wire Part Number	Wire CSA	Wire Spec	Wire Material description	Wire Color Description	Wire Length	End2 Terminal Part Number	End2 Pin Name	End2 Connect or
2	-	-	FB94D	2643673 R1	0.79	18.0	Std. Wall XLPE Primary Cable	GREY	1170.0	-	31	1700
2	-	-	FL94D	2643673 R1	0.79	18.0	Std. Wall XLPE Primary Cable	GREY	1170.0	-	31	1700

Connector Name	8503A
Part Number	1684261C1
Instances	A26 - Antilock Brake System (ABS) Bendix:Diagram1 A26 - Antilock Brake System (ABS) Bendix:Diagram2 A26 - Antilock Brake System (ABS) Bendix:Diagram3 L9 - Antilock Brake System (ABS) BENDIX 4 Channel Implemenation:Diagram1
Mates	SNSR-WS-3003-01-03C

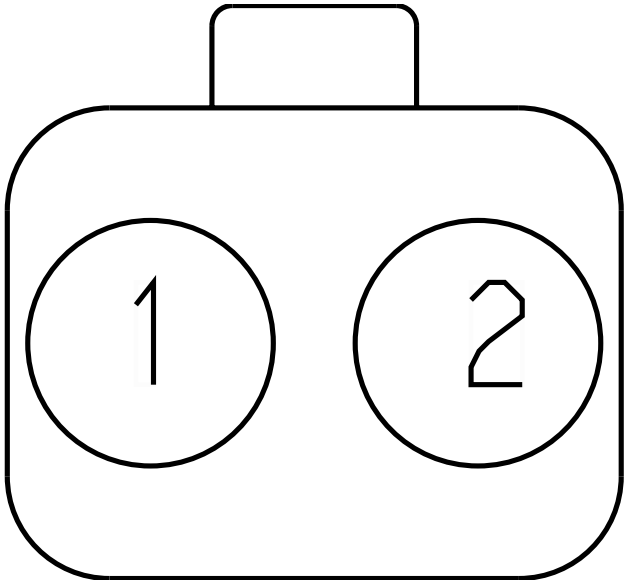

Name	Terminal Part Number	V-Min	Name	Wire Part Number	Wire CSA	Wire Spec	Wire Material description	Wire Color Description	Wire Length	End2 Terminal Part Number	End2 Pin Name	End2 Connect or
1	-	-	FL94E	2643673 R1	0.79	18.0	Std. Wall XLPE Primary Cable	GREY	4175.0	-	32	1700
1	-	-	ME94E	2643673 R1	0.79	18.0	Std. Wall XLPE Primary Cable	GREY	5105.0	-	32	1700
2	-	-	FL94F	2643673 R1	0.79	18.0	Std. Wall XLPE Primary Cable	GREY	4175.0	-	33	1700
2	-	-	ME94F	2643673 R1	0.79	18.0	Std. Wall XLPE Primary Cable	GREY	5105.0	-	33	1700

Connector Name	8503A
Part Number	1684261C1
Instances	B6.7 - Antilock Brake System (ABS) BENDIX 4 Channel Implemenation:Diagram1 L9 - Antilock Brake System (ABS) Bendix 6 Channel Implementation:Diagram1 L9 - Antilock Brake System (ABS) Bendix 6 Channel Implementation:Diagram2 L9 - Antilock Brake System (ABS) Bendix 6 Channel Implementation:Diagram3
Mates	SNSR-WS-3003-01-03C_

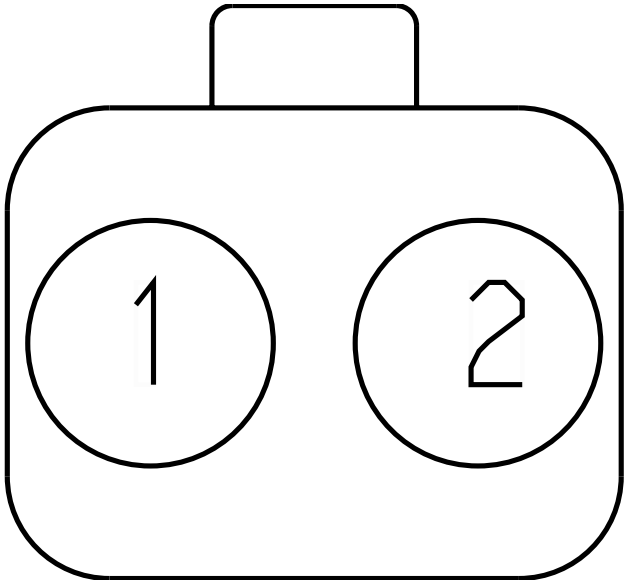

Name	Terminal Part Number	V-Min	Name	Wire Part Number	Wire CSA	Wire Spec	Wire Material description	Wire Color Description	Wire Length	End2 Terminal Part Number	End2 Pin Name	End2 Connect or
1	-	-	FL94E	2643673 R1	0.79	18.0	Std. Wall XLPE Primary Cable	GREY	4175.0	-	32	1700
2	-	-	FL94F	2643673 R1	0.79	18.0	Std. Wall XLPE Primary Cable	GREY	4175.0	-	33	1700

Connector Name 8503B

Part Number 1684261C1

Instances B6.7 - Antilock Brake System (ABS) BENDIX 4 Channel Implemenation:Diagram2
L9 - Antilock Brake System (ABS) Bendix 6 Channel Implementation:Diagram4
L9 - Antilock Brake System (ABS) Bendix 6 Channel Implementation:Diagram5
L9 - Antilock Brake System (ABS) Bendix 6 Channel Implementation:Diagram6

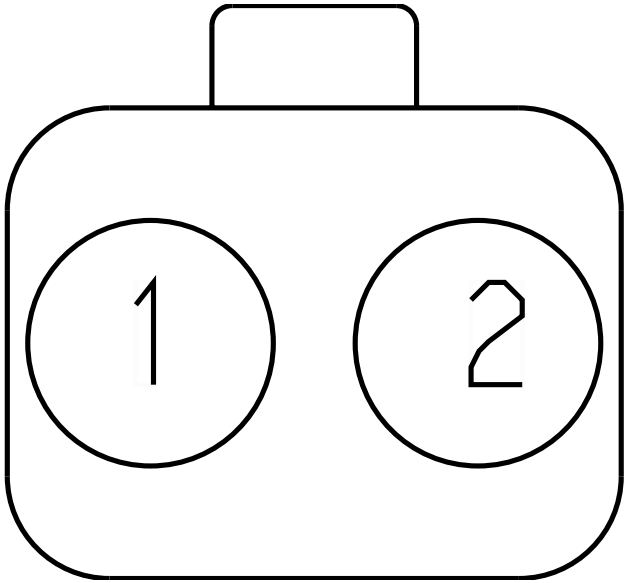

Name	Terminal Part Number	V-Min	Name	Wire Part Number	Wire CSA	Wire Spec	Wire Material description	Wire Color Description	Wire Length	End2 Terminal Part Number	End2 Pin Name	End2 Connect or
1	-	-	FA94E	2643673 R1	0.79	18.0	Std. Wall XLPE Primary Cable	GREY	4195.0	-	32	1700
2	-	-	FA94F	2643673 R1	0.79	18.0	Std. Wall XLPE Primary Cable	GREY	4195.0	-	33	1700

Connector Name 8503C

Part Number 1684261C1

Instances B6.7 - Antilock Brake System (ABS) BENDIX 4 Channel Implemenation:Diagram3
L9 - Antilock Brake System (ABS) Bendix 6 Channel Implementation:Diagram7
L9 - Antilock Brake System (ABS) Bendix 6 Channel Implementation:Diagram8
L9 - Antilock Brake System (ABS) Bendix 6 Channel Implementation:Diagram9

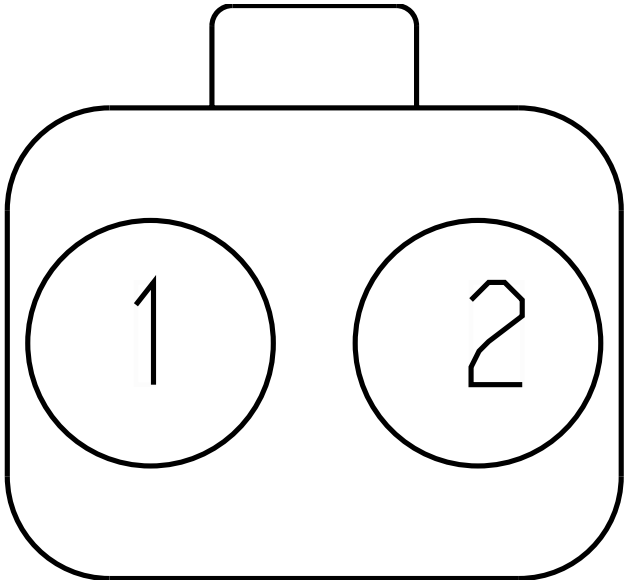

Name	Terminal Part Number	V-Min	Name	Wire Part Number	Wire CSA	Wire Spec	Wire Material description	Wire Color Description	Wire Length	End2 Terminal Part Number	End2 Pin Name	End2 Connect or
1	-	-	FB94E	2643673 R1	0.79	18.0	Std. Wall XLPE Primary Cable	GREY	4135.0	-	32	1700
2	-	-	FB94F	2643673 R1	0.79	18.0	Std. Wall XLPE Primary Cable	GREY	4135.0	-	33	1700

Connector Name	8506A
Part Number	6111844C1
Instances	A26 - Antilock Brake System (ABS)-Wabco 4 Channel Implementation:Diagram1 L9 - Antilock Brake System (ABS) Wabco 4 Channel Implementation:Diagram1
Mates	SNSR-WS-3003-02-04A

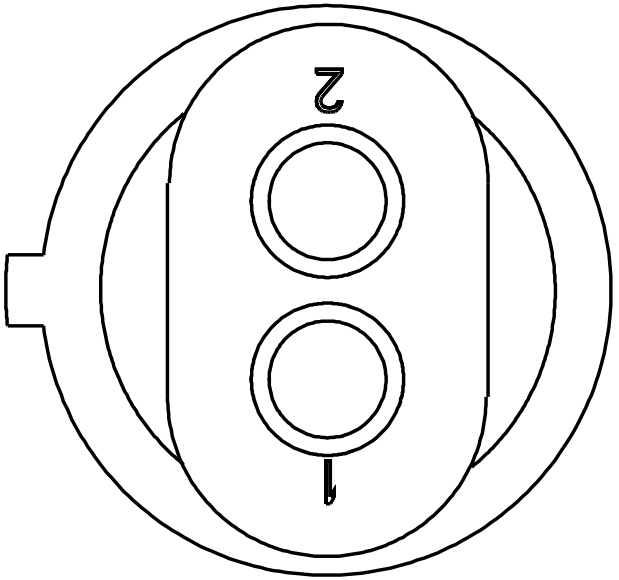

Name	Terminal Part Number	V-Min	Name	Wire Part Number	Wire CSA	Wire Spec	Wire Material description	Wire Color Description	Wire Length	End2 Terminal Part Number	End2 Pin Name	End2 Connect or
1	-	-	FD94AC	3510311 R1	0.79	18.0	Thin Wall XLPE Primary Cable	GREY	1170.0	-	30	1700
1	-	-	MF94AC	3510311 R1	0.79	18.0	Thin Wall XLPE Primary Cable	GREY	1615.0	-	30	1700
2	-	-	FE94AD	3510311 R1	0.79	18.0	Thin Wall XLPE Primary Cable	GREY	1170.0	-	31	1700
2	-	-	MF94AD	3510311 R1	0.79	18.0	Thin Wall XLPE Primary Cable	GREY	1615.0	-	31	1700

Connector Name	8507A
Part Number	6111844C1
Instances	A26 - Antilock Brake System (ABS)-Wabco 4 Channel Implementation:Diagram1
Mates	SNSR-WS-3003-02-04B

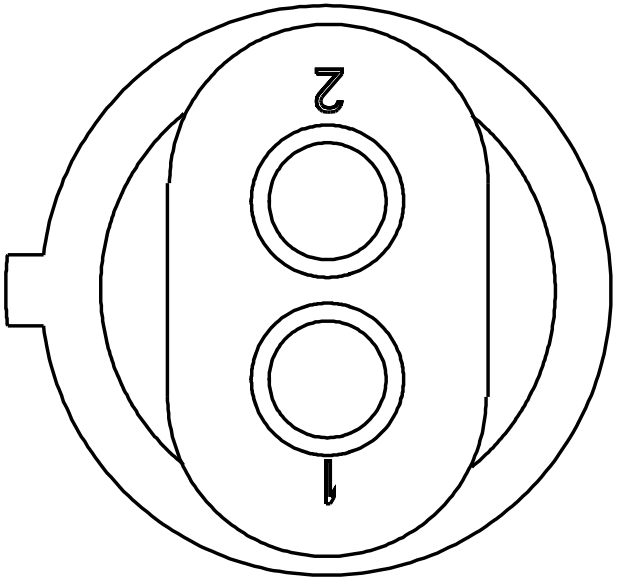

Name	Terminal Part Number	V-Min	Name	Wire Part Number	Wire CSA	Wire Spec	Wire Material description	Wire Color Description	Wire Length	End2 Terminal Part Number	End2 Pin Name	End2 Connect or
1	-	-	MF94AE	3510311 R1	0.79	18.0	Thin Wall XLPE Primary Cable	GREY	5105.0	-	32	1700
2	-	-	MF94AF	3510311 R1	0.79	18.0	Thin Wall XLPE Primary Cable	GREY	5105.0	-	33	1700

Connector Name	8507A
Part Number	6111844C1
Instances	L9 - Antilock Brake System (ABS) Wabco 4 Channel Implementation:Diagram1
Mates	SNSR-WS-3003-02-04B

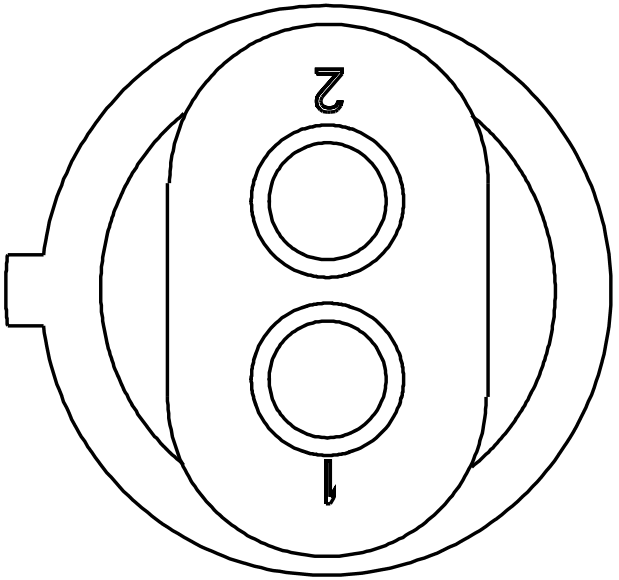

Name	Terminal Part Number	V-Min	Name	Wire Part Number	Wire CSA	Wire Spec	Wire Material description	Wire Color Description	Wire Length	End2 Terminal Part Number	End2 Pin Name	End2 Connect or
1	-	-	FD94AE	3510311 R1	0.79	18.0	Thin Wall XLPE Primary Cable	GREY	4175.0	-	32	1700
2	-	-	FD94AF	3510311 R1	0.79	18.0	Thin Wall XLPE Primary Cable	GREY	4175.0	-	33	1700

Connector Name	8508A
Part Number	3919376C1
Instances	A26 - Antilock Brake System (ABS)-Wabco 4 Channel Implementation:Diagram1 L9 - Antilock Brake System (ABS) Wabco 4 Channel Implementation:Diagram1
Mates	MDL-ABS-3003-02-04A

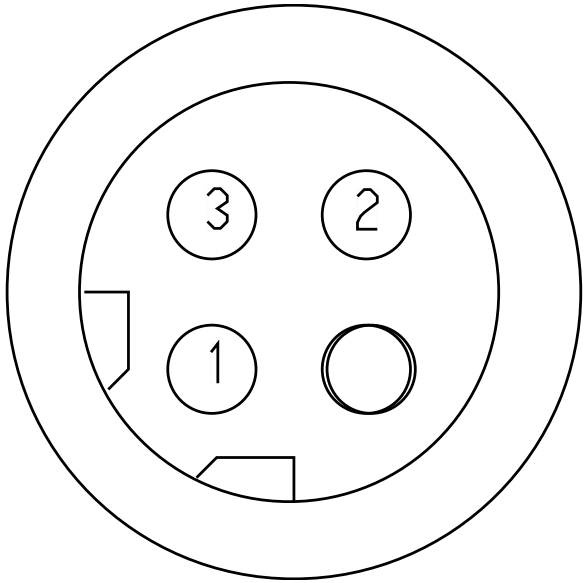

Name	Terminal Part Number	V-Min	Name	Wire Part Number	Wire CSA	Wire Spec	Wire Material description	Wire Color Description	Wire Length	End2 Terminal Part Number	End2 Pin Name	End2 Connect or
1	-	-	MH94AL	3510313 R1	1.91	14.0	Thin Wall XLPE Primary Cable	GREY	1025.0	-	29	1700
1	-	-	MF94ALM	3510313 R1	1.91	14.0	Thin Wall XLPE Primary Cable	GREY	175.0	-	X	-
2	-	-	MH94AA	3510313 R1	1.91	14.0	Thin Wall XLPE Primary Cable	GREY	1025.0	-	28	1700
2	-	-	MF94AAM	3510313 R1	1.91	14.0	Thin Wall XLPE Primary Cable	GREY	125.0	-	X	-

Name	Terminal Part Number	V-Min	Name	Wire Part Number	Wire CSA	Wire Spec	Wire Material description	Wire Color Description	Wire Length	End2 Terminal Part Number	End2 Pin Name	End2 Connect or
3	-	-	MH94AB	3510313 R1	1.91	14.0	Thin Wall XLPE Primary Cable	GREY	1025.0	-	27	1700
3	-	-	MF94ABM	3510313 R1	1.91	14.0	Thin Wall XLPE Primary Cable	GREY	75.0	-	X	-

Connector Name	8509A
Part Number	3919376C1
Instances	A26 - Antilock Brake System (ABS)-Wabco 4 Channel Implementation:Diagram1 L9 - Antilock Brake System (ABS) Wabco 4 Channel Implementation:Diagram1
Mates	MDL-ABS-3003-02-04B

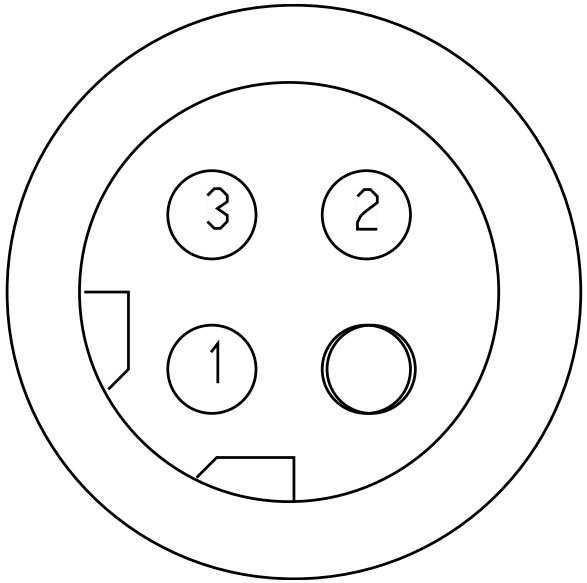

Name	Terminal Part Number	V-Min	Name	Wire Part Number	Wire CSA	Wire Spec	Wire Material description	Wire Color Description	Wire Length	End2 Terminal Part Number	End2 Pin Name	End2 Connect or
1	-	-	MH94AH	3510313 R1	1.91	14.0	Thin Wall XLPE Primary Cable	GREY	4665.0	-	36	1700
1	-	-	MF94AHM	3510313 R1	1.91	14.0	Thin Wall XLPE Primary Cable	GREY	75.0	-	X	-
2	-	-	MH94AJ	3510313 R1	1.91	14.0	Thin Wall XLPE Primary Cable	GREY	4665.0	-	35	1700
2	-	-	MF94AJM	3510313 R1	1.91	14.0	Thin Wall XLPE Primary Cable	GREY	125.0	-	X	-

Name	Terminal Part Number	V-Min	Name	Wire Part Number	Wire CSA	Wire Spec	Wire Material description	Wire Color Description	Wire Length	End2 Terminal Part Number	End2 Pin Name	End2 Connect or
3	-	-	MH94AK	3510313 R1	1.91	14.0	Thin Wall XLPE Primary Cable	GREY	4665.0	-	34	1700
3	-	-	MF94AKM	3510313 R1	1.91	14.0	Thin Wall XLPE Primary Cable	GREY	175.0	-	X	-

Connector Name	8600A
Part Number	587566C91
Instances	B6.7 - Cooling Fan Control Two-Speed:Diagram2
Mates	GND-RADIATOR-5014-01-03A

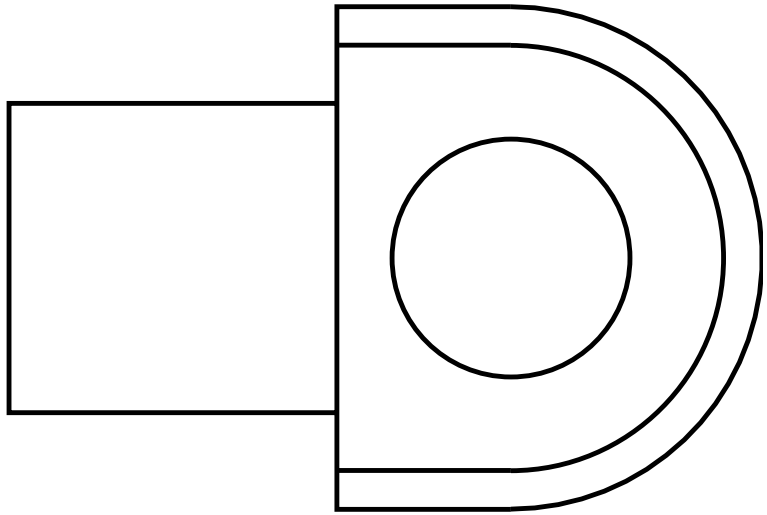

Name	Terminal Part Number	V-Min	Name	Wire Part Number	Wire CSA	Wire Spec	Wire Material description	Wire Color Description	Wire Length	End2 Terminal Part Number	End2 Pin Name	End2 Connect or
A	-	-	MY11-GC	2643787 R1	3.01	12.0	Std. Wall XLPE Primary Cable	WHITE	2935.0	-	-	-

Connector Name	8600
Part Number	587566C91
Instances	A26 - Cooling Fan Control Two-Speed:Diagram1 B6.7 - Cooling Fan Control Two-Speed:Diagram1
Mates	GND-RADIATOR-5014-01-03A

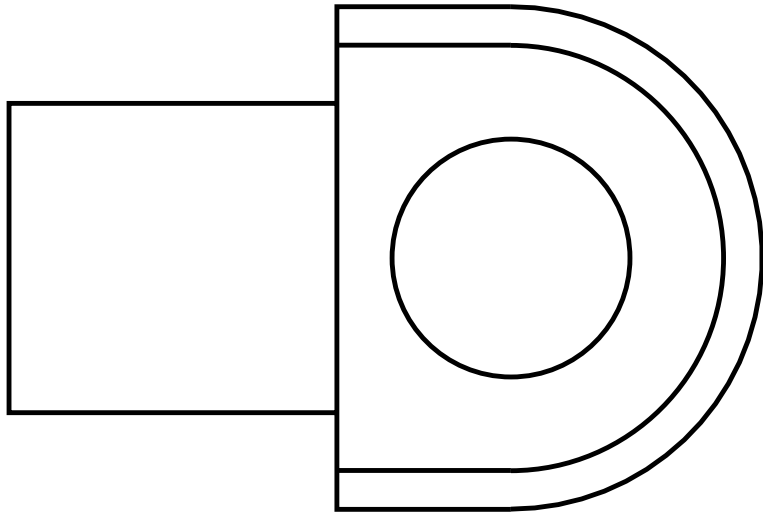

Name	Terminal Part Number	V-Min	Name	Wire Part Number	Wire CSA	Wire Spec	Wire Material description	Wire Color Description	Wire Length	End2 Terminal Part Number	End2 Pin Name	End2 Connect or
A	-	-	MX11-GC	2643787 R1	3.01	12.0	Std. Wall XLPE Primary Cable	WHITE	2935.0	-	-	-
A	-	-	MY11-GC	2643787 R1	3.01	12.0	Std. Wall XLPE Primary Cable	WHITE	2935.0	-	-	-
A	-	-	MW11-GC	2643787 R1	3.01	12.0	Std. Wall XLPE Primary Cable	WHITE	2935.0	-	-	-
A	-	-	TD11-GC	3510362 R1	3.01	12.0	Thin Wall XLPE Primary Cable	WHITE	1085.0	-	-	-

Name	Terminal Part Number	V-Min	Name	Wire Part Number	Wire CSA	Wire Spec	Wire Material description	Wire Color Description	Wire Length	End2 Terminal Part Number	End2 Pin Name	End2 Connect or
A	-	-	PK11-GC	2643787 R1	3.01	12.0	Std. Wall XLPE Primary Cable	WHITE	955.0	-	-	-
A	-	-	PL11-GC	2643787 R1	3.01	12.0	Std. Wall XLPE Primary Cable	WHITE	955.0	-	-	-
A	-	-	MZ11-GC	2643787 R1	3.01	12.0	Std. Wall XLPE Primary Cable	WHITE	2935.0	-	-	-
A	-	-	TC11-GC	3510362 R1	3.01	12.0	Thin Wall XLPE Primary Cable	WHITE	1085.0	-	-	-

Connector Name 8700A-DB

Part Number 587567C91

Instances B6.7 - Heated Mirrors (Hood with Door Pods):Diagram2
B6.7 - Mirrors (Heat) Switch Pack Actuated includes Hood Mirrors:Diagram2
L9 - Heated Mirrors (Hood with Door Pods):Diagram2
L9 - Mirrors (Heat) Switch Pack Actuated includes Hood Mirrors:Diagram2

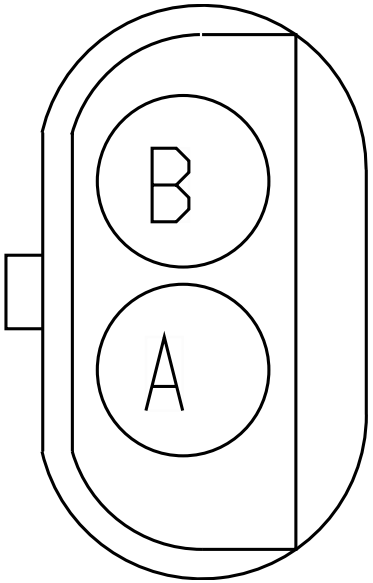

Name	Terminal Part Number	V-Min	Name	Wire Part Number	Wire CSA	Wire Spec	Wire Material description	Wire Color Description	Wire Length	End2 Terminal Part Number	End2 Pin Name	End2 Connect or
A	-	-	PM78AC	2643678 R1	1.16	16.0	Std. Wall XLPE Primary Cable	LIGHT GREEN	3725.0	-	64	1700
B	-	-	PM78-GA	2643681 R1	1.16	16.0	Std. Wall XLPE Primary Cable	WHITE	2090.0	-	-	-
B	-	-	PM78-GA	2643681 R1	1.16	16.0	Std. Wall XLPE Primary Cable	WHITE	2090.0	-	X	-

Connector Name 8700B-LF-DC

Part Number 587567C91

Instances L9 - Heated Mirrors (Hood with Door Pods):Diagram3
L9 - Mirrors (Heat) Switch Pack Actuated includes Hood Mirrors:Diagram3

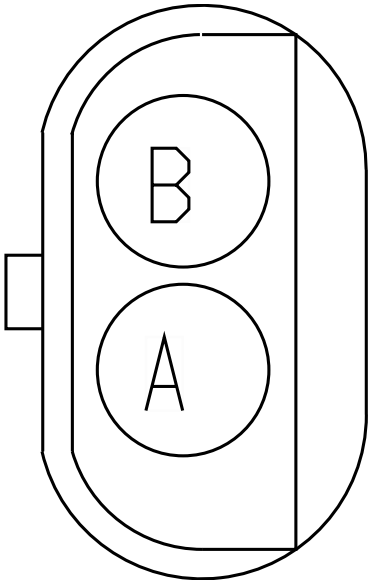

Name	Terminal Part Number	V-Min	Name	Wire Part Number	Wire CSA	Wire Spec	Wire Material description	Wire Color Description	Wire Length	End2 Terminal Part Number	End2 Pin Name	End2 Connect or
A	-	-	PG78AC	2643678 R1	1.16	16.0	Std. Wall XLPE Primary Cable	LIGHT GREEN	3595.0	-	64	1700
B	-	-	PT78-GB	2643681 R1	1.16	16.0	Std. Wall XLPE Primary Cable	WHITE	1960.0	-	X	-

Connector Name	8700C-LF-DD
Part Number	587567C91
Instances	L9 - Heated Mirrors (Hood with Door Pods):Diagram4 L9 - Mirrors (Heat) Switch Pack Actuated includes Hood Mirrors:Diagram4
Mates	MODU-DS-HOOD-MIRROR-1017-0 6-01A

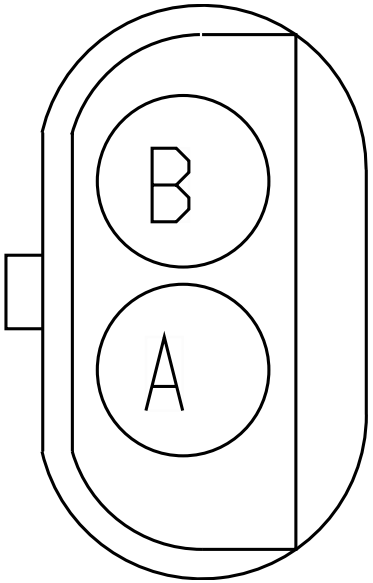

Name	Terminal Part Number	V-Min	Name	Wire Part Number	Wire CSA	Wire Spec	Wire Material description	Wire Color Description	Wire Length	End2 Terminal Part Number	End2 Pin Name	End2 Connect or
A	-	-	PS78AC	2643678 R1	1.16	16.0	Std. Wall XLPE Primary Cable	LIGHT GREEN	3960.0	-	64	1700
B	-	-	PU78-GB	2643681 R1	1.16	16.0	Std. Wall XLPE Primary Cable	WHITE	2325.0	-	X	-

Connector Name	8700-DA
Part Number	587567C91
Instances	A26 - Heated Mirrors (Hood with Door Pods):Diagram1 A26 - Mirrors (Heat) Switch Pack Actuated includes Hood Mirrors:Diagram1 B6.7 - Heated Mirrors (Hood with Door Pods):Diagram1 B6.7 - Mirrors (Heat) Switch Pack Actuated includes Hood Mirrors:Diagram1 L9 - Heated Mirrors (Hood with Door Pods):Diagram1 L9 - Mirrors (Heat) Switch Pack Actuated includes Hood Mirrors:Diagram1
Mates	MODU-DS-HOOD-MIRROR-1017-0 6-01A

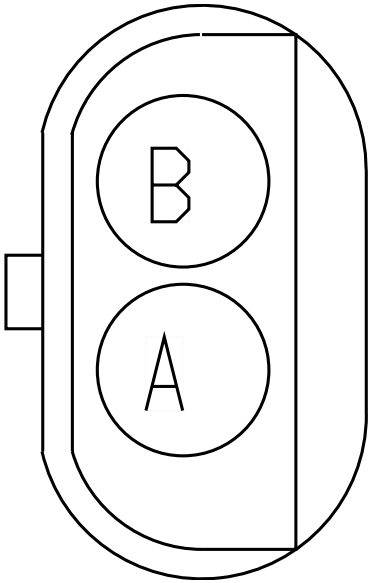

Name	Terminal Part Number	V-Min	Name	Wire Part Number	Wire CSA	Wire Spec	Wire Material description	Wire Color Description	Wire Length	End2 Terminal Part Number	End2 Pin Name	End2 Connect or
A	-	-	MT78AC	2643678 R1	1.16	16.0	Std. Wall XLPE Primary Cable	LIGHT GREEN	3245.0	-	64	1700
B	-	-	MT78-GA	2643681 R1	1.16	16.0	Std. Wall XLPE Primary Cable	WHITE	1610.0	-	-	-
B	-	-	MT78-GA	2643681 R1	1.16	16.0	Std. Wall XLPE Primary Cable	WHITE	1610.0	-	X	-

Connector Name 8701A-RT-DB

Part Number 587567C91

Instances B6.7 - Heated Mirrors (Hood with Door Pods):Diagram2
B6.7 - Heated Mirrors (RT Hood with Door Pods):Diagram2
B6.7 - Mirrors (Heat) Switch Pack Actuated includes Hood Mirrors:Diagram2
B6.7 - Mirrors (Heat) Switch Pack Actuated includes RT Hood Mirror:Diagram2
L9 - Heated Mirrors (Hood with Door Pods):Diagram2
L9 - Heated Mirrors (RT Hood with Door Pods):Diagram2
L9 - Mirrors (Heat) Switch Pack Actuated includes Hood Mirrors:Diagram2
L9 - Mirrors (Heat) Switch Pack Actuated includes RT Hood Mirror:Diagram2

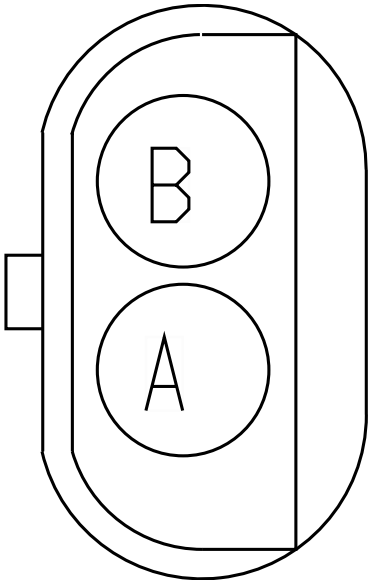

Name	Terminal Part Number	V-Min	Name	Wire Part Number	Wire CSA	Wire Spec	Wire Material description	Wire Color Description	Wire Length	End2 Terminal Part Number	End2 Pin Name	End2 Connect or
A	-	-	PM78BC	2643678 R1	1.16	16.0	Std. Wall XLPE Primary Cable	LIGHT GREEN	4370.0	-	63	1700
B	-	-	PJ78-GB	2643681 R1	1.16	16.0	Std. Wall XLPE Primary Cable	WHITE	3650.0	-	-	-
B	-	-	PM78-GB	2643681 R1	1.16	16.0	Std. Wall XLPE Primary Cable	WHITE	2735.0	-	-	-
B	-	-	PM78-GB	2643681 R1	1.16	16.0	Std. Wall XLPE Primary Cable	WHITE	2735.0	-	X	-

Connector Name 8701-RT-DA

Part Number 587567C91

Instances
A26 - Heated Mirrors (Hood with Door Pods):Diagram1
A26 - Heated Mirrors (RT Hood with Door Pods):Diagram1
A26 - Mirrors (Heat) Switch Pack Actuated includes Hood Mirrors:Diagram1
A26 - Mirrors (Heat) Switch Pack Actuated includes RT Hood Mirror:Diagram1
B6.7 - Heated Mirrors (Hood with Door Pods):Diagram1
B6.7 - Heated Mirrors (RT Hood with Door Pods):Diagram1
B6.7 - Mirrors (Heat) Switch Pack Actuated includes Hood Mirrors:Diagram1
B6.7 - Mirrors (Heat) Switch Pack Actuated includes RT Hood Mirror:Diagram1
L9 - Heated Mirrors (Hood with Door Pods):Diagram1
L9 - Heated Mirrors (RT Hood with Door Pods):Diagram1
L9 - Mirrors (Heat) Switch Pack Actuated includes Hood Mirrors:Diagram1
L9 - Mirrors (Heat) Switch Pack Actuated includes RT Hood Mirror:Diagram1

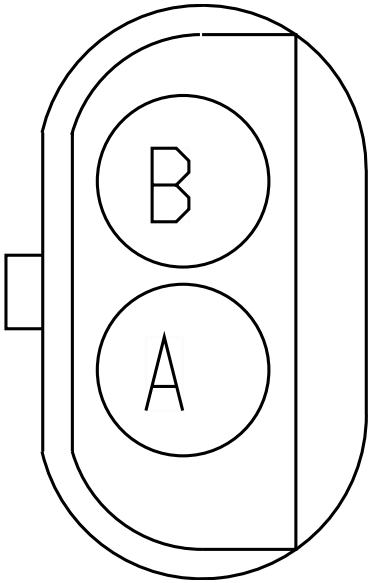

Name	Terminal Part Number	V-Min	Name	Wire Part Number	Wire CSA	Wire Spec	Wire Material description	Wire Color Description	Wire Length	End2 Terminal Part Number	End2 Pin Name	End2 Connect or
A	-	-	MT78BC	2643678 R1	1.16	16.0	Std. Wall XLPE Primary Cable	LIGHT GREEN	4495.0	-	63	1700
B	-	-	MT78-GB	2643681 R1	1.16	16.0	Std. Wall XLPE Primary Cable	WHITE	2895.0	-	-	-
B	-	-	MS78-GB	2643681 R1	1.16	16.0	Std. Wall XLPE Primary Cable	WHITE	3905.0	-	-	-
B	-	-	MT78-GB	2643681 R1	1.16	16.0	Std. Wall XLPE Primary Cable	WHITE	2895.0	-	X	-

Connector Name 8702A-RT-DD

Part Number 587567C91

Instances B6.7 - Heated Mirrors (RT Hood with Door Pods):Diagram4
B6.7 - Mirrors (Heat) Switch Pack Actuated includes RT Hood Mirror:Diagram4
L9 - Heated Mirrors (Hood with Door Pods):Diagram4
L9 - Heated Mirrors (RT Hood with Door Pods):Diagram4
L9 - Mirrors (Heat) Switch Pack Actuated includes Hood Mirrors:Diagram4
L9 - Mirrors (Heat) Switch Pack Actuated includes RT Hood Mirror:Diagram4

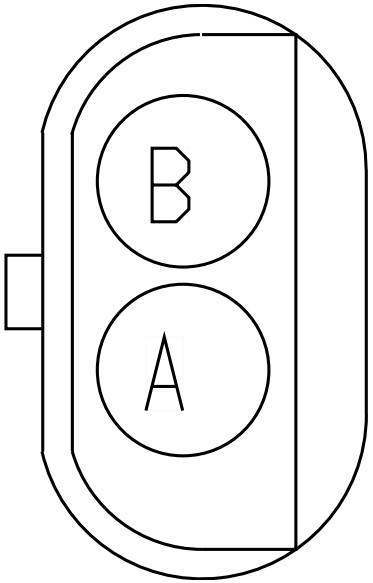

Name	Terminal Part Number	V-Min	Name	Wire Part Number	Wire CSA	Wire Spec	Wire Material description	Wire Color Description	Wire Length	End2 Terminal Part Number	End2 Pin Name	End2 Connect or
A	-	-	PU78BC	2643678 R1	1.16	16.0	Std. Wall XLPE Primary Cable	LIGHT GREEN	4720.0	-	63	1700
B	-	-	PU78-GA	2643681 R1	1.16	16.0	Std. Wall XLPE Primary Cable	WHITE	3085.0	-	-	-
B	-	-	PR78-GB	2643681 R1	1.16	16.0	Std. Wall XLPE Primary Cable	WHITE	4000.0	-	-	-
B	-	-	PU78-GA	2643681 R1	1.16	16.0	Std. Wall XLPE Primary Cable	WHITE	3085.0	-	X	-

Connector Name	8702-RT-DC
Part Number	587567C91
Instances	B6.7 - Heated Mirrors (RT Hood with Door Pods):Diagram3 B6.7 - Mirrors (Heat) Switch Pack Actuated includes RT Hood Mirror:Diagram3 L9 - Heated Mirrors (Hood with Door Pods):Diagram3 L9 - Heated Mirrors (RT Hood with Door Pods):Diagram3 L9 - Mirrors (Heat) Switch Pack Actuated includes Hood Mirrors:Diagram3 L9 - Mirrors (Heat) Switch Pack Actuated includes RT Hood Mirror:Diagram3
Mates	MODU-PS-HOOD-MIRROR-1017-0 6-01A

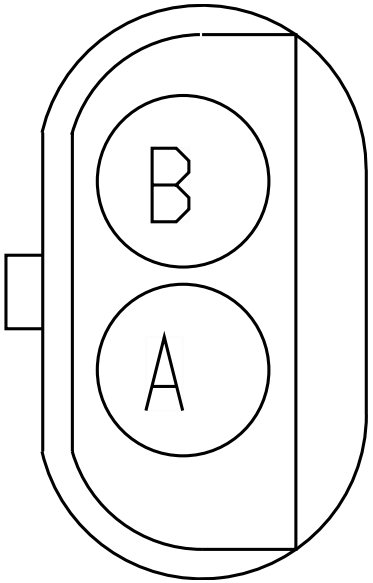

Name	Terminal Part Number	V-Min	Name	Wire Part Number	Wire CSA	Wire Spec	Wire Material description	Wire Color Description	Wire Length	End2 Terminal Part Number	End2 Pin Name	End2 Connect or
A	-	-	PF78BC	2643678 R1	1.16	16.0	Std. Wall XLPE Primary Cable	LIGHT GREEN	4845.0	-	63	1700
B	-	-	PF78-GB	2643681 R1	1.16	16.0	Std. Wall XLPE Primary Cable	WHITE	4255.0	-	-	-
B	-	-	PT78-GA	2643681 R1	1.16	16.0	Std. Wall XLPE Primary Cable	WHITE	3210.0	-	-	-
B	-	-	PT78-GA	2643681 R1	1.16	16.0	Std. Wall XLPE Primary Cable	WHITE	3210.0	-	X	-

Connector Name	8800
Part Number	3551896C1
Instances	A26 - Forward Chassis Ground Splice Packs 8800:Diagram1 L9 - Forward Chassis Ground Splice Packs 8800:Diagram1
Mates	SP-0003-00-10-M0A

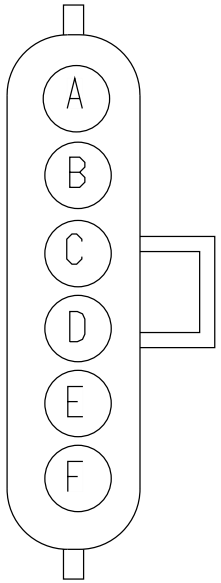

Name	Terminal Part Number	V-Min	Name	Wire Part Number	Wire CSA	Wire Spec	Wire Material description	Wire Color Description	Wire Length	End2 Terminal Part Number	End2 Pin Name	End2 Connect or
A	-	-	TC85-GB	2643681 R1	1.16	16.0	Std. Wall XLPE Primary Cable	WHITE	1480.0	-	X	-
A	-	-	MY11-GD	2643787 R1	3.01	12.0	Std. Wall XLPE Primary Cable	WHITE	1480.0	-	X	-
A	-	-	MX11-GD	2643787 R1	3.01	12.0	Std. Wall XLPE Primary Cable	WHITE	1480.0	-	X	-
B	-	-	MD64-GA	3510360 R1	1.16	16.0	Thin Wall XLPE Primary Cable	WHITE	1780.0	-	-	-

Name	Terminal Part Number	V-Min	Name	Wire Part Number	Wire CSA	Wire Spec	Wire Material description	Wire Color Description	Wire Length	End2 Terminal Part Number	End2 Pin Name	End2 Connector
B	-	-	TH64-GA	3510360 R1	1.16	16.0	Thin Wall XLPE Primary Cable	WHITE	1830.0	-	-	-
B	-	-	TG64-GA	3510360 R1	1.16	16.0	Thin Wall XLPE Primary Cable	WHITE	2380.0	-	-	-
B	-	-	TK64-GA	3510360 R1	1.16	16.0	Thin Wall XLPE Primary Cable	WHITE	2280.0	-	-	-
B	-	-	XK64-GA	3510360 R1	1.16	16.0	Thin Wall XLPE Primary Cable	WHITE	2390.0	-	-	-
B	-	-	XH64-GA	3510360 R1	1.16	16.0	Thin Wall XLPE Primary Cable	WHITE	2990.0	-	-	-
C	-	-	TG64-GB	3510360 R1	1.16	16.0	Thin Wall XLPE Primary Cable	WHITE	3120.0	-	-	-
C	-	-	TH64-GB	3510360 R1	1.16	16.0	Thin Wall XLPE Primary Cable	WHITE	2590.0	-	-	-
C	-	-	MD64-GB	3510360 R1	1.16	16.0	Thin Wall XLPE Primary Cable	WHITE	2520.0	-	-	-

Name	Terminal Part Number	V-Min	Name	Wire Part Number	Wire CSA	Wire Spec	Wire Material description	Wire Color Description	Wire Length	End2 Terminal Part Number	End2 Pin Name	End2 Connector
C	-	-	TK64-GB	3510360 R1	1.16	16.0	Thin Wall XLPE Primary Cable	WHITE	3040.0	-	-	-
C	-	-	XH64-GB	3510360 R1	1.16	16.0	Thin Wall XLPE Primary Cable	WHITE	3730.0	-	-	-
C	-	-	XK64-GB	3510360 R1	1.16	16.0	Thin Wall XLPE Primary Cable	WHITE	3130.0	-	-	-
D	-	-	RD11-GE	2643689 R1	1.91	14.0	Std. Wall XLPE Primary Cable	WHITE	2950.0	-	-	-
D	-	-	MC11-GE	2643689 R1	1.91	14.0	Std. Wall XLPE Primary Cable	WHITE	1640.0	-	-	-
D	-	-	ML11-GE	2643689 R1	1.91	14.0	Std. Wall XLPE Primary Cable	WHITE	2005.0	-	-	-
D	-	-	RB11-GE	2643689 R1	1.91	14.0	Std. Wall XLPE Primary Cable	WHITE	2680.0	-	-	-
D	-	-	MV11-GE	2643689 R1	1.91	14.0	Std. Wall XLPE Primary Cable	WHITE	890.0	-	-	-

Name	Terminal Part Number	V-Min	Name	Wire Part Number	Wire CSA	Wire Spec	Wire Material description	Wire Color Description	Wire Length	End2 Terminal Part Number	End2 Pin Name	End2 Connect or
E	-	-	PF78-GB	2643681 R1	1.16	16.0	Std. Wall XLPE Primary Cable	WHITE	4255.0	-	-	-
E	-	-	MS78-GB	2643681 R1	1.16	16.0	Std. Wall XLPE Primary Cable	WHITE	3905.0	-	-	-
E	-	-	PR78-GB	2643681 R1	1.16	16.0	Std. Wall XLPE Primary Cable	WHITE	4000.0	-	-	-
E	-	-	PJ78-GB	2643681 R1	1.16	16.0	Std. Wall XLPE Primary Cable	WHITE	3650.0	-	-	-
F	-	-	MU85-GC	2643681 R1	1.16	16.0	Std. Wall XLPE Primary Cable	WHITE	0.0	-	-	-

Connector Name	8800
Part Number	3551896C1
Instances	B6.7 - Forward Chassis Ground Splice Packs 8800:Diagram1
Mates	SP-0003-00-10-M0A

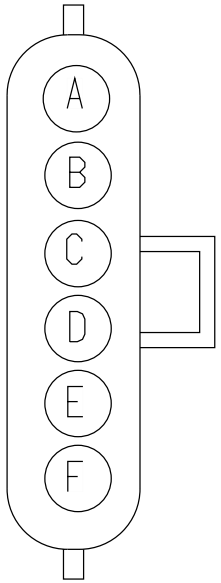

Name	Terminal Part Number	V-Min	Name	Wire Part Number	Wire CSA	Wire Spec	Wire Material description	Wire Color Description	Wire Length	End2 Terminal Part Number	End2 Pin Name	End2 Connect or
A	-	-	MY11-GD	2643787 R1	3.01	12.0	Std. Wall XLPE Primary Cable	WHITE	1480.0	-	X	-
A	-	-	TC85-GB	2643681 R1	1.16	16.0	Std. Wall XLPE Primary Cable	WHITE	1480.0	-	X	-
B	-	-	MD64-GA	3510360 R1	1.16	16.0	Thin Wall XLPE Primary Cable	WHITE	1780.0	-	-	-
B	-	-	TM64-GA	3510360 R1	1.16	16.0	Thin Wall XLPE Primary Cable	WHITE	1680.0	-	-	-

Name	Terminal Part Number	V-Min	Name	Wire Part Number	Wire CSA	Wire Spec	Wire Material description	Wire Color Description	Wire Length	End2 Terminal Part Number	End2 Pin Name	End2 Connector
B	-	-	TJ64-GA	3510360 R1	1.16	16.0	Thin Wall XLPE Primary Cable	WHITE	1680.0	-	-	-
B	-	-	TG64-GA	3510360 R1	1.16	16.0	Thin Wall XLPE Primary Cable	WHITE	2380.0	-	-	-
B	-	-	TK64-GA	3510360 R1	1.16	16.0	Thin Wall XLPE Primary Cable	WHITE	2280.0	-	-	-
C	-	-	TM64-GB	3510360 R1	1.16	16.0	Thin Wall XLPE Primary Cable	WHITE	2440.0	-	-	-
C	-	-	MD64-GB	3510360 R1	1.16	16.0	Thin Wall XLPE Primary Cable	WHITE	2520.0	-	-	-
C	-	-	TG64-GB	3510360 R1	1.16	16.0	Thin Wall XLPE Primary Cable	WHITE	3120.0	-	-	-
C	-	-	TK64-GB	3510360 R1	1.16	16.0	Thin Wall XLPE Primary Cable	WHITE	3040.0	-	-	-
C	-	-	TJ64-GB	3510360 R1	1.16	16.0	Thin Wall XLPE Primary Cable	WHITE	2440.0	-	-	-

Name	Terminal Part Number	V-Min	Name	Wire Part Number	Wire CSA	Wire Spec	Wire Material description	Wire Color Description	Wire Length	End2 Terminal Part Number	End2 Pin Name	End2 Connector
D	-	-	ML11-GE	2643689 R1	1.91	14.0	Std. Wall XLPE Primary Cable	WHITE	2005.0	-	-	-
D	-	-	MC11-GE	2643689 R1	1.91	14.0	Std. Wall XLPE Primary Cable	WHITE	1640.0	-	-	-
D	-	-	RB11-GE	2643689 R1	1.91	14.0	Std. Wall XLPE Primary Cable	WHITE	2680.0	-	-	-
D	-	-	RD11-GE	2643689 R1	1.91	14.0	Std. Wall XLPE Primary Cable	WHITE	2950.0	-	-	-
F	-	-	PF78-GB	2643681 R1	1.16	16.0	Std. Wall XLPE Primary Cable	WHITE	4255.0	-	-	-
F	-	-	PR78-GB	2643681 R1	1.16	16.0	Std. Wall XLPE Primary Cable	WHITE	4000.0	-	-	-
F	-	-	PJ78-GB	2643681 R1	1.16	16.0	Std. Wall XLPE Primary Cable	WHITE	3650.0	-	-	-
F	-	-	MS78-GB	2643681 R1	1.16	16.0	Std. Wall XLPE Primary Cable	WHITE	3905.0	-	-	-

Connector Name	8802
Part Number	3551896C1
Instances	A26 - Center Chassis Ground Splice Packs:Diagram1
Mates	SP-0003-00-10-N0B-8802

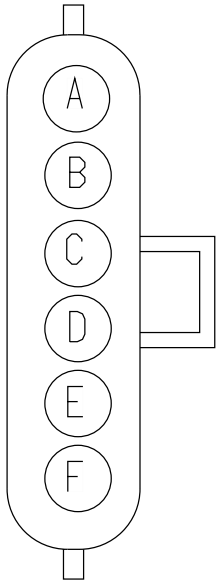

Name	Terminal Part Number	V-Min	Name	Wire Part Number	Wire CSA	Wire Spec	Wire Material description	Wire Color Description	Wire Length	End2 Terminal Part Number	End2 Pin Name	End2 Connect or
A	-	-	RX9	2643680 R1	1.16	16.0	Std. Wall XLPE Primary Cable	GREY	1780.0	-	-	-
B	-	-	FA9-G	2643673 R1	0.79	18.0	Std. Wall XLPE Primary Cable	GREY	2485.0	-	-	-
C	-	-	ZX9-GB	2643673 R1	0.79	18.0	Std. Wall XLPE Primary Cable	GREY	2740.0	-	-	-
D	-	-	PP87H	3510311 R1	0.79	18.0	Thin Wall XLPE Primary Cable	GREY	1764.0	-	-	-

Name	Terminal Part Number	V-Min	Name	Wire Part Number	Wire CSA	Wire Spec	Wire Material description	Wire Color Description	Wire Length	End2 Terminal Part Number	End2 Pin Name	End2 Connector
D	-	-	AK8EB	3510311 R1	0.79	18.0	Thin Wall XLPE Primary Cable	GREY	1640.0	-	-	-
F	-	-	MG9H	2643673 R1	0.79	18.0	Std. Wall XLPE Primary Cable	GREY	2750.0	-	-	-

Connector Name	8802
Part Number	3551896C1
Instances	B6.7 - Center Chassis Ground Splice Packs:Diagram1 L9 - Center Chassis Ground Splice Packs:Diagram1
Mates	SP-0003-00-10-N0B-8802

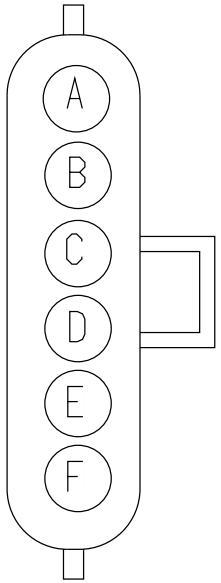

Name	Terminal Part Number	V-Min	Name	Wire Part Number	Wire CSA	Wire Spec	Wire Material description	Wire Color Description	Wire Length	End2 Terminal Part Number	End2 Pin Name	End2 Connect or
A	-	-	SL9	2643680 R1	1.16	16.0	Std. Wall XLPE Primary Cable	GREY	2180.0	-	-	-
A	-	-	RX9	2643680 R1	1.16	16.0	Std. Wall XLPE Primary Cable	GREY	1780.0	-	-	-
B	-	-	FD9A	2643673 R1	0.79	18.0	Std. Wall XLPE Primary Cable	GREY	1915.0	-	-	-
B	-	-	FA9-G	2643673 R1	0.79	18.0	Std. Wall XLPE Primary Cable	GREY	2485.0	-	-	-

Name	Terminal Part Number	V-Min	Name	Wire Part Number	Wire CSA	Wire Spec	Wire Material description	Wire Color Description	Wire Length	End2 Terminal Part Number	End2 Pin Name	End2 Connector
C	-	-	ZP9B	2643673 R1	0.79	18.0	Std. Wall XLPE Primary Cable	GREY	2610.0	-	-	-
C	-	-	ZX9-GB	2643673 R1	0.79	18.0	Std. Wall XLPE Primary Cable	GREY	2740.0	-	-	-
D	-	-	AK9EB	3510311 R1	0.79	18.0	Thin Wall XLPE Primary Cable	GREY	1485.0	-	-	-
D	-	-	PP87H	3510311 R1	0.79	18.0	Thin Wall XLPE Primary Cable	GREY	1764.0	-	-	-
D	-	-	AK8EB	3510311 R1	0.79	18.0	Thin Wall XLPE Primary Cable	GREY	1640.0	-	-	-
F	-	-	RH9F	2643673 R1	0.79	18.0	Std. Wall XLPE Primary Cable	GREY	2750.0	-	-	-
F	-	-	MG9H	2643673 R1	0.79	18.0	Std. Wall XLPE Primary Cable	GREY	2750.0	-	-	-

Connector Name	8805
Part Number	3551896C1
Instances	A26 - Center Chassis Ground Splice Packs:Diagram1 B6.7 - Center Chassis Ground Splice Packs:Diagram1 L9 - Center Chassis Ground Splice Packs:Diagram1
Mates	SP-0003-00-10-N0D-8805

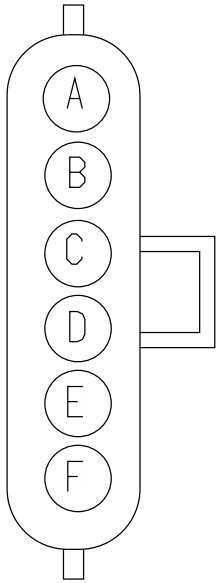

Name	Terminal Part Number	V-Min	Name	Wire Part Number	Wire CSA	Wire Spec	Wire Material description	Wire Color Description	Wire Length	End2 Terminal Part Number	End2 Pin Name	End2 Connect or
A	-	-	XM59-G	2643787 R1	3.01	12.0	Std. Wall XLPE Primary Cable	WHITE	1700.0	-	F	8809
B	-	-	NG59A-G	2643689 R1	1.91	14.0	Std. Wall XLPE Primary Cable	WHITE	1705.0	-	-	-
C	-	-	NZ59X-G	2643689 R1	1.91	14.0	Std. Wall XLPE Primary Cable	WHITE	2920.0	-	-	-
C	-	-	NT59S-G	2643689 R1	1.91	14.0	Std. Wall XLPE Primary Cable	WHITE	2245.0	-	-	-

Name	Terminal Part Number	V-Min	Name	Wire Part Number	Wire CSA	Wire Spec	Wire Material description	Wire Color Description	Wire Length	End2 Terminal Part Number	End2 Pin Name	End2 Connector
C	-	-	NS59S-G	2643689 R1	1.91	14.0	Std. Wall XLPE Primary Cable	WHITE	3720.0	-	-	-
C	-	-	BU59Z-G	2643689 R1	1.91	14.0	Std. Wall XLPE Primary Cable	WHITE	2075.0	-	-	-
C	-	-	NU59F-G	2643689 R1	1.91	14.0	Std. Wall XLPE Primary Cable	WHITE	2570.0	-	-	-
C	-	-	2A59F-G	2643689 R1	1.91	14.0	Std. Wall XLPE Primary Cable	WHITE	1275.0	-	-	-
C	-	-	BV59Y-G	2643689 R1	1.91	14.0	Std. Wall XLPE Primary Cable	WHITE	3720.0	-	-	-
C	-	-	RE59F-G	2643689 R1	1.91	14.0	Std. Wall XLPE Primary Cable	WHITE	1225.0	-	-	-
D	-	-	BU59Z-G	2643689 R1	1.91	14.0	Std. Wall XLPE Primary Cable	WHITE	2075.0	-	-	-
D	-	-	2A59F-G	2643689 R1	1.91	14.0	Std. Wall XLPE Primary Cable	WHITE	1275.0	-	-	-

Name	Terminal Part Number	V-Min	Name	Wire Part Number	Wire CSA	Wire Spec	Wire Material description	Wire Color Description	Wire Length	End2 Terminal Part Number	End2 Pin Name	End2 Connector
D	-	-	NU59F-G	2643689 R1	1.91	14.0	Std. Wall XLPE Primary Cable	WHITE	2570.0	-	-	-
D	-	-	RE59F-G	2643689 R1	1.91	14.0	Std. Wall XLPE Primary Cable	WHITE	1225.0	-	-	-
D	-	-	BV59Y-G	2643689 R1	1.91	14.0	Std. Wall XLPE Primary Cable	WHITE	3720.0	-	-	-
D	-	-	NZ59X-G	2643689 R1	1.91	14.0	Std. Wall XLPE Primary Cable	WHITE	2920.0	-	-	-
D	-	-	NW59L-G	2643689 R1	1.91	14.0	Std. Wall XLPE Primary Cable	WHITE	2670.0	-	-	-
D	-	-	2B59L-G	2643689 R1	1.91	14.0	Std. Wall XLPE Primary Cable	WHITE	1275.0	-	-	-
E	-	-	NR59R-G	2643689 R1	1.91	14.0	Std. Wall XLPE Primary Cable	WHITE	3520.0	-	-	-
E	-	-	NS59R-G	2643674 R1	0.79	18.0	Std. Wall XLPE Primary Cable	WHITE	3182.0	-	-	-

Name	Terminal Part Number	V-Min	Name	Wire Part Number	Wire CSA	Wire Spec	Wire Material description	Wire Color Description	Wire Length	End2 Terminal Part Number	End2 Pin Name	End2 Connector
F	-	-	CJ19A-G	2643681 R1	1.16	16.0	Std. Wall XLPE Primary Cable	WHITE	850.0	-	-	-
F	-	-	CG19-G	3510360 R1	1.16	16.0	Thin Wall XLPE Primary Cable	WHITE	1525.0	-	-	-
F	-	-	CB19-G	2643681 R1	1.16	16.0	Std. Wall XLPE Primary Cable	WHITE	1050.0	-	-	-
F	-	-	CK19B-G	2643681 R1	1.16	16.0	Std. Wall XLPE Primary Cable	WHITE	995.0	-	-	-
F	-	-	CR19H-G	2643681 R1	1.16	16.0	Std. Wall XLPE Primary Cable	WHITE	825.0	-	-	-
F	-	-	CE19-G	3510360 R1	1.16	16.0	Thin Wall XLPE Primary Cable	WHITE	1420.0	-	-	-
F	-	-	CM19F-G	2643681 R1	1.16	16.0	Std. Wall XLPE Primary Cable	WHITE	625.0	-	-	-
F	-	-	CL19C-G	2643681 R1	1.16	16.0	Std. Wall XLPE Primary Cable	WHITE	1695.0	-	-	-

Name	Terminal Part Number	V-Min	Name	Wire Part Number	Wire CSA	Wire Spec	Wire Material description	Wire Color Description	Wire Length	End2 Terminal Part Number	End2 Pin Name	End2 Connector
F	-	-	CP19D-G	2643681 R1	1.16	16.0	Std. Wall XLPE Primary Cable	WHITE	1125.0	-	-	-
F	-	-	CD19-G	3510360 R1	1.16	16.0	Thin Wall XLPE Primary Cable	WHITE	1210.0	-	-	-
F	-	-	CH19E-G	2643681 R1	1.16	16.0	Std. Wall XLPE Primary Cable	WHITE	975.0	-	-	-
F	-	-	CA19-G	3510360 R1	1.16	16.0	Thin Wall XLPE Primary Cable	WHITE	1075.0	-	-	-
F	-	-	CF19-G	3510360 R1	1.16	16.0	Thin Wall XLPE Primary Cable	WHITE	2015.0	-	-	-
F	-	-	CN19-G	3510360 R1	1.16	16.0	Thin Wall XLPE Primary Cable	WHITE	1435.0	-	-	-
F	-	-	CT19-G	3510360 R1	1.16	16.0	Thin Wall XLPE Primary Cable	WHITE	975.0	-	-	-
F	-	-	CV19-G	3510360 R1	1.16	16.0	Thin Wall XLPE Primary Cable	WHITE	1145.0	-	-	-

Name	Terminal Part Number	V-Min	Name	Wire Part Number	Wire CSA	Wire Spec	Wire Material description	Wire Color Description	Wire Length	End2 Terminal Part Number	End2 Pin Name	End2 Connector
F	-	-	CZ19-G	3510360 R1	1.16	16.0	Thin Wall XLPE Primary Cable	WHITE	1995.0	-	-	-
F	-	-	CX19-G	3510360 R1	1.16	16.0	Thin Wall XLPE Primary Cable	WHITE	1345.0	-	-	-
F	-	-	CR19-G	3510360 R1	1.16	16.0	Thin Wall XLPE Primary Cable	WHITE	1150.0	-	-	-
F	-	-	PU19-G	2643681 R1	1.16	16.0	Std. Wall XLPE Primary Cable	WHITE	1395.0	-	-	-
F	-	-	XA19-G	3510360 R1	1.16	16.0	Thin Wall XLPE Primary Cable	WHITE	1235.0	-	-	-
F	-	-	CH19-G	3510360 R1	1.16	16.0	Thin Wall XLPE Primary Cable	WHITE	925.0	-	-	-
F	-	-	XY19-G	3510360 R1	1.16	16.0	Thin Wall XLPE Primary Cable	WHITE	545.0	-	-	-
F	-	-	PX19-G	3510360 R1	1.16	16.0	Thin Wall XLPE Primary Cable	WHITE	1375.0	-	-	-

Name	Terminal Part Number	V-Min	Name	Wire Part Number	Wire CSA	Wire Spec	Wire Material description	Wire Color Description	Wire Length	End2 Terminal Part Number	End2 Pin Name	End2 Connector
F	-	-	CS19-G	3510360 R1	1.16	16.0	Thin Wall XLPE Primary Cable	WHITE	625.0	-	-	-
F	-	-	CW19-G	3510360 R1	1.16	16.0	Thin Wall XLPE Primary Cable	WHITE	1145.0	-	-	-
F	-	-	CU19-G	3510360 R1	1.16	16.0	Thin Wall XLPE Primary Cable	WHITE	845.0	-	-	-
F	-	-	CC19-G	3510360 R1	1.16	16.0	Thin Wall XLPE Primary Cable	WHITE	567.0	-	-	-
F	-	-	CY19-G	3510360 R1	1.16	16.0	Thin Wall XLPE Primary Cable	WHITE	1695.0	-	-	-
F	-	-	CP19-G	3510360 R1	1.16	16.0	Thin Wall XLPE Primary Cable	WHITE	750.0	-	-	-

Connector Name	8806
Part Number	3551896C1
Instances	A26 - Center Chassis Ground Splice Packs:Diagram1 L9 - Center Chassis Ground Splice Packs:Diagram1
Mates	SP-0003-00-10-N0D-8806

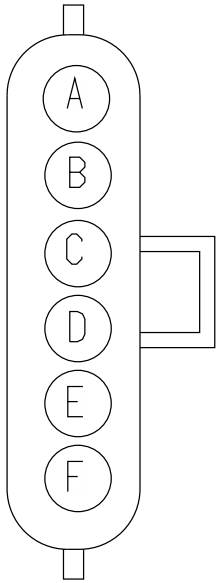

Name	Terminal Part Number	V-Min	Name	Wire Part Number	Wire CSA	Wire Spec	Wire Material description	Wire Color Description	Wire Length	End2 Terminal Part Number	End2 Pin Name	End2 Connect or
A	-	-	UK11-GC	2643689 R1	1.91	14.0	Std. Wall XLPE Primary Cable	WHITE	455.0	-	E	8807
C	-	-	UD59-GB	2643674 R1	0.79	18.0	Std. Wall XLPE Primary Cable	WHITE	2225.0	-	-	-
C	-	-	TM59-GB	2643674 R1	0.79	18.0	Std. Wall XLPE Primary Cable	WHITE	2225.0	-	-	-
D	-	-	TM59-GD	2643674 R1	0.79	18.0	Std. Wall XLPE Primary Cable	WHITE	1071.0	-	-	-

Name	Terminal Part Number	V-Min	Name	Wire Part Number	Wire CSA	Wire Spec	Wire Material description	Wire Color Description	Wire Length	End2 Terminal Part Number	End2 Pin Name	End2 Connector
D	-	-	SJ59-GD	2643674 R1	0.79	18.0	Std. Wall XLPE Primary Cable	WHITE	2145.0	-	B	9820M
D	-	-	SJ59-GD	2643674 R1	0.79	18.0	Std. Wall XLPE Primary Cable	WHITE	2145.0	-	-	-
F	-	-	MV59-GA	2643674 R1	0.79	18.0	Std. Wall XLPE Primary Cable	WHITE	275.0	-	-	-
F	-	-	RP59-GA	2643674 R1	0.79	18.0	Std. Wall XLPE Primary Cable	WHITE	2145.0	-	B	9820M
F	-	-	UC59-GA	2643674 R1	0.79	18.0	Std. Wall XLPE Primary Cable	WHITE	4395.0	-	-	-
F	-	-	MX59-GA	2643674 R1	0.79	18.0	Std. Wall XLPE Primary Cable	WHITE	275.0	-	-	-
F	-	-	RN59-GA	2643674 R1	0.79	18.0	Std. Wall XLPE Primary Cable	WHITE	4395.0	-	-	-
F	-	-	RP59-GA	2643674 R1	0.79	18.0	Std. Wall XLPE Primary Cable	WHITE	2145.0	-	-	-

Connector Name	8807
Part Number	3551896C1
Instances	A26 - Center Chassis Ground Splice Packs:Diagram1
Mates	SP-0003-00-10-N0C-8807

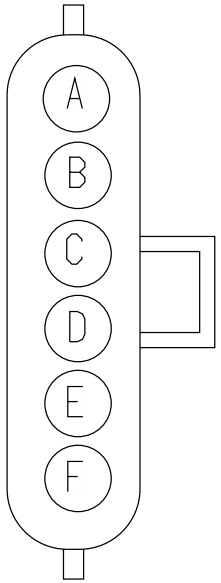

Name	Terminal Part Number	V-Min	Name	Wire Part Number	Wire CSA	Wire Spec	Wire Material description	Wire Color Description	Wire Length	End2 Terminal Part Number	End2 Pin Name	End2 Connect or
A	-	-	SL11-GA	2643787 R1	3.01	12.0	Std. Wall XLPE Primary Cable	WHITE	2430.0	-	1	9717B
B	-	-	SL10-G	3510362 R1	3.01	12.0	Thin Wall XLPE Primary Cable	WHITE	2400.0	-	-	-
C	-	-	AJ39-GB	2643681 R1	1.16	16.0	Std. Wall XLPE Primary Cable	WHITE	630.0	-	-	-
C	-	-	AP39-GB	2643681 R1	1.16	16.0	Std. Wall XLPE Primary Cable	WHITE	2600.0	-	-	-

Name	Terminal Part Number	V-Min	Name	Wire Part Number	Wire CSA	Wire Spec	Wire Material description	Wire Color Description	Wire Length	End2 Terminal Part Number	End2 Pin Name	End2 Connector
C	-	-	PN39-GB	2643681 R1	1.16	16.0	Std. Wall XLPE Primary Cable	WHITE	2125.0	-	-	-
C	-	-	BA39-GB	2643681 R1	1.16	16.0	Std. Wall XLPE Primary Cable	WHITE	600.0	-	-	-
C	-	-	AR39-GB	2643681 R1	1.16	16.0	Std. Wall XLPE Primary Cable	WHITE	1750.0	-	-	-
C	-	-	NH39-GB	2643681 R1	1.16	16.0	Std. Wall XLPE Primary Cable	WHITE	1080.0	-	-	-
C	-	-	PA39-GB	2643681 R1	1.16	16.0	Std. Wall XLPE Primary Cable	WHITE	1525.0	-	-	-
C	-	-	PF39-GB	2643681 R1	1.16	16.0	Std. Wall XLPE Primary Cable	WHITE	2475.0	-	-	-
C	-	-	NX39-GB	2643681 R1	1.16	16.0	Std. Wall XLPE Primary Cable	WHITE	1430.0	-	-	-
C	-	-	AC39-GB	2643681 R1	1.16	16.0	Std. Wall XLPE Primary Cable	WHITE	1290.0	-	-	-

Name	Terminal Part Number	V-Min	Name	Wire Part Number	Wire CSA	Wire Spec	Wire Material description	Wire Color Description	Wire Length	End2 Terminal Part Number	End2 Pin Name	End2 Connector
C	-	-	AQ39-GB	2643681 R1	1.16	16.0	Std. Wall XLPE Primary Cable	WHITE	2300.0	-	-	-
D	-	-	NP39-GF	2643674 R1	0.79	18.0	Std. Wall XLPE Primary Cable	WHITE	1025.0	-	-	-
D	-	-	BC39-GF	2643674 R1	0.79	18.0	Std. Wall XLPE Primary Cable	WHITE	3250.0	-	-	-
D	-	-	NN39-GF	2643674 R1	0.79	18.0	Std. Wall XLPE Primary Cable	WHITE	1125.0	-	-	-
D	-	-	2F39-GF	2643674 R1	0.79	18.0	Std. Wall XLPE Primary Cable	WHITE	2485.0	-	-	-
D	-	-	BZ39-G	2643674 R1	0.79	18.0	Std. Wall XLPE Primary Cable	WHITE	2695.0	-	-	-
D	-	-	NQ39-GF	2643674 R1	0.79	18.0	Std. Wall XLPE Primary Cable	WHITE	2480.0	-	-	-
D	-	-	AH39-GF	2643674 R1	0.79	18.0	Std. Wall XLPE Primary Cable	WHITE	1310.0	-	-	-

Name	Terminal Part Number	V-Min	Name	Wire Part Number	Wire CSA	Wire Spec	Wire Material description	Wire Color Description	Wire Length	End2 Terminal Part Number	End2 Pin Name	End2 Connector
D	-	-	PS39-GF	2643674 R1	0.79	18.0	Std. Wall XLPE Primary Cable	WHITE	3800.0	-	-	-
D	-	-	NK39-GF	2643674 R1	0.79	18.0	Std. Wall XLPE Primary Cable	WHITE	2025.0	-	-	-
D	-	-	BB39-G	2643674 R1	0.79	18.0	Std. Wall XLPE Primary Cable	WHITE	825.0	-	-	-
E	-	-	UK11-GC	2643689 R1	1.91	14.0	Std. Wall XLPE Primary Cable	WHITE	455.0	-	A	8806
F	-	-	PV11-GBB	2643787 R1	3.01	12.0	Std. Wall XLPE Primary Cable	WHITE	2450.0	-	-	-
F	-	-	ND11-GD	2643787 R1	3.01	12.0	Std. Wall XLPE Primary Cable	WHITE	250.0	-	-	-

Connector Name	8807
Part Number	3551896C1
Instances	B6.7 - Center Chassis Ground Splice Packs:Diagram1
Mates	SP-0003-00-10-N0C-8807

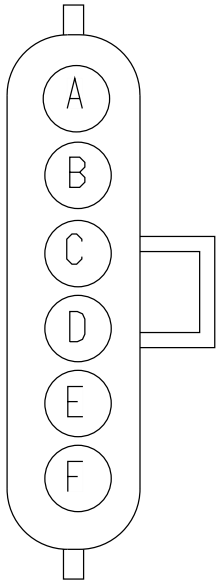

Name	Terminal Part Number	V-Min	Name	Wire Part Number	Wire CSA	Wire Spec	Wire Material description	Wire Color Description	Wire Length	End2 Terminal Part Number	End2 Pin Name	End2 Connect or
A	-	-	SL11-GA	2643787 R1	3.01	12.0	Std. Wall XLPE Primary Cable	WHITE	2430.0	-	1	9717B
B	-	-	SL10-G	3510362 R1	3.01	12.0	Thin Wall XLPE Primary Cable	WHITE	2400.0	-	-	-
C	-	-	AE39-GB	2643681 R1	1.16	16.0	Std. Wall XLPE Primary Cable	WHITE	2350.0	-	-	-
C	-	-	AQ39-GB	2643681 R1	1.16	16.0	Std. Wall XLPE Primary Cable	WHITE	2300.0	-	-	-

Name	Terminal Part Number	V-Min	Name	Wire Part Number	Wire CSA	Wire Spec	Wire Material description	Wire Color Description	Wire Length	End2 Terminal Part Number	End2 Pin Name	End2 Connector
C	-	-	AR39-GB	2643681 R1	1.16	16.0	Std. Wall XLPE Primary Cable	WHITE	1750.0	-	-	-
C	-	-	AJ39-GB	2643681 R1	1.16	16.0	Std. Wall XLPE Primary Cable	WHITE	630.0	-	-	-
C	-	-	AC39-GB	2643681 R1	1.16	16.0	Std. Wall XLPE Primary Cable	WHITE	1290.0	-	-	-
C	-	-	AP39-GB	2643681 R1	1.16	16.0	Std. Wall XLPE Primary Cable	WHITE	2600.0	-	-	-
D	-	-	AH39-GF	2643674 R1	0.79	18.0	Std. Wall XLPE Primary Cable	WHITE	1310.0	-	-	-
D	-	-	NU39-GF	2643674 R1	0.79	18.0	Std. Wall XLPE Primary Cable	WHITE	3875.0	-	-	-
D	-	-	NN39-GF	2643674 R1	0.79	18.0	Std. Wall XLPE Primary Cable	WHITE	1125.0	-	-	-
D	-	-	BZ39-GF	2643674 R1	0.79	18.0	Std. Wall XLPE Primary Cable	WHITE	2110.0	-	-	-

Name	Terminal Part Number	V-Min	Name	Wire Part Number	Wire CSA	Wire Spec	Wire Material description	Wire Color Description	Wire Length	End2 Terminal Part Number	End2 Pin Name	End2 Connector
D	-	-	PS39-GF	2643674 R1	0.79	18.0	Std. Wall XLPE Primary Cable	WHITE	3800.0	-	-	-
D	-	-	NQ39-GF	2643674 R1	0.79	18.0	Std. Wall XLPE Primary Cable	WHITE	2480.0	-	-	-
D	-	-	NK39-GF	2643674 R1	0.79	18.0	Std. Wall XLPE Primary Cable	WHITE	2025.0	-	-	-
E	-	-	UC59-GA	2643674 R1	0.79	18.0	Std. Wall XLPE Primary Cable	WHITE	4395.0	-	-	-
F	-	-	ND11-GD	2643787 R1	3.01	12.0	Std. Wall XLPE Primary Cable	WHITE	250.0	-	-	-
F	-	-	PV11-GBB	2643787 R1	3.01	12.0	Std. Wall XLPE Primary Cable	WHITE	2450.0	-	-	-

Connector Name	8807
Part Number	3551896C1
Instances	L9 - Center Chassis Ground Splice Packs:Diagram1
Mates	SP-0003-00-10-N0C-8807

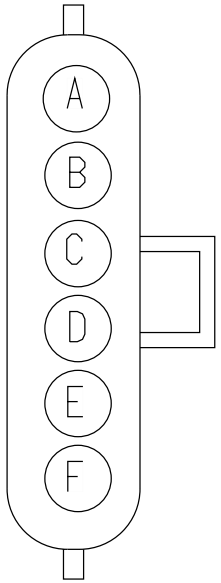

Name	Terminal Part Number	V-Min	Name	Wire Part Number	Wire CSA	Wire Spec	Wire Material description	Wire Color Description	Wire Length	End2 Terminal Part Number	End2 Pin Name	End2 Connect or
A	-	-	SL11-GA	2643787 R1	3.01	12.0	Std. Wall XLPE Primary Cable	WHITE	2430.0	-	1	9717B
B	-	-	SL10-G	3510362 R1	3.01	12.0	Thin Wall XLPE Primary Cable	WHITE	2400.0	-	-	-
C	-	-	BA39-GB	2643681 R1	1.16	16.0	Std. Wall XLPE Primary Cable	WHITE	600.0	-	-	-
C	-	-	AC39-GB	2643681 R1	1.16	16.0	Std. Wall XLPE Primary Cable	WHITE	1290.0	-	-	-

Name	Terminal Part Number	V-Min	Name	Wire Part Number	Wire CSA	Wire Spec	Wire Material description	Wire Color Description	Wire Length	End2 Terminal Part Number	End2 Pin Name	End2 Connector
C	-	-	AJ39-GB	2643681 R1	1.16	16.0	Std. Wall XLPE Primary Cable	WHITE	630.0	-	-	-
C	-	-	PA39-GB	2643681 R1	1.16	16.0	Std. Wall XLPE Primary Cable	WHITE	1525.0	-	-	-
C	-	-	AR39-GB	2643681 R1	1.16	16.0	Std. Wall XLPE Primary Cable	WHITE	1750.0	-	-	-
C	-	-	NX39-GB	2643681 R1	1.16	16.0	Std. Wall XLPE Primary Cable	WHITE	1430.0	-	-	-
C	-	-	AQ39-GB	2643681 R1	1.16	16.0	Std. Wall XLPE Primary Cable	WHITE	2300.0	-	-	-
C	-	-	NH39-GB	2643681 R1	1.16	16.0	Std. Wall XLPE Primary Cable	WHITE	1080.0	-	-	-
C	-	-	AP39-GB	2643681 R1	1.16	16.0	Std. Wall XLPE Primary Cable	WHITE	2600.0	-	-	-
C	-	-	PN39-GB	2643681 R1	1.16	16.0	Std. Wall XLPE Primary Cable	WHITE	2125.0	-	-	-

Name	Terminal Part Number	V-Min	Name	Wire Part Number	Wire CSA	Wire Spec	Wire Material description	Wire Color Description	Wire Length	End2 Terminal Part Number	End2 Pin Name	End2 Connector
C	-	-	PF39-GB	2643681 R1	1.16	16.0	Std. Wall XLPE Primary Cable	WHITE	2475.0	-	-	-
D	-	-	NK39-GF	2643674 R1	0.79	18.0	Std. Wall XLPE Primary Cable	WHITE	2025.0	-	-	-
D	-	-	BB39-G	2643674 R1	0.79	18.0	Std. Wall XLPE Primary Cable	WHITE	825.0	-	-	-
D	-	-	NN39-GF	2643674 R1	0.79	18.0	Std. Wall XLPE Primary Cable	WHITE	1125.0	-	-	-
D	-	-	2F39-GF	2643674 R1	0.79	18.0	Std. Wall XLPE Primary Cable	WHITE	2485.0	-	-	-
D	-	-	NP39-GF	2643674 R1	0.79	18.0	Std. Wall XLPE Primary Cable	WHITE	1025.0	-	-	-
D	-	-	BC39-GF	2643674 R1	0.79	18.0	Std. Wall XLPE Primary Cable	WHITE	3250.0	-	-	-
D	-	-	PS39-GF	2643674 R1	0.79	18.0	Std. Wall XLPE Primary Cable	WHITE	3800.0	-	-	-

Name	Terminal Part Number	V-Min	Name	Wire Part Number	Wire CSA	Wire Spec	Wire Material description	Wire Color Description	Wire Length	End2 Terminal Part Number	End2 Pin Name	End2 Connector
D	-	-	AH39-GF	2643674 R1	0.79	18.0	Std. Wall XLPE Primary Cable	WHITE	1310.0	-	-	-
D	-	-	NQ39-GF	2643674 R1	0.79	18.0	Std. Wall XLPE Primary Cable	WHITE	2480.0	-	-	-
E	-	-	UK11-GC	2643689 R1	1.91	14.0	Std. Wall XLPE Primary Cable	WHITE	455.0	-	A	8806
F	-	-	ND11-GD	2643787 R1	3.01	12.0	Std. Wall XLPE Primary Cable	WHITE	250.0	-	-	-
F	-	-	PV11-GBB	2643787 R1	3.01	12.0	Std. Wall XLPE Primary Cable	WHITE	2450.0	-	-	-

Connector Name	8809
Part Number	3551896C1
Instances	A26 - Center Chassis Ground Splice Packs:Diagram1
Mates	SP-0003-00-10-N0A-8809

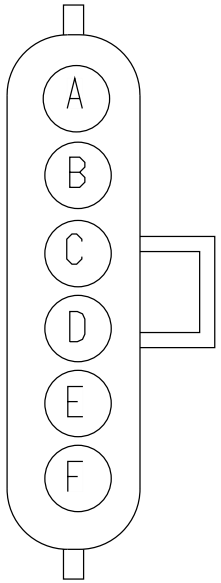

Name	Terminal Part Number	V-Min	Name	Wire Part Number	Wire CSA	Wire Spec	Wire Material description	Wire Color Description	Wire Length	End2 Terminal Part Number	End2 Pin Name	End2 Connect or
A	-	-	SL11-GB	2643787 R1	3.01	12.0	Std. Wall XLPE Primary Cable	WHITE	1710.0	-	1	9717B
C	-	-	ZE10-GR	2643689 R1	1.91	14.0	Std. Wall XLPE Primary Cable	WHITE	3020.0	-	-	-
C	-	-	RB10-GR	2643689 R1	1.91	14.0	Std. Wall XLPE Primary Cable	WHITE	1850.0	-	-	-
C	-	-	NT10-GS	2643689 R1	1.91	14.0	Std. Wall XLPE Primary Cable	WHITE	3145.0	-	-	-

Name	Terminal Part Number	V-Min	Name	Wire Part Number	Wire CSA	Wire Spec	Wire Material description	Wire Color Description	Wire Length	End2 Terminal Part Number	End2 Pin Name	End2 Connect or
D	-	-	YJ11-GD	3510360 R1	1.16	16.0	Thin Wall XLPE Primary Cable	WHITE	180.0	-	-	-
D	-	-	YK11-GD	3510360 R1	1.16	16.0	Thin Wall XLPE Primary Cable	WHITE	215.0	-	-	-
D	-	-	YH112-GD	3510360 R1	1.16	16.0	Thin Wall XLPE Primary Cable	WHITE	1125.0	-	-	-
D	-	-	YN65-G	2643681 R1	1.16	16.0	Std. Wall XLPE Primary Cable	WHITE	3145.0	-	-	-
D	-	-	YM65-G	2643681 R1	1.16	16.0	Std. Wall XLPE Primary Cable	WHITE	1325.0	-	-	-
E	-	-	RL49-G	2643674 R1	0.79	18.0	Std. Wall XLPE Primary Cable	WHITE	3120.0	-	-	-
F	-	-	XM59-G	2643787 R1	3.01	12.0	Std. Wall XLPE Primary Cable	WHITE	1700.0	-	A	8805

Connector Name	8809
Part Number	3551896C1
Instances	B6.7 - Center Chassis Ground Splice Packs:Diagram1
Mates	SP-0003-00-10-N0A-8809

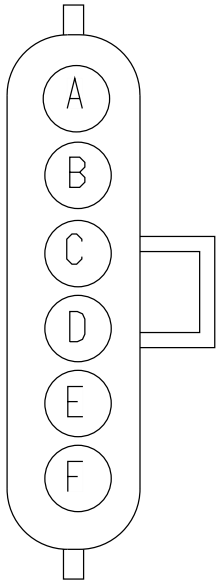

Name	Terminal Part Number	V-Min	Name	Wire Part Number	Wire CSA	Wire Spec	Wire Material description	Wire Color Description	Wire Length	End2 Terminal Part Number	End2 Pin Name	End2 Connect or
A	-	-	SL11-GB	2643787 R1	3.01	12.0	Std. Wall XLPE Primary Cable	WHITE	1710.0	-	1	9717B
C	-	-	ZE10-GR	2643689 R1	1.91	14.0	Std. Wall XLPE Primary Cable	WHITE	3020.0	-	-	-
C	-	-	RA10-GR	2643689 R1	1.91	14.0	Std. Wall XLPE Primary Cable	WHITE	1850.0	-	-	-
C	-	-	NT10-GS	2643689 R1	1.91	14.0	Std. Wall XLPE Primary Cable	WHITE	3145.0	-	-	-

Name	Terminal Part Number	V-Min	Name	Wire Part Number	Wire CSA	Wire Spec	Wire Material description	Wire Color Description	Wire Length	End2 Terminal Part Number	End2 Pin Name	End2 Connector
D	-	-	YU11-GD	2643681 R1	1.16	16.0	Std. Wall XLPE Primary Cable	WHITE	265.0	-	-	-
D	-	-	YM65-G	2643681 R1	1.16	16.0	Std. Wall XLPE Primary Cable	WHITE	1325.0	-	-	-
D	-	-	YH112-GD	3510360 R1	1.16	16.0	Thin Wall XLPE Primary Cable	WHITE	1125.0	-	-	-
D	-	-	YJ11-GD	3510360 R1	1.16	16.0	Thin Wall XLPE Primary Cable	WHITE	180.0	-	-	-
D	-	-	YK11-GD	3510360 R1	1.16	16.0	Thin Wall XLPE Primary Cable	WHITE	215.0	-	-	-
E	-	-	RL49-G	2643674 R1	0.79	18.0	Std. Wall XLPE Primary Cable	WHITE	3120.0	-	-	-
F	-	-	XM59-G	2643787 R1	3.01	12.0	Std. Wall XLPE Primary Cable	WHITE	1700.0	-	A	8805

Connector Name 8809
Part Number 3551896C1
Instances L9 - Center Chassis Ground Splice Packs:Diagram1
Mates SP-0003-00-10-N0A-8809

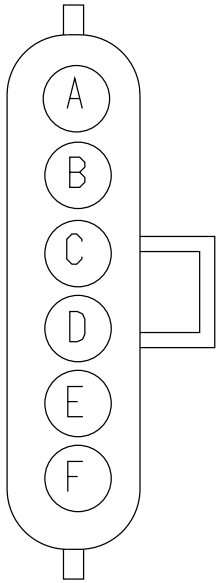

Name	Terminal Part Number	V-Min	Name	Wire Part Number	Wire CSA	Wire Spec	Wire Material description	Wire Color Description	Wire Length	End2 Terminal Part Number	End2 Pin Name	End2 Connect or
A	-	-	SL11-GB	2643787 R1	3.01	12.0	Std. Wall XLPE Primary Cable	WHITE	1710.0	-	1	9717B
C	-	-	ZE10-GR	2643689 R1	1.91	14.0	Std. Wall XLPE Primary Cable	WHITE	3020.0	-	-	-
C	-	-	RA10-GR	2643689 R1	1.91	14.0	Std. Wall XLPE Primary Cable	WHITE	1850.0	-	-	-
C	-	-	NT10-GS	2643689 R1	1.91	14.0	Std. Wall XLPE Primary Cable	WHITE	3145.0	-	-	-

Name	Terminal Part Number	V-Min	Name	Wire Part Number	Wire CSA	Wire Spec	Wire Material description	Wire Color Description	Wire Length	End2 Terminal Part Number	End2 Pin Name	End2 Connector
D	-	-	YH112-GD	3510360 R1	1.16	16.0	Thin Wall XLPE Primary Cable	WHITE	1125.0	-	-	-
D	-	-	YK11-GD	3510360 R1	1.16	16.0	Thin Wall XLPE Primary Cable	WHITE	215.0	-	-	-
D	-	-	YN65-G	2643681 R1	1.16	16.0	Std. Wall XLPE Primary Cable	WHITE	3145.0	-	-	-
D	-	-	YT11-GD	2643681 R1	1.16	16.0	Std. Wall XLPE Primary Cable	WHITE	300.0	-	-	-
D	-	-	YJ11-GD	3510360 R1	1.16	16.0	Thin Wall XLPE Primary Cable	WHITE	180.0	-	-	-
D	-	-	YU11-GD	2643681 R1	1.16	16.0	Std. Wall XLPE Primary Cable	WHITE	265.0	-	-	-
D	-	-	YM65-G	2643681 R1	1.16	16.0	Std. Wall XLPE Primary Cable	WHITE	1325.0	-	-	-
E	-	-	RL49-G	2643674 R1	0.79	18.0	Std. Wall XLPE Primary Cable	WHITE	3120.0	-	-	-
F	-	-	XM59-G	2643787 R1	3.01	12.0	Std. Wall XLPE Primary Cable	WHITE	1700.0	-	A	8805

Connector Name 8881

Part Number 3553404C1

Instances B6.7 - Body J1939 (250kbps):B6.7 - Body J1939 (250Kbps)
B6.7 - CAN Layout:Body Standard J1939 (250Kbps)
L9 - Body J1939 (250kbps):L9 - Body J1939 (250Kbps)
L9 - CAN Layout:Body Standard J1939 (250Kbps)

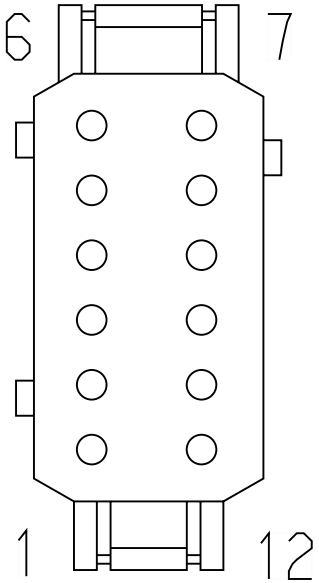

Name	Terminal Part Number	V-Min	Name	Wire Part Number	Wire CSA	Wire Spec	Wire Material description	Wire Color Description	Wire Length	End2 Terminal Part Number	End2 Pin Name	End2 Connect or
5	-	-	WIRE722759	-	0.0	-	-	-	0.0	-	PIN1	-
8	-	-	WIRE722757	-	0.0	-	-	-	0.0	-	PIN1	-

Connector Name 8884A

Part Number 6099041C1

Instances B6.7 - Body J1939 (250kbps):B6.7 - Body J1939 (250Kbps)
B6.7 - CAN Layout:Body Standard J1939 (250Kbps)
L9 - Body J1939 (250kbps):L9 - Body J1939 (250Kbps)
L9 - CAN Layout:Body Standard J1939 (250Kbps)

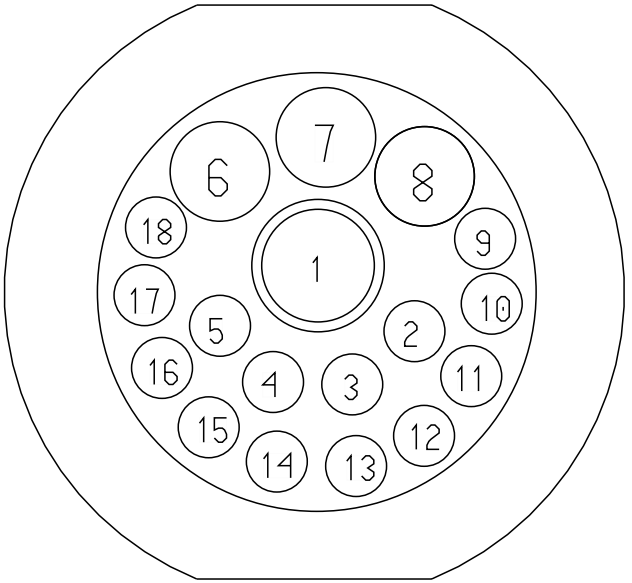

Name	Terminal Part Number	V-Min	Name	Wire Part Number	Wire CSA	Wire Spec	Wire Material description	Wire Color Description	Wire Length	End2 Terminal Part Number	End2 Pin Name	End2 Connect or
12	-	-	WIRE722869	-	0.0	-	-	-	0.0	-	L	1024
13	-	-	WIRE722870	-	0.0	-	-	-	0.0	-	B	1024

Connector Name 8884D

Part Number 3602454C1

Instances B6.7 - Body J1939 (250kbps):B6.7 - Body J1939 (250Kbps)
B6.7 - CAN Layout:Body Standard J1939 (250Kbps)
L9 - Body J1939 (250kbps):L9 - Body J1939 (250Kbps)
L9 - CAN Layout:Body Standard J1939 (250Kbps)

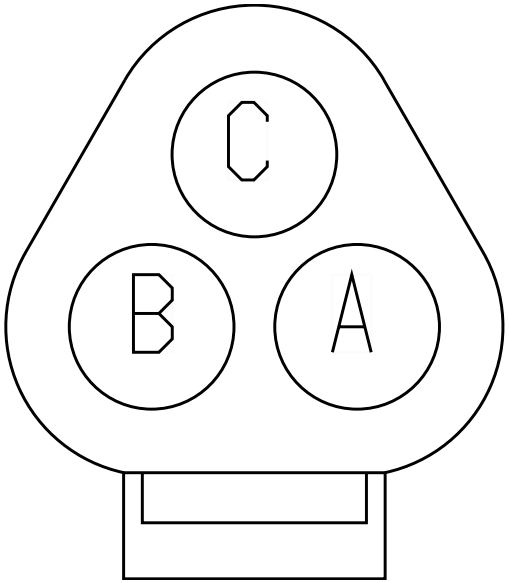

Name	Terminal Part Number	V-Min	Name	Wire Part Number	Wire CSA	Wire Spec	Wire Material description	Wire Color Description	Wire Length	End2 Terminal Part Number	End2 Pin Name	End2 Connect or
A	-	-	WIRE722872	-	0.0	-	-	-	0.0	-	H	1024
B	-	-	WIRE722871	-	0.0	-	-	-	0.0	-	E	1024

Connector Name 8884G

Part Number 3602454C1

Instances B6.7 - Body J1939 (250kbps):B6.7 - Body J1939 (250Kbps)
B6.7 - CAN Layout:Body Standard J1939 (250Kbps)
L9 - Body J1939 (250kbps):L9 - Body J1939 (250Kbps)
L9 - CAN Layout:Body Standard J1939 (250Kbps)

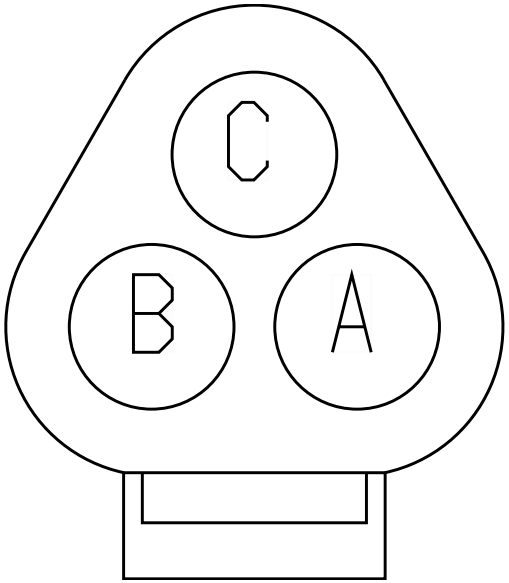

Name	Terminal Part Number	V-Min	Name	Wire Part Number	Wire CSA	Wire Spec	Wire Material description	Wire Color Description	Wire Length	End2 Terminal Part Number	End2 Pin Name	End2 Connect or
A	-	-	WIRE722867	-	0.0	-	-	-	0.0	-	L	1028
B	-	-	WIRE722868	-	0.0	-	-	-	0.0	-	B	1028

Connector Name 8903

Part Number 6111813C1

Instances A26 - Powertrain J1939 Allison 3k/4k:A26 - Powertrain J1939 Allison 3k/4k
A26 - Powertrain J1939 UltraShift Transmission:A26 - Powertrain J1939 UltraShift Transmission
B6.7 - CAN Layout:Powertrain Standard J1939 (500Kbps)
B6.7 - Powertrain J1939 Allison 1k/2k:B6.7 - Allison 1k/2k Transmission
B6.7 - Powertrain J1939 Allison 3k/4k:B6.7 - Allison 3k/4k Transmission
B6.7 - Powertrain J1939 Manual Transmission:B6.7 - Manual Transmission
L9 - CAN Layout:Powertrain Standard J1939 (500kbps)
L9 - Powertrain J1939 Allison 3k/4k:L9 - Powertrain J1939 Allison 3k/4k
L9 - Powertrain J1939 Eaton:L9 - Powertrain J1939 Eaton
L9 - Powertrain J1939 Manual Transmission:Powertrain Standard J1939 (500kbps)

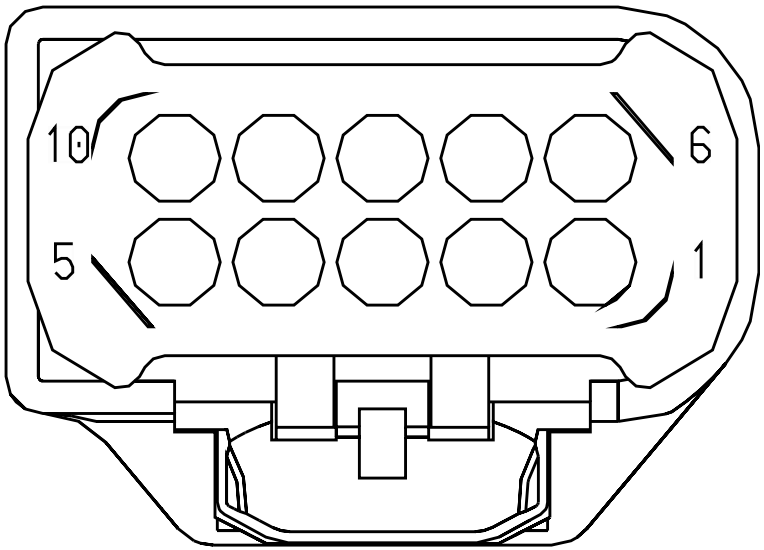

Mates SNSR-BENDIX_RADR-3000-03-0 1A

Name	Terminal Part Number	V-Min	Name	Wire Part Number	Wire CSA	Wire Spec	Wire Material description	Wire Color Description	Wire Length	End2 Terminal Part Number	End2 Pin Name	End2 Connector
1	-	-	WIRE735251	-	0.0	-	-	-	0.0	-	1	-
1	-	-	WIRE735150	-	0.0	-	-	-	0.0	-	1	-
6	-	-	WIRE735250	-	0.0	-	-	-	0.0	-	1	-
6	-	-	WIRE735151	-	0.0	-	-	-	0.0	-	1	-

Connector Name	8903
Part Number	6111813C1
Instances	A26/B6.7/L9 - A26 - Adaptive Cruise Control w/o Display (Bendix):Diagram1
Mates	SNSR-BENDIX_RADR-3000-03-0 1A

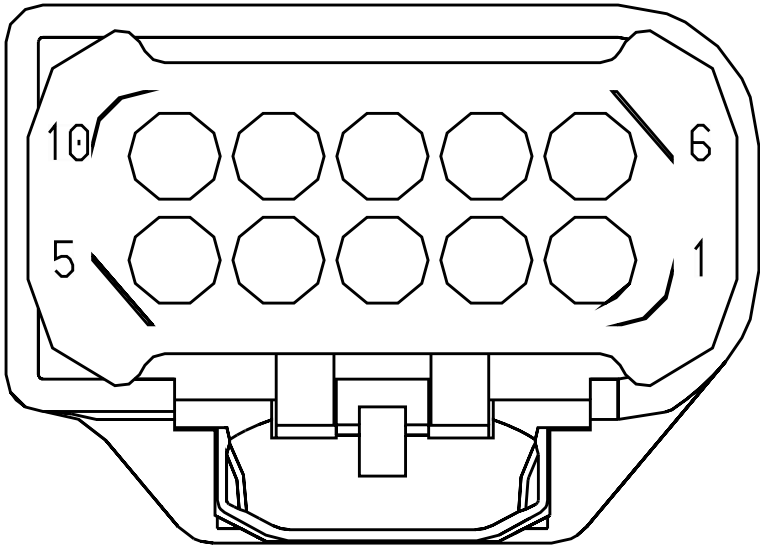

Name	Terminal Part Number	V-Min	Name	Wire Part Number	Wire CSA	Wire Spec	Wire Material description	Wire Color Description	Wire Length	End2 Terminal Part Number	End2 Pin Name	End2 Connector
1	-	-	-	-	-	-	-	-	-	-	-	-
5	-	-	WG67-GA	3510358 R1	0.53	20.0	Thin Wall XLPE Primary Cable	WHITE	3990.0	-	47	1700
6	-	-	-	-	-	-	-	-	-	-	-	-
8	-	-	WG67AA	3510322 R1	0.53	20.0	Thin Wall XLPE Primary Cable	PINK	3990.0	-	20	1700

Connector Name	8998
Part Number	3553404C1
Instances	B6.7 - Body J1939 (250kbps):B6.7 - Body J1939 (250Kbps) B6.7 - CAN Layout:Body Standard J1939 (250Kbps) B6.7 - CAN Layout:Telematics J1708 B6.7 - Telematics J1708 (9.6kbps):B6.7 - Telematics J1708 L9 - Body J1939 (250kbps):L9 - Body J1939 (250Kbps) L9 - CAN Layout:Body Standard J1939 (250Kbps) L9 - CAN Layout:Telematics J1708 L9 - Telematics J1708 (9.6kbps):Telematics J1708 (9.6kbps)
Mates	MODU-VDR-2037-XX

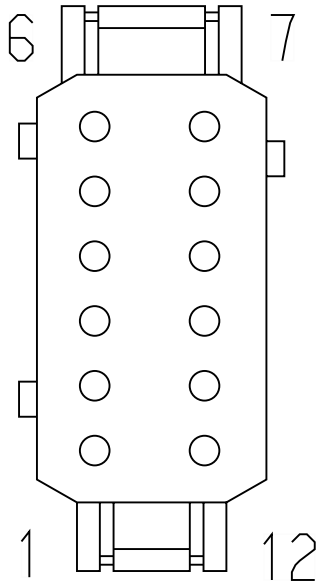

Name	Terminal Part Number	V-Min	Name	Wire Part Number	Wire CSA	Wire Spec	Wire Material description	Wire Color Description	Wire Length	End2 Terminal Part Number	End2 Pin Name	End2 Connect or
4	-	-	WIRE722860	-	0.0	-	-	-	0.0	-	F	1660
4	-	-	WIRE722860	-	0.0	-	-	-	0.0	-	-	-
5	-	-	WIRE722859	-	0.0	-	-	-	0.0	-	F	1661
6	-	-	WIRE722760	-	0.0	-	-	-	0.0	-	PIN1	-
7	-	-	WIRE722758	-	0.0	-	-	-	0.0	-	PIN1	-

Connector Name	8999
Part Number	2018590C1
Instances	A26/B6.7/L9 - Seatbelt Reminder 6 Seats:Diagram1
Mates	DEV-VDR-01

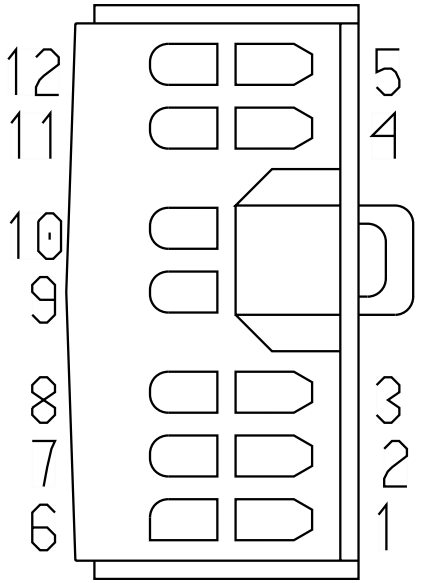

Name	Terminal Part Number	V-Min	Name	Wire Part Number	Wire CSA	Wire Spec	Wire Material description	Wire Color Description	Wire Length	End2 Terminal Part Number	End2 Pin Name	End2 Connect or
1	-	-	WIRE891611	-	0.0	-	-	-	0.0	-	B	2997
2	-	-	WIRE891609	-	0.0	-	-	-	0.0	-	B	2999
3	-	-	WIRE891605	-	0.0	-	-	-	0.0	-	B	2995
4	-	-	WIRE891601	-	0.0	-	-	-	0.0	-	B	2993
5	-	-	WIRE891603	-	0.0	-	-	-	0.0	-	B	2991
6	-	-	WIRE891607	-	0.0	-	-	-	0.0	-	B	3002
7	-	-	WIRE891606	-	0.0	-	-	-	0.0	-	B	3000
8	-	-	WIRE891602	-	0.0	-	-	-	0.0	-	B	2990

Name	Terminal Part Number	V-Min	Name	Wire Part Number	Wire CSA	Wire Spec	Wire Material description	Wire Color Description	Wire Length	End2 Terminal Part Number	End2 Pin Name	End2 Connect or
9	-	-	WIRE891600	-	0.0	-	-	-	0.0	-	B	2992
10	-	-	WIRE891604	-	0.0	-	-	-	0.0	-	B	2994
11	-	-	WIRE891608	-	0.0	-	-	-	0.0	-	B	2998
12	-	-	WIRE891610	-	0.0	-	-	-	0.0	-	B	2996

Connector Name	9001
Part Number	1671610C1
Instances	L9 - Drain Valve Heater:Diagram1
Mates	HTR-DRAIN_VALVE-3042-01-01A

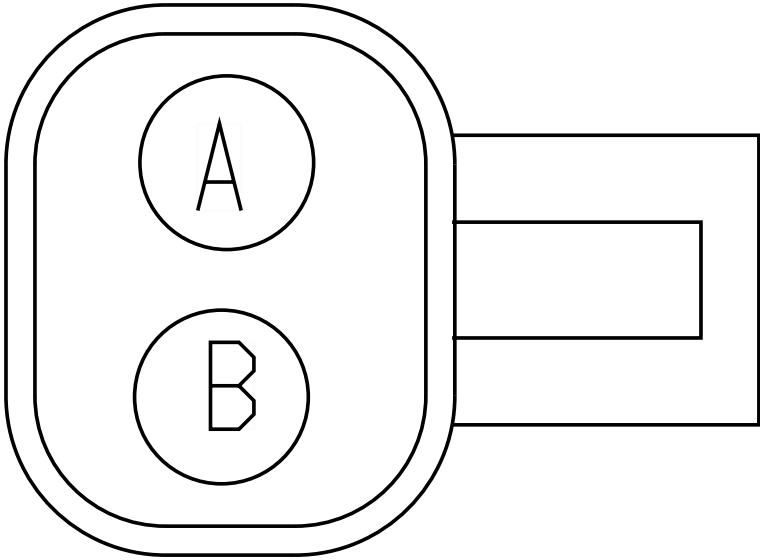

Name	Terminal Part Number	V-Min	Name	Wire Part Number	Wire CSA	Wire Spec	Wire Material description	Wire Color Description	Wire Length	End2 Terminal Part Number	End2 Pin Name	End2 Connect or
A	-	-	NP39A	2643673 R1	0.79	18.0	Std. Wall XLPE Primary Cable	GREY	3005.0	-	40	1701F
B	-	-	NP39-GF	2643674 R1	0.79	18.0	Std. Wall XLPE Primary Cable	WHITE	1025.0	-	-	-

Connector Name	9002A
Part Number	1671610C1
Instances	B6.7 - Drain Valve Heater:Diagram2 L9 - Drain Valve Heater:Diagram3
Mates	HTR-DRAIN_VALVE-3042-01-01A

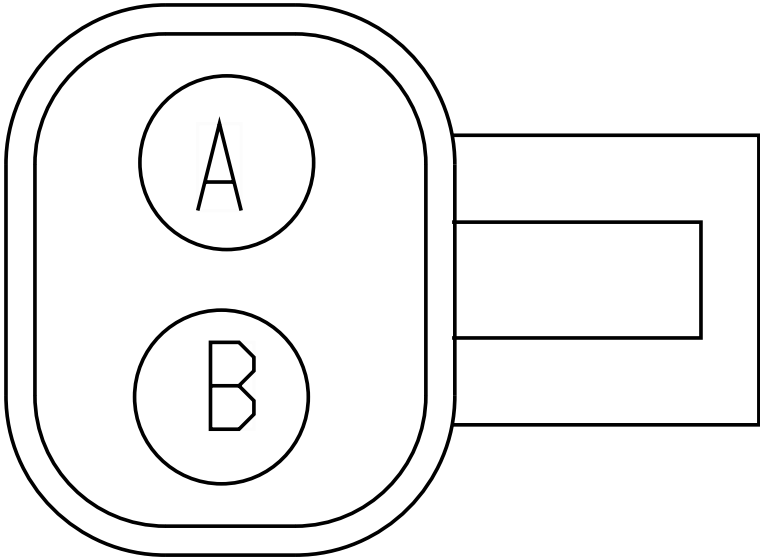

Name	Terminal Part Number	V-Min	Name	Wire Part Number	Wire CSA	Wire Spec	Wire Material description	Wire Color Description	Wire Length	End2 Terminal Part Number	End2 Pin Name	End2 Connect or
A	-	-	NU39A	2643673 R1	0.79	18.0	Std. Wall XLPE Primary Cable	GREY	6255.0	-	40	1701F
A	-	-	2F39A	2643673 R1	0.79	18.0	Std. Wall XLPE Primary Cable	GREY	4465.0	-	40	1701F
B	-	-	NU39-GF	2643674 R1	0.79	18.0	Std. Wall XLPE Primary Cable	WHITE	3875.0	-	-	-
B	-	-	2F39-GF	2643674 R1	0.79	18.0	Std. Wall XLPE Primary Cable	WHITE	2485.0	-	-	-

Connector Name 9002

Part Number 1671610C1

Instances B6.7 - Drain Valve Heater:Diagram1
L9 - Drain Valve Heater:Diagram2

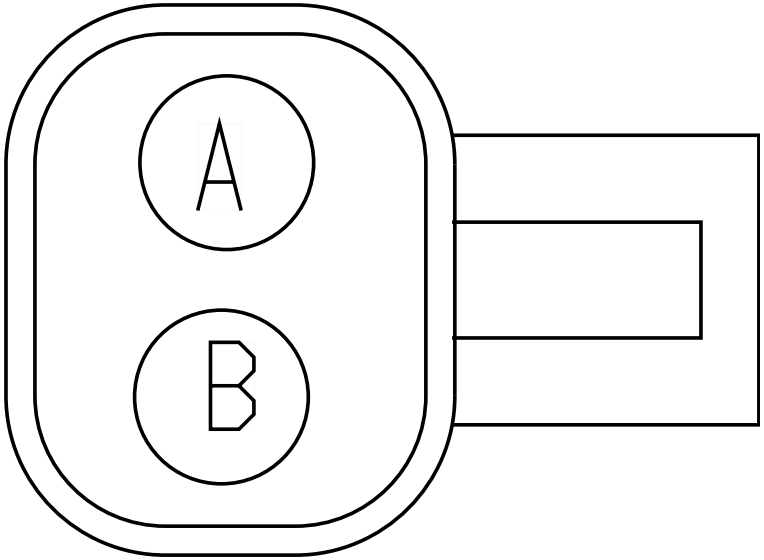

Name	Terminal Part Number	V-Min	Name	Wire Part Number	Wire CSA	Wire Spec	Wire Material description	Wire Color Description	Wire Length	End2 Terminal Part Number	End2 Pin Name	End2 Connect or
A	-	-	NN39A	2643673 R1	0.79	18.0	Std. Wall XLPE Primary Cable	GREY	3105.0	-	40	1701F
B	-	-	NN39-GF	2643674 R1	0.79	18.0	Std. Wall XLPE Primary Cable	WHITE	1125.0	-	-	-

Connector Name 9003

Part Number 1671610C1

Instances B6.7 - Drain Valve Heater:Diagram3
L9 - Drain Valve Heater:Diagram4

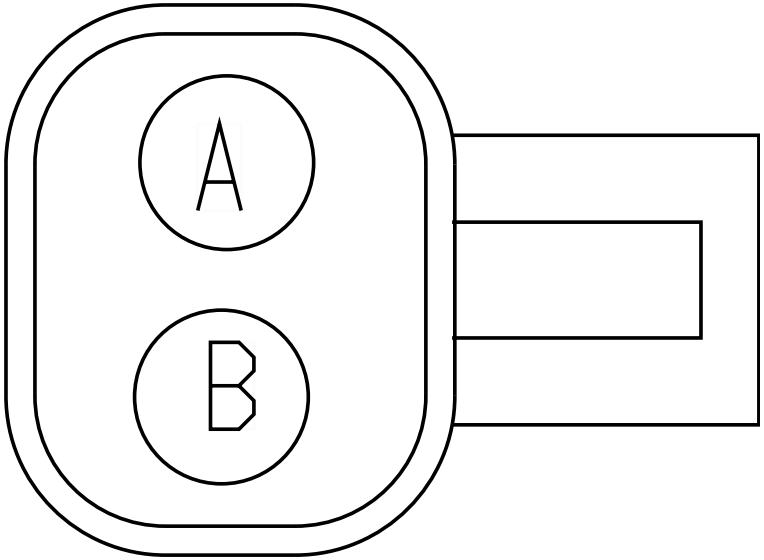

Name	Terminal Part Number	V-Min	Name	Wire Part Number	Wire CSA	Wire Spec	Wire Material description	Wire Color Description	Wire Length	End2 Terminal Part Number	End2 Pin Name	End2 Connect or
A	-	-	AH39A	2643673 R1	0.79	18.0	Std. Wall XLPE Primary Cable	GREY	3290.0	-	40	1701F
B	-	-	AH39-GF	2643674 R1	0.79	18.0	Std. Wall XLPE Primary Cable	WHITE	1310.0	-	-	-

Connector Name	9004
Part Number	1671610C1
Instances	A26 - Drain Valve Heater:Diagram1 A26 - Drain Valve Heater:Diagram2 A26 - Drain Valve Heater:Diagram3 A26 - Drain Valve Heater:Diagram4 A26 - Drain Valve Heater:Diagram5 A26 - Drain Valve Heater:Diagram6 A26 - Drain Valve Heater:Diagram7 A26 - Drain Valve Heater:Diagram8 A26 - Drain Valve Heater:Diagram9 A26 - Drain Valve Heater:Diagram10 B6.7 - Drain Valve Heater:Diagram4
Mates	HTR-DRAIN_VALVE-3042-01-01A

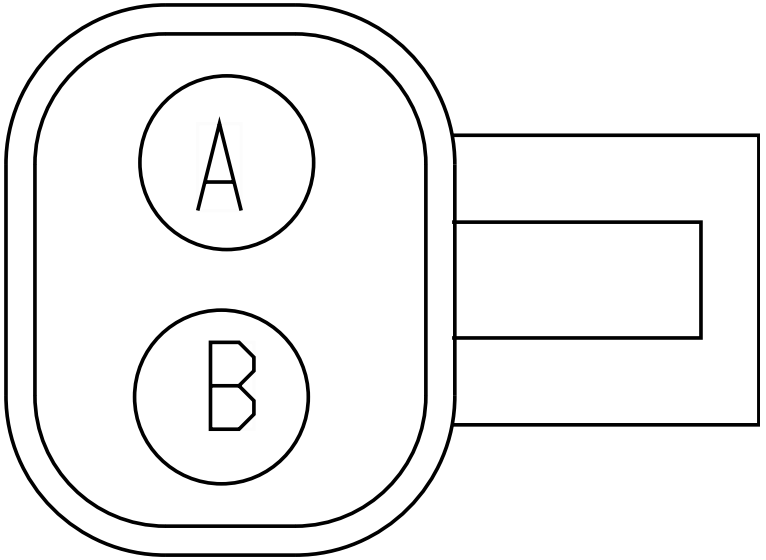

Name	Terminal Part Number	V-Min	Name	Wire Part Number	Wire CSA	Wire Spec	Wire Material description	Wire Color Description	Wire Length	End2 Terminal Part Number	End2 Pin Name	End2 Connector
A	-	-	BZ39A	2643673 R1	0.79	18.0	Std. Wall XLPE Primary Cable	GREY	1885.0	-	40	1701F
A	-	-	2F39A	2643673 R1	0.79	18.0	Std. Wall XLPE Primary Cable	GREY	4465.0	-	40	1701F
A	-	-	AH39A	2643673 R1	0.79	18.0	Std. Wall XLPE Primary Cable	GREY	3290.0	-	40	1701F
A	-	-	BB39A	2643673 R1	0.79	18.0	Std. Wall XLPE Primary Cable	GREY	2805.0	-	40	1701F

Name	Terminal Part Number	V-Min	Name	Wire Part Number	Wire CSA	Wire Spec	Wire Material description	Wire Color Description	Wire Length	End2 Terminal Part Number	End2 Pin Name	End2 Connector
A	-	-	BC39A	2643673 R1	0.79	18.0	Std. Wall XLPE Primary Cable	GREY	5230.0	-	40	1701F
A	-	-	NK39A	2643673 R1	0.79	18.0	Std. Wall XLPE Primary Cable	GREY	4005.0	-	40	1701F
A	-	-	NN39A	2643673 R1	0.79	18.0	Std. Wall XLPE Primary Cable	GREY	3105.0	-	40	1701F
A	-	-	NP39A	2643673 R1	0.79	18.0	Std. Wall XLPE Primary Cable	GREY	3005.0	-	40	1701F
A	-	-	NQ39A	2643673 R1	0.79	18.0	Std. Wall XLPE Primary Cable	GREY	4460.0	-	40	1701F
A	-	-	PS39A	2643673 R1	0.79	18.0	Std. Wall XLPE Primary Cable	GREY	5780.0	-	40	1701F
B	-	-	BZ39-GF	2643674 R1	0.79	18.0	Std. Wall XLPE Primary Cable	WHITE	2110.0	-	-	-
B	-	-	AH39-GF	2643674 R1	0.79	18.0	Std. Wall XLPE Primary Cable	WHITE	1310.0	-	-	-

Name	Terminal Part Number	V-Min	Name	Wire Part Number	Wire CSA	Wire Spec	Wire Material description	Wire Color Description	Wire Length	End2 Terminal Part Number	End2 Pin Name	End2 Connector
B	-	-	PS39-GF	2643674 R1	0.79	18.0	Std. Wall XLPE Primary Cable	WHITE	3800.0	-	-	-
B	-	-	NN39-GF	2643674 R1	0.79	18.0	Std. Wall XLPE Primary Cable	WHITE	1125.0	-	-	-
B	-	-	NK39-GF	2643674 R1	0.79	18.0	Std. Wall XLPE Primary Cable	WHITE	2025.0	-	-	-
B	-	-	NQ39-GF	2643674 R1	0.79	18.0	Std. Wall XLPE Primary Cable	WHITE	2480.0	-	-	-
B	-	-	2F39-GF	2643674 R1	0.79	18.0	Std. Wall XLPE Primary Cable	WHITE	2485.0	-	-	-
B	-	-	NP39-GF	2643674 R1	0.79	18.0	Std. Wall XLPE Primary Cable	WHITE	1025.0	-	-	-
B	-	-	BC39-GF	2643674 R1	0.79	18.0	Std. Wall XLPE Primary Cable	WHITE	3250.0	-	-	-
B	-	-	BB39-G	2643674 R1	0.79	18.0	Std. Wall XLPE Primary Cable	WHITE	825.0	-	-	-
B	-	-	BZ39-G	2643674 R1	0.79	18.0	Std. Wall XLPE Primary Cable	WHITE	2695.0	-	-	-

Connector Name 9005
Part Number 1671610C1
Instances L9 - Drain Valve Heater:Diagram5

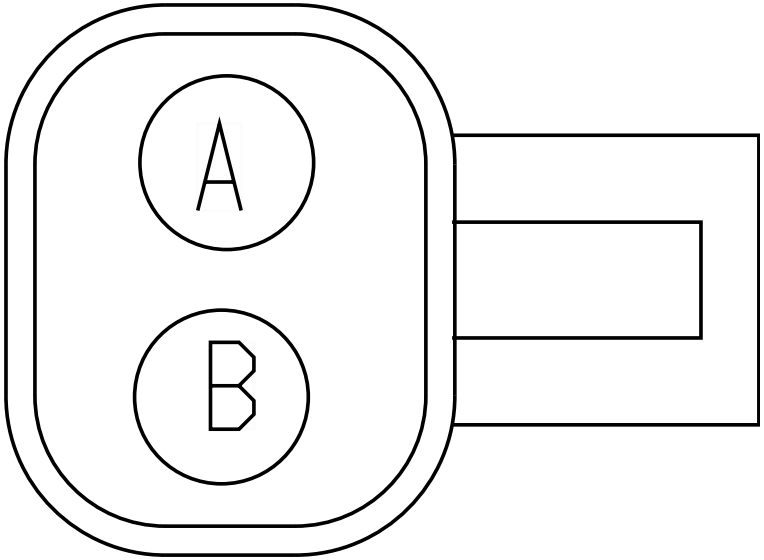

Name	Terminal Part Number	V-Min	Name	Wire Part Number	Wire CSA	Wire Spec	Wire Material description	Wire Color Description	Wire Length	End2 Terminal Part Number	End2 Pin Name	End2 Connect or
A	-	-	BB39A	2643673 R1	0.79	18.0	Std. Wall XLPE Primary Cable	GREY	2805.0	-	40	1701F
B	-	-	BB39-G	2643674 R1	0.79	18.0	Std. Wall XLPE Primary Cable	WHITE	825.0	-	-	-

Connector Name 9100A

Part Number 1661778C1

Instances A26 - 26" Fuel Tank - Secondary:Diagram2
B6.7 - 26 inch Fuel Tank - Secondary:Diagram1

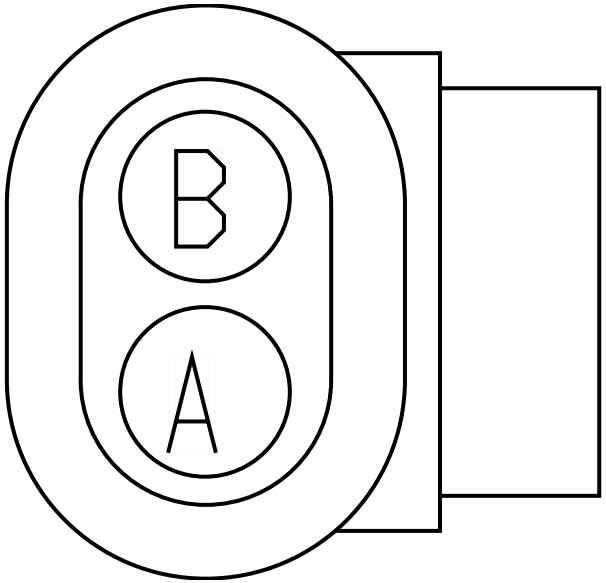

Name	Terminal Part Number	V-Min	Name	Wire Part Number	Wire CSA	Wire Spec	Wire Material description	Wire Color Description	Wire Length	End2 Terminal Part Number	End2 Pin Name	End2 Connect or
A	-	-	FD36A	2643673 R1	0.79	18.0	Std. Wall XLPE Primary Cable	GREY	2125.0	-	29	1701F
B	-	-	FA9-G	2643673 R1	0.79	18.0	Std. Wall XLPE Primary Cable	GREY	2485.0	-	B	9100
B	-	-	FD9A	2643673 R1	0.79	18.0	Std. Wall XLPE Primary Cable	GREY	1915.0	-	-	-

Connector Name	9100
Part Number	1661778C1
Instances	L9 - City Horn (W/ 10PIN CLK & Park Brake):Diagram1 L9 - City Horn (W/ 10PIN CLK):Diagram1
Mates	HORN-CITYHORN-1005-01-01A

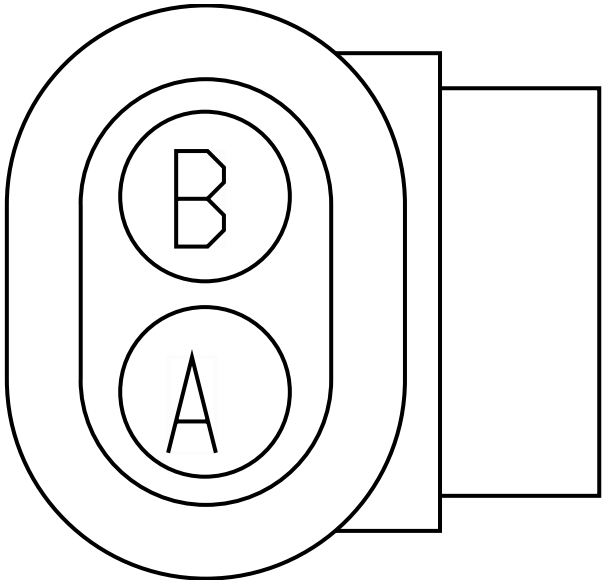

Name	Terminal Part Number	V-Min	Name	Wire Part Number	Wire CSA	Wire Spec	Wire Material description	Wire Color Description	Wire Length	End2 Terminal Part Number	End2 Pin Name	End2 Connect or
A	-	-	MR85E	2643680 R1	1.16	16.0	Std. Wall XLPE Primary Cable	GREY	1930.0	-	21	1700
B	-	-	MY85-GA	2643681 R1	1.16	16.0	Std. Wall XLPE Primary Cable	WHITE	1590.0	-	-	-

Connector Name 9100

Part Number 1661778C1

Instances A26 - 26" Fuel Tank - Secondary:Diagram1
A26 - 26" Fuel Tank - Secondary:Diagram3
A26 - 26" Fuel Tank - Secondary:Diagram4
A26 - 26" Fuel Tank - Secondary:Diagram5

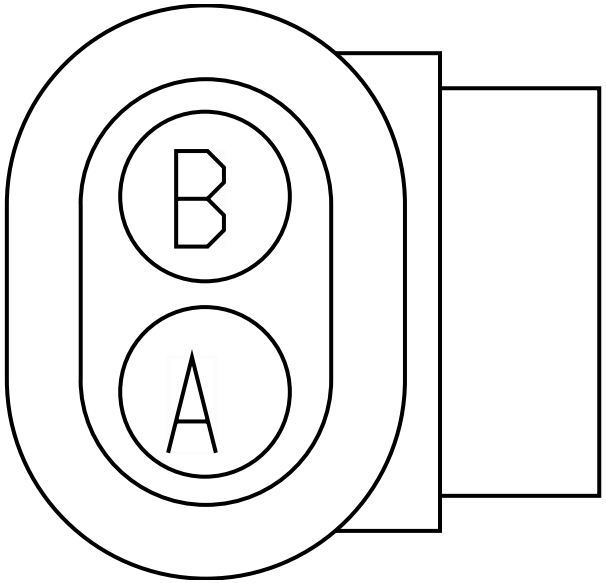

Name	Terminal Part Number	V-Min	Name	Wire Part Number	Wire CSA	Wire Spec	Wire Material description	Wire Color Description	Wire Length	End2 Terminal Part Number	End2 Pin Name	End2 Connect or
A	-	-	FA36A	2643673 R1	0.79	18.0	Std. Wall XLPE Primary Cable	GREY	2495.0	-	29	1701F
A	-	-	FE36A	2643673 R1	0.79	18.0	Std. Wall XLPE Primary Cable	GREY	4075.0	-	29	1701F
A	-	-	PL36A	2643673 R1	0.79	18.0	Std. Wall XLPE Primary Cable	GREY	4440.0	-	29	1701F
A	-	-	FF36A	2643673 R1	0.79	18.0	Std. Wall XLPE Primary Cable	GREY	4740.0	-	29	1701F

Name	Terminal Part Number	V-Min	Name	Wire Part Number	Wire CSA	Wire Spec	Wire Material description	Wire Color Description	Wire Length	End2 Terminal Part Number	End2 Pin Name	End2 Connect or
B	-	-	FA9-G	2643673 R1	0.79	18.0	Std. Wall XLPE Primary Cable	GREY	2485.0	-	B	9100A
B	-	-	ZX9-GB	2643673 R1	0.79	18.0	Std. Wall XLPE Primary Cable	GREY	2740.0	-	-	-

Connector Name	9101
Part Number	1661778C1
Instances	A26 - 26" Fuel Tank - Secondary:Diagram6
Mates	SNSR-FUEL_LEVEL-3017-05-01

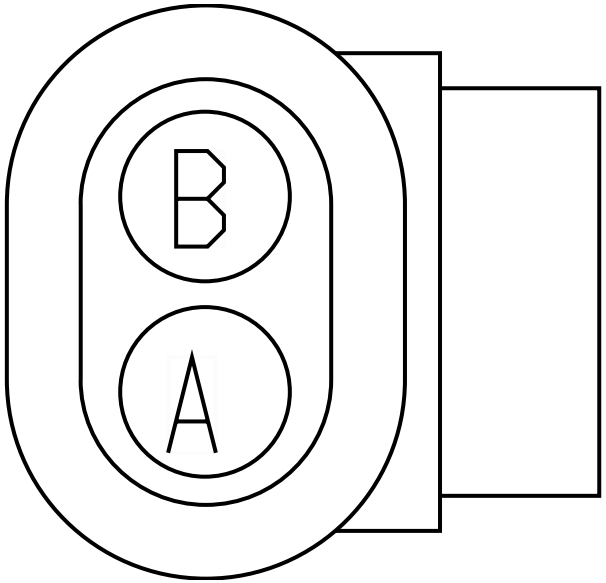

Name	Terminal Part Number	V-Min	Name	Wire Part Number	Wire CSA	Wire Spec	Wire Material description	Wire Color Description	Wire Length	End2 Terminal Part Number	End2 Pin Name	End2 Connect or
A	-	-	FB36A	2643676 R1	0.79	18.0	Std. Wall XLPE Primary Cable	TAN	4035.0	-	29	1701F
B	-	-	FA9-G	2643673 R1	0.79	18.0	Std. Wall XLPE Primary Cable	GREY	2485.0	-	-	-

Connector Name 9101

Part Number 1661778C1

Instances L9 - 26 inch Fuel Tank:Diagram1
L9 - 26 inch Fuel Tank:Diagram2
L9 - 26 inch Fuel Tank:Diagram3
L9 - 26 inch Fuel Tank:Diagram4
L9 - 26 inch Fuel Tank:Diagram5
L9 - 26 inch Fuel Tank:Diagram6
L9 - 26 inch Fuel Tank - Secondary:Diagram1
L9 - 26 inch Fuel Tank - Secondary:Diagram2
L9 - 26 inch Fuel Tank - Secondary:Diagram3
L9 - 26 inch Fuel Tank - Secondary:Diagram4
L9 - 26 inch Fuel Tank - Secondary:Diagram5
L9 - 26 inch Fuel Tank - Secondary:Diagram6
L9 - 26 inch Fuel Tank - Secondary:Diagram7

Mates SNSR-FUEL_LEVEL-3017-05-01

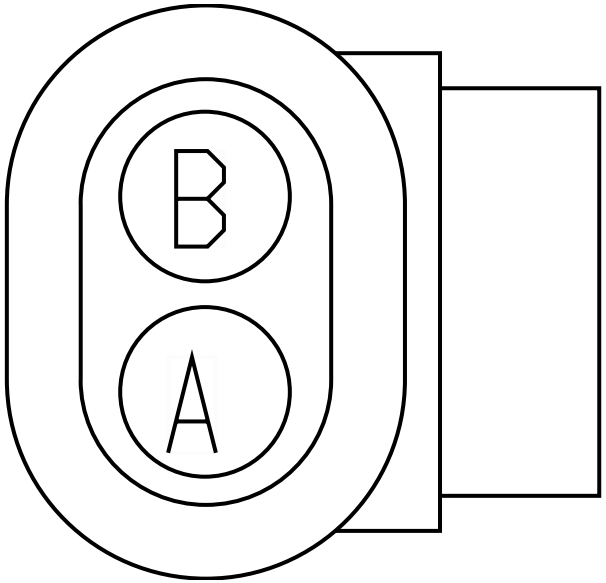

Name	Terminal Part Number	V-Min	Name	Wire Part Number	Wire CSA	Wire Spec	Wire Material description	Wire Color Description	Wire Length	End2 Terminal Part Number	End2 Pin Name	End2 Connect or
A	-	-	ZP36B	2643676 R1	0.79	18.0	Std. Wall XLPE Primary Cable	TAN	4240.0	-	27	1701F
A	-	-	ZL36B	2643676 R1	0.79	18.0	Std. Wall XLPE Primary Cable	TAN	4135.0	-	27	1701F
A	-	-	ZT36B	2643676 R1	0.79	18.0	Std. Wall XLPE Primary Cable	TAN	4510.0	-	27	1701F
A	-	-	FG36B	2643676 R1	0.79	18.0	Std. Wall XLPE Primary Cable	TAN	5355.0	-	27	1701F

Name	Terminal Part Number	V-Min	Name	Wire Part Number	Wire CSA	Wire Spec	Wire Material description	Wire Color Description	Wire Length	End2 Terminal Part Number	End2 Pin Name	End2 Connector
A	-	-	ZX36B	2643676 R1	0.79	18.0	Std. Wall XLPE Primary Cable	TAN	4370.0	-	27	1701F
A	-	-	ZV36B	2643676 R1	0.79	18.0	Std. Wall XLPE Primary Cable	TAN	6465.0	-	27	1701F
A	-	-	FC36A	2643676 R1	0.79	18.0	Std. Wall XLPE Primary Cable	TAN	3885.0	-	29	1701F
A	-	-	FA36A	2643673 R1	0.79	18.0	Std. Wall XLPE Primary Cable	GREY	2495.0	-	29	1701F
A	-	-	PL36A	2643673 R1	0.79	18.0	Std. Wall XLPE Primary Cable	GREY	4440.0	-	29	1701F
A	-	-	FB36A	2643676 R1	0.79	18.0	Std. Wall XLPE Primary Cable	TAN	4035.0	-	29	1701F
A	-	-	FD36A	2643673 R1	0.79	18.0	Std. Wall XLPE Primary Cable	GREY	2125.0	-	29	1701F
A	-	-	FF36A	2643673 R1	0.79	18.0	Std. Wall XLPE Primary Cable	GREY	4740.0	-	29	1701F

Name	Terminal Part Number	V-Min	Name	Wire Part Number	Wire CSA	Wire Spec	Wire Material description	Wire Color Description	Wire Length	End2 Terminal Part Number	End2 Pin Name	End2 Connector
A	-	-	FE36A	2643673 R1	0.79	18.0	Std. Wall XLPE Primary Cable	GREY	4075.0	-	29	1701F
B	-	-	ZX9-GB	2643673 R1	0.79	18.0	Std. Wall XLPE Primary Cable	GREY	2740.0	-	-	-
B	-	-	FA9-G	2643673 R1	0.79	18.0	Std. Wall XLPE Primary Cable	GREY	2485.0	-	-	-

Connector Name 9102C

Part Number 1661778C1

Instances A26 - 26" Fuel Tank:Diagram1
A26 - 26" Fuel Tank:Diagram2
A26 - 26" Fuel Tank:Diagram3
A26 - 26" Fuel Tank:Diagram4
A26 - 26" Fuel Tank:Diagram5
A26 - 26" Fuel Tank - Secondary:Diagram7

Mates SNSR-FUEL_LEVEL-3017-05-01

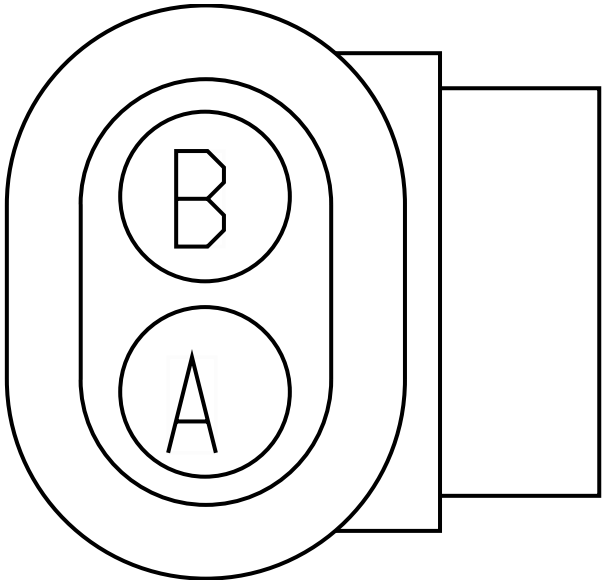

Name	Terminal Part Number	V-Min	Name	Wire Part Number	Wire CSA	Wire Spec	Wire Material description	Wire Color Description	Wire Length	End2 Terminal Part Number	End2 Pin Name	End2 Connect or
A	-	-	ZP36B	2643676 R1	0.79	18.0	Std. Wall XLPE Primary Cable	TAN	4240.0	-	27	1701F
A	-	-	ZV36B	2643676 R1	0.79	18.0	Std. Wall XLPE Primary Cable	TAN	6465.0	-	27	1701F
A	-	-	FG36B	2643676 R1	0.79	18.0	Std. Wall XLPE Primary Cable	TAN	5355.0	-	27	1701F
A	-	-	ZX36B	2643676 R1	0.79	18.0	Std. Wall XLPE Primary Cable	TAN	4370.0	-	27	1701F

Name	Terminal Part Number	V-Min	Name	Wire Part Number	Wire CSA	Wire Spec	Wire Material description	Wire Color Description	Wire Length	End2 Terminal Part Number	End2 Pin Name	End2 Connector
A	-	-	ZT36B	2643676 R1	0.79	18.0	Std. Wall XLPE Primary Cable	TAN	4510.0	-	27	1701F
A	-	-	FC36A	2643676 R1	0.79	18.0	Std. Wall XLPE Primary Cable	TAN	3885.0	-	29	1701F
B	-	-	ZX9-GB	2643673 R1	0.79	18.0	Std. Wall XLPE Primary Cable	GREY	2740.0	-	-	-
B	-	-	FA9-G	2643673 R1	0.79	18.0	Std. Wall XLPE Primary Cable	GREY	2485.0	-	-	-

Connector Name 9102C
Part Number 1661778C1
Instances B6.7 - 26 inch Fuel Tank:Diagram1

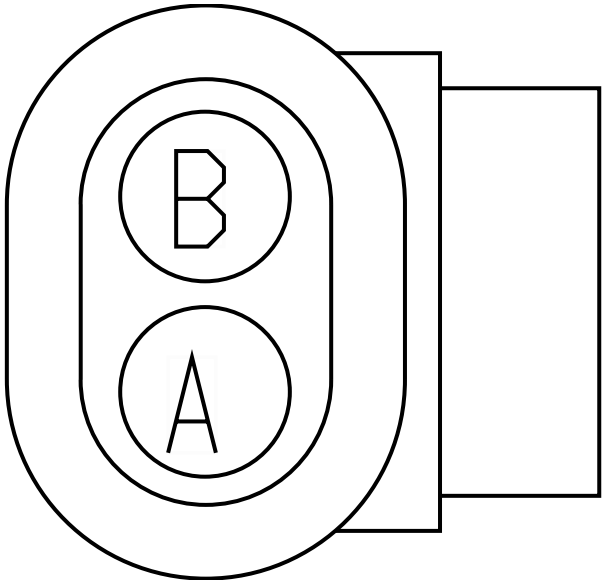

Name	Terminal Part Number	V-Min	Name	Wire Part Number	Wire CSA	Wire Spec	Wire Material description	Wire Color Description	Wire Length	End2 Terminal Part Number	End2 Pin Name	End2 Connect or
A	-	-	ZP36B	2643676 R1	0.79	18.0	Std. Wall XLPE Primary Cable	TAN	4240.0	-	27	1701F
B	-	-	ZP9B	2643673 R1	0.79	18.0	Std. Wall XLPE Primary Cable	GREY	2610.0	-	B	9102V

Connector Name	9102V
Part Number	1661778C1
Instances	B6.7 - 26 inch Fuel Tank:Diagram2
Mates	SNSR-FUEL_LEVEL-3017-05-01

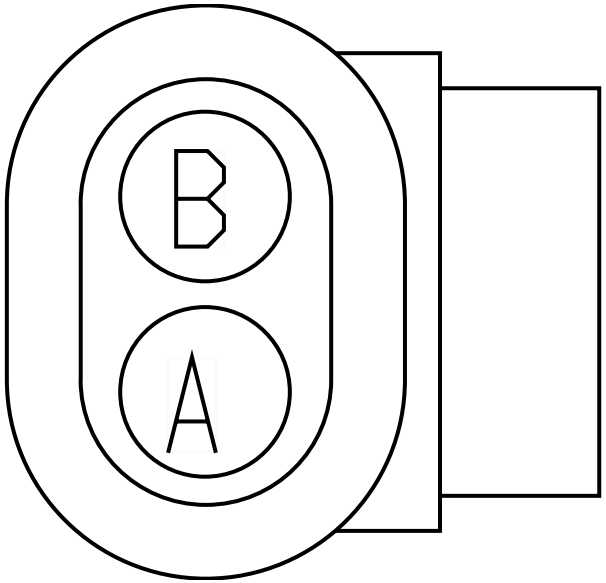

Name	Terminal Part Number	V-Min	Name	Wire Part Number	Wire CSA	Wire Spec	Wire Material description	Wire Color Description	Wire Length	End2 Terminal Part Number	End2 Pin Name	End2 Connect or
A	-	-	ZV36B	2643676 R1	0.79	18.0	Std. Wall XLPE Primary Cable	TAN	6465.0	-	27	1701F
B	-	-	ZP9B	2643673 R1	0.79	18.0	Std. Wall XLPE Primary Cable	GREY	2610.0	-	B	9102C

Connector Name 9102X
Part Number 1661778C1
Instances B6.7 - 26 inch Fuel Tank:Diagram3

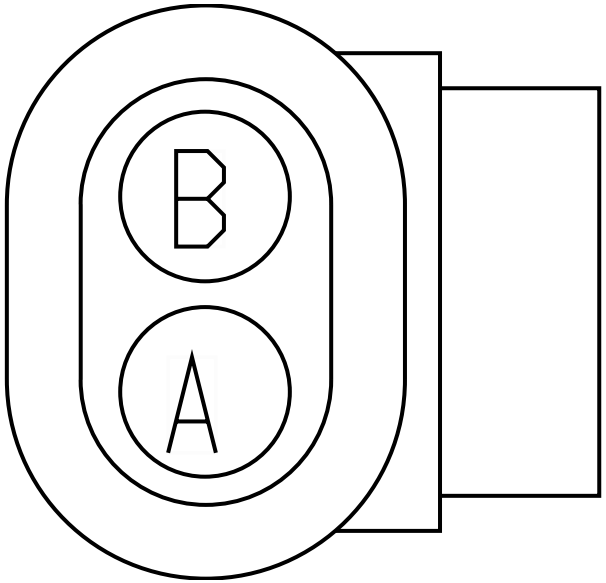

Name	Terminal Part Number	V-Min	Name	Wire Part Number	Wire CSA	Wire Spec	Wire Material description	Wire Color Description	Wire Length	End2 Terminal Part Number	End2 Pin Name	End2 Connect or
A	-	-	ZX36B	2643676 R1	0.79	18.0	Std. Wall XLPE Primary Cable	TAN	4370.0	-	27	1701F
B	-	-	ZP9B	2643673 R1	0.79	18.0	Std. Wall XLPE Primary Cable	GREY	2610.0	-	-	-

Connector Name	9108A
Part Number	587567C91
Instances	B6.7 - Fuel Heater (Vehicle Powered)(Davco):Diagram1 L9 - Fuel Heater (Vehicle Powered)(Davco):Diagram1
Mates	DEV-FUEL FILTER ASSY-3036-01-08:A

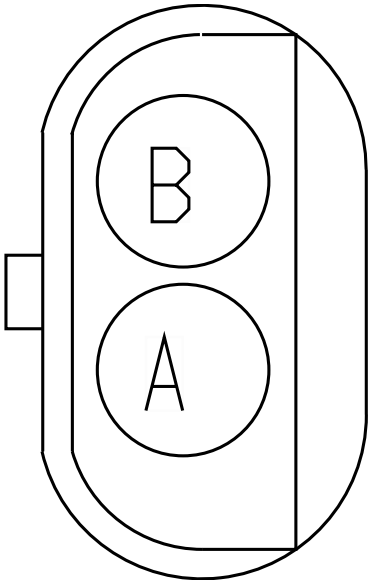

Name	Terminal Part Number	V-Min	Name	Wire Part Number	Wire CSA	Wire Spec	Wire Material description	Wire Color Description	Wire Length	End2 Terminal Part Number	End2 Pin Name	End2 Connect or
A	-	-	CA19	2643680 R1	1.16	16.0	Std. Wall XLPE Primary Cable	GREY	3535.0	-	67	1701F
A	-	-	CB19	2643680 R1	1.16	16.0	Std. Wall XLPE Primary Cable	GREY	2660.0	-	67	1701F
B	-	-	CA19-G	3510360 R1	1.16	16.0	Thin Wall XLPE Primary Cable	WHITE	1075.0	-	-	-
B	-	-	CB19-G	2643681 R1	1.16	16.0	Std. Wall XLPE Primary Cable	WHITE	1050.0	-	-	-

Connector Name 9108B

Part Number 587567C91

Instances B6.7 - Fuel Heater (Vehicle Powered)(Davco):Diagram2
L9 - Fuel Heater (Vehicle Powered)(Davco):Diagram2

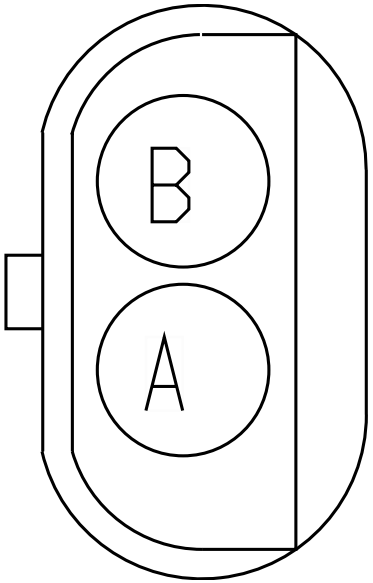

Name	Terminal Part Number	V-Min	Name	Wire Part Number	Wire CSA	Wire Spec	Wire Material description	Wire Color Description	Wire Length	End2 Terminal Part Number	End2 Pin Name	End2 Connect or
A	-	-	CB19	2643680 R1	1.16	16.0	Std. Wall XLPE Primary Cable	GREY	2660.0	-	67	1701F
A	-	-	CA19	2643680 R1	1.16	16.0	Std. Wall XLPE Primary Cable	GREY	3535.0	-	67	1701F
B	-	-	CB19-G	2643681 R1	1.16	16.0	Std. Wall XLPE Primary Cable	WHITE	1050.0	-	-	-
B	-	-	CA19-G	3510360 R1	1.16	16.0	Thin Wall XLPE Primary Cable	WHITE	1075.0	-	-	-

Connector Name 9108C

Part Number 587567C91

Instances B6.7 - Fuel Heater (Vehicle Powered)(Davco):Diagram3
L9 - Fuel Heater (Vehicle Powered)(Davco):Diagram3

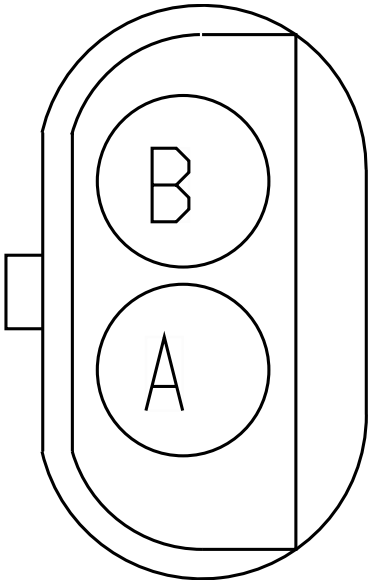

Name	Terminal Part Number	V-Min	Name	Wire Part Number	Wire CSA	Wire Spec	Wire Material description	Wire Color Description	Wire Length	End2 Terminal Part Number	End2 Pin Name	End2 Connect or
A	-	-	CG19	2643680 R1	1.16	16.0	Std. Wall XLPE Primary Cable	GREY	3535.0	-	67	1701F
A	-	-	PX19	2643680 R1	1.16	16.0	Std. Wall XLPE Primary Cable	GREY	2285.0	-	67	1701F
B	-	-	CG19-G	3510360 R1	1.16	16.0	Thin Wall XLPE Primary Cable	WHITE	1525.0	-	-	-
B	-	-	PX19-G	3510360 R1	1.16	16.0	Thin Wall XLPE Primary Cable	WHITE	1375.0	-	-	-

Connector Name 9108D

Part Number 587567C91

Instances B6.7 - Fuel Heater (Vehicle Powered)(Davco):Diagram4
L9 - Fuel Heater (Vehicle Powered)(Davco):Diagram4

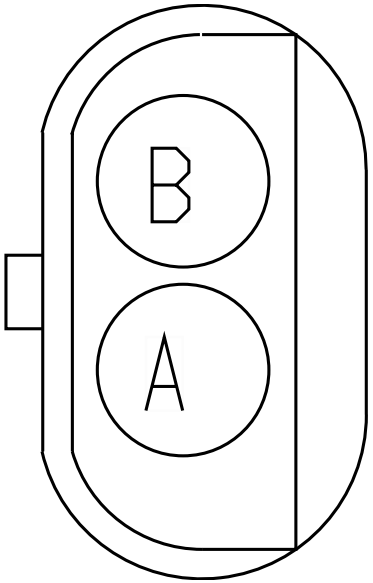

Name	Terminal Part Number	V-Min	Name	Wire Part Number	Wire CSA	Wire Spec	Wire Material description	Wire Color Description	Wire Length	End2 Terminal Part Number	End2 Pin Name	End2 Connect or
A	-	-	CD19	2643680 R1	1.16	16.0	Std. Wall XLPE Primary Cable	GREY	3670.0	-	67	1701F
B	-	-	CD19-G	3510360 R1	1.16	16.0	Thin Wall XLPE Primary Cable	WHITE	1210.0	-	-	-

Connector Name 9108E

Part Number 587567C91

Instances B6.7 - Fuel Heater (Vehicle Powered)(Davco):Diagram5
L9 - Fuel Heater (Vehicle Powered)(Davco):Diagram5

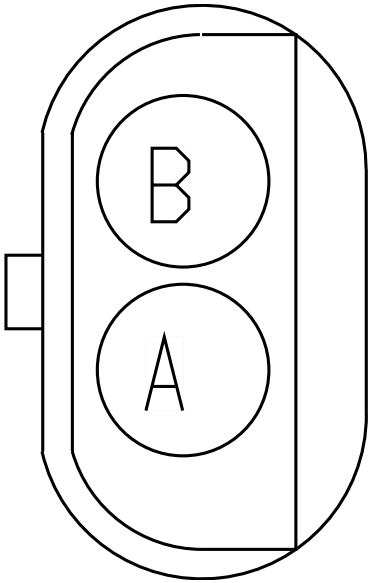

Name	Terminal Part Number	V-Min	Name	Wire Part Number	Wire CSA	Wire Spec	Wire Material description	Wire Color Description	Wire Length	End2 Terminal Part Number	End2 Pin Name	End2 Connect or
A	-	-	CE19	2643680 R1	1.16	16.0	Std. Wall XLPE Primary Cable	GREY	4230.0	-	67	1701F
B	-	-	CE19-G	3510360 R1	1.16	16.0	Thin Wall XLPE Primary Cable	WHITE	1420.0	-	-	-

Connector Name 9108F

Part Number 587567C91

Instances B6.7 - Fuel Heater (Vehicle Powered)(Davco):Diagram6
L9 - Fuel Heater (Vehicle Powered)(Davco):Diagram6

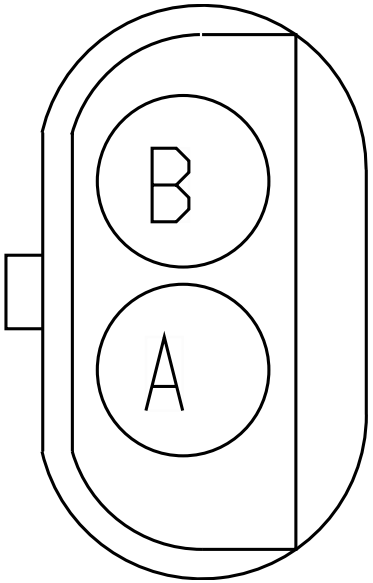

Name	Terminal Part Number	V-Min	Name	Wire Part Number	Wire CSA	Wire Spec	Wire Material description	Wire Color Description	Wire Length	End2 Terminal Part Number	End2 Pin Name	End2 Connect or
A	-	-	CF19	2643680 R1	1.16	16.0	Std. Wall XLPE Primary Cable	GREY	4825.0	-	67	1701F
B	-	-	CF19-G	3510360 R1	1.16	16.0	Thin Wall XLPE Primary Cable	WHITE	2015.0	-	-	-

Connector Name 9108G
Part Number 587567C91
Instances L9 - Fuel Heater (Vehicle Powered)(Davco):Diagram7

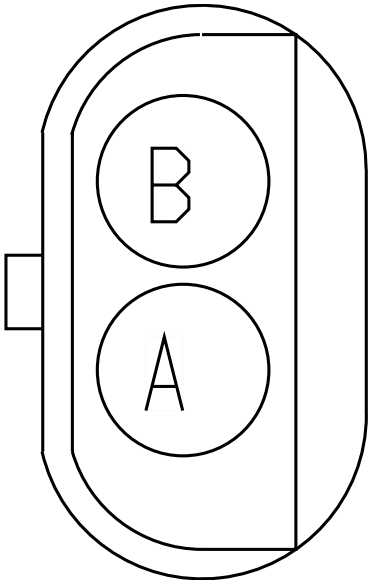

Name	Terminal Part Number	V-Min	Name	Wire Part Number	Wire CSA	Wire Spec	Wire Material description	Wire Color Description	Wire Length	End2 Terminal Part Number	End2 Pin Name	End2 Connect or
A	-	-	PU19	2643680 R1	1.16	16.0	Std. Wall XLPE Primary Cable	GREY	4205.0	-	67	1701F
B	-	-	PU19-G	2643681 R1	1.16	16.0	Std. Wall XLPE Primary Cable	WHITE	1395.0	-	-	-

Connector Name 9108H

Part Number 587567C91

Instances B6.7 - Fuel Heater (Vehicle Powered)(Davco):Diagram7
L9 - Fuel Heater (Vehicle Powered)(Davco):Diagram8

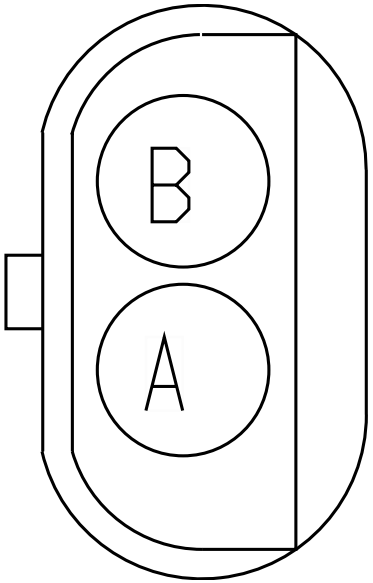

Name	Terminal Part Number	V-Min	Name	Wire Part Number	Wire CSA	Wire Spec	Wire Material description	Wire Color Description	Wire Length	End2 Terminal Part Number	End2 Pin Name	End2 Connect or
A	-	-	CN19	2643680 R1	1.16	16.0	Std. Wall XLPE Primary Cable	GREY	3445.0	-	67	1701F
B	-	-	CN19-G	3510360 R1	1.16	16.0	Thin Wall XLPE Primary Cable	WHITE	1435.0	-	-	-

Connector Name 9108J
Part Number 587567C91
Instances L9 - Fuel Heater (Vehicle Powered)(Davco):Diagram9

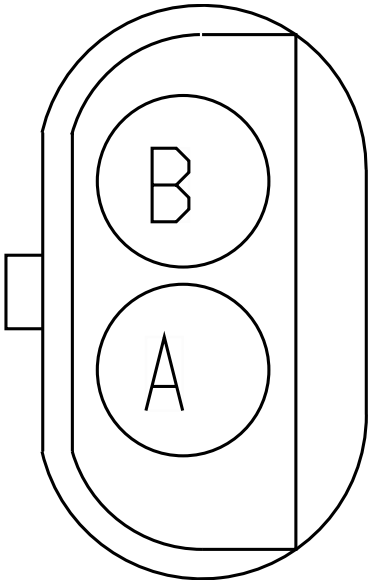

Name	Terminal Part Number	V-Min	Name	Wire Part Number	Wire CSA	Wire Spec	Wire Material description	Wire Color Description	Wire Length	End2 Terminal Part Number	End2 Pin Name	End2 Connect or
A	-	-	CG19	2643680 R1	1.16	16.0	Std. Wall XLPE Primary Cable	GREY	3535.0	-	67	1701F
B	-	-	CG19-G	3510360 R1	1.16	16.0	Thin Wall XLPE Primary Cable	WHITE	1525.0	-	-	-

Connector Name 9108K
Part Number 587567C91
Instances L9 - Fuel Heater (Vehicle Powered)(Davco):Diagram10

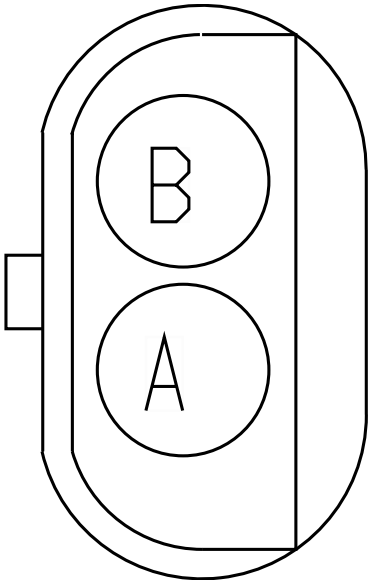

Name	Terminal Part Number	V-Min	Name	Wire Part Number	Wire CSA	Wire Spec	Wire Material description	Wire Color Description	Wire Length	End2 Terminal Part Number	End2 Pin Name	End2 Connect or
A	-	-	CR19	2643680 R1	1.16	16.0	Std. Wall XLPE Primary Cable	GREY	3610.0	-	67	1701F
B	-	-	CR19-G	3510360 R1	1.16	16.0	Thin Wall XLPE Primary Cable	WHITE	1150.0	-	-	-

Connector Name 9108L
Part Number 587567C91
Instances L9 - Fuel Heater (Vehicle Powered)(Davco):Diagram11

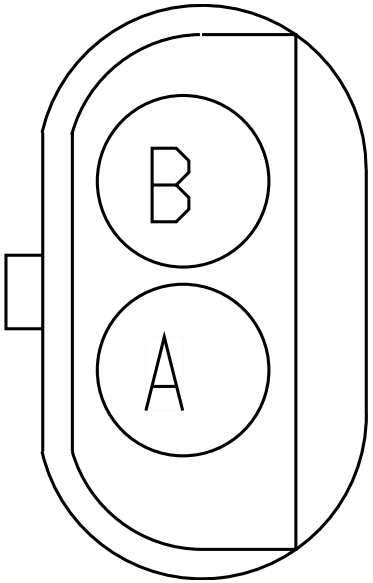

Name	Terminal Part Number	V-Min	Name	Wire Part Number	Wire CSA	Wire Spec	Wire Material description	Wire Color Description	Wire Length	End2 Terminal Part Number	End2 Pin Name	End2 Connect or
A	-	-	CT19	2643680 R1	1.16	16.0	Std. Wall XLPE Primary Cable	GREY	3785.0	-	67	1701F
B	-	-	CT19-G	3510360 R1	1.16	16.0	Thin Wall XLPE Primary Cable	WHITE	975.0	-	-	-

Connector Name 9108M
Part Number 587567C91
Instances L9 - Fuel Heater (Vehicle Powered)(Davco):Diagram12

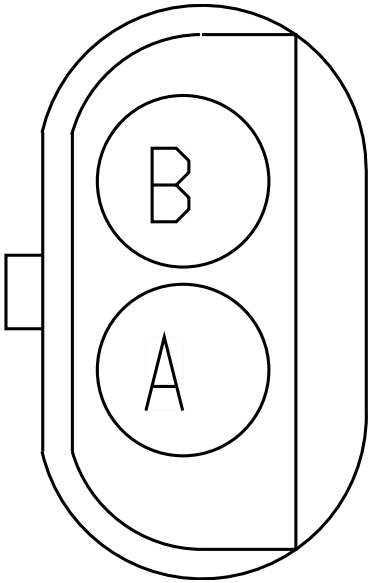

Name	Terminal Part Number	V-Min	Name	Wire Part Number	Wire CSA	Wire Spec	Wire Material description	Wire Color Description	Wire Length	End2 Terminal Part Number	End2 Pin Name	End2 Connect or
A	-	-	CV19	2643680 R1	1.16	16.0	Std. Wall XLPE Primary Cable	GREY	3955.0	-	67	1701F
B	-	-	CV19-G	3510360 R1	1.16	16.0	Thin Wall XLPE Primary Cable	WHITE	1145.0	-	-	-

Connector Name	9108N
Part Number	587567C91
Instances	A26 - Fuel Heater (Vehicle Powered)(Davco):Diagram1 A26 - Fuel Heater (Vehicle Powered)(Davco):Diagram2 A26 - Fuel Heater (Vehicle Powered)(Davco):Diagram3 A26 - Fuel Heater (Vehicle Powered)(Davco):Diagram4 A26 - Fuel Heater (Vehicle Powered)(Davco):Diagram5 A26 - Fuel Heater (Vehicle Powered)(Davco):Diagram6 A26 - Fuel Heater (Vehicle Powered)(Davco):Diagram7 A26 - Fuel Heater (Vehicle Powered)(Davco):Diagram8 A26 - Fuel Heater (Vehicle Powered)(Davco):Diagram9
Mates	DEV-FUEL FILTER ASSY-3036-01-08:A

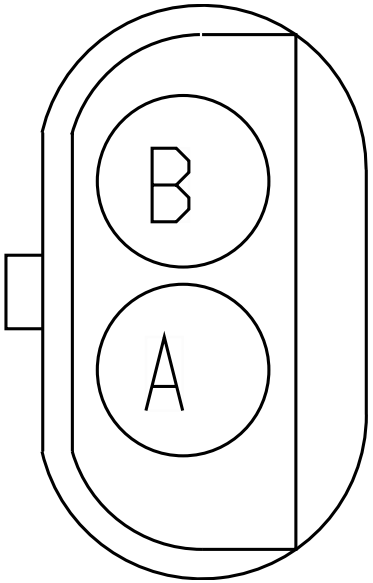

Name	Terminal Part Number	V-Min	Name	Wire Part Number	Wire CSA	Wire Spec	Wire Material description	Wire Color Description	Wire Length	End2 Terminal Part Number	End2 Pin Name	End2 Connect or
A	-	-	CB19	2643680 R1	1.16	16.0	Std. Wall XLPE Primary Cable	GREY	2660.0	-	67	1701F
A	-	-	CG19	2643680 R1	1.16	16.0	Std. Wall XLPE Primary Cable	GREY	3535.0	-	67	1701F
A	-	-	CR19	2643680 R1	1.16	16.0	Std. Wall XLPE Primary Cable	GREY	3610.0	-	67	1701F
A	-	-	CT19	2643680 R1	1.16	16.0	Std. Wall XLPE Primary Cable	GREY	3785.0	-	67	1701F

Name	Terminal Part Number	V-Min	Name	Wire Part Number	Wire CSA	Wire Spec	Wire Material description	Wire Color Description	Wire Length	End2 Terminal Part Number	End2 Pin Name	End2 Connector
A	-	-	CX19	2643680 R1	1.16	16.0	Std. Wall XLPE Primary Cable	GREY	4155.0	-	67	1701F
A	-	-	PU19	2643680 R1	1.16	16.0	Std. Wall XLPE Primary Cable	GREY	4205.0	-	67	1701F
A	-	-	CA19	2643680 R1	1.16	16.0	Std. Wall XLPE Primary Cable	GREY	3535.0	-	67	1701F
A	-	-	CV19	2643680 R1	1.16	16.0	Std. Wall XLPE Primary Cable	GREY	3955.0	-	67	1701F
A	-	-	CZ19	2643680 R1	1.16	16.0	Std. Wall XLPE Primary Cable	GREY	4805.0	-	67	1701F
B	-	-	CZ19-G	3510360 R1	1.16	16.0	Thin Wall XLPE Primary Cable	WHITE	1995.0	-	-	-
B	-	-	CX19-G	3510360 R1	1.16	16.0	Thin Wall XLPE Primary Cable	WHITE	1345.0	-	-	-
B	-	-	CA19-G	3510360 R1	1.16	16.0	Thin Wall XLPE Primary Cable	WHITE	1075.0	-	-	-

Name	Terminal Part Number	V-Min	Name	Wire Part Number	Wire CSA	Wire Spec	Wire Material description	Wire Color Description	Wire Length	End2 Terminal Part Number	End2 Pin Name	End2 Connector
B	-	-	PU19-G	2643681 R1	1.16	16.0	Std. Wall XLPE Primary Cable	WHITE	1395.0	-	-	-
B	-	-	CG19-G	3510360 R1	1.16	16.0	Thin Wall XLPE Primary Cable	WHITE	1525.0	-	-	-
B	-	-	CV19-G	3510360 R1	1.16	16.0	Thin Wall XLPE Primary Cable	WHITE	1145.0	-	-	-
B	-	-	CR19-G	3510360 R1	1.16	16.0	Thin Wall XLPE Primary Cable	WHITE	1150.0	-	-	-
B	-	-	CT19-G	3510360 R1	1.16	16.0	Thin Wall XLPE Primary Cable	WHITE	975.0	-	-	-
B	-	-	CB19-G	2643681 R1	1.16	16.0	Std. Wall XLPE Primary Cable	WHITE	1050.0	-	-	-

Connector Name 9108N
Part Number 587567C91
Instances L9 - Fuel Heater (Vehicle Powered)(Davco):Diagram13

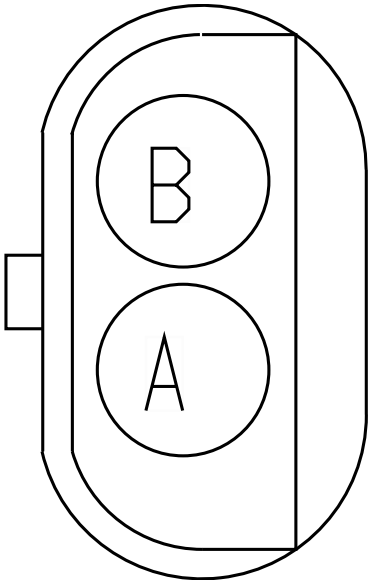

Name	Terminal Part Number	V-Min	Name	Wire Part Number	Wire CSA	Wire Spec	Wire Material description	Wire Color Description	Wire Length	End2 Terminal Part Number	End2 Pin Name	End2 Connect or
A	-	-	CX19	2643680 R1	1.16	16.0	Std. Wall XLPE Primary Cable	GREY	4155.0	-	67	1701F
B	-	-	CX19-G	3510360 R1	1.16	16.0	Thin Wall XLPE Primary Cable	WHITE	1345.0	-	-	-

Connector Name 9108P
Part Number 587567C91
Instances L9 - Fuel Heater (Vehicle Powered)(Davco):Diagram14

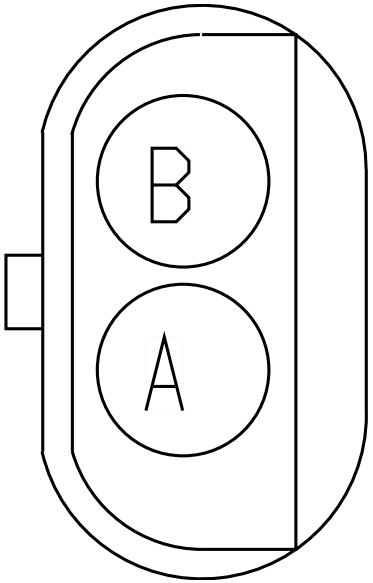

Name	Terminal Part Number	V-Min	Name	Wire Part Number	Wire CSA	Wire Spec	Wire Material description	Wire Color Description	Wire Length	End2 Terminal Part Number	End2 Pin Name	End2 Connect or
A	-	-	CZ19	2643680 R1	1.16	16.0	Std. Wall XLPE Primary Cable	GREY	4805.0	-	67	1701F
B	-	-	CZ19-G	3510360 R1	1.16	16.0	Thin Wall XLPE Primary Cable	WHITE	1995.0	-	-	-

Connector Name 9109
Part Number 587567C91
Instances L9 - Fuel Heater (Vehicle Powered)(Davco):Diagram15
Mates DEV-FUEL FILTER ASSY-3036-01-08:A

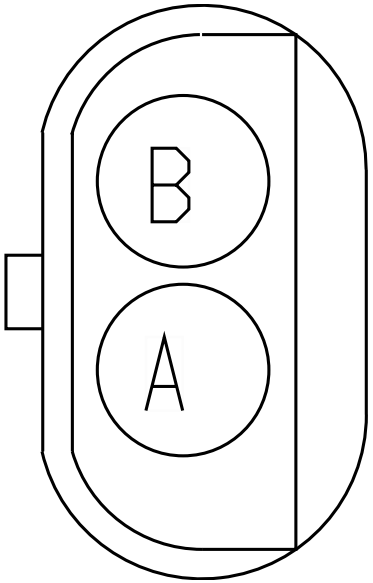

Name	Terminal Part Number	V-Min	Name	Wire Part Number	Wire CSA	Wire Spec	Wire Material description	Wire Color Description	Wire Length	End2 Terminal Part Number	End2 Pin Name	End2 Connect or
A	-	-	CC19	2643680 R1	1.16	16.0	Std. Wall XLPE Primary Cable	GREY	3377.0	-	67	1701F
B	-	-	CC19-G	3510360 R1	1.16	16.0	Thin Wall XLPE Primary Cable	WHITE	567.0	-	-	-

Connector Name 9200A

Part Number 1671610C1

Instances B6.7 - Drain Valve Heater:Diagram5
L9 - Drain Valve Heater:Diagram7

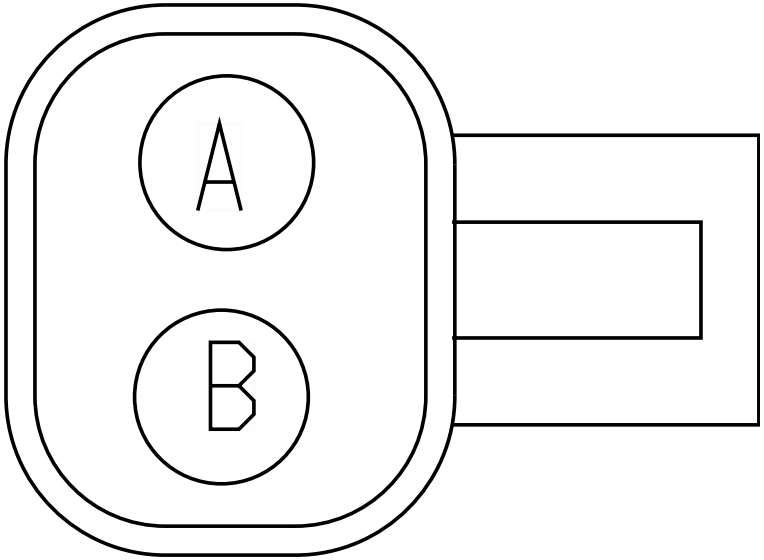

Name	Terminal Part Number	V-Min	Name	Wire Part Number	Wire CSA	Wire Spec	Wire Material description	Wire Color Description	Wire Length	End2 Terminal Part Number	End2 Pin Name	End2 Connect or
A	-	-	NK39A	2643673 R1	0.79	18.0	Std. Wall XLPE Primary Cable	GREY	4005.0	-	40	1701F
B	-	-	NK39-GF	2643674 R1	0.79	18.0	Std. Wall XLPE Primary Cable	WHITE	2025.0	-	-	-

Connector Name 9200B

Part Number 1671610C1

Instances B6.7 - Drain Valve Heater:Diagram6
L9 - Drain Valve Heater:Diagram8

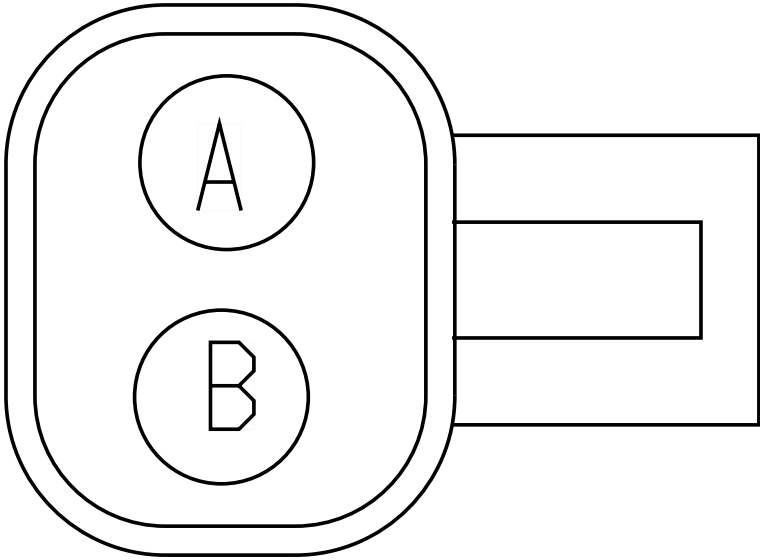

Name	Terminal Part Number	V-Min	Name	Wire Part Number	Wire CSA	Wire Spec	Wire Material description	Wire Color Description	Wire Length	End2 Terminal Part Number	End2 Pin Name	End2 Connect or
A	-	-	NQ39A	2643673 R1	0.79	18.0	Std. Wall XLPE Primary Cable	GREY	4460.0	-	40	1701F
B	-	-	NQ39-GF	2643674 R1	0.79	18.0	Std. Wall XLPE Primary Cable	WHITE	2480.0	-	-	-

Connector Name 9200C
Part Number 1671610C1
Instances B6.7 - Drain Valve Heater:Diagram7
L9 - Drain Valve Heater:Diagram9

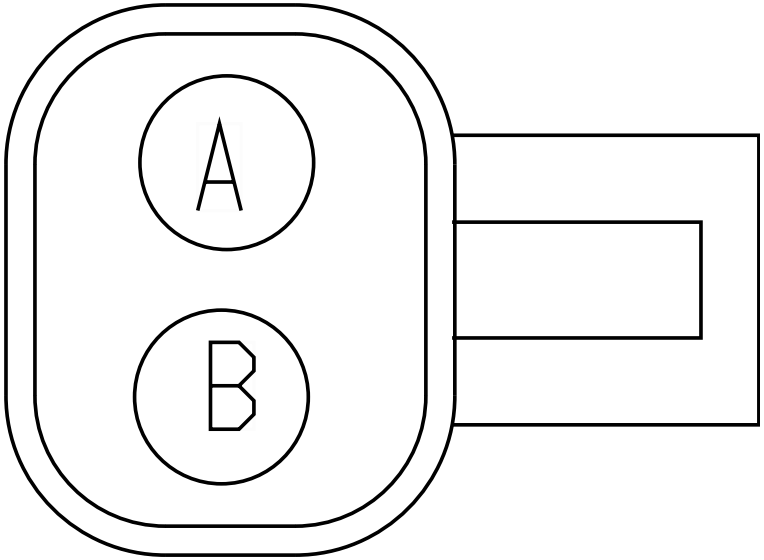

Name	Terminal Part Number	V-Min	Name	Wire Part Number	Wire CSA	Wire Spec	Wire Material description	Wire Color Description	Wire Length	End2 Terminal Part Number	End2 Pin Name	End2 Connect or
A	-	-	PS39A	2643673 R1	0.79	18.0	Std. Wall XLPE Primary Cable	GREY	5780.0	-	40	1701F
A	-	-	BC39A	2643673 R1	0.79	18.0	Std. Wall XLPE Primary Cable	GREY	5230.0	-	40	1701F
B	-	-	PS39-GF	2643674 R1	0.79	18.0	Std. Wall XLPE Primary Cable	WHITE	3800.0	-	-	-
B	-	-	BC39-GF	2643674 R1	0.79	18.0	Std. Wall XLPE Primary Cable	WHITE	3250.0	-	-	-

Connector Name 9200J
Part Number 1671610C1
Instances L9 - Drain Valve Heater:Diagram10

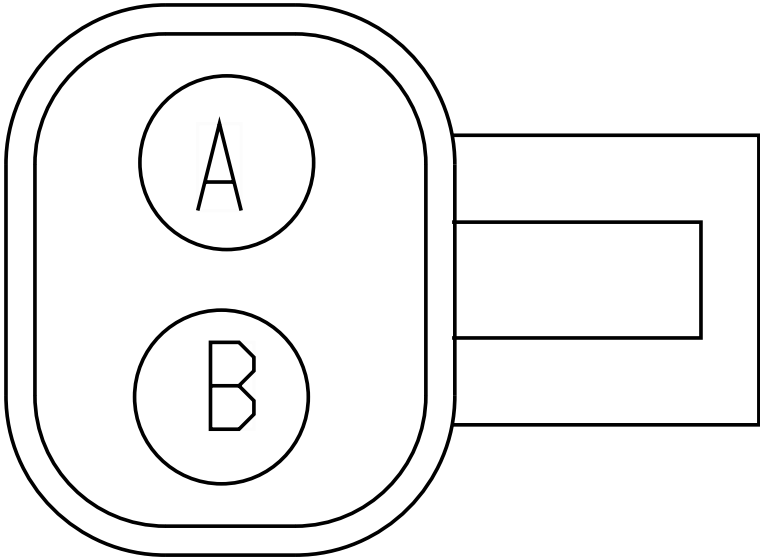

Name	Terminal Part Number	V-Min	Name	Wire Part Number	Wire CSA	Wire Spec	Wire Material description	Wire Color Description	Wire Length	End2 Terminal Part Number	End2 Pin Name	End2 Connect or
A	-	-	PS39A	2643673 R1	0.79	18.0	Std. Wall XLPE Primary Cable	GREY	5780.0	-	40	1701F
B	-	-	PS39-GF	2643674 R1	0.79	18.0	Std. Wall XLPE Primary Cable	WHITE	3800.0	-	-	-

Connector Name	9260
Part Number	1667733C1
Instances	B6.7 - Powertrain Splice Pack 6704:Diagram1 B6.7 - Transmission (Allison 1K/2K):Diagram1 B6.7 - Transmission (Allison 3K/4K):Diagram1 B6.7 - Transmission (Allison 3K/4K):Diagram2 L9 - Powertrain Splice Pack 6704 & 6704B:Diagram1
Mates	500

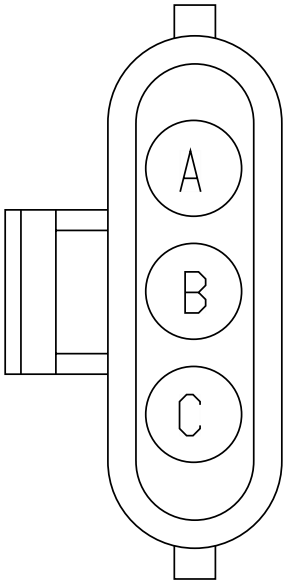

Name	Terminal Part Number	V-Min	Name	Wire Part Number	Wire CSA	Wire Spec	Wire Material description	Wire Color Description	Wire Length	End2 Terminal Part Number	End2 Pin Name	End2 Connect or
A	-	-	N14-G	2643788 R1	4.81	10.0	Std. Wall XLPE Primary Cable	WHITE	230.0	-	-	-
B	-	-	N14-GA	2643788 R1	4.81	10.0	Std. Wall XLPE Primary Cable	WHITE	230.0	-	-	-

Connector Name	9262F
Part Number	1669834C1
Short Description	AMMETER CONNECTOR
Instances	B6.7 - Current Monitoring (Ammeter):Diagram1 B6.7 - Current Monitoring (Ammeter):Diagram2
Mates	6332M

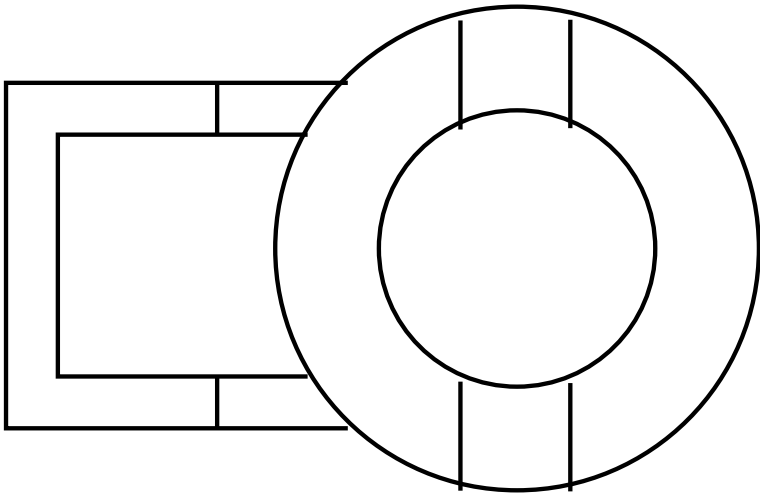

Name	Terminal Part Number	V-Min	Name	Wire Part Number	Wire CSA	Wire Spec	Wire Material description	Wire Color Description	Wire Length	End2 Terminal Part Number	End2 Pin Name	End2 Connect or
A	-	-	N26B	3510333 R1	4.81	10.0	Thin Wall XLPE Primary Cable	TAN	255.0	-	A	9262M

Connector Name	9262M
Part Number	1664531C1
Short Description	BATTERY AMMETER SENSE
Instances	B6.7 - Current Monitoring (Ammeter):Diagram1 B6.7 - Current Monitoring (Ammeter):Diagram2
Mates	6332

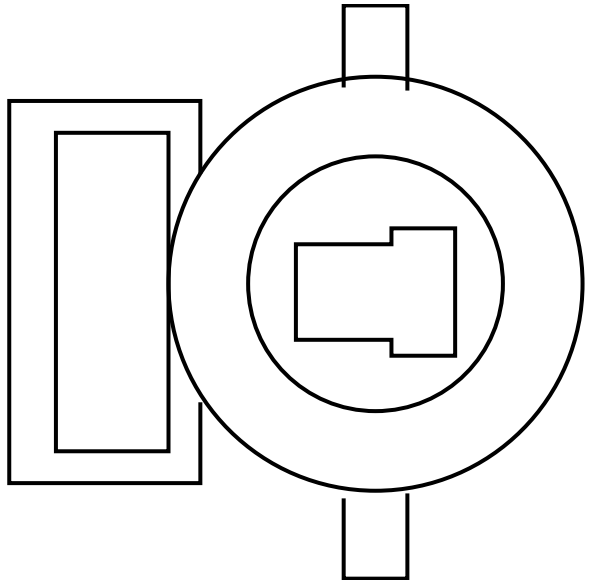

Name	Terminal Part Number	V-Min	Name	Wire Part Number	Wire CSA	Wire Spec	Wire Material description	Wire Color Description	Wire Length	End2 Terminal Part Number	End2 Pin Name	End2 Connect or
A	-	-	N26B	3510333 R1	4.81	10.0	Thin Wall XLPE Primary Cable	TAN	255.0	-	A	9262F

Connector Name	9263F
Part Number	1669834C1
Short Description	2-WAY RADIO BATT GND
Instances	B6.7 - 2-Way Radio:Diagram1 B6.7 - 2-Way Radio:Diagram2
Mates	9263M

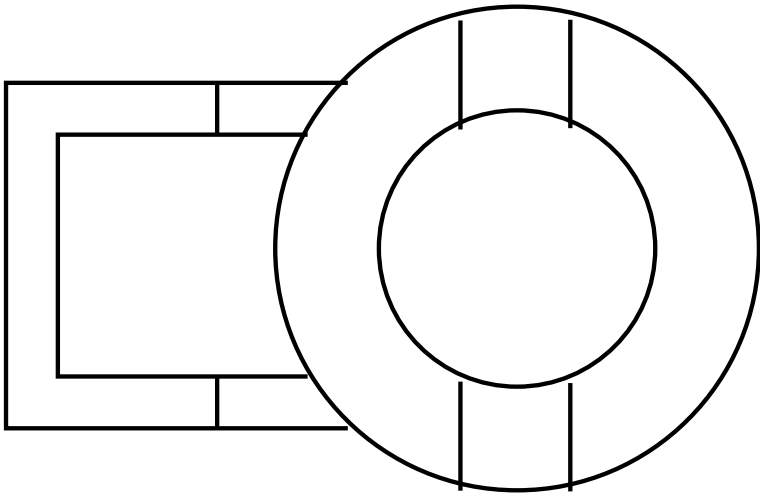

Name	Terminal Part Number	V-Min	Name	Wire Part Number	Wire CSA	Wire Spec	Wire Material description	Wire Color Description	Wire Length	End2 Terminal Part Number	End2 Pin Name	End2 Connect or
A	-	-	RA14-G	3510362 R1	3.01	12.0	Thin Wall XLPE Primary Cable	WHITE	930.0	-	5	4060

Connector Name	9263M
Part Number	1664531C1
Short Description	2-WAY RADIO NEGATIVE CONN
Instances	B6.7 - 2-Way Radio:Diagram1 B6.7 - 2-Way Radio:Diagram2
Mates	9263F

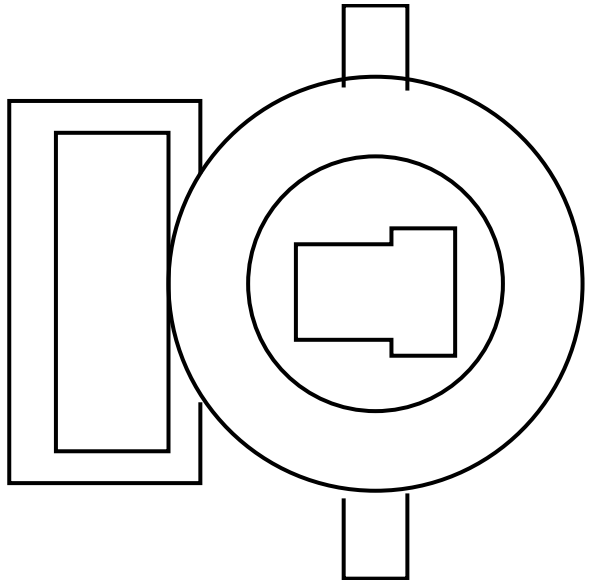

Name	Terminal Part Number	V-Min	Name	Wire Part Number	Wire CSA	Wire Spec	Wire Material description	Wire Color Description	Wire Length	End2 Terminal Part Number	End2 Pin Name	End2 Connect or
A	-	-	N14-GD	3510363 R1	4.81	10.0	Thin Wall XLPE Primary Cable	WHITE	230.0	-	PIN2	-

Connector Name	9264F
Part Number	1669834C1
Short Description	2-WAY RADIO POSITIVE CONN
Instances	B6.7 - 2-Way Radio:Diagram1 B6.7 - 2-Way Radio:Diagram2 L9 - 2-Way Radio:Diagram1 L9 - 2-Way Radio:Diagram2
Mates	9264M

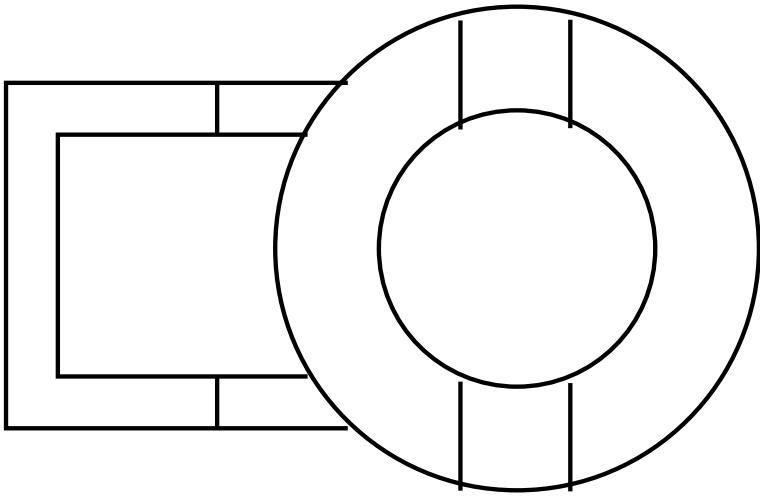

Name	Terminal Part Number	V-Min	Name	Wire Part Number	Wire CSA	Wire Spec	Wire Material description	Wire Color Description	Wire Length	End2 Terminal Part Number	End2 Pin Name	End2 Connect or
A	-	-	N14HC	3510369 R1	4.81	10.0	Thin Wall XLPE Primary Cable	RED	225.0	-	2	9265

Connector Name	9264M
Part Number	1664531C1
Short Description	2-WAY RADIO BATTERY POWER
Instances	B6.7 - 2-Way Radio:Diagram1 B6.7 - 2-Way Radio:Diagram2 L9 - 2-Way Radio:Diagram1 L9 - 2-Way Radio:Diagram2
Mates	9264F

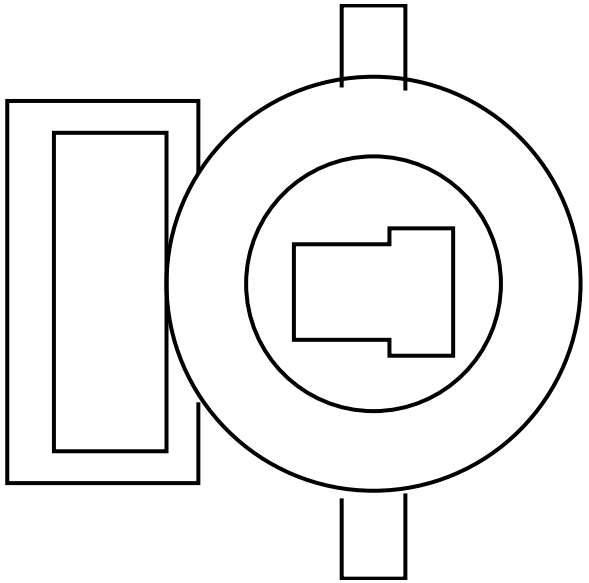

Name	Terminal Part Number	V-Min	Name	Wire Part Number	Wire CSA	Wire Spec	Wire Material description	Wire Color Description	Wire Length	End2 Terminal Part Number	End2 Pin Name	End2 Connect or
A	-	-	RA14A	3510368 R1	3.01	12.0	Thin Wall XLPE Primary Cable	RED	2130.0	-	4	4060

Connector Name	9265
Part Number	3512967C1
Instances	B6.7 - 2-Way Radio:Diagram1 B6.7 - 2-Way Radio:Diagram2 L9 - 2-Way Radio:Diagram1 L9 - 2-Way Radio:Diagram2
Mates	CP-2WAY_RADIO_FUSE

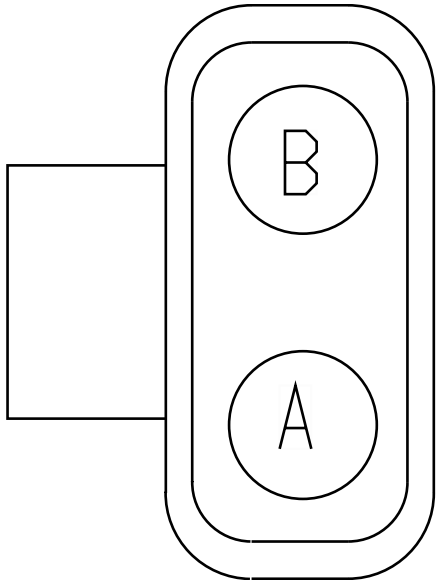

Name	Terminal Part Number	V-Min	Name	Wire Part Number	Wire CSA	Wire Spec	Wire Material description	Wire Color Description	Wire Length	End2 Terminal Part Number	End2 Pin Name	End2 Connect or
1	-	-	N14HB	2643698 R1	4.81	10.0	Std. Wall XLPE Primary Cable	RED	210.0	-	PIN1	-
2	-	-	N14HC	3510369 R1	4.81	10.0	Thin Wall XLPE Primary Cable	RED	225.0	-	A	9264F

Connector Name	9303Ac
Part Number	1661375C2
Instances	B6.7 - License Plate Light (LED BOX LAMP Daisy Chain Tail Light):Diagram1
Mates	LT-LS_DAISY_10PIN_TAIL_ASS Y-1002-02-02A

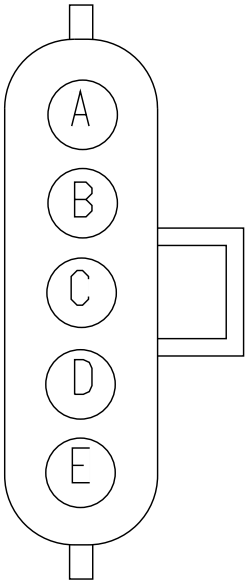

Name	Terminal Part Number	V-Min	Name	Wire Part Number	Wire CSA	Wire Spec	Wire Material description	Wire Color Description	Wire Length	End2 Terminal Part Number	End2 Pin Name	End2 Connect or
D	-	-	RB68	2643688 R1	1.91	14.0	Std. Wall XLPE Primary Cable	BROWN	2875.0	-	4	9800
E	-	-	RB10-G	3510362 R1	3.01	12.0	Thin Wall XLPE Primary Cable	WHITE	2875.0	-	12	9800

Connector Name	9303A
Part Number	1661375C2
Instances	A26 - Back-Up Alarm (Automatic) W/ Tailboard:Diagram1 A26 - Back-Up Alarm (Automatic) W/O Tailboard:Diagram1 A26 - Back-Up Alarm (Manual) W/ Tailboard:Diagram1 A26 - Back-Up Alarm (Manual) W/O Tailboard:Diagram1 A26 - Back-Up Alarm (Relay to 5 Pin 08TKC Tailboard to Alarm) (Automatic):Diagram1 A26 - Back-Up Alarm (Relay to 5 Pin 08TKC Tailboard. Alarm Plugs In) (Automatic):Diagram1 A26 - Backup Alarm (Switch to 5 Pin 08TKC Tailboard to Alarm) (Manual):Diagram1 A26 - Backup Alarm (Switch to 5 Pin 08TKC Tailboard. Alarm Plugs In) (Manual):Diagram1 A26 - Backup Lights (Single Reverse Lights) Eaton/Manual Transmission:Diagram1 A26 - Directional Signal (Turn) W/ Daisy Chain Box Lamps:Diagram1 A26 - Directional Signal (Turn) W/ Daisy Chain Box Lamps, W/ Plow Lights:Diagram1-Option 1 (Snow Plow #1) A26 - Directional Signal (Turn) W/ Daisy Chain Box Lamps, W/ Plow Lights:Diagram1-Option 2 (Snow Plow #2) A26 - Directional Signal (Turn) W/ Less Power Module Tail Board, W/Hazard SW:Diagram1 A26 - Directional Signal (Turn) W/ Less Power Module Tail Board, W/Hazard SW, W/Plow Lights:Diagram1-Option 1 (Snow Plow #1) A26 - Directional Signal (Turn) W/ Less Power Module Tail Board, W/Hazard SW, W/Plow Lights:Diagram1-Option 2 (Snow Plow #2) A26 - Directional Signal (Turn) W/ Single Tail Board, W/Hazard SW, W/Plow Lights:Diagram1-Option 1 (Snow Plow #1) A26 - Directional Signal (Turn) W/ Single Tail Board, W/Hazard SW, W/Plow Lights:Diagram1-Option 2 (Snow Plow #2) A26 - License Plate Light (Tail Light Single Assy.) W/Less Power Module (W/08TKC, 08THM):Diagram1 A26 - Rear Light (Tail Light) W/Less Power Module (W/08TKC, 08THM):Diagram1
Mates	LT-TAIL-ASSY-1002-01-05A

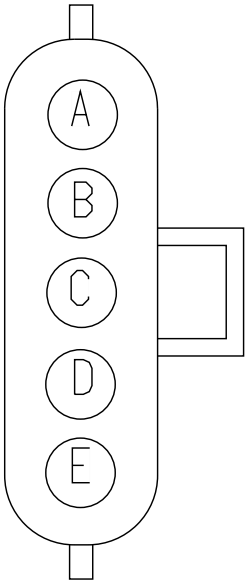

Name	Terminal Part Number	V-Min	Name	Wire Part Number	Wire CSA	Wire Spec	Wire Material description	Wire Color Description	Wire Length	End2 Terminal Part Number	End2 Pin Name	End2 Connect or
A	-	-	RB71	2643690 R1	1.91	14.0	Std. Wall XLPE Primary Cable	ORANGE	2875.0	-	1	9800
B	-	-	RB56	2643690 R1	1.91	14.0	Std. Wall XLPE Primary Cable	ORANGE	2875.0	-	2	9800
C	-	-	RB57	2643690 R1	1.91	14.0	Std. Wall XLPE Primary Cable	ORANGE	2875.0	-	3	9800
D	-	-	RB68	2643688 R1	1.91	14.0	Std. Wall XLPE Primary Cable	BROWN	2875.0	-	4	9800
E	-	-	RB10-G	3510362 R1	3.01	12.0	Thin Wall XLPE Primary Cable	WHITE	2875.0	-	12	9800

Connector Name	9303A
Part Number	1661375C2
Instances	A26 - Backup Light (Dual Daisy Reverse LT)Allison/ZF Trans 3K/4K:Diagram1 A26 - Backup Light (Dual Daisy Reverse LT)Allison/ZF Trans 3K/4K:Diagram2 A26 - Backup Light (Single Reverse Light) W/Less Power Module Allison 3K/4K:Diagram1-Combination1 A26 - Backup Light (Single Reverse Light) W/Less Power Module Allison 3K/4K:Diagram1-Combination2 A26 - Backup Lights (Dual Daisy Reverse Light) Eaton/Manual Trans:Diagram1 A26 - License Plate Light (LED BOX LAMP Daisy Chain Tail Light):Diagram1 A26 - Rear Light (Tail Light) W_Daisy Chain pair of Box Lamps W/08TRS:Diagram1 A26 - Rear Lights Stop - Daisy Chain:Diagram1 A26 - Rear Lights Stop - Single Assemby Jumper Harness W/08TKC, 08THM:Diagram1 A26 - Rear Lights Stop - Single Assemby W/08TKJ:Diagram1 B6.7 - Back-Up Alarm (Automatic) W/ Tailboard:Diagram1 B6.7 - Back-Up Alarm (Automatic) W/O Tailboard:Diagram1 B6.7 - Back-Up Alarm (Manual) W/ Tailboard:Diagram1 B6.7 - Back-Up Alarm (Manual) W/O Tailboard:Diagram1 B6.7 - Backup Light (Dual Daisy Reverse LT)Allison/ZF Trans 1K/2K:Diagram1 B6.7 - Backup Light (Dual Daisy Reverse LT)Allison/ZF Trans 3K/4K:Diagram1 B6.7 - Backup Light (Dual Daisy Reverse LT)Allison/ZF Trans 3K/4K:Diagram2 B6.7 - Backup Light (Single Reverse Light) Allison 1K/2K Option 1:Diagram1 B6.7 - Backup Light (Single Reverse Light) Allison 1K/2K Option 2:Diagram1 B6.7 - Backup Light (Single Reverse Light) Allison 1K/2K Option 3:Diagram1 B6.7 - Backup Light (Single Reverse Light) Allison 3K/4K Option 1:Diagram1 B6.7 - Backup Light (Single Reverse Light) Allison 3K/4K Option 1:Diagram2 B6.7 - Backup Light (Single Reverse Light) Allison 3K/4K Option 2:Diagram1

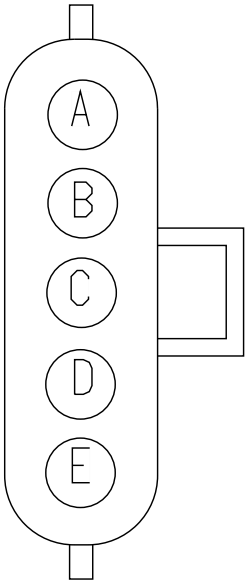

B6.7 - Backup Light (Single Reverse Light) Allison 3K/4K Option 2:Diagram2
B6.7 - Backup Light (Single Reverse Light) Allison 3K/4K Option 3:Diagram1
B6.7 - Backup Light (Single Reverse Light) Allison 3K/4K Option 3:Diagram2
B6.7 - Backup Lights (Dual Daisy Reverse Light) Eaton/Manual Trans:Diagram1
B6.7 - Backup Lights (Single Reverse Light) Eaton/Manual Trans:Diagram1
B6.7 - Backup Lights (Single Reverse Lights) Eaton/Manual Trans Option 1:Diagram1
B6.7 - Backup Lights (Single Reverse Lights) Eaton/Manual Trans Option 2:Diagram1
B6.7 - Directional Signal (Turn) W/ DAISY CHAIN BOX LAMPS:Diagram1
B6.7 - Directional Signal (Turn) W/ DAISY CHAIN BOX LAMPS:Diagram2
B6.7 - Directional Signal (Turn) W/ Daisy Chain Box Lamps W/ Plow Lights:Diagram1
B6.7 - Directional Signal (Turn) W/ Daisy Chain Box Lamps W/ Plow Lights:Diagram2
B6.7 - Directional Signal (Turn) W/ Daisy Chain Box Lamps W/ Plow Lights:Diagram3
B6.7 - Directional Signal (Turn) W/ Daisy Chain Box Lamps W/ Plow Lights:Diagram4
B6.7 - License Plate Light (Tail Light Single Assy) Option 1:Diagram1
B6.7 - License Plate Light (Tail Light Single Assy) Option 2:Diagram1
B6.7 - License Plate Light (Tail Light Single Assy) Option 3:Diagram1
B6.7 - License Plate Light (Tail Light Single Assy) Option 4:Diagram1
B6.7 - License Plate Light (Tail Light Single Assy) W/Less Power Module:Diagram1
B6.7 - Rear Light (Tail Light) Option 1:Diagram1
B6.7 - Rear Light (Tail Light) Option 2:Diagram1
B6.7 - Rear Light (Tail Light) Option 3:Diagram1
B6.7 - Rear Light (Tail Light) Option 4:Diagram1
B6.7 - Rear Light (Tail Light) W_Daisy Chain pair of Box Lamps:Diagram1
B6.7 - Rear Lights Stop - Daisy Chain:Diagram1
B6.7 - Rear Lights Stop - Single Assemby:Diagram1

L9 - Back-Up Alarm (Automatic) W/O Tailboard:Diagram1
L9 - Back-Up Alarm (Manual) W/O Tailboard:Diagram1
L9 - Back-Up Alarm (Manual) W/O Tailboard:Diagram2
L9 - Backup Light (Dual Daisy Reverse Light)Allison/ZF Trans 3K/4K:Diagram1
L9 - Backup Light (Dual Daisy Reverse Light)Allison/ZF Trans 3K/4K:Diagram2
L9 - Backup Lights (Dual Daisy Reverse Light) Eaton/Manual Trans:Diagram1
L9 - Backup Lights (Dual Daisy Reverse Light) Eaton/Manual Trans:Diagram2
L9 - Directional Signal (Turn) W/ DAISY CHAIN BOX LAMPS:Diagram1
L9 - Directional Signal (Turn) W/ DAISY CHAIN BOX LAMPS:Diagram2
L9 - Directional Signal (Turn) W/ Daisy Chain Box Lamps W/ Plow Lights:Diagram1
L9 - Directional Signal (Turn) W/ Daisy Chain Box Lamps W/ Plow Lights:Diagram2
L9 - Directional Signal (Turn) W/ Daisy Chain Box Lamps W/ Plow Lights:Diagram3
L9 - Directional Signal (Turn) W/ Daisy Chain Box Lamps W/ Plow Lights:Diagram4
L9 - License Plate Light (LED BOX LAMP Daisy Chain Tail Light):Diagram1
L9 - Rear Light (Tail Light) W Daisy Chain pair of Box Lamps:Diagram1
L9 - Rear Lights Stop - Daisy Chain:Diagram1

Mates ALRM-REVERSE-3009-02-01A

Name	Terminal Part Number	V-Min	Name	Wire Part Number	Wire CSA	Wire Spec	Wire Material description	Wire Color Description	Wire Length	End2 Terminal Part Number	End2 Pin Name	End2 Connect or
A	-	-	RB71	2643690 R1	1.91	14.0	Std. Wall XLPE Primary Cable	ORANGE	2875.0	-	1	9800
A	-	-	RB56	2643690 R1	1.91	14.0	Std. Wall XLPE Primary Cable	ORANGE	2875.0	-	2	9800

Name	Terminal Part Number	V-Min	Name	Wire Part Number	Wire CSA	Wire Spec	Wire Material description	Wire Color Description	Wire Length	End2 Terminal Part Number	End2 Pin Name	End2 Connect or
B	-	-	RB56	2643690 R1	1.91	14.0	Std. Wall XLPE Primary Cable	ORANGE	2875.0	-	2	9800
C	-	-	RB57	2643690 R1	1.91	14.0	Std. Wall XLPE Primary Cable	ORANGE	2875.0	-	3	9800
D	-	-	RB68	2643688 R1	1.91	14.0	Std. Wall XLPE Primary Cable	BROWN	2875.0	-	4	9800
D	-	-	RB68	2643688 R1	1.91	14.0	Std. Wall XLPE Primary Cable	BROWN	2875.0	-	4	1701F
E	-	-	RB10-G	3510362 R1	3.01	12.0	Thin Wall XLPE Primary Cable	WHITE	2875.0	-	12	9800

Connector Name	9303A
Part Number	1661375C2
Instances	A26 - Backup Light (Single Reverse Light) Allison 3K/4K:Diagram1 A26 - Backup Light (Single Reverse Light) Allison 3K/4K:Diagram2 A26 - Backup Light (Single Reverse Light) Allison 3K/4K Option2:Diagram1 A26 - Backup Light (Single Reverse Light) Allison 3K/4K Option2:Diagram2 A26 - Backup Light (Single Reverse Light)Allison 3K/4K:Diagram1 A26 - Backup Light (Single Reverse Light)Allison 3K/4K:Diagram2 A26 - Backup Lights (Single Reverse Light) Eaton/Manual Trans:Diagram1 A26 - Backup Lights (Single Reverse Lights) Eaton/Manual Trans:Diagram1 A26 - Backup Lights (Single Reverse Lights) Eaton/Manual Trans Option2:Diagram1 A26 - Directional Signal (Turn) W/ Single Tail Board W/Hazard SW:Diagram1 A26 - License Plate Light (Tail Light Single Assembly):Diagram1 A26 - License Plate Light (Tail Light Single Assembly)Option2:Diagram1 A26 - License Plate Light (Tail Light Single Assembly)Option3:Diagram1 A26 - Rear Light (Tail Light) W/08THK:Diagram1 A26 - Rear Light (Tail Light) W/08TKB:Diagram1 A26 - Rear Light (Tail Light) W/08TKJ:Diagram1 A26 - Rear Lights Stop - Single Assemby:Diagram1 L9 - Back-Up Alarm (Automatic) W/ Tailboard:Diagram1 L9 - Back-Up Alarm (Manual) W/ Tailboard:Diagram1 L9 - Back-Up Alarm (Manual) W/ Tailboard:Diagram2 L9 - Backup Light (Single Reverse Light) Allison 3K/4K Option 1:Diagram1 L9 - Backup Light (Single Reverse Light) Allison 3K/4K Option 1:Diagram2 L9 - Backup Light (Single Reverse Light) Allison 3K/4K Option 2:Diagram1 L9 - Backup Light (Single Reverse Light) Allison 3K/4K Option 2:Diagram2

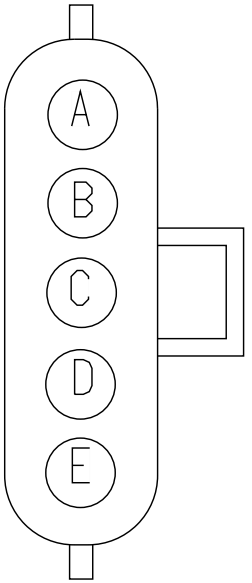

L9 - Backup Light (Single Reverse Light) Allison 3K/4K Option 3:Diagram1
L9 - Backup Light (Single Reverse Light) Allison 3K/4K Option 3:Diagram2
L9 - Backup Light (Single Reverse Light)Allison:Diagram1
L9 - Backup Light (Single Reverse Light)Allison:Diagram2
L9 - Backup Lights (Single Reverse Light) Eaton/Manual Trans Option 1:Diagram1
L9 - Backup Lights (Single Reverse Light) Eaton/Manual Trans Option 1:Diagram2
L9 - Backup Lights (Single Reverse Light) Eaton/Manual Trans Option 2:Diagram1
L9 - Backup Lights (Single Reverse Light) Eaton/Manual Trans Option 2:Diagram2
L9 - Backup Lights (Single Reverse Light) Eaton/Manual Trans Option 3:Diagram1
L9 - Backup Lights (Single Reverse Light) Eaton/Manual Trans Option 3:Diagram2
L9 - Backup Lights (Single Reverse Light) Eaton/Manual Trans Option 4:Diagram1
L9 - Backup Lights (Single Reverse Light) Eaton/Manual Trans Option 4:Diagram2
L9 - License Plate Light (Tail Light Single Assy) Option 1:Diagram1
L9 - License Plate Light (Tail Light Single Assy) Option 2:Diagram1
L9 - License Plate Light (Tail Light Single Assy) Option 3:Diagram1
L9 - License Plate Light (Tail Light Single Assy) Option 4:Diagram1
L9 - Rear Lights Stop - Single Assemby:Diagram1

Mates LT-TAIL ASSY-1002-01-04

Name	Terminal Part Number	V-Min	Name	Wire Part Number	Wire CSA	Wire Spec	Wire Material description	Wire Color Description	Wire Length	End2 Terminal Part Number	End2 Pin Name	End2 Connect or
A	-	-	RB71	2643690 R1	1.91	14.0	Std. Wall XLPE Primary Cable	ORANGE	2875.0	-	1	9800

Name	Terminal Part Number	V-Min	Name	Wire Part Number	Wire CSA	Wire Spec	Wire Material description	Wire Color Description	Wire Length	End2 Terminal Part Number	End2 Pin Name	End2 Connector
B	-	-	RB57	2643690 R1	1.91	14.0	Std. Wall XLPE Primary Cable	ORANGE	2875.0	-	3	9800
B	-	-	RB56	2643690 R1	1.91	14.0	Std. Wall XLPE Primary Cable	ORANGE	2875.0	-	2	9800
C	-	-	RB56	2643690 R1	1.91	14.0	Std. Wall XLPE Primary Cable	ORANGE	2875.0	-	2	9800
C	-	-	RB57	2643690 R1	1.91	14.0	Std. Wall XLPE Primary Cable	ORANGE	2875.0	-	3	9800
D	-	-	RB68	2643688 R1	1.91	14.0	Std. Wall XLPE Primary Cable	BROWN	2875.0	-	4	9800
E	-	-	RB10-G	3510362 R1	3.01	12.0	Thin Wall XLPE Primary Cable	WHITE	2875.0	-	12	9800

Connector Name	9303A
Part Number	1661375C2
Short Description	STOP TAIL AND TURN
Instances	A26 - Backup Light (Dual Reverse Light)Allison/ZF Trans 3K/4K:Diagram1 A26 - Backup Light (Dual Reverse Light)Allison/ZF Trans 3K/4K:Diagram2 A26 - Backup Lights (Dual Reverse Light) Eaton/Manual Trans:Diagram1 A26 - License Plate Light (LED BOX LAMP Tail Light):Diagram1 A26 - Rear Light (LED BOX LAMP Tail Light) W/08TPS, 08TPR:Diagram1 A26 - Rear Lights Stop - Dual Assembly:Diagram1 B6.7 - Backup Light (Dual Reverse Light)Allison/ZF Trans 1K/2K:Diagram1 B6.7 - Backup Light (Dual Reverse Light)Allison/ZF Trans 3K/4K:Diagram1 B6.7 - Backup Light (Dual Reverse Light)Allison/ZF Trans 3K/4K:Diagram2 B6.7 - Backup Lights (Dual Reverse Light) Eaton/Manual Trans:Diagram1 B6.7 - Directional Signal (Turn) W/ LED BOX LAMPS:Diagram1 B6.7 - Directional Signal (Turn) W/ LED BOX LAMPS:Diagram2 B6.7 - Directional Signal (Turn) W/ LED BOX LAMPS W/Plow Lights:Diagram1 B6.7 - Directional Signal (Turn) W/ LED BOX LAMPS W/Plow Lights:Diagram2 B6.7 - Directional Signal (Turn) W/ LED BOX LAMPS W/Plow Lights:Diagram3 B6.7 - Directional Signal (Turn) W/ LED BOX LAMPS W/Plow Lights:Diagram4 B6.7 - License Plate Light (LED BOX LAMP Tail Light):Diagram1 B6.7 - Rear Light (LED BOX LAMP Tail Light):Diagram1 B6.7 - Rear Lights Stop - Dual Assembly:Diagram1 L9 - Backup Lights (Dual Reverse Light) Eaton/Manual Trans:Diagram1 L9 - Backup Lights (Dual Reverse Light) Eaton/Manual Trans:Diagram2 L9 - Directional Signal (Turn) W/ LED BOX LAMPS:Diagram1 L9 - Directional Signal (Turn) W/ LED BOX LAMPS:Diagram2 L9 - Directional Signal (Turn) W/ LED BOX LAMPS W/Plow Lights:Diagram1

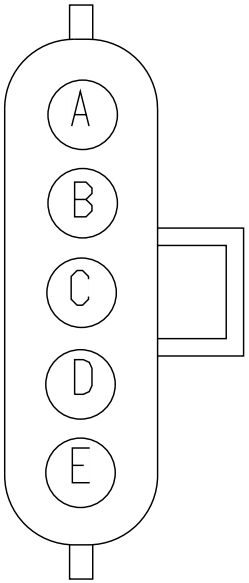

L9 - Directional Signal (Turn) W/ LED BOX LAMPS W/Plow Lights:Diagram2
L9 - Directional Signal (Turn) W/ LED BOX LAMPS W/Plow Lights:Diagram3
L9 - Directional Signal (Turn) W/ LED BOX LAMPS W/Plow Lights:Diagram4
L9 - License Plate Light (LED BOX LAMP Tail Light):Diagram1
L9 - Rear Light (LED BOX LAMP Tail Light):Diagram1
L9 - Rear Light (Tail Light):Diagram1
L9 - Rear Lights Stop - Dual Assembly:Diagram1

Mates 71

Name	Terminal Part Number	V-Min	Name	Wire Part Number	Wire CSA	Wire Spec	Wire Material description	Wire Color Description	Wire Length	End2 Terminal Part Number	End2 Pin Name	End2 Connect or
A	-	-	RB71	2643690 R1	1.91	14.0	Std. Wall XLPE Primary Cable	ORANGE	2875.0	-	1	9800
B	-	-	RB56	2643690 R1	1.91	14.0	Std. Wall XLPE Primary Cable	ORANGE	2875.0	-	2	9800
C	-	-	RB57	2643690 R1	1.91	14.0	Std. Wall XLPE Primary Cable	ORANGE	2875.0	-	3	9800
D	-	-	RB68	2643688 R1	1.91	14.0	Std. Wall XLPE Primary Cable	BROWN	2875.0	-	4	9800
D	-	-	RB68	2643688 R1	1.91	14.0	Std. Wall XLPE Primary Cable	BROWN	2875.0	-	4	1701F
E	-	-	RB10-G	3510362 R1	3.01	12.0	Thin Wall XLPE Primary Cable	WHITE	2875.0	-	12	9800

Connector Name	9303A
Part Number	1661375C2
Instances	A26 - Backup Lights (Reverse) W/Less Power Module Eaton/ Manual Trans:Diagram1 B6.7 - Directional Signal (Turn) W/ Less Power Module Tail Board W/Hazard SW W/PLOW LIGHTS:Diagram1 B6.7 - Directional Signal (Turn) W/ Less Power Module Tail Board W/Hazard SW W/PLOW LIGHTS:Diagram2 B6.7 - Directional Signal (Turn) W/ Less Power Module Tail Board W/Hazard SW W/PLOW LIGHTS:Diagram3 B6.7 - Directional Signal (Turn) W/ Less Power Module Tail Board W/Hazard SW W/PLOW LIGHTS:Diagram4 B6.7 - Directional Signal (Turn) W/ Less Power Module Tail Board W/Hazard SW:Diagram1 B6.7 - Directional Signal (Turn) W/ Less Power Module Tail Board W/Hazard SW:Diagram2 B6.7 - Directional Signal (Turn) W/ Single Tail Board W/Hazard SW:Diagram1 B6.7 - Directional Signal (Turn) W/ Single Tail Board W/Hazard SW:Diagram2 B6.7 - Directional Signal (Turn) W/ Single Tail Board W/Plow Lights:Diagram1 B6.7 - Directional Signal (Turn) W/ Single Tail Board W/Plow Lights:Diagram2 B6.7 - Directional Signal (Turn) W/ Single Tail Board W/Plow Lights:Diagram3 B6.7 - Directional Signal (Turn) W/ Single Tail Board W/Plow Lights:Diagram4 L9 - Directional Signal (Turn) W/ Less Power Module Tail Board W/Hazard SW W/PLOW LIGHTS:Diagram1 L9 - Directional Signal (Turn) W/ Less Power Module Tail Board W/Hazard SW W/PLOW LIGHTS:Diagram2 L9 - Directional Signal (Turn) W/ Less Power Module Tail Board W/Hazard SW W/PLOW LIGHTS:Diagram3 L9 - Directional Signal (Turn) W/ Less Power Module Tail Board W/Hazard SW W/PLOW LIGHTS:Diagram4 L9 - Directional Signal (Turn) W/ Less Power Module Tail Board W/Hazard SW:Diagram1 L9 - Directional Signal (Turn) W/ Less Power Module Tail Board W/Hazard SW:Diagram2 L9 - Directional Signal (Turn) W/ Single Tail Board W/Hazard SW:Diagram1

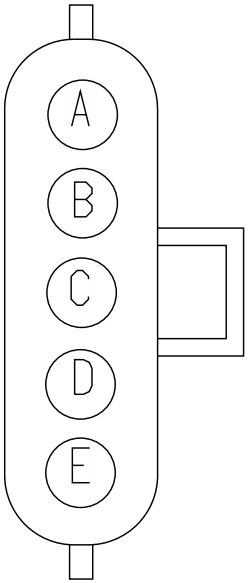

L9 - Directional Signal (Turn) W/ Single Tail Board W/Hazard SW:Diagram2
L9 - Directional Signal (Turn) W/ Single Tail Board W/Plow Lights:Diagram1
L9 - Directional Signal (Turn) W/ Single Tail Board W/Plow Lights:Diagram2
L9 - Directional Signal (Turn) W/ Single Tail Board W/Plow Lights:Diagram3
L9 - Directional Signal (Turn) W/ Single Tail Board W/Plow Lights:Diagram4

Mates LT-TAIL-ASSY-1002-01-10A

Name	Terminal Part Number	V-Min	Name	Wire Part Number	Wire CSA	Wire Spec	Wire Material description	Wire Color Description	Wire Length	End2 Terminal Part Number	End2 Pin Name	End2 Connector
A	-	-	RB71	2643690 R1	1.91	14.0	Std. Wall XLPE Primary Cable	ORANGE	2875.0	-	1	9800
B	-	-	RB56	2643690 R1	1.91	14.0	Std. Wall XLPE Primary Cable	ORANGE	2875.0	-	2	9800
C	-	-	RB57	2643690 R1	1.91	14.0	Std. Wall XLPE Primary Cable	ORANGE	2875.0	-	3	9800
E	-	-	RB10-G	3510362 R1	3.01	12.0	Thin Wall XLPE Primary Cable	WHITE	2875.0	-	12	9800

Connector Name	9303A
Part Number	1661375C2
Short Description	STOP TAIL AND TURN
Instances	A26 - Directional Signal (Turn) W/ LED BOX LAMPS:Diagram1 A26 - Directional Signal (Turn) W/ LED BOX LAMPS, W/Plow Lights:Diagram1-Option 1 (Snow Plow #1) A26 - Directional Signal (Turn) W/ LED BOX LAMPS, W/Plow Lights:Diagram1-Option 2 (Snow Plow #2)
Mates	71

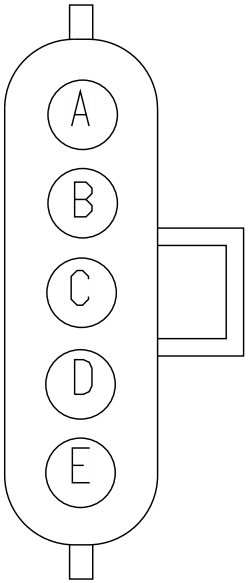

Name	Terminal Part Number	V-Min	Name	Wire Part Number	Wire CSA	Wire Spec	Wire Material description	Wire Color Description	Wire Length	End2 Terminal Part Number	End2 Pin Name	End2 Connect or
B	-	-	RB56	2643690 R1	1.91	14.0	Std. Wall XLPE Primary Cable	ORANGE	2875.0	-	2	9800
C	-	-	RB57	2643690 R1	1.91	14.0	Std. Wall XLPE Primary Cable	ORANGE	2875.0	-	3	9800
E	-	-	RB10-G	3510362 R1	3.01	12.0	Thin Wall XLPE Primary Cable	WHITE	2875.0	-	12	9800

Connector Name 945

Part Number 3866817C1

Instances A26 - Battery International (4) 12V:Diagram1
A26 - Bosch LIL165 LIL200 Alternator W/Sensor:Diagram1
A26 - Bosch LIL165 LIL200 Alternator W/Sensor:Diagram2
A26 - Delco Remy 28SI Alternator W/Sensor:Diagram1
A26 - Delco Remy 28SI Alternator W/Sensor:Diagram2
A26 - Delco Remy 36SI Alternator W/Sensor:Diagram1
A26 - Delco Remy 36SI Alternator W/Sensor:Diagram2
A26 - Delco Remy 40SI Alternator W/Sensor:Diagram1
A26 - Delco Remy 40SI Alternator W/Sensor:Diagram2
A26 - Leece-Neville - LN 325A Alternator W/Sensor:Diagram1
A26 - Leece-Neville - LN 325A Alternator W/Sensor:Diagram2
A26 - Leece-Neville AVI160-210A/240A Alternator W/ Sensor:Diagram1
A26 - Leece-Neville AVI160-210A/240A Alternator W/ Sensor:Diagram2

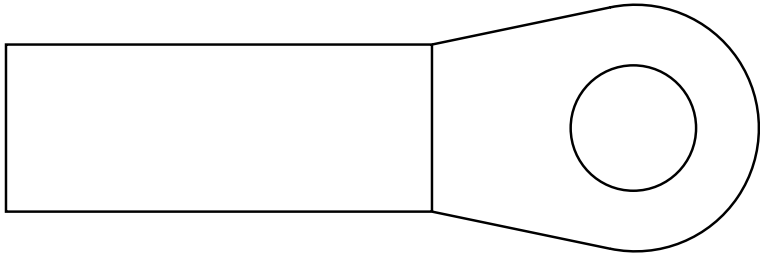

Mates BTRY-925CCA_1-4005-01-01D

Name	Terminal Part Number	V-Min	Name	Wire Part Number	Wire CSA	Wire Spec	Wire Material description	Wire Color Description	Wire Length	End2 Terminal Part Number	End2 Pin Name	End2 Connect or
1	-	-	JS1B	2643692 R1	1.91	14.0	Std. Wall XLPE Primary Cable	TAN	290.0	-	A	1F
1	-	-	7A	2643686 R1	1.91	14.0	Std. Wall XLPE Primary Cable	RED	3950.0	-	1	123
1	-	-	14	2645953 R1	18.94	4.0	SGX NFLEX 125	RED	3700.0	-	1	S97_9251

Connector Name	9501
Part Number	1684261C1
Instances	L9 - Antilock Brake System (ABS) BENDIX 4 Channel Implemenation:Diagram1
Mates	SNSR-WS-3003-01-03B

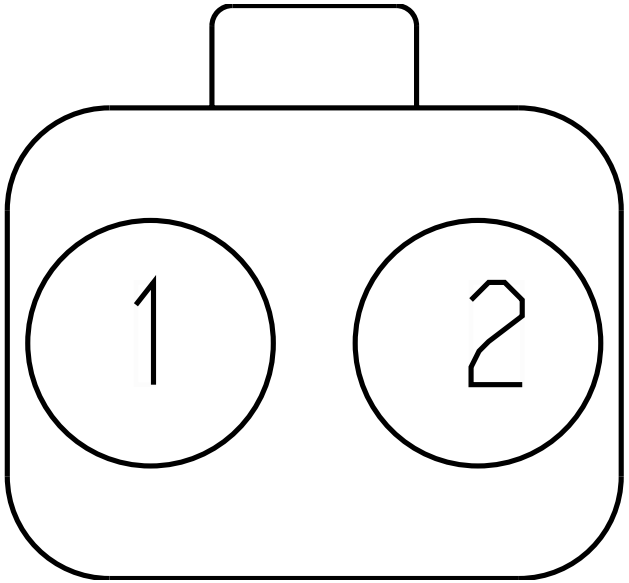

Name	Terminal Part Number	V-Min	Name	Wire Part Number	Wire CSA	Wire Spec	Wire Material description	Wire Color Description	Wire Length	End2 Terminal Part Number	End2 Pin Name	End2 Connect or
1	-	-	RC94A	2643680 R1	1.16	16.0	Std. Wall XLPE Primary Cable	GREY	965.0	-	13	9800
2	-	-	RC94B	2643682 R1	1.16	16.0	Std. Wall XLPE Primary Cable	ORANGE	965.0	-	14	9800

Connector Name	9501
Part Number	3539777C1
Instances	B6.7 - Antilock Brake System (ABS) BENDIX 4 Channel Implemenation:Diagram1 B6.7 - Antilock Brake System (ABS) BENDIX 4 Channel Implemenation:Diagram2 B6.7 - Antilock Brake System (ABS) BENDIX 4 Channel Implemenation:Diagram3
Mates	SNSR-WS-3003-01-03B

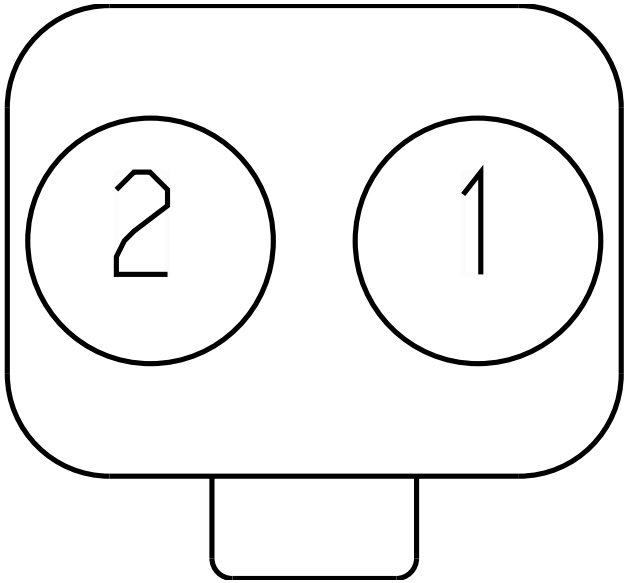

Name	Terminal Part Number	V-Min	Name	Wire Part Number	Wire CSA	Wire Spec	Wire Material description	Wire Color Description	Wire Length	End2 Terminal Part Number	End2 Pin Name	End2 Connect or
1	-	-	RC94A	2643680 R1	1.16	16.0	Std. Wall XLPE Primary Cable	GREY	965.0	-	13	9800
2	-	-	RC94B	2643682 R1	1.16	16.0	Std. Wall XLPE Primary Cable	ORANGE	965.0	-	14	9800

Connector Name	9502
Part Number	1686834C1
Instances	B6.7 - Antilock Brake System (ABS) BENDIX 4 Channel Implemenation:Diagram1 B6.7 - Antilock Brake System (ABS) BENDIX 4 Channel Implemenation:Diagram2 B6.7 - Antilock Brake System (ABS) BENDIX 4 Channel Implemenation:Diagram3 L9 - Antilock Brake System (ABS) BENDIX 4 Channel Implemenation:Diagram1
Mates	MDL-ABS-3003-01-03A

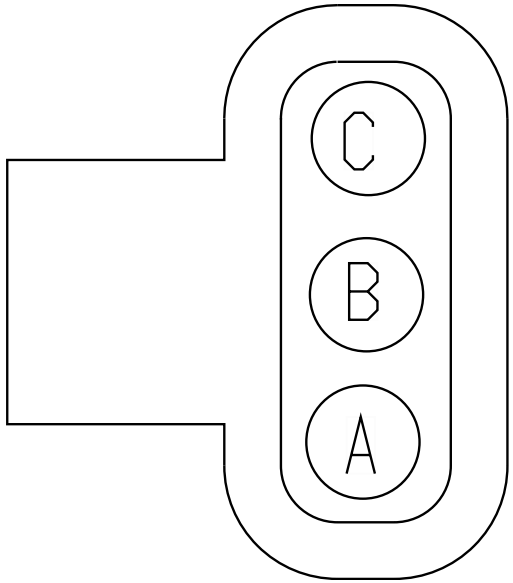

Name	Terminal Part Number	V-Min	Name	Wire Part Number	Wire CSA	Wire Spec	Wire Material description	Wire Color Description	Wire Length	End2 Terminal Part Number	End2 Pin Name	End2 Connect or
A	-	-	RC94E	3510294 R1	1.16	16.0	Thin Wall XLPE Primary Cable	BLACK	965.0	-	17	9800
B	-	-	RC94F	3510366 R1	1.16	16.0	Thin Wall XLPE Primary Cable	RED	965.0	-	18	9800
C	-	-	RC94H	3510306 R1	1.16	16.0	Thin Wall XLPE Primary Cable	BROWN	965.0	-	19	9800

Connector Name	9503
Part Number	1684261C1
Instances	L9 - Antilock Brake System (ABS) BENDIX 4 Channel Implemenation:Diagram1
Mates	SNSR-WS-3003-01-03A

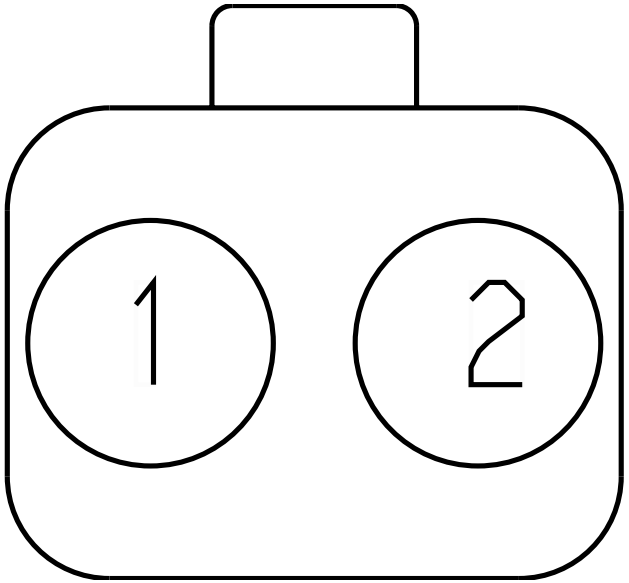

Name	Terminal Part Number	V-Min	Name	Wire Part Number	Wire CSA	Wire Spec	Wire Material description	Wire Color Description	Wire Length	End2 Terminal Part Number	End2 Pin Name	End2 Connect or
1	-	-	RC94C	2643721 R1	1.16	16.0	Std. Wall XLPE Primary Cable	DARK BLUE	1500.0	-	15	9800
2	-	-	RC94D	2643684 R1	1.16	16.0	Std. Wall XLPE Primary Cable	YELLOW 2	1500.0	-	16	9800

Connector Name	9503
Part Number	3539777C1
Instances	B6.7 - Antilock Brake System (ABS) BENDIX 4 Channel Implemenation:Diagram1 B6.7 - Antilock Brake System (ABS) BENDIX 4 Channel Implemenation:Diagram2 B6.7 - Antilock Brake System (ABS) BENDIX 4 Channel Implemenation:Diagram3
Mates	SNSR-WS-3003-01-03A

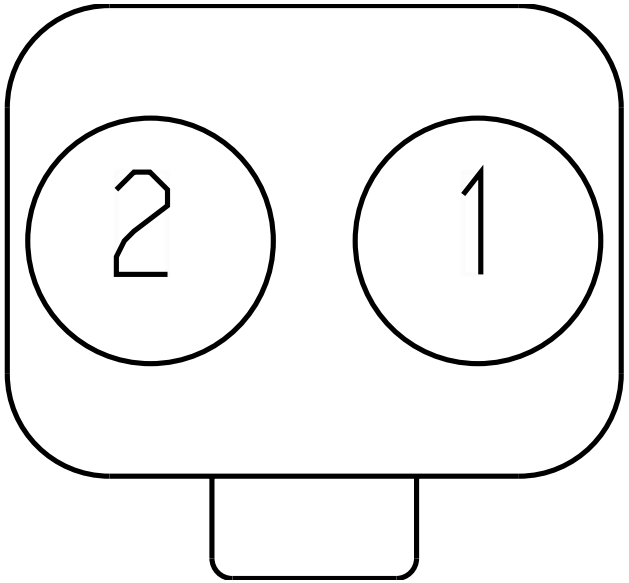

Name	Terminal Part Number	V-Min	Name	Wire Part Number	Wire CSA	Wire Spec	Wire Material description	Wire Color Description	Wire Length	End2 Terminal Part Number	End2 Pin Name	End2 Connect or
1	-	-	RC94C	2643721 R1	1.16	16.0	Std. Wall XLPE Primary Cable	DARK BLUE	1500.0	-	15	9800
2	-	-	RC94D	2643684 R1	1.16	16.0	Std. Wall XLPE Primary Cable	YELLOW 2	1500.0	-	16	9800

Connector Name	9504
Part Number	1686834C1
Instances	B6.7 - Antilock Brake System (ABS) BENDIX 4 Channel Implemenation:Diagram1 B6.7 - Antilock Brake System (ABS) BENDIX 4 Channel Implemenation:Diagram2 B6.7 - Antilock Brake System (ABS) BENDIX 4 Channel Implemenation:Diagram3 L9 - Antilock Brake System (ABS) BENDIX 4 Channel Implemenation:Diagram1
Mates	MDL-ABS-3003-01-03B

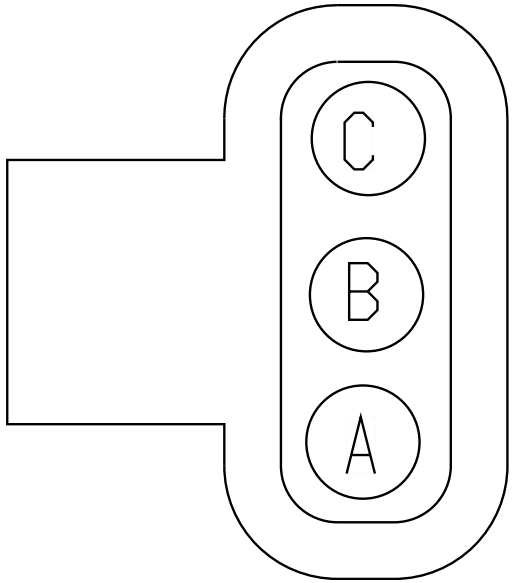

Name	Terminal Part Number	V-Min	Name	Wire Part Number	Wire CSA	Wire Spec	Wire Material description	Wire Color Description	Wire Length	End2 Terminal Part Number	End2 Pin Name	End2 Connect or
A	-	-	RC94J	3510348 R1	1.16	16.0	Thin Wall XLPE Primary Cable	VIOLET	1400.0	-	20	9800
B	-	-	RC94K	3510300 R1	1.16	16.0	Thin Wall XLPE Primary Cable	LIGHT GREEN	1400.0	-	21	9800
C	-	-	RC94L	3510342 R1	1.16	16.0	Thin Wall XLPE Primary Cable	LIGHT BLUE	1400.0	-	22	9800

Connector Name	9510B
Part Number	1678137C1
Instances	A26 - Bendix Tractor or Towing Truck W/ Air SUSP J1939 Driven Lamp:Diagram1 A26 - Bendix Tractor or Towing Truck W/ Air SUSP J1939 Driven Lamp:Diagram2 A26 - Bendix Tractor or Towing Truck W/ Air SUSP J1939 Driven Lamp:Diagram3 A26 - Bendix Tractor or Towing Truck W/ Air SUSP J1939 Driven Lamp:Diagram4 L9 - Bendix Tractor or Towing Truck W/ Air SUSP J1939 Driven Lamp:Diagram1 L9 - Bendix Tractor or Towing Truck W/ Air SUSP J1939 Driven Lamp:Diagram2
Mates	SNSR-SUSPENSION_PT-3026-01 -03A

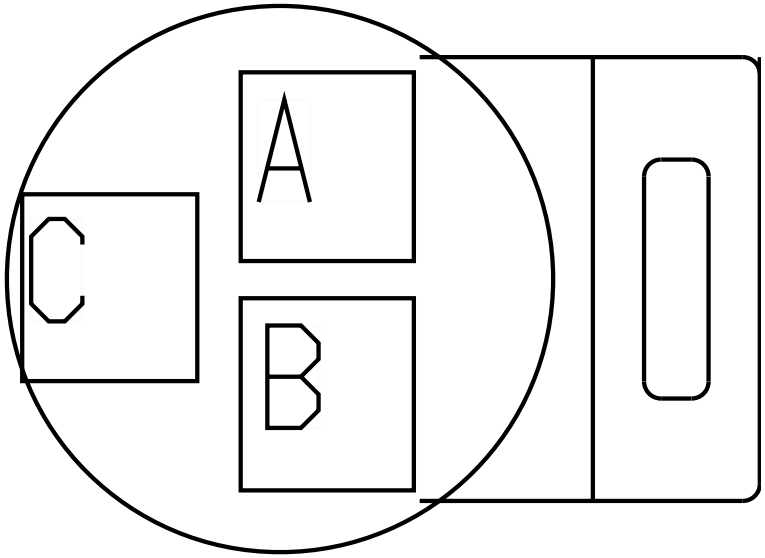

Name	Terminal Part Number	V-Min	Name	Wire Part Number	Wire CSA	Wire Spec	Wire Material description	Wire Color Description	Wire Length	End2 Terminal Part Number	End2 Pin Name	End2 Connector
A	-	-	TD94SZC	3510312 R1	1.16	16.0	Thin Wall XLPE Primary Cable	GREY	1935.0	-	A	9510M
B	-	-	TD94SH	3510312 R1	1.16	16.0	Thin Wall XLPE Primary Cable	GREY	1935.0	-	C	9510M
C	-	-	TD94SVC	3510312 R1	1.16	16.0	Thin Wall XLPE Primary Cable	GREY	1935.0	-	B	9510M

Connector Name	9510M
Part Number	1667741C1
Short Description	RSP TRANSDUCER
Instances	A26 - Bendix Tractor or Towing Truck W/ Air SUSP J1939 Driven Lamp:Diagram1 A26 - Bendix Tractor or Towing Truck W/ Air SUSP J1939 Driven Lamp:Diagram2 A26 - Bendix Tractor or Towing Truck W/ Air SUSP J1939 Driven Lamp:Diagram3 A26 - Bendix Tractor or Towing Truck W/ Air SUSP J1939 Driven Lamp:Diagram4 L9 - Bendix Tractor or Towing Truck W/ Air SUSP J1939 Driven Lamp:Diagram1 L9 - Bendix Tractor or Towing Truck W/ Air SUSP J1939 Driven Lamp:Diagram2
Mates	9510

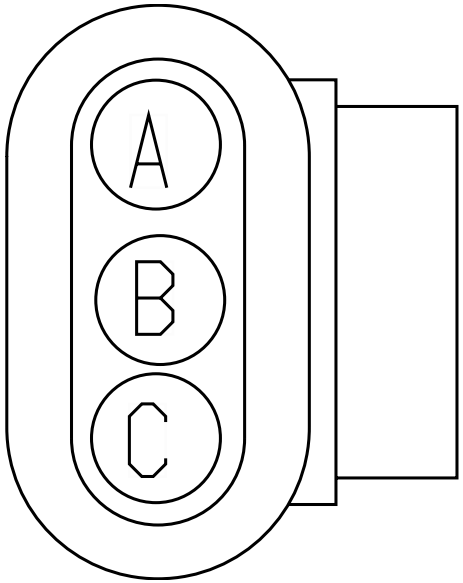

Name	Terminal Part Number	V-Min	Name	Wire Part Number	Wire CSA	Wire Spec	Wire Material description	Wire Color Description	Wire Length	End2 Terminal Part Number	End2 Pin Name	End2 Connect or
A	-	-	TD94SZC	3510312 R1	1.16	16.0	Thin Wall XLPE Primary Cable	GREY	1935.0	-	A	9510B
B	-	-	TD94SVC	3510312 R1	1.16	16.0	Thin Wall XLPE Primary Cable	GREY	1935.0	-	C	9510B
C	-	-	TD94SH	3510312 R1	1.16	16.0	Thin Wall XLPE Primary Cable	GREY	1935.0	-	B	9510B

Connector Name	9510
Part Number	1667740C1
Short Description	RSP TRANSDUCER
Instances	A26 - Bendix Tractor or Towing Truck W/ Air SUSP J1939 Driven Lamp:Diagram1 A26 - Bendix Tractor or Towing Truck W/ Air SUSP J1939 Driven Lamp:Diagram2 A26 - Bendix Tractor or Towing Truck W/ Air SUSP J1939 Driven Lamp:Diagram3 A26 - Bendix Tractor or Towing Truck W/ Air SUSP J1939 Driven Lamp:Diagram4 L9 - Bendix Tractor or Towing Truck W/ Air SUSP J1939 Driven Lamp:Diagram1 L9 - Bendix Tractor or Towing Truck W/ Air SUSP J1939 Driven Lamp:Diagram2
Mates	9510M

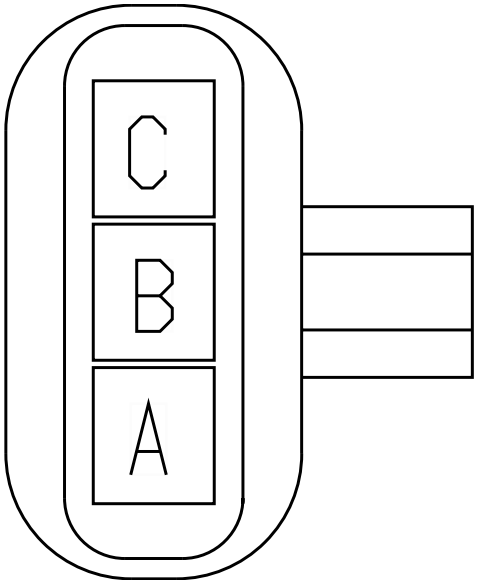

Name	Terminal Part Number	V-Min	Name	Wire Part Number	Wire CSA	Wire Spec	Wire Material description	Wire Color Description	Wire Length	End2 Terminal Part Number	End2 Pin Name	End2 Connector
A	-	-	WA94SZC	2643680 R1	1.16	16.0	Std. Wall XLPE Primary Cable	GREY	4540.0	-	10	9524
B	-	-	WA94SVC	2643680 R1	1.16	16.0	Std. Wall XLPE Primary Cable	GREY	4540.0	-	11	9524
C	-	-	WA94SH	2643680 R1	1.16	16.0	Std. Wall XLPE Primary Cable	GREY	4540.0	-	12	9524

Connector Name 9512C

Part Number 3678796C1

Instances A26 - Bendix Tractor or Towing Truck N/ Air SUSP J1939 Driven Lamp:Diagram3
A26 - Bendix Tractor or Towing Truck N/ Air SUSP J1939 Driven Lamp:Diagram4
A26 - Bendix Tractor or Towing Truck W/ Air SUSP J1939 Driven Lamp:Diagram3
A26 - Bendix Tractor or Towing Truck W/ Air SUSP J1939 Driven Lamp:Diagram4
A26 - Stability Control (Bendix Straight Truck J1939 Driven Lamp):Diagram3
A26 - Stability Control (Bendix Straight Truck J1939 Driven Lamp):Diagram4

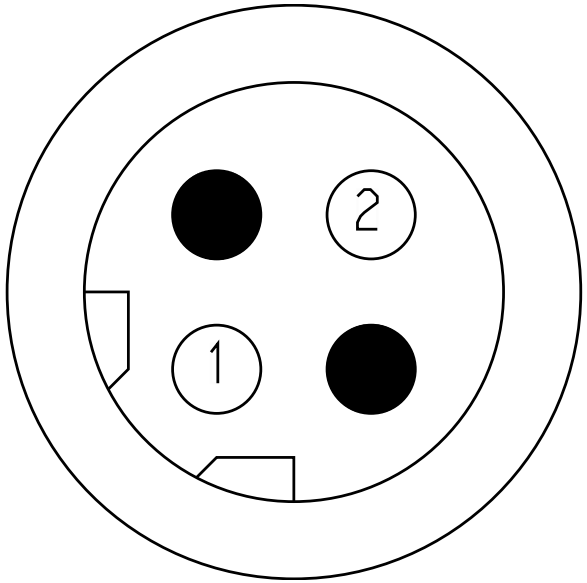

Name	Terminal Part Number	V-Min	Name	Wire Part Number	Wire CSA	Wire Spec	Wire Material description	Wire Color Description	Wire Length	End2 Terminal Part Number	End2 Pin Name	End2 Connect or
1	-	-	VT94SJ	2643673 R1	0.79	18.0	Std. Wall XLPE Primary Cable	GREY	1660.0	-	49	1701F
2	-	-	VT94SK	2643673 R1	0.79	18.0	Std. Wall XLPE Primary Cable	GREY	1660.0	-	69	1701F

Connector Name	9512
Part Number	3678796C1
Instances	A26 - Bendix Tractor or Towing Truck N/ Air SUSP J1939 Driven Lamp:Diagram1 A26 - Bendix Tractor or Towing Truck N/ Air SUSP J1939 Driven Lamp:Diagram2 A26 - Bendix Tractor or Towing Truck W/ Air SUSP J1939 Driven Lamp:Diagram1 A26 - Bendix Tractor or Towing Truck W/ Air SUSP J1939 Driven Lamp:Diagram2 A26 - Stability Control (Bendix Straight Truck J1939 Driven Lamp):Diagram1 A26 - Stability Control (Bendix Straight Truck J1939 Driven Lamp):Diagram2 B6.7 - Stability Control (Bendix Straight Truck J1939 Driven Lamp):Diagram1 B6.7 - Stability Control (Bendix Straight Truck J1939 Driven Lamp):Diagram2 B6.7 - Stability Control (Bendix Straight Truck J1939 Driven Lamp):Diagram3 B6.7 - Stability Control (Bendix Straight Truck J1939 Driven Lamp):Diagram4 B6.7 - Traction Control (Bendix):Diagram1 B6.7 - Traction Control (Bendix):Diagram2 L9 - Bendix Tractor or Towing Truck W/ Air SUSP J1939 Driven Lamp:Diagram1 L9 - Bendix Tractor or Towing Truck W/ Air SUSP J1939 Driven Lamp:Diagram2 L9 - Stability Control (Bendix Straight Truck J1939 Driven Lamp):Diagram1 L9 - Stability Control (Bendix Straight Truck J1939 Driven Lamp):Diagram2 L9 - Stability Control (Bendix Straight Truck J1939 Driven Lamp):Diagram3 L9 - Stability Control (Bendix Straight Truck J1939 Driven Lamp):Diagram4
Mates	SOL-TCV_BENDIX-3026-01-01A

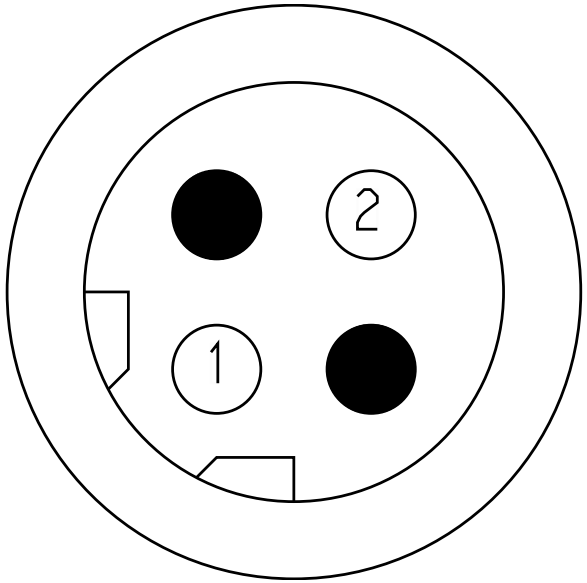

Name	Terminal Part Number	V-Min	Name	Wire Part Number	Wire CSA	Wire Spec	Wire Material description	Wire Color Description	Wire Length	End2 Terminal Part Number	End2 Pin Name	End2 Connector
1	-	-	WA94SJ	2643680 R1	1.16	16.0	Std. Wall XLPE Primary Cable	GREY	1695.0	-	5	9524
1	-	-	VT94SJ	2643673 R1	0.79	18.0	Std. Wall XLPE Primary Cable	GREY	1660.0	-	49	1701F
1	-	-	RD94BE	3510336 R1	1.16	16.0	Thin Wall XLPE Primary Cable	YELLOW 2	410.0	-	24	9800
1	-	-	UD94BE	3510336 R1	1.16	16.0	Thin Wall XLPE Primary Cable	YELLOW 2	1865.0	-	24	9800
2	-	-	WA94SK	2643680 R1	1.16	16.0	Std. Wall XLPE Primary Cable	GREY	1695.0	-	6	9524
2	-	-	VT94SK	2643673 R1	0.79	18.0	Std. Wall XLPE Primary Cable	GREY	1660.0	-	69	1701F
2	-	-	RD94BD	3510306 R1	1.16	16.0	Thin Wall XLPE Primary Cable	BROWN	410.0	-	23	9800
2	-	-	UD94BD	3510306 R1	1.16	16.0	Thin Wall XLPE Primary Cable	BROWN	1865.0	-	23	9800

Connector Name 9513

Part Number 1686834C1

Instances A26 - Bendix Tractor or Towing Truck N/ Air SUSP J1939 Driven Lamp:Diagram1
A26 - Bendix Tractor or Towing Truck N/ Air SUSP J1939 Driven Lamp:Diagram2
A26 - Bendix Tractor or Towing Truck N/ Air SUSP J1939 Driven Lamp:Diagram3
A26 - Bendix Tractor or Towing Truck N/ Air SUSP J1939 Driven Lamp:Diagram4
A26 - Bendix Tractor or Towing Truck W/ Air SUSP J1939 Driven Lamp:Diagram1
A26 - Bendix Tractor or Towing Truck W/ Air SUSP J1939 Driven Lamp:Diagram2
A26 - Bendix Tractor or Towing Truck W/ Air SUSP J1939 Driven Lamp:Diagram3
A26 - Bendix Tractor or Towing Truck W/ Air SUSP J1939 Driven Lamp:Diagram4
L9 - Bendix Tractor or Towing Truck W/ Air SUSP J1939 Driven Lamp:Diagram1
L9 - Bendix Tractor or Towing Truck W/ Air SUSP J1939 Driven Lamp:Diagram2

Mates MDL-TRAILER-3026-01-02A

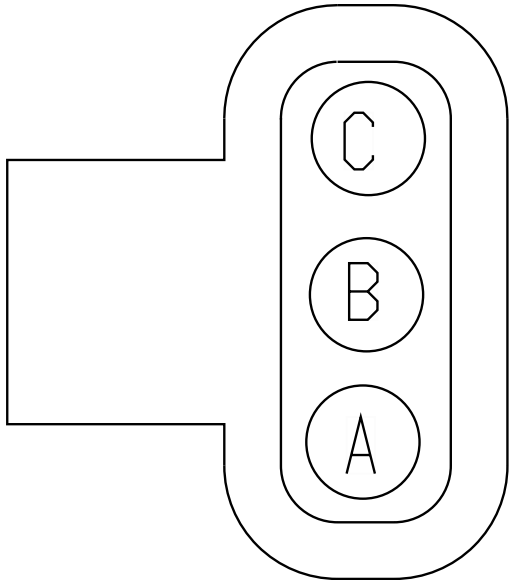

Name	Terminal Part Number	V-Min	Name	Wire Part Number	Wire CSA	Wire Spec	Wire Material description	Wire Color Description	Wire Length	End2 Terminal Part Number	End2 Pin Name	End2 Connector
A	-	-	WA94SM	2643680 R1	1.16	16.0	Std. Wall XLPE Primary Cable	GREY	1845.0	-	7	9524
B	-	-	WA94SN	2643680 R1	1.16	16.0	Std. Wall XLPE Primary Cable	GREY	1845.0	-	8	9524
C	-	-	WA94SL	2643680 R1	1.16	16.0	Std. Wall XLPE Primary Cable	GREY	1845.0	-	9	9524

Connector Name 9514D/9514F

Part Number 3601685C1

Instances A26 - ABS Private J1939:A26 - ABS Private J1939
A26 - CAN Layout:ABS Proprietary J1939
L9 - ABS Private J1939:L9 - ABS Private J1939
L9 - CAN Layout:ABS Proprietary J1939

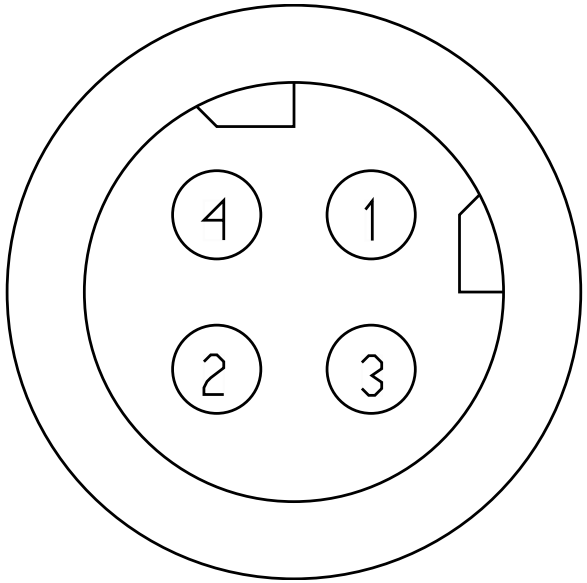

Name	Terminal Part Number	V-Min	Name	Wire Part Number	Wire CSA	Wire Spec	Wire Material description	Wire Color Description	Wire Length	End2 Terminal Part Number	End2 Pin Name	End2 Connect or
1	-	-	WIRE239188	-	0.0	-	-	-	0.0	-	54	1701F
2	-	-	WIRE239189	-	0.0	-	-	-	0.0	-	55	1701F
3	-	-	WIRE239190	-	0.0	-	-	-	0.0	-	56	1701F
4	-	-	WIRE239191	-	0.0	-	-	-	0.0	-	57	1701F

Connector Name 9514D

Part Number 3601685C1

Instances A26 - Bendix Tractor or Towing Truck N/ Air SUSP J1939 Driven Lamp:Diagram3
A26 - Bendix Tractor or Towing Truck W/ Air SUSP J1939 Driven Lamp:Diagram3
A26 - Stability Control (Bendix Straight Truck J1939 Driven Lamp):Diagram3
B6.7 - ABS Private J1939:B6.7 - ABS Private J1939
B6.7 - CAN Layout:ABS Proprietary J1939
B6.7 - Stability Control (Bendix Straight Truck J1939 Driven Lamp):Diagram3
L9 - Stability Control (Bendix Straight Truck J1939 Driven Lamp):Diagram3

Mates SNSR-YAW_RATE-3026-01-01A

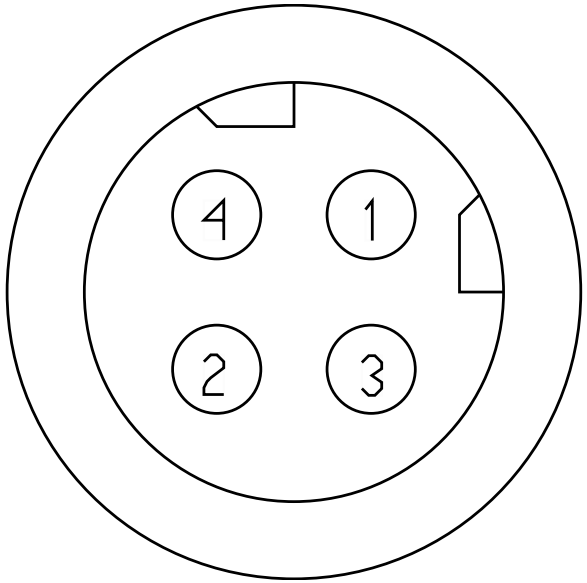

Name	Terminal Part Number	V-Min	Name	Wire Part Number	Wire CSA	Wire Spec	Wire Material description	Wire Color Description	Wire Length	End2 Terminal Part Number	End2 Pin Name	End2 Connect or
1	-	-	TA94SAB	2643673 R1	0.79	18.0	Std. Wall XLPE Primary Cable	GREY	2985.0	-	54	1701F
1	-	-	WIRE239 188	-	0.0	-	-	-	0.0	-	54	1701F
2	-	-	TA94SCB	2643673 R1	0.79	18.0	Std. Wall XLPE Primary Cable	GREY	2985.0	-	55	1701F
2	-	-	WIRE239 189	-	0.0	-	-	-	0.0	-	55	1701F
3	-	-	-	-	-	-	-	-	-	-	-	-
3	-	-	WIRE239 190	-	0.0	-	-	-	0.0	-	56	1701F
4	-	-	-	-	-	-	-	-	-	-	-	-
4	-	-	WIRE239 191	-	0.0	-	-	-	0.0	-	57	1701F

Connector Name 9514F

Part Number 3601685C1

Instances A26 - Bendix Tractor or Towing Truck N/ Air SUSP J1939 Driven Lamp:Diagram4
A26 - Bendix Tractor or Towing Truck W/ Air SUSP J1939 Driven Lamp:Diagram4
A26 - Stability Control (Bendix Straight Truck J1939 Driven Lamp):Diagram4
B6.7 - Stability Control (Bendix Straight Truck J1939 Driven Lamp):Diagram4
L9 - Stability Control (Bendix Straight Truck J1939 Driven Lamp):Diagram4

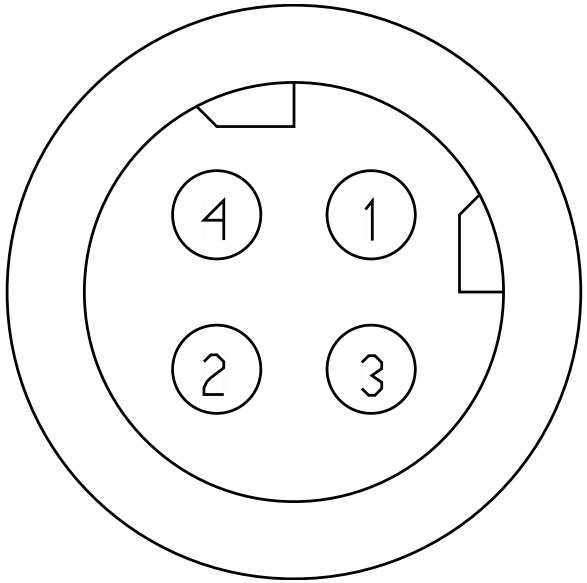

Name	Terminal Part Number	V-Min	Name	Wire Part Number	Wire CSA	Wire Spec	Wire Material description	Wire Color Description	Wire Length	End2 Terminal Part Number	End2 Pin Name	End2 Connect or
1	-	-	TG94SAB	2643673 R1	0.79	18.0	Std. Wall XLPE Primary Cable	GREY	4555.0	-	54	1701F
2	-	-	TG94SCB	2643673 R1	0.79	18.0	Std. Wall XLPE Primary Cable	GREY	4555.0	-	55	1701F

Connector Name 9514H

Part Number 3601685C1

Instances A26 - Bendix Tractor or Towing Truck N/ Air SUSP J1939 Driven Lamp:Diagram2
A26 - Bendix Tractor or Towing Truck W/ Air SUSP J1939 Driven Lamp:Diagram2
A26 - Stability Control (Bendix Straight Truck J1939 Driven Lamp):Diagram2
B6.7 - Stability Control (Bendix Straight Truck J1939 Driven Lamp):Diagram2
L9 - Bendix Tractor or Towing Truck W/ Air SUSP J1939 Driven Lamp:Diagram2
L9 - Stability Control (Bendix Straight Truck J1939 Driven Lamp):Diagram2

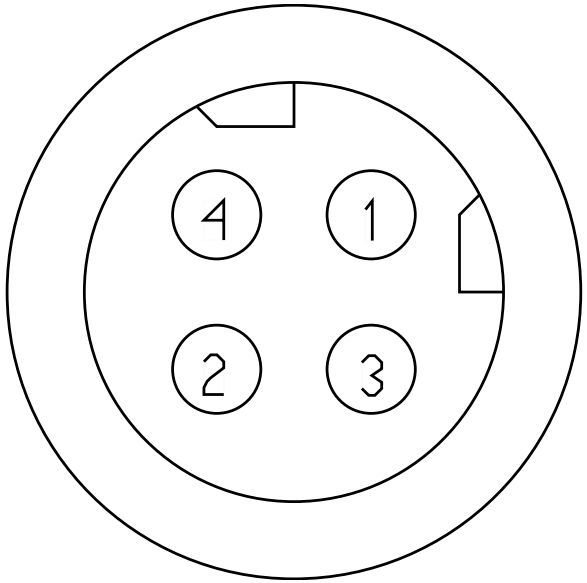

Name	Terminal Part Number	V-Min	Name	Wire Part Number	Wire CSA	Wire Spec	Wire Material description	Wire Color Description	Wire Length	End2 Terminal Part Number	End2 Pin Name	End2 Connect or
1	-	-	WC94SAB	2643673 R1	0.79	18.0	Std. Wall XLPE Primary Cable	GREY	4615.0	-	1	9524
2	-	-	WC94SBB	2643673 R1	0.79	18.0	Std. Wall XLPE Primary Cable	GREY	4615.0	-	3	9524
2	-	-	WC94SCB	2643673 R1	0.79	18.0	Std. Wall XLPE Primary Cable	GREY	4615.0	-	2	9524
3	-	-	-	-	-	-	-	-	-	-	-	-
4	-	-	-	-	-	-	-	-	-	-	-	-

Connector Name	9514/9514H
Part Number	3601685C1
Instances	A26 - ABS Private J1939:A26 - ABS Private J1939 A26 - CAN Layout:ABS Proprietary J1939 L9 - ABS Private J1939:L9 - ABS Private J1939 L9 - CAN Layout:ABS Proprietary J1939
Mates	SNSR-YAW_RATE-3026-01-01A

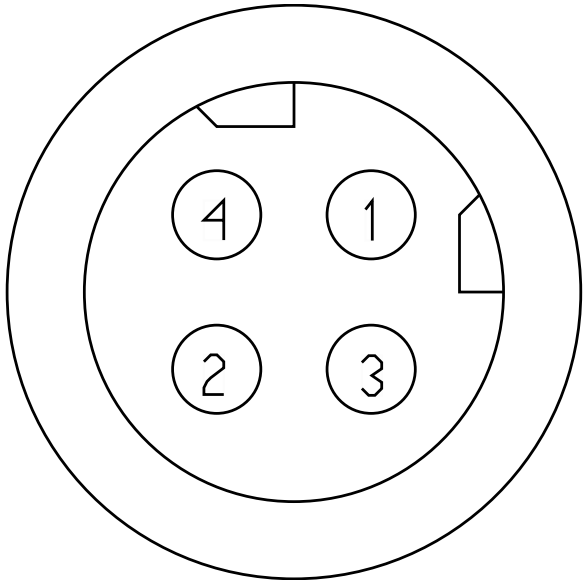

Name	Terminal Part Number	V-Min	Name	Wire Part Number	Wire CSA	Wire Spec	Wire Material description	Wire Color Description	Wire Length	End2 Terminal Part Number	End2 Pin Name	End2 Connect or
1	-	-	WIRE239174	-	0.0	-	-	-	0.0	-	1	9524
2	-	-	WIRE239175	-	0.0	-	-	-	0.0	-	3	9524
3	-	-	WIRE239172	-	0.0	-	-	-	0.0	-	2	9524
4	-	-	WIRE239173	-	0.0	-	-	-	0.0	-	4	9524

Connector Name	9514
Part Number	3601685C1
Instances	A26 - Bendix Tractor or Towing Truck N/ Air SUSP J1939 Driven Lamp:Diagram1 A26 - Bendix Tractor or Towing Truck W/ Air SUSP J1939 Driven Lamp:Diagram1 A26 - Stability Control (Bendix Straight Truck J1939 Driven Lamp):Diagram1 B6.7 - Stability Control (Bendix Straight Truck J1939 Driven Lamp):Diagram1 L9 - Bendix Tractor or Towing Truck W/ Air SUSP J1939 Driven Lamp:Diagram1 L9 - Stability Control (Bendix Straight Truck J1939 Driven Lamp):Diagram1
Mates	SNSR-YAW_RATE-3026-01-01A

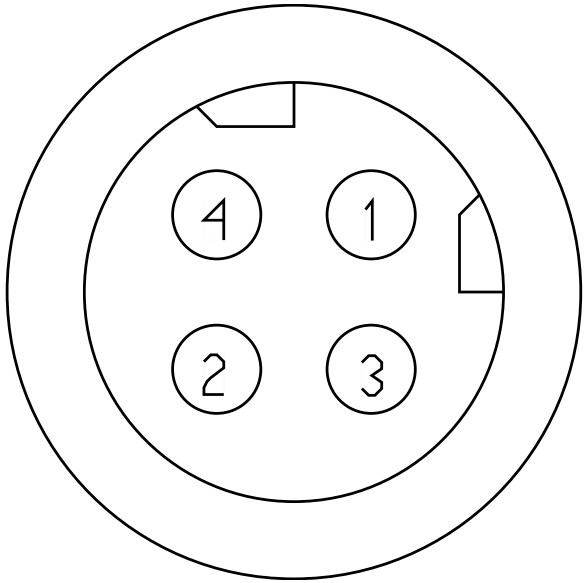

Name	Terminal Part Number	V-Min	Name	Wire Part Number	Wire CSA	Wire Spec	Wire Material description	Wire Color Description	Wire Length	End2 Terminal Part Number	End2 Pin Name	End2 Connect or
1	-	-	WG94SAB	2643673 R1	0.79	18.0	Std. Wall XLPE Primary Cable	GREY	3045.0	-	1	9524
2	-	-	WG94SBB	2643673 R1	0.79	18.0	Std. Wall XLPE Primary Cable	GREY	3045.0	-	3	9524
2	-	-	WG94SCB	2643673 R1	0.79	18.0	Std. Wall XLPE Primary Cable	GREY	3045.0	-	2	9524
3	-	-	-	-	-	-	-	-	-	-	-	-
4	-	-	-	-	-	-	-	-	-	-	-	-

Connector Name	9516
Part Number	6111844C1
Instances	A26 - Antilock Brake System (ABS)-Wabco 4 Channel Implementation:Diagram1 L9 - Antilock Brake System (ABS) Wabco 4 Channel Implementation:Diagram1
Mates	SNSR-WS-3003-02-04C

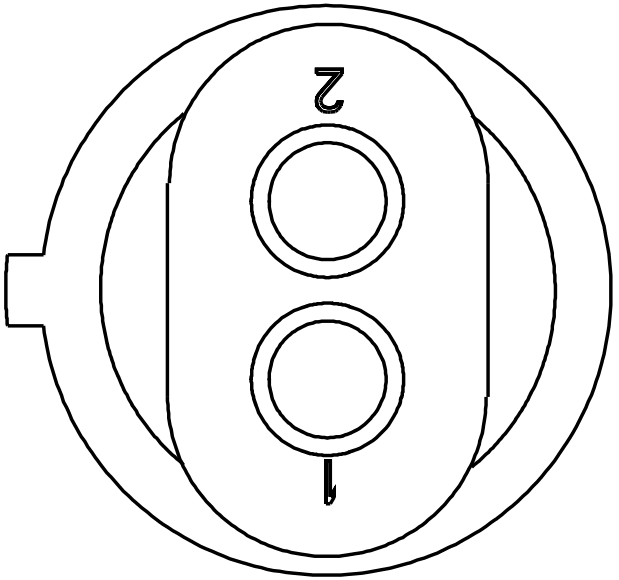

Name	Terminal Part Number	V-Min	Name	Wire Part Number	Wire CSA	Wire Spec	Wire Material description	Wire Color Description	Wire Length	End2 Terminal Part Number	End2 Pin Name	End2 Connect or
1	-	-	[RV94WL]	V-18-GXL	0.79	18.0	Std. Wall XLPE Primary Cable	Not Applica ble	1465.0	-	13	9800
2	-	-	[RV94WM]	V-18-GXL	0.79	18.0	Std. Wall XLPE Primary Cable	Not Applica ble	1465.0	-	14	9800

Connector Name	9517
Part Number	6111844C1
Instances	A26 - Antilock Brake System (ABS)-Wabco 4 Channel Implementation:Diagram1 L9 - Antilock Brake System (ABS) Wabco 4 Channel Implementation:Diagram1
Mates	SNSR-WS-3003-02-04D

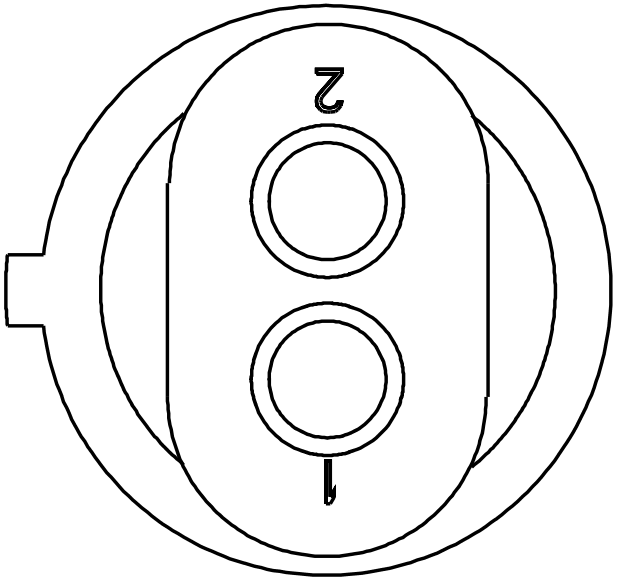

Name	Terminal Part Number	V-Min	Name	Wire Part Number	Wire CSA	Wire Spec	Wire Material description	Wire Color Description	Wire Length	End2 Terminal Part Number	End2 Pin Name	End2 Connect or
1	-	-	[RV94WS]	V-18-GXL	0.79	18.0	Std. Wall XLPE Primary Cable	Not Applica ble	2075.0	-	15	9800
2	-	-	[RV94WT]	V-18-GXL	0.79	18.0	Std. Wall XLPE Primary Cable	Not Applica ble	2075.0	-	16	9800

Connector Name	9518
Part Number	3919376C1
Instances	A26 - Antilock Brake System (ABS)-Wabco 4 Channel Implementation:Diagram1 L9 - Antilock Brake System (ABS) Wabco 4 Channel Implementation:Diagram1
Mates	MDL-ABS-3003-02-04C

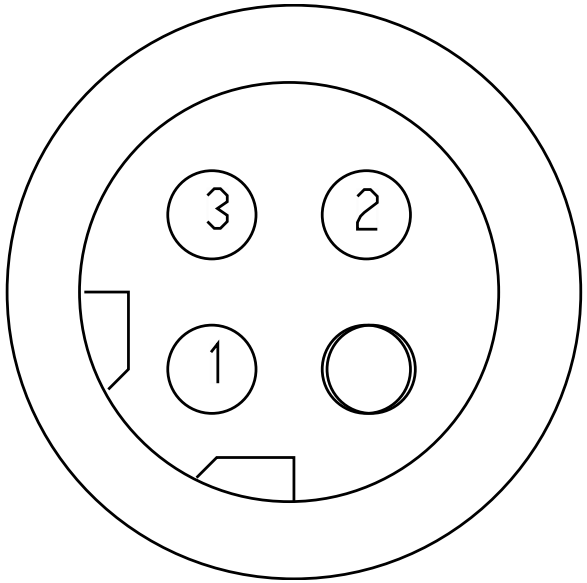

Name	Terminal Part Number	V-Min	Name	Wire Part Number	Wire CSA	Wire Spec	Wire Material description	Wire Color Description	Wire Length	End2 Terminal Part Number	End2 Pin Name	End2 Connect or
1	-	-	[RV94WN]	V-18-GXL	0.79	18.0	Std. Wall XLPE Primary Cable	Not Applica ble	1110.0	-	17	9800
2	-	-	[RV94G7]	V-18-GXL	0.79	18.0	Std. Wall XLPE Primary Cable	Not Applica ble	1110.0	-	18	9800
3	-	-	[RV94WR]	V-18-GXL	0.79	18.0	Std. Wall XLPE Primary Cable	Not Applica ble	1110.0	-	19	9800

Connector Name	9519
Part Number	3919376C1
Instances	A26 - Antilock Brake System (ABS)-Wabco 4 Channel Implementation:Diagram1 L9 - Antilock Brake System (ABS) Wabco 4 Channel Implementation:Diagram1
Mates	MDL-ABS-3003-02-04D

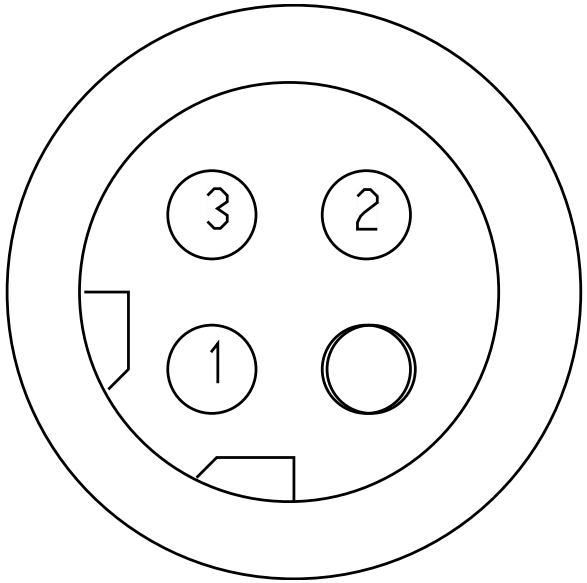

Name	Terminal Part Number	V-Min	Name	Wire Part Number	Wire CSA	Wire Spec	Wire Material description	Wire Color Description	Wire Length	End2 Terminal Part Number	End2 Pin Name	End2 Connect or
1	-	-	[RV94WU]	V-18-GXL	0.79	18.0	Std. Wall XLPE Primary Cable	Not Applica ble	1760.0	-	20	9800
2	-	-	[RV94G6]	V-18-GXL	0.79	18.0	Std. Wall XLPE Primary Cable	Not Applica ble	1760.0	-	21	9800
3	-	-	[RV94WW]	V-18-GXL	0.79	18.0	Std. Wall XLPE Primary Cable	Not Applica ble	1760.0	-	22	9800

Connector Name	9524
Part Number	3549412C1
Short Description	ABS/RSP CONNECTOR
Instances	A26 - ABS Private J1939:A26 - ABS Private J1939 A26 - Bendix Tractor or Towing Truck N/ Air SUSP J1939 Driven Lamp:Diagram1 A26 - Bendix Tractor or Towing Truck N/ Air SUSP J1939 Driven Lamp:Diagram2 A26 - Bendix Tractor or Towing Truck N/ Air SUSP J1939 Driven Lamp:Diagram3 A26 - Bendix Tractor or Towing Truck N/ Air SUSP J1939 Driven Lamp:Diagram4 A26 - Bendix Tractor or Towing Truck W/ Air SUSP J1939 Driven Lamp:Diagram1 A26 - Bendix Tractor or Towing Truck W/ Air SUSP J1939 Driven Lamp:Diagram2 A26 - Bendix Tractor or Towing Truck W/ Air SUSP J1939 Driven Lamp:Diagram3 A26 - Bendix Tractor or Towing Truck W/ Air SUSP J1939 Driven Lamp:Diagram4 A26 - CAN Layout:ABS Proprietary J1939 A26 - Stability Control (Bendix Straight Truck J1939 Driven Lamp):Diagram1 A26 - Stability Control (Bendix Straight Truck J1939 Driven Lamp):Diagram2 B6.7 - Stability Control (Bendix Straight Truck J1939 Driven Lamp):Diagram1 B6.7 - Stability Control (Bendix Straight Truck J1939 Driven Lamp):Diagram2 L9 - ABS Private J1939:L9 - ABS Private J1939 L9 - Bendix Tractor or Towing Truck W/ Air SUSP J1939 Driven Lamp:Diagram1 L9 - Bendix Tractor or Towing Truck W/ Air SUSP J1939 Driven Lamp:Diagram2 L9 - CAN Layout:ABS Proprietary J1939 L9 - Stability Control (Bendix Straight Truck J1939 Driven Lamp):Diagram1 L9 - Stability Control (Bendix Straight Truck J1939 Driven Lamp):Diagram2
Mates	9524

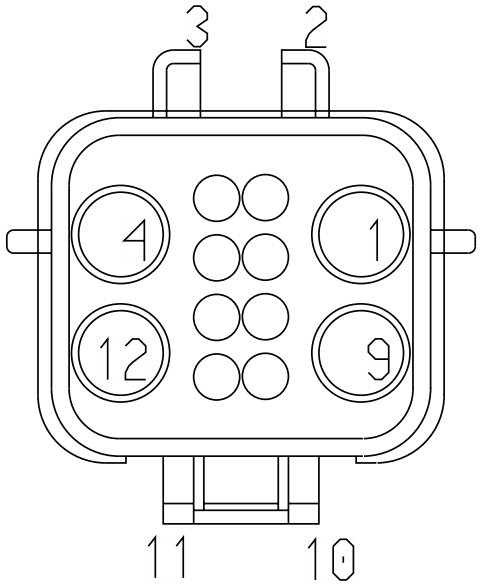

Name	Terminal Part Number	V-Min	Name	Wire Part Number	Wire CSA	Wire Spec	Wire Material description	Wire Color Description	Wire Length	End2 Terminal Part Number	End2 Pin Name	End2 Connector
1	-	-	WIRE239169	-	0.0	-	-	-	0.0	-	50	1700
1	-	-	ND94SAB	2643680 R1	1.16	16.0	Std. Wall XLPE Primary Cable	GREY	250.0	-	50	1700
1	-	-	XY94SAB	2643680 R1	1.16	16.0	Std. Wall XLPE Primary Cable	GREY	250.0	-	50	1700
2	-	-	WIRE239171	-	0.0	-	-	-	0.0	-	60	1700
2	-	-	ND94SCB	2643680 R1	1.16	16.0	Std. Wall XLPE Primary Cable	GREY	250.0	-	60	1700
2	-	-	TV94SCB	2643680 R1	1.16	16.0	Std. Wall XLPE Primary Cable	GREY	250.0	-	60	1700
3	-	-	WIRE239168	-	0.0	-	-	-	0.0	-	42	1700
3	-	-	ND94SBB	2643680 R1	1.16	16.0	Std. Wall XLPE Primary Cable	GREY	250.0	-	42	1700
4	-	-	WIRE239170	-	0.0	-	-	-	0.0	-	51	1700
5	-	-	ND94SJ	2643680 R1	1.16	16.0	Std. Wall XLPE Primary Cable	GREY	250.0	-	69	1700

Name	Terminal Part Number	V-Min	Name	Wire Part Number	Wire CSA	Wire Spec	Wire Material description	Wire Color Description	Wire Length	End2 Terminal Part Number	End2 Pin Name	End2 Connector
5	-	-	TV94SJ	2643680 R1	1.16	16.0	Std. Wall XLPE Primary Cable	GREY	250.0	-	69	1700
6	-	-	ND94SK	2643680 R1	1.16	16.0	Std. Wall XLPE Primary Cable	GREY	250.0	-	70	1700
6	-	-	TV94SK	2643680 R1	1.16	16.0	Std. Wall XLPE Primary Cable	GREY	250.0	-	70	1700
7	-	-	ND94SM	2643680 R1	1.16	16.0	Std. Wall XLPE Primary Cable	GREY	250.0	-	71	1700
7	-	-	TV94SM	2643680 R1	1.16	16.0	Std. Wall XLPE Primary Cable	GREY	250.0	-	71	1700
8	-	-	ND94SN	2643680 R1	1.16	16.0	Std. Wall XLPE Primary Cable	GREY	250.0	-	72	1700
8	-	-	TV94SN	2643680 R1	1.16	16.0	Std. Wall XLPE Primary Cable	GREY	250.0	-	72	1700
9	-	-	ND94SL	2643680 R1	1.16	16.0	Std. Wall XLPE Primary Cable	GREY	250.0	-	73	1700

Name	Terminal Part Number	V-Min	Name	Wire Part Number	Wire CSA	Wire Spec	Wire Material description	Wire Color Description	Wire Length	End2 Terminal Part Number	End2 Pin Name	End2 Connect or
10	-	-	ND94SZC	2643680 R1	1.16	16.0	Std. Wall XLPE Primary Cable	GREY	250.0	-	74	1700
11	-	-	ND94SVC	2643680 R1	1.16	16.0	Std. Wall XLPE Primary Cable	GREY	250.0	-	75	1700
12	-	-	ND94SH	2643680 R1	1.16	16.0	Std. Wall XLPE Primary Cable	GREY	250.0	-	76	1700

Connector Name	9524
Part Number	3576268C1
Short Description	ABS/RSP CONNECTOR
Instances	A26 - ABS Private J1939:A26 - ABS Private J1939 A26 - Bendix Tractor or Towing Truck N/ Air SUSP J1939 Driven Lamp:Diagram1 A26 - Bendix Tractor or Towing Truck N/ Air SUSP J1939 Driven Lamp:Diagram2 A26 - Bendix Tractor or Towing Truck N/ Air SUSP J1939 Driven Lamp:Diagram3 A26 - Bendix Tractor or Towing Truck N/ Air SUSP J1939 Driven Lamp:Diagram4 A26 - Bendix Tractor or Towing Truck W/ Air SUSP J1939 Driven Lamp:Diagram1 A26 - Bendix Tractor or Towing Truck W/ Air SUSP J1939 Driven Lamp:Diagram2 A26 - Bendix Tractor or Towing Truck W/ Air SUSP J1939 Driven Lamp:Diagram3 A26 - Bendix Tractor or Towing Truck W/ Air SUSP J1939 Driven Lamp:Diagram4 A26 - CAN Layout:ABS Proprietary J1939 A26 - Stability Control (Bendix Straight Truck J1939 Driven Lamp):Diagram1 A26 - Stability Control (Bendix Straight Truck J1939 Driven Lamp):Diagram2 B6.7 - Stability Control (Bendix Straight Truck J1939 Driven Lamp):Diagram1 B6.7 - Stability Control (Bendix Straight Truck J1939 Driven Lamp):Diagram2 L9 - ABS Private J1939:L9 - ABS Private J1939 L9 - Bendix Tractor or Towing Truck W/ Air SUSP J1939 Driven Lamp:Diagram1 L9 - Bendix Tractor or Towing Truck W/ Air SUSP J1939 Driven Lamp:Diagram2 L9 - CAN Layout:ABS Proprietary J1939 L9 - Stability Control (Bendix Straight Truck J1939 Driven Lamp):Diagram1 L9 - Stability Control (Bendix Straight Truck J1939 Driven Lamp):Diagram2
Mates	9524

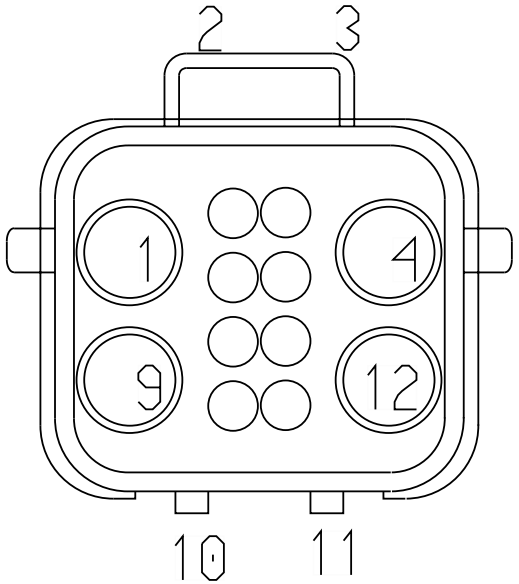

Name	Terminal Part Number	V-Min	Name	Wire Part Number	Wire CSA	Wire Spec	Wire Material description	Wire Color Description	Wire Length	End2 Terminal Part Number	End2 Pin Name	End2 Connector
1	-	-	WIRE239174	-	0.0	-	-	-	0.0	-	1	9514/9514H
1	-	-	WG94SAB	2643673R1	0.79	18.0	Std. Wall XLPE Primary Cable	GREY	3045.0	-	1	9514
1	-	-	WC94SAB	2643673R1	0.79	18.0	Std. Wall XLPE Primary Cable	GREY	4615.0	-	1	9514H
2	-	-	WIRE239172	-	0.0	-	-	-	0.0	-	3	9514/9514H
2	-	-	WC94SCB	2643673R1	0.79	18.0	Std. Wall XLPE Primary Cable	GREY	4615.0	-	2	9514H
2	-	-	WG94SCB	2643673R1	0.79	18.0	Std. Wall XLPE Primary Cable	GREY	3045.0	-	2	9514
3	-	-	WIRE239175	-	0.0	-	-	-	0.0	-	2	9514/9514H
3	-	-	WC94SBB	2643673R1	0.79	18.0	Std. Wall XLPE Primary Cable	GREY	4615.0	-	2	9514H
3	-	-	WG94SBB	2643673R1	0.79	18.0	Std. Wall XLPE Primary Cable	GREY	3045.0	-	2	9514
4	-	-	WIRE239173	-	0.0	-	-	-	0.0	-	4	9514/9514H

Name	Terminal Part Number	V-Min	Name	Wire Part Number	Wire CSA	Wire Spec	Wire Material description	Wire Color Description	Wire Length	End2 Terminal Part Number	End2 Pin Name	End2 Connector
5	-	-	WA94SJ	2643680 R1	1.16	16.0	Std. Wall XLPE Primary Cable	GREY	1695.0	-	1	9512
6	-	-	WA94SK	2643680 R1	1.16	16.0	Std. Wall XLPE Primary Cable	GREY	1695.0	-	2	9512
7	-	-	WA94SM	2643680 R1	1.16	16.0	Std. Wall XLPE Primary Cable	GREY	1845.0	-	A	9513
8	-	-	WA94SN	2643680 R1	1.16	16.0	Std. Wall XLPE Primary Cable	GREY	1845.0	-	B	9513
9	-	-	WA94SL	2643680 R1	1.16	16.0	Std. Wall XLPE Primary Cable	GREY	1845.0	-	C	9513
10	-	-	WA94SZC	2643680 R1	1.16	16.0	Std. Wall XLPE Primary Cable	GREY	4540.0	-	A	9510
11	-	-	WA94SVC	2643680 R1	1.16	16.0	Std. Wall XLPE Primary Cable	GREY	4540.0	-	B	9510
12	-	-	WA94SH	2643680 R1	1.16	16.0	Std. Wall XLPE Primary Cable	GREY	4540.0	-	C	9510

Connector Name	9531F
Part Number	6112506C1
Short Description	BENDIX 6S/6M CONNECTOR
Instances	A26 - Antilock Brake System (ABS) Bendix:Diagram1 A26 - Antilock Brake System (ABS) Bendix:Diagram2 A26 - Antilock Brake System (ABS) Bendix:Diagram3 L9 - Antilock Brake System (ABS) Bendix 6 Channel Implementation:Diagram1 L9 - Antilock Brake System (ABS) Bendix 6 Channel Implementation:Diagram2 L9 - Antilock Brake System (ABS) Bendix 6 Channel Implementation:Diagram3 L9 - Antilock Brake System (ABS) Bendix 6 Channel Implementation:Diagram4 L9 - Antilock Brake System (ABS) Bendix 6 Channel Implementation:Diagram5 L9 - Antilock Brake System (ABS) Bendix 6 Channel Implementation:Diagram6 L9 - Antilock Brake System (ABS) Bendix 6 Channel Implementation:Diagram7 L9 - Antilock Brake System (ABS) Bendix 6 Channel Implementation:Diagram8 L9 - Antilock Brake System (ABS) Bendix 6 Channel Implementation:Diagram9
Mates	9531M

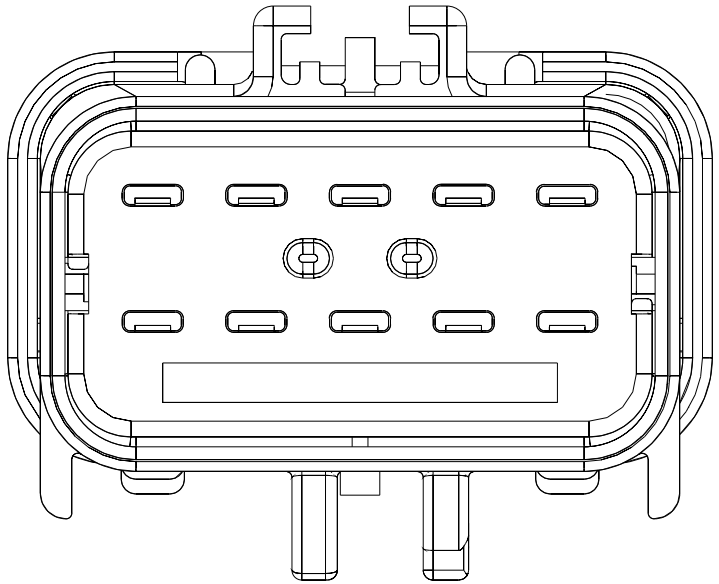

Name	Terminal Part Number	V-Min	Name	Wire Part Number	Wire CSA	Wire Spec	Wire Material description	Wire Color Description	Wire Length	End2 Terminal Part Number	End2 Pin Name	End2 Connect or
1	-	-	TF94BP	2643680 R1	1.16	16.0	Std. Wall XLPE Primary Cable	GREY	330.0	-	24	1700
2	-	-	TF94BY	2643680 R1	1.16	16.0	Std. Wall XLPE Primary Cable	GREY	330.0	-	37	1700

Name	Terminal Part Number	V-Min	Name	Wire Part Number	Wire CSA	Wire Spec	Wire Material description	Wire Color Description	Wire Length	End2 Terminal Part Number	End2 Pin Name	End2 Connector
3	-	-	TF94BZ	2643680 R1	1.16	16.0	Std. Wall XLPE Primary Cable	GREY	330.0	-	38	1700
4	-	-	TF94BT	2643680 R1	1.16	16.0	Std. Wall XLPE Primary Cable	GREY	330.0	-	39	1700
5	-	-	TF94BU	2643680 R1	1.16	16.0	Std. Wall XLPE Primary Cable	GREY	330.0	-	40	1700
6	-	-	TF94BS	2643680 R1	1.16	16.0	Std. Wall XLPE Primary Cable	GREY	330.0	-	41	1700
7	-	-	TF94BR	2643680 R1	1.16	16.0	Std. Wall XLPE Primary Cable	GREY	330.0	-	45	1700
8	-	-	TF94BQ	2643680 R1	1.16	16.0	Std. Wall XLPE Primary Cable	GREY	330.0	-	46	1700
9	-	-	TF94BW	2643680 R1	1.16	16.0	Std. Wall XLPE Primary Cable	GREY	330.0	-	48	1700
10	-	-	TF94BV	2643680 R1	1.16	16.0	Std. Wall XLPE Primary Cable	GREY	330.0	-	49	1700

Connector Name	9531M
Part Number	3690369C1
Short Description	BENDIX 6S/6M ABS CONNECTOR
Instances	A26 - Antilock Brake System (ABS) Bendix:Diagram1 A26 - Antilock Brake System (ABS) Bendix:Diagram2 A26 - Antilock Brake System (ABS) Bendix:Diagram3 L9 - Antilock Brake System (ABS) Bendix 6 Channel Implementation:Diagram1 L9 - Antilock Brake System (ABS) Bendix 6 Channel Implementation:Diagram2 L9 - Antilock Brake System (ABS) Bendix 6 Channel Implementation:Diagram3 L9 - Antilock Brake System (ABS) Bendix 6 Channel Implementation:Diagram4 L9 - Antilock Brake System (ABS) Bendix 6 Channel Implementation:Diagram5 L9 - Antilock Brake System (ABS) Bendix 6 Channel Implementation:Diagram6 L9 - Antilock Brake System (ABS) Bendix 6 Channel Implementation:Diagram7 L9 - Antilock Brake System (ABS) Bendix 6 Channel Implementation:Diagram8 L9 - Antilock Brake System (ABS) Bendix 6 Channel Implementation:Diagram9
Mates	9531F

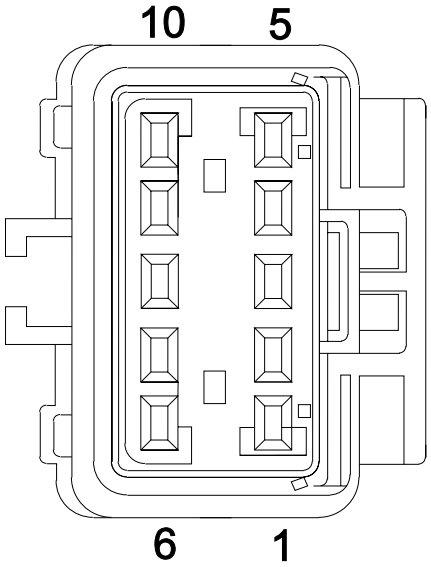

Name	Terminal Part Number	V-Min	Name	Wire Part Number	Wire CSA	Wire Spec	Wire Material description	Wire Color Description	Wire Length	End2 Terminal Part Number	End2 Pin Name	End2 Connect or
1	-	-	AA94BP	2643680 R1	1.16	16.0	Std. Wall XLPE Primary Cable	GREY	4455.0	-	1	9532F
2	-	-	AA94BY	2643680 R1	1.16	16.0	Std. Wall XLPE Primary Cable	GREY	4455.0	-	2	9532F

Name	Terminal Part Number	V-Min	Name	Wire Part Number	Wire CSA	Wire Spec	Wire Material description	Wire Color Description	Wire Length	End2 Terminal Part Number	End2 Pin Name	End2 Connector
3	-	-	AA94BZ	2643680 R1	1.16	16.0	Std. Wall XLPE Primary Cable	GREY	4455.0	-	3	9532F
4	-	-	AA94BT	2643680 R1	1.16	16.0	Std. Wall XLPE Primary Cable	GREY	4455.0	-	4	9532F
5	-	-	AA94BU	2643680 R1	1.16	16.0	Std. Wall XLPE Primary Cable	GREY	4455.0	-	5	9532F
6	-	-	AA94BS	2643680 R1	1.16	16.0	Std. Wall XLPE Primary Cable	GREY	4455.0	-	6	9532F
7	-	-	AA94BR	2643680 R1	1.16	16.0	Std. Wall XLPE Primary Cable	GREY	4455.0	-	7	9532F
8	-	-	AA94BQ	2643680 R1	1.16	16.0	Std. Wall XLPE Primary Cable	GREY	4455.0	-	8	9532F
9	-	-	AA94BW	2643680 R1	1.16	16.0	Std. Wall XLPE Primary Cable	GREY	4455.0	-	9	9532F
10	-	-	AA94BV	2643680 R1	1.16	16.0	Std. Wall XLPE Primary Cable	GREY	4455.0	-	10	9532F

Connector Name	9532F
Part Number	6112506C1
Short Description	BENDIX 6 CHANNEL ABS CONNECTOR
Instances	A26 - Antilock Brake System (ABS) Bendix:Diagram1 A26 - Antilock Brake System (ABS) Bendix:Diagram2 A26 - Antilock Brake System (ABS) Bendix:Diagram3 L9 - Antilock Brake System (ABS) Bendix 6 Channel Implementation:Diagram1 L9 - Antilock Brake System (ABS) Bendix 6 Channel Implementation:Diagram2 L9 - Antilock Brake System (ABS) Bendix 6 Channel Implementation:Diagram3 L9 - Antilock Brake System (ABS) Bendix 6 Channel Implementation:Diagram4 L9 - Antilock Brake System (ABS) Bendix 6 Channel Implementation:Diagram5 L9 - Antilock Brake System (ABS) Bendix 6 Channel Implementation:Diagram6 L9 - Antilock Brake System (ABS) Bendix 6 Channel Implementation:Diagram7 L9 - Antilock Brake System (ABS) Bendix 6 Channel Implementation:Diagram8 L9 - Antilock Brake System (ABS) Bendix 6 Channel Implementation:Diagram9
Mates	9532M

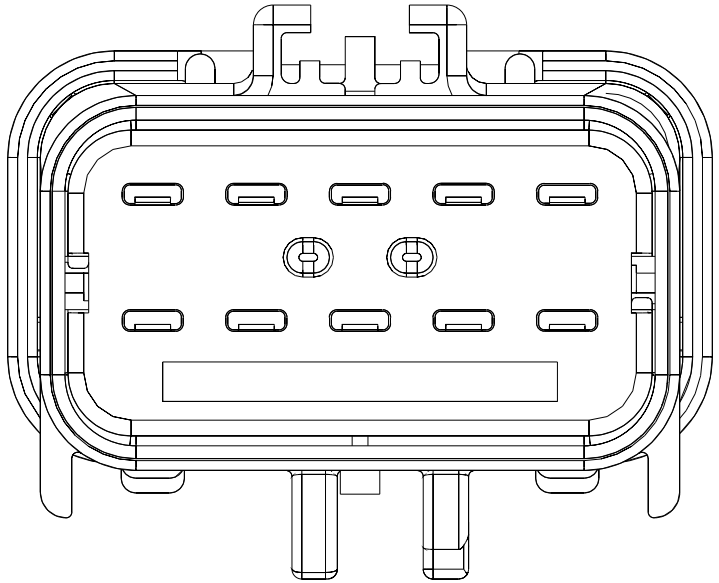

Name	Terminal Part Number	V-Min	Name	Wire Part Number	Wire CSA	Wire Spec	Wire Material description	Wire Color Description	Wire Length	End2 Terminal Part Number	End2 Pin Name	End2 Connect or
1	-	-	AA94BP	2643680 R1	1.16	16.0	Std. Wall XLPE Primary Cable	GREY	4455.0	-	1	9531M
2	-	-	AA94BY	2643680 R1	1.16	16.0	Std. Wall XLPE Primary Cable	GREY	4455.0	-	2	9531M

Name	Terminal Part Number	V-Min	Name	Wire Part Number	Wire CSA	Wire Spec	Wire Material description	Wire Color Description	Wire Length	End2 Terminal Part Number	End2 Pin Name	End2 Connector
3	-	-	AA94BZ	2643680 R1	1.16	16.0	Std. Wall XLPE Primary Cable	GREY	4455.0	-	3	9531M
4	-	-	AA94BT	2643680 R1	1.16	16.0	Std. Wall XLPE Primary Cable	GREY	4455.0	-	4	9531M
5	-	-	AA94BU	2643680 R1	1.16	16.0	Std. Wall XLPE Primary Cable	GREY	4455.0	-	5	9531M
6	-	-	AA94BS	2643680 R1	1.16	16.0	Std. Wall XLPE Primary Cable	GREY	4455.0	-	6	9531M
7	-	-	AA94BR	2643680 R1	1.16	16.0	Std. Wall XLPE Primary Cable	GREY	4455.0	-	7	9531M
8	-	-	AA94BQ	2643680 R1	1.16	16.0	Std. Wall XLPE Primary Cable	GREY	4455.0	-	8	9531M
9	-	-	AA94BW	2643680 R1	1.16	16.0	Std. Wall XLPE Primary Cable	GREY	4455.0	-	9	9531M
10	-	-	AA94BV	2643680 R1	1.16	16.0	Std. Wall XLPE Primary Cable	GREY	4455.0	-	10	9531M

Connector Name	9532M
Part Number	3690369C1
Short Description	BENDIX 6S/6M
Instances	A26 - Antilock Brake System (ABS) Bendix:Diagram1 A26 - Antilock Brake System (ABS) Bendix:Diagram2 A26 - Antilock Brake System (ABS) Bendix:Diagram3 L9 - Antilock Brake System (ABS) Bendix 6 Channel Implementation:Diagram1 L9 - Antilock Brake System (ABS) Bendix 6 Channel Implementation:Diagram2 L9 - Antilock Brake System (ABS) Bendix 6 Channel Implementation:Diagram3 L9 - Antilock Brake System (ABS) Bendix 6 Channel Implementation:Diagram4 L9 - Antilock Brake System (ABS) Bendix 6 Channel Implementation:Diagram5 L9 - Antilock Brake System (ABS) Bendix 6 Channel Implementation:Diagram6 L9 - Antilock Brake System (ABS) Bendix 6 Channel Implementation:Diagram7 L9 - Antilock Brake System (ABS) Bendix 6 Channel Implementation:Diagram8 L9 - Antilock Brake System (ABS) Bendix 6 Channel Implementation:Diagram9
Mates	9532F

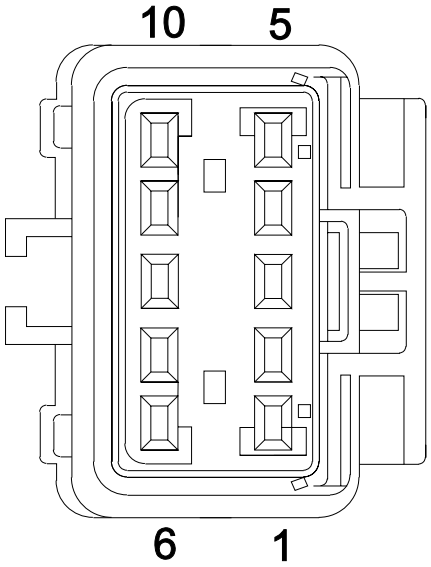

Name	Terminal Part Number	V-Min	Name	Wire Part Number	Wire CSA	Wire Spec	Wire Material description	Wire Color Description	Wire Length	End2 Terminal Part Number	End2 Pin Name	End2 Connect or
1	-	-	UP94C	2643680 R1	1.16	16.0	Std. Wall XLPE Primary Cable	GREY	1450.0	-	C	9548A
1	-	-	UG94C	2643680 R1	1.16	16.0	Std. Wall XLPE Primary Cable	GREY	1365.0	-	C	9548

Name	Terminal Part Number	V-Min	Name	Wire Part Number	Wire CSA	Wire Spec	Wire Material description	Wire Color Description	Wire Length	End2 Terminal Part Number	End2 Pin Name	End2 Connect or
1	-	-	UL94C	2643680 R1	1.16	16.0	Std. Wall XLPE Primary Cable	GREY	1715.0	-	C	9558
2	-	-	UP94D	2643680 R1	1.16	16.0	Std. Wall XLPE Primary Cable	GREY	1450.0	-	B	9548A
2	-	-	UG94D	2643680 R1	1.16	16.0	Std. Wall XLPE Primary Cable	GREY	1365.0	-	B	9548
2	-	-	UL94D	2643680 R1	1.16	16.0	Std. Wall XLPE Primary Cable	GREY	1715.0	-	B	9558
3	-	-	UP94E	2643680 R1	1.16	16.0	Std. Wall XLPE Primary Cable	GREY	1450.0	-	A	9548A
3	-	-	UG94E	2643680 R1	1.16	16.0	Std. Wall XLPE Primary Cable	GREY	1365.0	-	A	9548
3	-	-	UL94E	2643680 R1	1.16	16.0	Std. Wall XLPE Primary Cable	GREY	1715.0	-	A	9558
4	-	-	UP94K	2643680 R1	1.16	16.0	Std. Wall XLPE Primary Cable	GREY	2325.0	-	B	9550A

Name	Terminal Part Number	V-Min	Name	Wire Part Number	Wire CSA	Wire Spec	Wire Material description	Wire Color Description	Wire Length	End2 Terminal Part Number	End2 Pin Name	End2 Connector
4	-	-	UG94K	2643680 R1	1.16	16.0	Std. Wall XLPE Primary Cable	GREY	1910.0	-	B	9550
4	-	-	UL94K	2643680 R1	1.16	16.0	Std. Wall XLPE Primary Cable	GREY	2440.0	-	B	9561
5	-	-	UP94H	2643680 R1	1.16	16.0	Std. Wall XLPE Primary Cable	GREY	2325.0	-	C	9550A
5	-	-	UG94H	2643680 R1	1.16	16.0	Std. Wall XLPE Primary Cable	GREY	1910.0	-	C	9550
5	-	-	UL94H	2643680 R1	1.16	16.0	Std. Wall XLPE Primary Cable	GREY	2440.0	-	C	9561
6	-	-	UP94L	2643680 R1	1.16	16.0	Std. Wall XLPE Primary Cable	GREY	2325.0	-	A	9550A
6	-	-	UG94L	2643680 R1	1.16	16.0	Std. Wall XLPE Primary Cable	GREY	1910.0	-	A	9550
6	-	-	UL94L	2643680 R1	1.16	16.0	Std. Wall XLPE Primary Cable	GREY	2440.0	-	A	9561

Name	Terminal Part Number	V-Min	Name	Wire Part Number	Wire CSA	Wire Spec	Wire Material description	Wire Color Description	Wire Length	End2 Terminal Part Number	End2 Pin Name	End2 Connector
7	-	-	UP94A	2643680 R1	1.16	16.0	Std. Wall XLPE Primary Cable	GREY	1490.0	-	1	9549A
7	-	-	UG94A	2643680 R1	1.16	16.0	Std. Wall XLPE Primary Cable	GREY	1325.0	-	1	9549
7	-	-	UL94A	2643680 R1	1.16	16.0	Std. Wall XLPE Primary Cable	GREY	1815.0	-	1	9559
8	-	-	UP94B	2643680 R1	1.16	16.0	Std. Wall XLPE Primary Cable	GREY	1490.0	-	2	9549A
8	-	-	UG94B	2643680 R1	1.16	16.0	Std. Wall XLPE Primary Cable	GREY	1325.0	-	2	9549
8	-	-	UL94B	2643680 R1	1.16	16.0	Std. Wall XLPE Primary Cable	GREY	1815.0	-	2	9559
9	-	-	UP94F	2643680 R1	1.16	16.0	Std. Wall XLPE Primary Cable	GREY	2335.0	-	1	9551A
9	-	-	UG94F	2643680 R1	1.16	16.0	Std. Wall XLPE Primary Cable	GREY	2060.0	-	1	9551

Name	Terminal Part Number	V-Min	Name	Wire Part Number	Wire CSA	Wire Spec	Wire Material description	Wire Color Description	Wire Length	End2 Terminal Part Number	End2 Pin Name	End2 Connect or
9	-	-	UL94F	2643680 R1	1.16	16.0	Std. Wall XLPE Primary Cable	GREY	2415.0	-	1	9560
10	-	-	UP94G	2643680 R1	1.16	16.0	Std. Wall XLPE Primary Cable	GREY	2335.0	-	2	9551A
10	-	-	UG94G	2643680 R1	1.16	16.0	Std. Wall XLPE Primary Cable	GREY	2060.0	-	2	9551
10	-	-	UL94G	2643680 R1	1.16	16.0	Std. Wall XLPE Primary Cable	GREY	2415.0	-	2	9560

Connector Name	9540A
Part Number	3539777C1
Instances	A26 - Antilock Brake System (ABS) Bendix:Diagram1 L9 - Antilock Brake System (ABS) Bendix 6 Channel Implementation:Diagram3 L9 - Antilock Brake System (ABS) Bendix 6 Channel Implementation:Diagram6 L9 - Antilock Brake System (ABS) Bendix 6 Channel Implementation:Diagram9
Mates	SNSR-WS-3003-01-04D

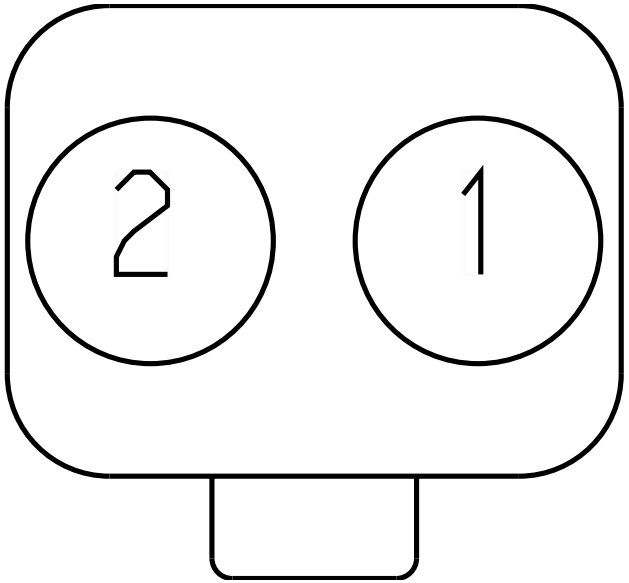

Name	Terminal Part Number	V-Min	Name	Wire Part Number	Wire CSA	Wire Spec	Wire Material description	Wire Color Description	Wire Length	End2 Terminal Part Number	End2 Pin Name	End2 Connect or
1	-	-	UP94R	2643680 R1	1.16	16.0	Std. Wall XLPE Primary Cable	GREY	1560.0	-	13	9800
2	-	-	UP94S	2643682 R1	1.16	16.0	Std. Wall XLPE Primary Cable	ORANGE	1560.0	-	14	9800

Connector Name 9540

Part Number 3539777C1

Instances A26 - Antilock Brake System (ABS) Bendix:Diagram2
L9 - Antilock Brake System (ABS) Bendix 6 Channel Implementation:Diagram1
L9 - Antilock Brake System (ABS) Bendix 6 Channel Implementation:Diagram4
L9 - Antilock Brake System (ABS) Bendix 6 Channel Implementation:Diagram7

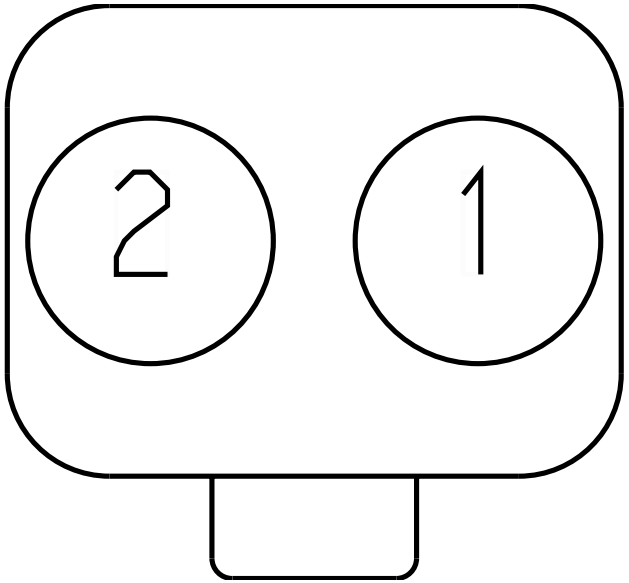

Name	Terminal Part Number	V-Min	Name	Wire Part Number	Wire CSA	Wire Spec	Wire Material description	Wire Color Description	Wire Length	End2 Terminal Part Number	End2 Pin Name	End2 Connect or
1	-	-	UG94R	2643680 R1	1.16	16.0	Std. Wall XLPE Primary Cable	GREY	1860.0	-	13	9800
2	-	-	UG94S	2643682 R1	1.16	16.0	Std. Wall XLPE Primary Cable	ORANGE	1860.0	-	14	9800

Connector Name 9541A

Part Number 1686834C1

Instances L9 - Antilock Brake System (ABS) Bendix 6 Channel Implementation:Diagram3
L9 - Antilock Brake System (ABS) Bendix 6 Channel Implementation:Diagram6
L9 - Antilock Brake System (ABS) Bendix 6 Channel Implementation:Diagram9

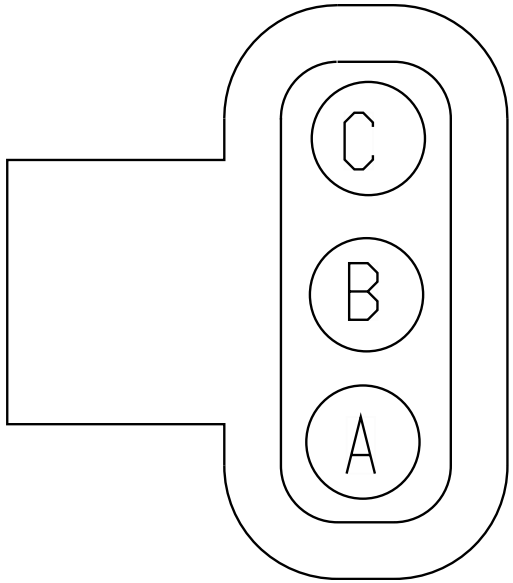

Name	Terminal Part Number	V-Min	Name	Wire Part Number	Wire CSA	Wire Spec	Wire Material description	Wire Color Description	Wire Length	End2 Terminal Part Number	End2 Pin Name	End2 Connect or
A	-	-	UP94M	3510294 R1	1.16	16.0	Thin Wall XLPE Primary Cable	BLACK	1640.0	-	17	9800
B	-	-	UP94N	3510366 R1	1.16	16.0	Thin Wall XLPE Primary Cable	RED	1640.0	-	18	9800
C	-	-	UP94P	3510306 R1	1.16	16.0	Thin Wall XLPE Primary Cable	BROWN	1640.0	-	19	9800

Connector Name	9541
Part Number	1686834C1
Instances	A26 - Antilock Brake System (ABS) Bendix:Diagram1 A26 - Antilock Brake System (ABS) Bendix:Diagram2 L9 - Antilock Brake System (ABS) Bendix 6 Channel Implementation:Diagram1 L9 - Antilock Brake System (ABS) Bendix 6 Channel Implementation:Diagram4 L9 - Antilock Brake System (ABS) Bendix 6 Channel Implementation:Diagram7
Mates	MDL-ABS-3003-01-04C

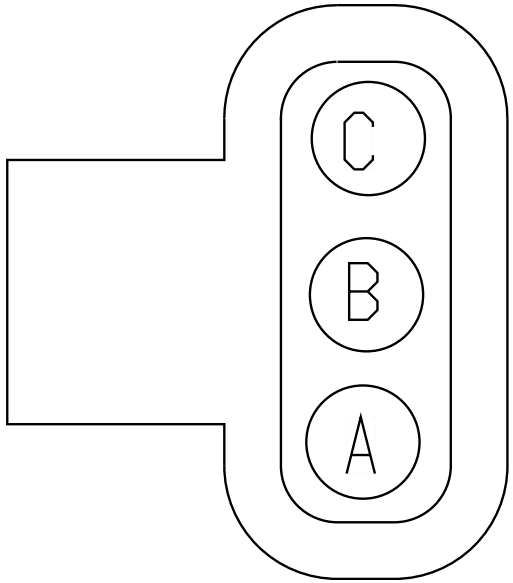

Name	Terminal Part Number	V-Min	Name	Wire Part Number	Wire CSA	Wire Spec	Wire Material description	Wire Color Description	Wire Length	End2 Terminal Part Number	End2 Pin Name	End2 Connect or
A	-	-	UP94M	3510294 R1	1.16	16.0	Thin Wall XLPE Primary Cable	BLACK	1640.0	-	17	9800
A	-	-	UG94M	3510294 R1	1.16	16.0	Thin Wall XLPE Primary Cable	BLACK	1660.0	-	17	9800
B	-	-	UP94N	3510366 R1	1.16	16.0	Thin Wall XLPE Primary Cable	RED	1640.0	-	18	9800
B	-	-	UG94N	3510366 R1	1.16	16.0	Thin Wall XLPE Primary Cable	RED	1660.0	-	18	9800

Name	Terminal Part Number	V-Min	Name	Wire Part Number	Wire CSA	Wire Spec	Wire Material description	Wire Color Description	Wire Length	End2 Terminal Part Number	End2 Pin Name	End2 Connect or
C	-	-	UP94P	3510306 R1	1.16	16.0	Thin Wall XLPE Primary Cable	BROWN	1640.0	-	19	9800
C	-	-	UG94P	3510306 R1	1.16	16.0	Thin Wall XLPE Primary Cable	BROWN	1660.0	-	19	9800

Connector Name	9542A
Part Number	3539777C1
Instances	A26 - Antilock Brake System (ABS) Bendix:Diagram1 L9 - Antilock Brake System (ABS) Bendix 6 Channel Implementation:Diagram3 L9 - Antilock Brake System (ABS) Bendix 6 Channel Implementation:Diagram6 L9 - Antilock Brake System (ABS) Bendix 6 Channel Implementation:Diagram9
Mates	SNSR-WS-3003-01-04A

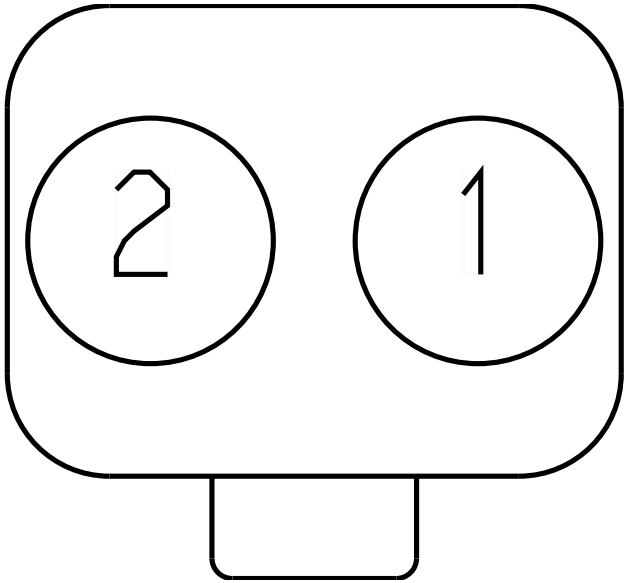

Name	Terminal Part Number	V-Min	Name	Wire Part Number	Wire CSA	Wire Spec	Wire Material description	Wire Color Description	Wire Length	End2 Terminal Part Number	End2 Pin Name	End2 Connect or
1	-	-	UP94W	2643721 R1	1.16	16.0	Std. Wall XLPE Primary Cable	DARK BLUE	3385.0	-	16	9800
1	-	-	UP94W	2643721 R1	1.16	16.0	Std. Wall XLPE Primary Cable	DARK BLUE	3385.0	-	15	9800
2	-	-	UP94X	2643684 R1	1.16	16.0	Std. Wall XLPE Primary Cable	YELLOW 2	3385.0	-	15	9800
2	-	-	UP94X	2643684 R1	1.16	16.0	Std. Wall XLPE Primary Cable	YELLOW 2	3385.0	-	16	9800

Connector Name 9542

Part Number 3539777C1

Instances A26 - Antilock Brake System (ABS) Bendix:Diagram2
L9 - Antilock Brake System (ABS) Bendix 6 Channel Implementation:Diagram1
L9 - Antilock Brake System (ABS) Bendix 6 Channel Implementation:Diagram4
L9 - Antilock Brake System (ABS) Bendix 6 Channel Implementation:Diagram7

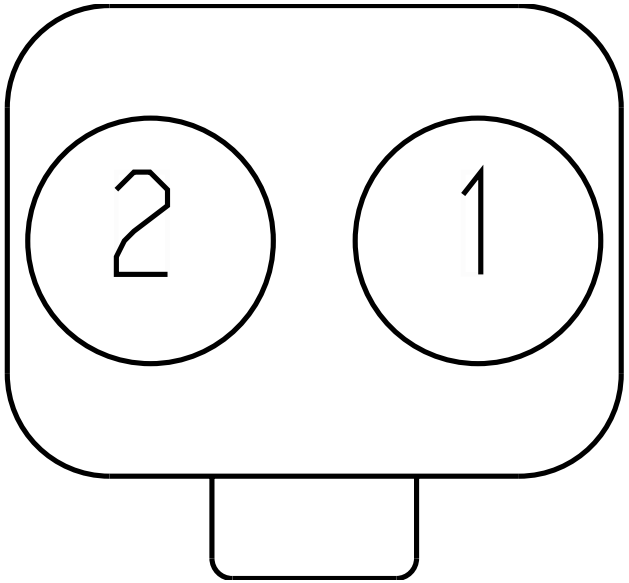

Name	Terminal Part Number	V-Min	Name	Wire Part Number	Wire CSA	Wire Spec	Wire Material description	Wire Color Description	Wire Length	End2 Terminal Part Number	End2 Pin Name	End2 Connect or
1	-	-	UG94W	2643721 R1	1.16	16.0	Std. Wall XLPE Primary Cable	DARK BLUE	2910.0	-	15	9800
2	-	-	UG94X	2643684 R1	1.16	16.0	Std. Wall XLPE Primary Cable	YELLOW 2	2910.0	-	16	9800

Connector Name	9543A
Part Number	1686834C1
Instances	A26 - Antilock Brake System (ABS) Bendix:Diagram1 L9 - Antilock Brake System (ABS) Bendix 6 Channel Implementation:Diagram3 L9 - Antilock Brake System (ABS) Bendix 6 Channel Implementation:Diagram6 L9 - Antilock Brake System (ABS) Bendix 6 Channel Implementation:Diagram9
Mates	MDL-ABS-3003-01-04D

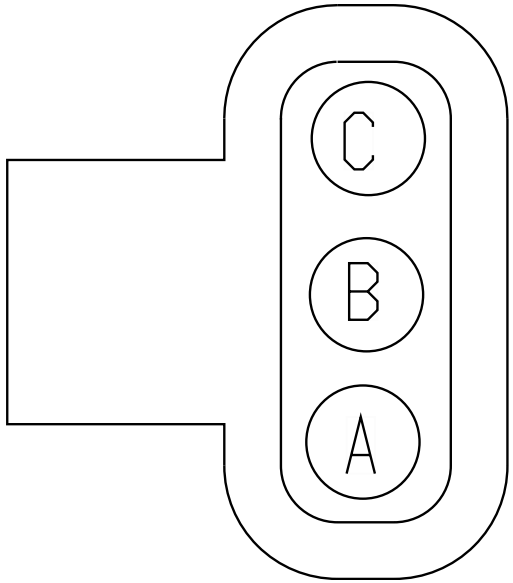

Name	Terminal Part Number	V-Min	Name	Wire Part Number	Wire CSA	Wire Spec	Wire Material description	Wire Color Description	Wire Length	End2 Terminal Part Number	End2 Pin Name	End2 Connect or
A	-	-	UP94T	3510348 R1	1.16	16.0	Thin Wall XLPE Primary Cable	VIOLET	3330.0	-	20	9800
B	-	-	UP94U	3510300 R1	1.16	16.0	Thin Wall XLPE Primary Cable	LIGHT GREEN	3330.0	-	21	9800
C	-	-	UP94V	3510342 R1	1.16	16.0	Thin Wall XLPE Primary Cable	LIGHT BLUE	3330.0	-	22	9800

Connector Name 9543

Part Number 1686834C1

Instances A26 - Antilock Brake System (ABS) Bendix:Diagram2
L9 - Antilock Brake System (ABS) Bendix 6 Channel Implementation:Diagram1
L9 - Antilock Brake System (ABS) Bendix 6 Channel Implementation:Diagram4
L9 - Antilock Brake System (ABS) Bendix 6 Channel Implementation:Diagram7

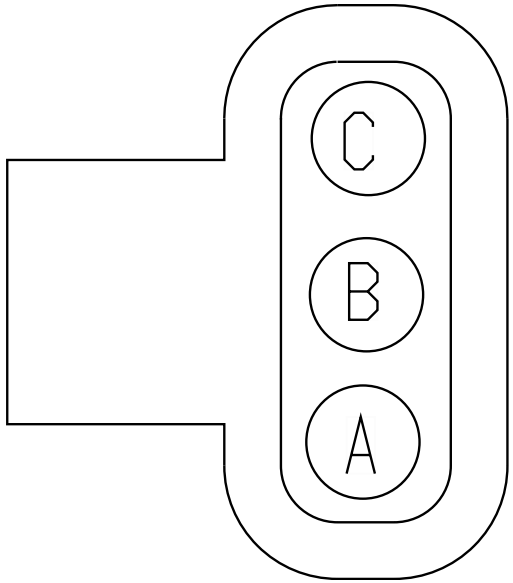

Name	Terminal Part Number	V-Min	Name	Wire Part Number	Wire CSA	Wire Spec	Wire Material description	Wire Color Description	Wire Length	End2 Terminal Part Number	End2 Pin Name	End2 Connect or
A	-	-	UG94T	3510348 R1	1.16	16.0	Thin Wall XLPE Primary Cable	VIOLET	2860.0	-	20	9800
B	-	-	UG94U	3510300 R1	1.16	16.0	Thin Wall XLPE Primary Cable	LIGHT GREEN	2860.0	-	21	9800
C	-	-	UG94V	3510342 R1	1.16	16.0	Thin Wall XLPE Primary Cable	LIGHT BLUE	2860.0	-	22	9800

Connector Name	9548A
Part Number	1686834C1
Instances	A26 - Antilock Brake System (ABS) Bendix:Diagram1 L9 - Antilock Brake System (ABS) Bendix 6 Channel Implementation:Diagram3 L9 - Antilock Brake System (ABS) Bendix 6 Channel Implementation:Diagram6 L9 - Antilock Brake System (ABS) Bendix 6 Channel Implementation:Diagram9
Mates	MDL-ABS-3003-01-06A

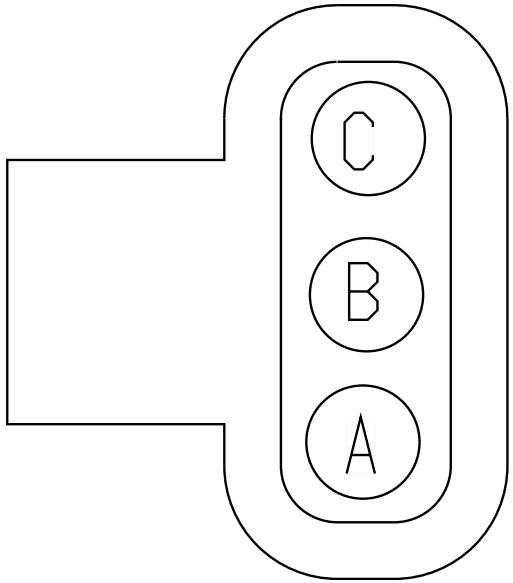

Name	Terminal Part Number	V-Min	Name	Wire Part Number	Wire CSA	Wire Spec	Wire Material description	Wire Color Description	Wire Length	End2 Terminal Part Number	End2 Pin Name	End2 Connector
A	-	-	UP94E	2643680 R1	1.16	16.0	Std. Wall XLPE Primary Cable	GREY	1450.0	-	3	9532M
B	-	-	UP94D	2643680 R1	1.16	16.0	Std. Wall XLPE Primary Cable	GREY	1450.0	-	2	9532M
C	-	-	UP94C	2643680 R1	1.16	16.0	Std. Wall XLPE Primary Cable	GREY	1450.0	-	1	9532M

Connector Name 9548

Part Number 1686834C1

Instances A26 - Antilock Brake System (ABS) Bendix:Diagram2
L9 - Antilock Brake System (ABS) Bendix 6 Channel Implementation:Diagram1
L9 - Antilock Brake System (ABS) Bendix 6 Channel Implementation:Diagram4
L9 - Antilock Brake System (ABS) Bendix 6 Channel Implementation:Diagram7

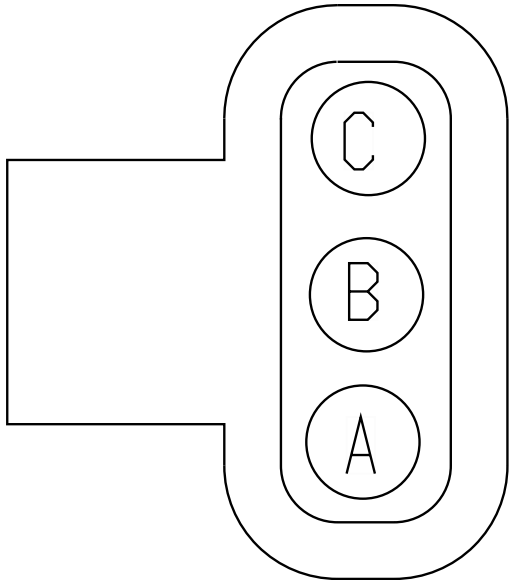

Name	Terminal Part Number	V-Min	Name	Wire Part Number	Wire CSA	Wire Spec	Wire Material description	Wire Color Description	Wire Length	End2 Terminal Part Number	End2 Pin Name	End2 Connect or
A	-	-	UG94E	2643680 R1	1.16	16.0	Std. Wall XLPE Primary Cable	GREY	1365.0	-	3	9532M
B	-	-	UG94D	2643680 R1	1.16	16.0	Std. Wall XLPE Primary Cable	GREY	1365.0	-	2	9532M
C	-	-	UG94C	2643680 R1	1.16	16.0	Std. Wall XLPE Primary Cable	GREY	1365.0	-	1	9532M

Connector Name	9549A
Part Number	3539777C1
Instances	A26 - Antilock Brake System (ABS) Bendix:Diagram1 L9 - Antilock Brake System (ABS) Bendix 6 Channel Implementation:Diagram3 L9 - Antilock Brake System (ABS) Bendix 6 Channel Implementation:Diagram6 L9 - Antilock Brake System (ABS) Bendix 6 Channel Implementation:Diagram9
Mates	SNSR-WS-3003-01-06A

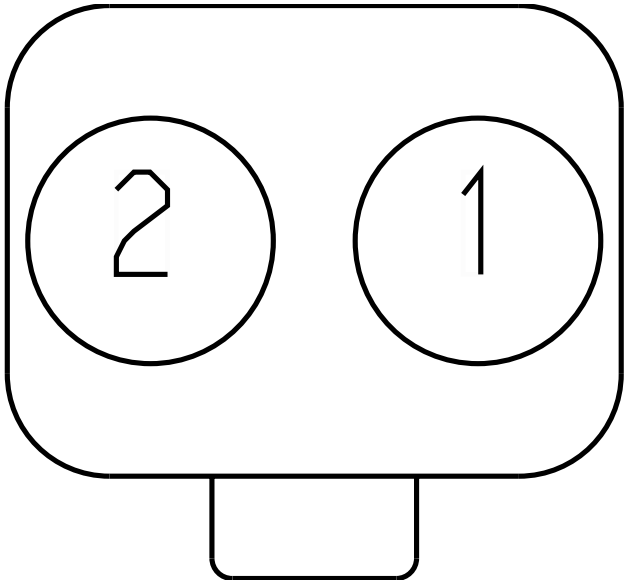

Name	Terminal Part Number	V-Min	Name	Wire Part Number	Wire CSA	Wire Spec	Wire Material description	Wire Color Description	Wire Length	End2 Terminal Part Number	End2 Pin Name	End2 Connect or
1	-	-	UP94A	2643680 R1	1.16	16.0	Std. Wall XLPE Primary Cable	GREY	1490.0	-	7	9532M
2	-	-	UP94B	2643680 R1	1.16	16.0	Std. Wall XLPE Primary Cable	GREY	1490.0	-	8	9532M

Connector Name 9549

Part Number 3539777C1

Instances A26 - Antilock Brake System (ABS) Bendix:Diagram2
L9 - Antilock Brake System (ABS) Bendix 6 Channel Implementation:Diagram1
L9 - Antilock Brake System (ABS) Bendix 6 Channel Implementation:Diagram4
L9 - Antilock Brake System (ABS) Bendix 6 Channel Implementation:Diagram7

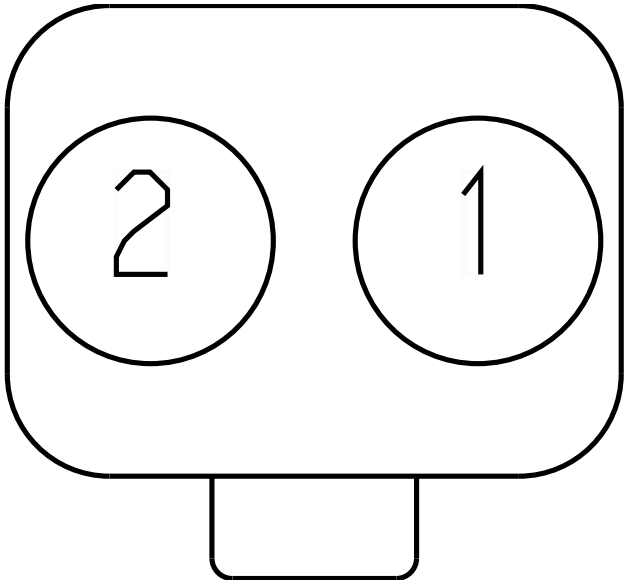

Name	Terminal Part Number	V-Min	Name	Wire Part Number	Wire CSA	Wire Spec	Wire Material description	Wire Color Description	Wire Length	End2 Terminal Part Number	End2 Pin Name	End2 Connect or
1	-	-	UG94A	2643680 R1	1.16	16.0	Std. Wall XLPE Primary Cable	GREY	1325.0	-	7	9532M
2	-	-	UG94B	2643680 R1	1.16	16.0	Std. Wall XLPE Primary Cable	GREY	1325.0	-	8	9532M

Connector Name	9550A
Part Number	1686834C1
Instances	A26 - Antilock Brake System (ABS) Bendix:Diagram1 L9 - Antilock Brake System (ABS) Bendix 6 Channel Implementation:Diagram3 L9 - Antilock Brake System (ABS) Bendix 6 Channel Implementation:Diagram6 L9 - Antilock Brake System (ABS) Bendix 6 Channel Implementation:Diagram9
Mates	MDL-ABS-3003-01-06B

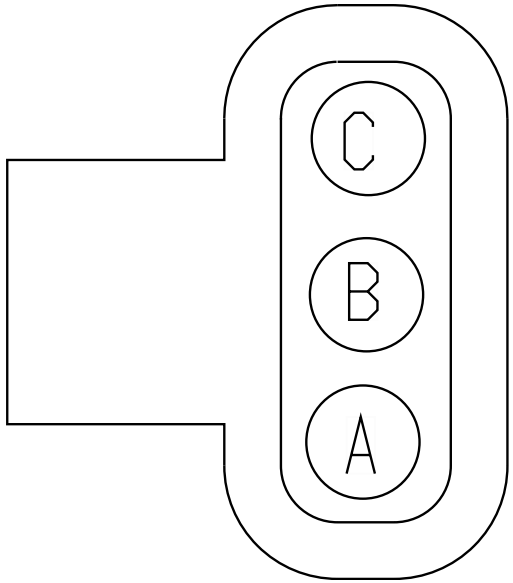

Name	Terminal Part Number	V-Min	Name	Wire Part Number	Wire CSA	Wire Spec	Wire Material description	Wire Color Description	Wire Length	End2 Terminal Part Number	End2 Pin Name	End2 Connector
A	-	-	UP94L	2643680 R1	1.16	16.0	Std. Wall XLPE Primary Cable	GREY	2325.0	-	6	9532M
B	-	-	UP94K	2643680 R1	1.16	16.0	Std. Wall XLPE Primary Cable	GREY	2325.0	-	4	9532M
C	-	-	UP94H	2643680 R1	1.16	16.0	Std. Wall XLPE Primary Cable	GREY	2325.0	-	5	9532M

Connector Name 9550

Part Number 1686834C1

Instances A26 - Antilock Brake System (ABS) Bendix:Diagram2
L9 - Antilock Brake System (ABS) Bendix 6 Channel Implementation:Diagram1
L9 - Antilock Brake System (ABS) Bendix 6 Channel Implementation:Diagram4
L9 - Antilock Brake System (ABS) Bendix 6 Channel Implementation:Diagram7

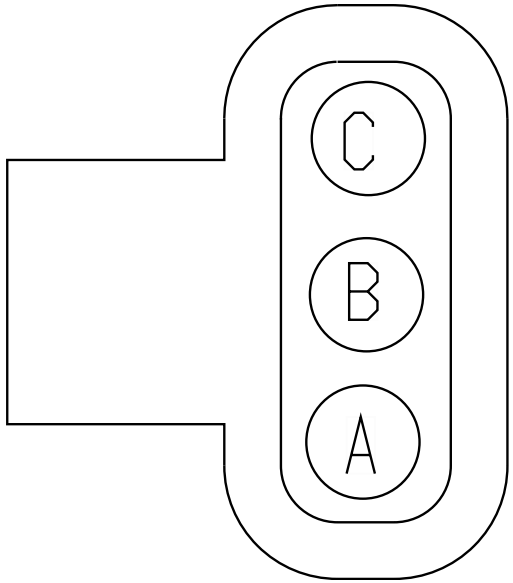

Name	Terminal Part Number	V-Min	Name	Wire Part Number	Wire CSA	Wire Spec	Wire Material description	Wire Color Description	Wire Length	End2 Terminal Part Number	End2 Pin Name	End2 Connector
A	-	-	UG94L	2643680 R1	1.16	16.0	Std. Wall XLPE Primary Cable	GREY	1910.0	-	6	9532M
B	-	-	UG94K	2643680 R1	1.16	16.0	Std. Wall XLPE Primary Cable	GREY	1910.0	-	4	9532M
C	-	-	UG94H	2643680 R1	1.16	16.0	Std. Wall XLPE Primary Cable	GREY	1910.0	-	5	9532M

Connector Name	9551A
Part Number	3539777C1
Instances	A26 - Antilock Brake System (ABS) Bendix:Diagram1 L9 - Antilock Brake System (ABS) Bendix 6 Channel Implementation:Diagram3 L9 - Antilock Brake System (ABS) Bendix 6 Channel Implementation:Diagram6 L9 - Antilock Brake System (ABS) Bendix 6 Channel Implementation:Diagram9
Mates	SNSR-WS-3003-01-06B

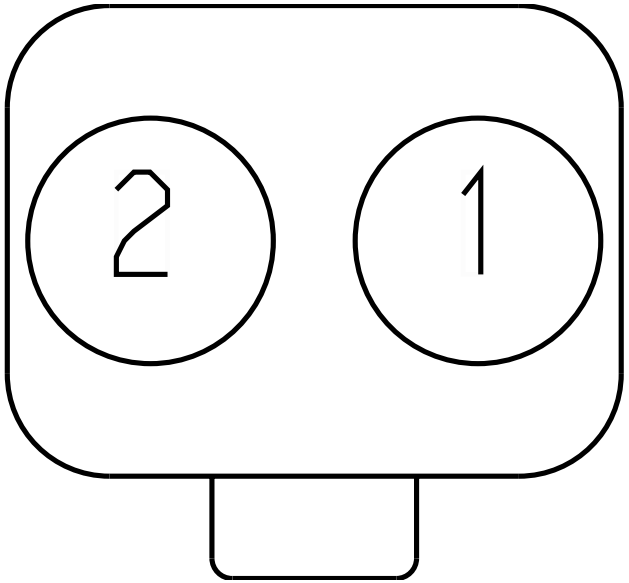

Name	Terminal Part Number	V-Min	Name	Wire Part Number	Wire CSA	Wire Spec	Wire Material description	Wire Color Description	Wire Length	End2 Terminal Part Number	End2 Pin Name	End2 Connect or
1	-	-	UP94F	2643680 R1	1.16	16.0	Std. Wall XLPE Primary Cable	GREY	2335.0	-	9	9532M
2	-	-	UP94G	2643680 R1	1.16	16.0	Std. Wall XLPE Primary Cable	GREY	2335.0	-	10	9532M

Connector Name 9551

Part Number 3539777C1

Instances A26 - Antilock Brake System (ABS) Bendix:Diagram2
L9 - Antilock Brake System (ABS) Bendix 6 Channel Implementation:Diagram1
L9 - Antilock Brake System (ABS) Bendix 6 Channel Implementation:Diagram4
L9 - Antilock Brake System (ABS) Bendix 6 Channel Implementation:Diagram7

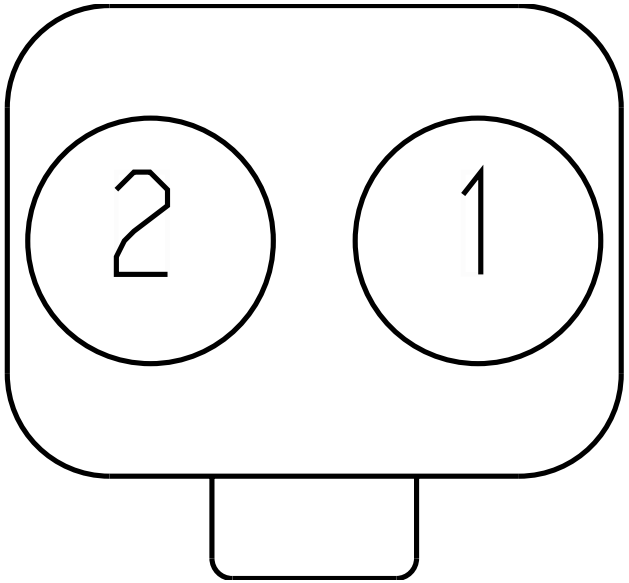

Name	Terminal Part Number	V-Min	Name	Wire Part Number	Wire CSA	Wire Spec	Wire Material description	Wire Color Description	Wire Length	End2 Terminal Part Number	End2 Pin Name	End2 Connect or
1	-	-	UG94F	2643680 R1	1.16	16.0	Std. Wall XLPE Primary Cable	GREY	2060.0	-	9	9532M
2	-	-	UG94G	2643680 R1	1.16	16.0	Std. Wall XLPE Primary Cable	GREY	2060.0	-	10	9532M

Connector Name 9556

Part Number 1686834C1

Instances A26 - Antilock Brake System (ABS) Bendix:Diagram3
L9 - Antilock Brake System (ABS) Bendix 6 Channel Implementation:Diagram2
L9 - Antilock Brake System (ABS) Bendix 6 Channel Implementation:Diagram5
L9 - Antilock Brake System (ABS) Bendix 6 Channel Implementation:Diagram8

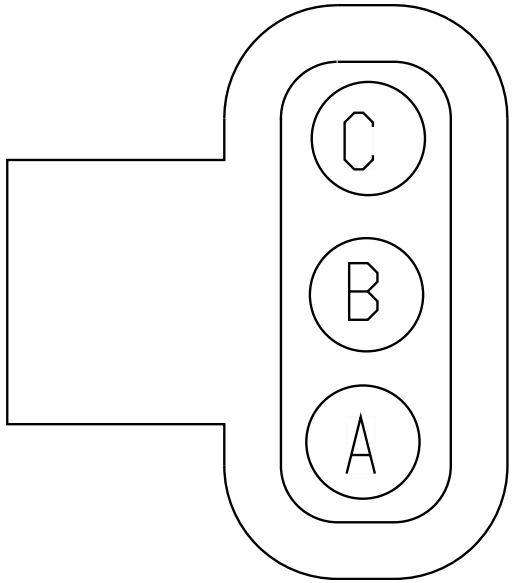

Name	Terminal Part Number	V-Min	Name	Wire Part Number	Wire CSA	Wire Spec	Wire Material description	Wire Color Description	Wire Length	End2 Terminal Part Number	End2 Pin Name	End2 Connect or
A	-	-	UL94M	3510294 R1	1.16	16.0	Thin Wall XLPE Primary Cable	BLACK	1310.0	-	17	9800
B	-	-	UL94N	3510366 R1	1.16	16.0	Thin Wall XLPE Primary Cable	RED	1310.0	-	18	9800
C	-	-	UL94P	3510306 R1	1.16	16.0	Thin Wall XLPE Primary Cable	BROWN	1310.0	-	19	9800

Connector Name 9557

Part Number 3539777C1

Instances A26 - Antilock Brake System (ABS) Bendix:Diagram3
L9 - Antilock Brake System (ABS) Bendix 6 Channel Implementation:Diagram2
L9 - Antilock Brake System (ABS) Bendix 6 Channel Implementation:Diagram5
L9 - Antilock Brake System (ABS) Bendix 6 Channel Implementation:Diagram8

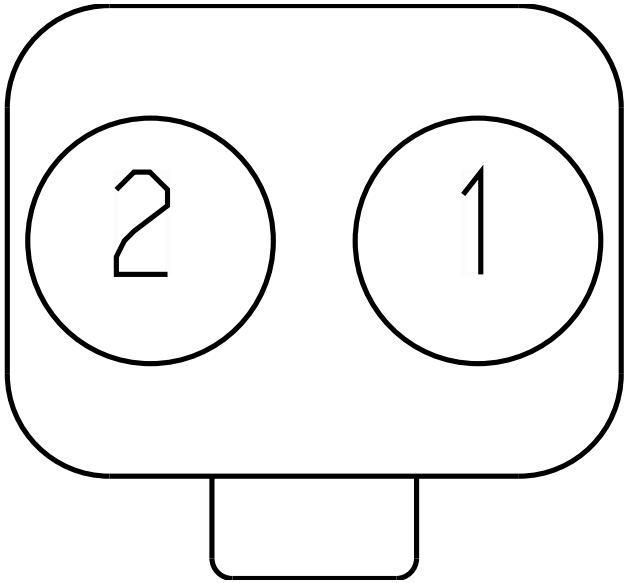

Name	Terminal Part Number	V-Min	Name	Wire Part Number	Wire CSA	Wire Spec	Wire Material description	Wire Color Description	Wire Length	End2 Terminal Part Number	End2 Pin Name	End2 Connect or
1	-	-	UL94R	2643680 R1	1.16	16.0	Std. Wall XLPE Primary Cable	GREY	1410.0	-	13	9800
2	-	-	UL94S	2643682 R1	1.16	16.0	Std. Wall XLPE Primary Cable	ORANGE	1410.0	-	14	9800

Connector Name 9558

Part Number 1686834C1

Instances A26 - Antilock Brake System (ABS) Bendix:Diagram3
L9 - Antilock Brake System (ABS) Bendix 6 Channel Implementation:Diagram2
L9 - Antilock Brake System (ABS) Bendix 6 Channel Implementation:Diagram5
L9 - Antilock Brake System (ABS) Bendix 6 Channel Implementation:Diagram8

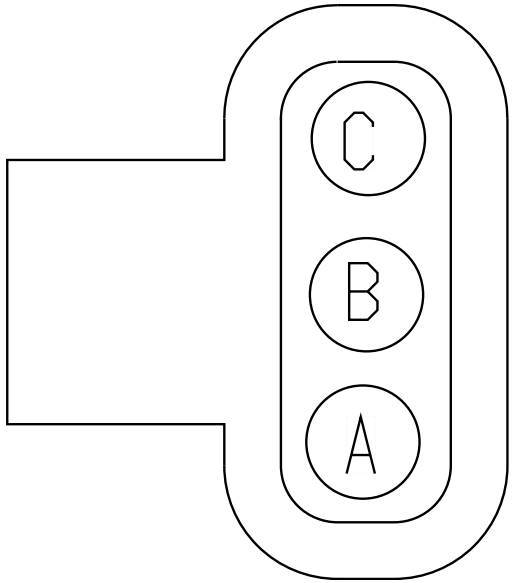

Name	Terminal Part Number	V-Min	Name	Wire Part Number	Wire CSA	Wire Spec	Wire Material description	Wire Color Description	Wire Length	End2 Terminal Part Number	End2 Pin Name	End2 Connect or
A	-	-	UL94E	2643680 R1	1.16	16.0	Std. Wall XLPE Primary Cable	GREY	1715.0	-	3	9532M
B	-	-	UL94D	2643680 R1	1.16	16.0	Std. Wall XLPE Primary Cable	GREY	1715.0	-	2	9532M
C	-	-	UL94C	2643680 R1	1.16	16.0	Std. Wall XLPE Primary Cable	GREY	1715.0	-	1	9532M

Connector Name 9559

Part Number 3539777C1

Instances A26 - Antilock Brake System (ABS) Bendix:Diagram3
L9 - Antilock Brake System (ABS) Bendix 6 Channel Implementation:Diagram2
L9 - Antilock Brake System (ABS) Bendix 6 Channel Implementation:Diagram5
L9 - Antilock Brake System (ABS) Bendix 6 Channel Implementation:Diagram8

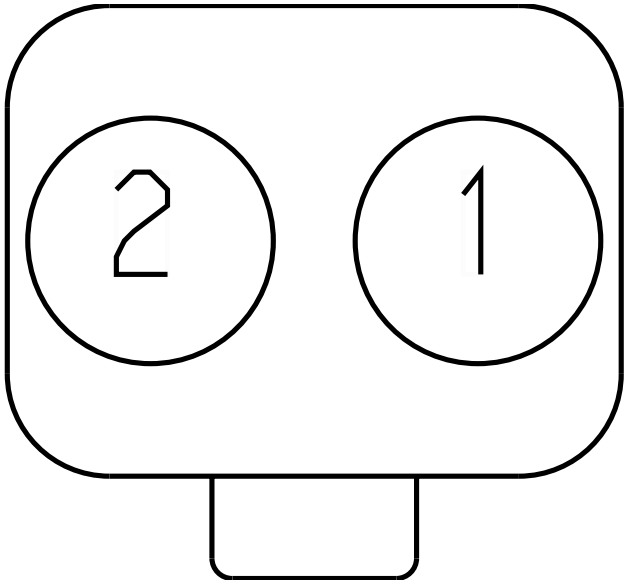

Name	Terminal Part Number	V-Min	Name	Wire Part Number	Wire CSA	Wire Spec	Wire Material description	Wire Color Description	Wire Length	End2 Terminal Part Number	End2 Pin Name	End2 Connect or
1	-	-	UL94A	2643680 R1	1.16	16.0	Std. Wall XLPE Primary Cable	GREY	1815.0	-	7	9532M
2	-	-	UL94B	2643680 R1	1.16	16.0	Std. Wall XLPE Primary Cable	GREY	1815.0	-	8	9532M

Connector Name 9560

Part Number 3539777C1

Instances A26 - Antilock Brake System (ABS) Bendix:Diagram3
L9 - Antilock Brake System (ABS) Bendix 6 Channel Implementation:Diagram2
L9 - Antilock Brake System (ABS) Bendix 6 Channel Implementation:Diagram5
L9 - Antilock Brake System (ABS) Bendix 6 Channel Implementation:Diagram8

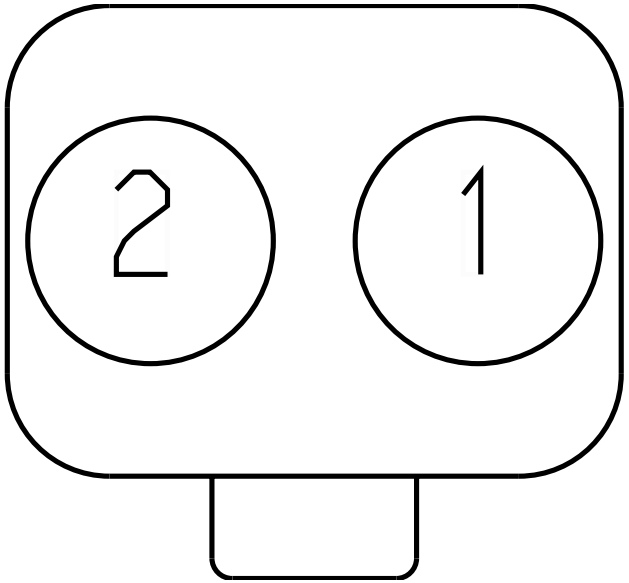

Name	Terminal Part Number	V-Min	Name	Wire Part Number	Wire CSA	Wire Spec	Wire Material description	Wire Color Description	Wire Length	End2 Terminal Part Number	End2 Pin Name	End2 Connect or
1	-	-	UL94F	2643680 R1	1.16	16.0	Std. Wall XLPE Primary Cable	GREY	2415.0	-	9	9532M
2	-	-	UL94G	2643680 R1	1.16	16.0	Std. Wall XLPE Primary Cable	GREY	2415.0	-	10	9532M

Connector Name 9561

Part Number 1686834C1

Instances A26 - Antilock Brake System (ABS) Bendix:Diagram3
L9 - Antilock Brake System (ABS) Bendix 6 Channel Implementation:Diagram2
L9 - Antilock Brake System (ABS) Bendix 6 Channel Implementation:Diagram5
L9 - Antilock Brake System (ABS) Bendix 6 Channel Implementation:Diagram8

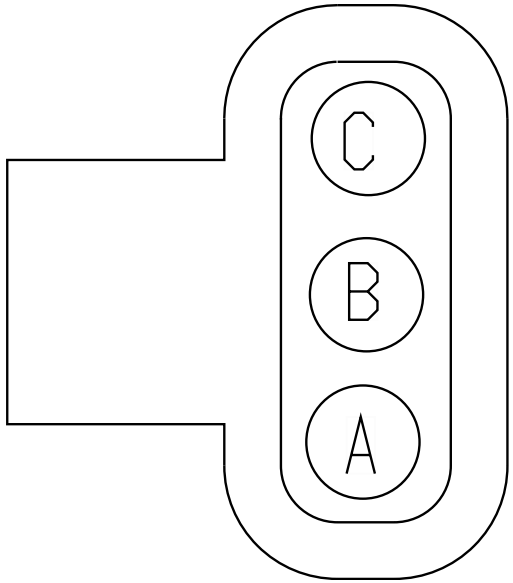

Name	Terminal Part Number	V-Min	Name	Wire Part Number	Wire CSA	Wire Spec	Wire Material description	Wire Color Description	Wire Length	End2 Terminal Part Number	End2 Pin Name	End2 Connector
A	-	-	UL94L	2643680 R1	1.16	16.0	Std. Wall XLPE Primary Cable	GREY	2440.0	-	6	9532M
B	-	-	UL94K	2643680 R1	1.16	16.0	Std. Wall XLPE Primary Cable	GREY	2440.0	-	4	9532M
C	-	-	UL94H	2643680 R1	1.16	16.0	Std. Wall XLPE Primary Cable	GREY	2440.0	-	5	9532M

Connector Name 9562

Part Number 1686834C1

Instances A26 - Antilock Brake System (ABS) Bendix:Diagram3
L9 - Antilock Brake System (ABS) Bendix 6 Channel Implementation:Diagram2
L9 - Antilock Brake System (ABS) Bendix 6 Channel Implementation:Diagram5
L9 - Antilock Brake System (ABS) Bendix 6 Channel Implementation:Diagram8

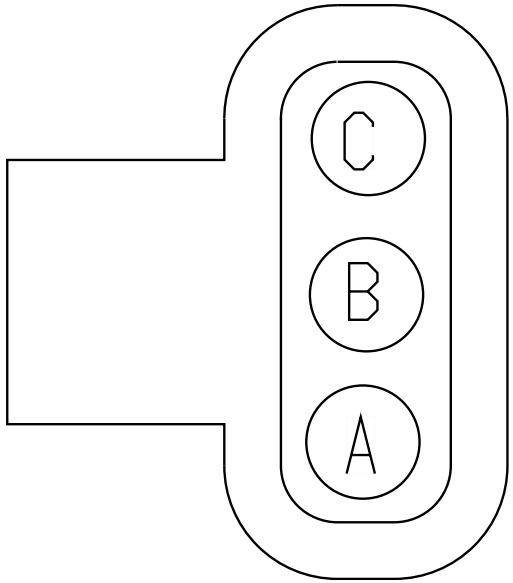

Name	Terminal Part Number	V-Min	Name	Wire Part Number	Wire CSA	Wire Spec	Wire Material description	Wire Color Description	Wire Length	End2 Terminal Part Number	End2 Pin Name	End2 Connect or
A	-	-	UL94T	3510348 R1	1.16	16.0	Thin Wall XLPE Primary Cable	VIOLET	2615.0	-	20	9800
B	-	-	UL94U	3510300 R1	1.16	16.0	Thin Wall XLPE Primary Cable	LIGHT GREEN	2615.0	-	21	9800
C	-	-	UL94V	3510342 R1	1.16	16.0	Thin Wall XLPE Primary Cable	LIGHT BLUE	2615.0	-	22	9800

Connector Name 9563

Part Number 3539777C1

Instances A26 - Antilock Brake System (ABS) Bendix:Diagram3
L9 - Antilock Brake System (ABS) Bendix 6 Channel Implementation:Diagram2
L9 - Antilock Brake System (ABS) Bendix 6 Channel Implementation:Diagram5
L9 - Antilock Brake System (ABS) Bendix 6 Channel Implementation:Diagram8

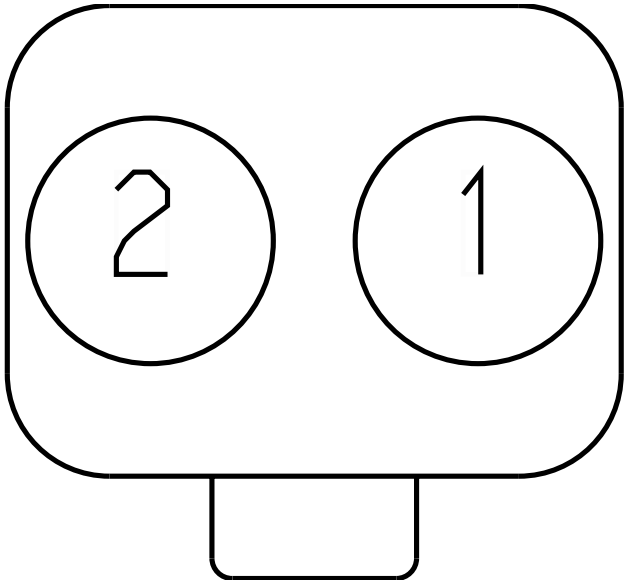

Name	Terminal Part Number	V-Min	Name	Wire Part Number	Wire CSA	Wire Spec	Wire Material description	Wire Color Description	Wire Length	End2 Terminal Part Number	End2 Pin Name	End2 Connect or
1	-	-	UL94W	2643721 R1	1.16	16.0	Std. Wall XLPE Primary Cable	DARK BLUE	2865.0	-	15	9800
2	-	-	UL94X	2643684 R1	1.16	16.0	Std. Wall XLPE Primary Cable	YELLOW 2	2865.0	-	16	9800

Connector Name	9715F
Part Number	1667732C1
Short Description	TRAILER SOCKET 1
Instances	A26 - Body Builder Lighting - Separate Turn and Stop Lamps (Blunt Cut) - Option 1:Diagram1-Option1 (R/D 9724) A26 - Body Builder Lighting - Separate Turn and Stop Lamps (Blunt Cut) - Option 2:Diagram1-Option1 (R/D 9724A) B6.7 - TEM _Electric Trailer Brake Controller Activated Stop LT Option 1:Diagram1
Mates	9715

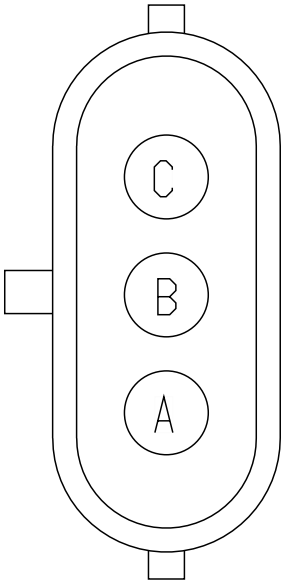

Name	Terminal Part Number	V-Min	Name	Wire Part Number	Wire CSA	Wire Spec	Wire Material description	Wire Color Description	Wire Length	End2 Terminal Part Number	End2 Pin Name	End2 Connect or
A	-	-	RG70	2643698 R1	4.81	10.0	Std. Wall XLPE Primary Cable	RED	2306.0	-	F	9724
A	-	-	TW70	2643698 R1	4.81	10.0	Std. Wall XLPE Primary Cable	RED	2306.0	-	F	9724A
B	-	-	RG68	2643779 R1	4.81	10.0	Std. Wall XLPE Primary Cable	BROWN	2306.0	-	E	9724
B	-	-	TW68	2643779 R1	4.81	10.0	Std. Wall XLPE Primary Cable	BROWN	2306.0	-	E	9724A

Name	Terminal Part Number	V-Min	Name	Wire Part Number	Wire CSA	Wire Spec	Wire Material description	Wire Color Description	Wire Length	End2 Terminal Part Number	End2 Pin Name	End2 Connect or
C	-	-	TW94	2643784 R1	4.81	10.0	Std. Wall XLPE Primary Cable	GREY	2306.0	-	G	9724A

Connector Name 9715F

Part Number 1667732C1

Short Description TRAILER SOCKET 1

Instances A26 - TEM Electric Trailer Brake Controller Activated Stop LT:Diagram1
A26 - TEM Electric Trailer Brake Controller Activated Stop LT (Option2):Diagram1
B6.7 - Body Builder Lighting - Separate Turn and Stop Lamps (Blunt Cut) Option 1:Diagram1
B6.7 - Body Builder Lighting - Separate Turn and Stop Lamps (Blunt Cut) Option 2:Diagram1
B6.7 - TEM Electric Trailer Brake Controller Activated Stop LT Option 2:Diagram1
B6.7 - Trailer Interface (Lighting) – BLUNT CUT (Part of Electric Trailer Brakes) Option 1:Diagram1
B6.7 - Trailer Interface (Lighting) – BLUNT CUT (Part of Electric Trailer Brakes) Option 2:Diagram1
L9 - Body Builder Lighting - Separate Turn and Stop Lamps (Blunt Cut) Option 1:Diagram1
L9 - Body Builder Lighting - Separate Turn and Stop Lamps (Blunt Cut) Option 2:Diagram1
L9 - TEM Electric Trailer Brake Controller Activated Stop LT:Diagram1
L9 - Trailer Interface (Lighting) – BLUNT CUT (Part of Electric Trailer Brakes) Option 1:Diagram1
L9 - Trailer Interface (Lighting) – BLUNT CUT (Part of Electric Trailer Brakes) Option 2:Diagram1

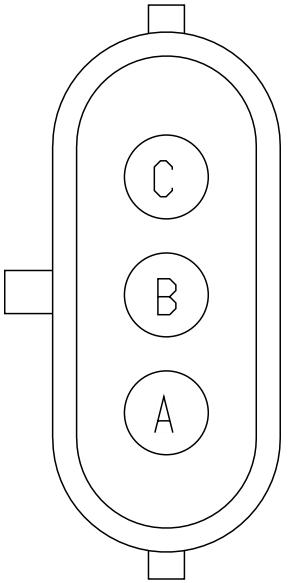

Mates 9715

Name	Terminal Part Number	V-Min	Name	Wire Part Number	Wire CSA	Wire Spec	Wire Material description	Wire Color Description	Wire Length	End2 Terminal Part Number	End2 Pin Name	End2 Connect or
A	-	-	RG70	2643698 R1	4.81	10.0	Std. Wall XLPE Primary Cable	RED	2306.0	-	E	9724
A	-	-	RG70	2643698 R1	4.81	10.0	Std. Wall XLPE Primary Cable	RED	2306.0	-	F	9724

Name	Terminal Part Number	V-Min	Name	Wire Part Number	Wire CSA	Wire Spec	Wire Material description	Wire Color Description	Wire Length	End2 Terminal Part Number	End2 Pin Name	End2 Connector
A	-	-	TW70	2643698 R1	4.81	10.0	Std. Wall XLPE Primary Cable	RED	2306.0	-	F	9724A
A	-	-	TW70	2643698 R1	4.81	10.0	Std. Wall XLPE Primary Cable	RED	2306.0	-	E	9724A
B	-	-	RG68	2643779 R1	4.81	10.0	Std. Wall XLPE Primary Cable	BROWN	2306.0	-	F	9724
B	-	-	RG68	2643779 R1	4.81	10.0	Std. Wall XLPE Primary Cable	BROWN	2306.0	-	E	9724
B	-	-	TW68	2643779 R1	4.81	10.0	Std. Wall XLPE Primary Cable	BROWN	2306.0	-	E	9724A
B	-	-	TW68	2643779 R1	4.81	10.0	Std. Wall XLPE Primary Cable	BROWN	2306.0	-	F	9724A
C	-	-	TW94	2643784 R1	4.81	10.0	Std. Wall XLPE Primary Cable	GREY	2306.0	-	G	9724A
C	-	-	RG94	2643784 R1	4.81	10.0	Std. Wall XLPE Primary Cable	GREY	2306.0	-	G	9724
C	-	-	TW94	2643784 R1	4.81	10.0	Std. Wall XLPE Primary Cable	GREY	2306.0	-	G	9724

Connector Name	9715
Part Number	1667733C1
Short Description	TRAILER SOCKET 1
Instances	A26 - Body Builder Lighting - Separate Turn and Stop Lamps (Blunt Cut) - Option 1:Diagram1-Option1 (R/D 9724) A26 - Body Builder Lighting - Separate Turn and Stop Lamps (Blunt Cut) - Option 2:Diagram1-Option1 (R/D 9724A) B6.7 - TEM _Electric Trailer Brake Controller Activated Stop LT Option 1:Diagram1
Mates	9715F

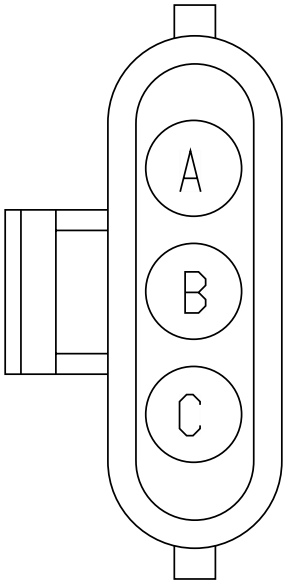

Name	Terminal Part Number	V-Min	Name	Wire Part Number	Wire CSA	Wire Spec	Wire Material description	Wire Color Description	Wire Length	End2 Terminal Part Number	End2 Pin Name	End2 Connect or
A	-	-	NC70T	2643698 R1	4.81	10.0	Std. Wall XLPE Primary Cable	RED	4455.0	-	9	1701F
B	-	-	NC68T	2643779 R1	4.81	10.0	Std. Wall XLPE Primary Cable	BROWN	4455.0	-	8	1701F
C	-	-	NC94T	2643784 R1	4.81	10.0	Std. Wall XLPE Primary Cable	GREY	4455.0	-	10	1701F

Connector Name	9715
Part Number	1667733C1
Short Description	TRAILER SOCKET 1
Instances	A26 - TEM Electric Trailer Brake Controller Activated Stop LT:Diagram1 A26 - TEM Electric Trailer Brake Controller Activated Stop LT (Option2):Diagram1 B6.7 - Body Builder Lighting - Separate Turn and Stop Lamps (Blunt Cut) Option 1:Diagram1 B6.7 - Body Builder Lighting - Separate Turn and Stop Lamps (Blunt Cut) Option 2:Diagram1 B6.7 - TEM Electric Trailer Brake Controller Activated Stop LT Option 2:Diagram1 B6.7 - Trailer Interface (Lighting) – BLUNT CUT (Part of Electric Trailer Brakes) Option 1:Diagram1 B6.7 - Trailer Interface (Lighting) – BLUNT CUT (Part of Electric Trailer Brakes) Option 2:Diagram1 L9 - Body Builder Lighting - Separate Turn and Stop Lamps (Blunt Cut) Option 1:Diagram1 L9 - Body Builder Lighting - Separate Turn and Stop Lamps (Blunt Cut) Option 2:Diagram1 L9 - TEM Electric Trailer Brake Controller Activated Stop LT:Diagram1 L9 - Trailer Interface (Lighting) – BLUNT CUT (Part of Electric Trailer Brakes) Option 1:Diagram1 L9 - Trailer Interface (Lighting) – BLUNT CUT (Part of Electric Trailer Brakes) Option 2:Diagram1
Mates	9715F

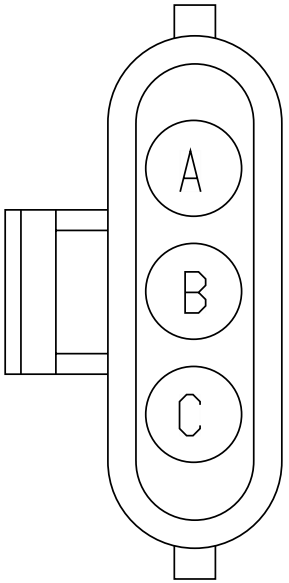

Name	Terminal Part Number	V-Min	Name	Wire Part Number	Wire CSA	Wire Spec	Wire Material description	Wire Color Description	Wire Length	End2 Terminal Part Number	End2 Pin Name	End2 Connect or
A	-	-	NC70T	2643698 R1	4.81	10.0	Std. Wall XLPE Primary Cable	RED	4455.0	-	9	1701F
A	-	-	NE70F	2643698 R1	4.81	10.0	Std. Wall XLPE Primary Cable	RED	2700.0	-	X	-

Name	Terminal Part Number	V-Min	Name	Wire Part Number	Wire CSA	Wire Spec	Wire Material description	Wire Color Description	Wire Length	End2 Terminal Part Number	End2 Pin Name	End2 Connector
B	-	-	NC68T	2643779 R1	4.81	10.0	Std. Wall XLPE Primary Cable	BROWN	4455.0	-	8	1701F
B	-	-	NE68F	2643779 R1	4.81	10.0	Std. Wall XLPE Primary Cable	BROWN	2650.0	-	X	-
C	-	-	NC94T	2643784 R1	4.81	10.0	Std. Wall XLPE Primary Cable	GREY	4455.0	-	10	1701F

Connector Name	9716M1
Part Number	1667733C1
Short Description	TRAILER SOCKET 2
Instances	B6.7 - Body Builder Lighting - Separate Turn and Stop Lamps (Blunt Cut) Option 1:Diagram1 B6.7 - Trailer Interface (Lighting) – BLUNT CUT (Part of Electric Trailer Brakes) Option 1:Diagram1 B6.7 - Trailer Interface (Lighting) – BLUNT CUT (Part of Electric Trailer Brakes) Option 2:Diagram1 L9 - Body Builder Lighting - Separate Turn and Stop Lamps (Blunt Cut) Option 1:Diagram1 L9 - Body Builder Lighting - Separate Turn and Stop Lamps (Blunt Cut) Option 2:Diagram1 L9 - Trailer Interface (Lighting) – BLUNT CUT (Part of Electric Trailer Brakes) Option 1:Diagram1 L9 - Trailer Interface (Lighting) – BLUNT CUT (Part of Electric Trailer Brakes) Option 2:Diagram1
Mates	9716

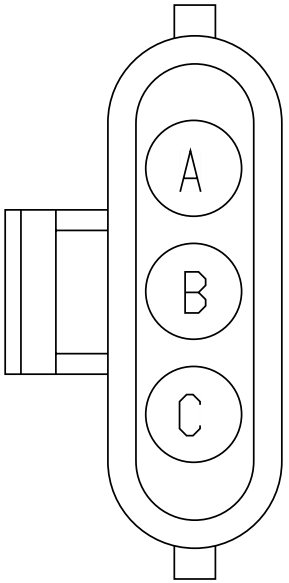

Name	Terminal Part Number	V-Min	Name	Wire Part Number	Wire CSA	Wire Spec	Wire Material description	Wire Color Description	Wire Length	End2 Terminal Part Number	End2 Pin Name	End2 Connector
A	-	-	RG58	2643779 R1	4.81	10.0	Std. Wall XLPE Primary Cable	BROWN	2331.0	-	B	9724
A	-	-	RG58	2643779 R1	4.81	10.0	Std. Wall XLPE Primary Cable	BROWN	2331.0	-	D	9724
A	-	-	TW58	2643779 R1	4.81	10.0	Std. Wall XLPE Primary Cable	BROWN	2331.0	-	D	9724A
A	-	-	TW58	2643779 R1	4.81	10.0	Std. Wall XLPE Primary Cable	BROWN	2331.0	-	B	9724A

Name	Terminal Part Number	V-Min	Name	Wire Part Number	Wire CSA	Wire Spec	Wire Material description	Wire Color Description	Wire Length	End2 Terminal Part Number	End2 Pin Name	End2 Connect or
B	-	-	RG56	2643802 R1	4.81	10.0	Std. Wall XLPE Primary Cable	YELLOW 2	2331.0	-	C	9724
B	-	-	RG56	2643802 R1	4.81	10.0	Std. Wall XLPE Primary Cable	YELLOW 2	2331.0	-	B	9724
B	-	-	TW56	2643802 R1	4.81	10.0	Std. Wall XLPE Primary Cable	YELLOW 2	2331.0	-	B	9724A
B	-	-	TW56	2643802 R1	4.81	10.0	Std. Wall XLPE Primary Cable	YELLOW 2	2331.0	-	C	9724A
C	-	-	RG57	2643776 R1	4.81	10.0	Std. Wall XLPE Primary Cable	LIGHT GREEN	2331.0	-	D	9724
C	-	-	RG57	2643776 R1	4.81	10.0	Std. Wall XLPE Primary Cable	LIGHT GREEN	2331.0	-	C	9724
C	-	-	TW57	2643776 R1	4.81	10.0	Std. Wall XLPE Primary Cable	LIGHT GREEN	2331.0	-	C	9724A
C	-	-	TW57	2643776 R1	4.81	10.0	Std. Wall XLPE Primary Cable	LIGHT GREEN	2331.0	-	D	9724A

Connector Name	9716M
Part Number	1667733C1
Short Description	TRAILER SOCKET 2
Instances	A26 - Body Builder Lighting - Separate Turn and Stop Lamps (Blunt Cut) - Option 1:Diagram1-Option1 (R/D 9724) A26 - Body Builder Lighting - Separate Turn and Stop Lamps (Blunt Cut) - Option 2:Diagram1-Option1 (R/D 9724A) B6.7 - Body Builder Lighting - Separate Turn and Stop Lamps (Blunt Cut) Option 2:Diagram1
Mates	9716

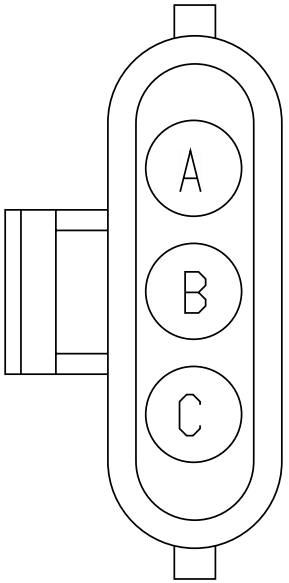

Name	Terminal Part Number	V-Min	Name	Wire Part Number	Wire CSA	Wire Spec	Wire Material description	Wire Color Description	Wire Length	End2 Terminal Part Number	End2 Pin Name	End2 Connect or
A	-	-	RG58	2643779 R1	4.81	10.0	Std. Wall XLPE Primary Cable	BROWN	2331.0	-	D	9724
A	-	-	RG58	2643779 R1	4.81	10.0	Std. Wall XLPE Primary Cable	BROWN	2331.0	-	B	9724
A	-	-	TW58	2643779 R1	4.81	10.0	Std. Wall XLPE Primary Cable	BROWN	2331.0	-	D	9724A
B	-	-	RG56	2643802 R1	4.81	10.0	Std. Wall XLPE Primary Cable	YELLOW 2	2331.0	-	B	9724

Name	Terminal Part Number	V-Min	Name	Wire Part Number	Wire CSA	Wire Spec	Wire Material description	Wire Color Description	Wire Length	End2 Terminal Part Number	End2 Pin Name	End2 Connect or
B	-	-	RG56	2643802 R1	4.81	10.0	Std. Wall XLPE Primary Cable	YELLOW 2	2331.0	-	C	9724
B	-	-	TW56	2643802 R1	4.81	10.0	Std. Wall XLPE Primary Cable	YELLOW 2	2331.0	-	B	9724A
C	-	-	RG57	2643776 R1	4.81	10.0	Std. Wall XLPE Primary Cable	LIGHT GREEN	2331.0	-	C	9724
C	-	-	RG57	2643776 R1	4.81	10.0	Std. Wall XLPE Primary Cable	LIGHT GREEN	2331.0	-	D	9724
C	-	-	TW57	2643776 R1	4.81	10.0	Std. Wall XLPE Primary Cable	LIGHT GREEN	2331.0	-	C	9724A

Connector Name	9716
Part Number	1667732C1
Short Description	TRAILER SOCKET 2
Instances	A26 - Body Builder Lighting - Separate Turn and Stop Lamps (Blunt Cut) - Option 1:Diagram1-Option1 (R/D 9724) A26 - Body Builder Lighting - Separate Turn and Stop Lamps (Blunt Cut) - Option 2:Diagram1-Option1 (R/D 9724A) B6.7 - Body Builder Lighting - Separate Turn and Stop Lamps (Blunt Cut) Option 2:Diagram1
Mates	9716M

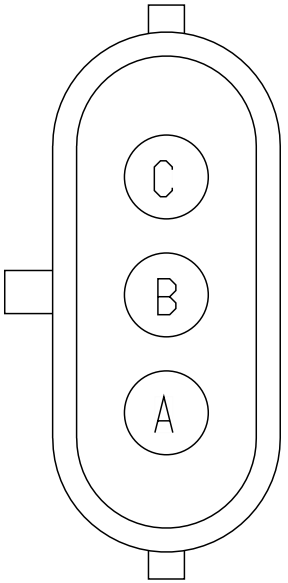

Name	Terminal Part Number	V-Min	Name	Wire Part Number	Wire CSA	Wire Spec	Wire Material description	Wire Color Description	Wire Length	End2 Terminal Part Number	End2 Pin Name	End2 Connect or
A	-	-	NC54T	2643779 R1	4.81	10.0	Std. Wall XLPE Primary Cable	BROWN	4430.0	-	7	1701F
B	-	-	NC56T	2643802 R1	4.81	10.0	Std. Wall XLPE Primary Cable	YELLOW 2	4430.0	-	5	1701F
C	-	-	NC57T	2643776 R1	4.81	10.0	Std. Wall XLPE Primary Cable	LIGHT GREEN	4430.0	-	6	1701F

Connector Name	9716
Part Number	1667732C1
Short Description	TRAILER SOCKET 2
Instances	B6.7 - Body Builder Lighting - Separate Turn and Stop Lamps (Blunt Cut) Option 1:Diagram1 B6.7 - Trailer Interface (Lighting) – BLUNT CUT (Part of Electric Trailer Brakes) Option 1:Diagram1 B6.7 - Trailer Interface (Lighting) – BLUNT CUT (Part of Electric Trailer Brakes) Option 2:Diagram1 L9 - Body Builder Lighting - Separate Turn and Stop Lamps (Blunt Cut) Option 1:Diagram1 L9 - Body Builder Lighting - Separate Turn and Stop Lamps (Blunt Cut) Option 2:Diagram1 L9 - Trailer Interface (Lighting) – BLUNT CUT (Part of Electric Trailer Brakes) Option 1:Diagram1 L9 - Trailer Interface (Lighting) – BLUNT CUT (Part of Electric Trailer Brakes) Option 2:Diagram1
Mates	9716M1

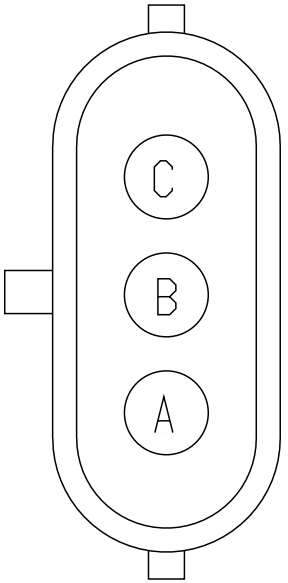

Name	Terminal Part Number	V-Min	Name	Wire Part Number	Wire CSA	Wire Spec	Wire Material description	Wire Color Description	Wire Length	End2 Terminal Part Number	End2 Pin Name	End2 Connector
A	-	-	NC54T	2643779 R1	4.81	10.0	Std. Wall XLPE Primary Cable	BROWN	4430.0	-	7	1701F
A	-	-	NE54F	2643779 R1	4.81	10.0	Std. Wall XLPE Primary Cable	BROWN	2575.0	-	X	-
B	-	-	NC56T	2643802 R1	4.81	10.0	Std. Wall XLPE Primary Cable	YELLOW 2	4430.0	-	5	1701F
B	-	-	NE56F	2643802 R1	4.81	10.0	Std. Wall XLPE Primary Cable	YELLOW 2	2510.0	-	X	-

Name	Terminal Part Number	V-Min	Name	Wire Part Number	Wire CSA	Wire Spec	Wire Material description	Wire Color Description	Wire Length	End2 Terminal Part Number	End2 Pin Name	End2 Connect or
C	-	-	NC57T	2643776 R1	4.81	10.0	Std. Wall XLPE Primary Cable	LIGHT GREEN	4430.0	-	6	1701F
C	-	-	NE57F	2643776 R1	4.81	10.0	Std. Wall XLPE Primary Cable	LIGHT GREEN	2450.0	-	X	-

Connector Name	9717F1
Part Number	3537133C1
Short Description	TRAILER GROUND
Instances	B6.7 - Body Builder Lighting - Separate Turn and Stop Lamps (Blunt Cut) Option 2:Diagram1 B6.7 - Trailer Interface (Lighting) – BLUNT CUT (Part of Electric Trailer Brakes) Option 1:Diagram1 L9 - Body Builder Lighting - Separate Turn and Stop Lamps (Blunt Cut) Option 1:Diagram1 L9 - Body Builder Lighting - Separate Turn and Stop Lamps (Blunt Cut) Option 2:Diagram1 L9 - Trailer Interface (Lighting) – BLUNT CUT (Part of Electric Trailer Brakes) Option 2:Diagram1
Mates	9717

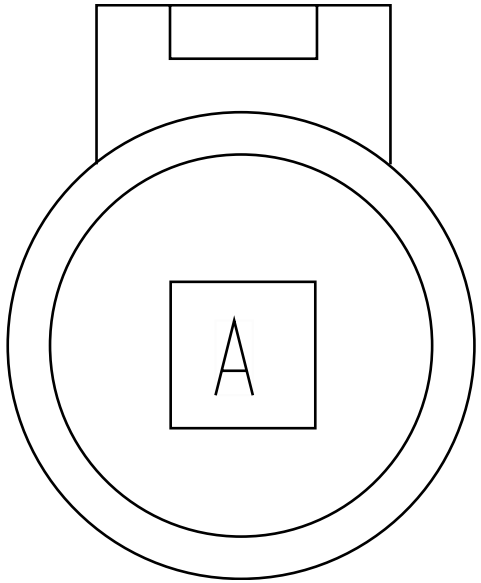

Name	Terminal Part Number	V-Min	Name	Wire Part Number	Wire CSA	Wire Spec	Wire Material description	Wire Color Description	Wire Length	End2 Terminal Part Number	End2 Pin Name	End2 Connect or
A	-	-	TW10	2643789 R1	7.48	8.0	Std. Wall XLPE Primary Cable	WHITE	2356.0	-	A	9724A
A	-	-	RG10	2643789 R1	7.48	8.0	Std. Wall XLPE Primary Cable	WHITE	2356.0	-	A	9724

Connector Name	9717F
Part Number	3517817C1
Short Description	TRAILER GROUND
Instances	A26 - Body Builder Lighting - Separate Turn and Stop Lamps (Blunt Cut) - Option 1:Diagram1-Option1 (R/D 9724) A26 - Body Builder Lighting - Separate Turn and Stop Lamps (Blunt Cut) - Option 2:Diagram1-Option1 (R/D 9724A)
Mates	9717

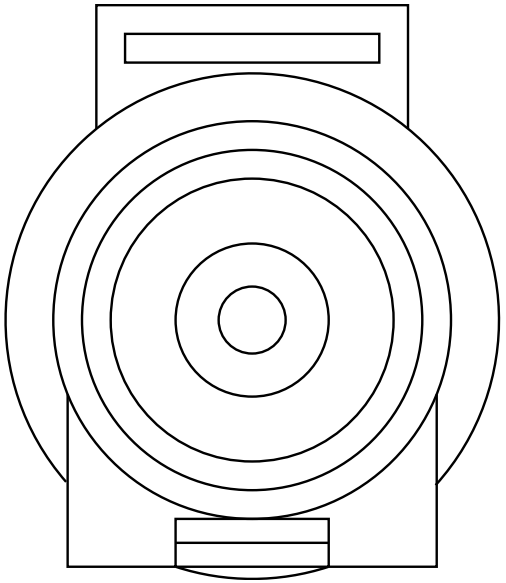

Name	Terminal Part Number	V-Min	Name	Wire Part Number	Wire CSA	Wire Spec	Wire Material description	Wire Color Description	Wire Length	End2 Terminal Part Number	End2 Pin Name	End2 Connect or
A	-	-	RG10	2643789 R1	7.48	8.0	Std. Wall XLPE Primary Cable	WHITE	2356.0	-	G	9724
A	-	-	TW10	2643789 R1	7.48	8.0	Std. Wall XLPE Primary Cable	WHITE	2356.0	-	G	9724A

Connector Name	9717F
Part Number	3517817C1
Short Description	TRAILER GROUND
Instances	B6.7 - Body Builder Lighting - Separate Turn and Stop Lamps (Blunt Cut) Option 1:Diagram1 B6.7 - Trailer Interface (Lighting) – BLUNT CUT (Part of Electric Trailer Brakes) Option 2:Diagram1 L9 - Trailer Interface (Lighting) – BLUNT CUT (Part of Electric Trailer Brakes) Option 1:Diagram1
Mates	9717

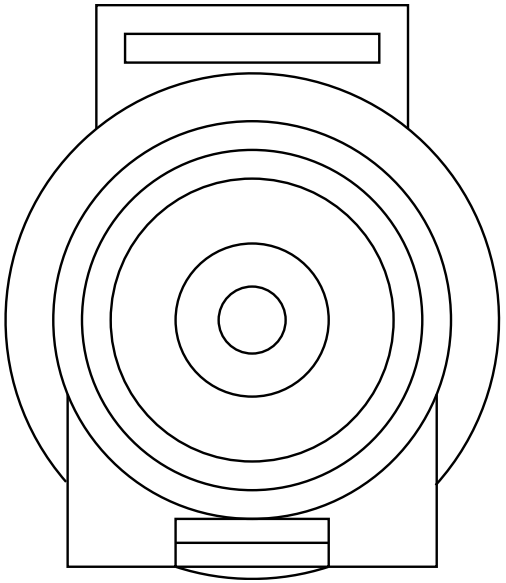

Name	Terminal Part Number	V-Min	Name	Wire Part Number	Wire CSA	Wire Spec	Wire Material description	Wire Color Description	Wire Length	End2 Terminal Part Number	End2 Pin Name	End2 Connect or
A	-	-	RG10	2643789 R1	7.48	8.0	Std. Wall XLPE Primary Cable	WHITE	2356.0	-	A	9724
A	-	-	TW10	2643789 R1	7.48	8.0	Std. Wall XLPE Primary Cable	WHITE	2356.0	-	A	9724A

Connector Name	9717
Part Number	3700151C1
Short Description	TRAILER GROUND 2
Instances	A26 - Body Builder Lighting - Separate Turn and Stop Lamps (Blunt Cut) - Option 1:Diagram1-Option1 (R/D 9724) A26 - Body Builder Lighting - Separate Turn and Stop Lamps (Blunt Cut) - Option 2:Diagram1-Option1 (R/D 9724A)
Mates	9717F

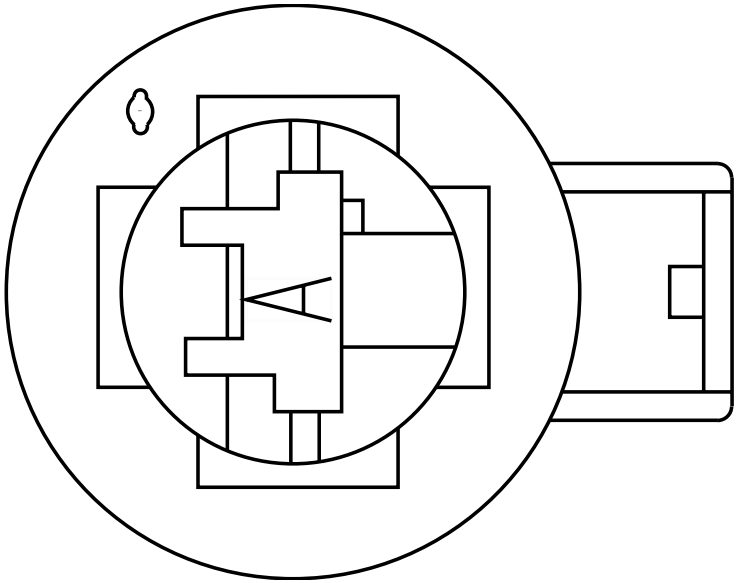

Name	Terminal Part Number	V-Min	Name	Wire Part Number	Wire CSA	Wire Spec	Wire Material description	Wire Color Description	Wire Length	End2 Terminal Part Number	End2 Pin Name	End2 Connect or
A	-	-	NC10D	2643789 R1	7.48	8.0	Std. Wall XLPE Primary Cable	WHITE	4780.0	-	-	-

Connector Name	9717
Part Number	3700151C1
Instances	B6.7 - Body Builder Lighting - Separate Turn and Stop Lamps (Blunt Cut) Option 1:Diagram1 B6.7 - Trailer Interface (Lighting) – BLUNT CUT (Part of Electric Trailer Brakes) Option 2:Diagram1 L9 - Trailer Interface (Lighting) – BLUNT CUT (Part of Electric Trailer Brakes) Option 1:Diagram1
Mates	9717F

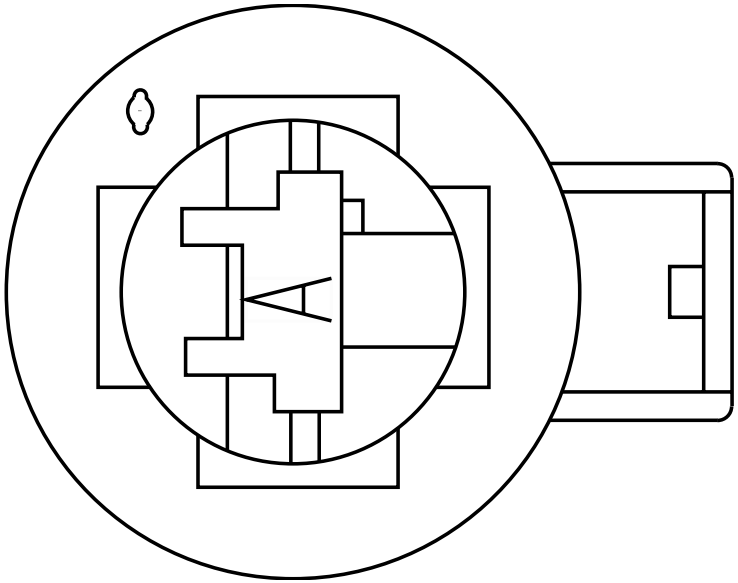

Name	Terminal Part Number	V-Min	Name	Wire Part Number	Wire CSA	Wire Spec	Wire Material description	Wire Color Description	Wire Length	End2 Terminal Part Number	End2 Pin Name	End2 Connect or
A	-	-	NC10D-G	2643789 R1	7.48	8.0	Std. Wall XLPE Primary Cable	WHITE	5180.0	-	-	-
A	-	-	NE10F	2643789 R1	7.48	8.0	Std. Wall XLPE Primary Cable	WHITE	2400.0	-	-	-

Connector Name	9717
Part Number	3700151C1
Short Description	TRAILER GROUND 2
Instances	B6.7 - Body Builder Lighting - Separate Turn and Stop Lamps (Blunt Cut) Option 2:Diagram1 B6.7 - Trailer Interface (Lighting) – BLUNT CUT (Part of Electric Trailer Brakes) Option 1:Diagram1 L9 - Body Builder Lighting - Separate Turn and Stop Lamps (Blunt Cut) Option 1:Diagram1 L9 - Body Builder Lighting - Separate Turn and Stop Lamps (Blunt Cut) Option 2:Diagram1 L9 - Trailer Interface (Lighting) – BLUNT CUT (Part of Electric Trailer Brakes) Option 2:Diagram1
Mates	9717F1

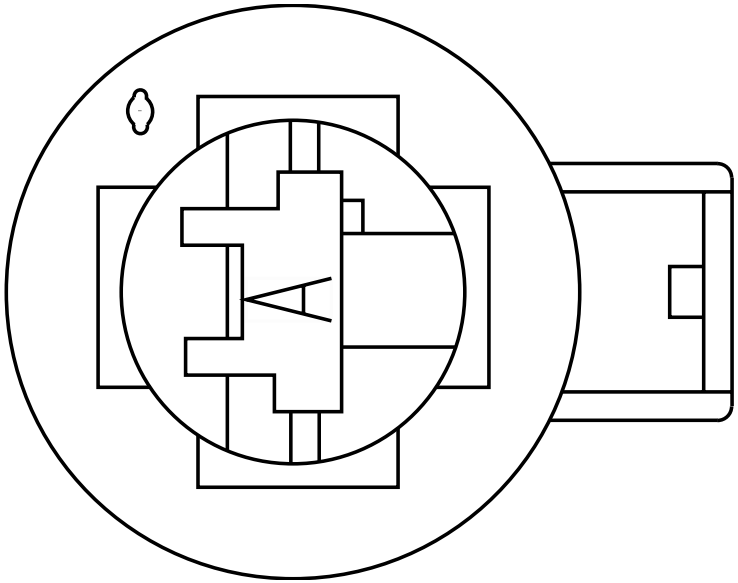

Name	Terminal Part Number	V-Min	Name	Wire Part Number	Wire CSA	Wire Spec	Wire Material description	Wire Color Description	Wire Length	End2 Terminal Part Number	End2 Pin Name	End2 Connect or
A	-	-	NE10F	2643789 R1	7.48	8.0	Std. Wall XLPE Primary Cable	WHITE	2400.0	-	-	-
A	-	-	NC10D	2643789 R1	7.48	8.0	Std. Wall XLPE Primary Cable	WHITE	4780.0	-	-	-
A	-	-	NC10D-G	2643789 R1	7.48	8.0	Std. Wall XLPE Primary Cable	WHITE	5180.0	-	-	-

Connector Name	9718A
Part Number	1661778C1
Short Description	WORK LIGHT
Instances	A26 - WORK LIGHT 1 BULB:Diagram1 A26 - WORK LIGHT 1 BULB:Diagram2 A26 - WORK LIGHT W Backup 1 Bulb:Diagram1 A26 - WORK LIGHT W Backup 1 Bulb:Diagram2 A26 - WORK LIGHT W BackUP 1 BULB:Diagram1 A26 - WORK LIGHT W BackUP 1 BULB:Diagram2 A26 - WORK LIGHT W RKE 1 BULB:Diagram1 A26 - WORK LIGHT W RKE 1 BULB:Diagram2 A26 - Work Light W/ Backup 1 Bulb W/Manual W/ RKE:Diagram1-Combination1 A26 - Work Light W/ Backup 1 Bulb W/Manual W/ RKE:Diagram1-Combination2 A26 - Work Lights LED W/ Sw Pack - Day Cab:Diagram1 A26 - Work Lights LED W/ Sw Pack - Day Cab:Diagram2 L9 - WORK LIGHT 1 BULB:Diagram1 L9 - WORK LIGHT 1 BULB:Diagram2 L9 - WORK LIGHT W BackUP 1 BULB Option 1:Diagram1 L9 - WORK LIGHT W BackUP 1 BULB Option 1:Diagram2 L9 - WORK LIGHT W BackUP 1 BULB Option 1:Diagram3 L9 - WORK LIGHT W BackUP 1 BULB Option 1:Diagram4 L9 - WORK LIGHT W BackUP 1 BULB Option 2:Diagram1 L9 - WORK LIGHT W BackUP 1 BULB Option 2:Diagram2 L9 - WORK LIGHT W RKE 1 BULB:Diagram1 L9 - WORK LIGHT W RKE 1 BULB:Diagram2 L9 - Work Lights LED W/ Sw Pack - Day Cab:Diagram1 L9 - Work Lights LED W/ Sw Pack - Day Cab:Diagram2
Mates	9719

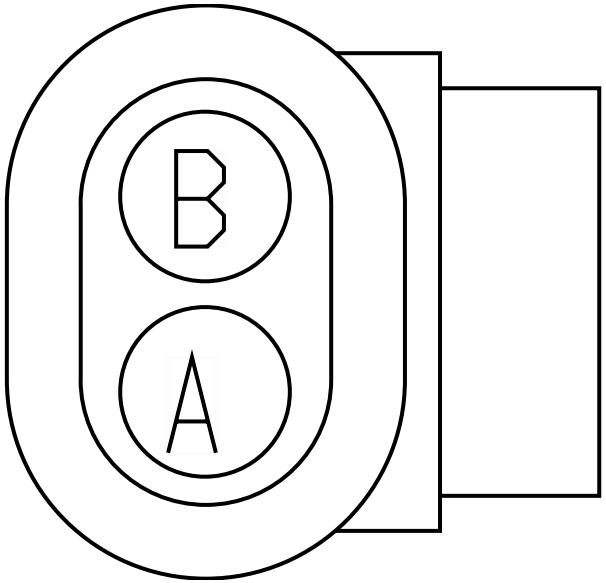

Name	Terminal Part Number	V-Min	Name	Wire Part Number	Wire CSA	Wire Spec	Wire Material description	Wire Color Description	Wire Length	End2 Terminal Part Number	End2 Pin Name	End2 Connect or
A	-	-	SZ65	2643682 R1	1.16	16.0	Std. Wall XLPE Primary Cable	ORANGE	2625.0	-	A	9766

Name	Terminal Part Number	V-Min	Name	Wire Part Number	Wire CSA	Wire Spec	Wire Material description	Wire Color Description	Wire Length	End2 Terminal Part Number	End2 Pin Name	End2 Connect or
A	-	-	NF65	2643682 R1	1.16	16.0	Std. Wall XLPE Primary Cable	ORANGE	2585.0	-	68	1701F
B	-	-	YU65-G	2643681 R1	1.16	16.0	Std. Wall XLPE Primary Cable	WHITE	1060.0	-	X	-
B	-	-	YM65-G	2643681 R1	1.16	16.0	Std. Wall XLPE Primary Cable	WHITE	1325.0	-	-	-
B	-	-	SZ65-G	2643681 R1	1.16	16.0	Std. Wall XLPE Primary Cable	WHITE	2625.0	-	B	9766
B	-	-	YJ65-G	2643681 R1	1.16	16.0	Std. Wall XLPE Primary Cable	WHITE	1145.0	-	X	-

Connector Name	9719
Part Number	3543888C1
Short Description	WORK LIGHT
Instances	A26 - WORK LIGHT 1 BULB:Diagram1 A26 - WORK LIGHT 1 BULB:Diagram2 A26 - WORK LIGHT W Backup 1 Bulb:Diagram1 A26 - WORK LIGHT W Backup 1 Bulb:Diagram2 A26 - WORK LIGHT W BackUP 1 BULB:Diagram1 A26 - WORK LIGHT W BackUP 1 BULB:Diagram2 A26 - WORK LIGHT W RKE 1 BULB:Diagram1 A26 - WORK LIGHT W RKE 1 BULB:Diagram2 A26 - Work Light W/ Backup 1 Bulb W/Manual W/ RKE:Diagram1-Combination1 A26 - Work Light W/ Backup 1 Bulb W/Manual W/ RKE:Diagram1-Combination2 A26 - Work Lights LED W/ Sw Pack - Day Cab:Diagram1 A26 - Work Lights LED W/ Sw Pack - Day Cab:Diagram2 L9 - WORK LIGHT 1 BULB:Diagram1 L9 - WORK LIGHT 1 BULB:Diagram2 L9 - WORK LIGHT W BackUP 1 BULB Option 1:Diagram1 L9 - WORK LIGHT W BackUP 1 BULB Option 1:Diagram2 L9 - WORK LIGHT W BackUP 1 BULB Option 1:Diagram3 L9 - WORK LIGHT W BackUP 1 BULB Option 1:Diagram4 L9 - WORK LIGHT W BackUP 1 BULB Option 2:Diagram1 L9 - WORK LIGHT W BackUP 1 BULB Option 2:Diagram2 L9 - WORK LIGHT W RKE 1 BULB:Diagram1 L9 - WORK LIGHT W RKE 1 BULB:Diagram2 L9 - Work Lights LED W/ Sw Pack - Day Cab:Diagram1 L9 - Work Lights LED W/ Sw Pack - Day Cab:Diagram2
Mates	9718A

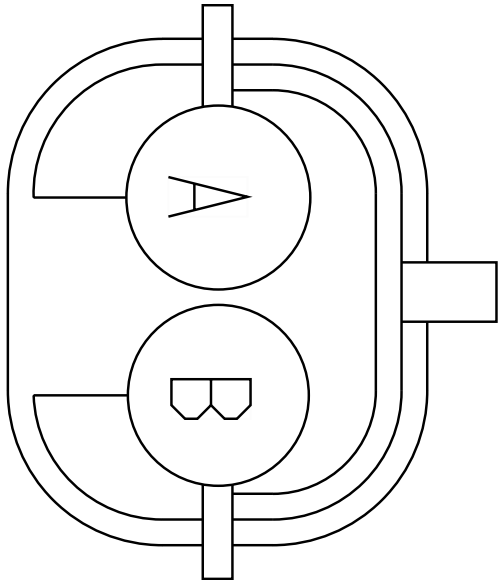

Name	Terminal Part Number	V-Min	Name	Wire Part Number	Wire CSA	Wire Spec	Wire Material description	Wire Color Description	Wire Length	End2 Terminal Part Number	End2 Pin Name	End2 Connect or
A	-	-	J65	-	1.16	16.0	Std. Wall XLPE Primary Cable	BLACK	2800.0	-	A	9720

Name	Terminal Part Number	V-Min	Name	Wire Part Number	Wire CSA	Wire Spec	Wire Material description	Wire Color Description	Wire Length	End2 Terminal Part Number	End2 Pin Name	End2 Connect or
A	-	-	J65	-	1.16	16.0	Std. Wall XLPE Primary Cable	BLACK	2800.0	-	A	9720A
A	-	-	J65	-	1.16	16.0	Std. Wall XLPE Primary Cable	BLACK	2800.0	-	-	-
B	-	-	J11-GK	-	1.16	16.0	Std. Wall XLPE Primary Cable	WHITE	2800.0	-	B	9720
B	-	-	J11-GK	-	1.16	16.0	Std. Wall XLPE Primary Cable	WHITE	2800.0	-	B	9720A
B	-	-	J11-GK	-	1.16	16.0	Std. Wall XLPE Primary Cable	WHITE	2800.0	-	-	-

Connector Name	9719
Part Number	3543888C1
Short Description	WORK LIGHT
Instances	A26 - Work Light W/ Backup 1 Bulb W/Automatic W/ RKE:Diagram1-Combination1 A26 - Work Light W/ Backup 1 Bulb W/Automatic W/ RKE:Diagram1-Combination2 B6.7 - WORK LIGHT 1 BULB:Diagram1 B6.7 - WORK LIGHT W BackUP 1 BULB:Diagram1 B6.7 - WORK LIGHT W RKE 1 BULB:Diagram1 B6.7 - Work Lights LED W/ Sw Pack - Day Cab:Diagram1
Mates	9767

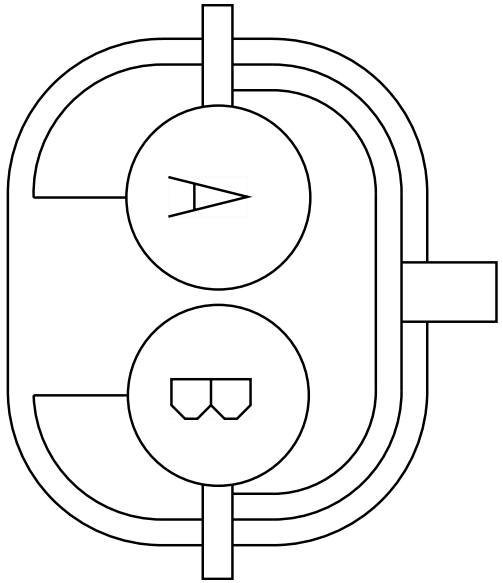

Name	Terminal Part Number	V-Min	Name	Wire Part Number	Wire CSA	Wire Spec	Wire Material description	Wire Color Description	Wire Length	End2 Terminal Part Number	End2 Pin Name	End2 Connect or
A	-	-	J65	-	1.16	16.0	Std. Wall XLPE Primary Cable	BLACK	2800.0	-	A	9720
A	-	-	J65	-	1.16	16.0	Std. Wall XLPE Primary Cable	BLACK	2800.0	-	A	9720A
B	-	-	J11-GK	-	1.16	16.0	Std. Wall XLPE Primary Cable	WHITE	2800.0	-	B	9720
B	-	-	J11-GK	-	1.16	16.0	Std. Wall XLPE Primary Cable	WHITE	2800.0	-	B	9720A

Connector Name	9720A
Part Number	3543888C1
Instances	A26 - WORK LIGHT W Backup 1 Bulb:Diagram2
Mates	LT-LED-WORK_DAY-1032-01-05 A-9720A

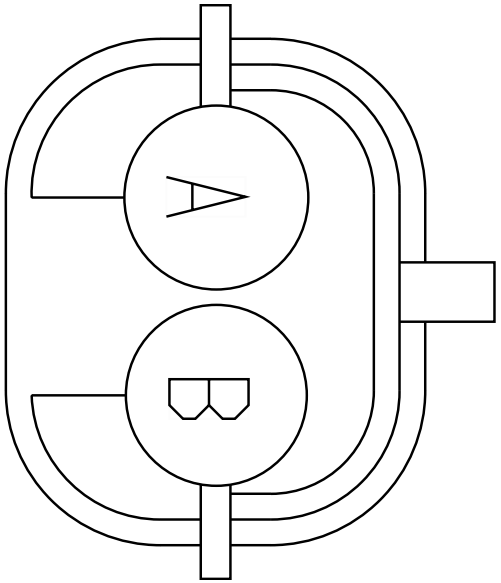

Name	Terminal Part Number	V-Min	Name	Wire Part Number	Wire CSA	Wire Spec	Wire Material description	Wire Color Description	Wire Length	End2 Terminal Part Number	End2 Pin Name	End2 Connect or
A	-	-	J65	-	1.16	16.0	Std. Wall XLPE Primary Cable	BLACK	2800.0	-	-	-
B	-	-	J11-GK	-	1.16	16.0	Std. Wall XLPE Primary Cable	WHITE	2800.0	-	-	-

Connector Name	9720A
Part Number	3543888C1
Instances	A26 - Work Light W/ Backup 1 Bulb W/Automatic W/ RKE:Diagram1-Combination2 A26 - Work Light W/ Backup 1 Bulb W/Manual W/ RKE:Diagram1-Combination2 L9 - WORK LIGHT 1 BULB:Diagram1 L9 - WORK LIGHT W BackUP 1 BULB Option 2:Diagram1 L9 - WORK LIGHT W RKE 1 BULB:Diagram2 L9 - Work Lights LED W/ Sw Pack - Day Cab:Diagram2
Mates	LT-LED-WORK_DAY-1032-01-05 A-9720A

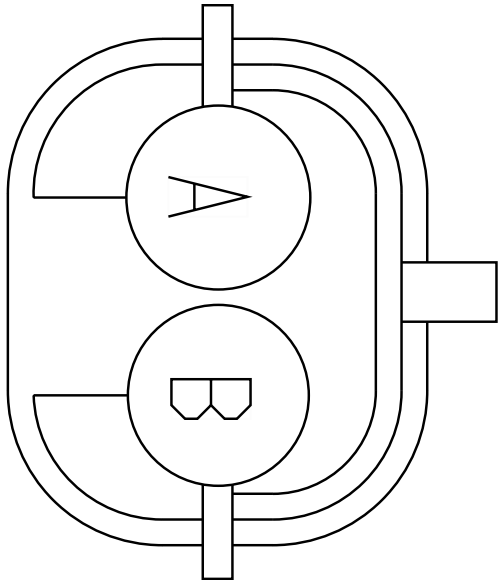

Name	Terminal Part Number	V-Min	Name	Wire Part Number	Wire CSA	Wire Spec	Wire Material description	Wire Color Description	Wire Length	End2 Terminal Part Number	End2 Pin Name	End2 Connect or
A	-	-	J65	-	1.16	16.0	Std. Wall XLPE Primary Cable	BLACK	2800.0	-	A	9719
A	-	-	J65	-	1.16	16.0	Std. Wall XLPE Primary Cable	BLACK	2800.0	-	-	-
A	-	-	J65	-	1.16	16.0	Std. Wall XLPE Primary Cable	BLACK	2800.0	-	A	9720
B	-	-	J11-GK	-	1.16	16.0	Std. Wall XLPE Primary Cable	WHITE	2800.0	-	B	9719

Name	Terminal Part Number	V-Min	Name	Wire Part Number	Wire CSA	Wire Spec	Wire Material description	Wire Color Description	Wire Length	End2 Terminal Part Number	End2 Pin Name	End2 Connect or
B	-	-	J11-GK	-	1.16	16.0	Std. Wall XLPE Primary Cable	WHITE	2800.0	-	-	-
B	-	-	J11-GK	-	1.16	16.0	Std. Wall XLPE Primary Cable	WHITE	2800.0	-	B	9720

Connector Name 9720

Part Number 3543888C1

Instances
A26 - WORK LIGHT 1 BULB:Diagram1
A26 - WORK LIGHT 1 BULB:Diagram2
A26 - WORK LIGHT W Backup 1 Bulb:Diagram1
A26 - WORK LIGHT W BackUP 1 BULB:Diagram1
A26 - WORK LIGHT W BackUP 1 BULB:Diagram2
A26 - WORK LIGHT W RKE 1 BULB:Diagram1
A26 - WORK LIGHT W RKE 1 BULB:Diagram2
A26 - Work Light W/ Backup 1 Bulb W/Automatic W/ RKE:Diagram1-Combination1
A26 - Work Light W/ Backup 1 Bulb W/Manual W/ RKE:Diagram1-Combination1
A26 - Work Lights LED W/ Sw Pack - Day Cab:Diagram1
A26 - Work Lights LED W/ Sw Pack - Day Cab:Diagram2
B6.7 - WORK LIGHT 1 BULB:Diagram1
B6.7 - WORK LIGHT W BackUP 1 BULB:Diagram1
B6.7 - WORK LIGHT W RKE 1 BULB:Diagram1
B6.7 - Work Lights LED W/ Sw Pack - Day Cab:Diagram1
L9 - WORK LIGHT 1 BULB:Diagram2
L9 - WORK LIGHT W BackUP 1 BULB Option 1:Diagram1
L9 - WORK LIGHT W BackUP 1 BULB Option 1:Diagram2
L9 - WORK LIGHT W BackUP 1 BULB Option 1:Diagram3
L9 - WORK LIGHT W BackUP 1 BULB Option 1:Diagram4
L9 - WORK LIGHT W BackUP 1 BULB Option 2:Diagram2
L9 - WORK LIGHT W RKE 1 BULB:Diagram1
L9 - Work Lights LED W/ Sw Pack - Day Cab:Diagram1

Mates LT-LED-WORK_DAY-1032-01-05 A-9720

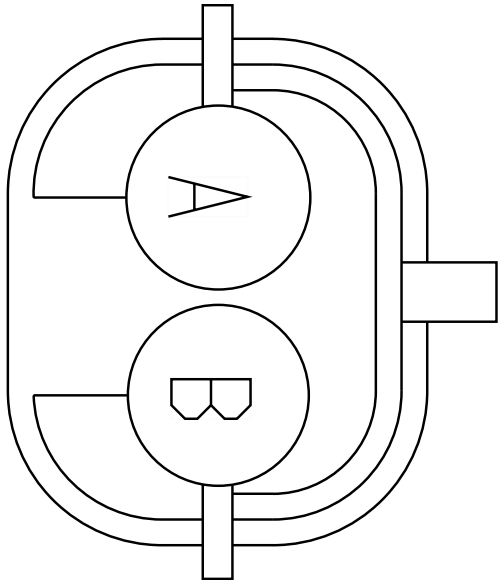

Name	Terminal Part Number	V-Min	Name	Wire Part Number	Wire CSA	Wire Spec	Wire Material description	Wire Color Description	Wire Length	End2 Terminal Part Number	End2 Pin Name	End2 Connector
A	-	-	J65	-	1.16	16.0	Std. Wall XLPE Primary Cable	BLACK	2800.0	-	A	9719
A	-	-	J65	-	1.16	16.0	Std. Wall XLPE Primary Cable	BLACK	2800.0	-	-	-

Name	Terminal Part Number	V-Min	Name	Wire Part Number	Wire CSA	Wire Spec	Wire Material description	Wire Color Description	Wire Length	End2 Terminal Part Number	End2 Pin Name	End2 Connect or
A	-	-	J65	-	1.16	16.0	Std. Wall XLPE Primary Cable	BLACK	2800.0	-	A	9720A
B	-	-	J11-GK	-	1.16	16.0	Std. Wall XLPE Primary Cable	WHITE	2800.0	-	B	9719
B	-	-	J11-GK	-	1.16	16.0	Std. Wall XLPE Primary Cable	WHITE	2800.0	-	-	-
B	-	-	J11-GK	-	1.16	16.0	Std. Wall XLPE Primary Cable	WHITE	2800.0	-	B	9720A

Connector Name 9724A

Part Number BLUNT_SL_VC

Instances A26 - Body Builder Lighting - Separate Turn and Stop Lamps (Blunt Cut) - Option 2:Diagram1-Option1 (R/D 9724A)
B6.7 - Body Builder Lighting - Separate Turn and Stop Lamps (Blunt Cut) Option 1:Diagram1
B6.7 - TEM _Electric Trailer Brake Controller Activated Stop LT Option 1:Diagram1
B6.7 - Trailer Interface (Lighting) – BLUNT CUT (Part of Electric Trailer Brakes) Option 1:Diagram1
L9 - Body Builder Lighting - Separate Turn and Stop Lamps (Blunt Cut) Option 1:Diagram1
L9 - TEM Electric Trailer Brake Controller Activated Stop LT:Diagram1
L9 - Trailer Interface (Lighting) – BLUNT CUT (Part of Electric Trailer Brakes) Option 2:Diagram1

Mates BLNT-EOF_BODY_CIRCUIT-1036 -04-01A

Name	Terminal Part Number	V-Min	Name	Wire Part Number	Wire CSA	Wire Spec	Wire Material description	Wire Color Description	Wire Length	End2 Terminal Part Number	End2 Pin Name	End2 Connect or
A	-	-	TW10	2643789 R1	7.48	8.0	Std. Wall XLPE Primary Cable	WHITE	2356.0	-	A	9717F1
A	-	-	TW10	2643789 R1	7.48	8.0	Std. Wall XLPE Primary Cable	WHITE	2356.0	-	A	9717F
B	-	-	TW56	2643802 R1	4.81	10.0	Std. Wall XLPE Primary Cable	YELLOW 2	2331.0	-	B	9716M1
B	-	-	TW58	2643779 R1	4.81	10.0	Std. Wall XLPE Primary Cable	BROWN	2331.0	-	A	9716M1

Name	Terminal Part Number	V-Min	Name	Wire Part Number	Wire CSA	Wire Spec	Wire Material description	Wire Color Description	Wire Length	End2 Terminal Part Number	End2 Pin Name	End2 Connector
B	-	-	TW56	2643802 R1	4.81	10.0	Std. Wall XLPE Primary Cable	YELLOW 2	2331.0	-	B	9716M
C	-	-	TW57	2643776 R1	4.81	10.0	Std. Wall XLPE Primary Cable	LIGHT GREEN	2331.0	-	C	9716M1
C	-	-	TW56	2643802 R1	4.81	10.0	Std. Wall XLPE Primary Cable	YELLOW 2	2331.0	-	B	9716M1
C	-	-	TW57	2643776 R1	4.81	10.0	Std. Wall XLPE Primary Cable	LIGHT GREEN	2331.0	-	C	9716M
D	-	-	TW58	2643779 R1	4.81	10.0	Std. Wall XLPE Primary Cable	BROWN	2331.0	-	A	9716M1
D	-	-	TW57	2643776 R1	4.81	10.0	Std. Wall XLPE Primary Cable	LIGHT GREEN	2331.0	-	C	9716M1
D	-	-	TW58	2643779 R1	4.81	10.0	Std. Wall XLPE Primary Cable	BROWN	2331.0	-	A	9716M
E	-	-	TW68	2643779 R1	4.81	10.0	Std. Wall XLPE Primary Cable	BROWN	2306.0	-	B	9715F

Name	Terminal Part Number	V-Min	Name	Wire Part Number	Wire CSA	Wire Spec	Wire Material description	Wire Color Description	Wire Length	End2 Terminal Part Number	End2 Pin Name	End2 Connect or
E	-	-	TW70	2643698 R1	4.81	10.0	Std. Wall XLPE Primary Cable	RED	2306.0	-	A	9715F
F	-	-	TW70	2643698 R1	4.81	10.0	Std. Wall XLPE Primary Cable	RED	2306.0	-	A	9715F
F	-	-	TW68	2643779 R1	4.81	10.0	Std. Wall XLPE Primary Cable	BROWN	2306.0	-	B	9715F
G	-	-	TW94	2643784 R1	4.81	10.0	Std. Wall XLPE Primary Cable	GREY	2306.0	-	C	9715F
G	-	-	TW10	2643789 R1	7.48	8.0	Std. Wall XLPE Primary Cable	WHITE	2356.0	-	A	9717F

Connector Name 9724

Part Number BLUNT_SL_VC

Instances A26 - Body Builder Lighting - Separate Turn and Stop Lamps (Blunt Cut) - Option 1:Diagram1-Option1 (R/D 9724)

Mates BLNT-EOF_BODY_CIRCUIT-1036 -04-01A

Name	Terminal Part Number	V-Min	Name	Wire Part Number	Wire CSA	Wire Spec	Wire Material description	Wire Color Description	Wire Length	End2 Terminal Part Number	End2 Pin Name	End2 Connector
B	-	-	RG56	2643802 R1	4.81	10.0	Std. Wall XLPE Primary Cable	YELLOW 2	2331.0	-	B	9716M
C	-	-	RG57	2643776 R1	4.81	10.0	Std. Wall XLPE Primary Cable	LIGHT GREEN	2331.0	-	C	9716M
D	-	-	RG58	2643779 R1	4.81	10.0	Std. Wall XLPE Primary Cable	BROWN	2331.0	-	A	9716M
E	-	-	RG68	2643779 R1	4.81	10.0	Std. Wall XLPE Primary Cable	BROWN	2306.0	-	B	9715F
F	-	-	RG70	2643698 R1	4.81	10.0	Std. Wall XLPE Primary Cable	RED	2306.0	-	A	9715F
G	-	-	RG10	2643789 R1	7.48	8.0	Std. Wall XLPE Primary Cable	WHITE	2356.0	-	A	9717F

Connector Name 9724

Part Number BLUNT_SL_VC

Instances A26 - TEM Electric Trailer Brake Controller Activated Stop LT:Diagram1
A26 - TEM Electric Trailer Brake Controller Activated Stop LT (Option2):Diagram1
B6.7 - Body Builder Lighting - Separate Turn and Stop Lamps (Blunt Cut) Option 2:Diagram1
B6.7 - TEM Electric Trailer Brake Controller Activated Stop LT Option 2:Diagram1
B6.7 - Trailer Interface (Lighting) – BLUNT CUT (Part of Electric Trailer Brakes) Option 2:Diagram1
L9 - Body Builder Lighting - Separate Turn and Stop Lamps (Blunt Cut) Option 2:Diagram1
L9 - Trailer Interface (Lighting) – BLUNT CUT (Part of Electric Trailer Brakes) Option 1:Diagram1
L9 - Transmission Power Take Off (Auto Trans with Lectradrive):Diagram1
L9 - Transmission Power Take Off (Lectrashift PTO with Manual Trans):Diagram1

Mates BLNT-EOF_BODY_CIRCUIT-1036 -04-01A

Name	Terminal Part Number	V-Min	Name	Wire Part Number	Wire CSA	Wire Spec	Wire Material description	Wire Color Description	Wire Length	End2 Terminal Part Number	End2 Pin Name	End2 Connector
A	-	-	RG10	2643789 R1	7.48	8.0	Std. Wall XLPE Primary Cable	WHITE	2356.0	-	A	9717F
A	-	-	RG10	2643789 R1	7.48	8.0	Std. Wall XLPE Primary Cable	WHITE	2356.0	-	A	9717F1
A	-	-	RY14LSA	2643670 R1	0.79	18.0	Std. Wall XLPE Primary Cable	BLACK	2970.0	-	B	9913B

Name	Terminal Part Number	V-Min	Name	Wire Part Number	Wire CSA	Wire Spec	Wire Material description	Wire Color Description	Wire Length	End2 Terminal Part Number	End2 Pin Name	End2 Connector
B	-	-	RG58	2643779 R1	4.81	10.0	Std. Wall XLPE Primary Cable	BROWN	2331.0	-	A	9716M1
B	-	-	RG56	2643802 R1	4.81	10.0	Std. Wall XLPE Primary Cable	YELLOW 2	2331.0	-	B	9716M1
B	-	-	RG58	2643779 R1	4.81	10.0	Std. Wall XLPE Primary Cable	BROWN	2331.0	-	A	9716M
B	-	-	RY14LSB	2643759 R1	0.79	18.0	Std. Wall XLPE Primary Cable	RED	2970.0	-	A	9913B
C	-	-	RG56	2643802 R1	4.81	10.0	Std. Wall XLPE Primary Cable	YELLOW 2	2331.0	-	B	9716M1
C	-	-	RG57	2643776 R1	4.81	10.0	Std. Wall XLPE Primary Cable	LIGHT GREEN	2331.0	-	C	9716M1
C	-	-	RG56	2643802 R1	4.81	10.0	Std. Wall XLPE Primary Cable	YELLOW 2	2331.0	-	B	9716M
D	-	-	RG57	2643776 R1	4.81	10.0	Std. Wall XLPE Primary Cable	LIGHT GREEN	2331.0	-	C	9716M1

Name	Terminal Part Number	V-Min	Name	Wire Part Number	Wire CSA	Wire Spec	Wire Material description	Wire Color Description	Wire Length	End2 Terminal Part Number	End2 Pin Name	End2 Connector
D	-	-	RG58	2643779 R1	4.81	10.0	Std. Wall XLPE Primary Cable	BROWN	2331.0	-	A	9716M1
D	-	-	RG57	2643776 R1	4.81	10.0	Std. Wall XLPE Primary Cable	LIGHT GREEN	2331.0	-	C	9716M
E	-	-	RG70	2643698 R1	4.81	10.0	Std. Wall XLPE Primary Cable	RED	2306.0	-	A	9715F
E	-	-	RG68	2643779 R1	4.81	10.0	Std. Wall XLPE Primary Cable	BROWN	2306.0	-	B	9715F
F	-	-	RG68	2643779 R1	4.81	10.0	Std. Wall XLPE Primary Cable	BROWN	2306.0	-	B	9715F
F	-	-	RG70	2643698 R1	4.81	10.0	Std. Wall XLPE Primary Cable	RED	2306.0	-	A	9715F
G	-	-	RG94	2643784 R1	4.81	10.0	Std. Wall XLPE Primary Cable	GREY	2306.0	-	C	9715F
G	-	-	TW94	2643784 R1	4.81	10.0	Std. Wall XLPE Primary Cable	GREY	2306.0	-	C	9715F

Connector Name 9736

Part Number 1661375C2

Instances A26 - Auxiliary Air Solenoids Normally Closed:Diagram1
A26 - Auxillary Air Solenoids Normally Open:Combination1
A26 - Auxillary Air Solenoids Normally Open:Combination2
A26 - Auxillary Air Solenoids Normally Open:Combination3
A26 - Auxillary Air Solenoids Normally Open:Combination4
A26 - Auxillary Air Solenoids Normally Open:Combination5
A26 - Auxillary Air Solenoids Normally Open:Combination6
L9 - Auxiliary Air Solenoids (1 Normally Closed):Diagram1
L9 - Auxillary Air Solenoids Normally Closed:Combination1
L9 - Auxillary Air Solenoids Normally Closed:Combination2
L9 - Auxillary Air Solenoids Normally Closed:Combination3
L9 - Auxillary Air Solenoids Normally Closed:Combination4
L9 - Auxillary Air Solenoids Normally Closed:Combination5
L9 - Auxillary Air Solenoids Normally Closed:Combination6

Mates SOL-AIR_4_PACK1-3004-01-01A

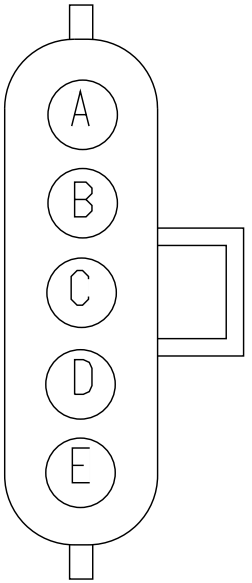

Name	Terminal Part Number	V-Min	Name	Wire Part Number	Wire CSA	Wire Spec	Wire Material description	Wire Color Description	Wire Length	End2 Terminal Part Number	End2 Pin Name	End2 Connect or
A	-	-	NG59A-G	2643689 R1	1.91	14.0	Std. Wall XLPE Primary Cable	WHITE	1705.0	-	-	-
B	-	-	NG59B	2643673 R1	0.79	18.0	Std. Wall XLPE Primary Cable	GREY	2155.0	-	32	1701F
C	-	-	NG59C	2643673 R1	0.79	18.0	Std. Wall XLPE Primary Cable	GREY	2155.0	-	33	1701F
D	-	-	NG59D	2643673 R1	0.79	18.0	Std. Wall XLPE Primary Cable	GREY	2155.0	-	34	1701F

Name	Terminal Part Number	V-Min	Name	Wire Part Number	Wire CSA	Wire Spec	Wire Material description	Wire Color Description	Wire Length	End2 Terminal Part Number	End2 Pin Name	End2 Connect or
E	-	-	NG59E	2643673 R1	0.79	18.0	Std. Wall XLPE Primary Cable	GREY	2155.0	-	35	1701F

Connector Name 9736

Part Number 1661375C2

Instances B6.7 - Auxiliary Air Solenoids (1 Normally Closed) Option 1:Diagram1
B6.7 - Auxiliary Air Solenoids (1 Normally Closed) Option 2:Diagram1
B6.7 - Auxiliary Air Solenoids (1 Normally Closed) Option 2:Diagram2
B6.7 - Auxiliary Air Solenoids (1 Normally Closed) Option 2:Diagram3
B6.7 - Auxiliary Air Solenoids (1 Normally Closed) Option 3:Diagram1
B6.7 - Auxiliary Air Solenoids (1 Normally Closed) Option 3:Diagram2
B6.7 - Auxiliary Air Solenoids (1 Normally Closed) Option 3:Diagram3

Mates SOL-AIR_4_PACK1-3004-01-01A

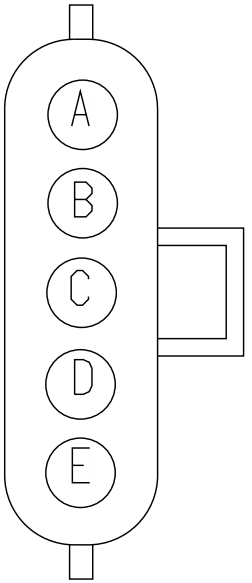

Name	Terminal Part Number	V-Min	Name	Wire Part Number	Wire CSA	Wire Spec	Wire Material description	Wire Color Description	Wire Length	End2 Terminal Part Number	End2 Pin Name	End2 Connect or
A	-	-	NG59A-G	2643689 R1	1.91	14.0	Std. Wall XLPE Primary Cable	WHITE	1705.0	-	-	-
B	-	-	NG59B	2643673 R1	0.79	18.0	Std. Wall XLPE Primary Cable	GREY	2155.0	-	32	1701F
C	-	-	NG59C	2643673 R1	0.79	18.0	Std. Wall XLPE Primary Cable	GREY	2155.0	-	33	1701F
D	-	-	NG59D	2643673 R1	0.79	18.0	Std. Wall XLPE Primary Cable	GREY	2155.0	-	34	1701F

Name	Terminal Part Number	V-Min	Name	Wire Part Number	Wire CSA	Wire Spec	Wire Material description	Wire Color Description	Wire Length	End2 Terminal Part Number	End2 Pin Name	End2 Connect or
E	-	-	NG59E	2643673 R1	0.79	18.0	Std. Wall XLPE Primary Cable	GREY	2155.0	-	35	1701F

Connector Name	9736
Part Number	1661375C2
Instances	L9 - Four Auxillary Air Solenoids:Diagram1 L9 - Three Auxillary Air Solenoids:Diagram1 L9 - Three Auxillary Air Solenoids:Diagram2 L9 - Three Auxillary Air Solenoids:Diagram3
Mates	SOL-AIR_4_PACK1-3004-01-01A

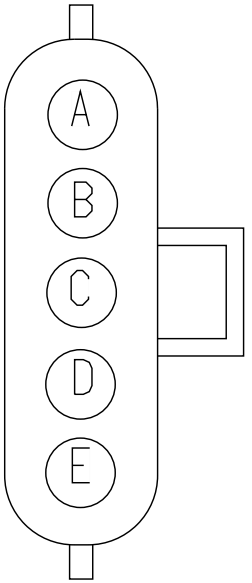

Name	Terminal Part Number	V-Min	Name	Wire Part Number	Wire CSA	Wire Spec	Wire Material description	Wire Color Description	Wire Length	End2 Terminal Part Number	End2 Pin Name	End2 Connect or
A	-	-	NG59A-G	2643689 R1	1.91	14.0	Std. Wall XLPE Primary Cable	WHITE	1705.0	-	-	-
B	-	-	NG59B	2643673 R1	0.79	18.0	Std. Wall XLPE Primary Cable	GREY	2155.0	-	32	1701F
C	-	-	NG59C	2643673 R1	0.79	18.0	Std. Wall XLPE Primary Cable	GREY	2155.0	-	33	1701F
D	-	-	NG59D	2643673 R1	0.79	18.0	Std. Wall XLPE Primary Cable	GREY	2155.0	-	34	1701F

Name	Terminal Part Number	V-Min	Name	Wire Part Number	Wire CSA	Wire Spec	Wire Material description	Wire Color Description	Wire Length	End2 Terminal Part Number	End2 Pin Name	End2 Connect or
E	-	-	NG59E	2643673 R1	0.79	18.0	Std. Wall XLPE Primary Cable	GREY	2155.0	-	35	1701F

Connector Name	9740A
Part Number	1661375C2
Instances	L9 - Four Auxillary Air Solenoids:Diagram1 L9 - Three Auxillary Air Solenoids:Diagram3
Mates	SOL-AIR_4_PACK3-3004-01-01A

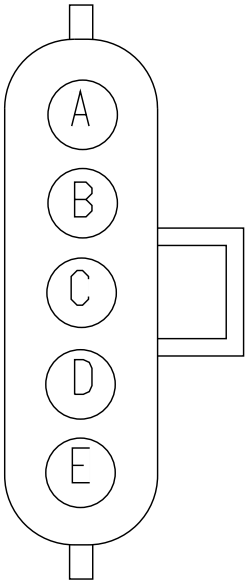

Name	Terminal Part Number	V-Min	Name	Wire Part Number	Wire CSA	Wire Spec	Wire Material description	Wire Color Description	Wire Length	End2 Terminal Part Number	End2 Pin Name	End2 Connect or
A	-	-	NW59L-G	2643689 R1	1.91	14.0	Std. Wall XLPE Primary Cable	WHITE	2670.0	-	-	-
B	-	-	NW59M	2643673 R1	0.79	18.0	Std. Wall XLPE Primary Cable	GREY	5480.0	-	46	1701F
C	-	-	NW59N	2643673 R1	0.79	18.0	Std. Wall XLPE Primary Cable	GREY	5480.0	-	47	1701F
D	-	-	NW59P	2643673 R1	0.79	18.0	Std. Wall XLPE Primary Cable	GREY	5480.0	-	48	1701F

Name	Terminal Part Number	V-Min	Name	Wire Part Number	Wire CSA	Wire Spec	Wire Material description	Wire Color Description	Wire Length	End2 Terminal Part Number	End2 Pin Name	End2 Connect or
E	-	-	NW59Q	2643673 R1	0.79	18.0	Std. Wall XLPE Primary Cable	GREY	5480.0	-	49	1701F

Connector Name	9740B
Part Number	1661375C2
Instances	B6.7 - Auxiliary Air Solenoids (1 Normally Closed) Option 3:Diagram1 B6.7 - Auxiliary Air Solenoids (1 Normally Closed) Option 3:Diagram2 B6.7 - Auxiliary Air Solenoids (1 Normally Closed) Option 3:Diagram3
Mates	SOL-AIR_4_PACK3-3004-01-01A

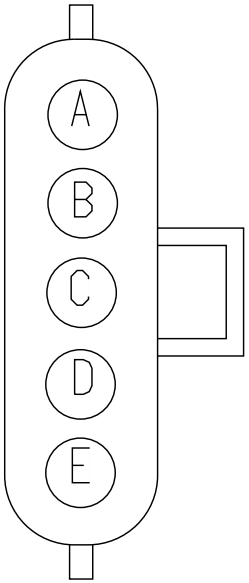

Name	Terminal Part Number	V-Min	Name	Wire Part Number	Wire CSA	Wire Spec	Wire Material description	Wire Color Description	Wire Length	End2 Terminal Part Number	End2 Pin Name	End2 Connect or
A	-	-	NR59R-G	2643689 R1	1.91	14.0	Std. Wall XLPE Primary Cable	WHITE	3520.0	-	-	-
B	-	-	NR59M	2643673 R1	0.79	18.0	Std. Wall XLPE Primary Cable	GREY	5980.0	-	46	1701F
C	-	-	NR59N	2643673 R1	0.79	18.0	Std. Wall XLPE Primary Cable	GREY	5980.0	-	47	1701F
D	-	-	NR59P	2643673 R1	0.79	18.0	Std. Wall XLPE Primary Cable	GREY	5980.0	-	48	1701F

Name	Terminal Part Number	V-Min	Name	Wire Part Number	Wire CSA	Wire Spec	Wire Material description	Wire Color Description	Wire Length	End2 Terminal Part Number	End2 Pin Name	End2 Connect or
E	-	-	NR59Q	2643673 R1	0.79	18.0	Std. Wall XLPE Primary Cable	GREY	5980.0	-	49	1701F

Connector Name	9740B
Part Number	1661375C2
Instances	L9 - Four Auxillary Air Solenoids:Diagram1 L9 - Three Auxillary Air Solenoids:Diagram2
Mates	SOL-AIR_4_PACK3/4-3004-01- 01A-N04-9740B

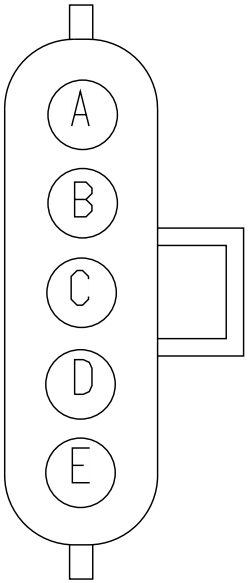

Name	Terminal Part Number	V-Min	Name	Wire Part Number	Wire CSA	Wire Spec	Wire Material description	Wire Color Description	Wire Length	End2 Terminal Part Number	End2 Pin Name	End2 Connect or
A	-	-	NR59R-G	2643689 R1	1.91	14.0	Std. Wall XLPE Primary Cable	WHITE	3520.0	-	-	-
A	-	-	NS59R-G	2643674 R1	0.79	18.0	Std. Wall XLPE Primary Cable	WHITE	3182.0	-	-	-
B	-	-	NR59M	2643673 R1	0.79	18.0	Std. Wall XLPE Primary Cable	GREY	5980.0	-	46	1701F
B	-	-	NS59S	2643673 R1	0.79	18.0	Std. Wall XLPE Primary Cable	GREY	5980.0	-	54	1701F

Name	Terminal Part Number	V-Min	Name	Wire Part Number	Wire CSA	Wire Spec	Wire Material description	Wire Color Description	Wire Length	End2 Terminal Part Number	End2 Pin Name	End2 Connect or
C	-	-	NR59N	2643673 R1	0.79	18.0	Std. Wall XLPE Primary Cable	GREY	5980.0	-	47	1701F
C	-	-	NS59T	2643673 R1	0.79	18.0	Std. Wall XLPE Primary Cable	GREY	6930.0	-	55	1701F
D	-	-	NR59P	2643673 R1	0.79	18.0	Std. Wall XLPE Primary Cable	GREY	5980.0	-	48	1701F
D	-	-	NS59V	2643673 R1	0.79	18.0	Std. Wall XLPE Primary Cable	GREY	6930.0	-	56	1701F
E	-	-	NR59Q	2643673 R1	0.79	18.0	Std. Wall XLPE Primary Cable	GREY	5980.0	-	49	1701F
E	-	-	NS59W	2643673 R1	0.79	18.0	Std. Wall XLPE Primary Cable	GREY	5980.0	-	57	1701F

Connector Name 9740C

Part Number 1661375C2

Instances A26 - Auxillary Air Solenoids Normally Open:Combination2
B6.7 - Auxiliary Air Solenoids (1 Normally Closed) Option 2:Diagram1
B6.7 - Auxiliary Air Solenoids (1 Normally Closed) Option 3:Diagram1
L9 - Auxillary Air Solenoids Normally Closed:Combination2
L9 - Three Auxillary Air Solenoids:Diagram2

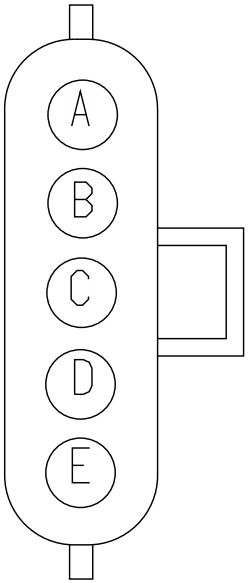

Name	Terminal Part Number	V-Min	Name	Wire Part Number	Wire CSA	Wire Spec	Wire Material description	Wire Color Description	Wire Length	End2 Terminal Part Number	End2 Pin Name	End2 Connect or
A	-	-	NZ59X-G	2643689 R1	1.91	14.0	Std. Wall XLPE Primary Cable	WHITE	2920.0	-	-	-
B	-	-	NZ59G	2643673 R1	0.79	18.0	Std. Wall XLPE Primary Cable	GREY	5730.0	-	36	1701F
C	-	-	NZ59H	2643673 R1	0.79	18.0	Std. Wall XLPE Primary Cable	GREY	5730.0	-	37	1701F
D	-	-	NZ59J	2643673 R1	0.79	18.0	Std. Wall XLPE Primary Cable	GREY	5730.0	-	38	1701F

Name	Terminal Part Number	V-Min	Name	Wire Part Number	Wire CSA	Wire Spec	Wire Material description	Wire Color Description	Wire Length	End2 Terminal Part Number	End2 Pin Name	End2 Connect or
E	-	-	NZ59K	2643673 R1	0.79	18.0	Std. Wall XLPE Primary Cable	GREY	5730.0	-	39	1701F

Connector Name 9740D

Part Number 1661375C2

Instances A26 - Auxillary Air Solenoids Normally Open:Combination3
L9 - Auxillary Air Solenoids Normally Closed:Combination3

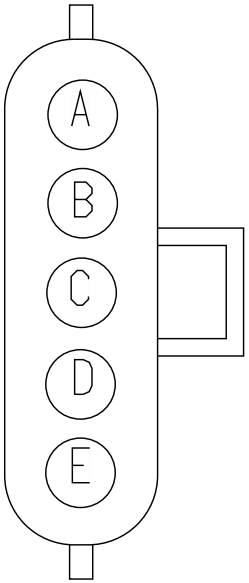

Name	Terminal Part Number	V-Min	Name	Wire Part Number	Wire CSA	Wire Spec	Wire Material description	Wire Color Description	Wire Length	End2 Terminal Part Number	End2 Pin Name	End2 Connect or
A	-	-	RE59F-G	2643689 R1	1.91	14.0	Std. Wall XLPE Primary Cable	WHITE	1225.0	-	-	-
B	-	-	RE59G	2643689 R1	1.91	14.0	Std. Wall XLPE Primary Cable	WHITE	4035.0	-	36	1701F
C	-	-	RE59H	2643673 R1	0.79	18.0	Std. Wall XLPE Primary Cable	GREY	4035.0	-	37	1701F
D	-	-	RE59J	2643673 R1	0.79	18.0	Std. Wall XLPE Primary Cable	GREY	4035.0	-	38	1701F

Name	Terminal Part Number	V-Min	Name	Wire Part Number	Wire CSA	Wire Spec	Wire Material description	Wire Color Description	Wire Length	End2 Terminal Part Number	End2 Pin Name	End2 Connect or
E	-	-	RE59K	2643673 R1	0.79	18.0	Std. Wall XLPE Primary Cable	GREY	4035.0	-	39	1701F

Connector Name	9740D
Part Number	1661375C2
Instances	B6.7 - Auxiliary Air Solenoids (1 Normally Closed) Option 2:Diagram2 B6.7 - Auxiliary Air Solenoids (1 Normally Closed) Option 3:Diagram2
Mates	SOL-AIR_4_PACK2-3004-01-01A

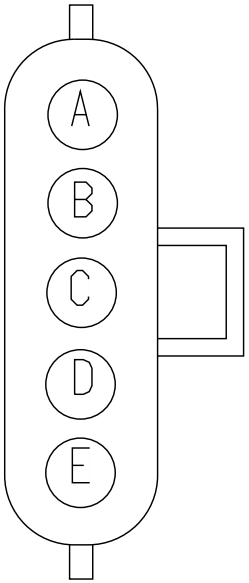

Name	Terminal Part Number	V-Min	Name	Wire Part Number	Wire CSA	Wire Spec	Wire Material description	Wire Color Description	Wire Length	End2 Terminal Part Number	End2 Pin Name	End2 Connect or
A	-	-	NS59S-G	2643689 R1	1.91	14.0	Std. Wall XLPE Primary Cable	WHITE	3720.0	-	-	-
B	-	-	NS59T	2643673 R1	0.79	18.0	Std. Wall XLPE Primary Cable	GREY	6930.0	-	36	1701F
C	-	-	NS59U	2643673 R1	0.79	18.0	Std. Wall XLPE Primary Cable	GREY	6930.0	-	37	1701F
D	-	-	NS59V	2643673 R1	0.79	18.0	Std. Wall XLPE Primary Cable	GREY	6930.0	-	38	1701F

Name	Terminal Part Number	V-Min	Name	Wire Part Number	Wire CSA	Wire Spec	Wire Material description	Wire Color Description	Wire Length	End2 Terminal Part Number	End2 Pin Name	End2 Connect or
E	-	-	NS59W	2643673 R1	0.79	18.0	Std. Wall XLPE Primary Cable	GREY	5980.0	-	39	1701F

Connector Name 9740E

Part Number 1661375C2

Instances A26 - Auxillary Air Solenoids Normally Open:Combination4
L9 - Auxillary Air Solenoids Normally Closed:Combination4
L9 - Three Auxillary Air Solenoids:Diagram1

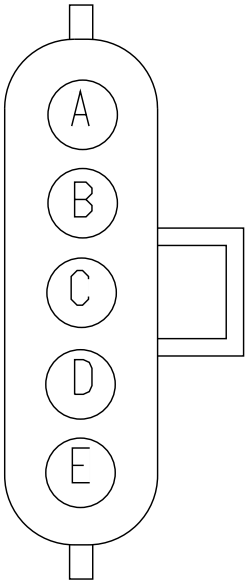

Name	Terminal Part Number	V-Min	Name	Wire Part Number	Wire CSA	Wire Spec	Wire Material description	Wire Color Description	Wire Length	End2 Terminal Part Number	End2 Pin Name	End2 Connect or
A	-	-	2A59F-G	2643689 R1	1.91	14.0	Std. Wall XLPE Primary Cable	WHITE	1275.0	-	-	-
B	-	-	2A59G	2643673 R1	0.79	18.0	Std. Wall XLPE Primary Cable	GREY	4085.0	-	36	1701F
C	-	-	2A59H	2643673 R1	0.79	18.0	Std. Wall XLPE Primary Cable	GREY	4085.0	-	37	1701F
D	-	-	2A59J	2643673 R1	0.79	18.0	Std. Wall XLPE Primary Cable	GREY	4085.0	-	38	1701F

Name	Terminal Part Number	V-Min	Name	Wire Part Number	Wire CSA	Wire Spec	Wire Material description	Wire Color Description	Wire Length	End2 Terminal Part Number	End2 Pin Name	End2 Connect or
E	-	-	2A59K	2643673 R1	0.79	18.0	Std. Wall XLPE Primary Cable	GREY	4085.0	-	39	1701F

Connector Name 9740E

Part Number 1661375C2

Instances B6.7 - Auxiliary Air Solenoids (1 Normally Closed) Option 2:Diagram3
B6.7 - Auxiliary Air Solenoids (1 Normally Closed) Option 3:Diagram3

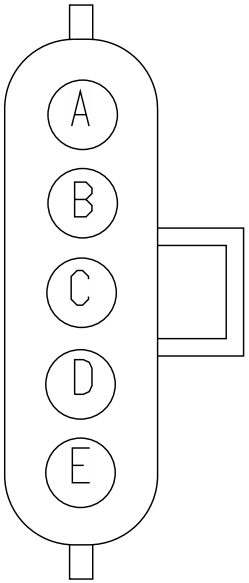

Name	Terminal Part Number	V-Min	Name	Wire Part Number	Wire CSA	Wire Spec	Wire Material description	Wire Color Description	Wire Length	End2 Terminal Part Number	End2 Pin Name	End2 Connect or
A	-	-	NT59S-G	2643689 R1	1.91	14.0	Std. Wall XLPE Primary Cable	WHITE	2245.0	-	-	-
B	-	-	NT59T	2643673 R1	0.79	18.0	Std. Wall XLPE Primary Cable	GREY	5455.0	-	36	1701F
C	-	-	NT59U	2643673 R1	0.79	18.0	Std. Wall XLPE Primary Cable	GREY	5455.0	-	37	1701F
D	-	-	NT59V	2643673 R1	0.79	18.0	Std. Wall XLPE Primary Cable	GREY	5455.0	-	38	1701F

Name	Terminal Part Number	V-Min	Name	Wire Part Number	Wire CSA	Wire Spec	Wire Material description	Wire Color Description	Wire Length	End2 Terminal Part Number	End2 Pin Name	End2 Connect or
E	-	-	NT59W	2643673 R1	0.79	18.0	Std. Wall XLPE Primary Cable	GREY	5455.0	-	39	1701F

Connector Name 9740F
Part Number 1661375C2
Instances L9 - Three Auxillary Air Solenoids:Diagram1
Mates SOL-AIR_4_PACK3-3004-01-01A

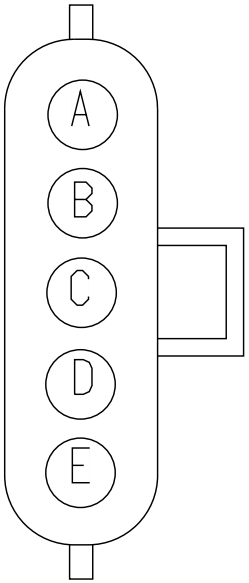

Name	Terminal Part Number	V-Min	Name	Wire Part Number	Wire CSA	Wire Spec	Wire Material description	Wire Color Description	Wire Length	End2 Terminal Part Number	End2 Pin Name	End2 Connect or
A	-	-	2B59L-G	2643689 R1	1.91	14.0	Std. Wall XLPE Primary Cable	WHITE	1275.0	-	-	-
B	-	-	2B59M	2643673 R1	0.79	18.0	Std. Wall XLPE Primary Cable	GREY	4085.0	-	46	1701F
C	-	-	2B59N	2643673 R1	0.79	18.0	Std. Wall XLPE Primary Cable	GREY	4085.0	-	47	1701F
D	-	-	2B59P	2643673 R1	0.79	18.0	Std. Wall XLPE Primary Cable	GREY	4085.0	-	48	1701F

Name	Terminal Part Number	V-Min	Name	Wire Part Number	Wire CSA	Wire Spec	Wire Material description	Wire Color Description	Wire Length	End2 Terminal Part Number	End2 Pin Name	End2 Connect or
E	-	-	2B59Q	2643673 R1	0.79	18.0	Std. Wall XLPE Primary Cable	GREY	4085.0	-	49	1701F

Connector Name 9740G

Part Number 1661375C2

Instances A26 - Auxillary Air Solenoids Normally Open:Combination5
L9 - Auxillary Air Solenoids Normally Closed:Combination5

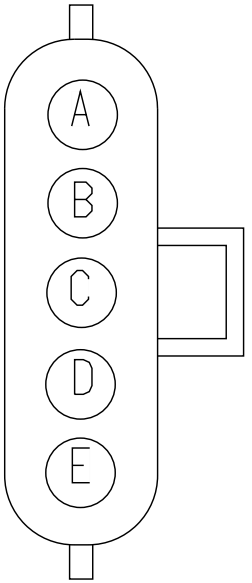

Name	Terminal Part Number	V-Min	Name	Wire Part Number	Wire CSA	Wire Spec	Wire Material description	Wire Color Description	Wire Length	End2 Terminal Part Number	End2 Pin Name	End2 Connect or
A	-	-	BV59Y-G	2643689 R1	1.91	14.0	Std. Wall XLPE Primary Cable	WHITE	3720.0	-	-	-
B	-	-	BV59G	2643673 R1	0.79	18.0	Std. Wall XLPE Primary Cable	GREY	6530.0	-	36	1701F
C	-	-	BV59H	2643673 R1	0.79	18.0	Std. Wall XLPE Primary Cable	GREY	6530.0	-	37	1701F
D	-	-	BV59J	2643673 R1	0.79	18.0	Std. Wall XLPE Primary Cable	GREY	6530.0	-	38	1701F

Name	Terminal Part Number	V-Min	Name	Wire Part Number	Wire CSA	Wire Spec	Wire Material description	Wire Color Description	Wire Length	End2 Terminal Part Number	End2 Pin Name	End2 Connect or
E	-	-	BV59K	2643673 R1	0.79	18.0	Std. Wall XLPE Primary Cable	GREY	6530.0	-	39	1701F

Connector Name 9740H

Part Number 1661375C2

Instances A26 - Auxillary Air Solenoids Normally Open:Combination1
A26 - Auxillary Air Solenoids Normally Open:Combination6
L9 - Auxillary Air Solenoids Normally Closed:Combination6

Mates SOL-AIR_4_PACK2-3004-01-01A

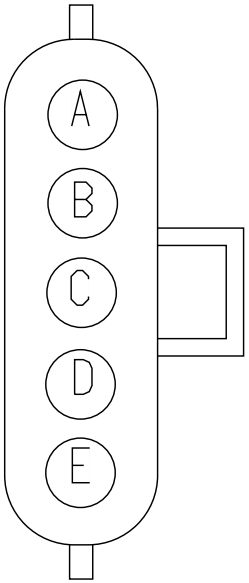

Name	Terminal Part Number	V-Min	Name	Wire Part Number	Wire CSA	Wire Spec	Wire Material description	Wire Color Description	Wire Length	End2 Terminal Part Number	End2 Pin Name	End2 Connect or
A	-	-	BU59Z-G	2643689 R1	1.91	14.0	Std. Wall XLPE Primary Cable	WHITE	2075.0	-	-	-
A	-	-	NU59G	2643673 R1	0.79	18.0	Std. Wall XLPE Primary Cable	GREY	5380.0	-	36	1701F
B	-	-	BU59G	2643673 R1	0.79	18.0	Std. Wall XLPE Primary Cable	GREY	4885.0	-	36	1701F
B	-	-	NU59H	2643673 R1	0.79	18.0	Std. Wall XLPE Primary Cable	GREY	5380.0	-	37	1701F

Name	Terminal Part Number	V-Min	Name	Wire Part Number	Wire CSA	Wire Spec	Wire Material description	Wire Color Description	Wire Length	End2 Terminal Part Number	End2 Pin Name	End2 Connector
C	-	-	BU59H	2643673 R1	0.79	18.0	Std. Wall XLPE Primary Cable	GREY	4885.0	-	37	1701F
C	-	-	NU59J	2643673 R1	0.79	18.0	Std. Wall XLPE Primary Cable	GREY	5380.0	-	38	1701F
D	-	-	BU59J	2643673 R1	0.79	18.0	Std. Wall XLPE Primary Cable	GREY	4885.0	-	38	1701F
D	-	-	NU59K	2643673 R1	0.79	18.0	Std. Wall XLPE Primary Cable	GREY	5380.0	-	39	1701F
E	-	-	BU59K	2643673 R1	0.79	18.0	Std. Wall XLPE Primary Cable	GREY	4885.0	-	39	1701F
E	-	-	NU59F-G	2643689 R1	1.91	14.0	Std. Wall XLPE Primary Cable	WHITE	2570.0	-	-	-

Connector Name 9740

Part Number 1661375C2

Instances L9 - Auxillary Air Solenoids Normally Closed:Combination1
L9 - Four Auxillary Air Solenoids:Diagram1
L9 - Three Auxillary Air Solenoids:Diagram3

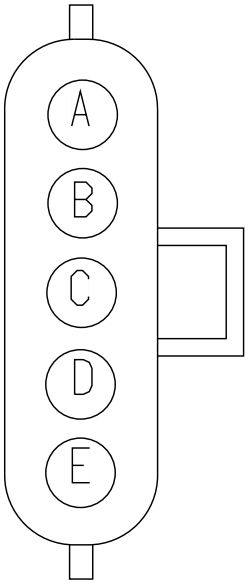

Name	Terminal Part Number	V-Min	Name	Wire Part Number	Wire CSA	Wire Spec	Wire Material description	Wire Color Description	Wire Length	End2 Terminal Part Number	End2 Pin Name	End2 Connect or
A	-	-	NU59F-G	2643689 R1	1.91	14.0	Std. Wall XLPE Primary Cable	WHITE	2570.0	-	-	-
B	-	-	NU59G	2643673 R1	0.79	18.0	Std. Wall XLPE Primary Cable	GREY	5380.0	-	36	1701F
C	-	-	NU59H	2643673 R1	0.79	18.0	Std. Wall XLPE Primary Cable	GREY	5380.0	-	37	1701F
D	-	-	NU59J	2643673 R1	0.79	18.0	Std. Wall XLPE Primary Cable	GREY	5380.0	-	38	1701F

Name	Terminal Part Number	V-Min	Name	Wire Part Number	Wire CSA	Wire Spec	Wire Material description	Wire Color Description	Wire Length	End2 Terminal Part Number	End2 Pin Name	End2 Connect or
E	-	-	NU59K	2643673 R1	0.79	18.0	Std. Wall XLPE Primary Cable	GREY	5380.0	-	39	1701F

Connector Name	9745A
Part Number	3536864C1
Instances	B6.7 - Windshield Washer Pump:Diagram1
Mates	MOT-WASHERPUMP-1029-03-06A

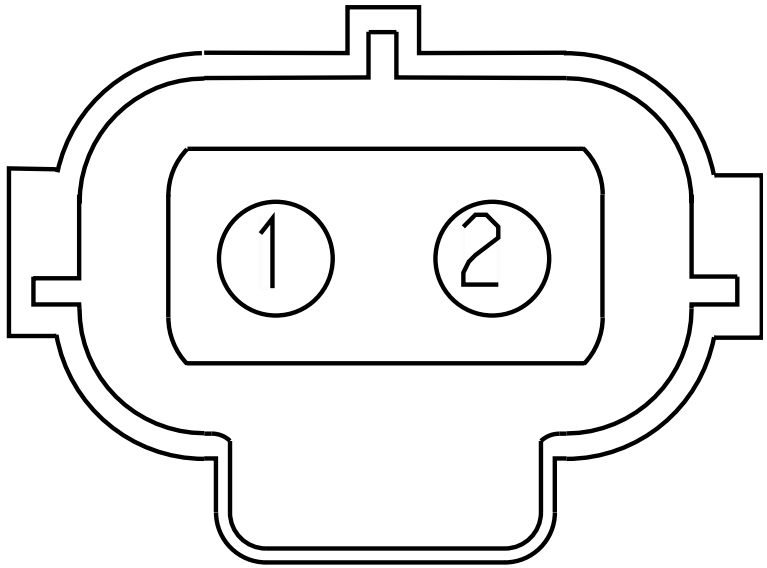

Name	Terminal Part Number	V-Min	Name	Wire Part Number	Wire CSA	Wire Spec	Wire Material description	Wire Color Description	Wire Length	End2 Terminal Part Number	End2 Pin Name	End2 Connect or
1	-	-	AB87DB	2643673 R1	0.79	18.0	Std. Wall XLPE Primary Cable	GREY	1875.0	-	59	1701F
2	-	-	AB87DA	2643680 R1	1.16	16.0	Std. Wall XLPE Primary Cable	GREY	1875.0	-	58	1701F

Connector Name 9745A
Part Number 3536864C1
Instances L9 - Windshield Washer Pump & Low Fluid Sensor:Diagram2

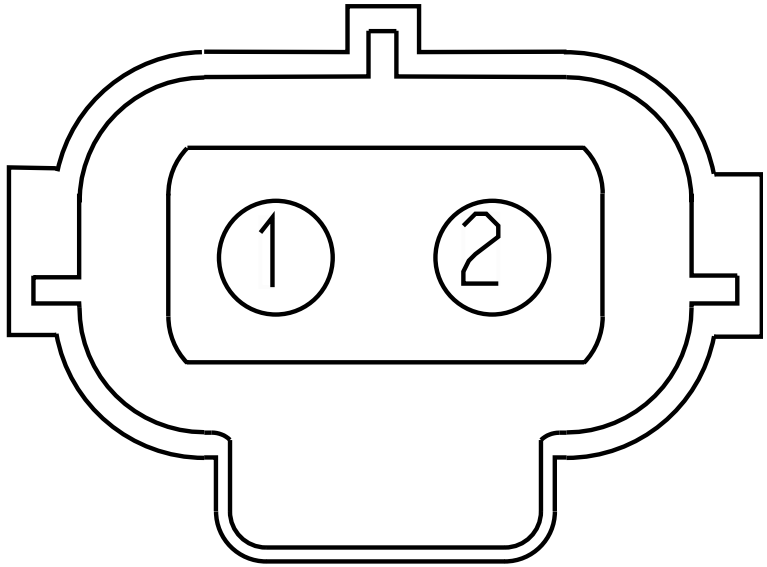

Name	Terminal Part Number	V-Min	Name	Wire Part Number	Wire CSA	Wire Spec	Wire Material description	Wire Color Description	Wire Length	End2 Terminal Part Number	End2 Pin Name	End2 Connect or
1	-	-	AB87DB	2643673 R1	0.79	18.0	Std. Wall XLPE Primary Cable	GREY	1875.0	-	59	1701F
2	-	-	AB87DA	2643680 R1	1.16	16.0	Std. Wall XLPE Primary Cable	GREY	1875.0	-	58	1701F

Connector Name	9745
Part Number	3536864C1
Instances	B6.7 - Windshield Washer Pump & Low Fluid Sensor:Diagram1
Mates	DEV-Low_Washer_Fluid_Senso r-1029-05-01A

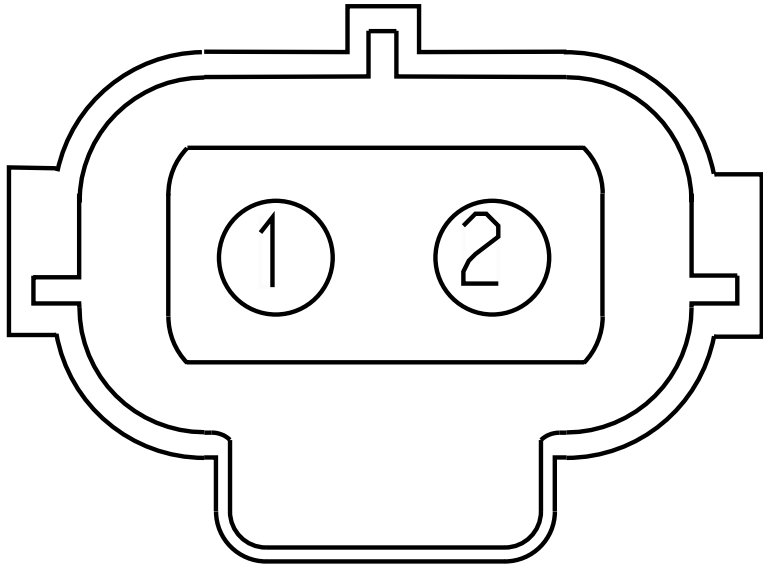

Name	Terminal Part Number	V-Min	Name	Wire Part Number	Wire CSA	Wire Spec	Wire Material description	Wire Color Description	Wire Length	End2 Terminal Part Number	End2 Pin Name	End2 Connect or
1	-	-	AB87DB	2643673 R1	0.79	18.0	Std. Wall XLPE Primary Cable	GREY	1875.0	-	59	1701F
2	-	-	AB87DA	2643680 R1	1.16	16.0	Std. Wall XLPE Primary Cable	GREY	1875.0	-	58	1701F

Connector Name	9745
Part Number	3536864C1
Instances	L9 - Windshield Washer Pump & Low Fluid Sensor:Diagram1
Mates	DEV-Low_Washer_Fluid_Senso r-1029-05-01A

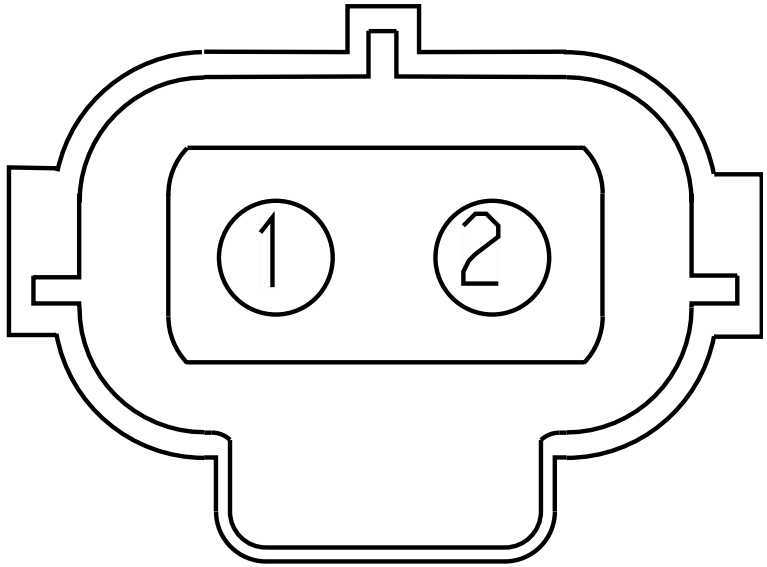

Name	Terminal Part Number	V-Min	Name	Wire Part Number	Wire CSA	Wire Spec	Wire Material description	Wire Color Description	Wire Length	End2 Terminal Part Number	End2 Pin Name	End2 Connect or
1	-	-	NY87MB	2643680 R1	1.16	16.0	Std. Wall XLPE Primary Cable	GREY	2120.0	-	59	1701F
2	-	-	NY87DB	2643673 R1	0.79	18.0	Std. Wall XLPE Primary Cable	GREY	2120.0	-	58	1701F

Connector Name	9746A
Part Number	3554317C1
Instances	B6.7 - Windshield Washer Pump & Low Fluid Sensor:Diagram1
Mates	DEV-Low_Washer_Fluid_Senso r-1029-05-01A

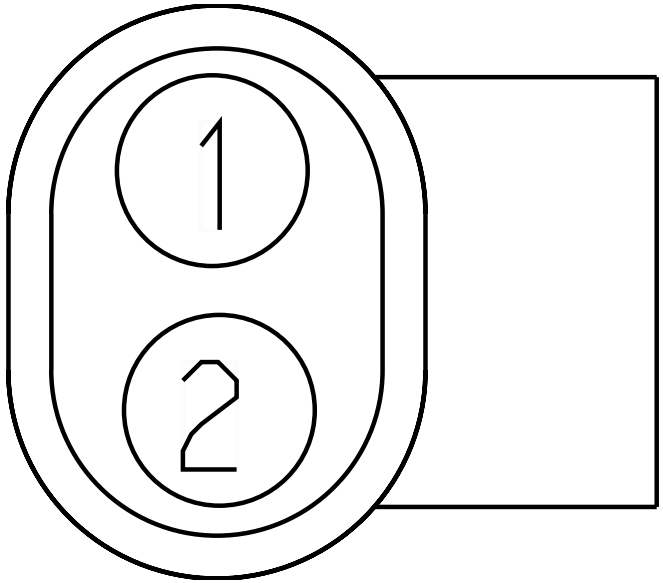

Name	Terminal Part Number	V-Min	Name	Wire Part Number	Wire CSA	Wire Spec	Wire Material description	Wire Color Description	Wire Length	End2 Terminal Part Number	End2 Pin Name	End2 Connect or
1	-	-	AK87EA	3510311 R1	0.79	18.0	Thin Wall XLPE Primary Cable	GREY	2000.0	-	41	1701F
2	-	-	AK9EB	3510311 R1	0.79	18.0	Thin Wall XLPE Primary Cable	GREY	1485.0	-	-	-

Connector Name 9746A
Part Number 3554317C1
Instances L9 - Windshield Washer Pump & Low Fluid Sensor:Diagram2

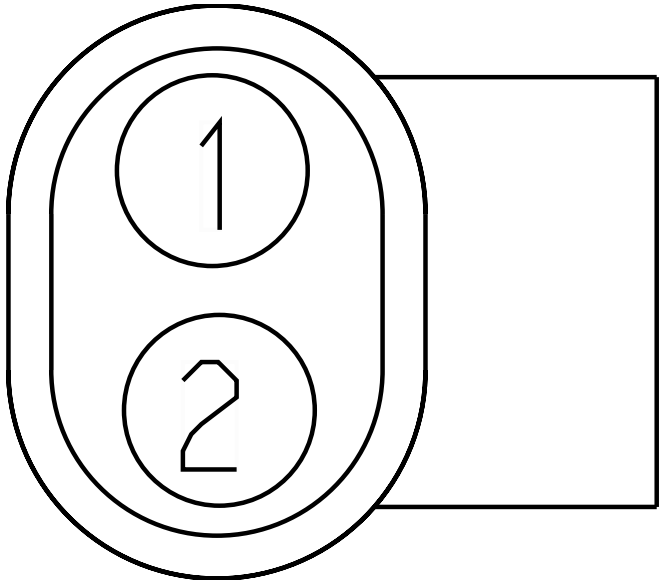

Name	Terminal Part Number	V-Min	Name	Wire Part Number	Wire CSA	Wire Spec	Wire Material description	Wire Color Description	Wire Length	End2 Terminal Part Number	End2 Pin Name	End2 Connect or
1	-	-	AK87EA	3510311 R1	0.79	18.0	Thin Wall XLPE Primary Cable	GREY	2000.0	-	41	1701F
2	-	-	AK8EB	3510311 R1	0.79	18.0	Thin Wall XLPE Primary Cable	GREY	1640.0	-	-	-

Connector Name	9746
Part Number	3554317C1
Instances	L9 - Windshield Washer Pump & Low Fluid Sensor:Diagram1
Mates	DEV-Low_Washer_Fluid_Senso r-1029-05-01A

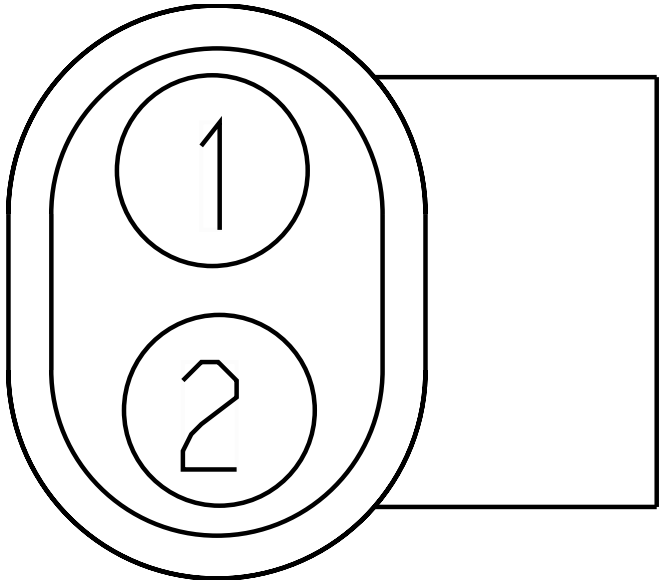

Name	Terminal Part Number	V-Min	Name	Wire Part Number	Wire CSA	Wire Spec	Wire Material description	Wire Color Description	Wire Length	End2 Terminal Part Number	End2 Pin Name	End2 Connect or
1	-	-	PP87EA	3510311 R1	0.79	18.0	Thin Wall XLPE Primary Cable	GREY	2124.0	-	41	1701F
2	-	-	PP87H	3510311 R1	0.79	18.0	Thin Wall XLPE Primary Cable	GREY	1764.0	-	-	-

Connector Name	9761F
Part Number	3522252C1
Short Description	LIFT AXLE
Instances	A26 - Lift Axle Controls (Center Pedestal Controls f/ 2 Lift Axles):Diagram1 A26 - Lift Axle Controls (Center Pedestal Controls f/ 1 lift axle):Diagram1 A26 - Lift Axle Controls (Center Pedestal Controls f/ 1 lift axle):Diagram2 A26 - Lift Axle Controls (Center Pedestal Controls f/ 3 lift axles):Diagram1 L9 - Lift Axle Controls (Center Pedestal Controls f/ 1 lift axle):Diagram1 L9 - Lift Axle Controls (Center Pedestal Controls f/ 1 lift axle):Diagram2 L9 - Lift Axle Controls (Center Pedestal Controls f/ 2 Lift Axles):Diagram1 L9 - Lift Axle Controls (Center Pedestal Controls f/ 3 lift axles):Diagram1
Mates	9761M

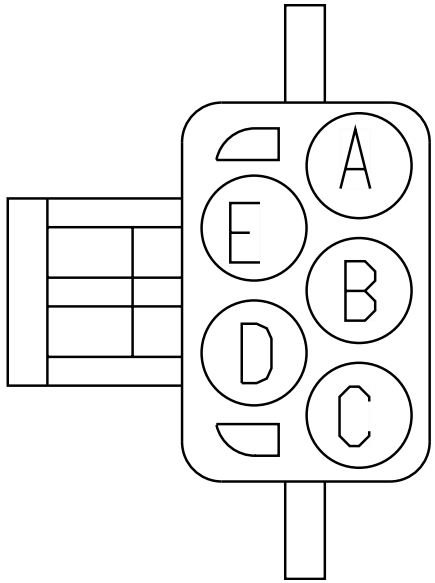

Name	Terminal Part Number	V-Min	Name	Wire Part Number	Wire CSA	Wire Spec	Wire Material description	Wire Color Description	Wire Length	End2 Terminal Part Number	End2 Pin Name	End2 Connector
A	-	-	RS59EF	2643673 R1	0.79	18.0	Std. Wall XLPE Primary Cable	GREY	4861.0	-	A	9762
A	-	-	RP59ED	2643673 R1	0.79	18.0	Std. Wall XLPE Primary Cable	GREY	2611.0	-	A	9820M
A	-	-	RR59EC	2643673 R1	0.79	18.0	Std. Wall XLPE Primary Cable	GREY	2691.0	-	A	9763
B	-	-	RR59EF	2643673 R1	0.79	18.0	Std. Wall XLPE Primary Cable	GREY	4861.0	-	A	9762

Name	Terminal Part Number	V-Min	Name	Wire Part Number	Wire CSA	Wire Spec	Wire Material description	Wire Color Description	Wire Length	End2 Terminal Part Number	End2 Pin Name	End2 Connect or
C	-	-	TM59ED	2643673 R1	0.79	18.0	Std. Wall XLPE Primary Cable	GREY	1537.0	-	A	9764
E	-	-	RM71N	2643682 R1	1.16	16.0	Std. Wall XLPE Primary Cable	ORANGE	2751.0	-	70	1701F

Connector Name	9761M
Part Number	3522251C1
Short Description	CHASSIS CONNECTOR
Instances	A26 - Lift Axle Controls (Center Pedestal Controls f/ 2 Lift Axles):Diagram1 A26 - Lift Axle Controls (Center Pedestal Controls f/ 1 lift axle):Diagram1 A26 - Lift Axle Controls (Center Pedestal Controls f/ 1 lift axle):Diagram2 A26 - Lift Axle Controls (Center Pedestal Controls f/ 3 lift axles):Diagram1 L9 - Lift Axle Controls (Center Pedestal Controls f/ 1 lift axle):Diagram1 L9 - Lift Axle Controls (Center Pedestal Controls f/ 1 lift axle):Diagram2 L9 - Lift Axle Controls (Center Pedestal Controls f/ 2 Lift Axles):Diagram1 L9 - Lift Axle Controls (Center Pedestal Controls f/ 3 lift axles):Diagram1
Mates	9761F

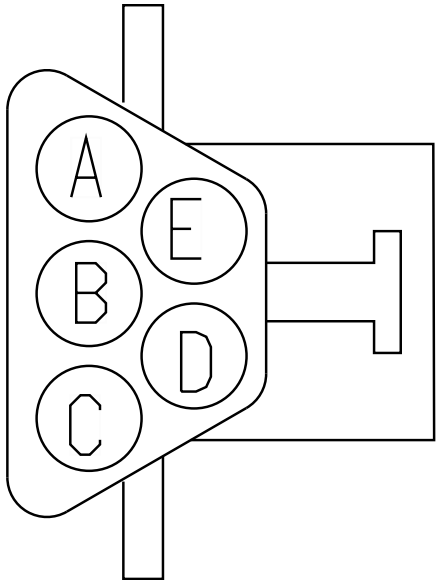

Name	Terminal Part Number	V-Min	Name	Wire Part Number	Wire CSA	Wire Spec	Wire Material description	Wire Color Description	Wire Length	End2 Terminal Part Number	End2 Pin Name	End2 Connector
A	-	-	T59MB	2643670 R1	0.79	18.0	Std. Wall XLPE Primary Cable	BLACK	2130.0	-	A	1027F
B	-	-	T59NB	2643670 R1	0.79	18.0	Std. Wall XLPE Primary Cable	BLACK	2130.0	-	B	1027F
C	-	-	T59PB	2643670 R1	0.79	18.0	Std. Wall XLPE Primary Cable	BLACK	2130.0	-	C	1027F
E	-	-	T71N	2643670 R1	0.79	18.0	Std. Wall XLPE Primary Cable	BLACK	2280.0	-	A	1917F

Connector Name	9762F
Part Number	3543888C1
Short Description	LIFT AXLE CONN
Instances	A26 - Lift Axle Controls (Center Pedestal Controls f/ 2 Lift Axles):Diagram1 A26 - Axle Lift Controls:Diagram1 A26 - Axle Lift Controls:Diagram2 A26 - Lift Axle Controls (Center Pedestal Controls f/ 1 lift axle):Diagram1 A26 - Lift Axle Controls (Center Pedestal Controls f/ 3 lift axles):Diagram1 A26/B6.7/L9 - Axle Lift Controls:Diagram1 A26/B6.7/L9 - Axle Lift Controls:Diagram3 L9 - Axle Lift Controls Option 2:Diagram1 L9 - Axle Lift Controls Option 2:Diagram2 L9 - Lift Axle Controls (Center Pedestal Controls f/ 1 lift axle):Diagram1 L9 - Lift Axle Controls (Center Pedestal Controls f/ 2 Lift Axles):Diagram1 L9 - Lift Axle Controls (Center Pedestal Controls f/ 3 lift axles):Diagram1
Mates	9762

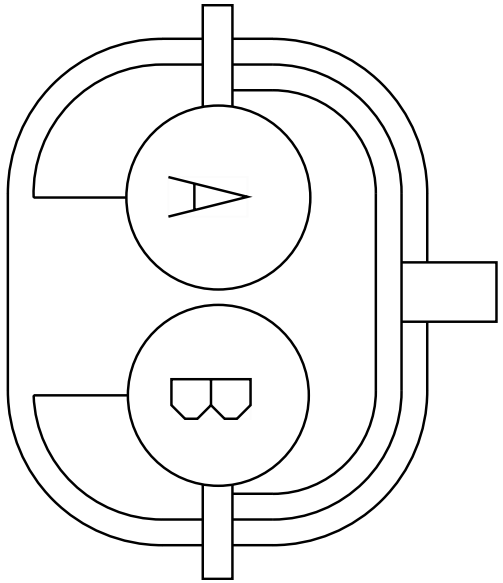

Name	Terminal Part Number	V-Min	Name	Wire Part Number	Wire CSA	Wire Spec	Wire Material description	Wire Color Description	Wire Length	End2 Terminal Part Number	End2 Pin Name	End2 Connect or
A	-	-	59	2643673 R1	0.79	18.0	Std. Wall XLPE Primary Cable	GREY	1300.0	-	A	9762M
B	-	-	59-G	2643674 R1	0.79	18.0	Std. Wall XLPE Primary Cable	WHITE	1300.0	-	B	9762M

Connector Name 9762M

Part Number 1661778C1

Instances A26 - Lift Axle Controls (Center Pedestal Controls f/ 2 Lift Axles):Diagram1
A26 - Axle Lift Controls:Diagram1
A26 - Axle Lift Controls:Diagram2
A26 - Lift Axle Controls (Center Pedestal Controls f/ 1 lift axle):Diagram1
A26 - Lift Axle Controls (Center Pedestal Controls f/ 3 lift axles):Diagram1
A26/B6.7/L9 - Axle Lift Controls:Diagram1
A26/B6.7/L9 - Axle Lift Controls:Diagram3
L9 - Axle Lift Controls Option 2:Diagram1
L9 - Axle Lift Controls Option 2:Diagram2
L9 - Lift Axle Controls (Center Pedestal Controls f/ 1 lift axle):Diagram1
L9 - Lift Axle Controls (Center Pedestal Controls f/ 2 Lift Axles):Diagram1
L9 - Lift Axle Controls (Center Pedestal Controls f/ 3 lift axles):Diagram1

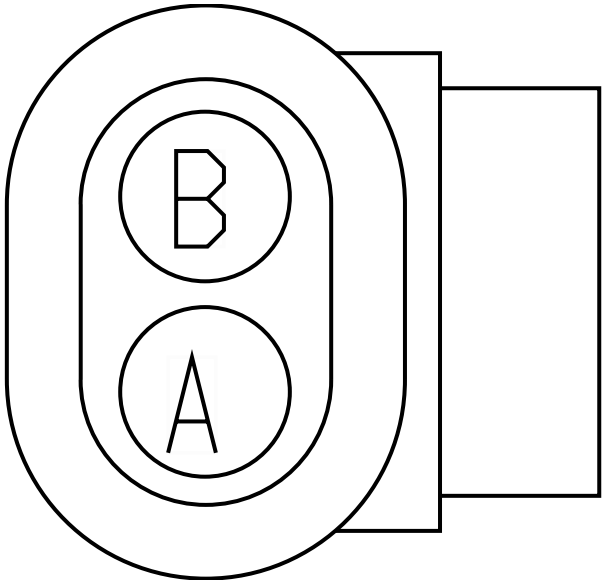

Name	Terminal Part Number	V-Min	Name	Wire Part Number	Wire CSA	Wire Spec	Wire Material description	Wire Color Description	Wire Length	End2 Terminal Part Number	End2 Pin Name	End2 Connect or
A	-	-	59	2643673 R1	0.79	18.0	Std. Wall XLPE Primary Cable	GREY	1300.0	-	A	9762F
B	-	-	59-G	2643674 R1	0.79	18.0	Std. Wall XLPE Primary Cable	WHITE	1300.0	-	B	9762F

Connector Name	9762
Part Number	1661778C1
Short Description	FIRST PUSHER AXLE
Instances	A26 - Lift Axle Controls (Center Pedestal Controls f/ 2 Lift Axles):Diagram1 A26 - Axle Lift Controls:Diagram1 A26 - Axle Lift Controls:Diagram2 A26 - Lift Axle Controls (Center Pedestal Controls f/ 1 lift axle):Diagram1 A26 - Lift Axle Controls (Center Pedestal Controls f/ 3 lift axles):Diagram1 A26/B6.7/L9 - Axle Lift Controls:Diagram1 A26/B6.7/L9 - Axle Lift Controls:Diagram3 L9 - Axle Lift Controls Option 2:Diagram1 L9 - Axle Lift Controls Option 2:Diagram2 L9 - Lift Axle Controls (Center Pedestal Controls f/ 1 lift axle):Diagram1 L9 - Lift Axle Controls (Center Pedestal Controls f/ 2 Lift Axles):Diagram1 L9 - Lift Axle Controls (Center Pedestal Controls f/ 3 lift axles):Diagram1
Mates	9762F

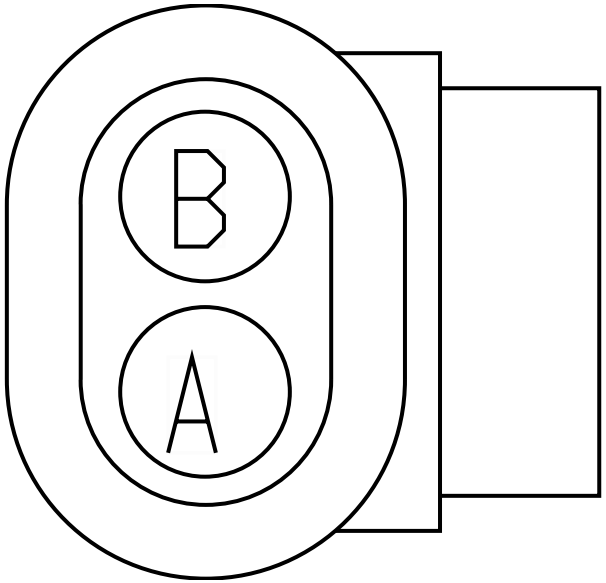

Name	Terminal Part Number	V-Min	Name	Wire Part Number	Wire CSA	Wire Spec	Wire Material description	Wire Color Description	Wire Length	End2 Terminal Part Number	End2 Pin Name	End2 Connect or
A	-	-	UC59EF	2643673 R1	0.79	18.0	Std. Wall XLPE Primary Cable	GREY	6680.0	-	60	1701F
A	-	-	RS59EF	2643673 R1	0.79	18.0	Std. Wall XLPE Primary Cable	GREY	4861.0	-	A	9761F
A	-	-	RR59EF	2643673 R1	0.79	18.0	Std. Wall XLPE Primary Cable	GREY	4861.0	-	B	9761F

Name	Terminal Part Number	V-Min	Name	Wire Part Number	Wire CSA	Wire Spec	Wire Material description	Wire Color Description	Wire Length	End2 Terminal Part Number	End2 Pin Name	End2 Connect or
B	-	-	UC59-GA	2643674 R1	0.79	18.0	Std. Wall XLPE Primary Cable	WHITE	4395.0	-	-	-
B	-	-	RN59-GA	2643674 R1	0.79	18.0	Std. Wall XLPE Primary Cable	WHITE	4395.0	-	-	-
B	-	-	MX59-GC	2643674 R1	0.79	18.0	Std. Wall XLPE Primary Cable	WHITE	4120.0	-	X	-
B	-	-	MV59-GC	2643674 R1	0.79	18.0	Std. Wall XLPE Primary Cable	WHITE	4120.0	-	X	-

Connector Name	9763
Part Number	1661778C1
Instances	A26 - Lift Axle Controls (Center Pedestal Controls f/ 2 Lift Axles):Diagram1 A26 - Axle Lift Controls:Diagram1 A26 - Axle Lift Controls:Diagram2 A26 - Lift Axle Controls (Center Pedestal Controls f/ 3 lift axles):Diagram1 L9 - Axle Lift Controls Option 2:Diagram1 L9 - Axle Lift Controls Option 2:Diagram2 L9 - Lift Axle Controls (Center Pedestal Controls f/ 2 Lift Axles):Diagram1 L9 - Lift Axle Controls (Center Pedestal Controls f/ 3 lift axles):Diagram1
Mates	SOL-Lift_Axle_2-3021-03-02A

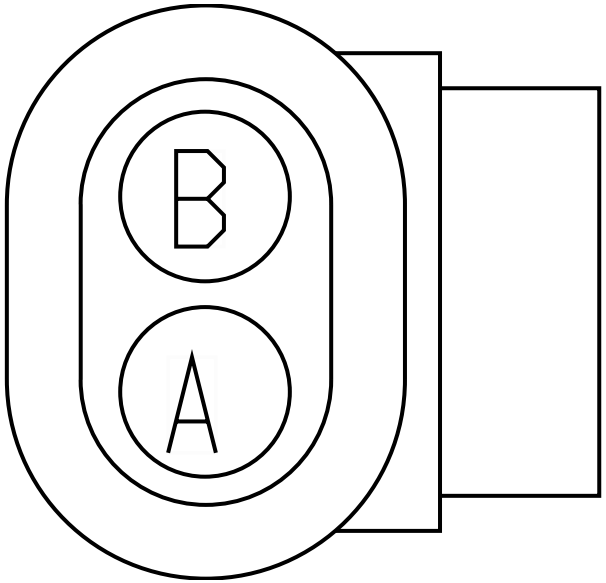

Name	Terminal Part Number	V-Min	Name	Wire Part Number	Wire CSA	Wire Spec	Wire Material description	Wire Color Description	Wire Length	End2 Terminal Part Number	End2 Pin Name	End2 Connect or
A	-	-	UD59EC	2643673 R1	0.79	18.0	Std. Wall XLPE Primary Cable	GREY	4510.0	-	61	1701F
A	-	-	RR59EC	2643673 R1	0.79	18.0	Std. Wall XLPE Primary Cable	GREY	2691.0	-	A	9761F
B	-	-	UD59-GB	2643674 R1	0.79	18.0	Std. Wall XLPE Primary Cable	WHITE	2225.0	-	-	-
B	-	-	MX59-GB	2643674 R1	0.79	18.0	Std. Wall XLPE Primary Cable	WHITE	2350.0	-	X	-

Name	Terminal Part Number	V-Min	Name	Wire Part Number	Wire CSA	Wire Spec	Wire Material description	Wire Color Description	Wire Length	End2 Terminal Part Number	End2 Pin Name	End2 Connect or
B	-	-	TM59-GB	2643674 R1	0.79	18.0	Std. Wall XLPE Primary Cable	WHITE	2225.0	-	-	-

Connector Name	9764
Part Number	1661778C1
Instances	A26 - Lift Axle Controls (Center Pedestal Controls f/ 3 lift axles):Diagram1 L9 - Lift Axle Controls (Center Pedestal Controls f/ 3 lift axles):Diagram1
Mates	SOL-Lift_Axle_3-3021-03-03A

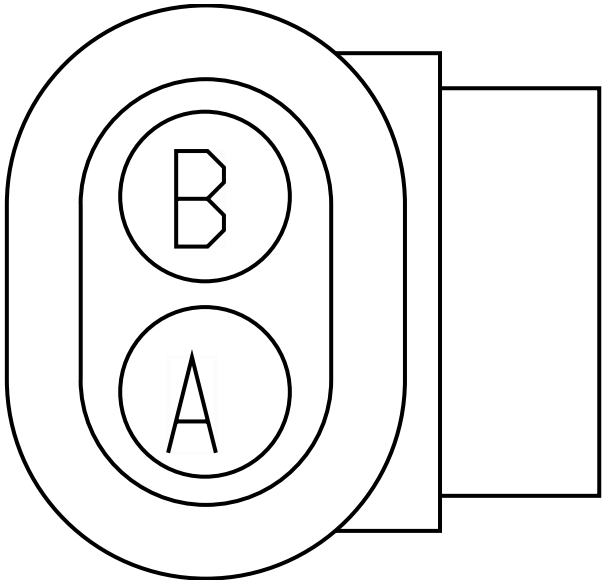

Name	Terminal Part Number	V-Min	Name	Wire Part Number	Wire CSA	Wire Spec	Wire Material description	Wire Color Description	Wire Length	End2 Terminal Part Number	End2 Pin Name	End2 Connect or
A	-	-	TM59ED	2643673 R1	0.79	18.0	Std. Wall XLPE Primary Cable	GREY	1537.0	-	C	9761F
B	-	-	TM59-GD	2643674 R1	0.79	18.0	Std. Wall XLPE Primary Cable	WHITE	1071.0	-	-	-

Connector Name	9766
Part Number	1661778C1
Short Description	WORK LIGHT
Instances	A26 - WORK LIGHT 1 BULB:Diagram2 A26 - WORK LIGHT W Backup 1 Bulb:Diagram2 A26 - WORK LIGHT W BackUP 1 BULB:Diagram2 A26 - WORK LIGHT W RKE 1 BULB:Diagram2 A26 - Work Light W/ Backup 1 Bulb W/Automatic W/ RKE:Diagram1-Combination2 A26 - Work Light W/ Backup 1 Bulb W/Manual W/ RKE:Diagram1-Combination2 A26 - Work Lights LED W/ Sw Pack - Day Cab:Diagram2 L9 - WORK LIGHT 1 BULB:Diagram1 L9 - WORK LIGHT W BackUP 1 BULB Option 1:Diagram2 L9 - WORK LIGHT W BackUP 1 BULB Option 1:Diagram4 L9 - WORK LIGHT W BackUP 1 BULB Option 2:Diagram1 L9 - WORK LIGHT W RKE 1 BULB:Diagram2 L9 - Work Lights LED W/ Sw Pack - Day Cab:Diagram2
Mates	9766

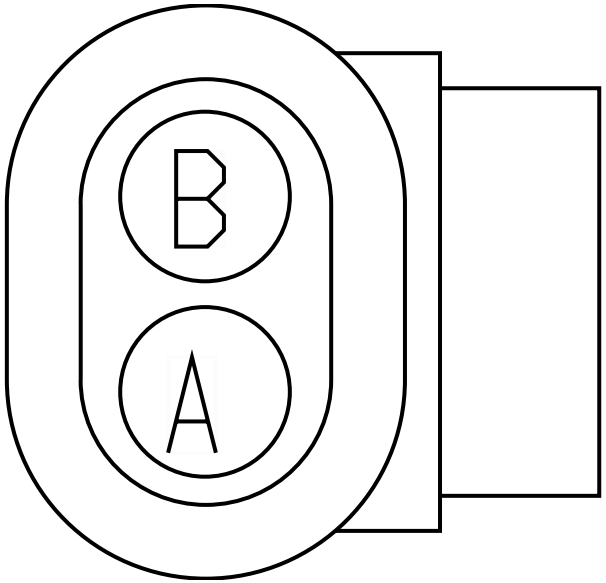

Name	Terminal Part Number	V-Min	Name	Wire Part Number	Wire CSA	Wire Spec	Wire Material description	Wire Color Description	Wire Length	End2 Terminal Part Number	End2 Pin Name	End2 Connector
A	-	-	UA65	2643682 R1	1.16	16.0	Std. Wall XLPE Primary Cable	ORANGE	4405.0	-	68	1701F
B	-	-	YT65-G	2643681 R1	1.16	16.0	Std. Wall XLPE Primary Cable	WHITE	2845.0	-	X	-
B	-	-	YN65-G	2643681 R1	1.16	16.0	Std. Wall XLPE Primary Cable	WHITE	3145.0	-	-	-
B	-	-	YK65-G	2643681 R1	1.16	16.0	Std. Wall XLPE Primary Cable	WHITE	2930.0	-	X	-

Connector Name	9766
Part Number	3543888C1
Short Description	WORK LIGHT
Instances	A26 - WORK LIGHT 1 BULB:Diagram2 A26 - WORK LIGHT W Backup 1 Bulb:Diagram2 A26 - WORK LIGHT W BackUP 1 BULB:Diagram2 A26 - WORK LIGHT W RKE 1 BULB:Diagram2 A26 - Work Light W/ Backup 1 Bulb W/Automatic W/ RKE:Diagram1-Combination2 A26 - Work Light W/ Backup 1 Bulb W/Manual W/ RKE:Diagram1-Combination2 A26 - Work Lights LED W/ Sw Pack - Day Cab:Diagram2 L9 - WORK LIGHT 1 BULB:Diagram1 L9 - WORK LIGHT W BackUP 1 BULB Option 1:Diagram2 L9 - WORK LIGHT W BackUP 1 BULB Option 1:Diagram4 L9 - WORK LIGHT W BackUP 1 BULB Option 2:Diagram1 L9 - WORK LIGHT W RKE 1 BULB:Diagram2 L9 - Work Lights LED W/ Sw Pack - Day Cab:Diagram2
Mates	9766

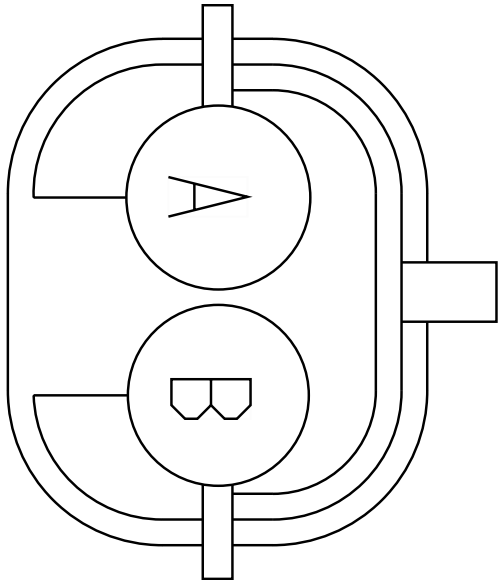

Name	Terminal Part Number	V-Min	Name	Wire Part Number	Wire CSA	Wire Spec	Wire Material description	Wire Color Description	Wire Length	End2 Terminal Part Number	End2 Pin Name	End2 Connector
A	-	-	SZ65	2643682 R1	1.16	16.0	Std. Wall XLPE Primary Cable	ORANGE	2625.0	-	A	9718A
A	-	-	SZ65	2643682 R1	1.16	16.0	Std. Wall XLPE Primary Cable	ORANGE	2625.0	-	A	9767
B	-	-	SZ65-G	2643681 R1	1.16	16.0	Std. Wall XLPE Primary Cable	WHITE	2625.0	-	B	9718A
B	-	-	SZ65-G	2643681 R1	1.16	16.0	Std. Wall XLPE Primary Cable	WHITE	2625.0	-	B	9767

Connector Name	9767
Part Number	1661778C1
Short Description	WORK LIGHT
Instances	A26 - Work Light W/ Backup 1 Bulb W/Automatic W/ RKE:Diagram1-Combination1 A26 - Work Light W/ Backup 1 Bulb W/Automatic W/ RKE:Diagram1-Combination2 B6.7 - WORK LIGHT 1 BULB:Diagram1 B6.7 - WORK LIGHT W BackUP 1 BULB:Diagram1 B6.7 - WORK LIGHT W RKE 1 BULB:Diagram1 B6.7 - Work Lights LED W/ Sw Pack - Day Cab:Diagram1
Mates	9719

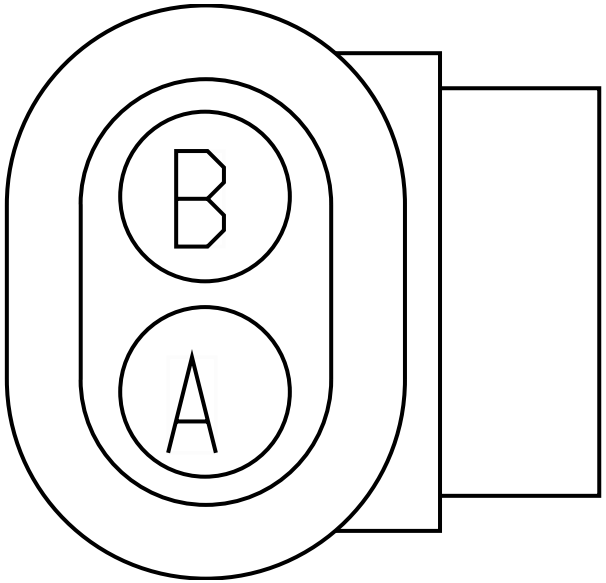

Name	Terminal Part Number	V-Min	Name	Wire Part Number	Wire CSA	Wire Spec	Wire Material description	Wire Color Description	Wire Length	End2 Terminal Part Number	End2 Pin Name	End2 Connect or
A	-	-	NF65	2643682 R1	1.16	16.0	Std. Wall XLPE Primary Cable	ORANGE	2585.0	-	68	1701F
A	-	-	SZ65	2643682 R1	1.16	16.0	Std. Wall XLPE Primary Cable	ORANGE	2625.0	-	A	9766
B	-	-	YU65-G	2643681 R1	1.16	16.0	Std. Wall XLPE Primary Cable	WHITE	1060.0	-	X	-
B	-	-	YM65-G	2643681 R1	1.16	16.0	Std. Wall XLPE Primary Cable	WHITE	1325.0	-	-	-

Name	Terminal Part Number	V-Min	Name	Wire Part Number	Wire CSA	Wire Spec	Wire Material description	Wire Color Description	Wire Length	End2 Terminal Part Number	End2 Pin Name	End2 Connect or
B	-	-	SZ65-G	2643681 R1	1.16	16.0	Std. Wall XLPE Primary Cable	WHITE	2625.0	-	B	9766

Connector Name	9775F
Part Number	1667740C1
Short Description	LOAD INDICATOR TO CENTER CHASSIS
Instances	A26/B6.7/L9 - Rear Suspension Pressure Monitoring (Auxiliary Gauge):Diagram1 A26/B6.7/L9 - Rear Suspension Pressure Monitoring (Auxiliary Gauge):Diagram2 A26/B6.7/L9 - Rear Suspension Pressure Monitoring (Virtual Gauge):Diagram1 A26/B6.7/L9 - Rear Suspension Pressure Monitoring (Virtual Gauge):Diagram2 B6.7 - Axle Loading (Weight) Rear:Diagram1 B6.7 - Axle Loading (Weight) Rear:Diagram2 L9 - Axle Loading (Weight) Rear:Diagram1 L9 - Axle Loading (Weight) Rear:Diagram2
Mates	9865M

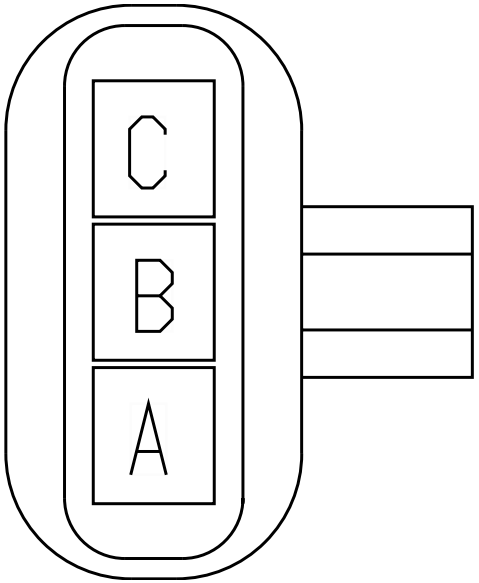

Name	Terminal Part Number	V-Min	Name	Wire Part Number	Wire CSA	Wire Spec	Wire Material description	Wire Color Description	Wire Length	End2 Terminal Part Number	End2 Pin Name	End2 Connect or
A	-	-	RU9N	2643673 R1	0.79	18.0	Std. Wall XLPE Primary Cable	GREY	1960.0	-	A	9832
A	-	-	RT9M	2643673 R1	0.79	18.0	Std. Wall XLPE Primary Cable	GREY	2960.0	-	A	9830
B	-	-	RT6H	2643673 R1	0.79	18.0	Std. Wall XLPE Primary Cable	GREY	2960.0	-	B	9830
B	-	-	RU6J	2643673 R1	0.79	18.0	Std. Wall XLPE Primary Cable	GREY	1960.0	-	B	9832

Name	Terminal Part Number	V-Min	Name	Wire Part Number	Wire CSA	Wire Spec	Wire Material description	Wire Color Description	Wire Length	End2 Terminal Part Number	End2 Pin Name	End2 Connect or
C	-	-	RT61C	2643673 R1	0.79	18.0	Std. Wall XLPE Primary Cable	GREY	2960.0	-	C	9830
C	-	-	RU61D	2643673 R1	0.79	18.0	Std. Wall XLPE Primary Cable	GREY	1960.0	-	C	9832

Connector Name	9778
Part Number	587567C91
Instances	A26 - Remote Start/Stop:Diagram1 B6.7 - Remote Start/Stop:Diagram1 B6.7 - Remote Start/Stop w/ Emergency Pump:Diagram1 L9 - Remote Start/Stop:Diagram1 L9 - Remote Start/Stop w/ Emergency Pump:Diagram1
Mates	CONN-BODY_BUILDER_REMOTE_S /S-5038-02-01A

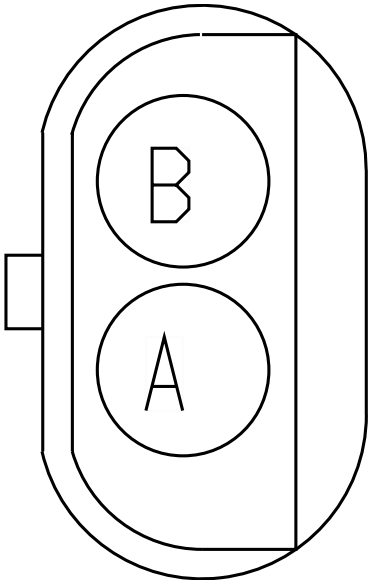

Name	Terminal Part Number	V-Min	Name	Wire Part Number	Wire CSA	Wire Spec	Wire Material description	Wire Color Description	Wire Length	End2 Terminal Part Number	End2 Pin Name	End2 Connect or
A	-	-	SW59CA	3510312 R1	1.16	16.0	Thin Wall XLPE Primary Cable	GREY	4480.0	-	44	1701F
B	-	-	SW104CA	3510354 R1	1.16	16.0	Thin Wall XLPE Primary Cable	DARK BLUE	4480.0	-	43	1701F

Connector Name	9800
Part Number	3558022C1
Short Description	CONNECTION TO CENTER HARNESS
Instances	A26 - Antilock Brake System (ABS) Bendix:Diagram1 A26 - Antilock Brake System (ABS) Bendix:Diagram2 A26 - Antilock Brake System (ABS) Bendix:Diagram3 A26 - Antilock Brake System (ABS)-Wabco 4 Channel Implementation:Diagram1 A26 - Axle Temperature Monitoring (Single Rear Aux Gauge):Diagram1 A26 - Axle Temperature Monitoring (Single Rear Virtual Gauge):Diagram1 A26 - Axle Temperature Monitoring (Tandem Rear Aux Gauge):Diagram1 A26 - Axle Temperature Monitoring (Tandem Rear Virtual Gauge):Diagram1 A26 - Back-Up Alarm (Automatic) W/ Tailboard:Diagram1 A26 - Back-Up Alarm (Automatic) W/O Tailboard:Diagram1 A26 - Back-Up Alarm (Manual) W/ Tailboard:Diagram1 A26 - Back-Up Alarm (Manual) W/O Tailboard:Diagram1 A26 - Back-Up Alarm (Relay to 5 Pin 08TKC Tailboard to Alarm) (Automatic):Diagram1 A26 - Back-Up Alarm (Relay to 5 Pin 08TKC Tailboard. Alarm Plugs In) (Automatic):Diagram1 A26 - Backup Alarm (Switch to 5 Pin 08TKC Tailboard to Alarm) (Manual):Diagram1 A26 - Backup Alarm (Switch to 5 Pin 08TKC Tailboard. Alarm Plugs In) (Manual):Diagram1 A26 - Backup Light (Dual Daisy Reverse LT)Allison/ZF Trans 3K/4K:Diagram1 A26 - Backup Light (Dual Daisy Reverse LT)Allison/ZF Trans 3K/4K:Diagram2 A26 - Backup Light (Dual Reverse Light)Allison/ZF Trans 3K/4K:Diagram1 A26 - Backup Light (Dual Reverse Light)Allison/ZF Trans 3K/4K:Diagram2 A26 - Backup Light (Single Reverse Light) Allison 3K/4K:Diagram1 A26 - Backup Light (Single Reverse Light) Allison 3K/4K:Diagram2 A26 - Backup Light (Single Reverse Light) Allison 3K/4K Option2:Diagram1

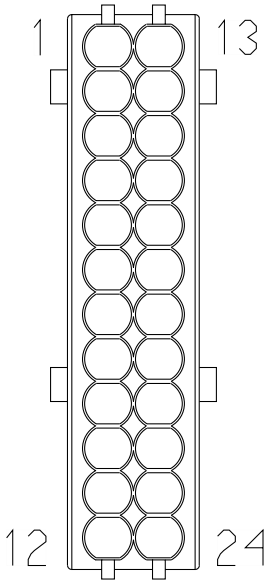

A26 - Backup Light (Single Reverse Light) Allison 3K/4K Option2:Diagram2
A26 - Backup Light (Single Reverse Light) W/Less Power Module Allison 3K/4K:Diagram1-Combination1
A26 - Backup Light (Single Reverse Light) W/Less Power Module Allison 3K/4K:Diagram1-Combination2
A26 - Backup Light (Single Reverse Light)Allison 3K/4K:Diagram1
A26 - Backup Light (Single Reverse Light)Allison 3K/4K:Diagram2
A26 - Backup Lights (Dual Daisy Reverse Light) Eaton/Manual Trans:Diagram1
A26 - Backup Lights (Dual Reverse Light) Eaton/Manual Trans:Diagram1
A26 - Backup Lights (Reverse) W/Less Power Module Eaton/Manual Trans:Diagram1
A26 - Backup Lights (Single Reverse Light) Eaton/Manual Trans:Diagram1
A26 - Backup Lights (Single Reverse Lights) Eaton/Manual Trans:Diagram1
A26 - Backup Lights (Single Reverse Lights) Eaton/Manual Trans Option2:Diagram1
A26 - Backup Lights (Single Reverse Lights) Eaton/Manual Transmission:Diagram1
A26 - Directional Signal (Turn) W/ Daisy Chain Box Lamps:Diagram1
A26 - Directional Signal (Turn) W/ Daisy Chain Box Lamps, W/Plow Lights:Diagram1-Option 1 (Snow Plow #1)
A26 - Directional Signal (Turn) W/ Daisy Chain Box Lamps, W/Plow Lights:Diagram1-Option 2 (Snow Plow #2)
A26 - Directional Signal (Turn) W/ LED BOX LAMPS:Diagram1
A26 - Directional Signal (Turn) W/ LED BOX LAMPS, W/Plow Lights:Diagram1-Option 1 (Snow Plow #1)
A26 - Directional Signal (Turn) W/ LED BOX LAMPS, W/Plow Lights:Diagram1-Option 2 (Snow Plow #2)
A26 - Directional Signal (Turn) W/ Less Power Module Tail Board, W/Hazard SW:Diagram1
A26 - Directional Signal (Turn) W/ Less Power Module Tail Board, W/Hazard SW, W/Plow Lights:Diagram1-Option 1 (Snow Plow #1)
A26 - Directional Signal (Turn) W/ Less Power Module Tail Board, W/Hazard SW, W/Plow Lights:Diagram1-Option 2 (Snow Plow #2)

A26 - Directional Signal (Turn) W/ Single Tail Board W/Hazard SW:Diagram1
A26 - Directional Signal (Turn) W/ Single Tail Board, W/Hazard SW, W/Plow Lights:Diagram1-Option 1 (Snow Plow #1)
A26 - Directional Signal (Turn) W/ Single Tail Board, W/Hazard SW, W/Plow Lights:Diagram1-Option 2 (Snow Plow #2)
A26 - Driver Controlled Locking Differential FR and RR Axle (Dana w/ one switch):Diagram1
A26 - Driver Controlled Locking Differential FR and RR Axle (Meritor w/ one sw):Diagram1
A26 - Driver Controlled Locking Differential FR and RR Axles (Dana w/ two sw):Diagram1
A26 - Driver Controlled Locking Differential FR and RR Axles (Meritor w/ two sw):Diagram1
A26 - Driver Controlled Locking Differential RR Axle (Dana w/ one sw):Diagram1
A26 - Driver Controlled Locking Differential RR Axle (Meritor w/ one sw):Diagram1
A26 - License Plate Light (LED BOX LAMP Daisy Chain Tail Light):Diagram1
A26 - License Plate Light (LED BOX LAMP Tail Light):Diagram1
A26 - License Plate Light (Tail Light Single Assembly):Diagram1
A26 - License Plate Light (Tail Light Single Assembly)Option2:Diagram1
A26 - License Plate Light (Tail Light Single Assembly)Option3:Diagram1
A26 - License Plate Light (Tail Light Single Assy.) W/Less Power Module (W/08TKC, 08THM):Diagram1
A26 - Rear Light (LED BOX LAMP Tail Light) W/08TPS, 08TPR:Diagram1
A26 - Rear Light (Tail Light) W/08THK:Diagram1
A26 - Rear Light (Tail Light) W/08TKB:Diagram1
A26 - Rear Light (Tail Light) W/08TKJ:Diagram1
A26 - Rear Light (Tail Light) W/Less Power Module (W/08TKC, 08THM):Diagram1
A26 - Rear Light (Tail Light) W_Daisy Chain pair of Box Lamps W/08TRS:Diagram1
A26 - Rear Lights Stop - Daisy Chain:Diagram1
A26 - Rear Lights Stop - Dual Assembly:Diagram1
A26 - Rear Lights Stop - Single Assemby:Diagram1
A26 - Rear Lights Stop - Single Assemby Jumper Harness W/08TKC, 08THM:Diagram1
A26 - Rear Lights Stop - Single Assemby W/08TKJ:Diagram1
A26 - Separate Rear Lights (Stop) W/08TVH:Diagram1

A26 - Traction Control (Bendix):Diagram1
A26 - Traction Control (Bendix):Diagram2
B6.7 - Antilock Brake System (ABS) BENDIX 4 Channel Implemenation:Diagram1
B6.7 - Antilock Brake System (ABS) BENDIX 4 Channel Implemenation:Diagram2
B6.7 - Antilock Brake System (ABS) BENDIX 4 Channel Implemenation:Diagram3
B6.7 - Axle Temperature Monitoring (Single Rear Aux Gauge):Diagram1
B6.7 - Axle Temperature Monitoring (Single Rear Virtual Gauge):Diagram1
B6.7 - Back-Up Alarm (Automatic) W/ Tailboard:Diagram1
B6.7 - Back-Up Alarm (Automatic) W/O Tailboard:Diagram1
B6.7 - Back-Up Alarm (Manual) W/ Tailboard:Diagram1
B6.7 - Back-Up Alarm (Manual) W/O Tailboard:Diagram1
B6.7 - Backup Light (Dual Daisy Reverse LT)Allison/ZF Trans 1K/2K:Diagram1
B6.7 - Backup Light (Dual Daisy Reverse LT)Allison/ZF Trans 3K/4K:Diagram1
B6.7 - Backup Light (Dual Daisy Reverse LT)Allison/ZF Trans 3K/4K:Diagram2
B6.7 - Backup Light (Dual Reverse Light)Allison/ZF Trans 1K/2K:Diagram1
B6.7 - Backup Light (Dual Reverse Light)Allison/ZF Trans 3K/4K:Diagram1
B6.7 - Backup Light (Dual Reverse Light)Allison/ZF Trans 3K/4K:Diagram2
B6.7 - Backup Light (Single Reverse Light) Allison 1K/2K Option 1:Diagram1
B6.7 - Backup Light (Single Reverse Light) Allison 1K/2K Option 2:Diagram1
B6.7 - Backup Light (Single Reverse Light) Allison 1K/2K Option 3:Diagram1
B6.7 - Backup Light (Single Reverse Light) Allison 3K/4K Option 1:Diagram1
B6.7 - Backup Light (Single Reverse Light) Allison 3K/4K Option 1:Diagram2
B6.7 - Backup Light (Single Reverse Light) Allison 3K/4K Option 2:Diagram1
B6.7 - Backup Light (Single Reverse Light) Allison 3K/4K Option 2:Diagram2
B6.7 - Backup Light (Single Reverse Light) Allison 3K/4K Option 3:Diagram1

B6.7 - Backup Light (Single Reverse Light) Allison 3K/4K Option 3:Diagram2
B6.7 - Backup Lights (Dual Daisy Reverse Light) Eaton/Manual Trans:Diagram1
B6.7 - Backup Lights (Dual Reverse Light) Eaton/Manual Trans:Diagram1
B6.7 - Backup Lights (Single Reverse Light) Eaton/Manual Trans:Diagram1
B6.7 - Backup Lights (Single Reverse Lights) Eaton/Manual Trans Option 1:Diagram1
B6.7 - Backup Lights (Single Reverse Lights) Eaton/Manual Trans Option 2:Diagram1
B6.7 - Directional Signal (Turn) W/ Less Power Module Tail Board W/Hazard SW W/PLOW LIGHTS:Diagram1
B6.7 - Directional Signal (Turn) W/ Less Power Module Tail Board W/Hazard SW W/PLOW LIGHTS:Diagram2
B6.7 - Directional Signal (Turn) W/ Less Power Module Tail Board W/Hazard SW W/PLOW LIGHTS:Diagram3
B6.7 - Directional Signal (Turn) W/ Less Power Module Tail Board W/Hazard SW W/PLOW LIGHTS:Diagram4
B6.7 - Directional Signal (Turn) W/ DAISY CHAIN BOX LAMPS:Diagram1
B6.7 - Directional Signal (Turn) W/ DAISY CHAIN BOX LAMPS:Diagram2
B6.7 - Directional Signal (Turn) W/ Daisy Chain Box Lamps W/ Plow Lights:Diagram1
B6.7 - Directional Signal (Turn) W/ Daisy Chain Box Lamps W/ Plow Lights:Diagram2
B6.7 - Directional Signal (Turn) W/ Daisy Chain Box Lamps W/ Plow Lights:Diagram3
B6.7 - Directional Signal (Turn) W/ Daisy Chain Box Lamps W/ Plow Lights:Diagram4
B6.7 - Directional Signal (Turn) W/ LED BOX LAMPS:Diagram1
B6.7 - Directional Signal (Turn) W/ LED BOX LAMPS:Diagram2
B6.7 - Directional Signal (Turn) W/ LED BOX LAMPS W/Plow Lights:Diagram1
B6.7 - Directional Signal (Turn) W/ LED BOX LAMPS W/Plow Lights:Diagram2
B6.7 - Directional Signal (Turn) W/ LED BOX LAMPS W/Plow Lights:Diagram3
B6.7 - Directional Signal (Turn) W/ LED BOX LAMPS W/Plow Lights:Diagram4
B6.7 - Directional Signal (Turn) W/ Less Power Module Tail Board W/Hazard SW:Diagram1

B6.7 - Directional Signal (Turn) W/ Less Power Module Tail Board W/Hazard SW:Diagram2
B6.7 - Directional Signal (Turn) W/ Single Tail Board W/Hazard SW:Diagram1
B6.7 - Directional Signal (Turn) W/ Single Tail Board W/Hazard SW:Diagram2
B6.7 - Directional Signal (Turn) W/ Single Tail Board W/Plow Lights:Diagram1
B6.7 - Directional Signal (Turn) W/ Single Tail Board W/Plow Lights:Diagram2
B6.7 - Directional Signal (Turn) W/ Single Tail Board W/Plow Lights:Diagram3
B6.7 - Directional Signal (Turn) W/ Single Tail Board W/Plow Lights:Diagram4
B6.7 - Driver Controlled Locking Differential - RR Axle (Dana w/ one sw):Diagram1
B6.7 - Driver Controlled Locking Differential - RR Axle (Meritor w/ one sw):Diagram1
B6.7 - License Plate Light (LED BOX LAMP Daisy Chain Tail Light):Diagram1
B6.7 - License Plate Light (LED BOX LAMP Tail Light):Diagram1
B6.7 - License Plate Light (Tail Light Single Assy) Option 1:Diagram1
B6.7 - License Plate Light (Tail Light Single Assy) Option 2:Diagram1
B6.7 - License Plate Light (Tail Light Single Assy) Option 3:Diagram1
B6.7 - License Plate Light (Tail Light Single Assy) Option 4:Diagram1
B6.7 - License Plate Light (Tail Light Single Assy) W/Less Power Module:Diagram1
B6.7 - Rear Light (LED BOX LAMP Tail Light):Diagram1
B6.7 - Rear Light (Tail Light) Option 1:Diagram1
B6.7 - Rear Light (Tail Light) Option 2:Diagram1
B6.7 - Rear Light (Tail Light) Option 3:Diagram1
B6.7 - Rear Light (Tail Light) Option 4:Diagram1
B6.7 - Rear Light (Tail Light) W_Daisy Chain pair of Box Lamps:Diagram1
B6.7 - Rear Lights Stop - Daisy Chain:Diagram1
B6.7 - Rear Lights Stop - Dual Assembly:Diagram1
B6.7 - Rear Lights Stop - Single Assemby:Diagram1
B6.7 - Traction Control (Bendix):Diagram1
B6.7 - Traction Control (Bendix):Diagram2

L9 - Antilock Brake System (ABS) BENDIX 4 Channel Implemenation:Diagram1
L9 - Antilock Brake System (ABS) Bendix 6 Channel Implementation:Diagram1
L9 - Antilock Brake System (ABS) Bendix 6 Channel Implementation:Diagram2
L9 - Antilock Brake System (ABS) Bendix 6 Channel Implementation:Diagram3
L9 - Antilock Brake System (ABS) Bendix 6 Channel Implementation:Diagram4
L9 - Antilock Brake System (ABS) Bendix 6 Channel Implementation:Diagram5
L9 - Antilock Brake System (ABS) Bendix 6 Channel Implementation:Diagram6
L9 - Antilock Brake System (ABS) Bendix 6 Channel Implementation:Diagram7
L9 - Antilock Brake System (ABS) Bendix 6 Channel Implementation:Diagram8
L9 - Antilock Brake System (ABS) Bendix 6 Channel Implementation:Diagram9
L9 - Antilock Brake System (ABS) Wabco 4 Channel Implementation:Diagram1
L9 - Axle Temperature Monitoring (Tandem Rear Aux Gauge) Option 1:Diagram1
L9 - Axle Temperature Monitoring (Tandem Rear Aux Gauge) Option 2:Diagram1
L9 - Axle Temperature Monitoring (Tandem Rear Virtual Gauge) Option 1:Diagram1
L9 - Axle Temperature Monitoring (Tandem Rear Virtual Gauge) Option 2:Diagram1
L9 - Back-Up Alarm (Automatic) W/ Tailboard:Diagram1
L9 - Back-Up Alarm (Automatic) W/O Tailboard:Diagram1
L9 - Back-Up Alarm (Manual) W/ Tailboard:Diagram1
L9 - Back-Up Alarm (Manual) W/ Tailboard:Diagram2
L9 - Back-Up Alarm (Manual) W/O Tailboard:Diagram1
L9 - Back-Up Alarm (Manual) W/O Tailboard:Diagram2
L9 - Backup Light (Dual Daisy Reverse Light)Allison/ZF Trans 3K/4K:Diagram1
L9 - Backup Light (Dual Daisy Reverse Light)Allison/ZF Trans 3K/4K:Diagram2
L9 - Backup Light (Single Reverse Light) Allison 3K/4K Option 1:Diagram1
L9 - Backup Light (Single Reverse Light) Allison 3K/4K Option 1:Diagram2

L9 - Backup Light (Single Reverse Light) Allison 3K/4K Option 2:Diagram1
L9 - Backup Light (Single Reverse Light) Allison 3K/4K Option 2:Diagram2
L9 - Backup Light (Single Reverse Light) Allison 3K/4K Option 3:Diagram1
L9 - Backup Light (Single Reverse Light) Allison 3K/4K Option 3:Diagram2
L9 - Backup Light (Single Reverse Light)Allison:Diagram1
L9 - Backup Light (Single Reverse Light)Allison:Diagram2
L9 - Backup Lights (Dual Daisy Reverse Light) Eaton/Manual Trans:Diagram1
L9 - Backup Lights (Dual Daisy Reverse Light) Eaton/Manual Trans:Diagram2
L9 - Backup Lights (Dual Reverse Light) Eaton/Manual Trans:Diagram1
L9 - Backup Lights (Dual Reverse Light) Eaton/Manual Trans:Diagram2
L9 - Backup Lights (Single Reverse Light) Eaton/Manual Trans Option 1:Diagram1
L9 - Backup Lights (Single Reverse Light) Eaton/Manual Trans Option 1:Diagram2
L9 - Backup Lights (Single Reverse Light) Eaton/Manual Trans Option 2:Diagram1
L9 - Backup Lights (Single Reverse Light) Eaton/Manual Trans Option 2:Diagram2
L9 - Backup Lights (Single Reverse Light) Eaton/Manual Trans Option 3:Diagram1
L9 - Backup Lights (Single Reverse Light) Eaton/Manual Trans Option 3:Diagram2
L9 - Backup Lights (Single Reverse Light) Eaton/Manual Trans Option 4:Diagram1
L9 - Backup Lights (Single Reverse Light) Eaton/Manual Trans Option 4:Diagram2
L9 - Directional Signal (Turn) W/ Less Power Module Tail Board W/Hazard SW W/PLOW LIGHTS:Diagram1
L9 - Directional Signal (Turn) W/ Less Power Module Tail Board W/Hazard SW W/PLOW LIGHTS:Diagram2
L9 - Directional Signal (Turn) W/ Less Power Module Tail Board W/Hazard SW W/PLOW LIGHTS:Diagram3
L9 - Directional Signal (Turn) W/ Less Power Module Tail Board W/Hazard SW W/PLOW LIGHTS:Diagram4
L9 - Directional Signal (Turn) W/ DAISY CHAIN BOX LAMPS:Diagram1

L9 - Directional Signal (Turn) W/ DAISY CHAIN BOX LAMPS:Diagram2
L9 - Directional Signal (Turn) W/ Daisy Chain Box Lamps W/ Plow Lights:Diagram1
L9 - Directional Signal (Turn) W/ Daisy Chain Box Lamps W/ Plow Lights:Diagram2
L9 - Directional Signal (Turn) W/ Daisy Chain Box Lamps W/ Plow Lights:Diagram3
L9 - Directional Signal (Turn) W/ Daisy Chain Box Lamps W/ Plow Lights:Diagram4
L9 - Directional Signal (Turn) W/ LED BOX LAMPS:Diagram1
L9 - Directional Signal (Turn) W/ LED BOX LAMPS:Diagram2
L9 - Directional Signal (Turn) W/ LED BOX LAMPS W/Plow Lights:Diagram1
L9 - Directional Signal (Turn) W/ LED BOX LAMPS W/Plow Lights:Diagram2
L9 - Directional Signal (Turn) W/ LED BOX LAMPS W/Plow Lights:Diagram3
L9 - Directional Signal (Turn) W/ LED BOX LAMPS W/Plow Lights:Diagram4
L9 - Directional Signal (Turn) W/ Less Power Module Tail Board W/Hazard SW:Diagram1
L9 - Directional Signal (Turn) W/ Less Power Module Tail Board W/Hazard SW:Diagram2
L9 - Directional Signal (Turn) W/ Single Tail Board W/Hazard SW:Diagram1
L9 - Directional Signal (Turn) W/ Single Tail Board W/Hazard SW:Diagram2
L9 - Directional Signal (Turn) W/ Single Tail Board W/Plow Lights:Diagram1
L9 - Directional Signal (Turn) W/ Single Tail Board W/Plow Lights:Diagram2
L9 - Directional Signal (Turn) W/ Single Tail Board W/Plow Lights:Diagram3
L9 - Directional Signal (Turn) W/ Single Tail Board W/Plow Lights:Diagram4
L9 - Driver Controlled Locking Differential - FR and RR Axle (Dana w/ one sw):Diagram1
L9 - Driver Controlled Locking Differential - FR and RR Axle (Meritor w/ one sw):Diagram1
L9 - Driver Controlled Locking Differential - FR and RR Axles (Dana w/ two sw):Diagram1
L9 - Driver Controlled Locking Differential - FR and RR Axles (Meritor w/ two sw):Diagram1

L9 - Driver Controlled Locking Differential - RR Axle (Dana w/ one sw):Diagram1
L9 - Driver Controlled Locking Differential - RR Axle (Meritor w/ one sw):Diagram1
L9 - License Plate Light (LED BOX LAMP Daisy Chain Tail Light):Diagram1
L9 - License Plate Light (LED BOX LAMP Tail Light):Diagram1
L9 - License Plate Light (Tail Light Single Assy) Option 1:Diagram1
L9 - License Plate Light (Tail Light Single Assy) Option 2:Diagram1
L9 - License Plate Light (Tail Light Single Assy) Option 3:Diagram1
L9 - License Plate Light (Tail Light Single Assy) Option 4:Diagram1
L9 - Rear Light (LED BOX LAMP Tail Light):Diagram1
L9 - Rear Light (Tail Light):Diagram1
L9 - Rear Light (Tail Light) W Daisy Chain pair of Box Lamps:Diagram1
L9 - Rear Lights Stop - Daisy Chain:Diagram1
L9 - Rear Lights Stop - Dual Assembly:Diagram1
L9 - Rear Lights Stop - Single Assemby:Diagram1
L9 - Traction Control (Bendix):Diagram1

Mates 9800

Name	Terminal Part Number	V-Min	Name	Wire Part Number	Wire CSA	Wire Spec	Wire Material description	Wire Color Description	Wire Length	End2 Terminal Part Number	End2 Pin Name	End2 Connect or
1	-	-	RB71	2643690 R1	1.91	14.0	Std. Wall XLPE Primary Cable	ORANGE	2875.0	-	A	9303A
2	-	-	RB56	2643690 R1	1.91	14.0	Std. Wall XLPE Primary Cable	ORANGE	2875.0	-	B	9303A
2	-	-	RB56	2643690 R1	1.91	14.0	Std. Wall XLPE Primary Cable	ORANGE	2875.0	-	C	9303A

Name	Terminal Part Number	V-Min	Name	Wire Part Number	Wire CSA	Wire Spec	Wire Material description	Wire Color Description	Wire Length	End2 Terminal Part Number	End2 Pin Name	End2 Connector
2	-	-	RB56	2643690 R1	1.91	14.0	Std. Wall XLPE Primary Cable	ORANGE	2875.0	-	A	9303A
3	-	-	RB57	2643690 R1	1.91	14.0	Std. Wall XLPE Primary Cable	ORANGE	2875.0	-	C	9303A
3	-	-	RB57	2643690 R1	1.91	14.0	Std. Wall XLPE Primary Cable	ORANGE	2875.0	-	B	9303A
4	-	-	RK68	2643688 R1	1.91	14.0	Std. Wall XLPE Primary Cable	BROWN	4380.0	-	4	1701F
4	-	-	RB68	2643688 R1	1.91	14.0	Std. Wall XLPE Primary Cable	BROWN	2875.0	-	D	9303A
4	-	-	RB68	2643688 R1	1.91	14.0	Std. Wall XLPE Primary Cable	BROWN	2875.0	-	D	9303Ac
5	-	-	RM32A	2643676 R1	0.79	18.0	Std. Wall XLPE Primary Cable	TAN	1860.0	-	1	9813
5	-	-	MG32A	2643676 R1	0.79	18.0	Std. Wall XLPE Primary Cable	TAN	4380.0	-	43	1701F

Name	Terminal Part Number	V-Min	Name	Wire Part Number	Wire CSA	Wire Spec	Wire Material description	Wire Color Description	Wire Length	End2 Terminal Part Number	End2 Pin Name	End2 Connector
6	-	-	RL32	2643676 R1	0.79	18.0	Std. Wall XLPE Primary Cable	TAN	2510.0	-	1	9813
6	-	-	RH32	2643676 R1	0.79	18.0	Std. Wall XLPE Primary Cable	TAN	4380.0	-	44	1701F
6	-	-	AF70	2643690 R1	1.91	14.0	Std. Wall XLPE Primary Cable	ORANGE	0.0	-	E	R01-930 3D
6	-	-	RM32	2643676 R1	0.79	18.0	Std. Wall XLPE Primary Cable	TAN	2510.0	-	1	9813
7	-	-	RO49	2643673 R1	0.79	18.0	Std. Wall XLPE Primary Cable	GREY	2260.0	-	A	9814
7	-	-	AJ49	2643674 R1	0.79	18.0	Std. Wall XLPE Primary Cable	WHITE	2660.0	-	A	9814A
8	-	-	AP49A	2643674 R1	0.79	18.0	Std. Wall XLPE Primary Cable	WHITE	2560.0	-	A	9815A
8	-	-	RO49A	2643673 R1	0.79	18.0	Std. Wall XLPE Primary Cable	GREY	2130.0	-	A	9815

Name	Terminal Part Number	V-Min	Name	Wire Part Number	Wire CSA	Wire Spec	Wire Material description	Wire Color Description	Wire Length	End2 Terminal Part Number	End2 Pin Name	End2 Connector
8	-	-	AJ49A	2643674 R1	0.79	18.0	Std. Wall XLPE Primary Cable	WHITE	2560.0	-	A	9815A
8	-	-	RN49A	2643673 R1	0.79	18.0	Std. Wall XLPE Primary Cable	GREY	2130.0	-	A	9815
9	-	-	AP49-GA	2643674 R1	0.79	18.0	Std. Wall XLPE Primary Cable	WHITE	2560.0	-	B	9815A
9	-	-	RO10-GB	2643674 R1	0.79	18.0	Std. Wall XLPE Primary Cable	WHITE	510.0	-	X	-
9	-	-	RN49-GA	2643674 R1	0.79	18.0	Std. Wall XLPE Primary Cable	WHITE	2130.0	-	B	9815
9	-	-	AJ10-GB	2643674 R1	0.79	18.0	Std. Wall XLPE Primary Cable	WHITE	360.0	-	X	-
11	-	-	RM9B	2643673 R1	0.79	18.0	Std. Wall XLPE Primary Cable	GREY	635.0	-	X	-
11	-	-	MG9H	2643673 R1	0.79	18.0	Std. Wall XLPE Primary Cable	GREY	2750.0	-	-	-

Name	Terminal Part Number	V-Min	Name	Wire Part Number	Wire CSA	Wire Spec	Wire Material description	Wire Color Description	Wire Length	End2 Terminal Part Number	End2 Pin Name	End2 Connect or
11	-	-	RL9C	2643673 R1	0.79	18.0	Std. Wall XLPE Primary Cable	GREY	2510.0	-	2	9813
12	-	-	RB10-G	3510362 R1	3.01	12.0	Thin Wall XLPE Primary Cable	WHITE	2875.0	-	E	9303A
12	-	-	SL10-G	3510362 R1	3.01	12.0	Thin Wall XLPE Primary Cable	WHITE	2400.0	-	-	-
12	-	-	AF11-GTL	3510362 R1	3.01	12.0	Thin Wall XLPE Primary Cable	WHITE	2875.0	-	F	R01-9303D
12	-	-	RB10-G	3510362 R1	3.01	12.0	Thin Wall XLPE Primary Cable	WHITE	2875.0	-	E	9303Ac
13	-	-	RC94A	2643680 R1	1.16	16.0	Std. Wall XLPE Primary Cable	GREY	965.0	-	1	9501
13	-	-	[RV94WL]	V-18-GXL	0.79	18.0	Std. Wall XLPE Primary Cable	Not Applicable	1465.0	-	1	9516
13	-	-	UL94R	2643680 R1	1.16	16.0	Std. Wall XLPE Primary Cable	GREY	1410.0	-	1	9557

Name	Terminal Part Number	V-Min	Name	Wire Part Number	Wire CSA	Wire Spec	Wire Material description	Wire Color Description	Wire Length	End2 Terminal Part Number	End2 Pin Name	End2 Connector
13	-	-	UG94R	2643680 R1	1.16	16.0	Std. Wall XLPE Primary Cable	GREY	1860.0	-	1	9540
13	-	-	UP94R	2643680 R1	1.16	16.0	Std. Wall XLPE Primary Cable	GREY	1560.0	-	1	9540A
14	-	-	RC94B	2643682 R1	1.16	16.0	Std. Wall XLPE Primary Cable	ORANGE	965.0	-	2	9501
14	-	-	[RV94WM]	V-18-GXL	0.79	18.0	Std. Wall XLPE Primary Cable	Not Applicable	1465.0	-	2	9516
14	-	-	UL94S	2643682 R1	1.16	16.0	Std. Wall XLPE Primary Cable	ORANGE	1410.0	-	2	9557
14	-	-	UP94S	2643682 R1	1.16	16.0	Std. Wall XLPE Primary Cable	ORANGE	1560.0	-	2	9540A
14	-	-	UG94S	2643682 R1	1.16	16.0	Std. Wall XLPE Primary Cable	ORANGE	1860.0	-	2	9540
15	-	-	RC94C	2643721 R1	1.16	16.0	Std. Wall XLPE Primary Cable	DARK BLUE	1500.0	-	1	9503

Name	Terminal Part Number	V-Min	Name	Wire Part Number	Wire CSA	Wire Spec	Wire Material description	Wire Color Description	Wire Length	End2 Terminal Part Number	End2 Pin Name	End2 Connector
15	-	-	[RV94WS]	V-18-GXL	0.79	18.0	Std. Wall XLPE Primary Cable	Not Applicable	2075.0	-	1	9517
15	-	-	UP94X	2643684 R1	1.16	16.0	Std. Wall XLPE Primary Cable	YELLOW 2	3385.0	-	2	9542A
15	-	-	UG94W	2643721 R1	1.16	16.0	Std. Wall XLPE Primary Cable	DARK BLUE	2910.0	-	1	9542
15	-	-	UL94W	2643721 R1	1.16	16.0	Std. Wall XLPE Primary Cable	DARK BLUE	2865.0	-	1	9563
15	-	-	UP94W	2643721 R1	1.16	16.0	Std. Wall XLPE Primary Cable	DARK BLUE	3385.0	-	1	9542A
16	-	-	RC94D	2643684 R1	1.16	16.0	Std. Wall XLPE Primary Cable	YELLOW 2	1500.0	-	2	9503
16	-	-	[RV94WT]	V-18-GXL	0.79	18.0	Std. Wall XLPE Primary Cable	Not Applicable	2075.0	-	2	9517
16	-	-	UP94W	2643721 R1	1.16	16.0	Std. Wall XLPE Primary Cable	DARK BLUE	3385.0	-	1	9542A

Name	Terminal Part Number	V-Min	Name	Wire Part Number	Wire CSA	Wire Spec	Wire Material description	Wire Color Description	Wire Length	End2 Terminal Part Number	End2 Pin Name	End2 Connector
16	-	-	UG94X	2643684 R1	1.16	16.0	Std. Wall XLPE Primary Cable	YELLOW 2	2910.0	-	2	9542
16	-	-	UL94X	2643684 R1	1.16	16.0	Std. Wall XLPE Primary Cable	YELLOW 2	2865.0	-	2	9563
16	-	-	UP94X	2643684 R1	1.16	16.0	Std. Wall XLPE Primary Cable	YELLOW 2	3385.0	-	2	9542A
17	-	-	RC94E	3510294 R1	1.16	16.0	Thin Wall XLPE Primary Cable	BLACK	965.0	-	A	9502
17	-	-	[RV94WN]	V-18-GXL	0.79	18.0	Std. Wall XLPE Primary Cable	Not Applicable	1110.0	-	1	9518
17	-	-	UL94M	3510294 R1	1.16	16.0	Thin Wall XLPE Primary Cable	BLACK	1310.0	-	A	9556
17	-	-	UP94M	3510294 R1	1.16	16.0	Thin Wall XLPE Primary Cable	BLACK	1640.0	-	A	9541
17	-	-	UG94M	3510294 R1	1.16	16.0	Thin Wall XLPE Primary Cable	BLACK	1660.0	-	A	9541

Name	Terminal Part Number	V-Min	Name	Wire Part Number	Wire CSA	Wire Spec	Wire Material description	Wire Color Description	Wire Length	End2 Terminal Part Number	End2 Pin Name	End2 Connector
17	-	-	UP94M	3510294 R1	1.16	16.0	Thin Wall XLPE Primary Cable	BLACK	1640.0	-	A	9541A
18	-	-	RC94F	3510366 R1	1.16	16.0	Thin Wall XLPE Primary Cable	RED	965.0	-	B	9502
18	-	-	[RV94G7]	V-18-GXL	0.79	18.0	Std. Wall XLPE Primary Cable	Not Applicable	1110.0	-	2	9518
18	-	-	UL94N	3510366 R1	1.16	16.0	Thin Wall XLPE Primary Cable	RED	1310.0	-	B	9556
18	-	-	UP94N	3510366 R1	1.16	16.0	Thin Wall XLPE Primary Cable	RED	1640.0	-	B	9541
18	-	-	UG94N	3510366 R1	1.16	16.0	Thin Wall XLPE Primary Cable	RED	1660.0	-	B	9541
18	-	-	UP94N	3510366 R1	1.16	16.0	Thin Wall XLPE Primary Cable	RED	1640.0	-	B	9541A
19	-	-	RC94H	3510306 R1	1.16	16.0	Thin Wall XLPE Primary Cable	BROWN	965.0	-	C	9502

Name	Terminal Part Number	V-Min	Name	Wire Part Number	Wire CSA	Wire Spec	Wire Material description	Wire Color Description	Wire Length	End2 Terminal Part Number	End2 Pin Name	End2 Connector
19	-	-	[RV94WR]	V-18-GXL	0.79	18.0	Std. Wall XLPE Primary Cable	Not Applicable	1110.0	-	3	9518
19	-	-	UL94P	3510306 R1	1.16	16.0	Thin Wall XLPE Primary Cable	BROWN	1310.0	-	C	9556
19	-	-	UP94P	3510306 R1	1.16	16.0	Thin Wall XLPE Primary Cable	BROWN	1640.0	-	C	9541
19	-	-	UG94P	3510306 R1	1.16	16.0	Thin Wall XLPE Primary Cable	BROWN	1660.0	-	C	9541
19	-	-	UP94P	3510306 R1	1.16	16.0	Thin Wall XLPE Primary Cable	BROWN	1640.0	-	C	9541A
20	-	-	RC94J	3510348 R1	1.16	16.0	Thin Wall XLPE Primary Cable	VIOLET	1400.0	-	A	9504
20	-	-	[RV94WU]	V-18-GXL	0.79	18.0	Std. Wall XLPE Primary Cable	Not Applicable	1760.0	-	1	9519
20	-	-	UL94T	3510348 R1	1.16	16.0	Thin Wall XLPE Primary Cable	VIOLET	2615.0	-	A	9562

Name	Terminal Part Number	V-Min	Name	Wire Part Number	Wire CSA	Wire Spec	Wire Material description	Wire Color Description	Wire Length	End2 Terminal Part Number	End2 Pin Name	End2 Connector
20	-	-	UP94T	3510348 R1	1.16	16.0	Thin Wall XLPE Primary Cable	VIOLET	3330.0	-	A	9543A
20	-	-	UG94T	3510348 R1	1.16	16.0	Thin Wall XLPE Primary Cable	VIOLET	2860.0	-	A	9543
21	-	-	RC94K	3510300 R1	1.16	16.0	Thin Wall XLPE Primary Cable	LIGHT GREEN	1400.0	-	B	9504
21	-	-	[RV94G6]	V-18-GXL	0.79	18.0	Std. Wall XLPE Primary Cable	Not Applicable	1760.0	-	2	9519
21	-	-	UP94U	3510300 R1	1.16	16.0	Thin Wall XLPE Primary Cable	LIGHT GREEN	3330.0	-	B	9543A
21	-	-	UG94U	3510300 R1	1.16	16.0	Thin Wall XLPE Primary Cable	LIGHT GREEN	2860.0	-	B	9543
21	-	-	UL94U	3510300 R1	1.16	16.0	Thin Wall XLPE Primary Cable	LIGHT GREEN	2615.0	-	B	9562
22	-	-	RC94L	3510342 R1	1.16	16.0	Thin Wall XLPE Primary Cable	LIGHT BLUE	1400.0	-	C	9504

Name	Terminal Part Number	V-Min	Name	Wire Part Number	Wire CSA	Wire Spec	Wire Material description	Wire Color Description	Wire Length	End2 Terminal Part Number	End2 Pin Name	End2 Connector
22	-	-	[RV94WW]	V-18-GXL	0.79	18.0	Std. Wall XLPE Primary Cable	Not Applicable	1760.0	-	3	9519
22	-	-	UP94V	3510342 R1	1.16	16.0	Thin Wall XLPE Primary Cable	LIGHT BLUE	3330.0	-	C	9543A
22	-	-	UG94V	3510342 R1	1.16	16.0	Thin Wall XLPE Primary Cable	LIGHT BLUE	2860.0	-	C	9543
22	-	-	UL94V	3510342 R1	1.16	16.0	Thin Wall XLPE Primary Cable	LIGHT BLUE	2615.0	-	C	9562
23	-	-	RD94BD	3510306 R1	1.16	16.0	Thin Wall XLPE Primary Cable	BROWN	410.0	-	2	P1898
23	-	-	RD94BD	3510306 R1	1.16	16.0	Thin Wall XLPE Primary Cable	BROWN	410.0	-	2	9512
23	-	-	UD94BD	3510306 R1	1.16	16.0	Thin Wall XLPE Primary Cable	BROWN	1865.0	-	2	9512
23	-	-	PR94BN	3510312 R1	1.16	16.0	Thin Wall XLPE Primary Cable	GREY	4380.0	-	15	1701F

Name	Terminal Part Number	V-Min	Name	Wire Part Number	Wire CSA	Wire Spec	Wire Material description	Wire Color Description	Wire Length	End2 Terminal Part Number	End2 Pin Name	End2 Connect or
24	-	-	RD94BE	3510336 R1	1.16	16.0	Thin Wall XLPE Primary Cable	YELLOW 2	410.0	-	1	P1898
24	-	-	RD94BE	3510336 R1	1.16	16.0	Thin Wall XLPE Primary Cable	YELLOW 2	410.0	-	1	9512
24	-	-	UD94BE	3510336 R1	1.16	16.0	Thin Wall XLPE Primary Cable	YELLOW 2	1865.0	-	1	9512
24	-	-	PR94BM	3510312 R1	1.16	16.0	Thin Wall XLPE Primary Cable	GREY	4380.0	-	14	1701F

Connector Name	9800
Part Number	3558026C1
Short Description	CONNECTION TO REAR CHASSIS HARNESS
Instances	A26 - Antilock Brake System (ABS) Bendix:Diagram1 A26 - Antilock Brake System (ABS) Bendix:Diagram2 A26 - Antilock Brake System (ABS) Bendix:Diagram3 A26 - Antilock Brake System (ABS)-Wabco 4 Channel Implementation:Diagram1 A26 - Axle Temperature Monitoring (Single Rear Aux Gauge):Diagram1 A26 - Axle Temperature Monitoring (Single Rear Virtual Gauge):Diagram1 A26 - Axle Temperature Monitoring (Tandem Rear Aux Gauge):Diagram1 A26 - Axle Temperature Monitoring (Tandem Rear Virtual Gauge):Diagram1 A26 - Back-Up Alarm (Automatic) W/ Tailboard:Diagram1 A26 - Back-Up Alarm (Automatic) W/O Tailboard:Diagram1 A26 - Back-Up Alarm (Manual) W/ Tailboard:Diagram1 A26 - Back-Up Alarm (Manual) W/O Tailboard:Diagram1 A26 - Back-Up Alarm (Relay to 5 Pin 08TKC Tailboard to Alarm) (Automatic):Diagram1 A26 - Back-Up Alarm (Relay to 5 Pin 08TKC Tailboard. Alarm Plugs In) (Automatic):Diagram1 A26 - Backup Alarm (Switch to 5 Pin 08TKC Tailboard to Alarm) (Manual):Diagram1 A26 - Backup Alarm (Switch to 5 Pin 08TKC Tailboard. Alarm Plugs In) (Manual):Diagram1 A26 - Backup Light (Dual Daisy Reverse LT)Allison/ZF Trans 3K/4K:Diagram1 A26 - Backup Light (Dual Daisy Reverse LT)Allison/ZF Trans 3K/4K:Diagram2 A26 - Backup Light (Dual Reverse Light)Allison/ZF Trans 3K/4K:Diagram1 A26 - Backup Light (Dual Reverse Light)Allison/ZF Trans 3K/4K:Diagram2 A26 - Backup Light (Single Reverse Light) Allison 3K/4K:Diagram1 A26 - Backup Light (Single Reverse Light) Allison 3K/4K:Diagram2 A26 - Backup Light (Single Reverse Light) Allison 3K/4K Option2:Diagram1

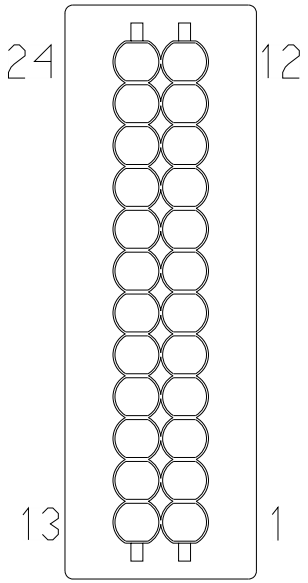

A26 - Backup Light (Single Reverse Light) Allison 3K/4K Option2:Diagram2
A26 - Backup Light (Single Reverse Light) W/Less Power Module Allison 3K/4K:Diagram1-Combination1
A26 - Backup Light (Single Reverse Light) W/Less Power Module Allison 3K/4K:Diagram1-Combination2
A26 - Backup Light (Single Reverse Light)Allison 3K/4K:Diagram1
A26 - Backup Light (Single Reverse Light)Allison 3K/4K:Diagram2
A26 - Backup Lights (Dual Daisy Reverse Light) Eaton/Manual Trans:Diagram1
A26 - Backup Lights (Dual Reverse Light) Eaton/Manual Trans:Diagram1
A26 - Backup Lights (Reverse) W/Less Power Module Eaton/Manual Trans:Diagram1
A26 - Backup Lights (Single Reverse Light) Eaton/Manual Trans:Diagram1
A26 - Backup Lights (Single Reverse Lights) Eaton/Manual Trans:Diagram1
A26 - Backup Lights (Single Reverse Lights) Eaton/Manual Trans Option2:Diagram1
A26 - Backup Lights (Single Reverse Lights) Eaton/Manual Transmission:Diagram1
A26 - Directional Signal (Turn) W/ Daisy Chain Box Lamps:Diagram1
A26 - Directional Signal (Turn) W/ Daisy Chain Box Lamps, W/Plow Lights:Diagram1-Option 1 (Snow Plow #1)
A26 - Directional Signal (Turn) W/ Daisy Chain Box Lamps, W/Plow Lights:Diagram1-Option 2 (Snow Plow #2)
A26 - Directional Signal (Turn) W/ LED BOX LAMPS:Diagram1
A26 - Directional Signal (Turn) W/ LED BOX LAMPS, W/Plow Lights:Diagram1-Option 1 (Snow Plow #1)
A26 - Directional Signal (Turn) W/ LED BOX LAMPS, W/Plow Lights:Diagram1-Option 2 (Snow Plow #2)
A26 - Directional Signal (Turn) W/ Less Power Module Tail Board, W/Hazard SW:Diagram1
A26 - Directional Signal (Turn) W/ Less Power Module Tail Board, W/Hazard SW, W/Plow Lights:Diagram1-Option 1 (Snow Plow #1)
A26 - Directional Signal (Turn) W/ Less Power Module Tail Board, W/Hazard SW, W/Plow Lights:Diagram1-Option 2 (Snow Plow #2)

A26 - Directional Signal (Turn) W/ Single Tail Board W/Hazard SW:Diagram1
A26 - Directional Signal (Turn) W/ Single Tail Board, W/Hazard SW, W/Plow Lights:Diagram1-Option 1 (Snow Plow #1)
A26 - Directional Signal (Turn) W/ Single Tail Board, W/Hazard SW, W/Plow Lights:Diagram1-Option 2 (Snow Plow #2)
A26 - Driver Controlled Locking Differential FR and RR Axle (Dana w/ one switch):Diagram1
A26 - Driver Controlled Locking Differential FR and RR Axle (Meritor w/ one sw):Diagram1
A26 - Driver Controlled Locking Differential FR and RR Axles (Dana w/ two sw):Diagram1
A26 - Driver Controlled Locking Differential FR and RR Axles (Meritor w/ two sw):Diagram1
A26 - Driver Controlled Locking Differential RR Axle (Dana w/ one sw):Diagram1
A26 - Driver Controlled Locking Differential RR Axle (Meritor w/ one sw):Diagram1
A26 - License Plate Light (LED BOX LAMP Daisy Chain Tail Light):Diagram1
A26 - License Plate Light (LED BOX LAMP Tail Light):Diagram1
A26 - License Plate Light (Tail Light Single Assembly):Diagram1
A26 - License Plate Light (Tail Light Single Assembly)Option2:Diagram1
A26 - License Plate Light (Tail Light Single Assembly)Option3:Diagram1
A26 - License Plate Light (Tail Light Single Assy.) W/Less Power Module (W/08TKC, 08THM):Diagram1
A26 - Rear Light (LED BOX LAMP Tail Light) W/08TPS, 08TPR:Diagram1
A26 - Rear Light (Tail Light) W/08THK:Diagram1
A26 - Rear Light (Tail Light) W/08TKB:Diagram1
A26 - Rear Light (Tail Light) W/08TKJ:Diagram1
A26 - Rear Light (Tail Light) W/Less Power Module (W/08TKC, 08THM):Diagram1
A26 - Rear Light (Tail Light) W_Daisy Chain pair of Box Lamps W/08TRS:Diagram1
A26 - Rear Lights Stop - Daisy Chain:Diagram1
A26 - Rear Lights Stop - Dual Assembly:Diagram1
A26 - Rear Lights Stop - Single Assemby:Diagram1
A26 - Rear Lights Stop - Single Assemby Jumper Harness W/08TKC, 08THM:Diagram1
A26 - Rear Lights Stop - Single Assemby W/08TKJ:Diagram1
A26 - Separate Rear Lights (Stop) W/08TVH:Diagram1

A26 - Traction Control (Bendix):Diagram1
A26 - Traction Control (Bendix):Diagram2
B6.7 - Antilock Brake System (ABS) BENDIX 4 Channel Implemenation:Diagram1
B6.7 - Antilock Brake System (ABS) BENDIX 4 Channel Implemenation:Diagram2
B6.7 - Antilock Brake System (ABS) BENDIX 4 Channel Implemenation:Diagram3
B6.7 - Axle Temperature Monitoring (Single Rear Aux Gauge):Diagram1
B6.7 - Axle Temperature Monitoring (Single Rear Virtual Gauge):Diagram1
B6.7 - Back-Up Alarm (Automatic) W/ Tailboard:Diagram1
B6.7 - Back-Up Alarm (Automatic) W/O Tailboard:Diagram1
B6.7 - Back-Up Alarm (Manual) W/ Tailboard:Diagram1
B6.7 - Back-Up Alarm (Manual) W/O Tailboard:Diagram1
B6.7 - Backup Light (Dual Daisy Reverse LT)Allison/ZF Trans 1K/2K:Diagram1
B6.7 - Backup Light (Dual Daisy Reverse LT)Allison/ZF Trans 3K/4K:Diagram1
B6.7 - Backup Light (Dual Daisy Reverse LT)Allison/ZF Trans 3K/4K:Diagram2
B6.7 - Backup Light (Dual Reverse Light)Allison/ZF Trans 1K/2K:Diagram1
B6.7 - Backup Light (Dual Reverse Light)Allison/ZF Trans 3K/4K:Diagram1
B6.7 - Backup Light (Dual Reverse Light)Allison/ZF Trans 3K/4K:Diagram2
B6.7 - Backup Light (Single Reverse Light) Allison 1K/2K Option 1:Diagram1
B6.7 - Backup Light (Single Reverse Light) Allison 1K/2K Option 2:Diagram1
B6.7 - Backup Light (Single Reverse Light) Allison 1K/2K Option 3:Diagram1
B6.7 - Backup Light (Single Reverse Light) Allison 3K/4K Option 1:Diagram1
B6.7 - Backup Light (Single Reverse Light) Allison 3K/4K Option 1:Diagram2
B6.7 - Backup Light (Single Reverse Light) Allison 3K/4K Option 2:Diagram1
B6.7 - Backup Light (Single Reverse Light) Allison 3K/4K Option 2:Diagram2
B6.7 - Backup Light (Single Reverse Light) Allison 3K/4K Option 3:Diagram1

B6.7 - Backup Light (Single Reverse Light) Allison 3K/4K Option 3:Diagram2
B6.7 - Backup Lights (Dual Daisy Reverse Light) Eaton/Manual Trans:Diagram1
B6.7 - Backup Lights (Dual Reverse Light) Eaton/Manual Trans:Diagram1
B6.7 - Backup Lights (Single Reverse Light) Eaton/Manual Trans:Diagram1
B6.7 - Backup Lights (Single Reverse Lights) Eaton/Manual Trans Option 1:Diagram1
B6.7 - Backup Lights (Single Reverse Lights) Eaton/Manual Trans Option 2:Diagram1
B6.7 - Directional Signal (Turn) W/ Less Power Module Tail Board W/Hazard SW W/PLOW LIGHTS:Diagram1
B6.7 - Directional Signal (Turn) W/ Less Power Module Tail Board W/Hazard SW W/PLOW LIGHTS:Diagram2
B6.7 - Directional Signal (Turn) W/ Less Power Module Tail Board W/Hazard SW W/PLOW LIGHTS:Diagram3
B6.7 - Directional Signal (Turn) W/ Less Power Module Tail Board W/Hazard SW W/PLOW LIGHTS:Diagram4
B6.7 - Directional Signal (Turn) W/ DAISY CHAIN BOX LAMPS:Diagram1
B6.7 - Directional Signal (Turn) W/ DAISY CHAIN BOX LAMPS:Diagram2
B6.7 - Directional Signal (Turn) W/ Daisy Chain Box Lamps W/ Plow Lights:Diagram1
B6.7 - Directional Signal (Turn) W/ Daisy Chain Box Lamps W/ Plow Lights:Diagram2
B6.7 - Directional Signal (Turn) W/ Daisy Chain Box Lamps W/ Plow Lights:Diagram3
B6.7 - Directional Signal (Turn) W/ Daisy Chain Box Lamps W/ Plow Lights:Diagram4
B6.7 - Directional Signal (Turn) W/ LED BOX LAMPS:Diagram1
B6.7 - Directional Signal (Turn) W/ LED BOX LAMPS:Diagram2
B6.7 - Directional Signal (Turn) W/ LED BOX LAMPS W/Plow Lights:Diagram1
B6.7 - Directional Signal (Turn) W/ LED BOX LAMPS W/Plow Lights:Diagram2
B6.7 - Directional Signal (Turn) W/ LED BOX LAMPS W/Plow Lights:Diagram3
B6.7 - Directional Signal (Turn) W/ LED BOX LAMPS W/Plow Lights:Diagram4
B6.7 - Directional Signal (Turn) W/ Less Power Module Tail Board W/Hazard SW:Diagram1

B6.7 - Directional Signal (Turn) W/ Less Power Module Tail Board W/Hazard SW:Diagram2
B6.7 - Directional Signal (Turn) W/ Single Tail Board W/Hazard SW:Diagram1
B6.7 - Directional Signal (Turn) W/ Single Tail Board W/Hazard SW:Diagram2
B6.7 - Directional Signal (Turn) W/ Single Tail Board W/Plow Lights:Diagram1
B6.7 - Directional Signal (Turn) W/ Single Tail Board W/Plow Lights:Diagram2
B6.7 - Directional Signal (Turn) W/ Single Tail Board W/Plow Lights:Diagram3
B6.7 - Directional Signal (Turn) W/ Single Tail Board W/Plow Lights:Diagram4
B6.7 - Driver Controlled Locking Differential - RR Axle (Dana w/ one sw):Diagram1
B6.7 - Driver Controlled Locking Differential - RR Axle (Meritor w/ one sw):Diagram1
B6.7 - License Plate Light (LED BOX LAMP Daisy Chain Tail Light):Diagram1
B6.7 - License Plate Light (LED BOX LAMP Tail Light):Diagram1
B6.7 - License Plate Light (Tail Light Single Assy) Option 1:Diagram1
B6.7 - License Plate Light (Tail Light Single Assy) Option 2:Diagram1
B6.7 - License Plate Light (Tail Light Single Assy) Option 3:Diagram1
B6.7 - License Plate Light (Tail Light Single Assy) Option 4:Diagram1
B6.7 - License Plate Light (Tail Light Single Assy) W/Less Power Module:Diagram1
B6.7 - Rear Light (LED BOX LAMP Tail Light):Diagram1
B6.7 - Rear Light (Tail Light) Option 1:Diagram1
B6.7 - Rear Light (Tail Light) Option 2:Diagram1
B6.7 - Rear Light (Tail Light) Option 3:Diagram1
B6.7 - Rear Light (Tail Light) Option 4:Diagram1
B6.7 - Rear Light (Tail Light) W_Daisy Chain pair of Box Lamps:Diagram1
B6.7 - Rear Lights Stop - Daisy Chain:Diagram1
B6.7 - Rear Lights Stop - Dual Assembly:Diagram1
B6.7 - Rear Lights Stop - Single Assemby:Diagram1
B6.7 - Traction Control (Bendix):Diagram1
B6.7 - Traction Control (Bendix):Diagram2

L9 - Antilock Brake System (ABS) BENDIX 4 Channel Implemenation:Diagram1
L9 - Antilock Brake System (ABS) Bendix 6 Channel Implementation:Diagram1
L9 - Antilock Brake System (ABS) Bendix 6 Channel Implementation:Diagram2
L9 - Antilock Brake System (ABS) Bendix 6 Channel Implementation:Diagram3
L9 - Antilock Brake System (ABS) Bendix 6 Channel Implementation:Diagram4
L9 - Antilock Brake System (ABS) Bendix 6 Channel Implementation:Diagram5
L9 - Antilock Brake System (ABS) Bendix 6 Channel Implementation:Diagram6
L9 - Antilock Brake System (ABS) Bendix 6 Channel Implementation:Diagram7
L9 - Antilock Brake System (ABS) Bendix 6 Channel Implementation:Diagram8
L9 - Antilock Brake System (ABS) Bendix 6 Channel Implementation:Diagram9
L9 - Antilock Brake System (ABS) Wabco 4 Channel Implementation:Diagram1
L9 - Axle Temperature Monitoring (Tandem Rear Aux Gauge) Option 1:Diagram1
L9 - Axle Temperature Monitoring (Tandem Rear Aux Gauge) Option 2:Diagram1
L9 - Axle Temperature Monitoring (Tandem Rear Virtual Gauge) Option 1:Diagram1
L9 - Axle Temperature Monitoring (Tandem Rear Virtual Gauge) Option 2:Diagram1
L9 - Back-Up Alarm (Automatic) W/ Tailboard:Diagram1
L9 - Back-Up Alarm (Automatic) W/O Tailboard:Diagram1
L9 - Back-Up Alarm (Manual) W/ Tailboard:Diagram1
L9 - Back-Up Alarm (Manual) W/ Tailboard:Diagram2
L9 - Back-Up Alarm (Manual) W/O Tailboard:Diagram1
L9 - Back-Up Alarm (Manual) W/O Tailboard:Diagram2
L9 - Backup Light (Dual Daisy Reverse Light)Allison/ZF Trans 3K/4K:Diagram1
L9 - Backup Light (Dual Daisy Reverse Light)Allison/ZF Trans 3K/4K:Diagram2
L9 - Backup Light (Single Reverse Light) Allison 3K/4K Option 1:Diagram1
L9 - Backup Light (Single Reverse Light) Allison 3K/4K Option 1:Diagram2

L9 - Backup Light (Single Reverse Light) Allison 3K/4K Option 2:Diagram1
L9 - Backup Light (Single Reverse Light) Allison 3K/4K Option 2:Diagram2
L9 - Backup Light (Single Reverse Light) Allison 3K/4K Option 3:Diagram1
L9 - Backup Light (Single Reverse Light) Allison 3K/4K Option 3:Diagram2
L9 - Backup Light (Single Reverse Light)Allison:Diagram1
L9 - Backup Light (Single Reverse Light)Allison:Diagram2
L9 - Backup Lights (Dual Daisy Reverse Light) Eaton/Manual Trans:Diagram1
L9 - Backup Lights (Dual Daisy Reverse Light) Eaton/Manual Trans:Diagram2
L9 - Backup Lights (Dual Reverse Light) Eaton/Manual Trans:Diagram1
L9 - Backup Lights (Dual Reverse Light) Eaton/Manual Trans:Diagram2
L9 - Backup Lights (Single Reverse Light) Eaton/Manual Trans Option 1:Diagram1
L9 - Backup Lights (Single Reverse Light) Eaton/Manual Trans Option 1:Diagram2
L9 - Backup Lights (Single Reverse Light) Eaton/Manual Trans Option 2:Diagram1
L9 - Backup Lights (Single Reverse Light) Eaton/Manual Trans Option 2:Diagram2
L9 - Backup Lights (Single Reverse Light) Eaton/Manual Trans Option 3:Diagram1
L9 - Backup Lights (Single Reverse Light) Eaton/Manual Trans Option 3:Diagram2
L9 - Backup Lights (Single Reverse Light) Eaton/Manual Trans Option 4:Diagram1
L9 - Backup Lights (Single Reverse Light) Eaton/Manual Trans Option 4:Diagram2
L9 - Directional Signal (Turn) W/ Less Power Module Tail Board W/Hazard SW W/PLOW LIGHTS:Diagram1
L9 - Directional Signal (Turn) W/ Less Power Module Tail Board W/Hazard SW W/PLOW LIGHTS:Diagram2
L9 - Directional Signal (Turn) W/ Less Power Module Tail Board W/Hazard SW W/PLOW LIGHTS:Diagram3
L9 - Directional Signal (Turn) W/ Less Power Module Tail Board W/Hazard SW W/PLOW LIGHTS:Diagram4
L9 - Directional Signal (Turn) W/ DAISY CHAIN BOX LAMPS:Diagram1

L9 - Directional Signal (Turn) W/ DAISY CHAIN BOX LAMPS:Diagram2
L9 - Directional Signal (Turn) W/ Daisy Chain Box Lamps W/ Plow Lights:Diagram1
L9 - Directional Signal (Turn) W/ Daisy Chain Box Lamps W/ Plow Lights:Diagram2
L9 - Directional Signal (Turn) W/ Daisy Chain Box Lamps W/ Plow Lights:Diagram3
L9 - Directional Signal (Turn) W/ Daisy Chain Box Lamps W/ Plow Lights:Diagram4
L9 - Directional Signal (Turn) W/ LED BOX LAMPS:Diagram1
L9 - Directional Signal (Turn) W/ LED BOX LAMPS:Diagram2
L9 - Directional Signal (Turn) W/ LED BOX LAMPS W/Plow Lights:Diagram1
L9 - Directional Signal (Turn) W/ LED BOX LAMPS W/Plow Lights:Diagram2
L9 - Directional Signal (Turn) W/ LED BOX LAMPS W/Plow Lights:Diagram3
L9 - Directional Signal (Turn) W/ LED BOX LAMPS W/Plow Lights:Diagram4
L9 - Directional Signal (Turn) W/ Less Power Module Tail Board W/Hazard SW:Diagram1
L9 - Directional Signal (Turn) W/ Less Power Module Tail Board W/Hazard SW:Diagram2
L9 - Directional Signal (Turn) W/ Single Tail Board W/Hazard SW:Diagram1
L9 - Directional Signal (Turn) W/ Single Tail Board W/Hazard SW:Diagram2
L9 - Directional Signal (Turn) W/ Single Tail Board W/Plow Lights:Diagram1
L9 - Directional Signal (Turn) W/ Single Tail Board W/Plow Lights:Diagram2
L9 - Directional Signal (Turn) W/ Single Tail Board W/Plow Lights:Diagram3
L9 - Directional Signal (Turn) W/ Single Tail Board W/Plow Lights:Diagram4
L9 - Driver Controlled Locking Differential - FR and RR Axle (Dana w/ one sw):Diagram1
L9 - Driver Controlled Locking Differential - FR and RR Axle (Meritor w/ one sw):Diagram1
L9 - Driver Controlled Locking Differential - FR and RR Axles (Dana w/ two sw):Diagram1
L9 - Driver Controlled Locking Differential - FR and RR Axles (Meritor w/ two sw):Diagram1

L9 - Driver Controlled Locking Differential - RR Axle (Dana w/ one sw):Diagram1
L9 - Driver Controlled Locking Differential - RR Axle (Meritor w/ one sw):Diagram1
L9 - License Plate Light (LED BOX LAMP Daisy Chain Tail Light):Diagram1
L9 - License Plate Light (LED BOX LAMP Tail Light):Diagram1
L9 - License Plate Light (Tail Light Single Assy) Option 1:Diagram1
L9 - License Plate Light (Tail Light Single Assy) Option 2:Diagram1
L9 - License Plate Light (Tail Light Single Assy) Option 3:Diagram1
L9 - License Plate Light (Tail Light Single Assy) Option 4:Diagram1
L9 - Rear Light (LED BOX LAMP Tail Light):Diagram1
L9 - Rear Light (Tail Light):Diagram1
L9 - Rear Light (Tail Light) W Daisy Chain pair of Box Lamps:Diagram1
L9 - Rear Lights Stop - Daisy Chain:Diagram1
L9 - Rear Lights Stop - Dual Assembly:Diagram1
L9 - Rear Lights Stop - Single Assemby:Diagram1
L9 - Traction Control (Bendix):Diagram1

Mates 9800

Name	Terminal Part Number	V-Min	Name	Wire Part Number	Wire CSA	Wire Spec	Wire Material description	Wire Color Description	Wire Length	End2 Terminal Part Number	End2 Pin Name	End2 Connect or
1	-	-	RK71A	2643690 R1	1.91	14.0	Std. Wall XLPE Primary Cable	ORANGE	4380.0	-	1	1701F
2	-	-	RK56	2643690 R1	1.91	14.0	Std. Wall XLPE Primary Cable	ORANGE	4380.0	-	2	1701F
3	-	-	RK57	2643690 R1	1.91	14.0	Std. Wall XLPE Primary Cable	ORANGE	4380.0	-	3	1701F

Name	Terminal Part Number	V-Min	Name	Wire Part Number	Wire CSA	Wire Spec	Wire Material description	Wire Color Description	Wire Length	End2 Terminal Part Number	End2 Pin Name	End2 Connect or
4	-	-	RB68	2643688 R1	1.91	14.0	Std. Wall XLPE Primary Cable	BROWN	2875.0	-	D	9303A
4	-	-	RK68	2643688 R1	1.91	14.0	Std. Wall XLPE Primary Cable	BROWN	4380.0	-	4	1701F
5	-	-	MG32A	2643676 R1	0.79	18.0	Std. Wall XLPE Primary Cable	TAN	4380.0	-	43	1701F
5	-	-	RM32A	2643676 R1	0.79	18.0	Std. Wall XLPE Primary Cable	TAN	1860.0	-	1	9813
6	-	-	RH32	2643676 R1	0.79	18.0	Std. Wall XLPE Primary Cable	TAN	4380.0	-	44	1701F
6	-	-	RM32	2643676 R1	0.79	18.0	Std. Wall XLPE Primary Cable	TAN	2510.0	-	1	9813
6	-	-	MZ70TB	2643760 R1	1.16	16.0	Std. Wall XLPE Primary Cable	RED	0.0	-	1	-
6	-	-	RL32	2643676 R1	0.79	18.0	Std. Wall XLPE Primary Cable	TAN	2510.0	-	1	9813

Name	Terminal Part Number	V-Min	Name	Wire Part Number	Wire CSA	Wire Spec	Wire Material description	Wire Color Description	Wire Length	End2 Terminal Part Number	End2 Pin Name	End2 Connector
7	-	-	MJ49	2643673 R1	0.79	18.0	Std. Wall XLPE Primary Cable	GREY	4380.0	-	50	1701F
8	-	-	RL49A	2643673 R1	0.79	18.0	Std. Wall XLPE Primary Cable	GREY	4380.0	-	45	1701F
9	-	-	RL49-G	2643674 R1	0.79	18.0	Std. Wall XLPE Primary Cable	WHITE	3120.0	-	-	-
11	-	-	MG9H	2643673 R1	0.79	18.0	Std. Wall XLPE Primary Cable	GREY	2750.0	-	-	-
11	-	-	RL9C	2643673 R1	0.79	18.0	Std. Wall XLPE Primary Cable	GREY	2510.0	-	2	9813
11	-	-	RM9B	2643673 R1	0.79	18.0	Std. Wall XLPE Primary Cable	GREY	635.0	-	X	-
11	-	-	RH9F	2643673 R1	0.79	18.0	Std. Wall XLPE Primary Cable	GREY	2750.0	-	-	-
12	-	-	SL10-G	3510362 R1	3.01	12.0	Thin Wall XLPE Primary Cable	WHITE	2400.0	-	-	-

Name	Terminal Part Number	V-Min	Name	Wire Part Number	Wire CSA	Wire Spec	Wire Material description	Wire Color Description	Wire Length	End2 Terminal Part Number	End2 Pin Name	End2 Connector
12	-	-	RB10-G	3510362 R1	3.01	12.0	Thin Wall XLPE Primary Cable	WHITE	2875.0	-	E	9303A
13	-	-	MD94BE	2643680 R1	1.16	16.0	Std. Wall XLPE Primary Cable	GREY	4380.0	-	16	1701F
13	-	-	ZU94WL	3510312 R1	1.16	16.0	Thin Wall XLPE Primary Cable	GREY	4380.0	-	14	1701F
14	-	-	MD94BD	2643680 R1	1.16	16.0	Std. Wall XLPE Primary Cable	GREY	4380.0	-	17	1701F
14	-	-	ZU94WM	3510312 R1	1.16	16.0	Thin Wall XLPE Primary Cable	GREY	4380.0	-	15	1701F
15	-	-	MD94BH	3510312 R1	1.16	16.0	Thin Wall XLPE Primary Cable	GREY	4380.0	-	18	1701F
15	-	-	ZU94WS	3510312 R1	1.16	16.0	Thin Wall XLPE Primary Cable	GREY	4380.0	-	22	1701F
15	-	-	MD94BF	3510312 R1	1.16	16.0	Thin Wall XLPE Primary Cable	GREY	4380.0	-	-	-

Name	Terminal Part Number	V-Min	Name	Wire Part Number	Wire CSA	Wire Spec	Wire Material description	Wire Color Description	Wire Length	End2 Terminal Part Number	End2 Pin Name	End2 Connector
16	-	-	MD94BF	3510312 R1	1.16	16.0	Thin Wall XLPE Primary Cable	GREY	4380.0	-	19	1701F
16	-	-	ZU94WT	3510312 R1	1.16	16.0	Thin Wall XLPE Primary Cable	GREY	4380.0	-	23	1701F
16	-	-	MD94BH	3510312 R1	1.16	16.0	Thin Wall XLPE Primary Cable	GREY	4380.0	-	-	-
17	-	-	MD94BA	2643680 R1	1.16	16.0	Std. Wall XLPE Primary Cable	GREY	4380.0	-	23	1701F
17	-	-	ZU94WN	3510313 R1	1.91	14.0	Thin Wall XLPE Primary Cable	GREY	4380.0	-	18	1701F
18	-	-	MD94BB	3510312 R1	1.16	16.0	Thin Wall XLPE Primary Cable	GREY	4380.0	-	24	1701F
18	-	-	ZU94-G7	3510313 R1	1.91	14.0	Thin Wall XLPE Primary Cable	GREY	4380.0	-	24	1701F
18	-	-	ZU94C	3510313 R1	1.91	14.0	Thin Wall XLPE Primary Cable	GREY	4780.0	-	24	1701F

Name	Terminal Part Number	V-Min	Name	Wire Part Number	Wire CSA	Wire Spec	Wire Material description	Wire Color Description	Wire Length	End2 Terminal Part Number	End2 Pin Name	End2 Connector
19	-	-	MD94BC	3510312 R1	1.16	16.0	Thin Wall XLPE Primary Cable	GREY	4380.0	-	25	1701F
19	-	-	ZU94WR	3510313 R1	1.91	14.0	Thin Wall XLPE Primary Cable	GREY	4380.0	-	19	1701F
20	-	-	MD94BJ	3510312 R1	1.16	16.0	Thin Wall XLPE Primary Cable	GREY	4380.0	-	21	1701F
20	-	-	ZU94WU	3510313 R1	1.91	14.0	Thin Wall XLPE Primary Cable	GREY	4380.0	-	17	1701F
21	-	-	MD94BK	3510312 R1	1.16	16.0	Thin Wall XLPE Primary Cable	GREY	4380.0	-	22	1701F
21	-	-	ZU94-G6	3510313 R1	1.91	14.0	Thin Wall XLPE Primary Cable	GREY	4380.0	-	25	1701F
22	-	-	MD94BL	3510312 R1	1.16	16.0	Thin Wall XLPE Primary Cable	GREY	4380.0	-	20	1701F
22	-	-	ZU94WW	3510313 R1	1.91	14.0	Thin Wall XLPE Primary Cable	GREY	4380.0	-	16	1701F

Name	Terminal Part Number	V-Min	Name	Wire Part Number	Wire CSA	Wire Spec	Wire Material description	Wire Color Description	Wire Length	End2 Terminal Part Number	End2 Pin Name	End2 Connect or
23	-	-	PR94BN	3510312 R1	1.16	16.0	Thin Wall XLPE Primary Cable	GREY	4380.0	-	15	1701F
23	-	-	RD94BD	3510306 R1	1.16	16.0	Thin Wall XLPE Primary Cable	BROWN	410.0	-	2	4952
23	-	-	UD94BD	3510306 R1	1.16	16.0	Thin Wall XLPE Primary Cable	BROWN	1865.0	-	2	4952
24	-	-	PR94BM	3510312 R1	1.16	16.0	Thin Wall XLPE Primary Cable	GREY	4380.0	-	14	1701F
24	-	-	RD94BE	3510336 R1	1.16	16.0	Thin Wall XLPE Primary Cable	YELLOW 2	410.0	-	1	4952
24	-	-	UD94BE	3510336 R1	1.16	16.0	Thin Wall XLPE Primary Cable	YELLOW 2	1865.0	-	1	4952

Connector Name 9813

Part Number 3536864C1

Instances A26 - Axle Temperature Monitoring (Single Rear Aux Gauge):Diagram1
A26 - Axle Temperature Monitoring (Single Rear Virtual Gauge):Diagram1
A26 - Axle Temperature Monitoring (Tandem Rear Aux Gauge):Diagram1
A26 - Axle Temperature Monitoring (Tandem Rear Virtual Gauge):Diagram1
B6.7 - Axle Temperature Monitoring (Single Rear Aux Gauge):Diagram1
B6.7 - Axle Temperature Monitoring (Single Rear Virtual Gauge):Diagram1
L9 - Axle Temperature Monitoring (Tandem Rear Aux Gauge) Option 1:Diagram1
L9 - Axle Temperature Monitoring (Tandem Rear Aux Gauge) Option 2:Diagram1
L9 - Axle Temperature Monitoring (Tandem Rear Virtual Gauge) Option 1:Diagram1
L9 - Axle Temperature Monitoring (Tandem Rear Virtual Gauge) Option 2:Diagram1

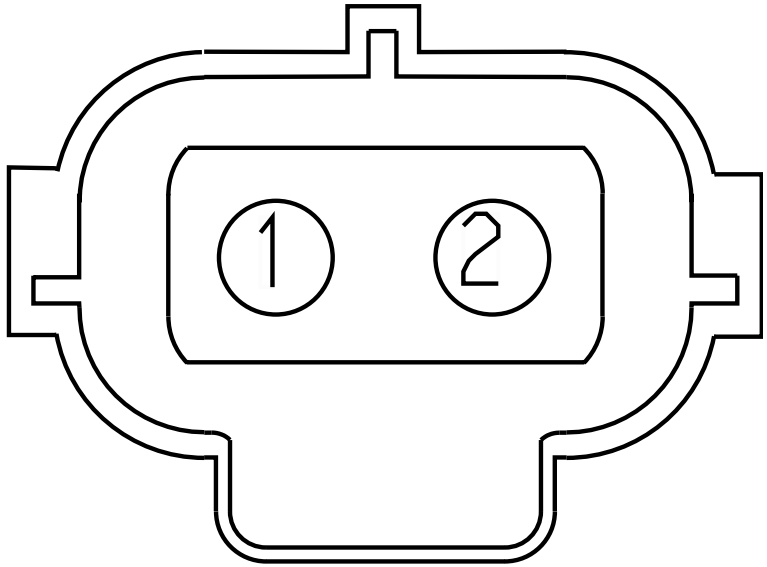

Mates SNSR-RR_Axl_Temp-3008-02-0 1A

Name	Terminal Part Number	V-Min	Name	Wire Part Number	Wire CSA	Wire Spec	Wire Material description	Wire Color Description	Wire Length	End2 Terminal Part Number	End2 Pin Name	End2 Connector
1	-	-	RM32A	2643676 R1	0.79	18.0	Std. Wall XLPE Primary Cable	TAN	1860.0	-	5	9800
1	-	-	RL32	2643676 R1	0.79	18.0	Std. Wall XLPE Primary Cable	TAN	2510.0	-	6	9800
1	-	-	RM32	2643676 R1	0.79	18.0	Std. Wall XLPE Primary Cable	TAN	2510.0	-	6	9800

Name	Terminal Part Number	V-Min	Name	Wire Part Number	Wire CSA	Wire Spec	Wire Material description	Wire Color Description	Wire Length	End2 Terminal Part Number	End2 Pin Name	End2 Connect or
2	-	-	RM9A	2643673 R1	0.79	18.0	Std. Wall XLPE Primary Cable	GREY	1575.0	-	X	-
2	-	-	RM9	2643673 R1	0.79	18.0	Std. Wall XLPE Primary Cable	GREY	1875.0	-	X	-
2	-	-	RL9C	2643673 R1	0.79	18.0	Std. Wall XLPE Primary Cable	GREY	2510.0	-	11	9800

Connector Name	9814A
Part Number	3593684C91
Instances	A26 - Driver Controlled Locking Differential FR and RR Axle (Meritor w/ one sw):Diagram1 A26 - Driver Controlled Locking Differential FR and RR Axles (Meritor w/ two sw):Diagram1 L9 - Driver Controlled Locking Differential - FR and RR Axle (Meritor w/ one sw):Diagram1 L9 - Driver Controlled Locking Differential - FR and RR Axles (Meritor w/ two sw):Diagram1
Mates	SW-FR_Diff_Lock-3012-03-02A

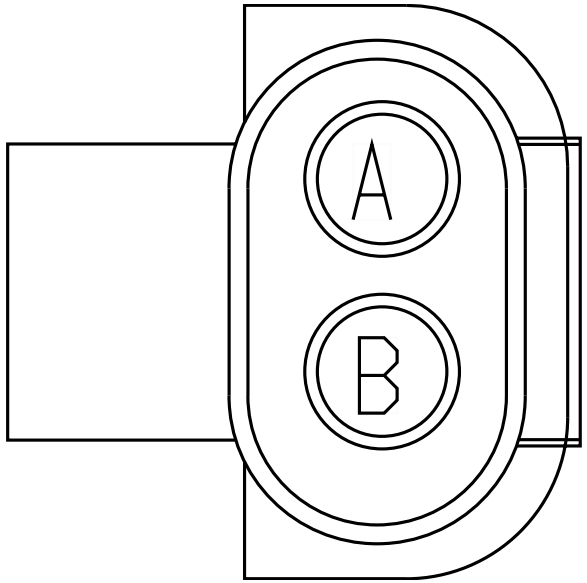

Name	Terminal Part Number	V-Min	Name	Wire Part Number	Wire CSA	Wire Spec	Wire Material description	Wire Color Description	Wire Length	End2 Terminal Part Number	End2 Pin Name	End2 Connect or
A	-	-	AJ49	2643674 R1	0.79	18.0	Std. Wall XLPE Primary Cable	WHITE	2660.0	-	7	9800
B	-	-	AJ49-G	2643674 R1	0.79	18.0	Std. Wall XLPE Primary Cable	WHITE	2300.0	-	X	-

Connector Name	9814
Part Number	587567C91
Instances	A26 - Driver Controlled Locking Differential FR and RR Axle (Dana w/ one switch):Diagram1 A26 - Driver Controlled Locking Differential FR and RR Axles (Dana w/ two sw):Diagram1 L9 - Driver Controlled Locking Differential - FR and RR Axle (Dana w/ one sw):Diagram1 L9 - Driver Controlled Locking Differential - FR and RR Axles (Dana w/ two sw):Diagram1
Mates	SW-FR_DIFF_LOCK-3012-03-01A

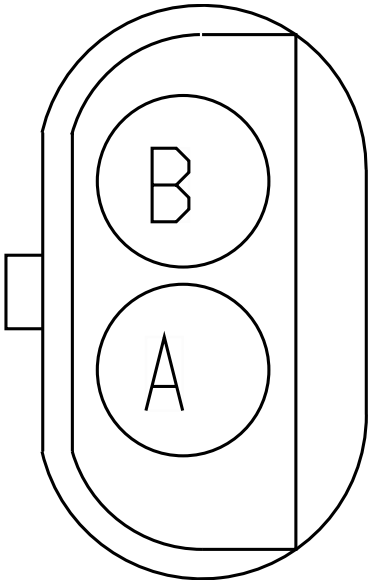

Name	Terminal Part Number	V-Min	Name	Wire Part Number	Wire CSA	Wire Spec	Wire Material description	Wire Color Description	Wire Length	End2 Terminal Part Number	End2 Pin Name	End2 Connect or
A	-	-	RO49	2643673 R1	0.79	18.0	Std. Wall XLPE Primary Cable	GREY	2260.0	-	7	9800
B	-	-	RO49-G	2643674 R1	0.79	18.0	Std. Wall XLPE Primary Cable	WHITE	1750.0	-	X	-

Connector Name	9815A
Part Number	3593684C91
Instances	A26 - Driver Controlled Locking Differential FR and RR Axle (Meritor w/ one sw):Diagram1 A26 - Driver Controlled Locking Differential FR and RR Axles (Meritor w/ two sw):Diagram1 A26 - Driver Controlled Locking Differential RR Axle (Meritor w/ one sw):Diagram1 B6.7 - Driver Controlled Locking Differential - RR Axle (Meritor w/ one sw):Diagram1 L9 - Driver Controlled Locking Differential - FR and RR Axle (Meritor w/ one sw):Diagram1 L9 - Driver Controlled Locking Differential - FR and RR Axles (Meritor w/ two sw):Diagram1 L9 - Driver Controlled Locking Differential - RR Axle (Meritor w/ one sw):Diagram1
Mates	SW-RR_Diff_Lock-3012-03-02A

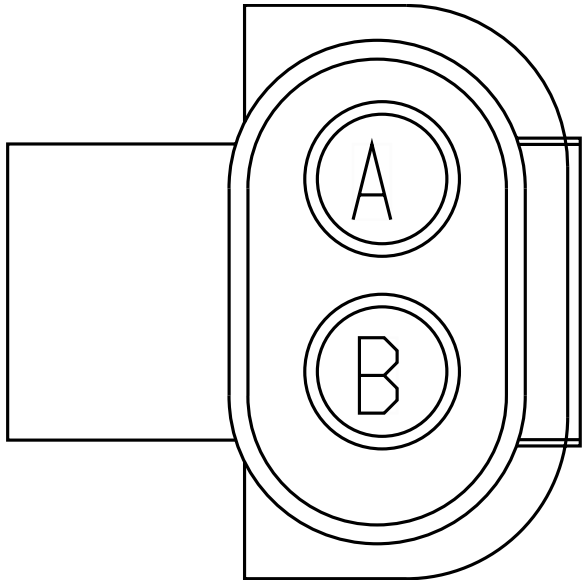

Name	Terminal Part Number	V-Min	Name	Wire Part Number	Wire CSA	Wire Spec	Wire Material description	Wire Color Description	Wire Length	End2 Terminal Part Number	End2 Pin Name	End2 Connect or
A	-	-	AP49A	2643674 R1	0.79	18.0	Std. Wall XLPE Primary Cable	WHITE	2560.0	-	8	9800
A	-	-	AJ49A	2643674 R1	0.79	18.0	Std. Wall XLPE Primary Cable	WHITE	2560.0	-	8	9800
B	-	-	AP49-GA	2643674 R1	0.79	18.0	Std. Wall XLPE Primary Cable	WHITE	2560.0	-	9	9800
B	-	-	AJ49-GA	2643674 R1	0.79	18.0	Std. Wall XLPE Primary Cable	WHITE	2200.0	-	X	-

Connector Name 9815

Part Number 587567C91

Instances A26 - Driver Controlled Locking Differential FR and RR Axle (Dana w/ one switch):Diagram1
A26 - Driver Controlled Locking Differential FR and RR Axles (Dana w/ two sw):Diagram1
A26 - Driver Controlled Locking Differential RR Axle (Dana w/ one sw):Diagram1
B6.7 - Driver Controlled Locking Differential - RR Axle (Dana w/ one sw):Diagram1
L9 - Driver Controlled Locking Differential - FR and RR Axle (Dana w/ one sw):Diagram1
L9 - Driver Controlled Locking Differential - FR and RR Axles (Dana w/ two sw):Diagram1
L9 - Driver Controlled Locking Differential - RR Axle (Dana w/ one sw):Diagram1

Mates SW-RR_DIFF_LOCK-3012-05-01A

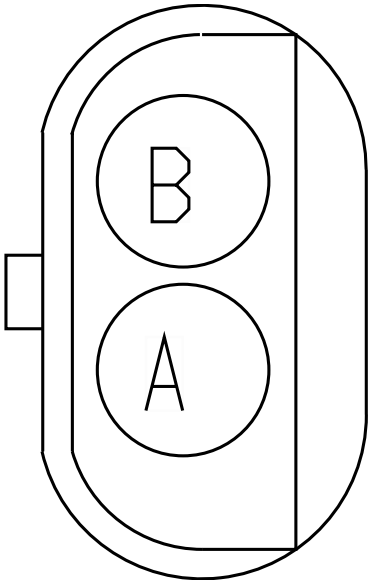

Name	Terminal Part Number	V-Min	Name	Wire Part Number	Wire CSA	Wire Spec	Wire Material description	Wire Color Description	Wire Length	End2 Terminal Part Number	End2 Pin Name	End2 Connect or
A	-	-	RO49A	2643673 R1	0.79	18.0	Std. Wall XLPE Primary Cable	GREY	2130.0	-	8	9800
A	-	-	RN49A	2643673 R1	0.79	18.0	Std. Wall XLPE Primary Cable	GREY	2130.0	-	8	9800
B	-	-	RO49-GA	2643674 R1	0.79	18.0	Std. Wall XLPE Primary Cable	WHITE	1620.0	-	X	-
B	-	-	RN49-GA	2643674 R1	0.79	18.0	Std. Wall XLPE Primary Cable	WHITE	2130.0	-	9	9800

Connector Name	9820F
Part Number	3543888C1
Short Description	SHRINK SLEEVE FOR J1939 (1)
Instances	A26 - Center Chassis Ground Splice Packs:Diagram1 A26/B6.7/L9 - Axle Lift Controls:Diagram2 A26/B6.7/L9 - Axle Lift Controls:Diagram4
Mates	9820M

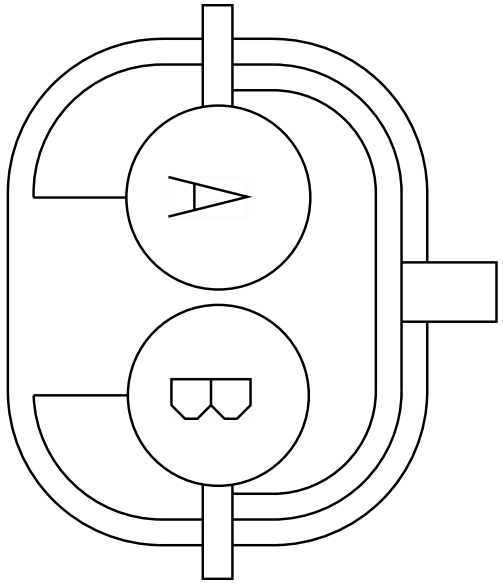

Name	Terminal Part Number	V-Min	Name	Wire Part Number	Wire CSA	Wire Spec	Wire Material description	Wire Color Description	Wire Length	End2 Terminal Part Number	End2 Pin Name	End2 Connect or
A	-	-	RR59DC	2643673 R1	0.79	18.0	Std. Wall XLPE Primary Cable	GREY	2830.0	-	A	9824
B	-	-	RR59DD	2643673 R1	0.79	18.0	Std. Wall XLPE Primary Cable	GREY	2830.0	-	-	-
B	-	-	RR59DD	2643673 R1	0.79	18.0	Std. Wall XLPE Primary Cable	GREY	2830.0	-	B	9824

Connector Name	9820F
Part Number	3543888C1
Short Description	SHRINK SLEEVE FOR J1939 (1)
Instances	A26 - Lift Axle Controls (Center Pedestal Controls f/ 1 lift axle):Diagram2 L9 - Lift Axle Controls (Center Pedestal Controls f/ 1 lift axle):Diagram2
Mates	9820M

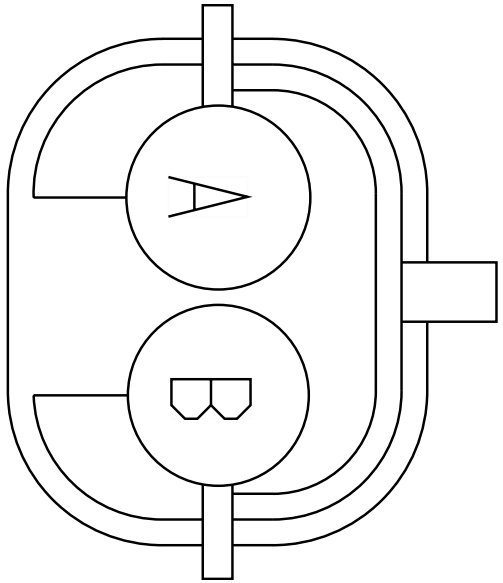

Name	Terminal Part Number	V-Min	Name	Wire Part Number	Wire CSA	Wire Spec	Wire Material description	Wire Color Description	Wire Length	End2 Terminal Part Number	End2 Pin Name	End2 Connect or
A	-	-	RR59DC	2643673 R1	0.79	18.0	Std. Wall XLPE Primary Cable	GREY	2830.0	-	A	9824
B	-	-	RR59DD	2643673 R1	0.79	18.0	Std. Wall XLPE Primary Cable	GREY	2830.0	-	B	9824

Connector Name	9820M
Part Number	1661778C1
Short Description	LIFT AXLES
Instances	A26 - Center Chassis Ground Splice Packs:Diagram1 A26/B6.7/L9 - Axle Lift Controls:Diagram2 A26/B6.7/L9 - Axle Lift Controls:Diagram4
Mates	9820F

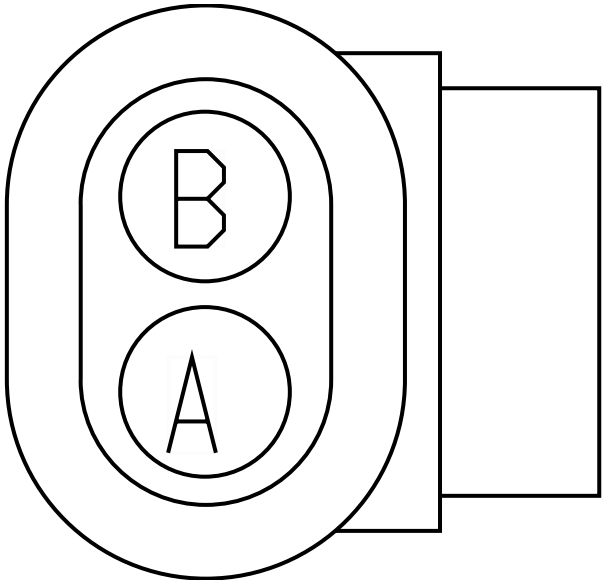

Name	Terminal Part Number	V-Min	Name	Wire Part Number	Wire CSA	Wire Spec	Wire Material description	Wire Color Description	Wire Length	End2 Terminal Part Number	End2 Pin Name	End2 Connect or
A	-	-	SJ59ED	2643673 R1	0.79	18.0	Std. Wall XLPE Primary Cable	GREY	4430.0	-	60	1701F
B	-	-	RP59-GA	2643674 R1	0.79	18.0	Std. Wall XLPE Primary Cable	WHITE	2145.0	-	F	8806
B	-	-	SJ59-GD	2643674 R1	0.79	18.0	Std. Wall XLPE Primary Cable	WHITE	2145.0	-	D	8806
B	-	-	SJ59-GD	2643674 R1	0.79	18.0	Std. Wall XLPE Primary Cable	WHITE	2145.0	-	-	-

Connector Name	9820M
Part Number	1661778C1
Short Description	LIFT AXLES
Instances	A26 - Lift Axle Controls (Center Pedestal Controls f/ 1 lift axle):Diagram2 L9 - Lift Axle Controls (Center Pedestal Controls f/ 1 lift axle):Diagram2
Mates	9820F

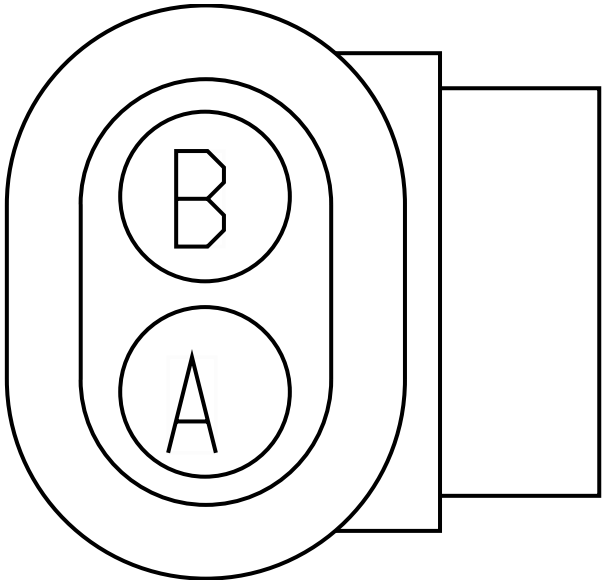

Name	Terminal Part Number	V-Min	Name	Wire Part Number	Wire CSA	Wire Spec	Wire Material description	Wire Color Description	Wire Length	End2 Terminal Part Number	End2 Pin Name	End2 Connect or
A	-	-	RP59ED	2643673 R1	0.79	18.0	Std. Wall XLPE Primary Cable	GREY	2611.0	-	A	9761F
B	-	-	RP59-GA	2643674 R1	0.79	18.0	Std. Wall XLPE Primary Cable	WHITE	2145.0	-	-	-

Connector Name	9824
Part Number	1661778C1
Instances	A26 - Lift Axle Controls (Center Pedestal Controls f/ 1 lift axle):Diagram2 A26/B6.7/L9 - Axle Lift Controls:Diagram2 A26/B6.7/L9 - Axle Lift Controls:Diagram4 L9 - Lift Axle Controls (Center Pedestal Controls f/ 1 lift axle):Diagram2
Mates	SOL-Lift_Axle_1-3021-03-01A

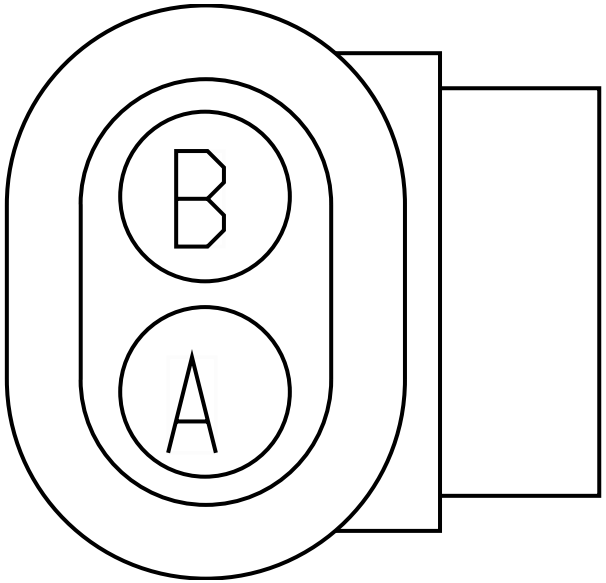

Name	Terminal Part Number	V-Min	Name	Wire Part Number	Wire CSA	Wire Spec	Wire Material description	Wire Color Description	Wire Length	End2 Terminal Part Number	End2 Pin Name	End2 Connect or
A	-	-	RR59DC	2643673 R1	0.79	18.0	Std. Wall XLPE Primary Cable	GREY	2830.0	-	A	9820F
B	-	-	RR59DD	2643673 R1	0.79	18.0	Std. Wall XLPE Primary Cable	GREY	2830.0	-	-	-
B	-	-	RR59DD	2643673 R1	0.79	18.0	Std. Wall XLPE Primary Cable	GREY	2830.0	-	B	9820F

Connector Name 9830

Part Number 1678137C1

Instances A26/B6.7/L9 - Rear Suspension Pressure Monitoring (Auxiliary Gauge):Diagram1
A26/B6.7/L9 - Rear Suspension Pressure Monitoring (Virtual Gauge):Diagram1
B6.7 - Axle Loading (Weight) Rear:Diagram1
B6.7 - Stability Control (Bendix Straight Truck J1939 Driven Lamp):Diagram1
B6.7 - Stability Control (Bendix Straight Truck J1939 Driven Lamp):Diagram2
B6.7 - Stability Control (Bendix Straight Truck J1939 Driven Lamp):Diagram3
B6.7 - Stability Control (Bendix Straight Truck J1939 Driven Lamp):Diagram4
L9 - Axle Loading (Weight) Rear:Diagram1
L9 - Bendix Tractor or Towing Truck W/ Air SUSP J1939 Driven Lamp:Diagram1
L9 - Bendix Tractor or Towing Truck W/ Air SUSP J1939 Driven Lamp:Diagram2
L9 - Stability Control (Bendix Straight Truck J1939 Driven Lamp):Diagram1
L9 - Stability Control (Bendix Straight Truck J1939 Driven Lamp):Diagram2
L9 - Stability Control (Bendix Straight Truck J1939 Driven Lamp):Diagram3
L9 - Stability Control (Bendix Straight Truck J1939 Driven Lamp):Diagram4

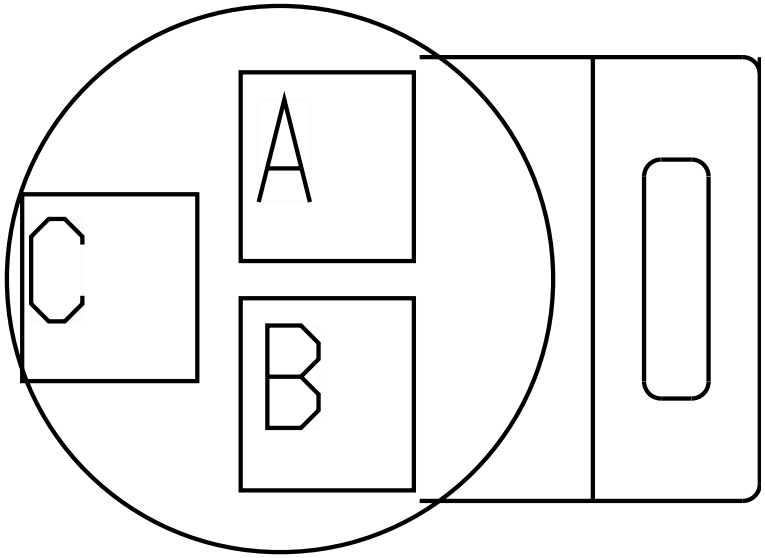

Mates SNSR-SECONDARY_PT-3026-01- 01B

Name	Terminal Part Number	V-Min	Name	Wire Part Number	Wire CSA	Wire Spec	Wire Material description	Wire Color Description	Wire Length	End2 Terminal Part Number	End2 Pin Name	End2 Connector
A	-	-	RT9M	2643673 R1	0.79	18.0	Std. Wall XLPE Primary Cable	GREY	2960.0	-	A	9775F
A	-	-	BN94SZA	2643673 R1	0.79	18.0	Std. Wall XLPE Primary Cable	GREY	475.0	-	X	-

Name	Terminal Part Number	V-Min	Name	Wire Part Number	Wire CSA	Wire Spec	Wire Material description	Wire Color Description	Wire Length	End2 Terminal Part Number	End2 Pin Name	End2 Connector
A	-	-	BN94SZB	2643673 R1	0.79	18.0	Std. Wall XLPE Primary Cable	GREY	125.0	-	X	-
B	-	-	RT6H	2643673 R1	0.79	18.0	Std. Wall XLPE Primary Cable	GREY	2960.0	-	B	9775F
B	-	-	BN94SVA	2643673 R1	0.79	18.0	Std. Wall XLPE Primary Cable	GREY	425.0	-	X	-
B	-	-	BN94SVB	2643673 R1	0.79	18.0	Std. Wall XLPE Primary Cable	GREY	175.0	-	X	-
C	-	-	RT61C	2643673 R1	0.79	18.0	Std. Wall XLPE Primary Cable	GREY	2960.0	-	C	9775F
C	-	-	BN94SE	2643673 R1	0.79	18.0	Std. Wall XLPE Primary Cable	GREY	700.0	-	D5	1800F
C	-	-	BN94SF	2643673 R1	0.79	18.0	Std. Wall XLPE Primary Cable	GREY	600.0	-	D6	1800F

Connector Name	9832
Part Number	1678137C1
Instances	A26/B6.7/L9 - Rear Suspension Pressure Monitoring (Auxiliary Gauge):Diagram2 A26/B6.7/L9 - Rear Suspension Pressure Monitoring (Virtual Gauge):Diagram2 B6.7 - Axle Loading (Weight) Rear:Diagram2 L9 - Axle Loading (Weight) Rear:Diagram2
Mates	SNSR-RRAXLE-3007-03-01A

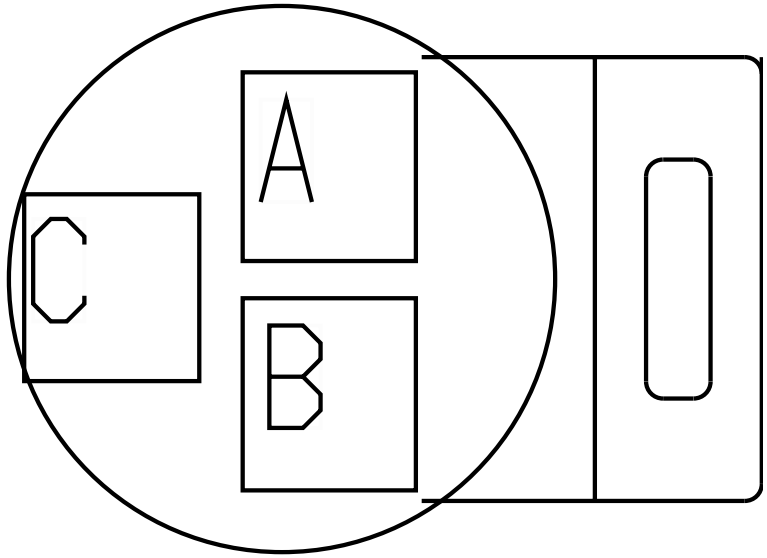

Name	Terminal Part Number	V-Min	Name	Wire Part Number	Wire CSA	Wire Spec	Wire Material description	Wire Color Description	Wire Length	End2 Terminal Part Number	End2 Pin Name	End2 Connector
A	-	-	RU9N	2643673 R1	0.79	18.0	Std. Wall XLPE Primary Cable	GREY	1960.0	-	A	9775F
B	-	-	RU6J	2643673 R1	0.79	18.0	Std. Wall XLPE Primary Cable	GREY	1960.0	-	B	9775F
C	-	-	RU61D	2643673 R1	0.79	18.0	Std. Wall XLPE Primary Cable	GREY	1960.0	-	C	9775F

Connector Name	9865M
Part Number	1667741C1
Short Description	LOAD INDICATOR
Instances	A26/B6.7/L9 - Rear Suspension Pressure Monitoring (Auxiliary Gauge):Diagram1 A26/B6.7/L9 - Rear Suspension Pressure Monitoring (Auxiliary Gauge):Diagram2 A26/B6.7/L9 - Rear Suspension Pressure Monitoring (Virtual Gauge):Diagram1 A26/B6.7/L9 - Rear Suspension Pressure Monitoring (Virtual Gauge):Diagram2 B6.7 - Axle Loading (Weight) Rear:Diagram1 B6.7 - Axle Loading (Weight) Rear:Diagram2 L9 - Axle Loading (Weight) Rear:Diagram1 L9 - Axle Loading (Weight) Rear:Diagram2
Mates	9775F

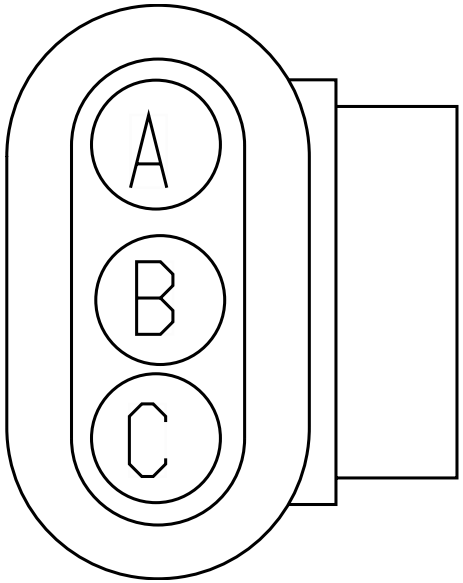

Name	Terminal Part Number	V-Min	Name	Wire Part Number	Wire CSA	Wire Spec	Wire Material description	Wire Color Description	Wire Length	End2 Terminal Part Number	End2 Pin Name	End2 Connect or
A	-	-	PD110B	2643673 R1	0.79	18.0	Std. Wall XLPE Primary Cable	GREY	4405.0	-	57	1701F
B	-	-	PD106B	2643673 R1	0.79	18.0	Std. Wall XLPE Primary Cable	GREY	4405.0	-	56	1701F
C	-	-	PD61B	2643673 R1	0.79	18.0	Std. Wall XLPE Primary Cable	GREY	4405.0	-	55	1701F

Connector Name 9900AA
Part Number 1673790C1
Instances A26 - Rightside Air Dryer:Diagram2
L9 - RIGHTSIDE AIR DRYER:Diagram2

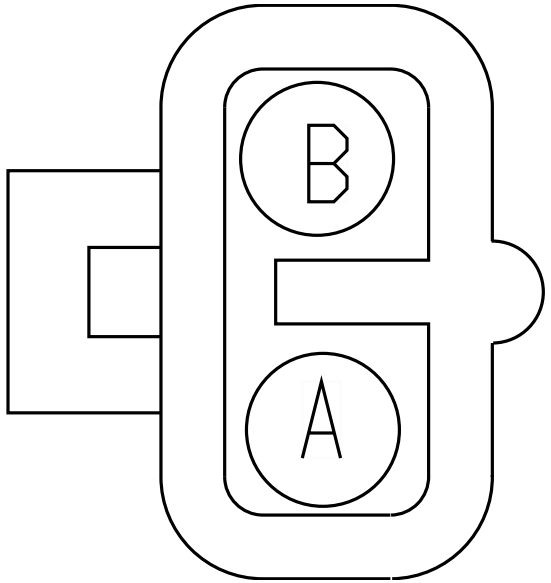

Name	Terminal Part Number	V-Min	Name	Wire Part Number	Wire CSA	Wire Spec	Wire Material description	Wire Color Description	Wire Length	End2 Terminal Part Number	End2 Pin Name	End2 Connect or
A	-	-	PN39B	2643680 R1	1.16	16.0	Std. Wall XLPE Primary Cable	GREY	4105.0	-	31	1701F
B	-	-	PN39-GB	2643681 R1	1.16	16.0	Std. Wall XLPE Primary Cable	WHITE	2125.0	-	-	-

Connector Name 9900AC

Part Number 1673790C1

Instances A26 - Rightside Air Dryer:Diagram3
B6.7 - RIGHTSIDE AIR DRYER:Diagram1
L9 - RIGHTSIDE AIR DRYER:Diagram3

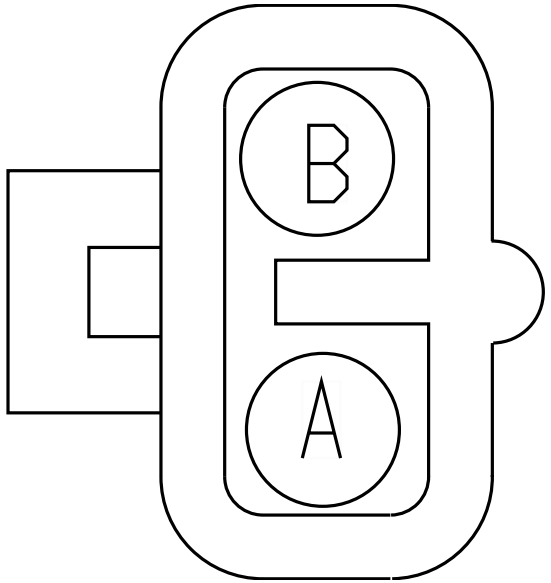

Name	Terminal Part Number	V-Min	Name	Wire Part Number	Wire CSA	Wire Spec	Wire Material description	Wire Color Description	Wire Length	End2 Terminal Part Number	End2 Pin Name	End2 Connect or
A	-	-	AC39B	2643680 R1	1.16	16.0	Std. Wall XLPE Primary Cable	GREY	3270.0	-	31	1701F
B	-	-	AC39-GB	2643681 R1	1.16	16.0	Std. Wall XLPE Primary Cable	WHITE	1290.0	-	-	-

Connector Name	9900AE
Part Number	1673790C1
Short Description	O/S LEFT RAIL AIR DRYER
Instances	B6.7 - RIGHTSIDE AIR DRYER:Diagram2
Mates	HTR-AIR_DRYER-3002-02-01A

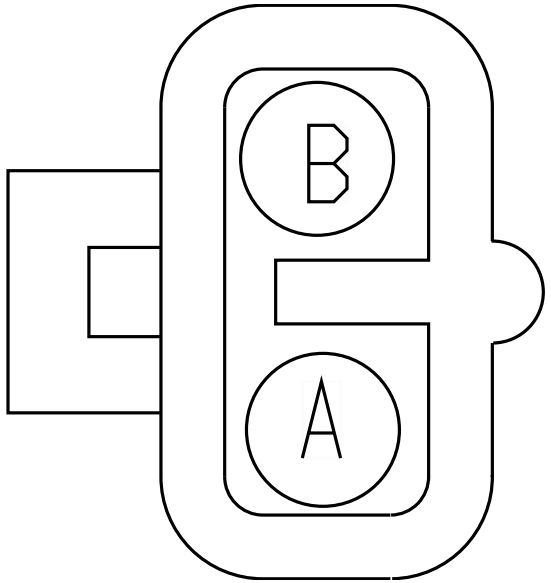

Name	Terminal Part Number	V-Min	Name	Wire Part Number	Wire CSA	Wire Spec	Wire Material description	Wire Color Description	Wire Length	End2 Terminal Part Number	End2 Pin Name	End2 Connect or
A	-	-	AE39B	2643680 R1	1.16	16.0	Std. Wall XLPE Primary Cable	GREY	4330.0	-	31	1701F
B	-	-	AE39-GB	2643681 R1	1.16	16.0	Std. Wall XLPE Primary Cable	WHITE	2350.0	-	-	-

Connector Name 9900AJ

Part Number 1673790C1

Instances A26 - Rightside Air Dryer:Diagram4
B6.7 - RIGHTSIDE AIR DRYER:Diagram3
L9 - RIGHTSIDE AIR DRYER:Diagram4

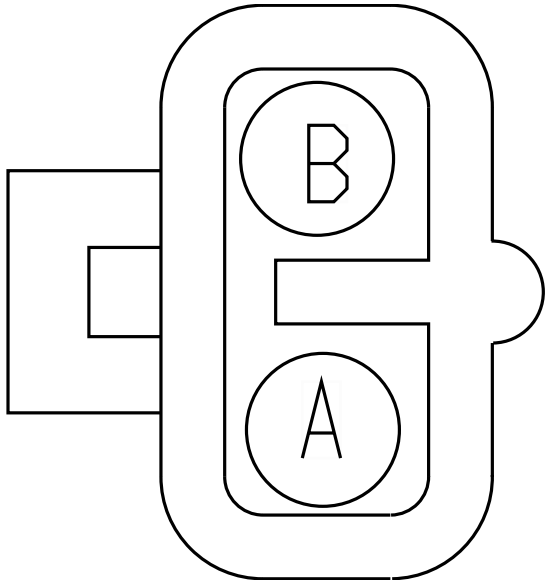

Name	Terminal Part Number	V-Min	Name	Wire Part Number	Wire CSA	Wire Spec	Wire Material description	Wire Color Description	Wire Length	End2 Terminal Part Number	End2 Pin Name	End2 Connect or
A	-	-	AJ39B	2643680 R1	1.16	16.0	Std. Wall XLPE Primary Cable	GREY	2610.0	-	31	1701F
B	-	-	AJ39-GB	2643681 R1	1.16	16.0	Std. Wall XLPE Primary Cable	WHITE	630.0	-	-	-

Connector Name 9900AP

Part Number 1673790C1

Instances A26 - Rightside Air Dryer:Diagram5
B6.7 - RIGHTSIDE AIR DRYER:Diagram4
L9 - RIGHTSIDE AIR DRYER:Diagram5

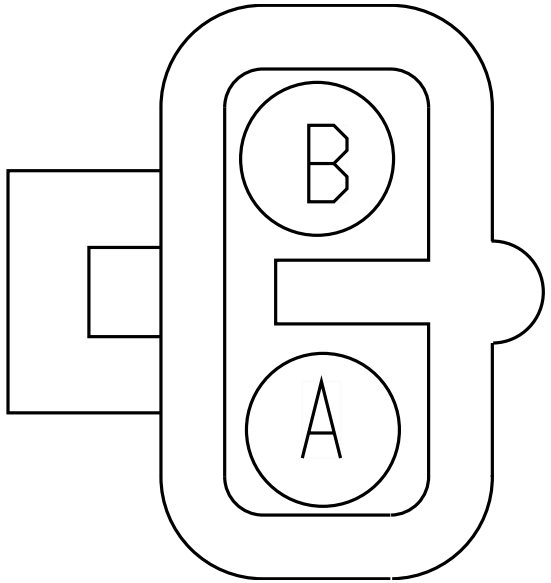

Name	Terminal Part Number	V-Min	Name	Wire Part Number	Wire CSA	Wire Spec	Wire Material description	Wire Color Description	Wire Length	End2 Terminal Part Number	End2 Pin Name	End2 Connect or
A	-	-	AP39B	2643680 R1	1.16	16.0	Std. Wall XLPE Primary Cable	GREY	4580.0	-	31	1701F
B	-	-	AP39-GB	2643681 R1	1.16	16.0	Std. Wall XLPE Primary Cable	WHITE	2600.0	-	-	-

Connector Name 9900AQ

Part Number 1673790C1

Instances A26 - Rightside Air Dryer:Diagram6
B6.7 - RIGHTSIDE AIR DRYER:Diagram5
L9 - RIGHTSIDE AIR DRYER:Diagram6

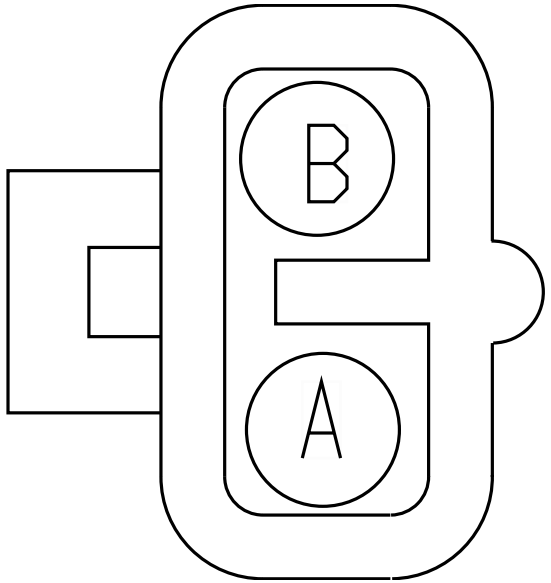

Name	Terminal Part Number	V-Min	Name	Wire Part Number	Wire CSA	Wire Spec	Wire Material description	Wire Color Description	Wire Length	End2 Terminal Part Number	End2 Pin Name	End2 Connect or
A	-	-	AQ39B	2643680 R1	1.16	16.0	Std. Wall XLPE Primary Cable	GREY	4280.0	-	31	1701F
B	-	-	AQ39-GB	2643681 R1	1.16	16.0	Std. Wall XLPE Primary Cable	WHITE	2300.0	-	-	-

Connector Name 9900AR

Part Number 1673790C1

Instances A26 - Rightside Air Dryer:Diagram7
B6.7 - RIGHTSIDE AIR DRYER:Diagram6
L9 - RIGHTSIDE AIR DRYER:Diagram7

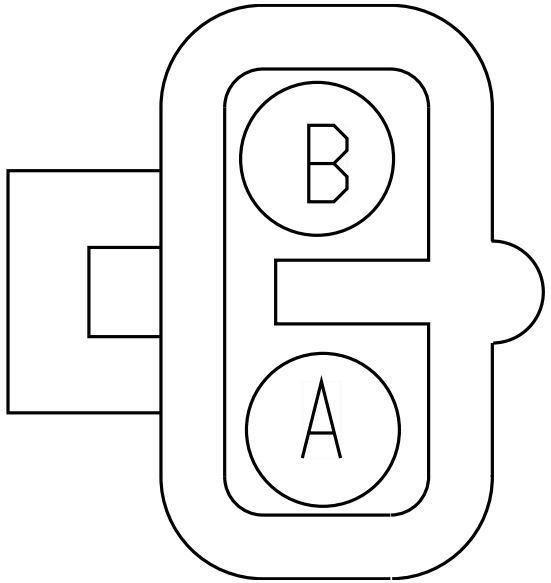

Name	Terminal Part Number	V-Min	Name	Wire Part Number	Wire CSA	Wire Spec	Wire Material description	Wire Color Description	Wire Length	End2 Terminal Part Number	End2 Pin Name	End2 Connect or
A	-	-	AR39B	2643680 R1	1.16	16.0	Std. Wall XLPE Primary Cable	GREY	3730.0	-	31	1701F
B	-	-	AR39-GB	2643681 R1	1.16	16.0	Std. Wall XLPE Primary Cable	WHITE	1750.0	-	-	-

Connector Name 9900A

Part Number 1673790C1

Instances A26 - Rightside Air Dryer:Diagram1
L9 - RIGHTSIDE AIR DRYER:Diagram1

Mates HTR-AIR_DRYER-3002-02-01A

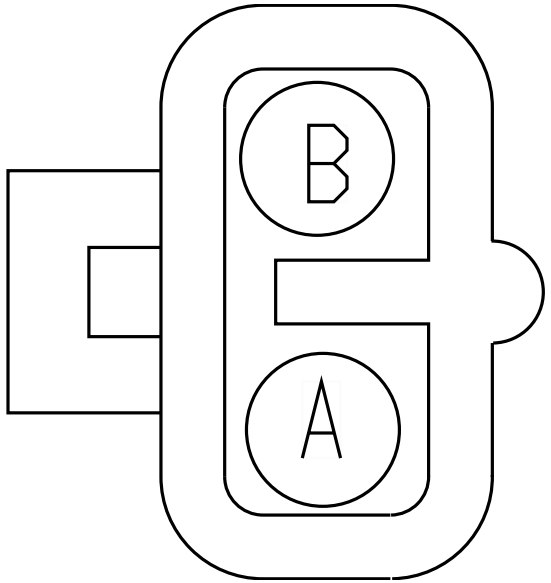

Name	Terminal Part Number	V-Min	Name	Wire Part Number	Wire CSA	Wire Spec	Wire Material description	Wire Color Description	Wire Length	End2 Terminal Part Number	End2 Pin Name	End2 Connect or
A	-	-	NH39B	3510312 R1	1.16	16.0	Thin Wall XLPE Primary Cable	GREY	3060.0	-	31	1701F
B	-	-	NH39-GB	2643681 R1	1.16	16.0	Std. Wall XLPE Primary Cable	WHITE	1080.0	-	-	-

Connector Name 9900C

Part Number 1673790C1

Instances A26 - Rightside Air Dryer:Diagram8
L9 - RIGHTSIDE AIR DRYER:Diagram8

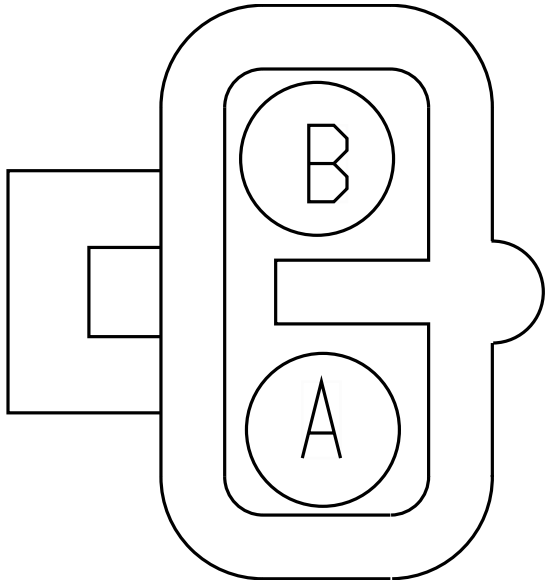

Name	Terminal Part Number	V-Min	Name	Wire Part Number	Wire CSA	Wire Spec	Wire Material description	Wire Color Description	Wire Length	End2 Terminal Part Number	End2 Pin Name	End2 Connect or
A	-	-	ZN39B	2643673 R1	0.79	18.0	Std. Wall XLPE Primary Cable	GREY	4455.0	-	31	1701F
B	-	-	PF39-GB	2643681 R1	1.16	16.0	Std. Wall XLPE Primary Cable	WHITE	2475.0	-	-	-

Connector Name 9900D

Part Number 1673790C1

Instances A26 - Rightside Air Dryer:Diagram9
L9 - RIGHTSIDE AIR DRYER:Diagram9

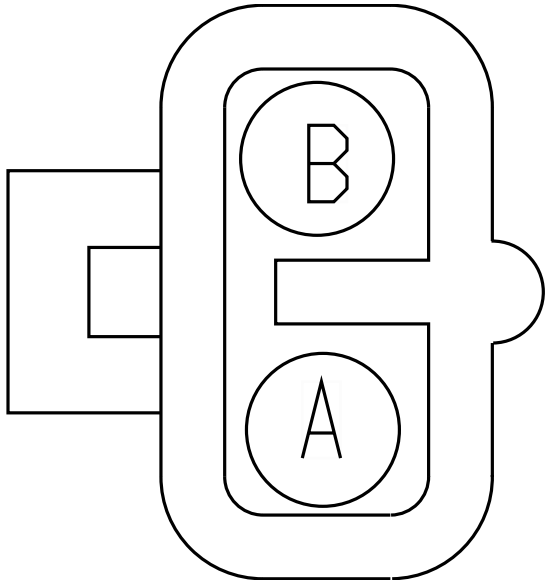

Name	Terminal Part Number	V-Min	Name	Wire Part Number	Wire CSA	Wire Spec	Wire Material description	Wire Color Description	Wire Length	End2 Terminal Part Number	End2 Pin Name	End2 Connect or
A	-	-	BA39B	2643680 R1	1.16	16.0	Std. Wall XLPE Primary Cable	GREY	2580.0	-	31	1701F
B	-	-	BA39-GB	2643681 R1	1.16	16.0	Std. Wall XLPE Primary Cable	WHITE	600.0	-	-	-

Connector Name 9900E

Part Number 1673790C1

Instances A26 - Rightside Air Dryer:Diagram10
L9 - RIGHTSIDE AIR DRYER:Diagram10

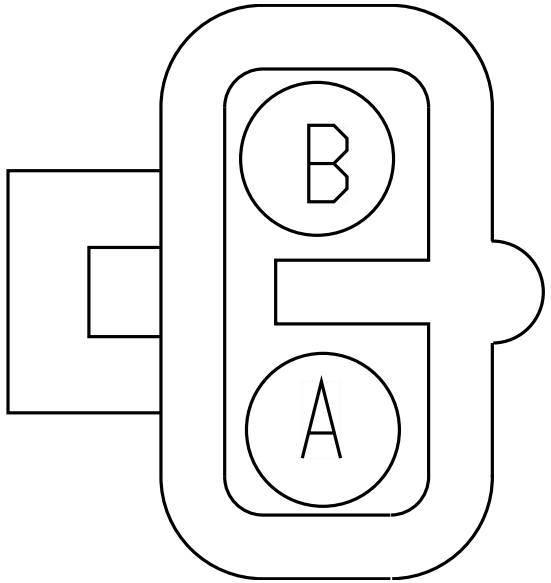

Name	Terminal Part Number	V-Min	Name	Wire Part Number	Wire CSA	Wire Spec	Wire Material description	Wire Color Description	Wire Length	End2 Terminal Part Number	End2 Pin Name	End2 Connect or
A	-	-	PA39B	2643680 R1	1.16	16.0	Std. Wall XLPE Primary Cable	GREY	2805.0	-	31	1701F
B	-	-	PA39-GB	2643681 R1	1.16	16.0	Std. Wall XLPE Primary Cable	WHITE	1525.0	-	-	-

Connector Name 9900G

Part Number 1673790C1

Instances A26 - Rightside Air Dryer:Diagram11
L9 - RIGHTSIDE AIR DRYER:Diagram11

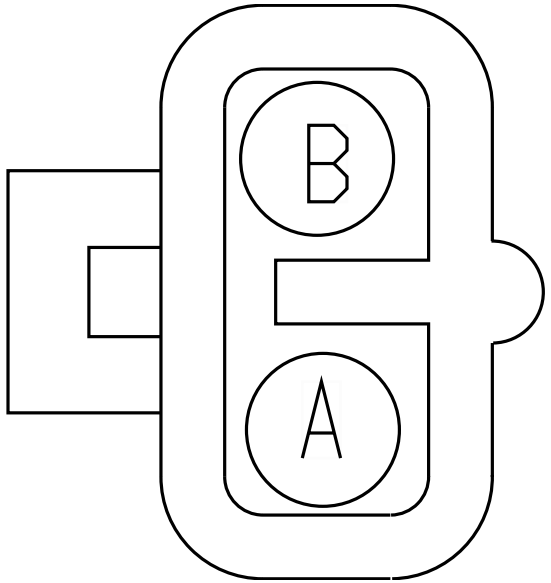

Name	Terminal Part Number	V-Min	Name	Wire Part Number	Wire CSA	Wire Spec	Wire Material description	Wire Color Description	Wire Length	End2 Terminal Part Number	End2 Pin Name	End2 Connect or
A	-	-	NX39B	2643680 R1	1.16	16.0	Std. Wall XLPE Primary Cable	GREY	3410.0	-	31	1701F
B	-	-	NX39-GB	2643681 R1	1.16	16.0	Std. Wall XLPE Primary Cable	WHITE	1430.0	-	-	-

Connector Name	9913B
Part Number	587570C91
Instances	L9 - Transmission Power Take Off (Auto Trans with Lectradrive):Diagram1 L9 - Transmission Power Take Off (Lectrashift PTO with Manual Trans):Diagram1
Mates	CONN_LECTRASHIFT-PTO_5047- 08-01A

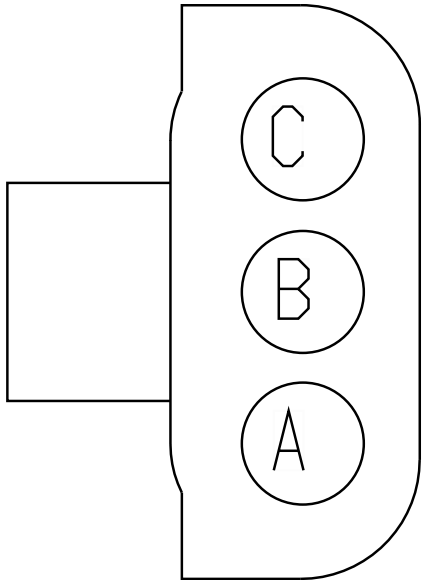

Name	Terminal Part Number	V-Min	Name	Wire Part Number	Wire CSA	Wire Spec	Wire Material description	Wire Color Description	Wire Length	End2 Terminal Part Number	End2 Pin Name	End2 Connect or
A	-	-	RY14LSB	2643759 R1	0.79	18.0	Std. Wall XLPE Primary Cable	RED	2970.0	-	B	9724
B	-	-	RY14LSA	2643670 R1	0.79	18.0	Std. Wall XLPE Primary Cable	BLACK	2970.0	-	A	9724
C	-	-	RY14LSC	2643787 R1	3.01	12.0	Std. Wall XLPE Primary Cable	WHITE	2090.0	-	42	1702

Connector Name	9915
Part Number	3539777C1
Instances	L9 - Transmission Power Take Off (Auto Trans with Lectradrive):Diagram1 L9 - Transmission Power Take Off (Lectrashift PTO with Manual Trans):Diagram1
Mates	DIODE_PTO_Lectrashift_5047 -08-01A

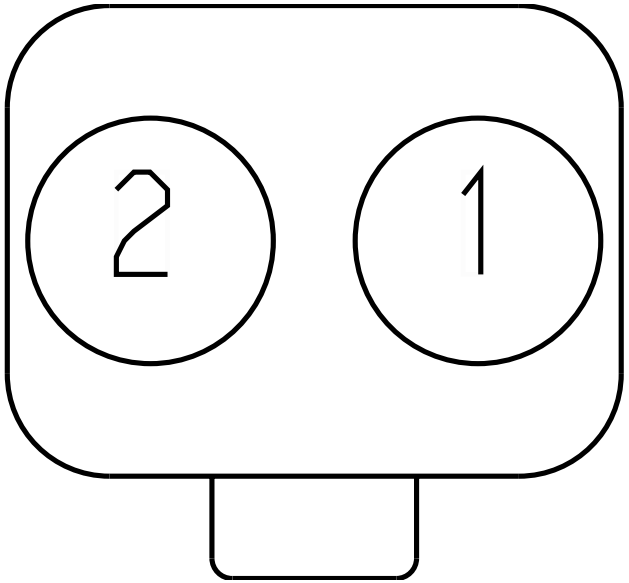

Name	Terminal Part Number	V-Min	Name	Wire Part Number	Wire CSA	Wire Spec	Wire Material description	Wire Color Description	Wire Length	End2 Terminal Part Number	End2 Pin Name	End2 Connect or
1	-	-	HW14BC	2643760 R1	1.16	16.0	Std. Wall XLPE Primary Cable	RED	640.0	-	R1-87	1873
2	-	-	HW11-GCK	3510313 R1	1.91	14.0	Thin Wall XLPE Primary Cable	GREY	1010.0	-	-	-

Connector Name 9916

Part Number 4105324C1

Instances A26 - Snow Valve Control:Diagram1
A26 - Snow Valve Control:Diagram2
B6.7 - Snow Valve Control:Diagram1
B6.7 - Snow Valve Control:Diagram2
L9 - Snow Valve Control:Diagram1
L9 - Snow Valve Control:Diagram2

Mates DIOD-SNOW_VALV-5042-01-02A

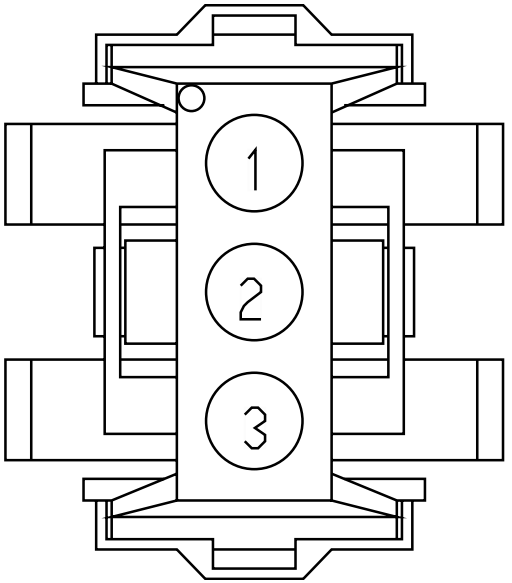

Name	Terminal Part Number	V-Min	Name	Wire Part Number	Wire CSA	Wire Spec	Wire Material description	Wire Color Description	Wire Length	End2 Terminal Part Number	End2 Pin Name	End2 Connect or
1	-	-	QA23DC	3510329 R1	0.79	18.0	Thin Wall XLPE Primary Cable	TAN	240.0	-	X	-
2	-	-	QA23BD	3510329 R1	0.79	18.0	Thin Wall XLPE Primary Cable	TAN	875.0	-	X	-
2	-	-	QA23A	3510329 R1	0.79	18.0	Thin Wall XLPE Primary Cable	TAN	1165.0	-	A6	1500A
3	-	-	QA23A	3510329 R1	0.79	18.0	Thin Wall XLPE Primary Cable	TAN	1165.0	-	A6	1500A

Name	Terminal Part Number	V-Min	Name	Wire Part Number	Wire CSA	Wire Spec	Wire Material description	Wire Color Description	Wire Length	End2 Terminal Part Number	End2 Pin Name	End2 Connector
3	-	-	QA23BD	3510329 R1	0.79	18.0	Thin Wall XLPE Primary Cable	TAN	875.0	-	X	-

Circuit Number	Gauge	Color	Insulation	Terminal / Splice Number	Connector Part number	Connector Number	Cavity	Seal/Sleeve	Lock 1	Lock 2
HGTEM1	16	GY	TXL	3522073C1	3598707C1	1	E1	N/A		
HGTEM2	16	GY	TXL	3522073C1	3598707C1	1	E2	N/A		
HGTEM3	16	GY	TXL	3522073C1	3598707C1	1	E3	N/A		
HGTEM4	16	GY	TXL	3522073C1	3598707C1	1	E4	N/A		
HGTEM5	16	GY	TXL	3522073C1	3598707C1	1	E5	N/A		
HGTEM6	16	GY	TXL	3522073C1	3598707C1	1	E6	N/A		
HGTEM7	16	GY	TXL	3522073C1	3598707C1	1	E7	N/A		
HGTEM8	16	GY	TXL	3522073C1	3598707C1	1	E8	N/A		
AB13D	18	PK	TXL	3544876C1	4063156C1	9	A	N/A		
9H5BF(+)	18	YL	TXL	3544884C1	4063156C1	9	B	N/A		
9L5BF(+)	18	YL	TXL	3544884C1	4063156C1	9	B	N/A		
9V5BF(+)	18	YL	TXL	3544884C1	4063156C1	9	B	N/A	1675053C1	
9H5BF(-)	18	GN	TXL	3544884C1	4063156C1	9	C	N/A		
9L5BF(-)	18	GN	TXL	3544884C1	4063156C1	9	C	N/A		
9V5BF(-)	18	GN	TXL	3544884C1	4063156C1	9	C	N/A	1667734C1	
ZB50B	18	YL	TXL	3544884C1	4063156C1	9	E	N/A		
ZB50A	18	YL	TXL	3544876C1	4063156C1	9	H	N/A		
AB11-GN	18	WH	TXL	3544876C1	4063156C1	9	J	N/A		
AB62	18	DKBL	TXL	3544884C1	4063156C1	9	L	N/A		
AB62DA	16	DKBL	TXL	3544884C1	4063156C1	9	M	N/A		
AB50	18	YL	TXL	3544884C1	4063156C1	9	P	N/A		
AB9	18	GY	TXL	3544884C1	4063156C1	9	R	N/A		
AB14D	18	RD	TXL	3544876C1	4063156C1	9	S	N/A		
ZJ71AB	16	OR	TXL	3535303C	3543733C1	400	J	3535424C		
KS71P	18	GY	TXL	3535303C	3543733C1	400	L	3535424C		
KT71P	18	GY	TXL	3535303C	3543733C1	400	L	3535424C		
KU71P	18	GY	TXL	3535303C	3543733C1	400	L	3535424C		
YU57A	16	OR	TXL	3535303C1	3543733C1	400	A	3535424C1		
XV57T	16	OR	TXL	3535303C1	3543733C1	400	B	3535424C1		
XZ57T	16	OR	TXL	3535303C1	3543733C1	400	B	3535424C1		
YT57T	16	OR	TXL	3535303C1	3543733C1	400	B	3535424C1		
YY57T	16	OR	TXL	3535303C1	3543733C1	400	B	3535424C1		
YV57BC	16	LTGN	TXL	3535303C1	3543733C1	400	C	3535424C1		
YW57BC	16	LTGN	TXL	3535303C1	3543733C1	400	C	3535424C1		
YX57BC	16	LTGN	TXL	3535303C1	3543733C1	400	C	3535424C1		
YZ57BC	16	LTGN	TXL	3535303C1	3543733C1	400	C	3535424C1		
XV56AA	16	OR	TXL	3535303C1	3543733C1	400	E	3535424C1		
XZ56AA	16	OR	TXL	3535303C1	3543733C1	400	E	3535424C1		
YT56AA	16	OR	TXL	3535303C1	3543733C1	400	E	3535424C1		
YY56AA	16	OR	TXL	3535303C1	3543733C1	400	E	3535424C1		
XV56T	16	OR	TXL	3535303C1	3543733C1	400	F	3535424C1		
XZ56T	16	OR	TXL	3535303C1	3543733C1	400	F	3535424C1		
YT56T	16	OR	TXL	3535303C1	3543733C1	400	F	3535424C1		
YY56T	16	OR	TXL	3535303C1	3543733C1	400	F	3535424C1		
YW56BC	16	YL	TXL	3535303C1	3543733C1	400	G	3535424C1		
YZ56BC	16	YL	TXL	3535303C1	3543733C1	400	G	3535424C1		
YV56BC	16	YL	TXL	3535303C1	3543733C1	400	H	3535424C1		
YX56BC	16	YL	TXL	3535303C1	3543733C1	400	H	3535424C1		
ZA71BK	16	OR	TXL	3535303C1	3543733C1	400	J	3535424C1		
ZC71BA	16	OR	TXL	3535303C1	3543733C1	400	J	3535424C1		
ZH71AC	16	OR	TXL	3535303C1	3543733C1	400	J	3535424C1		
ZL71AC	16	OR	TXL	3535303C1	3543733C1	400	J	3535424C1		
ZA71A	16	OR	TXL	3535303C1	3543733C1	400	K	3535424C1		
ZC71BK	16	OR	TXL	3535303C1	3543733C1	400	K	3535424C1		

Circuit Number	Gauge	Color	Insulation	Terminal / Splice Number	Connector Part number	Connector Number	Cavity	Seal/Sleeve	Lock 1	Lock 2
ZE71AD	16	OR	TXL	3535303C1	3543733C1	400	K	3535424C1		
ZG71BC	16	OR	TXL	3535303C1	3543733C1	400	K	3535424C1		
ZK71CB	16	OR	TXL	3535303C1	3543733C1	400	K	3535424C1		
KQ71N	16	OR	TXL	3535303C1	3543733C1	400	L	3535424C1		
ZU71D	18	OR	TXL	3535303C1	3543733C1	400	M	3535424C1		
VB92RE	18	TN	TXL	587578C1	587571C91	421	A	3517771C1		
VB92RH	18	TN	TXL	587578C1	587571C91	421	C	3517771C1		
VB92RJ	18	TN	TXL	587578C1	587571C91	421	D	3517771C1		
VB92#158A	18	TN	TXL	587578C1	3519221C91	422	A	3517771C1		
VB92#156A	18	TN	TXL	587578C1	3519221C91	422	B	3517771C1		
VB92#112A	18	TN	TXL	587578C1	3519221C91	422	C	3517771C1		
GY92#103A	18	TN	TXL	1661224C1	3928059C1	423	2	N/A		
GZ92#103A	18	TN	TXL	1661224C1	3928059C1	423	2	N/A		
VB92#161A	18	TN	TXL	1661224C1	3928059C1	423	4	N/A		
VB92-GAP	18	WH	TXL	1661224C1	3928059C1	423	11	N/A		
VB62RB	18	TN	TXL	1661224C1	3928059C1	423	12	N/A		
VB92RF	18	TN	TXL	1661224C1	3928059C1	424	2	N/A		
VB92RJ	18	TN	TXL	1661224C1	3928059C1	424	4	N/A		
VB92-GAL	18	WH	TXL	1661224C1	3928059C1	424	11	N/A		
VB62RC	18	TN	TXL	1661224C1	3928059C1	424	12	N/A		
UH91-GAH	18	WH	TXL	1661875C1	1667741C1	425	A	3568570C1		
UH44L	18	GY	TXL	1661875C1	1667741C1	425	B	3568570C1		
UH44J	18	GY	TXL	1661875C1	1667741C1	425	C	3568570C1		
KS10-G1	10	WH	TXL	2025425C1	1667732C1	500	A	1667735C1		
KD10-G5	10	WH	TXL	2025425C1	1667732C1	500	A	1667735C1		
KE10A	10	BK	GXL	2025425C1	1667732C1	500	B	1667735C1		
LA10-GG	10	WH	GXL	2025425C1	1667732C1	500	B	1667735C1		
LB10-GG	10	WH	GXL	2025425C1	1667732C1	500	B	1667735C1		
RU10A	10	BK	GXL	2025425C1	1667732C1	500	B	1667735C1		
KS10-G6	10	WH	TXL	2025425C1	1667732C1	500	B	1667735C1		
AE26A	10	WH	TXL	2025425C1	1667732C1	500	C	1667735C1		
AC23	20	TN	TXL	1661875C1	3522068C1	600	A	3568570C1		
AC23	20	TN	TXL	1661875C1	3522068C1	600	A	3568570C1		
AC23-G	20	TN	TXL	1661875C1	3522068C1	600	B	3568570C1		
AC23-G	20	TN	TXL	1661875C1	3522068C1	600	B	3568570C1		
VJ95N	20	TN	TXL	3626441C1	6114577C1	674	1	N/A		
VL95E	20	TN	TXL	3626441C1	6114577C1	674	1	N/A		
VJ95F	20	TN	TXL	3626441C1	6114577C1	674	2	N/A		
VL95F	20	TN	TXL	3626441C1	6114577C1	674	2	N/A		
VJ95MC	20	TN	TXL	3626441C1	6114577C1	674	3	N/A		
VL95H	18	TN	TXL	3626441C1	6114577C1	674	3	N/A		
VJ95AR1	18	TN	TXL	3626441C1	6114577C1	674	4	N/A		
VL95AR1	18	TN	TXL	3626441C1	6114577C1	674	4	N/A		
VJ95AB	20	TN	TXL	3626441C1	6114577C1	674	5	N/A		
VL95AC	20	TN	TXL	3626441C1	6114577C1	674	5	N/A		
VJ95AC	18	TN	TXL	3626441C1	6114577C1	674	6	N/A		
AA95AA	20	TN	TXL	3626441C1	6114577C1	674	6	N/A		
AC95AB	20	TN	TXL	3626441C1	6114577C1	674	6	N/A		
VJ95AS1	18	TN	TXL	3626441C1	6114577C1	674	7	N/A		
VL95AS1	18	TN	TXL	3626441C1	6114577C1	674	7	N/A		
VJ95AT1	18	TN	TXL	3626441C1	6114577C1	674	8	N/A		
VL95AT1	18	TN	TXL	3626441C1	6114577C1	674	8	N/A		
VJ95C	18	TN	TXL	3626441C1	6114577C1	674	9	N/A		
VL95AU1	18	TN	TXL	3626441C1	6114577C1	674	9	N/A		

Circuit Number	Gauge	Color	Insulation	Terminal / Splice Number	Connector Part number	Connector Number	Cavity	Seal/Sleeve	Lock 1	Lock 2
VJ10-G5	16	WH	GXL	3627568C1	6114577C1	674	10	N/A		
VJ10-G4	16	WH	GXL	3627568C1	6114577C1	674	10	N/A		
VJ10-G1	16	WH	150	3627568C1	6114577C1	674	11	N/A		
VJ10-G1	16	WH	GXL	3627568C1	6114577C1	674	11	N/A		
VJ13R	16	PK	150	3627568C1	6114577C1	674	12	N/A		
VJ13AA	18	PK	TXL	3626441C1	6114577C1	674	12	N/A		
VJ5B(+)	18	YL	193	3626441C1	6114577C1	674	13	N/A		
VJ5(+)	18	YL	193	3626441C1	6114577C1	674	13	N/A		
VJ5B(-)	18	GN	193	3626441C1	6114577C1	674	14	N/A		
VJ5(-)	18	GN	193	3626441C1	6114577C1	674	14	N/A		
KA95H1	16	PK	TXL	2033819C1	3765646C92	679	A1	1652325C1		
KA95P	16	PK	TXL	2033819C1	3765646C92	679	A10	1652325C1		
VJ10-G4	16	WH	GXL	2033819C1	3765646C92	679	A12	1652325C1		
KA95H2	16	PK	TXL	2033819C1	3765646C92	679	A3	1652325C1		
KA95H3	16	PK	TXL	2033819C1	3765646C92	679	A4	1652325C1		
KA95H4	16	PK	TXL	2033819C1	3765646C92	679	A6	1652325C1		
KA95H5	16	PK	TXL	2033819C1	3765646C92	679	A7	1652325C1		
KA95H6	16	PK	TXL	2033819C1	3765646C92	679	A9	1652325C1		
KA95GBA	16	BK	TXL	2033819C1	3765646C92	679	B1	1652325C1		
KA95A	20	TN	TXL	2033819C1	3765646C92	679	B10	3517771C1		
VJ95AR3	16	TN	TXL	2033819C1	3765646C92	679	B12	1652325C1		
VJ95AS3	16	TN	TXL	2033819C1	3765646C92	679	B3	1652325C1		
KA95GBB	16	BK	TXL	2033819C1	3765646C92	679	B4	1652325C1		
VJ95AT3	16	TN	TXL	2033819C1	3765646C92	679	B6	1652325C1		
KA95GBD	16	BK	TXL	2033819C1	3765646C92	679	B7	1652325C1		
VJ95AU3	16	TN	TXL	2033819C1	3765646C92	679	B9	1652325C1		
KA95PA	14	PK	TXL	2033816C1	3765646C92	679	D10	1652325C1		
KA95PC	16	PK	TXL	2033819C1	3765646C92	679	D12	1652325C1		
KA95H7	16	PK	TXL	2033819C1	3765646C92	679	E1	1652325C1		
KA95TB	18	GY	TXL	2033819C1	3765646C92	679	E10	3517771C1		
VJ95KD	14	RD	TXL	2033816C1	3765646C92	679	E12	1652325C1		
VJ14	16	RD	TXL	2033819C1	3765646C92	679	E2	1652325C1		
KA95P	16	PK	TXL	2033819C1	3765646C92	679	E3	1652325C1		
VJ14B	16	RD	TXL	2033819C1	3765646C92	679	E4	1652325C1		
KA95PB	14	PK	TXL	2033816C1	3765646C92	679	E5	1652325C1		
VJ14C	14	RD	TXL	2033816C1	3765646C92	679	E6	1652325C1		
KA95H1	18	PK	TXL	2033819C1	3765646C92	690	A1	3517771C1		
KA95P	18	RD	TXL	2033819C1	3765646C92	690	A10	3517771C1		
KA95SB	20	TN	TXL	2033819C1	3765646C92	690	A12	3517771C1		
KA95H2	18	PK	TXL	2033819C1	3765646C92	690	A3	3517771C1		
KA95H3	18	PK	TXL	2033819C1	3765646C92	690	A4	3517771C1		
KA95H4	18	PK	TXL	2033819C1	3765646C92	690	A6	3517771C1		
KA95H5	18	PK	TXL	2033819C1	3765646C92	690	A7	3517771C1		
KA95H6	18	PK	TXL	2033819C1	3765646C92	690	A9	3517771C1		
KA95GBA	18	BK	TXL	2033819C1	3765646C92	690	B1	3517771C1		
VJ10-G3	16	WH	GXL	2033819C1	3765646C92	690	B10	1652325C1		
VL95AR3	18	TN	TXL	2033819C1	3765646C92	690	B12	3517771C1		
VL95AS3	18	TN	TXL	2033819C1	3765646C92	690	B3	3517771C1		
KA95GBB	18	BK	TXL	2033819C1	3765646C92	690	B4	3517771C1		
VL95AT3	18	TN	TXL	2033819C1	3765646C92	690	B6	3517771C1		
KA95GBD	18	BK	TXL	2033819C1	3765646C92	690	B7	3517771C1		
VL95AU3	18	TN	TXL	2033819C1	3765646C92	690	B9	3517771C1		
KA95PA	10	PK	TXL	1687847C1	3765646C92	690	D10	589390C1		
KA95PC	10	PK	TXL	1687847C1	3765646C92	690	D12	589390C1		

Circuit Number	Gauge	Color	Insulation	Terminal / Splice Number	Connector Part number	Connector Number	Cavity	Seal/Sleeve	Lock 1	Lock 2
KA95H7	18	PK	TXL	2033819C1	3765646C92	690	E1	3517771C1		
KA95TB	18	GY	TXL	2033819C1	3765646C92	690	E10	3517771C1		
VJ95KD	10	TN	TXL	1687847C1	3765646C92	690	E12	589390C1		
KA14AA	18	RD	TXL	2033819C1	3765646C92	690	E2	3517771C1		
KA95P	18	RD	TXL	2033819C1	3765646C92	690	E3	3517771C1		
KA14B	16	RD	TXL	2033819C1	3765646C92	690	E4	1652325C1		
KA95PB	10	PK	TXL	1687847C1	3765646C92	690	E5	589390C1		
KA14C	10	RD	TXL	1687847C1	3765646C92	690	E6	589390C1		
WA2-G	2	WH	SGX	2241332C1		1000	1	3812582R1		
WA2-G	2	WH	SGX	2241332C1		1000	A	3812582R1		
WM2-G	2	WH	SGX	2241332C1		1000	A	3812582R1		
WA2	2	RD	SGX	2241332C1		1001	1	3812582R1		
WA2	2	RD	SGX	2241332C1		1001	A	3812582R1		
WM2	2	RD	SGX	2241332C1		1001	A	3812582R1		
BG13TC1	16	PK	GXL	587577C1	587567C91	1001	A	1652325C1		
BG11-GT1	16	WH	GXL	587577C1	587567C91	1001	B	1652325C1		
CD14	4	RD	SGX	2015884C1		1002	1	2644002R1		
BF11-GT2	16	WH	GXL	1661875C1	3522068C1	1002	A	1661872C1		
BG11-GT1	16	WH	GXL	1661875C1	3522068C1	1002	B	1661872C1		
CD14D	4	RD	SGX	2015884C1		1003	1	2644002R1		
BE42	16	GY	GXL	587577C1	587567C91	1003	A	1652325C1		
BE42-G	18	WH	GXL	587578C1	587567C91	1003	B	1652325C1		
FA11-GAA	6	WH	SGX	2015884C1		1004	1	2644002R1		
BH47A	16	GY	GXL	2036586C1	2036583C1	1004	A	N/A		
BH47B	16	GY	GXL	2036586C1	2036583C1	1004	B	N/A		
AD11-GT	10	WH	GXL	3710088C1		1005	1	2644005R1		
AE11-GT	10	WH	GXL	3710088C1		1005	1	2644005R1		
WB2-G	1	WH	SGX	3870430C1		1010	1	2643308R1		
CD14AB	12	RD	TXL	3768014C1	3768015C1	1010	2	N/A		
UD14A	18	RD	TXL	3768012C1	3768015C1	1010	5	N/A		
UL92BT	18	TN	TXL	3768012C1	3768015C1	1010	5	N/A		
VG70J	12	OR	TXL	3768014C	3768015C1	1010	6	N/A		
VJ70J	12	OR	TXL	3768014C	3768015C1	1010	6	N/A		
AD98H	18	RD	TXL	1 3768012	3768015C	1010	7	N/A		
AE98H	18	RD	TXL	3768012C1	3768015C1	1010	7	N/A		
AB14D	18	RD	TXL	3768012C1	3768015C1	1010	8	N/A		
AC14D	18	RD	TXL	3768012C1	3768015C1	1010	8	N/A		
CD14AC	12	RD	TXL	3768014C1	3768015C1	1010	10	N/A		
AA14EE	16	RD	TXL	3768013C1	3768015C1	1010	13	N/A		
TA75AC	12	RD	GXL	3768014C1	3768015C1	1010	14	N/A		
EB15	18	RD	TXL	3768012C1	3768015C1	1010	15	N/A		
EE15	18	RD	TXL	3768012C1	3768015C1	1010	15	N/A		
YD14CSB	16	RD	TXL	3768013C1	3768015C1	1010	16	N/A		
CD14AD	12	RD	TXL	3768014C1	3768015C1	1010	18	N/A		
UC92DC	18	TN	TXL	3768012C1	3768015C1	1010	21	N/A		
VH94TV	12	GY	GXL	3768014C	3768015C1	1010	22	N/A		
VW14ED	14	RD	GXL	3768014C1	3768015C1	1010	24	N/A		
CD14AE	12	RD	TXL	3768014C1	3768015C1	1010	26	N/A		
SM86P	18	LTGN	TXL	3768012C1	3768015C1	1010	29	N/A		
RC81B	12	RD	TXL	3768014C1	3768015C1	1010	30	N/A		
RD81B	12	RD	TXL	3768014C1	3768015C1	1010	30	N/A		
RG78V	12	LTGN	TXL	3768014C1	3768015C1	1010	30	N/A		
AA14MUX	18	RD	TXL	3768012C1	3768015C1	1010	31	N/A		
HN20	16	LTGN	TXL	3768013C1	3768015C1	1010	32	N/A		

Circuit Number	Gauge	Color	Insulation	Terminal / Splice Number	Connector Part number	Connector Number	Cavity	Seal/Sleeve	Lock 1	Lock 2
CD14AF	12	RD	TXL	3768014C1	3768015C1	1010	34	N/A		
MK14TS	20	RD	TXL	3768012C1	3768015C1	1010	37	N/A		
ML14EA	16	RD	TXL	3768013C1	3768015C1	1010	37	N/A		
MM14EB	18	RD	GXL	3768012C1	3768015C1	1010	37	N/A		
MP14EA	16	RD	TXL	3768013C1	3768015C1	1010	37	N/A		
MQ14ED	16	RD	TXL	3768013C1	3768015C1	1010	37	N/A		
VW14EA	16	RD	GXL	3768013C1	3768015C1	1010	37	N/A		
RC81A	12	LTGN	TXL	3768014C1	3768015C1	1010	38	N/A		
RD81A	12	LTGN	TXL	3768014C1	3768015C1	1010	38	N/A		
XA94AY	12	GY	TXL	3768014C1	3768015C1	1010	39	N/A		
XE94AY	14	GY	GXL	3768014C1	3768015C1	1010	39	N/A		
XS94L	12	GY	TXL	3768014C1	3768015C1	1010	39	N/A		
LB17BA	18	PK	TXL	3768012C1	3768015C1	1010	40	N/A		
WB2-G	1	WH	SGX	2241336C1		1010	A	3812582R1		
WP2-G	1	WH	SGX	2241336C1		1010	A	3812582R1		
WB2	1	RD	SGX	3870430C1		1011	1	2643308R1		
AA82P	16	GY	TXL	3768007C	3768010C1	1011	R2 -	30 N/A		
WB2	1	RD	SGX	3870430C1		1011	A	2643308R1		
WP2	1	RD	SGX	3870430C1		1011	A	2643308R1		
TJ70ET	10	RD	TXL	3768009C1	3768010C1	1011	R1 -	7 N/A		
TK70T	12	OR	TXL	3768009C1	3768010C1	1011	R1 -	7 N/A		
VG70-GT	18	WH	TXL	3768003C1	3768010C1	1011	R1 -	5 N/A		
VG70D	18	OR	TXL	3768003C1	3768010C1	1011	R1 -	6 N/A		
VG70J	12	OR	TXL	3768009C1	3768010C1	1011	R1 -	0 N/A		
VJ70-GT	18	WH	TXL	3768003C1	3768010C1	1011	R1 -	5 N/A		
VJ70DA	18	OR	TXL	3768003C1	3768010C1	1011	R1 -	6 N/A		
VJ70J	12	OR	TXL	3768009C1	3768010C1	1011	R1 -	0 N/A		
AA82E	16	GY	TXL	3768007C1	3768010C1	1011	R2 -	7 N/A		
AA82F	18	GY	TXL	3768003C1	3768010C1	1011	R2 -	6 N/A		
AA82J	16	GY	TXL	3768004C1	3768010C1	1011	R2 -	7A N/A		
AA82M	16	GY	TXL	3768004C1	3768010C1	1011	R2 -	5 N/A		
GX92#103B	18	TN	TXL	3768007C1	3768010C1	1011	R3 -	0 N/A		
GZ92#103B	18	TN	TXL	3768007C1	3768010C1	1011	R3 -	0 N/A		
VA92#117A	18	TN	TXL	3768003C1	3768010C1	1011	R3 -	6 N/A		
VA92#117B	18	TN	TXL	3768003C1	3768010C1	1011	R3 -	5 N/A		
VA92#117C	18	TN	TXL	3768007C1	3768010C1	1011	R3 -	7 N/A		
AD11-GR	18	WH	TXL	3768003C1	3768010C1	1011	R4 -	5 N/A		
AE11-GR	18	WH	TXL	3768003C1	3768010C1	1011	R4 -	5 N/A		
CD14DA	10	RD	TXL	3768009C1	3768010C1	1011	R4 -	0 N/A		
EH12C	18	LTBL	TXL	3768003C1	3768010C1	1011	R4 -	6 N/A		
EH12D	12	LTBL	TXL	3768009C1	3768010C1	1011	R4 -	7 N/A		
EJ12D	12	LTBL	TXL	3768009C1	3768010C1	1011	R4 -	7 N/A		
EJ12S	18	LTBL	TXL	3768003C1	3768010C1	1011	R4 -	6 N/A		
AA82H	18	GY	TXL	3768003C1	3768010C1	1011	R5 -	6 N/A		
AA82K	16	GY	TXL	3768007C1	3768010C1	1011	R5 -	7 N/A		
AA82L	16	GY	TXL	3768004C1	3768010C1	1011	R5 -	7A N/A		
AA82N	18	GY	TXL	3768003C1	3768010C1	1011	R5 -	5 N/A		
AA82P	16	GY	TXL	3768007C1	3768010C1	1011	R5 -	0 N/A		
KK18	16	GY	TXL	3768007C1	3768010C1	1011	R6 -	0 N/A		
KK18-GB	18	WH	TXL	3768003C1	3768010C1	1011	R6 -	6 N/A		
KK18A	18	GY	TXL	3768003C1	3768010C1	1011	R6 -	5 N/A		
KK18V	16	GY	TXL	3768007C1	3768010C1	1011	R6 -	7 N/A		
KL18-GB	18	WH	TXL	3768003C1	3768010C1	1011	R6 -	6 N/A		
KL18C	16	GY	TXL	3768007C1	3768010C1	1011	R6 -	0 N/A		

Circuit Number	Gauge	Color	Insulation	Terminal / Splice Number	Connector Part number	Connector Number	Cavity	Seal/Sleeve	Lock 1	Lock 2
KL18D	18	GY	TXL	3768003C1	3768010C1	1011	R6 -	5 N/A		
KL18V	16	GY	TXL	3768007C1	3768010C1	1011	R6 -	7 N/A		
KM18	16	GY	TXL	3768007C1	3768010C1	1011	R6 -	0 N/A		
KM18-GB	18	WH	TXL	3768003C1	3768010C1	1011	R6 -	6 N/A		
KM18E	18	GY	TXL	3768003C1	3768010C1	1011	R6 -	5 N/A		
KM18V	16	GY	TXL	3768007C1	3768010C1	1011	R6 -	7 N/A		
DJ13-GFF	18	WH	TXL	3768003C1	3768010C1	1012	R1 -	5 N/A		
DJ13DR	18	PK	TXL	3768003C1	3768010C1	1012	R1 -	6 N/A		
TE94T	12	GY	TXL	3768009C1	3768010C1	1012	R1 -	7 N/A		
TF72V	12	GY	TXL	3768009C1	3768010C1	1012	R1 -	7 N/A		
VH94TV	12	GY	GXL	3768009C1	3768010C1	1012	R1 -	0 N/A		
ZC71A	18	OR	TXL	3768007C1	3768010C1	1012	R2 -	0 N/A		
ZC71B	18	WH	TXL	3768003C1	3768010C1	1012	R2 -	6 N/A		
ZC71BA	16	OR	TXL	3768007C1	3768010C1	1012	R2 -	7 N/A		
ZC92#165A	18	TN	TXL	3768003C1	3768010C1	1012	R2 -	5 N/A		
ZJ71A	18	OR	TXL	3768007C1	3768010C1	1012	R2 -	0 N/A		
ZJ71AB	16	OR	TXL	3768007C1	3768010C1	1012	R2 -	7 N/A		
ZJ71B	18	WH	TXL	3768003C1	3768010C1	1012	R2 -	6 N/A		
ZJ92#165A	18	TN	TXL	3768003C1	3768010C1	1012	R2 -	5 N/A		
ZL71	16	OR	TXL	3768007C1	3768010C1	1012	R2 -	0 N/A		
ZL71AB	18	TN	TXL	3768003C1	3768010C1	1012	R2 -	6 N/A		
ZL71AC	16	OR	TXL	3768007C1	3768010C1	1012	R2 -	7 N/A		
ZL71B	18	WH	TXL	3768003C1	3768010C1	1012	R2 -	5 N/A		
PC92-GAJ	18	WH	TXL	3768003C1	3768010C1	1012	R3 -	5 N/A		
PC92A1	18	TN	TXL	3768007C1	3768010C1	1012	R3 -	7 N/A		
PC92A18	16	TN	GXL	3768007C1	3768010C1	1012	R3 -	0 N/A		
PC92DN	18	TN	GXL	3768003C1	3768010C1	1012	R3 -	6 N/A		
EJ12T	18	LTBL	TXL	3768003C1	3768010C1	1012	R4 -	6 N/A		
TH14SC	12	RD	TXL	3768009C1	3768010C1	1012	R4 -	0 N/A		
TH72	18	OR	TXL	3768003C1	3768010C1	1012	R4 -	5 N/A		
TH72-GA	18	WH	TXL	3768003C1	3768010C1	1012	R4 -	6 N/A		
TH72A	12	OR	TXL	3768009C1	3768010C1	1012	R4 -	7 N/A		
VK12-GCL	18	WH	TXL	3768003C1	3768010C1	1012	R4 -	5 N/A		
VK14BA	16	RD	TXL	3768007C1	3768010C1	1012	R4 -	0 N/A		
VL12BB	16	LTBL	TXL	3768007C1	3768010C1	1012	R4 -	7 N/A		
VM12BB	16	LTBL	TXL	3768007C1	3768010C1	1012	R4 -	7 N/A		
VP12BB	16	LTBL	TXL	3768007C1	3768010C1	1012	R4 -	7 N/A		
VR12BB	16	LTBL	TXL	3768007C1	3768010C1	1012	R4 -	7 N/A		
VT12BB	16	LTBL	TXL	3768007C1	3768010C1	1012	R4 -	7 N/A		
VJ70-GV	18	WH	TXL	3768003C1	3768010C1	1012	R5 -	5 N/A		
VJ70DB	18	OR	TXL	3768003C1	3768010C1	1012	R5 -	6 N/A		
VJ70JA	12	OR	TXL	3768009C1	3768010C1	1012	R5 -	0 N/A		
VL70TA	12	OR	TXL	3768009C1	3768010C1	1012	R5 -	7 N/A		
VM70TA	12	OR	TXL	3768009C1	3768010C1	1012	R5 -	7 N/A		
VN70-GV	18	WH	TXL	3768003C1	3768010C1	1012	R5 -	5 N/A		
VN70D	18	OR	TXL	3768003C1	3768010C1	1012	R5 -	6 N/A		
VN70JA	12	OR	TXL	3768009C1	3768010C1	1012	R5 -	0 N/A		
VQ70TA	12	OR	TXL	3768009C1	3768010C1	1012	R5 -	7 N/A		
VS70TA	12	OR	TXL	3768009C1	3768010C1	1012	R5 -	7 N/A		
DF13DU	18	GY	TXL	3768003C1	3768010C1	1012	R6 -	6 N/A		
LJ104DA	16	DKBL	TXL	3768007C1	3768010C1	1012	R6 -	0 N/A		
LJ104DB	16	DKBL	TXL	3768007C1	3768010C1	1012	R6 -	7 N/A		
LJ104DC	18	DKBL	TXL	3768003C1	3768010C1	1012	R6 -	5 N/A		
WX2	2	RD	SGX	2241353C1		1013	1	3812582R1		

Circuit Number	Gauge	Color	Insulation	Terminal / Splice Number	Connector Part number	Connector Number	Cavity	Seal/Sleeve	Lock 1	Lock 2
QA23H	18	TN	TXL	2 3768003	3768010C	1013	R6	85 N/A		
QA23DA	18	TN	TXL	3768003C	3768010C1	1013	R5 -	85 N/A		
RF78	16	LTGN	TXL	3768007C1	3768010C1	1013	R1 -	7 N/A		
RF78RP	16	LTGN	TXL	3768007C1	3768010C1	1013	R1 -	0 N/A		
RF78RR	18	WH	TXL	3768003C1	3768010C1	1013	R1 -	5 N/A		
RN78RK	18	LTGN	TXL	3768003C1	3768010C1	1013	R1 -	6 N/A		
RP78RC	18	LTGN	TXL	3768003C1	3768010C1	1013	R1 -	6 N/A		
QA11-GM	18	WH	TXL	3768003C1	3768010C1	1013	R2 -	6 N/A		
QA13B	18	PK	TXL	3768007C1	3768010C1	1013	R2 -	0 N/A		
QA23DA	18	TN	TXL	3768007C1	3768010C1	1013	R2 -	7 N/A		
QA23F	18	TN	TXL	3768003C1	3768010C1	1013	R2 -	5 N/A		
QA23H	18	TN	TXL	3768003C1	3768010C1	1013	R2 -	7A N/A		
KS59-GCA	18	WH	TXL	3768003C1	3768010C1	1013	R3 -	5 N/A		
KS59KB	18	GY	TXL	3768003C1	3768010C1	1013	R3 -	7A N/A		
KS59KD	18	GY	TXL	3768007C1	3768010C1	1013	R3 -	0 N/A		
KS71P	18	GY	TXL	3768003C1	3768010C1	1013	R3 -	6 N/A		
KT59-GM	18	WH	TXL	3768003C1	3768010C1	1013	R3 -	5 N/A		
KT59KA	18	GY	TXL	3768003C1	3768010C1	1013	R3 -	7A N/A		
KT59KD	18	GY	TXL	3768007C1	3768010C1	1013	R3 -	0 N/A		
KT71P	18	GY	TXL	3768003C1	3768010C1	1013	R3 -	6 N/A		
KU59-GM	18	WH	TXL	3768003C1	3768010C1	1013	R3 -	5 N/A		
KU59KA	18	GY	TXL	3768003C1	3768010C1	1013	R3 -	7A N/A		
KU59KD	18	GY	TXL	3768007C1	3768010C1	1013	R3 -	0 N/A		
KU71P	18	GY	TXL	3768003C1	3768010C1	1013	R3 -	6 N/A		
KS59-GC	18	WH	TXL	3768003C1	3768010C1	1013	R4 -	5 N/A		
KS59JC	18	GY	TXL	3768007C1	3768010C1	1013	R4 -	0 N/A		
KS59KC	18	GY	TXL	3768007C1	3768010C1	1013	R4 -	7 N/A		
KS59KF	18	GY	TXL	3768003C1	3768010C1	1013	R4 -	6 N/A		
KT59-GMA	18	WH	TXL	3768003C1	3768010C1	1013	R4 -	5 N/A		
KT59JC	18	GY	TXL	3768007C1	3768010C1	1013	R4 -	0 N/A		
KT59KC	18	GY	TXL	3768007C1	3768010C1	1013	R4 -	7 N/A		
KT59KF	18	GY	TXL	3768003C1	3768010C1	1013	R4 -	6 N/A		
KU59-GMA	18	WH	TXL	3768003C1	3768010C1	1013	R4 -	5 N/A		
KU59JC	18	GY	TXL	3768007C1	3768010C1	1013	R4 -	0 N/A		
KU59KC	18	GY	TXL	3768007C1	3768010C1	1013	R4 -	7 N/A		
KU59KF	18	GY	TXL	3768003C1	3768010C1	1013	R4 -	6 N/A		
QA11-GCH	18	WH	TXL	3768003C1	3768010C1	1013	R5 -	7A N/A		
QA13C	18	PK	TXL	3768007C1	3768010C1	1013	R5 -	7 N/A		
QA23BC	18	TN	TXL	3768007C1	3768010C1	1013	R5 -	0 N/A		
QA23CA	18	TN	TXL	3768003C1	3768010C1	1013	R5 -	6 N/A		
QA11-GCJ	18	WH	TXL	3768003C1	3768010C1	1013	R6 -	7A N/A		
QA13DA	18	PK	TXL	3768007C1	3768010C1	1013	R6 -	7 N/A		
QA23DB	18	TN	TXL	3768007C1	3768010C1	1013	R6 -	0 N/A		
QA23EB	18	TN	TXL	3768003C1	3768010C1	1013	R6 -	6 N/A		
RK78-GC	18	WH	TXL	3768003C1	3768010C1	1014	R1 -	5 N/A		
RK78BC	16	LTGN	TXL	3768004C1	3768010C1	1014	R1 -	6 N/A		
RK78G	16	LTGN	TXL	3768007C1	3768010C1	1014	R1 -	0 N/A		
RK78H	14	BK	TXL	3768008C1	3768010C1	1014	R1 -	7 N/A		
UD14A	18	RD	TXL	3768007C1	3768010C1	1014	R2 -	0 N/A		
UD17B	18	PK	TXL	3768007C1	3768010C1	1014	R2 -	7 N/A		
UD92-GC	18	WH	TXL	3768003C1	3768010C1	1014	R2 -	5 N/A		
UD92B	18	TN	TXL	3768003C1	3768010C1	1014	R2 -	6 N/A		
ZR12-GD	16	WH	TXL	3768004C1	3768010C1	1014	R3 -	5 N/A		
ZR12U	12	LTBL	TXL	3768009C1	3768010C1	1014	R3 -	7 N/A		

Circuit Number	Gauge	Color	Insulation	Terminal / Splice Number	Connector Part number	Connector Number	Cavity	Seal/Sleeve	Lock 1	Lock 2
ZR12Z	12	LTBL	TXL	3768009C1	3768010C1	1014	R3 -	0 N/A		
ZR12ZB	18	LTBL	TXL	3768003C1	3768010C1	1014	R3 -	6 N/A		
AD11-GY	18	WH	TXL	3768003C1	3768010C1	1014	R4 -	5 N/A		
AE11-GY	18	WH	TXL	3768003C1	3768010C1	1014	R4 -	5 N/A		
CD14DB	10	RD	TXL	3768009C1	3768010C1	1014	R4 -	0 N/A		
DE13DF	18	PK	TXL	3768003C1	3768010C1	1014	R4 -	6 N/A		
DF13DF	18	PK	TXL	3768003C1	3768010C1	1014	R4 -	6 N/A		
DJ13DG	12	PK	TXL	3768009C1	3768010C1	1014	R4 -	7 N/A		
RK78-GD	18	WH	TXL	3768003C1	3768010C1	1014	R5 -	5 N/A		
RK78D	14	BK	TXL	3768008C1	3768010C1	1014	R5 -	7 N/A		
RK78E	14	LTGN	TXL	3768008C1	3768010C1	1014	R5 -	0 N/A		
RK78F	18	LTGN	TXL	3768003C1	3768010C1	1014	R5 -	6 N/A		
RL78AA	16	LTGN	TXL	3768007C1	3768010C1	1014	R6 -	0 N/A		
RL78AB	16	LTGN	TXL	3768007C1	3768010C1	1014	R6 -	7 N/A		
RL78RN	18	WH	TXL	3768003C1	3768010C1	1014	R6 -	5 N/A		
RM78AA	16	LTGN	TXL	3768007C1	3768010C1	1014	R6 -	0 N/A		
RM78AB	16	LTGN	TXL	3768007C1	3768010C1	1014	R6 -	7 N/A		
RM78RM	18	WH	TXL	3768003C1	3768010C1	1014	R6 -	5 N/A		
RN78RD	18	LTGN	TXL	3768003C1	3768010C1	1014	R6 -	6 N/A		
RR78RC	18	LTGN	TXL	3768003C1	3768010C1	1014	R6 -	6 N/A		
DJ13DJ	12	PK	TXL	3768014C1	3768015C1	1015	2	N/A		
MK13TS	20	PK	TXL	3768012C1	3768015C1	1015	5	N/A		
MM13EE	18	PK	TXL	3768012C1	3768015C1	1015	5	N/A		
MQ13EE	16	PK	TXL	3768013C1	3768015C1	1015	5	N/A		
VW13EE	16	PK	TXL	3768013C1	3768015C1	1015	5	N/A		
HE87MB	18	GY	TXL	3768012C1	3768015C1	1015	6	N/A		
HJ87KA	18	GY	TXL	3768012C1	3768015C1	1015	6	N/A		
DJ13DR	18	PK	TXL	3768012C1	3768015C1	1015	7	N/A		
WD44Y	16	GY	TXL	3768013C1	3768015C1	1015	8	N/A		
DJ13DK	12	PK	TXL	3768014C1	3768015C1	1015	10	N/A		
KR59J	18	GY	TXL	3768012C1	3768015C1	1015	13	N/A		
KS59JB	18	GY	TXL	3768012C1	3768015C1	1015	13	N/A		
KT59JB	18	GY	TXL	3768012C1	3768015C1	1015	13	N/A		
KU59JB	18	GY	TXL	3768012C1	3768015C1	1015	13	N/A		
DL13AB	18	PK	TXL	3768012C1	3768015C1	1015	14	N/A		
ZA71BB	16	OR	TXL	3768013C1	3768015C1	1015	15	N/A		
ZC71	16	OR	TXL	3768013C1	3768015C1	1015	15	N/A		
ZH71AA	16	OR	TXL	3768013C1	3768015C1	1015	15	N/A		
ZJ71	16	OR	TXL	3768013C1	3768015C1	1015	15	N/A		
ZL71	16	OR	TXL	3768013C1	3768015C1	1015	15	N/A		
AB13D	18	PK	TXL	3768012C1	3768015C1	1015	16	N/A		
AC13D	18	PK	TXL	3768012C1	3768015C1	1015	16	N/A		
DJ13DL	12	PK	TXL	3768014C1	3768015C1	1015	18	N/A		
SH86P	16	LTGN	TXL	3768013C1	3768015C1	1015	21	N/A		
SJ86P	16	LTGN	TXL	3768013C1	3768015C1	1015	21	N/A		
SK86P	16	LTGN	TXL	3768013C1	3768015C1	1015	21	N/A		
SL86P	16	LTGN	TXL	3768013C1	3768015C1	1015	21	N/A		
RF78RP	16	LTGN	TXL	3768013C	3768015C1	1015	22	N/A		
AA13EA	18	PK	TXL	3768012C1	3768015C1	1015	23	N/A		
UL92#163A	16	PK	TXL	3768013C1	3768015C1	1015	24	N/A		
UN92YD	16	TN	TXL	3768013C1	3768015C1	1015	24	N/A		
DJ13DM	12	PK	TXL	3768014C1	3768015C1	1015	26	N/A		
YA67A	16	PK	TXL	3768013C1	3768015C1	1015	29	N/A		
YC67A	16	PK	TXL	3768013C1	3768015C1	1015	29	N/A		

Circuit Number	Gauge	Color	Insulation	Terminal / Splice Number	Connector Part number	Connector Number	Cavity	Seal/Sleeve	Lock 1	Lock 2
KH39A	16	GY	TXL	3768013C1	3768015C1	1015	30	N/A		
LL13B	16	PK	TXL	3768013C1	3768015C1	1015	31	N/A		
MA97F	16	VT	TXL	3768013C1	3768015C1	1015	32	N/A		
DJ13DN	12	PK	TXL	3768014C1	3768015C1	1015	34	N/A		
XA94V	18	GY	TXL	3768012C1	3768015C1	1015	37	N/A		
XE94V	14	GY	GXL	3768014C1	3768015C1	1015	37	N/A		
XT90E	18	GY	TXL	3768012C1	3768015C1	1015	37	N/A		
XU90E	18	GY	TXL	3768012C1	3768015C1	1015	37	N/A		
KH39	16	GY	TXL	3768013C1	3768015C1	1015	38	N/A		
YB67TA	18	PK	TXL	3768012C1	3768015C1	1015	39	N/A		
YD67A	16	PK	TXL	3768013C1	3768015C1	1015	40	N/A		
CD14C	8	RD	TXL	4100163C1	4100070C1	1016	R1-30	N/A		
CD14CA	8	RD	TXL	4100163C1	4100070C1	1016	R1-87	N/A		
CD14DC	8	RD	TXL	4100163C1	4100070C1	1016	R2-30	N/A		
AD11-GZ	18	WH	TXL	3768007C1	4100070C1	1016	R2-85	N/A		
AE11-GZ	18	WH	TXL	3768007C1	4100070C1	1016	R2-85	N/A		
DE13DE	18	PK	TXL	3768007C1	4100070C1	1016	R2-86	N/A		
DF13DE	18	PK	TXL	3768007C1	4100070C1	1016	R2-86	N/A		
DJ13DH	8	RD	TXL	4100163C1	4100070C1	1016	R2-87	N/A		
CD14CG	12	RD	TXL	3768014C1	3768015C1	1017	1	N/A		
CD14CH	12	RD	TXL	3768014C1	3768015C1	1017	2	N/A		
EH12J	18	LTBL	TXL	3768012C1	3768015C1	1017	3	N/A		
EJ12J	18	LTBL	TXL	3768012C1	3768015C1	1017	3	N/A		
CD14AG	12	RD	TXL	3768014C1	3768015C1	1017	4	N/A		
NP14DCE	18	RD	GXL	3768012C1	3768015C1	1017	5	N/A		
QE14A	12	RD	TXL	3768014C1	3768015C1	1017	6	N/A		
QF14A	12	RD	TXL	3768014C1	3768015C1	1017	6	N/A		
HD85AA	18	GY	TXL	3768012C1	3768015C1	1017	7	N/A		
TJ14NS	12	BK	TXL	3768014C1	3768015C1	1017	8	N/A		
CD14CB	12	RD	TXL	3768157C1	3768015C1	1017	10	N/A		
LJ104DA	16	DKBL	TXL	3768013C	3768015C1	1017	13	N/A		
NE14A	20	PK	TXL	3768012C1	3768015C1	1017	13	N/A		
JB86C	14	LTGN	TXL	3768014C1	3768015C1	1017	14	N/A		
AA63BD	18	DKBL	TXL	3768012C1	3768015C1	1017	15	N/A		
MH26D	18	TN	GXL	3768012C1	3768015C1	1017	16	N/A		
MJ26D	18	TN	GXL	3768012C1	3768015C1	1017	16	N/A		
RK78G	16	LTGN	TXL	3768013C	3768015C1	1017	16	N/A		
CD14CC	12	RD	TXL	3768014C1	3768015C1	1017	17	N/A		
CD14CD	12	RD	TXL	3768014C1	3768015C1	1017	18	N/A		
CD14CE	12	RD	TXL	3768014C1	3768015C1	1017	19	N/A		
CD14CF	12	RD	TXL	3768014C1	3768015C1	1017	20	N/A		
KK18V	16	GY	TXL	3768013C	3768015C1	1017	21	N/A		
KL18V	16	GY	TXL	3768013C	3768015C1	1017	21	N/A		
KM18V	16	GY	TXL	3768013C	3768015C1	1017	21	N/A		
TH14SC	12	RD	TXL	3768014C	3768015C1	1017	22	N/A		
VK14BA	16	RD	TXL	3768013C1	3768015C1	1017	22	N/A		
JA84	14	LTGN	TXL	3768014C1	3768015C1	1017	23	N/A		
ZR12Z	12	LTBL	TXL	3768014C	3768015C1	1017	24	N/A		
EH12H	16	LTBL	TXL	3768013C1	3768015C1	1017	25	N/A		
EJ12H	16	LTBL	TXL	3768013C1	3768015C1	1017	25	N/A		
EH12E	18	LTBL	TXL	3768012C1	3768015C1	1017	26	N/A		
EJ12E	18	LTBL	TXL	3768012C1	3768015C1	1017	26	N/A		
EH12F	12	LTBL	TXL	3768014C1	3768015C1	1017	27	N/A		
EJ12F	12	LTBL	TXL	3768014C1	3768015C1	1017	27	N/A		

Circuit Number	Gauge	Color	Insulation	Terminal / Splice Number	Connector Part number	Connector Number	Cavity	Seal/Sleeve	Lock 1	Lock 2
EH12G	16	LTBL	TXL	3768013C1	3768015C1	1017	28	N/A		
EJ12G	16	LTBL	TXL	3768013C1	3768015C1	1017	28	N/A		
ZR12ZA	18	LTBL	TXL	3768012C1	3768015C1	1017	29	N/A		
SM86AE	18	LTGN	TXL	3768012C1	3768015C1	1017	30	N/A		
SM86F	18	LTGN	TXL	3768012C1	3768015C1	1017	31	N/A		
NC12B	20	LTBL	TXL	3768012C1	3768015C1	1017	32	N/A		
DJ13DT	12	PK	TXL	3768157C1	3768015C1	1017	34	N/A		
PB97DF	18	VT	TXL	3768012C1	3768015C1	1017	37	N/A		
RL78AA	16	LTGN	TXL	3768013C	3768015C1	1017	38	N/A		
RM78AA	16	LTGN	TXL	3768013C	3768015C1	1017	38	N/A		
JC13UC	20	PK	TXL	3768012C1	3768015C1	1017	39	N/A		
JE13U	20	PK	TXL	3768012C1	3768015C1	1017	39	N/A		
MD13ZA	16	PK	TXL	3768013C1	3768015C1	1017	40	N/A		
CD14BG	12	RD	TXL	3768014C1	3768015C1	1018	2	N/A		
CD14BD	12	RD	TXL	3768014C1	3768015C1	1018	3	N/A		
CD14BE	12	RD	TXL	3768014C1	3768015C1	1018	4	N/A		
JD86C2	14	LTGN	TXL	3768014C1	3768015C1	1018	6	N/A		
LL14G	16	RD	TXL	3768013C1	3768015C1	1018	7	N/A		
XT40A	14	GY	TXL	3768014C1	3768015C1	1018	8	N/A		
CD14CJ	12	RD	TXL	3768014C1	3768015C1	1018	10	N/A		
CD14BB	12	RD	TXL	3768014C1	3768015C1	1018	11	N/A		
CD14BC	12	RD	TXL	3768014C1	3768015C1	1018	12	N/A		
VJ70JA	12	OR	TXL	3768014C	3768015C1	1018	14	N/A		
VN70JA	12	OR	TXL	3768014C1	3768015C1	1018	14	N/A		
RD81D	12	RD	TXL	3768014C1	3768015C1	1018	15	N/A		
RD81DA	12	RD	TXL	3768014C1	3768015C1	1018	16	N/A		
CD14BA	12	RD	TXL	3768014C1	3768015C1	1018	18	N/A		
AA73C	20	LTGN	TXL	3768012C1	3768015C1	1018	21	N/A		
HR72C	12	OR	TXL	3768014C1	3768015C1	1018	22	N/A		
RK78E	14	LTGN	TXL	3768014C	3768015C1	1018	22	N/A		
JC84C	14	LTGN	TXL	3768014C1	3768015C1	1018	24	N/A		
JE14UA	14	LTGN	TXL	3768014C1	3768015C1	1018	24	N/A		
DJ13DP	12	PK	TXL	3768014C1	3768015C1	1018	26	N/A		
HR13X	16	PK	TXL	3768013C1	3768015C1	1018	29	N/A		
QC105	18	LTGN	TXL	3768012C1	3768015C1	1018	30	N/A		
QD105C	16	LTGN	TXL	3768013C1	3768015C1	1018	30	N/A		
QL13A	18	RD	TXL	3768012C1	3768015C1	1018	30	N/A		
QR13AA	18	RD	TXL	3768012C1	3768015C1	1018	30	N/A		
QS13R	18	RD	TXL	3768012C1	3768015C1	1018	30	N/A		
QU14R	18	RD	TXL	3768012C1	3768015C1	1018	30	N/A		
QZ13R3	18	RD	TXL	3768012C1	3768015C1	1018	30	N/A		
NP13DCG	18	PK	TXL	3768012C1	3768015C1	1018	31	N/A		
QA13A	18	PK	TXL	3768012C1	3768015C1	1018	32	N/A		
DJ13DG	12	PK	TXL	3768014C	3768015C1	1018	34	N/A		
NZ22AA	16	PK	TXL	3768013C1	3768015C1	1018	37	N/A		
JA13UA	20	PK	TXL	3768012C1	3768015C1	1018	38	N/A		
UB92#163A	16	PK	TXL	3768013C1	3768015C1	1018	39	N/A		
UD13A	16	PK	GXL	3768013C1	3768015C1	1018	39	N/A		
UF92#163B	16	TN	TXL	3768013C1	3768015C1	1018	39	N/A		
UL92#163	18	TN	TXL	3768012C1	3768015C1	1018	39	N/A		
MQ98F	20	TN	TXL	3768012C1	3768015C1	1018	40	N/A		
NA28D	20	TN	TXL	4062808C1	4063041C1	1020	1	N/A		
NA9CDC	20	GY	TXL	4062808C1	4063041C1	1020	2	N/A		
NA62F	20	DKBL	TXL	4062808C1	4063041C1	1020	3	N/A		

Circuit Number	Gauge	Color	Insulation	Terminal / Splice Number	Connector Part number	Connector Number	Cavity	Seal/Sleeve	Lock 1	Lock 2
NA11-GKF	20	WH	TXL	4062808C1	4063041C1	1020	4	N/A		
WD2-G	1	WH	SGX	3870430C1		1020	A	2643308R1		
WS2-G	1	WH	SGX	3870430C1		1020	A	2643308R1		
AB62DA	16	DKBL	TXL	3613770C1	3613769C1	1021	1	N/A		
AC62DA	16	DKBL	TXL	3613770C1	3613769C1	1021	1	N/A		
UL62Z	18	DKBL	TXL	3613771C1	3613769C1	1021	2	N/A		
KS62DA	16	DKBL	TXL	3613770C1	3613769C1	1021	3	N/A		
KT62DA	16	DKBL	TXL	3613770C1	3613769C1	1021	3	N/A		
KU62DA	16	DKBL	TXL	3613770C1	3613769C1	1021	3	N/A		
YD62A	18	DKBL	TXL	3613771C1	3613769C1	1021	4	N/A		
ZR62DJ	18	DKBL	TXL	3613771C1	3613769C1	1021	5	N/A		
KB62EAL	18	BK	TXL	3613771C1	3613769C1	1021	6	N/A		
VB62RA	18	TN	TXL	3613771C1	3613769C1	1021	7	N/A		
HD62DE	18	DKBL	TXL	3613771C1	3613769C1	1021	8	N/A		
RG62DD	18	DKBL	TXL	3613771C1	3613769C1	1021	10	N/A		
NA62F	20	DKBL	TXL	3613771C1	3613769C1	1021	12	N/A		
QA62K	18	DKBL	TXL	3613771C1	3613769C1	1021	13	N/A		
UF62A	18	DKBL	TXL	3613771C1	3613769C1	1021	14	N/A		
UN62A	18	DKBL	TXL	3613771C1	3613769C1	1021	14	N/A		
WD2	1	RD	SGX	3870430C1		1021	A	2643308R1		
WS2	1	RD	SGX	3870430C1		1021	A	2643308R1		
FB11-GBA	14	WH	TXL	3613770C1	3613769C1	1022	1	N/A		
AB11-GN	18	WH	TXL	3613771C1	3613769C1	1022	2	N/A		
AC11-GN	18	WH	TXL	3613771C1	3613769C1	1022	2	N/A		
RL78RN	18	WH	TXL	3613771C	3613769C1	1022	3	N/A		
RM78RM	18	WH	TXL	3613771C	3613769C1	1022	3	N/A		
KK18-GB	18	WH	TXL	3613771C	3613769C1	1022	4	N/A		
KL18-GB	18	WH	TXL	3613771C	3613769C1	1022	4	N/A		
KM18-GB	18	WH	TXL	3613771C	3613769C1	1022	4	N/A		
VK12-GCL	18	WH	TXL	3613771C	3613769C1	1022	5	N/A		
YA67-G	16	WH	TXL	3613770C1	3613769C1	1022	6	N/A		
YC67-G	16	WH	TXL	3613770C1	3613769C1	1022	6	N/A		
YD67-G	18	WH	TXL	3613771C1	3613769C1	1022	6	N/A		
VJ70-GV	18	WH	TXL	3613771C	3613769C1	1022	7	N/A		
VN70-GV	18	WH	TXL	3613771C	3613769C1	1022	7	N/A		
RF78RR	18	WH	TXL	3613771C	3613769C1	1022	8	N/A		
TH72-GA	18	WH	TXL	3613771C	3613769C1	1022	9	N/A		
HD62-GA	18	WH	TXL	3613771C1	3613769C1	1022	10	N/A		
VG70-GT	18	WH	TXL	3613771C	3613769C1	1022	11	N/A		
VJ70-GT	18	WH	TXL	3613771C	3613769C1	1022	11	N/A		
NP11-GA	18	WH	TXL	3613771C1	3613769C1	1022	12	N/A		
QD105-GCP	16	WH	TXL	3613770C1	3613769C1	1022	13	N/A		
TJ11-GAM	16	WH	TXL	3613770C1	3613769C1	1022	14	N/A		
FB11-GCB	14	WH	TXL	3613770C1	3613769C1	1023	1	N/A		
YG96-GE	18	YL	TXL	3613771C1	3613769C1	1023	2	N/A		
UC92-GAH	18	WH	TXL	3613771C1	3613769C1	1023	3	N/A		
UL92-GAH	18	WH	TXL	3613771C1	3613769C1	1023	3	N/A		
JB11-GCC	14	WH	TXL	3613770C1	3613769C1	1023	4	N/A		
MH11-GBD	18	WH	TXL	3613771C1	3613769C1	1023	5	N/A		
MJ11-GAD	18	WH	TXL	3613771C1	3613769C1	1023	5	N/A		
ML11-GBE	16	WH	TXL	3613770C1	3613769C1	1023	6	N/A		
MP11-GBE	16	WH	TXL	3613770C1	3613769C1	1023	6	N/A		
MQ11-GBE	16	WH	TXL	3613770C1	3613769C1	1023	6	N/A		
VW11-GBE	16	WH	TXL	3613770C1	3613769C1	1023	6	N/A		

Circuit Number	Gauge	Color	Insulation	Terminal / Splice Number	Connector Part number	Connector Number	Cavity	Seal/Sleeve	Lock 1	Lock 2
RF78-GB	16	WH	TXL	3613770C1	3613769C1	1023	7	N/A		
NZ22-GAN	16	WH	TXL	3613770C1	3613769C1	1023	8	N/A		
UH91-GAH	18	WH	TXL	3613771C1	3613769C1	1023	9	N/A		
YD11-GBP	18	WH	TXL	3613771C1	3613769C1	1023	10	N/A		
PC92-GN2	18	WH	TXL	3613771C1	3613769C1	1023	11	N/A		
DL11-GAR	18	WH	TXL	3613771C1	3613769C1	1023	12	N/A		
UF92-GAH	18	WH	TXL	3613771C1	3613769C1	1023	13	N/A		
UN92-GAH	18	WH	TXL	3613771C1	3613769C1	1023	13	N/A		
VW11-GEF	14	WH	TXL	3613770C1	3613769C1	1023	14	N/A		
8A5BC(-)	18	GN	TXL	3534164C1	3601838C1	1024	A	N/A		
9A5BC(-)	18	GN	TXL	3534164C1	3601838C1	1024	A	N/A		
9P5BC(-)	18	GN	TXL	3534164C1	3601838C1	1024	A	N/A		
9X5BC(-)	18	GN	TXL	3534164C1	3601838C1	1024	A	N/A		
GC5BC(-)	18	GN	TXL	3534164C1	3601838C1	1024	A	N/A		
GD5BC(-)	18	GN	TXL	3534164C1	3601838C1	1024	A	N/A		
KB5AL(-)	18	GN	TXL	3534164C1	3601838C1	1024	B	N/A		
8A5BD(-)	18	GN	TXL	3534164C1	3601838C1	1024	C	N/A		
9A5BD(-)	18	GN	TXL	3534164C1	3601838C1	1024	C	N/A		
9P5BD(-)	18	GN	TXL	3534164C1	3601838C1	1024	C	N/A		
9X5BD(-)	18	GN	TXL	3534164C1	3601838C1	1024	C	N/A		
GC5BD(-)	18	GN	TXL	3534164C1	3601838C1	1024	C	N/A		
GD5BD(-)	18	GN	TXL	3534164C1	3601838C1	1024	C	N/A		
8A5BD(-)	18	GN	TXL	3534164C1	3601838C1	1024	D	N/A		
9A5BD(-)	18	GN	TXL	3534164C1	3601838C1	1024	D	N/A		
9P5BD(-)	18	GN	TXL	3534164C1	3601838C1	1024	D	N/A	1661376C1	
9X5BD(-)	18	GN	TXL	3534164C1	3601838C1	1024	D	N/A		
GC5BD(-)	18	GN	TXL	3534164C1	3601838C1	1024	D	N/A		
GD5BD(-)	18	GN	TXL	3534164C1	3601838C1	1024	D	N/A		
KB5CCB(-)	18	GN	TXL	3534164C1	3601838C1	1024	E	N/A		
8A5BE(-)	18	GN	TXL	3534164C1	3601838C1	1024	F	N/A		
9A5BE(-)	18	GN	TXL	3534164C1	3601838C1	1024	F	N/A		
9P5BE(-)	18	GN	TXL	3534164C1	3601838C1	1024	F	N/A	1684263C1	
9X5BE(-)	18	GN	TXL	3534164C1	3601838C1	1024	F	N/A		
GC5BE(-)	18	GN	TXL	3534164C1	3601838C1	1024	F	N/A		
GD5BE(-)	18	GN	TXL	3534164C1	3601838C1	1024	F	N/A		
8A5BE(+)	18	YL	TXL	3534164C1	3601838C1	1024	G	N/A		
9A5BE(+)	18	YL	TXL	3534164C1	3601838C1	1024	G	N/A		
9P5BE(+)	18	YL	TXL	3534164C1	3601838C1	1024	G	N/A	1661874C1	
9X5BE(+)	18	YL	TXL	3534164C1	3601838C1	1024	G	N/A		
GC5BE(+)	18	YL	TXL	3534164C1	3601838C1	1024	G	N/A		
GD5BE(+)	18	YL	TXL	3534164C1	3601838C1	1024	G	N/A		
KB5CCB(+)	18	YL	TXL	3534164C1	3601838C1	1024	H	N/A		
8A5BD(+)	18	YL	TXL	3534164C1	3601838C1	1024	J	N/A		
9A5BD(+)	18	YL	TXL	3534164C1	3601838C1	1024	J	N/A		
9P5BD(+)	18	YL	TXL	3534164C1	3601838C1	1024	J	N/A		
9X5BD(+)	18	YL	TXL	3534164C1	3601838C1	1024	J	N/A		
GC5BD(+)	18	YL	TXL	3534164C1	3601838C1	1024	J	N/A		
GD5BD(+)	18	YL	TXL	3534164C1	3601838C1	1024	J	N/A		
8A5BD(+)	18	YL	TXL	3534164C1	3601838C1	1024	K	N/A		
9A5BD(+)	18	YL	TXL	3534164C1	3601838C1	1024	K	N/A		
9P5BD(+)	18	YL	TXL	3534164C1	3601838C1	1024	K	N/A		
9X5BD(+)	18	YL	TXL	3534164C1	3601838C1	1024	K	N/A		
GC5BD(+)	18	YL	TXL	3534164C1	3601838C1	1024	K	N/A		
GD5BD(+)	18	YL	TXL	3534164C1	3601838C1	1024	K	N/A		

Circuit Number	Gauge	Color	Insulation	Terminal / Splice Number	Connector Part number	Connector Number	Cavity	Seal/Sleeve	Lock 1	Lock 2
KB5AL(+)	18	YL	TXL	3534164C1	3601838C1	1024	L	N/A		
8A5BC(+)	18	YL	TXL	3534164C1	3601838C1	1024	M	N/A		
9A5BC(+)	18	YL	TXL	3534164C1	3601838C1	1024	M	N/A		
9P5BC(+)	18	YL	TXL	3534164C1	3601838C1	1024	M	N/A		
9X5BC(+)	18	YL	TXL	3534164C1	3601838C1	1024	M	N/A		
GC5BC(+)	18	YL	TXL	3534164C1	3601838C1	1024	M	N/A		
GD5BC(+)	18	YL	TXL	3534164C1	3601838C1	1024	M	N/A		
8A5BG(-)	18	GN	TXL	3534164C1	3601838C1	1025	A	N/A		
9F5BE(-)	18	GN	TXL	3534164C1	3601838C1	1025	A	N/A		
9J5BE(-)	18	GN	TXL	3534164C1	3601838C1	1025	A	N/A	3522253C1	
9P5BG(-)	18	GN	TXL	3534164C1	3601838C1	1025	A	N/A		
GC5BG(-)	18	GN	TXL	3534164C1	3601838C1	1025	A	N/A		
GD5BG(-)	18	GN	TXL	3534164C1	3601838C1	1025	A	N/A		
DL5V(-)	18	GN	TXL	3534164C1	3601838C1	1025	B	N/A		
MH5CCA(-)	18	GN	TXL	3534164C1	3601838C1	1025	B	N/A		
MJ5CCA(-)	18	GN	TXL	3534164C1	3601838C1	1025	B	N/A		
8A5BH(-)	18	GN	TXL	3534164C1	3601838C1	1025	C	N/A		
9F5BF(-)	18	GN	TXL	3534164C1	3601838C1	1025	C	N/A		
9J5BF(-)	18	GN	TXL	3534164C1	3601838C1	1025	C	N/A		
9P5BH(-)	18	GN	TXL	3534164C1	3601838C1	1025	C	N/A		
GC5BH(-)	18	GN	TXL	3534164C1	3601838C1	1025	C	N/A		
GD5BH(-)	18	GN	TXL	3534164C1	3601838C1	1025	C	N/A		
8A5BH(-)	18	GN	TXL	3534164C1	3601838C1	1025	D	N/A		
9F5BF(-)	18	GN	TXL	3534164C1	3601838C1	1025	D	N/A		
9J5BF(-)	18	GN	TXL	3534164C1	3601838C1	1025	D	N/A		
9P5BH(-)	18	GN	TXL	3534164C1	3601838C1	1025	D	N/A		
GC5BH(-)	18	GN	TXL	3534164C1	3601838C1	1025	D	N/A		
GD5BH(-)	18	GN	TXL	3534164C1	3601838C1	1025	D	N/A		
MK5TS(-)	20	GN	193	3535484C1	3601838C1	1025	E	N/A		
MN5BF(-)	18	GN	TXL	3534164C1	3601838C1	1025	E	N/A		
MP5CG(-)	18	GN	TXL	3534164C1	3601838C1	1025	E	N/A		
MR5BF(-)	18	GN	TXL	3534164C1	3601838C1	1025	E	N/A		
VW5CC(-)	18	GN	TXL	3534164C1	3601838C1	1025	E	N/A		
8A5BJ(-)	18	GN	TXL	3534164C1	3601838C1	1025	F	N/A		
9F5BG(-)	18	GN	TXL	3534164C1	3601838C1	1025	F	N/A		
9J5BG(-)	18	GN	TXL	3534164C1	3601838C1	1025	F	N/A	1661874C1	
9P5BJ(-)	18	GN	TXL	3534164C1	3601838C1	1025	F	N/A		
GC5BJ(-)	18	GN	TXL	3534164C1	3601838C1	1025	F	N/A		
GD5BJ(-)	18	GN	TXL	3534164C1	3601838C1	1025	F	N/A		
8A5BJ(+)	18	YL	TXL	3534164C1	3601838C1	1025	G	N/A		
9F5BG(+)	18	YL	TXL	3534164C1	3601838C1	1025	G	N/A		
9J5BG(+)	18	YL	TXL	3534164C1	3601838C1	1025	G	N/A	3538636C1	
9P5BJ(+)	18	YL	TXL	3534164C1	3601838C1	1025	G	N/A		
GC5BJ(+)	18	YL	TXL	3534164C1	3601838C1	1025	G	N/A		
GD5BJ(+)	18	YL	TXL	3534164C1	3601838C1	1025	G	N/A		
MK5TS(+)	20	YL	193	3535484C1	3601838C1	1025	H	N/A		
MN5BF(+)	18	YL	TXL	3534164C1	3601838C1	1025	H	N/A		
MP5CG(+)	18	YL	TXL	3534164C1	3601838C1	1025	H	N/A		
MR5BF(+)	18	YL	TXL	3534164C1	3601838C1	1025	H	N/A		
VW5CC(+)	18	YL	TXL	3534164C1	3601838C1	1025	H	N/A		
8A5BH(+)	18	YL	TXL	3534164C1	3601838C1	1025	J	N/A		
9F5BF(+)	18	YL	TXL	3534164C1	3601838C1	1025	J	N/A		
9J5BF(+)	18	YL	TXL	3534164C1	3601838C1	1025	J	N/A	3525875C1	
9P5BH(+)	18	YL	TXL	3534164C1	3601838C1	1025	J	N/A		

Circuit Number	Gauge	Color	Insulation	Terminal / Splice Number	Connector Part number	Connector Number	Cavity	Seal/Sleeve	Lock 1	Lock 2
GC5BH(+)	18	YL	TXL	3534164C1	3601838C1	1025	J	N/A		
GD5BH(+)	18	YL	TXL	3534164C1	3601838C1	1025	J	N/A		
8A5BH(+)	18	YL	TXL	3534164C1	3601838C1	1025	K	N/A		
9F5BF(+)	18	YL	TXL	3534164C1	3601838C1	1025	K	N/A		
9J5BF(+)	18	YL	TXL	3534164C1	3601838C1	1025	K	N/A	3525873C1	
9P5BH(+)	18	YL	TXL	3534164C1	3601838C1	1025	K	N/A		
GC5BH(+)	18	YL	TXL	3534164C1	3601838C1	1025	K	N/A		
GD5BH(+)	18	YL	TXL	3534164C1	3601838C1	1025	K	N/A		
DL5V(+)	18	YL	TXL	3534164C1	3601838C1	1025	L	N/A		
MH5CCA(+)	18	YL	TXL	3534164C1	3601838C1	1025	L	N/A		
MJ5CCA(+)	18	YL	TXL	3534164C1	3601838C1	1025	L	N/A		
8A5BG(+)	18	YL	TXL	3534164C1	3601838C1	1025	M	N/A		
9F5BE(+)	18	YL	TXL	3534164C1	3601838C1	1025	M	N/A		
9J5BE(+)	18	YL	TXL	3534164C1	3601838C1	1025	M	N/A		
9P5BG(+)	18	YL	TXL	3534164C1	3601838C1	1025	M	N/A	3601925C1	1689501C1
GC5BG(+)	18	YL	TXL	3534164C1	3601838C1	1025	M	N/A		
GD5BG(+)	18	YL	TXL	3534164C1	3601838C1	1025	M	N/A		
9T5AG(-)	18	GN	TXL	3534164C1	3601838C1	1026	A	N/A		
9Y5AG(-)	18	GN	TXL	3534164C1	3601838C1	1026	A	N/A		
NP5DZ(-)	18	GN	TXL	3534164C1	3601838C1	1026	B	N/A		
9T5AH(-)	18	GN	TXL	3534164C1	3601838C1	1026	C	N/A		
9Y5AH(-)	18	GN	TXL	3534164C1	3601838C1	1026	C	N/A		
9T5AH(-)	18	GN	TXL	3534164C1	3601838C1	1026	D	N/A		
9Y5AH(-)	18	GN	TXL	3534164C1	3601838C1	1026	D	N/A		
NG5L(-)	20	GN	193	3535484C1	3601838C1	1026	E	N/A		
9T5AJ(-)	18	GN	TXL	3534164C1	3601838C1	1026	F	N/A		
9Y5AJ(-)	18	GN	TXL	3534164C1	3601838C1	1026	F	N/A		
9T5AJ(+)	18	YL	TXL	3534164C1	3601838C1	1026	G	N/A		
9Y5AJ(+)	18	YL	TXL	3534164C1	3601838C1	1026	G	N/A		
NG5L(+)	20	YL	193	3535484C1	3601838C1	1026	H	N/A		
9T5AH(+)	18	YL	TXL	3534164C1	3601838C1	1026	J	N/A		
9Y5AH(+)	18	YL	TXL	3534164C1	3601838C1	1026	J	N/A		
9T5AH(+)	18	YL	TXL	3534164C1	3601838C1	1026	K	N/A		
9Y5AH(+)	18	YL	TXL	3534164C1	3601838C1	1026	K	N/A		
NP5DZ(+)	18	YL	TXL	3534164C1	3601838C1	1026	L	N/A		
9T5AG(+)	18	YL	TXL	3534164C1	3601838C1	1026	M	N/A		
9Y5AG(+)	18	YL	TXL	3534164C1	3601838C1	1026	M	N/A		
FB11-GCC	14	WH	TXL	3613770C1	3613769C1	1027	1	N/A		
NA11-GKF	20	WH	TXL	3613771C1	3613769C1	1027	2	N/A		
MM11-GBE	14	WH	TXL	3613770C1	3613769C1	1027	3	N/A		
MM11-GBH	18	WH	TXL	3613771C1	3613769C1	1027	4	N/A		
ZR12-GC	16	WH	TXL	3613770C1	3613769C1	1027	5	N/A		
VA92#117B	18	TN	TXL	3613771C	3613769C1	1027	6	N/A		
XT90HC	18	GY	TXL	3613771C1	3613769C1	1027	7	N/A		
HU103BA	16	LTGN	GXL	3613770C1	3613769C1	1027	8	N/A		
VB92-GAP	18	WH	TXL	3613771C1	3613769C1	1027	9	N/A		
VB92-GAL	18	WH	TXL	3613771C1	3613769C1	1027	11	N/A		
RF78-GA	16	WH	TXL	3613770C1	3613769C1	1027	12	N/A		
RK78-GC	18	WH	TXL	3613771C1	3613769C1	1027	13	N/A		
RK78-GD	18	WH	TXL	3613771C	3613769C1	1027	14	N/A		
8A5BE(-)	18	GN	TXL	3534164C1	3601838C1	1028	A	N/A		
9A5BE(-)	18	GN	TXL	3534164C1	3601838C1	1028	A	N/A		
9F5BC(-)	18	GN	TXL	3534164C1	3601838C1	1028	A	N/A		
9J5BC(-)	18	GN	TXL	3534164C1	3601838C1	1028	A	N/A	1671608C1	

Circuit Number	Gauge	Color	Insulation	Terminal / Splice Number	Connector Part number	Connector Number	Cavity	Seal/Sleeve	Lock 1	Lock 2
9P5BE(-)	18	GN	TXL	3534164C1	3601838C1	1028	A	N/A	1664408C1	
9X5BE(-)	18	GN	TXL	3534164C1	3601838C1	1028	A	N/A		
GC5BE(-)	18	GN	TXL	3534164C1	3601838C1	1028	A	N/A		
GD5BE(-)	18	GN	TXL	3534164C1	3601838C1	1028	A	N/A		
KB5CCC(-)	18	GN	TXL	3534164C1	3601838C1	1028	B	N/A		
8A5BF(-)	18	GN	TXL	3534164C1	3601838C1	1028	C	N/A		
9A5BF(-)	18	GN	TXL	3534164C1	3601838C1	1028	C	N/A		
9F5BD(-)	18	GN	TXL	3534164C1	3601838C1	1028	C	N/A		
9J5BD(-)	18	GN	TXL	3534164C1	3601838C1	1028	C	N/A	2039342C1	
9P5BF(-)	18	GN	TXL	3534164C1	3601838C1	1028	C	N/A	3564169C1	
9X5BF(-)	18	GN	TXL	3534164C1	3601838C1	1028	C	N/A		
GC5BF(-)	18	GN	TXL	3534164C1	3601838C1	1028	C	N/A		
GD5BF(-)	18	GN	TXL	3534164C1	3601838C1	1028	C	N/A		
8A5BF(-)	18	GN	TXL	3534164C1	3601838C1	1028	D	N/A		
9A5BF(-)	18	GN	TXL	3534164C1	3601838C1	1028	D	N/A		
9F5BD(-)	18	GN	TXL	3534164C1	3601838C1	1028	D	N/A		
9J5BD(-)	18	GN	TXL	3534164C1	3601838C1	1028	D	N/A		
9P5BF(-)	18	GN	TXL	3534164C1	3601838C1	1028	D	N/A	3540454C1	3551897C1
9X5BF(-)	18	GN	TXL	3534164C1	3601838C1	1028	D	N/A		
GC5BF(-)	18	GN	TXL	3534164C1	3601838C1	1028	D	N/A		
GD5BF(-)	18	GN	TXL	3534164C1	3601838C1	1028	D	N/A		
QL5(-)	18	GN	TXL	3534164C1	3601838C1	1028	E	N/A		
QR5(-)	18	GN	TXL	3534164C1	3601838C1	1028	E	N/A		
QS5B(-)	18	GN	TXL	3534164C1	3601838C1	1028	E	N/A		
QU5(-)	18	GN	TXL	3534164C1	3601838C1	1028	E	N/A		
QZ5D3(-)	18	GN	TXL	3534164C1	3601838C1	1028	E	N/A		
8A5BG(-)	18	GN	TXL	3534164C1	3601838C1	1028	F	N/A		
9A5BG(-)	18	GN	TXL	3534164C1	3601838C1	1028	F	N/A		
9F5BE(-)	18	GN	TXL	3534164C1	3601838C1	1028	F	N/A		
9J5BE(-)	18	GN	TXL	3534164C1	3601838C1	1028	F	N/A	1661874C1	
9P5BG(-)	18	GN	TXL	3534164C1	3601838C1	1028	F	N/A		
9X5BG(-)	18	GN	TXL	3534164C1	3601838C1	1028	F	N/A		
GC5BG(-)	18	GN	TXL	3534164C1	3601838C1	1028	F	N/A		
GD5BG(-)	18	GN	TXL	3534164C1	3601838C1	1028	F	N/A		
8A5BG(+)	18	YL	TXL	3534164C1	3601838C1	1028	G	N/A		
9A5BG(+)	18	YL	TXL	3534164C1	3601838C1	1028	G	N/A		
9F5BE(+)	18	YL	TXL	3534164C1	3601838C1	1028	G	N/A		
9J5BE(+)	18	YL	TXL	3534164C1	3601838C1	1028	G	N/A		
9P5BG(+)	18	YL	TXL	3534164C1	3601838C1	1028	G	N/A		
9X5BG(+)	18	YL	TXL	3534164C1	3601838C1	1028	G	N/A		
GC5BG(+)	18	YL	TXL	3534164C1	3601838C1	1028	G	N/A		
GD5BG(+)	18	YL	TXL	3534164C1	3601838C1	1028	G	N/A		
QL5(+)	18	YL	TXL	3534164C1	3601838C1	1028	H	N/A		
QR5(+)	18	YL	TXL	3534164C1	3601838C1	1028	H	N/A		
QS5B(+)	18	YL	TXL	3534164C1	3601838C1	1028	H	N/A		
QU5(+)	18	YL	TXL	3534164C1	3601838C1	1028	H	N/A		
QZ5D3(+)	18	YL	TXL	3534164C1	3601838C1	1028	H	N/A		
8A5BF(+)	18	YL	TXL	3534164C1	3601838C1	1028	J	N/A		
9A5BF(+)	18	YL	TXL	3534164C1	3601838C1	1028	J	N/A		
9F5BD(+)	18	YL	TXL	3534164C1	3601838C1	1028	J	N/A		
9J5BD(+)	18	YL	TXL	3534164C1	3601838C1	1028	J	N/A		
9P5BF(+)	18	YL	TXL	3534164C1	3601838C1	1028	J	N/A		
9X5BF(+)	18	YL	TXL	3534164C1	3601838C1	1028	J	N/A		
GC5BF(+)	18	YL	TXL	3534164C1	3601838C1	1028	J	N/A		

Circuit Number	Gauge	Color	Insulation	Terminal / Splice Number	Connector Part number	Connector Number	Cavity	Seal/Sleeve	Lock 1	Lock 2
GD5BF(+)	18	YL	TXL	3534164C1	3601838C1	1028	J	N/A		
8A5BF(+)	18	YL	TXL	3534164C1	3601838C1	1028	K	N/A		
9A5BF(+)	18	YL	TXL	3534164C1	3601838C1	1028	K	N/A		
9F5BD(+)	18	YL	TXL	3534164C1	3601838C1	1028	K	N/A		
9J5BD(+)	18	YL	TXL	3534164C1	3601838C1	1028	K	N/A	1664408C1	
9P5BF(+)	18	YL	TXL	3534164C1	3601838C1	1028	K	N/A		
9X5BF(+)	18	YL	TXL	3534164C1	3601838C1	1028	K	N/A		
GC5BF(+)	18	YL	TXL	3534164C1	3601838C1	1028	K	N/A		
GD5BF(+)	18	YL	TXL	3534164C1	3601838C1	1028	K	N/A		
KB5CCC(+)	18	YL	TXL	3534164C1	3601838C1	1028	L	N/A		
8A5BE(+)	18	YL	TXL	3534164C1	3601838C1	1028	M	N/A		
9A5BE(+)	18	YL	TXL	3534164C1	3601838C1	1028	M	N/A		
9F5BC(+)	18	YL	TXL	3534164C1	3601838C1	1028	M	N/A		
9J5BC(+)	18	YL	TXL	3534164C1	3601838C1	1028	M	N/A	1667771C1	1667771C1
9P5BE(+)	18	YL	TXL	3534164C1	3601838C1	1028	M	N/A	1667771C1	
9X5BE(+)	18	YL	TXL	3534164C1	3601838C1	1028	M	N/A		
GC5BE(+)	18	YL	TXL	3534164C1	3601838C1	1028	M	N/A		
GD5BE(+)	18	YL	TXL	3534164C1	3601838C1	1028	M	N/A		
HD85AA	18	GY	TXL	1661224C1	3928059C1	1029	2	N/A		
HD85AB	18	GY	TXL	1661224C1	3928059C1	1029	4	N/A		
HD62-GA	18	WH	TXL	1661224C1	3928059C1	1029	11	N/A		
HD62DE	18	DKBL	TXL	1661224C1	3928059C1	1029	12	N/A		
WE2-G	1	WH	SGX	3870430C1		1030	A	2643308R1		
WT2-G	1	WH	SGX	3870430C1		1030	A	2643308R1		
WE2	1	RD	SGX	3870430C1		1031	A	2643308R1		
WT2	1	RD	SGX	3870430C1		1031	A	2643308R1		
WF2-G	1	WH	SGX	2241343C1		1040	1	3812582R1		
WF2-G	1	WH	SGX	2241343C1		1040	A	3812582R1		
WU2-G	1	WH	SGX	2241343C1		1040	A	3812582R1	1667530C1	
WF2	1	RD	SGX	3870430C1		1041	1	2643308R1		
WF2	1	RD	SGX	3870430C1		1041	A	2643308R1		
WU2	1	RD	SGX	3870430C1		1041	A	2643308R1		
WG2-G	1	WH	SGX	2241343C1		1050	1	3812582R1		
WG2-G	2	WH	SGX	2241318C1		1050	A	3812582R1		
WV2-G	2	WH	SGX	2241318C1		1050	A	3812582R1		
WG2	1	RD	SGX	3870430C1		1051	1	2643308R1		
WG2	2	RD	SGX	2241353C1		1051	A	3812582R1		
WV2	2	RD	SGX	2241353C1		1051	A	3812582R1		
ZB50B	18	YL	TXL	1661261C1	1661259C1	1052	A	N/A		
ZD50B	18	YL	TXL	1661261C1	1661259C1	1052	A	N/A		
ZB50A	18	YL	TXL	1661261C1	1661259C1	1052	B	N/A		
ZD50A	18	YL	TXL	1661261C1	1661259C1	1052	B	N/A		
WC2-G	0	BK	SGX	475968C1		1060	1	2643308R1		
WR2-G	0	BK	SGX	475968C1		1060	1	2643308R1		
WC2	0	RD	SGX	2241359C1		1061	A	3812583R1		
WR2	0	RD	SGX	2241359C1		1061	A	3812583R1		
WK2-G	2	WH	SGX	2241353C1		1070	1	3812582R1		
WK2-G	2	WH	SGX	2012973C1		1070	A	2644004R1		
WW2-G	2	WH	SGX	2012973C1		1070	A	2644004R1		
WK2	2	RD	SGX	2241353C1		1071	1	3812582R1		
WK2	2	RD	SGX	2012973C1		1071	A	2644004R1		
WW2	2	RD	SGX	2012973C1		1071	A	2644004R1		
WX2-G	2	WH	SGX	2241332C1		1073	1	3812582R1		
WL2-G	0	BK	SGX	2241359C1		1080	1	3812583R1		

Circuit Number	Gauge	Color	Insulation	Terminal / Splice Number	Connector Part number	Connector Number	Cavity	Seal/Sleeve	Lock 1	Lock 2
WL2-G	0	BK	SGX	2241359C1		1080	A	3812583R1		
WX2-G	0	BK	SGX	2241359C1		1080	A	3812583R1		
WL2	0	RD	SGX	2241359C1		1081	1	3812583R1		
WL2	0	RD	SGX	2241359C1		1081	A	3812583R1		
WX2	0	RD	SGX	2241359C1		1081	A	3812583R1		
EB15	18	RD	TXL	1661208C1	3546518C1	1100	A	N/A		
LB17H	18	PK	TXL	1661208C1	3546518C1	1100	B	N/A		
LC17HA	18	PK	TXL	1661208C1	3546518C1	1100	B	N/A		
LD149B	16	GY	TXL	1661209C1	3546518C1	1100	B	N/A		
LE149B	16	GY	TXL	1661209C1	3546518C1	1100	B	N/A		
EC149	18	GY	TXL	1661208C1	3546518C1	1100	C	N/A		
EK149	14	GY	TXL	3566715C1	3546518C1	1100	C	N/A		
DB149A	18	GY	TXL	1661208C1	3546518C1	1100	D	N/A		
DD13A	14	GY	TXL	3566715C1	3546518C1	1100	D	N/A		
DG149A	18	GY	TXL	1661208C1	3546518C1	1100	D	N/A		
DH13	14	GY	TXL	3566715C1	3546518C1	1100	D	N/A		
ZR12ZA	18	LTBL	TXL	1661224C1	3928059C1	1106	2	N/A		
ZR12ZB	18	LTBL	TXL	1661224C1	3928059C1	1106	4	N/A		
ZR12-GE	18	WH	TXL	1661224C1	3928059C1	1106	9	N/A		
ZR12ZC	18	LTBL	TXL	1661224C1	3928059C1	1106	10	N/A		
ZR12-GA	16	WH	TXL	1661226C1	3928059C1	1106	11	N/A		
ZR12ZC	18	LTBL	TXL	3541250C1	3928059C1	1106	12	N/A		
ZR62DJ	18	DKBL	TXL	3541250C1	3928059C1	1106	12	N/A		
QA9Z	18	GY	TXL	1661224C1	3928059C1	1107	1	N/A		
QA9ZC	18	GY	TXL	1661224C1	3928059C1	1107	2	N/A		
QA23EC	18	TN	TXL	1661224C1	3928059C1	1107	9	N/A		
QA13DB	18	PK	TXL	1661224C1	3928059C1	1107	10	N/A		
QA11-GAD	18	WH	TXL	1661224C1	3928059C1	1107	11	N/A		
QA62K	18	DKBL	TXL	1661224C1	3928059C1	1107	12	N/A		
KS59JD	18	GY	TXL	1661224C1	3928059C1	1108	2	N/A		
KT59JD	18	GY	TXL	1661224C1	3928059C1	1108	2	N/A		
KU59JD	18	GY	TXL	1661224C1	3928059C1	1108	2	N/A		
KS59KE	18	GY	TXL	1661224C1	3928059C1	1108	4	N/A		
KT59KE	18	GY	TXL	1661224C1	3928059C1	1108	4	N/A		
KU59KE	18	GY	TXL	1661224C1	3928059C1	1108	4	N/A		
KS59-GBA	18	WH	TXL	1661224C1	3928059C1	1108	9	N/A		
KT59-GBA	18	WH	TXL	1661224C1	3928059C1	1108	9	N/A		
KU59GEA	18	WH	TXL	1661224C1	3928059C1	1108	9	N/A		
KS59TA	18	GY	TXL	1661224C1	3928059C1	1108	10	N/A		
KT59TA	18	GY	TXL	1661224C1	3928059C1	1108	10	N/A		
KU59TA	18	GY	TXL	1661224C1	3928059C1	1108	10	N/A		
KS59-GA	18	WH	TXL	1661224C1	3928059C1	1108	11	N/A		
KT59-GA	18	WH	TXL	1661224C1	3928059C1	1108	11	N/A		
KU59-GA	18	WH	TXL	1661224C1	3928059C1	1108	11	N/A		
KS62Q	18	DKBL	TXL	1661224C1	3928059C1	1108	12	N/A		
KT62DB	16	DKBL	TXL	1661226C1	3928059C1	1108	12	N/A		
KU62Q	18	DKBL	TXL	1661224C1	3928059C1	1108	12	N/A		
XC44A	18	GY	TXL	3727971C1	3518182C1	1109	1	N/A		
XC90-M	18	GY	TXL	3727971C1	3518182C1	1109	2	N/A		
QI79A	18	GY	TXL	1661262C1	1661260C1	1112	A	N/A		
QW79B	18	GY	GXL	1661262C1	1661260C1	1112	A	N/A		
QI9BB	18	GY	TXL	1661262C1	1661260C1	1112	B	N/A		
QW9BC	18	GY	GXL	1661262C1	1661260C1	1112	B	N/A		
QW79C	18	GY	GXL	1661262C1	1661260C1	1113	A	N/A		

Circuit Number	Gauge	Color	Insulation	Terminal / Splice Number	Connector Part number	Connector Number	Cavity	Seal/Sleeve	Lock 1	Lock 2
QW9BD	18	GY	GXL	1661262C1	1661260C1	1113	B	N/A		
WA2-G	2	WH	SGX	475962C1		1200	1	2644004R1		
WK2-G	2	WH	SGX	475962C1		1200	1	2644004R1		
WX2-G	2	WH	SGX	475962C1		1200	1	2644004R1		
WA2-G	2	WH	SGX	475963C1		1200	A	2644004R1		
WG2-G	2	WH	SGX	475963C1		1200	A	2644004R1		
WA2-FLA	10	RS	FUS	338892C2		1201	1	2644054R1		
WA2-FLB	10	RS	FUS	338892C2		1201	1	2644054R1		
WK2-FLA	10	RS	FUS	338892C2		1201	1	2644054R1		
WK2-FLB	10	RS	FUS	338892C2		1201	1	2644054R1		
WX2-FLA	10	RS	FUS	338892C2		1201	1	2644054R1		
WX2-FLB	10	RS	FUS	338892C2		1201	1	2644054R1		
WA2-FLA	10	RS	FUS	338892C2		1201	A	2644054R1		
WA2-FLB	10	RS	FUS	338892C2		1201	A	2644054R1		
WG2-FLA	10	RS	FUS	338892C2		1201	A	2644054R1		
WG2-FLB	10	RS	FUS	338892C2		1201	A	2644054R1		
AD60-G	18	WH	TXL	1661261C1	3767197C1	1202	A	N/A		
AE60-G	18	WH	TXL	1661261C1	3767197C1	1202	A	N/A		
AB60C	18	OR	TXL	1661261C1	3767197C1	1202	B	N/A		
AC60C	18	OR	TXL	1661261C1	3767197C1	1202	B	N/A		
AA60A	18	OR	TXL	1661261C1	3767197C1	1202	C	N/A		
KA60B	18	GY	TXL	1661261C1	3767197C1	1202	D	N/A		
KR59H	18	GY	TXL	1661261C1	1661889C1	1227	A	N/A		
KR59K	18	GY	TXL	1661261C1	1661889C1	1227	B	N/A		
KR59-GBN	16	WH	TXL	1661261C1	1661889C1	1227	C	N/A		
9S5AH(+)	18	YL	TXL	3597102C1	3597143C1	1300	1	N/A	3601925C1	
9T5AK(+)	18	YL	TXL	3597102C1	3597143C1	1300	1	N/A		
9W5AH(+)	18	YL	TXL	3597102C1	3597143C1	1300	1	N/A		
9Y5AK(+)	18	YL	TXL	3597102C1	3597143C1	1300	1	N/A		
WB2-G	1	WH	SGX	475964C1		1300	1	2644002R1		
WF2-G	1	WH	SGX	475964C1		1300	1	2644002R1		
WG2-G	1	WH	SGX	475964C1		1300	1	2644002R1		
9S5AH(-)	18	GN	TXL	3597102C1	3597143C1	1300	2	N/A		
9T5AK(-)	18	GN	TXL	3597102C1	3597143C1	1300	2	N/A		
9W5AH(-)	18	GN	TXL	3597102C1	3597143C1	1300	2	N/A		
9Y5AK(-)	18	GN	TXL	3597102C1	3597143C1	1300	2	N/A		
SM86AE	18	LTGN	TXL	3597102C1	3597143C1	1300	4	N/A		
SM86P	18	LTGN	TXL	3597102C1	3597143C1	1300	7	N/A		
SM86-G	18	WH	TXL	3597102C1	3597143C1	1300	8	N/A		
SP86DA	18	LTGN	TXL	3597102C1	3597143C1	1300	9	N/A		
SP86EA	18	LTGN	TXL	3597102C1	3597143C1	1300	10	N/A		
MQ86K	18	LTGN	TXL	3597102C1	3597143C1	1300	11	N/A		
SQ86K	18	LTGN	TXL	3597102C1	3597143C1	1300	11	N/A		
MQ86L	18	LTGN	TXL	3597102C1	3597143C1	1300	12	N/A		
SQ86L	18	LTGN	TXL	3597102C1	3597143C1	1300	12	N/A		
MQ86H	18	LTGN	TXL	3597102C1	3597143C1	1300	13	N/A		
SQ86H	18	LTGN	TXL	3597102C1	3597143C1	1300	13	N/A		
MQ86J	18	LTGN	TXL	3597102C1	3597143C1	1300	14	N/A		
SQ86J	18	LTGN	TXL	3597102C1	3597143C1	1300	14	N/A		
SP86BA	18	LTGN	TXL	3597102C1	3597143C1	1300	15	N/A		
SP86CA	18	LTGN	TXL	3597102C1	3597143C1	1300	16	N/A		
WB2-G	1	WH	SGX	475965C1		1300	A	2644004R1		
WD2-G	1	WH	SGX	475965C1		1300	A	2644004R1		
WE2-G	1	WH	SGX	475965C1		1300	A	2644004R1		

Circuit Number	Gauge	Color	Insulation	Terminal / Splice Number	Connector Part number	Connector Number	Cavity	Seal/Sleeve	Lock 1	Lock 2
WF2-G	1	WH	SGX	475965C1		1300	A	2644004R1		
WB2-FLA	8	LTBL	FUS	2241415C1		1301	1	3812582R1		
WB2-FLB	8	LTBL	FUS	2241415C1		1301	1	3812582R1		
WF2-FLA	8	LTBL	FUS	2241415C1		1301	1	3812582R1		
WF2-FLB	8	LTBL	FUS	2241415C1		1301	1	3812582R1		
WG2-FLA	8	LTBL	FUS	2241415C1		1301	1	3812582R1		
WG2-FLB	8	LTBL	FUS	2241415C1		1301	1	3812582R1		
NE86AA	20	LTGN	TXL	3600062C1	3600061C1	1301	7	N/A		
NE86AC	20	LTGN	TXL	3600062C1	3600061C1	1301	9	N/A		
NE86AB	20	LTGN	TXL	3600062C1	3600061C1	1301	10	N/A		
NE86AD	20	LTGN	TXL	3600062C1	3600061C1	1301	11	N/A		
SR86A(+)	20	LTGN	TXL	3600062C1	3600061C1	1301	15	N/A		
SR86A(-)	20	LTGN	TXL	3600062C1	3600061C1	1301	16	N/A		
WB2-FL	6	TN	FUS	338892C2		1301	A	2644054R1		
WD2-FL	6	TN	FUS	338892C2		1301	A	2644054R1		
WE2-FL	6	TN	FUS	338892C2		1301	A	2644054R1		
WF2-FL	6	TN	FUS	338892C2		1301	A	2644054R1		
MK14TS	20	RD	TXL	3598294C1	4089980C1	1349	1	N/A		
MK13TS	20	PK	TXL	3598294C1	4089980C1	1349	2	N/A		
MK11-GTS	20	WH	TXL	3598294C1	4089980C1	1349	3	N/A		
MK5TS(+)	20	YL	193	3598294C1	3598293C1	1350	1	N/A		
MK5TS(-)	20	GN	193	3598294C1	3598293C1	1350	6	N/A		
XA94-GA	12	WH	TXL	3597157C1	3596926C1	1400	1	N/A		
XA94V	18	GY	TXL	3598072C1	3596926C1	1400	3	N/A		
XB94BN	16	GY	TXL	3598073C1	3596926C1	1400	4	N/A		
XB94BM	16	GY	TXL	3598073C1	3596926C1	1400	5	N/A		
9B5N(-)	18	GN	TXL	3598072C1	3596926C1	1400	7	N/A	1661874C1	
9C5N(-)	18	GN	TXL	3598072C1	3596926C1	1400	7	N/A		
9K5N(-)	18	GN	TXL	3598072C1	3596926C1	1400	7	N/A		
9N5N(-)	18	GN	TXL	3598072C1	3596926C1	1400	7	N/A		
GB5N(-)	18	GN	TXL	3598072C1	3596926C1	1400	7	N/A		
GF5N(-)	18	GN	TXL	3598072C1	3596926C1	1400	7	N/A		
GM5N(-)	18	GN	TXL	3598072C1	3596926C1	1400	7	N/A		
GN5N(-)	18	GN	TXL	3598072C1	3596926C1	1400	7	N/A		
9B5N(+)	18	YL	TXL	3598072C1	3596926C1	1400	8	N/A		
9C5N(+)	18	YL	TXL	3598072C1	3596926C1	1400	8	N/A		
9K5N(+)	18	YL	TXL	3598072C1	3596926C1	1400	8	N/A		
9N5N(+)	18	YL	TXL	3598072C1	3596926C1	1400	8	N/A		
GB5N(+)	18	YL	TXL	3598072C1	3596926C1	1400	8	N/A		
GF5N(+)	18	YL	TXL	3598072C1	3596926C1	1400	8	N/A		
GM5N(+)	18	YL	TXL	3598072C1	3596926C1	1400	8	N/A		
GN5N(+)	18	YL	TXL	3598072C1	3596926C1	1400	8	N/A		
XA94BH	16	GY	TXL	3598073C1	3596926C1	1400	10	N/A		
XA94BF	16	GY	TXL	3598073C1	3596926C1	1400	11	N/A		
XA94AY	12	GY	TXL	3597157C1	3596926C1	1400	16	N/A		
WC2-G	0	BK	SGX	2241346C1		1400	A	3812583R1		
XA94B	16	GY	TXL	3598073C1	3596929C1	1401	1	N/A		
XA94	16	GY	TXL	3598073C1	3596929C1	1401	2	N/A		
XA94A	16	GY	TXL	3598073C1	3596929C1	1401	3	N/A		
XA94K	16	GY	TXL	3598073C1	3596929C1	1401	4	N/A		
XA94C	16	GY	TXL	3598073C1	3596929C1	1401	5	N/A		
XA94J	16	GY	TXL	3598073C1	3596929C1	1401	6	N/A		
XA94H	16	GY	TXL	3598073C1	3596929C1	1401	7	N/A		
XA94D	16	GY	TXL	3598073C1	3596929C1	1401	8	N/A		

Circuit Number	Gauge	Color	Insulation	Terminal / Splice Number	Connector Part number	Connector Number	Cavity	Seal/Sleeve	Lock 1	Lock 2
XA94BK	16	GY	TXL	3598073C1	3596929C1	1401	9	N/A		
XA94BL	16	GY	TXL	3598073C1	3596929C1	1401	10	N/A		
XA94E	16	GY	TXL	3598073C1	3596929C1	1401	11	N/A		
XA94BB	16	GY	TXL	3598073C1	3596929C1	1401	12	N/A		
XA94BJ	16	GY	TXL	3598073C1	3596929C1	1401	13	N/A		
XA94F	16	GY	TXL	3598073C1	3596929C1	1401	14	N/A		
XA94BE	16	GY	TXL	3598073C1	3596929C1	1401	15	N/A		
XA94BC	16	GY	TXL	3598073C1	3596929C1	1401	16	N/A		
XA94BA	16	GY	TXL	3598073C1	3596929C1	1401	17	N/A		
XA94BD	16	GY	TXL	3598073C1	3596929C1	1401	18	N/A		
WC2-FL	2	BK	FUS	475963C1		1401	A	2644004R1		
XN94AA	14	GY	GXL	3598073C1	3596928C1	1402	2	N/A		
XP94AA	14	GY	GXL	3598073C1	3596928C1	1402	2	N/A		
XQ94AA	14	GY	GXL	3598073C1	3596928C1	1402	2	N/A		
XJ94SK	18	GY	TXL	3598072C1	3596928C1	1402	3	N/A		
XM94SK	18	GY	TXL	3598072C1	3596928C1	1402	3	N/A		
XN94AB	14	GY	GXL	3598073C1	3596928C1	1402	3	N/A		
XP94AC	16	GY	GXL	3598073C1	3596928C1	1402	3	N/A		
XR94BP	16	GY	TXL	3598073C1	3596928C1	1402	4	N/A		
XF94SJ	16	GY	GXL	3598073C1	3596928C1	1402	5	N/A		
XL94SJ	16	GY	GXL	3598073C1	3596928C1	1402	5	N/A		
XR94BY	16	GY	TXL	3598073C1	3596928C1	1402	6	N/A		
XR94BZ	16	GY	TXL	3598073C1	3596928C1	1402	7	N/A		
XR94BT	16	GY	TXL	3598073C1	3596928C1	1402	9	N/A		
XR94BU	16	GY	TXL	3598073C1	3596928C1	1402	10	N/A		
XR94BR	16	GY	TXL	3598073C1	3596928C1	1402	11	N/A		
XR94BW	16	GY	TXL	3598073C1	3596928C1	1402	12	N/A		
XR94BS	16	GY	TXL	3598073C1	3596928C1	1402	13	N/A		
XR94BQ	16	GY	TXL	3598073C1	3596928C1	1402	14	N/A		
XR94BV	16	GY	TXL	3598073C1	3596928C1	1402	15	N/A		
XF94SZD	16	GY	TXL	3598073C1	3596927C1	1403	1	N/A		
XH94SZ	18	GY	TXL	3598072C1	3596927C1	1403	1	N/A		
XK94SZD	18	GY	TXL	3598072C1	3596927C1	1403	1	N/A		
XF94SE	18	GY	TXL	3598072C1	3596927C1	1403	2	N/A		
XL94SE	18	GY	TXL	3598072C1	3596927C1	1403	2	N/A		
XF94SH	18	GY	TXL	3598072C1	3596927C1	1403	3	N/A		
XK94SH	18	GY	TXL	3598072C1	3596927C1	1403	3	N/A		
XQ94AC	16	GY	GXL	3598073C1	3596927C1	1403	3	N/A		
XF94SVD	16	GY	TXL	3598073C1	3596927C1	1403	4	N/A		
XH94SV	18	GY	TXL	3598072C1	3596927C1	1403	4	N/A		
XK94SVD	18	GY	TXL	3598072C1	3596927C1	1403	4	N/A		
XF94SF	18	GY	TXL	3598072C1	3596927C1	1403	5	N/A		
XL94SF	18	GY	TXL	3598072C1	3596927C1	1403	5	N/A		
XF94SL	16	GY	GXL	3598073C1	3596927C1	1403	6	N/A		
XG94SL	18	GY	TXL	3598072C1	3596927C1	1403	6	N/A		
XF94SDA	18	LTGN	TXL	3598072C1	3596927C1	1403	7	N/A		
XL94SDA	18	LTGN	TXL	3598072C1	3596927C1	1403	7	N/A		
XF94SBA	18	GY	TXL	3598072C1	3596927C1	1403	8	N/A		
XL94SBA	18	GY	TXL	3598072C1	3596927C1	1403	8	N/A		
XF94SM	16	GY	GXL	3598073C1	3596927C1	1403	9	N/A		
XG94SM	16	GY	GXL	3598073C1	3596927C1	1403	9	N/A		
XF94SCA	18	GY	TXL	3598072C1	3596927C1	1403	10	N/A		
XL94SCA	18	GY	TXL	3598072C1	3596927C1	1403	10	N/A		
XF94SAA	18	GY	TXL	3598072C1	3596927C1	1403	11	N/A		

Circuit Number	Gauge	Color	Insulation	Terminal / Splice Number	Connector Part number	Connector Number	Cavity	Seal/Sleeve	Lock 1	Lock 2
XL94SAA	18	GY	TXL	3598072C1	3596927C1	1403	11	N/A		
XF94SN	16	GY	GXL	3598073C1	3596927C1	1403	12	N/A		
XG94SN	18	GY	TXL	3598072C1	3596927C1	1403	12	N/A		
XF94SAA	18	GY	TXL	3534164C1	3601838C1	1410	A	N/A		
XL94SAA	18	GY	TXL	3534164C1	3601838C1	1410	A	N/A		
XF94SAB	18	GY	TXL	3534164C1	3601838C1	1410	B	N/A		
XL94SAB	18	GY	TXL	3534164C1	3601838C1	1410	B	N/A		
XF94SA	20	GY	TXL	3535484C1	3601838C1	1410	C	N/A		
XL94SA	20	GY	TXL	3535484C1	3601838C1	1410	C	N/A		
XF94SCA	18	GY	TXL	3534164C1	3601838C1	1410	D	N/A		
XL94SCA	18	GY	TXL	3534164C1	3601838C1	1410	D	N/A		
XF94SCB	18	GY	TXL	3534164C1	3601838C1	1410	E	N/A		
XL94SCB	18	GY	TXL	3534164C1	3601838C1	1410	E	N/A		
XF94SC	20	GY	TXL	3535484C1	3601838C1	1410	F	N/A		
XL94SC	20	GY	TXL	3535484C1	3601838C1	1410	F	N/A		
XF94SBA	18	GY	TXL	3534164C1	3601838C1	1410	G	N/A		
XL94SBA	18	GY	TXL	3534164C1	3601838C1	1410	G	N/A		
XF94SBB	18	GY	TXL	3534164C1	3601838C1	1410	H	N/A		
XL94SBB	18	GY	TXL	3534164C1	3601838C1	1410	H	N/A		
XF94SB	20	GY	TXL	3535484C1	3601838C1	1410	J	N/A		
XL94SB	20	GY	TXL	3535484C1	3601838C1	1410	J	N/A		
XF94SDA	18	LTGN	TXL	3534164C1	3601838C1	1410	K	N/A		
XL94SDA	18	LTGN	TXL	3534164C1	3601838C1	1410	K	N/A		
XF94SDB	18	GY	TXL	3534164C1	3601838C1	1410	L	N/A		
XL94SDB	18	GY	TXL	3534164C1	3601838C1	1410	L	N/A		
XF94SD	20	GY	TXL	3535484C1	3601838C1	1410	M	N/A		
XL94SD	20	GY	TXL	3535484C1	3601838C1	1410	M	N/A		
9M5N(-)	18	GN	TXL	3548971C1	3557922C1	1420	1	N/A		
9Q5N(-)	18	GN	TXL	3548971C1	3557922C1	1420	1	N/A		
9R5N(-)	18	GN	TXL	3548971C1	3557922C1	1420	1	N/A		
9U5N(-)	18	GN	TXL	3548971C1	3557922C1	1420	1	N/A		
GP5N(-)	18	GN	TXL	3548971C1	3557922C1	1420	1	N/A		
9M5N(+)	18	YL	TXL	3548971C1	3557922C1	1420	3	N/A		
9Q5N(+)	18	YL	TXL	3548971C1	3557922C1	1420	3	N/A		
9R5N(+)	18	YL	TXL	3548971C1	3557922C1	1420	3	N/A		
9U5N(+)	18	YL	TXL	3548971C1	3557922C1	1420	3	N/A		
GP5N(+)	18	YL	TXL	3548971C1	3557922C1	1420	3	N/A		
XE94G1	18	WH	TXL	3548971C1	3557922C1	1420	4	N/A		
XE94V	14	GY	GXL	3548972C1	3557922C1	1420	7	N/A		
XE94AY	14	GY	GXL	3548972C1	3557922C1	1420	8	N/A		
XE94G2	16	WH	TXL	3548970C1	3557922C1	1420	9	N/A		
XE94AK	14	GY	GXL	3548972C1	3557921C1	1421	1	N/A		
XE94WR	14	GY	GXL	3548972C1	3557921C1	1421	2	N/A		
XE94AB	14	GY	GXL	3548972C1	3557921C1	1421	3	N/A		
XE94AH	14	GY	GXL	3548972C1	3557921C1	1421	4	N/A		
XE94WN	14	GY	GXL	3548972C1	3557921C1	1421	5	N/A		
XE94AL	14	GY	GXL	3548972C1	3557921C1	1421	6	N/A		
XE94WW	14	GY	GXL	3548972C1	3557921C1	1421	8	N/A		
XE94WU	14	GY	TXL	3548972C1	3557921C1	1421	9	N/A		
XE94AE	18	GY	TXL	3548971C1	3557921C1	1421	10	N/A		
XE94WL	18	GY	TXL	3548971C1	3557921C1	1421	11	N/A		
XE94AC	18	GY	TXL	3548971C1	3557921C1	1421	12	N/A		
XE94AF	18	GY	TXL	3548971C1	3557921C1	1421	13	N/A		
XE94WM	18	GY	TXL	3548971C1	3557921C1	1421	14	N/A		

Circuit Number	Gauge	Color	Insulation	Terminal / Splice Number	Connector Part number	Connector Number	Cavity	Seal/Sleeve	Lock 1	Lock 2
XE94AD	18	GY	TXL	3548971C1	3557921C1	1421	15	N/A		
XE94WS	18	GY	TXL	3548971C1	3557921C1	1421	17	N/A		
XE94WT	18	GY	TXL	3548971C1	3557921C1	1421	18	N/A		
RS92#101	18	LTBL	TXL	2018639C1	2018589C1	1501	1	N/A		
SM92#101	18	LTBL	TXL	2018639C1	2018589C1	1501	1	N/A		
SM92#101	18	LTBL	TXL	2018639C1	2018589C1	1501	1	N/A		
RS92#103	18	YL	TXL	2018639C1	2018589C1	1501	2	N/A		
SN92#103	18	YL	TXL	2018639C1	2018589C1	1501	2	N/A		
SR92#103	18	YL	TXL	2018639C1	2018589C1	1501	2	N/A		
SN92#103	18	YL	TXL	2018639C1	2018589C1	1501	2	N/A		
SR92#103	18	YL	TXL	2018639C1	2018589C1	1501	2	N/A		
RS92#105	18	OR	TXL	2018639C1	2018589C1	1501	3	N/A		
SM92#105	18	OR	TXL	2018639C1	2018589C1	1501	3	N/A		
SM92#105	18	OR	TXL	2018639C1	2018589C1	1501	3	N/A		
LB92#109	18	WH	TXL	2018639C1	2018589C1	1501	4	N/A		
RU10B	18	BK	TXL	2018639C1	2018589C1	1501	4	N/A		
SM92#109	18	WH	TXL	2018639C1	2018589C1	1501	4	N/A		
PV14B	18	RD	TXL	2018639C1	2018589C1	1501	5	N/A		
SM92#110	18	RD	TXL	2018639C1	2018589C1	1501	5	N/A		
SM92#110	18	RD	TXL	2018639C1	2018589C1	1501	5	N/A		
PV92#120	18	LTBL	TXL	2018639C1	2018589C1	1501	6	N/A		
TL92#117	18	LTBL	TXL	2018639C1	2018589C1	1501	6	N/A		
TM92A117	18	LTBL	TXL	2018639C1	2018589C1	1501	6	N/A		
TN92#117	18	LTBL	TXL	2018639C1	2018589C1	1501	6	N/A		
TL92#117	18	LTBL	TXL	2018639C1	2018589C1	1501	6	N/A		
TM92A117	18	LTBL	TXL	2018639C1	2018589C1	1501	6	N/A		
TN92#117	18	LTBL	TXL	2018639C1	2018589C1	1501	6	N/A		
PV92#180	18	OR	TXL	2018639C1	2018589C1	1501	7	N/A		
SM92#122	18	YL	TXL	2018639C1	2018589C1	1501	7	N/A		
SM92#122	18	YL	TXL	2018639C1	2018589C1	1501	7	N/A		
SM92#123	18	LTGN	TXL	2018639C1	2018589C1	1501	8	N/A		
SM92#123	18	LTGN	TXL	2018639C1	2018589C1	1501	8	N/A		
PV92#139	18	OR	TXL	2018639C1	2018589C1	1501	9	N/A		
SR92#115	18	WH	TXL	2018639C1	2018589C1	1501	9	N/A		
SR92#115	18	WH	TXL	2018639C1	2018589C1	1501	9	N/A		
PV92#159	18	TN	TXL	2018639C1	2018589C1	1501	10	N/A		
SM92#130	18	WH	TXL	2018639C1	2018589C1	1501	10	N/A		
SM92#130	18	WH	TXL	2018639C1	2018589C1	1501	10	N/A		
PV92#142	18	WH	TXL	2018639C1	2018589C1	1501	11	N/A		
SM92#134	18	YL	TXL	2018639C1	2018589C1	1501	11	N/A		
SM92#134	18	YL	TXL	2018639C1	2018589C1	1501	11	N/A		
RS92#143	18	LTBL	TXL	2018639C1	2018589C1	1501	12	N/A		
SY92A141	18	TN	TXL	2018639C1	2018589C1	1501	12	N/A	3662518C1	
TL92A141	18	TN	TXL	2018639C1	2018589C1	1501	12	N/A		
SY92A141	18	TN	TXL	2018639C1	2018589C1	1501	12	N/A		
TL92A141	18	TN	TXL	2018639C1	2018589C1	1501	12	N/A		
RS92#150	18	PK	TXL	2018639C1	2018589C1	1501	13	N/A		
SM92#143	18	LTBL	TXL	2018639C1	2018589C1	1501	13	N/A		
SM92#143	18	LTBL	TXL	2018639C1	2018589C1	1501	13	N/A		
PV92#140	18	LTGN	TXL	2018639C1	2018589C1	1501	14	N/A		
SY92#145	18	OR	TXL	2018639C1	2018589C1	1501	14	N/A		
TL92#145	18	OR	TXL	2018639C1	2018589C1	1501	14	N/A	3743662C1	
SY92#145	18	OR	TXL	2018639C1	2018589C1	1501	14	N/A		
TL92#145	18	OR	TXL	2018639C1	2018589C1	1501	14	N/A		

Circuit Number	Gauge	Color	Insulation	Terminal / Splice Number	Connector Part number	Connector Number	Cavity	Seal/Sleeve	Lock 1	Lock 2
PV92#160	18	YL	TXL	2018639C1	2018589C1	1501	15	N/A		
SR92#119	18	LTBL	TXL	2018639C1	2018589C1	1501	15	N/A		
SR92#119	18	LTBL	TXL	2018639C1	2018589C1	1501	15	N/A		
PV92#163	18	YL	TXL	2018639C1	2018589C1	1501	16	N/A		
SR92#124	18	WH	TXL	2018639C1	2018589C1	1501	16	N/A		
SR92#124	18	WH	TXL	2018639C1	2018589C1	1501	16	N/A		
PV92#165	18	TN	TXL	2018639C1	2018589C1	1501	17	N/A		
SM92#162	18	YL	TXL	2018639C1	2018589C1	1501	17	N/A		
SM92#162	18	YL	TXL	2018639C1	2018589C1	1501	17	N/A		
RU10C	18	BK	TXL	2018639C1	2018589C1	1501	18	N/A		
SM92#163	18	YL	TXL	2018639C1	2018589C1	1501	18	N/A		
SM92#163	18	YL	TXL	2018639C1	2018589C1	1501	18	N/A		
PV14C	18	RD	TXL	3717171C1	1661601C1	1502	1	N/A		
SM92#164	18	LTBL	TXL	3717171C1	1661601C1	1502	1	N/A		
SM92#164	18	LTBL	TXL	3717171C1	1661601C1	1502	1	N/A		
PU92#123	18	LTGN	TXL	3717171C1	1661601C1	1502	2	N/A		
SM92#165	18	TN	TXL	3717171C1	1661601C1	1502	2	N/A		
SM92#165	18	TN	TXL	3717171C1	1661601C1	1502	2	N/A		
LB92#169	18	WH	TXL	3717171C1	1661601C1	1502	3	N/A		
PV92#111	18	OR	TXL	3717171C1	1661601C1	1502	3	N/A		
SM92#169	18	WH	TXL	3717171C1	1661601C1	1502	3	N/A		
PV92#114	18	GY	TXL	3717171C1	1661601C1	1502	4	N/A		
SM92#170	18	RD	TXL	3717171C1	1661601C1	1502	4	N/A		
SM92#170	18	RD	TXL	3717171C1	1661601C1	1502	4	N/A		
PV92#117	18	LTBL	TXL	3717171C1	1661601C1	1502	5	N/A		
SW92#111	18	OR	150	3717171C1	1661601C1	1502	5	N/A		
SW92#111	18	OR	150	3717171C1	1661601C1	1502	5	N/A		
PV92#133	18	YL	TXL	3717171C1	1661601C1	1502	6	N/A		
SR92A112	18	PK	TXL	3717171C1	1661601C1	1502	6	N/A		
ST92A112	18	PK	150	3717171C1	1661601C1	1502	6	N/A		
SR92A112	18	PK	TXL	3717171C1	1661601C1	1502	6	N/A		
ST92A112	18	PK	150	3717171C1	1661601C1	1502	6	N/A		
PV92#134	18	WH	TXL	3717171C1	1661601C1	1502	7	N/A		
SW92#116	18	LTBL	150	3717171C1	1661601C1	1502	7	N/A		
SW92#116	18	LTBL	150	3717171C1	1661601C1	1502	7	N/A		
PV92#136	18	OR	TXL	3717171C1	1661601C1	1502	8	N/A		
SW92#177	18	LTGN	150	3717171C1	1661601C1	1502	8	N/A	3553460C1	3589992C1
SW92#177	18	LTGN	150	3717171C1	1661601C1	1502	8	N/A		
PV92#138	18	OR	TXL	3717171C1	1661601C1	1502	9	N/A		
SR92A131	18	PK	TXL	3717171C1	1661601C1	1502	9	N/A		
ST92#131	18	YL	150	3717171C1	1661601C1	1502	9	N/A		
SR92A131	18	PK	TXL	3717171C1	1661601C1	1502	9	N/A		
ST92#131	18	YL	150	3717171C1	1661601C1	1502	9	N/A		
PV92A141	18	TN	TXL	3717171C1	1661601C1	1502	10	N/A		
SW92#133	18	YL	150	3717171C1	1661601C1	1502	10	N/A	1661874C1	
SW92#133	18	YL	150	3717171C1	1661601C1	1502	10	N/A		
PV92#151	18	WH	TXL	3717171C1	1661601C1	1502	11	N/A		
SW92#136	18	OR	150	3717171C1	1661601C1	1502	11	N/A		
SW92#136	18	OR	150	3717171C1	1661601C1	1502	11	N/A		
PV92#152	18	LTGN	TXL	3717171C1	1661601C1	1502	12	N/A		
SW92#137	18	WH	150	3717171C1	1661601C1	1502	12	N/A	1671608C1	
SW92#137	18	WH	150	3717171C1	1661601C1	1502	12	N/A		
PV92#153	18	YL	TXL	3717171C1	1661601C1	1502	13	N/A		
SR92A158	18	LTGN	TXL	3717171C1	1661601C1	1502	13	N/A		

Circuit Number	Gauge	Color	Insulation	Terminal / Splice Number	Connector Part number	Connector Number	Cavity	Seal/Sleeve	Lock 1	Lock 2
ST92#158	18	LTGN	150	3717171C1	1661601C1	1502	13	N/A		
SR92A158	18	LTGN	TXL	3717171C1	1661601C1	1502	13	N/A		
ST92#158	18	LTGN	150	3717171C1	1661601C1	1502	13	N/A		
PV92#154	18	TN	TXL	3717171C1	1661601C1	1502	14	N/A		
SW92#171	18	YL	150	3717171C1	1661601C1	1502	14	N/A		
SW92#171	18	YL	150	3717171C1	1661601C1	1502	14	N/A		
PV92#155	18	WH	TXL	3717171C1	1661601C1	1502	15	N/A		
SW92#151	18	WH	150	3717171C1	1661601C1	1502	15	N/A	1661376C1	
SW92#151	18	WH	150	3717171C1	1661601C1	1502	15	N/A		
PV92#157	18	WH	TXL	3717171C1	1661601C1	1502	16	N/A		
SW92#152	18	LTGN	150	3717171C1	1661601C1	1502	16	N/A		
SW92#152	18	LTGN	150	3717171C1	1661601C1	1502	16	N/A		
PV92#158	18	LTGN	TXL	3717171C1	1661601C1	1502	17	N/A		
SW31#154	18	TN	150	3717171C1	1661601C1	1502	17	N/A		
SW31#154	18	TN	150	3717171C1	1661601C1	1502	17	N/A		
PV92#171	18	YL	TXL	3627612C1	3627615C1	1503	1	N/A		
SW48#139	18	OR	150	3627612C1	3627615C1	1503	1	N/A		
SA48#139	18	OR	150	3627612C1	3627615C1	1503	1	N/A		
SL48#139	18	OR	TXL	3627612C1	3627615C1	1503	1	N/A		
PV92#173	18	LTBL	TXL	3627612C1	3627615C1	1503	2	N/A		
SW47#140	18	LTGN	TXL	3627612C1	3627615C1	1503	2	N/A		
SW47#140	18	LTGN	TXL	3627612C1	3627615C1	1503	2	N/A		
PV92#174	18	LTBL	TXL	3627612C1	3627615C1	1503	3	N/A		
SW92A120	18	LTBL	150	3627612C1	3627615C1	1503	3	N/A	3606525C1	
SA92A120	18	LTBL	150	3627612C1	3627615C1	1503	3	N/A		
SV92#120	18	LTBL	TXL	3627612C1	3627615C1	1503	3	N/A		
PV92#176	18	YL	TXL	3627612C1	3627615C1	1503	4	N/A		
SB5#127	18	GN	TXL	3627612C1	3627615C1	1503	4	N/A		
SB5#127	18	GN	TXL	3627612C1	3627615C1	1503	4	N/A		
PV92#177	18	LTBL	TXL	3627612C1	3627615C1	1503	5	N/A		
SW92#155	18	WH	150	3627612C1	3627615C1	1503	5	N/A	1661874C1	
SW92#155	18	WH	150	3627612C1	3627615C1	1503	5	N/A		
PV92#178	18	WH	TXL	3627612C1	3627615C1	1503	6	N/A		
SW92#174	18	LTBL	150	3627612C1	3627615C1	1503	6	N/A	3543732C1	
SW92#174	18	LTBL	150	3627612C1	3627615C1	1503	6	N/A		
PV92#179	18	PK	TXL	3627612C1	3627615C1	1503	7	N/A		
SW92#176	18	YL	150	3627612C1	3627615C1	1503	7	N/A		
SW92#176	18	YL	150	3627612C1	3627615C1	1503	7	N/A		
KJ47#125	18	GY	TXL	3627612C1	3627615C1	1503	8	N/A		
PU92#145	18	OR	TXL	3627612C1	3627615C1	1503	8	N/A		
SW47#125	18	GY	TXL	3627612C1	3627615C1	1503	8	N/A		
RT5#127	18	GN	TXL	3627612C1	3627615C1	1503	9	N/A		
SW48#159	18	TN	150	3627612C1	3627615C1	1503	9	N/A		
SA48#159	18	TN	150	3627612C1	3627615C1	1503	9	N/A		
SL48#159	18	TN	TXL	3627612C1	3627615C1	1503	9	N/A		
RT5#106	18	YL	TXL	3627612C1	3627615C1	1503	10	N/A		
SW47#160	18	YL	TXL	3627612C1	3627615C1	1503	10	N/A		
SW47#160	18	YL	TXL	3627612C1	3627615C1	1503	10	N/A		
SW92#180	18	OR	150	3627612C1	3627615C1	1503	11	N/A	3598916C1	3598917C1
SA92#180	18	OR	150	3627612C1	3627615C1	1503	11	N/A		
SV92#180	18	OR	TXL	3627612C1	3627615C1	1503	11	N/A		
SB5#106	18	YL	TXL	3627612C1	3627615C1	1503	12	N/A		
SB5#106	18	YL	TXL	3627612C1	3627615C1	1503	12	N/A		
TL92#142	18	WH	TXL	3627612C1	3627615C1	1503	13	N/A		

Circuit Number	Gauge	Color	Insulation	Terminal / Splice Number	Connector Part number	Connector Number	Cavity	Seal/Sleeve	Lock 1	Lock 2
TM92A142	18	WH	TXL	3627612C1	3627615C1	1503	13	N/A		
TL92#142	18	WH	TXL	3627612C1	3627615C1	1503	13	N/A		
TM92A142	18	WH	TXL	3627612C1	3627615C1	1503	13	N/A		
PX92A131	18	YL	TXL	3627612C1	3627615C1	1503	14	N/A		
SR92#156	18	PK	TXL	3627612C1	3627615C1	1503	14	N/A		
SR92#156	18	PK	TXL	3627612C1	3627615C1	1503	14	N/A		
PV92#161	18	TN	TXL	3627612C1	3627615C1	1503	15	N/A		
SR92#161	18	OR	TXL	3627612C1	3627615C1	1503	15	N/A		
SR92#161	18	OR	TXL	3627612C1	3627615C1	1503	15	N/A		
PX92A137	18	WH	TXL	3627612C1	3627615C1	1503	16	N/A		
SR92#175	18	OR	TXL	3627612C1	3627615C1	1503	16	N/A		
SR92#175	18	OR	TXL	3627612C1	3627615C1	1503	16	N/A		
SW92#118	18	GY	150	3627612C1	3627615C1	1503	18	N/A		
SW92#118	18	GY	150	3627612C1	3627615C1	1503	18	N/A		
WK2-G	2	WH	SGX	475963C1		1600	A	2644004R1		
EC149	18	GY	TXL	3522073C1	3598706C1	1600	A1	N/A		
ED149	18	GY	TXL	3522073C1	3598706C1	1600	A1	N/A		
EK149B	18	LTBL	TXL	3522073C1	3598706C1	1600	A1	N/A		
AA82B	20	GY	TXL	3534303C1	3598706C1	1600	A10	N/A		
AA82C	20	GY	TXL	3534303C1	3598706C1	1600	A11	N/A		
WA44	16	GY	TXL	3522073C1	3598706C1	1600	A12	N/A		
WE44AB	16	GY	TXL	3522073C1	3598706C1	1600	A12	N/A		
AA63A	16	LTBL	TXL	3522073C1	3598706C1	1600	A13	N/A		
AA102A	20	YL	TXL	3534303C1	3598706C1	1600	A14	N/A		
HE87B	20	GY	TXL	3534303C1	3598706C1	1600	A15	N/A		
HJ87B	20	GY	TXL	3534303C1	3598706C1	1600	A15	N/A		
DB149A	18	GY	TXL	3522073C1	3598706C1	1600	A16	N/A		
DC149A	18	GY	TXL	3522073C1	3598706C1	1600	A16	N/A		
DD13FAM	18	BN	TXL	3522073C1	3598706C1	1600	A16	N/A		
DG149A	18	GY	TXL	3522073C1	3598706C1	1600	A16	N/A		
DH13C	18	GY	TXL	3522073C1	3598706C1	1600	A16	N/A		
QI79A	18	GY	TXL	3522073C1	3598706C1	1600	A2	N/A		
QW79A	18	GY	TXL	3522073C1	3598706C1	1600	A2	N/A		
AA52D	20	YL	GXL	3534303C1	3598706C1	1600	A4	N/A		
AA85A	20	GY	TXL	3534303C1	3598706C1	1600	A5	N/A		
AA57B	20	OR	TXL	3534303C1	3598706C1	1600	A6	N/A		
AA56B	20	OR	TXL	3534303C1	3598706C1	1600	A7	N/A		
HE87EA	18	GY	TXL	3522073C1	3598706C1	1600	A8	N/A		
HK87C	18	GY	TXL	3522073C1	3598706C1	1600	A8	N/A		
AA82A	20	GY	TXL	3534303C1	3598706C1	1600	A9	N/A		
SN86A	18	GY	TXL	3522073C1	3598706C1	1600	B1	N/A		
NN32B	18	TN	TXL	3522073C1	3598706C1	1600	B10	N/A		
XS90HB	18	GY	TXL	3522073C1	3598706C1	1600	B10	N/A		
NM32A	18	TN	GXL	3522073C1	3598706C1	1600	B11	N/A		
SA77B	20	GY	TXL	3534303C1	3598706C1	1600	B12	N/A		
NK40BB	18	GY	TXL	3522073C1	3598706C1	1600	B14	N/A		
TA75AA	18	LTGN	TXL	3522073C1	3598706C1	1600	B15	N/A		
AA150	20	GY	TXL	3534303C1	3598706C1	1600	B16	N/A		
NK40	18	GY	GXL	3522073C1	3598706C1	1600	B2	N/A		
NL40	18	GY	GXL	3522073C1	3598706C1	1600	B2	N/A		
WC40	18	GY	TXL	3522073C1	3598706C1	1600	B2	N/A		
NK40A	18	GY	GXL	3522073C1	3598706C1	1600	B3	N/A		
UA97A	18	VT	TXL	3522073C1	3598706C1	1600	B4	N/A		
TB74	18	LTGN	TXL	3522073C1	3598706C1	1600	B5	N/A		

Circuit Number	Gauge	Color	Insulation	Terminal / Splice Number	Connector Part number	Connector Number	Cavity	Seal/Sleeve	Lock 1	Lock 2
XS90M	18	GY	TXL	3522073C1	3598706C1	1600	B6	N/A		
NJ31J	18	TN	TXL	3522073C1	3598706C1	1600	B7	N/A		
AA36B	18	TN	TXL	3522073C1	3598706C1	1600	B8	N/A		
AA36A	18	TN	TXL	3522073C1	3598706C1	1600	B9	N/A		
LJ104DC	18	DKBL	TXL	3522073C	3598707C1	1601	E1	N/A		
TH72	18	OR	TXL	3522073C	3598707C1	1601	E11	N/A		
VA92#117A	18	TN	TXL	3522073C	3598707C1	1601	E16	N/A		
KK18A	18	GY	TXL	3522073C	3598707C1	1601	F12	N/A		
KL18D	18	GY	TXL	3522073C	3598707C1	1601	F12	N/A		
KM18E	18	GY	TXL	3522073C	3598707C1	1601	F12	N/A		
RP78RC	18	LTGN	TXL	3522073C	3598707C1	1601	F13	N/A		
VG70D	18	OR	TXL	3522073C	3598707C1	1601	F15	N/A		
WK2-FLA	10	RS	FUS	338892C2		1601	A	2644054R1		
WK2-FLB	10	RS	FUS	338892C2		1601	A	2644054R1		
VU103D	18	LTGN	TXL	3522073C1	3598707C1	1601	E1	N/A		
LZ59S	18	GY	TXL	3522073C1	3598707C1	1601	E10	N/A		
HW12LC	18	PK	TXL	3522073C1	3598707C1	1601	E11	N/A		
LT59D	18	GY	TXL	3522073C1	3598707C1	1601	E12	N/A		
LY59G	18	GY	TXL	3522073C1	3598707C1	1601	E13	N/A		
HU103AA	18	LTGN	TXL	3522073C1	3598707C1	1601	E14	N/A		
LZ59T	18	GY	TXL	3522073C1	3598707C1	1601	E15	N/A		
VU103C	18	LTGN	TXL	3522073C1	3598707C1	1601	E2	N/A		
UG92#161A	18	TN	TXL	3522073C1	3598707C1	1601	E4	N/A		
AA82H	18	GY	TXL	3522073C1	3598707C1	1601	E6	N/A		
AA82F	18	GY	TXL	3522073C1	3598707C1	1601	E7	N/A		
UF92D	18	TN	TXL	3522073C1	3598707C1	1601	E8	N/A		
UN92D	18	TN	TXL	3522073C1	3598707C1	1601	E8	N/A		
LY59J	18	GY	TXL	3522073C1	3598707C1	1601	E9	N/A		
VV44A	18	GY	GXL	3522073C1	3598707C1	1601	F1	N/A		
WC44	16	GY	TXL	3522073C1	3598707C1	1601	F1	N/A		
LT59C	18	GY	TXL	3522073C1	3598707C1	1601	F10	N/A		
RN78RC	18	LTGN	TXL	3522073C1	3598707C1	1601	F13	N/A		
RR78RC	18	LTGN	TXL	3522073C1	3598707C1	1601	F13	N/A		
LZ59V	18	GY	TXL	3522073C1	3598707C1	1601	F14	N/A		
VJ70D	18	OR	TXL	3522073C1	3598707C1	1601	F15	N/A		
VN70D	18	OR	TXL	3522073C1	3598707C1	1601	F15	N/A		
RK78BD	16	LTGN	TXL	3522073C1	3598707C1	1601	F16	N/A		
HB103L	18	LTGN	GXL	3522073C1	3598707C1	1601	F2	N/A		
LW59P	18	GY	TXL	3522073C1	3598707C1	1601	F2	N/A		
LX59P	18	GY	TXL	3522073C1	3598707C1	1601	F2	N/A		
LW59Q	18	GY	TXL	3522073C1	3598707C1	1601	F3	N/A		
LX59Q	18	GY	TXL	3522073C1	3598707C1	1601	F3	N/A		
LY59H	18	GY	TXL	3522073C1	3598707C1	1601	F4	N/A		
LY59K	18	GY	TXL	3522073C1	3598707C1	1601	F5	N/A		
HB103J	18	LTGN	GXL	3522073C1	3598707C1	1601	F6	N/A		
LW59M	18	GY	TXL	3522073C1	3598707C1	1601	F6	N/A		
LX59M	18	GY	TXL	3522073C1	3598707C1	1601	F6	N/A		
HB103K	18	LTGN	GXL	3522073C1	3598707C1	1601	F7	N/A		
LW59N	18	GY	TXL	3522073C1	3598707C1	1601	F7	N/A		
LX59N	18	GY	TXL	3522073C1	3598707C1	1601	F7	N/A		
LU59E	18	GY	TXL	3522073C1	3598707C1	1601	F8	N/A		
LZ59W	18	GY	TXL	3522073C1	3598707C1	1601	F9	N/A		
XS90J	18	GY	TXL	3522073C1	3598707C1	1601	F9	N/A		
AF3BD(-)	18	GY	TXL	3522073C1	3598705C1	1602	E1	N/A		

Circuit Number	Gauge	Color	Insulation	Terminal / Splice Number	Connector Part number	Connector Number	Cavity	Seal/Sleeve	Lock 1	Lock 2
AB50	18	YL	TXL	3522073C1	3598705C1	1602	E11	N/A		
AC50	18	YL	TXL	3522073C1	3598705C1	1602	E11	N/A		
LS59A	18	GY	TXL	3522073C1	3598705C1	1602	E12	N/A		
YG96A	18	YL	TXL	3522073C1	3598705C1	1602	E13	N/A		
WB70	20	RD	TXL	3534303C1	3598705C1	1602	E14	N/A		
XS70	18	GY	TXL	3522073C1	3598705C1	1602	E14	N/A		
WB70A	20	RD	TXL	3534303C1	3598705C1	1602	E15	N/A		
AD11-GAC	18	WH	TXL	3522073C1	3598705C1	1602	E16	N/A		
AE11-GAC	18	WH	TXL	3522073C1	3598705C1	1602	E16	N/A		
AF3BD(+)	18	DKBL	TXL	3522073C1	3598705C1	1602	E2	N/A		
AA9Z	18	GY	TXL	3522073C1	3598705C1	1602	E3	N/A		
NK6	18	GY	GXL	3522073C1	3598705C1	1602	E4	N/A		
WC6	20	GY	TXL	3534303C1	3598705C1	1602	E4	N/A		
KA9A	18	GY	TXL	3522073C1	3598705C1	1602	E5	N/A		
SA6DB	20	GY	TXL	3534303C1	3598705C1	1602	E6	N/A		
AA9B	18	GY	TXL	3522073C1	3598705C1	1602	E7	N/A		
ME106B	18	GY	TXL	3522073C1	3598705C1	1602	E8	N/A		
NL6A	18	GY	GXL	3522073C1	3598705C1	1602	E8	N/A		
LP88	18	LTGN	TXL	3522073C1	3598705C1	1602	E9	N/A		
ZU71D	18	OR	TXL	3522073C1	3598705C1	1602	F10	N/A		
UJ93A	18	TN	TXL	3522073C1	3598705C1	1602	F11	N/A		
VU103B	18	LTGN	TXL	3522073C1	3598705C1	1602	F12	N/A		
QA9ZC	18	GY	TXL	3522073C1	3598705C1	1602	F13	N/A		
VU103A	18	LTGN	TXL	3522073C1	3598705C1	1602	F14	N/A		
WC44D	18	GY	TXL	3522073C1	3598705C1	1602	F15	N/A		
XS90PA	18	GY	GXL	3522073C1	3598705C1	1602	F16	N/A		
8A5BB(-)	18	GN	TXL	3522073C1	3598705C1	1602	F5	N/A		
9A5BB(-)	18	GN	TXL	3522073C1	3598705C1	1602	F5	N/A		
9F5BB(-)	18	GN	TXL	3522073C1	3598705C1	1602	F5	N/A		
9J5BB(-)	18	GN	TXL	3522073C1	3598705C1	1602	F5	N/A	1667734C1	
9P5BB(-)	18	GN	TXL	3522073C1	3598705C1	1602	F5	N/A		
9X5BB(-)	18	GN	TXL	3522073C1	3598705C1	1602	F5	N/A		
GC5BB(-)	18	GN	TXL	3522073C1	3598705C1	1602	F5	N/A		
GD5BB(-)	18	GN	TXL	3522073C1	3598705C1	1602	F5	N/A		
8A5BB(+)	18	YL	TXL	3522073C1	3598705C1	1602	F6	N/A		
9A5BB(+)	18	YL	TXL	3522073C1	3598705C1	1602	F6	N/A		
9F5BB(+)	18	YL	TXL	3522073C1	3598705C1	1602	F6	N/A		
9J5BB(+)	18	YL	TXL	3522073C1	3598705C1	1602	F6	N/A	1661874C1	
9P5BB(+)	18	YL	TXL	3522073C1	3598705C1	1602	F6	N/A		
9X5BB(+)	18	YL	TXL	3522073C1	3598705C1	1602	F6	N/A		
GC5BB(+)	18	YL	TXL	3522073C1	3598705C1	1602	F6	N/A		
GD5BB(+)	18	YL	TXL	3522073C1	3598705C1	1602	F6	N/A		
ME61B	18	GY	TXL	3522073C1	3598705C1	1602	F7	N/A		
LF104D	18	DKBL	TXL	3522073C1	3598705C1	1602	F8	N/A		
RA28BA	18	TN	TXL	3522073C1	3598705C1	1602	F9	N/A		
VG57T	10	LTGN	TXL	3544878C1	3598711C1	1603	A	N/A		
YU57A	16	OR	TXL	3544876C1	3598711C1	1603	A	N/A		
VG56T	10	YL	TXL	3544878C1	3598711C1	1603	B	N/A		
XV56AA	16	OR	TXL	3544876C1	3598711C1	1603	B	N/A		
XZ56AA	16	OR	TXL	3544876C1	3598711C1	1603	B	N/A		
YT56AA	16	OR	TXL	3544876C1	3598711C1	1603	B	N/A		
YY56AA	16	OR	TXL	3544876C1	3598711C1	1603	B	N/A		
SA77	16	LTGN	GXL	3544876C1	3598711C1	1603	C	N/A		
YL56A	16	OR	TXL	3544876C1	3598711C1	1603	D	N/A		

Circuit Number	Gauge	Color	Insulation	Terminal / Splice Number	Connector Part number	Connector Number	Cavity	Seal/Sleeve	Lock 1	Lock 2
YM56A	14	OR	TXL	3544877C1	3598711C1	1603	D	N/A		
YN56A	14	OR	TXL	3544877C1	3598711C1	1603	D	N/A		
AA85	16	GY	TXL	3544876C1	3598711C1	1603	E	N/A		
YJ64A	16	YL	TXL	3544876C1	3598711C1	1603	F	N/A		
ZT65	16	OR	TXL	3544876C1	3598711C1	1603	G	N/A		
YF52A	14	YL	TXL	3544877C1	3598711C1	1603	H	N/A		
YG52A	14	YL	TXL	3544877C1	3598711C1	1603	H	N/A		
KP112	16	GY	TXL	3544876C1	3598711C1	1603	J	N/A		
QA23F	18	TN	TXL	3544876C1	3598711C1	1603	J	N/A		
YJ64B	16	YL	TXL	3544876C1	3598711C1	1603	K	N/A		
YF52B	14	YL	TXL	3544877C1	3598711C1	1603	L	N/A		
YG52B	14	YL	TXL	3544877C1	3598711C1	1603	L	N/A		
YL57C	16	OR	TXL	3544876C1	3598711C1	1603	M	N/A		
YM57A	14	OR	TXL	3544877C1	3598711C1	1603	M	N/A		
YN57A	14	OR	TXL	3544877C1	3598711C1	1603	M	N/A		
AA82	16	GY	TXL	3544876C1	3598710C1	1604	A	N/A		
YF53A	14	YL	TXL	3544877C1	3598710C1	1604	B	N/A		
YG53A	14	YL	TXL	3544877C1	3598710C1	1604	B	N/A		
XV56	16	OR	TXL	3544876C1	3598710C1	1604	C	N/A		
XZ56	16	OR	TXL	3544876C1	3598710C1	1604	C	N/A		
YM56	16	OR	TXL	3544876C1	3598710C1	1604	C	N/A		
YN56	18	OR	TXL	3544876C1	3598710C1	1604	C	N/A		
YT56B	16	OR	TXL	3544876C1	3598710C1	1604	C	N/A		
YY56	16	OR	TXL	3544876C1	3598710C1	1604	C	N/A		
VG68T	12	BN	TXL	3544877C1	3598710C1	1604	D	N/A		
VL68T	12	BN	TXL	3544877C1	3598710C1	1604	D	N/A		
VM68T	12	BN	TXL	3544877C1	3598710C1	1604	D	N/A		
VP68	12	BN	TXL	3544877C1	3598710C1	1604	D	N/A		
VR68T	12	BN	TXL	3544877C1	3598710C1	1604	D	N/A		
VT68TA	12	BN	TXL	3544877C1	3598710C1	1604	D	N/A		
YX70B	12	YL	TXL	3544877C1	3598710C1	1604	D	N/A		
YZ70B	12	YL	TXL	3544877C1	3598710C1	1604	D	N/A		
AA11-GKC	12	WH	TXL	3544877C1	3598710C1	1604	E	N/A		
VG58T	12	BN	TXL	3544877C1	3598710C1	1604	F	N/A		
VL58T	12	BN	TXL	3544877C1	3598710C1	1604	F	N/A		
VM58T	12	BN	TXL	3544877C1	3598710C1	1604	F	N/A		
VP58	12	BN	TXL	3544877C1	3598710C1	1604	F	N/A		
VR58T	12	BN	TXL	3544877C1	3598710C1	1604	F	N/A		
VT58	12	BN	TXL	3544877C1	3598710C1	1604	F	N/A		
YP54	16	BN	TXL	3544876C1	3598710C1	1604	G	N/A		
YS54	16	BN	TXL	3544876C1	3598710C1	1604	G	N/A		
YF53B	14	YL	TXL	3544877C1	3598710C1	1604	H	N/A		
YG53B	14	YL	TXL	3544877C1	3598710C1	1604	H	N/A		
WF63	18	DKBL	TXL	3544876C1	3598710C1	1604	J	N/A		
WG63	18	DKBL	TXL	3544876C1	3598710C1	1604	J	N/A		
WJ63	18	DKBL	TXL	3544876C1	3598710C1	1604	J	N/A		
XV57	16	OR	TXL	3544876C1	3598710C1	1604	K	N/A		
XZ57	16	OR	TXL	3544876C1	3598710C1	1604	K	N/A		
YH57	16	OR	TXL	3544876C1	3598710C1	1604	K	N/A		
YK57	16	OR	TXL	3544876C1	3598710C1	1604	K	N/A		
YQ57	16	OR	TXL	3544876C1	3598710C1	1604	K	N/A		
YR57	16	OR	TXL	3544876C1	3598710C1	1604	K	N/A		
YT57B	16	OR	TXL	3544876C1	3598710C1	1604	K	N/A		
YY57	16	OR	TXL	3544876C1	3598710C1	1604	K	N/A		

Circuit Number	Gauge	Color	Insulation	Terminal / Splice Number	Connector Part number	Connector Number	Cavity	Seal/Sleeve	Lock 1	Lock 2
HZ14BC	4	RD	SGX	571673C1		1605	A	2644004R1		
UD17B	18	PK	TXL	3544884C	3759005C1	1606	M	N/A		
EH12C	18	LTBL	TXL	3544876C1	3759005C1	1606	A	N/A		
EJ12C	18	LTBL	TXL	3544876C1	3759005C1	1606	A	N/A		
DE13DD	18	PK	TXL	3544884C1	3759005C1	1606	B	N/A		
DF13DD	18	PK	TXL	3544884C1	3759005C1	1606	B	N/A		
9S5AA(-)	18	GN	TXL	3544884C1	3759005C1	1606	D	N/A		
9T5AA(-)	18	GN	TXL	3544884C1	3759005C1	1606	D	N/A		
9W5AA(-)	18	GN	TXL	3544884C1	3759005C1	1606	D	N/A	2005242C1	
9Y5AA(-)	18	GN	TXL	3544884C1	3759005C1	1606	D	N/A		
9S5AA(+)	18	YL	TXL	3544884C1	3759005C1	1606	E	N/A		
9T5AA(+)	18	YL	TXL	3544884C1	3759005C1	1606	E	N/A		
9W5AA(+)	18	YL	TXL	3544884C1	3759005C1	1606	E	N/A		
9Y5AA(+)	18	YL	TXL	3544884C1	3759005C1	1606	E	N/A		
9D5B(-)	18	GN	TXL	3544884C1	3759005C1	1606	G	N/A		
9K5B(-)	18	GN	TXL	3544884C1	3759005C1	1606	G	N/A		
9M5B(-)	18	GN	TXL	3544884C1	3759005C1	1606	G	N/A		
9N5B(-)	18	GN	TXL	3544884C1	3759005C1	1606	G	N/A		
9Q5B(-)	18	GN	TXL	3544884C1	3759005C1	1606	G	N/A		
9R5B(-)	18	GN	TXL	3544884C1	3759005C1	1606	G	N/A		
9U5B(-)	18	GN	TXL	3544884C1	3759005C1	1606	G	N/A		
GB5B(-)	18	GN	TXL	3544884C1	3759005C1	1606	G	N/A		
GE5B(-)	18	GN	TXL	3544884C1	3759005C1	1606	G	N/A		
GG5B(-)	18	GN	TXL	3544884C1	3759005C1	1606	G	N/A		
GH5B(-)	18	GN	TXL	3544884C1	3759005C1	1606	G	N/A		
GJ5B(-)	18	GN	TXL	3544884C1	3759005C1	1606	G	N/A		
GK5B(-)	18	GN	TXL	3544884C1	3759005C1	1606	G	N/A		
GL5B(-)	18	GN	TXL	3544884C1	3759005C1	1606	G	N/A		
GM5B(-)	18	GN	TXL	3544884C1	3759005C1	1606	G	N/A		
GN5B(-)	18	GN	TXL	3544884C1	3759005C1	1606	G	N/A		
GP5B(-)	18	GN	TXL	3544884C1	3759005C1	1606	G	N/A		
GQ5B(-)	18	GN	TXL	3544884C1	3759005C1	1606	G	N/A		
GT5B(-)	18	GN	TXL	3544884C1	3759005C1	1606	G	N/A		
GU5B(-)	18	GN	TXL	3544884C1	3759005C1	1606	G	N/A		
GV5B(-)	18	GN	TXL	3544884C1	3759005C1	1606	G	N/A		
GW5B(-)	18	GN	TXL	3544884C1	3759005C1	1606	G	N/A		
9D5B(+)	18	YL	TXL	3544884C1	3759005C1	1606	H	N/A		
9K5B(+)	18	YL	TXL	3544884C1	3759005C1	1606	H	N/A	3576263C1	
9M5B(+)	18	YL	TXL	3544884C1	3759005C1	1606	H	N/A		
9N5B(+)	18	YL	TXL	3544884C1	3759005C1	1606	H	N/A		
9Q5B(+)	18	YL	TXL	3544884C1	3759005C1	1606	H	N/A		
9R5B(+)	18	YL	TXL	3544884C1	3759005C1	1606	H	N/A		
9U5B(+)	18	YL	TXL	3544884C1	3759005C1	1606	H	N/A		
GB5B(+)	18	YL	TXL	3544884C1	3759005C1	1606	H	N/A		
GE5B(+)	18	YL	TXL	3544884C1	3759005C1	1606	H	N/A		
GG5B(+)	18	YL	TXL	3544884C1	3759005C1	1606	H	N/A		
GH5B(+)	18	YL	TXL	3544884C1	3759005C1	1606	H	N/A		
GJ5B(+)	18	YL	TXL	3544884C1	3759005C1	1606	H	N/A		
GK5B(+)	18	YL	TXL	3544884C1	3759005C1	1606	H	N/A		
GL5B(+)	18	YL	TXL	3544884C1	3759005C1	1606	H	N/A		
GM5B(+)	18	YL	TXL	3544884C1	3759005C1	1606	H	N/A		
GN5B(+)	18	YL	TXL	3544884C1	3759005C1	1606	H	N/A		
GP5B(+)	18	YL	TXL	3544884C1	3759005C1	1606	H	N/A		
GQ5B(+)	18	YL	TXL	3544884C1	3759005C1	1606	H	N/A		

Circuit Number	Gauge	Color	Insulation	Terminal / Splice Number	Connector Part number	Connector Number	Cavity	Seal/Sleeve	Lock 1	Lock 2
GT5B(+)	18	YL	TXL	3544884C1	3759005C1	1606	H	N/A		
GU5B(+)	18	YL	TXL	3544884C1	3759005C1	1606	H	N/A		
GV5B(+)	18	YL	TXL	3544884C1	3759005C1	1606	H	N/A		
GW5B(+)	18	YL	TXL	3544884C1	3759005C1	1606	H	N/A		
TJ70ER	18	RD	TXL	3544884C1	3759005C1	1606	L	N/A		
LH92#141A	18	TN	TXL	3544884C1	3759005C1	1606	M	N/A		
UB92#141A	18	TN	TXL	3544884C1	3759005C1	1606	M	N/A		
UF92#141A	18	TN	TXL	3544884C1	3759005C1	1606	M	N/A		
9E5BA(-)	18	GN	TXL	3544884C1	3759005C1	1606	N	N/A		
9G5BA(-)	18	GN	TXL	3544884C1	3759005C1	1606	N	N/A		
9H5BA(-)	18	GN	TXL	3544884C1	3759005C1	1606	N	N/A		
9L5BA(-)	18	GN	TXL	3544884C1	3759005C1	1606	N	N/A		
9V5BA(-)	18	GN	TXL	3544884C1	3759005C1	1606	N	N/A		
9Z5BA(-)	18	GN	TXL	3544884C1	3759005C1	1606	N	N/A		
9E5BA(+)	18	YL	TXL	3544884C1	3759005C1	1606	P	N/A		
9G5BA(+)	18	YL	TXL	3544884C1	3759005C1	1606	P	N/A		
9H5BA(+)	18	YL	TXL	3544884C1	3759005C1	1606	P	N/A		
9L5BA(+)	18	YL	TXL	3544884C1	3759005C1	1606	P	N/A		
9V5BA(+)	18	YL	TXL	3544884C1	3759005C1	1606	P	N/A		
9Z5BA(+)	18	YL	TXL	3544884C1	3759005C1	1606	P	N/A		
LQ88A	18	LTGN	TXL	3544884C1	3759005C1	1606	R	N/A		
LB17H	18	PK	TXL	3544884C1	3759005C1	1606	S	N/A		
LC17HA	18	PK	TXL	3544884C1	3759005C1	1606	S	N/A		
LD149AA	18	GY	TXL	3544884C1	3759005C1	1606	S	N/A		
LE149AA	18	GY	TXL	3544884C1	3759005C1	1606	S	N/A		
LH149B	18	GY	TXL	3544884C1	3759005C1	1606	S	N/A		
LA17	16	PK	TXL	3544884C1	3759005C1	1606	T	N/A		
LG17	16	PK	TXL	3544884C1	3759005C1	1606	T	N/A		
SA77D	20	LTGN	TXL	3534303C1	3710061C1	1607	A10	N/A		
SA77BA	20	LTGN	TXL	3534303C1	3710061C1	1607	A12	N/A		
KN49	18	GY	TXL	3522073C1	3710061C1	1607	A3	N/A		
KN49A	18	GY	TXL	3522073C1	3710061C1	1607	A4	N/A		
AA60A	18	OR	TXL	3522073C1	3710061C1	1607	A6	N/A		
NA28D	20	TN	TXL	3534303C1	3710061C1	1607	A9	N/A		
AA6AM	20	GY	TXL	3534303C1	3710061C1	1607	B10	N/A		
UA17B	18	PK	TXL	3522073C1	3710061C1	1607	B2	N/A		
LF104CB	18	DKBL	GXL	3522073C1	3710061C1	1607	B5	N/A		
LF104CC	18	DKBL	TXL	3522073C1	3710061C1	1607	B9	N/A		
AA9Z	18	GY	TXL	1661208C1	2007315C1	1620	A	N/A		
NA9CDC	20	GY	TXL	1661208C1	2007315C1	1620	B	N/A		
XS9AC	18	GY	TXL	1661208C1	2007315C1	1620	C	N/A		
ME110B	18	GY	TXL	1661208C1	2007315C1	1620	D	N/A		
QA9Z	18	GY	TXL	1661208C1	2007315C1	1620	E	N/A		
AB9	18	GY	TXL	1661208C1	2007315C1	1620	F	N/A		
AC9	18	GY	TXL	1661208C1	2007315C1	1620	F	N/A		
KA9B	18	GY	TXL	1661208C1	2007315C1	1620	G	N/A		
ND9A	20	WH	TXL	1661208C1	2007315C1	1620	H	N/A		
QI9BB	18	GY	TXL	1661208C1	2007315C1	1620	J	N/A		
QW9BB	18	GY	TXL	1661208C1	2007315C1	1620	J	N/A		
NL9ZB	18	GY	TXL	1661208C1	2007315C1	1620	K	N/A		
VU9ZF	18	GY	TXL	1661208C1	2007315C1	1620	K	N/A		
YP54	16	BN	TXL	1661209C1	2007315C1	1623	A	N/A		
YS54	16	BN	TXL	1661209C1	2007315C1	1623	A	N/A		
YP54B	18	BN	TXL	1661208C1	2007315C1	1623	C	N/A		

Circuit Number	Gauge	Color	Insulation	Terminal / Splice Number	Connector Part number	Connector Number	Cavity	Seal/Sleeve	Lock 1	Lock 2
YS54B	18	BN	TXL	1661208C1	2007315C1	1623	C	N/A		
XY58DA	18	BN	TXL	1661208C1	2007315C1	1623	D	N/A		
YS58T	18	BN	TXL	1661208C1	2007315C1	1623	D	N/A		
XY58DB	18	BN	TXL	1661208C1	2007315C1	1623	E	N/A		
YP58T	18	BN	TXL	1661208C1	2007315C1	1623	F	N/A		
ZN68	16	BN	TXL	1661209C1	2007315C1	1623	G	N/A		
ZP68	16	BN	TXL	1661209C1	2007315C1	1623	G	N/A		
ZQ68	16	BN	TXL	1661209C1	2007315C1	1623	G	N/A		
YL57C	16	OR	TXL	3535303C1	3543733C1	1625	A	3535424C1		
YL57	16	OR	TXL	3535303C1	3543733C1	1625	B	3535424C1		
YV57BB	16	TN	TXL	3535303C1	3543733C1	1625	C	3535424C1		
YW57BB	16	LTGN	TXL	3535303C1	3543733C1	1625	C	3535424C1		
YX57BB	16	LTGN	TXL	3535303C1	3543733C1	1625	C	3535424C1		
YZ57BB	16	LTGN	TXL	3535303C1	3543733C1	1625	C	3535424C1		
YL56A	16	OR	TXL	3535303C1	3543733C1	1625	E	3535424C1		
YL56	16	OR	TXL	3535303C1	3543733C1	1625	F	3535424C1		
YV56BB	16	YL	TXL	3535303C1	3543733C1	1625	G	3535424C1		
YW56BB	16	YL	TXL	3535303C1	3543733C1	1625	G	3535424C1		
YX56BB	16	YL	TXL	3535303C1	3543733C1	1625	G	3535424C1		
YZ56BB	16	YL	TXL	3535303C1	3543733C1	1625	G	3535424C1		
9D5D(+)	18	YL	TXL	3754236C1	3757649C1	1650	Conne	ti N/A		
9D5D(-)	18	GN	TXL	3754236C1	3757649C1	1650	Conne	ti N/A		
9K5D(+)	18	YL	TXL	3754236C1	3757649C1	1650	Conne	ti N/A	3589992C1	
9K5D(-)	18	GN	TXL	3754236C1	3757649C1	1650	Conne	ti N/A		
9M5D(+)	18	YL	TXL	3754236C1	3757649C1	1650	Conne	ti N/A		
9M5D(-)	18	GN	TXL	3754236C1	3757649C1	1650	Conne	ti N/A		
9N5D(+)	18	YL	TXL	3754236C1	3757649C1	1650	Conne	ti N/A		
9N5D(-)	18	GN	TXL	3754236C1	3757649C1	1650	Conne	ti N/A		
9Q5D(+)	18	YL	TXL	3754236C1	3757649C1	1650	Conne	ti N/A		
9Q5D(-)	18	GN	TXL	3754236C1	3757649C1	1650	Conne	ti N/A		
9S5AD(+)	18	YL	TXL	3754236C1	3757649C1	1650	Conne	ti N/A		
9S5AD(-)	18	GN	TXL	3754236C1	3757649C1	1650	Conne	ti N/A		
9T5AD(+)	18	YL	TXL	3754236C1	3757649C1	1650	Conne	ti N/A		
9T5AD(-)	18	GN	TXL	3754236C1	3757649C1	1650	Conne	ti N/A		
9U5D(+)	18	YL	TXL	3754236C1	3757649C1	1650	Conne	ti N/A		
9U5D(-)	18	GN	TXL	3754236C1	3757649C1	1650	Conne	ti N/A		
AD98-G	18	WH	TXL	3754236C1	3757649C1	1650	Conne	ti N/A		
AD98H	18	RD	TXL	3754236C1	3757649C1	1650	Conne	ti N/A		
GB5D(+)	18	YL	TXL	3754236C1	3757649C1	1650	Conne	ti N/A		
GB5D(-)	18	GN	TXL	3754236C1	3757649C1	1650	Conne	ti N/A		
GE5D(+)	18	YL	TXL	3754236C1	3757649C1	1650	Conne	ti N/A		
GE5D(-)	18	GN	TXL	3754236C1	3757649C1	1650	Conne	ti N/A		
GG5D(+)	18	YL	TXL	3754236C1	3757649C1	1650	Conne	ti N/A		
GG5D(-)	18	GN	TXL	3754236C1	3757649C1	1650	Conne	ti N/A		
GH5D(+)	18	YL	TXL	3754236C1	3757649C1	1650	Conne	ti N/A		
GH5D(-)	18	GN	TXL	3754236C1	3757649C1	1650	Conne	ti N/A		
GJ5D(+)	18	YL	TXL	3754236C1	3757649C1	1650	Conne	ti N/A		
GJ5D(-)	18	GN	TXL	3754236C1	3757649C1	1650	Conne	ti N/A		
GU5D(+)	18	YL	TXL	3754236C1	3757649C1	1650	Conne	ti N/A		
GU5D(-)	18	GN	TXL	3754236C1	3757649C1	1650	Conne	ti N/A		
GV5D(+)	18	YL	TXL	3754236C1	3757649C1	1650	Conne	ti N/A		
GV5D(-)	18	GN	TXL	3754236C1	3757649C1	1650	Conne	ti N/A		
AF3BD(+)	18	DKBL	TXL	1661208C1	2006789C1	1660	A	N/A		
XT3C(+)	18	DKBL	TXL	1661208C1	2006789C1	1660	C	N/A		

Circuit Number	Gauge	Color	Insulation	Terminal / Splice Number	Connector Part number	Connector Number	Cavity	Seal/Sleeve	Lock 1	Lock 2
XU3C(+)	18	DKBL	TXL	1661208C1	2006789C1	1660	C	N/A		
ML3BE(+)	18	DKBL	TXL	1661208C1	2006789C1	1660	E	N/A		
MM3BD(+)	18	DKBL	TXL	1661208C1	2006789C1	1660	E	N/A		
MQ3BE(+)	18	DKBL	TXL	1661208C1	2006789C1	1660	E	N/A		
QS3D(+)	20	DKBL	TXL	1661208C1	2006789C1	1660	F	N/A		
QU3D(+)	20	DKBL	TXL	1661208C1	2006789C1	1660	F	N/A		
QZ3D(+)	20	DKBL	TXL	1661208C1	2006789C1	1660	F	N/A		
AF3BD(-)	18	GY	TXL	1661208C1	2006789C1	1661	A	N/A		
XT3C(-)	18	GY	TXL	1661208C1	2006789C1	1661	C	N/A		
XU3C(-)	18	DKBL	TXL	1661208C1	2006789C1	1661	C	N/A		
ML3BE(-)	18	GY	TXL	1661208C1	2006789C1	1661	E	N/A		
MM3BD(-)	18	GY	TXL	1661208C1	2006789C1	1661	E	N/A		
MQ3BE(-)	18	GY	TXL	1661208C1	2006789C1	1661	E	N/A		
QS3D(-)	20	GY	TXL	1661208C1	2006789C1	1661	F	N/A		
QU3D(-)	20	GY	TXL	1661208C1	2006789C1	1661	F	N/A		
QZ3D(-)	20	GY	TXL	1661208C1	2006789C1	1661	F	N/A		
YF52A	14	YL	TXL	3574288C1	3595625C1	1700	1	N/A		
YG52AA	14	YL	TXL	3574288C1	3595625C1	1700	1	N/A		
WL2-G	0	BK	SGX	475968C1		1700	1	2643308R1		
MA52	14	YL	GXL	3549416C1	3595624C1	1700	1	N/A		
MB52	14	YL	GXL	3549416C1	3595624C1	1700	1	N/A		
MC52	14	YL	GXL	3549416C1	3595624C1	1700	1	N/A		
MF52	14	YL	GXL	3549416C1	3595624C1	1700	1	N/A		
MJ52	14	YL	GXL	3549416C1	3595624C1	1700	1	N/A		
ML52	14	YL	GXL	3549416C1	3595624C1	1700	1	N/A		
MN52	14	YL	GXL	3549416C1	3595624C1	1700	1	N/A		
MU52	14	YL	GXL	3549416C1	3595624C1	1700	1	N/A		
MW52	14	YL	GXL	3549416C1	3595624C1	1700	1	N/A		
NF52	14	YL	GXL	3549416C1	3595624C1	1700	1	N/A		
RB52	14	YL	GXL	3549416C1	3595624C1	1700	1	N/A		
RD52	14	YL	GXL	3549416C1	3595624C1	1700	1	N/A		
MA52	14	YL	GXL	3549416C1	3595624C1	1700	1	N/A		
MB52	14	YL	GXL	3549416C1	3595624C1	1700	1	N/A		
MC52	14	YL	GXL	3549416C1	3595624C1	1700	1	N/A		
MF52	14	YL	GXL	3549416C1	3595624C1	1700	1	N/A		
MJ52	14	YL	GXL	3549416C1	3595624C1	1700	1	N/A		
ML52	14	YL	GXL	3549416C1	3595624C1	1700	1	N/A		
MN52	14	YL	GXL	3549416C1	3595624C1	1700	1	N/A		
MU52	14	YL	GXL	3549416C1	3595624C1	1700	1	N/A		
MW52	14	YL	GXL	3549416C1	3595624C1	1700	1	N/A		
NF52	14	YL	GXL	3549416C1	3595624C1	1700	1	N/A		
RB52	14	YL	GXL	3549416C1	3595624C1	1700	1	N/A		
RD52	14	YL	GXL	3549416C1	3595624C1	1700	1	N/A		
YF53A	14	YL	TXL	3574288C1	3595625C1	1700	2	N/A		
YG53AA	14	YL	TXL	3574288C1	3595625C1	1700	2	N/A		
MA53	14	YL	GXL	3549416C1	3595624C1	1700	2	N/A		
MB53	14	YL	GXL	3549416C1	3595624C1	1700	2	N/A		
MC53	14	YL	GXL	3549416C1	3595624C1	1700	2	N/A		
MF53	14	YL	GXL	3549416C1	3595624C1	1700	2	N/A		
MJ53	14	YL	GXL	3549416C1	3595624C1	1700	2	N/A		
ML53	14	YL	GXL	3549416C1	3595624C1	1700	2	N/A		
MN53	14	YL	GXL	3549416C1	3595624C1	1700	2	N/A		
MU53	14	YL	GXL	3549416C1	3595624C1	1700	2	N/A		
MW53	14	YL	GXL	3549416C1	3595624C1	1700	2	N/A		

Circuit Number	Gauge	Color	Insulation	Terminal / Splice Number	Connector Part number	Connector Number	Cavity	Seal/Sleeve	Lock 1	Lock 2
NF53	14	YL	GXL	3549416C1	3595624C1	1700	2	N/A		
RB53	14	YL	GXL	3549416C1	3595624C1	1700	2	N/A		
RD53	14	YL	GXL	3549416C1	3595624C1	1700	2	N/A		
MA53	14	YL	GXL	3549416C1	3595624C1	1700	2	N/A		
MB53	14	YL	GXL	3549416C1	3595624C1	1700	2	N/A		
MC53	14	YL	GXL	3549416C1	3595624C1	1700	2	N/A		
MF53	14	YL	GXL	3549416C1	3595624C1	1700	2	N/A		
MJ53	14	YL	GXL	3549416C1	3595624C1	1700	2	N/A		
ML53	14	YL	GXL	3549416C1	3595624C1	1700	2	N/A		
MN53	14	YL	GXL	3549416C1	3595624C1	1700	2	N/A		
MU53	14	YL	GXL	3549416C1	3595624C1	1700	2	N/A		
MW53	14	YL	GXL	3549416C1	3595624C1	1700	2	N/A		
NF53	14	YL	GXL	3549416C1	3595624C1	1700	2	N/A		
RB53	14	YL	GXL	3549416C1	3595624C1	1700	2	N/A		
RD53	14	YL	GXL	3549416C1	3595624C1	1700	2	N/A		
YF52B	14	YL	TXL	3574288C1	3595625C1	1700	3	N/A		
YG52BA	14	YL	TXL	3574288C1	3595625C1	1700	3	N/A		
MA52D	14	YL	GXL	3549416C1	3595624C1	1700	3	N/A		
MB52D	14	YL	GXL	3549416C1	3595624C1	1700	3	N/A		
MC52D	14	YL	GXL	3549416C1	3595624C1	1700	3	N/A		
MF52D	14	YL	GXL	3549416C1	3595624C1	1700	3	N/A		
MJ52D	14	YL	GXL	3549416C1	3595624C1	1700	3	N/A		
ML52D	14	YL	GXL	3549416C1	3595624C1	1700	3	N/A		
MN52D	14	YL	GXL	3549416C1	3595624C1	1700	3	N/A		
MU52D	14	YL	GXL	3549416C1	3595624C1	1700	3	N/A		
MW52D	14	YL	GXL	3549416C1	3595624C1	1700	3	N/A		
NF52D	14	YL	GXL	3549416C1	3595624C1	1700	3	N/A		
RB52D	14	YL	GXL	3549416C1	3595624C1	1700	3	N/A		
RD52D	14	YL	GXL	3549416C1	3595624C1	1700	3	N/A		
MA52D	14	YL	GXL	3549416C1	3595624C1	1700	3	N/A		
MB52D	14	YL	GXL	3549416C1	3595624C1	1700	3	N/A		
MC52D	14	YL	GXL	3549416C1	3595624C1	1700	3	N/A		
MF52D	14	YL	GXL	3549416C1	3595624C1	1700	3	N/A		
MJ52D	14	YL	GXL	3549416C1	3595624C1	1700	3	N/A		
ML52D	14	YL	GXL	3549416C1	3595624C1	1700	3	N/A		
MN52D	14	YL	GXL	3549416C1	3595624C1	1700	3	N/A		
MU52D	14	YL	GXL	3549416C1	3595624C1	1700	3	N/A		
MW52D	14	YL	GXL	3549416C1	3595624C1	1700	3	N/A		
NF52D	14	YL	GXL	3549416C1	3595624C1	1700	3	N/A		
RB52D	14	YL	GXL	3549416C1	3595624C1	1700	3	N/A		
RD52D	14	YL	GXL	3549416C1	3595624C1	1700	3	N/A		
YF53B	14	YL	TXL	3574288C1	3595625C1	1700	4	N/A		
YG53BA	14	YL	TXL	3574288C1	3595625C1	1700	4	N/A		
MA53B	14	YL	GXL	3549416C1	3595624C1	1700	4	N/A		
MB53B	14	YL	GXL	3549416C1	3595624C1	1700	4	N/A		
MC53B	14	YL	GXL	3549416C1	3595624C1	1700	4	N/A		
MF53B	14	YL	GXL	3549416C1	3595624C1	1700	4	N/A		
MJ53B	14	YL	GXL	3549416C1	3595624C1	1700	4	N/A		
ML53B	14	YL	GXL	3549416C1	3595624C1	1700	4	N/A		
MN53B	14	YL	GXL	3549416C1	3595624C1	1700	4	N/A		
MU53B	14	YL	GXL	3549416C1	3595624C1	1700	4	N/A		
MW53B	14	YL	GXL	3549416C1	3595624C1	1700	4	N/A		
NF53B	14	YL	GXL	3549416C1	3595624C1	1700	4	N/A		
RB53B	14	YL	GXL	3549416C1	3595624C1	1700	4	N/A		

Circuit Number	Gauge	Color	Insulation	Terminal / Splice Number	Connector Part number	Connector Number	Cavity	Seal/Sleeve	Lock 1	Lock 2
RD53B	14	YL	GXL	3549416C1	3595624C1	1700	4	N/A		
MA53B	14	YL	GXL	3549416C1	3595624C1	1700	4	N/A		
MB53B	14	YL	GXL	3549416C1	3595624C1	1700	4	N/A		
MC53B	14	YL	GXL	3549416C1	3595624C1	1700	4	N/A		
MF53B	14	YL	GXL	3549416C1	3595624C1	1700	4	N/A		
MJ53B	14	YL	GXL	3549416C1	3595624C1	1700	4	N/A		
ML53B	14	YL	GXL	3549416C1	3595624C1	1700	4	N/A		
MN53B	14	YL	GXL	3549416C1	3595624C1	1700	4	N/A		
MU53B	14	YL	GXL	3549416C1	3595624C1	1700	4	N/A		
MW53B	14	YL	GXL	3549416C1	3595624C1	1700	4	N/A		
NF53B	14	YL	GXL	3549416C1	3595624C1	1700	4	N/A		
RB53B	14	YL	GXL	3549416C1	3595624C1	1700	4	N/A		
RD53B	14	YL	GXL	3549416C1	3595624C1	1700	4	N/A		
YP54B	18	BN	TXL	3574289C1	3595625C1	1700	5	N/A		
YS54B	18	BN	TXL	3574289C1	3595625C1	1700	5	N/A		
MA54B	14	BN	GXL	3549416C1	3595624C1	1700	5	N/A		
MB54B	14	BN	GXL	3549416C1	3595624C1	1700	5	N/A		
MC54B	14	BN	GXL	3549416C1	3595624C1	1700	5	N/A		
MF54B	14	BN	GXL	3549416C1	3595624C1	1700	5	N/A		
MJ54B	14	BN	GXL	3549416C1	3595624C1	1700	5	N/A		
ML54B	14	BN	GXL	3549416C1	3595624C1	1700	5	N/A		
MN54B	14	BN	GXL	3549416C1	3595624C1	1700	5	N/A		
MU54B	14	BN	GXL	3549416C1	3595624C1	1700	5	N/A		
MW54B	14	BN	GXL	3549416C1	3595624C1	1700	5	N/A		
NF54B	14	BN	GXL	3549416C1	3595624C1	1700	5	N/A		
RB54B	14	BN	GXL	3549416C1	3595624C1	1700	5	N/A		
RD54B	14	BN	GXL	3549416C1	3595624C1	1700	5	N/A		
MA54B	14	BN	GXL	3549416C1	3595624C1	1700	5	N/A		
MB54B	14	BN	GXL	3549416C1	3595624C1	1700	5	N/A		
MC54B	14	BN	GXL	3549416C1	3595624C1	1700	5	N/A		
MF54B	14	BN	GXL	3549416C1	3595624C1	1700	5	N/A		
MJ54B	14	BN	GXL	3549416C1	3595624C1	1700	5	N/A		
ML54B	14	BN	GXL	3549416C1	3595624C1	1700	5	N/A		
MN54B	14	BN	GXL	3549416C1	3595624C1	1700	5	N/A		
MU54B	14	BN	GXL	3549416C1	3595624C1	1700	5	N/A		
MW54B	14	BN	GXL	3549416C1	3595624C1	1700	5	N/A		
NF54B	14	BN	GXL	3549416C1	3595624C1	1700	5	N/A		
RB54B	14	BN	GXL	3549416C1	3595624C1	1700	5	N/A		
RD54B	14	BN	GXL	3549416C1	3595624C1	1700	5	N/A		
KK18C	16	GY	TXL	3574288C1	3595625C1	1700	6	N/A		
SH19A	16	GY	GXL	3549416C1	3595624C1	1700	6	N/A		
YG53AC	14	YL	TXL	3574288C1	3595625C1	1700	8	N/A		
MC53E	14	YL	GXL	3549416C1	3595624C1	1700	8	N/A		
ML53E	14	YL	GXL	3549416C1	3595624C1	1700	8	N/A		
MN64LO	14	YL	GXL	3549416C1	3595624C1	1700	8	N/A		
MU64LO	14	YL	GXL	3549416C1	3595624C1	1700	8	N/A		
MW64LO	14	YL	GXL	3549416C1	3595624C1	1700	8	N/A		
NF64LO	14	YL	GXL	3549416C1	3595624C1	1700	8	N/A		
RB53E	14	YL	GXL	3549416C1	3595624C1	1700	8	N/A		
RD53E	14	YL	GXL	3549416C1	3595624C1	1700	8	N/A		
MC53E	14	YL	GXL	3549416C1	3595624C1	1700	8	N/A		
ML53E	14	YL	GXL	3549416C1	3595624C1	1700	8	N/A		
MN64LO	14	YL	GXL	3549416C1	3595624C1	1700	8	N/A		
MU64LO	14	YL	GXL	3549416C1	3595624C1	1700	8	N/A		

Circuit Number	Gauge	Color	Insulation	Terminal / Splice Number	Connector Part number	Connector Number	Cavity	Seal/Sleeve	Lock 1	Lock 2
MW64LO	14	YL	GXL	3549416C1	3595624C1	1700	8	N/A		
NF64LO	14	YL	GXL	3549416C1	3595624C1	1700	8	N/A		
RB53E	14	YL	GXL	3549416C1	3595624C1	1700	8	N/A		
RD53E	14	YL	GXL	3549416C1	3595624C1	1700	8	N/A		
YG53BC	14	YL	TXL	3574288C1	3595625C1	1700	9	N/A		
MC53F	14	YL	GXL	3549416C1	3595624C1	1700	9	N/A		
ML53F	14	YL	GXL	3549416C1	3595624C1	1700	9	N/A		
MN64HI	14	YL	GXL	3549416C1	3595624C1	1700	9	N/A		
MU64HI	14	YL	GXL	3549416C1	3595624C1	1700	9	N/A		
MW64HI	14	YL	GXL	3549416C1	3595624C1	1700	9	N/A		
NF64HI	14	YL	GXL	3549416C1	3595624C1	1700	9	N/A		
RB53F	14	YL	GXL	3549416C1	3595624C1	1700	9	N/A		
RD53F	14	YL	GXL	3549416C1	3595624C1	1700	9	N/A		
MC53F	14	YL	GXL	3549416C1	3595624C1	1700	9	N/A		
ML53F	14	YL	GXL	3549416C1	3595624C1	1700	9	N/A		
MN64HI	14	YL	GXL	3549416C1	3595624C1	1700	9	N/A		
MU64HI	14	YL	GXL	3549416C1	3595624C1	1700	9	N/A		
MW64HI	14	YL	GXL	3549416C1	3595624C1	1700	9	N/A		
NF64HI	14	YL	GXL	3549416C1	3595624C1	1700	9	N/A		
RB53F	14	YL	GXL	3549416C1	3595624C1	1700	9	N/A		
RD53F	14	YL	GXL	3549416C1	3595624C1	1700	9	N/A		
YG52AC	14	YL	TXL	3574288C1	3595625C1	1700	10	N/A		
MC52B	14	YL	GXL	3549416C1	3595624C1	1700	10	N/A		
ML52B	14	YL	GXL	3549416C1	3595624C1	1700	10	N/A		
RB52B	14	YL	GXL	3549416C1	3595624C1	1700	10	N/A		
RD52B	14	YL	GXL	3549416C1	3595624C1	1700	10	N/A		
MC52B	14	YL	GXL	3549416C1	3595624C1	1700	10	N/A		
ML52B	14	YL	GXL	3549416C1	3595624C1	1700	10	N/A		
RB52B	14	YL	GXL	3549416C1	3595624C1	1700	10	N/A		
RD52B	14	YL	GXL	3549416C1	3595624C1	1700	10	N/A		
YG52BC	14	YL	TXL	3574288C1	3595625C1	1700	11	N/A		
MC52E	14	YL	GXL	3549416C1	3595624C1	1700	11	N/A		
ML52E	14	YL	GXL	3549416C1	3595624C1	1700	11	N/A		
RB52E	14	YL	GXL	3549416C1	3595624C1	1700	11	N/A		
RD52E	14	YL	GXL	3549416C1	3595624C1	1700	11	N/A		
MC52E	14	YL	GXL	3549416C1	3595624C1	1700	11	N/A		
ML52E	14	YL	GXL	3549416C1	3595624C1	1700	11	N/A		
RB52E	14	YL	GXL	3549416C1	3595624C1	1700	11	N/A		
RD52E	14	YL	GXL	3549416C1	3595624C1	1700	11	N/A		
HU103C	10	LTGN	GXL	3574287C1	3595625C1	1700	12	N/A		
HW14LP	10	RD	GXL	3574287C1	3595625C1	1700	12	N/A		
MG103C	12	LTGN	TXL	3549415C1	3595624C1	1700	12	N/A		
MG103C	12	LTGN	TXL	3549415C1	3595624C1	1700	12	N/A		
HU103D	12	LTGN	TXL	3574287C1	3595625C1	1700	13	N/A		
MG103D	12	LTGN	GXL	3549415C1	3595624C1	1700	13	N/A		
MG103D	12	LTGN	GXL	3549415C1	3595624C1	1700	13	N/A		
XV56	16	OR	TXL	3574285C1	3595625C1	1700	14	N/A		
XZ56B	16	OR	TXL	3574285C1	3595625C1	1700	14	N/A		
YM56	16	OR	TXL	3574285C1	3595625C1	1700	14	N/A		
YN56B	16	OR	TXL	3574285C1	3595625C1	1700	14	N/A		
YT56B	16	OR	TXL	3574285C1	3595625C1	1700	14	N/A		
YY56B	16	OR	TXL	3574285C1	3595625C1	1700	14	N/A		
MA56B	16	OR	TXL	3549417C1	3595624C1	1700	14	N/A		
MB56B	16	OR	TXL	3549417C1	3595624C1	1700	14	N/A		

Circuit Number	Gauge	Color	Insulation	Terminal / Splice Number	Connector Part number	Connector Number	Cavity	Seal/Sleeve	Lock 1	Lock 2
MC56B	16	OR	TXL	3549417C1	3595624C1	1700	14	N/A		
MF56B	16	OR	TXL	3549417C1	3595624C1	1700	14	N/A		
MJ56B	16	OR	TXL	3549417C1	3595624C1	1700	14	N/A		
ML56B	16	OR	TXL	3549417C1	3595624C1	1700	14	N/A		
MN56B	16	OR	TXL	3549417C1	3595624C1	1700	14	N/A		
MU56B	16	OR	TXL	3549417C1	3595624C1	1700	14	N/A		
MW56B	16	OR	TXL	3549417C1	3595624C1	1700	14	N/A		
NF56B	16	OR	TXL	3549417C1	3595624C1	1700	14	N/A		
RB56B	16	OR	TXL	3549417C1	3595624C1	1700	14	N/A		
RD56B	16	OR	TXL	3549417C1	3595624C1	1700	14	N/A		
MA56B	16	OR	TXL	3549417C1	3595624C1	1700	14	N/A		
MB56B	16	OR	TXL	3549417C1	3595624C1	1700	14	N/A		
MC56B	16	OR	TXL	3549417C1	3595624C1	1700	14	N/A		
MF56B	16	OR	TXL	3549417C1	3595624C1	1700	14	N/A		
MJ56B	16	OR	TXL	3549417C1	3595624C1	1700	14	N/A		
ML56B	16	OR	TXL	3549417C1	3595624C1	1700	14	N/A		
MN56B	16	OR	TXL	3549417C1	3595624C1	1700	14	N/A		
MU56B	16	OR	TXL	3549417C1	3595624C1	1700	14	N/A		
MW56B	16	OR	TXL	3549417C1	3595624C1	1700	14	N/A		
NF56B	16	OR	TXL	3549417C1	3595624C1	1700	14	N/A		
RB56B	16	OR	TXL	3549417C1	3595624C1	1700	14	N/A		
RD56B	16	OR	TXL	3549417C1	3595624C1	1700	14	N/A		
XV57B	16	OR	TXL	3574285C1	3595625C1	1700	15	N/A		
XZ57B	16	OR	TXL	3574285C1	3595625C1	1700	15	N/A		
YH57B	16	OR	TXL	3574285C1	3595625C1	1700	15	N/A		
YK57B	16	OR	TXL	3574285C1	3595625C1	1700	15	N/A		
YQ57B	16	OR	TXL	3574285C1	3595625C1	1700	15	N/A		
YR57	16	OR	TXL	3574285C1	3595625C1	1700	15	N/A		
YT57B	16	OR	TXL	3574285C1	3595625C1	1700	15	N/A		
YY57B	16	OR	TXL	3574285C1	3595625C1	1700	15	N/A		
MA57B	16	OR	TXL	3549417C1	3595624C1	1700	15	N/A		
MB57B	16	OR	TXL	3549417C1	3595624C1	1700	15	N/A		
MC57B	16	OR	TXL	3549417C1	3595624C1	1700	15	N/A		
MF57B	16	OR	TXL	3549417C1	3595624C1	1700	15	N/A		
MJ57B	16	OR	TXL	3549417C1	3595624C1	1700	15	N/A		
ML57B	16	OR	TXL	3549417C1	3595624C1	1700	15	N/A		
MN57B	16	OR	TXL	3549417C1	3595624C1	1700	15	N/A		
MU57B	16	OR	TXL	3549417C1	3595624C1	1700	15	N/A		
MW57B	16	OR	TXL	3549417C1	3595624C1	1700	15	N/A		
NF57B	16	OR	TXL	3549417C1	3595624C1	1700	15	N/A		
RB57B	16	OR	TXL	3549417C1	3595624C1	1700	15	N/A		
RD57B	16	OR	TXL	3549417C1	3595624C1	1700	15	N/A		
MA57B	16	OR	TXL	3549417C1	3595624C1	1700	15	N/A		
MB57B	16	OR	TXL	3549417C1	3595624C1	1700	15	N/A		
MC57B	16	OR	TXL	3549417C1	3595624C1	1700	15	N/A		
MF57B	16	OR	TXL	3549417C1	3595624C1	1700	15	N/A		
MJ57B	16	OR	TXL	3549417C1	3595624C1	1700	15	N/A		
ML57B	16	OR	TXL	3549417C1	3595624C1	1700	15	N/A		
MN57B	16	OR	TXL	3549417C1	3595624C1	1700	15	N/A		
MU57B	16	OR	TXL	3549417C1	3595624C1	1700	15	N/A		
MW57B	16	OR	TXL	3549417C1	3595624C1	1700	15	N/A		
NF57B	16	OR	TXL	3549417C1	3595624C1	1700	15	N/A		
RB57B	16	OR	TXL	3549417C1	3595624C1	1700	15	N/A		
RD57B	16	OR	TXL	3549417C1	3595624C1	1700	15	N/A		

Circuit Number	Gauge	Color	Insulation	Terminal / Splice Number	Connector Part number	Connector Number	Cavity	Seal/Sleeve	Lock 1	Lock 2
HK87C	18	GY	TXL	2003343C1	3595625C1	1700	17	N/A		
NZ22AA	16	PK	TXL	3574285C1	3595625C1	1700	17	N/A		
KA9BB	18	GY	TXL	2003343C1	3595625C1	1700	18	N/A		
HJ87KA	18	GY	TXL	2003343C1	3595625C1	1700	19	N/A		
HJ87BA	18	GY	TXL	2003343C1	3595625C1	1700	20	N/A		
YC67A	16	PK	TXL	3574285C1	3595625C1	1700	20	N/A		
AA85	16	GY	TXL	3574285C1	3595625C1	1700	21	N/A		
MR85E	16	GY	GXL	3549417C1	3595624C1	1700	21	N/A		
TB85E	16	GY	GXL	3549417C1	3595624C1	1700	21	N/A		
MR85E	16	GY	GXL	3549417C1	3595624C1	1700	21	N/A		
MX85E	16	GY	GXL	3549417C1	3595624C1	1700	21	N/A		
TB85E	16	GY	GXL	3549417C1	3595624C1	1700	21	N/A		
YJ64A	16	YL	TXL	3574285C1	3595625C1	1700	22	N/A		
MD64A	16	YL	GXL	3549417C1	3595624C1	1700	22	N/A		
TG64A	16	YL	GXL	3549417C1	3595624C1	1700	22	N/A		
TH64A	16	YL	TXL	3549417C1	3595624C1	1700	22	N/A		
TK64A	16	YL	TXL	3549417C1	3595624C1	1700	22	N/A		
MD64A	16	YL	TXL	3549417C1	3595624C1	1700	22	N/A		
TG64A	16	YL	TXL	3549417C1	3595624C1	1700	22	N/A		
TJ64A	16	YL	TXL	3549417C1	3595624C1	1700	22	N/A		
TK64A	16	WH	TXL	3549417C1	3595624C1	1700	22	N/A		
TM64A	16	YL	TXL	3549417C1	3595624C1	1700	22	N/A		
YJ64B	16	YL	TXL	3574285C1	3595625C1	1700	23	N/A		
MD64B	16	YL	GXL	3549417C1	3595624C1	1700	23	N/A		
TG64B	16	YL	GXL	3549417C1	3595624C1	1700	23	N/A		
TH64B	16	YL	TXL	3549417C1	3595624C1	1700	23	N/A		
TK64B	16	YL	TXL	3549417C1	3595624C1	1700	23	N/A		
MD64B	16	YL	TXL	3549417C1	3595624C1	1700	23	N/A		
TG64B	16	YL	TXL	3549417C1	3595624C1	1700	23	N/A		
TJ64B	16	YL	TXL	3549417C1	3595624C1	1700	23	N/A		
TK64B	16	YL	TXL	3549417C1	3595624C1	1700	23	N/A		
TM64B	16	YL	TXL	3549417C1	3595624C1	1700	23	N/A		
XR94BP	16	GY	TXL	3574285C1	3595625C1	1700	24	N/A		
YA67A	16	PK	TXL	3574285C1	3595625C1	1700	24	N/A		
YD67Y	18	PK	TXL	2003343C1	3595625C1	1700	24	N/A		
TF94BP	16	GY	GXL	3549417C1	3595624C1	1700	24	N/A		
YD5DA(+)	18	YL	TXL	2003343C1	3595625C1	1700	25	N/A		
NZ22-GAN	16	WH	TXL	3574288C1	3595625C1	1700	26	N/A		
YD5DA(-)	18	GN	TXL	3574289C1	3595625C1	1700	26	N/A		
NL9ZB	18	GY	TXL	2003343C1	3595625C1	1700	27	N/A		
XA94	16	GY	TXL	3574285C1	3595625C1	1700	27	N/A		
XE94AB	14	GY	GXL	3574285C1	3595625C1	1700	27	N/A		
ME94	18	GY	GXL	3549418C1	3595624C1	1700	27	N/A		
MH94AB	14	GY	TXL	3549417C1	3595624C1	1700	27	N/A		
ME94	18	GY	GXL	3549418C1	3595624C1	1700	27	N/A		
MH94AB	14	GY	TXL	3549417C1	3595624C1	1700	27	N/A		
NL6A	18	GY	GXL	2003343C1	3595625C1	1700	28	N/A		
XA94A	16	GY	TXL	3574285C1	3595625C1	1700	28	N/A		
XE94AA	14	GY	GXL	3574285C1	3595625C1	1700	28	N/A		
ME94A	18	GY	GXL	3549418C1	3595624C1	1700	28	N/A		
MH94AA	14	GY	TXL	3549417C1	3595624C1	1700	28	N/A		
ME94A	18	GY	GXL	3549418C1	3595624C1	1700	28	N/A		
MH94AA	14	GY	TXL	3549417C1	3595624C1	1700	28	N/A		
NL40	18	GY	GXL	2003343C1	3595625C1	1700	29	N/A		

Circuit Number	Gauge	Color	Insulation	Terminal / Splice Number	Connector Part number	Connector Number	Cavity	Seal/Sleeve	Lock 1	Lock 2
XA94B	16	GY	TXL	3574285C1	3595625C1	1700	29	N/A		
XE94AL	14	GY	GXL	3574285C1	3595625C1	1700	29	N/A		
ME94B	18	GY	GXL	3549418C1	3595624C1	1700	29	N/A		
MH94AL	14	GY	TXL	3549417C1	3595624C1	1700	29	N/A		
ME94B	18	GY	GXL	3549418C1	3595624C1	1700	29	N/A		
MH94AL	14	GY	TXL	3549417C1	3595624C1	1700	29	N/A		
XA94C	16	GY	TXL	3574285C1	3595625C1	1700	30	N/A		
XE94AC	18	GY	TXL	2003343C1	3595625C1	1700	30	N/A		
XS94L(+)	18	GY	TXL	2003343C1	3595625C1	1700	30	N/A		
FA94C	18	GY	GXL	3549418C1	3595624C1	1700	30	N/A		
FB94C	18	GY	GXL	3549418C1	3595624C1	1700	30	N/A		
FD94AC	18	GY	TXL	3549418C1	3595624C1	1700	30	N/A		
FE94AC	18	GY	TXL	3549418C1	3595624C1	1700	30	N/A		
FF94AC	18	GY	TXL	3549418C1	3595624C1	1700	30	N/A		
FL94C	18	GY	GXL	3549418C1	3595624C1	1700	30	N/A		
FA94C	18	GY	GXL	3549418C1	3595624C1	1700	30	N/A		
FB94C	18	GY	GXL	3549418C1	3595624C1	1700	30	N/A		
FD94AC	18	GY	TXL	3549418C1	3595624C1	1700	30	N/A		
FE94AC	18	GY	TXL	3549418C1	3595624C1	1700	30	N/A		
FF94AC	18	GY	TXL	3549418C1	3595624C1	1700	30	N/A		
FL94C	18	GY	GXL	3549418C1	3595624C1	1700	30	N/A		
XA94D	16	GY	TXL	3574285C1	3595625C1	1700	31	N/A		
XE94AD	18	GY	TXL	2003343C1	3595625C1	1700	31	N/A		
XS94L(-)	18	GY	TXL	2003343C1	3595625C1	1700	31	N/A		
FA94D	18	GY	GXL	3549418C1	3595624C1	1700	31	N/A		
FB94D	18	GY	GXL	3549418C1	3595624C1	1700	31	N/A		
FD94AD	18	GY	TXL	3549418C1	3595624C1	1700	31	N/A		
FE94AD	18	GY	TXL	3549418C1	3595624C1	1700	31	N/A		
FF94AD	18	GY	TXL	3549418C1	3595624C1	1700	31	N/A		
FL94D	18	GY	GXL	3549418C1	3595624C1	1700	31	N/A		
FA94D	18	GY	GXL	3549418C1	3595624C1	1700	31	N/A		
FB94D	18	GY	GXL	3549418C1	3595624C1	1700	31	N/A		
FD94AD	18	GY	TXL	3549418C1	3595624C1	1700	31	N/A		
FE94AD	18	GY	TXL	3549418C1	3595624C1	1700	31	N/A		
FF94AD	18	GY	TXL	3549418C1	3595624C1	1700	31	N/A		
FL94D	18	GY	GXL	3549418C1	3595624C1	1700	31	N/A		
XA94E	16	GY	TXL	3574285C1	3595625C1	1700	32	N/A		
XE94AE	18	GY	TXL	2003343C1	3595625C1	1700	32	N/A		
XT90R	18	GY	TXL	2003343C1	3595625C1	1700	32	N/A		
XU90R	18	GY	TXL	2003343C1	3595625C1	1700	32	N/A		
FA94E	18	GY	GXL	3549418C1	3595624C1	1700	32	N/A		
FB94E	18	GY	GXL	3549418C1	3595624C1	1700	32	N/A		
FD94AE	18	GY	TXL	3549418C1	3595624C1	1700	32	N/A		
FE94AE	18	GY	TXL	3549418C1	3595624C1	1700	32	N/A		
FF94AE	18	GY	TXL	3549418C1	3595624C1	1700	32	N/A		
FL94E	18	GY	GXL	3549418C1	3595624C1	1700	32	N/A		
FA94E	18	GY	GXL	3549418C1	3595624C1	1700	32	N/A		
FB94E	18	GY	GXL	3549418C1	3595624C1	1700	32	N/A		
FD94AE	18	GY	TXL	3549418C1	3595624C1	1700	32	N/A		
FE94AE	18	GY	TXL	3549418C1	3595624C1	1700	32	N/A		
FF94AE	18	GY	TXL	3549418C1	3595624C1	1700	32	N/A		
FL94E	18	GY	GXL	3549418C1	3595624C1	1700	32	N/A		
XA94F	16	GY	TXL	3574285C1	3595625C1	1700	33	N/A		
XE94AF	18	GY	TXL	2003343C1	3595625C1	1700	33	N/A		

Circuit Number	Gauge	Color	Insulation	Terminal / Splice Number	Connector Part number	Connector Number	Cavity	Seal/Sleeve	Lock 1	Lock 2
XT90D	18	GY	TXL	2003343C1	3595625C1	1700	33	N/A		
XU90D	18	GY	TXL	2003343C1	3595625C1	1700	33	N/A		
FA94F	18	GY	GXL	3549418C1	3595624C1	1700	33	N/A		
FB94F	18	GY	GXL	3549418C1	3595624C1	1700	33	N/A		
FD94AF	18	GY	TXL	3549418C1	3595624C1	1700	33	N/A		
FE94AF	18	GY	TXL	3549418C1	3595624C1	1700	33	N/A		
FF94AF	18	GY	TXL	3549418C1	3595624C1	1700	33	N/A		
FL94F	18	GY	GXL	3549418C1	3595624C1	1700	33	N/A		
FA94F	18	GY	GXL	3549418C1	3595624C1	1700	33	N/A		
FB94F	18	GY	GXL	3549418C1	3595624C1	1700	33	N/A		
FD94AF	18	GY	TXL	3549418C1	3595624C1	1700	33	N/A		
FE94AF	18	GY	TXL	3549418C1	3595624C1	1700	33	N/A		
FF94AF	18	GY	TXL	3549418C1	3595624C1	1700	33	N/A		
FL94F	18	GY	GXL	3549418C1	3595624C1	1700	33	N/A		
XA94H	16	GY	TXL	3574285C1	3595625C1	1700	34	N/A		
XE94AK	14	GY	GXL	3574285C1	3595625C1	1700	34	N/A		
ME94H	18	GY	GXL	3549418C1	3595624C1	1700	34	N/A		
MH94AK	14	GY	TXL	3549417C1	3595624C1	1700	34	N/A		
ME94H	18	GY	GXL	3549418C1	3595624C1	1700	34	N/A		
MH94AK	14	GY	TXL	3549417C1	3595624C1	1700	34	N/A		
XA94J	16	GY	TXL	3574285C1	3595625C1	1700	35	N/A		
XE94AJ	14	GY	GXL	3574285C1	3595625C1	1700	35	N/A		
XS94R(+)	18	GY	TXL	2003343C1	3595625C1	1700	35	N/A		
ME94J	18	GY	GXL	3549418C1	3595624C1	1700	35	N/A		
MH94AJ	14	GY	TXL	3549417C1	3595624C1	1700	35	N/A		
ME94J	18	GY	GXL	3549418C1	3595624C1	1700	35	N/A		
MH94AJ	14	GY	TXL	3549417C1	3595624C1	1700	35	N/A		
XA94K	16	GY	TXL	3574285C1	3595625C1	1700	36	N/A		
XE94AH	14	GY	GXL	3574285C1	3595625C1	1700	36	N/A		
XS94R(-)	18	GY	TXL	2003343C1	3595625C1	1700	36	N/A		
ME94K	18	GY	GXL	3549418C1	3595624C1	1700	36	N/A		
MH94AH	14	GY	TXL	3549417C1	3595624C1	1700	36	N/A		
ME94K	18	GY	GXL	3549418C1	3595624C1	1700	36	N/A		
MH94AH	14	GY	TXL	3549417C1	3595624C1	1700	36	N/A		
GC5BJ(+)	18	YL	TXL	2003343C1	3595625C1	1700	37	N/A		
GD5BJ(+)	18	YL	TXL	2003343C1	3595625C1	1700	37	N/A		
XR94BY	16	GY	TXL	3574285C1	3595625C1	1700	37	N/A		
TF94BY	16	GY	GXL	3549417C1	3595624C1	1700	37	N/A		
GC5BJ(-)	18	GN	TXL	2003343C1	3595625C1	1700	38	N/A		
GD5BJ(-)	18	GN	TXL	2003343C1	3595625C1	1700	38	N/A		
XR94BZ	16	GY	TXL	3574285C1	3595625C1	1700	38	N/A		
XT10GV	18	WH	TXL	2003343C1	3595625C1	1700	38	N/A		
XU10-GV	18	WH	TXL	2003343C1	3595625C1	1700	38	N/A		
TF94BZ	16	GY	GXL	3549417C1	3595624C1	1700	38	N/A		
XR94BT	16	GY	TXL	3574285C1	3595625C1	1700	39	N/A		
TF94BT	16	GY	GXL	3549417C1	3595624C1	1700	39	N/A		
XR94BU	16	GY	TXL	3574285C1	3595625C1	1700	40	N/A		
TF94BU	16	GY	GXL	3549417C1	3595624C1	1700	40	N/A		
XR94BS	16	GY	TXL	3574285C1	3595625C1	1700	41	N/A		
TF94BS	16	GY	GXL	3549417C1	3595624C1	1700	41	N/A		
XF94SBB	18	GY	TXL	2003343C1	3595625C1	1700	42	N/A		
ND94SBB	16	GY	GXL	3549417C1	3595624C1	1700	42	N/A		
TV94SBB	16	GY	GXL	3549417C1	3595624C1	1700	42	N/A		
LF104CC	18	DKBL	TXL	2003343C1	3595625C1	1700	43	N/A		

Circuit Number	Gauge	Color	Insulation	Terminal / Splice Number	Connector Part number	Connector Number	Cavity	Seal/Sleeve	Lock 1	Lock 2
NR104CC	18	DKBL	GXL	3549418C1	3595624C1	1700	43	N/A		
NS104CC	18	DKBL	GXL	3549418C1	3595624C1	1700	43	N/A		
NR104CC	18	DKBL	GXL	3549418C1	3595624C1	1700	43	N/A		
NS104CC	18	DKBL	GXL	3549418C1	3595624C1	1700	43	N/A		
LF104CB	18	DKBL	GXL	2003343C1	3595625C1	1700	44	N/A		
NR104CB	18	DKBL	GXL	3549418C1	3595624C1	1700	44	N/A		
NS104CB	18	DKBL	GXL	3549418C1	3595624C1	1700	44	N/A		
NR104CB	18	DKBL	GXL	3549418C1	3595624C1	1700	44	N/A		
NS104CB	18	DKBL	GXL	3549418C1	3595624C1	1700	44	N/A		
XR94BR	16	GY	TXL	3574285C1	3595625C1	1700	45	N/A		
TF94BR	16	GY	GXL	3549417C1	3595624C1	1700	45	N/A		
XR94BQ	16	GY	TXL	3574285C1	3595625C1	1700	46	N/A		
TF94BQ	16	GY	GXL	3549417C1	3595624C1	1700	46	N/A		
UH44J	18	GY	TXL	2003343C1	3595625C1	1700	47	N/A		
WD44Y	16	GY	TXL	3574285C1	3595625C1	1700	47	N/A		
YA67-G	16	WH	TXL	3574285C1	3595625C1	1700	47	N/A		
YC67-G	16	WH	TXL	3574285C1	3595625C1	1700	47	N/A		
YD67-G	18	WH	TXL	2003343C1	3595625C1	1700	47	N/A		
XR94BW	16	GY	TXL	3574285C1	3595625C1	1700	48	N/A		
TF94BW	16	GY	GXL	3549417C1	3595624C1	1700	48	N/A		
XR94BV	16	GY	TXL	3574285C1	3595625C1	1700	49	N/A		
TF94BV	16	GY	GXL	3549417C1	3595624C1	1700	49	N/A		
XF94SAB	18	GY	TXL	2003343C1	3595625C1	1700	50	N/A		
XT40B	14	GY	TXL	3574285C1	3595625C1	1700	50	N/A		
ND94SAB	16	GY	GXL	3549417C1	3595624C1	1700	50	N/A		
TV94SAB	16	GY	GXL	3549417C1	3595624C1	1700	50	N/A		
XF94SDB	18	GY	TXL	3574289C1	3595625C1	1700	51	N/A		
ND94SDB	16	GY	GXL	3549416C1	3595624C1	1700	51	N/A		
TV94SDB	16	GY	GXL	3549416C1	3595624C1	1700	51	N/A		
HGTEM1	16	GY	TXL	3574285C1	3595625C1	1700	52	N/A		
RCTEM1	16	GY	TXL	3549417C1	3595624C1	1700	52	N/A		
RCTEM1	16	GY	TXL	3549417C1	3595624C1	1700	52	N/A		
HGTEM2	16	GY	TXL	3574285C1	3595625C1	1700	53	N/A		
RCTEM2	16	GY	TXL	3549417C1	3595624C1	1700	53	N/A		
RCTEM2	16	GY	TXL	3549417C1	3595624C1	1700	53	N/A		
HGTEM3	16	GY	TXL	3574285C1	3595625C1	1700	54	N/A		
RCTEM3	16	GY	TXL	3549417C1	3595624C1	1700	54	N/A		
RCTEM3	16	GY	TXL	3549417C1	3595624C1	1700	54	N/A		
HGTEM4	16	GY	TXL	3574285C1	3595625C1	1700	55	N/A		
RCTEM4	16	GY	TXL	3549417C1	3595624C1	1700	55	N/A		
RCTEM4	16	GY	TXL	3549417C1	3595624C1	1700	55	N/A		
HGTEM5	16	GY	TXL	3574285C1	3595625C1	1700	56	N/A		
RCTEM5	16	GY	TXL	3549417C1	3595624C1	1700	56	N/A		
RCTEM5	16	GY	TXL	3549417C1	3595624C1	1700	56	N/A		
HGTEM6	16	GY	TXL	3574285C1	3595625C1	1700	57	N/A		
RCTEM6	16	GY	TXL	3549417C1	3595624C1	1700	57	N/A		
RCTEM6	16	GY	TXL	3549417C1	3595624C1	1700	57	N/A		
HGTEM7	16	GY	TXL	3574285C1	3595625C1	1700	58	N/A		
RCTEM7	16	GY	TXL	3549417C1	3595624C1	1700	58	N/A		
RCTEM7	16	GY	TXL	3549417C1	3595624C1	1700	58	N/A		
HGTEM8	16	GY	TXL	3574285C1	3595625C1	1700	59	N/A		
RCTEM8	16	GY	TXL	3549417C1	3595624C1	1700	59	N/A		
RCTEM8	16	GY	TXL	3549417C1	3595624C1	1700	59	N/A		
XF94SCB	18	GY	TXL	2003343C1	3595625C1	1700	60	N/A		

Circuit Number	Gauge	Color	Insulation	Terminal / Splice Number	Connector Part number	Connector Number	Cavity	Seal/Sleeve	Lock 1	Lock 2
ND94SCB	16	GY	GXL	3549417C1	3595624C1	1700	60	N/A		
TV94SCB	16	GY	GXL	3549417C1	3595624C1	1700	60	N/A		
9D5A(-)	18	GN	TXL	2003343C1	3595625C1	1700	61	N/A		
GW5A(-)	18	GN	TXL	2003343C1	3595625C1	1700	61	N/A		
UH44L	18	GY	TXL	2003343C1	3595625C1	1700	61	N/A		
NK5C(-)	18	GN	TXL	3549418C1	3595624C1	1700	61	N/A		
NK5C(-)	18	GN	TXL	3549418C1	3595624C1	1700	61	N/A		
9D5A(+)	18	YL	TXL	2003343C1	3595625C1	1700	62	N/A		
GW5A(+)	18	YL	TXL	2003343C1	3595625C1	1700	62	N/A		
NK5C(+)	18	YL	TXL	3549418C1	3595624C1	1700	62	N/A		
NK5C(+)	18	YL	TXL	3549418C1	3595624C1	1700	62	N/A		
RL78AB	16	LTGN	TXL	3574285C	3595625C1	1700	63	N/A		
RM78AC	16	LTGN	TXL	3574285C1	3595625C1	1700	63	N/A		
MS78BC	16	LTGN	GXL	3549417C1	3595624C1	1700	63	N/A		
MT78BC	16	LTGN	GXL	3549417C1	3595624C1	1700	63	N/A		
PF78BC	16	LTGN	GXL	3549417C1	3595624C1	1700	63	N/A		
PJ78BC	16	LTGN	GXL	3549417C1	3595624C1	1700	63	N/A		
PM78BC	16	LTGN	GXL	3549417C1	3595624C1	1700	63	N/A		
PR78BC	16	LTGN	GXL	3549417C1	3595624C1	1700	63	N/A		
PT78BC	16	LTGN	GXL	3549417C1	3595624C1	1700	63	N/A		
PU78BC	16	LTGN	GXL	3549417C1	3595624C1	1700	63	N/A		
MS78BC	16	LTGN	GXL	3549417C1	3595624C1	1700	63	N/A		
MT78BC	16	LTGN	GXL	3549417C1	3595624C1	1700	63	N/A		
PF78BC	16	LTGN	GXL	3549417C1	3595624C1	1700	63	N/A		
PJ78BC	16	LTGN	GXL	3549417C1	3595624C1	1700	63	N/A		
PM78BC	16	LTGN	GXL	3549417C1	3595624C1	1700	63	N/A		
PR78BC	16	LTGN	GXL	3549417C1	3595624C1	1700	63	N/A		
RM78AD	16	LTGN	TXL	3574288C1	3595625C1	1700	64	N/A		
MT78AC	16	LTGN	GXL	3549416C1	3595624C1	1700	64	N/A		
PG78AC	16	LTGN	GXL	3549416C1	3595624C1	1700	64	N/A		
PM78AC	16	LTGN	GXL	3549416C1	3595624C1	1700	64	N/A		
PS78AC	16	LTGN	GXL	3549416C1	3595624C1	1700	64	N/A		
PT78AC	16	LTGN	GXL	3549416C1	3595624C1	1700	64	N/A		
PU78AC	16	LTGN	GXL	3549416C1	3595624C1	1700	64	N/A		
MT78AC	16	LTGN	GXL	3549416C1	3595624C1	1700	64	N/A		
PG78AC	16	LTGN	GXL	3549416C1	3595624C1	1700	64	N/A		
PM78AC	16	LTGN	GXL	3549416C1	3595624C1	1700	64	N/A		
PS78AC	16	LTGN	GXL	3549416C1	3595624C1	1700	64	N/A		
HB103M	12	LTGN	GXL	3574287C1	3595625C1	1700	65	N/A		
SE103M	12	LTGN	GXL	3549415C1	3595624C1	1700	65	N/A		
SE103M	12	LTGN	GXL	3549415C1	3595624C1	1700	65	N/A		
HB103N	12	LTGN	GXL	3574287C1	3595625C1	1700	66	N/A		
SE103N	12	LTGN	GXL	3549415C1	3595624C1	1700	66	N/A		
SE103N	12	LTGN	GXL	3549415C1	3595624C1	1700	66	N/A		
HB103P	12	LTGN	GXL	3574287C1	3595625C1	1700	67	N/A		
SE103P	12	LTGN	GXL	3549415C1	3595624C1	1700	67	N/A		
SE103P	12	LTGN	GXL	3549415C1	3595624C1	1700	67	N/A		
XF94SJ	16	GY	GXL	3574288C1	3595625C1	1700	69	N/A		
ND94SJ	16	GY	GXL	3549416C1	3595624C1	1700	69	N/A		
TV94SJ	16	GY	GXL	3549416C1	3595624C1	1700	69	N/A		
XJ94SK	18	GY	TXL	3574289C1	3595625C1	1700	70	N/A		
XP94SK	16	GY	GXL	3574288C1	3595625C1	1700	70	N/A		
ND94SK	16	GY	GXL	3549416C1	3595624C1	1700	70	N/A		
TV94SK	16	GY	GXL	3549416C1	3595624C1	1700	70	N/A		

Circuit Number	Gauge	Color	Insulation	Terminal / Splice Number	Connector Part number	Connector Number	Cavity	Seal/Sleeve	Lock 1	Lock 2
XF94SM	16	GY	GXL	3574288C1	3595625C1	1700	71	N/A		
ND94SM	16	GY	GXL	3549416C1	3595624C1	1700	71	N/A		
TV94SM	16	GY	GXL	3549416C1	3595624C1	1700	71	N/A		
XF94SN	16	GY	GXL	3574288C1	3595625C1	1700	72	N/A		
ND94SN	16	GY	GXL	3549416C1	3595624C1	1700	72	N/A		
TV94SN	16	GY	GXL	3549416C1	3595624C1	1700	72	N/A		
XF94SL	16	GY	GXL	3574288C1	3595625C1	1700	73	N/A		
ND94SL	16	GY	GXL	3549416C1	3595624C1	1700	73	N/A		
TV94SL	16	GY	GXL	3549416C1	3595624C1	1700	73	N/A		
XF94SZC	16	GY	TXL	3574288C1	3595625C1	1700	74	N/A		
ND94SZC	16	GY	GXL	3549416C1	3595624C1	1700	74	N/A		
XF94SVC	16	GY	TXL	3574288C1	3595625C1	1700	75	N/A		
ND94SVC	16	GY	GXL	3549416C1	3595624C1	1700	75	N/A		
XF94SH	18	GY	TXL	3574289C1	3595625C1	1700	76	N/A		
ND94SH	16	GY	GXL	3549416C1	3595624C1	1700	76	N/A		
WL2-G	0	BK	SGX	2241346C1		1700	A	3812583R1		
ZA71A	16	OR	TXL	3574288C1	3595623C1	1701	1	N/A		
ZC71BK	16	OR	TXL	3574288C1	3595623C1	1701	1	N/A		
ZE71AD	16	OR	TXL	3574288C1	3595623C1	1701	1	N/A		
ZG71BA	16	OR	TXL	3574288C1	3595623C1	1701	1	N/A		
ZK71BA	16	OR	TXL	3574288C1	3595623C1	1701	1	N/A		
WL2-FLA	10	RS	FUS	338892C2		1701	1	2644054R1		
WL2-FLB	10	RS	FUS	338892C2		1701	1	2644054R1		
YL56	16	OR	TXL	3574288C1	3595623C1	1701	2	N/A		
YM56A	14	OR	TXL	3574288C1	3595623C1	1701	2	N/A		
YN56A	14	OR	TXL	3574288C1	3595623C1	1701	2	N/A		
YL57	16	OR	TXL	3574288C1	3595623C1	1701	3	N/A		
YM57A	14	OR	TXL	3574288C1	3595623C1	1701	3	N/A		
YN57A	14	OR	TXL	3574288C1	3595623C1	1701	3	N/A		
ZN68	16	BN	TXL	3574288C1	3595623C1	1701	4	N/A		
ZP68A	16	BN	TXL	3574288C1	3595623C1	1701	4	N/A		
ZQ68A	16	BN	TXL	3574288C1	3595623C1	1701	4	N/A		
VG56T	10	YL	TXL	3574287C1	3595623C1	1701	5	N/A		
XV56T	16	OR	TXL	3574288C1	3595623C1	1701	5	N/A		
XZ56T	16	OR	TXL	3574288C1	3595623C1	1701	5	N/A		
YB67TA	18	PK	TXL	3574289C1	3595623C1	1701	5	N/A		
YT56T	16	OR	TXL	3574288C1	3595623C1	1701	5	N/A		
YY56T	16	OR	TXL	3574288C1	3595623C1	1701	5	N/A		
VG57T	10	LTGN	TXL	3574287C1	3595623C1	1701	6	N/A		
XV57T	16	OR	TXL	3574288C1	3595623C1	1701	6	N/A		
XZ57T	16	OR	TXL	3574288C1	3595623C1	1701	6	N/A		
YB67U	18	GY	GXL	3574289C1	3595623C1	1701	6	N/A		
YT57T	16	OR	TXL	3574288C1	3595623C1	1701	6	N/A		
YY57T	16	OR	TXL	3574288C1	3595623C1	1701	6	N/A		
VG58T	12	BN	TXL	3574287C1	3595623C1	1701	7	N/A		
VL58TA	12	BN	TXL	3574287C1	3595623C1	1701	7	N/A		
VM58TA	12	BN	TXL	3574287C1	3595623C1	1701	7	N/A		
VP58T	12	BN	TXL	3574287C1	3595623C1	1701	7	N/A		
VR58TA	12	BN	TXL	3574287C1	3595623C1	1701	7	N/A		
VT58T	12	BN	TXL	3574287C1	3595623C1	1701	7	N/A		
VG68T	12	BN	TXL	3574287C1	3595623C1	1701	8	N/A		
VL68TA	12	BN	TXL	3574287C1	3595623C1	1701	8	N/A		
VM68TA	12	BN	TXL	3574287C1	3595623C1	1701	8	N/A		
VP68T	12	BN	TXL	3574287C1	3595623C1	1701	8	N/A		

Circuit Number	Gauge	Color	Insulation	Terminal / Splice Number	Connector Part number	Connector Number	Cavity	Seal/Sleeve	Lock 1	Lock 2
VR68TA	12	BN	TXL	3574287C1	3595623C1	1701	8	N/A		
VT68T	12	BN	TXL	3574287C1	3595623C1	1701	8	N/A		
TJ70T	10	RD	TXL	3574287C1	3595623C1	1701	9	N/A		
TK70T	12	OR	TXL	3574287C	3595623C1	1701	9	N/A		
YB67V	18	GY	GXL	3574289C1	3595623C1	1701	9	N/A		
TE94T	12	GY	TXL	3574287C1	3595623C1	1701	10	N/A		
TJ94T	10	DKBL	TXL	3574287C1	3595623C1	1701	10	N/A		
YB67W	18	GY	GXL	3574289C1	3595623C1	1701	10	N/A		
TF72V	12	GY	TXL	3574287C1	3595623C1	1701	11	N/A		
TH72A	12	OR	TXL	3574287C	3595623C1	1701	11	N/A		
YV56BB	16	YL	TXL	3574288C1	3595623C1	1701	12	N/A		
YX56BB	16	YL	TXL	3574288C1	3595623C1	1701	12	N/A		
KA9	18	GY	TXL	3574289C1	3595623C1	1701	13	N/A		
XB94BM	16	GY	TXL	3574285C1	3595623C1	1701	14	N/A		
XE94WL	18	GY	TXL	2003343C1	3595623C1	1701	14	N/A		
XS94L(+)	18	GY	TXL	2003343C1	3595623C1	1701	14	N/A		
XB94BN	16	GY	TXL	3574285C1	3595623C1	1701	15	N/A		
XE94WM	18	GY	TXL	2003343C1	3595623C1	1701	15	N/A		
XS94L(-)	18	GY	TXL	2003343C1	3595623C1	1701	15	N/A		
XA94BE	16	GY	TXL	3574285C1	3595623C1	1701	16	N/A		
XE94WW	14	GY	GXL	3574285C1	3595623C1	1701	16	N/A		
XS94R(+)	18	GY	TXL	2003343C1	3595623C1	1701	16	N/A		
XA94BD	16	GY	TXL	3574285C1	3595623C1	1701	17	N/A		
XE94WU	14	GY	TXL	3574285C1	3595623C1	1701	17	N/A		
XS94R(-)	18	GY	TXL	2003343C1	3595623C1	1701	17	N/A		
XA94BH	16	GY	TXL	3574285C1	3595623C1	1701	18	N/A		
XE94WN	14	GY	GXL	3574285C1	3595623C1	1701	18	N/A		
XT3C(-)	18	GY	TXL	2003343C1	3595623C1	1701	18	N/A		
XU3C(-)	18	DKBL	TXL	2003343C1	3595623C1	1701	18	N/A		
XA94BF	16	GY	TXL	3574285C1	3595623C1	1701	19	N/A		
XE94WR	14	GY	GXL	3574285C1	3595623C1	1701	19	N/A		
XT3C(+)	18	DKBL	TXL	2003343C1	3595623C1	1701	19	N/A		
XU3C(+)	18	DKBL	TXL	2003343C1	3595623C1	1701	19	N/A		
XA94BL	16	GY	TXL	3574285C1	3595623C1	1701	20	N/A		
XA94BJ	16	GY	TXL	3574285C1	3595623C1	1701	21	N/A		
XC44A	18	GY	TXL	2003343C1	3595623C1	1701	21	N/A		
XX44A	18	GY	TXL	2003343C1	3595623C1	1701	21	N/A		
XA94BK	16	GY	TXL	3574285C1	3595623C1	1701	22	N/A		
XE94WS	18	GY	TXL	2003343C1	3595623C1	1701	22	N/A		
XT90D	18	GY	TXL	2003343C1	3595623C1	1701	22	N/A		
XU90D	18	GY	TXL	2003343C1	3595623C1	1701	22	N/A		
XA94BA	16	GY	TXL	3574285C1	3595623C1	1701	23	N/A		
XE94WT	18	GY	TXL	2003343C1	3595623C1	1701	23	N/A		
XT90R	18	GY	TXL	2003343C1	3595623C1	1701	23	N/A		
XU90R	18	GY	TXL	2003343C1	3595623C1	1701	23	N/A		
XA94BB	16	GY	TXL	3574285C1	3595623C1	1701	24	N/A		
XE94G7	14	WH	GXL	3574285C1	3595623C1	1701	24	N/A		
XT90F	18	GY	TXL	2003343C1	3595623C1	1701	24	N/A		
XU90E	18	GY	TXL	2003343C1	3595623C1	1701	24	N/A		
XA94BC	16	GY	TXL	3574285C1	3595623C1	1701	25	N/A		
XE94G6	14	WH	GXL	3574285C1	3595623C1	1701	25	N/A		
XT10GV	18	WH	TXL	2003343C1	3595623C1	1701	25	N/A		
XU10-GV	18	WH	TXL	2003343C1	3595623C1	1701	25	N/A		
XS94L	12	GY	TXL	3574287C1	3595623C1	1701	26	N/A		

Circuit Number	Gauge	Color	Insulation	Terminal / Splice Number	Connector Part number	Connector Number	Cavity	Seal/Sleeve	Lock 1	Lock 2
AA36B	18	TN	TXL	2003343C1	3595623C1	1701	27	N/A		
HD85AB	18	GY	TXL	2003343C1	3595623C1	1701	28	N/A		
AA36A	18	TN	TXL	2003343C1	3595623C1	1701	29	N/A		
KH39	16	GY	TXL	3574285C1	3595623C1	1701	31	N/A		
LS59A	18	GY	TXL	2003343C1	3595623C1	1701	32	N/A		
LT59C	18	GY	TXL	2003343C1	3595623C1	1701	33	N/A		
LT59D	18	GY	TXL	2003343C1	3595623C1	1701	34	N/A		
LU59E	18	GY	TXL	2003343C1	3595623C1	1701	35	N/A		
LY59G	18	GY	TXL	2003343C1	3595623C1	1701	36	N/A		
LY59H	18	GY	TXL	2003343C1	3595623C1	1701	37	N/A		
LY59J	18	GY	TXL	2003343C1	3595623C1	1701	38	N/A		
LY59K	18	GY	TXL	2003343C1	3595623C1	1701	39	N/A		
KH39A	16	GY	TXL	3574285C1	3595623C1	1701	40	N/A		
HE87EA	18	GY	TXL	2003343C1	3595623C1	1701	41	N/A		
YV56BC	16	YL	TXL	3574285C1	3595623C1	1701	42	N/A		
YX56BC	16	YL	TXL	3574285C1	3595623C1	1701	42	N/A		
LF104D	18	DKBL	TXL	2003343C1	3595623C1	1701	43	N/A		
NN32B	18	TN	TXL	2003343C1	3595623C1	1701	43	N/A		
LJ104DB	16	DKBL	TXL	3574285C	3595623C1	1701	44	N/A		
LX59Q	18	GY	TXL	2003343C1	3595623C1	1701	44	N/A		
NM32A	18	TN	GXL	2003343C1	3595623C1	1701	44	N/A		
KN49	18	GY	TXL	2003343C1	3595623C1	1701	45	N/A		
LW59M	18	GY	TXL	2003343C1	3595623C1	1701	46	N/A		
LX59M	18	GY	TXL	2003343C1	3595623C1	1701	46	N/A		
XG94SL	18	GY	TXL	2003343C1	3595623C1	1701	46	N/A		
LW59N	18	GY	TXL	2003343C1	3595623C1	1701	47	N/A		
LX59N	18	GY	TXL	2003343C1	3595623C1	1701	47	N/A		
XG94SM	16	GY	GXL	3574285C1	3595623C1	1701	47	N/A		
LW59P	18	GY	TXL	2003343C1	3595623C1	1701	48	N/A		
LX59P	18	GY	TXL	2003343C1	3595623C1	1701	48	N/A		
XG94SN	18	GY	TXL	2003343C1	3595623C1	1701	48	N/A		
LW59Q	18	GY	TXL	2003343C1	3595623C1	1701	49	N/A		
XL94SJ	16	GY	GXL	3574285C1	3595623C1	1701	49	N/A		
KN49A	18	GY	TXL	2003343C1	3595623C1	1701	50	N/A		
HN20	16	LTGN	TXL	3574288C1	3595623C1	1701	51	N/A		
9J5BA(+)	18	YL	TXL	2003343C1	3595623C1	1701	52	N/A		
9X5BA(+)	18	YL	TXL	2003343C1	3595623C1	1701	52	N/A		
GD5BA(+)	18	YL	TXL	2003343C1	3595623C1	1701	52	N/A		
9J5BA(-)	18	GN	TXL	2003343C1	3595623C1	1701	53	N/A		
9X5BA(-)	18	GN	TXL	2003343C1	3595623C1	1701	53	N/A		
GD5BA(-)	18	GN	TXL	2003343C1	3595623C1	1701	53	N/A		
LZ59S	18	GY	TXL	2003343C1	3595623C1	1701	54	N/A		
XL94SA	20	GY	TXL	2003343C1	3595623C1	1701	54	N/A		
LZ59T	18	GY	TXL	2003343C1	3595623C1	1701	55	N/A		
ME61B	18	GY	TXL	2003343C1	3595623C1	1701	55	N/A		
XL94SC	20	GY	TXL	2003343C1	3595623C1	1701	55	N/A		
LZ59V	18	GY	TXL	2003343C1	3595623C1	1701	56	N/A		
ME106B	18	GY	TXL	2003343C1	3595623C1	1701	56	N/A		
XL94SB	20	GY	TXL	2003343C1	3595623C1	1701	56	N/A		
LZ59W	18	GY	TXL	2003343C1	3595623C1	1701	57	N/A		
ME110B	18	GY	TXL	2003343C1	3595623C1	1701	57	N/A		
XL94SD	20	GY	TXL	2003343C1	3595623C1	1701	57	N/A		
HE87D	18	GY	TXL	2003343C1	3595623C1	1701	58	N/A		
WC44D	18	GY	TXL	2003343C1	3595623C1	1701	58	N/A		

Circuit Number	Gauge	Color	Insulation	Terminal / Splice Number	Connector Part number	Connector Number	Cavity	Seal/Sleeve	Lock 1	Lock 2
HE87MB	18	GY	TXL	2003343C1	3595623C1	1701	59	N/A		
KS59MB	18	GY	TXL	2003343C1	3595623C1	1701	60	N/A		
KT59MB	18	GY	TXL	2003343C1	3595623C1	1701	60	N/A		
KU59MB	18	GY	TXL	2003343C1	3595623C1	1701	60	N/A		
XC90-K	18	GY	TXL	2003343C1	3595623C1	1701	60	N/A		
XD90-GD	14	GY	TXL	3574285C1	3595623C1	1701	60	N/A		
XK94SZC	18	GY	TXL	2003343C1	3595623C1	1701	60	N/A		
XX90-K	18	GY	TXL	2003343C1	3595623C1	1701	60	N/A		
GE5A(-)	18	GN	TXL	2003343C1	3595623C1	1701	61	N/A		
GG5A(-)	18	GN	TXL	2003343C1	3595623C1	1701	61	N/A		
GQ5A(-)	18	GN	TXL	2003343C1	3595623C1	1701	61	N/A		
GT5A(-)	18	GN	TXL	2003343C1	3595623C1	1701	61	N/A		
GV5A(-)	18	GN	TXL	2003343C1	3595623C1	1701	61	N/A		
KS59NB	18	GY	TXL	2003343C1	3595623C1	1701	61	N/A		
KU59NB	18	GY	TXL	2003343C1	3595623C1	1701	61	N/A		
XK94SVC	18	GY	TXL	2003343C1	3595623C1	1701	61	N/A		
XN94AA	14	GY	GXL	3574285C1	3595623C1	1701	61	N/A		
XP94AA	14	GY	GXL	3574285C1	3595623C1	1701	61	N/A		
XQ94AA	14	GY	GXL	3574285C1	3595623C1	1701	61	N/A		
GE5A(+)	18	YL	TXL	2003343C1	3595623C1	1701	62	N/A		
GG5A(+)	18	YL	TXL	2003343C1	3595623C1	1701	62	N/A		
GQ5A(+)	18	YL	TXL	2003343C1	3595623C1	1701	62	N/A		
GT5A(+)	18	YL	TXL	2003343C1	3595623C1	1701	62	N/A		
GV5A(+)	18	YL	TXL	2003343C1	3595623C1	1701	62	N/A		
KU59NC	18	GY	TXL	2003343C1	3595623C1	1701	62	N/A		
XK94SH	18	GY	TXL	2003343C1	3595623C1	1701	62	N/A		
YV57BB	16	TN	TXL	3574285C1	3595623C1	1701	63	N/A		
YX57BB	16	LTGN	TXL	3574285C1	3595623C1	1701	63	N/A		
YV57BC	16	LTGN	TXL	3574288C1	3595623C1	1701	64	N/A		
YX57BC	16	LTGN	TXL	3574288C1	3595623C1	1701	64	N/A		
XN94AB	14	GY	GXL	3574288C1	3595623C1	1701	65	N/A		
XP94AB	16	GY	GXL	3574288C1	3595623C1	1701	65	N/A		
XQ94AB	14	GY	GXL	3574288C1	3595623C1	1701	65	N/A		
KP112	16	GY	TXL	3574288C1	3595623C1	1701	66	N/A		
KK18B	16	GY	TXL	3574288C1	3595623C1	1701	67	N/A		
KM18D	16	GY	TXL	3574288C1	3595623C1	1701	67	N/A		
ZT65	16	OR	TXL	3574288C1	3595623C1	1701	68	N/A		
WC44	16	GY	TXL	3574288C1	3595623C1	1701	69	N/A		
XM94SK	18	GY	TXL	3574289C1	3595623C1	1701	69	N/A		
XQ94SK	16	GY	GXL	3574288C1	3595623C1	1701	69	N/A		
KQ71N	16	OR	TXL	3574288C1	3595623C1	1701	70	N/A		
VL68TB	12	BN	TXL	3574287C1	3595623C1	1701	71	N/A		
VP68BB	12	BN	TXL	3574287C1	3595623C1	1701	71	N/A		
VR68TB	16	BN	TXL	3574288C1	3595623C1	1701	71	N/A		
ZP68TB	16	BN	TXL	3574288C1	3595623C1	1701	71	N/A		
VL70TA	12	OR	TXL	3574287C	3595623C1	1701	72	N/A		
VQ70TB	12	OR	TXL	3574287C1	3595623C1	1701	72	N/A		
VS70TA	12	OR	TXL	3574287C	3595623C1	1701	72	N/A		
YX70B	12	YL	TXL	3574287C1	3595623C1	1701	72	N/A		
ZG71BB	16	OR	TXL	3574288C1	3595623C1	1701	73	N/A		
VL58TB	12	BN	TXL	3574287C1	3595623C1	1701	74	N/A		
VP58BB	12	BN	TXL	3574287C1	3595623C1	1701	74	N/A		
VR58TB	12	BN	TXL	3574287C1	3595623C1	1701	74	N/A		
VL12BB	16	LTBL	TXL	3574288C	3595623C1	1701	75	N/A		

Circuit Number	Gauge	Color	Insulation	Terminal / Splice Number	Connector Part number	Connector Number	Cavity	Seal/Sleeve	Lock 1	Lock 2
VP12BB	16	LTBL	TXL	3574288C1	3595623C1	1701	75	N/A		
VR12BB	16	LTBL	TXL	3574288C	3595623C1	1701	75	N/A		
WL2-FL	2	BK	FUS	475963C1		1701	A	2644004R1		
PC92A20A	16	TN	GXL	3574288C1	3595621C1	1702	1	N/A		
UK92A	18	TN	TXL	3574289C1	3595621C1	1702	1	N/A		
KA146-G	16	GY	TXL	3549417C1	3595620C1	1702	2	N/A	1661874C1	
TC9E	18	GY	TXL	2003343C1	3595621C1	1702	2	N/A		
TD9E	18	GY	TXL	2003343C1	3595621C1	1702	2	N/A		
KA146-G	16	GY	TXL	3549417C1	3595620C1	1702	2	N/A		
KK77A	18	LTGN	TXL	3549418C1	3595620C1	1702	3	N/A		
SA6DBJ	20	GY	TXL	2003343C1	3595621C1	1702	3	N/A		
KK77A	18	LTGN	TXL	3549418C1	3595620C1	1702	3	N/A		
KK77B	18	LTGN	TXL	3549418C1	3595620C1	1702	4	N/A		
SA77BJ	20	LTGN	TXL	2003343C1	3595621C1	1702	4	N/A		
KK77B	18	LTGN	TXL	3549418C1	3595620C1	1702	4	N/A		
RB14A	14	RD	TXL	3549417C1	3595620C1	1702	5	N/A		
MJ71A	18	OR	150	3549418C1	3595620C1	1702	6	N/A		
PG92B145	18	OR	TXL	3549418C1	3595620C1	1702	6	N/A		
PU92B145	18	OR	TXL	3549418C1	3595620C1	1702	6	N/A		
PY92#145	18	OR	TXL	3549418C1	3595620C1	1702	6	N/A		
SY92#145	18	OR	TXL	3549418C1	3595620C1	1702	6	N/A	3610532C1	
ZA71BA	16	OR	TXL	3574285C1	3595621C1	1702	6	N/A		
ZH71	16	OR	TXL	3574285C1	3595621C1	1702	6	N/A		
KH71	16	OR	TXL	3549417C1	3595620C1	1702	6	N/A		
MJ71A	18	OR	150	3549418C1	3595620C1	1702	6	N/A		
PY92#145	18	OR	TXL	3549418C1	3595620C1	1702	6	N/A		
SY92#145	18	OR	TXL	3549418C1	3595620C1	1702	6	N/A		
MJ71B	18	TN	150	3549418C1	3595620C1	1702	7	N/A		
PH92#165	18	TN	TXL	3549418C1	3595620C1	1702	7	N/A		
PM92#165	18	TN	TXL	3549418C1	3595620C1	1702	7	N/A		
PV92#165	18	TN	TXL	3549418C1	3595620C1	1702	7	N/A		
SM92#165	18	TN	TXL	3549418C1	3595620C1	1702	7	N/A		
ZA71BJ	16	OR	TXL	3574285C1	3595621C1	1702	7	N/A		
ZC92#165	18	TN	TXL	2003343C1	3595621C1	1702	7	N/A		
ZH71AB	16	OR	TXL	3574285C1	3595621C1	1702	7	N/A		
ZJ92#165	18	TN	TXL	2003343C1	3595621C1	1702	7	N/A		
ZL71AA	18	TN	TXL	2003343C1	3595621C1	1702	7	N/A		
KH71A	16	OR	TXL	3549417C1	3595620C1	1702	7	N/A		
MJ71B	18	TN	150	3549418C1	3595620C1	1702	7	N/A		
PM92#165	18	TN	TXL	3549418C1	3595620C1	1702	7	N/A		
SM92#165	18	TN	TXL	3549418C1	3595620C1	1702	7	N/A		
PH92#163	18	YL	TXL	3549418C1	3595620C1	1702	8	N/A		
PM92#163	18	YL	TXL	3549418C1	3595620C1	1702	8	N/A	1661874C1	
PV92#163	18	YL	TXL	3549418C1	3595620C1	1702	8	N/A		
SM92#163	18	YL	TXL	3549418C1	3595620C1	1702	8	N/A		
UB92#163	16	PK	TXL	3574285C1	3595621C1	1702	8	N/A		
UD13AJ	16	PK	GXL	3574285C1	3595621C1	1702	8	N/A		
UF92#163	16	TN	TXL	3574285C1	3595621C1	1702	8	N/A		
UL92#163B	16	PK	TXL	3574285C1	3595621C1	1702	8	N/A		
KH13A	14	PK	GXL	3549417C1	3595620C1	1702	8	N/A		
PM92#163	18	YL	TXL	3549418C1	3595620C1	1702	8	N/A		
SM92#163	18	YL	TXL	3549418C1	3595620C1	1702	8	N/A		
SK14HD	14	RD	TXL	3574288C1	3595621C1	1702	9	N/A		
SL14HF	14	RD	TXL	3574288C1	3595621C1	1702	9	N/A		

Circuit Number	Gauge	Color	Insulation	Terminal / Splice Number	Connector Part number	Connector Number	Cavity	Seal/Sleeve	Lock 1	Lock 2
ZL71C	18	WH	TXL	3574289C1	3595621C1	1702	9	N/A		
KK77	18	LTGN	TXL	3549418C1	3595620C1	1702	10	N/A		
SA77J	16	LTGN	GXL	3574285C1	3595621C1	1702	10	N/A		
KK77	18	LTGN	TXL	3549418C1	3595620C1	1702	10	N/A		
KW5A(+)	18	YL	TXL	3549418C1	3595620C1	1702	11	N/A		
PB5A(+)	18	YL	TXL	3549418C1	3595620C1	1702	11	N/A		
PC5E(+)	18	YL	TXL	3549418C1	3595620C1	1702	11	N/A		
RT5A(+)	18	YL	TXL	3549418C1	3595620C1	1702	11	N/A		
SB5A(+)	18	YL	TXL	3549418C1	3595620C1	1702	11	N/A		
9B5R(+)	18	YL	TXL	2003343C1	3595621C1	1702	11	N/A		
9C5R(+)	18	YL	TXL	2003343C1	3595621C1	1702	11	N/A		
9K5R(+)	18	YL	TXL	2003343C1	3595621C1	1702	11	N/A		
9M5R(+)	18	YL	TXL	2003343C1	3595621C1	1702	11	N/A		
9N5R(+)	18	YL	TXL	2003343C1	3595621C1	1702	11	N/A		
9Q5R(+)	18	YL	TXL	2003343C1	3595621C1	1702	11	N/A		
9R5R(+)	18	YL	TXL	2003343C1	3595621C1	1702	11	N/A		
9U5PJ(+)	18	YL	TXL	2003343C1	3595621C1	1702	11	N/A		
GB5R(+)	18	YL	TXL	2003343C1	3595621C1	1702	11	N/A		
GE5R(+)	18	YL	TXL	2003343C1	3595621C1	1702	11	N/A		
GF5R(+)	18	YL	TXL	2003343C1	3595621C1	1702	11	N/A		
GG5R(+)	18	YL	TXL	2003343C1	3595621C1	1702	11	N/A		
GH5R(+)	18	YL	TXL	2003343C1	3595621C1	1702	11	N/A		
GJ5R(+)	18	YL	TXL	2003343C1	3595621C1	1702	11	N/A		
GK5R(+)	18	YL	TXL	2003343C1	3595621C1	1702	11	N/A		
GL5R(+)	18	YL	TXL	2003343C1	3595621C1	1702	11	N/A		
GM5R(+)	18	YL	TXL	2003343C1	3595621C1	1702	11	N/A		
GN5R(+)	18	YL	TXL	2003343C1	3595621C1	1702	11	N/A		
GP5R(+)	18	YL	TXL	2003343C1	3595621C1	1702	11	N/A		
GQ5R(+)	18	YL	TXL	2003343C1	3595621C1	1702	11	N/A		
GT5R(+)	18	YL	TXL	2003343C1	3595621C1	1702	11	N/A		
GU5R(+)	18	YL	TXL	2003343C1	3595621C1	1702	11	N/A		
GV5R(+)	18	YL	TXL	2003343C1	3595621C1	1702	11	N/A		
KW5A(+)	18	YL	TXL	3549418C1	3595620C1	1702	11	N/A		
KX5R(+)	18	YL	TXL	3549418C1	3595620C1	1702	11	N/A		
PC5E(+)	18	YL	TXL	3549418C1	3595620C1	1702	11	N/A		
SB5A(+)	18	YL	TXL	3549418C1	3595620C1	1702	11	N/A		
PH92#161	18	TN	TXL	3549418C1	3595620C1	1702	12	N/A		
PV92#161	18	TN	TXL	3549418C1	3595620C1	1702	12	N/A		
RA28B	18	TN	TXL	2003343C1	3595621C1	1702	12	N/A		
UG92#161	18	TN	TXL	2003343C1	3595621C1	1702	12	N/A		
FM28	18	TN	GXL	3549418C1	3595620C1	1702	12	N/A		
CA31B	18	TN	TXL	3549418C1	3595620C1	1702	13	N/A		
NJ31	18	TN	TXL	2003343C1	3595621C1	1702	13	N/A		
CA31B	18	TN	150	3549418C1	3595620C1	1702	13	N/A		
KG31	18	TN	TXL	3549418C1	3595620C1	1702	13	N/A		
KJ31	18	TN	TXL	3549418C1	3595620C1	1702	13	N/A		
MA88	14	LTGN	GXL	3549417C1	3595620C1	1702	14	N/A		
LP88J	18	LTGN	TXL	2003343C1	3595621C1	1702	14	N/A		
MA88	14	LTGN	GXL	3549417C1	3595620C1	1702	14	N/A		
MB41E	18	TN	TXL	2003343C1	3595621C1	1702	15	N/A		
KA17A	16	PK	TXL	3549417C1	3595620C1	1702	16	N/A	3539784C1	
LA17B	16	PK	TXL	3574285C1	3595621C1	1702	16	N/A		
LG17BA	16	PK	TXL	3574285C1	3595621C1	1702	16	N/A		
GA17	16	PK	GXL	3549417C1	3595620C1	1702	16	N/A		

Circuit Number	Gauge	Color	Insulation	Terminal / Splice Number	Connector Part number	Connector Number	Cavity	Seal/Sleeve	Lock 1	Lock 2
GB17A	16	PK	TXL	3549417C1	3595620C1	1702	16	N/A		
KW5A(-)	18	GN	TXL	3549418C1	3595620C1	1702	17	N/A		
PB5A(-)	18	GN	TXL	3549418C1	3595620C1	1702	17	N/A		
PC5E(-)	18	GN	TXL	3549418C1	3595620C1	1702	17	N/A		
RT5A(-)	18	GN	TXL	3549418C1	3595620C1	1702	17	N/A		
SB5A(-)	18	GN	TXL	3549418C1	3595620C1	1702	17	N/A		
9B5R(-)	18	GN	TXL	2003343C1	3595621C1	1702	17	N/A		
9C5R(-)	18	GN	TXL	2003343C1	3595621C1	1702	17	N/A		
9K5R(-)	18	GN	TXL	2003343C1	3595621C1	1702	17	N/A		
9M5R(-)	18	GN	TXL	2003343C1	3595621C1	1702	17	N/A		
9N5R(-)	18	GN	TXL	2003343C1	3595621C1	1702	17	N/A		
9Q5R(-)	18	GN	TXL	2003343C1	3595621C1	1702	17	N/A		
9R5R(-)	18	GN	TXL	2003343C1	3595621C1	1702	17	N/A		
9U5PJ(-)	18	GN	TXL	2003343C1	3595621C1	1702	17	N/A		
GB5R(-)	18	GN	TXL	2003343C1	3595621C1	1702	17	N/A		
GE5R(-)	18	GN	TXL	2003343C1	3595621C1	1702	17	N/A		
GF5R(-)	18	GN	TXL	2003343C1	3595621C1	1702	17	N/A		
GG5R(-)	18	GN	TXL	2003343C1	3595621C1	1702	17	N/A		
GH5R(-)	18	GN	TXL	2003343C1	3595621C1	1702	17	N/A		
GJ5R(-)	18	GN	TXL	2003343C1	3595621C1	1702	17	N/A		
GK5R(-)	18	GN	TXL	2003343C1	3595621C1	1702	17	N/A		
GL5R(-)	18	GN	TXL	2003343C1	3595621C1	1702	17	N/A		
GM5R(-)	18	GN	TXL	2003343C1	3595621C1	1702	17	N/A		
GN5R(-)	18	GN	TXL	2003343C1	3595621C1	1702	17	N/A		
GP5R(-)	18	GN	TXL	2003343C1	3595621C1	1702	17	N/A		
GQ5R(-)	18	GN	TXL	2003343C1	3595621C1	1702	17	N/A		
GT5R(-)	18	GN	TXL	2003343C1	3595621C1	1702	17	N/A		
GU5R(-)	18	GN	TXL	2003343C1	3595621C1	1702	17	N/A		
GV5R(-)	18	GN	TXL	2003343C1	3595621C1	1702	17	N/A		
KW5A(-)	18	GN	TXL	3549418C1	3595620C1	1702	17	N/A		
KX5R(-)	18	GN	TXL	3549418C1	3595620C1	1702	17	N/A		
PC5E(-)	18	GN	TXL	3549418C1	3595620C1	1702	17	N/A		
SB5A(-)	18	GN	TXL	3549418C1	3595620C1	1702	17	N/A		
MB41D	18	TN	TXL	2003343C1	3595621C1	1702	18	N/A		
PH92#142	18	WH	TXL	3549418C1	3595620C1	1702	19	N/A		
PM92#134	18	YL	TXL	3549418C1	3595620C1	1702	19	N/A	3553650C1	
PV92#142	18	WH	TXL	3549418C1	3595620C1	1702	19	N/A		
SM92#134	18	YL	TXL	3549418C1	3595620C1	1702	19	N/A		
UB92#134	18	TN	TXL	2003343C1	3595621C1	1702	19	N/A		
UD92-GCJ	18	WH	TXL	2003343C1	3595621C1	1702	19	N/A		
UL92#134	18	TN	TXL	2003343C1	3595621C1	1702	19	N/A		
KH17-GC	18	WH	TXL	3549418C1	3595620C1	1702	19	N/A		
PM92#134	18	YL	TXL	3549418C1	3595620C1	1702	19	N/A		
SM92#134	18	YL	TXL	3549418C1	3595620C1	1702	19	N/A		
PH92A141	18	TN	TXL	3549418C1	3595620C1	1702	20	N/A	1667771C1	
PV92A141	18	TN	TXL	3549418C1	3595620C1	1702	20	N/A		
PY92A141	18	TN	TXL	3549418C1	3595620C1	1702	20	N/A		
RL92A141	18	TN	TXL	3549418C1	3595620C1	1702	20	N/A		
SY92A141	18	TN	TXL	3549418C1	3595620C1	1702	20	N/A		
TL92A141	18	TN	TXL	3549418C1	3595620C1	1702	20	N/A		
LH92#141	18	TN	TXL	2003343C1	3595621C1	1702	20	N/A		
UB92#141	18	TN	TXL	2003343C1	3595621C1	1702	20	N/A		
UD92BJ	18	TN	TXL	2003343C1	3595621C1	1702	20	N/A		
UF92#141	18	TN	TXL	2003343C1	3595621C1	1702	20	N/A		

Circuit Number	Gauge	Color	Insulation	Terminal / Splice Number	Connector Part number	Connector Number	Cavity	Seal/Sleeve	Lock 1	Lock 2
KH17B	18	PK	TXL	3549418C1	3595620C1	1702	20	N/A		
PY92A141	18	TN	TXL	3549418C1	3595620C1	1702	20	N/A		
RL92A141	18	TN	TXL	3549418C1	3595620C1	1702	20	N/A		
SY92A141	18	TN	TXL	3549418C1	3595620C1	1702	20	N/A		
TL92A141	18	TN	TXL	3549418C1	3595620C1	1702	20	N/A		
PK92B103	18	YL	TXL	3549418C1	3595620C1	1702	21	N/A		
PR92D103	18	YL	TXL	3549418C1	3595620C1	1702	21	N/A		
RS92B103	18	YL	TXL	3549418C1	3595620C1	1702	21	N/A		
SR92D103	18	YL	TXL	3549418C1	3595620C1	1702	21	N/A		
GX92#103	18	TN	TXL	2003343C1	3595621C1	1702	21	N/A		
GY92#103	18	TN	TXL	2003343C1	3595621C1	1702	21	N/A		
GZ92#103	18	TN	TXL	2003343C1	3595621C1	1702	21	N/A		
LA17C	16	PK	TXL	3574285C1	3595621C1	1702	21	N/A		
KH17C	18	PK	TXL	3549418C1	3595620C1	1702	21	N/A		
PR92D103	18	YL	TXL	3549418C1	3595620C1	1702	21	N/A		
SR92D103	18	YL	TXL	3549418C1	3595620C1	1702	21	N/A		
VJ97C	20	VT	TXL	3549418C1	3595620C1	1702	22	N/A		
BD97CJ	18	VT	TXL	2003343C1	3595621C1	1702	22	N/A		
BE97CJ	18	VT	TXL	2003343C1	3595621C1	1702	22	N/A		
VJ97C	20	PL	TXL	3549418C1	3595620C1	1702	22	N/A		
VJ97B	20	VT	TXL	3549418C1	3595620C1	1702	23	N/A		
BD97BJ	18	VT	TXL	2003343C1	3595621C1	1702	23	N/A		
BE97BJ	18	VT	TXL	2003343C1	3595621C1	1702	23	N/A		
VJ97B	20	PL	TXL	3549418C1	3595620C1	1702	23	N/A		
BD99D	18	VT	TXL	2003343C1	3595621C1	1702	24	N/A		
PG92B123	18	LTGN	TXL	3549418C1	3595620C1	1702	25	N/A		
PU92B123	18	LTGN	TXL	3549418C1	3595620C1	1702	25	N/A		
RM92DL	18	LTBL	TXL	3549418C1	3595620C1	1702	25	N/A		
RN92#117	18	LTBL	TXL	3549418C1	3595620C1	1702	25	N/A		
TM92DL	18	LTBL	TXL	3549418C1	3595620C1	1702	25	N/A		
TN92#117	18	LTBL	TXL	3549418C1	3595620C1	1702	25	N/A		
PC92DN2	18	TN	GXL	2003343C1	3595621C1	1702	25	N/A		
VA92#117	18	TN	TXL	2003343C1	3595621C1	1702	25	N/A		
RM92DL	18	LTBL	TXL	3549418C1	3595620C1	1702	25	N/A		
RN92#117	18	LTBL	TXL	3549418C1	3595620C1	1702	25	N/A		
TM92DL	18	LTBL	TXL	3549418C1	3595620C1	1702	25	N/A		
TN92#117	18	LTBL	TXL	3549418C1	3595620C1	1702	25	N/A		
PR92D158	18	LTGN	TXL	3549418C1	3595620C1	1702	26	N/A		
SR92D158	18	LTGN	TXL	3549418C1	3595620C1	1702	26	N/A		
PC92A3A	18	TN	GXL	2003343C1	3595621C1	1702	26	N/A		
VB92#158	18	TN	TXL	2003343C1	3595621C1	1702	26	N/A		
PR92D158	18	LTGN	TXL	3549418C1	3595620C1	1702	26	N/A		
SR92D158	18	LTGN	TXL	3549418C1	3595620C1	1702	26	N/A		
PR92#124	18	WH	TXL	3549418C1	3595620C1	1702	27	N/A	3503599C1	
SR92#124	18	WH	TXL	3549418C1	3595620C1	1702	27	N/A		
PC92A2	18	TN	TXL	2003343C1	3595621C1	1702	27	N/A		
PR92#124	18	WH	TXL	3549418C1	3595620C1	1702	27	N/A		
SR92#124	18	WH	TXL	3549418C1	3595620C1	1702	27	N/A		
VJ99B	20	VT	TXL	3549418C1	3595620C1	1702	28	N/A		
BD99BJ	18	VT	TXL	2003343C1	3595621C1	1702	28	N/A		
BE99BJ	18	VT	TXL	2003343C1	3595621C1	1702	28	N/A		
VJ99B	20	PL	TXL	3549418C1	3595620C1	1702	28	N/A		
BD97N	18	VT	TXL	2003343C1	3595621C1	1702	29	N/A		
AB6B	18	GY	TXL	3549418C1	3595620C1	1702	30	N/A		

Circuit Number	Gauge	Color	Insulation	Terminal / Splice Number	Connector Part number	Connector Number	Cavity	Seal/Sleeve	Lock 1	Lock 2
AF6B	18	GY	TXL	3549418C1	3595620C1	1702	30	N/A		
KP6B	18	TN	TXL	3549418C1	3595620C1	1702	30	N/A		
VG6B	18	TN	TXL	3549418C1	3595620C1	1702	30	N/A		
BD97M	18	VT	TXL	2003343C1	3595621C1	1702	30	N/A		
BE97FU	16	VT	TXL	3574285C1	3595621C1	1702	30	N/A		
AB6B	18	GY	TXL	3549418C1	3595620C1	1702	30	N/A		
AF6B	18	GY	TXL	3549418C1	3595620C1	1702	30	N/A		
AH6B	18	GY	TXL	3549418C1	3595620C1	1702	30	N/A		
KP6B	18	GY	TXL	3549418C1	3595620C1	1702	30	N/A		
VG6B	18	PL	TXL	3549418C1	3595620C1	1702	30	N/A		
VX6B	18	GY	TXL	3549418C1	3595620C1	1702	30	N/A		
SR92#156	18	PK	TXL	3549418C1	3595620C1	1702	31	N/A		
VB92#156	18	TN	TXL	2003343C1	3595621C1	1702	31	N/A		
KH92ER	18	TN	TXL	3549418C1	3595620C1	1702	31	N/A		
PR92#156	18	PK	TXL	3549418C1	3595620C1	1702	31	N/A		
SR92#156	18	PK	TXL	3549418C1	3595620C1	1702	31	N/A		
VJ97N	20	VT	TXL	3549418C1	3595620C1	1702	32	N/A		
BE97WC	18	VT	TXL	2003343C1	3595621C1	1702	32	N/A		
VJ97N	20	PL	TXL	3549418C1	3595620C1	1702	32	N/A		
VJ97M	20	VT	TXL	3549418C1	3595620C1	1702	33	N/A		
BE97M	18	VT	TXL	2003343C1	3595621C1	1702	33	N/A		
VJ97M	20	PL	TXL	3549418C1	3595620C1	1702	33	N/A		
VB18A	18	WH	TXL	3574277C1	3595620C1	1702	34	N/A		
KL18A	16	GY	TXL	3574288C1	3595621C1	1702	34	N/A		
KM18A	16	GY	TXL	3574288C1	3595621C1	1702	34	N/A		
PC92A18A	16	TN	GXL	3574288C1	3595621C1	1702	34	N/A		
KA13	16	PK	TXL	3549417C1	3595620C1	1702	37	N/A		
MA97FA	16	VT	TXL	3574285C1	3595621C1	1702	37	N/A		
KV13	16	PK	TXL	3549417C1	3595620C1	1702	37	N/A		
KH47#125	18	GY	TXL	3549418C1	3595620C1	1702	38	N/A		
KJ47#125	18	GY	TXL	3549418C1	3595620C1	1702	38	N/A		
PA47T	18	GY	TXL	2003343C1	3595621C1	1702	38	N/A		
PB97DG	18	VT	TXL	2003343C1	3595621C1	1702	38	N/A		
PW47#125	18	GY	TXL	3549418C1	3595620C1	1702	38	N/A		
SW47#125	18	GY	TXL	3549418C1	3595620C1	1702	38	N/A		
ML93	18	TN	GXL	3549418C1	3595620C1	1702	39	N/A		
SR92#161	18	OR	TXL	3549418C1	3595620C1	1702	39	N/A		
UE92J	18	TN	TXL	2003343C1	3595621C1	1702	39	N/A		
UJ93	18	TN	TXL	2003343C1	3595621C1	1702	39	N/A		
VB92#161	18	TN	TXL	2003343C1	3595621C1	1702	39	N/A		
KH92J	18	TN	TXL	3549418C1	3595620C1	1702	39	N/A		
ML93	18	TN	GXL	3549418C1	3595620C1	1702	39	N/A		
PR92#161	18	OR	TXL	3549418C1	3595620C1	1702	39	N/A		
SR92#161	18	OR	TXL	3549418C1	3595620C1	1702	39	N/A		
KA18T	18	PK	TXL	3549418C1	3595620C1	1702	40	N/A		
UE92AJ	18	GY	TXL	2003343C1	3595621C1	1702	40	N/A		
KA18T	18	PK	TXL	3549418C1	3595620C1	1702	40	N/A		
PR92B112	18	PK	TXL	3549418C1	3595620C1	1702	41	N/A		
SR92B112	18	PK	TXL	3549418C1	3595620C1	1702	41	N/A		
LQ88AJ	18	LTGN	TXL	2003343C1	3595621C1	1702	41	N/A		
VB92#112	18	TN	TXL	2003343C1	3595621C1	1702	41	N/A		
PR92B112	18	PK	TXL	3549418C1	3595620C1	1702	41	N/A		
SR92B112	18	PK	TXL	3549418C1	3595620C1	1702	41	N/A		
HW14LSD	12	RD	TXL	3574287C1	3595621C1	1702	42	N/A		

Circuit Number	Gauge	Color	Insulation	Terminal / Splice Number	Connector Part number	Connector Number	Cavity	Seal/Sleeve	Lock 1	Lock 2
SA77BAJ	20	LTGN	TXL	3574289C1	3595621C1	1702	42	N/A		
RY14LSC	12	WH	GXL	3549415C1	3595620C1	1702	42	N/A		
WL2-FLC	10	RS	FUS	338892C2		1703	1	2644054R1		
WL2-FLD	10	RS	FUS	338892C2		1703	1	2644054R1		
AA56B	20	OR	TXL	3544883C1	3553649C1	1800	A1	N/A		
AA57B	20	OR	TXL	3544883C1	3553649C1	1800	A2	N/A		
AD87-GA	18	WH	TXL	3544876C1	3553649C1	1800	A3	N/A		
AE87-GA	18	WH	TXL	3544876C1	3553649C1	1800	A3	N/A		
KA9C	18	GY	TXL	3544876C1	3553649C1	1800	A4	N/A		
HE87A	20	GY	TXL	3544875C1	3553649C1	1800	A5	N/A		
HJ87A	18	GY	TXL	3544876C1	3553649C1	1800	A5	N/A		
WB70A	20	RD	TXL	3544875C1	3553649C1	1800	A6	N/A		
AA52D	20	YL	GXL	3544883C1	3553649C1	1800	A7	N/A		
AA102A	20	YL	TXL	3544883C1	3553649C1	1800	A8	N/A		
AA82C	20	GY	TXL	3544883C1	3553649C1	1800	B1	N/A		
AA85A	20	GY	TXL	3544883C1	3553649C1	1800	B10	N/A		
AA150	20	GY	TXL	3544883C1	3553649C1	1800	B11	N/A		
SN86A	18	GY	TXL	3544884C1	3553649C1	1800	B12	N/A		
NK40A	18	GY	GXL	3544884C1	3553649C1	1800	B2	N/A		
NK6	18	GY	GXL	3544884C1	3553649C1	1800	B3	N/A		
WC6	20	GY	TXL	3544883C1	3553649C1	1800	B3	N/A		
BD97B	18	VT	TXL	3544884C1	3553649C1	1800	B4	N/A		
BE97B	18	VT	TXL	3544884C1	3553649C1	1800	B4	N/A		
BD97MA	18	VT	TXL	3544884C1	3553649C1	1800	B5	N/A		
BE97F	16	VT	TXL	3544884C1	3553649C1	1800	B5	N/A		
BD97NA	18	VT	TXL	3544884C1	3553649C1	1800	B6	N/A		
BE97WD	18	VT	TXL	3544884C1	3553649C1	1800	B6	N/A		
WA44	16	GY	TXL	3544884C1	3553649C1	1800	B7	N/A		
WE44AA	16	GY	TXL	3544884C1	3553649C1	1800	B7	N/A		
WB70	20	RD	TXL	3544883C1	3553649C1	1800	B9	N/A		
XS70	18	GY	TXL	3544884C1	3553649C1	1800	B9	N/A		
AA82B	20	GY	TXL	3544883C1	3553649C1	1800	C1	N/A		
XF94SZE	16	GY	TXL	3544884C1	3553649C1	1800	C10	N/A		
XH94SZ	18	GY	TXL	3544884C1	3553649C1	1800	C10	N/A		
XK94SZE	18	GY	TXL	3544884C1	3553649C1	1800	C10	N/A		
UA97A	18	VT	TXL	3544884C1	3553649C1	1800	C11	N/A		
NK40	18	GY	GXL	3544884C1	3553649C1	1800	C12	N/A		
WC40	18	GY	TXL	3544884C1	3553649C1	1800	C12	N/A		
NK40BB	18	GY	TXL	3544884C1	3553649C1	1800	C2	N/A		
XF94SV	16	GY	TXL	3544884C1	3553649C1	1800	C3	N/A		
XH94SV	18	GY	TXL	3544884C1	3553649C1	1800	C3	N/A		
XK94SVE	18	GY	TXL	3544884C1	3553649C1	1800	C3	N/A		
BD99B	18	VT	TXL	3544884C1	3553649C1	1800	C4	N/A		
BE99B	18	VT	TXL	3544884C1	3553649C1	1800	C4	N/A		
BD97C	18	VT	TXL	3544884C1	3553649C1	1800	C5	N/A		
BE97C	18	VT	TXL	3544884C1	3553649C1	1800	C5	N/A		
BD99DA	18	VT	TXL	3544884C1	3553649C1	1800	C6	N/A		
BE97MA	18	VT	TXL	3544884C1	3553649C1	1800	C6	N/A		
AA82A	20	GY	TXL	3544883C1	3553649C1	1800	C9	N/A		
AB62DD	18	DKBL	TXL	3544876C1	3553649C1	1800	D3	N/A		
AC62DD	18	DKBL	TXL	3544876C1	3553649C1	1800	D3	N/A		
XF94SE	18	GY	TXL	3544876C1	3553649C1	1800	D5	N/A		
XL94SE	18	GY	TXL	3544876C1	3553649C1	1800	D5	N/A		
XF94SF	18	GY	TXL	3544876C1	3553649C1	1800	D6	N/A		

Circuit Number	Gauge	Color	Insulation	Terminal / Splice Number	Connector Part number	Connector Number	Cavity	Seal/Sleeve	Lock 1	Lock 2
XL94SF	18	GY	TXL	3544876C1	3553649C1	1800	D6	N/A		
LB17BA	18	PK	TXL	3544884C1	3553649C1	1800	D7	N/A		
LD149AC	18	GY	TXL	3544884C1	3553649C1	1800	D7	N/A		
UA17B	18	PK	TXL	3544884C1	3553649C1	1800	D8	N/A		
BL97	20	GY	TXL	3608497C1	3608496C1	1802	1	N/A		
BX97	20	GY	TXL	3608497C1	3608496C1	1802	1	N/A		
BZ97	20	GY	TXL	3608497C1	3608496C1	1802	1	N/A		
CA97	20	GY	TXL	3608497C1	3608496C1	1802	1	N/A		
CC97	20	GY	TXL	3608497C1	3608496C1	1802	1	N/A		
CD97	20	GY	TXL	3608497C1	3608496C1	1802	1	N/A		
BL100	20	GY	TXL	3608497C1	3608496C1	1802	2	N/A		
BX100	20	GY	TXL	3608497C1	3608496C1	1802	2	N/A		
BZ100	20	GY	TXL	3608497C1	3608496C1	1802	2	N/A		
CA100	20	GY	TXL	3608497C1	3608496C1	1802	2	N/A		
CC100	20	GY	TXL	3608497C1	3608496C1	1802	2	N/A		
CD100	20	GY	TXL	3608497C1	3608496C1	1802	2	N/A		
BE85A	20	GY	TXL	3608497C1	3608496C1	1802	3	N/A		
BL85A	20	GY	TXL	3608497C1	3608496C1	1802	3	N/A		
CA85A	20	GY	TXL	3608497C1	3608496C1	1802	3	N/A		
BL9VA	20	GY	TXL	3608497C1	3608496C1	1802	4	N/A		
BX9VA	20	GY	TXL	3608497C1	3608496C1	1802	4	N/A		
BZ9VA	20	GY	TXL	3608497C1	3608496C1	1802	4	N/A		
CA9VA	20	GY	TXL	3608497C1	3608496C1	1802	4	N/A		
CC9VA	20	GY	TXL	3608497C1	3608496C1	1802	4	N/A		
CD9VA	20	GY	TXL	3608497C1	3608496C1	1802	4	N/A		
BE62DD	20	DKBL	TXL	3608497C1	3608496C1	1802	5	N/A		
BL62DD	20	DKBL	TXL	3608497C1	3608496C1	1802	5	N/A		
CA62DD	20	DKBL	TXL	3608497C1	3608496C1	1802	5	N/A		
BE62-GDD	18	WH	TXL	3608497C1	3608496C1	1802	6	N/A		
BL62-GDD	18	WH	TXL	3608497C1	3608496C1	1802	6	N/A		
CA62-GDD	18	WH	TXL	3608497C1	3608496C1	1802	6	N/A		
BB99V	18	VT/WH	GXL	2036586C1	1673744C1	1804	1	N/A		
BB97Y	18	VT	GXL	2036586C1	1673744C1	1804	2	N/A		
BB97P	18	VT/BK	GXL	2036586C1	1673744C1	1804	3	N/A		
BB99U	18	VT/WH	GXL	2036586C1	1673744C1	1804	4	N/A		
BB99W	18	VT	GXL	2036586C1	1673744C1	1804	5	N/A		
BB99E	18	VT/BK	GXL	2036586C1	1673744C1	1804	6	N/A		
CA17J	18	PK	TXL	1667742C1	3540757C1	1807	A	N/A		
CB17J	18	PK	TXL	1667742C1	3540757C1	1807	A	N/A		
CC17J	18	PK	TXL	1667742C1	3540757C1	1807	A	N/A		
CD17J	18	PK	TXL	1667742C1	3540757C1	1807	A	N/A		
CE17J	18	PK	TXL	1667742C1	3540757C1	1807	A	N/A		
CF17J	18	PK	TXL	1667742C1	3540757C1	1807	A	N/A		
CA17H	18	PK	TXL	1667742C1	3540757C1	1807	B	N/A		
CB17H	18	PK	TXL	1667742C1	3540757C1	1807	B	N/A		
CC17H	18	PK	TXL	1667742C1	3540757C1	1807	B	N/A		
CD17H	18	PK	TXL	1667742C1	3540757C1	1807	B	N/A		
CE17H	18	PK	TXL	1667742C1	3540757C1	1807	B	N/A		
CF17H	18	PK	TXL	1667742C1	3540757C1	1807	B	N/A		
CA97A	18	VT	GXL	1667742C1	3540757C1	1807	C	N/A		
CB97A	18	VT	GXL	1667742C1	3540757C1	1807	C	N/A		
CC97A	18	VT	GXL	1667742C1	3540757C1	1807	C	N/A		
CD97A	18	VT	GXL	1667742C1	3540757C1	1807	C	N/A		
CE97A	18	VT	GXL	1667742C1	3540757C1	1807	C	N/A		

Circuit Number	Gauge	Color	Insulation	Terminal / Splice Number	Connector Part number	Connector Number	Cavity	Seal/Sleeve	Lock 1	Lock 2
CF97A	18	VT	GXL	1667742C1	3540757C1	1807	C	N/A		
CA9VB	18	GY	TXL	1667742C1	3540757C1	1807	D	N/A		
CB9VB	18	GY	TXL	1667742C1	3540757C1	1807	D	N/A		
CC9VB	18	GY	TXL	1667742C1	3540757C1	1807	D	N/A		
CD9VB	18	GY	TXL	1667742C1	3540757C1	1807	D	N/A		
CE9VB	18	GY	TXL	1667742C1	3540757C1	1807	D	N/A		
CF9VB	18	GY	TXL	1667742C1	3540757C1	1807	D	N/A		
BF97	20	GY	TXL	3544254C1	3547870C1	1809	A	N/A		
BG97	20	GY	TXL	3544254C1	3547870C1	1809	A	N/A		
CB97	20	GY	TXL	3544254C1	3547870C1	1809	A	N/A		
BF85B	20	GY	TXL	3544254C1	3547870C1	1809	B	N/A		
BG85B	20	GY	TXL	3544254C1	3547870C1	1809	B	N/A		
CB85B	20	GY	TXL	3544254C1	3547870C1	1809	B	N/A		
BF62DD	20	DKBL	TXL	3544254C1	3547870C1	1809	C	N/A		
BG62DD	20	DKBL	TXL	3544254C1	3547870C1	1809	C	N/A		
CB62DD	20	DKBL	TXL	3544254C1	3547870C1	1809	C	N/A		
BG9R	18	GY	TXL	1661261C1	3547870C1	1809	D	N/A		
BV9R	18	GY	TXL	1661261C1	3547870C1	1809	D	N/A		
BW9R	18	GY	TXL	1661261C1	3547870C1	1809	D	N/A		
CB9R	18	GY	TXL	1661261C1	3547870C1	1809	D	N/A		
CE9R	18	GY	TXL	1661261C1	3547870C1	1809	D	N/A		
CF9R	18	GY	TXL	1661261C1	3547870C1	1809	D	N/A		
BB56A	18	OR	TXL	3571717C1	3539212C1	1810	1	N/A		
BB57A	18	OR	TXL	3571717C1	3539212C1	1810	2	N/A		
BB52A	18	YL	TXL	3571717C1	3539212C1	1810	3	N/A		
BB102A	18	YL	TXL	3571717C1	3539212C1	1810	4	N/A		
BB82B	18	GY	TXL	3571717C1	3539212C1	1810	5	N/A		
BE87-G	18	WH	TXL	3571717C1	3539212C1	1810	6	N/A		
BF11-GAA	18	WH	TXL	3571717C1	3539212C1	1810	6	N/A		
BG11-GAA	18	WH	TXL	3571717C1	3539212C1	1810	6	N/A		
BL87-G	18	WH	TXL	3571717C1	3539212C1	1810	6	N/A		
CA87-G	18	WH	TXL	3571717C1	3539212C1	1810	6	N/A		
CB11-GAA	18	WH	TXL	3571717C1	3539212C1	1810	6	N/A		
BG9S	18	GY	TXL	3571717C1	3539212C1	1810	7	N/A		
BL9S	18	GY	TXL	3571717C1	3539212C1	1810	7	N/A		
BV9S	18	GY	TXL	3571717C1	3539212C1	1810	7	N/A		
BW9S	18	GY	TXL	3571717C1	3539212C1	1810	7	N/A		
BX9S	18	GY	TXL	3571717C1	3539212C1	1810	7	N/A		
BZ9S	18	GY	TXL	3571717C1	3539212C1	1810	7	N/A		
CA9S	18	GY	TXL	3571717C1	3539212C1	1810	7	N/A		
CB9S	18	GY	TXL	3571717C1	3539212C1	1810	7	N/A		
CC9S	18	GY	TXL	3571717C1	3539212C1	1810	7	N/A		
CD9S	18	GY	TXL	3571717C1	3539212C1	1810	7	N/A		
CE9S	18	GY	TXL	3571717C1	3539212C1	1810	7	N/A		
CF9S	18	GY	TXL	3571717C1	3539212C1	1810	7	N/A		
BB82	18	GY	TXL	3571717C1	3539212C1	1810	8	N/A		
BB82A	18	GY	TXL	3571717C1	3539212C1	1810	11	N/A		
BB87A	18	GY	TXL	3571717C1	3539212C1	1810	12	N/A		
BG9VC	18	GY	TXL	1651943C1	1678137C1	1811	A	N/A		
BL9VC	18	GY	TXL	1651943C1	1678137C1	1811	A	N/A		
BW9VC	18	GY	TXL	1651943C1	1678137C1	1811	A	N/A		
BZ9VC	18	GY	TXL	1651943C1	1678137C1	1811	A	N/A		
CA9VC	18	GY	TXL	1651943C1	1678137C1	1811	A	N/A		
CB9VC	18	GY	TXL	1651943C1	1678137C1	1811	A	N/A		

Circuit Number	Gauge	Color	Insulation	Terminal / Splice Number	Connector Part number	Connector Number	Cavity	Seal/Sleeve	Lock 1	Lock 2
CC9VC	18	GY	TXL	1651943C1	1678137C1	1811	A	N/A		
CE9VC	18	GY	TXL	1651943C1	1678137C1	1811	A	N/A		
BG6HB	18	GY	TXL	1651943C1	1678137C1	1811	B	N/A		
BL6HB	18	GY	TXL	1651943C1	1678137C1	1811	B	N/A		
BW6HB	18	GY	TXL	1651943C1	1678137C1	1811	B	N/A		
BZ6HB	18	GY	TXL	1651943C1	1678137C1	1811	B	N/A		
CA6HB	18	GY	TXL	1651943C1	1678137C1	1811	B	N/A		
CB6HB	18	GY	TXL	1651943C1	1678137C1	1811	B	N/A		
CC6HB	18	GY	TXL	1651943C1	1678137C1	1811	B	N/A		
CE6HB	18	GY	TXL	1651943C1	1678137C1	1811	B	N/A		
BG40	18	GY	TXL	1651943C1	1678137C1	1811	C	N/A		
BL40	18	GY	TXL	1651943C1	1678137C1	1811	C	N/A		
BW40	18	GY	TXL	1651943C1	1678137C1	1811	C	N/A		
BZ40	18	GY	TXL	1651943C1	1678137C1	1811	C	N/A		
CA40	18	GY	TXL	1651943C1	1678137C1	1811	C	N/A		
CB40	18	GY	TXL	1651943C1	1678137C1	1811	C	N/A		
CC40	18	GY	TXL	1651943C1	1678137C1	1811	C	N/A		
CE40	18	GY	TXL	1651943C1	1678137C1	1811	C	N/A		
BG9VE	18	GY	TXL	1651943C1	1678137C1	1812	A	N/A		
BL9VE	18	GY	TXL	1651943C1	1678137C1	1812	A	N/A		
CA9VE	18	GY	TXL	1651943C1	1678137C1	1812	A	N/A		
CB9VE	18	GY	TXL	1651943C1	1678137C1	1812	A	N/A		
BG6HA	18	GY	TXL	1651943C1	1678137C1	1812	B	N/A		
BL6HA	18	GY	TXL	1651943C1	1678137C1	1812	B	N/A		
CA6HA	18	GY	TXL	1651943C1	1678137C1	1812	B	N/A		
CB6HA	18	GY	TXL	1651943C1	1678137C1	1812	B	N/A		
BG40A	18	GY	TXL	1651943C1	1678137C1	1812	C	N/A		
BL40A	18	GY	TXL	1651943C1	1678137C1	1812	C	N/A		
CA40A	18	GY	TXL	1651943C1	1678137C1	1812	C	N/A		
CB40A	18	GY	TXL	1651943C1	1678137C1	1812	C	N/A		
BG44BB	18	GY	TXL	1661875C1	1661777C1	1813	C	N/A		
BL44BB	18	GY	TXL	1661875C1	1661777C1	1813	C	N/A		
BW44BB	18	GY	TXL	1661875C1	1661777C1	1813	C	N/A		
BZ44BB	18	GY	TXL	1661875C1	1661777C1	1813	C	N/A		
CA44BB	18	GY	TXL	1661875C1	1661777C1	1813	C	N/A		
CB44BB	18	GY	TXL	1661875C1	1661777C1	1813	C	N/A		
CC44BB	18	GY	TXL	1661875C1	1661777C1	1813	C	N/A		
CE44BB	18	GY	TXL	1661875C1	1661777C1	1813	C	N/A		
BG9VD	18	GY	TXL	1661875C1	1661777C1	1813	D	N/A		
BL9VD	18	GY	TXL	1661875C1	1661777C1	1813	D	N/A		
BW9VD	18	GY	TXL	1661875C1	1661777C1	1813	D	N/A		
BZ9VD	18	GY	TXL	1661875C1	1661777C1	1813	D	N/A		
CA9VD	18	GY	TXL	1661875C1	1661777C1	1813	D	N/A		
CB9VD	18	GY	TXL	1661875C1	1661777C1	1813	D	N/A		
CC9VD	18	GY	TXL	1661875C1	1661777C1	1813	D	N/A		
CE9VD	18	GY	TXL	1661875C1	1661777C1	1813	D	N/A		
BN94SC	20	GY	TXL	3601801C1	3601800C1	1821	1	N/A		
BN94SA	20	GY	TXL	3601801C1	3601800C1	1821	2	N/A		
BN94SB	20	GY	TXL	3601801C1	3601800C1	1821	3	N/A		
BN94SD	20	GY	TXL	3601801C1	3601800C1	1821	4	N/A		
HB103-FL	10	RS	FUS	3866817C1		1822	1	2644005R1		
HC103-FL	10	RS	FUS	3866817C1		1822	1	2644005R1		
BG9VF	18	GY	TXL	1651943C1	1678137C1	1822	A	N/A		
BL9VF	18	GY	TXL	1651943C1	1678137C1	1822	A	N/A		

Circuit Number	Gauge	Color	Insulation	Terminal / Splice Number	Connector Part number	Connector Number	Cavity	Seal/Sleeve	Lock 1	Lock 2
CA9VF	18	GY	TXL	1651943C1	1678137C1	1822	A	N/A		
CB9VF	18	GY	TXL	1651943C1	1678137C1	1822	A	N/A		
BG6HC	18	GY	TXL	1651943C1	1678137C1	1822	B	N/A		
BL6HC	18	GY	TXL	1651943C1	1678137C1	1822	B	N/A		
CA6HC	18	GY	TXL	1651943C1	1678137C1	1822	B	N/A		
CB6HC	18	GY	TXL	1651943C1	1678137C1	1822	B	N/A		
BG40F	18	GY	TXL	1651943C1	1678137C1	1822	C	N/A		
BL40F	18	GY	TXL	1651943C1	1678137C1	1822	C	N/A		
CA40F	18	GY	TXL	1651943C1	1678137C1	1822	C	N/A		
CB40F	18	GY	TXL	1651943C1	1678137C1	1822	C	N/A		
BG70A	18	OR	TXL	1661875C1	1661777C1	1823	C	N/A		
BL70A	18	OR	TXL	1661875C1	1661777C1	1823	C	N/A		
CA70A	18	OR	TXL	1661875C1	1661777C1	1823	C	N/A		
CB70A	18	OR	TXL	1661875C1	1661777C1	1823	C	N/A		
BG9VG	18	GY	TXL	1661875C1	1661777C1	1823	D	N/A		
BL9VG	18	GY	TXL	1661875C1	1661777C1	1823	D	N/A		
CA9VG	18	GY	TXL	1661875C1	1661777C1	1823	D	N/A		
CB9VG	18	GY	TXL	1661875C1	1661777C1	1823	D	N/A		
BG70	18	OR	TXL	1661875C1	1661777C1	1824	C	N/A		
BL70	18	OR	TXL	1661875C1	1661777C1	1824	C	N/A		
CA70	18	OR	TXL	1661875C1	1661777C1	1824	C	N/A		
CB70	18	OR	TXL	1661875C1	1661777C1	1824	C	N/A		
BG9VH	18	GY	TXL	1661875C1	1661777C1	1824	D	N/A		
BL9VH	18	GY	TXL	1661875C1	1661777C1	1824	D	N/A		
CA9VH	18	GY	TXL	1661875C1	1661777C1	1824	D	N/A		
CB9VH	18	GY	TXL	1661875C1	1661777C1	1824	D	N/A		
BN94SZA	18	GY	GXL	1651943C1	1678137C1	1826	A	N/A		
BN94SVA	18	GY	GXL	1651943C1	1678137C1	1826	B	N/A		
BN94SE	18	GY	GXL	1651943C1	1678137C1	1826	C	N/A		
BN94SZB	18	GY	GXL	1651943C1	1678137C1	1828	A	N/A		
BN94SVB	18	GY	GXL	1651943C1	1678137C1	1828	B	N/A		
BN94SF	18	GY	GXL	1651943C1	1678137C1	1828	C	N/A		
UL62Z	18	DKBL	TXL	3517243C1	3605446C91	1852	3	N/A		
UL92-GAH	18	WH	TXL	3517243C1	3605446C91	1852	5	N/A		
9Q5J(+)	18	YL	TXL	3517243C1	3605446C91	1852	8	N/A		
GB5J(+)	18	YL	TXL	3517243C1	3605446C91	1852	8	N/A		
GF5J(+)	18	YL	TXL	3517243C1	3605446C91	1852	8	N/A		
GU5J(+)	18	YL	TXL	3517243C1	3605446C91	1852	8	N/A		
GV5J(+)	18	YL	TXL	3517243C1	3605446C91	1852	8	N/A		
UL92#134A	18	TN	TXL	3517243C1	3605446C91	1852	11	N/A		
UL92#163	18	TN	TXL	3517243C1	3605446C91	1852	12	N/A		
UL92BT	18	TN	TXL	3517243C1	3605446C91	1852	13	N/A		
9Q5J(-)	18	GN	TXL	3517243C1	3605446C91	1852	15	N/A		
GB5J(-)	18	GN	TXL	3517243C1	3605446C91	1852	15	N/A		
GF5J(-)	18	GN	TXL	3517243C1	3605446C91	1852	15	N/A		
GU5J(-)	18	GN	TXL	3517243C1	3605446C91	1852	15	N/A		
GV5J(-)	18	GN	TXL	3517243C1	3605446C91	1852	15	N/A		
HC103S	6	RD	SGX	373756C2		1870	1	2644054R1		
HR72A	12	OR	TXL	1673747C1	587568C91	1872	A	589391C1		
HR72-GY	12	WH	TXL	1673747C1	587568C91	1872	B	589391C1		
HR72C	12	OR	TXL	2022374C1	593385C1	1873	R1-30	N/A		
HW14LP	10	RD	GXL	2022374C1	593385C1	1873	R1-30	N/A		
HR13X	16	PK	TXL	2018946C1	593385C1	1873	R1-85	N/A		
HW12LC	18	PK	TXL	1659673C1	593385C1	1873	R1-85	N/A		

Circuit Number	Gauge	Color	Insulation	Terminal / Splice Number	Connector Part number	Connector Number	Cavity	Seal/Sleeve	Lock 1	Lock 2
HR11-GCB	18	WH	TXL	1659673C1	593385C1	1873	R1-86	N/A		
HW11-GCB	18	WH	TXL	1659673C1	593385C1	1873	R1-86	N/A		
HR72A	12	OR	TXL	2022374C1	593385C1	1873	R1-87	N/A		
HW14BC	16	RD	GXL	1661710C1	593385C1	1873	R1-87	N/A		
HW14LSC	12	RD	TXL	1661710C1	593385C1	1873	R1-87	N/A		
JC84C	14	LTGN	TXL	3534165C1	4094648C1	1901	A	N/A		
JC11-GAC	14	WH	TXL	3534165C1	4094648C1	1901	C	N/A		
JB86C	14	LTGN	TXL	3517476C1	3517473C1	1902	A	N/A		
JB11-GCC	14	WH	TXL	3517476C1	3517473C1	1902	B	N/A		
JA84	14	LTGN	TXL	3534165C1	4094648C1	1903	A	N/A		
JA11-GAF	14	WH	TXL	3534165C1	4094648C1	1903	C	N/A		
JA11-GUC	20	WH	TXL	4081932C1	3768147C1	1904	1	N/A		
JA13UA	20	PK	TXL	4081932C1	3768147C1	1904	2	N/A		
JC11-GUB	20	WH	TXL	4081932C1	3768147C1	1905	1	N/A		
JC13UC	20	PK	TXL	4081932C1	3768147C1	1905	2	N/A		
SH14HCA	14	RD	TXL	N/A	BLUNT_SL_V	1913	B	N/A		
SK14HC	14	RD	TXL	N/A	BLUNT_SL_V	1913	B	N/A		
SH11-GAP	14	WH	TXL	N/A	BLUNT_SL_V	1914	B	N/A		
SK11-GAP	14	WH	TXL	N/A	BLUNT_SL_V	1914	B	N/A		
SH86P	16	LTGN	TXL	N/A	BLUNT_SL_V	1915	B	N/A		
SK86P	16	LTGN	TXL	N/A	BLUNT_SL_V	1915	B	N/A		
LL13B	16	PK	TXL	N/A	BLUNT_SL_V	1916	A	N/A		
MQ86RCD	18	LTGN	TXL	1661261C1	1661259C1	1917	A	N/A		
MQ86-GD2	18	WH	TXL	1661261C1	1661259C1	1917	B	N/A		
QC105-GAP	18	WH	TXL	587578C1	587567C91	1918	A	N/A		
QD105-GB	16	WH	TXL	587577C1	587567C91	1918	A	N/A		
QE14B	12	RD	TXL	1673748C1	587567C91	1918	A	N/A		
QF14A	12	RD	TXL	1673748C1	587567C91	1918	A	N/A		
QC105	18	LTGN	TXL	587578C1	587567C91	1918	B	N/A		
QD105B	16	LTGN	TXL	587577C1	587567C91	1918	B	N/A		
QE11-GP	12	WH	TXL	1673748C1	587567C91	1918	B	N/A		
QF11-GCN	12	WH	TXL	1673748C1	587567C91	1918	B	N/A		
LL14G	16	RD	TXL	N/A	BLUNT_SL_V	1919	A	N/A		
VW5CC(-)	18	GN	TXL	2005483C1	3616085C1	1921	2	N/A		
VW13EE	16	PK	TXL	2005483C1	3616085C1	1921	3	N/A		
VW11-GBE	16	WH	TXL	2005483C1	3616085C1	1921	4	N/A		
VW14EA	16	RD	GXL	2005483C1	3616085C1	1921	5	N/A		
VW5CC(+)	18	YL	TXL	2005483C1	3616085C1	1921	7	N/A		
TJ14NS	12	BK	TXL	N/A	BLUNT_SL_V	1923	A	N/A		
TJ70E	10	RD	TXL	N/A	BLUNT_SL_V	1923	B	N/A		
TJ94T	10	DKBL	TXL	N/A	BLUNT_SL_V	1923	C	N/A		
TJ11-GAM	16	WH	TXL	N/A	BLUNT_SL_V	1923	D	N/A		
VW11-GEF	14	WH	TXL	3534167C1	3554818C1	1924	A	N/A		
VW14ED	14	RD	GXL	3534167C1	3554818C1	1924	B	N/A		
DL13BA	18	PK	TXL	1661208C1	3544677C1	1926	A	N/A		
DL11-GAR	18	WH	TXL	1661208C1	3544677C1	1926	B	N/A		
DL5V(+)	18	YL	TXL	1661208C1	3544677C1	1926	C	N/A		
DL5V(-)	18	GN	TXL	1661208C1	3544677C1	1926	D	N/A		
DL179	18	WH	TXL	1661208C1	3544677C1	1926	E	N/A		
NP13DCH	18	PK	TXL	3673333C1	3704144C1	1928	1	N/A		
NP91	20	-	TXL	3673333C1	3704144C1	1928	2	N/A		
NP14DCF	18	RD	TXL	3673333C1	3704144C1	1928	3	N/A		
NP11-GD	18	WH	TXL	3673333C1	3704144C1	1928	4	N/A		
QD105-GA	16	WH	TXL	587577C1	587567C91	1935	A	N/A		

Circuit Number	Gauge	Color	Insulation	Terminal / Splice Number	Connector Part number	Connector Number	Cavity	Seal/Sleeve	Lock 1	Lock 2
QE14C	12	RD	TXL	1673748C1	587567C91	1935	A	N/A		
QD105A	16	LTGN	TXL	587577C1	587567C91	1935	B	N/A		
QE11-GR	12	WH	TXL	1673748C1	587567C91	1935	B	N/A		
MM14ED	18	RD	GXL	1661875C1	2011340C1	1939	C	N/A		
MM11-GBH	18	WH	TXL	1661875C1	2011340C1	1939	D	N/A		
MM13EE	18	PK	TXL	1661875C1	2011340C1	1939	E	N/A		
VU103A	18	LTGN	TXL	N/A	BLUNT_SL_V	1940	A	N/A		
VU103B	18	LTGN	TXL	N/A	BLUNT_SL_V	1940	B	N/A		
VU103C	18	LTGN	TXL	N/A	BLUNT_SL_V	1940	C	N/A		
VU103D	18	LTGN	TXL	N/A	BLUNT_SL_V	1940	D	N/A		
VU9ZF	18	GY	TXL	N/A	BLUNT_SL_V	1940	E	N/A		
VV44A	18	GY	GXL	N/A	BLUNT_SL_V	1941	A	N/A		
PA47TA	16	GY	GXL	N/A	BLUNT_SL_V	1945	A	N/A		
NP14DCA	18	RD	TXL	3673333C1	3704182C1	1950	2	N/A		
NP13DCB	18	PK	TXL	3673333C1	3704182C1	1950	4	N/A		
NP11-GC	18	WH	TXL	3673333C1	3704182C1	1950	6	N/A		
NP5DZ(+)	18	YL	TXL	3673333C1	3704182C1	1950	8	N/A		
NP5DZ(-)	18	GN	TXL	3673333C1	3704182C1	1950	9	N/A		
NP91	20	-	TXL	3673333C1	3704182C1	1950	16	N/A		
YP58T	18	BN	TXL	3544692C1	3544688C1	2000	1	N/A		
YS58T	18	BN	TXL	3544692C1	3544688C1	2000	1	N/A		
KA18	18	PK	TXL	3710089C1		2000	1	2644038R1		
SM86F	18	LTGN	TXL	3544692C1	3544688C1	2000	2	N/A		
AD63-GA	16	WH	TXL	3544694C1	3544688C1	2000	3	N/A		
AE63-GA	16	WH	TXL	3544694C1	3544688C1	2000	3	N/A		
WF63	18	DKBL	TXL	3544692C1	3544688C1	2000	4	N/A		
WG63BD	18	DKBL	TXL	3544692C1	3544688C1	2000	4	N/A		
WJ63BD	18	DKBL	TXL	3544692C1	3544688C1	2000	4	N/A		
AA63BD	18	DKBL	TXL	3544692C1	3544688C1	2000	5	N/A		
9B5F(-)	18	GN	TXL	3544692C1	3544688C1	2000	9	N/A	1667734C1	
9C5F(-)	18	GN	TXL	3544692C1	3544688C1	2000	9	N/A		
GF5F(-)	18	GN	TXL	3544692C1	3544688C1	2000	9	N/A		
9B5F(+)	18	YL	TXL	3544692C1	3544688C1	2000	10	N/A	1661376C1	
9C5F(+)	18	YL	TXL	3544692C1	3544688C1	2000	10	N/A		
GF5F(+)	18	YL	TXL	3544692C1	3544688C1	2000	10	N/A		
KA18	18	PK	TXL	3710089C1		2000	A	2644038R1	3610532C1	
KA18S	18	PK	TXL	3710089C1		2001	1	2644038R1		
KA18S	18	PK	TXL	3710089C1		2001	A	2644038R1		
ZR12U	12	LTBL	TXL	3546091C	3554817C1	2021	A	N/A		
ZR12-GB	12	WH	TXL	3546091C1	3554817C1	2021	B	N/A		
NE14A	20	PK	TXL	3535805C1	3833917C1	2224	1	N/A		
ND10AA	20	WH	TXL	3535805C1	3833917C1	2224	2	N/A		
NC12B	20	LTBL	TXL	3535805C1	3833917C1	2224	3	N/A		
ND10AB	20	WH	TXL	3535805C1	3833917C1	2224	5	N/A		
ND9A	20	WH	TXL	3867325C1	3834322C1	2225	1	N/A		
NG5L(+)	20	YL	193	3867325C1	3834322C1	2225	8	N/A		
ND10AC	20	WH	TXL	3867325C1	3834322C1	2225	10	N/A		
NE86AA	20	LTGN	TXL	3867325C1	3834322C1	2225	11	N/A		
NE86AB	20	LTGN	TXL	3867325C1	3834322C1	2225	12	N/A		
NE86AC	20	LTGN	TXL	3867325C1	3834322C1	2225	13	N/A		
NE86AD	20	LTGN	TXL	3867325C1	3834322C1	2225	14	N/A		
ND10AD	20	LTGN	TXL	3867325C1	3834322C1	2225	15	N/A		
NG5L(-)	20	GN	193	3867325C1	3834322C1	2225	16	N/A		
AA63B	16	DKBL	TXL	3534165C1	3533975C1	2312	A	N/A		

Circuit Number	Gauge	Color	Insulation	Terminal / Splice Number	Connector Part number	Connector Number	Cavity	Seal/Sleeve	Lock 1	Lock 2
AA9BAA	16	GY	TXL	3534165C1	3533975C1	2312	B	N/A		
SP86BA	18	LTGN	TXL	3534164C1	3533975C1	2312	C	N/A		
SP86CA	18	LTGN	TXL	3534164C1	3533975C1	2312	D	N/A		
AA63C	16	DKBL	TXL	3534165C1	3533975C1	2313	A	N/A		
AA9BAB	16	GY	TXL	3534165C1	3533975C1	2313	B	N/A		
SP86DA	18	LTGN	TXL	3534164C1	3533975C1	2313	C	N/A		
SP86EA	18	LTGN	TXL	3534164C1	3533975C1	2313	D	N/A		
SR86A(-)	20	LTGN	TXL	3834457C1	3811207C1	2505	1	N/A		
SR86A(+)	20	LTGN	TXL	3834457C1	3811207C1	2505	2	N/A		
9V5BB(-)	18	GN	TXL	1661212C1	2005836C1	2600	A	N/A		
9Z5BB(-)	18	GN	TXL	1661212C1	2005836C1	2600	A	N/A		
9V5BB(+)	18	YL	TXL	1661212C1	2005836C1	2600	B	N/A		
9Z5BB(+)	18	YL	TXL	1661212C1	2005836C1	2600	B	N/A		
RD81D	12	RD	TXL	3534167C1	2005836C1	2600	C	N/A		
RD81DA	12	RD	TXL	3534167C1	2005836C1	2600	D	N/A		
RD81-GD	12	WH	TXL	3534167C1	2005836C1	2600	E	N/A		
RD81-GDA	12	WH	TXL	3534167C1	2005836C1	2600	F	N/A		
WJ63BE	18	DKBL	TXL	1661212C1	2005836C1	2600	G	N/A		
WJ63-GC	12	WH	TXL	3534167C1	2005836C1	2600	H	N/A		
QK11-GGA	18	WH	TXL	1661261C1	1661259C1	2996	A	N/A		
QS11-GGA	18	WH	TXL	1661261C1	1661259C1	2996	A	N/A		
QU11-GGA	18	WH	TXL	1661261C1	1661259C1	2996	A	N/A		
QZ11-GGA	18	WH	TXL	1661261C1	1661259C1	2996	A	N/A		
QK11-GG	18	WH	TXL	1661261C1	1661259C1	2996	B	N/A		
QS11-GG	18	WH	TXL	1661261C1	1661259C1	2996	B	N/A		
QU11-GG	18	WH	TXL	1661261C1	1661259C1	2996	B	N/A		
QZ11-GG2	18	WH	TXL	1661261C1	1661259C1	2996	B	N/A		
QK11-GAA	18	WH	TXL	1661262C1	1661260C1	2997	A	N/A		
QS11-GAA	18	WH	TXL	1661262C1	1661260C1	2997	A	N/A		
QU11-GAA	18	WH	TXL	1661262C1	1661260C1	2997	A	N/A		
QZ11-GAA	18	WH	TXL	1661262C1	1661260C1	2997	A	N/A		
QK11-GA	18	WH	TXL	1661262C1	1661260C1	2997	B	N/A		
QS11-GA	18	WH	TXL	1661262C1	1661260C1	2997	B	N/A		
QU11-GA	18	WH	TXL	1661262C1	1661260C1	2997	B	N/A		
QZ11-GA2	18	WH	TXL	1661262C1	1661260C1	2997	B	N/A		
QK11-GHA	18	WH	TXL	1661261C1	1661259C1	2998	A	N/A		
QS11-GHA	18	WH	TXL	1661261C1	1661259C1	2998	A	N/A		
QU11-GHA	18	WH	TXL	1661261C1	1661259C1	2998	A	N/A		
QZ11-GHA	18	WH	TXL	1661261C1	1661259C1	2998	A	N/A		
QK11-GH	18	WH	TXL	1661261C1	1661259C1	2998	B	N/A		
QS11-GH	18	WH	TXL	1661261C1	1661259C1	2998	B	N/A		
QU11-GH	18	WH	TXL	1661261C1	1661259C1	2998	B	N/A		
QZ11-GH2	18	WH	TXL	1661261C1	1661259C1	2998	B	N/A		
QK11-GBA	18	WH	TXL	1661262C1	1661260C1	2999	A	N/A		
QS11-GBA	18	WH	TXL	1661262C1	1661260C1	2999	A	N/A		
QU11-GBA	18	WH	TXL	1661262C1	1661260C1	2999	A	N/A		
QZ11-GBA	18	WH	TXL	1661262C1	1661260C1	2999	A	N/A		
QK11-GB	18	WH	TXL	1661262C1	1661260C1	2999	B	N/A		
QS11-GB	18	WH	TXL	1661262C1	1661260C1	2999	B	N/A		
QU11-GB	18	WH	TXL	1661262C1	1661260C1	2999	B	N/A		
QZ11-GB2	18	WH	TXL	1661262C1	1661260C1	2999	B	N/A		
QG11-GCA	18	WH	TXL	1661262C1	1661260C1	3000	A	N/A		
QM11-GCA	18	WH	TXL	1661262C1	1661260C1	3000	A	N/A		
QG11-GC	18	WH	TXL	1661262C1	1661260C1	3000	B	N/A		

Circuit Number	Gauge	Color	Insulation	Terminal / Splice Number	Connector Part number	Connector Number	Cavity	Seal/Sleeve	Lock 1	Lock 2
QM11-GC	18	WH	TXL	1661262C1	1661260C1	3000	B	N/A		
RK78D	14	BK	TXL	333733C1	899167R1	3001	A	N/A		
QG11-GJA	18	WH	TXL	1661261C1	1661259C1	3002	A	N/A		
QM11-GJA	18	WH	TXL	1661261C1	1661259C1	3002	A	N/A		
QG11-GJ	18	WH	TXL	1661261C1	1661259C1	3002	B	N/A		
QM11-GJ	18	WH	TXL	1661261C1	1661259C1	3002	B	N/A		
RK78H	14	BK	TXL	333733C1	899167R1	3004	A	N/A		
RK78-GE	12	WH	TXL	333734C1	899167R1	3005	A	N/A		
MG14L	10	RD	TXL	3515522C1	3525613C1	4004	A	3541256C1		
MG14L	10	RD	TXL	3515522C1	3525613C1	4004	A	3541256C1		
MG103C	12	LTGN	TXL	3614762C1	3525613C1	4004	B	3541256C1		
MG103C	12	LTGN	TXL	3614762C1	3525613C1	4004	B	3541256C1		
KH10-GA	8	WH	GXL	373756C2		4007	1	2644054R1		
KH5TC(+)	18	YL	TXL	3618272C1	6112506C1	4060	1	N/A		
KH5TC(-)	18	GN	TXL	3618272C1	6112506C1	4060	2	N/A		
AD41	18	TN	TXL	3618272C1	6112506C1	4060	3	N/A		
KA41	18	TN	TXL	3618272C1	6112506C1	4060	3	N/A		
RA14A	12	RD	TXL	3612308C1	6112506C1	4060	4	N/A		
RA14A	12	RD	TXL	3612308C1	6112506C1	4060	4	N/A		
RA14-G	12	WH	TXL	3612308C1	6112506C1	4060	5	N/A		
RA14-G	12	WH	TXL	3612308C1	6112506C1	4060	5	N/A		
AE26B	18	TN	GXL	3618272C1	6112506C1	4060	6	N/A		
AE26B	18	TN	GXL	3618272C1	6112506C1	4060	6	N/A		
AE26A	18	TN	GXL	3618272C1	6112506C1	4060	7	N/A		
AE26A	10	WH	TXL	3612308C1	6112506C1	4060	7	N/A		
AD41-G	18	TN	TXL	3618272C1	6112506C1	4060	8	N/A		
KA41-G	18	TN	TXL	3618272C1	6112506C1	4060	8	N/A		
MG103D	12	LTGN	GXL	N/A	BLUNT_SL_V	4069	A	N/A		
MG103D	12	LTGN	GXL	N/A	BLUNT_SL_V	4069	A	N/A		
XA94-GA	12	WH	TXL	3581768C1		4081	1	2644038R1		
XC90-D	14	GY	TXL	3581768C1		4081	1	2644038R1		
XD90-GD	14	GY	TXL	3581768C1		4081	1	2644038R1		
XE94-GC	12	WH	GXL	3581768C1		4081	1	2644038R1		
XX90-D	14	GY	TXL	3581768C1		4081	1	2644038R1		
MH26DA	18	TN	GXL	3518963C1	3553404C1	4087	6	N/A		
MH5CC(+)	18	YL	TXL	3727971C1	3553404C1	4087	7	N/A		
MH5CC(-)	18	GN	TXL	3727971C1	3553404C1	4087	8	N/A		
MH26B	18	TN	TXL	3727971C1	3553404C1	4087	10	N/A		
MH26A	18	TN	TXL	3727971C1	3553404C1	4087	11	N/A		
MH11-GBA	18	WH	TXL	3727971C1	3553404C1	4087	12	N/A		
QA23ED	18	TN	TXL	1661875C1	3522251C1	4120	A	3568570C1		
QA23BE	18	TN	TXL	1661875C1	3522251C1	4120	B	3568570C1		
QA23CB	18	TN	TXL	1661875C1	3522251C1	4120	C	3568570C1		
QA23DE	18	PK	TXL	1661875C1	3522251C1	4120	D	3568570C1		
QA23EF	18	TN	TXL	1661875C1	3522251C1	4120	E	3568570C1		
MY11-G	12	WH	TXL	3581768C1		4307	1	2644038R1		
MZ11-G	12	WH	TXL	3581768C1		4307	1	2644038R1		
TC11-G	12	WH	TXL	3581768C1		4307	1	2644038R1		
TD11-G	12	WH	TXL	3581768C1		4307	1	2644038R1		
MY11-G	12	WH	TXL	3581768C1		4307	1	2644005R1		
MZ11-G	12	WH	TXL	3581768C1		4307	1	2644005R1		
NC11-G	12	WH	TXL	3581768C1		4307	1	2644005R1		
ND11-G	12	WH	TXL	3581768C1		4307	1	2644005R1		
TC11-G	12	WH	TXL	3581768C1		4307	1	2644005R1		

Circuit Number	Gauge	Color	Insulation	Terminal / Splice Number	Connector Part number	Connector Number	Cavity	Seal/Sleeve	Lock 1	Lock 2
TD11-G	12	WH	TXL	3581768C1		4307	1	2644005R1		
MT78-GC	16	WH	GXL	3549254C1		4308	1	2644038R1		
PM78-GC	16	WH	GXL	3549254C1		4308	1	2644038R1		
PT78-GC	16	WH	GXL	3549254C1		4308	1	2644038R1		
PU78-GC	16	WH	GXL	3549254C1		4308	1	2644038R1		
MT78-GC	16	WH	GXL	3549254C1		4308	1	2644005R1		
PM78-GC	16	WH	GXL	3549254C1		4308	1	2644005R1		
ST22H	18	TN	GXL	3554090C1	3554089C1	4320	B1	N/A		
ST22F	18	TN	GXL	3554090C1	3554089C1	4320	B2	N/A		
ST22J	18	TN	GXL	3554090C1	3554089C1	4320	B3	N/A		
ST3C(+)	18	DKBL	TXL	3565443C1	3554089C1	4320	C1	N/A		
ST3C(-)	18	GY	TXL	3565443C1	3554089C1	4320	C2	N/A		
ST22L	18	TN	GXL	3554090C1	3554089C1	4320	D1	N/A		
ST22K	18	TN	GXL	3554090C1	3554089C1	4320	D2	N/A		
ST22M	18	TN	GXL	3554090C1	3554089C1	4320	E1	N/A		
ST22S	18	TN	GXL	3554090C1	3554089C1	4320	G3	N/A		
ST22R	18	TN	GXL	3554090C1	3554089C1	4320	H1	N/A		
ST22P	18	TN	GXL	3554090C1	3554089C1	4320	H2	N/A		
ST22N	18	TN	GXL	3554090C1	3554089C1	4320	H3	N/A		
ST22A	18	TN	GXL	3554090C1	3554089C1	4320	J1	N/A		
ST98(-)	18	BK	TXL	3565443C1	3554089C1	4320	J3	N/A		
ST22B	18	TN	GXL	3554090C1	3554089C1	4320	K1	N/A		
ST22-GE	18	WH	GXL	3554090C1	3554089C1	4320	K2	N/A		
ST98(+)	18	BK	TXL	3565443C1	3554089C1	4320	K3	N/A		
ST22-GB	18	WH	GXL	1661875C1	3538635C1	4321	A	1661872C1		
ST22F	18	TN	GXL	1661875C1	3538635C1	4321	B	1661872C1		
ST22H	18	TN	GXL	1661875C1	3538635C1	4321	C	1661872C1		
ST22J	18	TN	GXL	1661875C1	3538635C1	4321	D	1661872C1		
ST22K	18	TN	GXL	1661875C1	3538635C1	4321	E	1661872C1		
ST22-GC	18	WH	GXL	1661875C1	3538635C1	4321	F	1661872C1		
ST22L	18	TN	GXL	1661875C1	3538635C1	4321	G	1661872C1		
ST22-GD	18	WH	GXL	1661875C1	3538635C1	4321	H	1661872C1		
ST22M	18	TN	GXL	1661875C1	3538635C1	4321	K	1661872C1		
ST22N	18	TN	GXL	1661875C1	1667741C1	4322	A	1661872C1		
ST22P	18	TN	GXL	1661875C1	1667741C1	4322	B	1661872C1		
ST22R	18	TN	GXL	1661875C1	1667741C1	4322	C	1661872C1		
ST22S	18	TN	GXL	587576C1	587568C91	4323	A	1652325C1		
ST22-GF	18	WH	GXL	587576C1	587568C91	4323	B	1652325C1		
MN14C	4	RD	SGX	3517757C1	3517760C1	4411	A	N/A		
MU14CA	4	RD	SGX	3517757C1	3517760C1	4414	A	N/A		
AA82DJ	16	GY	TXL	2033819C1	1661375C2	4500	A	1652325C1		
AA82JJ	16	GY	TXL	2033819C1	1661375C2	4500	B	1652325C1		
AA82-GJ	16	GY	TXL	2033819C1	1661375C2	4500	C	1652325C1		
AA82KJ	16	GY	TXL	2033819C1	1661375C2	4500	D	1652325C1		
AA82LJ	16	GY	TXL	2033819C1	1661375C2	4500	E	1652325C1		
TT38A	18	GY	TXL	587578C1	587567C91	4515	A	3517771C1		
TT11-G	18	WH	TXL	587578C1	587567C91	4515	B	3517771C1		
HZ14-FL	8	LTBL	FUS	373756C2		4800	1	2644054R1		
RD94BD	16	BN	TXL	3679224C1	3678796C1	4950	1	3601687C1		
RD94BE	16	YL	TXL	3679224C1	3678796C1	4950	2	3601687C1		
UD94BD	16	BN	TXL	3679224C1	3678796C1	4952	1	3601687C1		
UD94BE	16	YL	TXL	3679224C1	3678796C1	4952	2	3601687C1		
VB70BJ	16	OR	TXL	3613770C1	3626438C1	4962	1	N/A		
VB68BJ	16	BN	TXL	3613770C1	3626438C1	4962	2	N/A		

Circuit Number	Gauge	Color	Insulation	Terminal / Splice Number	Connector Part number	Connector Number	Cavity	Seal/Sleeve	Lock 1	Lock 2
KA14A5	16	RD	TXL	3743666C1	3945694C1	6000	1	N/A	3606526C1	
KA14A5	16	RD	TXL	3743666C1	3945694C1	6000	1	N/A		
KA95GBE	16	BK	TXL	3743666C1	3945694C1	6000	3	N/A		
KA95GBE	16	TN	TXL	3743666C1	3945694C1	6000	3	N/A		
KA13B	18	PK	TXL	3743666C1	3945694C1	6000	5	N/A		
KA13B	18	PK	TXL	3743666C1	3945694C1	6000	5	N/A		
VJ95F	20	TN	TXL	3743668C1	3945694C1	6000	6	N/A		
VL95F	20	TN	TXL	3743668C1	3945694C1	6000	6	N/A		
AB6A	20	GY	TXL	3743668C1	3945694C1	6000	8	N/A		
AF6A	20	GY	TXL	3743668C1	3945694C1	6000	8	N/A		
KP6A	20	TN	TXL	3743668C1	3945694C1	6000	8	N/A		
VG6A	20	TN	TXL	3743668C1	3945694C1	6000	8	N/A		
AB6A	20	GY	TXL	3743668C1	3945694C1	6000	8	N/A		
AF6A	20	GY	TXL	3743668C1	3945694C1	6000	8	N/A		
AH6A	20	GY	TXL	3743668C1	3945694C1	6000	8	N/A		
KP6A	20	GY	TXL	3743668C1	3945694C1	6000	8	N/A		
VG6A	20	PL	TXL	3743668C1	3945694C1	6000	8	N/A		
VX6A	20	GY	TXL	3743668C1	3945694C1	6000	8	N/A		
VJ97C	20	VT	TXL	3743668C1	3945694C1	6000	9	N/A		
VJ97C	20	PL	TXL	3743668C1	3945694C1	6000	9	N/A		
VJ99B	20	VT	TXL	3743668C1	3945694C1	6000	10	N/A		
VJ99B	20	PL	TXL	3743668C1	3945694C1	6000	10	N/A		
KR46B	20	GY	TXL	3743668C1	3945694C1	6000	12	N/A		
KR46B	20	GY	TXL	3743668C1	3945694C1	6000	12	N/A		
KY46B	20	GY	TXL	3743668C1	3945694C1	6000	12	N/A		
VW46B	20	GY	TXL	3743668C1	3945694C1	6000	12	N/A		
VA95	20	TN	TXL	3743668C1	3945694C1	6000	13	N/A		
VB95	20	TN	TXL	3743668C1	3945694C1	6000	13	N/A		
VA95	20	TN	TXL	3743668C1	3945694C1	6000	13	N/A		
VJ95K	20	TN	150	3743668C1	3945694C1	6000	16	N/A		
VK95K	20	TN	150	3743668C1	3945694C1	6000	16	N/A		
KR46A	20	GY	TXL	3743668C1	3945694C1	6000	19	N/A		
KR46A	20	GY	TXL	3743668C1	3945694C1	6000	19	N/A		
KY46A	20	GY	TXL	3743668C1	3945694C1	6000	19	N/A		
VW46A	20	GY	TXL	3743668C1	3945694C1	6000	19	N/A		
KW5(+)	20	YL	193	3743668C1	3945694C1	6000	22	N/A		
PB5B(+)	20	YL	193	3743668C1	3945694C1	6000	22	N/A		
PC5D(+)	20	YL	193	3743668C1	3945694C1	6000	22	N/A		
RT5B(+)	20	YL	193	3743668C1	3945694C1	6000	22	N/A		
SB5B(+)	20	YL	193	3743668C1	3945694C1	6000	22	N/A		
KW5(+)	20	YL	193	3743668C1	3945694C1	6000	22	N/A		
KX5S(+)	20	YL	193	3743668C1	3945694C1	6000	22	N/A		
PC5D(+)	20	YL	193	3743668C1	3945694C1	6000	22	N/A		
SB5B(+)	20	YL	193	3743668C1	3945694C1	6000	22	N/A		
KA14A4	16	RD	TXL	3743666C1	3945694C1	6000	25	N/A	3598916C1	3598917C1
KA14A4	16	RD	TXL	3743666C1	3945694C1	6000	25	N/A		
KA14A3	16	RD	TXL	3743666C1	3945694C1	6000	26	N/A	3553460C1	3589992C1
KA14A3	16	RD	TXL	3743666C1	3945694C1	6000	26	N/A		
KA14A2	16	RD	TXL	3743666C1	3945694C1	6000	27	N/A		
KA14A2	16	RD	TXL	3743666C1	3945694C1	6000	27	N/A		
KA14A1	16	RD	TXL	3743666C1	3945694C1	6000	28	N/A	3543732C1	
KA14A1	16	RD	TXL	3743666C1	3945694C1	6000	28	N/A		
KR97AR	20	VT	TXL	3743668C1	3945694C1	6000	30	N/A		
KR97AR	20	PL	TXL	3743668C1	3945694C1	6000	30	N/A		

Circuit Number	Gauge	Color	Insulation	Terminal / Splice Number	Connector Part number	Connector Number	Cavity	Seal/Sleeve	Lock 1	Lock 2
KY97AR	20	PL	TXL	3743668C1	3945694C1	6000	30	N/A		
VW97AR	20	PL	TXL	3743668C1	3945694C1	6000	30	N/A		
KT9A	20	TN	150	3743668C1	3945694C1	6000	32	N/A		
KZ9A	20	TN	150	3743668C1	3945694C1	6000	32	N/A		
KT9A	20	GY	TXL	3743668C1	3945694C1	6000	32	N/A		
KZ9A	20	GY	TXL	3743668C1	3945694C1	6000	32	N/A		
VJ97B	20	VT	TXL	3743668C1	3945694C1	6000	33	N/A		
VJ97B	20	PL	TXL	3743668C1	3945694C1	6000	33	N/A		
KT34	20	TN	TXL	3743668C1	3945694C1	6000	35	N/A		
KZ34A	20	TN	TXL	3743668C1	3945694C1	6000	35	N/A		
KT34	20	TN	TXL	3743668C1	3945694C1	6000	35	N/A		
KZ34A	20	TN	TXL	3743668C1	3945694C1	6000	35	N/A		
VJ95B	20	TN	TXL	3743668C1	3945694C1	6000	38	N/A		
VL95AT2	20	TN	TXL	3743668C1	3945694C1	6000	38	N/A		
VJ95A1	20	TN	TXL	3743668C1	3945694C1	6000	39	N/A		
VL95AS2	20	TN	TXL	3743668C1	3945694C1	6000	39	N/A		
VJ95AU2	20	TN	TXL	3743668C1	3945694C1	6000	40	N/A		
VL95AU2	20	TN	TXL	3743668C1	3945694C1	6000	40	N/A		
VJ95	20	TN	150	3743668C1	3945694C1	6000	41	N/A		
VK95BA	20	TN	150	3743668C1	3945694C1	6000	41	N/A		
VJ95A	20	TN	150	3743668C1	3945694C1	6000	42	N/A		
VK95BC	20	TN	150	3743668C1	3945694C1	6000	42	N/A		
KW5(-)	20	GN	193	3743668C1	3945694C1	6000	46	N/A		
PB5B(-)	20	GN	193	3743668C1	3945694C1	6000	46	N/A		
PC5D(-)	20	GN	193	3743668C1	3945694C1	6000	46	N/A		
RT5B(-)	20	GN	193	3743668C1	3945694C1	6000	46	N/A		
SB5B(-)	20	GN	193	3743668C1	3945694C1	6000	46	N/A		
KW5(-)	20	GN	193	3743668C1	3945694C1	6000	46	N/A		
KX5S(-)	20	GN	193	3743668C1	3945694C1	6000	46	N/A		
PC5D(-)	20	GN	193	3743668C1	3945694C1	6000	46	N/A		
SB5B(-)	20	GN	193	3743668C1	3945694C1	6000	46	N/A		
KA10-GA	16	WH	TXL	3743666C1	3945694C1	6000	49	N/A		
KA10-GA	16	WH	TXL	3743666C1	3945694C1	6000	49	N/A		
KA10-GB	16	WH	TXL	3743666C1	3945694C1	6000	50	N/A		
KA10-GB	16	WH	TXL	3743666C1	3945694C1	6000	50	N/A		
KA10-GC	16	WH	TXL	3743666C1	3945694C1	6000	51	N/A		
KA10-GC	16	WH	TXL	3743666C1	3945694C1	6000	51	N/A		
KA10-GD	16	WH	TXL	3743666C1	3945694C1	6000	52	N/A		
KA10-GD	16	WH	TXL	3743666C1	3945694C1	6000	52	N/A		
VJ95EL	18	TN	150	3743666C1	3945694C1	6000	53	N/A		
VK95DVL	20	TN	150	3743668C1	3945694C1	6000	53	N/A		
VJ95N	20	TN	TXL	3743668C1	3945694C1	6000	54	N/A		
VL95E	20	TN	TXL	3743668C1	3945694C1	6000	54	N/A		
KA95AA	20	TN	TXL	3743668C1	3945694C1	6000	57	N/A		
AA95AA	20	TN	TXL	3743668C1	3945694C1	6000	57	N/A		
AC23-G1	20	TN	TXL	3743668C1	3945694C1	6000	57	N/A		
BA47A	20	GY	TXL	3743668C1	3945694C1	6000	59	N/A		
KM47C	20	GY	TXL	3743668C1	3945694C1	6000	59	N/A		
BA47A	20	GY	TXL	3743668C1	3945694C1	6000	59	N/A		
KM47C	20	GY	TXL	3743668C1	3945694C1	6000	59	N/A		
BA47	20	GY	TXL	3743668C1	3945694C1	6000	60	N/A		
KM47B	20	GY	TXL	3743668C1	3945694C1	6000	60	N/A		
BA47	20	GY	TXL	3743668C1	3945694C1	6000	60	N/A		
KM47B	20	GY	TXL	3743668C1	3945694C1	6000	60	N/A		

Circuit Number	Gauge	Color	Insulation	Terminal / Splice Number	Connector Part number	Connector Number	Cavity	Seal/Sleeve	Lock 1	Lock 2
VJ97N	20	VT	TXL	3743668C1	3945694C1	6000	61	N/A		
VJ97N	20	PL	TXL	3743668C1	3945694C1	6000	61	N/A		
KB9-G	20	GY	TXL	3743668C1	3945694C1	6000	62	N/A		
KC9A-G	20	GY	TXL	3743668C1	3945694C1	6000	62	N/A		
KB9-G	20	GY	TXL	3743668C1	3945694C1	6000	62	N/A		
KR99A	20	VT	TXL	3743668C1	3945694C1	6000	63	N/A		
KR99A	20	PL	TXL	3743668C1	3945694C1	6000	63	N/A		
KY99A	20	PL	TXL	3743668C1	3945694C1	6000	63	N/A		
VW99A	20	PL	TXL	3743668C1	3945694C1	6000	63	N/A		
VJ97M	20	VT	TXL	3743668C1	3945694C1	6000	64	N/A		
VJ97M	20	PL	TXL	3743668C1	3945694C1	6000	64	N/A		
AD41A	20	TN	TXL	3743668C1	3945694C1	6000	65	N/A		
KA41A	20	TN	TXL	3743668C1	3945694C1	6000	65	N/A		
KR97XG	20	GY	TXL	3743668C1	3945694C1	6000	66	N/A		
KR97XG	20	GY	TXL	3743668C1	3945694C1	6000	66	N/A		
KY97XG	20	GY	TXL	3743668C1	3945694C1	6000	66	N/A		
VW97XG	20	GY	TXL	3743668C1	3945694C1	6000	66	N/A		
KR99F	20	VT	TXL	3743668C1	3945694C1	6000	67	N/A		
KR99F	20	PL	TXL	3743668C1	3945694C1	6000	67	N/A		
KY99F	20	PL	TXL	3743668C1	3945694C1	6000	67	N/A		
VW99F	20	PL	TXL	3743668C1	3945694C1	6000	67	N/A		
KR97XC	20	TN	TXL	3743668C1	3945694C1	6000	70	N/A		
KR97XC	20	TN	TXL	3743668C1	3945694C1	6000	70	N/A		
KY97XC	20	TN	TXL	3743668C1	3945694C1	6000	70	N/A		
VW97XC	20	TN	TXL	3743668C1	3945694C1	6000	70	N/A		
KA10-GE	16	WH	TXL	3743666C1	3945694C1	6000	73	N/A		
KA10-GE	16	WH	TXL	3743666C1	3945694C1	6000	73	N/A		
KA18	18	PK	TXL	3743666C1	3945694C1	6000	75	N/A		
KA18	18	PK	TXL	3743666C1	3945694C1	6000	75	N/A		
KA18R	18	PK	TXL	3743666C1	3945694C1	6000	76	N/A	3610532C1	
KA18R	18	PK	TXL	3743666C1	3945694C1	6000	76	N/A		
VJ95EH	18	TN	150	3743666C1	3945694C1	6000	77	N/A		
VK95DVH	20	TN	150	3743668C1	3945694C1	6000	77	N/A		
AC23	20	TN	TXL	3743668C1	3945694C1	6000	78	N/A		
AC23	20	TN	TXL	3743668C1	3945694C1	6000	78	N/A		
KA95A	20	TN	TXL	3743668C1	3945694C1	6000	79	N/A		
KA95SB	20	TN	TXL	3743668C1	3945694C1	6000	79	N/A		
VJ95AB	20	TN	TXL	3743668C1	3945694C1	6000	82	N/A		
VL95AC	20	TN	TXL	3743668C1	3945694C1	6000	82	N/A		
KF97XH	20	VT	TXL	3743668C1	3945694C1	6000	83	N/A		
KF97XH	20	PL	TXL	3743668C1	3945694C1	6000	83	N/A		
VW97XH	20	PL	TXL	3743668C1	3945694C1	6000	83	N/A		
KF46C	20	GY	TXL	3743668C1	3945694C1	6000	90	N/A		
KF46C	20	GY	TXL	3743668C1	3945694C1	6000	90	N/A		
KY99B	20	PL	TXL	3743668C1	3945694C1	6000	90	N/A		
VW99B	20	GY	TXL	3743668C1	3945694C1	6000	90	N/A		
KR99C	20	VT	TXL	3743668C1	3945694C1	6000	94	N/A		
KR99C	20	PL	TXL	3743668C1	3945694C1	6000	94	N/A		
KY99C	20	PL	TXL	3743668C1	3945694C1	6000	94	N/A		
VW99C	20	PL	TXL	3743668C1	3945694C1	6000	94	N/A		
XS90H	14	GY	GXL	1661707C1	1667639C1	6060	A	N/A		
XS90HA	16	GY	GXL	1661707C1	1667639C1	6060	B	N/A		
XS90CA	16	GY	GXL	2036586C1	2036584C1	6061	A	N/A		
XS90-G	16	WH	GXL	2036586C1	2036584C1	6061	B	N/A		

Circuit Number	Gauge	Color	Insulation	Terminal / Splice Number	Connector Part number	Connector Number	Cavity	Seal/Sleeve	Lock 1	Lock 2
XS90-GA	12	WH	GXL	3581768C1		6062	1	2644038R1		
XS9AB	18	GY	TXL	2036586C1	2036583C1	6063	A	N/A		
XS90P	18	GY	GXL	2036586C1	2036583C1	6063	B	N/A		
XS90L	16	GY	TXL	3757932C1	3602747C1	6065	1	N/A		
XS90N	16	GY	TXL	3757932C1	3602747C1	6065	2	N/A		
XS14B	8	GY	GXL	3700153C1	3537133C1	6066	A	3537135C1		
XS090F	10	GY	TXL	3607170C1		6067	1	2644002R1		
XS90H	14	GY	GXL	3607170C1		6067	1	2644002R1		
XS014	10	RD	TXL	1661708C1	1661747C91	6068	1	N/A		
XS90A	16	GY	TXL	3895713C1	1661747C91	6068	2	N/A		
XS090F	10	GY	TXL	1661708C1	1661747C91	6068	4	N/A		
XS90K	16	GY	TXL	3895713C1	1661747C91	6068	5	N/A		
XS90-GM	10	WH	GXL	3867524C1		6069	1	2644005R1		
XS90NA	14	GY	GXL	1661707C1	1667639C1	6070	A	N/A		
XS90NB	14	GY	GXL	1661707C1	1667639C1	6070	B	N/A		
XS90LA	16	GY	TXL	879630R1	598839C1	6071	A	N/A		
XS90J	18	GY	TXL	879630R1	598839C1	6071	B	N/A		
XS90KA	16	GY	TXL	879630R1	598839C1	6071	C	N/A		
KA13C	14	PK	GXL	1661707C1	1667639C1	6100	A	N/A		
KV13C	14	PK	GXL	1661707C1	1667639C1	6100	A	N/A		
KA13A	14	PK	GXL	1661707C1	1667639C1	6100	B	N/A	1675053C1	
KA13A	14	PK	GXL	1661707C1	1667639C1	6100	B	N/A		
AG77-G	18	WH	TXL	2033819C1	1671610C1	6200	A	3517771C1		
AH77-G	18	WH	TXL	2033819C1	1671610C1	6200	A	3517771C1		
KK77-G	18	LTGN	TXL	2033819C1	1671610C1	6200	A	3517771C1		
KK77	18	LTGN	TXL	2033819C1	1671610C1	6200	B	3517771C1		
KK77	18	LTGN	TXL	2033819C1	1671610C1	6200	B	3517771C1		
KK77-ZV	18	LTGN	TXL	1651943C1	1678137C1	6201	A	N/A		
KK77-ZV	18	LTGN	TXL	1651943C1	1678137C1	6201	A	N/A		
KK77A	18	LTGN	TXL	1651943C1	1678137C1	6201	B	N/A		
KK77A	18	LTGN	TXL	1651943C1	1678137C1	6201	B	N/A		
KK77B	18	LTGN	TXL	1651943C1	1678137C1	6201	C	N/A		
KK77B	18	LTGN	TXL	1651943C1	1678137C1	6201	C	N/A		
TC9AE	18	GY	TXL	1661875C1	3590299C1	6202	A	3568570C1		
TB74J	18	LTGN	TXL	1661875C1	3590299C1	6202	B	3568570C1		
KE11-G1	16	WH	TXL	365680C2		6304	1	2644038R1		
AG11-G1	10	WH	TXL	365684C2		6304	A	2644005R1		
AP11-G1	10	WH	GXL	365684C2		6304	A	2644005R1		
KA10-G	10	WH	GXL	365684C2		6305	1	2644005R1		
KA10-G	10	WH	GXL	365684C2		6305	A	2644005R1		
GB17A	16	PK	TXL	3692844C1		6306	1	2644038R1		
KA17A	16	PK	TXL	3692844C1		6306	A	2644038R1		
AE26A	18	TN	GXL	2033819C1	1664531C1	6332	A	1652325C1		
AE26B	18	TN	GXL	3866603C1		6335	1	2644038R1		
AE26B	18	TN	GXL	3866603C1		6335	A	2644038R1		
KT34A	18	TN	TXL	3554322C1	3662425C1	6401	A	3554318C1		
KT34A	18	TN	TXL	3554322C1	3662425C1	6401	A	3554318C1		
KT34-G	18	TN	TXL	3554322C1	3662425C1	6401	B	3554318C1		
KT34-G	18	TN	TXL	3554322C1	3662425C1	6401	B	3554318C1		
KA14A	10	RD	GXL	3752553C1	6113338C1	6566	1	6113347C1	3525873C1	3525875C1
KA14A	10	RD	GXL	3752553C1	6113338C1	6566	1	6113347C1		
VB18G	10	PK	GXL	3752553C1	6113338C1	6566	3	6113347C1		
KH14S	10	RD	GXL	3752553C1	6113338C1	6566	3	6113347C1		
VJ14B	16	RD	TXL	3830798C1	6113341C1	6567	1	3509903C1		

Circuit Number	Gauge	Color	Insulation	Terminal / Splice Number	Connector Part number	Connector Number	Cavity	Seal/Sleeve	Lock 1	Lock 2
KA14B	16	RD	TXL	3830798C1	6113341C1	6567	1	3509903C1		
PH14A	12	RD	TXL	3830799C1	6113341C1	6567	7	3509903C1		
PM14A	12	RD	TXL	3830799C1	6113341C1	6567	7	3509903C1		
PV14A	12	RD	TXL	3830799C1	6113341C1	6567	7	3575783C1		
SM14A	12	RD	TXL	3830799C1	6113341C1	6567	7	3509903C1		
KH14A	12	RD	TXL	3830799C1	6113341C1	6567	7	3575783C1		
PM14A	12	RD	TXL	3830799C1	6113341C1	6567	7	3509903C1		
SM14A	12	RD	TXL	3830799C1	6113341C1	6567	7	3509903C1		
RB14A	14	RD	TXL	3830798C1	6113341C1	6567	10	3509903C1		
VJ14A	12	RD	TXL	3830799C1	6113341C1	6567	13	3509903C1		
KA14D	12	RD	TXL	3830799C1	6113341C1	6567	13	3509903C1		
KN14A	12	RD	TXL	3830799C1	6113341C1	6567	14	3509903C1		
KN14A	12	RD	TXL	3830799C1	6113341C1	6567	14	3509903C1		
KS10-G1	10	WH	TXL	1687847C1	3551896C1	6704	A	589390C1		
KD10-G5	10	WH	TXL	1687847C1	3551896C1	6704	A	589390C1		
YA41-GE	10	WH	TXL	1687847C1	3551896C1	6704	A	589390C1		
VJ10-G1	16	WH	150	2033819C1	3551896C1	6704	B	1652325C1		
KG31R	18	GY	GXL	2033819C1	3551896C1	6704	B	1652325C1		
KJ31R	18	GY	GXL	2033819C1	3551896C1	6704	B	1652325C1		
VJ10-G2	14	WH	150	2033816C1	3551896C1	6704	C	1652325C1		
VJ10-G3	18	WH	TXL	2033819C1	3551896C1	6704	D	3517771C1		
PM92#109	18	WH	TXL	2033819C1	3551896C1	6704	D	3517771C1		
SM92#109	18	WH	TXL	2033819C1	3551896C1	6704	D	3517771C1		
VJ10-G4	16	WH	GXL	2033819C1	3551896C1	6704	E	1652325C1		
PM92#169	18	WH	TXL	2033819C1	3551896C1	6704	E	3517771C1		
SM92#169	18	WH	TXL	2033819C1	3551896C1	6704	E	3517771C1		
VJ10-G5	16	WH	GXL	2033819C1	3551896C1	6704	F	1652325C1		
RA14-G	12	WH	TXL	2033816C1	3551896C1	6704	F	589391C1		
VB18B	10	PK	TXL	3753255C1	6105358C1	6709	1	N/A		
AG18E	10	WH	TXL	3753255C1	6105358C1	6709	2	N/A		
AP18E	10	WH	TXL	3753255C1	6105358C1	6709	2	N/A		
VB18C	10	PK	TXL	3512334C1	3512331C91	6710	1	589390C1		
VB18A	18	WH	TXL	2039343C1	3512331C91	6710	2	3517771C1		
VB18B	10	PK	TXL	3512334C1	3512331C91	6710	4	589390C1		
AG18D	18	WH	TXL	2039343C1	3512331C91	6710	5	3517771C1		
AP18D	18	WH	TXL	2039343C1	3512331C91	6710	5	3517771C1		
KB9-G	20	GY	TXL	3535302C1	3543733C1	6747	A	3535423C1		
KC9B-G	20	GY	TXL	3535302C1	3543733C1	6747	A	3535423C1		
KB9-G	20	GY	TXL	3535302C1	3543733C1	6747	A	3535423C1		
VA95-G	18	WH	GXL	3535303C1	3543733C1	6747	B	3535424C1		
VB95-G	18	WH	GXL	3535303C1	3543733C1	6747	B	3535424C1		
VA95-G	18	WH	GXL	3535303C1	3543733C1	6747	B	3535424C1		
KT34-G	18	TN	TXL	3535303C1	3543733C1	6747	C	3535424C1		
KT34-G	18	TN	TXL	3535303C1	3543733C1	6747	C	3535424C1		
AD41-G	18	TN	TXL	3535303C1	3543733C1	6747	D	3535424C1		
KA41-G	18	TN	TXL	3535303C1	3543733C1	6747	D	3535424C1		
KA95AA	20	TN	TXL	3535302C1	3543733C1	6747	E	3535423C1		
KE11-G1	16	WH	TXL	3535303C1	3543733C1	6747	E	3535424C1		
KH11-G1	16	WH	TXL	3535303C1	3543733C1	6747	E	3535424C1		
VJ95AC	18	TN	TXL	3535303C1	3543733C1	6747	F	3535424C1		
KK77-G	18	LTGN	TXL	3535303C1	3543733C1	6747	F	3535424C1		
AC23-G	20	TN	TXL	3535302C1	3543733C1	6747	G	3535423C1		
KR9B	20	GY	TXL	3535302C1	3543733C1	6747	G	3535423C1		
KY9B-G	20	GY	TXL	3535302C1	3543733C1	6747	G	3535423C1		

Circuit Number	Gauge	Color	Insulation	Terminal / Splice Number	Connector Part number	Connector Number	Cavity	Seal/Sleeve	Lock 1	Lock 2
VW9B-G	20	GY	TXL	3535302C1	3543733C1	6747	G	3535423C1		
KA146-G	16	GY	TXL	3535303C1	3543733C1	6747	J	3535424C1		
KA146-G	16	GY	TXL	3535303C1	3543733C1	6747	J	3535424C1		
ML9TS	18	GY	TXL	3535303C1	3543733C1	6747	K	3535424C1		
ML9TS	18	GY	TXL	3535303C1	3543733C1	6747	K	3535424C1		
KK77-ZV	18	LTGN	TXL	3535303C1	3543733C1	6747	L	3535424C1		
KK77-ZV	18	LTGN	TXL	3535303C1	3543733C1	6747	L	3535424C1		
CA9T	18	GY	TXL	3535303C1	3543733C1	6747	M	3535424C1		
CA9T	18	GY	150	3535303C1	3543733C1	6747	M	3535424C1		
FM9C	18	GY	GXL	3535303C1	3543733C1	6747	M	3535424C1		
SJ14HFA	14	RD	TXL	3566715C1	1661198C1	6900	A	N/A		
SL14HD	16	LTGN	TXL	1661209C1	1661198C1	6900	A	N/A		
SJ11-GA	14	WH	TXL	3566715C1	1661198C1	6900	B	N/A		
SL11GAP	14	WH	TXL	3566715C1	1661198C1	6900	B	N/A		
SJ86P	16	LTGN	TXL	1661209C1	1661198C1	6900	C	N/A		
SL86P	16	LTGN	TXL	1661209C1	1661198C1	6900	C	N/A		
ZJ94AA	16	GY	GXL	3679224C1	3678796C1	6925	1	3601687C1		
ZJ94AB	16	GY	GXL	3679224C1	3678796C1	6925	2	3601687C1		
HB103A	12	RD	GXL	3573311C1	3534572C1	6969	A1	N/A		
HB103B	12	RD	GXL	3573311C1	3534572C1	6969	A2	N/A		
HB103C	12	RD	GXL	3573311C1	3534572C1	6969	A3	N/A		
HB103D	12	RD	GXL	3573311C1	3534572C1	6969	B1	N/A		
HB103E	12	RD	GXL	3573311C1	3534572C1	6969	B2	N/A		
HB103F	12	RD	GXL	3573311C1	3534572C1	6969	B3	N/A		
HB103K	18	LTGN	GXL	3534164C1	3534572C1	6969	C1	N/A		
HB103N	12	LTGN	GXL	3573311C1	3534572C1	6969	C2	N/A		
HB103L	18	LTGN	GXL	3534164C1	3534572C1	6969	C3	N/A		
HB103P	12	LTGN	GXL	3573311C1	3534572C1	6969	C4	N/A		
HB103E	12	RD	GXL	3573311C1	3534572C1	6969	E1	N/A		
HB11H-GP	18	WH	GXL	3534164C1	3534572C1	6969	E2	N/A		
HB103F	12	RD	GXL	3573311C1	3534572C1	6969	E3	N/A		
HB11J-GR	18	WH	GXL	3534164C1	3534572C1	6969	E4	N/A		
HB103J	18	LTGN	GXL	3534164C1	3534572C1	6969	G1	N/A		
HB103M	12	LTGN	GXL	3573311C1	3534572C1	6969	G2	N/A		
HB103D	12	RD	GXL	3573311C1	3534572C1	6969	J1	N/A		
HB11G-GN	18	WH	GXL	3534164C1	3534572C1	6969	J2	N/A		
JS1A	16	RD	TXL	365876C2		7000	1	2644038R1		
JT1A	16	TN	GXL	365876C2		7000	1	2644038R1		
KB62D1	18	BK	TXL	N/A	BLUNT_SL_V	7001	A	N/A		
KB22D2	18	WH	TXL	N/A	BLUNT_SL_V	7001	B	N/A		
KB23D3	18	RD	TXL	N/A	BLUNT_SL_V	7001	C	N/A		
KB27D4	18	BN	TXL	N/A	BLUNT_SL_V	7001	D	N/A		
KB29D5	18	BN	TXL	N/A	BLUNT_SL_V	7001	E	N/A		
KB16D6	18	DKBL	TXL	N/A	BLUNT_SL_V	7001	F	N/A		
KB15D7	18	LTGN	TXL	N/A	BLUNT_SL_V	7001	G	N/A		
KB14D8	18	BK	TXL	N/A	BLUNT_SL_V	7001	H	N/A		
KB13D9	18	PK	TXL	N/A	BLUNT_SL_V	7001	J	N/A		
KB12D10	18	OR	TXL	N/A	BLUNT_SL_V	7001	K	N/A		
KB11D11	18	OR	TXL	N/A	BLUNT_SL_V	7001	L	N/A		
KB10D12	18	YL	TXL	N/A	BLUNT_SL_V	7001	M	N/A		
KB09D13	18	YL	TXL	N/A	BLUNT_SL_V	7002	A	N/A		
KB08D14	18	VT	TXL	N/A	BLUNT_SL_V	7002	B	N/A		
KB07D15	18	GY	TXL	N/A	BLUNT_SL_V	7002	C	N/A		
KB6D16	18	BK	TXL	N/A	BLUNT_SL_V	7002	D	N/A		

Circuit Number	Gauge	Color	Insulation	Terminal / Splice Number	Connector Part number	Connector Number	Cavity	Seal/Sleeve	Lock 1	Lock 2
KB5D17	18	LTGN	TXL	N/A	BLUNT_SL_V	7002	E	N/A		
KB20D18	18	LTGN	TXL	N/A	BLUNT_SL_V	7002	F	N/A		
KB19D19	18	TN	TXL	N/A	BLUNT_SL_V	7002	G	N/A		
KB18D20	18	RD	TXL	N/A	BLUNT_SL_V	7002	H	N/A		
KB17D21	18	VT	TXL	N/A	BLUNT_SL_V	7002	J	N/A		
KB26D22	18	RD	TXL	N/A	BLUNT_SL_V	7002	K	N/A		
JS1B	16	RD	TXL	3695859C1		7100	1	2644005R1		
KX5V(-)	18	GN	TXL	3555249C1	3599542C1	7105	2	N/A		
KX5V(+)	18	YL	TXL	3555249C1	3599542C1	7105	3	N/A		
KH17-GC	18	WH	TXL	3555249C1	3599542C1	7105	4	N/A		
KH92J	18	TN	TXL	3555249C1	3599542C1	7105	25	N/A		
KH17C	18	PK	TXL	3555249C1	3599542C1	7105	26	N/A		
KH5TC(-)	18	GN	TXL	3555249C1	3599542C1	7105	27	N/A		
KH5TC(+)	18	YL	TXL	3555249C1	3599542C1	7105	28	N/A		
KH92ER	18	TN	TXL	3555249C1	3599542C1	7105	31	N/A		
KH17B	18	PK	TXL	3555249C1	3599542C1	7105	32	N/A		
KH13A	14	PK	GXL	3557534C1	3599542C1	7105	35	N/A		
KH10-GE	14	WH	TXL	500398C1	3599542C1	7105	36	N/A		
KH14A	12	RD	TXL	3557534C1	3599542C1	7105	38	N/A		
VA95A	18	TN	GXL	3572625C1	3854645C91	7112	1	N/A		
VA95A	18	TN	GXL	3572625C1	3854645C91	7112	1	N/A		
AU162A	18	WH	GXL	1651968C1	3539778C1	7112	1	N/A		
AV162A	18	WH	GXL	1651968C1	3539778C1	7112	1	N/A		
AW162A	18	WH	GXL	1651968C1	3539778C1	7112	1	N/A		
AX162A	18	WH	GXL	1651968C1	3539778C1	7112	1	N/A		
AY162A	18	WH	GXL	1651968C1	3539778C1	7112	1	N/A		
AZ162A	18	WH	GXL	1651968C1	3539778C1	7112	1	N/A		
BD162A	18	WH	GXL	1651968C1	3539778C1	7112	1	N/A		
VW95A	18	TN	GXL	1651968C1	3539778C1	7112	1	N/A		
VX95A	18	TN	GXL	1651968C1	3539778C1	7112	1	N/A		
VA95A	18	TN	GXL	1651987C1	3539778C1	7112	1	N/A		
VB95A	18	TN	GXL	1651987C1	3539778C1	7112	1	N/A		
VC95A	18	TN	GXL	1651987C1	3539778C1	7112	1	N/A		
VD95A	18	TN	GXL	1651987C1	3539778C1	7112	1	N/A		
VE95A	18	TN	GXL	1651987C1	3539778C1	7112	1	N/A		
VF95A	18	TN	GXL	1651987C1	3539778C1	7112	1	N/A		
VG95A	18	TN	GXL	1651987C1	3539778C1	7112	1	N/A		
VH95A	18	TN	GXL	1651987C1	3539778C1	7112	1	N/A		
VK95A	18	TN	GXL	1651987C1	3539778C1	7112	1	N/A		
VL95A	18	TN	GXL	1651987C1	3539778C1	7112	1	N/A		
VM95A	18	TN	GXL	1651987C1	3539778C1	7112	1	N/A		
VN95A	18	TN	GXL	1651987C1	3539778C1	7112	1	N/A		
VP95A	18	TN	GXL	1651987C1	3539778C1	7112	1	N/A		
VS95A	18	TN	GXL	1651987C1	3539778C1	7112	1	N/A		
VA95-G	18	WH	GXL	3572625C1	3854645C91	7112	2	N/A		
VA95-G	18	WH	GXL	3572625C1	3854645C91	7112	2	N/A		
AU162-GA	18	WH	GXL	1651968C1	3539778C1	7112	2	N/A		
AV162-GA	18	WH	GXL	1651968C1	3539778C1	7112	2	N/A		
AW162-GA	18	WH	GXL	1651968C1	3539778C1	7112	2	N/A		
AX162-GA	18	WH	GXL	1651968C1	3539778C1	7112	2	N/A		
AY162-GA	18	WH	GXL	1651968C1	3539778C1	7112	2	N/A		
AZ162-GA	18	WH	GXL	1651968C1	3539778C1	7112	2	N/A		
BD162-GA	18	WH	GXL	1651968C1	3539778C1	7112	2	N/A		
VW95-GA	18	WH	GXL	1651968C1	3539778C1	7112	2	N/A		

Circuit Number	Gauge	Color	Insulation	Terminal / Splice Number	Connector Part number	Connector Number	Cavity	Seal/Sleeve	Lock 1	Lock 2
VX95-GA	18	WH	GXL	1651968C1	3539778C1	7112	2	N/A		
VA95-GA	18	WH	GXL	1651987C1	3539778C1	7112	2	N/A		
VB95-GA	18	WH	GXL	1651987C1	3539778C1	7112	2	N/A		
VC95-GA	18	WH	GXL	1651987C1	3539778C1	7112	2	N/A		
VD95-GA	18	WH	GXL	1651987C1	3539778C1	7112	2	N/A		
VE95-GA	18	WH	GXL	1651987C1	3539778C1	7112	2	N/A		
VF95-GA	18	WH	GXL	1651987C1	3539778C1	7112	2	N/A		
VG95-GA	18	WH	GXL	1651987C1	3539778C1	7112	2	N/A		
VH95-GA	18	WH	GXL	1651987C1	3539778C1	7112	2	N/A		
VK95-GA	18	WH	GXL	1651987C1	3539778C1	7112	2	N/A		
VL95-GA	18	WH	GXL	1651987C1	3539778C1	7112	2	N/A		
VM95-GA	18	WH	GXL	1651987C1	3539778C1	7112	2	N/A		
VN95-GA	18	WH	GXL	1651987C1	3539778C1	7112	2	N/A		
VP95-GA	18	WH	GXL	1651987C1	3539778C1	7112	2	N/A		
VS95-GA	18	WH	GXL	1651987C1	3539778C1	7112	2	N/A		
VW95A	18	TN	GXL	3561584C1	3590390C1	7113	1	3536868C1		
VA95A	18	TN	GXL	3572625C1	3602747C1	7113	1	N/A		
VW95-GA	18	WH	GXL	3561584C1	3590390C1	7113	2	3536868C1		
VA95-GA	18	WH	GXL	3572625C1	3602747C1	7113	2	N/A		
VA95A	18	TN	GXL	3572626C1	3539778C1	7114	1	N/A		
VB95A	18	TN	GXL	3572626C1	3539778C1	7114	1	N/A		
VC95A	18	TN	GXL	3572626C1	3539778C1	7114	1	N/A		
VD95A	18	TN	GXL	3572626C1	3539778C1	7114	1	N/A		
VF95A	18	TN	GXL	3572626C1	3539778C1	7114	1	N/A		
VG95A	18	TN	GXL	3572626C1	3539778C1	7114	1	N/A		
VH95A	18	TN	GXL	3572626C1	3539778C1	7114	1	N/A		
VJ95A	18	TN	GXL	3572626C1	3539778C1	7114	1	N/A		
VK95A	18	TN	GXL	3572626C1	3539778C1	7114	1	N/A		
VL95A	18	TN	GXL	3572626C1	3539778C1	7114	1	N/A		
VY95A	18	TN	GXL	3572626C1	3539778C1	7114	1	N/A		
VZ95A	18	TN	GXL	3572626C1	3539778C1	7114	1	N/A		
WH95A	18	TN	GXL	3572626C1	3539778C1	7114	1	N/A		
XB95A	18	TN	GXL	3572626C1	3539778C1	7114	1	N/A		
XW95A	18	TN	GXL	3572626C1	3539778C1	7114	1	N/A		
VA95-GA	18	WH	GXL	3572626C1	3539778C1	7114	2	N/A		
VB95-GA	18	WH	GXL	3572626C1	3539778C1	7114	2	N/A		
VC95-GA	18	WH	GXL	3572626C1	3539778C1	7114	2	N/A		
VD95-GA	18	WH	GXL	3572626C1	3539778C1	7114	2	N/A		
VF95-GA	18	WH	GXL	3572626C1	3539778C1	7114	2	N/A		
VG95-GA	18	WH	GXL	3572626C1	3539778C1	7114	2	N/A		
VH95-GA	18	WH	GXL	3572626C1	3539778C1	7114	2	N/A		
VJ95-GA	18	WH	GXL	3572626C1	3539778C1	7114	2	N/A		
VK95-GA	18	WH	GXL	3572626C1	3539778C1	7114	2	N/A		
VL95-GA	18	WH	GXL	3572626C1	3539778C1	7114	2	N/A		
VY95-GA	18	WH	GXL	3572626C1	3539778C1	7114	2	N/A		
VZ95-GA	18	WH	GXL	3572626C1	3539778C1	7114	2	N/A		
WH95-GA	18	WH	GXL	3572626C1	3539778C1	7114	2	N/A		
XB95-GA	18	WH	GXL	3572626C1	3539778C1	7114	2	N/A		
XW95-GA	18	WH	GXL	3572626C1	3539778C1	7114	2	N/A		
PK92#101	18	LTBL	TXL	3686945C1	3605713C1	7151	1	N/A	1664408C1	
PK92#103	18	YL	TXL	3686945C1	3605713C1	7151	3	N/A	2006792C1	
PK92#105	18	OR	TXL	3686945C1	3605713C1	7151	5	N/A	2011364C1	
PB5#106	18	YL	TXL	3686945C1	3605713C1	7151	6	N/A		
KE10B	18	BK	TXL	3686945C1	3605713C1	7151	9	N/A		

Circuit Number	Gauge	Color	Insulation	Terminal / Splice Number	Connector Part number	Connector Number	Cavity	Seal/Sleeve	Lock 1	Lock 2
PH14B	18	RD	TXL	3686945C1	3605713C1	7151	10	N/A		
PH92#111	18	OR	TXL	3686945C1	3605713C1	7151	11	N/A		
PH92#114	18	GY	TXL	3686945C1	3605713C1	7151	14	N/A		
PH92#117	18	LTBL	TXL	3686945C1	3605713C1	7151	17	N/A		
PH92#120	18	LTBL	TXL	3686945C1	3605713C1	7151	20	N/A		
PG92#123	18	LTGN	TXL	3686945C1	3605713C1	7151	23	N/A		
PB5#127	18	GN	TXL	3686945C1	3605713C1	7151	27	N/A		
PH92A131	18	YL	TXL	3686945C1	3605713C1	7151	31	N/A		
PH92#133	18	YL	TXL	3686945C1	3605713C1	7151	33	N/A		
PH92#134	18	WH	TXL	3686945C1	3605713C1	7151	34	N/A		
PH92#136	18	OR	TXL	3686945C1	3605713C1	7151	36	N/A		
PH92A137	18	WH	TXL	3686945C1	3605713C1	7151	37	N/A	1661263C1	
PH92#138	18	OR	TXL	3686945C1	3605713C1	7151	38	N/A		
PH92#139	18	OR	TXL	3686945C1	3605713C1	7151	39	N/A		
PH92#140	18	LTGN	TXL	3686945C1	3605713C1	7151	40	N/A		
PH92A141	18	TN	TXL	3686945C1	3605713C1	7151	41	N/A		
PH92#142	18	WH	TXL	3686945C1	3605713C1	7151	42	N/A		
PK92#143	18	LTBL	TXL	3686945C1	3605713C1	7151	43	N/A		
PG92#145	18	OR	TXL	3686945C1	3605713C1	7151	45	N/A		
PK92#150	18	PK	TXL	3686945C1	3605713C1	7151	50	N/A	2039342C1	
PH92#151	18	WH	TXL	3686945C1	3605713C1	7151	51	N/A		
PH92#152	18	LTGN	TXL	3686945C1	3605713C1	7151	52	N/A		
PH92#153	18	YL	TXL	3686945C1	3605713C1	7151	53	N/A		
PH92#154	18	TN	TXL	3686945C1	3605713C1	7151	54	N/A		
PH92#155	18	WH	TXL	3686945C1	3605713C1	7151	55	N/A		
PH92#157	18	WH	TXL	3686945C1	3605713C1	7151	57	N/A		
PH92#158	18	LTGN	TXL	3686945C1	3605713C1	7151	58	N/A		
PH92#159	18	TN	TXL	3686945C1	3605713C1	7151	59	N/A		
PH92#160	18	YL	TXL	3686945C1	3605713C1	7151	60	N/A		
PH92#161	18	TN	TXL	3686945C1	3605713C1	7151	61	N/A		
PH92#163	18	YL	TXL	3686945C1	3605713C1	7151	63	N/A		
PH92#165	18	TN	TXL	3686945C1	3605713C1	7151	65	N/A		
KE10C	18	BK	TXL	3686945C1	3605713C1	7151	69	N/A		
PH14C	18	RD	TXL	3686945C1	3605713C1	7151	70	N/A		
PH92#171	18	YL	TXL	3686945C1	3605713C1	7151	71	N/A		
PH92#173	18	LTBL	TXL	3686945C1	3605713C1	7151	73	N/A		
PH92#174	18	LTBL	TXL	3686945C1	3605713C1	7151	74	N/A		
PH92#176	18	YL	TXL	3686945C1	3605713C1	7151	76	N/A		
PH92#177	18	LTBL	TXL	3686945C1	3605713C1	7151	77	N/A		
PH92#178	18	WH	TXL	3686945C1	3605713C1	7151	78	N/A		
PH92#179	18	PK	TXL	3686945C1	3605713C1	7151	79	N/A		
PH92#180	18	OR	TXL	3686945C1	3605713C1	7151	80	N/A	1661263C1	
JT1A	16	TN	GXL	3613770C1	3626435C1	7200	1	N/A		
PR92A175	18	OR	GXL	2036586C1	3524377C1	7211	A	N/A	3768011C1	
SR92A175	18	OR	GXL	2036586C1	3524377C1	7211	A	N/A		
PR92A175	18	OR	GXL	2036586C1	3524377C1	7211	A	N/A		
SR92A175	18	OR	GXL	2036586C1	3524377C1	7211	A	N/A		
PR92C158	18	LTGN	GXL	2036586C1	3524377C1	7211	B	N/A		
SR92C158	18	LTGN	GXL	2036586C1	3524377C1	7211	B	N/A		
PR92C158	18	LTGN	GXL	2036586C1	3524377C1	7211	B	N/A		
SR92C158	18	LTGN	GXL	2036586C1	3524377C1	7211	B	N/A		
PR92#119	18	LTBL	TXL	3554322C1	3868823C1	7212	A	3554318C1		
SR92#119	18	LTBL	TXL	3554322C1	3868823C1	7212	A	3554318C1		
PR92#119	18	LTBL	TXL	3554322C1	3868823C1	7212	A	3554318C1		

Circuit Number	Gauge	Color	Insulation	Terminal / Splice Number	Connector Part number	Connector Number	Cavity	Seal/Sleeve	Lock 1	Lock 2
SR92#119	18	LTBL	TXL	3554322C1	3868823C1	7212	A	3554318C1		
PR92C131	18	YL	TXL	3554322C1	3868823C1	7212	B	3554318C1	2037987C1	
SR92C131	18	YL	TXL	3554322C1	3868823C1	7212	B	3554318C1		
PR92C131	18	YL	TXL	3554322C1	3868823C1	7212	B	3554318C1		
SR92C131	18	YL	TXL	3554322C1	3868823C1	7212	B	3554318C1		
PR92#115	18	WH	TXL	3554322C1	3868820C1	7213	A	3554318C1	3539784C1	
SR92#115	18	WH	TXL	3554322C1	3868820C1	7213	A	3554318C1		
PR92#115	18	WH	TXL	3554322C1	3868820C1	7213	A	3554318C1		
SR92#115	18	WH	TXL	3554322C1	3868820C1	7213	A	3554318C1		
PR92D131	18	YL	TXL	3554322C1	3868820C1	7213	B	3554318C1	3756423C1	
SR92D131	18	YL	TXL	3554322C1	3868820C1	7213	B	3554318C1		
PR92D131	18	YL	TXL	3554322C1	3868820C1	7213	B	3554318C1		
SR92D131	18	YL	TXL	3554322C1	3868820C1	7213	B	3554318C1		
RCTEM1	16	GY	TXL	1651969C1	3601924C1	7220	1	N/A		
RCTEM1	16	GY	TXL	1651969C1	3601924C1	7220	1	N/A		
RCTEM2	16	GY	TXL	1651969C1	3601924C1	7220	2	N/A		
RCTEM2	16	GY	TXL	1651969C1	3601924C1	7220	2	N/A		
RCTEM3	16	GY	TXL	1651969C1	3601924C1	7220	3	N/A		
RCTEM3	16	GY	TXL	1651969C1	3601924C1	7220	3	N/A		
RCTEM4	16	GY	TXL	1651969C1	3601924C1	7220	4	N/A		
RCTEM4	16	GY	TXL	1651969C1	3601924C1	7220	4	N/A		
RCTEM5	16	GY	TXL	1651969C1	3601924C1	7220	5	N/A		
RCTEM5	16	GY	TXL	1651969C1	3601924C1	7220	5	N/A		
RCTEM6	16	GY	TXL	1651969C1	3601924C1	7220	6	N/A		
RCTEM6	16	GY	TXL	1651969C1	3601924C1	7220	6	N/A		
RCTEM7	16	GY	TXL	1651969C1	3601924C1	7220	7	N/A		
RCTEM7	16	GY	TXL	1651969C1	3601924C1	7220	7	N/A		
RCTEM8	16	GY	TXL	1651969C1	3601924C1	7220	8	N/A		
RCTEM8	16	GY	TXL	1651969C1	3601924C1	7220	8	N/A		
SE103M	12	LTGN	GXL	N/A	BLUNT_SL_V	7230	A	N/A		
SE103M	12	LTGN	GXL	N/A	BLUNT_SL_V	7230	A	N/A		
SE103N	12	LTGN	GXL	N/A	BLUNT_SL_V	7230	B	N/A		
SE103N	12	LTGN	GXL	N/A	BLUNT_SL_V	7230	B	N/A		
SE103P	12	LTGN	GXL	N/A	BLUNT_SL_V	7230	C	N/A		
SE103P	12	LTGN	GXL	N/A	BLUNT_SL_V	7230	C	N/A		
PH92#152	18	LTGN	TXL	3686945C1	3605714C1	7350	1	N/A		
PV92#152	18	LTGN	TXL	3686945C1	3605714C1	7350	1	N/A		
PH92#133	18	YL	TXL	3686945C1	3605714C1	7350	2	N/A		
PV92#133	18	YL	TXL	3686945C1	3605714C1	7350	2	N/A		
PH92#151	18	WH	TXL	3686945C1	3605714C1	7350	3	N/A		
PV92#151	18	WH	TXL	3686945C1	3605714C1	7350	3	N/A		
PH92#117	18	LTBL	TXL	3686945C1	3605714C1	7350	4	N/A		
PV92#117	18	LTBL	TXL	3686945C1	3605714C1	7350	4	N/A		
PH92#157	18	WH	TXL	3686945C1	3605714C1	7350	6	N/A		
PV92#157	18	WH	TXL	3686945C1	3605714C1	7350	6	N/A		
PH92#179	18	PK	TXL	3686945C1	3605714C1	7350	7	N/A		
PV92#179	18	PK	TXL	3686945C1	3605714C1	7350	7	N/A		
PH92#154	18	TN	TXL	3686945C1	3605714C1	7350	8	N/A		
PV92#154	18	TN	TXL	3686945C1	3605714C1	7350	8	N/A		
PH92#158	18	LTGN	TXL	3686945C1	3605714C1	7350	9	N/A		
PV92#158	18	LTGN	TXL	3686945C1	3605714C1	7350	9	N/A		
PH92#178	18	WH	TXL	3686945C1	3605714C1	7350	10	N/A		
PV92#178	18	WH	TXL	3686945C1	3605714C1	7350	10	N/A		
PH92#177	18	LTBL	TXL	3686945C1	3605714C1	7350	11	N/A		

Circuit Number	Gauge	Color	Insulation	Terminal / Splice Number	Connector Part number	Connector Number	Cavity	Seal/Sleeve	Lock 1	Lock 2
PV92#177	18	LTBL	TXL	3686945C1	3605714C1	7350	11	N/A		
PH92A137	18	WH	TXL	3686945C1	3605714C1	7350	12	N/A	1661890C1	
PX92A137	18	WH	TXL	3686945C1	3605714C1	7350	12	N/A		
PH92A131	18	YL	TXL	3686945C1	3605714C1	7350	13	N/A	1661376C1	
PX92A131	18	YL	TXL	3686945C1	3605714C1	7350	13	N/A		
PH92#111	18	OR	TXL	3686945C1	3605714C1	7350	14	N/A		
PV92#111	18	OR	TXL	3686945C1	3605714C1	7350	14	N/A		
PH92#155	18	WH	TXL	3686945C1	3605714C1	7350	15	N/A		
PV92#155	18	WH	TXL	3686945C1	3605714C1	7350	15	N/A		
PH92#171	18	YL	TXL	3686945C1	3605714C1	7350	16	N/A		
PV92#171	18	YL	TXL	3686945C1	3605714C1	7350	16	N/A		
PH92#136	18	OR	TXL	3686945C1	3605714C1	7350	17	N/A		
PV92#136	18	OR	TXL	3686945C1	3605714C1	7350	17	N/A		
PH92#138	18	OR	TXL	3686945C1	3605714C1	7350	18	N/A		
PV92#138	18	OR	TXL	3686945C1	3605714C1	7350	18	N/A		
PH92#174	18	LTBL	TXL	3686945C1	3605714C1	7350	19	N/A		
PV92#174	18	LTBL	TXL	3686945C1	3605714C1	7350	19	N/A		
PH92#114	18	GY	TXL	3686945C1	3605714C1	7350	20	N/A		
PV92#114	18	GY	TXL	3686945C1	3605714C1	7350	20	N/A		
PH92#153	18	YL	TXL	3686945C1	3605714C1	7350	21	N/A		
PV92#153	18	YL	TXL	3686945C1	3605714C1	7350	21	N/A		
PH92#173	18	LTBL	TXL	3686945C1	3605714C1	7350	22	N/A		
PV92#173	18	LTBL	TXL	3686945C1	3605714C1	7350	22	N/A		
PH92#134	18	WH	TXL	3686945C1	3605714C1	7350	23	N/A		
PV92#134	18	WH	TXL	3686945C1	3605714C1	7350	23	N/A		
PH92#176	18	YL	TXL	3686945C1	3605714C1	7350	24	N/A		
PV92#176	18	YL	TXL	3686945C1	3605714C1	7350	24	N/A		
PN92#101	18	LTBL	TXL	3686945C1	3605713C1	7500	1	N/A		
PR92#101	18	LTBL	TXL	3686945C1	3605713C1	7500	1	N/A	3573833C1	
PN92#101	18	LTBL	TXL	3686945C1	3605713C1	7500	1	N/A		
PR92#101	18	LTBL	TXL	3686945C1	3605713C1	7500	1	N/A		
PN92#103	18	YL	TXL	3686945C1	3605713C1	7500	3	N/A		
PR92#103	18	YL	TXL	3686945C1	3605713C1	7500	3	N/A	3601839C1	
PN92#103	18	YL	TXL	3686945C1	3605713C1	7500	3	N/A		
PR92#103	18	YL	TXL	3686945C1	3605713C1	7500	3	N/A		
PM92#105	18	OR	TXL	3686945C1	3605713C1	7500	5	N/A	3534158C1	
PM92#105	18	OR	TXL	3686945C1	3605713C1	7500	5	N/A		
PC5#106	18	YL	TXL	3686945C1	3605713C1	7500	6	N/A		
PC5#106	18	YL	TXL	3686945C1	3605713C1	7500	6	N/A		
LA92#109	18	WH	TXL	3686945C1	3605713C1	7500	9	N/A		
PM92#109	18	WH	TXL	3686945C1	3605713C1	7500	9	N/A		
PM92#110	18	RD	TXL	3686945C1	3605713C1	7500	10	N/A		
PM92#110	18	RD	TXL	3686945C1	3605713C1	7500	10	N/A		
PW92#111	18	OR	150	3686945C1	3605713C1	7500	11	N/A		
PW92#111	18	OR	150	3686945C1	3605713C1	7500	11	N/A		
PR92A112	18	PK	TXL	3686945C1	3605713C1	7500	12	N/A		
PT92A112	18	PK	150	3686945C1	3605713C1	7500	12	N/A		
PR92A112	18	PK	TXL	3686945C1	3605713C1	7500	12	N/A		
PT92A112	18	PK	150	3686945C1	3605713C1	7500	12	N/A		
PR92#115	18	WH	TXL	3686945C1	3605713C1	7500	15	N/A		
PR92#115	18	WH	TXL	3686945C1	3605713C1	7500	15	N/A		
PW92#116	18	LTBL	150	3686945C1	3605713C1	7500	16	N/A		
PW92#116	18	LTBL	150	3686945C1	3605713C1	7500	16	N/A		
RL92#117	18	LTBL	TXL	3686945C1	3605713C1	7500	17	N/A		

Circuit Number	Gauge	Color	Insulation	Terminal / Splice Number	Connector Part number	Connector Number	Cavity	Seal/Sleeve	Lock 1	Lock 2
RM92A117	18	LTBL	TXL	3686945C1	3605713C1	7500	17	N/A		
RN92#117	18	LTBL	TXL	3686945C1	3605713C1	7500	17	N/A		
RL92#117	18	LTBL	TXL	3686945C1	3605713C1	7500	17	N/A		
RM92A117	18	LTBL	TXL	3686945C1	3605713C1	7500	17	N/A		
RN92#117	18	LTBL	TXL	3686945C1	3605713C1	7500	17	N/A		
PW92#118	18	GY	150	3686945C1	3605713C1	7500	18	N/A		
PW92#118	18	GY	150	3686945C1	3605713C1	7500	18	N/A		
PR92#119	18	LTBL	TXL	3686945C1	3605713C1	7500	19	N/A		
PR92#119	18	LTBL	TXL	3686945C1	3605713C1	7500	19	N/A		
PW92A120	18	LTBL	150	3686945C1	3605713C1	7500	20	N/A		
PB92A120	18	LTBL	150	3686945C1	3605713C1	7500	20	N/A		
PE92#120	18	DKBL	TXL	3686945C1	3605713C1	7500	20	N/A		
PM92#122	18	YL	TXL	3686945C1	3605713C1	7500	22	N/A	3540758C1	
PM92#122	18	YL	TXL	3686945C1	3605713C1	7500	22	N/A		
PM92#123	18	LTGN	TXL	3686945C1	3605713C1	7500	23	N/A		
PM92#123	18	LTGN	TXL	3686945C1	3605713C1	7500	23	N/A		
PR92#124	18	WH	TXL	3686945C1	3605713C1	7500	24	N/A		
PR92#124	18	WH	TXL	3686945C1	3605713C1	7500	24	N/A		
KH47#125	18	GY	TXL	3686945C1	3605713C1	7500	25	N/A		
PW47#125	18	GY	TXL	3686945C1	3605713C1	7500	25	N/A		
PC5#127	18	GN	TXL	3686945C1	3605713C1	7500	27	N/A		
PC5#127	18	GN	TXL	3686945C1	3605713C1	7500	27	N/A		
PM92#130	18	YL	TXL	3686945C1	3605713C1	7500	30	N/A		
PM92#130	18	YL	TXL	3686945C1	3605713C1	7500	30	N/A		
PR92A131	18	YL	TXL	3686945C1	3605713C1	7500	31	N/A		
PT92#131	18	YL	150	3686945C1	3605713C1	7500	31	N/A		
PR92A131	18	YL	TXL	3686945C1	3605713C1	7500	31	N/A		
PT92#131	18	YL	150	3686945C1	3605713C1	7500	31	N/A		
PW92#133	18	YL	150	3686945C1	3605713C1	7500	33	N/A		
PW92#133	18	YL	150	3686945C1	3605713C1	7500	33	N/A		
PM92#134	18	YL	TXL	3686945C1	3605713C1	7500	34	N/A	3553460C1	
PM92#134	18	YL	TXL	3686945C1	3605713C1	7500	34	N/A		
PW92#136	18	OR	150	3686945C1	3605713C1	7500	36	N/A		
PW92#136	18	OR	150	3686945C1	3605713C1	7500	36	N/A		
PW92#137	18	WH	150	3686945C1	3605713C1	7500	37	N/A		
PW92#137	18	WH	150	3686945C1	3605713C1	7500	37	N/A		
PW48#139	18	OR	150	3686945C1	3605713C1	7500	39	N/A		
PB48#139	18	OR	150	3686945C1	3605713C1	7500	39	N/A		
PD48#139	18	OR	TXL	3686945C1	3605713C1	7500	39	N/A		
PW47#140	18	LTGN	TXL	3686945C1	3605713C1	7500	40	N/A		
PW47#140	18	LTGN	TXL	3686945C1	3605713C1	7500	40	N/A		
PY92A141	18	TN	TXL	3686945C1	3605713C1	7500	41	N/A		
RL92A141	18	TN	TXL	3686945C1	3605713C1	7500	41	N/A		
PY92A141	18	TN	TXL	3686945C1	3605713C1	7500	41	N/A		
RL92A141	18	TN	TXL	3686945C1	3605713C1	7500	41	N/A		
RL92#142	18	WH	TXL	3686945C1	3605713C1	7500	42	N/A		
RM92A142	18	WH	TXL	3686945C1	3605713C1	7500	42	N/A		
RL92#142	18	WH	TXL	3686945C1	3605713C1	7500	42	N/A		
RM92A142	18	WH	TXL	3686945C1	3605713C1	7500	42	N/A		
PM92#143	18	LTBL	TXL	3686945C1	3605713C1	7500	43	N/A	3554820C1	
PM92#143	18	LTBL	TXL	3686945C1	3605713C1	7500	43	N/A		
PY92#145	18	OR	TXL	3686945C1	3605713C1	7500	45	N/A		
RL92#145	18	OR	TXL	3686945C1	3605713C1	7500	45	N/A		
PY92#145	18	OR	TXL	3686945C1	3605713C1	7500	45	N/A		

Circuit Number	Gauge	Color	Insulation	Terminal / Splice Number	Connector Part number	Connector Number	Cavity	Seal/Sleeve	Lock 1	Lock 2
RL92#145	18	OR	TXL	3686945C1	3605713C1	7500	45	N/A		
PW92#151	18	WH	150	3686945C1	3605713C1	7500	51	N/A		
PW92#151	18	WH	150	3686945C1	3605713C1	7500	51	N/A		
PW92#152	18	LTGN	150	3686945C1	3605713C1	7500	52	N/A		
PW92#152	18	LTGN	150	3686945C1	3605713C1	7500	52	N/A		
PW31#154	18	TN	150	3686945C1	3605713C1	7500	54	N/A		
PW31#154	18	TN	150	3686945C1	3605713C1	7500	54	N/A		
PW92#155	18	WH	150	3686945C1	3605713C1	7500	55	N/A		
PW92#155	18	WH	150	3686945C1	3605713C1	7500	55	N/A		
PR92#156	18	PK	TXL	3686945C1	3605713C1	7500	56	N/A		
PR92A158	18	LTGN	TXL	3686945C1	3605713C1	7500	58	N/A		
PT92#158	18	LTGN	150	3686945C1	3605713C1	7500	58	N/A		
PR92A158	18	LTGN	TXL	3686945C1	3605713C1	7500	58	N/A		
PT92#158	18	LTGN	150	3686945C1	3605713C1	7500	58	N/A		
PW48#159	18	TN	150	3686945C1	3605713C1	7500	59	N/A		
PB48#159	18	TN	150	3686945C1	3605713C1	7500	59	N/A		
PD48#159	18	TN	TXL	3686945C1	3605713C1	7500	59	N/A		
PW47#160	18	YL	TXL	3686945C1	3605713C1	7500	60	N/A		
PW47#160	18	YL	TXL	3686945C1	3605713C1	7500	60	N/A		
PR92#161	18	OR	TXL	3686945C1	3605713C1	7500	61	N/A		
PM92#162	18	YL	TXL	3686945C1	3605713C1	7500	62	N/A	3562309C1	
PM92#162	18	YL	TXL	3686945C1	3605713C1	7500	62	N/A		
PM92#163	18	YL	TXL	3686945C1	3605713C1	7500	63	N/A	3553460C1	
PM92#163	18	YL	TXL	3686945C1	3605713C1	7500	63	N/A		
PM92#164	18	LTBL	TXL	3686945C1	3605713C1	7500	64	N/A	3598918C1	3598919C1
PM92#164	18	LTBL	TXL	3686945C1	3605713C1	7500	64	N/A		
PM92#165	18	TN	TXL	3686945C1	3605713C1	7500	65	N/A		
PM92#165	18	TN	TXL	3686945C1	3605713C1	7500	65	N/A		
LA92#169	18	WH	TXL	3686945C1	3605713C1	7500	69	N/A		
PM92#169	18	WH	TXL	3686945C1	3605713C1	7500	69	N/A		
PM92#170	18	RD	TXL	3686945C1	3605713C1	7500	70	N/A	3562309C1	
PM92#170	18	RD	TXL	3686945C1	3605713C1	7500	70	N/A		
PW92#171	18	YL	150	3686945C1	3605713C1	7500	71	N/A		
PW92#171	18	YL	150	3686945C1	3605713C1	7500	71	N/A		
PW92#174	18	LTBL	150	3686945C1	3605713C1	7500	74	N/A		
PW92#174	18	LTBL	150	3686945C1	3605713C1	7500	74	N/A		
PR92#175	18	OR	TXL	3686945C1	3605713C1	7500	75	N/A		
PR92#175	18	OR	TXL	3686945C1	3605713C1	7500	75	N/A		
PW92#176	18	YL	150	3686945C1	3605713C1	7500	76	N/A		
PW92#176	18	YL	150	3686945C1	3605713C1	7500	76	N/A		
PW92#177	18	LTGN	150	3686945C1	3605713C1	7500	77	N/A		
PW92#177	18	LTGN	150	3686945C1	3605713C1	7500	77	N/A		
PW92#180	18	OR	150	3686945C1	3605713C1	7500	80	N/A		
PB92#180	18	OR	150	3686945C1	3605713C1	7500	80	N/A		
PE92#180	18	OR	TXL	3686945C1	3605713C1	7500	80	N/A		
KH10-G	10	WH	TXL	3841700C1	3577412C1	7501	1	N/A		
KH14SA	10	RD	TXL	3841700C1	3577412C1	7501	2	N/A		
KM47C	20	GY	TXL	3756267C1	3554317C1	7601	1	3756268C1		
KM47B	20	GY	TXL	3756267C1	3554317C1	7601	2	3756268C1		
KM47C	20	GY	TXL	3756267C1	3662425C1	7601	A	3756268C1		
KM47B	20	GY	TXL	3756267C1	3662425C1	7601	B	3756268C1		
PD48#159	18	TN	TXL	3554322C1	3610533C1	7603	A	3554318C1		
SL48#159	18	TN	TXL	3554322C1	3610533C1	7603	A	3554318C1		
PD48#139	18	OR	TXL	3554322C1	3610533C1	7603	B	3554318C1		

Circuit Number	Gauge	Color	Insulation	Terminal / Splice Number	Connector Part number	Connector Number	Cavity	Seal/Sleeve	Lock 1	Lock 2
SL48#139	18	OR	TXL	3554322C1	3610533C1	7603	B	3554318C1		
PE92#180	18	OR	TXL	3554322C1	3610533C1	7615	A	3554318C1		
SV92#180	18	OR	TXL	3554322C1	3610533C1	7615	A	3554318C1		
PE92#120	18	DKBL	TXL	3554322C1	3610533C1	7615	B	3554318C1		
SV92#120	18	LTBL	TXL	3554322C1	3610533C1	7615	B	3554318C1		
XN47TV	18	GY	GXL	3549254C1		7620	1	2644038R1		
XN47TS	16	GY	GXL	2206584C1	2206589C1	7621	1	3522194C1		
XN47T-G	18	GY	GXL	2206584C1	2206589C1	7621	2	3522193C1		
XN47TV	18	GY	GXL	2206584C1	2206589C1	7621	3	3522193C1		
BA47	20	GY	TXL	1661875C1	1661778C1	7703	A	3568570C1		
BA47	20	GY	TXL	1661875C1	1661778C1	7703	A	3568570C1		
BA47A	20	GY	TXL	1661875C1	1661778C1	7703	B	3568570C1		
BA47A	20	GY	TXL	1661875C1	1661778C1	7703	B	3568570C1		
TG41	16	TN	GXL	3626031C1	3518183C1	7750	1	N/A		
TG41-G	16	TN	GXL	3626031C1	3518183C1	7750	2	N/A		
TG41	16	TN	GXL	1661875C1	3522068C1	7751	A	1661872C1		
TG41-G	16	TN	GXL	1661875C1	3522068C1	7751	B	1661872C1		
MA88	14	LTGN	GXL	N/A	BLUNT_SL_V	7800	A	N/A		
MA88	14	LTGN	GXL	N/A	BLUNT_SL_V	7800	A	N/A		
YL112	16	GY	GXL	1661875C1	3522068C1	7803	A	1661872C1		
YH112-GD	16	WH	TXL	1661875C1	3522068C1	7803	B	1661872C1		
YJ112-GD	16	WH	GXL	1661875C1	3522068C1	7803	B	1661872C1		
YK112-GD	16	WH	TXL	1661875C1	3522068C1	7803	B	1661872C1		
UN92YD	16	TN	TXL	1661875C1	3540756C1	7900	A	N/A		
UN92D	18	TN	TXL	1661875C1	3540756C1	7900	B	N/A		
UN62A	18	DKBL	TXL	1661875C1	3540756C1	7900	C	N/A		
UN92-GAH	18	WH	TXL	1661875C1	3540756C1	7900	D	N/A		
MA52D	14	YL	GXL	2033816C1	1661375C2	8000	A	589391C1		
MB52D	14	YL	GXL	2033816C1	1661375C2	8000	A	589391C1		
MC52D	14	YL	GXL	2033816C1	1661375C2	8000	A	589391C1		
MN52D	14	YL	GXL	2033816C1	1661375C2	8000	A	589391C1		
MW52D	14	YL	GXL	2033816C1	1661375C2	8000	A	589391C1		
RB52D	14	YL	GXL	2033816C1	1661375C2	8000	A	589391C1		
MA52D	14	YL	GXL	2033816C1	1661375C2	8000	A	589391C1		
MB52D	14	YL	GXL	2033816C1	1661375C2	8000	A	589391C1		
MC52D	14	YL	GXL	2033816C1	1661375C2	8000	A	589391C1		
MN52D	14	YL	GXL	2033816C1	1661375C2	8000	A	589391C1		
MW52D	14	YL	GXL	2033816C1	1661375C2	8000	A	589391C1		
RB52D	14	YL	GXL	2033816C1	1661375C2	8000	A	589391C1		
TC11-GA	14	WH	GXL	2033816C1	1661375C2	8000	B	589391C1		
TD11-GA	14	WH	GXL	2033816C1	1661375C2	8000	B	589391C1		
TC11-GA	14	WH	GXL	2033816C1	1661375C2	8000	B	589391C1		
TD11-GA	14	WH	GXL	2033816C1	1661375C2	8000	B	589391C1		
MA53B	14	YL	GXL	2033816C1	1661375C2	8000	C	589391C1		
MB53B	14	YL	GXL	2033816C1	1661375C2	8000	C	589391C1		
MC53B	14	YL	GXL	2033816C1	1661375C2	8000	C	589391C1		
MN53B	14	YL	GXL	2033816C1	1661375C2	8000	C	589391C1		
MW53B	14	YL	GXL	2033816C1	1661375C2	8000	C	589391C1		
RB53B	14	YL	GXL	2033816C1	1661375C2	8000	C	589391C1		
MA53B	14	YL	GXL	2033816C1	1661375C2	8000	C	589391C1		
MB53B	14	YL	GXL	2033816C1	1661375C2	8000	C	589391C1		
MC53B	14	YL	GXL	2033816C1	1661375C2	8000	C	589391C1		
MN53B	14	YL	GXL	2033816C1	1661375C2	8000	C	589391C1		
MW53B	14	YL	GXL	2033816C1	1661375C2	8000	C	589391C1		

Circuit Number	Gauge	Color	Insulation	Terminal / Splice Number	Connector Part number	Connector Number	Cavity	Seal/Sleeve	Lock 1	Lock 2
RB53B	14	YL	GXL	2033816C1	1661375C2	8000	C	589391C1		
MA57B	16	OR	TXL	2033819C1	1661375C2	8000	D	1652325C1		
MB57B	16	OR	TXL	2033819C1	1661375C2	8000	D	1652325C1		
MC57C	16	OR	GXL	2033819C1	1661375C2	8000	D	1652325C1		
MN57C	16	OR	GXL	2033819C1	1661375C2	8000	D	1652325C1		
MW57C	16	OR	GXL	2033819C1	1661375C2	8000	D	1652325C1		
RB57C	16	OR	GXL	2033819C1	1661375C2	8000	D	1652325C1		
MA57B	16	OR	TXL	2033819C1	1661375C2	8000	D	1652325C1		
MB57B	16	OR	TXL	2033819C1	1661375C2	8000	D	1652325C1		
MC57C	16	OR	GXL	2033819C1	1661375C2	8000	D	1652325C1		
MN57C	16	OR	GXL	2033819C1	1661375C2	8000	D	1652325C1		
MW57C	16	OR	GXL	2033819C1	1661375C2	8000	D	1652325C1		
RB57C	16	OR	GXL	2033819C1	1661375C2	8000	D	1652325C1		
MA54D	14	BN	GXL	2033816C1	1661375C2	8000	E	589391C1		
MB54D	14	BN	GXL	2033816C1	1661375C2	8000	E	589391C1		
MC54D	14	BN	GXL	2033816C1	1661375C2	8000	E	589391C1		
MN54D	14	BN	GXL	2033816C1	1661375C2	8000	E	589391C1		
MW54D	14	BN	GXL	2033816C1	1661375C2	8000	E	589391C1		
RB54D	14	BN	GXL	2033816C1	1661375C2	8000	E	589391C1		
MA54D	14	BN	GXL	2033816C1	1661375C2	8000	E	589391C1		
MB54D	14	BN	GXL	2033816C1	1661375C2	8000	E	589391C1		
MC54D	14	BN	GXL	2033816C1	1661375C2	8000	E	589391C1		
MN54D	14	BN	GXL	2033816C1	1661375C2	8000	E	589391C1		
MW54D	14	BN	GXL	2033816C1	1661375C2	8000	E	589391C1		
RB54D	14	BN	GXL	2033816C1	1661375C2	8000	E	589391C1		
MA52	14	YL	GXL	2033816C1	1661375C2	8001	A	589391C1		
MB52	14	YL	GXL	2033816C1	1661375C2	8001	A	589391C1		
MC52	14	YL	GXL	2033816C1	1661375C2	8001	A	589391C1		
MN52	14	YL	GXL	2033816C1	1661375C2	8001	A	589391C1		
MW52	14	YL	GXL	2033816C1	1661375C2	8001	A	589391C1		
RB52	14	YL	GXL	2033816C1	1661375C2	8001	A	589391C1		
MA52	14	YL	GXL	2033816C1	1661375C2	8001	A	589391C1		
MB52	14	YL	GXL	2033816C1	1661375C2	8001	A	589391C1		
MC52	14	YL	GXL	2033816C1	1661375C2	8001	A	589391C1		
MN52	14	YL	GXL	2033816C1	1661375C2	8001	A	589391C1		
MW52	14	YL	GXL	2033816C1	1661375C2	8001	A	589391C1		
RB52	14	YL	GXL	2033816C1	1661375C2	8001	A	589391C1		
TC11-GB	14	WH	GXL	2033816C1	1661375C2	8001	B	589391C1		
TD11-GB	14	WH	GXL	2033816C1	1661375C2	8001	B	589391C1		
TC11-GB	14	WH	GXL	2033816C1	1661375C2	8001	B	589391C1		
TD11-GB	14	WH	GXL	2033816C1	1661375C2	8001	B	589391C1		
MA53	14	YL	GXL	2033816C1	1661375C2	8001	C	589391C1		
MB53	14	YL	GXL	2033816C1	1661375C2	8001	C	589391C1		
MC53	14	YL	GXL	2033816C1	1661375C2	8001	C	589391C1		
MN53	14	YL	GXL	2033816C1	1661375C2	8001	C	589391C1		
MW53	14	YL	GXL	2033816C1	1661375C2	8001	C	589391C1		
RB53	14	YL	GXL	2033816C1	1661375C2	8001	C	589391C1		
MA53	14	YL	GXL	2033816C1	1661375C2	8001	C	589391C1		
MB53	14	YL	GXL	2033816C1	1661375C2	8001	C	589391C1		
MC53	14	YL	GXL	2033816C1	1661375C2	8001	C	589391C1		
MN53	14	YL	GXL	2033816C1	1661375C2	8001	C	589391C1		
MW53	14	YL	GXL	2033816C1	1661375C2	8001	C	589391C1		
RB53	14	YL	GXL	2033816C1	1661375C2	8001	C	589391C1		
MA56B	16	OR	TXL	2033819C1	1661375C2	8001	D	1652325C1		

Circuit Number	Gauge	Color	Insulation	Terminal / Splice Number	Connector Part number	Connector Number	Cavity	Seal/Sleeve	Lock 1	Lock 2
MB56B	16	OR	TXL	2033819C1	1661375C2	8001	D	1652325C1		
MC56C	16	OR	GXL	2033819C1	1661375C2	8001	D	1652325C1		
MN56C	16	OR	GXL	2033819C1	1661375C2	8001	D	1652325C1		
MW56C	16	OR	GXL	2033819C1	1661375C2	8001	D	1652325C1		
RB56C	16	OR	GXL	2033819C1	1661375C2	8001	D	1652325C1		
MA56B	16	OR	TXL	2033819C1	1661375C2	8001	D	1652325C1		
MB56B	16	OR	TXL	2033819C1	1661375C2	8001	D	1652325C1		
MC56C	16	OR	GXL	2033819C1	1661375C2	8001	D	1652325C1		
MN56C	16	OR	GXL	2033819C1	1661375C2	8001	D	1652325C1		
MW56C	16	OR	GXL	2033819C1	1661375C2	8001	D	1652325C1		
RB56C	16	OR	GXL	2033819C1	1661375C2	8001	D	1652325C1		
MA54C	14	BN	GXL	2033816C1	1661375C2	8001	E	589391C1		
MB54C	14	BN	GXL	2033816C1	1661375C2	8001	E	589391C1		
MC54C	14	BN	GXL	2033816C1	1661375C2	8001	E	589391C1		
MN54C	14	BN	GXL	2033816C1	1661375C2	8001	E	589391C1		
MW54C	14	BN	GXL	2033816C1	1661375C2	8001	E	589391C1		
RB54C	14	BN	GXL	2033816C1	1661375C2	8001	E	589391C1		
MA54C	14	BN	GXL	2033816C1	1661375C2	8001	E	589391C1		
MB54C	14	BN	GXL	2033816C1	1661375C2	8001	E	589391C1		
MC54C	14	BN	GXL	2033816C1	1661375C2	8001	E	589391C1		
MN54C	14	BN	GXL	2033816C1	1661375C2	8001	E	589391C1		
MW54C	14	BN	GXL	2033816C1	1661375C2	8001	E	589391C1		
RB54C	14	BN	GXL	2033816C1	1661375C2	8001	E	589391C1		
MC64HI	14	YL	GXL	3535486C1	2039311C91	8102	A	589391C1		
MN64HI	14	YL	GXL	3535486C1	2039311C91	8102	A	589391C1		
MC64HI	14	YL	GXL	3535486C1	2039311C91	8102	A	589391C1		
MN64HI	14	YL	GXL	3535486C1	2039311C91	8102	A	589391C1		
MC11-GE	14	WH	GXL	3535486C1	2039311C91	8102	B	589391C1		
MN11-GE	14	WH	GXL	3535486C1	2039311C91	8102	B	589391C1		
MC11-GE	14	WH	GXL	3535486C1	2039311C91	8102	B	589391C1		
MN11-GE	14	WH	GXL	3535486C1	2039311C91	8102	B	589391C1		
MC64LO	14	YL	GXL	3535486C1	2039311C91	8102	C	589391C1		
MN64LO	14	YL	GXL	3535486C1	2039311C91	8102	C	589391C1		
MC64LO	14	YL	GXL	3535486C1	2039311C91	8102	C	589391C1		
MN64LO	14	YL	GXL	3535486C1	2039311C91	8102	C	589391C1		
MC56D	16	OR	GXL	2039343C1	2039311C91	8102	D	1652325C1		
MN56D	16	OR	GXL	2039343C1	2039311C91	8102	D	1652325C1		
MC56D	16	OR	GXL	2039343C1	2039311C91	8102	D	1652325C1		
MN56D	16	OR	GXL	2039343C1	2039311C91	8102	D	1652325C1		
MC54F	14	BN	GXL	3535486C1	2039311C91	8102	E	589391C1		
MN54F	14	BN	GXL	3535486C1	2039311C91	8102	E	589391C1		
MC54F	14	BN	GXL	3535486C1	2039311C91	8102	E	589391C1		
MN54F	14	BN	GXL	3535486C1	2039311C91	8102	E	589391C1		
MC57D	16	OR	GXL	2039343C1	2039311C91	8102	F	1652325C1		
MN57D	16	OR	GXL	2039343C1	2039311C91	8102	F	1652325C1		
MC57D	16	OR	GXL	2039343C1	2039311C91	8102	F	1652325C1		
MN57D	16	OR	GXL	2039343C1	2039311C91	8102	F	1652325C1		
MW64HI	14	YL	GXL	3535486C1	2039311C91	8103	A	589391C1		
RB64HI	14	YL	GXL	3535486C1	2039311C91	8103	A	589391C1		
MW64HI	14	YL	GXL	3535486C1	2039311C91	8103	A	589391C1		
RB64HI	14	YL	GXL	3535486C1	2039311C91	8103	A	589391C1		
MW11-GE	14	WH	GXL	3535486C1	2039311C91	8103	B	589391C1		
RB11-GE	14	WH	GXL	3535486C1	2039311C91	8103	B	589391C1		
MW11-GE	14	WH	GXL	3535486C1	2039311C91	8103	B	589391C1		

Circuit Number	Gauge	Color	Insulation	Terminal / Splice Number	Connector Part number	Connector Number	Cavity	Seal/Sleeve	Lock 1	Lock 2
RB11-GE	14	WH	GXL	3535486C1	2039311C91	8103	B	589391C1		
MW64LO	14	YL	GXL	3535486C1	2039311C91	8103	C	589391C1		
RB64LO	14	YL	GXL	3535486C1	2039311C91	8103	C	589391C1		
MW64LO	14	YL	GXL	3535486C1	2039311C91	8103	C	589391C1		
RB64LO	14	YL	GXL	3535486C1	2039311C91	8103	C	589391C1		
MW56D	16	OR	GXL	2039343C1	2039311C91	8103	D	1652325C1		
RB56D	16	OR	GXL	2039343C1	2039311C91	8103	D	1652325C1		
MW56D	16	OR	GXL	2039343C1	2039311C91	8103	D	1652325C1		
RB56D	16	OR	GXL	2039343C1	2039311C91	8103	D	1652325C1		
MW54F	14	BN	GXL	3535486C1	2039311C91	8103	E	589391C1		
RB54F	14	BN	GXL	3535486C1	2039311C91	8103	E	589391C1		
MW54F	14	BN	GXL	3535486C1	2039311C91	8103	E	589391C1		
RB54F	14	BN	GXL	3535486C1	2039311C91	8103	E	589391C1		
MW57D	16	OR	GXL	2039343C1	2039311C91	8103	F	1652325C1		
RB57D	16	OR	GXL	2039343C1	2039311C91	8103	F	1652325C1		
MW57D	16	OR	GXL	2039343C1	2039311C91	8103	F	1652325C1		
RB57D	16	OR	GXL	2039343C1	2039311C91	8103	F	1652325C1		
MB54H	16	BN	GXL	1661875C1	1661778C1	8150	A	1661872C1		
MB54H	16	BN	GXL	1661875C1	1661778C1	8150	A	1661872C1		
MB54-GA	16	WH	GXL	1661875C1	1661778C1	8150	B	1661872C1		
MB54-GA	16	WH	GXL	1661875C1	1661778C1	8150	B	1661872C1		
MB54J	16	BN	GXL	1661875C1	1661778C1	8151	A	1661872C1		
MB54J	16	BN	GXL	1661875C1	1661778C1	8151	A	1661872C1		
MB54-GB	16	WH	GXL	1661875C1	1661778C1	8151	B	1661872C1		
MB54-GB	16	WH	GXL	1661875C1	1661778C1	8151	B	1661872C1		
MD64B	16	YL	GXL	587577C1	587567C91	8200	A	1652325C1		
MD64B	16	YL	TXL	587577C1	587567C91	8200	A	N/A		
MD64-GB	16	WH	GXL	587577C1	587567C91	8200	B	1652325C1		
MD64-GB	16	WH	TXL	587577C1	587567C91	8200	B	N/A		
MD64A	16	YL	GXL	587577C1	587567C91	8201	A	1652325C1		
MD64A	16	YL	TXL	587577C1	587567C91	8201	A	N/A		
MD64-GA	16	WH	TXL	587577C1	587567C91	8201	B	1652325C1		
MD64-GA	16	WH	TXL	587577C1	587567C91	8201	B	N/A		
MR85E	16	GY	GXL	1661875C1	1661778C1	8301	A	1661872C1		
MR85E	16	GY	GXL	1661875C1	1661778C1	8301	A	1661872C1		
MY85-GA	16	WH	GXL	1661875C1	1661778C1	8301	B	1661872C1		
MZ85-GA	16	WH	GXL	1661875C1	1661778C1	8301	B	1661872C1		
MY85-GA	16	WH	GXL	1661875C1	1661778C1	8301	B	1661872C1		
MZ85-GA	16	WH	GXL	1661875C1	1661778C1	8301	B	1661872C1		
VJ95MC	20	TN	TXL	3573077C1	6114576C1	8500	1	N/A		
VL95H	18	TN	TXL	3573077C1	6114576C1	8500	1	N/A		
VJ5A(+)	18	YL	193	3573077C1	6114576C1	8500	2	N/A		
VK5A(+)	18	YL	193	3573077C1	6114576C1	8500	2	N/A		
KA95TB	18	GY	TXL	3573077C1	6114576C1	8500	5	N/A		
KA95TB	18	GY	TXL	3573077C1	6114576C1	8500	5	N/A		
VJ13B	18	PK	TXL	3573077C1	6114576C1	8500	6	N/A		
VJ13AB	18	RD	TXL	3573077C1	6114576C1	8500	6	N/A		
VJ95AR2	18	TN	TXL	3573077C1	6114576C1	8500	8	N/A		
VL95AR2	18	RD	TXL	3573077C1	6114576C1	8500	8	N/A		
VJ5A(-)	18	GN	193	3573077C1	6114576C1	8500	9	N/A		
VK5A(-)	18	GN	193	3573077C1	6114576C1	8500	9	N/A		
VJ10-G3	18	WH	TXL	3573077C1	6114576C1	8500	13	N/A		
VJ10-G5	16	BK	TXL	3989901C1	6114576C1	8500	13	N/A		
ME94	18	GY	GXL	2033819C1	1686834C1	8500	A	1652325C1		

Circuit Number	Gauge	Color	Insulation	Terminal / Splice Number	Connector Part number	Connector Number	Cavity	Seal/Sleeve	Lock 1	Lock 2
ME94	18	GY	GXL	2033819C1	1686834C1	8500	A	N/A		
ME94A	18	GY	GXL	2033819C1	1686834C1	8500	B	1652325C1		
ME94A	18	GY	GXL	2033819C1	1686834C1	8500	B	N/A		
ME94B	18	GY	GXL	2033819C1	1686834C1	8500	C	1652325C1		
ME94B	18	GY	GXL	2033819C1	1686834C1	8500	C	N/A		
ME94H	18	GY	GXL	2033819C1	1686834C1	8501	A	1652325C1		
ME94H	18	GY	GXL	2033819C1	1686834C1	8501	A	N/A		
ME94J	18	GY	GXL	2033819C1	1686834C1	8501	B	1652325C1		
ME94J	18	GY	GXL	2033819C1	1686834C1	8501	B	N/A		
ME94K	18	GY	GXL	2033819C1	1686834C1	8501	C	1652325C1		
ME94K	18	GY	GXL	2033819C1	1686834C1	8501	C	N/A		
FA94C	18	GY	GXL	1680205C1	1684261C1	8502	1	N/A		
FB94C	18	GY	GXL	1680205C1	1684261C1	8502	1	N/A		
FL94C	18	GY	GXL	1680205C1	1684261C1	8502	1	N/A		
FA94C	18	GY	GXL	1680205C1	1684261C1	8502	1	N/A		
FB94C	18	GY	GXL	1680205C1	1684261C1	8502	1	N/A		
FL94C	18	GY	GXL	1680205C1	1684261C1	8502	1	N/A		
FA94D	18	GY	GXL	1680205C1	1684261C1	8502	2	N/A		
FB94D	18	GY	GXL	1680205C1	1684261C1	8502	2	N/A		
FL94D	18	GY	GXL	1680205C1	1684261C1	8502	2	N/A		
FA94D	18	GY	GXL	1680205C1	1684261C1	8502	2	N/A		
FB94D	18	GY	GXL	1680205C1	1684261C1	8502	2	N/A		
FL94D	18	GY	GXL	1680205C1	1684261C1	8502	2	N/A		
VJ95EL	18	TN	150	3573077C1	3573078C1	8600	1	N/A		
VJ95EH	18	TN	150	3573077C1	3573078C1	8600	2	N/A		
VJ95	20	TN	150	3573077C1	3573078C1	8600	3	N/A		
VJ95A	20	TN	150	3573077C1	3573078C1	8600	4	N/A		
AB6C	18	TN	150	3573077C1	3573078C1	8600	5	N/A		
AF6C	20	TN	150	3573077C1	3573078C1	8600	5	N/A		
KP6C	18	TN	150	3573077C1	3573078C1	8600	5	N/A		
VG6C	18	TN	150	3573077C1	3573078C1	8600	5	N/A		
KT9A	20	TN	150	3573077C1	3573078C1	8600	7	N/A		
KZ9C	20	TN	150	3573077C1	3573078C1	8600	7	N/A		
VJ95K	20	TN	150	3573077C1	3573078C1	8600	8	N/A		
VJ5A(+)	18	YL	193	3573077C1	3573078C1	8600	9	N/A		
VJ5A(-)	18	GN	193	3573077C1	3573078C1	8600	10	N/A		
VJ10-G2	14	WH	150	3989901C1	3573078C1	8600	11	N/A		
VJ13A	14	PK	150	3989901C1	3573078C1	8600	12	N/A		
VJ5B(+)	18	YL	193	3573077C1	3573078C1	8600	13	N/A		
VJ5B(-)	18	GN	193	3573077C1	3573078C1	8600	14	N/A		
TC11-GC	12	WH	GXL	1673747C1	587566C91	8600	A	589390C1		
TD11-GC	12	WH	GXL	1673747C1	587566C91	8600	A	589390C1		
TC11-GC	12	WH	GXL	1673747C1	587566C91	8600	A	589390C1		
TD11-GC	12	WH	GXL	1673747C1	587566C91	8600	A	589390C1		
MT78AC	16	LTGN	GXL	587577C1	587567C91	8700	A	1652325C1		
MT78AC	16	LTGN	GXL	587577C1	587567C91	8700	A	1652325C1		
MT78-GA	16	WH	GXL	587577C1	587567C91	8700	B	1652325C1		
MT78-GA	16	WH	GXL	587577C1	587567C91	8700	B	1652325C1		
MS78BC	16	LTGN	GXL	587577C1	587567C91	8701	A	1652325C1		
MT78BC	16	LTGN	GXL	587577C1	587567C91	8701	A	1652325C1		
MS78BC	16	LTGN	GXL	587577C1	587567C91	8701	A	N/A		
MT78BC	16	LTGN	GXL	587577C1	587567C91	8701	A	N/A		
MS78-GB	16	WH	GXL	587577C1	587567C91	8701	B	1652325C1		
MT78-GB	16	WH	GXL	587577C1	587567C91	8701	B	1652325C1		

Circuit Number	Gauge	Color	Insulation	Terminal / Splice Number	Connector Part number	Connector Number	Cavity	Seal/Sleeve	Lock 1	Lock 2
MS78-GB	16	WH	GXL	587577C1	587567C91	8701	B	N/A		
MT78-GB	16	WH	GXL	587577C1	587567C91	8701	B	N/A		
PF78BC	16	LTGN	GXL	587577C1	587567C91	8702	A	1652325C1		
PT78BC	16	LTGN	GXL	587577C1	587567C91	8702	A	1652325C1		
PF78BC	16	LTGN	GXL	587577C1	587567C91	8702	A	N/A		
PF78-GB	16	WH	GXL	587577C1	587567C91	8702	B	1652325C1		
PT78-GA	16	WH	GXL	587577C1	587567C91	8702	B	1652325C1		
PF78-GB	16	WH	GXL	587577C1	587567C91	8702	B	N/A		
MY11-GD	12	WH	GXL	2033816C1	3551896C1	8800	A	589390C1		
TC85-GB	16	WH	GXL	2033819C1	3551896C1	8800	A	1652325C1		
MY11-GD	12	WH	GXL	2033816C1	3551896C1	8800	A	N/A		
NC11-GD	12	WH	GXL	2033816C1	3551896C1	8800	A	N/A		
TC85-GB	16	WH	GXL	2033819C1	3551896C1	8800	A	N/A		
MD64-GA	16	WH	TXL	2033819C1	3551896C1	8800	B	1652325C1		
TG64-GA	16	WH	TXL	2033819C1	3551896C1	8800	B	1652325C1		
TH64-GA	16	WH	TXL	2033819C1	3551896C1	8800	B	1652325C1		
TK64-GA	16	WH	TXL	2033819C1	3551896C1	8800	B	1652325C1		
MD64-GA	16	WH	TXL	2033819C1	3551896C1	8800	B	N/A		
TG64-GA	16	WH	TXL	2033819C1	3551896C1	8800	B	N/A		
TJ64-GA	16	WH	TXL	2033819C1	3551896C1	8800	B	N/A		
TK64-GA	16	WH	TXL	2033819C1	3551896C1	8800	B	N/A		
TM64-GA	16	WH	TXL	2033819C1	3551896C1	8800	B	N/A		
MD64-GB	16	WH	GXL	2033819C1	3551896C1	8800	C	1652325C1		
TG64-GB	16	WH	TXL	2033819C1	3551896C1	8800	C	1652325C1		
TH64-GB	16	WH	TXL	2033819C1	3551896C1	8800	C	1652325C1		
TK64-GB	16	WH	TXL	2033819C1	3551896C1	8800	C	1652325C1		
MD64-GB	16	WH	TXL	2033819C1	3551896C1	8800	C	N/A		
TG64-GB	16	WH	TXL	2033819C1	3551896C1	8800	C	N/A		
TJ64-GB	16	WH	TXL	2033819C1	3551896C1	8800	C	N/A		
TK64-GB	16	WH	TXL	2033819C1	3551896C1	8800	C	N/A		
TM64-GB	16	WH	TXL	2033819C1	3551896C1	8800	C	N/A		
MB54-GA	16	WH	GXL	2033819C1	3551896C1	8800	D	1652325C1		
MC11-GE	14	WH	GXL	2033816C1	3551896C1	8800	D	589391C1		
MJ54-GA	16	WH	GXL	2033819C1	3551896C1	8800	D	1652325C1		
ML11-GE	14	WH	GXL	2033816C1	3551896C1	8800	D	589391C1		
MN11-GE	14	WH	GXL	2033816C1	3551896C1	8800	D	589391C1		
MU11-GE	14	WH	GXL	2033816C1	3551896C1	8800	D	589391C1		
MW11-GE	14	WH	GXL	2033816C1	3551896C1	8800	D	589391C1		
NF11-GE	14	WH	GXL	2033816C1	3551896C1	8800	D	589391C1		
RB11-GE	14	WH	GXL	2033816C1	3551896C1	8800	D	589391C1		
RD11-GE	14	WH	GXL	2033816C1	3551896C1	8800	D	589391C1		
MB54-GA	16	WH	GXL	2033819C1	3551896C1	8800	D	N/A		
MC11-GE	14	WH	GXL	2033816C1	3551896C1	8800	D	N/A		
MJ54-GA	16	WH	GXL	2033819C1	3551896C1	8800	D	N/A		
ML11-GE	14	WH	GXL	2033816C1	3551896C1	8800	D	N/A		
MN11-GE	14	WH	GXL	2033816C1	3551896C1	8800	D	N/A		
MU11-GE	14	WH	GXL	2033816C1	3551896C1	8800	D	N/A		
MW11-GE	14	WH	GXL	2033816C1	3551896C1	8800	D	N/A		
NF11-GE	14	WH	GXL	2033816C1	3551896C1	8800	D	N/A		
RB11-GE	14	WH	GXL	2033816C1	3551896C1	8800	D	N/A		
RD11-GE	14	WH	GXL	2033816C1	3551896C1	8800	D	N/A		
MB54-GB	16	WH	GXL	2033819C1	3551896C1	8800	E	1652325C1		
MJ54-GB	16	WH	GXL	2033819C1	3551896C1	8800	E	1652325C1		
MS78-GB	16	WH	GXL	2033819C1	3551896C1	8800	E	1652325C1		

Circuit Number	Gauge	Color	Insulation	Terminal / Splice Number	Connector Part number	Connector Number	Cavity	Seal/Sleeve	Lock 1	Lock 2
PF78-GB	16	WH	GXL	2033819C1	3551896C1	8800	E	1652325C1		
PG78-GA	16	WH	GXL	2033819C1	3551896C1	8800	E	1652325C1		
PJ78-GB	16	WH	GXL	2033819C1	3551896C1	8800	E	1652325C1		
PR78-GB	16	WH	GXL	2033819C1	3551896C1	8800	E	1652325C1		
PS78-GA	16	WH	GXL	2033819C1	3551896C1	8800	E	1652325C1		
MB54-GB	16	WH	GXL	2033819C1	3551896C1	8800	E	N/A		
MJ54-GB	16	WH	GXL	2033819C1	3551896C1	8800	E	N/A		
MS78-GB	16	WH	GXL	2033819C1	3551896C1	8800	F	N/A		
PF78-GB	16	WH	GXL	2033819C1	3551896C1	8800	F	N/A		
PG78-GA	16	WH	GXL	2033819C1	3551896C1	8800	F	N/A		
PJ78-GB	16	WH	GXL	2033819C1	3551896C1	8800	F	N/A		
PR78-GB	16	WH	GXL	2033819C1	3551896C1	8800	F	N/A		
PS78-GA	16	WH	GXL	2033819C1	3551896C1	8800	F	N/A		
RX9	16	GY	GXL	2033819C1	3551896C1	8802	A	1652325C1		
SL9	16	GY	GXL	2033819C1	3551896C1	8802	A	1652325C1		
FA9-G	18	GY	GXL	2033819C1	3551896C1	8802	B	1652325C1		
FB9-G	18	GY	GXL	2033819C1	3551896C1	8802	B	1652325C1		
FC9-G	18	GY	GXL	2033819C1	3551896C1	8802	B	1652325C1		
FD9-G	18	GY	GXL	2033819C1	3551896C1	8802	B	1652325C1		
FE9-G	18	GY	GXL	2033819C1	3551896C1	8802	B	1652325C1		
FF9-G	18	GY	GXL	2033819C1	3551896C1	8802	B	1652325C1		
FD9A	18	GY	GXL	2033819C1	3551896C1	8802	B	1652325C1		
FG9-GB	18	GY	GXL	2033819C1	3551896C1	8802	C	1652325C1		
PL9-G	18	GY	GXL	2033819C1	3551896C1	8802	C	1652325C1		
ZL9-GB	18	GY	GXL	2033819C1	3551896C1	8802	C	1652325C1		
ZP9-GB	18	GY	GXL	2033819C1	3551896C1	8802	C	1652325C1		
ZT9-GB	18	GY	GXL	2033819C1	3551896C1	8802	C	1652325C1		
ZV9-GB	18	GY	GXL	2033819C1	3551896C1	8802	C	1652325C1		
ZX9-GB	18	GY	GXL	2033819C1	3551896C1	8802	C	1652325C1		
ZP9B	18	GY	GXL	2033819C1	3551896C1	8802	C	1652325C1		
ZT9B	18	GY	GXL	2033819C1	3551896C1	8802	C	1652325C1		
ZV9B	18	GY	GXL	2033819C1	3551896C1	8802	C	1652325C1		
ZX9B	18	GY	GXL	2033819C1	3551896C1	8802	C	1652325C1		
AK8EB	18	GY	TXL	2033819C1	3551896C1	8802	D	3517771C1		
PP87H	18	GY	TXL	2033819C1	3551896C1	8802	D	3517771C1		
AK9EB	18	GY	TXL	2033819C1	3551896C1	8802	D	3517771C1		
MF9F	18	GY	GXL	2033819C1	3551896C1	8802	F	1652325C1		
MG9H	18	GY	GXL	2033819C1	3551896C1	8802	F	1652325C1		
RH9F	18	GY	GXL	2033819C1	3551896C1	8802	F	1652325C1		
XM59-G	12	WH	GXL	2033816C1	3551896C1	8805	A	589390C1		
NR104CC	18	DKBL	GXL	587576C1	587568C91	8805	A	1652325C1		
NR104CC	18	DKBL	GXL	587576C1	587568C91	8805	A	1652325C1		
XM59-G	12	WH	GXL	2033816C1	3551896C1	8805	A	589390C1		
NG59A-G	14	WH	GXL	2033816C1	3551896C1	8805	B	589391C1		
NM59A-G	16	WH	GXL	2033819C1	3551896C1	8805	B	1652325C1		
NR104CB	18	DKBL	GXL	587576C1	587568C91	8805	B	1652325C1		
NR104CB	18	DKBL	GXL	587576C1	587568C91	8805	B	1652325C1		
NG59A-G	14	WH	GXL	2033816C1	3551896C1	8805	B	589391C1		
NM59A-G	16	WH	GXL	2033819C1	3551896C1	8805	B	1652325C1		
2A59F-G	14	WH	GXL	2033816C1	3551896C1	8805	C	589391C1		
BU59Z-G	14	WH	GXL	2033816C1	3551896C1	8805	C	589391C1		
BV59Y-G	14	WH	GXL	2033816C1	3551896C1	8805	C	589391C1		
NU59F-G	14	WH	GXL	2033816C1	3551896C1	8805	C	589391C1		
NZ59X-G	14	WH	GXL	2033816C1	3551896C1	8805	C	589391C1		

Circuit Number	Gauge	Color	Insulation	Terminal / Splice Number	Connector Part number	Connector Number	Cavity	Seal/Sleeve	Lock 1	Lock 2
RE59F-G	14	WH	GXL	2033816C1	3551896C1	8805	C	589391C1		
NS59S-G	14	WH	GXL	2033816C1	3551896C1	8805	C	589391C1		
NT59S-G	14	WH	GXL	2033816C1	3551896C1	8805	C	589391C1		
NZ59X-G	14	WH	GXL	2033816C1	3551896C1	8805	C	589391C1		
2B59L-G	14	WH	GXL	2033816C1	3551896C1	8805	D	589391C1		
EV12-GA	18	WH	GXL	2033819C1	3551896C1	8805	D	1652325C1		
NW59L-G	14	WH	GXL	2033816C1	3551896C1	8805	D	589391C1		
EV12-GA	18	WH	GXL	2033819C1	3551896C1	8805	D	1652325C1		
NR59R-G	14	WH	GXL	2033816C1	3551896C1	8805	E	589391C1		
NS59R-G	18	WH	GXL	2033819C1	3551896C1	8805	E	1652325C1		
NR59R-G	14	WH	GXL	2033816C1	3551896C1	8805	E	589391C1		
CA19-G	16	WH	TXL	2033819C1	3551896C1	8805	F	1652325C1		
CB19-G	16	WH	GXL	2033819C1	3551896C1	8805	F	1652325C1		
CC19-G	16	WH	TXL	2033819C1	3551896C1	8805	F	1652325C1		
CD19-G	16	WH	TXL	2033819C1	3551896C1	8805	F	1652325C1		
CE19-G	16	WH	TXL	2033819C1	3551896C1	8805	F	1652325C1		
CF19-G	16	WH	TXL	2033819C1	3551896C1	8805	F	1652325C1		
CG19-G	16	WH	TXL	2033819C1	3551896C1	8805	F	1652325C1		
CH19-G	16	WH	TXL	2033819C1	3551896C1	8805	F	1652325C1		
CN19-G	16	WH	TXL	2033819C1	3551896C1	8805	F	1652325C1		
CP19-G	16	WH	TXL	2033819C1	3551896C1	8805	F	1652325C1		
CR19-G	16	WH	TXL	2033819C1	3551896C1	8805	F	1652325C1		
CS19-G	16	WH	TXL	2033819C1	3551896C1	8805	F	1652325C1		
CT19-G	16	WH	TXL	2033819C1	3551896C1	8805	F	1652325C1		
CU19-G	16	WH	TXL	2033819C1	3551896C1	8805	F	1652325C1		
CV19-G	16	WH	TXL	2033819C1	3551896C1	8805	F	1652325C1		
CW19-G	16	WH	TXL	2033819C1	3551896C1	8805	F	1652325C1		
CX19-G	16	WH	TXL	2033819C1	3551896C1	8805	F	1652325C1		
CY19-G	16	WH	TXL	2033819C1	3551896C1	8805	F	1652325C1		
CZ19-G	16	WH	TXL	2033819C1	3551896C1	8805	F	1652325C1		
PU19-G	16	WH	GXL	2033819C1	3551896C1	8805	F	1652325C1		
PX19-G	16	WH	TXL	2033819C1	3551896C1	8805	F	1652325C1		
XA19-G	16	WH	TXL	2033819C1	3551896C1	8805	F	1652325C1		
XY19-G	16	WH	TXL	2033819C1	3551896C1	8805	F	1652325C1		
CA19-G	16	WH	TXL	2033819C1	3551896C1	8805	F	1652325C1		
CB19-G	16	WH	TXL	2033819C1	3551896C1	8805	F	1652325C1		
CD19-G	16	WH	TXL	2033819C1	3551896C1	8805	F	1652325C1		
CE19-G	16	WH	TXL	2033819C1	3551896C1	8805	F	1652325C1		
CF19-G	16	WH	TXL	2033819C1	3551896C1	8805	F	1652325C1		
CG19-G	16	WH	TXL	2033819C1	3551896C1	8805	F	1652325C1		
CH19E-G	16	WH	GXL	2033819C1	3551896C1	8805	F	1652325C1		
CJ19A-G	16	WH	GXL	2033819C1	3551896C1	8805	F	1652325C1		
CK19B-G	16	WH	GXL	2033819C1	3551896C1	8805	F	1652325C1		
CL19C-G	16	WH	GXL	2033819C1	3551896C1	8805	F	1652325C1		
CM19F-G	16	WH	GXL	2033819C1	3551896C1	8805	F	1652325C1		
CN19-G	16	WH	TXL	2033819C1	3551896C1	8805	F	1652325C1		
CP19D-G	16	WH	GXL	2033819C1	3551896C1	8805	F	1652325C1		
CR19H-G	16	WH	GXL	2033819C1	3551896C1	8805	F	1652325C1		
UK11-GC	14	WH	GXL	2033816C1	3551896C1	8806	A	589391C1		
WE42-G	18	WH	GXL	2033819C1	3551896C1	8806	B	1652325C1		
WJ42-G	18	WH	GXL	2033819C1	3551896C1	8806	B	1652325C1		
WM42-G	16	GY	GXL	2033819C1	3551896C1	8806	B	1652325C1		
TM59-GB	18	WH	GXL	2033819C1	3551896C1	8806	C	1652325C1		
TT11-G	18	WH	TXL	2033819C1	3551896C1	8806	C	3517771C1		

Circuit Number	Gauge	Color	Insulation	Terminal / Splice Number	Connector Part number	Connector Number	Cavity	Seal/Sleeve	Lock 1	Lock 2
UD59-GB	18	WH	GXL	2033819C1	3551896C1	8806	C	1652325C1		
SJ59-GD	18	WH	GXL	2033819C1	3551896C1	8806	D	1652325C1		
TM59-GD	18	WH	GXL	2033819C1	3551896C1	8806	D	1652325C1		
XN47T-G	18	GY	GXL	2033819C1	3551896C1	8806	D	1652325C1		
MV59-GA	18	WH	GXL	2033819C1	3551896C1	8806	F	1652325C1		
MX59-GA	18	WH	GXL	2033819C1	3551896C1	8806	F	1652325C1		
RN59-GA	18	WH	GXL	2033819C1	3551896C1	8806	F	1652325C1		
RP59-GA	18	WH	GXL	2033819C1	3551896C1	8806	F	1652325C1		
UC59-GA	18	WH	GXL	2033819C1	3551896C1	8806	F	1652325C1		
SL11-GA	12	WH	GXL	2033816C1	3551896C1	8807	A	589390C1		
SL11-GA	12	WH	GXL	2033816C1	3551896C1	8807	A	589390C1		
SL10-G	12	WH	TXL	2033816C1	3551896C1	8807	B	589391C1		
SL10-G	12	WH	TXL	2033816C1	3551896C1	8807	B	589391C1		
AC39-GB	16	WH	GXL	2033819C1	3551896C1	8807	C	1652325C1		
AD39-GB	16	WH	GXL	2033819C1	3551896C1	8807	C	1652325C1		
AE39-GB	16	WH	GXL	2033819C1	3551896C1	8807	C	1652325C1		
AF39-GB	16	WH	GXL	2033819C1	3551896C1	8807	C	1652325C1		
AG39-GB	16	WH	GXL	2033819C1	3551896C1	8807	C	1652325C1		
AJ39-GB	16	WH	GXL	2033819C1	3551896C1	8807	C	1652325C1		
AP39-GB	16	WH	GXL	2033819C1	3551896C1	8807	C	1652325C1		
AQ39-GB	16	WH	GXL	2033819C1	3551896C1	8807	C	1652325C1		
AR39-GB	16	WH	GXL	2033819C1	3551896C1	8807	C	1652325C1		
AS39-GB	16	WH	GXL	2033819C1	3551896C1	8807	C	1652325C1		
BA39-GB	16	WH	GXL	2033819C1	3551896C1	8807	C	1652325C1		
NH39-GB	16	WH	GXL	2033819C1	3551896C1	8807	C	1652325C1		
NX39-GB	16	WH	GXL	2033819C1	3551896C1	8807	C	1652325C1		
PA39-GB	16	WH	GXL	2033819C1	3551896C1	8807	C	1652325C1		
PF39-GB	16	WH	GXL	2033819C1	3551896C1	8807	C	1652325C1		
PN39-GB	16	WH	GXL	2033819C1	3551896C1	8807	C	1652325C1		
ZN39-GB	16	WH	GXL	2033819C1	3551896C1	8807	C	1652325C1		
AC39-GB	16	WH	GXL	2033819C1	3551896C1	8807	C	1652325C1		
AD39-GB	16	WH	GXL	2033819C1	3551896C1	8807	C	1652325C1		
AE39-GB	16	WH	GXL	2033819C1	3551896C1	8807	C	1652325C1		
AJ39-GB	16	WH	GXL	2033819C1	3551896C1	8807	C	1652325C1		
AP39-GB	16	WH	GXL	2033819C1	3551896C1	8807	C	1652325C1		
AQ39-GB	16	WH	GXL	2033819C1	3551896C1	8807	C	1652325C1		
AR39-GB	16	WH	GXL	2033819C1	3551896C1	8807	C	1652325C1		
2F39-GF	18	WH	GXL	2033819C1	3551896C1	8807	D	1652325C1		
AH39-GF	18	WH	GXL	2033819C1	3551896C1	8807	D	1652325C1		
BB39-G	18	WH	GXL	2033819C1	3551896C1	8807	D	1652325C1		
BC39-GF	18	WH	GXL	2033819C1	3551896C1	8807	D	1652325C1		
BF11-GT2	16	WH	GXL	2033819C1	3551896C1	8807	D	1652325C1		
BZ39-G	18	WH	GXL	2033819C1	3551896C1	8807	D	1652325C1		
NK39-GF	18	WH	GXL	2033819C1	3551896C1	8807	D	1652325C1		
NN39-GF	18	WH	GXL	2033819C1	3551896C1	8807	D	1652325C1		
NP39-GF	18	WH	GXL	2033819C1	3551896C1	8807	D	1652325C1		
NQ39-GF	18	WH	GXL	2033819C1	3551896C1	8807	D	1652325C1		
PS39-GF	18	WH	GXL	2033819C1	3551896C1	8807	D	1652325C1		
AH39-GF	18	WH	GXL	2033819C1	3551896C1	8807	D	1652325C1		
BZ39-GF	18	WH	GXL	2033819C1	3551896C1	8807	D	1652325C1		
NK39-GF	18	WH	GXL	2033819C1	3551896C1	8807	D	1652325C1		
NN39-GF	18	WH	GXL	2033819C1	3551896C1	8807	D	1652325C1		
NQ39-GF	18	WH	GXL	2033819C1	3551896C1	8807	D	1652325C1		
NU39-GF	18	WH	GXL	2033819C1	3551896C1	8807	D	1652325C1		

Circuit Number	Gauge	Color	Insulation	Terminal / Splice Number	Connector Part number	Connector Number	Cavity	Seal/Sleeve	Lock 1	Lock 2
PS39-GF	18	WH	GXL	2033819C1	3551896C1	8807	D	1652325C1		
BE42-G	18	WH	GXL	2033819C1	3551896C1	8807	E	1652325C1		
UK11-GC	14	WH	GXL	2033816C1	3551896C1	8807	E	589391C1		
WF42-G	18	WH	GXL	2033819C1	3551896C1	8807	E	1652325C1		
WK42-G	18	WH	GXL	2033819C1	3551896C1	8807	E	1652325C1		
WL42-G	16	GY	GXL	2033819C1	3551896C1	8807	E	1652325C1		
ML42-G	18	WH	GXL	2033819C1	3551896C1	8807	E	1652325C1		
TR42-G	16	WH	GXL	2033819C1	3551896C1	8807	E	1652325C1		
UC59-GA	18	WH	GXL	2033819C1	3551896C1	8807	E	1652325C1		
ND11-GD	12	WH	GXL	2033816C1	3551896C1	8807	F	589390C1		
PV11-GBB	12	WH	GXL	2033816C1	3551896C1	8807	F	589390C1		
ST22-G	16	WH	GXL	2033819C1	3551896C1	8807	F	1652325C1		
ND11-GD	12	WH	GXL	2033816C1	3551896C1	8807	F	589390C1		
PV11-GBB	12	WH	GXL	2033816C1	3551896C1	8807	F	589390C1		
SL11-GB	12	WH	GXL	2033816C1	3551896C1	8809	A	589390C1		
SL11-GB	12	WH	GXL	2033816C1	3551896C1	8809	A	589390C1		
ZK10-GA	18	WH	GXL	2033819C1	3551896C1	8809	B	1652325C1		
ZQ10-GA	18	WH	GXL	2033819C1	3551896C1	8809	B	1652325C1		
ZS10-GA	18	WH	GXL	2033819C1	3551896C1	8809	B	1652325C1		
ZW10-GA	18	WH	GXL	2033819C1	3551896C1	8809	B	1652325C1		
ZQ10-GA	18	WH	GXL	2033819C1	3551896C1	8809	B	1652325C1		
ZS10-GA	18	WH	GXL	2033819C1	3551896C1	8809	B	1652325C1		
ZW10-GA	18	WH	GXL	2033819C1	3551896C1	8809	B	1652325C1		
NL10-GS	14	WH	GXL	2033816C1	3551896C1	8809	C	589391C1		
NT10-GS	14	WH	GXL	2033816C1	3551896C1	8809	C	589391C1		
RA10-GR	14	WH	GXL	2033816C1	3551896C1	8809	C	589391C1		
RB10-GR	14	WH	GXL	2033816C1	3551896C1	8809	C	589391C1		
ZE10-GR	14	WH	GXL	2033816C1	3551896C1	8809	C	589391C1		
NL10-GS	14	WH	GXL	2033816C1	3551896C1	8809	C	589391C1		
RB10-GR	14	WH	GXL	2033816C1	3551896C1	8809	C	589391C1		
ZE10-GR	14	WH	GXL	2033816C1	3551896C1	8809	C	589391C1		
YH112-GD	16	WH	TXL	2033819C1	3551896C1	8809	D	1652325C1		
YJ11-GD	16	WH	TXL	2033819C1	3551896C1	8809	D	1652325C1		
YK11-GD	16	WH	TXL	2033819C1	3551896C1	8809	D	1652325C1		
YM65-G	16	WH	GXL	2033819C1	3551896C1	8809	D	1652325C1		
YN65-G	16	WH	GXL	2033819C1	3551896C1	8809	D	1652325C1		
YS112-GD	16	WH	TXL	2033819C1	3551896C1	8809	D	1652325C1		
YT11-GD	16	WH	GXL	2033819C1	3551896C1	8809	D	1652325C1		
YU11-GD	16	WH	GXL	2033819C1	3551896C1	8809	D	1652325C1		
YM65-G	16	WH	GXL	2033819C1	3551896C1	8809	D	1652325C1		
YS112-GD	16	WH	TXL	2033819C1	3551896C1	8809	D	1652325C1		
YU11-GD	16	WH	GXL	2033819C1	3551896C1	8809	D	1652325C1		
RL49-G	18	WH	GXL	2033819C1	3551896C1	8809	E	1652325C1		
RL49-G	18	WH	GXL	2033819C1	3551896C1	8809	E	1652325C1		
XM59-G	12	WH	GXL	2033816C1	3551896C1	8809	F	589390C1		
XM59-G	12	WH	GXL	2033816C1	3551896C1	8809	F	589390C1		
QL5(-)	18	GN	TXL	3727971C1	3553404C1	8881	5	N/A		
QR5(-)	18	GN	TXL	3727971C1	3553404C1	8881	5	N/A		
QU5A(-)	18	GN	TXL	3727971C1	3553404C1	8881	5	N/A		
QZ5D1(-)	18	GN	TXL	3727971C1	3553404C1	8881	5	N/A		
QL5A	18	GN	TXL	3727971C1	3553404C1	8881	6	N/A		
QU5A	18	GN	TXL	3727971C1	3553404C1	8881	6	N/A		
QL5B	18	YL	TXL	3727971C1	3553404C1	8881	7	N/A		
QU5B	18	YL	TXL	3727971C1	3553404C1	8881	7	N/A		

Circuit Number	Gauge	Color	Insulation	Terminal / Splice Number	Connector Part number	Connector Number	Cavity	Seal/Sleeve	Lock 1	Lock 2
QL5(+)	18	YL	TXL	3727971C1	3553404C1	8881	8	N/A		
QR5(+)	18	YL	TXL	3727971C1	3553404C1	8881	8	N/A		
QU5A(+)	18	YL	TXL	3727971C1	3553404C1	8881	8	N/A		
QZ5D1(+)	18	YL	TXL	3727971C1	3553404C1	8881	8	N/A		
QL13AA	18	RD	TXL	3727971C1	3553404C1	8881	10	N/A		
QR13AA	18	RD	TXL	3727971C1	3553404C1	8881	10	N/A		
QU14RA	18	RD	TXL	3727971C1	3553404C1	8881	10	N/A		
QZ13R1	18	RD	TXL	3727971C1	3553404C1	8881	10	N/A		
QL11-AB	18	WH	TXL	3727971C1	3553404C1	8881	12	N/A		
QR11-G	18	WH	TXL	3727971C1	3553404C1	8881	12	N/A		
QU11-G2	18	WH	TXL	3727971C1	3553404C1	8881	12	N/A		
QZ11-GAN	18	WH	TXL	3727971C1	3553404C1	8881	12	N/A		
QK11-GA	18	WH	TXL	3727971C1	3586750C1	8882	1	N/A		
QU11-GA2	18	WH	TXL	3727971C1	3586750C1	8882	1	N/A		
QZ11-GA1	18	WH	TXL	3727971C1	3586750C1	8882	1	N/A		
QK11-GB	18	WH	TXL	3727971C1	3586750C1	8882	2	N/A		
QU11-GB2	18	WH	TXL	3727971C1	3586750C1	8882	2	N/A		
QZ11-GB1	18	WH	TXL	3727971C1	3586750C1	8882	2	N/A		
QN11-GD	18	WH	TXL	3727971C1	3586750C1	8882	3	N/A		
QV11-GD2	18	WH	TXL	3727971C1	3586750C1	8882	3	N/A		
QX11-GD1	18	WH	TXL	3727971C1	3586750C1	8882	3	N/A		
QP11-GF	18	WH	TXL	3727971C1	3586750C1	8882	4	N/A		
QT11-GE	18	WH	TXL	3727971C1	3586750C1	8882	4	N/A		
QV11-GF2	18	WH	TXL	3727971C1	3586750C1	8882	4	N/A		
QY11-GF1	18	WH	TXL	3727971C1	3586750C1	8882	4	N/A		
QQ11-GE	18	WH	TXL	3727971C1	3586750C1	8882	5	N/A		
QV11-GE2	18	WH	TXL	3727971C1	3586750C1	8882	5	N/A		
QX11-GE1	18	WH	TXL	3727971C1	3586750C1	8882	5	N/A		
QM11-GC	18	WH	TXL	3727971C1	3586750C1	8882	6	N/A		
QM11-GJ	18	WH	TXL	3727971C1	3586750C1	8882	7	N/A		
QQ11-GL	18	WH	TXL	3727971C1	3586750C1	8882	8	N/A		
QV11-GL2	18	WH	TXL	3727971C1	3586750C1	8882	8	N/A		
QX11-GL1	18	WH	TXL	3727971C1	3586750C1	8882	8	N/A		
QP11-GM	18	WH	TXL	3727971C1	3586750C1	8882	9	N/A		
QT11-GL	18	WH	TXL	3727971C1	3586750C1	8882	9	N/A		
QV11-GM2	18	WH	TXL	3727971C1	3586750C1	8882	9	N/A		
QY11-GM1	18	WH	TXL	3727971C1	3586750C1	8882	9	N/A		
QN11-GK	18	WH	TXL	3727971C1	3586750C1	8882	10	N/A		
QV11-GK2	18	WH	TXL	3727971C1	3586750C1	8882	10	N/A		
QX11-GK1	18	WH	TXL	3727971C1	3586750C1	8882	10	N/A		
QK11-GH	18	WH	TXL	3727971C1	3586750C1	8882	11	N/A		
QU11-GH2	18	WH	TXL	3727971C1	3586750C1	8882	11	N/A		
QZ11-GH1	18	WH	TXL	3727971C1	3586750C1	8882	11	N/A		
QK11-GG	18	WH	TXL	3727971C1	3586750C1	8882	12	N/A		
QU11-GG2	18	WH	TXL	3727971C1	3586750C1	8882	12	N/A		
QZ11-GG1	18	WH	TXL	3727971C1	3586750C1	8882	12	N/A		
AL1AL	12	GY	GXL	3841697C1	6099045C1	8883	1	N/A		
AL1AL	12	GY	GXL	3841697C1	6099045C1	8883	1	N/A		
AL2AL	14	GY	GXL	3841697C1	6099045C1	8883	2	N/A		
AL2AL	14	GY	GXL	3841697C1	6099045C1	8883	2	N/A		
AL5AL	18	GY	GXL	3572626C1	6099045C1	8883	5	N/A		
AL5AL	18	GY	GXL	3572626C1	6099045C1	8883	5	N/A		
AL6AL	18	GY	GXL	3572626C1	6099045C1	8883	6	N/A		
AL6AL	18	GY	GXL	3572626C1	6099045C1	8883	6	N/A		

Circuit Number	Gauge	Color	Insulation	Terminal / Splice Number	Connector Part number	Connector Number	Cavity	Seal/Sleeve	Lock 1	Lock 2
AL7AL	18	GY	GXL	3572626C1	6099045C1	8883	7	N/A		
AL7AL	18	GY	GXL	3572626C1	6099045C1	8883	7	N/A		
AL8AL	18	GY	GXL	3572626C1	6099045C1	8883	8	N/A		
AL8AL	18	GY	GXL	3572626C1	6099045C1	8883	8	N/A		
AL9AL	18	GY	GXL	3572626C1	6099045C1	8883	9	N/A		
AL9AL	18	GY	GXL	3572626C1	6099045C1	8883	9	N/A		
AM10AL	18	GY	TXL	3572626C1	6099045C1	8883	10	N/A		
AN10AL	18	GY	TXL	3572626C1	6099045C1	8883	10	N/A		
AM10AL	18	GY	TXL	3572626C1	6099045C1	8883	10	N/A		
AN10AL	18	GY	TXL	3572626C1	6099045C1	8883	10	N/A		
AN11AL	18	GY	TXL	3572626C1	6099045C1	8883	11	N/A		
AN11AL	18	GY	TXL	3572626C1	6099045C1	8883	11	N/A		
AM12AL	18	GY	TXL	3572626C1	6099045C1	8883	12	N/A		
AN12AL	18	GY	TXL	3572626C1	6099045C1	8883	12	N/A		
AM12AL	18	GY	TXL	3572626C1	6099045C1	8883	12	N/A		
AN12AL	18	GY	TXL	3572626C1	6099045C1	8883	12	N/A		
AM13AL	18	GY	TXL	3572626C1	6099045C1	8883	13	N/A		
AM13AL	18	GY	TXL	3572626C1	6099045C1	8883	13	N/A		
AN14AL	18	GY	TXL	3572626C1	6099045C1	8883	14	N/A		
AN14AL	18	GY	TXL	3572626C1	6099045C1	8883	14	N/A		
AM15AL	18	GY	TXL	3572626C1	6099045C1	8883	15	N/A		
AN15AL	18	GY	TXL	3572626C1	6099045C1	8883	15	N/A		
AM15AL	18	GY	TXL	3572626C1	6099045C1	8883	15	N/A		
AN15AL	18	GY	TXL	3572626C1	6099045C1	8883	15	N/A		
AM16AL	18	GY	TXL	3572626C1	6099045C1	8883	16	N/A		
AM16AL	18	GY	TXL	3572626C1	6099045C1	8883	16	N/A		
AN17AL	18	GY	TXL	3572626C1	6099045C1	8883	17	N/A		
AN17AL	18	GY	TXL	3572626C1	6099045C1	8883	17	N/A		
AM18AL	18	GY	TXL	3626031C1	6099045C1	8883	18	N/A		
AN18AL	18	GY	TXL	3626031C1	6099045C1	8883	18	N/A		
AM18AL	18	GY	TXL	3626031C1	6099045C1	8883	18	N/A		
AN18AL	18	GY	TXL	3626031C1	6099045C1	8883	18	N/A		
AL20AL	18	GY	TXL	3626031C1	6099045C1	8883	20	N/A		
AL20AL	18	GY	TXL	3626031C1	6099045C1	8883	20	N/A		
AL21AL	18	GY	GXL	3572626C1	6099045C1	8883	21	N/A		
AL21AL	18	GY	GXL	3572626C1	6099045C1	8883	21	N/A		
AL23AL	18	GY	TXL	3626031C1	6099045C1	8883	23	N/A		
A123AL	18	GY	TXL	3518961C1	6099045C1	8883	23	N/A		
A223AL	18	GY	TXL	3626031C1	6099045C1	8883	23	N/A		
AL24AL	18	GY	TXL	3626031C1	6099045C1	8883	24	N/A		
AL24AL	18	GY	TXL	3626031C1	6099045C1	8883	24	N/A		
A125AL	18	GY	GXL	3572626C1	6099045C1	8883	25	N/A		
QL5A	18	GN	TXL	1661208C1	1661200C1	8883	A	N/A		
QU5A	18	GN	TXL	1661208C1	1661200C1	8883	A	N/A		
QL5B	18	YL	TXL	1661208C1	1661200C1	8883	B	N/A		
QU5B	18	YL	TXL	1661208C1	1661200C1	8883	B	N/A		
QL11-AA	18	WH	TXL	1661208C1	1661200C1	8883	C	N/A		
QU11-G1	18	WH	TXL	1661208C1	1661200C1	8883	C	N/A		
QL13RB	18	RD	TXL	1661208C1	1661200C1	8883	D	N/A		
QU14RB	18	RD	TXL	1661208C1	1661200C1	8883	D	N/A		
AL20AL	18	GY	TXL	3626031C1	3838727C1	8885	1	N/A		
AL20AL	18	GY	TXL	3626031C1	3838727C1	8885	1	N/A		
AL9AL	18	GY	GXL	3626031C1	3838727C1	8885	2	N/A		
AL9AL	18	GY	GXL	3626031C1	3838727C1	8885	2	N/A		

Circuit Number	Gauge	Color	Insulation	Terminal / Splice Number	Connector Part number	Connector Number	Cavity	Seal/Sleeve	Lock 1	Lock 2
AL24AL	18	GY	TXL	3626031C1	3838727C1	8885	3	N/A		
AL24AL	18	GY	TXL	3626031C1	3838727C1	8885	3	N/A		
AL8AL	18	GY	GXL	3626031C1	3838727C1	8885	4	N/A		
AL8AL	18	GY	GXL	3626031C1	3838727C1	8885	4	N/A		
AL21AL	18	GY	GXL	3626031C1	3838727C1	8885	5	N/A		
AL21AL	18	GY	GXL	3626031C1	3838727C1	8885	5	N/A		
A123AL	18	GY	TXL	3518961C1	3838727C1	8885	6	N/A		
A125AL	18	GY	GXL	3518961C1	3838727C1	8885	7	N/A		
AL6AL	18	GY	GXL	3626031C1	3838727C1	8885	8	N/A		
AL6AL	18	GY	GXL	3626031C1	3838727C1	8885	8	N/A		
AL7AL	18	GY	GXL	3626031C1	3838727C1	8885	10	N/A		
AL7AL	18	GY	GXL	3626031C1	3838727C1	8885	10	N/A		
AL23AL	18	GY	TXL	3626031C1	3838727C1	8885	11	N/A		
A223AL	18	GY	TXL	3626031C1	3838727C1	8885	11	N/A		
AL5AL	18	GY	GXL	3626031C1	3838727C1	8885	12	N/A		
AL5AL	18	GY	GXL	3626031C1	3838727C1	8885	12	N/A		
AL1AL	12	GY	GXL	N/A	BLUNT_SL_V	8886	A	N/A		
AL1AL	12	GY	GXL	N/A	BLUNT_SL_V	8886	A	N/A		
AL2AL	14	GY	GXL	N/A	BLUNT_SL_V	8886	B	N/A		
AL2AL	14	GY	GXL	N/A	BLUNT_SL_V	8886	B	N/A		
AM18AL	18	GY	TXL	1667742C1	3525874C1	8887	A	3568570C1		
AM18AL	18	GY	TXL	1667742C1	3525874C1	8887	A	3568570C1		
AM12AL	18	GY	TXL	1667742C1	3525874C1	8887	B	3568570C1		
AM12AL	18	GY	TXL	1667742C1	3525874C1	8887	B	3568570C1		
AM13AL	18	GY	TXL	1667742C1	3525874C1	8887	C	3568570C1		
AM13AL	18	GY	TXL	1667742C1	3525874C1	8887	C	3568570C1		
AM15AL	18	GY	TXL	1667742C1	3525874C1	8887	E	3568570C1		
AM15AL	18	GY	TXL	1667742C1	3525874C1	8887	E	3568570C1		
AM16AL	18	GY	TXL	1667742C1	3525874C1	8887	F	3568570C1		
AM16AL	18	GY	TXL	1667742C1	3525874C1	8887	F	3568570C1		
AM10AL	18	GY	TXL	1667742C1	3525874C1	8887	G	3568570C1		
AM10AL	18	GY	TXL	1667742C1	3525874C1	8887	G	3568570C1		
AN15AL	18	GY	TXL	1661875C1	3525872C1	8888	A	3568570C1		
AN15AL	18	GY	TXL	1661875C1	3525872C1	8888	A	3568570C1		
AN11AL	18	GY	TXL	1661875C1	3525872C1	8888	B	3568570C1		
AN11AL	18	GY	TXL	1661875C1	3525872C1	8888	B	3568570C1		
AN18AL	18	GY	TXL	1661875C1	3525872C1	8888	C	3568570C1		
AN18AL	18	GY	TXL	1661875C1	3525872C1	8888	C	3568570C1		
AN12AL	18	GY	TXL	1661875C1	3525872C1	8888	D	3568570C1		
AN12AL	18	GY	TXL	1661875C1	3525872C1	8888	D	3568570C1		
AN14AL	18	GY	TXL	1661875C1	3525872C1	8888	E	3568570C1		
AN14AL	18	GY	TXL	1661875C1	3525872C1	8888	E	3568570C1		
AN10AL	18	GY	TXL	1661875C1	3525872C1	8888	F	3568570C1		
AN10AL	18	GY	TXL	1661875C1	3525872C1	8888	F	3568570C1		
AN17AL	18	GY	TXL	1661875C1	3525872C1	8888	G	3568570C1		
AN17AL	18	GY	TXL	1661875C1	3525872C1	8888	G	3568570C1		
QK11-GAN	14	WH	GXL	3613770C1	3613769C1	8995	1	N/A		
QS11-GAN	14	WH	GXL	3613770C1	3613769C1	8995	1	N/A		
QU11-GAN	14	WH	GXL	3613770C1	3613769C1	8995	1	N/A		
QZ11-GAP	14	WH	GXL	3613770C1	3613769C1	8995	1	N/A		
QL11-A	18	WH	TXL	3613771C1	3613769C1	8995	2	N/A		
QR11-G	18	WH	TXL	3613771C1	3613769C1	8995	2	N/A		
QS11-G	18	WH	TXL	3613771C1	3613769C1	8995	2	N/A		
QU11-G	18	WH	TXL	3613771C1	3613769C1	8995	2	N/A		

Circuit Number	Gauge	Color	Insulation	Terminal / Splice Number	Connector Part number	Connector Number	Cavity	Seal/Sleeve	Lock 1	Lock 2
QZ11-G	18	WH	TXL	3613771C1	3613769C1	8995	2	N/A		
QK11-GAA	18	WH	TXL	3613771C1	3613769C1	8995	3	N/A		
QS11-GAA	18	WH	TXL	3613771C1	3613769C1	8995	3	N/A		
QU11-GAA	18	WH	TXL	3613771C1	3613769C1	8995	3	N/A		
QZ11-GAA	18	WH	TXL	3613771C1	3613769C1	8995	3	N/A		
QK11-GBA	18	WH	TXL	3613771C1	3613769C1	8995	4	N/A		
QS11-GBA	18	WH	TXL	3613771C1	3613769C1	8995	4	N/A		
QU11-GBA	18	WH	TXL	3613771C1	3613769C1	8995	4	N/A		
QZ11-GBA	18	WH	TXL	3613771C1	3613769C1	8995	4	N/A		
QG11-GCA	18	WH	TXL	3613771C1	3613769C1	8995	5	N/A		
QM11-GCA	18	WH	TXL	3613771C1	3613769C1	8995	5	N/A		
QH11-GDA	18	WH	TXL	3613771C1	3613769C1	8995	6	N/A		
QN11-GDA	18	WH	TXL	3613771C1	3613769C1	8995	6	N/A		
QV11-GDA	18	WH	TXL	3613771C1	3613769C1	8995	6	N/A		
QX11-GDA	18	WH	TXL	3613771C1	3613769C1	8995	6	N/A		
QH11-GEA	18	WH	TXL	3613771C1	3613769C1	8995	7	N/A		
QQ11-GEA	18	WH	TXL	3613771C1	3613769C1	8995	7	N/A		
QT11-GEA	18	WH	TXL	3613771C1	3613769C1	8995	7	N/A		
QV11-GEA	18	WH	TXL	3613771C1	3613769C1	8995	7	N/A		
QX11-GEA	18	WH	TXL	3613771C1	3613769C1	8995	7	N/A		
QJ11-GFA	18	WH	TXL	3613771C1	3613769C1	8995	8	N/A		
QP11-GFA	18	WH	TXL	3613771C1	3613769C1	8995	8	N/A		
QV11-GFA	18	WH	TXL	3613771C1	3613769C1	8995	8	N/A		
QY11-GFA	18	WH	TXL	3613771C1	3613769C1	8995	8	N/A		
QK11-GGA	18	WH	TXL	3613771C1	3613769C1	8995	9	N/A		
QS11-GGA	18	WH	TXL	3613771C1	3613769C1	8995	9	N/A		
QU11-GGA	18	WH	TXL	3613771C1	3613769C1	8995	9	N/A		
QZ11-GGA	18	WH	TXL	3613771C1	3613769C1	8995	9	N/A		
QK11-GHA	18	WH	TXL	3613771C1	3613769C1	8995	10	N/A		
QS11-GHA	18	WH	TXL	3613771C1	3613769C1	8995	10	N/A		
QU11-GHA	18	WH	TXL	3613771C1	3613769C1	8995	10	N/A		
QZ11-GHA	18	WH	TXL	3613771C1	3613769C1	8995	10	N/A		
QG11-GJA	18	WH	TXL	3613771C1	3613769C1	8995	11	N/A		
QM11-GJA	18	WH	TXL	3613771C1	3613769C1	8995	11	N/A		
QH11-GKA	18	WH	TXL	3613771C1	3613769C1	8995	12	N/A		
QN11-GKA	18	WH	TXL	3613771C1	3613769C1	8995	12	N/A		
QV11-GKA	18	WH	TXL	3613771C1	3613769C1	8995	12	N/A		
QX11-GKA	18	WH	TXL	3613771C1	3613769C1	8995	12	N/A		
QH11-GLA	18	WH	TXL	3613771C1	3613769C1	8995	13	N/A		
QN11-GLA	18	WH	TXL	3613771C1	3613769C1	8995	13	N/A		
QV11-GLA	18	WH	TXL	3613771C1	3613769C1	8995	13	N/A		
QX11-GLA	18	WH	TXL	3613771C1	3613769C1	8995	13	N/A		
QJ11-GMA	18	WH	TXL	3613771C1	3613769C1	8995	14	N/A		
QP11-GMA	18	WH	TXL	3613771C1	3613769C1	8995	14	N/A		
QV11-GMA	18	WH	TXL	3613771C1	3613769C1	8995	14	N/A		
QY11-GMA	18	WH	TXL	3613771C1	3613769C1	8995	14	N/A		
QH11-GDA	18	WH	TXL	2018639C1	2018590C1	8997	1	N/A		
QN11-GDA	18	WH	TXL	2018639C1	2018590C1	8997	1	N/A		
QV11-GDA	18	WH	TXL	2018639C1	2018590C1	8997	1	N/A		
QX11-GDA	18	WH	TXL	2018639C1	2018590C1	8997	1	N/A		
QH11-GD	18	WH	TXL	2018639C1	2018590C1	8997	2	N/A		
QN11-GD	18	WH	TXL	2018639C1	2018590C1	8997	2	N/A		
QV11-GD	18	WH	TXL	2018639C1	2018590C1	8997	2	N/A		
QX11-GD2	18	WH	TXL	2018639C1	2018590C1	8997	2	N/A		

Circuit Number	Gauge	Color	Insulation	Terminal / Splice Number	Connector Part number	Connector Number	Cavity	Seal/Sleeve	Lock 1	Lock 2
QH11-GKA	18	WH	TXL	2018639C1	2018590C1	8997	3	N/A		
QN11-GKA	18	WH	TXL	2018639C1	2018590C1	8997	3	N/A		
QV11-GKA	18	WH	TXL	2018639C1	2018590C1	8997	3	N/A		
QX11-GKA	18	WH	TXL	2018639C1	2018590C1	8997	3	N/A		
QH11-GK	18	WH	TXL	2018639C1	2018590C1	8997	4	N/A		
QN11-GK	18	WH	TXL	2018639C1	2018590C1	8997	4	N/A		
QV11-GK	18	WH	TXL	2018639C1	2018590C1	8997	4	N/A		
QX11-GK2	18	WH	TXL	2018639C1	2018590C1	8997	4	N/A		
QH11-GEA	18	WH	TXL	2018639C1	2018590C1	8997	5	N/A		
QQ11-GEA	18	WH	TXL	2018639C1	2018590C1	8997	5	N/A		
QT11-GEA	18	WH	TXL	2018639C1	2018590C1	8997	5	N/A		
QV11-GEA	18	WH	TXL	2018639C1	2018590C1	8997	5	N/A		
QX11-GEA	18	WH	TXL	2018639C1	2018590C1	8997	5	N/A		
QH11-GE	18	WH	TXL	2018639C1	2018590C1	8997	6	N/A		
QQ11-GE	18	WH	TXL	2018639C1	2018590C1	8997	6	N/A		
QT11-GE	18	WH	TXL	2018639C1	2018590C1	8997	6	N/A		
QV11-GE	18	WH	TXL	2018639C1	2018590C1	8997	6	N/A		
QX11-GE2	18	WH	TXL	2018639C1	2018590C1	8997	6	N/A		
QH11-GLA	18	WH	TXL	2018639C1	2018590C1	8997	7	N/A		
QN11-GLA	18	WH	TXL	2018639C1	2018590C1	8997	7	N/A		
QV11-GLA	18	WH	TXL	2018639C1	2018590C1	8997	7	N/A		
QX11-GLA	18	WH	TXL	2018639C1	2018590C1	8997	7	N/A		
QH11-GL	18	WH	TXL	2018639C1	2018590C1	8997	8	N/A		
QQ11-GL	18	WH	TXL	2018639C1	2018590C1	8997	8	N/A		
QT11-GL	18	WH	TXL	2018639C1	2018590C1	8997	8	N/A		
QV11-GL	18	WH	TXL	2018639C1	2018590C1	8997	8	N/A		
QX11-GL2	18	WH	TXL	2018639C1	2018590C1	8997	8	N/A		
QJ11-GFA	18	WH	TXL	2018639C1	2018590C1	8997	9	N/A		
QP11-GFA	18	WH	TXL	2018639C1	2018590C1	8997	9	N/A		
QV11-GFA	18	WH	TXL	2018639C1	2018590C1	8997	9	N/A		
QY11-GFA	18	WH	TXL	2018639C1	2018590C1	8997	9	N/A		
QJ11-GF	18	WH	TXL	2018639C1	2018590C1	8997	10	N/A		
QP11-GF	18	WH	TXL	2018639C1	2018590C1	8997	10	N/A		
QV11-GF	18	WH	TXL	2018639C1	2018590C1	8997	10	N/A		
QY11-GF2	18	WH	TXL	2018639C1	2018590C1	8997	10	N/A		
QJ11-GMA	18	WH	TXL	2018639C1	2018590C1	8997	11	N/A		
QP11-GMA	18	WH	TXL	2018639C1	2018590C1	8997	11	N/A		
QV11-GMA	18	WH	TXL	2018639C1	2018590C1	8997	11	N/A		
QY11-GMA	18	WH	TXL	2018639C1	2018590C1	8997	11	N/A		
QJ11-GM	18	WH	TXL	2018639C1	2018590C1	8997	12	N/A		
QP11-GM	18	WH	TXL	2018639C1	2018590C1	8997	12	N/A		
QV11-GM	18	WH	TXL	2018639C1	2018590C1	8997	12	N/A		
QY11-GM2	18	WH	TXL	2018639C1	2018590C1	8997	12	N/A		
QS3D(+)	20	DKBL	TXL	3727971C1	3553404C1	8998	4	N/A		
QU3D(+)	20	DKBL	TXL	3727971C1	3553404C1	8998	4	N/A		
QZ3D(+)	20	DKBL	TXL	3727971C1	3553404C1	8998	4	N/A		
QS3D(-)	20	GY	TXL	3727971C1	3553404C1	8998	5	N/A		
QU3D(-)	20	GY	TXL	3727971C1	3553404C1	8998	5	N/A		
QZ3D(-)	20	GY	TXL	3727971C1	3553404C1	8998	5	N/A		
QS5B(+)	18	YL	TXL	3727971C1	3553404C1	8998	6	N/A		
QU5B(+)	18	YL	TXL	3727971C1	3553404C1	8998	6	N/A		
QZ5D2(+)	18	YL	TXL	3727971C1	3553404C1	8998	6	N/A		
QS5B(-)	18	GN	TXL	3727971C1	3553404C1	8998	7	N/A		
QU5B(-)	18	GN	TXL	3727971C1	3553404C1	8998	7	N/A		

Circuit Number	Gauge	Color	Insulation	Terminal / Splice Number	Connector Part number	Connector Number	Cavity	Seal/Sleeve	Lock 1	Lock 2
QZ5D2(-)	18	GN	TXL	3727971C1	3553404C1	8998	7	N/A		
QS13R	18	RD	TXL	3727971C1	3553404C1	8998	10	N/A		
QU14RC	18	RD	TXL	3727971C1	3553404C1	8998	10	N/A		
QZ13R2	18	RD	TXL	3727971C1	3553404C1	8998	10	N/A		
QS11-G	18	WH	TXL	3727971C1	3553404C1	8998	12	N/A		
QU11-G3	18	WH	TXL	3727971C1	3553404C1	8998	12	N/A		
QZ11-G	18	WH	TXL	3727971C1	3553404C1	8998	12	N/A		
QS11-GA	18	WH	TXL	3727971C1	3586750C1	8999	1	N/A		
QU11-GA1	18	WH	TXL	3727971C1	3586750C1	8999	1	N/A		
QZ11-GA3	18	WH	TXL	3727971C1	3586750C1	8999	1	N/A		
QS11-GB	18	WH	TXL	3727971C1	3586750C1	8999	2	N/A		
QU11-GB1	18	WH	TXL	3727971C1	3586750C1	8999	2	N/A		
QZ11-GB3	18	WH	TXL	3727971C1	3586750C1	8999	2	N/A		
QG11-GC	18	WH	TXL	3727971C1	3586750C1	8999	3	N/A		
QH11-GD	18	WH	TXL	3727971C1	3586750C1	8999	4	N/A		
QV11-GD1	18	WH	TXL	3727971C1	3586750C1	8999	4	N/A		
QX11-GD3	18	WH	TXL	3727971C1	3586750C1	8999	4	N/A		
QH11-GE	18	WH	TXL	3727971C1	3586750C1	8999	5	N/A		
QV11-GE1	18	WH	TXL	3727971C1	3586750C1	8999	5	N/A		
QX11-GE3	18	WH	TXL	3727971C1	3586750C1	8999	5	N/A		
QJ11-GF	18	WH	TXL	3727971C1	3586750C1	8999	6	N/A		
QV11-GF1	18	WH	TXL	3727971C1	3586750C1	8999	6	N/A		
QY11-GF3	18	WH	TXL	3727971C1	3586750C1	8999	6	N/A		
QJ11-GM	18	WH	TXL	3727971C1	3586750C1	8999	7	N/A		
QV11-GM1	18	WH	TXL	3727971C1	3586750C1	8999	7	N/A		
QY11-GM3	18	WH	TXL	3727971C1	3586750C1	8999	7	N/A		
QH11-GL	18	WH	TXL	3727971C1	3586750C1	8999	8	N/A		
QV11-GL1	18	WH	TXL	3727971C1	3586750C1	8999	8	N/A		
QX11-GL3	18	WH	TXL	3727971C1	3586750C1	8999	8	N/A		
QH11-GK	18	WH	TXL	3727971C1	3586750C1	8999	9	N/A		
QV11-GK1	18	WH	TXL	3727971C1	3586750C1	8999	9	N/A		
QX11-GK3	18	WH	TXL	3727971C1	3586750C1	8999	9	N/A		
QG11-GJ	18	WH	TXL	3727971C1	3586750C1	8999	10	N/A		
QS11-GH	18	WH	TXL	3727971C1	3586750C1	8999	11	N/A		
QU11-GH1	18	WH	TXL	3727971C1	3586750C1	8999	11	N/A		
QZ11-GH3	18	WH	TXL	3727971C1	3586750C1	8999	11	N/A		
QS11-GG	18	WH	TXL	3727971C1	3586750C1	8999	12	N/A		
QU11-GG1	18	WH	TXL	3727971C1	3586750C1	8999	12	N/A		
QZ11-GG3	18	WH	TXL	3727971C1	3586750C1	8999	12	N/A		
NP39A	18	GY	GXL	2033819C1	1671610C1	9001	A	1652325C1		
NP39-GF	18	WH	GXL	2033819C1	1671610C1	9001	B	1652325C1		
NN39A	18	GY	GXL	2033819C1	1671610C1	9002	A	1652325C1		
NN39A	18	GY	GXL	2033819C1	1671610C1	9002	A	1652325C1		
NN39-GF	18	WH	GXL	2033819C1	1671610C1	9002	B	1652325C1		
NN39-GF	18	WH	GXL	2033819C1	1671610C1	9002	B	1652325C1		
AH39A	18	GY	GXL	2033819C1	1671610C1	9003	A	1652325C1		
AH39A	18	GY	GXL	2033819C1	1671610C1	9003	A	1652325C1		
AH39-GF	18	WH	GXL	2033819C1	1671610C1	9003	B	1652325C1		
AH39-GF	18	WH	GXL	2033819C1	1671610C1	9003	B	1652325C1		
BZ39A	18	GY	GXL	2033819C1	1671610C1	9004	A	1652325C1		
BZ39A	18	GY	GXL	2033819C1	1671610C1	9004	A	1652325C1		
BZ39-G	18	WH	GXL	2033819C1	1671610C1	9004	B	1652325C1		
BZ39-GF	18	WH	GXL	2033819C1	1671610C1	9004	B	1652325C1		
BB39A	18	GY	GXL	2033819C1	1671610C1	9005	A	1652325C1		

Circuit Number	Gauge	Color	Insulation	Terminal / Splice Number	Connector Part number	Connector Number	Cavity	Seal/Sleeve	Lock 1	Lock 2
BB39-G	18	WH	GXL	2033819C1	1671610C1	9005	B	1652325C1		
RP36	18	TN	GXL	1661875C1	1661778C1	9100	A	1661872C1		
FA36A	18	GY	GXL	1661875C1	1661778C1	9100	A	1661872C1		
RP9D	18	GY	GXL	1661875C1	1661778C1	9100	B	1661872C1		
FA9-G	18	GY	GXL	1661875C1	1661778C1	9100	B	1661872C1		
FB36A	18	TN	GXL	1661875C1	1661778C1	9101	A	1661872C1		
FB9-G	18	GY	GXL	1661875C1	1661778C1	9101	B	1661872C1		
FC36A	18	TN	GXL	1661875C1	1661778C1	9102	A	1661872C1		
FC9-G	18	GY	GXL	1661875C1	1661778C1	9102	B	1661872C1		
ZL36B	18	TN	GXL	1661875C1	1661778C1	9103	A	1661872C1		
ZL9-GB	18	GY	GXL	1661875C1	1661778C1	9103	B	1661872C1		
CC19	16	GY	GXL	587577C1	587567C91	9109	A	1652325C1		
CC19-G	16	WH	TXL	587577C1	587567C91	9109	B	1652325C1		
ST22B	18	TN	GXL	3509874C1	3558026C1	9300	14	3509903C1		
ST22A	18	TN	GXL	3509874C1	3558026C1	9300	15	3509903C1		
ST98(+)	18	BK	TXL	3509874C1	3558026C1	9300	16	3532128C1		
ST98(-)	18	BK	TXL	3509874C1	3558026C1	9300	17	3532128C1		
ST3C(+)	18	DKBL	TXL	3509874C1	3558026C1	9300	18	3532128C1		
ST3C(-)	18	GY	TXL	3509874C1	3558026C1	9300	19	3532128C1		
[CJ19A]	16	-	GXL	3618273C1	3756499C1	9301	1	N/A		
[CK19B]	16	-	GXL	3618273C1	3756499C1	9301	1	N/A		
[CL19C]	16	-	GXL	3618273C1	3756499C1	9301	1	N/A		
SH19A	16	GY	GXL	3613770C1	3626436C1	9301	1	N/A		
RC94A	16	GY	GXL	1680205C1	3539777C1	9501	1	N/A		
TA94G	16	GY	GXL	1680205C1	3539777C1	9501	1	N/A		
UF94A	16	GY	GXL	1680205C1	3539777C1	9501	1	N/A		
RC94B	16	OR	GXL	1680205C1	3539777C1	9501	2	N/A		
TA94H	16	OR	GXL	1680205C1	3539777C1	9501	2	N/A		
UF94B	16	GY	GXL	1680205C1	3539777C1	9501	2	N/A		
RC94E	16	BK	TXL	2033819C1	1686834C1	9502	A	1652325C1		
TA94F	16	BK	TXL	2033819C1	1686834C1	9502	A	1652325C1		
UF94E	16	GY	GXL	2033819C1	1686834C1	9502	A	1652325C1		
RC94F	16	RD	TXL	2033819C1	1686834C1	9502	B	1652325C1		
TA94E	16	RD	TXL	2033819C1	1686834C1	9502	B	1652325C1		
UF94F	16	GY	GXL	2033819C1	1686834C1	9502	B	1652325C1		
RC94H	16	BN	TXL	2033819C1	1686834C1	9502	C	1652325C1		
TA94D	16	BN	TXL	2033819C1	1686834C1	9502	C	1652325C1		
UF94H	16	GY	GXL	2033819C1	1686834C1	9502	C	1652325C1		
RC94C	16	DKBL	GXL	1680205C1	3539777C1	9503	1	N/A		
TA94J	16	DKBL	GXL	1680205C1	3539777C1	9503	1	N/A		
UF94C	16	GY	GXL	1680205C1	3539777C1	9503	1	N/A		
RC94D	16	YL	GXL	1680205C1	3539777C1	9503	2	N/A		
TA94K	16	YL	GXL	1680205C1	3539777C1	9503	2	N/A		
UF94D	16	GY	GXL	1680205C1	3539777C1	9503	2	N/A		
RC94J	16	VT	TXL	2033819C1	1686834C1	9504	A	1652325C1		
TA94C	16	VT	TXL	2033819C1	1686834C1	9504	A	1652325C1		
UF94J	16	GY	GXL	2033819C1	1686834C1	9504	A	1652325C1		
RC94K	16	LTGN	TXL	2033819C1	1686834C1	9504	B	1652325C1		
TA94A	16	LTGN	TXL	2033819C1	1686834C1	9504	B	1652325C1		
UF94K	16	GY	GXL	2033819C1	1686834C1	9504	B	1652325C1		
RC94L	16	LTBL	TXL	2033819C1	1686834C1	9504	C	1652325C1		
TA94B	16	LTBL	TXL	2033819C1	1686834C1	9504	C	1652325C1		
UF94L	16	GY	GXL	2033819C1	1686834C1	9504	C	1652325C1		
AD94T	16	GY	GXL	2033819C1	1686834C1	9506	A	1652325C1		

Circuit Number	Gauge	Color	Insulation	Terminal / Splice Number	Connector Part number	Connector Number	Cavity	Seal/Sleeve	Lock 1	Lock 2
AD94U	16	GY	GXL	2033819C1	1686834C1	9506	B	1652325C1		
AD94V	16	GY	GXL	2033819C1	1686834C1	9506	C	1652325C1		
WA94SZC	16	GY	GXL	1667742C1	1667740C1	9510	A	1661872C1		
WA94SVC	16	GY	GXL	1667742C1	1667740C1	9510	B	1661872C1		
WA94SH	16	GY	GXL	1667742C1	1667740C1	9510	C	1661872C1		
WA94SJ	16	GY	GXL	3679224C1	3678796C1	9512	1	3601687C1		
WA94SK	16	GY	GXL	3679224C1	3678796C1	9512	2	3601687C1		
WA94SM	16	GY	GXL	2033819C1	1686834C1	9513	A	1652325C1		
WA94SN	16	GY	GXL	2033819C1	1686834C1	9513	B	1652325C1		
WA94SL	16	GY	GXL	2033819C1	1686834C1	9513	C	1652325C1		
WG94SAB	18	GY	GXL	3601686C1	3601685C1	9514	1	3601687C1		
WG94SBB	18	GY	GXL	3601686C1	3601685C1	9514	2	3601687C1		
WG94SCB	18	GY	GXL	3601686C1	3601685C1	9514	3	3601687C1		
WG94SDB	18	GY	GXL	3601686C1	3601685C1	9514	4	3601687C1		
TA94SS	16	BK	TXL	2033819C1	1686834C1	9520	A	1652325C1		
UF94BZ	16	BK	TXL	2033819C1	1686834C1	9520	A	1652325C1		
TA94TT	16	RD	TXL	2033819C1	1686834C1	9520	B	1652325C1		
UF94BY	16	RD	TXL	2033819C1	1686834C1	9520	B	1652325C1		
TA94UU	16	BN	TXL	2033819C1	1686834C1	9520	C	1652325C1		
UF94BP	16	BN	TXL	2033819C1	1686834C1	9520	C	1652325C1		
TA94M	16	GY	GXL	1680205C1	3539777C1	9521	1	N/A		
UF94BR	16	GY	GXL	1680205C1	3539777C1	9521	1	N/A		
TA94N	16	OR	GXL	1680205C1	3539777C1	9521	2	N/A		
UF94BQ	16	OR	GXL	1680205C1	3539777C1	9521	2	N/A		
TA94VV	16	VT	TXL	2033819C1	1686834C1	9522	A	1652325C1		
UF94BS	16	VT	TXL	2033819C1	1686834C1	9522	A	1652325C1		
TA94W	16	LTGN	TXL	2033819C1	1686834C1	9522	B	1652325C1		
UF94BT	16	LTGN	TXL	2033819C1	1686834C1	9522	B	1652325C1		
TA94X	16	LTBL	TXL	2033819C1	1686834C1	9522	C	1652325C1		
UF94BU	16	LTBL	TXL	2033819C1	1686834C1	9522	C	1652325C1		
TA94PP	16	DKBL	GXL	1680205C1	3539777C1	9523	1	N/A		
UF94BW	16	DKBL	GXL	1680205C1	3539777C1	9523	1	N/A		
TA94RR	16	YL	GXL	1680205C1	3539777C1	9523	2	N/A		
UF94BV	16	YL	GXL	1680205C1	3539777C1	9523	2	N/A		
AL94A	16	GY	GXL	3574288C1	3576268C1	9524	1	UNDEF		
TA94G	16	GY	GXL	3574288C1	3576268C1	9524	1	UNDEF		
WC94SAB	18	GY	GXL	3574289C1	3576268C1	9524	1	N/A		
WG94SAB	18	GY	GXL	3574289C1	3576268C1	9524	1	N/A		
ND94SAB	16	GY	GXL	3549416C1	3549412C1	9524	1	N/A		
TV94SAB	16	GY	GXL	3549416C1	3549412C1	9524	1	N/A		
AL94E	16	GY	GXL	3574285C1	3576268C1	9524	2	UNDEF		
TA94F	16	BK	TXL	3574285C1	3576268C1	9524	2	UNDEF		
WC94SCB	18	GY	GXL	2003343C1	3576268C1	9524	2	N/A		
WG94SCB	18	GY	GXL	2003343C1	3576268C1	9524	2	N/A		
ND94SCB	16	GY	GXL	3549417C1	3549412C1	9524	2	N/A		
TV94SCB	16	GY	GXL	3549417C1	3549412C1	9524	2	N/A		
AL94L	16	GY	GXL	3574285C1	3576268C1	9524	3	UNDEF		
TA94C	16	VT	TXL	3574285C1	3576268C1	9524	3	UNDEF		
WC94SBB	18	GY	GXL	2003343C1	3576268C1	9524	3	N/A		
WG94SBB	18	GY	GXL	2003343C1	3576268C1	9524	3	N/A		
ND94SBB	16	GY	GXL	3549417C1	3549412C1	9524	3	N/A		
TV94SBB	16	GY	GXL	3549417C1	3549412C1	9524	3	N/A		
AL94F	16	GY	GXL	3574288C1	3576268C1	9524	4	UNDEF		
TA94J	16	DKBL	GXL	3574288C1	3576268C1	9524	4	UNDEF		

Circuit Number	Gauge	Color	Insulation	Terminal / Splice Number	Connector Part number	Connector Number	Cavity	Seal/Sleeve	Lock 1	Lock 2
WC94SDB	18	GY	GXL	3574289C1	3576268C1	9524	4	N/A		
WG94SDB	18	GY	GXL	3574289C1	3576268C1	9524	4	N/A		
ND94SDB	16	GY	GXL	3549416C1	3549412C1	9524	4	N/A		
TV94SDB	16	GY	GXL	3549416C1	3549412C1	9524	4	N/A		
AL94D	16	GY	GXL	3574285C1	3576268C1	9524	5	UNDEF		
TA94E	16	RD	TXL	3574285C1	3576268C1	9524	5	UNDEF		
WA94SJ	16	GY	GXL	3574285C1	3576268C1	9524	5	N/A		
ND94SJ	16	GY	GXL	3549417C1	3549412C1	9524	5	N/A		
TV94SJ	16	GY	GXL	3549417C1	3549412C1	9524	5	N/A		
AL94K	16	GY	GXL	3574285C1	3576268C1	9524	6	UNDEF		
TA94A	16	LTGN	TXL	3574285C1	3576268C1	9524	6	UNDEF		
WA94SK	16	GY	GXL	3574285C1	3576268C1	9524	6	N/A		
ND94SK	16	GY	GXL	3549417C1	3549412C1	9524	6	N/A		
TV94SK	16	GY	GXL	3549417C1	3549412C1	9524	6	N/A		
AL94C	16	GY	GXL	3574285C1	3576268C1	9524	7	UNDEF		
TA94D	16	BN	TXL	3574285C1	3576268C1	9524	7	UNDEF		
WA94SM	16	GY	GXL	3574285C1	3576268C1	9524	7	N/A		
ND94SM	16	GY	GXL	3549417C1	3549412C1	9524	7	N/A		
TV94SM	16	GY	GXL	3549417C1	3549412C1	9524	7	N/A		
AL94H	16	GY	GXL	3574285C1	3576268C1	9524	8	UNDEF		
TA94B	16	LTBL	TXL	3574285C1	3576268C1	9524	8	UNDEF		
WA94SN	16	GY	GXL	3574285C1	3576268C1	9524	8	N/A		
ND94SN	16	GY	GXL	3549417C1	3549412C1	9524	8	N/A		
TV94SN	16	GY	GXL	3549417C1	3549412C1	9524	8	N/A		
AL94B	16	GY	GXL	3574288C1	3576268C1	9524	9	UNDEF		
TA94H	16	OR	GXL	3574288C1	3576268C1	9524	9	UNDEF		
WA94SL	16	GY	GXL	3574288C1	3576268C1	9524	9	N/A		
ND94SL	16	GY	GXL	3549416C1	3549412C1	9524	9	N/A		
TV94SL	16	GY	GXL	3549416C1	3549412C1	9524	9	N/A		
WA94SZC	16	GY	GXL	3574285C1	3576268C1	9524	10	N/A		
ND94SZC	16	GY	GXL	3549417C1	3549412C1	9524	10	N/A		
WA94SVC	16	GY	GXL	3574285C1	3576268C1	9524	11	N/A		
ND94SVC	16	GY	GXL	3549417C1	3549412C1	9524	11	N/A		
AL94G	16	GY	GXL	3574288C1	3576268C1	9524	12	UNDEF		
TA94K	16	YL	GXL	3574288C1	3576268C1	9524	12	UNDEF		
WA94SH	16	GY	GXL	3574288C1	3576268C1	9524	12	N/A		
ND94SH	16	GY	GXL	3549416C1	3549412C1	9524	12	N/A		
AL94R	16	GY	GXL	1680205C1	3539777C1	9540	1	N/A		
UG94R	16	GY	GXL	1680205C1	3539777C1	9540	1	N/A		
AL94S	16	OR	GXL	1680205C1	3539777C1	9540	2	N/A		
UG94S	16	OR	GXL	1680205C1	3539777C1	9540	2	N/A		
AL94M	16	BK	TXL	2033819C1	1686834C1	9541	A	1652325C1		
UG94M	16	BK	TXL	2033819C1	1686834C1	9541	A	1652325C1		
AL94N	16	RD	TXL	2033819C1	1686834C1	9541	B	1652325C1		
UG94N	16	RD	TXL	2033819C1	1686834C1	9541	B	1652325C1		
AL94P	16	BN	TXL	2033819C1	1686834C1	9541	C	1652325C1		
UG94P	16	BN	TXL	2033819C1	1686834C1	9541	C	1652325C1		
AL94W	16	DKBL	GXL	1680205C1	3539777C1	9542	1	N/A		
UG94W	16	DKBL	GXL	1680205C1	3539777C1	9542	1	N/A		
AL94X	16	YL	GXL	1680205C1	3539777C1	9542	2	N/A		
UG94X	16	YL	GXL	1680205C1	3539777C1	9542	2	N/A		
AL94T	16	VT	TXL	2033819C1	1686834C1	9543	A	1652325C1		
UG94T	16	VT	TXL	2033819C1	1686834C1	9543	A	1652325C1		
AL94U	16	LTGN	TXL	2033819C1	1686834C1	9543	B	1652325C1		

Circuit Number	Gauge	Color	Insulation	Terminal / Splice Number	Connector Part number	Connector Number	Cavity	Seal/Sleeve	Lock 1	Lock 2
UG94U	16	LTGN	TXL	2033819C1	1686834C1	9543	B	1652325C1		
AL94V	16	LTBL	TXL	2033819C1	1686834C1	9543	C	1652325C1		
UG94V	16	LTBL	TXL	2033819C1	1686834C1	9543	C	1652325C1		
AL94E	16	GY	GXL	2033819C1	1686834C1	9548	A	1652325C1		
UG94E	16	GY	GXL	2033819C1	1686834C1	9548	A	1652325C1		
US94E	16	GY	GXL	2033819C1	1686834C1	9548	A	1652325C1		
AL94D	16	GY	GXL	2033819C1	1686834C1	9548	B	1652325C1		
UG94D	16	GY	GXL	2033819C1	1686834C1	9548	B	1652325C1		
US94D	16	GY	GXL	2033819C1	1686834C1	9548	B	1652325C1		
AL94C	16	GY	GXL	2033819C1	1686834C1	9548	C	1652325C1		
UG94C	16	GY	GXL	2033819C1	1686834C1	9548	C	1652325C1		
US94C	16	GY	GXL	2033819C1	1686834C1	9548	C	1652325C1		
AL94A	16	GY	GXL	1680205C1	3539777C1	9549	1	N/A		
UG94A	16	GY	GXL	1680205C1	3539777C1	9549	1	N/A		
AL94B	16	GY	GXL	1680205C1	3539777C1	9549	2	N/A		
UG94B	16	GY	GXL	1680205C1	3539777C1	9549	2	N/A		
AL94L	16	GY	GXL	2033819C1	1686834C1	9550	A	1652325C1		
UG94L	16	GY	GXL	2033819C1	1686834C1	9550	A	1652325C1		
AL94K	16	GY	GXL	2033819C1	1686834C1	9550	B	1652325C1		
UG94K	16	GY	GXL	2033819C1	1686834C1	9550	B	1652325C1		
AL94H	16	GY	GXL	2033819C1	1686834C1	9550	C	1652325C1		
UG94H	16	GY	GXL	2033819C1	1686834C1	9550	C	1652325C1		
AL94F	16	GY	GXL	1680205C1	3539777C1	9551	1	N/A		
UG94F	16	GY	GXL	1680205C1	3539777C1	9551	1	N/A		
UV94F	16	GY	GXL	1680205C1	3539777C1	9551	1	N/A		
AL94G	16	GY	GXL	1680205C1	3539777C1	9551	2	N/A		
UG94G	16	GY	GXL	1680205C1	3539777C1	9551	2	N/A		
UV94G	16	GY	GXL	1680205C1	3539777C1	9551	2	N/A		
UL94M	16	BK	TXL	2033819C1	1686834C1	9556	A	1652325C1		
UL94N	16	RD	TXL	2033819C1	1686834C1	9556	B	1652325C1		
UL94P	16	BN	TXL	2033819C1	1686834C1	9556	C	1652325C1		
UL94R	16	GY	GXL	1680205C1	3539777C1	9557	1	N/A		
UL94S	16	OR	GXL	1680205C1	3539777C1	9557	2	N/A		
UL94E	16	GY	GXL	2033819C1	1686834C1	9558	A	1652325C1		
UL94D	16	GY	GXL	2033819C1	1686834C1	9558	B	1652325C1		
UL94C	16	GY	GXL	2033819C1	1686834C1	9558	C	1652325C1		
UL94A	16	GY	GXL	1680205C1	3539777C1	9559	1	N/A		
UL94B	16	GY	GXL	1680205C1	3539777C1	9559	2	N/A		
UL94F	16	GY	GXL	1680205C1	3539777C1	9560	1	N/A		
UL94G	16	GY	GXL	1680205C1	3539777C1	9560	2	N/A		
UL94L	16	GY	GXL	2033819C1	1686834C1	9561	A	1652325C1		
UL94K	16	GY	GXL	2033819C1	1686834C1	9561	B	1652325C1		
UL94H	16	GY	GXL	2033819C1	1686834C1	9561	C	1652325C1		
UL94T	16	VT	TXL	2033819C1	1686834C1	9562	A	1652325C1		
UL94U	16	LTGN	TXL	2033819C1	1686834C1	9562	B	1652325C1		
UL94V	16	LTBL	TXL	2033819C1	1686834C1	9562	C	1652325C1		
UL94W	16	DKBL	GXL	1680205C1	3539777C1	9563	1	N/A		
UL94X	16	YL	GXL	1680205C1	3539777C1	9563	2	N/A		
NC70T	10	RD	GXL	1667737C1	1667733C1	9715	A	1667735C1		
NE70F	10	RD	GXL	1667737C1	1667733C1	9715	A	1667735C1		
VE70F	10	RD	GXL	1667737C1	1667733C1	9715	A	1667735C1		
NC70T	10	RD	GXL	1667737C1	1667733C1	9715	A	1667735C1		
NC68T	10	BN	GXL	1667737C1	1667733C1	9715	B	1667735C1		
NE68F	10	BN	GXL	1667737C1	1667733C1	9715	B	1667735C1		

Circuit Number	Gauge	Color	Insulation	Terminal / Splice Number	Connector Part number	Connector Number	Cavity	Seal/Sleeve	Lock 1	Lock 2
VE68F	10	BN	GXL	1667737C1	1667733C1	9715	B	1667735C1		
NC68T	10	BN	GXL	1667737C1	1667733C1	9715	B	1667735C1		
NC94T	10	GY	GXL	1667737C1	1667733C1	9715	C	1667735C1		
NE94F	10	GY	GXL	1667737C1	1667733C1	9715	C	1667735C1		
VE94F	10	GY	GXL	1667737C1	1667733C1	9715	C	1667735C1		
NC94T	10	GY	GXL	1667737C1	1667733C1	9715	C	1667735C1		
NC54T	10	BN	GXL	2025425C1	1667732C1	9716	A	1667735C1		
NE54F	10	BN	GXL	2025425C1	1667732C1	9716	A	1667735C1		
VE54F	10	BN	GXL	2025425C1	1667732C1	9716	A	1667735C1		
NC54T	10	BN	GXL	2025425C1	1667732C1	9716	A	1667735C1		
NC56T	10	YL	GXL	2025425C1	1667732C1	9716	B	1667735C1		
NE56F	10	YL	GXL	2025425C1	1667732C1	9716	B	1667735C1		
VE56F	10	YL	GXL	2025425C1	1667732C1	9716	B	1667735C1		
NC56T	10	YL	GXL	2025425C1	1667732C1	9716	B	1667735C1		
NC57T	10	LTGN	GXL	2025425C1	1667732C1	9716	C	1667735C1		
NE57F	10	LTGN	GXL	2025425C1	1667732C1	9716	C	1667735C1		
VE57F	10	LTGN	GXL	2025425C1	1667732C1	9716	C	1667735C1		
NC57T	10	LTGN	GXL	2025425C1	1667732C1	9716	C	1667735C1		
NC10D	8	WH	GXL	3700154C1	3700151C1	9717	A	3537135C1		
NE10F	8	WH	GXL	3700154C1	3700151C1	9717	A	3537135C1		
VE10F	8	WH	GXL	3700154C1	3700151C1	9717	A	3537135C1		
NC10D-G	8	WH	GXL	3700154C1	3700151C1	9717	A	3537135C1		
SW72EB	10	LTGN	TXL	1687848C1	1669834C1	9722	A	589390C1		
UA72EB	10	LTGN	TXL	1687848C1	1669834C1	9722	A	589390C1		
SZ72	10	OR	TXL	1687847C1	1664531C1	9722	A	589390C1		
SZ72	10	OR	TXL	1687847C1	1664531C1	9722	A	589390C1		
RY14LSB	18	RD	GXL	N/A	BLUNT_SL_V	9724	A	N/A		
RG10	8	WH	GXL	N/A	BLUNT_SL_V	9724	A	N/A		
RY14LSA	18	BK	GXL	N/A	BLUNT_SL_V	9724	B	N/A		
RG58	10	BN	GXL	N/A	BLUNT_SL_V	9724	B	N/A		
RG56	10	YL	GXL	N/A	BLUNT_SL_V	9724	C	N/A		
RG57	10	LTGN	GXL	N/A	BLUNT_SL_V	9724	D	N/A		
RG70	10	RD	GXL	N/A	BLUNT_SL_V	9724	E	N/A		
RG68	10	BN	GXL	N/A	BLUNT_SL_V	9724	F	N/A		
RG94	10	GY	GXL	N/A	BLUNT_SL_V	9724	G	N/A		
SW72EB	10	LTGN	TXL	N/A	BLUNT_SL_V	9724	H	N/A		
TU58	14	BK	GXL	1667736C1	1667732C1	9726	A	1671603C1		
TU56	16	YL	GXL	1667736C1	1667732C1	9726	B	1664232C1		
TU57	16	LTGN	GXL	1667736C1	1667732C1	9726	C	1664232C1		
TU71	16	OR	GXL	2010349C1	1667733C1	9727	A	1664232C1		
TU68	14	BN	GXL	1667738C1	1667733C1	9727	B	1671603C1		
TU12	14	LTBL	GXL	1667738C1	1667733C1	9727	C	1671603C1		
VD11-G	8	WH	GXL	3517818C1	3517817C1	9728	A	N/A		
TU68	14	BN	GXL	2033912C1	2039312C91	9729	A	589391C1		
TU56	16	YL	GXL	2033911C1	2039312C91	9729	B	1652325C1		
TU57	16	LTGN	GXL	2033911C1	2039312C91	9729	C	1652325C1		
TU58	14	BK	GXL	2033912C1	2039312C91	9729	D	589391C1		
TU71	16	OR	GXL	2033911C1	2039312C91	9729	E	1652325C1		
TU12	14	LTBL	GXL	2033912C1	2039312C91	9729	F	589391C1		
VD11-GA	10	WH	TXL	1687848C1	2039312C91	9729	G	589390C1		
VE11-GA	10	WH	TXL	1687848C1	2039312C91	9729	G	589390C1		
NG59A-G	14	WH	GXL	2033816C1	1661375C2	9736	A	589391C1		
NG59A-G	14	WH	GXL	2033816C1	1661375C2	9736	A	589391C1		
NG59B	18	GY	GXL	2033819C1	1661375C2	9736	B	1652325C1		

Circuit Number	Gauge	Color	Insulation	Terminal / Splice Number	Connector Part number	Connector Number	Cavity	Seal/Sleeve	Lock 1	Lock 2
NG59B	18	GY	GXL	2033819C1	1661375C2	9736	B	1652325C1		
NG59C	18	GY	GXL	2033819C1	1661375C2	9736	C	1652325C1		
NG59C	18	GY	GXL	2033819C1	1661375C2	9736	C	1652325C1		
NG59D	18	GY	GXL	2033819C1	1661375C2	9736	D	1652325C1		
NG59D	18	GY	GXL	2033819C1	1661375C2	9736	D	1652325C1		
NG59E	18	GY	GXL	2033819C1	1661375C2	9736	E	1652325C1		
NG59E	18	GY	GXL	2033819C1	1661375C2	9736	E	1652325C1		
TV59B	18	GY	GXL	1661875C1	3522068C1	9737	A	1661872C1		
NM59B	18	GY	GXL	1661875C1	3522068C1	9737	A	1661872C1		
NM59A-G	16	WH	GXL	1661875C1	3522068C1	9737	B	1661872C1		
NM59A-G	16	WH	GXL	1661875C1	3522068C1	9737	B	1661872C1		
VE28RW	18	TN	GXL	N/A	BLUNT_SL_V	9738	A	N/A		
VE10GC	8	WH	GXL	N/A	BLUNT_SL_V	9738	B	N/A		
VE10GD	8	WH	GXL	N/A	BLUNT_SL_V	9738	B	N/A		
VE71BZ	16	OR	GXL	N/A	BLUNT_SL_V	9738	B	N/A		
VE72RW	10	OR	GXL	N/A	BLUNT_SL_V	9738	B	N/A		
VE94Z	10	GY	GXL	N/A	BLUNT_SL_V	9738	B	N/A		
NU59F-G	14	WH	GXL	2033816C1	1661375C2	9740	A	589391C1		
NU59G	18	GY	GXL	2033819C1	1661375C2	9740	B	1652325C1		
NU59H	18	GY	GXL	2033819C1	1661375C2	9740	C	1652325C1		
NU59J	18	GY	GXL	2033819C1	1661375C2	9740	D	1652325C1		
NU59K	18	GY	GXL	2033819C1	1661375C2	9740	E	1652325C1		
NY87MB	16	GY	GXL	3561584C1	3536864C1	9745	1	3536868C1		
NY87DB	18	GY	GXL	3561584C1	3536864C1	9745	2	3536868C1		
PP87EA	18	GY	TXL	3554322C1	3554317C1	9746	1	3554318C1		
PP87H	18	GY	TXL	3554322C1	3554317C1	9746	2	3554318C1		
ML47A	16	GY	GXL	1667742C1	3543888C1	9750	A	1661872C1		
MM47C	16	GY	GXL	1667742C1	3543888C1	9750	A	1661872C1		
TE47A	16	GY	GXL	1667742C1	3543888C1	9750	A	1661872C1		
TR47A	16	GY	GXL	1667742C1	3543888C1	9750	A	1661872C1		
ML47A	16	GY	GXL	1667742C1	3543888C1	9750	A	1661872C1		
MM47C	16	GY	GXL	1667742C1	3543888C1	9750	A	1661872C1		
TR47A	16	GY	GXL	1667742C1	3543888C1	9750	A	1661872C1		
ML47B	16	GY	GXL	1667742C1	3543888C1	9750	B	1661872C1		
MM47D	16	GY	GXL	1667742C1	3543888C1	9750	B	1661872C1		
TE47B	16	GY	GXL	1667742C1	3543888C1	9750	B	1661872C1		
TR47B	16	GY	GXL	1667742C1	3543888C1	9750	B	1661872C1		
ML47B	16	GY	GXL	1667742C1	3543888C1	9750	B	1661872C1		
MM47D	16	GY	GXL	1667742C1	3543888C1	9750	B	1661872C1		
TR47B	16	GY	GXL	1667742C1	3543888C1	9750	B	1661872C1		
ML42	16	GY	GXL	587577C1	587567C91	9754	A	1652325C1		
ML42	16	GY	GXL	587577C1	587567C91	9754	A	1652325C1		
WJ42-G	18	WH	GXL	587578C1	587567C91	9754	B	1652325C1		
WK42-G	18	WH	GXL	587578C1	587567C91	9754	B	1652325C1		
ML42-G	18	WH	GXL	587578C1	587567C91	9754	B	1652325C1		
ML47A	16	GY	GXL	2036586C1	2036583C1	9755	A	N/A		
ML47A	16	GY	GXL	2036586C1	2036583C1	9755	A	N/A		
ML47B	16	GY	GXL	2036586C1	2036583C1	9755	B	N/A		
ML47B	16	GY	GXL	2036586C1	2036583C1	9755	B	N/A		
MM47C	16	GY	GXL	2036586C1	2036583C1	9756	A	N/A		
MM47C	16	GY	GXL	2036586C1	2036583C1	9756	A	N/A		
MM47D	16	GY	GXL	2036586C1	2036583C1	9756	B	N/A		
MM47D	16	GY	GXL	2036586C1	2036583C1	9756	B	N/A		
RR59EF	18	GY	GXL	1661875C1	1661778C1	9762	A	1661872C1		

Circuit Number	Gauge	Color	Insulation	Terminal / Splice Number	Connector Part number	Connector Number	Cavity	Seal/Sleeve	Lock 1	Lock 2
RS59EF	18	GY	GXL	1661875C1	1661778C1	9762	A	1661872C1		
UC59EF	18	GY	GXL	1661875C1	1661778C1	9762	A	1661872C1		
UC59EF	18	GY	GXL	1661875C1	1661778C1	9762	A	1661872C1		
MV59-GC	18	WH	GXL	1661875C1	1661778C1	9762	B	1661872C1		
MX59-GC	18	WH	GXL	1661875C1	1661778C1	9762	B	1661872C1		
RN59-GA	18	WH	GXL	1661875C1	1661778C1	9762	B	1661872C1		
UC59-GA	18	WH	GXL	1661875C1	1661778C1	9762	B	1661872C1		
UC59-GA	18	WH	GXL	1661875C1	1661778C1	9762	B	1661872C1		
RR59EC	18	GY	GXL	1661875C1	1661778C1	9763	A	1661872C1		
UD59EC	18	GY	GXL	1661875C1	1661778C1	9763	A	1661872C1		
MX59-GB	18	WH	GXL	1661875C1	1661778C1	9763	B	1661872C1		
TM59-GB	18	WH	GXL	1661875C1	1661778C1	9763	B	1661872C1		
UD59-GB	18	WH	GXL	1661875C1	1661778C1	9763	B	1661872C1		
TM59ED	18	GY	GXL	1661875C1	1661778C1	9764	A	1661872C1		
TM59-GD	18	WH	GXL	1661875C1	1661778C1	9764	B	1661872C1		
SZ65	16	OR	GXL	1667742C1	3543888C1	9766	A	1661872C1		
UA65	16	OR	GXL	1661875C1	1661778C1	9766	A	1661872C1		
SZ65-G	16	WH	GXL	1667742C1	3543888C1	9766	B	1661872C1		
YK65-G	16	WH	GXL	1661875C1	1661778C1	9766	B	1661872C1		
YN65-G	16	WH	GXL	1661875C1	1661778C1	9766	B	1661872C1		
YT65-G	16	WH	GXL	1661875C1	1661778C1	9766	B	1661872C1		
SZ65	16	OR	GXL	1661875C1	1661778C1	9767	A	1661872C1		
SZ65-G	16	WH	GXL	1661875C1	1661778C1	9767	B	1661872C1		
SW59CA	16	GY	TXL	587575C1	587567C91	9778	A	1652325C1		
SW59CA	16	GY	TXL	587575C1	587567C91	9778	A	1652325C1		
SW104CA	16	DKBL	TXL	587575C1	587567C91	9778	B	1652325C1		
SW104CA	16	DKBL	TXL	587575C1	587567C91	9778	B	1652325C1		
EV12-G	18	WH	GXL	3863609C1		9780	1	2644038R1		
EV12-G	18	WH	GXL	3863609C1		9780	1	2644038R1		
AF71	14	OR	GXL	3559037C1	3558022C1	9800	1	3575783C1		
RB71	14	OR	GXL	3559037C1	3558022C1	9800	1	3575783C1		
RK71A	14	OR	GXL	3559035C1	3558026C1	9800	1	3575783C1		
RK71A	14	OR	GXL	3559035C1	3558026C1	9800	1	3575783C1		
AF56	14	OR	GXL	3559037C1	3558022C1	9800	2	3575783C1		
RB56	14	OR	GXL	3559037C1	3558022C1	9800	2	3575783C1		
RK56	14	OR	GXL	3559035C1	3558026C1	9800	2	3575783C1		
RK56	14	OR	GXL	3559035C1	3558026C1	9800	2	3575783C1		
AF57	14	OR	GXL	3559037C1	3558022C1	9800	3	3575783C1		
RB57	14	OR	GXL	3559037C1	3558022C1	9800	3	3575783C1		
RK57	14	OR	GXL	3559035C1	3558026C1	9800	3	3575783C1		
RK57	14	OR	GXL	3559035C1	3558026C1	9800	3	3575783C1		
AF68	14	BN	GXL	3559037C1	3558022C1	9800	4	3575783C1		
RB68	14	BN	GXL	3559037C1	3558022C1	9800	4	3575783C1		
RK68	14	BN	GXL	3559035C1	3558026C1	9800	4	3575783C1		
RK68	14	BN	GXL	3559035C1	3558026C1	9800	4	3575783C1		
RM32A	18	TN	GXL	3559036C1	3558022C1	9800	5	3509903C1		
RP36	18	TN	GXL	3559036C1	3558022C1	9800	5	3509903C1		
MG32A	18	TN	GXL	3509874C1	3558026C1	9800	5	3509903C1		
AF70	14	OR	GXL	3559037C1	3558022C1	9800	6	3575783C1		
RL32	18	TN	GXL	3559036C1	3558022C1	9800	6	3509903C1		
RM32	18	TN	GXL	3559036C1	3558022C1	9800	6	3509903C1		
UC32	18	TN	GXL	3559036C1	3558022C1	9800	6	3509903C1		
RH32	18	TN	GXL	3509874C1	3558026C1	9800	6	3509903C1		
RH32	18	TN	GXL	3509874C1	3558026C1	9800	6	3509903C1		

Circuit Number	Gauge	Color	Insulation	Terminal / Splice Number	Connector Part number	Connector Number	Cavity	Seal/Sleeve	Lock 1	Lock 2
AJ49	18	WH	GXL	3559036C1	3558022C1	9800	7	3509903C1		
RO49	18	GY	GXL	3559036C1	3558022C1	9800	7	3509903C1		
MJ49	18	GY	GXL	3509874C1	3558026C1	9800	7	3509903C1		
AJ49A	18	WH	GXL	3559036C1	3558022C1	9800	8	3509903C1		
AP49A	18	WH	GXL	3559036C1	3558022C1	9800	8	3509903C1		
RN49A	18	GY	GXL	3559036C1	3558022C1	9800	8	3509903C1		
RO49A	18	GY	GXL	3559036C1	3558022C1	9800	8	3509903C1		
RL49A	18	GY	GXL	3509874C1	3558026C1	9800	8	3509903C1		
RL49A	18	GY	GXL	3509874C1	3558026C1	9800	8	3509903C1		
AJ10-GB	18	WH	GXL	3559036C1	3558022C1	9800	9	3509903C1		
AP49-GA	18	WH	GXL	3559036C1	3558022C1	9800	9	3509903C1		
RN49-GA	18	WH	GXL	3559036C1	3558022C1	9800	9	3509903C1		
RO10-GB	18	WH	GXL	3559036C1	3558022C1	9800	9	3509903C1		
RL49-G	18	WH	GXL	3509874C1	3558026C1	9800	9	3509903C1		
RL49-G	18	WH	GXL	3509874C1	3558026C1	9800	9	3509903C1		
RP9D	18	GY	GXL	3559036C1	3558022C1	9800	10	3509903C1		
RL9C	18	GY	GXL	3559036C1	3558022C1	9800	11	3509903C1		
RM9B	18	GY	GXL	3559036C1	3558022C1	9800	11	3509903C1		
UC9C	18	GY	GXL	3559036C1	3558022C1	9800	11	3509903C1		
MF9F	18	GY	GXL	3509874C1	3558026C1	9800	11	3509903C1		
MG9H	18	GY	GXL	3509874C1	3558026C1	9800	11	3509903C1		
RH9F	18	GY	GXL	3509874C1	3558026C1	9800	11	3509903C1		
AF11-GTL	12	WH	TXL	3559037C1	3558022C1	9800	12	3575783C1		
RB10-G	12	WH	TXL	3559037C1	3558022C1	9800	12	3575783C1		
SL10-G	12	WH	TXL	3559035C1	3558026C1	9800	12	3575783C1		
SL10-G	12	WH	TXL	3559035C1	3558026C1	9800	12	3575783C1		
AL94R	16	GY	GXL	3559037C1	3558022C1	9800	13	3509903C1		
RC94A	16	GY	GXL	3559037C1	3558022C1	9800	13	3509903C1		
TA94M	16	GY	GXL	3559037C1	3558022C1	9800	13	3509903C1		
UF94BR	16	GY	GXL	3559037C1	3558022C1	9800	13	3509903C1		
UG94R	16	GY	GXL	3559037C1	3558022C1	9800	13	3509903C1		
UJ94WL	18	GY	TXL	3559036C1	3558022C1	9800	13	3532128C1		
UL94R	16	GY	GXL	3559037C1	3558022C1	9800	13	3509903C1		
UP94R	16	GY	GXL	3559037C1	3558022C1	9800	13	3509903C1		
US94R	16	GY	GXL	3559037C1	3558022C1	9800	13	3509903C1		
[RE94M]	18	-	GXL	3559036C1	3558022C1	9800	13	3509903C1		
[RV94WL]	18	-	GXL	3559036C1	3558022C1	9800	13	3509903C1		
[UH94J]	18	-	GXL	3559036C1	3558022C1	9800	13	3509903C1		
[UM94J]	18	-	GXL	3559036C1	3558022C1	9800	13	3509903C1		
MD94BE	16	GY	GXL	3559035C1	3558026C1	9800	13	3509903C1		
ZU94WL	16	GY	TXL	3559035C1	3558026C1	9800	13	3509903C1		
MD94BE	16	GY	GXL	3559035C1	3558026C1	9800	13	3509903C1		
ZU94WL	16	GY	TXL	3559035C1	3558026C1	9800	13	3509903C1		
AL94S	16	OR	GXL	3559037C1	3558022C1	9800	14	3509903C1		
RC94B	16	OR	GXL	3559037C1	3558022C1	9800	14	3509903C1		
TA94N	16	OR	GXL	3559037C1	3558022C1	9800	14	3509903C1		
UF94BQ	16	OR	GXL	3559037C1	3558022C1	9800	14	3509903C1		
UG94S	16	OR	GXL	3559037C1	3558022C1	9800	14	3509903C1		
UJ94WM	18	GY	TXL	3559036C1	3558022C1	9800	14	3532128C1		
UL94S	16	OR	GXL	3559037C1	3558022C1	9800	14	3509903C1		
UP94S	16	OR	GXL	3559037C1	3558022C1	9800	14	3509903C1		
US94S	16	OR	GXL	3559037C1	3558022C1	9800	14	3509903C1		
[RE94N]	18	-	GXL	3559036C1	3558022C1	9800	14	3509903C1		
[RV94WM]	18	-	GXL	3559036C1	3558022C1	9800	14	3509903C1		

Circuit Number	Gauge	Color	Insulation	Terminal / Splice Number	Connector Part number	Connector Number	Cavity	Seal/Sleeve	Lock 1	Lock 2
[UH94K]	18	-	GXL	3559036C1	3558022C1	9800	14	3509903C1		
[UM94K]	18	-	GXL	3559036C1	3558022C1	9800	14	3509903C1		
MD94BD	16	GY	GXL	3559035C1	3558026C1	9800	14	3509903C1		
ZU94WM	16	GY	TXL	3559035C1	3558026C1	9800	14	3509903C1		
MD94BD	16	GY	GXL	3559035C1	3558026C1	9800	14	3509903C1		
ZU94WM	16	GY	TXL	3559035C1	3558026C1	9800	14	3509903C1		
AL94W	16	DKBL	GXL	3559037C1	3558022C1	9800	15	3509903C1		
RC94C	16	DKBL	GXL	3559037C1	3558022C1	9800	15	3509903C1		
TA94PP	16	DKBL	GXL	3559037C1	3558022C1	9800	15	3509903C1		
UF94BW	16	DKBL	GXL	3559037C1	3558022C1	9800	15	3509903C1		
UG94W	16	DKBL	GXL	3559037C1	3558022C1	9800	15	3509903C1		
UJ94WS	18	GY	TXL	3559036C1	3558022C1	9800	15	3532128C1		
UL94W	16	DKBL	GXL	3559037C1	3558022C1	9800	15	3509903C1		
UP94W	16	DKBL	GXL	3559037C1	3558022C1	9800	15	3509903C1		
UV94W	16	DKBL	GXL	3559037C1	3558022C1	9800	15	3509903C1		
[RE94P]	18	-	GXL	3559036C1	3558022C1	9800	15	3509903C1		
[RV94WS]	18	-	GXL	3559036C1	3558022C1	9800	15	3509903C1		
[UH94T]	18	-	GXL	3559036C1	3558022C1	9800	15	3509903C1		
[UM94T]	18	-	GXL	3559036C1	3558022C1	9800	15	3509903C1		
MD94BH	16	GY	TXL	3559035C1	3558026C1	9800	15	3509903C1		
ZU94WS	16	GY	TXL	3559035C1	3558026C1	9800	15	3509903C1		
MD94BH	16	GY	TXL	3559035C1	3558026C1	9800	15	3509903C1		
ZU94WS	16	GY	TXL	3559035C1	3558026C1	9800	15	3509903C1		
AL94X	16	YL	GXL	3559037C1	3558022C1	9800	16	3509903C1		
RC94D	16	YL	GXL	3559037C1	3558022C1	9800	16	3509903C1		
TA94RR	16	YL	GXL	3559037C1	3558022C1	9800	16	3509903C1		
UF94BV	16	YL	GXL	3559037C1	3558022C1	9800	16	3509903C1		
UG94X	16	YL	GXL	3559037C1	3558022C1	9800	16	3509903C1		
UJ94WT	18	GY	TXL	3559036C1	3558022C1	9800	16	3532128C1		
UL94X	16	YL	GXL	3559037C1	3558022C1	9800	16	3509903C1		
UP94X	16	YL	GXL	3559037C1	3558022C1	9800	16	3509903C1		
UV94X	16	YL	GXL	3559037C1	3558022C1	9800	16	3509903C1		
[RE94R]	18	-	GXL	3559036C1	3558022C1	9800	16	3509903C1		
[RV94WT]	18	-	GXL	3559036C1	3558022C1	9800	16	3509903C1		
[UH94U]	18	-	GXL	3559036C1	3558022C1	9800	16	3509903C1		
[UM94U]	18	-	GXL	3559036C1	3558022C1	9800	16	3509903C1		
MD94BF	16	GY	TXL	3559035C1	3558026C1	9800	16	3509903C1		
ZU94WT	16	GY	TXL	3559035C1	3558026C1	9800	16	3509903C1		
MD94BF	16	GY	TXL	3559035C1	3558026C1	9800	16	3509903C1		
ZU94WT	16	GY	TXL	3559035C1	3558026C1	9800	16	3509903C1		
AE94LA	16	GY	GXL	3559037C1	3558022C1	9800	17	3509903C1		
AL94M	16	BK	TXL	3559037C1	3558022C1	9800	17	3509903C1		
RC94E	16	BK	TXL	3559037C1	3558022C1	9800	17	3509903C1		
TA94SS	16	BK	TXL	3559037C1	3558022C1	9800	17	3509903C1		
UF94BZ	16	BK	TXL	3559037C1	3558022C1	9800	17	3509903C1		
UG94M	16	BK	TXL	3559037C1	3558022C1	9800	17	3509903C1		
UJ94WNM	14	GY	TXL	3559037C1	3558022C1	9800	17	3509903C1		
UL94M	16	BK	TXL	3559037C1	3558022C1	9800	17	3509903C1		
UP94M	16	BK	TXL	3559037C1	3558022C1	9800	17	3509903C1		
US94M	16	BK	TXL	3559037C1	3558022C1	9800	17	3509903C1		
[RV94WN]	18	-	GXL	3559036C1	3558022C1	9800	17	3509903C1		
[UH94L]	18	-	GXL	3559036C1	3558022C1	9800	17	3509903C1		
[UM94L]	18	-	GXL	3559036C1	3558022C1	9800	17	3509903C1		
MD94BA	16	GY	GXL	3559035C1	3558026C1	9800	17	3509903C1		

Circuit Number	Gauge	Color	Insulation	Terminal / Splice Number	Connector Part number	Connector Number	Cavity	Seal/Sleeve	Lock 1	Lock 2
ZU94WN	14	GY	TXL	3559035C1	3558026C1	9800	17	3509903C1		
MD94BA	16	GY	GXL	3559035C1	3558026C1	9800	17	3509903C1		
ZU94WR	14	GY	TXL	3548972C1	3558026C1	9800	17	3509903C1		
AE94LB	16	GY	GXL	3559037C1	3558022C1	9800	18	3509903C1		
AL94N	16	RD	TXL	3559037C1	3558022C1	9800	18	3509903C1		
RC94F	16	RD	TXL	3559037C1	3558022C1	9800	18	3509903C1		
TA94TT	16	RD	TXL	3559037C1	3558022C1	9800	18	3509903C1		
UF94BY	16	RD	TXL	3559037C1	3558022C1	9800	18	3509903C1		
UG94N	16	RD	TXL	3559037C1	3558022C1	9800	18	3509903C1		
UJ94G7M	14	GY	TXL	3559037C1	3558022C1	9800	18	3509903C1		
UL94N	16	RD	TXL	3559037C1	3558022C1	9800	18	3509903C1		
UP94N	16	RD	TXL	3559037C1	3558022C1	9800	18	3509903C1		
US94N	16	RD	TXL	3559037C1	3558022C1	9800	18	3509903C1		
[RV94G7]	18	-	GXL	3559036C1	3558022C1	9800	18	3509903C1		
[UH94G8]	18	-	GXL	3559036C1	3558022C1	9800	18	3509903C1		
[UM94G8]	18	-	GXL	3559036C1	3558022C1	9800	18	3509903C1		
MD94BB	16	GY	TXL	3559035C1	3558026C1	9800	18	3509903C1		
ZU94-G7	14	GY	TXL	3559035C1	3558026C1	9800	18	3509903C1		
MD94BB	16	GY	TXL	3559035C1	3558026C1	9800	18	3509903C1		
ZU94C	14	GY	TXL	3548972C1	3558026C1	9800	18	3509903C1		
AE94LC	16	GY	GXL	3559037C1	3558022C1	9800	19	3509903C1		
AL94P	16	BN	TXL	3559037C1	3558022C1	9800	19	3509903C1		
RC94H	16	BN	TXL	3559037C1	3558022C1	9800	19	3509903C1		
TA94UU	16	BN	TXL	3559037C1	3558022C1	9800	19	3509903C1		
UF94BP	16	BN	TXL	3559037C1	3558022C1	9800	19	3509903C1		
UG94P	16	BN	TXL	3559037C1	3558022C1	9800	19	3509903C1		
UJ94WRM	14	GY	TXL	3559037C1	3558022C1	9800	19	3509903C1		
UL94P	16	BN	TXL	3559037C1	3558022C1	9800	19	3509903C1		
UP94P	16	BN	TXL	3559037C1	3558022C1	9800	19	3509903C1		
US94P	16	BN	TXL	3559037C1	3558022C1	9800	19	3509903C1		
[RV94WR]	18	-	GXL	3559036C1	3558022C1	9800	19	3509903C1		
[UH94M]	18	-	GXL	3559036C1	3558022C1	9800	19	3509903C1		
[UM94M]	18	-	GXL	3559036C1	3558022C1	9800	19	3509903C1		
MD94BC	16	GY	TXL	3559035C1	3558026C1	9800	19	3509903C1		
ZU94WR	14	GY	TXL	3559035C1	3558026C1	9800	19	3509903C1		
MD94BC	16	GY	TXL	3559035C1	3558026C1	9800	19	3509903C1		
ZU94WN	14	GY	TXL	3548972C1	3558026C1	9800	19	3509903C1		
AE94RJ	16	GY	GXL	3559037C1	3558022C1	9800	20	3509903C1		
AL94T	16	VT	TXL	3559037C1	3558022C1	9800	20	3509903C1		
RC94J	16	VT	TXL	3559037C1	3558022C1	9800	20	3509903C1		
TA94VV	16	VT	TXL	3559037C1	3558022C1	9800	20	3509903C1		
UF94BS	16	VT	TXL	3559037C1	3558022C1	9800	20	3509903C1		
UG94T	16	VT	TXL	3559037C1	3558022C1	9800	20	3509903C1		
UJ94WUM	14	GY	TXL	3559037C1	3558022C1	9800	20	3509903C1		
UL94T	16	VT	TXL	3559037C1	3558022C1	9800	20	3509903C1		
UP94T	16	VT	TXL	3559037C1	3558022C1	9800	20	3509903C1		
UV94T	16	VT	TXL	3559037C1	3558022C1	9800	20	3509903C1		
[RV94WU]	18	-	GXL	3559036C1	3558022C1	9800	20	3509903C1		
[UH94P]	18	-	GXL	3559036C1	3558022C1	9800	20	3509903C1		
[UM94P]	18	-	GXL	3559036C1	3558022C1	9800	20	3509903C1		
MD94BJ	16	GY	TXL	3559035C1	3558026C1	9800	20	3509903C1		
ZU94WU	14	GY	TXL	3559035C1	3558026C1	9800	20	3509903C1		
MD94BJ	16	GY	TXL	3559035C1	3558026C1	9800	20	3509903C1		
ZU94WW	14	GY	TXL	3548972C1	3558026C1	9800	20	3509903C1		

Circuit Number	Gauge	Color	Insulation	Terminal / Splice Number	Connector Part number	Connector Number	Cavity	Seal/Sleeve	Lock 1	Lock 2
AE94RK	16	GY	GXL	3559037C1	3558022C1	9800	21	3509903C1		
AL94U	16	LTGN	TXL	3559037C1	3558022C1	9800	21	3509903C1		
RC94K	16	LTGN	TXL	3559037C1	3558022C1	9800	21	3509903C1		
TA94W	16	LTGN	TXL	3559037C1	3558022C1	9800	21	3509903C1		
UF94BT	16	LTGN	TXL	3559037C1	3558022C1	9800	21	3509903C1		
UG94U	16	LTGN	TXL	3559037C1	3558022C1	9800	21	3509903C1		
UJ94G6M	14	GY	TXL	3559037C1	3558022C1	9800	21	3509903C1		
UL94U	16	LTGN	TXL	3559037C1	3558022C1	9800	21	3509903C1		
UP94U	16	LTGN	TXL	3559037C1	3558022C1	9800	21	3509903C1		
UV94U	16	LTGN	TXL	3559037C1	3558022C1	9800	21	3509903C1		
[RV94G6]	18	-	GXL	3559036C1	3558022C1	9800	21	3509903C1		
[UH94G9]	18	-	GXL	3559036C1	3558022C1	9800	21	3509903C1		
[UM94G9]	18	-	GXL	3559036C1	3558022C1	9800	21	3509903C1		
MD94BK	16	GY	TXL	3559035C1	3558026C1	9800	21	3509903C1		
ZU94-G6	14	GY	TXL	3559035C1	3558026C1	9800	21	3509903C1		
MD94BK	16	GY	TXL	3559035C1	3558026C1	9800	21	3509903C1		
ZU94A	14	GY	TXL	3548972C1	3558026C1	9800	21	3509903C1		
AE94RL	16	GY	GXL	3559037C1	3558022C1	9800	22	3509903C1		
AL94V	16	LTBL	TXL	3559037C1	3558022C1	9800	22	3509903C1		
RC94L	16	LTBL	TXL	3559037C1	3558022C1	9800	22	3509903C1		
TA94X	16	LTBL	TXL	3559037C1	3558022C1	9800	22	3509903C1		
UF94BU	16	LTBL	TXL	3559037C1	3558022C1	9800	22	3509903C1		
UG94V	16	LTBL	TXL	3559037C1	3558022C1	9800	22	3509903C1		
UJ94WWM	14	GY	TXL	3559037C1	3558022C1	9800	22	3509903C1		
UL94V	16	LTBL	TXL	3559037C1	3558022C1	9800	22	3509903C1		
UP94V	16	LTBL	TXL	3559037C1	3558022C1	9800	22	3509903C1		
UV94V	16	LTBL	TXL	3559037C1	3558022C1	9800	22	3509903C1		
[RV94WW]	18	-	GXL	3559036C1	3558022C1	9800	22	3509903C1		
[UH94S]	18	-	GXL	3559036C1	3558022C1	9800	22	3509903C1		
[UM94S]	18	-	GXL	3559036C1	3558022C1	9800	22	3509903C1		
MD94BL	16	GY	TXL	3559035C1	3558026C1	9800	22	3509903C1		
ZU94WW	14	GY	TXL	3559035C1	3558026C1	9800	22	3509903C1		
MD94BL	16	GY	TXL	3559035C1	3558026C1	9800	22	3509903C1		
ZU94WU	14	GY	TXL	3548972C1	3558026C1	9800	22	3509903C1		
RD94BD	16	BN	TXL	3559037C1	3558022C1	9800	23	3509903C1		
UD94BD	16	BN	TXL	3559037C1	3558022C1	9800	23	3509903C1		
[RW94WX]	18	-	GXL	3559036C1	3558022C1	9800	23	3509903C1		
PR94BN	16	GY	TXL	3559035C1	3558026C1	9800	23	3509903C1		
PR94BN	16	GY	TXL	3559035C1	3558026C1	9800	23	3509903C1		
RD94BE	16	YL	TXL	3559037C1	3558022C1	9800	24	3509903C1		
UD94BE	16	YL	TXL	3559037C1	3558022C1	9800	24	3509903C1		
[RW94WZ]	18	-	GXL	3559036C1	3558022C1	9800	24	3509903C1		
PR94BM	16	GY	TXL	3559035C1	3558026C1	9800	24	3509903C1		
PR94BM	16	GY	TXL	3559035C1	3558026C1	9800	24	3509903C1		
RM32A	18	TN	GXL	3536865C1	3536864C1	9811	1	3536868C1		
UC32	18	TN	GXL	3536865C1	3536864C1	9811	1	3536868C1		
RM9A	18	GY	GXL	3536865C1	3536864C1	9811	2	3536868C1		
UC9C	18	GY	GXL	3536865C1	3536864C1	9811	2	3536868C1		
RL32	18	TN	GXL	3536865C1	3536864C1	9812	1	3536868C1		
RM32	18	TN	GXL	3536865C1	3536864C1	9812	1	3536868C1		
RL9C	18	GY	GXL	3536865C1	3536864C1	9812	2	3536868C1		
RM9	18	GY	GXL	3536865C1	3536864C1	9812	2	3536868C1		
RO49	18	GY	GXL	587578C1	587567C91	9814	A	1652325C1		
RO49-G	18	WH	GXL	587578C1	587567C91	9814	B	1652325C1		

Circuit Number	Gauge	Color	Insulation	Terminal / Splice Number	Connector Part number	Connector Number	Cavity	Seal/Sleeve	Lock 1	Lock 2
RN49A	18	GY	GXL	587578C1	587567C91	9815	A	1652325C1		
RO49A	18	GY	GXL	587578C1	587567C91	9815	A	1652325C1		
RN49-GA	18	WH	GXL	587578C1	587567C91	9815	B	1652325C1		
RO49-GA	18	WH	GXL	587578C1	587567C91	9815	B	1652325C1		
RR59DC	18	GY	GXL	1661875C1	1661778C1	9824	A	1661872C1		
RR59DD	18	GY	GXL	1661875C1	1661778C1	9824	B	1661872C1		
RT9M	18	GY	GXL	1651943C1	1678137C1	9830	A	UNDEF		
RT6H	18	GY	GXL	1651943C1	1678137C1	9830	B	UNDEF		
RT61C	18	GY	GXL	1651943C1	1678137C1	9830	C	UNDEF		
RU9N	18	GY	GXL	1651943C1	1678137C1	9832	A	UNDEF		
RU6J	18	GY	GXL	1651943C1	1678137C1	9832	B	UNDEF		
RU61D	18	GY	GXL	1651943C1	1678137C1	9832	C	UNDEF		
HW14BC	16	RD	GXL	1680205C1	3866308C1	9915	1	N/A		
HW11-GCK	14	GY	TXL	2034787C1	3866308C1	9915	2	N/A		
QA23DC	18	TN	TXL	1661538C1	2206665C1	9916	1	N/A		
QA23A	18	TN	TXL	1661538C1	2206665C1	9916	2	N/A		
QA23BD	18	TN	TXL	1661538C1	2206665C1	9916	3	N/A		
AA82J	16	GY	TXL	3 3574288	3595625C	1703M	72	N/A		
9D5D(+)	18	YL	TXL	1 239481R	A	AS34	-	2644000		
9M5D(+)	18	YL	TXL	1 239481R	A	AS34	-	2644000		
9N5D(+)	18	YL	TXL	1 239481R	A	AS34	-	2644000		
9Q5D(+)	18	YL	TXL	1 239481R	A	AS34	-	2644000		
9D5D(-)	18	GN	TXL	1 239481R	A	AS35	-	2644000		
9K5D(-)	18	GN	TXL	1 239481R	A	AS35	-	2644000		
9M5D(-)	18	GN	TXL	1 239481R	A	AS35	-	2644000		
9N5D(-)	18	GN	TXL	1 239481R	A	AS35	-	2644000		
9Q5D(-)	18	GN	TXL	1 239481R	A	AS35	-	2644000		
9U5D(-)	18	GN	TXL	1 239481R	A	AS35	-	2644000		
9S5AD(+)	18	YL	TXL	1 239481R	A	AS36	-	2644000		
9T5AD(+)	18	YL	TXL	1 239481R	A	AS36	-	2644000		
9S5AD(-)	18	GN	TXL	1 239481R	A	AS37	-	2644000		
9T5AD(-)	18	GN	TXL	1 239481R	A	AS37	-	2644000		
AD98-G	18	WH	TXL	1 239481R	A	BS11	-	2644000		
KS59KB	18	GY	TXL	2 239481R	B	DS11	-	2644000		
KT59KA	18	GY	TXL	2 239481R	B	DS11	-	2644000		
KU59KA	18	GY	TXL	2 239481R	B	DS11	-	2644000		
QA11-GCH	18	WH	TXL	2 239481R	A	DS70	-	2644000		
QA11-GCJ	18	WH	TXL	2 239481R	A	DS70	-	2644000		
KL18C	16	GY	TXL	3574288C	3595625C1	1703M	11	N/A		
PC92A18	16	TN	GXL	3574285C	3595625C1	1703M	14	N/A		
UD92-GC	18	WH	TXL	2003343C	3595625C1	1703M	21	N/A		
VA92#117C	18	TN	TXL	2003343C	3595625C1	1703M	43	N/A		
ZC92#165A	18	TN	TXL	2003343C	3595625C1	1703M	45	N/A		
ZJ92#165A	18	TN	TXL	2003343C	3595625C1	1703M	45	N/A		
GX92#103B	18	TN	TXL	2003343C	3595625C1	1703M	55	N/A		
VM12BB	16	LTBL	TXL	2039343C	2039311C9	4450M	F	1652325C		
VT12BB	16	LTBL	TXL	2039343C	2039311C9	4450M	F	1652325C		
VM70TA	12	OR	TXL	2033816C	1686834C1	4460M	C	589391C1		
DJ13-GFF	18	WH	TXL	ABRSPLIC	A	BS8	-	N/A		
QA23EB	18	TN	TXL	239481R1	A	DS1	-	2644000R		
KS59-GC	18	WH	TXL	239481R1	A	DS10	-	2644000R		
KS59-GCA	18	WH	TXL	239481R1	A	DS10	-	2644000R		
KT59-GM	18	WH	TXL	239481R1	B	DS10	-	2644000R		
KT59-GMA	18	WH	TXL	239481R1	B	DS10	-	2644000R		

Circuit Number	Gauge	Color	Insulation	Terminal / Splice Number	Connector Part number	Connector Number	Cavity	Seal/Sleeve	Lock 1	Lock 2
KU59-GM	18	WH	TXL	239481R1	B	DS10	-	2644000R		
KU59-GMA	18	WH	TXL	239481R1	B	DS10	-	2644000R		
AA82E	16	GY	TXL	239481R1	A	DS17	-	2644000R		
AA82M	16	GY	TXL	239481R1	A	DS17	-	2644000R		
AA82N	18	GY	TXL	239481R1	A	DS17	-	2644000R		
EJ12S	18	LTBL	TXL	239481R1	A	DS18	-	2644000R		
EJ12T	18	LTBL	TXL	239481R1	A	DS18	-	2644000R		
QA13B	18	PK	TXL	239481R1	A	DS2	-	2644000R		
QA13C	18	PK	TXL	239481R1	A	DS2	-	2644000R		
QA13DA	18	PK	TXL	239481R1	A	DS2	-	2644000R		
ZC71A	18	OR	TXL	239481R1	B	DS24	-	2644000R		
ZC71B	18	WH	TXL	239481R1	B	DS24	-	2644000R		
ZJ71A	18	OR	TXL	239481R1	B	DS24	-	2644000R		
ZJ71B	18	WH	TXL	239481R1	B	DS24	-	2644000R		
QA23BC	18	TN	TXL	239481R1	B	DS3	-	2644000R		
KS59KC	18	GY	TXL	239481R1	A	DS42	-	2644000R		
KS59KD	18	GY	TXL	239481R1	A	DS42	-	2644000R		
KS59KF	18	GY	TXL	239481R1	A	DS42	-	2644000R		
KT59KC	18	GY	TXL	239481R1	A	DS42	-	2644000R		
KT59KD	18	GY	TXL	239481R1	A	DS42	-	2644000R		
KT59KF	18	GY	TXL	239481R1	A	DS42	-	2644000R		
KU59KC	18	GY	TXL	239481R1	A	DS42	-	2644000R		
KU59KD	18	GY	TXL	239481R1	A	DS42	-	2644000R		
KU59KF	18	GY	TXL	239481R1	A	DS42	-	2644000R		
KS59JC	18	GY	TXL	239481R1	A	DS43	-	2644000R		
KT59JC	18	GY	TXL	239481R1	A	DS43	-	2644000R		
KU59JC	18	GY	TXL	239481R1	A	DS43	-	2644000R		
EH12D	12	LTBL	TXL	239481R1	B	DS54	-	2644000R		
EJ12D	12	LTBL	TXL	239481R1	B	DS54	-	2644000R		
TJ70ET	10	RD	TXL	239481R1	A	DS56	-	2644000R		
DE13DF	18	PK	TXL	239481R1	A	DS59	-	2644000R		
DF13DF	18	PK	TXL	239481R1	A	DS59	-	2644000R		
DF13DU	18	GY	TXL	239481R1	A	DS59	-	2644000R		
RN78RD	18	LTGN	TXL	239481R1	A	DS63	-	2644000R		
RN78RK	18	LTGN	TXL	239481R1	A	DS63	-	2644000R		
RK78BC	16	LTGN	TXL	239481R1	A	DS66	-	2644000R		
RM78AB	16	LTGN	TXL	239481R1	A	DS69	-	2644000R		
QA11-GM	18	WH	TXL	239481R1	A	DS70	-	2644000R		
KK18	16	GY	TXL	239481R1	A	DS71	-	2644000R		
KM18	16	GY	TXL	239481R1	A	DS71	-	2644000R		
RF78	16	LTGN	TXL	239481R1	B	JS3	-	2644000R		
QA23DB	18	TN	TXL	239481R1	B	LS2	-	2644000R		
ZR12-GD	16	WH	TXL	239481R1	B	MS3	-	2644000R		
AC13D	18	PK	TXL	3544876C1	4063156C1	0009B	A	N/A		
9E5BF(+)	18	YL	TXL	3544884C1	4063156C1	0009B	B	N/A		
9G5BF(+)	18	YL	TXL	3544884C1	4063156C1	0009B	B	N/A		
9Z5BF(+)	18	YL	TXL	3544884C1	4063156C1	0009B	B	N/A		
9E5BF(-)	18	GN	TXL	3544884C1	4063156C1	0009B	C	N/A		
9G5BF(-)	18	GN	TXL	3544884C1	4063156C1	0009B	C	N/A		
9Z5BF(-)	18	GN	TXL	3544884C1	4063156C1	0009B	C	N/A		
ZD50B	18	YL	TXL	3544884C1	4063156C1	0009B	E	N/A		
ZD50A	18	YL	TXL	3544876C1	4063156C1	0009B	H	N/A		
AC11-GN	18	WH	TXL	3544876C1	4063156C1	0009B	J	N/A		
AC62	18	DKBL	TXL	3544884C1	4063156C1	0009B	L	N/A		

Circuit Number	Gauge	Color	Insulation	Terminal / Splice Number	Connector Part number	Connector Number	Cavity	Seal/Sleeve	Lock 1	Lock 2
AC62DA	16	DKBL	TXL	3544884C1	4063156C1	0009B	M	N/A		
AC50	18	YL	TXL	3544884C1	4063156C1	0009B	P	N/A		
AC9	18	GY	TXL	3544884C1	4063156C1	0009B	R	N/A		
AC14D	18	RD	TXL	3544876C1	4063156C1	0009B	S	N/A		
BG28A	20	TN	TXL	4062808C1	4063415C1	1000A	1	N/A		
BG28B	20	TN	TXL	4062808C1	4063415C1	1000A	3	N/A		
BG28C	20	TN	TXL	4062808C1	4063415C1	1000A	4	N/A		
RC81-G	10	WH	GXL	2020632C1		1004A	1	2644002R1		
RD81-G	10	WH	GXL	2020632C1		1004A	1	2644002R1		
AA11-GKC	12	WH	TXL	3581768C1		1004B	1	2644038R1		
FB11-GKJ	6	WH	SGX	2015884C1		1005A	1	2644002R1		
ML11-G	8	WH	GXL	3710088C1		1005B	1	2644005R1		
MP11-G	8	WH	GXL	3710088C1		1005B	1	2644005R1		
KS59MB	18	GY	TXL	1661224C1	3928059C1	1023A	1	N/A		
KT59MB	18	GY	TXL	1661224C1	3928059C1	1023A	1	N/A		
KU59MB	18	GY	TXL	1661224C1	3928059C1	1023A	1	N/A		
KS59SB	18	GY	TXL	1661224C1	3928059C1	1023A	2	N/A		
KT59SB	18	GY	TXL	1661224C1	3928059C1	1023A	2	N/A		
KU59SA	18	GY	TXL	1661224C1	3928059C1	1023A	2	N/A		
KS59-GB	18	WH	TXL	1661224C1	3928059C1	1023A	11	N/A		
KT59-GB	18	WH	TXL	1661224C1	3928059C1	1023A	11	N/A		
KU59-GB	18	WH	TXL	1661224C1	3928059C1	1023A	11	N/A		
KS62R	18	DKBL	TXL	1661224C1	3928059C1	1023A	12	N/A		
KT62D	16	DKBL	TXL	1661226C1	3928059C1	1023A	12	N/A		
KU62R	18	DKBL	TXL	1661224C1	3928059C1	1023A	12	N/A		
KS59NB	18	GY	TXL	1661224C1	3928059C1	1023B	1	N/A		
KU59NB	18	GY	TXL	1661224C1	3928059C1	1023B	1	N/A		
KS59U	18	GY	TXL	1661224C1	3928059C1	1023B	2	N/A		
KU59SB	18	GY	TXL	1661224C1	3928059C1	1023B	2	N/A		
KS59-GDA	18	WH	TXL	1661224C1	3928059C1	1023B	11	N/A		
KU59-GDA	18	WH	TXL	1661224C1	3928059C1	1023B	11	N/A		
KS62P	18	DKBL	TXL	1661224C1	3928059C1	1023B	12	N/A		
KU62P	18	DKBL	TXL	1661224C1	3928059C1	1023B	12	N/A		
KU59NC	18	GY	TXL	1661224C1	3928059C1	1023C	1	N/A		
KU59SC	18	GY	TXL	1661224C1	3928059C1	1023C	2	N/A		
KU59-GDB	18	WH	TXL	1661224C1	3928059C1	1023C	11	N/A		
KU62S	18	DKBL	TXL	1661224C1	3928059C1	1023C	12	N/A		
EE15	18	RD	TXL	1661208C1	3546518C1	1100MA	A	N/A		
LH149B	18	GY	TXL	1661208C1	3546518C1	1100MA	B	N/A		
ED149	18	GY	TXL	1661208C1	3546518C1	1100MA	C	N/A		
DC149A	18	GY	TXL	1661208C1	3546518C1	1100MA	D	N/A		
9E5BH(+)	18	YL	TXL	2035086C1	3768593C1	1101F	5	N/A		
9G5BH(+)	18	YL	TXL	2035086C1	3768593C1	1101F	5	N/A		
9H5BH(+)	18	YL	TXL	2035086C1	3768593C1	1101F	5	N/A		
9L5BH(+)	18	YL	TXL	2035086C1	3768593C1	1101F	5	N/A		
9V5BH(+)	18	YL	TXL	2035086C1	3768593C1	1101F	5	N/A	2039342C1	
9Z5BH(+)	18	YL	TXL	2035086C1	3768593C1	1101F	5	N/A		
9E5BH(-)	18	GN	TXL	2035086C1	3768593C1	1101F	6	N/A		
9G5BH(-)	18	GN	TXL	2035086C1	3768593C1	1101F	6	N/A		
9H5BH(-)	18	GN	TXL	2035086C1	3768593C1	1101F	6	N/A		
9L5BH(-)	18	GN	TXL	2035086C1	3768593C1	1101F	6	N/A		
9V5BH(-)	18	GN	TXL	2035086C1	3768593C1	1101F	6	N/A		
9Z5BH(-)	18	GN	TXL	2035086C1	3768593C1	1101F	6	N/A		
9E5BG(+)	18	YL	TXL	3522073C1	3522071C1	1101M	5	N/A		

Circuit Number	Gauge	Color	Insulation	Terminal / Splice Number	Connector Part number	Connector Number	Cavity	Seal/Sleeve	Lock 1	Lock 2
9G5BG(+)	18	YL	TXL	3522073C1	3522071C1	1101M	5	N/A		
9H5BG(+)	18	YL	TXL	3522073C1	3522071C1	1101M	5	N/A		
9L5BG(+)	18	YL	TXL	3522073C1	3522071C1	1101M	5	N/A		
9V5BG(+)	18	YL	TXL	3522073C1	3522071C1	1101M	5	N/A	1673791C1	
9Z5BG(+)	18	YL	TXL	3522073C1	3522071C1	1101M	5	N/A		
9E5BG(-)	18	GN	TXL	3522073C1	3522071C1	1101M	6	N/A		
9G5BG(-)	18	GN	TXL	3522073C1	3522071C1	1101M	6	N/A		
9H5BG(-)	18	GN	TXL	3522073C1	3522071C1	1101M	6	N/A		
9L5BG(-)	18	GN	TXL	3522073C1	3522071C1	1101M	6	N/A		
9V5BG(-)	18	GN	TXL	3522073C1	3522071C1	1101M	6	N/A		
9Z5BG(-)	18	GN	TXL	3522073C1	3522071C1	1101M	6	N/A		
AD11-GKD	18	WH	TXL	3522073C1	3522071C1	1101M	8	N/A		
AE11-GKD	18	WH	TXL	3522073C1	3522071C1	1101M	8	N/A		
AA14MUX	18	RD	TXL	3522073C1	3522071C1	1101M	10	N/A		
XX44AA	18	GY	TXL	3727971C1	3518182C1	1109A	1	N/A		
XX90-M	18	GY	TXL	3727971C1	3518182C1	1109A	2	N/A		
YD67COG1	18	GY	TXL	1661224C1	3928059C1	1126M	1	N/A		
YD11COG1	18	WH	TXL	1661224C1	3928059C1	1126M	2	N/A		
YD67COG2	18	GY	TXL	1661224C1	3928059C1	1126M	4	N/A		
YD67NB	16	VT	TXL	1661226C1	3928059C1	1126M	11	N/A		
YD62A	18	DKBL	TXL	1661224C1	3928059C1	1126M	12	N/A		
AA73A	20	LTGN	TXL	3673333C1	3768152C1	1200A	1	N/A		
AD74-G	20	WH	TXL	3673333C1	3768152C1	1200A	2	N/A		
AE74-G	20	WH	TXL	3673333C1	3768152C1	1200A	2	N/A		
AA75B	20	LTGN	TXL	3673333C1	3768152C1	1200A	5	N/A		
TA75A	20	LTGN	TXL	3673333C1	3768152C1	1200A	6	N/A		
9S5AF(+)	20	YL	193	3673333C1	3768152C1	1200A	7	N/A	1661376C1	
9T5AF(+)	20	YL	193	3673333C1	3768152C1	1200A	7	N/A		
9W5AF(+)	20	YL	193	3673333C1	3768152C1	1200A	7	N/A		
9Y5AF(+)	20	YL	193	3673333C1	3768152C1	1200A	7	N/A		
9S5AF(-)	20	GN	193	3673333C1	3768152C1	1200A	8	N/A	1684263C1	
9T5AF(-)	20	GN	193	3673333C1	3768152C1	1200A	8	N/A		
9W5AF(-)	20	GN	193	3673333C1	3768152C1	1200A	8	N/A		
9Y5AF(-)	20	GN	193	3673333C1	3768152C1	1200A	8	N/A		
AA74A2	20	LTGN	TXL	3673333C1	3768152C1	1200A	9	N/A		
AA74B2	20	LTGN	TXL	3673333C1	3768152C1	1200A	10	N/A		
AA74D5	20	LTGN	TXL	3673333C1	3768152C1	1200A	11	N/A		
AA73B	20	LTGN	TXL	3673333C1	3768152C1	1200A	12	N/A		
AD74-GA	20	WH	TXL	3673333C1	3768152C1	1200A	13	N/A		
AE74-GA	20	WH	TXL	3673333C1	3768152C1	1200A	13	N/A		
AA74C2	20	LTGN	TXL	3673333C1	3768152C1	1200A	18	N/A		
AA74E2	20	LTGN	TXL	3673333C1	3768152C1	1200A	19	N/A		
AA74D2	20	LTGN	TXL	3673333C1	3768152C1	1200A	21	N/A		
AA74D4	20	LTGN	TXL	3673333C1	3768152C1	1200A	22	N/A		
WM2-G	2	WH	SGX	475963C1		1200A	A	2644004R1		
WV2-G	2	WH	SGX	475963C1		1200A	A	2644004R1		
AA74B1	20	LTGN	TXL	3673333C1	3768153C1	1200B	1	N/A		
AA74B3	20	LTGN	TXL	3673333C1	3768153C1	1200B	2	N/A		
AA74B4	20	LTGN	TXL	3673333C1	3768153C1	1200B	3	N/A		
AA74C1	20	LTGN	TXL	3673333C1	3768153C1	1200B	4	N/A		
AA74C3	20	LTGN	TXL	3673333C1	3768153C1	1200B	5	N/A		
AA74C4	20	LTGN	TXL	3673333C1	3768153C1	1200B	6	N/A		
AA74C5	20	LTGN	TXL	3673333C1	3768153C1	1200B	7	N/A		
AA74E1	20	LTGN	TXL	3673333C1	3768153C1	1200B	8	N/A		

Circuit Number	Gauge	Color	Insulation	Terminal / Splice Number	Connector Part number	Connector Number	Cavity	Seal/Sleeve	Lock 1	Lock 2
AA74E3	20	LTGN	TXL	3673333C1	3768153C1	1200B	9	N/A		
AA74E4	20	LTGN	TXL	3673333C1	3768153C1	1200B	10	N/A		
AA74E5	20	LTGN	TXL	3673333C1	3768153C1	1200B	11	N/A		
AA74B5	20	LTGN	TXL	3673333C1	3768153C1	1200B	12	N/A		
AA74A1	20	LTGN	TXL	3673333C1	3768153C1	1200B	13	N/A		
AA74A3	20	LTGN	TXL	3673333C1	3768153C1	1200B	14	N/A		
AA74A4	20	LTGN	TXL	3673333C1	3768153C1	1200B	15	N/A		
AA74A5	20	LTGN	TXL	3673333C1	3768153C1	1200B	16	N/A		
AA74D1	20	LTGN	TXL	3673333C1	3768153C1	1200B	21	N/A		
AA74D3	20	LTGN	TXL	3673333C1	3768153C1	1200B	22	N/A		
AA74C1	20	LTGN	TXL	3544883C1	4057474C1	1200C	A	N/A		
AA74C2	20	LTGN	TXL	3544883C1	4057474C1	1200C	B	N/A		
AA74C3	20	LTGN	TXL	3544883C1	4057474C1	1200C	C	N/A		
AA74C4	20	LTGN	TXL	3544883C1	4057474C1	1200C	D	N/A		
AA74C5	20	LTGN	TXL	3544883C1	4057474C1	1200C	E	N/A		
AA74D1	20	LTGN	TXL	3544883C1	4057474C1	1200C	F	N/A		
AA74D2	20	LTGN	TXL	3544883C1	4057474C1	1200C	G	N/A		
AA74D3	20	LTGN	TXL	3544883C1	4057474C1	1200C	H	N/A		
AA74D4	20	LTGN	TXL	3544883C1	4057474C1	1200C	J	N/A		
AA74D5	20	LTGN	TXL	3544883C1	4057474C1	1200C	K	N/A		
AA74E1	20	LTGN	TXL	3544883C1	4057474C1	1200C	L	N/A		
AA74E2	20	LTGN	TXL	3544883C1	4057474C1	1200C	M	N/A		
AA74E3	20	LTGN	TXL	3544883C1	4057474C1	1200C	N	N/A		
AA74E4	20	LTGN	TXL	3544883C1	4057474C1	1200C	P	N/A		
AA74E5	20	LTGN	TXL	3544883C1	4057474C1	1200C	S	N/A		
TA75AC	12	RD	GXL	1661227C1	4061870C1	1200D	A	N/A		
AD75-G	12	WH	TXL	1661227C1	4061870C1	1200D	B	N/A		
AE75-G	12	WH	TXL	1661227C1	4061870C1	1200D	B	N/A		
AA74A1	20	LTGN	TXL	3544883C1	4057658C1	1200E	A	N/A		
AA74A2	20	LTGN	TXL	3544883C1	4057658C1	1200E	B	N/A		
AA74A3	20	LTGN	TXL	3544883C1	4057658C1	1200E	C	N/A		
AA74A4	20	LTGN	TXL	3544883C1	4057658C1	1200E	D	N/A		
AA74A5	20	LTGN	TXL	3544883C1	4057658C1	1200E	E	N/A		
AA74B1	20	LTGN	TXL	3544883C1	4057658C1	1200E	F	N/A		
AA74B2	20	LTGN	TXL	3544883C1	4057658C1	1200E	G	N/A		
AA74B3	20	LTGN	TXL	3544883C1	4057658C1	1200E	H	N/A		
AA74B4	20	LTGN	TXL	3544883C1	4057658C1	1200E	J	N/A		
AA74B5	20	LTGN	TXL	3544883C1	4057658C1	1200E	K	N/A		
SA77D	20	LTGN	TXL	3544883C1	4057658C1	1200E	L	N/A		
AA6AM	20	GY	TXL	3544883C1	4057658C1	1200E	M	N/A		
TA75AB	18	LTGN	TXL	3544884C1	4057658C1	1200E	N	N/A		
AA75B	20	LTGN	TXL	3544883C1	4057658C1	1200E	P	N/A		
WM2-FLA	10	RS	FUS	338892C2		1201A	A	2644054R1		
WM2-FLB	10	RS	FUS	338892C2		1201A	A	2644054R1		
WV2-FLA	10	RS	FUS	338892C2		1201A	A	2644054R1		
WV2-FLB	10	RS	FUS	338892C2		1201A	A	2644054R1	3540758C1	
WP2-G	1	WH	SGX	475965C1		1300A	A	2644004R1		
WS2-G	1	WH	SGX	475965C1		1300A	A	2644004R1		
WT2-G	1	WH	SGX	475965C1		1300A	A	2644004R1		
WU2-G	1	WH	SGX	475965C1		1300A	A	2644004R1	1661873C1	
WP2-FL	6	TN	FUS	338892C2		1301A	A	2644054R1		
WS2-FL	6	TN	FUS	338892C2		1301A	A	2644054R1		
WT2-FL	6	TN	FUS	338892C2		1301A	A	2644054R1		
WU2-FL	6	TN	FUS	338892C2		1301A	A	2644054R1		

Circuit Number	Gauge	Color	Insulation	Terminal / Splice Number	Connector Part number	Connector Number	Cavity	Seal/Sleeve	Lock 1	Lock 2
WR2-G	0	BK	SGX	2241346C1		1400A	A	3812583R1		
WR2-FL	2	BK	FUS	475963C1		1401A	A	2644004R1		
9B5G(-)	18	GN	TXL	3522073C1	3710061C1	1500A	A10	N/A	1675053C1	
9C5G(-)	18	GN	TXL	3522073C1	3710061C1	1500A	A10	N/A		
9K5G(-)	18	GN	TXL	3522073C1	3710061C1	1500A	A10	N/A		
9M5G(-)	18	GN	TXL	3522073C1	3710061C1	1500A	A10	N/A		
9N5G(-)	18	GN	TXL	3522073C1	3710061C1	1500A	A10	N/A		
9Q5G(-)	18	GN	TXL	3522073C1	3710061C1	1500A	A10	N/A		
9R5G(-)	18	GN	TXL	3522073C1	3710061C1	1500A	A10	N/A		
9U5G(-)	18	GN	TXL	3522073C1	3710061C1	1500A	A10	N/A		
GB5G(-)	18	GN	TXL	3522073C1	3710061C1	1500A	A10	N/A		
GE5G(-)	18	GN	TXL	3522073C1	3710061C1	1500A	A10	N/A		
GF5G(-)	18	GN	TXL	3522073C1	3710061C1	1500A	A10	N/A		
GG5G(-)	18	GN	TXL	3522073C1	3710061C1	1500A	A10	N/A		
GH5G(-)	18	GN	TXL	3522073C1	3710061C1	1500A	A10	N/A		
GJ5G(-)	18	GN	TXL	3522073C1	3710061C1	1500A	A10	N/A		
GK5G(-)	18	GN	TXL	3522073C1	3710061C1	1500A	A10	N/A		
GL5G(-)	18	GN	TXL	3522073C1	3710061C1	1500A	A10	N/A		
GM5G(-)	18	GN	TXL	3522073C1	3710061C1	1500A	A10	N/A		
GN5G(-)	18	GN	TXL	3522073C1	3710061C1	1500A	A10	N/A		
GP5G(-)	18	GN	TXL	3522073C1	3710061C1	1500A	A10	N/A		
GQ5G(-)	18	GN	TXL	3522073C1	3710061C1	1500A	A10	N/A		
GT5G(-)	18	GN	TXL	3522073C1	3710061C1	1500A	A10	N/A		
GU5G(-)	18	GN	TXL	3522073C1	3710061C1	1500A	A10	N/A		
GV5G(-)	18	GN	TXL	3522073C1	3710061C1	1500A	A10	N/A		
AA14EE	16	RD	TXL	3522073C1	3710061C1	1500A	A2	N/A		
AA13EA	18	PK	TXL	3522073C1	3710061C1	1500A	A3	N/A		
DL13BB	18	PK	TXL	3522073C1	3710061C1	1500A	A6	N/A		
DL179	18	WH	TXL	3522073C1	3710061C1	1500A	A7	N/A		
9B5G(+)	18	YL	TXL	3522073C1	3710061C1	1500A	A9	N/A	1667771C1	
9C5G(+)	18	YL	TXL	3522073C1	3710061C1	1500A	A9	N/A		
9K5G(+)	18	YL	TXL	3522073C1	3710061C1	1500A	A9	N/A		
9M5G(+)	18	YL	TXL	3522073C1	3710061C1	1500A	A9	N/A		
9N5G(+)	18	YL	TXL	3522073C1	3710061C1	1500A	A9	N/A		
9Q5G(+)	18	YL	TXL	3522073C1	3710061C1	1500A	A9	N/A		
9R5G(+)	18	YL	TXL	3522073C1	3710061C1	1500A	A9	N/A		
9U5G(+)	18	YL	TXL	3522073C1	3710061C1	1500A	A9	N/A		
GB5G(+)	18	YL	TXL	3522073C1	3710061C1	1500A	A9	N/A		
GE5G(+)	18	YL	TXL	3522073C1	3710061C1	1500A	A9	N/A		
GF5G(+)	18	YL	TXL	3522073C1	3710061C1	1500A	A9	N/A		
GG5G(+)	18	YL	TXL	3522073C1	3710061C1	1500A	A9	N/A		
GH5G(+)	18	YL	TXL	3522073C1	3710061C1	1500A	A9	N/A		
GJ5G(+)	18	YL	TXL	3522073C1	3710061C1	1500A	A9	N/A		
GK5G(+)	18	YL	TXL	3522073C1	3710061C1	1500A	A9	N/A		
GL5G(+)	18	YL	TXL	3522073C1	3710061C1	1500A	A9	N/A		
GM5G(+)	18	YL	TXL	3522073C1	3710061C1	1500A	A9	N/A		
GN5G(+)	18	YL	TXL	3522073C1	3710061C1	1500A	A9	N/A		
GP5G(+)	18	YL	TXL	3522073C1	3710061C1	1500A	A9	N/A		
GQ5G(+)	18	YL	TXL	3522073C1	3710061C1	1500A	A9	N/A		
GT5G(+)	18	YL	TXL	3522073C1	3710061C1	1500A	A9	N/A		
GU5G(+)	18	YL	TXL	3522073C1	3710061C1	1500A	A9	N/A		
GV5G(+)	18	YL	TXL	3522073C1	3710061C1	1500A	A9	N/A		
BG28B	20	TN	TXL	3534303C1	3710061C1	1500A	B10	N/A		
AD11-GKE	16	WH	TXL	3522073C1	3710061C1	1500A	B3	N/A		

Circuit Number	Gauge	Color	Insulation	Terminal / Splice Number	Connector Part number	Connector Number	Cavity	Seal/Sleeve	Lock 1	Lock 2
AE11-GKE	16	WH	TXL	3522073C1	3710061C1	1500A	B3	N/A		
MQ98F	20	TN	TXL	3534303C1	3710061C1	1500A	B4	N/A		
MQ11-GMW	20	WH	TXL	3534303C1	3710061C1	1500A	B5	N/A		
QA23A	18	TN	TXL	3522073C1	3710061C1	1500A	B6	N/A		
QA23-GT	18	WH	TXL	3522073C1	3710061C1	1500A	B7	N/A		
BG28C	20	TN	TXL	3534303C1	3710061C1	1500A	B8	N/A		
BG28A	20	TN	TXL	3534303C1	3710061C1	1500A	B9	N/A		
WW2-G	2	WH	SGX	475963C1		1600A	A	2644004R1		
WW2-FLA	10	RS	FUS	338892C2		1601A	A	2644054R1		
WW2-FLB	10	RS	FUS	338892C2		1601A	A	2644054R1		
AE98-G	18	WH	TXL	3754236C1	3544066C1	1650MA	A	N/A		
AE98H	18	RD	TXL	3754236C1	3544066C1	1650MA	B	N/A		
9R5D(+)	18	YL	TXL	3754236C1	3544066C1	1650MA	C	N/A		
GK5D(+)	18	YL	TXL	3754236C1	3544066C1	1650MA	C	N/A		
GL5D(+)	18	YL	TXL	3754236C1	3544066C1	1650MA	C	N/A		
GM5D(+)	18	YL	TXL	3754236C1	3544066C1	1650MA	C	N/A		
GN5D(+)	18	YL	TXL	3754236C1	3544066C1	1650MA	C	N/A		
GP5D(+)	18	YL	TXL	3754236C1	3544066C1	1650MA	C	N/A		
GQ5D(+)	18	YL	TXL	3754236C1	3544066C1	1650MA	C	N/A		
GT5D(+)	18	YL	TXL	3754236C1	3544066C1	1650MA	C	N/A		
GW5D(+)	18	YL	TXL	3754236C1	3544066C1	1650MA	C	N/A		
9R5D(-)	18	GN	TXL	3754236C1	3544066C1	1650MA	D	N/A		
GK5D(-)	18	GN	TXL	3754236C1	3544066C1	1650MA	D	N/A		
GL5D(-)	18	GN	TXL	3754236C1	3544066C1	1650MA	D	N/A		
GM5D(-)	18	GN	TXL	3754236C1	3544066C1	1650MA	D	N/A		
GN5D(-)	18	GN	TXL	3754236C1	3544066C1	1650MA	D	N/A		
GP5D(-)	18	GN	TXL	3754236C1	3544066C1	1650MA	D	N/A		
GQ5D(-)	18	GN	TXL	3754236C1	3544066C1	1650MA	D	N/A		
GT5D(-)	18	GN	TXL	3754236C1	3544066C1	1650MA	D	N/A		
GW5D(-)	18	GN	TXL	3754236C1	3544066C1	1650MA	D	N/A		
9W5AD(+)	18	YL	TXL	3754236C1	3544066C1	1650MA	H	N/A		
9Y5AD(+)	18	YL	TXL	3754236C1	3544066C1	1650MA	H	N/A		
9W5AD(-)	18	GN	TXL	3754236C1	3544066C1	1650MA	J	N/A		
9Y5AD(-)	18	GN	TXL	3754236C1	3544066C1	1650MA	J	N/A		
NK5C(+)	18	YL	TXL	1661875C1	1667741C1	1657M	A	3568570C1		
NK5C(+)	18	YL	TXL	3683464C1	3683465C1	1657M	A	N/A		
NK5C(-)	18	GN	TXL	3683464C1	3683465C1	1657M	B	N/A		
NK5C(-)	18	GN	TXL	1661875C1	1667741C1	1657M	C	3568570C1		
YD13COG	16	PK	TXL	1661262C1	3540613C1	16B	C	N/A		
YD11COG	18	WH	TXL	1661262C1	3540613C1	16B	D	N/A		
YD5DA(-)	18	GN	TXL	1661262C1	3540613C1	16B	E	N/A		
YD5DA(+)	18	YL	TXL	1661262C1	3540613C1	16B	F	N/A		
YD67COG	18	GY	TXL	1661262C1	3540613C1	16B	G	N/A		
YD14CSB	16	RD	TXL	1661262C1	3540613C1	16B	H	N/A		
9D5E(-)	18	GN	TXL	1661262C1	3540613C1	16B	J	N/A		
GW5E(-)	18	GN	TXL	1661262C1	3540613C1	16B	J	N/A		
9D5E(+)	18	YL	TXL	1661262C1	3540613C1	16B	K	N/A		
GW5E(+)	18	YL	TXL	1661262C1	3540613C1	16B	K	N/A		
WX2-G	0	BK	SGX	2241346C1		1700A	A	3812583R1		
WX2-FL	2	BK	FUS	475963C1		1701A	A	2644004R1		
RK71A	14	OR	GXL	3549416C1	3595622C1	1701F	1	N/A		
RK71A	14	OR	GXL	3549416C1	3595622C1	1701F	1	N/A		
RK56	14	OR	GXL	3549416C1	3595622C1	1701F	2	N/A		
RK56	14	OR	GXL	3549416C1	3595622C1	1701F	2	N/A		

Circuit Number	Gauge	Color	Insulation	Terminal / Splice Number	Connector Part number	Connector Number	Cavity	Seal/Sleeve	Lock 1	Lock 2
RK57	14	OR	GXL	3549416C1	3595622C1	1701F	3	N/A		
RK57	14	OR	GXL	3549416C1	3595622C1	1701F	3	N/A		
RK68	14	BN	GXL	3549416C1	3595622C1	1701F	4	N/A		
RK68	14	BN	GXL	3549416C1	3595622C1	1701F	4	N/A		
NA56T	10	YL	GXL	3549415C1	3595622C1	1701F	5	N/A		
NB56T	10	YL	GXL	3549415C1	3595622C1	1701F	5	N/A		
NC56T	10	YL	GXL	3549415C1	3595622C1	1701F	5	N/A		
NE56T	10	YL	GXL	3549415C1	3595622C1	1701F	5	N/A		
VE56T	10	YL	GXL	3549415C1	3595622C1	1701F	5	N/A		
NC56T	10	YL	GXL	3549415C1	3595622C1	1701F	5	N/A		
NA57T	10	LTGN	GXL	3549415C1	3595622C1	1701F	6	N/A		
NB57T	10	LTGN	GXL	3549415C1	3595622C1	1701F	6	N/A		
NC57T	10	LTGN	GXL	3549415C1	3595622C1	1701F	6	N/A		
NE57T	10	LTGN	GXL	3549415C1	3595622C1	1701F	6	N/A		
VE57T	10	LTGN	GXL	3549415C1	3595622C1	1701F	6	N/A		
NC57T	10	LTGN	GXL	3549415C1	3595622C1	1701F	6	N/A		
NA54T	10	BN	GXL	3549415C1	3595622C1	1701F	7	N/A		
NB54T	10	BN	GXL	3549415C1	3595622C1	1701F	7	N/A		
NC54T	10	BN	GXL	3549415C1	3595622C1	1701F	7	N/A		
NE54T	10	BN	GXL	3549415C1	3595622C1	1701F	7	N/A		
VE54T	10	BN	GXL	3549415C1	3595622C1	1701F	7	N/A		
NC54T	10	BN	GXL	3549415C1	3595622C1	1701F	7	N/A		
NA68T	10	BN	GXL	3549415C1	3595622C1	1701F	8	N/A		
NB68T	10	BN	GXL	3549415C1	3595622C1	1701F	8	N/A		
NC68T	10	BN	GXL	3549415C1	3595622C1	1701F	8	N/A		
NE68T	10	BN	GXL	3549415C1	3595622C1	1701F	8	N/A		
VE68T	10	BN	GXL	3549415C1	3595622C1	1701F	8	N/A		
NC68T	10	BN	GXL	3549415C1	3595622C1	1701F	8	N/A		
NA70T	10	RD	GXL	3549415C1	3595622C1	1701F	9	N/A		
NB70T	10	RD	GXL	3549415C1	3595622C1	1701F	9	N/A		
NC70T	10	RD	GXL	3549415C1	3595622C1	1701F	9	N/A		
NE70T	10	RD	GXL	3549415C1	3595622C1	1701F	9	N/A		
VE70T	10	RD	GXL	3549415C1	3595622C1	1701F	9	N/A		
NC70T	10	RD	GXL	3549415C1	3595622C1	1701F	9	N/A		
NA94T	10	GY	GXL	3549415C1	3595622C1	1701F	10	N/A		
NB94T	10	GY	GXL	3549415C1	3595622C1	1701F	10	N/A		
NC94T	10	GY	GXL	3549415C1	3595622C1	1701F	10	N/A		
NE94T	10	GY	GXL	3549415C1	3595622C1	1701F	10	N/A		
VE94T	10	GY	GXL	3549415C1	3595622C1	1701F	10	N/A		
NC94T	10	GY	GXL	3549415C1	3595622C1	1701F	10	N/A		
NB72	12	OR	GXL	3549415C1	3595622C1	1701F	11	N/A		
SZ72	10	OR	TXL	3549415C1	3595622C1	1701F	11	N/A		
VE72RW	10	OR	GXL	3549415C1	3595622C1	1701F	11	N/A		
SZ72	10	OR	TXL	3549415C1	3595622C1	1701F	11	N/A		
ND56BB	16	YL	GXL	3549416C1	3595622C1	1701F	12	N/A		
PV56BB	16	YL	GXL	3549416C1	3595622C1	1701F	12	N/A		
ND56BB	16	YL	GXL	3549416C1	3595622C1	1701F	12	N/A		
PV56BB	16	YL	GXL	3549416C1	3595622C1	1701F	12	N/A		
RX9	16	GY	GXL	3549416C1	3595622C1	1701F	13	N/A		
SL9	16	GY	GXL	3549416C1	3595622C1	1701F	13	N/A		
PR94BM	16	GY	TXL	3549417C1	3595622C1	1701F	14	N/A		
ZU94WL	16	GY	TXL	3549417C1	3595622C1	1701F	14	N/A		
PR94BM	16	GY	TXL	3549417C1	3595622C1	1701F	14	N/A		
ZU94WL	16	GY	TXL	3549417C1	3595622C1	1701F	14	N/A		

Circuit Number	Gauge	Color	Insulation	Terminal / Splice Number	Connector Part number	Connector Number	Cavity	Seal/Sleeve	Lock 1	Lock 2
PR94BN	16	GY	TXL	3549417C1	3595622C1	1701F	15	N/A		
ZU94WM	16	GY	TXL	3549417C1	3595622C1	1701F	15	N/A		
PR94BN	16	GY	TXL	3549417C1	3595622C1	1701F	15	N/A		
ZU94WM	16	GY	TXL	3549417C1	3595622C1	1701F	15	N/A		
MD94BE	16	GY	GXL	3549417C1	3595622C1	1701F	16	N/A		
ZU94WW	14	GY	TXL	3549417C1	3595622C1	1701F	16	N/A		
MD94BE	16	GY	GXL	3549417C1	3595622C1	1701F	16	N/A		
ZU94WW	14	GY	TXL	3549417C1	3595622C1	1701F	16	N/A		
MD94BD	16	GY	GXL	3549417C1	3595622C1	1701F	17	N/A		
ZU94WU	14	GY	TXL	3549417C1	3595622C1	1701F	17	N/A		
MD94BD	16	GY	GXL	3549417C1	3595622C1	1701F	17	N/A		
ZU94WU	14	GY	TXL	3549417C1	3595622C1	1701F	17	N/A		
MD94BH	16	GY	TXL	3549417C1	3595622C1	1701F	18	N/A		
ZU94WN	14	GY	TXL	3549417C1	3595622C1	1701F	18	N/A		
MD94BH	16	GY	TXL	3549417C1	3595622C1	1701F	18	N/A		
ZU94WN	14	GY	TXL	3549417C1	3595622C1	1701F	18	N/A		
MD94BF	16	GY	TXL	3549417C1	3595622C1	1701F	19	N/A		
ZU94WR	14	GY	TXL	3549417C1	3595622C1	1701F	19	N/A		
MD94BF	16	GY	TXL	3549417C1	3595622C1	1701F	19	N/A		
ZU94WR	14	GY	TXL	3549417C1	3595622C1	1701F	19	N/A		
MD94BL	16	GY	TXL	3549417C1	3595622C1	1701F	20	N/A		
MD94BL	16	GY	TXL	3549417C1	3595622C1	1701F	20	N/A		
MD94BJ	16	GY	TXL	3549417C1	3595622C1	1701F	21	N/A		
MD94BJ	16	GY	TXL	3549417C1	3595622C1	1701F	21	N/A		
MD94BK	16	GY	TXL	3549417C1	3595622C1	1701F	22	N/A		
ZU94WS	16	GY	TXL	3549417C1	3595622C1	1701F	22	N/A		
MD94BK	16	GY	TXL	3549417C1	3595622C1	1701F	22	N/A		
ZU94WS	16	GY	TXL	3549417C1	3595622C1	1701F	22	N/A		
MD94BA	16	GY	GXL	3549417C1	3595622C1	1701F	23	N/A		
ZU94WT	16	GY	TXL	3549417C1	3595622C1	1701F	23	N/A		
MD94BA	16	GY	GXL	3549417C1	3595622C1	1701F	23	N/A		
ZU94WT	16	GY	TXL	3549417C1	3595622C1	1701F	23	N/A		
MD94BB	16	GY	TXL	3549417C1	3595622C1	1701F	24	N/A		
ZU94-G7	14	GY	TXL	3549417C1	3595622C1	1701F	24	N/A		
MD94BB	16	GY	TXL	3549417C1	3595622C1	1701F	24	N/A		
ZU94C	14	GY	TXL	3549417C1	3595622C1	1701F	24	N/A		
MD94BC	16	GY	TXL	3549417C1	3595622C1	1701F	25	N/A		
ZU94-G6	14	GY	TXL	3549417C1	3595622C1	1701F	25	N/A		
MD94BC	16	GY	TXL	3549417C1	3595622C1	1701F	25	N/A		
ZU94A	14	GY	TXL	3549417C1	3595622C1	1701F	25	N/A		
VE28RW	18	TN	GXL	3574277C1	3595622C1	1701F	26	N/A		
FG36B	18	TN	GXL	3549418C1	3595622C1	1701F	27	N/A		
ZL36B	18	TN	GXL	3549418C1	3595622C1	1701F	27	N/A		
ZP36B	18	TN	GXL	3549418C1	3595622C1	1701F	27	N/A		
ZT36B	18	TN	GXL	3549418C1	3595622C1	1701F	27	N/A		
ZV36B	18	TN	GXL	3549418C1	3595622C1	1701F	27	N/A		
ZX36B	18	TN	GXL	3549418C1	3595622C1	1701F	27	N/A		
ZP36B	18	TN	GXL	3549418C1	3595622C1	1701F	27	N/A		
ZT36B	18	TN	GXL	3549418C1	3595622C1	1701F	27	N/A		
ZV36B	18	TN	GXL	3549418C1	3595622C1	1701F	27	N/A		
ZX36B	18	TN	GXL	3549418C1	3595622C1	1701F	27	N/A		
FA36A	18	GY	GXL	3549418C1	3595622C1	1701F	29	N/A		
FB36A	18	TN	GXL	3549418C1	3595622C1	1701F	29	N/A		
FC36A	18	TN	GXL	3549418C1	3595622C1	1701F	29	N/A		

Circuit Number	Gauge	Color	Insulation	Terminal / Splice Number	Connector Part number	Connector Number	Cavity	Seal/Sleeve	Lock 1	Lock 2
FD36A	18	GY	GXL	3549418C1	3595622C1	1701F	29	N/A		
FE36A	18	GY	GXL	3549418C1	3595622C1	1701F	29	N/A		
FF36A	18	GY	GXL	3549418C1	3595622C1	1701F	29	N/A		
PL36A	18	GY	GXL	3549418C1	3595622C1	1701F	29	N/A		
FD36A	18	TN	GXL	3549418C1	3595622C1	1701F	29	N/A		
AC39B	16	GY	GXL	3549417C1	3595622C1	1701F	31	N/A		
AD39B	16	GY	GXL	3549417C1	3595622C1	1701F	31	N/A		
AE39B	16	GY	GXL	3549417C1	3595622C1	1701F	31	N/A		
AF39B	16	GY	GXL	3549417C1	3595622C1	1701F	31	N/A		
AG39B	16	GY	GXL	3549417C1	3595622C1	1701F	31	N/A		
AJ39B	16	GY	GXL	3549417C1	3595622C1	1701F	31	N/A		
AP39B	16	GY	GXL	3549417C1	3595622C1	1701F	31	N/A		
AQ39B	16	GY	GXL	3549417C1	3595622C1	1701F	31	N/A		
AR39B	16	GY	GXL	3549417C1	3595622C1	1701F	31	N/A		
AS39B	16	GY	GXL	3549417C1	3595622C1	1701F	31	N/A		
BA39B	16	GY	GXL	3549417C1	3595622C1	1701F	31	N/A		
NH39B	16	GY	TXL	3549417C1	3595622C1	1701F	31	N/A		
NX39B	16	GY	GXL	3549417C1	3595622C1	1701F	31	N/A		
PA39B	16	GY	GXL	3549417C1	3595622C1	1701F	31	N/A		
PF39B	18	GY	GXL	3549418C1	3595622C1	1701F	31	N/A		
PN39B	16	GY	GXL	3549417C1	3595622C1	1701F	31	N/A		
ZN39B	18	GY	GXL	3549418C1	3595622C1	1701F	31	N/A		
AC39B	16	GY	GXL	3549417C1	3595622C1	1701F	31	N/A		
AD39B	16	GY	GXL	3549417C1	3595622C1	1701F	31	N/A		
AE39B	16	GY	GXL	3549417C1	3595622C1	1701F	31	N/A		
AJ39B	16	GY	GXL	3549417C1	3595622C1	1701F	31	N/A		
AP39B	16	GY	GXL	3549417C1	3595622C1	1701F	31	N/A		
AQ39B	16	GY	GXL	3549417C1	3595622C1	1701F	31	N/A		
AR39B	16	GY	GXL	3549417C1	3595622C1	1701F	31	N/A		
NG59B	18	GY	GXL	3549418C1	3595622C1	1701F	32	N/A		
TV59B	18	GY	GXL	3549418C1	3595622C1	1701F	32	N/A		
NG59B	18	GY	GXL	3549418C1	3595622C1	1701F	32	N/A		
NM59B	18	GY	GXL	3549418C1	3595622C1	1701F	32	N/A		
NG59C	18	GY	GXL	3549418C1	3595622C1	1701F	33	N/A		
NG59C	18	GY	GXL	3549418C1	3595622C1	1701F	33	N/A		
NG59D	18	GY	GXL	3549418C1	3595622C1	1701F	34	N/A		
NG59D	18	GY	GXL	3549418C1	3595622C1	1701F	34	N/A		
NG59E	18	GY	GXL	3549418C1	3595622C1	1701F	35	N/A		
NG59E	18	GY	GXL	3549418C1	3595622C1	1701F	35	N/A		
2A59G	18	GY	GXL	3549418C1	3595622C1	1701F	36	N/A		
BU59G	18	GY	GXL	3549418C1	3595622C1	1701F	36	N/A		
BV59G	18	GY	GXL	3549418C1	3595622C1	1701F	36	N/A		
NU59G	18	GY	GXL	3549418C1	3595622C1	1701F	36	N/A		
NZ59G	18	GY	GXL	3549418C1	3595622C1	1701F	36	N/A		
RE59G	14	WH	GXL	3549417C1	3595622C1	1701F	36	N/A		
NS59T	18	GY	GXL	3549418C1	3595622C1	1701F	36	N/A		
NT59T	18	GY	GXL	3549418C1	3595622C1	1701F	36	N/A		
NZ59G	18	GY	GXL	3549418C1	3595622C1	1701F	36	N/A		
2A59H	18	GY	GXL	3549418C1	3595622C1	1701F	37	N/A		
BU59H	18	GY	GXL	3549418C1	3595622C1	1701F	37	N/A		
BV59H	18	GY	GXL	3549418C1	3595622C1	1701F	37	N/A		
NU59H	18	GY	GXL	3549418C1	3595622C1	1701F	37	N/A		
NZ59H	18	GY	GXL	3549418C1	3595622C1	1701F	37	N/A		
RE59H	18	GY	GXL	3549418C1	3595622C1	1701F	37	N/A		

Circuit Number	Gauge	Color	Insulation	Terminal / Splice Number	Connector Part number	Connector Number	Cavity	Seal/Sleeve	Lock 1	Lock 2
NS59U	18	GY	GXL	3549418C1	3595622C1	1701F	37	N/A		
NT59U	18	GY	GXL	3549418C1	3595622C1	1701F	37	N/A		
NZ59H	18	GY	GXL	3549418C1	3595622C1	1701F	37	N/A		
2A59J	18	GY	GXL	3549418C1	3595622C1	1701F	38	N/A		
BU59J	18	GY	GXL	3549418C1	3595622C1	1701F	38	N/A		
BV59J	18	GY	GXL	3549418C1	3595622C1	1701F	38	N/A		
NU59J	18	GY	GXL	3549418C1	3595622C1	1701F	38	N/A		
NZ59J	18	GY	GXL	3549418C1	3595622C1	1701F	38	N/A		
RE59J	18	GY	GXL	3549418C1	3595622C1	1701F	38	N/A		
NS59V	18	GY	GXL	3549418C1	3595622C1	1701F	38	N/A		
NT59V	18	GY	GXL	3549418C1	3595622C1	1701F	38	N/A		
NZ59J	18	GY	GXL	3549418C1	3595622C1	1701F	38	N/A		
2A59K	18	GY	GXL	3549418C1	3595622C1	1701F	39	N/A		
BU59K	18	GY	GXL	3549418C1	3595622C1	1701F	39	N/A		
BV59K	18	GY	GXL	3549418C1	3595622C1	1701F	39	N/A		
NU59K	18	GY	GXL	3549418C1	3595622C1	1701F	39	N/A		
NZ59K	18	GY	GXL	3549418C1	3595622C1	1701F	39	N/A		
RE59K	18	GY	GXL	3549418C1	3595622C1	1701F	39	N/A		
NS59W	18	GY	GXL	3549418C1	3595622C1	1701F	39	N/A		
NT59W	18	GY	GXL	3549418C1	3595622C1	1701F	39	N/A		
NZ59K	18	GY	GXL	3549418C1	3595622C1	1701F	39	N/A		
2F39A	18	GY	GXL	3549418C1	3595622C1	1701F	40	N/A		
AH39A	18	GY	GXL	3549418C1	3595622C1	1701F	40	N/A		
BB39A	18	GY	GXL	3549418C1	3595622C1	1701F	40	N/A		
BC39A	18	GY	GXL	3549418C1	3595622C1	1701F	40	N/A		
BZ39A	18	GY	GXL	3549418C1	3595622C1	1701F	40	N/A		
NK39A	18	GY	GXL	3549418C1	3595622C1	1701F	40	N/A		
NN39A	18	GY	GXL	3549418C1	3595622C1	1701F	40	N/A		
NP39A	18	GY	GXL	3549418C1	3595622C1	1701F	40	N/A		
NQ39A	18	GY	GXL	3549418C1	3595622C1	1701F	40	N/A		
PS39A	18	GY	GXL	3549418C1	3595622C1	1701F	40	N/A		
AH39A	18	GY	GXL	3549418C1	3595622C1	1701F	40	N/A		
BZ39A	18	GY	GXL	3549418C1	3595622C1	1701F	40	N/A		
NK39A	18	GY	GXL	3549418C1	3595622C1	1701F	40	N/A		
NN39A	18	GY	GXL	3549418C1	3595622C1	1701F	40	N/A		
NQ39A	18	GY	GXL	3549418C1	3595622C1	1701F	40	N/A		
NU39A	18	GY	GXL	3549418C1	3595622C1	1701F	40	N/A		
PS39A	18	GY	GXL	3549418C1	3595622C1	1701F	40	N/A		
AK87EA	18	GY	TXL	3549418C1	3595622C1	1701F	41	N/A		
PP87EA	18	GY	TXL	3549418C1	3595622C1	1701F	41	N/A		
AK87EA	18	GY	TXL	3549418C1	3595622C1	1701F	41	N/A		
ND56BC	16	YL	GXL	3549417C1	3595622C1	1701F	42	N/A		
PV56BC	16	YL	GXL	3549417C1	3595622C1	1701F	42	N/A		
ND56BC	16	YL	GXL	3549417C1	3595622C1	1701F	42	N/A		
PV56BC	16	YL	GXL	3549417C1	3595622C1	1701F	42	N/A		
MG32A	18	TN	GXL	3549418C1	3595622C1	1701F	43	N/A		
SW104CA	16	DKBL	TXL	3549417C1	3595622C1	1701F	43	N/A		
SW104CA	16	DKBL	TXL	3549417C1	3595622C1	1701F	43	N/A		
RH32	18	TN	GXL	3549418C1	3595622C1	1701F	44	N/A		
SW59CA	16	GY	TXL	3549417C1	3595622C1	1701F	44	N/A		
RH32	18	TN	GXL	3549418C1	3595622C1	1701F	44	N/A		
SW59CA	16	GY	TXL	3549417C1	3595622C1	1701F	44	N/A		
RL49A	18	GY	GXL	3549418C1	3595622C1	1701F	45	N/A		
RL49A	18	GY	GXL	3549418C1	3595622C1	1701F	45	N/A		

Circuit Number	Gauge	Color	Insulation	Terminal / Splice Number	Connector Part number	Connector Number	Cavity	Seal/Sleeve	Lock 1	Lock 2
2B59M	18	GY	GXL	3549418C1	3595622C1	1701F	46	N/A		
NR59M	18	GY	GXL	3549418C1	3595622C1	1701F	46	N/A		
NW59M	18	GY	GXL	3549418C1	3595622C1	1701F	46	N/A		
NR59M	18	GY	GXL	3549418C1	3595622C1	1701F	46	N/A		
2B59N	18	GY	GXL	3549418C1	3595622C1	1701F	47	N/A		
NR59N	18	GY	GXL	3549418C1	3595622C1	1701F	47	N/A		
NW59N	18	GY	GXL	3549418C1	3595622C1	1701F	47	N/A		
NR59N	18	GY	GXL	3549418C1	3595622C1	1701F	47	N/A		
2B59P	18	GY	GXL	3549418C1	3595622C1	1701F	48	N/A		
NR59P	18	GY	GXL	3549418C1	3595622C1	1701F	48	N/A		
NW59P	18	GY	GXL	3549418C1	3595622C1	1701F	48	N/A		
NR59P	18	GY	GXL	3549418C1	3595622C1	1701F	48	N/A		
2B59Q	18	GY	GXL	3549418C1	3595622C1	1701F	49	N/A		
NR59Q	18	GY	GXL	3549418C1	3595622C1	1701F	49	N/A		
NW59Q	18	GY	GXL	3549418C1	3595622C1	1701F	49	N/A		
VT94SJ	18	GY	GXL	3549418C1	3595622C1	1701F	49	N/A		
NR59Q	18	GY	GXL	3549418C1	3595622C1	1701F	49	N/A		
VT94SJ	18	GY	GXL	3549418C1	3595622C1	1701F	49	N/A		
MJ49	18	GY	GXL	3549418C1	3595622C1	1701F	50	N/A		
NL20	16	LTGN	GXL	3549416C1	3595622C1	1701F	51	N/A		
NT20	16	LTGN	GXL	3549416C1	3595622C1	1701F	51	N/A		
RA20	16	LTGN	GXL	3549416C1	3595622C1	1701F	51	N/A		
RB20	16	LTGN	GXL	3549416C1	3595622C1	1701F	51	N/A		
ZE20	16	LTGN	GXL	3549416C1	3595622C1	1701F	51	N/A		
NL20	16	LTGN	GXL	3549416C1	3595622C1	1701F	51	N/A		
RB20	16	LTGN	GXL	3549416C1	3595622C1	1701F	51	N/A		
ZE20	16	LTGN	GXL	3549416C1	3595622C1	1701F	51	N/A		
NL5E(+)	18	YL	TXL	3549418C1	3595622C1	1701F	52	N/A		
NT5E(+)	18	YL	TXL	3549418C1	3595622C1	1701F	52	N/A		
RA5E(+)	18	YL	TXL	3549418C1	3595622C1	1701F	52	N/A		
RB5E(+)	18	YL	TXL	3549418C1	3595622C1	1701F	52	N/A		
ZE5E(+)	18	YL	TXL	3549418C1	3595622C1	1701F	52	N/A		
NL5E(+)	18	YL	TXL	3549418C1	3595622C1	1701F	52	N/A		
RB5E(+)	18	YL	TXL	3549418C1	3595622C1	1701F	52	N/A		
ZE5E(+)	18	YL	TXL	3549418C1	3595622C1	1701F	52	N/A		
NL5E(-)	18	GN	TXL	3549418C1	3595622C1	1701F	53	N/A		
NT5E(-)	18	GN	TXL	3549418C1	3595622C1	1701F	53	N/A		
RA5E(-)	18	GN	TXL	3549418C1	3595622C1	1701F	53	N/A		
RB5E(-)	18	GN	TXL	3549418C1	3595622C1	1701F	53	N/A		
ZE5E(-)	18	GN	TXL	3549418C1	3595622C1	1701F	53	N/A		
NL5E(-)	18	GN	TXL	3549418C1	3595622C1	1701F	53	N/A		
RB5E(-)	18	GN	TXL	3549418C1	3595622C1	1701F	53	N/A		
NS59S	18	GY	GXL	3549418C1	3595622C1	1701F	54	N/A		
TA94SAB	18	GY	GXL	3549418C1	3595622C1	1701F	54	N/A		
TG94SAB	18	GY	GXL	3549418C1	3595622C1	1701F	54	N/A		
TA94SAB	18	GY	GXL	3549418C1	3595622C1	1701F	54	N/A		
ZE5E(-)	18	GN	TXL	3549418C1	3595622C1	1701F	54	N/A		
NS59T	18	GY	GXL	3549418C1	3595622C1	1701F	55	N/A		
PD61B	18	GY	GXL	3549418C1	3595622C1	1701F	55	N/A		
TA94SCB	18	GY	GXL	3549418C1	3595622C1	1701F	55	N/A		
TG94SCB	18	GY	GXL	3549418C1	3595622C1	1701F	55	N/A		
PD61B	18	GY	GXL	3549418C1	3595622C1	1701F	55	N/A		
TA94SCB	18	GY	GXL	3549418C1	3595622C1	1701F	55	N/A		
NS59V	18	GY	GXL	3549418C1	3595622C1	1701F	56	N/A		

Circuit Number	Gauge	Color	Insulation	Terminal / Splice Number	Connector Part number	Connector Number	Cavity	Seal/Sleeve	Lock 1	Lock 2
PD106B	18	GY	GXL	3549418C1	3595622C1	1701F	56	N/A		
TA94SBB	18	GY	GXL	3549418C1	3595622C1	1701F	56	N/A		
TG94SBB	18	GY	GXL	3549418C1	3595622C1	1701F	56	N/A		
PD106B	18	GY	GXL	3549418C1	3595622C1	1701F	56	N/A		
TA94SBB	18	GY	GXL	3549418C1	3595622C1	1701F	56	N/A		
NS59W	18	GY	GXL	3549418C1	3595622C1	1701F	57	N/A		
PD110B	18	GY	GXL	3549418C1	3595622C1	1701F	57	N/A		
TA94SDB	18	GY	GXL	3549418C1	3595622C1	1701F	57	N/A		
TG94SDB	18	GY	GXL	3549418C1	3595622C1	1701F	57	N/A		
PD110B	18	GY	GXL	3549418C1	3595622C1	1701F	57	N/A		
TA94SDB	18	GY	GXL	3549418C1	3595622C1	1701F	57	N/A		
AB87DA	16	GY	GXL	3549417C1	3595622C1	1701F	58	N/A		
NY87DB	18	GY	GXL	3549418C1	3595622C1	1701F	58	N/A		
AB87DA	16	GY	GXL	3549417C1	3595622C1	1701F	58	N/A		
AB87DB	18	GY	GXL	3549418C1	3595622C1	1701F	59	N/A		
NY87MB	16	GY	GXL	3549417C1	3595622C1	1701F	59	N/A		
AB87DB	18	GY	GXL	3549418C1	3595622C1	1701F	59	N/A		
SJ59ED	18	GY	GXL	3549418C1	3595622C1	1701F	60	N/A		
TT38A	18	GY	TXL	3549418C1	3595622C1	1701F	60	N/A		
UC59EF	18	GY	GXL	3549418C1	3595622C1	1701F	60	N/A		
UC59EF	18	GY	GXL	3549418C1	3595622C1	1701F	60	N/A		
AT94AA	16	GY	GXL	3549417C1	3595622C1	1701F	61	N/A		
UD59EC	18	GY	GXL	3549418C1	3595622C1	1701F	61	N/A		
ZJ94AA	16	GY	GXL	3549417C1	3595622C1	1701F	61	N/A		
ND57BB	16	LTGN	GXL	3549417C1	3595622C1	1701F	63	N/A		
PV57BB	16	LTGN	GXL	3549417C1	3595622C1	1701F	63	N/A		
ND57BB	16	LTGN	GXL	3549417C1	3595622C1	1701F	63	N/A		
PV57BB	16	LTGN	GXL	3549417C1	3595622C1	1701F	63	N/A		
ND57BC	16	LTGN	GXL	3549416C1	3595622C1	1701F	64	N/A		
PV57BC	16	LTGN	GXL	3549416C1	3595622C1	1701F	64	N/A		
ND57BC	16	LTGN	GXL	3549416C1	3595622C1	1701F	64	N/A		
PV57BC	16	LTGN	GXL	3549416C1	3595622C1	1701F	64	N/A		
AT94AB	16	GY	GXL	3549416C1	3595622C1	1701F	65	N/A		
BE42	16	GY	GXL	3549416C1	3595622C1	1701F	65	N/A		
ML42	16	GY	GXL	3549416C1	3595622C1	1701F	65	N/A		
TE42	16	GY	GXL	3549416C1	3595622C1	1701F	65	N/A		
TR42	16	GY	GXL	3549416C1	3595622C1	1701F	65	N/A		
XN47TS	16	GY	GXL	3549416C1	3595622C1	1701F	65	N/A		
ZJ94AB	16	GY	GXL	3549416C1	3595622C1	1701F	65	N/A		
ML42	16	GY	GXL	3549416C1	3595622C1	1701F	65	N/A		
TR42	16	GY	GXL	3549416C1	3595622C1	1701F	65	N/A		
YL112	16	GY	GXL	3549416C1	3595622C1	1701F	66	N/A		
YP112	16	GY	GXL	3549416C1	3595622C1	1701F	66	N/A		
YP112	16	GY	GXL	3549416C1	3595622C1	1701F	66	N/A		
CA19	16	GY	GXL	3549416C1	3595622C1	1701F	67	N/A		
CB19	16	GY	GXL	3549416C1	3595622C1	1701F	67	N/A		
CC19	16	GY	GXL	3549416C1	3595622C1	1701F	67	N/A		
CD19	16	GY	GXL	3549416C1	3595622C1	1701F	67	N/A		
CE19	16	GY	GXL	3549416C1	3595622C1	1701F	67	N/A		
CF19	16	GY	GXL	3549416C1	3595622C1	1701F	67	N/A		
CG19	16	GY	GXL	3549416C1	3595622C1	1701F	67	N/A		
CH19	16	GY	GXL	3549416C1	3595622C1	1701F	67	N/A		
CN19	16	GY	GXL	3549416C1	3595622C1	1701F	67	N/A		
CP19	16	GY	GXL	3549416C1	3595622C1	1701F	67	N/A		

Circuit Number	Gauge	Color	Insulation	Terminal / Splice Number	Connector Part number	Connector Number	Cavity	Seal/Sleeve	Lock 1	Lock 2
CR19	16	GY	GXL	3549416C1	3595622C1	1701F	67	N/A		
CS19	16	GY	GXL	3549416C1	3595622C1	1701F	67	N/A		
CT19	16	GY	GXL	3549416C1	3595622C1	1701F	67	N/A		
CU19	16	GY	GXL	3549416C1	3595622C1	1701F	67	N/A		
CV19	16	GY	GXL	3549416C1	3595622C1	1701F	67	N/A		
CW19	16	GY	GXL	3549416C1	3595622C1	1701F	67	N/A		
CX19	16	GY	GXL	3549416C1	3595622C1	1701F	67	N/A		
CY19	16	GY	GXL	3549416C1	3595622C1	1701F	67	N/A		
CZ19	16	GY	GXL	3549416C1	3595622C1	1701F	67	N/A		
PU19	16	GY	GXL	3549416C1	3595622C1	1701F	67	N/A		
PX19	16	GY	GXL	3549416C1	3595622C1	1701F	67	N/A		
XA19	16	GY	GXL	3549416C1	3595622C1	1701F	67	N/A		
XY19	16	GY	GXL	3549416C1	3595622C1	1701F	67	N/A		
CA19	16	GY	GXL	3549416C1	3595622C1	1701F	67	N/A		
CB19	16	GY	GXL	3549416C1	3595622C1	1701F	67	N/A		
CD19	16	GY	GXL	3549416C1	3595622C1	1701F	67	N/A		
CE19	16	GY	GXL	3549416C1	3595622C1	1701F	67	N/A		
CF19	16	GY	GXL	3549416C1	3595622C1	1701F	67	N/A		
CG19	16	GY	GXL	3549416C1	3595622C1	1701F	67	N/A		
CH19E	16	GY	GXL	3549416C1	3595622C1	1701F	67	N/A		
CJ19A	16	GY	GXL	3549416C1	3595622C1	1701F	67	N/A		
CK19B	16	GY	GXL	3549416C1	3595622C1	1701F	67	N/A		
CL19C	16	GY	GXL	3549416C1	3595622C1	1701F	67	N/A		
CM19F	16	GY	GXL	3549416C1	3595622C1	1701F	67	N/A		
CN19	16	GY	GXL	3549416C1	3595622C1	1701F	67	N/A		
CP19D	16	GY	GXL	3549416C1	3595622C1	1701F	67	N/A		
CR19H	16	GY	GXL	3549416C1	3595622C1	1701F	67	N/A		
NF65	16	OR	GXL	3549416C1	3595622C1	1701F	68	N/A		
UA65	16	OR	GXL	3549416C1	3595622C1	1701F	68	N/A		
NF65	16	OR	GXL	3549416C1	3595622C1	1701F	68	N/A		
VT94SK	18	GY	GXL	3574277C1	3595622C1	1701F	69	N/A		
VT94SK	18	GY	GXL	3574277C1	3595622C1	1701F	69	N/A		
EV12-G	18	WH	GXL	3574277C1	3595622C1	1701F	70	N/A		
RM71N	16	OR	GXL	3549416C1	3595622C1	1701F	70	N/A		
EV12-G	18	WH	GXL	3574277C1	3595622C1	1701F	70	N/A		
ND68BB	14	BN	GXL	3549416C1	3595622C1	1701F	71	N/A		
PV68BB	14	BN	GXL	3549416C1	3595622C1	1701F	71	N/A		
ND68BB	14	BN	GXL	3549416C1	3595622C1	1701F	71	N/A		
PV68BB	14	BN	GXL	3549416C1	3595622C1	1701F	71	N/A		
ND70BB	14	RD	GXL	3549416C1	3595622C1	1701F	72	N/A		
PV70BB	14	RD	GXL	3549416C1	3595622C1	1701F	72	N/A		
ND70BB	14	RD	GXL	3549416C1	3595622C1	1701F	72	N/A		
PV70BB	14	RD	GXL	3549416C1	3595622C1	1701F	72	N/A		
ND71BB	16	LTBL	GXL	3549416C1	3595622C1	1701F	73	N/A		
PV71BB	16	LTBL	GXL	3549416C1	3595622C1	1701F	73	N/A		
VE71BZ	16	OR	GXL	3549416C1	3595622C1	1701F	73	N/A		
ND71BB	16	LTBL	GXL	3549416C1	3595622C1	1701F	73	N/A		
PV71BB	16	LTBL	GXL	3549416C1	3595622C1	1701F	73	N/A		
ND54BB	14	BN	GXL	3549416C1	3595622C1	1701F	74	N/A		
PV54BB	14	BN	GXL	3549416C1	3595622C1	1701F	74	N/A		
ND54BB	14	BN	GXL	3549416C1	3595622C1	1701F	74	N/A		
PV54BB	14	BN	GXL	3549416C1	3595622C1	1701F	74	N/A		
ND12BB	14	LTBL	GXL	3549416C1	3595622C1	1701F	75	N/A		
PV12BB	14	LTBL	GXL	3549416C1	3595622C1	1701F	75	N/A		

Circuit Number	Gauge	Color	Insulation	Terminal / Splice Number	Connector Part number	Connector Number	Cavity	Seal/Sleeve	Lock 1	Lock 2
ND12BB	14	LTBL	GXL	3549416C1	3595622C1	1701F	75	N/A		
PV12BB	14	LTBL	GXL	3549416C1	3595622C1	1701F	75	N/A		
BG13TC1	16	PK	GXL	3549416C1	3595622C1	1701F	76	N/A		
ZK37C	16	TN	GXL	3549416C1	3595622C1	1701F	76	N/A		
ZQ37C	16	TN	GXL	3549416C1	3595622C1	1701F	76	N/A		
ZS37C	16	TN	GXL	3549416C1	3595622C1	1701F	76	N/A		
ZW37C	16	TN	GXL	3549416C1	3595622C1	1701F	76	N/A		
ZQ37C	16	TN	GXL	3549416C1	3595622C1	1701F	76	N/A		
ZS37C	16	TN	GXL	3549416C1	3595622C1	1701F	76	N/A		
ZW37C	16	TN	GXL	3549416C1	3595622C1	1701F	76	N/A		
SH14HC	14	RD	TXL	3549416C1	3595624C1	1703F	1	N/A		
SJ14HF	14	RD	TXL	3549416C1	3595624C1	1703F	1	N/A		
SK14HD	14	RD	TXL	3549416C1	3595624C1	1703F	1	N/A		
SL14HF	14	RD	TXL	3549416C1	3595624C1	1703F	1	N/A		
ZL71C	18	WH	TXL	3574277C1	3595624C1	1703F	1	N/A		
SH11-GA	14	WH	TXL	3549416C1	3595624C1	1703F	2	N/A		
SJ11-G	14	WH	TXL	3549416C1	3595624C1	1703F	2	N/A		
QA23ED	18	TN	TXL	3574277C1	3595624C1	1703F	3	N/A		
QA23BE	18	TN	TXL	3574277C1	3595624C1	1703F	4	N/A		
QA23CB	18	TN	TXL	3574277C1	3595624C1	1703F	5	N/A		
QA23DE	18	PK	TXL	3574277C1	3595624C1	1703F	6	N/A		
QA23EF	18	TN	TXL	3574277C1	3595624C1	1703F	7	N/A		
AA82-GJ	16	GY	TXL	3549416C1	3595624C1	1703F	8	N/A		
XS90K	16	GY	TXL	3549416C1	3595624C1	1703F	9	N/A		
XS90L	16	GY	TXL	3549416C1	3595624C1	1703F	10	N/A		
KL18A	16	GY	TXL	3549416C1	3595624C1	1703F	11	N/A		
KM18A	16	GY	TXL	3549416C1	3595624C1	1703F	11	N/A		
PC92A2	18	TN	TXL	3574277C1	3595624C1	1703F	11	N/A		
HW14LSD	12	RD	TXL	3549415C1	3595624C1	1703F	12	N/A		
MD13Z	16	PK	TXL	3549416C1	3595624C1	1703F	13	N/A		
PC92A18A	16	TN	GXL	3549417C1	3595624C1	1703F	14	N/A		
PC92A20A	16	TN	GXL	3549417C1	3595624C1	1703F	15	N/A		
MH11-GBA	18	WH	TXL	3549418C1	3595624C1	1703F	16	N/A		
MJ11-GBD	18	WH	TXL	3549418C1	3595624C1	1703F	16	N/A		
TB74J	18	LTGN	TXL	3549418C1	3595624C1	1703F	17	N/A		
RA28B	18	TN	TXL	3549418C1	3595624C1	1703F	18	N/A		
SA6DBJ	20	GY	TXL	3549418C1	3595624C1	1703F	19	N/A		
SA77BJ	20	LTGN	TXL	3549418C1	3595624C1	1703F	20	N/A		
UB92#134	18	TN	TXL	3549418C1	3595624C1	1703F	21	N/A		
UD92-GCJ	18	WH	TXL	3549418C1	3595624C1	1703F	21	N/A		
UL92#134	18	TN	TXL	3549418C1	3595624C1	1703F	21	N/A		
UK92A	18	TN	TXL	3549418C1	3595624C1	1703F	22	N/A		
SA77BAJ	20	LTGN	TXL	3549418C1	3595624C1	1703F	23	N/A		
MB41E	18	TN	TXL	3549418C1	3595624C1	1703F	24	N/A		
MC41EJ	18	TN	TXL	3549418C1	3595624C1	1703F	24	N/A		
MB41D	18	TN	TXL	3549418C1	3595624C1	1703F	25	N/A		
MC41	18	TN	TXL	3549418C1	3595624C1	1703F	25	N/A		
XS90P	18	GY	GXL	3574277C1	3595624C1	1703F	26	N/A		
MH26DA	18	TN	GXL	3549418C1	3595624C1	1703F	27	N/A		
MJ26DA	18	TN	GXL	3549418C1	3595624C1	1703F	27	N/A		
LH92#141	18	TN	TXL	3549418C1	3595624C1	1703F	28	N/A		
UB92#141	18	TN	TXL	3549418C1	3595624C1	1703F	28	N/A		
UD92BJ	18	TN	TXL	3549418C1	3595624C1	1703F	28	N/A		
UF92#141	18	TN	TXL	3549418C1	3595624C1	1703F	28	N/A		

Circuit Number	Gauge	Color	Insulation	Terminal / Splice Number	Connector Part number	Connector Number	Cavity	Seal/Sleeve	Lock 1	Lock 2
LA17A	16	PK	TXL	3549417C1	3595624C1	1703F	29	N/A		
LG17BA	16	PK	TXL	3549417C1	3595624C1	1703F	29	N/A		
MH5CC(+)	18	YL	TXL	3549418C1	3595624C1	1703F	30	N/A		
MJ5CC(+)	18	YL	TXL	3549418C1	3595624C1	1703F	30	N/A		
PA47T	18	GY	TXL	3549418C1	3595624C1	1703F	31	N/A		
PB97DG	18	VT	TXL	3549418C1	3595624C1	1703F	31	N/A		
MH5CC(-)	18	GN	TXL	3549418C1	3595624C1	1703F	32	N/A		
MJ5CC(-)	18	GN	TXL	3549418C1	3595624C1	1703F	32	N/A		
UE92J	18	TN	TXL	3549418C1	3595624C1	1703F	33	N/A		
UE92AJ	18	GY	TXL	3549418C1	3595624C1	1703F	34	N/A		
TC9AAJ	18	GY	TXL	3549418C1	3595624C1	1703F	35	N/A		
TD9E	18	GY	TXL	3549418C1	3595624C1	1703F	35	N/A		
BD97BJ	18	VT	TXL	3549418C1	3595624C1	1703F	36	N/A		
BE97BJ	18	VT	TXL	3549418C1	3595624C1	1703F	36	N/A		
BD97N	18	VT	TXL	3549418C1	3595624C1	1703F	37	N/A		
BE97WC	18	VT	TXL	3549418C1	3595624C1	1703F	37	N/A		
BD97M	18	VT	TXL	3549418C1	3595624C1	1703F	38	N/A		
BE97FU	16	VT	TXL	3549417C1	3595624C1	1703F	38	N/A		
XS90HA	16	GY	GXL	3549417C1	3595624C1	1703F	39	N/A		
XS90MA	18	GY	TXL	3549418C1	3595624C1	1703F	41	N/A		
UB92#163	16	PK	TXL	3549417C1	3595624C1	1703F	42	N/A		
UD13AJ	16	PK	GXL	3549417C1	3595624C1	1703F	42	N/A		
UF92#163	16	TN	TXL	3549417C1	3595624C1	1703F	42	N/A		
UL92#163B	16	PK	TXL	3549417C1	3595624C1	1703F	42	N/A		
PC92A3A	18	TN	GXL	3549418C1	3595624C1	1703F	43	N/A		
VA92#117	18	TN	TXL	3549418C1	3595624C1	1703F	43	N/A		
ZA71BJ	16	OR	TXL	3549417C1	3595624C1	1703F	44	N/A		
ZC92#165	18	TN	TXL	3549418C1	3595624C1	1703F	45	N/A		
ZH71AB	16	OR	TXL	3549417C1	3595624C1	1703F	45	N/A		
ZJ92#165	18	TN	TXL	3549418C1	3595624C1	1703F	45	N/A		
ZL71AA	18	TN	TXL	3549418C1	3595624C1	1703F	45	N/A		
BD99BJ	18	VT	TXL	3549418C1	3595624C1	1703F	47	N/A		
BE99BJ	18	VT	TXL	3549418C1	3595624C1	1703F	47	N/A		
BD99D	18	VT	TXL	3549418C1	3595624C1	1703F	48	N/A		
BE97M	18	VT	TXL	3549418C1	3595624C1	1703F	48	N/A		
BD97CJ	18	VT	TXL	3549418C1	3595624C1	1703F	49	N/A		
BE97CJ	18	VT	TXL	3549418C1	3595624C1	1703F	49	N/A		
9B5R(-)	18	GN	TXL	3549418C1	3595624C1	1703F	52	N/A		
9C5R(-)	18	GN	TXL	3549418C1	3595624C1	1703F	52	N/A		
9K5R(-)	18	GN	TXL	3549418C1	3595624C1	1703F	52	N/A		
9M5R(-)	18	GN	TXL	3549418C1	3595624C1	1703F	52	N/A		
9N5R(-)	18	GN	TXL	3549418C1	3595624C1	1703F	52	N/A		
9Q5R(-)	18	GN	TXL	3549418C1	3595624C1	1703F	52	N/A		
9R5R(-)	18	GN	TXL	3549418C1	3595624C1	1703F	52	N/A		
9U5PJ(-)	18	GN	TXL	3549418C1	3595624C1	1703F	52	N/A		
GB5R(-)	18	GN	TXL	3549418C1	3595624C1	1703F	52	N/A		
GE5R(-)	18	GN	TXL	3549418C1	3595624C1	1703F	52	N/A		
GF5R(-)	18	GN	TXL	3549418C1	3595624C1	1703F	52	N/A		
GG5R(-)	18	GN	TXL	3549418C1	3595624C1	1703F	52	N/A		
GH5R(-)	18	GN	TXL	3549418C1	3595624C1	1703F	52	N/A		
GJ5R(-)	18	GN	TXL	3549418C1	3595624C1	1703F	52	N/A		
GK5R(-)	18	GN	TXL	3549418C1	3595624C1	1703F	52	N/A		
GL5R(-)	18	GN	TXL	3549418C1	3595624C1	1703F	52	N/A		
GM5R(-)	18	GN	TXL	3549418C1	3595624C1	1703F	52	N/A		

Circuit Number	Gauge	Color	Insulation	Terminal / Splice Number	Connector Part number	Connector Number	Cavity	Seal/Sleeve	Lock 1	Lock 2
GN5R(-)	18	GN	TXL	3549418C1	3595624C1	1703F	52	N/A		
GP5R(-)	18	GN	TXL	3549418C1	3595624C1	1703F	52	N/A		
GQ5R(-)	18	GN	TXL	3549418C1	3595624C1	1703F	52	N/A		
GT5R(-)	18	GN	TXL	3549418C1	3595624C1	1703F	52	N/A		
GU5R(-)	18	GN	TXL	3549418C1	3595624C1	1703F	52	N/A		
GV5R(-)	18	GN	TXL	3549418C1	3595624C1	1703F	52	N/A		
9B5R(+)	18	YL	TXL	3549418C1	3595624C1	1703F	53	N/A		
9C5R(+)	18	YL	TXL	3549418C1	3595624C1	1703F	53	N/A		
9K5R(+)	18	YL	TXL	3549418C1	3595624C1	1703F	53	N/A		
9M5R(+)	18	YL	TXL	3549418C1	3595624C1	1703F	53	N/A		
9N5R(+)	18	YL	TXL	3549418C1	3595624C1	1703F	53	N/A		
9Q5R(+)	18	YL	TXL	3549418C1	3595624C1	1703F	53	N/A		
9R5R(+)	18	YL	TXL	3549418C1	3595624C1	1703F	53	N/A		
9U5PJ(+)	18	YL	TXL	3549418C1	3595624C1	1703F	53	N/A		
GB5R(+)	18	YL	TXL	3549418C1	3595624C1	1703F	53	N/A		
GE5R(+)	18	YL	TXL	3549418C1	3595624C1	1703F	53	N/A		
GF5R(+)	18	YL	TXL	3549418C1	3595624C1	1703F	53	N/A		
GG5R(+)	18	YL	TXL	3549418C1	3595624C1	1703F	53	N/A		
GH5R(+)	18	YL	TXL	3549418C1	3595624C1	1703F	53	N/A		
GJ5R(+)	18	YL	TXL	3549418C1	3595624C1	1703F	53	N/A		
GK5R(+)	18	YL	TXL	3549418C1	3595624C1	1703F	53	N/A		
GL5R(+)	18	YL	TXL	3549418C1	3595624C1	1703F	53	N/A		
GM5R(+)	18	YL	TXL	3549418C1	3595624C1	1703F	53	N/A		
GN5R(+)	18	YL	TXL	3549418C1	3595624C1	1703F	53	N/A		
GP5R(+)	18	YL	TXL	3549418C1	3595624C1	1703F	53	N/A		
GQ5R(+)	18	YL	TXL	3549418C1	3595624C1	1703F	53	N/A		
GT5R(+)	18	YL	TXL	3549418C1	3595624C1	1703F	53	N/A		
GU5R(+)	18	YL	TXL	3549418C1	3595624C1	1703F	53	N/A		
GV5R(+)	18	YL	TXL	3549418C1	3595624C1	1703F	53	N/A		
MA97FA	16	VT	TXL	3549417C1	3595624C1	1703F	54	N/A		
GX92#103	18	TN	TXL	3549418C1	3595624C1	1703F	55	N/A		
GY92#103	18	TN	TXL	3549418C1	3595624C1	1703F	55	N/A		
GZ92#103	18	TN	TXL	3549418C1	3595624C1	1703F	55	N/A		
UG92#161	18	TN	TXL	3549418C1	3595624C1	1703F	56	N/A		
UJ93	18	TN	TXL	3549418C1	3595624C1	1703F	56	N/A		
VB92#161	18	TN	TXL	3549418C1	3595624C1	1703F	56	N/A		
VB92#156	18	TN	TXL	3549418C1	3595624C1	1703F	57	N/A		
PC92DN2	18	TN	GXL	3549418C1	3595624C1	1703F	58	N/A		
VB92#158	18	TN	TXL	3549418C1	3595624C1	1703F	58	N/A		
LQ88AJ	18	LTGN	TXL	3549418C1	3595624C1	1703F	59	N/A		
LP88J	18	LTGN	TXL	3549418C1	3595624C1	1703F	60	N/A		
NJ31	18	TN	TXL	3549418C1	3595624C1	1703F	61	N/A		
VB92#112	18	TN	TXL	3549418C1	3595624C1	1703F	62	N/A		
XS9AB	18	GY	TXL	3549418C1	3595624C1	1703F	63	N/A		
SA77J	16	LTGN	GXL	3549416C1	3595624C1	1703F	65	N/A		
ZA71BA	16	OR	TXL	3549416C1	3595624C1	1703F	66	N/A		
ZH71	16	OR	TXL	3549416C1	3595624C1	1703F	66	N/A		
AA82KJ	16	GY	TXL	3549416C1	3595624C1	1703F	69	N/A		
AA82LJ	16	GY	TXL	3549416C1	3595624C1	1703F	70	N/A		
AA82JJ	16	GY	TXL	3549416C1	3595624C1	1703F	72	N/A		
AA82DJ	16	GY	TXL	3549416C1	3595624C1	1703F	74	N/A		
SH14HCA	14	RD	TXL	3574288C1	3595625C1	1703M	1	N/A		
SJ14HFA	14	RD	TXL	3574288C1	3595625C1	1703M	1	N/A		
SK14HC	14	RD	TXL	3574288C1	3595625C1	1703M	1	N/A		

Circuit Number	Gauge	Color	Insulation	Terminal / Splice Number	Connector Part number	Connector Number	Cavity	Seal/Sleeve	Lock 1	Lock 2
SL14HD	16	LTGN	TXL	3574288C1	3595625C1	1703M	1	N/A		
ZL71B	18	WH	TXL	3574289C1	3595625C1	1703M	1	N/A		
SH11-GAP	14	WH	TXL	3574288C1	3595625C1	1703M	2	N/A		
SJ11-GA	14	WH	TXL	3574288C1	3595625C1	1703M	2	N/A		
QA23-G	18	WH	TXL	3574289C1	3595625C1	1703M	3	N/A		
QA23BA	18	TN	TXL	3574289C1	3595625C1	1703M	4	N/A		
QA23CA	18	TN	TXL	3574289C1	3595625C1	1703M	5	N/A		
QA23DD	18	PK	TXL	3574289C1	3595625C1	1703M	6	N/A		
QA23EA	18	TN	TXL	3574289C1	3595625C1	1703M	7	N/A		
AD82-G	16	WH	TXL	3574288C1	3595625C1	1703M	8	N/A		
AE82-G	16	WH	TXL	3574288C1	3595625C1	1703M	8	N/A		
XS90KA	16	GY	TXL	3574288C1	3595625C1	1703M	9	N/A		
XS90LA	16	GY	TXL	3574288C1	3595625C1	1703M	10	N/A		
KM18C	16	GY	TXL	3574288C1	3595625C1	1703M	11	N/A		
PC92A1	18	TN	TXL	3574289C1	3595625C1	1703M	11	N/A		
HW14LSC	12	RD	TXL	3574287C1	3595625C1	1703M	12	N/A		
MD13ZA	16	PK	TXL	3574288C1	3595625C1	1703M	13	N/A		
PC92A20	16	TN	GXL	3574285C1	3595625C1	1703M	15	N/A		
MH11-GBD	18	WH	TXL	2003343C1	3595625C1	1703M	16	N/A		
MJ11-GAD	18	WH	TXL	2003343C1	3595625C1	1703M	16	N/A		
TB74	18	LTGN	TXL	2003343C1	3595625C1	1703M	17	N/A		
RA28BA	18	TN	TXL	2003343C1	3595625C1	1703M	18	N/A		
SA6DB	20	GY	TXL	2003343C1	3595625C1	1703M	19	N/A		
SA77B	20	GY	TXL	2003343C1	3595625C1	1703M	20	N/A		
UB92#134A	18	TN	TXL	2003343C1	3595625C1	1703M	21	N/A		
UL92#134A	18	TN	TXL	2003343C1	3595625C1	1703M	21	N/A		
UK92C	18	TN	TXL	2003343C1	3595625C1	1703M	22	N/A		
SA77BA	20	LTGN	TXL	2003343C1	3595625C1	1703M	23	N/A		
MB41EJ	18	TN	TXL	2003343C1	3595625C1	1703M	24	N/A		
MC41E	18	TN	TXL	2003343C1	3595625C1	1703M	24	N/A		
MB41DJ	18	TN	TXL	2003343C1	3595625C1	1703M	25	N/A		
MC41D	18	TN	TXL	2003343C1	3595625C1	1703M	25	N/A		
XS90PA	18	GY	GXL	3574289C1	3595625C1	1703M	26	N/A		
MH26D	18	TN	GXL	2003343C1	3595625C1	1703M	27	N/A		
MJ26D	18	TN	GXL	2003343C1	3595625C1	1703M	27	N/A		
LH92#141A	18	TN	TXL	2003343C1	3595625C1	1703M	28	N/A		
UB92#141A	18	TN	TXL	2003343C1	3595625C1	1703M	28	N/A		
UD92B	18	TN	TXL	2003343C1	3595625C1	1703M	28	N/A		
UF92#141A	18	TN	TXL	2003343C1	3595625C1	1703M	28	N/A		
LA17	16	PK	TXL	3574285C1	3595625C1	1703M	29	N/A		
LG17	16	PK	TXL	3574285C1	3595625C1	1703M	29	N/A		
MH5CCA(+)	18	YL	TXL	2003343C1	3595625C1	1703M	30	N/A		
MJ5CCA(+)	18	YL	TXL	2003343C1	3595625C1	1703M	30	N/A		
PA47TA	16	GY	GXL	3574285C1	3595625C1	1703M	31	N/A		
PB97DF	18	VT	TXL	2003343C1	3595625C1	1703M	31	N/A		
MH5CCA(-)	18	GN	TXL	2003343C1	3595625C1	1703M	32	N/A		
MJ5CCA(-)	18	GN	TXL	2003343C1	3595625C1	1703M	32	N/A		
UE92	18	TN	TXL	2003343C1	3595625C1	1703M	33	N/A		
UE92AA	18	GY	TXL	2003343C1	3595625C1	1703M	34	N/A		
KA9AA	18	GY	TXL	2003343C1	3595625C1	1703M	35	N/A		
BD97B	18	VT	TXL	2003343C1	3595625C1	1703M	36	N/A		
BE97B	18	VT	TXL	2003343C1	3595625C1	1703M	36	N/A		
BD97NA	18	VT	TXL	2003343C1	3595625C1	1703M	37	N/A		
BE97WD	18	VT	TXL	2003343C1	3595625C1	1703M	37	N/A		

Circuit Number	Gauge	Color	Insulation	Terminal / Splice Number	Connector Part number	Connector Number	Cavity	Seal/Sleeve	Lock 1	Lock 2
BD97MA	18	VT	TXL	2003343C1	3595625C1	1703M	38	N/A		
BE97F	16	VT	TXL	3574285C1	3595625C1	1703M	38	N/A		
XS90HB	18	GY	TXL	2003343C1	3595625C1	1703M	39	N/A		
XS90M	18	GY	TXL	2003343C1	3595625C1	1703M	41	N/A		
UB92#163A	16	PK	TXL	3574285C1	3595625C1	1703M	42	N/A		
UD13A	16	PK	GXL	3574285C1	3595625C1	1703M	42	N/A		
UF92#163C	16	TN	TXL	3574285C1	3595625C1	1703M	42	N/A		
UL92#163A	16	PK	TXL	3574285C1	3595625C1	1703M	42	N/A		
PC92A3	18	TN	GXL	2003343C1	3595625C1	1703M	43	N/A		
ZA71BK	16	OR	TXL	3574285C1	3595625C1	1703M	44	N/A		
ZH71AC	16	OR	TXL	3574285C1	3595625C1	1703M	45	N/A		
ZL71AB	18	TN	TXL	2003343C1	3595625C1	1703M	45	N/A		
BD99B	18	VT	TXL	2003343C1	3595625C1	1703M	47	N/A		
BE99B	18	VT	TXL	2003343C1	3595625C1	1703M	47	N/A		
BD99DA	18	VT	TXL	2003343C1	3595625C1	1703M	48	N/A		
BE97MA	18	VT	TXL	2003343C1	3595625C1	1703M	48	N/A		
BD97C	18	VT	TXL	2003343C1	3595625C1	1703M	49	N/A		
BE97C	18	VT	TXL	2003343C1	3595625C1	1703M	49	N/A		
9B5P(-)	18	GN	TXL	2003343C1	3595625C1	1703M	52	N/A	2005243C1	
9C5P(-)	18	GN	TXL	2003343C1	3595625C1	1703M	52	N/A		
9K5P(-)	18	GN	TXL	2003343C1	3595625C1	1703M	52	N/A		
9M5P(-)	18	GN	TXL	2003343C1	3595625C1	1703M	52	N/A		
9N5P(-)	18	GN	TXL	2003343C1	3595625C1	1703M	52	N/A		
9Q5P(-)	18	GN	TXL	2003343C1	3595625C1	1703M	52	N/A		
9R5P(-)	18	GN	TXL	2003343C1	3595625C1	1703M	52	N/A		
9U5P(-)	18	GN	TXL	2003343C1	3595625C1	1703M	52	N/A		
GB5P(-)	18	GN	TXL	2003343C1	3595625C1	1703M	52	N/A		
GE5P(-)	18	GN	TXL	2003343C1	3595625C1	1703M	52	N/A		
GF5P(-)	18	GN	TXL	2003343C1	3595625C1	1703M	52	N/A		
GG5P(-)	18	GN	TXL	2003343C1	3595625C1	1703M	52	N/A		
GH5P(-)	18	GN	TXL	2003343C1	3595625C1	1703M	52	N/A		
GJ5P(-)	18	GN	TXL	2003343C1	3595625C1	1703M	52	N/A		
GK5P(-)	18	GN	TXL	2003343C1	3595625C1	1703M	52	N/A		
GL5P(-)	18	GN	TXL	2003343C1	3595625C1	1703M	52	N/A		
GM5P(-)	18	GN	TXL	2003343C1	3595625C1	1703M	52	N/A		
GN5P(-)	18	GN	TXL	2003343C1	3595625C1	1703M	52	N/A		
GP5P(-)	18	GN	TXL	2003343C1	3595625C1	1703M	52	N/A		
GQ5P(-)	18	GN	TXL	2003343C1	3595625C1	1703M	52	N/A		
GT5P(-)	18	GN	TXL	2003343C1	3595625C1	1703M	52	N/A		
GU5P(-)	18	GN	TXL	2003343C1	3595625C1	1703M	52	N/A		
GV5P(-)	18	GN	TXL	2003343C1	3595625C1	1703M	52	N/A		
9B5P(+)	18	YL	TXL	2003343C1	3595625C1	1703M	53	N/A	3558056C1	
9C5P(+)	18	YL	TXL	2003343C1	3595625C1	1703M	53	N/A		
9K5P(+)	18	YL	TXL	2003343C1	3595625C1	1703M	53	N/A		
9M5P(+)	18	YL	TXL	2003343C1	3595625C1	1703M	53	N/A		
9N5P(+)	18	YL	TXL	2003343C1	3595625C1	1703M	53	N/A		
9Q5P(+)	18	YL	TXL	2003343C1	3595625C1	1703M	53	N/A		
9R5P(+)	18	YL	TXL	2003343C1	3595625C1	1703M	53	N/A		
9U5P(+)	18	YL	TXL	2003343C1	3595625C1	1703M	53	N/A		
GB5P(+)	18	YL	TXL	2003343C1	3595625C1	1703M	53	N/A		
GE5P(+)	18	YL	TXL	2003343C1	3595625C1	1703M	53	N/A		
GF5P(+)	18	YL	TXL	2003343C1	3595625C1	1703M	53	N/A		
GG5P(+)	18	YL	TXL	2003343C1	3595625C1	1703M	53	N/A		
GH5P(+)	18	YL	TXL	2003343C1	3595625C1	1703M	53	N/A		

Circuit Number	Gauge	Color	Insulation	Terminal / Splice Number	Connector Part number	Connector Number	Cavity	Seal/Sleeve	Lock 1	Lock 2
GJ5P(+)	18	YL	TXL	2003343C1	3595625C1	1703M	53	N/A		
GK5P(+)	18	YL	TXL	2003343C1	3595625C1	1703M	53	N/A		
GL5P(+)	18	YL	TXL	2003343C1	3595625C1	1703M	53	N/A		
GM5P(+)	18	YL	TXL	2003343C1	3595625C1	1703M	53	N/A		
GN5P(+)	18	YL	TXL	2003343C1	3595625C1	1703M	53	N/A		
GP5P(+)	18	YL	TXL	2003343C1	3595625C1	1703M	53	N/A		
GQ5P(+)	18	YL	TXL	2003343C1	3595625C1	1703M	53	N/A		
GT5P(+)	18	YL	TXL	2003343C1	3595625C1	1703M	53	N/A		
GU5P(+)	18	YL	TXL	2003343C1	3595625C1	1703M	53	N/A		
GV5P(+)	18	YL	TXL	2003343C1	3595625C1	1703M	53	N/A		
MA97F	16	VT	TXL	3574285C1	3595625C1	1703M	54	N/A		
GY92#103A	18	TN	TXL	2003343C1	3595625C1	1703M	55	N/A		
GZ92#103C	18	TN	TXL	2003343C1	3595625C1	1703M	55	N/A		
UG92#161A	18	TN	TXL	2003343C1	3595625C1	1703M	56	N/A		
UJ93A	18	TN	TXL	2003343C1	3595625C1	1703M	56	N/A		
VB92#161A	18	TN	TXL	2003343C1	3595625C1	1703M	56	N/A		
VB92#156A	18	TN	TXL	2003343C1	3595625C1	1703M	57	N/A		
PC92DN3	18	TN	GXL	2003343C1	3595625C1	1703M	58	N/A		
VB92#158A	18	TN	TXL	2003343C1	3595625C1	1703M	58	N/A		
LQ88A	18	LTGN	TXL	2003343C1	3595625C1	1703M	59	N/A		
LP88	18	LTGN	TXL	2003343C1	3595625C1	1703M	60	N/A		
NJ31J	18	TN	TXL	2003343C1	3595625C1	1703M	61	N/A		
VB92#112A	18	TN	TXL	2003343C1	3595625C1	1703M	62	N/A		
XS9AC	18	GY	TXL	2003343C1	3595625C1	1703M	63	N/A		
SA77	16	LTGN	GXL	3574288C1	3595625C1	1703M	65	N/A		
ZA71BB	16	OR	TXL	3574288C1	3595625C1	1703M	66	N/A		
ZH71AA	16	OR	TXL	3574288C1	3595625C1	1703M	66	N/A		
AA82K	16	GY	TXL	3574288C1	3595625C1	1703M	69	N/A		
AA82L	16	GY	TXL	3574288C1	3595625C1	1703M	70	N/A		
AA82D	16	GY	TXL	3574288C1	3595625C1	1703M	74	N/A		
BB56A	18	OR	TXL	3544886C1	3612512C1	1800F	A1	N/A		
BB57A	18	OR	TXL	3544886C1	3612512C1	1800F	A2	N/A		
BE11-GAA	18	WH	TXL	3544880C1	3612512C1	1800F	A3	N/A		
BF11-GAA	18	WH	TXL	3544880C1	3612512C1	1800F	A3	N/A		
BG11-GAA	18	WH	TXL	3544880C1	3612512C1	1800F	A3	N/A		
BL11-GAA	18	WH	GXL	3544880C1	3612512C1	1800F	A3	N/A		
CA11-GAA	18	WH	GXL	3544880C1	3612512C1	1800F	A3	N/A		
CB11-GAA	18	WH	TXL	3544880C1	3612512C1	1800F	A3	N/A		
BG9V	18	GY	GXL	3544880C1	3612512C1	1800F	A4	N/A		
BL9V	18	GY	GXL	3544880C1	3612512C1	1800F	A4	N/A		
BV9V	18	GY	TXL	3544880C1	3612512C1	1800F	A4	N/A		
BW9V	18	GY	TXL	3544880C1	3612512C1	1800F	A4	N/A		
BX9V	18	GY	TXL	3544880C1	3612512C1	1800F	A4	N/A		
BZ9V	18	GY	TXL	3544880C1	3612512C1	1800F	A4	N/A		
CA9V	18	GY	GXL	3544880C1	3612512C1	1800F	A4	N/A		
CB9V	18	GY	GXL	3544880C1	3612512C1	1800F	A4	N/A		
CC9V	18	GY	TXL	3544880C1	3612512C1	1800F	A4	N/A		
CD9V	18	GY	TXL	3544880C1	3612512C1	1800F	A4	N/A		
CE9V	18	GY	TXL	3544880C1	3612512C1	1800F	A4	N/A		
CF9V	18	GY	TXL	3544880C1	3612512C1	1800F	A4	N/A		
BB87A	18	GY	TXL	3544880C1	3612512C1	1800F	A5	N/A		
BG70A	18	OR	TXL	3544880C1	3612512C1	1800F	A6	N/A		
BL70A	18	OR	TXL	3544880C1	3612512C1	1800F	A6	N/A		
CA70A	18	OR	TXL	3544880C1	3612512C1	1800F	A6	N/A		

Circuit Number	Gauge	Color	Insulation	Terminal / Splice Number	Connector Part number	Connector Number	Cavity	Seal/Sleeve	Lock 1	Lock 2
CB70A	18	OR	TXL	3544880C1	3612512C1	1800F	A6	N/A		
BB52A	18	YL	TXL	3544886C1	3612512C1	1800F	A7	N/A		
BB102A	18	YL	TXL	3544886C1	3612512C1	1800F	A8	N/A		
BB82B	18	GY	TXL	3544886C1	3612512C1	1800F	B1	N/A		
BE85A	20	GY	TXL	3544885C1	3612512C1	1800F	B10	N/A		
BF85B	20	GY	TXL	3544885C1	3612512C1	1800F	B10	N/A		
BG85B	20	GY	TXL	3544885C1	3612512C1	1800F	B10	N/A		
BL85A	20	GY	TXL	3544885C1	3612512C1	1800F	B10	N/A		
CA85A	20	GY	TXL	3544885C1	3612512C1	1800F	B10	N/A		
CB85B	20	GY	TXL	3544885C1	3612512C1	1800F	B10	N/A		
BL100	20	GY	TXL	3544885C1	3612512C1	1800F	B11	N/A		
BX100	20	GY	TXL	3544885C1	3612512C1	1800F	B11	N/A		
BZ100	20	GY	TXL	3544885C1	3612512C1	1800F	B11	N/A		
CA100	20	GY	TXL	3544885C1	3612512C1	1800F	B11	N/A		
CC100	20	GY	TXL	3544885C1	3612512C1	1800F	B11	N/A		
CD100	20	GY	TXL	3544885C1	3612512C1	1800F	B11	N/A		
BF97	20	GY	TXL	3544885C1	3612512C1	1800F	B12	N/A		
BG97	20	GY	TXL	3544885C1	3612512C1	1800F	B12	N/A		
BL97	20	GY	TXL	3544885C1	3612512C1	1800F	B12	N/A		
BX97	20	GY	TXL	3544885C1	3612512C1	1800F	B12	N/A		
BZ97	20	GY	TXL	3544885C1	3612512C1	1800F	B12	N/A		
CA97	20	GY	TXL	3544885C1	3612512C1	1800F	B12	N/A		
CB97	20	GY	TXL	3544885C1	3612512C1	1800F	B12	N/A		
CC97	20	GY	TXL	3544885C1	3612512C1	1800F	B12	N/A		
CD97	20	GY	TXL	3544885C1	3612512C1	1800F	B12	N/A		
BG40A	18	GY	TXL	3544886C1	3612512C1	1800F	B2	N/A		
BL40A	18	GY	TXL	3544886C1	3612512C1	1800F	B2	N/A		
CA40A	18	GY	TXL	3544886C1	3612512C1	1800F	B2	N/A		
CB40A	18	GY	TXL	3544886C1	3612512C1	1800F	B2	N/A		
BG6H	18	GY	GXL	3544886C1	3612512C1	1800F	B3	N/A		
BL6H	18	GY	GXL	3544886C1	3612512C1	1800F	B3	N/A		
BW6HB	18	GY	TXL	3544886C1	3612512C1	1800F	B3	N/A		
BZ6HB	18	GY	TXL	3544886C1	3612512C1	1800F	B3	N/A		
CA6H	18	GY	GXL	3544886C1	3612512C1	1800F	B3	N/A		
CB6H	18	GY	GXL	3544886C1	3612512C1	1800F	B3	N/A		
CC6HB	18	GY	TXL	3544886C1	3612512C1	1800F	B3	N/A		
CE6HB	18	GY	TXL	3544886C1	3612512C1	1800F	B3	N/A		
BB97Y	18	VT	GXL	3544886C1	3612512C1	1800F	B4	N/A		
BB99U	18	VT/WH	GXL	3544886C1	3612512C1	1800F	B5	N/A		
BB99W	18	VT	GXL	3544886C1	3612512C1	1800F	B6	N/A		
BG44BB	18	GY	TXL	3544886C1	3612512C1	1800F	B7	N/A		
BL44BB	18	GY	TXL	3544886C1	3612512C1	1800F	B7	N/A		
BV44BB	18	WH	GXL	3544886C1	3612512C1	1800F	B7	N/A		
BW44BB	18	GY	TXL	3544886C1	3612512C1	1800F	B7	N/A		
BX44BB	18	WH	GXL	3544886C1	3612512C1	1800F	B7	N/A		
BZ44BB	18	GY	TXL	3544886C1	3612512C1	1800F	B7	N/A		
CA44BB	18	GY	TXL	3544886C1	3612512C1	1800F	B7	N/A		
CB44BB	18	GY	TXL	3544886C1	3612512C1	1800F	B7	N/A		
CC44BB	18	GY	TXL	3544886C1	3612512C1	1800F	B7	N/A		
CD44BB	18	WH	GXL	3544886C1	3612512C1	1800F	B7	N/A		
CE44BB	18	GY	TXL	3544886C1	3612512C1	1800F	B7	N/A		
CF44BB	18	WH	GXL	3544886C1	3612512C1	1800F	B7	N/A		
BG70	18	OR	TXL	3544886C1	3612512C1	1800F	B9	N/A		
BL70	18	OR	TXL	3544886C1	3612512C1	1800F	B9	N/A		

Circuit Number	Gauge	Color	Insulation	Terminal / Splice Number	Connector Part number	Connector Number	Cavity	Seal/Sleeve	Lock 1	Lock 2
BV70	18	OR	TXL	3544886C1	3612512C1	1800F	B9	N/A		
BW70	18	OR	TXL	3544886C1	3612512C1	1800F	B9	N/A		
BX70	18	OR	TXL	3544886C1	3612512C1	1800F	B9	N/A		
BZ70	18	OR	TXL	3544886C1	3612512C1	1800F	B9	N/A		
CA70	18	OR	TXL	3544886C1	3612512C1	1800F	B9	N/A		
CB70	18	OR	TXL	3544886C1	3612512C1	1800F	B9	N/A		
CC70	18	OR	TXL	3544886C1	3612512C1	1800F	B9	N/A		
CD70	18	OR	TXL	3544886C1	3612512C1	1800F	B9	N/A		
CE70	18	OR	TXL	3544886C1	3612512C1	1800F	B9	N/A		
CF70	18	OR	TXL	3544886C1	3612512C1	1800F	B9	N/A		
BB82A	18	GY	TXL	3544886C1	3612512C1	1800F	C1	N/A		
BN94SZ	18	GY	GXL	3544886C1	3612512C1	1800F	C10	N/A		
CA97A	18	VT	GXL	3544886C1	3612512C1	1800F	C11	N/A		
CB97A	18	VT	GXL	3544886C1	3612512C1	1800F	C11	N/A		
CC97A	18	VT	GXL	3544886C1	3612512C1	1800F	C11	N/A		
CD97A	18	VT	GXL	3544886C1	3612512C1	1800F	C11	N/A		
CE97A	18	VT	GXL	3544886C1	3612512C1	1800F	C11	N/A		
CF97A	18	VT	GXL	3544886C1	3612512C1	1800F	C11	N/A		
BG40	18	GY	TXL	3544886C1	3612512C1	1800F	C12	N/A		
BL40	18	GY	TXL	3544886C1	3612512C1	1800F	C12	N/A		
BW40	18	GY	TXL	3544886C1	3612512C1	1800F	C12	N/A		
BZ40	18	GY	TXL	3544886C1	3612512C1	1800F	C12	N/A		
CA40	18	GY	TXL	3544886C1	3612512C1	1800F	C12	N/A		
CB40	18	GY	TXL	3544886C1	3612512C1	1800F	C12	N/A		
CC40	18	GY	TXL	3544886C1	3612512C1	1800F	C12	N/A		
CE40	18	GY	TXL	3544886C1	3612512C1	1800F	C12	N/A		
BG40F	18	GY	TXL	3544886C1	3612512C1	1800F	C2	N/A		
BL40F	18	GY	TXL	3544886C1	3612512C1	1800F	C2	N/A		
CA40F	18	GY	TXL	3544886C1	3612512C1	1800F	C2	N/A		
CB40F	18	GY	TXL	3544886C1	3612512C1	1800F	C2	N/A		
BN94SV	18	GY	GXL	3544886C1	3612512C1	1800F	C3	N/A		
BB99V	18	VT/WH	GXL	3544886C1	3612512C1	1800F	C4	N/A		
BB97P	18	VT/BK	GXL	3544886C1	3612512C1	1800F	C5	N/A		
BB99E	18	VT/BK	GXL	3544886C1	3612512C1	1800F	C6	N/A		
BB82	18	GY	TXL	3544886C1	3612512C1	1800F	C9	N/A		
BE62DD	20	DKBL	TXL	3544879C1	3612512C1	1800F	D3	N/A		
BF62DD	20	DKBL	TXL	3544879C1	3612512C1	1800F	D3	N/A		
BG62DD	20	DKBL	TXL	3544879C1	3612512C1	1800F	D3	N/A		
BL62DD	20	DKBL	TXL	3544879C1	3612512C1	1800F	D3	N/A		
CA62DD	20	DKBL	TXL	3544879C1	3612512C1	1800F	D3	N/A		
CB62DD	20	DKBL	TXL	3544879C1	3612512C1	1800F	D3	N/A		
BN94SE	18	GY	GXL	3544880C1	3612512C1	1800F	D5	N/A		
BN94SF	18	GY	GXL	3544880C1	3612512C1	1800F	D6	N/A		
CA17J	18	PK	TXL	3544886C1	3612512C1	1800F	D7	N/A		
CB17J	18	PK	TXL	3544886C1	3612512C1	1800F	D7	N/A		
CC17J	18	PK	TXL	3544886C1	3612512C1	1800F	D7	N/A		
CD17J	18	PK	TXL	3544886C1	3612512C1	1800F	D7	N/A		
CE17J	18	PK	TXL	3544886C1	3612512C1	1800F	D7	N/A		
CF17J	18	PK	TXL	3544886C1	3612512C1	1800F	D7	N/A		
CA17H	18	PK	TXL	3544886C1	3612512C1	1800F	D8	N/A		
CB17H	18	PK	TXL	3544886C1	3612512C1	1800F	D8	N/A		
CC17H	18	PK	TXL	3544886C1	3612512C1	1800F	D8	N/A		
CD17H	18	PK	TXL	3544886C1	3612512C1	1800F	D8	N/A		
CE17H	18	PK	TXL	3544886C1	3612512C1	1800F	D8	N/A		

Circuit Number	Gauge	Color	Insulation	Terminal / Splice Number	Connector Part number	Connector Number	Cavity	Seal/Sleeve	Lock 1	Lock 2
CF17H	18	PK	TXL	3544886C1	3612512C1	1800F	D8	N/A		
BV70	18	OR	TXL	2036586C1	2036584C1	1814A	A	N/A		
BW70	18	OR	TXL	2036586C1	2036584C1	1814A	A	N/A		
BX70	18	OR	TXL	2036586C1	2036584C1	1814A	A	N/A		
BZ70	18	OR	TXL	2036586C1	2036584C1	1814A	A	N/A		
CC70	18	OR	TXL	2036586C1	2036584C1	1814A	A	N/A		
CD70	18	OR	TXL	2036586C1	2036584C1	1814A	A	N/A		
CE70	18	OR	TXL	2036586C1	2036584C1	1814A	A	N/A		
CF70	18	OR	TXL	2036586C1	2036584C1	1814A	A	N/A		
BV9VF	18	GY	GXL	2036586C1	2036584C1	1814A	B	N/A		
BW9VF	18	GY	GXL	2036586C1	2036584C1	1814A	B	N/A		
BX9VF	18	GY	GXL	2036586C1	2036584C1	1814A	B	N/A		
BZ9VF	18	GY	GXL	2036586C1	2036584C1	1814A	B	N/A		
CC9VF	18	GY	GXL	2036586C1	2036584C1	1814A	B	N/A		
CD9VF	18	GY	GXL	2036586C1	2036584C1	1814A	B	N/A		
CE9VF	18	GY	GXL	2036586C1	2036584C1	1814A	B	N/A		
CF9VF	18	GY	GXL	2036586C1	2036584C1	1814A	B	N/A		
BV44BB	18	WH	GXL	1661261C1	1661259C1	1815A	A	N/A		
BX44BB	18	WH	GXL	1661261C1	1661259C1	1815A	A	N/A		
CD44BB	18	WH	GXL	1661261C1	1661259C1	1815A	A	N/A		
CF44BB	18	WH	GXL	1661261C1	1661259C1	1815A	A	N/A		
BVBLK1	18	BK	GXL	1661261C1	1661259C1	1815A	B	N/A		
BXBLK1	18	BK	GXL	1661261C1	1661259C1	1815A	B	N/A		
CDBLK1	18	BK	GXL	1661261C1	1661259C1	1815A	B	N/A		
CFBLK1	18	BK	GXL	1661261C1	1661259C1	1815A	B	N/A		
BN94SA	20	GY	TXL	3534481C1	1667529C1	1820F	A	N/A		
BN94SB	20	GY	TXL	3534481C1	1667529C1	1820F	B	N/A		
BN94SC	20	GY	TXL	3534481C1	1667529C1	1820F	C	N/A		
BN94SD	20	GY	TXL	3534481C1	1667529C1	1820F	D	N/A		
XF94SA	20	GY	TXL	3544254C1	1667305C1	1820M	A	N/A		
XL94SAB	18	GY	TXL	1661261C1	1667305C1	1820M	A	N/A		
XF94SB	20	GY	TXL	3544254C1	1667305C1	1820M	B	N/A		
XL94SBB	18	GY	TXL	1661261C1	1667305C1	1820M	B	N/A		
XF94SC	20	GY	TXL	3544254C1	1667305C1	1820M	C	N/A		
XL94SCB	18	GY	TXL	1661261C1	1667305C1	1820M	C	N/A		
XF94SD	20	GY	TXL	3544254C1	1667305C1	1820M	D	N/A		
XL94SDB	18	GY	TXL	1661261C1	1667305C1	1820M	D	N/A		
BD92#134	18	TN	TXL	3544884C1	4064551C1	1825F	B	N/A		
BD92	18	TN	TXL	3544884C1	4064551C1	1825F	C	N/A		
BD9ZA	18	GY	TXL	3544884C1	4064551C1	1825F	D	N/A		
BD5FA(+)	18	YL	TXL	3544884C1	4064551C1	1825F	E	N/A		
BD5FA(-)	18	GN	TXL	3544884C1	4064551C1	1825F	F	N/A		
BD62DC	18	DKBL	TXL	3544884C1	4064551C1	1825F	G	N/A		
BD92-GAH	18	WH	TXL	3544884C1	4064551C1	1825F	H	N/A		
HU103C	10	LTGN	GXL	2022374C1	593385C1	1873B	R1-30	N/A		
HU103BA	16	LTGN	GXL	2018946C1	593385C1	1873B	R1-85	N/A		
HU103AA	18	LTGN	TXL	1659673C1	593385C1	1873B	R1-86	N/A		
HU103D	12	LTGN	TXL	2022374C1	593385C1	1873B	R1-87	N/A		
PC92A20	16	TN	GXL	2018946C1	593385C1	1873C	R1-30	N/A		
PC92-GN1	18	WH	GXL	1659673C1	593385C1	1873C	R1-85	N/A		
PC92DN1	18	TN	GXL	1659673C1	593385C1	1873C	R1-86	N/A		
PC92A3	18	TN	GXL	1659673C1	593385C1	1873C	R1-87	N/A		
YG52A	14	YL	TXL	2018946C1	593385C1	1873D	R1-30	N/A		
YG96-GD	18	YL	TXL	1659673C1	593385C1	1873D	R1-85	N/A		

Circuit Number	Gauge	Color	Insulation	Terminal / Splice Number	Connector Part number	Connector Number	Cavity	Seal/Sleeve	Lock 1	Lock 2
YG96E	18	YL	TXL	1659673C1	593385C1	1873D	R1-86	N/A		
YG52AA	14	YL	TXL	2018946C1	593385C1	1873D	R1-87	N/A		
YG52AC	14	YL	TXL	2018946C1	593385C1	1873D	R1-87	N/A		
YG52B	14	YL	TXL	2018946C1	593385C1	1873E	R1-30	N/A		
YG96-GC	18	YL	TXL	1659673C1	593385C1	1873E	R1-85	N/A		
YG96D	18	YL	TXL	1659673C1	593385C1	1873E	R1-86	N/A		
YG52BA	14	YL	TXL	2018946C1	593385C1	1873E	R1-87	N/A		
YG52BC	14	YL	TXL	2018946C1	593385C1	1873E	R1-87	N/A		
YG53A	14	YL	TXL	2018946C1	593385C1	1873F	R1-30	N/A		
YG96-GB	18	YL	TXL	1659673C1	593385C1	1873F	R1-85	N/A		
YG96C	18	YL	TXL	1659673C1	593385C1	1873F	R1-86	N/A		
YG53AA	14	YL	TXL	2018946C1	593385C1	1873F	R1-87	N/A		
YG53AC	14	YL	TXL	2018946C1	593385C1	1873F	R1-87	N/A		
YG53B	14	YL	TXL	2018946C1	593385C1	1873G	R1-30	N/A		
YG96-GA	18	YL	TXL	1659673C1	593385C1	1873G	R1-85	N/A		
YG96B	18	YL	TXL	1659673C1	593385C1	1873G	R1-86	N/A		
YG53BA	14	YL	TXL	2018946C1	593385C1	1873G	R1-87	N/A		
YG53BC	14	YL	TXL	2018946C1	593385C1	1873G	R1-87	N/A		
XT40A	14	GY	TXL	2018946C1	593385C1	1873H	R1-30	N/A		
XT90HC	18	GY	TXL	1659673C1	593385C1	1873H	R1-85	N/A		
XT90G	18	GY	TXL	1659673C1	593385C1	1873H	R1-86	N/A		
XT40B	14	GY	TXL	2018946C1	593385C1	1873H	R1-87	N/A		
VB95A	18	TN	GXL	3572625C1	3850892C1	1874A	1	N/A		
VB95-G	18	WH	GXL	3572625C1	3850892C1	1874A	2	N/A		
JE14UA	14	LTGN	TXL	3534165C1	4094648C1	1901A	A	N/A		
JE11-GUD	20	WH	TXL	3535484C1	4094648C1	1901A	C	N/A		
JD86C2	14	LTGN	TXL	3534165C1	4094648C1	1903B	A	N/A		
JD11-GCE	14	WH	TXL	3534165C1	4094648C1	1903B	C	N/A		
JE11-GUB	20	WH	TXL	4081932C1	3768147C1	1905A	1	N/A		
JE13U	20	PK	TXL	4081932C1	3768147C1	1905A	2	N/A		
ML14EA	16	RD	TXL	1661261C1	1667305C1	1910A	A	N/A		
MP14EA	16	RD	TXL	1661261C1	1667305C1	1910A	A	N/A		
ML11-GBE	16	WH	TXL	1661261C1	1667305C1	1910A	B	N/A		
MP11-GBE	16	WH	TXL	1661261C1	1667305C1	1910A	B	N/A		
ML3BE(+)	18	DKBL	TXL	1661261C1	1667305C1	1910A	C	N/A		
MP5CG(+)	18	YL	TXL	1661261C1	1667305C1	1910A	C	N/A		
ML3BE(-)	18	GY	TXL	1661261C1	1667305C1	1910A	D	N/A		
MP5CG(-)	18	GN	TXL	1661261C1	1667305C1	1910A	D	N/A		
ML11-G	8	WH	GXL	373759C2		1910G	1	2644054R1		
MP11-G	8	WH	GXL	373759C2		1910G	1	2644054R1		
MQ86H	18	LTGN	TXL	1661212C1	2005836C1	1916A	A	N/A		
MQ86J	18	LTGN	TXL	1661212C1	2005836C1	1916A	B	N/A		
MQ86HA	18	LTGN	TXL	1661212C1	2005836C1	1916A	C	N/A		
MQ86JA	18	LTGN	TXL	1661212C1	2005836C1	1916A	D	N/A		
MQ86-GD1	18	WH	TXL	1661212C1	2005836C1	1916A	E	N/A		
MQ86HB	18	LTGN	TXL	1661212C1	2005836C1	1916A	F	N/A		
MQ86JB	18	LTGN	TXL	1661212C1	2005836C1	1916A	G	N/A		
MQ14ED	16	RD	TXL	1661212C1	1661199C1	1918A	A	N/A		
MQ13EE	16	PK	TXL	1661212C1	1661199C1	1918A	B	N/A		
MQ11-GBE	16	WH	TXL	1661212C1	1661199C1	1918A	C	N/A		
MQ86RCD	18	LTGN	TXL	1661212C1	2005836C1	1919A	A	N/A		
MQ11-GMW	20	WH	TXL	3539945C1	2005836C1	1919A	B	N/A		
MQ3BE(+)	18	DKBL	TXL	1661212C1	2005836C1	1919A	C	N/A		
MQ3BE(-)	18	GY	TXL	1661212C1	2005836C1	1919A	D	N/A		

Circuit Number	Gauge	Color	Insulation	Terminal / Splice Number	Connector Part number	Connector Number	Cavity	Seal/Sleeve	Lock 1	Lock 2
MQ86-GD3	18	WH	TXL	1661212C1	2005836C1	1919A	E	N/A		
MQ86HA	18	LTGN	TXL	1661212C1	2005836C1	1919A	F	N/A		
MQ86JA	18	LTGN	TXL	1661212C1	2005836C1	1919A	G	N/A		
8A5BJ(+)	18	YL	TXL	3683464C1	3683465C1	1935N	A	N/A		
9A5BG(+)	18	YL	TXL	3683464C1	3683465C1	1935N	A	N/A		
9F5BG(+)	18	YL	TXL	3683464C1	3683465C1	1935N	A	N/A		
9J5BG(+)	18	YL	TXL	3683464C1	3683465C1	1935N	A	N/A	3539785C1	
9P5BJ(+)	18	YL	TXL	3683464C1	3683465C1	1935N	A	N/A		
9X5BG(+)	18	YL	TXL	3683464C1	3683465C1	1935N	A	N/A		
8A5BJ(-)	18	GN	TXL	3683464C1	3683465C1	1935N	B	N/A		
9A5BG(-)	18	GN	TXL	3683464C1	3683465C1	1935N	B	N/A		
9F5BG(-)	18	GN	TXL	3683464C1	3683465C1	1935N	B	N/A		
9J5BG(-)	18	GN	TXL	3683464C1	3683465C1	1935N	B	N/A	3540454C1	3551897C1
9P5BJ(-)	18	GN	TXL	3683464C1	3683465C1	1935N	B	N/A		
9X5BG(-)	18	GN	TXL	3683464C1	3683465C1	1935N	B	N/A		
MR5BF(+)	18	YL	TXL	1661875C1	1667741C1	1937N	A	N/A		
MR5BF(-)	18	GN	TXL	1661875C1	1667741C1	1937N	C	N/A		
MM11-GBE	14	WH	TXL	3534167C1	3554818C1	1938M	A	N/A		
MM14EA	14	RD	GXL	3534167C1	3554818C1	1938M	B	N/A		
8A5BA(+)	18	YL	TXL	3683464C1	3683465C1	1939_2	A	N/A		
9A5BA(+)	18	YL	TXL	3683464C1	3683465C1	1939_2	A	N/A		
9F5BA(+)	18	YL	TXL	3683464C1	3683465C1	1939_2	A	N/A		
9P5BA(+)	18	YL	TXL	3683464C1	3683465C1	1939_2	A	N/A		
GC5BA(+)	18	YL	TXL	3683464C1	3683465C1	1939_2	A	N/A		
8A5BA(-)	18	GN	TXL	3683464C1	3683465C1	1939_2	B	N/A		
9A5BA(-)	18	GN	TXL	3683464C1	3683465C1	1939_2	B	N/A		
9F5BA(-)	18	GN	TXL	3683464C1	3683465C1	1939_2	B	N/A		
9P5BA(-)	18	GN	TXL	3683464C1	3683465C1	1939_2	B	N/A		
GC5BA(-)	18	GN	TXL	3683464C1	3683465C1	1939_2	B	N/A		
9K5A(+)	18	YL	TXL	3683464C1	3683465C1	1939_5	A	N/A		
9M5A(+)	18	YL	TXL	3683464C1	3683465C1	1939_5	A	N/A		
9N5A(+)	18	YL	TXL	3683464C1	3683465C1	1939_5	A	N/A		
9Q5A(+)	18	YL	TXL	3683464C1	3683465C1	1939_5	A	N/A		
9R5A(+)	18	YL	TXL	3683464C1	3683465C1	1939_5	A	N/A		
9U5A(+)	18	YL	TXL	3683464C1	3683465C1	1939_5	A	N/A		
GB5A(+)	18	YL	TXL	3683464C1	3683465C1	1939_5	A	N/A		
GH5A(+)	18	YL	TXL	3683464C1	3683465C1	1939_5	A	N/A		
GJ5A(+)	18	YL	TXL	3683464C1	3683465C1	1939_5	A	N/A		
GK5A(+)	18	YL	TXL	3683464C1	3683465C1	1939_5	A	N/A		
GL5A(+)	18	YL	TXL	3683464C1	3683465C1	1939_5	A	N/A		
GM5A(+)	18	YL	TXL	3683464C1	3683465C1	1939_5	A	N/A		
GN5A(+)	18	YL	TXL	3683464C1	3683465C1	1939_5	A	N/A		
GP5A(+)	18	YL	TXL	3683464C1	3683465C1	1939_5	A	N/A		
GU5A(+)	18	YL	TXL	3683464C1	3683465C1	1939_5	A	N/A		
9K5A(-)	18	GN	TXL	3683464C1	3683465C1	1939_5	B	N/A	3558056C1	
9M5A(-)	18	GN	TXL	3683464C1	3683465C1	1939_5	B	N/A		
9N5A(-)	18	GN	TXL	3683464C1	3683465C1	1939_5	B	N/A		
9Q5A(-)	18	GN	TXL	3683464C1	3683465C1	1939_5	B	N/A		
9R5A(-)	18	GN	TXL	3683464C1	3683465C1	1939_5	B	N/A		
9U5A(-)	18	GN	TXL	3683464C1	3683465C1	1939_5	B	N/A		
GB5A(-)	18	GN	TXL	3683464C1	3683465C1	1939_5	B	N/A		
GH5A(-)	18	GN	TXL	3683464C1	3683465C1	1939_5	B	N/A		
GJ5A(-)	18	GN	TXL	3683464C1	3683465C1	1939_5	B	N/A		
GK5A(-)	18	GN	TXL	3683464C1	3683465C1	1939_5	B	N/A		

Circuit Number	Gauge	Color	Insulation	Terminal / Splice Number	Connector Part number	Connector Number	Cavity	Seal/Sleeve	Lock 1	Lock 2
GL5A(-)	18	GN	TXL	3683464C1	3683465C1	1939_5	B	N/A		
GM5A(-)	18	GN	TXL	3683464C1	3683465C1	1939_5	B	N/A		
GN5A(-)	18	GN	TXL	3683464C1	3683465C1	1939_5	B	N/A		
GP5A(-)	18	GN	TXL	3683464C1	3683465C1	1939_5	B	N/A		
GU5A(-)	18	GN	TXL	3683464C1	3683465C1	1939_5	B	N/A		
9E5BB(+)	18	YL	TXL	3683464C1	3683465C1	1939-1	A	N/A		
9E5BH(+)	18	YL	TXL	3683464C1	3683465C1	1939-1	A	N/A		
9G5BB(+)	18	YL	TXL	3683464C1	3683465C1	1939-1	A	N/A		
9G5BJ(+)	18	YL	TXL	3683464C1	3683465C1	1939-1	A	N/A		
9H5BB(+)	18	YL	TXL	3683464C1	3683465C1	1939-1	A	N/A		
9H5BH(+)	18	YL	TXL	3683464C1	3683465C1	1939-1	A	N/A		
9L5BB(+)	18	YL	TXL	3683464C1	3683465C1	1939-1	A	N/A		
9L5BJ(+)	18	YL	TXL	3683464C1	3683465C1	1939-1	A	N/A		
9V5BJ(+)	18	YL	TXL	3683464C1	3683465C1	1939-1	A	N/A	1661874C1	
9Z5BJ(+)	18	YL	TXL	3683464C1	3683465C1	1939-1	A	N/A		
9E5BB(-)	18	GN	TXL	3683464C1	3683465C1	1939-1	B	N/A		
9E5BH(-)	18	GN	TXL	3683464C1	3683465C1	1939-1	B	N/A		
9G5BB(-)	18	GN	TXL	3683464C1	3683465C1	1939-1	B	N/A		
9G5BJ(-)	18	GN	TXL	3683464C1	3683465C1	1939-1	B	N/A		
9H5BB(-)	18	GN	TXL	3683464C1	3683465C1	1939-1	B	N/A		
9H5BH(-)	18	GN	TXL	3683464C1	3683465C1	1939-1	B	N/A		
9L5BB(-)	18	GN	TXL	3683464C1	3683465C1	1939-1	B	N/A		
9L5BJ(-)	18	GN	TXL	3683464C1	3683465C1	1939-1	B	N/A		
9V5BJ(-)	18	GN	TXL	3683464C1	3683465C1	1939-1	B	N/A	3525875C1	
9Z5BJ(-)	18	GN	TXL	3683464C1	3683465C1	1939-1	B	N/A		
9S5AB(+)	18	YL	TXL	3683464C1	3683465C1	1939-2	A	N/A		
9S5AJ(+)	18	YL	TXL	3683464C1	3683465C1	1939-2	A	N/A		
9T5AB(+)	18	YL	TXL	3683464C1	3683465C1	1939-2	A	N/A		
9T5AL(+)	18	YL	TXL	3683464C1	3683465C1	1939-2	A	N/A		
9W5AB(+)	18	YL	TXL	3683464C1	3683465C1	1939-2	A	N/A		
9W5AJ(+)	18	YL	TXL	3683464C1	3683465C1	1939-2	A	N/A		
9Y5AB(+)	18	YL	TXL	3683464C1	3683465C1	1939-2	A	N/A		
9Y5AL(+)	18	YL	TXL	3683464C1	3683465C1	1939-2	A	N/A		
9S5AB(-)	18	GN	TXL	3683464C1	3683465C1	1939-2	B	N/A		
9S5AJ(-)	18	GN	TXL	3683464C1	3683465C1	1939-2	B	N/A		
9T5AB(-)	18	GN	TXL	3683464C1	3683465C1	1939-2	B	N/A		
9T5AL(-)	18	GN	TXL	3683464C1	3683465C1	1939-2	B	N/A		
9W5AB(-)	18	GN	TXL	3683464C1	3683465C1	1939-2	B	N/A		
9W5AJ(-)	18	GN	TXL	3683464C1	3683465C1	1939-2	B	N/A		
9Y5AB(-)	18	GN	TXL	3683464C1	3683465C1	1939-2	B	N/A		
9Y5AL(-)	18	GN	TXL	3683464C1	3683465C1	1939-2	B	N/A		
MM3BD(+)	18	DKBL	TXL	3727971C1	3553404C1	1939M	4	N/A		
MM3BD(-)	18	GY	TXL	3727971C1	3553404C1	1939M	5	N/A		
MN5BF(-)	18	GN	TXL	3727971C1	3553404C1	1939M	11	N/A		
MN5BF(+)	18	YL	TXL	3727971C1	3553404C1	1939M	12	N/A		
YB67V	18	GY	GXL	3754236C1	3673259C1	1942F	1	N/A		
YB67W	18	GY	GXL	3754236C1	3673259C1	1942F	2	N/A		
YB67U	18	GY	GXL	3754236C1	3673259C1	1942F	3	N/A		
XV57C	18	OR	TXL	3754236C1	3673259C1	1942F	4	N/A		
YK57C	18	OR	TXL	3754236C1	3673259C1	1942F	4	N/A		
YQ57C	18	OR	TXL	3754236C1	3673259C1	1942F	4	N/A		
YY57C	18	OR	TXL	3754236C1	3673259C1	1942F	4	N/A		
JS1B	16	RD	TXL	3895713C1	3565207C1	1F	A	N/A		
JS1A	16	RD	TXL	3895713C1	3565207C1	1F	B	N/A		

Circuit Number	Gauge	Color	Insulation	Terminal / Splice Number	Connector Part number	Connector Number	Cavity	Seal/Sleeve	Lock 1	Lock 2
RH62D	20	DKBL	TXL	3662109C1	3662108C1	254F	A1	N/A		
RH78VB	20	RD	TXL	3662109C1	3662108C1	254F	A2	N/A		
RH78K	20	LTGN	TXL	3662109C1	3662108C1	254F	A3	N/A		
RH78-GD	20	WH	TXL	3662109C1	3662108C1	254F	A4	N/A		
RH78JA	20	LTGN	TXL	3662109C1	3662108C1	254F	B1	N/A		
RH78DB	20	LTGN	TXL	3662109C1	3662108C1	254F	B2	N/A		
RH78C	20	LTGN	TXL	3662109C1	3662108C1	254F	B3	N/A		
RH78EF	20	LTGN	TXL	3662109C1	3662108C1	254F	B4	N/A		
RH62D	20	DKBL	TXL	3535805C1	3510243C1	254M	A1	N/A		
RH78VB	20	RD	TXL	3535805C1	3510243C1	254M	A2	N/A		
RH78K	20	LTGN	TXL	3535805C1	3510243C1	254M	A3	N/A		
RH78-GD	20	WH	TXL	3535805C1	3510243C1	254M	A4	N/A		
RH78JA	20	LTGN	TXL	3535805C1	3510243C1	254M	B1	N/A		
RH78DB	20	LTGN	TXL	3535805C1	3510243C1	254M	B2	N/A		
RH78C	20	LTGN	TXL	3535805C1	3510243C1	254M	B3	N/A		
RH78EF	20	LTGN	TXL	3535805C1	3510243C1	254M	B4	N/A		
XY58DA	18	BN	TXL	1661212C1	1661201C1	3000F	A	N/A		
XZ56D	18	OR	TXL	1661212C1	1661201C1	3000F	A	N/A		
YN56D	18	OR	TXL	1661212C1	1661201C1	3000F	A	N/A		
YY56D	18	OR	TXL	1661212C1	1661201C1	3000F	A	N/A		
RF78RJ	16	LTGN	TXL	1661212C1	1661201C1	3000F	B	N/A		
RG62DD	18	DKBL	TXL	1661212C1	1661201C1	3000F	C	N/A		
RG78J	18	LTGN	TXL	1661212C1	1661201C1	3000F	D	N/A		
RG78M	18	LTGN	TXL	1661212C1	1661201C1	3000F	E	N/A		
RG78L	18	LTGN	TXL	1661212C1	1661201C1	3000F	F	N/A		
XY58DB	18	BN	TXL	1661212C1	1661201C1	3100F	A	N/A		
XZ57D	18	OR	TXL	1661212C1	1661201C1	3100F	A	N/A		
YH57D	18	OR	TXL	1661212C1	1661201C1	3100F	A	N/A		
YK57D	18	OR	TXL	1661212C1	1661201C1	3100F	A	N/A		
YY57D	18	OR	TXL	1661212C1	1661201C1	3100F	A	N/A		
RF78B	16	LTGN	TXL	1661212C1	1661201C1	3100F	B	N/A		
RG78J	18	LTGN	TXL	1661212C1	1661201C1	3100F	D	N/A		
RG78M	18	LTGN	TXL	1661212C1	1661201C1	3100F	E	N/A		
RG78L	18	LTGN	TXL	1661212C1	1661201C1	3100F	F	N/A		
9G5BD(-)	18	GN	TXL	1661208C1	1661200C1	3200M	A	N/A		
9L5BD(-)	18	GN	TXL	1661208C1	1661200C1	3200M	A	N/A		
9V5BD(-)	18	GN	TXL	1661208C1	1661200C1	3200M	A	N/A		
9Z5BD(-)	18	GN	TXL	1661208C1	1661200C1	3200M	A	N/A		
9G5BD(+)	18	YL	TXL	1661208C1	1661200C1	3200M	B	N/A		
9L5BD(+)	18	YL	TXL	1661208C1	1661200C1	3200M	B	N/A		
9V5BD(+)	18	YL	TXL	1661208C1	1661200C1	3200M	B	N/A		
9Z5BD(+)	18	YL	TXL	1661208C1	1661200C1	3200M	B	N/A		
RC81B	12	RD	TXL	3566715C1	1661200C1	3200M	C	N/A		
RD81B	12	RD	TXL	3566715C1	1661200C1	3200M	C	N/A		
RG78V	12	LTGN	TXL	3566715C1	1661200C1	3200M	C	N/A		
RC81-GA	12	WH	TXL	3566715C1	1661200C1	3200M	D	N/A		
RD81-GA	12	WH	TXL	3566715C1	1661200C1	3200M	D	N/A		
RF78-GA	16	WH	TXL	1661209C1	1661200C1	3200M	D	N/A		
MB41DJ	18	TN	TXL	1661208C1	1661200C1	3200M	E	N/A		
MC41D	18	TN	TXL	1661208C1	1661200C1	3200M	E	N/A		
MB41EJ	18	TN	TXL	1661208C1	1661200C1	3200M	F	N/A		
MC41E	18	TN	TXL	1661208C1	1661200C1	3200M	F	N/A		
9G5BK(-)	18	GN	TXL	1661208C1	1661200C1	3204M	A	N/A		
9L5CK(-)	18	GN	TXL	1661208C1	1661200C1	3204M	A	N/A		

Circuit Number	Gauge	Color	Insulation	Terminal / Splice Number	Connector Part number	Connector Number	Cavity	Seal/Sleeve	Lock 1	Lock 2
9V5CK(-)	18	GN	TXL	1661208C1	1661200C1	3204M	A	N/A	3540454C1	3551897C1
9Z5BK(-)	18	GN	TXL	1661208C1	1661200C1	3204M	A	N/A		
9G5BK(+)	18	YL	TXL	1661208C1	1661200C1	3204M	B	N/A		
9L5CK(+)	18	YL	TXL	1661208C1	1661200C1	3204M	B	N/A		
9V5CK(+)	18	YL	TXL	1661208C1	1661200C1	3204M	B	N/A	3539785C1	
9Z5BK(+)	18	YL	TXL	1661208C1	1661200C1	3204M	B	N/A		
RC81A	12	LTGN	TXL	3566715C1	1661200C1	3204M	C	N/A		
RD81A	12	LTGN	TXL	3566715C1	1661200C1	3204M	C	N/A		
RC81-GB	12	WH	TXL	3566715C1	1661200C1	3204M	D	N/A		
RD81-GB	12	WH	TXL	3566715C1	1661200C1	3204M	D	N/A		
RF78-GB	16	WH	TXL	1661209C1	1661200C1	3204M	D	N/A		
WG63BB	18	DKBL	TXL	1661261C1	1667305C1	3205M	A	N/A		
WJ63BB	18	DKBL	TXL	1661261C1	1667305C1	3205M	A	N/A		
AD11-G	18	WH	TXL	1661261C1	1667305C1	3205M	B	N/A		
AE11-G	18	WH	TXL	1661261C1	1667305C1	3205M	B	N/A		
MQ86HB	18	LTGN	TXL	1661261C1	1667305C1	3205M	C	N/A		
SQ86H	18	LTGN	TXL	1661261C1	1667305C1	3205M	C	N/A		
MQ86JB	18	LTGN	TXL	1661261C1	1667305C1	3205M	D	N/A		
SQ86J	18	LTGN	TXL	1661261C1	1667305C1	3205M	D	N/A		
WG63BC	18	DKBL	TXL	1661261C1	1667305C1	3206M	A	N/A		
WJ63BC	18	DKBL	TXL	1661261C1	1667305C1	3206M	A	N/A		
AD11-GK	18	WH	TXL	1661261C1	1667305C1	3206M	B	N/A		
AE11-GK	18	WH	TXL	1661261C1	1667305C1	3206M	B	N/A		
MQ86K	18	LTGN	TXL	1661261C1	1667305C1	3206M	C	N/A		
SQ86K	18	LTGN	TXL	1661261C1	1667305C1	3206M	C	N/A		
MQ86L	18	LTGN	TXL	1661261C1	1667305C1	3206M	D	N/A		
SQ86L	18	LTGN	TXL	1661261C1	1667305C1	3206M	D	N/A		
TC11-GC	12	WH	GXL	3866817C1		4005C	1	2644005R1		
TD11-GC	12	WH	GXL	3866817C1		4005C	1	2644005R1		
TC11-GC	12	WH	GXL	3866817C1		4005C	1	2644005R1		
TD11-GC	12	WH	GXL	3866817C1		4005C	1	2644005R1		
MG14L	10	RD	TXL	3866817C1		4007A	1	2644005R1		
MG14L	10	RD	TXL	3866817C1		4007A	1	2644005R1		
[CJ19A]	16	-	GXL	V-TERM	PAS1(A)	4042A	A	N/A		
CJ19A	16	GY	GXL	2033819C1	1671610C1	4042A	A	1652325C1		
CJ19A-G	16	WH	GXL	2033819C1	1671610C1	4042A	B	1652325C1		
[CK19B]	16	-	GXL	V-TERM	PAS1(A)	4042B	A	N/A		
CK19B	16	GY	GXL	2033819C1	1671610C1	4042B	A	1652325C1		
CK19B-G	16	WH	GXL	2033819C1	1671610C1	4042B	B	1652325C1		
[CL19C]	16	-	GXL	V-TERM	PAS1(A)	4042C	A	N/A		
CL19C	16	GY	GXL	2033819C1	1671610C1	4042C	A	1652325C1		
CL19C-G	16	WH	GXL	2033819C1	1671610C1	4042C	B	1652325C1		
CP19D	16	GY	GXL	2033819C1	1671610C1	4042D	A	1652325C1		
CP19D-G	16	WH	GXL	2033819C1	1671610C1	4042D	B	1652325C1		
CH19	16	GY	GXL	2033819C1	1671610C1	4042E	A	1652325C1		
CH19E	16	GY	GXL	2033819C1	1671610C1	4042E	A	1652325C1		
CH19-G	16	WH	TXL	2033819C1	1671610C1	4042E	B	1652325C1		
CH19E-G	16	WH	GXL	2033819C1	1671610C1	4042E	B	1652325C1		
CP19	16	GY	GXL	2033819C1	1671610C1	4042F	A	1652325C1		
CM19F	16	GY	GXL	2033819C1	1671610C1	4042F	A	1652325C1		
CP19-G	16	WH	TXL	2033819C1	1671610C1	4042F	B	1652325C1		
CM19F-G	16	WH	GXL	2033819C1	1671610C1	4042F	B	1652325C1		
CS19	16	GY	GXL	2033819C1	1671610C1	4042G	A	1652325C1		
CR19H	16	GY	GXL	2033819C1	1671610C1	4042G	A	1652325C1		

Circuit Number	Gauge	Color	Insulation	Terminal / Splice Number	Connector Part number	Connector Number	Cavity	Seal/Sleeve	Lock 1	Lock 2
CS19-G	16	WH	TXL	2033819C1	1671610C1	4042G	B	1652325C1		
CR19H-G	16	WH	GXL	2033819C1	1671610C1	4042G	B	1652325C1		
CU19	16	GY	GXL	2033819C1	1671610C1	4042H	A	1652325C1		
CU19-G	16	WH	TXL	2033819C1	1671610C1	4042H	B	1652325C1		
CW19	16	GY	GXL	2033819C1	1671610C1	4042J	A	1652325C1		
CW19-G	16	WH	TXL	2033819C1	1671610C1	4042J	B	1652325C1		
CY19	16	GY	GXL	2033819C1	1671610C1	4042K	A	1652325C1		
CY19-G	16	WH	TXL	2033819C1	1671610C1	4042K	B	1652325C1		
XA19	16	GY	GXL	2033819C1	1671610C1	4042L	A	1652325C1		
XA19-G	16	WH	TXL	2033819C1	1671610C1	4042L	B	1652325C1		
XY19	16	GY	GXL	2033819C1	1671610C1	4042M	A	1652325C1		
XY19-G	16	WH	TXL	2033819C1	1671610C1	4042M	B	1652325C1		
MC41	18	TN	TXL	3613771C1	3690369C1	4060A	3	N/A		
SH14HC	14	RD	TXL	3613770C1	3690369C1	4060A	4	N/A		
SJ14HF	14	RD	TXL	3613770C1	3690369C1	4060A	4	N/A		
SH11-GA	14	WH	TXL	3613770C1	3690369C1	4060A	5	N/A		
SJ11-G	14	WH	TXL	3613770C1	3690369C1	4060A	5	N/A		
MH26A	18	TN	TXL	3613771C1	3690369C1	4060A	6	N/A		
MJ26A	18	TN	TXL	3613771C1	3690369C1	4060A	6	N/A		
MH26B	18	TN	TXL	3613771C1	3690369C1	4060A	7	N/A		
MJ26B	18	TN	TXL	3613771C1	3690369C1	4060A	7	N/A		
MC41EJ	18	TN	TXL	3613771C1	3690369C1	4060A	8	N/A		
MD13Z	16	PK	TXL	3613770C1	3690369C1	4060A	10	N/A		
SK11-GAP	14	WH	TXL	3581768C1		4081A	1	2644038R1		
SL11GAP	14	WH	TXL	3581768C1		4081A	1	2644038R1		
MJ26DA	18	TN	GXL	3518963C1	3553404C1	4087B	6	N/A		
MJ5CC(+)	18	YL	TXL	3727971C1	3553404C1	4087B	7	N/A		
MJ5CC(-)	18	GN	TXL	3727971C1	3553404C1	4087B	8	N/A		
MJ26B	18	TN	TXL	3727971C1	3553404C1	4087B	10	N/A		
MJ26A	18	TN	TXL	3727971C1	3553404C1	4087B	11	N/A		
MJ11-GBD	18	WH	TXL	3727971C1	3553404C1	4087B	12	N/A		
UF92#163A	16	TN	TXL	1661875C1	3540756C1	422F	A	1661872C1		
UF92D	18	TN	TXL	1661875C1	3540756C1	422F	B	3568570C1		
UF62A	18	DKBL	TXL	1661875C1	3540756C1	422F	C	3568570C1		
UF92-GAH	18	WH	TXL	1661875C1	3540756C1	422F	D	3568570C1		
RA10-GR	14	WH	GXL	2034787C1	3572899C1	4410D	2	N/A		
RA5E(+)	18	YL	TXL	1680205C1	3572899C1	4410D	3	N/A		
RA5E(-)	18	GN	TXL	1680205C1	3572899C1	4410D	4	N/A		
RA20	16	LTGN	GXL	1680205C1	3572899C1	4410D	6	N/A		
RC10-GP	14	WH	GXL	2034787C1	3572899C1	4410E	2	N/A		
RC5F(+)	18	YL	TXL	1680205C1	3572899C1	4410E	3	N/A		
RC5F(-)	18	GN	TXL	1680205C1	3572899C1	4410E	4	N/A		
RC20A	16	LTGN	GXL	1680205C1	3572899C1	4410E	6	N/A		
RJ59	14	GY	GXL	2034788C1	3572900C1	4410F	1	UNDEF		
RS59C	14	GY	GXL	2034788C1	3572900C1	4410F	1	UNDEF		
RJ10-GPM	14	WH	GXL	2034788C1	3572900C1	4410F	2	UNDEF		
RS10-GPN	14	WH	GXL	2034788C1	3572900C1	4410F	2	UNDEF		
ZE10-GR	14	WH	GXL	2034787C1	3572899C1	4410F	2	N/A		
ZE10-GR	14	WH	GXL	2034787C1	3572899C1	4410F	2	N/A		
RJ1(+)	18	YL	TXL	3572626C1	3572900C1	4410F	3	UNDEF		
RS1A(+)	18	YL	TXL	3572626C1	3572900C1	4410F	3	UNDEF		
ZE5E(+)	18	YL	TXL	1680205C1	3572899C1	4410F	3	N/A		
ZE5E(+)	18	YL	TXL	1680205C1	3572899C1	4410F	3	N/A		
RJ1(-)	18	GN	TXL	3572626C1	3572900C1	4410F	4	UNDEF		

Circuit Number	Gauge	Color	Insulation	Terminal / Splice Number	Connector Part number	Connector Number	Cavity	Seal/Sleeve	Lock 1	Lock 2
RS1A(-)	18	GN	TXL	3572626C1	3572900C1	4410F	4	UNDEF		
ZE5E(-)	18	GN	TXL	1680205C1	3572899C1	4410F	4	N/A		
ZE5E(-)	18	GN	TXL	1680205C1	3572899C1	4410F	4	N/A		
RJ14	16	RD	GXL	1680206C1	3572900C1	4410F	6	UNDEF		
RS14D	16	RD	GXL	1680206C1	3572900C1	4410F	6	UNDEF		
ZE20	16	LTGN	GXL	1680205C1	3572899C1	4410F	6	N/A		
ZE20	16	LTGN	GXL	1680205C1	3572899C1	4410F	6	N/A		
RB10-GR	14	WH	GXL	2034787C1	3572899C1	4410G	2	N/A		
RB10-GR	14	WH	GXL	2034787C1	3572899C1	4410G	2	N/A		
RB5E(+)	18	YL	TXL	1680205C1	3572899C1	4410G	3	N/A		
RB5E(+)	18	YL	TXL	1680205C1	3572899C1	4410G	3	N/A		
RB5E(-)	18	GN	TXL	1680205C1	3572899C1	4410G	4	N/A		
RB5E(-)	18	GN	TXL	1680205C1	3572899C1	4410G	4	N/A		
RB20	16	LTGN	GXL	1680205C1	3572899C1	4410G	6	N/A		
RB20	16	LTGN	GXL	1680205C1	3572899C1	4410G	6	N/A		
NT10-GS	14	WH	GXL	2034787C1	3572899C1	4410H	2	N/A		
RC10-GP	14	WH	GXL	2034787C1	3572899C1	4410H	2	N/A		
NT5E(+)	18	YL	TXL	3757932C1	3572899C1	4410H	3	N/A		
RC5F(+)	18	YL	TXL	3757932C1	3572899C1	4410H	3	N/A		
NT5E(-)	18	GN	TXL	3757932C1	3572899C1	4410H	4	N/A		
RC5F(-)	18	GN	TXL	3757932C1	3572899C1	4410H	4	N/A		
NT20	16	LTGN	GXL	1680205C1	3572899C1	4410H	6	N/A		
RC20A	16	LTGN	GXL	1680205C1	3572899C1	4410H	6	N/A		
RD10-GP	14	WH	GXL	2034787C1	3572899C1	4410J	2	N/A		
RD10-GP	14	WH	GXL	2034787C1	3572899C1	4410J	2	N/A		
RD5F(+)	18	YL	TXL	1680205C1	3572899C1	4410J	3	N/A		
RD5F(+)	18	YL	TXL	1680205C1	3572899C1	4410J	3	N/A		
RD5F(-)	18	GN	TXL	1680205C1	3572899C1	4410J	4	N/A		
RD5F(-)	18	GN	TXL	1680205C1	3572899C1	4410J	4	N/A		
RD20A	16	LTGN	GXL	1680205C1	3572899C1	4410J	6	N/A		
RD20A	16	LTGN	GXL	1680205C1	3572899C1	4410J	6	N/A		
RS59C	14	GY	GXL	2034787C1	3572899C1	4410K	1	N/A		
RS10-GPN	14	WH	GXL	2034787C1	3572899C1	4410K	2	N/A		
RS1A(+)	18	YL	TXL	3572625C1	3572899C1	4410K	3	N/A		
RS1A(-)	18	GN	TXL	3572625C1	3572899C1	4410K	4	N/A		
RS14D	16	RD	GXL	3572625C1	3572899C1	4410K	6	N/A		
RK59D	14	GY	GXL	2034787C1	3572899C1	4410L	1	N/A		
RK10-GPP	14	WH	GXL	2034787C1	3572899C1	4410L	2	N/A		
NL10-GS	14	WH	GXL	2034787C1	3572899C1	4410L	2	N/A		
RD10-GP	14	WH	GXL	2034787C1	3572899C1	4410L	2	N/A		
NL10-GS	14	WH	GXL	2034787C1	3572899C1	4410L	2	N/A		
RD10-GP	14	WH	GXL	2034787C1	3572899C1	4410L	2	N/A		
RK1B(+)	18	YL	TXL	3757932C1	3572899C1	4410L	3	N/A		
NL5E(+)	18	YL	TXL	1680205C1	3572899C1	4410L	3	N/A		
RD5F(+)	18	YL	TXL	1680205C1	3572899C1	4410L	3	N/A		
NL5E(+)	18	YL	TXL	1680205C1	3572899C1	4410L	3	N/A		
RD5F(+)	18	YL	TXL	1680205C1	3572899C1	4410L	3	N/A		
RK1B(-)	18	GN	TXL	3757932C1	3572899C1	4410L	4	N/A		
NL5E(-)	18	GN	TXL	1680205C1	3572899C1	4410L	4	N/A		
RD5F(-)	18	GN	TXL	1680205C1	3572899C1	4410L	4	N/A		
NL5E(-)	18	GN	TXL	1680205C1	3572899C1	4410L	4	N/A		
RD5F(-)	18	GN	TXL	1680205C1	3572899C1	4410L	4	N/A		
RK14E	16	RD	GXL	1680205C1	3572899C1	4410L	6	N/A		
NL20	16	LTGN	GXL	1680205C1	3572899C1	4410L	6	N/A		

Circuit Number	Gauge	Color	Insulation	Terminal / Splice Number	Connector Part number	Connector Number	Cavity	Seal/Sleeve	Lock 1	Lock 2
RD20A	16	LTGN	GXL	1680205C1	3572899C1	4410L	6	N/A		
NL20	16	LTGN	GXL	1680205C1	3572899C1	4410L	6	N/A		
RD20A	16	LTGN	GXL	1680205C1	3572899C1	4410L	6	N/A		
RJ59	14	GY	GXL	2034787C1	3572899C1	4410M	1	N/A		
RK59D	14	GY	GXL	2034787C1	3572899C1	4410M	1	N/A		
RJ10-GPM	14	WH	GXL	2034787C1	3572899C1	4410M	2	N/A		
RK10-GPP	14	WH	GXL	2034787C1	3572899C1	4410M	2	N/A		
RJ1(+)	18	YL	TXL	3572625C1	3572899C1	4410M	3	N/A		
RK1B(+)	18	YL	TXL	3572625C1	3572899C1	4410M	3	N/A		
RJ1(-)	18	GN	TXL	3572625C1	3572899C1	4410M	4	N/A		
RK1B(-)	18	GN	TXL	3572625C1	3572899C1	4410M	4	N/A		
RJ14	16	RD	GXL	1680205C1	3572899C1	4410M	6	N/A		
RK14E	16	RD	GXL	1680205C1	3572899C1	4410M	6	N/A		
PG14H	4	RD	SGX	3517757C1	3517760C1	4411A1	A	N/A		
PG14H	4	RD	SGX	3517757C1	3517760C1	4411A1	A	N/A		
PH14CY	4	RD	SGX	3517757C1	3517760C1	4411A2	A	N/A		
PH14CY	4	RD	SGX	3517757C1	3517760C1	4411A2	A	N/A		
PJ14E	4	RD	SGX	3517757C1	3517760C1	4411A3	A	N/A		
PJ14E	4	RD	SGX	3517757C1	3517760C1	4411A3	A	N/A		
ZF14H	4	RD	SGX	3517757C1	3517760C1	4411A4	A	N/A		
ZF14H	4	RD	SGX	3517757C1	3517760C1	4411A4	A	N/A		
ZG14CZ	4	RD	SGX	3517757C1	3517760C1	4411A5	A	N/A		
ZG14CZ	4	RD	SGX	3517757C1	3517760C1	4411A5	A	N/A		
ZM14E	4	RD	SGX	3517757C1	3517760C1	4411A6	A	N/A		
ZM14E	4	RD	SGX	3517757C1	3517760C1	4411A6	A	N/A		
LM14CX	4	RD	SGX	3517757C1	3517760C1	4411A7	A	N/A		
LM14CX	4	RD	SGX	3517757C1	3517760C1	4411A7	A	N/A		
MP14C	4	RD	SGX	3517757C1	3517760C1	4411A8	A	N/A		
MP14C	4	RD	SGX	3517757C1	3517760C1	4411A8	A	N/A		
MY14CA	4	RD	SGX	3517757C1	3517760C1	4411A9	A	N/A		
MY14CA	4	RD	SGX	3517757C1	3517760C1	4411A9	A	N/A		
RH14	4	RD	SGX	3517758C1	3517759C1	4411F	A	N/A		
RH14	4	RD	SGX	3517757C1	3517760C1	4411M	A	N/A		
PC14H	4	RD	SGX	3517757C1	3517760C1	4411M	A	N/A		
PB14CY	4	RD	SGX	3517757C1	3517760C1	4411M1	A	N/A		
PE14E	4	RD	SGX	3517757C1	3517760C1	4411M2	A	N/A		
ZB14CZ	4	RD	SGX	3517757C1	3517760C1	4411M4	A	N/A		
ZA14H	4	RD	SGX	3517757C1	3517760C1	4411M5	A	N/A		
ZC14E	4	RD	SGX	3517757C1	3517760C1	4411M6	A	N/A		
LL14CX	4	RD	SGX	3517757C1	3517760C1	4411M7	A	N/A		
TT14	4	RD	SGX	3517758C1	3517759C1	4411N	A	N/A		
TT14	4	RD	SGX	3517757C1	3517760C1	4411P	A	N/A		
MY14CA	4	RD	SGX	3517758C1	3517759C1	4412A1	A	N/A		
MY14CA	4	RD	SGX	3517758C1	3517759C1	4412A1	A	N/A		
MP14C	4	RD	SGX	3517758C1	3517759C1	4412A2	A	N/A		
MP14C	4	RD	SGX	3517758C1	3517759C1	4412A2	A	N/A		
PC14H	4	RD	SGX	3517758C1	3517759C1	4412F	A	N/A		
ZA14H	4	RD	SGX	3517758C1	3517759C1	4412F	A	N/A		
PJ14E	4	RD	SGX	3517758C1	3517759C1	4413A1	A	N/A		
ZM14E	4	RD	SGX	3517758C1	3517759C1	4413A1	A	N/A		
PJ14E	4	RD	SGX	3517758C1	3517759C1	4413A1	A	N/A		
ZM14E	4	RD	SGX	3517758C1	3517759C1	4413A1	A	N/A		
PH14CY	4	RD	SGX	3517758C1	3517759C1	4413A2	A	N/A		
ZG14CZ	4	RD	SGX	3517758C1	3517759C1	4413A2	A	N/A		

Circuit Number	Gauge	Color	Insulation	Terminal / Splice Number	Connector Part number	Connector Number	Cavity	Seal/Sleeve	Lock 1	Lock 2
PH14CY	4	RD	SGX	3517758C1	3517759C1	4413A2	A	N/A		
ZG14CZ	4	RD	SGX	3517758C1	3517759C1	4413A2	A	N/A		
PG14H	4	RD	SGX	3517758C1	3517759C1	4413A3	A	N/A		
ZF14H	4	RD	SGX	3517758C1	3517759C1	4413A3	A	N/A		
PG14H	4	RD	SGX	3517758C1	3517759C1	4413A3	A	N/A		
ZF14H	4	RD	SGX	3517758C1	3517759C1	4413A3	A	N/A		
LM14CX	4	RD	SGX	3517758C1	3517759C1	4413A4	A	N/A		
LM14CX	4	RD	SGX	3517758C1	3517759C1	4413A4	A	N/A		
MN14C	4	RD	SGX	3517758C1	3517759C1	4413F	A	N/A		
PB14CY	4	RD	SGX	3517758C1	3517759C1	4413F1	A	N/A		
ZB14CZ	4	RD	SGX	3517758C1	3517759C1	4413F1	A	N/A		
PE14E	4	RD	SGX	3517758C1	3517759C1	4413F2	A	N/A		
ZC14E	4	RD	SGX	3517758C1	3517759C1	4413F2	A	N/A		
MU14CA	4	RD	SGX	3517758C1	3517759C1	4413F3	A	N/A		
LL14CX	4	RD	SGX	3517758C1	3517759C1	4413F4	A	N/A		
PV68BB	14	BN	GXL	3535486C1	2039311C91	4450AM	A	589391C1		
PV68BB	14	BN	GXL	3535486C1	2039311C91	4450AM	A	589391C1		
PV56BB	16	YL	GXL	2039343C1	2039311C91	4450AM	B	1652325C1		
PV56BB	16	YL	GXL	2039343C1	2039311C91	4450AM	B	1652325C1		
PV57BB	16	LTGN	GXL	2039343C1	2039311C91	4450AM	C	1652325C1		
PV57BB	16	LTGN	GXL	2039343C1	2039311C91	4450AM	C	1652325C1		
PV54BB	14	BN	GXL	3535486C1	2039311C91	4450AM	D	589391C1		
PV54BB	14	BN	GXL	3535486C1	2039311C91	4450AM	D	589391C1		
PV71BB	16	LTBL	GXL	2039343C1	2039311C91	4450AM	E	1652325C1		
PV71BB	16	LTBL	GXL	2039343C1	2039311C91	4450AM	E	1652325C1		
PV12BB	14	LTBL	GXL	3535486C1	2039311C91	4450AM	F	589391C1		
PV12BB	14	LTBL	GXL	3535486C1	2039311C91	4450AM	F	589391C1		
PV11-GBB	12	WH	GXL	2039313C1	2039311C91	4450AM	G	589390C1		
PV11-GBB	12	WH	GXL	2039344C1	2039311C91	4450AM	G	589390C1		
RX68BB	14	BN	GXL	2033912C1	2039312C91	4450BF	A	589391C1		
RX56BB	16	OR	GXL	2033911C1	2039312C91	4450BF	B	1652325C1		
RX57BB	16	OR	GXL	2033911C1	2039312C91	4450BF	C	1652325C1		
RX58BB	14	BN	GXL	2033912C1	2039312C91	4450BF	D	589391C1		
RX71BB	16	OR	GXL	2033911C1	2039312C91	4450BF	E	1652325C1		
RX12BB	14	LTBL	GXL	2033912C1	2039312C91	4450BF	F	589391C1		
RX11-GBB	12	WH	GXL	2033912C1	2039312C91	4450BF	G	589390C1		
RX56BC	16	OR	GXL	2033819C1	1686834C1	4450BM	A	1652325C1		
RX57BC	16	OR	GXL	2033819C1	1686834C1	4450BM	B	1652325C1		
RX70BB	14	OR	GXL	2033816C1	1686834C1	4450BM	C	589391C1		
NV68BBA	14	BN	GXL	2033912C1	2039312C91	4450D	A	589391C1		
NV56BBA	16	YL	GXL	2033911C1	2039312C91	4450D	B	1652325C1		
NV57BBA	16	LTGN	GXL	2033911C1	2039312C91	4450D	C	1652325C1		
NV54BBA	14	BN	GXL	2033912C1	2039312C91	4450D	D	589391C1		
NV71BBA	16	LTBL	GXL	2033911C1	2039312C91	4450D	E	1652325C1		
NV12BBA	14	LTBL	GXL	2033912C1	2039312C91	4450D	F	589391C1		
NV11A-GD	12	WH	GXL	2033912C1	2039312C91	4450D	G	589390C1		
NV11A-GD	12	WH	GXL	N/A	BLUNT_SL_V	4450E	A	N/A		
NV12BBA	14	LTBL	GXL	N/A	BLUNT_SL_V	4450E	A	N/A		
NV54BBA	14	BN	GXL	N/A	BLUNT_SL_V	4450E	A	N/A		
NV56BBA	16	YL	GXL	N/A	BLUNT_SL_V	4450E	A	N/A		
NV57BBA	16	LTGN	GXL	N/A	BLUNT_SL_V	4450E	A	N/A		
NV68BBA	14	BN	GXL	N/A	BLUNT_SL_V	4450E	A	N/A		
NV71BBA	16	LTBL	GXL	N/A	BLUNT_SL_V	4450E	A	N/A		
VM68TB	12	BN	TXL	2039313C1	2039311C91	4450M	A	589391C1		

Circuit Number	Gauge	Color	Insulation	Terminal / Splice Number	Connector Part number	Connector Number	Cavity	Seal/Sleeve	Lock 1	Lock 2
VT68TB	12	BN	TXL	2039313C1	2039311C91	4450M	A	589391C1		
ZQ68TB	16	BN	TXL	2039343C1	2039311C91	4450M	A	1652325C1		
ND68BB	14	BN	GXL	3535486C1	2039311C91	4450M	A	589391C1		
ND68BB	14	BN	GXL	3535486C1	2039311C91	4450M	A	589391C1		
YW56BB	16	YL	TXL	2039343C1	2039311C91	4450M	B	1652325C1		
YZ56BB	16	YL	TXL	2039343C1	2039311C91	4450M	B	1652325C1		
ND56BB	16	YL	GXL	2039343C1	2039311C91	4450M	B	1652325C1		
ND56BB	16	YL	GXL	2039343C1	2039311C91	4450M	B	1652325C1		
YW57BB	16	LTGN	TXL	2039343C1	2039311C91	4450M	C	1652325C1		
YZ57BB	16	LTGN	TXL	2039343C1	2039311C91	4450M	C	1652325C1		
ND57BB	16	LTGN	GXL	2039343C1	2039311C91	4450M	C	1652325C1		
ND57BB	16	LTGN	GXL	2039343C1	2039311C91	4450M	C	1652325C1		
VM58TB	12	BN	TXL	2039313C1	2039311C91	4450M	D	589391C1		
VT58TB	12	BN	TXL	2039313C1	2039311C91	4450M	D	589391C1		
ND54BB	14	BN	GXL	3535486C1	2039311C91	4450M	D	589391C1		
ND54BB	14	BN	GXL	3535486C1	2039311C91	4450M	D	589391C1		
ZK71BB	16	LTBL	TXL	2039343C1	2039311C91	4450M	E	1652325C1		
ND71BB	16	LTBL	GXL	2039343C1	2039311C91	4450M	E	1652325C1		
ND71BB	16	LTBL	GXL	2039343C1	2039311C91	4450M	E	1652325C1		
ND12BB	14	LTBL	GXL	3535486C1	2039311C91	4450M	F	589391C1		
ND12BB	14	LTBL	GXL	3535486C1	2039311C91	4450M	F	589391C1		
YW11-GBJ	12	WH	TXL	2039313C1	2039311C91	4450M	G	589391C1		
YZ11-GBJ	12	WH	TXL	2039313C1	2039311C91	4450M	G	589391C1		
ND11-GD	12	WH	GXL	2039313C1	2039311C91	4450M	G	589390C1		
ND11-GD	12	WH	GXL	2039344C1	2039311C91	4450M	G	589390C1		
PV56BC	16	YL	GXL	2033819C1	1686834C1	4460AM	A	1652325C1		
PV56BC	16	YL	GXL	2033819C1	1686834C1	4460AM	A	1652325C1		
PV57BC	16	LTGN	GXL	2033819C1	1686834C1	4460AM	B	1652325C1		
PV57BC	16	LTGN	GXL	2033819C1	1686834C1	4460AM	B	1652325C1		
PV70BB	14	RD	GXL	2033816C1	1686834C1	4460AM	C	589391C1		
PV70BB	14	RD	GXL	2033816C1	1686834C1	4460AM	C	589391C1		
RX56BC	16	OR	GXL	2033911C1	3553961C1	4460BF	A	1652325C1		
RX57BC	16	OR	GXL	2033911C1	3553961C1	4460BF	B	1652325C1		
RX70BB	14	OR	GXL	2033912C1	3553961C1	4460BF	C	589391C1		
RX68BB	14	BN	GXL	3535486C1	2039311C91	4460BM	A	589391C1		
RX56BB	16	OR	GXL	2039343C1	2039311C91	4460BM	B	1652325C1		
RX57BB	16	OR	GXL	2039343C1	2039311C91	4460BM	C	1652325C1		
RX58BB	14	BN	GXL	3535486C1	2039311C91	4460BM	D	589391C1		
RX71BB	16	OR	GXL	2039343C1	2039311C91	4460BM	E	1652325C1		
RX12BB	14	LTBL	GXL	3535486C1	2039311C91	4460BM	F	589391C1		
RX11-GBB	12	WH	GXL	2039313C1	2039311C91	4460BM	G	589390C1		
NV56BCA	16	YL	GXL	2033911C1	3553961C1	4460D	A	1652325C1		
NV57BCA	16	LTGN	GXL	2033911C1	3553961C1	4460D	B	1652325C1		
NV70BBA	14	RD	GXL	2033912C1	3553961C1	4460D	C	589391C1		
NV56BCA	16	YL	GXL	N/A	BLUNT_SL_V	4460E	A	N/A		
NV57BCA	16	LTGN	GXL	N/A	BLUNT_SL_V	4460E	A	N/A		
NV70BBA	14	RD	GXL	N/A	BLUNT_SL_V	4460E	A	N/A		
YW56BC	16	YL	TXL	2033819C1	1686834C1	4460M	A	1652325C1		
YZ56BC	16	YL	TXL	2033819C1	1686834C1	4460M	A	1652325C1		
ND56BC	16	YL	GXL	2033819C1	1686834C1	4460M	A	1652325C1		
ND56BC	16	YL	GXL	2033819C1	1686834C1	4460M	A	1652325C1		
YW57BC	16	LTGN	TXL	2033819C1	1686834C1	4460M	B	1652325C1		
YZ57BC	16	LTGN	TXL	2033819C1	1686834C1	4460M	B	1652325C1		
ND57BC	16	LTGN	GXL	2033819C1	1686834C1	4460M	B	1652325C1		

Circuit Number	Gauge	Color	Insulation	Terminal / Splice Number	Connector Part number	Connector Number	Cavity	Seal/Sleeve	Lock 1	Lock 2
ND57BC	16	LTGN	GXL	2033819C1	1686834C1	4460M	B	1652325C1		
YZ70B	12	YL	TXL	2033816C1	1686834C1	4460M	C	589391C1		
ND70BB	14	RD	GXL	2033816C1	1686834C1	4460M	C	589391C1		
ND70BB	14	RD	GXL	2033816C1	1686834C1	4460M	C	589391C1		
AH77-G	18	WH	TXL	3863609C1		6304A	A	2644038R1		
GA17D	16	PK	GXL	3692844C1		6305M	1	2644038R1		
GA17D	16	PK	GXL	2036586C1	2036583C1	6316M	A	N/A		
GA17	16	PK	GXL	2036586C1	2036583C1	6316M	B	N/A		
AB6G	18	GY	TXL	2033819C1	1687789C1	6401M	A	3517771C1		
AF6G	18	GY	TXL	2033819C1	1687789C1	6401M	A	3517771C1		
AB6G	18	GY	TXL	2033819C1	1687789C1	6401M	A	3517771C1		
AF6G	18	GY	TXL	2033819C1	1687789C1	6401M	A	3517771C1		
KZ34	16	TN	GXL	2033819C1	1687789C1	6401M	B	1652325C1		
KZ34	16	TN	GXL	2033819C1	1687789C1	6401M	B	1652325C1		
KZ34A	20	TN	TXL	2033819C1	1687789C1	6401M	C	3517771C1		
KZ34A	20	TN	TXL	2033819C1	1687789C1	6401M	C	3517771C1		
KZ9B	18	GY	TXL	2033819C1	1687789C1	6401M	D	3517771C1		
KZ9B	18	GY	TXL	2033819C1	1687789C1	6401M	D	3517771C1		
KZ34B	16	TN	GXL	2033819C1	1687789C1	6401M	E	1652325C1		
KZ34B	16	TN	GXL	2033819C1	1687789C1	6401M	E	1652325C1		
KZ34	16	TN	GXL	2033819C1	1671610C1	6401R	A	1652325C1		
KZ34	16	TN	GXL	2033819C1	1671610C1	6401R	A	1652325C1		
KZ34B	16	TN	GXL	2033819C1	1671610C1	6401R	B	1652325C1		
KZ34B	16	TN	GXL	2033819C1	1671610C1	6401R	B	1652325C1		
FM9C	18	GY	GXL	1661875C1	3522068C1	6703A	A	1661872C1		
FM28	18	TN	GXL	1661875C1	3522068C1	6703A	B	1661872C1		
YA41-GH	4	WH	SGX	2241330C1		6704A	1	3812582R1		
KS10-G6	10	WH	TXL	1687847C1	3551896C1	6704B	A	589390C1		
YA41-GF	10	WH	TXL	1687847C1	3551896C1	6704B	A	589390C1		
VJ10-G1	16	WH	GXL	2033819C1	3551896C1	6704B	B	1652325C1		
VJ10-G2	14	WH	150	2033816C1	3551896C1	6704B	C	1652325C1		
VJ10-G3	16	WH	GXL	2033819C1	3551896C1	6704B	D	1652325C1		
VJ10-G4	16	WH	GXL	2033819C1	3551896C1	6704B	E	1652325C1		
VJ10-G5	16	BK	TXL	2033819C1	3551896C1	6704B	F	1652325C1		
VK95DVL	20	TN	150	3613771C1	3573078C1	670A	1	N/A		
VK95DVH	20	TN	150	3613771C1	3573078C1	670A	2	N/A		
VK95BA	20	TN	150	3613771C1	3573078C1	670A	3	N/A		
VK95BC	20	TN	150	3613771C1	3573078C1	670A	4	N/A		
AB6D	18	TN	150	3613771C1	3573078C1	670A	5	N/A		
AF6D	18	TN	150	3613771C1	3573078C1	670A	5	N/A		
AH6D	18	TN	150	3613771C1	3573078C1	670A	5	N/A		
KP6D	18	TN	150	3613771C1	3573078C1	670A	5	N/A		
VG6D	18	TN	150	3613771C1	3573078C1	670A	5	N/A		
VX6D	18	TN	150	3613771C1	3573078C1	670A	5	N/A		
KT9	18	GY	150	3613771C1	3573078C1	670A	7	N/A		
KZ9	18	GY	150	3613771C1	3573078C1	670A	7	N/A		
VK95K	20	TN	150	3613771C1	3573078C1	670A	8	N/A		
VK5A(+)	18	YL	193	3613771C1	3573078C1	670A	9	N/A		
VK5A(-)	18	GN	193	3613771C1	3573078C1	670A	10	N/A		
VJ10-G2	14	WH	150	3613770C1	3573078C1	670A	11	N/A		
VJ13RA	12	PK	150	3612307C1	3573078C1	670A	12	N/A		
VJ5(+)	18	YL	193	3613771C1	3573078C1	670A	13	N/A		
VJ5(-)	18	GN	193	3613771C1	3573078C1	670A	14	N/A		
AT94AA	16	GY	GXL	3679224C1	3678796C1	6925A	1	3601687C1		

Circuit Number	Gauge	Color	Insulation	Terminal / Splice Number	Connector Part number	Connector Number	Cavity	Seal/Sleeve	Lock 1	Lock 2
AT94AB	16	GY	GXL	3679224C1	3678796C1	6925A	2	3601687C1		
ML93	18	TN	GXL	1661208C1	1661198C1	7103M	A	N/A		
ML93	18	TN	GXL	1661208C1	1661198C1	7103M	A	N/A		
ML9TS	18	GY	TXL	1661208C1	1661198C1	7103M	C	N/A		
ML9TS	18	GY	TXL	1661208C1	1661198C1	7103M	C	N/A		
VX95A	18	TN	GXL	3561584C1	3590390C1	7113A	1	3536868C1		
VE95A	18	TN	GXL	3526966C1	3977821C1	7113A	1	N/A		
VX95-GA	18	WH	GXL	3561584C1	3590390C1	7113A	2	3536868C1		
VE95-GA	18	WH	GXL	3526966C1	3977821C1	7113A	2	N/A		
VA95A	18	TN	GXL	3526966C1	3977821C1	7113B	1	N/A		
VB95A	18	TN	GXL	3572625C1	3602747C1	7113B	1	N/A		
VA95-GA	18	WH	GXL	3526966C1	3977821C1	7113B	2	N/A		
VB95-GA	18	WH	GXL	3572625C1	3602747C1	7113B	2	N/A		
VB95A	18	TN	GXL	3572625C1	3602747C1	7113C	1	N/A		
VF95A	18	TN	GXL	3526966C1	3977821C1	7113C	1	N/A		
VB95-GA	18	WH	GXL	3572625C1	3602747C1	7113C	2	N/A		
VF95-GA	18	WH	GXL	3526966C1	3977821C1	7113C	2	N/A		
VC95A	18	TN	GXL	3526966C1	3977821C1	7113D	1	N/A		
VC95A	18	TN	GXL	3572625C1	3602747C1	7113D	1	N/A		
VC95-GA	18	WH	GXL	3526966C1	3977821C1	7113D	2	N/A		
VC95-GA	18	WH	GXL	3572625C1	3602747C1	7113D	2	N/A		
VD95A	18	TN	GXL	3572625C1	3602747C1	7113E	1	N/A		
VG95A	18	TN	GXL	3526966C1	3977821C1	7113E	1	N/A		
VD95-GA	18	WH	GXL	3572625C1	3602747C1	7113E	2	N/A		
VG95-GA	18	WH	GXL	3526966C1	3977821C1	7113E	2	N/A		
VF95A	18	TN	GXL	3526966C1	3977821C1	7113F	1	N/A		
VD95A	18	TN	GXL	3572625C1	3602747C1	7113F	1	N/A		
VF95-GA	18	WH	GXL	3526966C1	3977821C1	7113F	2	N/A		
VD95-GA	18	WH	GXL	3572625C1	3602747C1	7113F	2	N/A		
VG95A	18	TN	GXL	3572625C1	3602747C1	7113G	1	N/A		
VH95A	18	TN	GXL	3526966C1	3977821C1	7113G	1	N/A		
VG95-GA	18	WH	GXL	3572625C1	3602747C1	7113G	2	N/A		
VH95-GA	18	WH	GXL	3526966C1	3977821C1	7113G	2	N/A		
VH95A	18	TN	GXL	3526966C1	3977821C1	7113H	1	N/A		
VK95A	18	TN	GXL	3572625C1	3602747C1	7113H	1	N/A		
VH95-GA	18	WH	GXL	3526966C1	3977821C1	7113H	2	N/A		
VK95-GA	18	WH	GXL	3572625C1	3602747C1	7113H	2	N/A		
VJ95A	18	TN	GXL	3572625C1	3602747C1	7113J	1	N/A		
VL95A	18	TN	GXL	3526966C1	3977821C1	7113J	1	N/A		
VJ95-GA	18	WH	GXL	3572625C1	3602747C1	7113J	2	N/A		
VL95-GA	18	WH	GXL	3526966C1	3977821C1	7113J	2	N/A		
VK95A	18	TN	GXL	3526966C1	3977821C1	7113K	1	N/A		
VM95A	18	TN	GXL	3572625C1	3602747C1	7113K	1	N/A		
VK95-GA	18	WH	GXL	3526966C1	3977821C1	7113K	2	N/A		
VM95-GA	18	WH	GXL	3572625C1	3602747C1	7113K	2	N/A		
VL95A	18	TN	GXL	3572625C1	3602747C1	7113L	1	N/A		
VN95A	18	TN	GXL	3526966C1	3977821C1	7113L	1	N/A		
VL95-GA	18	WH	GXL	3572625C1	3602747C1	7113L	2	N/A		
VN95-GA	18	WH	GXL	3526966C1	3977821C1	7113L	2	N/A		
VY95A	18	TN	GXL	3526966C1	3977821C1	7113M	1	N/A		
VP95A	18	TN	GXL	3572625C1	3602747C1	7113M	1	N/A		
VY95-GA	18	WH	GXL	3526966C1	3977821C1	7113M	2	N/A		
VP95-GA	18	WH	GXL	3572625C1	3602747C1	7113M	2	N/A		
XB95A	18	TN	GXL	3526966C1	3977821C1	7113N	1	N/A		

Circuit Number	Gauge	Color	Insulation	Terminal / Splice Number	Connector Part number	Connector Number	Cavity	Seal/Sleeve	Lock 1	Lock 2
VS95A	18	TN	GXL	3526966C1	3977821C1	7113N	1	N/A		
XB95-GA	18	WH	GXL	3526966C1	3977821C1	7113N	2	N/A		
VS95-GA	18	WH	GXL	3526966C1	3977821C1	7113N	2	N/A		
VZ95A	18	TN	GXL	3572625C1	3602747C1	7113P	1	N/A		
VZ95-GA	18	WH	GXL	3572625C1	3602747C1	7113P	2	N/A		
XW95A	18	TN	GXL	3526966C1	3977821C1	7113R	1	N/A		
XW95-GA	18	WH	GXL	3526966C1	3977821C1	7113R	2	N/A		
AU162A	18	WH	GXL	3561584C1	3590390C1	7113S	1	3536868C1		
AU162-GA	18	WH	GXL	3561584C1	3590390C1	7113S	2	3536868C1		
AV162A	18	WH	GXL	3561584C1	3590390C1	7113T	1	3536868C1		
AV162-GA	18	WH	GXL	3561584C1	3590390C1	7113T	2	3536868C1		
AW162A	18	WH	GXL	3561584C1	3590390C1	7113U	1	3536868C1		
AW162-GA	18	WH	GXL	3561584C1	3590390C1	7113U	2	3536868C1		
AX162A	18	WH	GXL	3561584C1	3590390C1	7113V	1	3536868C1		
AX162-GA	18	WH	GXL	3561584C1	3590390C1	7113V	2	3536868C1		
AY162A	18	WH	GXL	3561584C1	3590390C1	7113W	1	3536868C1		
AY162-GA	18	WH	GXL	3561584C1	3590390C1	7113W	2	3536868C1		
AZ162A	18	WH	GXL	3561584C1	3590390C1	7113X	1	3536868C1		
AZ162-GA	18	WH	GXL	3561584C1	3590390C1	7113X	2	3536868C1		
BD162A	18	WH	GXL	3561584C1	3590390C1	7113Y	1	3536868C1		
BD162-GA	18	WH	GXL	3561584C1	3590390C1	7113Y	2	3536868C1		
WH95A	18	TN	GXL	3526966C1	3977821C1	7113Z	1	N/A		
WH95-GA	18	WH	GXL	3526966C1	3977821C1	7113Z	2	N/A		
PK92C103	18	YL	TXL	1661875C1	3525872C1	7205F	A	3568570C1	3518184C1	
PN92B103	18	YL	TXL	1661875C1	3525872C1	7205F	A	3568570C1	1618846C1	1618847C1
PR92B103	18	YL	TXL	1661875C1	3525872C1	7205F	A	3568570C1	3768016C1	
RS92C103	18	YL	TXL	1661875C1	3525872C1	7205F	A	3568570C1		
SN92B103	18	YL	TXL	1661875C1	3525872C1	7205F	A	3568570C1		
SR92B103	18	YL	TXL	1661875C1	3525872C1	7205F	A	3568570C1		
PN92B103	18	YL	TXL	1661875C1	3525872C1	7205F	A	3568570C1		
PR92B103	18	YL	TXL	1661875C1	3525872C1	7205F	A	3568570C1		
SN92B103	18	YL	TXL	1661875C1	3525872C1	7205F	A	3568570C1		
SR92B103	18	YL	TXL	1661875C1	3525872C1	7205F	A	3568570C1		
PK92#143	18	LTBL	TXL	1661875C1	3525872C1	7205F	B	3568570C1		
RS92#143	18	LTBL	TXL	1661875C1	3525872C1	7205F	B	3568570C1		
PK92#150	18	PK	TXL	1661875C1	3525872C1	7205F	C	3568570C1		
RS92#150	18	PK	TXL	1661875C1	3525872C1	7205F	C	3568570C1		
PK92#101	18	LTBL	TXL	1661875C1	3525872C1	7205F	E	3568570C1	2006504C1	
PM92#122	18	YL	TXL	1661875C1	3525872C1	7205F	E	3568570C1	3543732C1	
RS92#101	18	LTBL	TXL	1661875C1	3525872C1	7205F	E	3568570C1		
SM92#122	18	YL	TXL	1661875C1	3525872C1	7205F	E	3568570C1		
PM92#122	18	YL	TXL	1661875C1	3525872C1	7205F	E	3568570C1		
SM92#122	18	YL	TXL	1661875C1	3525872C1	7205F	E	3568570C1		
PG92A123	18	LTGN	TXL	1661875C1	3525872C1	7205F	F	3568570C1		
PM92#105	18	OR	TXL	1661875C1	3525872C1	7205F	F	3568570C1	3536085C1	3599541C1
PU92A123	18	LTGN	TXL	1661875C1	3525872C1	7205F	F	3568570C1		
SM92#105	18	OR	TXL	1661875C1	3525872C1	7205F	F	3568570C1		
PM92#105	18	OR	TXL	1661875C1	3525872C1	7205F	F	3568570C1		
SM92#105	18	OR	TXL	1661875C1	3525872C1	7205F	F	3568570C1		
PG92A145	18	OR	TXL	1661875C1	3525872C1	7205F	G	3568570C1		
PM92#164	18	LTBL	TXL	1661875C1	3525872C1	7205F	G	3568570C1		
PU92A145	18	OR	TXL	1661875C1	3525872C1	7205F	G	3568570C1		
SM92#164	18	LTBL	TXL	1661875C1	3525872C1	7205F	G	3568570C1		
PM92#164	18	LTBL	TXL	1661875C1	3525872C1	7205F	G	3568570C1		

Circuit Number	Gauge	Color	Insulation	Terminal / Splice Number	Connector Part number	Connector Number	Cavity	Seal/Sleeve	Lock 1	Lock 2
SM92#164	18	LTBL	TXL	1661875C1	3525872C1	7205F	G	3568570C1		
PK92#105	18	OR	TXL	1661875C1	3525872C1	7205F	H	3568570C1		
PM92#162	18	YL	TXL	1661875C1	3525872C1	7205F	H	3568570C1	3549120C1	
RS92#105	18	OR	TXL	1661875C1	3525872C1	7205F	H	3568570C1		
SM92#162	18	YL	TXL	1661875C1	3525872C1	7205F	H	3568570C1		
PM92#162	18	YL	TXL	1661875C1	3525872C1	7205F	H	3568570C1		
SM92#162	18	YL	TXL	1661875C1	3525872C1	7205F	H	3568570C1		
PN92#101	18	LTBL	TXL	1667742C1	3525874C1	7206F	A	3568570C1		
PR92#101	18	LTBL	TXL	1667742C1	3525874C1	7206F	A	3568570C1		
SM92#101	18	LTBL	TXL	1667742C1	3525874C1	7206F	A	3568570C1		
PN92#101	18	LTBL	TXL	1667742C1	3525874C1	7206F	A	3568570C1		
PR92#101	18	LTBL	TXL	1667742C1	3525874C1	7206F	A	3568570C1		
SM92#101	18	LTBL	TXL	1667742C1	3525874C1	7206F	A	3568570C1		
RL92#117	18	LTBL	TXL	1667742C1	3525874C1	7206F	B	3568570C1		
TL92#117	18	LTBL	TXL	1667742C1	3525874C1	7206F	B	3568570C1	3683466C1	3573833C1
RL92#117	18	LTBL	TXL	1667742C1	3525874C1	7206F	B	3568570C1		
TL92#117	18	LTBL	TXL	1667742C1	3525874C1	7206F	B	3568570C1		
PN92C103	18	YL	TXL	1667742C1	3525874C1	7206F	C	3568570C1	1618846C1	1618847C1
PR92C103	18	YL	TXL	1667742C1	3525874C1	7206F	C	3568570C1	1684263C1	
SN92C103	18	YL	TXL	1667742C1	3525874C1	7206F	C	3568570C1		
SR92C103	18	YL	TXL	1667742C1	3525874C1	7206F	C	3568570C1		
PN92C103	18	YL	TXL	1667742C1	3525874C1	7206F	C	3568570C1		
PR92C103	18	YL	TXL	1667742C1	3525874C1	7206F	C	3568570C1		
SN92C103	18	YL	TXL	1667742C1	3525874C1	7206F	C	3568570C1		
SR92C103	18	YL	TXL	1667742C1	3525874C1	7206F	C	3568570C1		
PM92#143	18	LTBL	TXL	1667742C1	3525874C1	7206F	D	3568570C1	3554821C1	
SM92#143	18	LTBL	TXL	1667742C1	3525874C1	7206F	D	3568570C1		
PM92#143	18	LTBL	TXL	1667742C1	3525874C1	7206F	D	3568570C1		
SM92#143	18	LTBL	TXL	1667742C1	3525874C1	7206F	D	3568570C1		
RL92#142	18	WH	TXL	1667742C1	3525874C1	7206F	E	3568570C1		
TL92#142	18	WH	TXL	1667742C1	3525874C1	7206F	E	3568570C1	3610532C1	
RL92#142	18	WH	TXL	1667742C1	3525874C1	7206F	E	3568570C1		
TL92#142	18	WH	TXL	1667742C1	3525874C1	7206F	E	3568570C1		
RL92#145	18	OR	TXL	1667742C1	3525874C1	7206F	F	3568570C1		
TL92#145	18	OR	TXL	1667742C1	3525874C1	7206F	F	3568570C1	3610532C1	
RL92#145	18	OR	TXL	1667742C1	3525874C1	7206F	F	3568570C1		
TL92#145	18	OR	TXL	1667742C1	3525874C1	7206F	F	3568570C1		
PM92#130	18	YL	TXL	1667742C1	3525874C1	7206F	G	3568570C1	3546519C1	
SM92#130	18	WH	TXL	1667742C1	3525874C1	7206F	G	3568570C1		
PM92#130	18	YL	TXL	1667742C1	3525874C1	7206F	G	3568570C1		
SM92#130	18	WH	TXL	1667742C1	3525874C1	7206F	G	3568570C1		
PM92#123	18	LTGN	TXL	1667742C1	3525874C1	7206F	H	3568570C1	3544678C1	
SM92#123	18	LTGN	TXL	1667742C1	3525874C1	7206F	H	3568570C1		
PM92#123	18	LTGN	TXL	1667742C1	3525874C1	7206F	H	3568570C1		
SM92#123	18	LTGN	TXL	1667742C1	3525874C1	7206F	H	3568570C1		
KR99C	20	VT	TXL	3727971C1	3586750C1	7207F	1	N/A		
KR99C	20	PL	TXL	3727971C1	3586750C1	7207F	1	N/A		
KR46A	20	GY	TXL	3727971C1	3586750C1	7207F	2	N/A		
KR46A	20	GY	TXL	3727971C1	3586750C1	7207F	2	N/A		
KY46A	20	GY	TXL	3727971C1	3586750C1	7207F	2	N/A		
KR99F	20	VT	TXL	3727971C1	3586750C1	7207F	3	N/A		
KR99F	20	PL	TXL	3727971C1	3586750C1	7207F	3	N/A		
KY97XG	20	GY	TXL	3727971C1	3586750C1	7207F	3	N/A		
KR46B	20	GY	TXL	3727971C1	3586750C1	7207F	4	N/A		

Circuit Number	Gauge	Color	Insulation	Terminal / Splice Number	Connector Part number	Connector Number	Cavity	Seal/Sleeve	Lock 1	Lock 2
KR46B	20	GY	TXL	3727971C1	3586750C1	7207F	4	N/A		
KY46B	20	GY	TXL	3727971C1	3586750C1	7207F	4	N/A		
KR97AR	20	VT	TXL	3727971C1	3586750C1	7207F	5	N/A		
KR97AR	20	PL	TXL	3727971C1	3586750C1	7207F	5	N/A		
KY97AR	20	PL	TXL	3727971C1	3586750C1	7207F	5	N/A		
KR97XG	20	GY	TXL	3727971C1	3586750C1	7207F	6	N/A		
KR97XG	20	GY	TXL	3727971C1	3586750C1	7207F	6	N/A		
KY9B-G	20	GY	TXL	3727971C1	3586750C1	7207F	6	N/A		
KF97XH	20	VT	TXL	3727971C1	3586750C1	7207F	7	N/A		
AH6C	18	GY	TXL	3518963C1	3586750C1	7207F	7	N/A		
KF97XH	20	PL	TXL	3727971C1	3586750C1	7207F	7	N/A		
AB6E	18	GY	TXL	3518963C1	3586750C1	7207F	8	N/A		
KP6D	18	TN	TXL	3518963C1	3586750C1	7207F	8	N/A		
AB6C	18	GY	TXL	3518963C1	3586750C1	7207F	8	N/A		
KP6C	18	GY	TXL	3518963C1	3586750C1	7207F	8	N/A		
KY99A	20	PL	TXL	3727971C1	3586750C1	7207F	8	N/A		
KF46C	20	GY	TXL	3727971C1	3586750C1	7207F	9	N/A		
KF46C	20	GY	TXL	3727971C1	3586750C1	7207F	9	N/A		
KY97XC	20	TN	TXL	3727971C1	3586750C1	7207F	9	N/A		
KC9C-G	20	GY	TXL	3727971C1	3586750C1	7207F	10	N/A		
KR9B	20	GY	TXL	3727971C1	3586750C1	7207F	10	N/A		
KY99B	20	PL	TXL	3727971C1	3586750C1	7207F	10	N/A		
KR97XC	20	TN	TXL	3727971C1	3586750C1	7207F	11	N/A		
KR97XC	20	TN	TXL	3727971C1	3586750C1	7207F	11	N/A		
KY99C	20	PL	TXL	3727971C1	3586750C1	7207F	11	N/A		
KR99A	20	VT	TXL	3727971C1	3586750C1	7207F	12	N/A		
KR99A	20	PL	TXL	3727971C1	3586750C1	7207F	12	N/A		
KY99F	20	PL	TXL	3727971C1	3586750C1	7207F	12	N/A		
VW99C	20	PL	TXL	3727971C1	3586750C1	7208F	1	N/A		
VW46A	20	GY	TXL	3727971C1	3586750C1	7208F	2	N/A		
VW99F	20	PL	TXL	3727971C1	3586750C1	7208F	3	N/A		
VW46B	20	GY	TXL	3727971C1	3586750C1	7208F	4	N/A		
VW97AR	20	PL	TXL	3727971C1	3586750C1	7208F	5	N/A		
VW97XG	20	GY	TXL	3727971C1	3586750C1	7208F	6	N/A		
VW97XH	20	PL	TXL	3727971C1	3586750C1	7208F	7	N/A		
VX6C	18	GY	TXL	3727971C1	3586750C1	7208F	8	N/A		
VW99B	20	GY	TXL	3727971C1	3586750C1	7208F	9	N/A		
VW9B-G	20	GY	TXL	3727971C1	3586750C1	7208F	10	N/A		
VW97XC	20	TN	TXL	3727971C1	3586750C1	7208F	11	N/A		
VW99A	20	PL	TXL	3727971C1	3586750C1	7208F	12	N/A		
PW92#111	18	OR	150	3686945C1	3605715C1	7250M	1	N/A		
SW92#111	18	OR	150	3686945C1	3605715C1	7250M	1	N/A		
PW92#111	18	OR	150	3686945C1	3605715C1	7250M	1	N/A		
SW92#111	18	OR	150	3686945C1	3605715C1	7250M	1	N/A		
PW92#155	18	WH	150	3686945C1	3605715C1	7250M	2	N/A		
SW92#155	18	WH	150	3686945C1	3605715C1	7250M	2	N/A		
PW92#155	18	WH	150	3686945C1	3605715C1	7250M	2	N/A		
SW92#155	18	WH	150	3686945C1	3605715C1	7250M	2	N/A		
PW92#177	18	LTGN	150	3686945C1	3605715C1	7250M	3	N/A		
SW92#177	18	LTGN	150	3686945C1	3605715C1	7250M	3	N/A	3577413C1	
PW92#177	18	LTGN	150	3686945C1	3605715C1	7250M	3	N/A		
SW92#177	18	LTGN	150	3686945C1	3605715C1	7250M	3	N/A		
PW92#136	18	OR	150	3686945C1	3605715C1	7250M	4	N/A		
SW92#136	18	OR	150	3686945C1	3605715C1	7250M	4	N/A	1675053C1	

Circuit Number	Gauge	Color	Insulation	Terminal / Splice Number	Connector Part number	Connector Number	Cavity	Seal/Sleeve	Lock 1	Lock 2
PW92#136	18	OR	150	3686945C1	3605715C1	7250M	4	N/A		
SW92#136	18	OR	150	3686945C1	3605715C1	7250M	4	N/A		
PW92#152	18	LTGN	150	3686945C1	3605715C1	7250M	5	N/A		
SW92#152	18	LTGN	150	3686945C1	3605715C1	7250M	5	N/A		
PW92#152	18	LTGN	150	3686945C1	3605715C1	7250M	5	N/A		
SW92#152	18	LTGN	150	3686945C1	3605715C1	7250M	5	N/A		
PW92#171	18	YL	150	3686945C1	3605715C1	7250M	6	N/A		
SW92#171	18	YL	150	3686945C1	3605715C1	7250M	6	N/A	3525873C1	3525875C1
PW92#171	18	YL	150	3686945C1	3605715C1	7250M	6	N/A		
SW92#171	18	YL	150	3686945C1	3605715C1	7250M	6	N/A		
PW92#174	18	LTBL	150	3686945C1	3605715C1	7250M	8	N/A		
SW92#174	18	LTBL	150	3686945C1	3605715C1	7250M	8	N/A	3540454C1	3551897C1
PW92#174	18	LTBL	150	3686945C1	3605715C1	7250M	8	N/A		
SW92#174	18	LTBL	150	3686945C1	3605715C1	7250M	8	N/A		
PW92#133	18	YL	150	3686945C1	3605715C1	7250M	9	N/A		
SW92#133	18	YL	150	3686945C1	3605715C1	7250M	9	N/A		
PW92#133	18	YL	150	3686945C1	3605715C1	7250M	9	N/A		
SW92#133	18	YL	150	3686945C1	3605715C1	7250M	9	N/A		
PW92#151	18	WH	150	3686945C1	3605715C1	7250M	10	N/A		
SW92#151	18	WH	150	3686945C1	3605715C1	7250M	10	N/A		
PW92#151	18	WH	150	3686945C1	3605715C1	7250M	10	N/A		
SW92#151	18	WH	150	3686945C1	3605715C1	7250M	10	N/A		
PR92B131	18	YL	150	3686945C1	3605715C1	7250M	11	N/A		
PT92#131	18	YL	150	3686945C1	3605715C1	7250M	11	N/A		
SR92B131	18	YL	150	3686945C1	3605715C1	7250M	11	N/A		
ST92#131	18	YL	150	3686945C1	3605715C1	7250M	11	N/A		
PR92B131	18	YL	150	3686945C1	3605715C1	7250M	11	N/A		
PT92#131	18	YL	150	3686945C1	3605715C1	7250M	11	N/A		
SR92B131	18	YL	150	3686945C1	3605715C1	7250M	11	N/A		
ST92#131	18	YL	150	3686945C1	3605715C1	7250M	11	N/A		
PW92#137	18	WH	150	3686945C1	3605715C1	7250M	12	N/A		
SW92#137	18	WH	150	3686945C1	3605715C1	7250M	12	N/A	1667734C1	
PW92#137	18	WH	150	3686945C1	3605715C1	7250M	12	N/A		
SW92#137	18	WH	150	3686945C1	3605715C1	7250M	12	N/A		
PW92#180	18	OR	150	3686945C1	3605715C1	7250M	13	N/A		
SW92#180	18	OR	150	3686945C1	3605715C1	7250M	13	N/A		
PB92#180	18	OR	150	3686945C1	3605715C1	7250M	13	N/A		
SA92#180	18	OR	150	3686945C1	3605715C1	7250M	13	N/A		
PW92A120	18	LTBL	150	3686945C1	3605715C1	7250M	14	N/A		
SW92A120	18	LTBL	150	3686945C1	3605715C1	7250M	14	N/A	3606532C1	
PB92A120	18	LTBL	150	3686945C1	3605715C1	7250M	14	N/A		
SA92A120	18	LTBL	150	3686945C1	3605715C1	7250M	14	N/A		
PW92#116	18	LTBL	150	3686945C1	3605715C1	7250M	15	N/A		
SW92#116	18	LTBL	150	3686945C1	3605715C1	7250M	15	N/A		
PW92#116	18	LTBL	150	3686945C1	3605715C1	7250M	15	N/A		
SW92#116	18	LTBL	150	3686945C1	3605715C1	7250M	15	N/A		
PR92C112	18	PK	150	3686945C1	3605715C1	7250M	16	N/A		
PT92A112	18	PK	150	3686945C1	3605715C1	7250M	16	N/A		
SR92C112	18	PK	150	3686945C1	3605715C1	7250M	16	N/A		
ST92A112	18	PK	150	3686945C1	3605715C1	7250M	16	N/A		
PR92C112	18	PK	150	3686945C1	3605715C1	7250M	16	N/A		
PT92A112	18	PK	150	3686945C1	3605715C1	7250M	16	N/A		
SR92C112	18	PK	150	3686945C1	3605715C1	7250M	16	N/A		
ST92A112	18	PK	150	3686945C1	3605715C1	7250M	16	N/A		

Circuit Number	Gauge	Color	Insulation	Terminal / Splice Number	Connector Part number	Connector Number	Cavity	Seal/Sleeve	Lock 1	Lock 2
PW92#118	18	GY	150	3686945C1	3605715C1	7250M	17	N/A		
SW92#118	18	GY	150	3686945C1	3605715C1	7250M	17	N/A		
PW92#118	18	GY	150	3686945C1	3605715C1	7250M	17	N/A		
SW92#118	18	GY	150	3686945C1	3605715C1	7250M	17	N/A		
PW31#154	18	TN	150	3686945C1	3605715C1	7250M	18	N/A		
SW31#154	18	TN	150	3686945C1	3605715C1	7250M	18	N/A		
PW31#154	18	TN	150	3686945C1	3605715C1	7250M	18	N/A		
SW31#154	18	TN	150	3686945C1	3605715C1	7250M	18	N/A		
PR92B158	18	LTGN	150	3686945C1	3605715C1	7250M	19	N/A		
PT92#158	18	LTGN	150	3686945C1	3605715C1	7250M	19	N/A	593387C1	
SR92B158	18	LTGN	150	3686945C1	3605715C1	7250M	19	N/A		
ST92#158	18	LTGN	150	3686945C1	3605715C1	7250M	19	N/A		
PR92B158	18	LTGN	150	3686945C1	3605715C1	7250M	19	N/A		
PT92#158	18	LTGN	150	3686945C1	3605715C1	7250M	19	N/A		
SR92B158	18	LTGN	150	3686945C1	3605715C1	7250M	19	N/A		
ST92#158	18	LTGN	150	3686945C1	3605715C1	7250M	19	N/A		
PW92#176	18	YL	150	3686945C1	3605715C1	7250M	20	N/A		
SW92#176	18	YL	150	3686945C1	3605715C1	7250M	20	N/A		
PW92#176	18	YL	150	3686945C1	3605715C1	7250M	20	N/A		
SW92#176	18	YL	150	3686945C1	3605715C1	7250M	20	N/A		
MJ71A	18	OR	150	3758251C1	1661778C1	7500M	A	3568570C1		
MJ71A	18	OR	150	3594831C1	1661778C1	7500M	A	3568570C1		
MJ71B	18	TN	150	3758251C1	1661778C1	7500M	B	3568570C1		
MJ71B	18	TN	150	3594831C1	1661778C1	7500M	B	3568570C1		
KH71	16	OR	TXL	3594831C1	1661778C1	7500W	A	1661872C1		
KH71A	16	OR	TXL	3594831C1	1661778C1	7500W	B	1661872C1		
PH92#160	18	YL	TXL	3554322C1	3610533C1	7600M	A	3554318C1		
PV92#160	18	YL	TXL	3554322C1	3610533C1	7600M	A	3554318C1		
PH92#140	18	LTGN	TXL	3554322C1	3610533C1	7600M	B	3554318C1		
PV92#140	18	LTGN	TXL	3554322C1	3610533C1	7600M	B	3554318C1		
PW48#159	18	TN	150	3554322C1	3610533C1	7603M	A	3554318C1		
SW48#159	18	TN	150	3554322C1	3610533C1	7603M	A	3554318C1		
PB48#159	18	TN	150	3554322C1	3610533C1	7603M	A	3554318C1		
SA48#159	18	TN	150	3554322C1	3610533C1	7603M	A	3554318C1		
PW48#139	18	OR	150	3554322C1	3610533C1	7603M	B	3554318C1		
SW48#139	18	OR	150	3554322C1	3610533C1	7603M	B	3554318C1		
PB48#139	18	OR	150	3554322C1	3610533C1	7603M	B	3554318C1		
SA48#139	18	OR	150	3554322C1	3610533C1	7603M	B	3554318C1		
PH92#159	18	TN	TXL	3554322C1	3594124C91	7604M	A	3554318C1		
PV92#159	18	TN	TXL	3554322C1	3594124C91	7604M	A	3554318C1		
PH92#139	18	OR	TXL	3554322C1	3594124C91	7604M	B	3554318C1		
PV92#139	18	OR	TXL	3554322C1	3594124C91	7604M	B	3554318C1		
PW47#160	18	YL	TXL	3554322C1	3610533C1	7605M	A	3554318C1		
SW47#160	18	YL	TXL	3554322C1	3610533C1	7605M	A	3554318C1		
PW47#160	18	YL	TXL	3554322C1	3610533C1	7605M	A	3554318C1		
SW47#160	18	YL	TXL	3554322C1	3610533C1	7605M	A	3554318C1		
PW47#140	18	LTGN	TXL	3554322C1	3610533C1	7605M	B	3554318C1		
SW47#140	18	LTGN	TXL	3554322C1	3610533C1	7605M	B	3554318C1		
PW47#140	18	LTGN	TXL	3554322C1	3610533C1	7605M	B	3554318C1		
SW47#140	18	LTGN	TXL	3554322C1	3610533C1	7605M	B	3554318C1		
PH92#180	18	OR	TXL	3554322C1	3594124C91	7607M	A	3554318C1	1661264C1	
PV92#180	18	OR	TXL	3554322C1	3594124C91	7607M	A	3554318C1		
PH92#120	18	LTBL	TXL	3554322C1	3594124C91	7607M	B	3554318C1		
PV92#120	18	LTBL	TXL	3554322C1	3594124C91	7607M	B	3554318C1		

Circuit Number	Gauge	Color	Insulation	Terminal / Splice Number	Connector Part number	Connector Number	Cavity	Seal/Sleeve	Lock 1	Lock 2
KJ31	18	TN	TXL	3536865C1	3536864C1	7700A	1	3536867C1		
KJ31R	18	GY	GXL	3536865C1	3536864C1	7700A	2	3536868C1		
KG31	18	TN	TXL	3536865C1	3536864C1	7700L	1	3536867C1		
KG31R	18	GY	GXL	3536865C1	3536864C1	7700L	2	3536868C1		
CA31B	18	TN	TXL	3536865C1	3536864C1	7700M	1	3536867C1		
CA31B	18	TN	150	3536865C1	3536864C1	7700M	1	3536867C1		
CA9T	18	GY	TXL	3536865C1	3536864C1	7700M	2	3536867C1		
CA9T	18	GY	150	3536865C1	3536864C1	7700M	2	3536867C1		
KW5B(+)	18	YL	TXL	3683464C1	3683465C1	7801A	A	3535424C1		
KW5B(+)	18	YL	TXL	3683464C1	3683465C1	7801A	A	3535424C1		
KW5B(-)	18	GN	TXL	3683464C1	3683465C1	7801A	B	3535424C1		
KW5B(-)	18	GN	TXL	3683464C1	3683465C1	7801A	B	3535424C1		
PB5D(+)	18	YL	TXL	3683464C1	3683465C1	7801B	A	3535424C1		
PC5A(+)	18	YL	TXL	3683464C1	3683465C1	7801B	A	3535424C1		
PB5D(-)	18	GN	TXL	3683464C1	3683465C1	7801B	B	3535424C1		
PC5A(-)	18	GN	TXL	3683464C1	3683465C1	7801B	B	3535424C1		
RT5D(+)	18	YL	TXL	3683464C1	3683465C1	7801M	A	3535424C1		
SB5C(+)	18	YL	TXL	3683464C1	3683465C1	7801M	A	3535424C1		
KX5B(+)	18	YL	TXL	3683464C1	3683465C1	7801M	A	3535424C1		
PC5A(+)	18	YL	TXL	3683464C1	3683465C1	7801M	A	3535424C1		
SB5C(+)	18	YL	TXL	3683464C1	3683465C1	7801M	A	3535424C1		
RT5D(-)	18	GN	TXL	3683464C1	3683465C1	7801M	B	3535424C1		
SB5C(-)	18	GN	TXL	3683464C1	3683465C1	7801M	B	3535424C1		
KX5B(-)	18	GN	TXL	3683464C1	3683465C1	7801M	B	3535424C1		
PC5A(-)	18	GN	TXL	3683464C1	3683465C1	7801M	B	3535424C1		
SB5C(-)	18	GN	TXL	3683464C1	3683465C1	7801M	B	3535424C1		
YP112	16	GY	GXL	3686944C1	3950690C1	7803A	1	N/A		
YP112	16	GY	GXL	3686944C1	3950690C1	7803A	1	N/A		
YS112-GD	16	WH	TXL	3686944C1	3950690C1	7803A	2	N/A		
YT112-GD	16	WH	TXL	3686944C1	3950690C1	7803A	2	N/A		
YU112-GD	16	WH	TXL	3686944C1	3950690C1	7803A	2	N/A		
YS112-GD	16	WH	TXL	3686944C1	3950690C1	7803A	2	N/A		
YU112-GD	16	WH	TXL	3686944C1	3950690C1	7803A	2	N/A		
UB92#134A	18	TN	TXL	3544884C1	4064551C1	7900F	B	N/A		
UK92C	18	TN	TXL	3544884C1	4064551C1	7900F	B	N/A		
UE92	18	TN	TXL	3544884C1	4064551C1	7900F	C	N/A		
UE92AA	18	GY	TXL	3544884C1	4064551C1	7900F	D	N/A		
9B5J(+)	18	YL	TXL	3544884C1	4064551C1	7900F	E	N/A		
9M5J(+)	18	YL	TXL	3544884C1	4064551C1	7900F	E	N/A		
9N5J(+)	18	YL	TXL	3544884C1	4064551C1	7900F	E	N/A		
GG5J(+)	18	YL	TXL	3544884C1	4064551C1	7900F	E	N/A		
GJ5J(+)	18	YL	TXL	3544884C1	4064551C1	7900F	E	N/A		
GL5J(+)	18	YL	TXL	3544884C1	4064551C1	7900F	E	N/A		
GN5J(+)	18	YL	TXL	3544884C1	4064551C1	7900F	E	N/A		
GP5J(+)	18	YL	TXL	3544884C1	4064551C1	7900F	E	N/A		
GT5J(+)	18	YL	TXL	3544884C1	4064551C1	7900F	E	N/A		
9B5J(-)	18	GN	TXL	3544884C1	4064551C1	7900F	F	N/A		
9M5J(-)	18	GN	TXL	3544884C1	4064551C1	7900F	F	N/A		
9N5J(-)	18	GN	TXL	3544884C1	4064551C1	7900F	F	N/A		
GG5J(-)	18	GN	TXL	3544884C1	4064551C1	7900F	F	N/A		
GJ5J(-)	18	GN	TXL	3544884C1	4064551C1	7900F	F	N/A		
GL5J(-)	18	GN	TXL	3544884C1	4064551C1	7900F	F	N/A		
GN5J(-)	18	GN	TXL	3544884C1	4064551C1	7900F	F	N/A		
GP5J(-)	18	GN	TXL	3544884C1	4064551C1	7900F	F	N/A		

Circuit Number	Gauge	Color	Insulation	Terminal / Splice Number	Connector Part number	Connector Number	Cavity	Seal/Sleeve	Lock 1	Lock 2
GT5J(-)	18	GN	TXL	3544884C1	4064551C1	7900F	F	N/A		
UC92DC	18	TN	TXL	3544884C1	4064551C1	7900F	G	N/A		
UC92-GAH	18	WH	TXL	3544884C1	4064551C1	7900F	H	N/A		
BD92#134	18	TN	TXL	3544886C1	4064552C1	7900M	B	N/A		
BD92	18	TN	TXL	3544886C1	4064552C1	7900M	C	N/A		
BD9ZA	18	GY	TXL	3544886C1	4064552C1	7900M	D	N/A		
BD5FA(+)	18	YL	TXL	3544886C1	4064552C1	7900M	E	N/A		
BD5FA(-)	18	GN	TXL	3544886C1	4064552C1	7900M	F	N/A		
BD62DC	18	DKBL	TXL	3544886C1	4064552C1	7900M	G	N/A		
BD92-GAH	18	WH	TXL	3544886C1	4064552C1	7900M	H	N/A		
MF52D	14	YL	GXL	2033816C1	1661375C2	8000A	A	589391C1		
MJ52D	14	YL	GXL	2033816C1	1661375C2	8000A	A	589391C1		
ML52D	14	YL	GXL	2033816C1	1661375C2	8000A	A	589391C1		
MU52D	14	YL	GXL	2033816C1	1661375C2	8000A	A	589391C1		
NF52D	14	YL	GXL	2033816C1	1661375C2	8000A	A	589391C1		
RD52D	14	YL	GXL	2033816C1	1661375C2	8000A	A	589391C1		
MF52D	14	YL	GXL	2033816C1	1661375C2	8000A	A	N/A		
MJ52D	14	YL	GXL	2033816C1	1661375C2	8000A	A	N/A		
ML52D	14	YL	GXL	2033816C1	1661375C2	8000A	A	N/A		
MU52D	14	YL	GXL	2033816C1	1661375C2	8000A	A	N/A		
NF52D	14	YL	GXL	2033816C1	1661375C2	8000A	A	N/A		
RD52D	14	YL	GXL	2033816C1	1661375C2	8000A	A	N/A		
MY11-GA	14	WH	GXL	2033816C1	1661375C2	8000A	B	589391C1		
MZ11-GA	14	WH	GXL	2033816C1	1661375C2	8000A	B	589391C1		
MY11-GA	14	WH	GXL	2033816C1	1661375C2	8000A	B	N/A		
MZ11-GA	14	WH	GXL	2033816C1	1661375C2	8000A	B	N/A		
NC11-GA	14	WH	GXL	2033816C1	1661375C2	8000A	B	N/A		
ND11-GA	14	WH	GXL	2033816C1	1661375C2	8000A	B	N/A		
MF53B	14	YL	GXL	2033816C1	1661375C2	8000A	C	589391C1		
MJ53B	14	YL	GXL	2033816C1	1661375C2	8000A	C	589391C1		
ML53B	14	YL	GXL	2033816C1	1661375C2	8000A	C	589391C1		
MU53B	14	YL	GXL	2033816C1	1661375C2	8000A	C	589391C1		
NF53B	14	YL	GXL	2033816C1	1661375C2	8000A	C	589391C1		
RD53B	14	YL	GXL	2033816C1	1661375C2	8000A	C	589391C1		
MF53B	14	YL	GXL	2033816C1	1661375C2	8000A	C	N/A		
MJ53B	14	YL	GXL	2033816C1	1661375C2	8000A	C	N/A		
ML53B	14	YL	GXL	2033816C1	1661375C2	8000A	C	N/A		
MU53B	14	YL	GXL	2033816C1	1661375C2	8000A	C	N/A		
NF53B	14	YL	GXL	2033816C1	1661375C2	8000A	C	N/A		
RD53B	14	YL	GXL	2033816C1	1661375C2	8000A	C	N/A		
MF57B	16	OR	TXL	2033819C1	1661375C2	8000A	D	1652325C1		
MJ57B	16	OR	TXL	2033819C1	1661375C2	8000A	D	1652325C1		
ML57C	16	OR	TXL	2033819C1	1661375C2	8000A	D	1652325C1		
MU57C	16	OR	TXL	2033819C1	1661375C2	8000A	D	1652325C1		
NF57C	16	OR	TXL	2033819C1	1661375C2	8000A	D	1652325C1		
RD57C	16	OR	TXL	2033819C1	1661375C2	8000A	D	1652325C1		
MF57B	16	OR	TXL	2033819C1	1661375C2	8000A	D	N/A		
MJ57B	16	OR	TXL	2033819C1	1661375C2	8000A	D	N/A		
ML57C	16	OR	TXL	2033819C1	1661375C2	8000A	D	N/A		
MU57C	16	OR	GXL	2033819C1	1661375C2	8000A	D	N/A		
NF57C	16	OR	GXL	2033819C1	1661375C2	8000A	D	N/A		
RD57C	16	OR	TXL	2033819C1	1661375C2	8000A	D	N/A		
MF54D	14	BN	GXL	2033816C1	1661375C2	8000A	E	589391C1		
MJ54D	14	BN	GXL	2033816C1	1661375C2	8000A	E	589391C1		

Circuit Number	Gauge	Color	Insulation	Terminal / Splice Number	Connector Part number	Connector Number	Cavity	Seal/Sleeve	Lock 1	Lock 2
ML54D	14	BN	GXL	2033816C1	1661375C2	8000A	E	589391C1		
MU54D	14	BN	GXL	2033816C1	1661375C2	8000A	E	589391C1		
NF54D	14	BN	GXL	2033816C1	1661375C2	8000A	E	589391C1		
RD54D	14	BN	GXL	2033816C1	1661375C2	8000A	E	589391C1		
MF54D	14	BN	GXL	2033816C1	1661375C2	8000A	E	N/A		
MJ54D	14	BN	GXL	2033816C1	1661375C2	8000A	E	N/A		
ML54D	14	BN	GXL	2033816C1	1661375C2	8000A	E	N/A		
MU54D	14	BN	GXL	2033816C1	1661375C2	8000A	E	N/A		
NF54D	14	BN	GXL	2033816C1	1661375C2	8000A	E	N/A		
RD54D	14	BN	GXL	2033816C1	1661375C2	8000A	E	N/A		
MF52	14	YL	GXL	2033816C1	1661375C2	8001A	A	589391C1		
MJ52	14	YL	GXL	2033816C1	1661375C2	8001A	A	589391C1		
ML52	14	YL	GXL	2033816C1	1661375C2	8001A	A	589391C1		
MU52	14	YL	GXL	2033816C1	1661375C2	8001A	A	589391C1		
NF52	14	YL	GXL	2033816C1	1661375C2	8001A	A	589391C1		
RD52	14	YL	GXL	2033816C1	1661375C2	8001A	A	589391C1		
MF52	14	YL	GXL	2033816C1	1661375C2	8001A	A	N/A		
MJ52	14	YL	GXL	2033816C1	1661375C2	8001A	A	N/A		
ML52	14	YL	GXL	2033816C1	1661375C2	8001A	A	N/A		
MU52	14	YL	GXL	2033816C1	1661375C2	8001A	A	N/A		
NF52	14	YL	GXL	2033816C1	1661375C2	8001A	A	N/A		
RD52	14	YL	GXL	2033816C1	1661375C2	8001A	A	N/A		
MY11-GB	14	WH	GXL	2033816C1	1661375C2	8001A	B	589391C1		
MZ11-GB	14	WH	GXL	2033816C1	1661375C2	8001A	B	589391C1		
MY11-GB	14	WH	GXL	2033816C1	1661375C2	8001A	B	N/A		
MZ11-GB	14	WH	GXL	2033816C1	1661375C2	8001A	B	N/A		
NC11-GB	14	WH	GXL	2033816C1	1661375C2	8001A	B	N/A		
ND11-GB	14	WH	GXL	2033816C1	1661375C2	8001A	B	N/A		
MF53	14	YL	GXL	2033816C1	1661375C2	8001A	C	589391C1		
MJ53	14	YL	GXL	2033816C1	1661375C2	8001A	C	589391C1		
ML53	14	YL	GXL	2033816C1	1661375C2	8001A	C	589391C1		
MU53	14	YL	GXL	2033816C1	1661375C2	8001A	C	589391C1		
NF53	14	YL	GXL	2033816C1	1661375C2	8001A	C	589391C1		
RD53	14	YL	GXL	2033816C1	1661375C2	8001A	C	589391C1		
MF53	14	YL	GXL	2033816C1	1661375C2	8001A	C	N/A		
MJ53	14	YL	GXL	2033816C1	1661375C2	8001A	C	N/A		
ML53	14	YL	GXL	2033816C1	1661375C2	8001A	C	N/A		
MU53	14	YL	GXL	2033816C1	1661375C2	8001A	C	N/A		
NF53	14	YL	GXL	2033816C1	1661375C2	8001A	C	N/A		
RD53	14	YL	GXL	2033816C1	1661375C2	8001A	C	N/A		
MF56B	16	OR	TXL	2033819C1	1661375C2	8001A	D	1652325C1		
MJ56B	16	OR	TXL	2033819C1	1661375C2	8001A	D	1652325C1		
ML56C	16	OR	TXL	2033819C1	1661375C2	8001A	D	1652325C1		
MU56C	16	OR	TXL	2033819C1	1661375C2	8001A	D	1652325C1		
NF56C	16	OR	TXL	2033819C1	1661375C2	8001A	D	1652325C1		
RD56C	16	OR	TXL	2033819C1	1661375C2	8001A	D	1652325C1		
MF56B	16	OR	TXL	2033819C1	1661375C2	8001A	D	N/A		
MJ56B	16	OR	TXL	2033819C1	1661375C2	8001A	D	N/A		
ML56C	16	OR	TXL	2033819C1	1661375C2	8001A	D	N/A		
MU56C	16	OR	GXL	2033819C1	1661375C2	8001A	D	N/A		
NF56C	16	OR	GXL	2033819C1	1661375C2	8001A	D	N/A		
RD56C	16	OR	TXL	2033819C1	1661375C2	8001A	D	N/A		
MF54C	14	BN	GXL	2033816C1	1661375C2	8001A	E	589391C1		
MJ54C	14	BN	GXL	2033816C1	1661375C2	8001A	E	589391C1		

Circuit Number	Gauge	Color	Insulation	Terminal / Splice Number	Connector Part number	Connector Number	Cavity	Seal/Sleeve	Lock 1	Lock 2
ML54C	14	BN	GXL	2033816C1	1661375C2	8001A	E	589391C1		
MU54C	14	BN	GXL	2033816C1	1661375C2	8001A	E	589391C1		
NF54C	14	BN	GXL	2033816C1	1661375C2	8001A	E	589391C1		
RD54C	14	BN	GXL	2033816C1	1661375C2	8001A	E	589391C1		
MF54C	14	BN	GXL	2033816C1	1661375C2	8001A	E	N/A		
MJ54C	14	BN	GXL	2033816C1	1661375C2	8001A	E	N/A		
ML54C	14	BN	GXL	2033816C1	1661375C2	8001A	E	N/A		
MU54C	14	BN	GXL	2033816C1	1661375C2	8001A	E	N/A		
NF54C	14	BN	GXL	2033816C1	1661375C2	8001A	E	N/A		
RD54C	14	BN	GXL	2033816C1	1661375C2	8001A	E	N/A		
ML64HI	14	YL	GXL	3535486C1	2039311C91	8102A	A	589391C1		
MU64HI	14	YL	GXL	3535486C1	2039311C91	8102A	A	589391C1		
ML64HI	14	YL	GXL	3535486C1	2039311C91	8102A	A	589391C1		
MU64HI	14	YL	GXL	3535486C1	2039311C91	8102A	A	589391C1		
ML11-GE	14	WH	GXL	3535486C1	2039311C91	8102A	B	589391C1		
MU11-GE	14	WH	GXL	3535486C1	2039311C91	8102A	B	589391C1		
ML11-GE	14	WH	GXL	3535486C1	2039311C91	8102A	B	589391C1		
MU11-GE	14	WH	GXL	3535486C1	2039311C91	8102A	B	589391C1		
ML64LO	14	YL	GXL	3535486C1	2039311C91	8102A	C	589391C1		
MU64LO	14	YL	GXL	3535486C1	2039311C91	8102A	C	589391C1		
ML64LO	14	YL	GXL	3535486C1	2039311C91	8102A	C	589391C1		
MU64LO	14	YL	GXL	3535486C1	2039311C91	8102A	C	589391C1		
ML56D	16	OR	TXL	2039343C1	2039311C91	8102A	D	1652325C1		
MU56D	16	OR	TXL	2039343C1	2039311C91	8102A	D	1652325C1		
ML56D	16	OR	TXL	2039343C1	2039311C91	8102A	D	1652325C1		
MU56D	16	OR	GXL	2039343C1	2039311C91	8102A	D	1652325C1		
ML54F	14	BN	GXL	3535486C1	2039311C91	8102A	E	589391C1		
MU54F	14	BN	GXL	3535486C1	2039311C91	8102A	E	589391C1		
ML54F	14	BN	GXL	3535486C1	2039311C91	8102A	E	589391C1		
MU54F	14	BN	GXL	3535486C1	2039311C91	8102A	E	589391C1		
ML57D	14	OR	GXL	3535486C1	2039311C91	8102A	F	589391C1		
MU57D	14	OR	GXL	3535486C1	2039311C91	8102A	F	589391C1		
ML57D	14	OR	GXL	3535486C1	2039311C91	8102A	F	589391C1		
MU57D	16	OR	GXL	2039343C1	2039311C91	8102A	F	1652325C1		
NF64HI	14	YL	GXL	3535486C1	2039311C91	8103A	A	589391C1		
RD64HI	14	YL	GXL	3535486C1	2039311C91	8103A	A	589391C1		
NF64HI	14	YL	GXL	3535486C1	2039311C91	8103A	A	589391C1		
RD64HI	14	YL	GXL	3535486C1	2039311C91	8103A	A	589391C1		
NF11-GE	14	WH	GXL	3535486C1	2039311C91	8103A	B	589391C1		
RD11-GE	14	WH	GXL	3535486C1	2039311C91	8103A	B	589391C1		
NF11-GE	14	WH	GXL	3535486C1	2039311C91	8103A	B	589391C1		
RD11-GE	14	WH	GXL	3535486C1	2039311C91	8103A	B	589391C1		
NF64LO	14	YL	GXL	3535486C1	2039311C91	8103A	C	589391C1		
RD64LO	14	YL	GXL	3535486C1	2039311C91	8103A	C	589391C1		
NF64LO	14	YL	GXL	3535486C1	2039311C91	8103A	C	589391C1		
RD64LO	14	YL	GXL	3535486C1	2039311C91	8103A	C	589391C1		
NF56D	16	OR	TXL	2039343C1	2039311C91	8103A	D	1652325C1		
RD56D	16	OR	TXL	2039343C1	2039311C91	8103A	D	1652325C1		
NF56D	16	OR	GXL	2039343C1	2039311C91	8103A	D	1652325C1		
RD56D	16	OR	TXL	2039343C1	2039311C91	8103A	D	1652325C1		
NF54F	14	BN	GXL	3535486C1	2039311C91	8103A	E	589391C1		
RD54F	14	BN	GXL	3535486C1	2039311C91	8103A	E	589391C1		
NF54F	14	BN	GXL	3535486C1	2039311C91	8103A	E	589391C1		
RD54F	14	BN	GXL	3535486C1	2039311C91	8103A	E	589391C1		

Circuit Number	Gauge	Color	Insulation	Terminal / Splice Number	Connector Part number	Connector Number	Cavity	Seal/Sleeve	Lock 1	Lock 2
NF57D	16	OR	GXL	2039343C1	2039311C91	8103A	F	1652325C1		
RD57D	16	OR	GXL	2039343C1	2039311C91	8103A	F	1652325C1		
NF57D	16	OR	GXL	2039343C1	2039311C91	8103A	F	1652325C1		
RD57D	16	OR	GXL	2039343C1	2039311C91	8103A	F	1652325C1		
MJ54H	16	BN	GXL	1661875C1	1661778C1	8150A	A	1661872C1		
MJ54H	16	BN	GXL	1661875C1	1661778C1	8150A	A	1661872C1		
MJ54-GA	16	WH	GXL	1661875C1	1661778C1	8150A	B	1661872C1		
MJ54-GA	16	WH	GXL	1661875C1	1661778C1	8150A	B	1661872C1		
MJ54J	16	BN	GXL	1661875C1	1661778C1	8151A	A	1661872C1		
MJ54J	16	BN	GXL	1661875C1	1661778C1	8151A	A	1661872C1		
MJ54-GB	16	WH	GXL	1661875C1	1661778C1	8151A	B	1661872C1		
MJ54-GB	16	WH	GXL	1661875C1	1661778C1	8151A	B	1661872C1		
TH64B	16	YL	TXL	4080004C1	6131286C1	8200A	1	4080000C1		
TJ64B	16	YL	TXL	4080004C1	6131286C1	8200A	1	4080000C1		
TH64-GB	16	WH	TXL	4080004C1	6131286C1	8200A	2	4080000C1		
TJ64-GB	16	WH	TXL	4080004C1	6131286C1	8200A	2	4080000C1		
TK64B	16	YL	TXL	4080004C1	6131286C1	8200B	1	4080000C1		
TK64B	16	YL	TXL	4080004C1	6131286C1	8200B	1	4080000C1		
TK64-GB	16	WH	TXL	4080004C1	6131286C1	8200B	2	4080000C1		
TK64-GB	16	WH	TXL	4080004C1	6131286C1	8200B	2	4080000C1		
TM64B	16	YL	TXL	4080004C1	6131286C1	8200C	1	4080000C1		
TM64-GB	16	WH	TXL	4080004C1	6131286C1	8200C	2	4080000C1		
TG64B	16	YL	GXL	587577C1	587567C91	8200X	A	1652325C1		
TG64B	16	YL	TXL	587577C1	587567C91	8200X	A	1652325C1		
TG64-GB	16	WH	TXL	587577C1	587567C91	8200X	B	1652325C1		
TG64-GB	16	WH	TXL	587577C1	587567C91	8200X	B	1652325C1		
TH64A	16	YL	TXL	4080004C1	6131286C1	8201A	1	4080000C1		
TJ64A	16	YL	TXL	4080004C1	6131286C1	8201A	1	4080000C1		
TH64-GA	16	WH	TXL	4080004C1	6131286C1	8201A	2	4080000C1		
TJ64-GA	16	WH	TXL	4080004C1	6131286C1	8201A	2	4080000C1		
TK64A	16	YL	TXL	4080004C1	6131286C1	8201B	1	4080000C1		
TK64A	16	WH	TXL	4080004C1	6131286C1	8201B	1	4080000C1		
TK64-GA	16	WH	TXL	4080004C1	6131286C1	8201B	2	4080000C1		
TK64-GA	16	WH	TXL	4080004C1	6131286C1	8201B	2	4080000C1		
TM64A	16	YL	TXL	4080004C1	6131286C1	8201C	1	4080000C1		
TM64-GA	16	WH	TXL	4080004C1	6131286C1	8201C	2	4080000C1		
TG64A	16	YL	GXL	587577C1	587567C91	8201X	A	1652325C1		
TG64A	16	YL	TXL	587577C1	587567C91	8201X	A	1652325C1		
TG64-GA	16	WH	TXL	587577C1	587567C91	8201X	B	1652325C1		
TG64-GA	16	WH	TXL	587577C1	587567C91	8201X	B	1652325C1		
TB85E	16	GY	GXL	1661875C1	1661778C1	8301A	A	1661872C1		
TB85E	16	GY	GXL	1661875C1	1661778C1	8301A	A	1661872C1		
TC85-GC	16	WH	GXL	1661875C1	1661778C1	8301A	B	1661872C1		
TD85-GC	16	WH	GXL	1661875C1	1661778C1	8301A	B	1661872C1		
TC85-GC	16	WH	GXL	1661875C1	1661778C1	8301A	B	1661872C1		
TD85-GC	16	WH	GXL	1661875C1	1661778C1	8301A	B	1661872C1		
MX85E	16	GY	GXL	1661875C1	1661778C1	8301B	A	1661872C1		
NC85-GA	16	WH	GXL	1661875C1	1661778C1	8301B	B	1661872C1		
ND85-GA	16	WH	GXL	1661875C1	1661778C1	8301B	B	1661872C1		
FL94E	18	GY	GXL	1680205C1	1684261C1	8503A	1	N/A		
FL94E	18	GY	GXL	1680205C1	1684261C1	8503A	1	N/A		
FL94F	18	GY	GXL	1680205C1	1684261C1	8503A	2	N/A		
FL94F	18	GY	GXL	1680205C1	1684261C1	8503A	2	N/A		
FA94E	18	GY	GXL	1680205C1	1684261C1	8503B	1	N/A		

Circuit Number	Gauge	Color	Insulation	Terminal / Splice Number	Connector Part number	Connector Number	Cavity	Seal/Sleeve	Lock 1	Lock 2
FA94E	18	GY	GXL	1680205C1	1684261C1	8503B	1	N/A		
FA94F	18	GY	GXL	1680205C1	1684261C1	8503B	2	N/A		
FA94F	18	GY	GXL	1680205C1	1684261C1	8503B	2	N/A		
FB94E	18	GY	GXL	1680205C1	1684261C1	8503C	1	N/A		
FB94E	18	GY	GXL	1680205C1	1684261C1	8503C	1	N/A		
FB94F	18	GY	GXL	1680205C1	1684261C1	8503C	2	N/A		
FB94F	18	GY	GXL	1680205C1	1684261C1	8503C	2	N/A		
FD94AC	18	GY	TXL	6111842C1	6111844C1	8506A	1	6111843C1		
FE94AC	18	GY	TXL	6111842C1	6111844C1	8506A	1	6111843C1		
FF94AC	18	GY	TXL	6111842C1	6111844C1	8506A	1	6111843C1		
FD94AC	18	GY	TXL	6111842C1	6111844C1	8506A	1	6111843C1		
FE94AC	18	GY	TXL	6111842C1	6111844C1	8506A	1	6111843C1		
FF94AC	18	GY	TXL	6111842C1	6111844C1	8506A	1	6111843C1		
FD94AD	18	GY	TXL	6111842C1	6111844C1	8506A	2	6111843C1		
FE94AD	18	GY	TXL	6111842C1	6111844C1	8506A	2	6111843C1		
FF94AD	18	GY	TXL	6111842C1	6111844C1	8506A	2	6111843C1		
FD94AD	18	GY	TXL	6111842C1	6111844C1	8506A	2	6111843C1		
FE94AD	18	GY	TXL	6111842C1	6111844C1	8506A	2	6111843C1		
FF94AD	18	GY	TXL	6111842C1	6111844C1	8506A	2	6111843C1		
FD94AE	18	GY	TXL	6111842C1	6111844C1	8507A	1	6111843C1		
FD94AE	18	GY	TXL	6111842C1	6111844C1	8507A	1	6111843C1		
FD94AF	18	GY	TXL	6111842C1	6111844C1	8507A	2	6111843C1		
FD94AF	18	GY	TXL	6111842C1	6111844C1	8507A	2	6111843C1		
FE94AE	18	GY	TXL	6111842C1	6111844C1	8507B	1	6111843C1		
FE94AE	18	GY	TXL	6111842C1	6111844C1	8507B	1	6111843C1		
FE94AF	18	GY	TXL	6111842C1	6111844C1	8507B	2	6111843C1		
FE94AF	18	GY	TXL	6111842C1	6111844C1	8507B	2	6111843C1		
FF94AE	18	GY	TXL	6111842C1	6111844C1	8507C	1	6111843C1		
FF94AE	18	GY	TXL	6111842C1	6111844C1	8507C	1	6111843C1		
FF94AF	18	GY	TXL	6111842C1	6111844C1	8507C	2	6111843C1		
FF94AF	18	GY	TXL	6111842C1	6111844C1	8507C	2	6111843C1		
MH94AL	14	GY	TXL	3679224C1	3919376C1	8508A	1	3601687C1		
MH94AL	14	GY	TXL	3679224C1	3919376C1	8508A	1	N/A		
MH94AA	14	GY	TXL	3679224C1	3919376C1	8508A	2	3601687C1		
MH94AA	14	GY	TXL	3679224C1	3919376C1	8508A	2	N/A		
MH94AB	14	GY	TXL	3679224C1	3919376C1	8508A	3	3601687C1		
MH94AB	14	GY	TXL	3679224C1	3919376C1	8508A	3	N/A		
MH94AH	14	GY	TXL	3679224C1	3919376C1	8509A	1	3601687C1		
MH94AH	14	GY	TXL	3679224C1	3919376C1	8509A	1	N/A		
MH94AJ	14	GY	TXL	3679224C1	3919376C1	8509A	2	3601687C1		
MH94AJ	14	GY	TXL	3679224C1	3919376C1	8509A	2	N/A		
MH94AK	14	GY	TXL	3679224C1	3919376C1	8509A	3	3601687C1		
MH94AK	14	GY	TXL	3679224C1	3919376C1	8509A	3	N/A		
MY11-GC	12	WH	GXL	1673747C1	587566C91	8600A	A	589390C1		
MZ11-GC	12	WH	GXL	1673747C1	587566C91	8600A	A	589390C1		
MY11-GC	12	WH	GXL	1673747C1	587566C91	8600A	A	589390C1		
MZ11-GC	12	WH	GXL	1673747C1	587566C91	8600A	A	589390C1		
NC11-GC	12	WH	GXL	1673747C1	587566C91	8600A	A	589390C1		
ND11-GC	12	WH	GXL	1673747C1	587566C91	8600A	A	589390C1		
PM78AC	16	LTGN	GXL	587577C1	587567C91	8700A	A	1652325C1		
PM78AC	16	LTGN	GXL	587577C1	587567C91	8700A	A	1652325C1		
PM78-GA	16	WH	GXL	587577C1	587567C91	8700A	B	1652325C1		
PM78-GA	16	WH	GXL	587577C1	587567C91	8700A	B	1652325C1		
PG78AC	16	LTGN	GXL	587577C1	587567C91	8700B	A	1652325C1		

Circuit Number	Gauge	Color	Insulation	Terminal / Splice Number	Connector Part number	Connector Number	Cavity	Seal/Sleeve	Lock 1	Lock 2
PT78AC	16	LTGN	GXL	587577C1	587567C91	8700B	A	1652325C1		
PG78AC	16	LTGN	GXL	587577C1	587567C91	8700B	A	1652325C1		
PG78-GA	16	WH	GXL	587577C1	587567C91	8700B	B	1652325C1		
PT78-GB	16	WH	GXL	587577C1	587567C91	8700B	B	1652325C1		
PG78-GA	16	WH	GXL	587577C1	587567C91	8700B	B	1652325C1		
PS78AC	16	LTGN	GXL	587577C1	587567C91	8700C	A	1652325C1		
PU78AC	16	LTGN	GXL	587577C1	587567C91	8700C	A	1652325C1		
PS78AC	16	LTGN	GXL	587577C1	587567C91	8700C	A	1652325C1		
PS78-GA	16	WH	GXL	587577C1	587567C91	8700C	B	1652325C1		
PU78-GB	16	WH	GXL	587577C1	587567C91	8700C	B	1652325C1		
PS78-GA	16	WH	GXL	587577C1	587567C91	8700C	B	1652325C1		
PJ78BC	16	LTGN	GXL	587577C1	587567C91	8701A	A	1652325C1		
PM78BC	16	LTGN	GXL	587577C1	587567C91	8701A	A	1652325C1		
PJ78BC	16	LTGN	GXL	587577C1	587567C91	8701A	A	N/A		
PM78BC	16	LTGN	GXL	587577C1	587567C91	8701A	A	N/A		
PJ78-GB	16	WH	GXL	587577C1	587567C91	8701A	B	1652325C1		
PM78-GB	16	WH	GXL	587577C1	587567C91	8701A	B	1652325C1		
PJ78-GB	16	WH	GXL	587577C1	587567C91	8701A	B	N/A		
PM78-GB	16	WH	GXL	587577C1	587567C91	8701A	B	N/A		
PR78BC	16	LTGN	GXL	587577C1	587567C91	8702A	A	1652325C1		
PU78BC	16	LTGN	GXL	587577C1	587567C91	8702A	A	1652325C1		
PR78BC	16	LTGN	GXL	587577C1	587567C91	8702A	A	N/A		
PR78-GB	16	WH	GXL	587577C1	587567C91	8702A	B	1652325C1		
PU78-GA	16	WH	GXL	587577C1	587567C91	8702A	B	1652325C1		
PR78-GB	16	WH	GXL	587577C1	587567C91	8702A	B	N/A		
NS104CC	18	DKBL	GXL	587576C1	587568C91	8805A	A	1652325C1		
NS104CC	18	DKBL	GXL	587576C1	587568C91	8805A	A	1652325C1		
NS104CB	18	DKBL	GXL	587576C1	587568C91	8805A	B	1652325C1		
NS104CB	18	DKBL	GXL	587576C1	587568C91	8805A	B	1652325C1		
KB01DAL	10	BK	TXL	3517818C1	6099041C1	8884A	1	N/A		
VQ04DAL	14	RD	TXL	2034788C1	6099041C1	8884A	4	N/A		
KB05DAL	12	WH	GXL	2034788C1	6099041C1	8884A	5	N/A		
KB06DAL	12	RD	TXL	3841697C1	6099041C1	8884A	6	N/A		
KB07DAL	12	GY	TXL	3841697C1	6099041C1	8884A	7	N/A		
KB08DAL	12	DKBL	GXL	3841697C1	6099041C1	8884A	8	N/A		
KB09DAL	14	WH	TXL	2034788C1	6099041C1	8884A	9	N/A		
KB10DAL	14	WH	TXL	2034788C1	6099041C1	8884A	10	N/A		
KB11DAL	14	WH	TXL	2034788C1	6099041C1	8884A	11	N/A		
KB5AL(+)	18	YL	TXL	3754236C1	6099041C1	8884A	12	N/A		
KB5AL(-)	18	GN	TXL	3754236C1	6099041C1	8884A	13	N/A		
KB14DAL	14	WH	TXL	2034788C1	6099041C1	8884A	14	N/A		
KB15DAL	14	WH	TXL	2034788C1	6099041C1	8884A	15	N/A		
DD13A	14	GY	TXL	500397C1	6099045C1	8884B	1	N/A		
DH13	14	GY	TXL	500397C1	6099045C1	8884B	1	N/A		
DD13FAL	14	BN	GXL	500397C1	6099045C1	8884B	2	N/A		
DH13A	14	GY	TXL	500397C1	6099045C1	8884B	2	N/A		
EK149	14	GY	TXL	500397C1	6099045C1	8884B	3	N/A		
EK149A	14	GY	TXL	500397C1	6099045C1	8884B	4	N/A		
KB5EAL	18	LTGN	TXL	3754236C1	6099045C1	8884B	5	N/A		
KB6EAL	18	BK	TXL	3754236C1	6099045C1	8884B	6	N/A		
KB07EAL	18	GY	TXL	3754236C1	6099045C1	8884B	7	N/A		
KB08EAL	18	VT	TXL	3754236C1	6099045C1	8884B	8	N/A		
KB09EAL	18	YL	TXL	3754236C1	6099045C1	8884B	9	N/A		
KB10EAL	18	YL	TXL	3754236C1	6099045C1	8884B	10	N/A		

Circuit Number	Gauge	Color	Insulation	Terminal / Splice Number	Connector Part number	Connector Number	Cavity	Seal/Sleeve	Lock 1	Lock 2
KB11EAL	18	OR	TXL	3754236C1	6099045C1	8884B	11	N/A		
KB12EAL	18	OR	TXL	3754236C1	6099045C1	8884B	12	N/A		
KB13EAL	18	PK	TXL	3754236C1	6099045C1	8884B	13	N/A		
KB14EAL	18	BK	TXL	3754236C1	6099045C1	8884B	14	N/A		
KB15EAL	18	LTGN	TXL	3754236C1	6099045C1	8884B	15	N/A		
KB16EAL	18	DKBL	TXL	3754236C1	6099045C1	8884B	16	N/A		
KB17EAL	18	VT	TXL	3754236C1	6099045C1	8884B	17	N/A		
KB18EAL	18	RD	TXL	3518961C1	6099045C1	8884B	18	N/A		
KB19EAL	18	TN	TXL	3754236C1	6099045C1	8884B	19	N/A		
KB20EAL	18	LTGN	TXL	3518961C1	6099045C1	8884B	20	N/A		
LD149AB	18	GY	TXL	3754236C1	6099045C1	8884B	21	N/A		
LE149AB	18	GY	TXL	3754236C1	6099045C1	8884B	21	N/A		
KB22EAL	18	WH	TXL	3754236C1	6099045C1	8884B	22	N/A		
KB23EAL	18	RD	TXL	3518961C1	6099045C1	8884B	23	N/A		
WE24EAL	18	BK	TXL	3518961C1	6099045C1	8884B	24	N/A		
XX24EAL	18	BN	TXL	3518961C1	6099045C1	8884B	24	N/A		
KB25EAL	18	WH	TXL	3754236C1	6099045C1	8884B	25	N/A		
KB26EAL	18	RD	TXL	3754236C1	6099045C1	8884B	26	N/A		
KB27EAL	18	BN	TXL	3518961C1	6099045C1	8884B	27	N/A		
KB28EAL	18	BN	TXL	3754236C1	6099045C1	8884B	28	N/A		
KB29EAL	18	BN	TXL	3518961C1	6099045C1	8884B	29	N/A		
KB62EAL	18	BK	TXL	3757932C1	6099042C1	8884C	A	N/A		
KB22EAL	18	WH	TXL	3757932C1	6099042C1	8884C	B	N/A		
KB23EAL	18	RD	TXL	3757932C1	6099042C1	8884C	C	N/A		
KB27EAL	18	BN	TXL	3757932C1	6099042C1	8884C	D	N/A		
KB29EAL	18	BN	TXL	3757932C1	6099042C1	8884C	E	N/A		
KB16EAL	18	DKBL	TXL	3757932C1	6099042C1	8884C	F	N/A		
KB15EAL	18	LTGN	TXL	3757932C1	6099042C1	8884C	G	N/A		
KB14EAL	18	BK	TXL	3757932C1	6099042C1	8884C	H	N/A		
KB13EAL	18	PK	TXL	3757932C1	6099042C1	8884C	J	N/A		
KB12EAL	18	OR	TXL	3757932C1	6099042C1	8884C	K	N/A		
KB11EAL	18	OR	TXL	3757932C1	6099042C1	8884C	L	N/A		
KB10EAL	18	YL	TXL	3757932C1	6099042C1	8884C	M	N/A		
KB09EAL	18	YL	TXL	3757932C1	6099042C1	8884C	N	N/A		
KB08EAL	18	VT	TXL	3757932C1	6099042C1	8884C	O	N/A		
KB07EAL	18	GY	TXL	3757932C1	6099042C1	8884C	P	N/A		
KB6EAL	18	BK	TXL	3757932C1	6099042C1	8884C	Q	N/A		
KB5EAL	18	LTGN	TXL	3757932C1	6099042C1	8884C	R	N/A		
KB20EAL	18	LTGN	TXL	3757932C1	6099042C1	8884C	S	N/A		
KB19EAL	18	TN	TXL	3757932C1	6099042C1	8884C	T	N/A		
KB18EAL	18	RD	TXL	3757932C1	6099042C1	8884C	U	N/A		
KB17EAL	18	VT	TXL	3757932C1	6099042C1	8884C	V	N/A		
KB26EAL	18	RD	TXL	3757932C1	6099042C1	8884C	W	N/A		
KB5CCB(+)	18	YL	TXL	3754236C1	3602454C1	8884D	A	N/A		
KB5CCB(-)	18	GN	TXL	3754236C1	3602454C1	8884D	B	N/A		
KB01DAL	10	BK	TXL	3841698C1	4095571C1	8884E	1	N/A		
KB08DAL	12	DKBL	GXL	3841697C1	4095571C1	8884E	2	N/A		
VQ042DAL	12	OR	GXL	3841697C1	4095571C1	8884E	3	N/A		
KB05DAL	12	WH	GXL	3841697C1	4095571C1	8884E	4	N/A		
KB15DAL	14	WH	TXL	2034787C1	3754532C1	8884F	3	N/A		
KB25EAL	18	WH	TXL	3757932C1	3754532C1	8884F	4	N/A		
KB28EAL	18	BN	TXL	3757932C1	3754532C1	8884F	5	N/A		
KB06DAL	12	RD	TXL	500398C1	3754532C1	8884F	8	N/A		
KB07DAL	12	GY	TXL	500398C1	3754532C1	8884F	10	N/A		

Circuit Number	Gauge	Color	Insulation	Terminal / Splice Number	Connector Part number	Connector Number	Cavity	Seal/Sleeve	Lock 1	Lock 2
KB09DAL	14	WH	TXL	500398C1	3754532C1	8884F	12	N/A		
KB10DAL	14	WH	TXL	500398C1	3754532C1	8884F	14	N/A		
KB11DAL	14	WH	TXL	500398C1	3754532C1	8884F	16	N/A		
KB14DAL	14	WH	TXL	500398C1	3754532C1	8884F	18	N/A		
KB5CCC(+)	18	YL	TXL	3754236C1	3602454C1	8884G	A	N/A		
KB5CCC(-)	18	GN	TXL	3754236C1	3602454C1	8884G	B	N/A		
KB62D1	18	BK	TXL	3754236C1	6099043C1	8884M	A	N/A		
KB22D2	18	WH	TXL	3754236C1	6099043C1	8884M	B	N/A		
KB23D3	18	RD	TXL	3754236C1	6099043C1	8884M	C	N/A		
KB27D4	18	BN	TXL	3754236C1	6099043C1	8884M	D	N/A		
KB29D5	18	BN	TXL	3754236C1	6099043C1	8884M	E	N/A		
KB16D6	18	DKBL	TXL	3754236C1	6099043C1	8884M	F	N/A		
KB15D7	18	LTGN	TXL	3754236C1	6099043C1	8884M	G	N/A		
KB14D8	18	BK	TXL	3754236C1	6099043C1	8884M	H	N/A		
KB13D9	18	PK	TXL	3754236C1	6099043C1	8884M	J	N/A		
KB12D10	18	OR	TXL	3754236C1	6099043C1	8884M	K	N/A		
KB11D11	18	OR	TXL	3754236C1	6099043C1	8884M	L	N/A		
KB10D12	18	YL	TXL	3754236C1	6099043C1	8884M	M	N/A		
KB09D13	18	YL	TXL	3754236C1	6099043C1	8884M	N	N/A		
KB08D14	18	VT	TXL	3754236C1	6099043C1	8884M	O	N/A		
KB07D15	18	GY	TXL	3754236C1	6099043C1	8884M	P	N/A		
KB6D16	18	BK	TXL	3754236C1	6099043C1	8884M	Q	N/A		
KB5D17	18	LTGN	TXL	3754236C1	6099043C1	8884M	R	N/A		
KB20D18	18	LTGN	TXL	3754236C1	6099043C1	8884M	S	N/A		
KB19D19	18	TN	TXL	3754236C1	6099043C1	8884M	T	N/A		
KB18D20	18	RD	TXL	3754236C1	6099043C1	8884M	U	N/A		
KB17D21	18	VT	TXL	3754236C1	6099043C1	8884M	V	N/A		
KB26D22	18	RD	TXL	3754236C1	6099043C1	8884M	W	N/A		
2F39A	18	GY	GXL	2033819C1	1671610C1	9002A	A	1652325C1		
NU39A	18	GY	GXL	2033819C1	1671610C1	9002A	A	1652325C1		
2F39-GF	18	WH	GXL	2033819C1	1671610C1	9002A	B	1652325C1		
NU39-GF	18	WH	GXL	2033819C1	1671610C1	9002A	B	1652325C1		
FD36A	18	GY	GXL	1661875C1	1661778C1	9100A	A	1661872C1		
FD36A	18	TN	GXL	1661875C1	1661778C1	9100A	A	1661872C1		
FD9-G	18	GY	GXL	1661875C1	1661778C1	9100A	B	1661872C1		
FD9A	18	GY	GXL	1661875C1	1661778C1	9100A	B	1661872C1		
FE36A	18	GY	GXL	1661875C1	1661778C1	9100B	A	1661872C1		
FE9-G	18	GY	GXL	1661875C1	1661778C1	9100B	B	1661872C1		
PL36A	18	GY	GXL	1661875C1	1661778C1	9100C	A	1661872C1		
PL9-G	18	GY	GXL	1661875C1	1661778C1	9100C	B	1661872C1		
FF36A	18	GY	GXL	1661875C1	1661778C1	9100D	A	1661872C1		
FF9-G	18	GY	GXL	1661875C1	1661778C1	9100D	B	1661872C1		
ZK10-GA	18	WH	GXL	1661875C1	3522068C1	9102A	A	1661872C1		
ZK37C	16	TN	GXL	1661875C1	3522068C1	9102A	B	1661872C1		
ZS10-GA	18	WH	GXL	1661875C1	3522068C1	9102B	A	1661872C1		
ZS10-GA	18	WH	GXL	1661875C1	3522068C1	9102B	A	1661872C1		
ZS37C	16	TN	GXL	1661875C1	3522068C1	9102B	B	1661872C1		
ZS37C	16	TN	GXL	1661875C1	3522068C1	9102B	B	1661872C1		
ZP36B	18	TN	GXL	1661875C1	1661778C1	9102C	A	1661872C1		
ZP36B	18	TN	GXL	1661875C1	1661778C1	9102C	A	1661872C1		
ZP9-GB	18	GY	GXL	1661875C1	1661778C1	9102C	B	1661872C1		
ZP9B	18	GY	GXL	1661875C1	1661778C1	9102C	B	1661872C1		
ZQ10-GA	18	WH	GXL	1661875C1	3522068C1	9102D	A	1661872C1		
ZQ10-GA	18	WH	GXL	1661875C1	3522068C1	9102D	A	1661872C1		

Circuit Number	Gauge	Color	Insulation	Terminal / Splice Number	Connector Part number	Connector Number	Cavity	Seal/Sleeve	Lock 1	Lock 2
ZQ37C	16	TN	GXL	1661875C1	3522068C1	9102D	B	1661872C1		
ZQ37C	16	TN	GXL	1661875C1	3522068C1	9102D	B	1661872C1		
ZT36B	18	TN	GXL	1661875C1	1661778C1	9102E	A	1661872C1		
ZT36B	18	TN	GXL	1661875C1	1661778C1	9102E	A	1661872C1		
ZT9-GB	18	GY	GXL	1661875C1	1661778C1	9102E	B	1661872C1		
ZT9B	18	GY	GXL	1661875C1	1661778C1	9102E	B	1661872C1		
FG36B	18	TN	GXL	1661875C1	1661778C1	9102G	A	1661872C1		
FG9-GB	18	GY	GXL	1661875C1	1661778C1	9102G	B	1661872C1		
ZV36B	18	TN	GXL	1661875C1	1661778C1	9102V	A	1661872C1		
ZV36B	18	TN	GXL	1661875C1	1661778C1	9102V	A	1661872C1		
ZV9-GB	18	GY	GXL	1661875C1	1661778C1	9102V	B	1661872C1		
ZV9B	18	GY	GXL	1661875C1	1661778C1	9102V	B	1661872C1		
ZW10-GA	18	WH	GXL	1661875C1	3522068C1	9102W	A	1661872C1		
ZW10-GA	18	WH	GXL	1661875C1	3522068C1	9102W	A	1661872C1		
ZW37C	16	TN	GXL	1661875C1	3522068C1	9102W	B	1661872C1		
ZW37C	16	TN	GXL	1661875C1	3522068C1	9102W	B	1661872C1		
ZX36B	18	TN	GXL	1661875C1	1661778C1	9102X	A	1661872C1		
ZX36B	18	TN	GXL	1661875C1	1661778C1	9102X	A	1661872C1		
ZX9-GB	18	GY	GXL	1661875C1	1661778C1	9102X	B	1661872C1		
ZX9B	18	GY	GXL	1661875C1	1661778C1	9102X	B	1661872C1		
CB19	16	GY	GXL	587577C1	587567C91	9108A	A	1652325C1		
CA19	16	GY	GXL	587577C1	587567C91	9108A	A	1652325C1		
CB19-G	16	WH	GXL	587577C1	587567C91	9108A	B	1652325C1		
CA19-G	16	WH	TXL	587577C1	587567C91	9108A	B	1652325C1		
CA19	16	GY	GXL	587577C1	587567C91	9108B	A	1652325C1		
CB19	16	GY	GXL	587577C1	587567C91	9108B	A	1652325C1		
CA19-G	16	WH	TXL	587577C1	587567C91	9108B	B	1652325C1		
CB19-G	16	WH	TXL	587577C1	587567C91	9108B	B	1652325C1		
PX19	16	GY	GXL	587577C1	587567C91	9108C	A	1652325C1		
CG19	16	GY	GXL	587577C1	587567C91	9108C	A	1652325C1		
PX19-G	16	WH	TXL	587577C1	587567C91	9108C	B	1652325C1		
CG19-G	16	WH	TXL	587577C1	587567C91	9108C	B	1652325C1		
CD19	16	GY	GXL	587577C1	587567C91	9108D	A	1652325C1		
CD19	16	GY	GXL	587577C1	587567C91	9108D	A	1652325C1		
CD19-G	16	WH	TXL	587577C1	587567C91	9108D	B	1652325C1		
CD19-G	16	WH	TXL	587577C1	587567C91	9108D	B	1652325C1		
CE19	16	GY	GXL	587577C1	587567C91	9108E	A	1652325C1		
CE19	16	GY	GXL	587577C1	587567C91	9108E	A	1652325C1		
CE19-G	16	WH	TXL	587577C1	587567C91	9108E	B	1652325C1		
CE19-G	16	WH	TXL	587577C1	587567C91	9108E	B	1652325C1		
CF19	16	GY	GXL	587577C1	587567C91	9108F	A	1652325C1		
CF19	16	GY	GXL	587577C1	587567C91	9108F	A	1652325C1		
CF19-G	16	WH	TXL	587577C1	587567C91	9108F	B	1652325C1		
CF19-G	16	WH	TXL	587577C1	587567C91	9108F	B	1652325C1		
PU19	16	GY	GXL	587577C1	587567C91	9108G	A	1652325C1		
PU19-G	16	WH	GXL	587577C1	587567C91	9108G	B	1652325C1		
CN19	16	GY	GXL	587577C1	587567C91	9108H	A	1652325C1		
CN19	16	GY	GXL	587577C1	587567C91	9108H	A	1652325C1		
CN19-G	16	WH	TXL	587577C1	587567C91	9108H	B	1652325C1		
CN19-G	16	WH	TXL	587577C1	587567C91	9108H	B	1652325C1		
CG19	16	GY	GXL	587577C1	587567C91	9108J	A	1652325C1		
CG19-G	16	WH	TXL	587577C1	587567C91	9108J	B	1652325C1		
CR19	16	GY	GXL	587577C1	587567C91	9108K	A	1652325C1		
CR19-G	16	WH	TXL	587577C1	587567C91	9108K	B	1652325C1		

Circuit Number	Gauge	Color	Insulation	Terminal / Splice Number	Connector Part number	Connector Number	Cavity	Seal/Sleeve	Lock 1	Lock 2
CT19	16	GY	GXL	587577C1	587567C91	9108L	A	1652325C1		
CT19-G	16	WH	TXL	587577C1	587567C91	9108L	B	1652325C1		
CV19	16	GY	GXL	587577C1	587567C91	9108M	A	1652325C1		
CV19-G	16	WH	TXL	587577C1	587567C91	9108M	B	1652325C1		
CX19	16	GY	GXL	587577C1	587567C91	9108N	A	1652325C1		
CX19-G	16	WH	TXL	587577C1	587567C91	9108N	B	1652325C1		
CZ19	16	GY	GXL	587577C1	587567C91	9108P	A	1652325C1		
CZ19-G	16	WH	TXL	587577C1	587567C91	9108P	B	1652325C1		
NK39A	18	GY	GXL	2033819C1	1671610C1	9200A	A	1652325C1		
NK39A	18	GY	GXL	2033819C1	1671610C1	9200A	A	1652325C1		
NK39-GF	18	WH	GXL	2033819C1	1671610C1	9200A	B	1652325C1		
NK39-GF	18	WH	GXL	2033819C1	1671610C1	9200A	B	1652325C1		
NQ39A	18	GY	GXL	2033819C1	1671610C1	9200B	A	1652325C1		
NQ39A	18	GY	GXL	2033819C1	1671610C1	9200B	A	1652325C1		
NQ39-GF	18	WH	GXL	2033819C1	1671610C1	9200B	B	1652325C1		
NQ39-GF	18	WH	GXL	2033819C1	1671610C1	9200B	B	1652325C1		
BC39A	18	GY	GXL	2033819C1	1671610C1	9200C	A	1652325C1		
PS39A	18	GY	GXL	2033819C1	1671610C1	9200C	A	1652325C1		
BC39-GF	18	WH	GXL	2033819C1	1671610C1	9200C	B	1652325C1		
PS39-GF	18	WH	GXL	2033819C1	1671610C1	9200C	B	1652325C1		
PS39A	18	GY	GXL	2033819C1	1671610C1	9200J	A	1652325C1		
PS39-GF	18	WH	GXL	2033819C1	1671610C1	9200J	B	1652325C1		
RA14-G	12	WH	TXL	2033912C1	1669834C1	9263F	A	589391C1		
RA14A	12	RD	TXL	2033816C1	1664531C1	9264M	A	589391C1		
RA14A	12	RD	TXL	2033816C1	1664531C1	9264M	A	589391C1		
RB71	14	OR	GXL	2033816C1	1661375C2	9303A	A	589391C1		
RB56	14	OR	GXL	2033816C1	1661375C2	9303A	B	589391C1		
RB57	14	OR	GXL	2033816C1	1661375C2	9303A	C	589391C1		
RB68	14	BN	GXL	2033816C1	1661375C2	9303A	D	589391C1		
RB10-G	12	WH	TXL	2033816C1	1661375C2	9303A	E	589391C1		
AF71	14	OR	GXL	587575C1	587574C91	9303D	A	589391C1		
AF56	14	OR	GXL	587575C1	587574C91	9303D	B	589391C1		
AF57	14	OR	GXL	587575C1	587574C91	9303D	C	589391C1		
AF68	14	BN	GXL	587575C1	587574C91	9303D	D	589391C1		
AF70	14	OR	GXL	587575C1	587574C91	9303D	E	589391C1		
AF11-GTL	12	WH	TXL	1673747C1	587574C91	9303D	F	589391C1		
AD94P	16	GY	GXL	1680205C1	3539777C1	9501A	1	N/A		
AD94Q	16	GY	GXL	1680205C1	3539777C1	9501A	2	N/A		
AE94LA	16	GY	GXL	2033819C1	1686834C1	9502A	A	1652325C1		
AE94LB	16	GY	GXL	2033819C1	1686834C1	9502A	B	1652325C1		
AE94LC	16	GY	GXL	2033819C1	1686834C1	9502A	C	1652325C1		
AD94R	16	GY	GXL	1680205C1	3539777C1	9503A	1	N/A		
AD94S	16	GY	GXL	1680205C1	3539777C1	9503A	2	N/A		
AE94RJ	16	GY	GXL	2033819C1	1686834C1	9504A	A	1652325C1		
AE94RK	16	GY	GXL	2033819C1	1686834C1	9504A	B	1652325C1		
AE94RL	16	GY	GXL	2033819C1	1686834C1	9504A	C	1652325C1		
TC94SZC	16	GY	TXL	1651943C1	1678137C1	9510A	A	UNDEF		
TC94SVC	16	GY	TXL	1651943C1	1678137C1	9510A	B	UNDEF		
TC94SH	16	GY	TXL	1651943C1	1678137C1	9510A	C	UNDEF		
TD94SZC	16	GY	TXL	1651943C1	1678137C1	9510B	A	UNDEF		
TD94SVC	16	GY	TXL	1651943C1	1678137C1	9510B	B	UNDEF		
TD94SH	16	GY	TXL	1651943C1	1678137C1	9510B	C	UNDEF		
TF94SZC	16	GY	TXL	1651943C1	1678137C1	9510C	A	UNDEF		
TF94SVC	16	GY	TXL	1651943C1	1678137C1	9510C	B	UNDEF		

Circuit Number	Gauge	Color	Insulation	Terminal / Splice Number	Connector Part number	Connector Number	Cavity	Seal/Sleeve	Lock 1	Lock 2
TF94SH	16	GY	TXL	1651943C1	1678137C1	9510C	C	UNDEF		
TK94SZC	16	GY	TXL	1651943C1	1678137C1	9510D	A	UNDEF		
TK94SVC	16	GY	TXL	1651943C1	1678137C1	9510D	B	UNDEF		
TK94SH	16	GY	TXL	1651943C1	1678137C1	9510D	C	UNDEF		
TC94SZC	16	GY	TXL	1661875C1	1667741C1	9510M	A	1661872C1		
TD94SZC	16	GY	TXL	1661875C1	1667741C1	9510M	A	1661872C1		
TF94SZC	16	GY	TXL	1661875C1	1667741C1	9510M	A	1661872C1		
TK94SZC	16	GY	TXL	1661875C1	1667741C1	9510M	A	1661872C1		
TC94SVC	16	GY	TXL	1661875C1	1667741C1	9510M	B	1661872C1		
TD94SVC	16	GY	TXL	1661875C1	1667741C1	9510M	B	1661872C1		
TF94SVC	16	GY	TXL	1661875C1	1667741C1	9510M	B	1661872C1		
TK94SVC	16	GY	TXL	1661875C1	1667741C1	9510M	B	1661872C1		
TC94SH	16	GY	TXL	1661875C1	1667741C1	9510M	C	1661872C1		
TD94SH	16	GY	TXL	1661875C1	1667741C1	9510M	C	1661872C1		
TF94SH	16	GY	TXL	1661875C1	1667741C1	9510M	C	1661872C1		
TK94SH	16	GY	TXL	1661875C1	1667741C1	9510M	C	1661872C1		
VT94SJ	18	GY	GXL	3601686C1	3678796C1	9512C	1	3601687C1		
VT94SJ	18	GY	GXL	3601686C1	3678796C1	9512C	1	3601687C1		
VT94SK	18	GY	GXL	3601686C1	3678796C1	9512C	2	3601687C1		
VT94SK	18	GY	GXL	3601686C1	3678796C1	9512C	2	3601687C1		
TA94SAB	18	GY	GXL	3601686C1	3601685C1	9514D	1	3601687C1		
TA94SAB	18	GY	GXL	3601686C1	3601685C1	9514D	1	3601687C1		
TA94SCB	18	GY	GXL	3601686C1	3601685C1	9514D	2	3601687C1		
TA94SCB	18	GY	GXL	3601686C1	3601685C1	9514D	2	3601687C1		
TA94SBB	18	GY	GXL	3601686C1	3601685C1	9514D	3	3601687C1		
TA94SBB	18	GY	GXL	3601686C1	3601685C1	9514D	3	3601687C1		
TA94SDB	18	GY	GXL	3601686C1	3601685C1	9514D	4	3601687C1		
TA94SDB	18	GY	GXL	3601686C1	3601685C1	9514D	4	3601687C1		
TG94SAB	18	GY	GXL	3601686C1	3601685C1	9514F	1	3601687C1		
TG94SCB	18	GY	GXL	3601686C1	3601685C1	9514F	2	3601687C1		
TG94SBB	18	GY	GXL	3601686C1	3601685C1	9514F	3	3601687C1		
TG94SDB	18	GY	GXL	3601686C1	3601685C1	9514F	4	3601687C1		
WC94SAB	18	GY	GXL	3601686C1	3601685C1	9514H	1	3601687C1		
WC94SBB	18	GY	GXL	3601686C1	3601685C1	9514H	2	3601687C1		
WC94SCB	18	GY	GXL	3601686C1	3601685C1	9514H	3	3601687C1		
WC94SDB	18	GY	GXL	3601686C1	3601685C1	9514H	4	3601687C1		
UJ94WL	18	GY	TXL	6111842C1	6111844C1	9516A	1	6111843C1		
UJ94WM	18	GY	TXL	6111842C1	6111844C1	9516A	2	6111843C1		
AD94P	16	GY	GXL	1680206C1	3519462C1	9516M	1	UNDEF		
AD94Q	16	GY	GXL	1680206C1	3519462C1	9516M	2	UNDEF		
AD94R	16	GY	GXL	1680206C1	3519462C1	9516M	3	UNDEF		
AD94S	16	GY	GXL	1680206C1	3519462C1	9516M	4	UNDEF		
AD94T	16	GY	GXL	1680206C1	3519462C1	9516M	5	UNDEF		
AD94U	16	GY	GXL	1680206C1	3519462C1	9516M	6	UNDEF		
AD94V	16	GY	GXL	1680206C1	3519462C1	9516M	7	UNDEF		
UJ94WS	18	GY	TXL	6111842C1	6111844C1	9517A	1	6111843C1		
UJ94WT	18	GY	TXL	6111842C1	6111844C1	9517A	2	6111843C1		
UJ94WNM	14	GY	TXL	3679224C1	3919376C1	9518A	1	3601687C1		
UJ94G7M	14	GY	TXL	3679224C1	3919376C1	9518A	2	3601687C1		
UJ94WRM	14	GY	TXL	3679224C1	3919376C1	9518A	3	3601687C1		
UJ94WUM	14	GY	TXL	3679224C1	3919376C1	9519A	1	3601687C1		
UJ94G6M	14	GY	TXL	3679224C1	3919376C1	9519A	2	3601687C1		
UJ94WWM	14	GY	TXL	3679224C1	3919376C1	9519A	3	3601687C1		
TF94BP	16	GY	GXL	3618273C1	6112506C1	9531F	1	N/A		

Circuit Number	Gauge	Color	Insulation	Terminal / Splice Number	Connector Part number	Connector Number	Cavity	Seal/Sleeve	Lock 1	Lock 2
TF94BY	16	GY	GXL	3618273C1	6112506C1	9531F	2	N/A		
TF94BZ	16	GY	GXL	3618273C1	6112506C1	9531F	3	N/A		
TF94BT	16	GY	GXL	3618273C1	6112506C1	9531F	4	N/A		
TF94BU	16	GY	GXL	3618273C1	6112506C1	9531F	5	N/A		
TF94BS	16	GY	GXL	3618273C1	6112506C1	9531F	6	N/A		
TF94BR	16	GY	GXL	3618273C1	6112506C1	9531F	7	N/A		
TF94BQ	16	GY	GXL	3618273C1	6112506C1	9531F	8	N/A		
TF94BW	16	GY	GXL	3618273C1	6112506C1	9531F	9	N/A		
TF94BV	16	GY	GXL	3618273C1	6112506C1	9531F	10	N/A		
AA94BP	16	GY	GXL	3613770C1	3690369C1	9531M	1	N/A		
AA94BY	16	GY	GXL	3613770C1	3690369C1	9531M	2	N/A		
AA94BZ	16	GY	GXL	3613770C1	3690369C1	9531M	3	N/A		
AA94BT	16	GY	GXL	3613770C1	3690369C1	9531M	4	N/A		
AA94BU	16	GY	GXL	3613770C1	3690369C1	9531M	5	N/A		
AA94BS	16	GY	GXL	3613770C1	3690369C1	9531M	6	N/A		
AA94BR	16	GY	GXL	3613770C1	3690369C1	9531M	7	N/A		
AA94BQ	16	GY	GXL	3613770C1	3690369C1	9531M	8	N/A		
AA94BW	16	GY	GXL	3613770C1	3690369C1	9531M	9	N/A		
AA94BV	16	GY	GXL	3613770C1	3690369C1	9531M	10	N/A		
AA94BP	16	GY	GXL	3618273C1	6112506C1	9532F	1	N/A		
AA94BY	16	GY	GXL	3618273C1	6112506C1	9532F	2	N/A		
AA94BZ	16	GY	GXL	3618273C1	6112506C1	9532F	3	N/A		
AA94BT	16	GY	GXL	3618273C1	6112506C1	9532F	4	N/A		
AA94BU	16	GY	GXL	3618273C1	6112506C1	9532F	5	N/A		
AA94BS	16	GY	GXL	3618273C1	6112506C1	9532F	6	N/A		
AA94BR	16	GY	GXL	3618273C1	6112506C1	9532F	7	N/A		
AA94BQ	16	GY	GXL	3618273C1	6112506C1	9532F	8	N/A		
AA94BW	16	GY	GXL	3618273C1	6112506C1	9532F	9	N/A		
AA94BV	16	GY	GXL	3618273C1	6112506C1	9532F	10	N/A		
UF94H	16	GY	GXL	3613770C1	3690369C1	9532M	1	N/A		
UG94C	16	GY	GXL	3613770C1	3690369C1	9532M	1	N/A		
UL94C	16	GY	GXL	3613770C1	3690369C1	9532M	1	N/A		
UP94C	16	GY	GXL	3613770C1	3690369C1	9532M	1	N/A		
US94C	16	GY	GXL	3613770C1	3690369C1	9532M	1	N/A		
UF94F	16	GY	GXL	3613770C1	3690369C1	9532M	2	N/A		
UG94D	16	GY	GXL	3613770C1	3690369C1	9532M	2	N/A		
UL94D	16	GY	GXL	3613770C1	3690369C1	9532M	2	N/A		
UP94D	16	GY	GXL	3613770C1	3690369C1	9532M	2	N/A		
US94D	16	GY	GXL	3613770C1	3690369C1	9532M	2	N/A		
UF94E	16	GY	GXL	3613770C1	3690369C1	9532M	3	N/A		
UG94E	16	GY	GXL	3613770C1	3690369C1	9532M	3	N/A		
UL94E	16	GY	GXL	3613770C1	3690369C1	9532M	3	N/A		
UP94E	16	GY	GXL	3613770C1	3690369C1	9532M	3	N/A		
US94E	16	GY	GXL	3613770C1	3690369C1	9532M	3	N/A		
UF94K	16	GY	GXL	3613770C1	3690369C1	9532M	4	N/A		
UG94K	16	GY	GXL	3613770C1	3690369C1	9532M	4	N/A		
UL94K	16	GY	GXL	3613770C1	3690369C1	9532M	4	N/A		
UP94K	16	GY	GXL	3613770C1	3690369C1	9532M	4	N/A		
US94K	16	GY	GXL	3613770C1	3690369C1	9532M	4	N/A		
UF94L	16	GY	GXL	3613770C1	3690369C1	9532M	5	N/A		
UG94H	16	GY	GXL	3613770C1	3690369C1	9532M	5	N/A		
UL94H	16	GY	GXL	3613770C1	3690369C1	9532M	5	N/A		
UP94H	16	GY	GXL	3613770C1	3690369C1	9532M	5	N/A		
US94H	16	GY	GXL	3613770C1	3690369C1	9532M	5	N/A		

Circuit Number	Gauge	Color	Insulation	Terminal / Splice Number	Connector Part number	Connector Number	Cavity	Seal/Sleeve	Lock 1	Lock 2
UF94J	16	GY	GXL	3613770C1	3690369C1	9532M	6	N/A		
UG94L	16	GY	GXL	3613770C1	3690369C1	9532M	6	N/A		
UL94L	16	GY	GXL	3613770C1	3690369C1	9532M	6	N/A		
UP94L	16	GY	GXL	3613770C1	3690369C1	9532M	6	N/A		
US94L	16	GY	GXL	3613770C1	3690369C1	9532M	6	N/A		
UF94A	16	GY	GXL	3613770C1	3690369C1	9532M	7	N/A		
UG94A	16	GY	GXL	3613770C1	3690369C1	9532M	7	N/A		
UL94A	16	GY	GXL	3613770C1	3690369C1	9532M	7	N/A		
UP94A	16	GY	GXL	3613770C1	3690369C1	9532M	7	N/A		
UV94A	16	GY	GXL	3613770C1	3690369C1	9532M	7	N/A		
UF94B	16	GY	GXL	3613770C1	3690369C1	9532M	8	N/A		
UG94B	16	GY	GXL	3613770C1	3690369C1	9532M	8	N/A		
UL94B	16	GY	GXL	3613770C1	3690369C1	9532M	8	N/A		
UP94B	16	GY	GXL	3613770C1	3690369C1	9532M	8	N/A		
UV94B	16	GY	GXL	3613770C1	3690369C1	9532M	8	N/A		
UF94C	16	GY	GXL	3613770C1	3690369C1	9532M	9	N/A		
UG94F	16	GY	GXL	3613770C1	3690369C1	9532M	9	N/A		
UL94F	16	GY	GXL	3613770C1	3690369C1	9532M	9	N/A		
UP94F	16	GY	GXL	3613770C1	3690369C1	9532M	9	N/A		
UV94F	16	GY	GXL	3613770C1	3690369C1	9532M	9	N/A		
UF94D	16	GY	GXL	3613770C1	3690369C1	9532M	10	N/A		
UG94G	16	GY	GXL	3613770C1	3690369C1	9532M	10	N/A		
UL94G	16	GY	GXL	3613770C1	3690369C1	9532M	10	N/A		
UP94G	16	GY	GXL	3613770C1	3690369C1	9532M	10	N/A		
UV94G	16	GY	GXL	3613770C1	3690369C1	9532M	10	N/A		
[UH94B]	18	-	GXL	3613771C1	3690369C1	9533M	1	N/A		
[UM94B]	18	-	GXL	3613771C1	3690369C1	9533M	1	N/A		
[UH94A]	18	-	GXL	3613771C1	3690369C1	9533M	2	N/A		
[UM94A]	18	-	GXL	3613771C1	3690369C1	9533M	2	N/A		
[UH94G6]	18	-	GXL	3613771C1	3690369C1	9533M	3	N/A		
[UM94G6]	18	-	GXL	3613771C1	3690369C1	9533M	3	N/A		
[UH94C]	18	-	GXL	3613771C1	3690369C1	9533M	4	N/A		
[UM94C]	18	-	GXL	3613771C1	3690369C1	9533M	4	N/A		
[UH94D]	18	-	GXL	3613771C1	3690369C1	9533M	5	N/A		
[UM94D]	18	-	GXL	3613771C1	3690369C1	9533M	5	N/A		
[UH94G7]	18	-	GXL	3613771C1	3690369C1	9533M	6	N/A		
[UM94G7]	18	-	GXL	3613771C1	3690369C1	9533M	6	N/A		
[UH94E]	18	-	GXL	3613771C1	3690369C1	9533M	7	N/A		
[UM94E]	18	-	GXL	3613771C1	3690369C1	9533M	7	N/A		
[UH94F]	18	-	GXL	3613771C1	3690369C1	9533M	8	N/A		
[UM94F]	18	-	GXL	3613771C1	3690369C1	9533M	8	N/A		
[UH94N]	18	-	GXL	3613771C1	3690369C1	9533M	9	N/A		
[UM94N]	18	-	GXL	3613771C1	3690369C1	9533M	9	N/A		
[UH94H]	18	-	GXL	3613771C1	3690369C1	9533M	10	N/A		
[UM94H]	18	-	GXL	3613771C1	3690369C1	9533M	10	N/A		
UP94R	16	GY	GXL	1680205C1	3539777C1	9540A	1	N/A		
UP94S	16	OR	GXL	1680205C1	3539777C1	9540A	2	N/A		
US94R	16	GY	GXL	1680205C1	3539777C1	9540B	1	N/A		
US94S	16	OR	GXL	1680205C1	3539777C1	9540B	2	N/A		
UP94M	16	BK	TXL	2033819C1	1686834C1	9541A	A	1652325C1		
UP94N	16	RD	TXL	2033819C1	1686834C1	9541A	B	1652325C1		
UP94P	16	BN	TXL	2033819C1	1686834C1	9541A	C	1652325C1		
US94M	16	BK	TXL	2033819C1	1686834C1	9541B	A	1652325C1		
US94N	16	RD	TXL	2033819C1	1686834C1	9541B	B	1652325C1		

Circuit Number	Gauge	Color	Insulation	Terminal / Splice Number	Connector Part number	Connector Number	Cavity	Seal/Sleeve	Lock 1	Lock 2
US94P	16	BN	TXL	2033819C1	1686834C1	9541B	C	1652325C1		
UP94W	16	DKBL	GXL	1680205C1	3539777C1	9542A	1	N/A		
UP94X	16	YL	GXL	1680205C1	3539777C1	9542A	2	N/A		
UV94W	16	DKBL	GXL	1680205C1	3539777C1	9542C	1	N/A		
UV94X	16	YL	GXL	1680205C1	3539777C1	9542C	2	N/A		
UP94T	16	VT	TXL	2033819C1	1686834C1	9543A	A	1652325C1		
UP94U	16	LTGN	TXL	2033819C1	1686834C1	9543A	B	1652325C1		
UP94V	16	LTBL	TXL	2033819C1	1686834C1	9543A	C	1652325C1		
UV94T	16	VT	TXL	2033819C1	1686834C1	9543C	A	1652325C1		
UV94U	16	LTGN	TXL	2033819C1	1686834C1	9543C	B	1652325C1		
UV94V	16	LTBL	TXL	2033819C1	1686834C1	9543C	C	1652325C1		
UP94E	16	GY	GXL	2033819C1	1686834C1	9548A	A	1652325C1		
UP94D	16	GY	GXL	2033819C1	1686834C1	9548A	B	1652325C1		
UP94C	16	GY	GXL	2033819C1	1686834C1	9548A	C	1652325C1		
UP94A	16	GY	GXL	1680205C1	3539777C1	9549A	1	N/A		
UP94B	16	GY	GXL	1680205C1	3539777C1	9549A	2	N/A		
UV94A	16	GY	GXL	1680205C1	3539777C1	9549B	1	N/A		
UV94B	16	GY	GXL	1680205C1	3539777C1	9549B	2	N/A		
UP94L	16	GY	GXL	2033819C1	1686834C1	9550A	A	1652325C1		
UP94K	16	GY	GXL	2033819C1	1686834C1	9550A	B	1652325C1		
UP94H	16	GY	GXL	2033819C1	1686834C1	9550A	C	1652325C1		
US94L	16	GY	GXL	2033819C1	1686834C1	9550B	A	1652325C1		
US94K	16	GY	GXL	2033819C1	1686834C1	9550B	B	1652325C1		
US94H	16	GY	GXL	2033819C1	1686834C1	9550B	C	1652325C1		
UP94F	16	GY	GXL	1680205C1	3539777C1	9551A	1	N/A		
UP94G	16	GY	GXL	1680205C1	3539777C1	9551A	2	N/A		
UB10B	8	WH	GXL	3700153C1	3537133C1	9714F	A	3537135C1		
RF70A	10	RD	GXL	2025425C1	1667732C1	9715F	A	1667735C1		
RG70	10	RD	GXL	2025425C1	1667732C1	9715F	A	1667735C1		
SV70A	10	RD	GXL	2025425C1	1667732C1	9715F	A	1667735C1		
RF68A	10	BN	GXL	2025425C1	1667732C1	9715F	B	1667735C1		
RG68	10	BN	GXL	2025425C1	1667732C1	9715F	B	1667735C1		
SV68A	10	BN	GXL	2025425C1	1667732C1	9715F	B	1667735C1		
RF94A	10	DKBL	GXL	2025425C1	1667732C1	9715F	C	1667735C1		
RG94	10	GY	GXL	2025425C1	1667732C1	9715F	C	1667735C1		
SV94A	10	DKBL	GXL	2025425C1	1667732C1	9715F	C	1667735C1		
TV70A	10	RD	GXL	2025425C1	1667732C1	9715F1	A	1667735C1		
TW70	10	RD	GXL	2025425C1	1667732C1	9715F1	A	1667735C1		
TZ70A	10	RD	GXL	2025425C1	1667732C1	9715F1	A	1667735C1		
TV68A	10	BN	GXL	2025425C1	1667732C1	9715F1	B	1667735C1		
TW68	10	BN	GXL	2025425C1	1667732C1	9715F1	B	1667735C1		
TZ68A	10	BN	GXL	2025425C1	1667732C1	9715F1	B	1667735C1		
TV94A	10	DKBL	GXL	2025425C1	1667732C1	9715F1	C	1667735C1		
TW94	10	GY	GXL	2025425C1	1667732C1	9715F1	C	1667735C1		
TZ94A	10	DKBL	GXL	2025425C1	1667732C1	9715F1	C	1667735C1		
RF58A	10	BK	GXL	1667737C1	1667733C1	9716M	A	1667735C1		
RG58	10	BN	GXL	1667737C1	1667733C1	9716M	A	1667735C1		
SV58A	10	BK	GXL	1667737C1	1667733C1	9716M	A	1667735C1		
RF56A	10	YL	GXL	1667737C1	1667733C1	9716M	B	1667735C1		
RG56	10	YL	GXL	1667737C1	1667733C1	9716M	B	1667735C1		
SV56A	10	YL	GXL	1667737C1	1667733C1	9716M	B	1667735C1		
RF57A	10	LTGN	GXL	1667737C1	1667733C1	9716M	C	1667735C1		
RG57	10	LTGN	GXL	1667737C1	1667733C1	9716M	C	1667735C1		
SV57A	10	LTGN	GXL	1667737C1	1667733C1	9716M	C	1667735C1		

Circuit Number	Gauge	Color	Insulation	Terminal / Splice Number	Connector Part number	Connector Number	Cavity	Seal/Sleeve	Lock 1	Lock 2
TV58A	10	BK	GXL	1667737C1	1667733C1	9716M1	A	1667735C1		
TW58	10	BN	GXL	1667737C1	1667733C1	9716M1	A	1667735C1		
TZ58A	10	BK	GXL	1667737C1	1667733C1	9716M1	A	1667735C1		
TV56A	10	YL	GXL	1667737C1	1667733C1	9716M1	B	1667735C1		
TW56	10	YL	GXL	1667737C1	1667733C1	9716M1	B	1667735C1		
TZ56A	10	YL	GXL	1667737C1	1667733C1	9716M1	B	1667735C1		
TV57A	10	LTGN	GXL	1667737C1	1667733C1	9716M1	C	1667735C1		
TW57	10	LTGN	GXL	1667737C1	1667733C1	9716M1	C	1667735C1		
TZ57A	10	LTGN	GXL	1667737C1	1667733C1	9716M1	C	1667735C1		
NA10F	8	WH	GXL	3710088C1		9717A	1	2644005R1		
NB10A	8	WH	GXL	3710088C1		9717A	1	2644005R1		
NC10D	8	WH	GXL	3710088C1		9717A	1	2644005R1		
NE10D	8	WH	GXL	3710088C1		9717A	1	2644005R1		
VE10D	8	WH	GXL	3710088C1		9717A	1	2644005R1		
NC10D-G	8	WH	GXL	3710088C1		9717A	1	2644005R1		
SL11-GA	12	WH	GXL	3581768C1		9717B	1	2644038R1		
SL11-GB	12	WH	GXL	3581768C1		9717B	1	2644038R1		
SL11-GA	12	WH	GXL	3581768C1		9717B	1	2644005R1		
SL11-GB	12	WH	GXL	3581768C1		9717B	1	2644005R1		
RF10A	8	WH	GXL	3517818C1	3517817C1	9717F	A	N/A		
RG10	8	WH	GXL	3517818C1	3517817C1	9717F	A	N/A		
SV10A	8	WH	GXL	3517818C1	3517817C1	9717F	A	N/A		
TV10A	8	WH	GXL	3700153C1	3537133C1	9717F1	A	3537135C1		
TW10	8	WH	GXL	3700153C1	3537133C1	9717F1	A	3537135C1		
TZ10A	8	WH	GXL	3700153C1	3537133C1	9717F1	A	3537135C1		
NF65	16	OR	GXL	1661875C1	1661778C1	9718A	A	1661872C1		
NF65	16	OR	GXL	1661875C1	1661778C1	9718A	A	1661872C1		
YJ65-G	16	WH	GXL	1661875C1	1661778C1	9718A	B	1661872C1		
YM65-G	16	WH	GXL	1661875C1	1661778C1	9718A	B	1661872C1		
YU65-G	16	WH	GXL	1661875C1	1661778C1	9718A	B	1661872C1		
YM65-G	16	WH	GXL	1661875C1	1661778C1	9718A	B	1661872C1		
YU65-G	16	WH	GXL	1661875C1	1661778C1	9718A	B	1661872C1		
VB70BJ	16	OR	TXL	2033819C1	1686834C1	9720A	A	1652325C1		
VB68BJ	16	BN	TXL	2033819C1	1686834C1	9720A	B	1652325C1		
TW10	8	WH	GXL	N/A	BLUNT_SL_V	9724A	A	N/A		
TW58	10	BN	GXL	N/A	BLUNT_SL_V	9724A	B	N/A		
TW56	10	YL	GXL	N/A	BLUNT_SL_V	9724A	C	N/A		
TW57	10	LTGN	GXL	N/A	BLUNT_SL_V	9724A	D	N/A		
TW70	10	RD	GXL	N/A	BLUNT_SL_V	9724A	E	N/A		
TW68	10	BN	GXL	N/A	BLUNT_SL_V	9724A	F	N/A		
TW94	10	GY	GXL	N/A	BLUNT_SL_V	9724A	G	N/A		
UA72EB	10	LTGN	TXL	N/A	BLUNT_SL_V	9724A	H	N/A		
VE11-G	8	WH	GXL	3700153C1	3537133C1	9728F	A	3537135C1		
NW59L-G	14	WH	GXL	2033816C1	1661375C2	9740A	A	589391C1		
NW59M	18	GY	GXL	2033819C1	1661375C2	9740A	B	1652325C1		
NW59N	18	GY	GXL	2033819C1	1661375C2	9740A	C	1652325C1		
NW59P	18	GY	GXL	2033819C1	1661375C2	9740A	D	1652325C1		
NW59Q	18	GY	GXL	2033819C1	1661375C2	9740A	E	1652325C1		
NR59R-G	14	WH	GXL	2033816C1	1661375C2	9740B	A	589391C1		
NS59R-G	18	WH	GXL	2033819C1	1661375C2	9740B	A	1652325C1		
NR59R-G	14	WH	GXL	2033816C1	1661375C2	9740B	A	589391C1		
NR59M	18	GY	GXL	2033819C1	1661375C2	9740B	B	1652325C1		
NS59S	18	GY	GXL	2033819C1	1661375C2	9740B	B	1652325C1		
NR59M	18	GY	GXL	2033819C1	1661375C2	9740B	B	1652325C1		

Circuit Number	Gauge	Color	Insulation	Terminal / Splice Number	Connector Part number	Connector Number	Cavity	Seal/Sleeve	Lock 1	Lock 2
NR59N	18	GY	GXL	2033819C1	1661375C2	9740B	C	1652325C1		
NS59T	18	GY	GXL	2033819C1	1661375C2	9740B	C	1652325C1		
NR59N	18	GY	GXL	2033819C1	1661375C2	9740B	C	1652325C1		
NR59P	18	GY	GXL	2033819C1	1661375C2	9740B	D	1652325C1		
NS59V	18	GY	GXL	2033819C1	1661375C2	9740B	D	1652325C1		
NR59P	18	GY	GXL	2033819C1	1661375C2	9740B	D	1652325C1		
NR59Q	18	GY	GXL	2033819C1	1661375C2	9740B	E	1652325C1		
NS59W	18	GY	GXL	2033819C1	1661375C2	9740B	E	1652325C1		
NR59Q	18	GY	GXL	2033819C1	1661375C2	9740B	E	1652325C1		
NZ59X-G	14	WH	GXL	2033816C1	1661375C2	9740C	A	589391C1		
NZ59X-G	14	WH	GXL	2033816C1	1661375C2	9740C	A	589391C1		
NZ59G	18	GY	GXL	2033819C1	1661375C2	9740C	B	1652325C1		
NZ59G	18	GY	GXL	2033819C1	1661375C2	9740C	B	1652325C1		
NZ59H	18	GY	GXL	2033819C1	1661375C2	9740C	C	1652325C1		
NZ59H	18	GY	GXL	2033819C1	1661375C2	9740C	C	1652325C1		
NZ59J	18	GY	GXL	2033819C1	1661375C2	9740C	D	1652325C1		
NZ59J	18	GY	GXL	2033819C1	1661375C2	9740C	D	1652325C1		
NZ59K	18	GY	GXL	2033819C1	1661375C2	9740C	E	1652325C1		
NZ59K	18	GY	GXL	2033819C1	1661375C2	9740C	E	1652325C1		
RE59F-G	14	WH	GXL	2033816C1	1661375C2	9740D	A	589391C1		
NS59S-G	14	WH	GXL	2033816C1	1661375C2	9740D	A	589391C1		
RE59G	14	WH	GXL	2033816C1	1661375C2	9740D	B	589391C1		
NS59T	18	GY	GXL	2033819C1	1661375C2	9740D	B	1652325C1		
RE59H	18	GY	GXL	2033819C1	1661375C2	9740D	C	1652325C1		
NS59U	18	GY	GXL	2033819C1	1661375C2	9740D	C	1652325C1		
RE59J	18	GY	GXL	2033819C1	1661375C2	9740D	D	1652325C1		
NS59V	18	GY	GXL	2033819C1	1661375C2	9740D	D	1652325C1		
RE59K	18	GY	GXL	2033819C1	1661375C2	9740D	E	1652325C1		
NS59W	18	GY	GXL	2033819C1	1661375C2	9740D	E	1652325C1		
2A59F-G	14	WH	GXL	2033816C1	1661375C2	9740E	A	589391C1		
NT59S-G	14	WH	GXL	2033816C1	1661375C2	9740E	A	589391C1		
2A59G	18	GY	GXL	2033819C1	1661375C2	9740E	B	1652325C1		
NT59T	18	GY	GXL	2033819C1	1661375C2	9740E	B	1652325C1		
2A59H	18	GY	GXL	2033819C1	1661375C2	9740E	C	1652325C1		
NT59U	18	GY	GXL	2033819C1	1661375C2	9740E	C	1652325C1		
2A59J	18	GY	GXL	2033819C1	1661375C2	9740E	D	1652325C1		
NT59V	18	GY	GXL	2033819C1	1661375C2	9740E	D	1652325C1		
2A59K	18	GY	GXL	2033819C1	1661375C2	9740E	E	1652325C1		
NT59W	18	GY	GXL	2033819C1	1661375C2	9740E	E	1652325C1		
2B59L-G	14	WH	GXL	2033816C1	1661375C2	9740F	A	589391C1		
2B59M	18	GY	GXL	2033819C1	1661375C2	9740F	B	1652325C1		
2B59N	18	GY	GXL	2033819C1	1661375C2	9740F	C	1652325C1		
2B59P	18	GY	GXL	2033819C1	1661375C2	9740F	D	1652325C1		
2B59Q	18	GY	GXL	2033819C1	1661375C2	9740F	E	1652325C1		
BV59Y-G	14	WH	GXL	2033816C1	1661375C2	9740G	A	589391C1		
BV59G	18	GY	GXL	2033819C1	1661375C2	9740G	B	1652325C1		
BV59H	18	GY	GXL	2033819C1	1661375C2	9740G	C	1652325C1		
BV59J	18	GY	GXL	2033819C1	1661375C2	9740G	D	1652325C1		
BV59K	18	GY	GXL	2033819C1	1661375C2	9740G	E	1652325C1		
BU59Z-G	14	WH	GXL	2033816C1	1661375C2	9740H	A	589391C1		
BU59G	18	GY	GXL	2033819C1	1661375C2	9740H	B	1652325C1		
BU59H	18	GY	GXL	2033819C1	1661375C2	9740H	C	1652325C1		
BU59J	18	GY	GXL	2033819C1	1661375C2	9740H	D	1652325C1		
BU59K	18	GY	GXL	2033819C1	1661375C2	9740H	E	1652325C1		

Circuit Number	Gauge	Color	Insulation	Terminal / Splice Number	Connector Part number	Connector Number	Cavity	Seal/Sleeve	Lock 1	Lock 2
AB87DA	16	GY	GXL	3536865C1	3536864C1	9745A	1	3536868C1		
AB87DA	16	GY	GXL	3536865C1	3536864C1	9745A	1	3536868C1		
AB87DB	18	GY	GXL	3536865C1	3536864C1	9745A	2	3536868C1		
AB87DB	18	GY	GXL	3536865C1	3536864C1	9745A	2	3536868C1		
AK87EA	18	GY	TXL	3554322C1	3554317C1	9746A	1	3554318C1		
AK87EA	18	GY	TXL	3554322C1	3554317C1	9746A	1	3554318C1		
AK8EB	18	GY	TXL	3554322C1	3554317C1	9746A	2	3554318C1		
AK9EB	18	GY	TXL	3554322C1	3554317C1	9746A	2	3554318C1		
BH47A	16	GY	GXL	1667742C1	3543888C1	9750A	A	1661872C1		
BH47B	16	GY	GXL	1667742C1	3543888C1	9750A	B	1661872C1		
TE42	16	GY	GXL	587577C1	587567C91	9754B	A	1652325C1		
WE42-G	18	WH	GXL	587578C1	587567C91	9754B	B	1652325C1		
WF42-G	18	WH	GXL	587578C1	587567C91	9754B	B	1652325C1		
TR42	16	GY	GXL	425058C1	CB	9754D	A	N/A		
WL42-G	16	GY	GXL	425058C1	CB	9754D	C	N/A		
WM42-G	16	GY	GXL	425058C1	CB	9754D	C	N/A		
TR42	16	GY	GXL	3613770C1	3626435C1	9754F	1	N/A		
TR42-G	16	WH	GXL	3613770C1	3626435C1	9754F	2	N/A		
TE47A	16	GY	GXL	2036586C1	2036583C1	9755B	A	N/A		
TE47B	16	GY	GXL	2036586C1	2036583C1	9755B	B	N/A		
TR47A	16	GY	GXL	2036586C1	2036583C1	9755D	A	N/A		
TR47A	16	GY	GXL	2036586C1	2036583C1	9755D	A	N/A		
TR47B	16	GY	GXL	2036586C1	2036583C1	9755D	B	N/A		
TR47B	16	GY	GXL	2036586C1	2036583C1	9755D	B	N/A		
RP59ED	18	GY	GXL	1667742C1	3522252C1	9761F	A	1661872C1		
RR59EC	18	GY	GXL	1667742C1	3522252C1	9761F	A	1661872C1		
RS59EF	18	GY	GXL	1667742C1	3522252C1	9761F	A	1661872C1		
MV59ED	18	GY	GXL	1667742C1	3522252C1	9761F	B	1661872C1		
RR59EF	18	GY	GXL	1667742C1	3522252C1	9761F	B	1661872C1		
TM59ED	18	GY	GXL	1667742C1	3522252C1	9761F	C	1661872C1		
RM71N	16	OR	GXL	1667742C1	3522252C1	9761F	E	1661872C1		
RT9M	18	GY	GXL	1667742C1	1667740C1	9775F	A	1661872C1		
RU9N	18	GY	GXL	1667742C1	1667740C1	9775F	A	1661872C1		
RT6H	18	GY	GXL	1667742C1	1667740C1	9775F	B	1661872C1		
RU6J	18	GY	GXL	1667742C1	1667740C1	9775F	B	1661872C1		
RT61C	18	GY	GXL	1667742C1	1667740C1	9775F	C	1661872C1		
RU61D	18	GY	GXL	1667742C1	1667740C1	9775F	C	1661872C1		
UB10B	8	WH	GXL	3700153C1	3537133C1	9776F	A	3537135C1		
RF10A	8	WH	GXL	3517818C1	3517817C1	9778F	A	N/A		
SV10A	8	WH	GXL	3517818C1	3517817C1	9778F	A	N/A		
NA10F	8	WH	GXL	3700153C1	3537133C1	9778F	A	3537135C1		
NB10B	8	WH	GXL	3700153C1	3537133C1	9778F	A	3537135C1		
NE10E	8	WH	GXL	3700153C1	3537133C1	9778F	A	3537135C1		
VE10E	8	WH	GXL	3700153C1	3537133C1	9778F	A	3537135C1		
TV10A	8	WH	GXL	3700153C1	3537133C1	9778F1	A	3537135C1		
TZ10A	8	WH	GXL	3700153C1	3537133C1	9778F1	A	3537135C1		
RF58A	10	BK	GXL	2025425C1	1667732C1	9779F	A	1667735C1		
SV58A	10	BK	GXL	2025425C1	1667732C1	9779F	A	1667735C1		
NA54T	10	BN	GXL	2025425C1	1667732C1	9779F	A	1667735C1		
NB54B	10	BN	GXL	2025425C1	1667732C1	9779F	A	1667735C1		
NE54E	10	BN	GXL	2025425C1	1667732C1	9779F	A	1667735C1		
VE54E	10	BN	GXL	2025425C1	1667732C1	9779F	A	1667735C1		
RF56A	10	YL	GXL	2025425C1	1667732C1	9779F	B	1667735C1		
SV56A	10	YL	GXL	2025425C1	1667732C1	9779F	B	1667735C1		

Circuit Number	Gauge	Color	Insulation	Terminal / Splice Number	Connector Part number	Connector Number	Cavity	Seal/Sleeve	Lock 1	Lock 2
NA56T	10	YL	GXL	2025425C1	1667732C1	9779F	B	1667735C1		
NB56B	10	YL	GXL	2025425C1	1667732C1	9779F	B	1667735C1		
NE56E	10	YL	GXL	2025425C1	1667732C1	9779F	B	1667735C1		
VE56E	10	YL	GXL	2025425C1	1667732C1	9779F	B	1667735C1		
RF57A	10	LTGN	GXL	2025425C1	1667732C1	9779F	C	1667735C1		
SV57A	10	LTGN	GXL	2025425C1	1667732C1	9779F	C	1667735C1		
NA57T	10	LTGN	GXL	2025425C1	1667732C1	9779F	C	1667735C1		
NB57B	10	LTGN	GXL	2025425C1	1667732C1	9779F	C	1667735C1		
NE57E	10	LTGN	GXL	2025425C1	1667732C1	9779F	C	1667735C1		
VE57E	10	LTGN	GXL	2025425C1	1667732C1	9779F	C	1667735C1		
TV58A	10	BK	GXL	2025425C1	1667732C1	9779F1	A	1667735C1		
TZ58A	10	BK	GXL	2025425C1	1667732C1	9779F1	A	1667735C1		
TV56A	10	YL	GXL	2025425C1	1667732C1	9779F1	B	1667735C1		
TZ56A	10	YL	GXL	2025425C1	1667732C1	9779F1	B	1667735C1		
TV57A	10	LTGN	GXL	2025425C1	1667732C1	9779F1	C	1667735C1		
TZ57A	10	LTGN	GXL	2025425C1	1667732C1	9779F1	C	1667735C1		
EV12-GA	18	WH	GXL	3863609C1		9780A	1	2644038R1		
EV12-GA	18	WH	GXL	3863609C1		9780A	1	2644038R1		
RF70A	10	RD	GXL	1667737C1	1667733C1	9780M	A	1667735C1		
SV70A	10	RD	GXL	1667737C1	1667733C1	9780M	A	1667735C1		
NA70T	10	RD	GXL	1667737C1	1667733C1	9780M	A	1667735C1		
NB70B	10	RD	GXL	1667737C1	1667733C1	9780M	A	1667735C1		
NE70E	10	RD	GXL	1667737C1	1667733C1	9780M	A	1667735C1		
VE70E	10	RD	GXL	1667737C1	1667733C1	9780M	A	1667735C1		
RF68A	10	BN	GXL	1667737C1	1667733C1	9780M	B	1667735C1		
SV68A	10	BN	GXL	1667737C1	1667733C1	9780M	B	1667735C1		
NA68T	10	BN	GXL	1667737C1	1667733C1	9780M	B	1667735C1		
NB68B	10	BN	GXL	1667737C1	1667733C1	9780M	B	1667735C1		
NE68E	10	BN	GXL	1667737C1	1667733C1	9780M	B	1667735C1		
VE68E	10	BN	GXL	1667737C1	1667733C1	9780M	B	1667735C1		
RF94A	10	DKBL	GXL	1667737C1	1667733C1	9780M	C	1667735C1		
SV94A	10	DKBL	GXL	1667737C1	1667733C1	9780M	C	1667735C1		
NA94T	10	GY	GXL	1667737C1	1667733C1	9780M	C	1667735C1		
NB94T	10	GY	GXL	1667737C1	1667733C1	9780M	C	1667735C1		
NE94E	10	GY	GXL	1667737C1	1667733C1	9780M	C	1667735C1		
VE94E	10	GY	GXL	1667737C1	1667733C1	9780M	C	1667735C1		
TV70A	10	RD	GXL	1667737C1	1667733C1	9780M1	A	1667735C1		
TZ70A	10	RD	GXL	1667737C1	1667733C1	9780M1	A	1667735C1		
TV68A	10	BN	GXL	1667737C1	1667733C1	9780M1	B	1667735C1		
TZ68A	10	BN	GXL	1667737C1	1667733C1	9780M1	B	1667735C1		
TV94A	10	DKBL	GXL	1667737C1	1667733C1	9780M1	C	1667735C1		
TZ94A	10	DKBL	GXL	1667737C1	1667733C1	9780M1	C	1667735C1		
NB70C	10	RD	GXL	1667737C1	1667733C1	9781M	A	1667735C1		
NB68C	10	BN	GXL	1667737C1	1667733C1	9781M	B	1667735C1		
NB72	12	OR	GXL	1667737C1	1667733C1	9781M	C	1671603C1		
UB94T	10	DKBL	GXL	2025423C1	2031520C1	9782F	A	2025427C1		
NB54C	10	BN	GXL	2025425C1	1667732C1	9782F	A	1667735C1		
UB94TA	12	YL	GXL	2025422C1	2031520C1	9782F	B	2025428C1		
NB56C	10	YL	GXL	2025425C1	1667732C1	9782F	B	1667735C1		
NB57C	10	LTGN	GXL	2025425C1	1667732C1	9782F	C	1667735C1		
UB94T	10	DKBL	GXL	2031531C1	2031522C1	9782M	A	2025427C1		
UB94TA	12	YL	GXL	2031531C1	2031522C1	9782M	B	2025428C1		
NB10C	8	WH	GXL	3700153C1	3537133C1	9783F	A	3537135C1		
AJ49	18	WH	GXL	587578C1	3593684C91	9814A	A	1652325C1		

Circuit Number	Gauge	Color	Insulation	Terminal / Splice Number	Connector Part number	Connector Number	Cavity	Seal/Sleeve	Lock 1	Lock 2
AJ49-G	18	WH	GXL	587578C1	3593684C91	9814A	B	1652325C1		
AJ49A	18	WH	GXL	587578C1	3593684C91	9815A	A	1652325C1		
AP49A	18	WH	GXL	587578C1	3593684C91	9815A	A	1652325C1		
AJ49-GA	18	WH	GXL	587578C1	3593684C91	9815A	B	1652325C1		
AP49-GA	18	WH	GXL	587578C1	3593684C91	9815A	B	1652325C1		
RR59DC	18	GY	GXL	1667742C1	3543888C1	9820F	A	1661872C1		
RR59DD	18	GY	GXL	1667742C1	3543888C1	9820F	B	1661872C1		
MV59ED	18	GY	GXL	1661875C1	1661778C1	9820M	A	1661872C1		
RP59ED	18	GY	GXL	1661875C1	1661778C1	9820M	A	1661872C1		
SJ59ED	18	GY	GXL	1661875C1	1661778C1	9820M	A	1661872C1		
MV59-GD	18	WH	GXL	1661875C1	1661778C1	9820M	B	1661872C1		
RP59-GA	18	WH	GXL	1661875C1	1661778C1	9820M	B	1661872C1		
SJ59-GD	18	WH	GXL	1661875C1	1661778C1	9820M	B	1661872C1		
PD110B	18	GY	GXL	1661875C1	1667741C1	9865M	A	1661872C1		
PD110B	18	GY	GXL	1661875C1	1667741C1	9865M	A	1661872C1		
PD106B	18	GY	GXL	1661875C1	1667741C1	9865M	B	1661872C1		
PD106B	18	GY	GXL	1661875C1	1667741C1	9865M	B	1661872C1		
PD61B	18	GY	GXL	1661875C1	1667741C1	9865M	C	1661872C1		
PD61B	18	GY	GXL	1661875C1	1667741C1	9865M	C	1661872C1		
NH39B	16	GY	TXL	2033819C1	1673790C1	9900A	A	1652325C1		
NH39-GB	16	WH	GXL	2033819C1	1673790C1	9900A	B	1652325C1		
PN39B	16	GY	GXL	2033819C1	1673790C1	9900AA	A	1652325C1		
PN39-GB	16	WH	GXL	2033819C1	1673790C1	9900AA	B	1652325C1		
AC39B	16	GY	GXL	2033819C1	1673790C1	9900AC	A	1652325C1		
AC39B	16	GY	GXL	2033819C1	1673790C1	9900AC	A	1652325C1		
AC39-GB	16	WH	GXL	2033819C1	1673790C1	9900AC	B	1652325C1		
AC39-GB	16	WH	GXL	2033819C1	1673790C1	9900AC	B	1652325C1		
AD39B	16	GY	GXL	2033819C1	1673790C1	9900AD	A	1652325C1		
AD39B	16	GY	GXL	2033819C1	1673790C1	9900AD	A	1652325C1		
AD39-GB	16	WH	GXL	2033819C1	1673790C1	9900AD	B	1652325C1		
AD39-GB	16	WH	GXL	2033819C1	1673790C1	9900AD	B	1652325C1		
AE39B	16	GY	GXL	2033819C1	1673790C1	9900AE	A	1652325C1		
AE39B	16	GY	GXL	2033819C1	1673790C1	9900AE	A	1652325C1		
AE39-GB	16	WH	GXL	2033819C1	1673790C1	9900AE	B	1652325C1		
AE39-GB	16	WH	GXL	2033819C1	1673790C1	9900AE	B	1652325C1		
AF39B	16	GY	GXL	2033819C1	1673790C1	9900AF	A	1652325C1		
AF39-GB	16	WH	GXL	2033819C1	1673790C1	9900AF	B	1652325C1		
AG39B	16	GY	GXL	2033819C1	1673790C1	9900AG	A	1652325C1		
AG39-GB	16	WH	GXL	2033819C1	1673790C1	9900AG	B	1652325C1		
AJ39B	16	GY	GXL	2033819C1	1673790C1	9900AJ	A	1652325C1		
AJ39B	16	GY	GXL	2033819C1	1673790C1	9900AJ	A	1652325C1		
AJ39-GB	16	WH	GXL	2033819C1	1673790C1	9900AJ	B	1652325C1		
AJ39-GB	16	WH	GXL	2033819C1	1673790C1	9900AJ	B	1652325C1		
AP39B	16	GY	GXL	2033819C1	1673790C1	9900AP	A	1652325C1		
AP39B	16	GY	GXL	2033819C1	1673790C1	9900AP	A	1652325C1		
AP39-GB	16	WH	GXL	2033819C1	1673790C1	9900AP	B	1652325C1		
AP39-GB	16	WH	GXL	2033819C1	1673790C1	9900AP	B	1652325C1		
AQ39B	16	GY	GXL	2033819C1	1673790C1	9900AQ	A	1652325C1		
AQ39B	16	GY	GXL	2033819C1	1673790C1	9900AQ	A	1652325C1		
AQ39-GB	16	WH	GXL	2033819C1	1673790C1	9900AQ	B	1652325C1		
AQ39-GB	16	WH	GXL	2033819C1	1673790C1	9900AQ	B	1652325C1		
AR39B	16	GY	GXL	2033819C1	1673790C1	9900AR	A	1652325C1		
AR39B	16	GY	GXL	2033819C1	1673790C1	9900AR	A	1652325C1		
AR39-GB	16	WH	GXL	2033819C1	1673790C1	9900AR	B	1652325C1		

Circuit Number	Gauge	Color	Insulation	Terminal / Splice Number	Connector Part number	Connector Number	Cavity	Seal/Sleeve	Lock 1	Lock 2
AR39-GB	16	WH	GXL	2033819C1	1673790C1	9900AR	B	1652325C1		
PF39B	18	GY	GXL	2033819C1	1673790C1	9900C	A	1652325C1		
ZN39B	18	GY	GXL	2033819C1	1673790C1	9900C	A	1652325C1		
PF39-GB	16	WH	GXL	2033819C1	1673790C1	9900C	B	1652325C1		
ZN39-GB	16	WH	GXL	2033819C1	1673790C1	9900C	B	1652325C1		
BA39B	16	GY	GXL	2033819C1	1673790C1	9900D	A	1652325C1		
BA39-GB	16	WH	GXL	2033819C1	1673790C1	9900D	B	1652325C1		
PA39B	16	GY	GXL	2033819C1	1673790C1	9900E	A	1652325C1		
PA39-GB	16	WH	GXL	2033819C1	1673790C1	9900E	B	1652325C1		
NX39B	16	GY	GXL	2033819C1	1673790C1	9900G	A	1652325C1		
NX39-GB	16	WH	GXL	2033819C1	1673790C1	9900G	B	1652325C1		
AS39B	16	GY	GXL	2033819C1	1673790C1	9900V	A	1652325C1		
AS39-GB	16	WH	GXL	2033819C1	1673790C1	9900V	B	1652325C1		
RY14LSA	18	BK	GXL	587576C1	587570C91	9913B	A	1652325C1		
RY14LSB	18	RD	GXL	587576C1	587570C91	9913B	B	1652325C1		
RY14LSC	12	WH	GXL	1673747C1	587570C91	9913B	C	589390C1		
KN14A	12	RD	TXL	2033816C1	1671610C1	9932M	A	589391C1		
KN14A	12	RD	TXL	2033816C1	1671610C1	9932M	A	589391C1		
QW9BB	18	GY	TXL	239481R1		AS1	-	2644000R1		
QW9BC	18	GY	GXL	239481R1		AS1	-	2644000R1		
QW9BD	18	GY	GXL	239481R1		AS1	-	2644000R1		
9G5BC(+)	18	YL	TXL	239481R1		AS10	-	2644000R1		
9G5BD(+)	18	YL	TXL	239481R1		AS10	-	2644000R1		
9G5BE(+)	18	YL	TXL	239481R1		AS10	-	2644000R1		
9L5BC(+)	18	YL	TXL	239481R1		AS10	-	2644000R1		
9L5BD(+)	18	YL	TXL	239481R1		AS10	-	2644000R1		
9L5BE(+)	18	YL	TXL	239481R1		AS10	-	2644000R1		
9V5BC(+)	18	YL	TXL	239481R1		AS10	-	2644000R1		
9V5BD(+)	18	YL	TXL	239481R1		AS10	-	2644000R1		
9V5BE(+)	18	YL	TXL	239481R1		AS10	-	2644000R1		
9Z5BC(+)	18	YL	TXL	239481R1		AS10	-	2644000R1		
9Z5BD(+)	18	YL	TXL	239481R1		AS10	-	2644000R1		
9Z5BE(+)	18	YL	TXL	239481R1		AS10	-	2644000R1		
9G5BC(-)	18	GN	TXL	239481R1		AS11	-	2644000R1		
9G5BD(-)	18	GN	TXL	239481R1		AS11	-	2644000R1		
9G5BE(-)	18	GN	TXL	239481R1		AS11	-	2644000R1		
9L5BC(-)	18	GN	TXL	239481R1		AS11	-	2644000R1		
9L5BD(-)	18	GN	TXL	239481R1		AS11	-	2644000R1		
9L5BE(-)	18	GN	TXL	239481R1		AS11	-	2644000R1		
9V5BC(-)	18	GN	TXL	239481R1		AS11	-	2644000R1		
9V5BD(-)	18	GN	TXL	239481R1		AS11	-	2644000R1		
9V5BE(-)	18	GN	TXL	239481R1		AS11	-	2644000R1	1661376C1	
9Z5BC(-)	18	GN	TXL	239481R1		AS11	-	2644000R1		
9Z5BD(-)	18	GN	TXL	239481R1		AS11	-	2644000R1		
9Z5BE(-)	18	GN	TXL	239481R1		AS11	-	2644000R1		
9S5AA(-)	18	GN	TXL	239481R1		AS13	-	2644000R1		
9S5AB(-)	18	GN	TXL	239481R1		AS13	-	2644000R1		
9S5AC(-)	18	GN	TXL	239481R1		AS13	-	2644000R1		
9T5AA(-)	18	GN	TXL	239481R1		AS13	-	2644000R1		
9T5AB(-)	18	GN	TXL	239481R1		AS13	-	2644000R1		
9T5AC(-)	18	GN	TXL	239481R1		AS13	-	2644000R1		
9W5AA(-)	18	GN	TXL	239481R1		AS13	-	2644000R1		
9W5AB(-)	18	GN	TXL	239481R1		AS13	-	2644000R1		
9W5AC(-)	18	GN	TXL	239481R1		AS13	-	2644000R1		

Circuit Number	Gauge	Color	Insulation	Terminal / Splice Number	Connector Part number	Connector Number	Cavity	Seal/Sleeve	Lock 1	Lock 2
9Y5AA(-)	18	GN	TXL	239481R1		AS13	-	2644000R1		
9Y5AB(-)	18	GN	TXL	239481R1		AS13	-	2644000R1		
9Y5AC(-)	18	GN	TXL	239481R1		AS13	-	2644000R1		
9S5AA(+)	18	YL	TXL	239481R1		AS14	-	2644000R1		
9S5AB(+)	18	YL	TXL	239481R1		AS14	-	2644000R1		
9S5AC(+)	18	YL	TXL	239481R1		AS14	-	2644000R1		
9T5AA(+)	18	YL	TXL	239481R1		AS14	-	2644000R1		
9T5AB(+)	18	YL	TXL	239481R1		AS14	-	2644000R1		
9T5AC(+)	18	YL	TXL	239481R1		AS14	-	2644000R1		
9W5AA(+)	18	YL	TXL	239481R1		AS14	-	2644000R1	3558056C1	
9W5AB(+)	18	YL	TXL	239481R1		AS14	-	2644000R1	3539784C1	
9W5AC(+)	18	YL	TXL	239481R1		AS14	-	2644000R1	3589992C1	
9Y5AA(+)	18	YL	TXL	239481R1		AS14	-	2644000R1		
9Y5AB(+)	18	YL	TXL	239481R1		AS14	-	2644000R1		
9Y5AC(+)	18	YL	TXL	239481R1		AS14	-	2644000R1		
9D5A(+)	18	YL	TXL	239481R1		AS17	-	2644000R1		
9D5B(+)	18	YL	TXL	239481R1		AS17	-	2644000R1		
9D5C(+)	18	YL	TXL	239481R1		AS17	-	2644000R1		
9K5A(+)	18	YL	TXL	239481R1		AS17	-	2644000R1		
9K5B(+)	18	YL	TXL	239481R1		AS17	-	2644000R1		
9K5C(+)	18	YL	TXL	239481R1		AS17	-	2644000R1	3539784C1	
9M5A(+)	18	YL	TXL	239481R1		AS17	-	2644000R1		
9M5B(+)	18	YL	TXL	239481R1		AS17	-	2644000R1		
9M5C(+)	18	YL	TXL	239481R1		AS17	-	2644000R1		
9N5A(+)	18	YL	TXL	239481R1		AS17	-	2644000R1		
9N5B(+)	18	YL	TXL	239481R1		AS17	-	2644000R1		
9N5C(+)	18	YL	TXL	239481R1		AS17	-	2644000R1		
9Q5A(+)	18	YL	TXL	239481R1		AS17	-	2644000R1		
9Q5B(+)	18	YL	TXL	239481R1		AS17	-	2644000R1		
9Q5C(+)	18	YL	TXL	239481R1		AS17	-	2644000R1		
9R5A(+)	18	YL	TXL	239481R1		AS17	-	2644000R1		
9R5B(+)	18	YL	TXL	239481R1		AS17	-	2644000R1		
9R5C(+)	18	YL	TXL	239481R1		AS17	-	2644000R1		
9U5A(+)	18	YL	TXL	239481R1		AS17	-	2644000R1		
9U5B(+)	18	YL	TXL	239481R1		AS17	-	2644000R1		
9U5C(+)	18	YL	TXL	239481R1		AS17	-	2644000R1		
GB5A(+)	18	YL	TXL	239481R1		AS17	-	2644000R1		
GB5B(+)	18	YL	TXL	239481R1		AS17	-	2644000R1		
GB5C(+)	18	YL	TXL	239481R1		AS17	-	2644000R1		
GE5A(+)	18	YL	TXL	239481R1		AS17	-	2644000R1		
GE5B(+)	18	YL	TXL	239481R1		AS17	-	2644000R1		
GE5C(+)	18	YL	TXL	239481R1		AS17	-	2644000R1		
GG5A(+)	18	YL	TXL	239481R1		AS17	-	2644000R1		
GG5B(+)	18	YL	TXL	239481R1		AS17	-	2644000R1		
GG5C(+)	18	YL	TXL	239481R1		AS17	-	2644000R1		
GH5A(+)	18	YL	TXL	239481R1		AS17	-	2644000R1		
GH5B(+)	18	YL	TXL	239481R1		AS17	-	2644000R1		
GH5C(+)	18	YL	TXL	239481R1		AS17	-	2644000R1		
GJ5A(+)	18	YL	TXL	239481R1		AS17	-	2644000R1		
GJ5B(+)	18	YL	TXL	239481R1		AS17	-	2644000R1		
GJ5C(+)	18	YL	TXL	239481R1		AS17	-	2644000R1		
GK5A(+)	18	YL	TXL	239481R1		AS17	-	2644000R1		
GK5B(+)	18	YL	TXL	239481R1		AS17	-	2644000R1		
GK5C(+)	18	YL	TXL	239481R1		AS17	-	2644000R1		

Circuit Number	Gauge	Color	Insulation	Terminal / Splice Number	Connector Part number	Connector Number	Cavity	Seal/Sleeve	Lock 1	Lock 2
GL5A(+)	18	YL	TXL	239481R1		AS17	-	2644000R1		
GL5B(+)	18	YL	TXL	239481R1		AS17	-	2644000R1		
GL5C(+)	18	YL	TXL	239481R1		AS17	-	2644000R1		
GM5A(+)	18	YL	TXL	239481R1		AS17	-	2644000R1		
GM5B(+)	18	YL	TXL	239481R1		AS17	-	2644000R1		
GM5C(+)	18	YL	TXL	239481R1		AS17	-	2644000R1		
GN5A(+)	18	YL	TXL	239481R1		AS17	-	2644000R1		
GN5B(+)	18	YL	TXL	239481R1		AS17	-	2644000R1		
GN5C(+)	18	YL	TXL	239481R1		AS17	-	2644000R1		
GP5A(+)	18	YL	TXL	239481R1		AS17	-	2644000R1		
GP5B(+)	18	YL	TXL	239481R1		AS17	-	2644000R1		
GP5C(+)	18	YL	TXL	239481R1		AS17	-	2644000R1		
GQ5A(+)	18	YL	TXL	239481R1		AS17	-	2644000R1		
GQ5B(+)	18	YL	TXL	239481R1		AS17	-	2644000R1		
GQ5C(+)	18	YL	TXL	239481R1		AS17	-	2644000R1		
GT5A(+)	18	YL	TXL	239481R1		AS17	-	2644000R1		
GT5B(+)	18	YL	TXL	239481R1		AS17	-	2644000R1		
GT5C(+)	18	YL	TXL	239481R1		AS17	-	2644000R1		
GU5A(+)	18	YL	TXL	239481R1		AS17	-	2644000R1		
GU5B(+)	18	YL	TXL	239481R1		AS17	-	2644000R1		
GU5C(+)	18	YL	TXL	239481R1		AS17	-	2644000R1		
GV5A(+)	18	YL	TXL	239481R1		AS17	-	2644000R1		
GV5B(+)	18	YL	TXL	239481R1		AS17	-	2644000R1		
GV5C(+)	18	YL	TXL	239481R1		AS17	-	2644000R1		
GW5A(+)	18	YL	TXL	239481R1		AS17	-	2644000R1		
GW5B(+)	18	YL	TXL	239481R1		AS17	-	2644000R1		
GW5C(+)	18	YL	TXL	239481R1		AS17	-	2644000R1		
9D5A(-)	18	GN	TXL	239481R1		AS18	-	2644000R1		
9D5B(-)	18	GN	TXL	239481R1		AS18	-	2644000R1		
9D5C(-)	18	GN	TXL	239481R1		AS18	-	2644000R1		
9K5A(-)	18	GN	TXL	239481R1		AS18	-	2644000R1	2005242C1	
9K5B(-)	18	GN	TXL	239481R1		AS18	-	2644000R1		
9K5C(-)	18	GN	TXL	239481R1		AS18	-	2644000R1		
9M5A(-)	18	GN	TXL	239481R1		AS18	-	2644000R1		
9M5B(-)	18	GN	TXL	239481R1		AS18	-	2644000R1		
9M5C(-)	18	GN	TXL	239481R1		AS18	-	2644000R1		
9N5A(-)	18	GN	TXL	239481R1		AS18	-	2644000R1		
9N5B(-)	18	GN	TXL	239481R1		AS18	-	2644000R1		
9N5C(-)	18	GN	TXL	239481R1		AS18	-	2644000R1		
9Q5A(-)	18	GN	TXL	239481R1		AS18	-	2644000R1		
9Q5B(-)	18	GN	TXL	239481R1		AS18	-	2644000R1		
9Q5C(-)	18	GN	TXL	239481R1		AS18	-	2644000R1		
9R5A(-)	18	GN	TXL	239481R1		AS18	-	2644000R1		
9R5B(-)	18	GN	TXL	239481R1		AS18	-	2644000R1		
9R5C(-)	18	GN	TXL	239481R1		AS18	-	2644000R1		
9U5A(-)	18	GN	TXL	239481R1		AS18	-	2644000R1		
9U5B(-)	18	GN	TXL	239481R1		AS18	-	2644000R1		
9U5C(-)	18	GN	TXL	239481R1		AS18	-	2644000R1		
GB5A(-)	18	GN	TXL	239481R1		AS18	-	2644000R1		
GB5B(-)	18	GN	TXL	239481R1		AS18	-	2644000R1		
GB5C(-)	18	GN	TXL	239481R1		AS18	-	2644000R1		
GE5A(-)	18	GN	TXL	239481R1		AS18	-	2644000R1		
GE5B(-)	18	GN	TXL	239481R1		AS18	-	2644000R1		
GE5C(-)	18	GN	TXL	239481R1		AS18	-	2644000R1		

Circuit Number	Gauge	Color	Insulation	Terminal / Splice Number	Connector Part number	Connector Number	Cavity	Seal/Sleeve	Lock 1	Lock 2
GG5A(-)	18	GN	TXL	239481R1		AS18	-	2644000R1		
GG5B(-)	18	GN	TXL	239481R1		AS18	-	2644000R1		
GG5C(-)	18	GN	TXL	239481R1		AS18	-	2644000R1		
GH5A(-)	18	GN	TXL	239481R1		AS18	-	2644000R1		
GH5B(-)	18	GN	TXL	239481R1		AS18	-	2644000R1		
GH5C(-)	18	GN	TXL	239481R1		AS18	-	2644000R1		
GJ5A(-)	18	GN	TXL	239481R1		AS18	-	2644000R1		
GJ5B(-)	18	GN	TXL	239481R1		AS18	-	2644000R1		
GJ5C(-)	18	GN	TXL	239481R1		AS18	-	2644000R1		
GK5A(-)	18	GN	TXL	239481R1		AS18	-	2644000R1		
GK5B(-)	18	GN	TXL	239481R1		AS18	-	2644000R1		
GK5C(-)	18	GN	TXL	239481R1		AS18	-	2644000R1		
GL5A(-)	18	GN	TXL	239481R1		AS18	-	2644000R1		
GL5B(-)	18	GN	TXL	239481R1		AS18	-	2644000R1		
GL5C(-)	18	GN	TXL	239481R1		AS18	-	2644000R1		
GM5A(-)	18	GN	TXL	239481R1		AS18	-	2644000R1		
GM5B(-)	18	GN	TXL	239481R1		AS18	-	2644000R1		
GM5C(-)	18	GN	TXL	239481R1		AS18	-	2644000R1		
GN5A(-)	18	GN	TXL	239481R1		AS18	-	2644000R1		
GN5B(-)	18	GN	TXL	239481R1		AS18	-	2644000R1		
GN5C(-)	18	GN	TXL	239481R1		AS18	-	2644000R1		
GP5A(-)	18	GN	TXL	239481R1		AS18	-	2644000R1		
GP5B(-)	18	GN	TXL	239481R1		AS18	-	2644000R1		
GP5C(-)	18	GN	TXL	239481R1		AS18	-	2644000R1		
GQ5A(-)	18	GN	TXL	239481R1		AS18	-	2644000R1		
GQ5B(-)	18	GN	TXL	239481R1		AS18	-	2644000R1		
GQ5C(-)	18	GN	TXL	239481R1		AS18	-	2644000R1		
GT5A(-)	18	GN	TXL	239481R1		AS18	-	2644000R1		
GT5B(-)	18	GN	TXL	239481R1		AS18	-	2644000R1		
GT5C(-)	18	GN	TXL	239481R1		AS18	-	2644000R1		
GU5A(-)	18	GN	TXL	239481R1		AS18	-	2644000R1		
GU5B(-)	18	GN	TXL	239481R1		AS18	-	2644000R1		
GU5C(-)	18	GN	TXL	239481R1		AS18	-	2644000R1		
GV5A(-)	18	GN	TXL	239481R1		AS18	-	2644000R1		
GV5B(-)	18	GN	TXL	239481R1		AS18	-	2644000R1		
GV5C(-)	18	GN	TXL	239481R1		AS18	-	2644000R1		
GW5A(-)	18	GN	TXL	239481R1		AS18	-	2644000R1		
GW5B(-)	18	GN	TXL	239481R1		AS18	-	2644000R1		
GW5C(-)	18	GN	TXL	239481R1		AS18	-	2644000R1		
YD13COG	16	PK	TXL	239481R1		AS19	-	2644000R1		
YD67A	16	PK	TXL	239481R1		AS19	-	2644000R1		
YD67Y	18	PK	TXL	239481R1		AS19	-	2644000R1		
QW79A	18	GY	TXL	239481R1		AS2	-	2644000R1		
QW79B	18	GY	GXL	239481R1		AS2	-	2644000R1		
QW79C	18	GY	GXL	239481R1		AS2	-	2644000R1		
WG63	18	DKBL	TXL	239481R1		AS21	-	2644000R1		
WG63BB	18	DKBL	TXL	239481R1		AS21	-	2644000R1		
WG63BC	18	DKBL	TXL	239481R1		AS21	-	2644000R1		
WG63BD	18	DKBL	TXL	239481R1		AS21	-	2644000R1		
WJ63	18	DKBL	TXL	239481R1		AS21	-	2644000R1		
WJ63BB	18	DKBL	TXL	239481R1		AS21	-	2644000R1		
WJ63BC	18	DKBL	TXL	239481R1		AS21	-	2644000R1		
WJ63BD	18	DKBL	TXL	239481R1		AS21	-	2644000R1		
WJ63BE	18	DKBL	TXL	239481R1		AS21	-	2644000R1		

Circuit Number	Gauge	Color	Insulation	Terminal / Splice Number	Connector Part number	Connector Number	Cavity	Seal/Sleeve	Lock 1	Lock 2
AB60C	18	OR	TXL	239481R1		AS23	-	2644000R1		
AB62	18	DKBL	TXL	239481R1		AS23	-	2644000R1		
AB62DD	18	DKBL	TXL	239481R1		AS23	-	2644000R1		
HB103	6	RD	SGX	239481R1		AS24	-	2644000R1		
HB103-FL	10	RS	FUS	239481R1		AS24	-	2644000R1		
HC103-FL	10	RS	FUS	239481R1		AS24	-	2644000R1		
HC103S	6	RD	SGX	239481R1		AS24	-	2644000R1		
HZ14-FL	8	LTBL	FUS	239481R1		AS25	-	2644000R1		
HZ14BC	4	RD	SGX	239481R1		AS25	-	2644000R1		
XZ56	16	OR	TXL	239481R1		AS26	-	2644000R1		
XZ56B	16	OR	TXL	239481R1		AS26	-	2644000R1		
XZ56D	18	OR	TXL	239481R1		AS26	-	2644000R1		
YN56	18	OR	TXL	239481R1		AS26	-	2644000R1		
YN56B	16	OR	TXL	239481R1		AS26	-	2644000R1		
YN56D	18	OR	TXL	239481R1		AS26	-	2644000R1		
YY56	16	OR	TXL	239481R1		AS26	-	2644000R1		
YY56B	16	OR	TXL	239481R1		AS26	-	2644000R1		
YY56D	18	OR	TXL	239481R1		AS26	-	2644000R1		
QE14A	12	RD	TXL	239481R1		AS27	-	2644000R1		
QE14B	12	RD	TXL	239481R1		AS27	-	2644000R1		
QE14C	12	RD	TXL	239481R1		AS27	-	2644000R1		
QE11-GCN	12	WH	TXL	239481R1		AS28	-	2644000R1		
QE11-GP	12	WH	TXL	239481R1		AS28	-	2644000R1		
QE11-GR	12	WH	TXL	239481R1		AS28	-	2644000R1		
DD13FAL	14	BN	GXL	239481R1		AS29	-	2644000R1		
DD13FAM	18	BN	TXL	239481R1		AS29	-	2644000R1		
DH13A	14	GY	TXL	239481R1		AS29	-	2644000R1		
DH13C	18	GY	TXL	239481R1		AS29	-	2644000R1		
QD105-GA	16	WH	TXL	239481R1		AS3	-	2644000R1		
QD105-GB	16	WH	TXL	239481R1		AS3	-	2644000R1		
QD105-GCP	16	WH	TXL	239481R1		AS3	-	2644000R1		
QU11-GH	18	WH	TXL	239481R1		AS32	-	2644000R1		
QU11-GH1	18	WH	TXL	239481R1		AS32	-	2644000R1		
QU11-GH2	18	WH	TXL	239481R1		AS32	-	2644000R1		
QY11-GM1	18	WH	TXL	239481R1		AS32	-	2644000R1		
QY11-GM2	18	WH	TXL	239481R1		AS32	-	2644000R1		
QY11-GM3	18	WH	TXL	239481R1		AS32	-	2644000R1		
QZ13R1	18	RD	TXL	239481R1		AS33	-	2644000R1		
QZ13R2	18	RD	TXL	239481R1		AS33	-	2644000R1		
QZ13R3	18	RD	TXL	239481R1		AS33	-	2644000R1		
9D5C(+)	18	YL	TXL	239481R1		AS34	-	2644000R1		
9D5E(+)	18	YL	TXL	239481R1		AS34	-	2644000R1		
9K5C(+)	18	YL	TXL	239481R1		AS34	-	2644000R1		
9K5D(+)	18	YL	TXL	239481R1		AS34	-	2644000R1		
9K5E(+)	18	YL	TXL	239481R1		AS34	-	2644000R1		
9M5C(+)	18	YL	TXL	239481R1		AS34	-	2644000R1		
9M5E(+)	18	YL	TXL	239481R1		AS34	-	2644000R1		
9N5C(+)	18	YL	TXL	239481R1		AS34	-	2644000R1		
9N5E(+)	18	YL	TXL	239481R1		AS34	-	2644000R1		
9Q5C(+)	18	YL	TXL	239481R1		AS34	-	2644000R1		
9Q5E(+)	18	YL	TXL	239481R1		AS34	-	2644000R1		
9R5C(+)	18	YL	TXL	239481R1		AS34	-	2644000R1		
9R5D(+)	18	YL	TXL	239481R1		AS34	-	2644000R1		
9R5E(+)	18	YL	TXL	239481R1		AS34	-	2644000R1		

Circuit Number	Gauge	Color	Insulation	Terminal / Splice Number	Connector Part number	Connector Number	Cavity	Seal/Sleeve	Lock 1	Lock 2
9U5C(+)	18	YL	TXL	239481R1		AS34	-	2644000R1		
9U5D(+)	18	YL	TXL	239481R1		AS34	-	2644000R1		
9U5E(+)	18	YL	TXL	239481R1		AS34	-	2644000R1		
GB5C(+)	18	YL	TXL	239481R1		AS34	-	2644000R1		
GB5D(+)	18	YL	TXL	239481R1		AS34	-	2644000R1		
GB5E(+)	18	YL	TXL	239481R1		AS34	-	2644000R1		
GE5C(+)	18	YL	TXL	239481R1		AS34	-	2644000R1		
GE5D(+)	18	YL	TXL	239481R1		AS34	-	2644000R1		
GE5E(+)	18	YL	TXL	239481R1		AS34	-	2644000R1		
GG5C(+)	18	YL	TXL	239481R1		AS34	-	2644000R1		
GG5D(+)	18	YL	TXL	239481R1		AS34	-	2644000R1		
GG5E(+)	18	YL	TXL	239481R1		AS34	-	2644000R1		
GH5C(+)	18	YL	TXL	239481R1		AS34	-	2644000R1		
GH5D(+)	18	YL	TXL	239481R1		AS34	-	2644000R1		
GH5E(+)	18	YL	TXL	239481R1		AS34	-	2644000R1		
GJ5C(+)	18	YL	TXL	239481R1		AS34	-	2644000R1		
GJ5D(+)	18	YL	TXL	239481R1		AS34	-	2644000R1		
GJ5E(+)	18	YL	TXL	239481R1		AS34	-	2644000R1		
GK5C(+)	18	YL	TXL	239481R1		AS34	-	2644000R1		
GK5D(+)	18	YL	TXL	239481R1		AS34	-	2644000R1		
GK5E(+)	18	YL	TXL	239481R1		AS34	-	2644000R1		
GL5C(+)	18	YL	TXL	239481R1		AS34	-	2644000R1		
GL5D(+)	18	YL	TXL	239481R1		AS34	-	2644000R1		
GL5E(+)	18	YL	TXL	239481R1		AS34	-	2644000R1		
GM5C(+)	18	YL	TXL	239481R1		AS34	-	2644000R1		
GM5D(+)	18	YL	TXL	239481R1		AS34	-	2644000R1		
GM5E(+)	18	YL	TXL	239481R1		AS34	-	2644000R1		
GN5C(+)	18	YL	TXL	239481R1		AS34	-	2644000R1		
GN5D(+)	18	YL	TXL	239481R1		AS34	-	2644000R1		
GN5E(+)	18	YL	TXL	239481R1		AS34	-	2644000R1		
GP5C(+)	18	YL	TXL	239481R1		AS34	-	2644000R1		
GP5D(+)	18	YL	TXL	239481R1		AS34	-	2644000R1		
GP5E(+)	18	YL	TXL	239481R1		AS34	-	2644000R1		
GQ5C(+)	18	YL	TXL	239481R1		AS34	-	2644000R1		
GQ5D(+)	18	YL	TXL	239481R1		AS34	-	2644000R1		
GQ5E(+)	18	YL	TXL	239481R1		AS34	-	2644000R1		
GT5C(+)	18	YL	TXL	239481R1		AS34	-	2644000R1		
GT5D(+)	18	YL	TXL	239481R1		AS34	-	2644000R1		
GT5E(+)	18	YL	TXL	239481R1		AS34	-	2644000R1		
GU5C(+)	18	YL	TXL	239481R1		AS34	-	2644000R1		
GU5D(+)	18	YL	TXL	239481R1		AS34	-	2644000R1		
GU5E(+)	18	YL	TXL	239481R1		AS34	-	2644000R1		
GV5C(+)	18	YL	TXL	239481R1		AS34	-	2644000R1		
GV5D(+)	18	YL	TXL	239481R1		AS34	-	2644000R1		
GV5E(+)	18	YL	TXL	239481R1		AS34	-	2644000R1		
GW5C(+)	18	YL	TXL	239481R1		AS34	-	2644000R1		
GW5D(+)	18	YL	TXL	239481R1		AS34	-	2644000R1		
GW5E(+)	18	YL	TXL	239481R1		AS34	-	2644000R1		
9D5C(-)	18	GN	TXL	239481R1		AS35	-	2644000R1		
9D5E(-)	18	GN	TXL	239481R1		AS35	-	2644000R1		
9K5C(-)	18	GN	TXL	239481R1		AS35	-	2644000R1		
9K5E(-)	18	GN	TXL	239481R1		AS35	-	2644000R1		
9M5C(-)	18	GN	TXL	239481R1		AS35	-	2644000R1		
9M5E(-)	18	GN	TXL	239481R1		AS35	-	2644000R1		

Circuit Number	Gauge	Color	Insulation	Terminal / Splice Number	Connector Part number	Connector Number	Cavity	Seal/Sleeve	Lock 1	Lock 2
9N5C(-)	18	GN	TXL	239481R1		AS35	-	2644000R1		
9N5E(-)	18	GN	TXL	239481R1		AS35	-	2644000R1		
9Q5C(-)	18	GN	TXL	239481R1		AS35	-	2644000R1		
9Q5E(-)	18	GN	TXL	239481R1		AS35	-	2644000R1		
9R5C(-)	18	GN	TXL	239481R1		AS35	-	2644000R1		
9R5D(-)	18	GN	TXL	239481R1		AS35	-	2644000R1		
9R5E(-)	18	GN	TXL	239481R1		AS35	-	2644000R1		
9U5C(-)	18	GN	TXL	239481R1		AS35	-	2644000R1		
9U5E(-)	18	GN	TXL	239481R1		AS35	-	2644000R1		
GB5C(-)	18	GN	TXL	239481R1		AS35	-	2644000R1		
GB5D(-)	18	GN	TXL	239481R1		AS35	-	2644000R1		
GB5E(-)	18	GN	TXL	239481R1		AS35	-	2644000R1		
GE5C(-)	18	GN	TXL	239481R1		AS35	-	2644000R1		
GE5D(-)	18	GN	TXL	239481R1		AS35	-	2644000R1		
GE5E(-)	18	GN	TXL	239481R1		AS35	-	2644000R1		
GG5C(-)	18	GN	TXL	239481R1		AS35	-	2644000R1		
GG5D(-)	18	GN	TXL	239481R1		AS35	-	2644000R1		
GG5E(-)	18	GN	TXL	239481R1		AS35	-	2644000R1		
GH5C(-)	18	GN	TXL	239481R1		AS35	-	2644000R1		
GH5D(-)	18	GN	TXL	239481R1		AS35	-	2644000R1		
GH5E(-)	18	GN	TXL	239481R1		AS35	-	2644000R1		
GJ5C(-)	18	GN	TXL	239481R1		AS35	-	2644000R1		
GJ5D(-)	18	GN	TXL	239481R1		AS35	-	2644000R1		
GJ5E(-)	18	GN	TXL	239481R1		AS35	-	2644000R1		
GK5C(-)	18	GN	TXL	239481R1		AS35	-	2644000R1		
GK5D(-)	18	GN	TXL	239481R1		AS35	-	2644000R1		
GK5E(-)	18	GN	TXL	239481R1		AS35	-	2644000R1		
GL5C(-)	18	GN	TXL	239481R1		AS35	-	2644000R1		
GL5D(-)	18	GN	TXL	239481R1		AS35	-	2644000R1		
GL5E(-)	18	GN	TXL	239481R1		AS35	-	2644000R1		
GM5C(-)	18	GN	TXL	239481R1		AS35	-	2644000R1		
GM5D(-)	18	GN	TXL	239481R1		AS35	-	2644000R1		
GM5E(-)	18	GN	TXL	239481R1		AS35	-	2644000R1		
GN5C(-)	18	GN	TXL	239481R1		AS35	-	2644000R1		
GN5D(-)	18	GN	TXL	239481R1		AS35	-	2644000R1		
GN5E(-)	18	GN	TXL	239481R1		AS35	-	2644000R1		
GP5C(-)	18	GN	TXL	239481R1		AS35	-	2644000R1		
GP5D(-)	18	GN	TXL	239481R1		AS35	-	2644000R1		
GP5E(-)	18	GN	TXL	239481R1		AS35	-	2644000R1		
GQ5C(-)	18	GN	TXL	239481R1		AS35	-	2644000R1		
GQ5D(-)	18	GN	TXL	239481R1		AS35	-	2644000R1		
GQ5E(-)	18	GN	TXL	239481R1		AS35	-	2644000R1		
GT5C(-)	18	GN	TXL	239481R1		AS35	-	2644000R1		
GT5D(-)	18	GN	TXL	239481R1		AS35	-	2644000R1		
GT5E(-)	18	GN	TXL	239481R1		AS35	-	2644000R1		
GU5C(-)	18	GN	TXL	239481R1		AS35	-	2644000R1		
GU5D(-)	18	GN	TXL	239481R1		AS35	-	2644000R1		
GU5E(-)	18	GN	TXL	239481R1		AS35	-	2644000R1		
GV5C(-)	18	GN	TXL	239481R1		AS35	-	2644000R1		
GV5D(-)	18	GN	TXL	239481R1		AS35	-	2644000R1		
GV5E(-)	18	GN	TXL	239481R1		AS35	-	2644000R1		
GW5C(-)	18	GN	TXL	239481R1		AS35	-	2644000R1		
GW5D(-)	18	GN	TXL	239481R1		AS35	-	2644000R1		
GW5E(-)	18	GN	TXL	239481R1		AS35	-	2644000R1		

Circuit Number	Gauge	Color	Insulation	Terminal / Splice Number	Connector Part number	Connector Number	Cavity	Seal/Sleeve	Lock 1	Lock 2
9S5AC(+)	18	YL	TXL	239481R1		AS36	-	2644000R1		
9S5AE(+)	18	YL	TXL	239481R1		AS36	-	2644000R1		
9T5AC(+)	18	YL	TXL	239481R1		AS36	-	2644000R1		
9T5AE(+)	18	YL	TXL	239481R1		AS36	-	2644000R1		
9W5AC(+)	18	YL	TXL	239481R1		AS36	-	2644000R1		
9W5AD(+)	18	YL	TXL	239481R1		AS36	-	2644000R1		
9W5AE(+)	18	YL	TXL	239481R1		AS36	-	2644000R1		
9Y5AC(+)	18	YL	TXL	239481R1		AS36	-	2644000R1		
9Y5AD(+)	18	YL	TXL	239481R1		AS36	-	2644000R1		
9Y5AE(+)	18	YL	TXL	239481R1		AS36	-	2644000R1		
9S5AC(-)	18	GN	TXL	239481R1		AS37	-	2644000R1		
9S5AE(-)	18	GN	TXL	239481R1		AS37	-	2644000R1		
9T5AC(-)	18	GN	TXL	239481R1		AS37	-	2644000R1		
9T5AE(-)	18	GN	TXL	239481R1		AS37	-	2644000R1		
9W5AC(-)	18	GN	TXL	239481R1		AS37	-	2644000R1		
9W5AD(-)	18	GN	TXL	239481R1		AS37	-	2644000R1		
9W5AE(-)	18	GN	TXL	239481R1		AS37	-	2644000R1		
9Y5AC(-)	18	GN	TXL	239481R1		AS37	-	2644000R1		
9Y5AD(-)	18	GN	TXL	239481R1		AS37	-	2644000R1		
9Y5AE(-)	18	GN	TXL	239481R1		AS37	-	2644000R1		
VL58T	12	BN	TXL	239481R1		AS38	-	2644000R1		
VL58TA	12	BN	TXL	239481R1		AS38	-	2644000R1		
VL58TB	12	BN	TXL	239481R1		AS38	-	2644000R1		
VM58T	12	BN	TXL	239481R1		AS38	-	2644000R1		
VM58TA	12	BN	TXL	239481R1		AS38	-	2644000R1		
VM58TB	12	BN	TXL	239481R1		AS38	-	2644000R1		
VP58	12	BN	TXL	239481R1		AS38	-	2644000R1		
VP58BB	12	BN	TXL	239481R1		AS38	-	2644000R1		
VP58T	12	BN	TXL	239481R1		AS38	-	2644000R1		
VR58T	12	BN	TXL	239481R1		AS38	-	2644000R1		
VR58TA	12	BN	TXL	239481R1		AS38	-	2644000R1		
VR58TB	12	BN	TXL	239481R1		AS38	-	2644000R1		
VT58	12	BN	TXL	239481R1		AS38	-	2644000R1		
VT58T	12	BN	TXL	239481R1		AS38	-	2644000R1		
VT58TB	12	BN	TXL	239481R1		AS38	-	2644000R1		
VL68T	12	BN	TXL	239481R1		AS39	-	2644000R1		
VL68TA	12	BN	TXL	239481R1		AS39	-	2644000R1		
VL68TB	12	BN	TXL	239481R1		AS39	-	2644000R1		
VM68T	12	BN	TXL	239481R1		AS39	-	2644000R1		
VM68TA	12	BN	TXL	239481R1		AS39	-	2644000R1		
VM68TB	12	BN	TXL	239481R1		AS39	-	2644000R1		
VP68	12	BN	TXL	239481R1		AS39	-	2644000R1		
VP68BB	12	BN	TXL	239481R1		AS39	-	2644000R1		
VP68T	12	BN	TXL	239481R1		AS39	-	2644000R1		
VR68T	12	BN	TXL	239481R1		AS39	-	2644000R1		
VR68TA	12	BN	TXL	239481R1		AS39	-	2644000R1		
VR68TB	16	BN	TXL	239481R1		AS39	-	2644000R1		
VT68T	12	BN	TXL	239481R1		AS39	-	2644000R1		
VT68TA	12	BN	TXL	239481R1		AS39	-	2644000R1		
VT68TB	12	BN	TXL	239481R1		AS39	-	2644000R1		
9E5BA(-)	18	GN	TXL	239481R1		AS4	-	2644000R1		
9E5BB(-)	18	GN	TXL	239481R1		AS4	-	2644000R1		
9E5BC(-)	18	GN	TXL	239481R1		AS4	-	2644000R1		
9G5BA(-)	18	GN	TXL	239481R1		AS4	-	2644000R1		

Circuit Number	Gauge	Color	Insulation	Terminal / Splice Number	Connector Part number	Connector Number	Cavity	Seal/Sleeve	Lock 1	Lock 2
9G5BB(-)	18	GN	TXL	239481R1		AS4	-	2644000R1		
9G5BC(-)	18	GN	TXL	239481R1		AS4	-	2644000R1		
9H5BA(-)	18	GN	TXL	239481R1		AS4	-	2644000R1		
9H5BB(-)	18	GN	TXL	239481R1		AS4	-	2644000R1		
9H5BC(-)	18	GN	TXL	239481R1		AS4	-	2644000R1		
9L5BA(-)	18	GN	TXL	239481R1		AS4	-	2644000R1		
9L5BB(-)	18	GN	TXL	239481R1		AS4	-	2644000R1		
9L5BC(-)	18	GN	TXL	239481R1		AS4	-	2644000R1		
9V5BA(-)	18	GN	TXL	239481R1		AS4	-	2644000R1		
9V5BB(-)	18	GN	TXL	239481R1		AS4	-	2644000R1		
9V5BC(-)	18	GN	TXL	239481R1		AS4	-	2644000R1		
9Z5BA(-)	18	GN	TXL	239481R1		AS4	-	2644000R1		
9Z5BB(-)	18	GN	TXL	239481R1		AS4	-	2644000R1		
9Z5BC(-)	18	GN	TXL	239481R1		AS4	-	2644000R1		
9E5BA(+)	18	YL	TXL	239481R1		AS5	-	2644000R1		
9E5BB(+)	18	YL	TXL	239481R1		AS5	-	2644000R1		
9E5BC(+)	18	YL	TXL	239481R1		AS5	-	2644000R1		
9G5BA(+)	18	YL	TXL	239481R1		AS5	-	2644000R1		
9G5BB(+)	18	YL	TXL	239481R1		AS5	-	2644000R1		
9G5BC(+)	18	YL	TXL	239481R1		AS5	-	2644000R1		
9H5BA(+)	18	YL	TXL	239481R1		AS5	-	2644000R1		
9H5BB(+)	18	YL	TXL	239481R1		AS5	-	2644000R1		
9H5BC(+)	18	YL	TXL	239481R1		AS5	-	2644000R1		
9L5BA(+)	18	YL	TXL	239481R1		AS5	-	2644000R1		
9L5BB(+)	18	YL	TXL	239481R1		AS5	-	2644000R1		
9L5BC(+)	18	YL	TXL	239481R1		AS5	-	2644000R1		
9V5BA(+)	18	YL	TXL	239481R1		AS5	-	2644000R1		
9V5BB(+)	18	YL	TXL	239481R1		AS5	-	2644000R1		
9V5BC(+)	18	YL	TXL	239481R1		AS5	-	2644000R1		
9Z5BA(+)	18	YL	TXL	239481R1		AS5	-	2644000R1		
9Z5BB(+)	18	YL	TXL	239481R1		AS5	-	2644000R1		
9Z5BC(+)	18	YL	TXL	239481R1		AS5	-	2644000R1		
QV11-GF	18	WH	TXL	239481R1		AS6	-	2644000R1		
QV11-GF1	18	WH	TXL	239481R1		AS6	-	2644000R1		
QV11-GF2	18	WH	TXL	239481R1		AS6	-	2644000R1		
QD105A	16	LTGN	TXL	239481R1		AS7	-	2644000R1		
QD105B	16	LTGN	TXL	239481R1		AS7	-	2644000R1		
QD105C	16	LTGN	TXL	239481R1		AS7	-	2644000R1		
AA63A	16	LTBL	TXL	239481R1		AS8	-	2644000R1		
AA63B	16	DKBL	TXL	239481R1		AS8	-	2644000R1		
AA63C	16	DKBL	TXL	239481R1		AS8	-	2644000R1		
AA9B	18	GY	TXL	239481R1		AS9	-	2644000R1		
AA9BAA	16	GY	TXL	239481R1		AS9	-	2644000R1		
AA9BAB	16	GY	TXL	239481R1		AS9	-	2644000R1		
FB11-GBA	14	WH	TXL	239481R1		BS10	-	2644000R1		
FB11-GCB	14	WH	TXL	239481R1		BS10	-	2644000R1		
FB11-GCC	14	WH	TXL	239481R1		BS10	-	2644000R1		
FB11-GKJ	6	WH	SGX	239481R1		BS10	-	2644000R1		
AD11-G	18	WH	TXL	239481R1		BS11	-	2644000R1		
AD11-GAC	18	WH	TXL	239481R1		BS11	-	2644000R1		
AD11-GK	18	WH	TXL	239481R1		BS11	-	2644000R1		
AD11-GKE	16	WH	TXL	239481R1		BS11	-	2644000R1		
AD11-GX	12	WH	TXL	239481R1		BS11	-	2644000R1		
AD63-GA	16	WH	TXL	239481R1		BS11	-	2644000R1		

Circuit Number	Gauge	Color	Insulation	Terminal / Splice Number	Connector Part number	Connector Number	Cavity	Seal/Sleeve	Lock 1	Lock 2
AD87-GA	18	WH	TXL	239481R1		BS11	-	2644000R1		
AE11-G	18	WH	TXL	239481R1		BS11	-	2644000R1		
AE11-GAC	18	WH	TXL	239481R1		BS11	-	2644000R1		
AE11-GK	18	WH	TXL	239481R1		BS11	-	2644000R1		
AE11-GKE	16	WH	TXL	239481R1		BS11	-	2644000R1		
AE11-GX	12	WH	TXL	239481R1		BS11	-	2644000R1		
AE63-GA	16	WH	TXL	239481R1		BS11	-	2644000R1		
AE87-GA	18	WH	TXL	239481R1		BS11	-	2644000R1		
AE98-G	18	WH	TXL	239481R1		BS11	-	2644000R1		
RC81-G	10	WH	GXL	239481R1		BS12	-	2644000R1		
RC81-GA	12	WH	TXL	239481R1		BS12	-	2644000R1		
RC81-GB	12	WH	TXL	239481R1		BS12	-	2644000R1		
RD81-G	10	WH	GXL	239481R1		BS12	-	2644000R1		
RD81-GA	12	WH	TXL	239481R1		BS12	-	2644000R1		
RD81-GB	12	WH	TXL	239481R1		BS12	-	2644000R1		
RD81-GD	12	WH	TXL	239481R1		BS12	-	2644000R1		
RD81-GDA	12	WH	TXL	239481R1		BS12	-	2644000R1		
9S5AE(+)	18	YL	TXL	239481R1		BS13	-	2644000R1		
9S5AF(+)	20	YL	193	239481R1		BS13	-	2644000R1	1661874C1	
9S5AG(+)	18	YL	TXL	239481R1		BS13	-	2644000R1	2039342C1	
9T5AE(+)	18	YL	TXL	239481R1		BS13	-	2644000R1		
9T5AF(+)	20	YL	193	239481R1		BS13	-	2644000R1		
9T5AG(+)	18	YL	TXL	239481R1		BS13	-	2644000R1		
9W5AE(+)	18	YL	TXL	239481R1		BS13	-	2644000R1		
9W5AF(+)	20	YL	193	239481R1		BS13	-	2644000R1		
9W5AG(+)	18	YL	TXL	239481R1		BS13	-	2644000R1		
9Y5AE(+)	18	YL	TXL	239481R1		BS13	-	2644000R1		
9Y5AF(+)	20	YL	193	239481R1		BS13	-	2644000R1		
9Y5AG(+)	18	YL	TXL	239481R1		BS13	-	2644000R1		
9S5AE(-)	18	GN	TXL	239481R1		BS14	-	2644000R1		
9S5AF(-)	20	GN	193	239481R1		BS14	-	2644000R1	1664408C1	
9S5AG(-)	18	GN	TXL	239481R1		BS14	-	2644000R1	3540454C1	3551897C1
9T5AE(-)	18	GN	TXL	239481R1		BS14	-	2644000R1		
9T5AF(-)	20	GN	193	239481R1		BS14	-	2644000R1		
9T5AG(-)	18	GN	TXL	239481R1		BS14	-	2644000R1		
9W5AE(-)	18	GN	TXL	239481R1		BS14	-	2644000R1		
9W5AF(-)	20	GN	193	239481R1		BS14	-	2644000R1		
9W5AG(-)	18	GN	TXL	239481R1		BS14	-	2644000R1		
9Y5AE(-)	18	GN	TXL	239481R1		BS14	-	2644000R1		
9Y5AF(-)	20	GN	193	239481R1		BS14	-	2644000R1		
9Y5AG(-)	18	GN	TXL	239481R1		BS14	-	2644000R1		
9E5BC(+)	18	YL	TXL	239481R1		BS15	-	2644000R1		
9E5BF(+)	18	YL	TXL	239481R1		BS15	-	2644000R1		
9E5BG(+)	18	YL	TXL	239481R1		BS15	-	2644000R1		
9G5BE(+)	18	YL	TXL	239481R1		BS15	-	2644000R1		
9G5BF(+)	18	YL	TXL	239481R1		BS15	-	2644000R1		
9G5BG(+)	18	YL	TXL	239481R1		BS15	-	2644000R1		
9H5BC(+)	18	YL	TXL	239481R1		BS15	-	2644000R1		
9H5BF(+)	18	YL	TXL	239481R1		BS15	-	2644000R1		
9H5BG(+)	18	YL	TXL	239481R1		BS15	-	2644000R1		
9L5BE(+)	18	YL	TXL	239481R1		BS15	-	2644000R1		
9L5BF(+)	18	YL	TXL	239481R1		BS15	-	2644000R1		
9L5BG(+)	18	YL	TXL	239481R1		BS15	-	2644000R1		
9V5BE(+)	18	YL	TXL	239481R1		BS15	-	2644000R1		

Circuit Number	Gauge	Color	Insulation	Terminal / Splice Number	Connector Part number	Connector Number	Cavity	Seal/Sleeve	Lock 1	Lock 2
9V5BF(+)	18	YL	TXL	239481R1		BS15	-	2644000R1	1667734C1	
9V5BG(+)	18	YL	TXL	239481R1		BS15	-	2644000R1	1671608C1	
9Z5BE(+)	18	YL	TXL	239481R1		BS15	-	2644000R1		
9Z5BF(+)	18	YL	TXL	239481R1		BS15	-	2644000R1		
9Z5BG(+)	18	YL	TXL	239481R1		BS15	-	2644000R1		
9E5BC(-)	18	GN	TXL	239481R1		BS16	-	2644000R1		
9E5BF(-)	18	GN	TXL	239481R1		BS16	-	2644000R1		
9E5BG(-)	18	GN	TXL	239481R1		BS16	-	2644000R1		
9G5BE(-)	18	GN	TXL	239481R1		BS16	-	2644000R1		
9G5BF(-)	18	GN	TXL	239481R1		BS16	-	2644000R1		
9G5BG(-)	18	GN	TXL	239481R1		BS16	-	2644000R1		
9H5BC(-)	18	GN	TXL	239481R1		BS16	-	2644000R1		
9H5BF(-)	18	GN	TXL	239481R1		BS16	-	2644000R1		
9H5BG(-)	18	GN	TXL	239481R1		BS16	-	2644000R1		
9L5BE(-)	18	GN	TXL	239481R1		BS16	-	2644000R1		
9L5BF(-)	18	GN	TXL	239481R1		BS16	-	2644000R1		
9L5BG(-)	18	GN	TXL	239481R1		BS16	-	2644000R1		
9V5BE(-)	18	GN	TXL	239481R1		BS16	-	2644000R1	1661874C1	
9V5BF(-)	18	GN	TXL	239481R1		BS16	-	2644000R1	1667771C1	
9V5BG(-)	18	GN	TXL	239481R1		BS16	-	2644000R1	1664408C1	
9Z5BE(-)	18	GN	TXL	239481R1		BS16	-	2644000R1		
9Z5BF(-)	18	GN	TXL	239481R1		BS16	-	2644000R1		
9Z5BG(-)	18	GN	TXL	239481R1		BS16	-	2644000R1		
XQ94AB	14	GY	GXL	239481R1		BS17	-	2644000R1		
XQ94AC	16	GY	GXL	239481R1		BS17	-	2644000R1		
XQ94SK	16	GY	GXL	239481R1		BS17	-	2644000R1		
8A5BA(+)	18	YL	TXL	239481R1		BS18	-	2644000R1		
8A5BB(+)	18	YL	TXL	239481R1		BS18	-	2644000R1		
8A5BC(+)	18	YL	TXL	239481R1		BS18	-	2644000R1		
9A5BA(+)	18	YL	TXL	239481R1		BS18	-	2644000R1		
9A5BB(+)	18	YL	TXL	239481R1		BS18	-	2644000R1		
9A5BC(+)	18	YL	TXL	239481R1		BS18	-	2644000R1		
9F5BA(+)	18	YL	TXL	239481R1		BS18	-	2644000R1		
9F5BB(+)	18	YL	TXL	239481R1		BS18	-	2644000R1		
9F5BC(+)	18	YL	TXL	239481R1		BS18	-	2644000R1		
9J5BA(+)	18	YL	TXL	239481R1		BS18	-	2644000R1		
9J5BB(+)	18	YL	TXL	239481R1		BS18	-	2644000R1	1675053C1	
9J5BC(+)	18	YL	TXL	239481R1		BS18	-	2644000R1	1667771C1	
9P5BA(+)	18	YL	TXL	239481R1		BS18	-	2644000R1		
9P5BB(+)	18	YL	TXL	239481R1		BS18	-	2644000R1		
9P5BC(+)	18	YL	TXL	239481R1		BS18	-	2644000R1		
9X5BA(+)	18	YL	TXL	239481R1		BS18	-	2644000R1		
9X5BB(+)	18	YL	TXL	239481R1		BS18	-	2644000R1		
9X5BC(+)	18	YL	TXL	239481R1		BS18	-	2644000R1		
GC5BA(+)	18	YL	TXL	239481R1		BS18	-	2644000R1		
GC5BB(+)	18	YL	TXL	239481R1		BS18	-	2644000R1		
GC5BC(+)	18	YL	TXL	239481R1		BS18	-	2644000R1		
GD5BA(+)	18	YL	TXL	239481R1		BS18	-	2644000R1		
GD5BB(+)	18	YL	TXL	239481R1		BS18	-	2644000R1		
GD5BC(+)	18	YL	TXL	239481R1		BS18	-	2644000R1		
8A5BA(-)	18	GN	TXL	239481R1		BS19	-	2644000R1		
8A5BB(-)	18	GN	TXL	239481R1		BS19	-	2644000R1		
8A5BC(-)	18	GN	TXL	239481R1		BS19	-	2644000R1		
9A5BA(-)	18	GN	TXL	239481R1		BS19	-	2644000R1		

Circuit Number	Gauge	Color	Insulation	Terminal / Splice Number	Connector Part number	Connector Number	Cavity	Seal/Sleeve	Lock 1	Lock 2
9A5BB(-)	18	GN	TXL	239481R1		BS19	-	2644000R1		
9A5BC(-)	18	GN	TXL	239481R1		BS19	-	2644000R1		
9F5BA(-)	18	GN	TXL	239481R1		BS19	-	2644000R1		
9F5BB(-)	18	GN	TXL	239481R1		BS19	-	2644000R1		
9F5BC(-)	18	GN	TXL	239481R1		BS19	-	2644000R1		
9J5BA(-)	18	GN	TXL	239481R1		BS19	-	2644000R1	1661376C1	
9J5BB(-)	18	GN	TXL	239481R1		BS19	-	2644000R1	1667734C1	
9J5BC(-)	18	GN	TXL	239481R1		BS19	-	2644000R1	1673791C1	
9P5BA(-)	18	GN	TXL	239481R1		BS19	-	2644000R1		
9P5BB(-)	18	GN	TXL	239481R1		BS19	-	2644000R1		
9P5BC(-)	18	GN	TXL	239481R1		BS19	-	2644000R1		
9X5BA(-)	18	GN	TXL	239481R1		BS19	-	2644000R1		
9X5BB(-)	18	GN	TXL	239481R1		BS19	-	2644000R1		
9X5BC(-)	18	GN	TXL	239481R1		BS19	-	2644000R1		
GC5BA(-)	18	GN	TXL	239481R1		BS19	-	2644000R1		
GC5BB(-)	18	GN	TXL	239481R1		BS19	-	2644000R1		
GC5BC(-)	18	GN	TXL	239481R1		BS19	-	2644000R1		
GD5BA(-)	18	GN	TXL	239481R1		BS19	-	2644000R1		
GD5BB(-)	18	GN	TXL	239481R1		BS19	-	2644000R1		
GD5BC(-)	18	GN	TXL	239481R1		BS19	-	2644000R1		
HB103	6	RD	SGX	239481R1		BS23	-	2644000R1		
HB103A	12	RD	GXL	239481R1		BS23	-	2644000R1		
HB103B	12	RD	GXL	239481R1		BS23	-	2644000R1		
HB103C	12	RD	GXL	239481R1		BS23	-	2644000R1		
HB11FGAP	16	WH	GXL	239481R1		BS24	-	2644000R1		
HB11G-GN	18	WH	GXL	239481R1		BS24	-	2644000R1		
HB11H-GP	18	WH	GXL	239481R1		BS24	-	2644000R1		
HB11J-GR	18	WH	GXL	239481R1		BS24	-	2644000R1		
ZG71BA	16	OR	TXL	239481R1		BS25	-	2644000R1		
ZG71BB	16	OR	TXL	239481R1		BS25	-	2644000R1		
ZG71BC	16	OR	TXL	239481R1		BS25	-	2644000R1		
ZK71BA	16	OR	TXL	239481R1		BS25	-	2644000R1		
ZK71BB	16	LTBL	TXL	239481R1		BS25	-	2644000R1		
ZK71CB	16	OR	TXL	239481R1		BS25	-	2644000R1		
XV57	16	OR	TXL	239481R1		BS26	-	2644000R1		
XV57B	16	OR	TXL	239481R1		BS26	-	2644000R1		
XV57C	18	OR	TXL	239481R1		BS26	-	2644000R1		
XZ57	16	OR	TXL	239481R1		BS26	-	2644000R1		
XZ57B	16	OR	TXL	239481R1		BS26	-	2644000R1		
XZ57D	18	OR	TXL	239481R1		BS26	-	2644000R1		
YH57	16	OR	TXL	239481R1		BS26	-	2644000R1		
YH57B	16	OR	TXL	239481R1		BS26	-	2644000R1		
YH57D	18	OR	TXL	239481R1		BS26	-	2644000R1		
YK57	16	OR	TXL	239481R1		BS26	-	2644000R1		
YK57B	16	OR	TXL	239481R1		BS26	-	2644000R1		
YK57C	18	OR	TXL	239481R1		BS26	-	2644000R1		
YK57D	18	OR	TXL	239481R1		BS26	-	2644000R1		
YQ57	16	OR	TXL	239481R1		BS26	-	2644000R1		
YQ57B	16	OR	TXL	239481R1		BS26	-	2644000R1		
YQ57C	18	OR	TXL	239481R1		BS26	-	2644000R1		
YY57	16	OR	TXL	239481R1		BS26	-	2644000R1		
YY57B	16	OR	TXL	239481R1		BS26	-	2644000R1		
YY57C	18	OR	TXL	239481R1		BS26	-	2644000R1		
YY57D	18	OR	TXL	239481R1		BS26	-	2644000R1		

Circuit Number	Gauge	Color	Insulation	Terminal / Splice Number	Connector Part number	Connector Number	Cavity	Seal/Sleeve	Lock 1	Lock 2
QL11-A	18	WH	TXL	239481R1		BS27	-	2644000R1		
QL11-AA	18	WH	TXL	239481R1		BS27	-	2644000R1		
QL11-AB	18	WH	TXL	239481R1		BS27	-	2644000R1		
XE94-GC	12	WH	GXL	239481R1		BS28	-	2644000R1		
XE94AA	14	GY	GXL	239481R1		BS28	-	2644000R1		
XE94AJ	14	GY	GXL	239481R1		BS28	-	2644000R1		
XE94G1	18	WH	TXL	239481R1		BS28	-	2644000R1		
XE94G2	16	WH	TXL	239481R1		BS28	-	2644000R1		
XE94G6	14	WH	GXL	239481R1		BS28	-	2644000R1		
XE94G7	14	WH	GXL	239481R1		BS28	-	2644000R1		
AD11-GS	12	WH	TXL	239481R1		BS5	-	2644000R1		
AD11-GT	10	WH	GXL	239481R1		BS5	-	2644000R1		
AD11-GX	12	WH	TXL	239481R1		BS5	-	2644000R1		
AE11-GS	12	WH	TXL	239481R1		BS5	-	2644000R1		
AE11-GT	10	WH	GXL	239481R1		BS5	-	2644000R1		
AE11-GX	12	WH	TXL	239481R1		BS5	-	2644000R1		
HJ87A	18	GY	TXL	239481R1		BS6	-	2644000R1		
HJ87B	20	GY	TXL	239481R1		BS6	-	2644000R1		
HJ87BA	18	GY	TXL	239481R1		BS6	-	2644000R1		
HE87A	20	GY	TXL	239481R1		BS7	-	2644000R1		
HE87B	20	GY	TXL	239481R1		BS7	-	2644000R1		
HE87D	18	GY	TXL	239481R1		BS7	-	2644000R1		
FA11-GAA	6	WH	SGX	ABRSPLIC0		BS8	-	N/A		
HB11FGAP	16	WH	GXL	ABRSPLIC0		BS8	-	N/A		
HR11-GCB	18	WH	TXL	ABRSPLIC0		BS8	-	N/A		
HR72-GY	12	WH	TXL	ABRSPLIC0		BS8	-	N/A		
HW11-GCB	18	WH	TXL	ABRSPLIC0		BS8	-	N/A		
HW11-GCK	14	GY	TXL	ABRSPLIC0		BS8	-	N/A		
JA11-GAF	14	WH	TXL	ABRSPLIC0		BS8	-	N/A		
JA11-GUC	20	WH	TXL	ABRSPLIC0		BS8	-	N/A		
JC11-GAC	14	WH	TXL	ABRSPLIC0		BS8	-	N/A		
JC11-GUB	20	WH	TXL	ABRSPLIC0		BS8	-	N/A		
JD11-GCE	14	WH	TXL	ABRSPLIC0		BS8	-	N/A		
JE11-GUB	20	WH	TXL	ABRSPLIC0		BS8	-	N/A		
JE11-GUD	20	WH	TXL	ABRSPLIC0		BS8	-	N/A		
KR59-GBN	16	WH	TXL	ABRSPLIC0		BS8	-	N/A		
KS59-GBP	16	WH	TXL	ABRSPLIC0		BS8	-	N/A		
KT59-GBP	16	WH	TXL	ABRSPLIC0		BS8	-	N/A		
KU59-GBP	16	WH	TXL	ABRSPLIC0		BS8	-	N/A		
MK11-GTS	20	WH	TXL	ABRSPLIC0		BS8	-	N/A		
ND11-GAL	16	WH	TXL	ABRSPLIC0		BS8	-	N/A		
QA11-GAM	18	WH	TXL	ABRSPLIC0		BS8	-	N/A		
QC105-GAP	18	WH	TXL	ABRSPLIC0		BS8	-	N/A		
QE11-GCN	12	WH	TXL	ABRSPLIC0		BS8	-	N/A		
QF11-GCN	12	WH	TXL	ABRSPLIC0		BS8	-	N/A		
QK11-GAN	14	WH	GXL	ABRSPLIC0		BS8	-	N/A		
QS11-GAN	14	WH	GXL	ABRSPLIC0		BS8	-	N/A		
QU11-GAN	14	WH	GXL	ABRSPLIC0		BS8	-	N/A		
QZ11-GAN	18	WH	TXL	ABRSPLIC0		BS8	-	N/A		
QZ11-GAP	14	WH	GXL	ABRSPLIC0		BS8	-	N/A		
RK78-GE	12	WH	TXL	ABRSPLIC0		BS8	-	N/A		
SM86-G	18	WH	TXL	ABRSPLIC0		BS8	-	N/A		
WJ63-GC	12	WH	TXL	ABRSPLIC0		BS8	-	N/A		
YW11-GBJ	12	WH	TXL	ABRSPLIC0		BS8	-	N/A		

Circuit Number	Gauge	Color	Insulation	Terminal / Splice Number	Connector Part number	Connector Number	Cavity	Seal/Sleeve	Lock 1	Lock 2
YZ11-GBJ	12	WH	TXL	ABRSPLIC0		BS8	-	N/A		
KA9	18	GY	TXL	239481R1		CS1	-	2644000R1		
KA9B	18	GY	TXL	239481R1		CS1	-	2644000R1		
KA9BB	18	GY	TXL	239481R1		CS1	-	2644000R1		
XP94AB	16	GY	GXL	239481R1		CS2	-	2644000R1		
XP94AC	16	GY	GXL	239481R1		CS2	-	2644000R1		
XP94SK	16	GY	GXL	239481R1		CS2	-	2644000R1		
9B5F(+)	18	YL	TXL	239481R1		CS3	-	2644000R1	1661874C1	
9B5G(+)	18	YL	TXL	239481R1		CS3	-	2644000R1	1667771C1	
9B5H(+)	18	YL	TXL	239481R1		CS3	-	2644000R1	1664408C1	
9C5F(+)	18	YL	TXL	239481R1		CS3	-	2644000R1		
9C5G(+)	18	YL	TXL	239481R1		CS3	-	2644000R1		
9C5H(+)	18	YL	TXL	239481R1		CS3	-	2644000R1		
9K5E(+)	18	YL	TXL	239481R1		CS3	-	2644000R1		
9K5G(+)	18	YL	TXL	239481R1		CS3	-	2644000R1		
9K5H(+)	18	YL	TXL	239481R1		CS3	-	2644000R1		
9M5E(+)	18	YL	TXL	239481R1		CS3	-	2644000R1		
9M5G(+)	18	YL	TXL	239481R1		CS3	-	2644000R1		
9M5H(+)	18	YL	TXL	239481R1		CS3	-	2644000R1		
9N5E(+)	18	YL	TXL	239481R1		CS3	-	2644000R1		
9N5G(+)	18	YL	TXL	239481R1		CS3	-	2644000R1		
9N5H(+)	18	YL	TXL	239481R1		CS3	-	2644000R1		
9Q5E(+)	18	YL	TXL	239481R1		CS3	-	2644000R1		
9Q5G(+)	18	YL	TXL	239481R1		CS3	-	2644000R1		
9Q5H(+)	18	YL	TXL	239481R1		CS3	-	2644000R1		
9R5E(+)	18	YL	TXL	239481R1		CS3	-	2644000R1		
9R5G(+)	18	YL	TXL	239481R1		CS3	-	2644000R1		
9R5H(+)	18	YL	TXL	239481R1		CS3	-	2644000R1		
9U5E(+)	18	YL	TXL	239481R1		CS3	-	2644000R1		
9U5G(+)	18	YL	TXL	239481R1		CS3	-	2644000R1		
9U5H(+)	18	YL	TXL	239481R1		CS3	-	2644000R1		
GB5E(+)	18	YL	TXL	239481R1		CS3	-	2644000R1		
GB5G(+)	18	YL	TXL	239481R1		CS3	-	2644000R1		
GB5H(+)	18	YL	TXL	239481R1		CS3	-	2644000R1		
GE5E(+)	18	YL	TXL	239481R1		CS3	-	2644000R1		
GE5G(+)	18	YL	TXL	239481R1		CS3	-	2644000R1		
GE5P(+)	18	YL	TXL	239481R1		CS3	-	2644000R1		
GF5F(+)	18	YL	TXL	239481R1		CS3	-	2644000R1		
GF5G(+)	18	YL	TXL	239481R1		CS3	-	2644000R1		
GF5H(+)	18	YL	TXL	239481R1		CS3	-	2644000R1		
GG5E(+)	18	YL	TXL	239481R1		CS3	-	2644000R1		
GG5G(+)	18	YL	TXL	239481R1		CS3	-	2644000R1		
GG5H(+)	18	YL	TXL	239481R1		CS3	-	2644000R1		
GH5E(+)	18	YL	TXL	239481R1		CS3	-	2644000R1		
GH5G(+)	18	YL	TXL	239481R1		CS3	-	2644000R1		
GH5P(+)	18	YL	TXL	239481R1		CS3	-	2644000R1		
GJ5E(+)	18	YL	TXL	239481R1		CS3	-	2644000R1		
GJ5G(+)	18	YL	TXL	239481R1		CS3	-	2644000R1		
GJ5H(+)	18	YL	TXL	239481R1		CS3	-	2644000R1		
GK5E(+)	18	YL	TXL	239481R1		CS3	-	2644000R1		
GK5G(+)	18	YL	TXL	239481R1		CS3	-	2644000R1		
GK5P(+)	18	YL	TXL	239481R1		CS3	-	2644000R1		
GL5E(+)	18	YL	TXL	239481R1		CS3	-	2644000R1		
GL5G(+)	18	YL	TXL	239481R1		CS3	-	2644000R1		

Circuit Number	Gauge	Color	Insulation	Terminal / Splice Number	Connector Part number	Connector Number	Cavity	Seal/Sleeve	Lock 1	Lock 2
GL5H(+)	18	YL	TXL	239481R1		CS3	-	2644000R1		
GM5E(+)	18	YL	TXL	239481R1		CS3	-	2644000R1		
GM5G(+)	18	YL	TXL	239481R1		CS3	-	2644000R1		
GM5H(+)	18	YL	TXL	239481R1		CS3	-	2644000R1		
GN5E(+)	18	YL	TXL	239481R1		CS3	-	2644000R1		
GN5G(+)	18	YL	TXL	239481R1		CS3	-	2644000R1		
GN5H(+)	18	YL	TXL	239481R1		CS3	-	2644000R1		
GP5E(+)	18	YL	TXL	239481R1		CS3	-	2644000R1		
GP5G(+)	18	YL	TXL	239481R1		CS3	-	2644000R1		
GP5H(+)	18	YL	TXL	239481R1		CS3	-	2644000R1		
GQ5E(+)	18	YL	TXL	239481R1		CS3	-	2644000R1		
GQ5G(+)	18	YL	TXL	239481R1		CS3	-	2644000R1		
GQ5P(+)	18	YL	TXL	239481R1		CS3	-	2644000R1		
GT5E(+)	18	YL	TXL	239481R1		CS3	-	2644000R1		
GT5G(+)	18	YL	TXL	239481R1		CS3	-	2644000R1		
GT5H(+)	18	YL	TXL	239481R1		CS3	-	2644000R1		
GU5E(+)	18	YL	TXL	239481R1		CS3	-	2644000R1		
GU5G(+)	18	YL	TXL	239481R1		CS3	-	2644000R1		
GU5H(+)	18	YL	TXL	239481R1		CS3	-	2644000R1		
GV5E(+)	18	YL	TXL	239481R1		CS3	-	2644000R1		
GV5G(+)	18	YL	TXL	239481R1		CS3	-	2644000R1		
GV5H(+)	18	YL	TXL	239481R1		CS3	-	2644000R1		
9B5F(-)	18	GN	TXL	239481R1		CS4	-	2644000R1	1667734C1	
9B5G(-)	18	GN	TXL	239481R1		CS4	-	2644000R1		
9B5H(-)	18	GN	TXL	239481R1		CS4	-	2644000R1	2033927C1	
9C5F(-)	18	GN	TXL	239481R1		CS4	-	2644000R1		
9C5G(-)	18	GN	TXL	239481R1		CS4	-	2644000R1		
9C5H(-)	18	GN	TXL	239481R1		CS4	-	2644000R1		
9K5E(-)	18	GN	TXL	239481R1		CS4	-	2644000R1		
9K5G(-)	18	GN	TXL	239481R1		CS4	-	2644000R1		
9K5H(-)	18	GN	TXL	239481R1		CS4	-	2644000R1		
9M5E(-)	18	GN	TXL	239481R1		CS4	-	2644000R1		
9M5G(-)	18	GN	TXL	239481R1		CS4	-	2644000R1		
9M5H(-)	18	GN	TXL	239481R1		CS4	-	2644000R1		
9N5E(-)	18	GN	TXL	239481R1		CS4	-	2644000R1		
9N5G(-)	18	GN	TXL	239481R1		CS4	-	2644000R1		
9N5H(-)	18	GN	TXL	239481R1		CS4	-	2644000R1		
9Q5E(-)	18	GN	TXL	239481R1		CS4	-	2644000R1		
9Q5G(-)	18	GN	TXL	239481R1		CS4	-	2644000R1		
9Q5H(-)	18	GN	TXL	239481R1		CS4	-	2644000R1		
9R5E(-)	18	GN	TXL	239481R1		CS4	-	2644000R1		
9R5G(-)	18	GN	TXL	239481R1		CS4	-	2644000R1		
9R5H(-)	18	GN	TXL	239481R1		CS4	-	2644000R1		
9U5E(-)	18	GN	TXL	239481R1		CS4	-	2644000R1		
9U5G(-)	18	GN	TXL	239481R1		CS4	-	2644000R1		
9U5H(-)	18	GN	TXL	239481R1		CS4	-	2644000R1		
GB5E(-)	18	GN	TXL	239481R1		CS4	-	2644000R1		
GB5G(-)	18	GN	TXL	239481R1		CS4	-	2644000R1		
GB5H(-)	18	GN	TXL	239481R1		CS4	-	2644000R1		
GE5E(-)	18	GN	TXL	239481R1		CS4	-	2644000R1		
GE5G(-)	18	GN	TXL	239481R1		CS4	-	2644000R1		
GE5P(-)	18	GN	TXL	239481R1		CS4	-	2644000R1		
GF5F(-)	18	GN	TXL	239481R1		CS4	-	2644000R1		
GF5G(-)	18	GN	TXL	239481R1		CS4	-	2644000R1		

Circuit Number	Gauge	Color	Insulation	Terminal / Splice Number	Connector Part number	Connector Number	Cavity	Seal/Sleeve	Lock 1	Lock 2
GF5H(-)	18	GN	TXL	239481R1		CS4	-	2644000R1		
GG5E(-)	18	GN	TXL	239481R1		CS4	-	2644000R1		
GG5G(-)	18	GN	TXL	239481R1		CS4	-	2644000R1		
GG5H(-)	18	GN	TXL	239481R1		CS4	-	2644000R1		
GH5E(-)	18	GN	TXL	239481R1		CS4	-	2644000R1		
GH5G(-)	18	GN	TXL	239481R1		CS4	-	2644000R1		
GH5P(-)	18	GN	TXL	239481R1		CS4	-	2644000R1		
GJ5E(-)	18	GN	TXL	239481R1		CS4	-	2644000R1		
GJ5G(-)	18	GN	TXL	239481R1		CS4	-	2644000R1		
GJ5H(-)	18	GN	TXL	239481R1		CS4	-	2644000R1		
GK5E(-)	18	GN	TXL	239481R1		CS4	-	2644000R1		
GK5G(-)	18	GN	TXL	239481R1		CS4	-	2644000R1		
GK5P(-)	18	GN	TXL	239481R1		CS4	-	2644000R1		
GL5E(-)	18	GN	TXL	239481R1		CS4	-	2644000R1		
GL5G(-)	18	GN	TXL	239481R1		CS4	-	2644000R1		
GL5H(-)	18	GN	TXL	239481R1		CS4	-	2644000R1		
GM5E(-)	18	GN	TXL	239481R1		CS4	-	2644000R1		
GM5G(-)	18	GN	TXL	239481R1		CS4	-	2644000R1		
GM5H(-)	18	GN	TXL	239481R1		CS4	-	2644000R1		
GN5E(-)	18	GN	TXL	239481R1		CS4	-	2644000R1		
GN5G(-)	18	GN	TXL	239481R1		CS4	-	2644000R1		
GN5H(-)	18	GN	TXL	239481R1		CS4	-	2644000R1		
GP5E(-)	18	GN	TXL	239481R1		CS4	-	2644000R1		
GP5G(-)	18	GN	TXL	239481R1		CS4	-	2644000R1		
GP5H(-)	18	GN	TXL	239481R1		CS4	-	2644000R1		
GQ5E(-)	18	GN	TXL	239481R1		CS4	-	2644000R1		
GQ5G(-)	18	GN	TXL	239481R1		CS4	-	2644000R1		
GQ5P(-)	18	GN	TXL	239481R1		CS4	-	2644000R1		
GT5E(-)	18	GN	TXL	239481R1		CS4	-	2644000R1		
GT5G(-)	18	GN	TXL	239481R1		CS4	-	2644000R1		
GT5H(-)	18	GN	TXL	239481R1		CS4	-	2644000R1		
GU5E(-)	18	GN	TXL	239481R1		CS4	-	2644000R1		
GU5G(-)	18	GN	TXL	239481R1		CS4	-	2644000R1		
GU5H(-)	18	GN	TXL	239481R1		CS4	-	2644000R1		
GV5E(-)	18	GN	TXL	239481R1		CS4	-	2644000R1		
GV5G(-)	18	GN	TXL	239481R1		CS4	-	2644000R1		
GV5H(-)	18	GN	TXL	239481R1		CS4	-	2644000R1		
QA23EA	18	TN	TXL	239481R1		DS1	-	2644000R1		
QA23EC	18	TN	TXL	239481R1		DS1	-	2644000R1		
KS59-GA	18	WH	TXL	239481R1		DS10	-	2644000R1		
KS59-GB	18	WH	TXL	239481R1		DS10	-	2644000R1		
KS59-GBA	18	WH	TXL	239481R1		DS10	-	2644000R1		
KS59-GBP	16	WH	TXL	239481R1		DS10	-	2644000R1		
KS59-GDA	18	WH	TXL	239481R1		DS10	-	2644000R1		
KT59-GA	18	WH	TXL	239481R1		DS10	-	2644000R1		
KT59-GB	18	WH	TXL	239481R1		DS10	-	2644000R1		
KT59-GBA	18	WH	TXL	239481R1		DS10	-	2644000R1		
KT59-GBP	16	WH	TXL	239481R1		DS10	-	2644000R1		
KU59-GA	18	WH	TXL	239481R1		DS10	-	2644000R1		
KU59-GB	18	WH	TXL	239481R1		DS10	-	2644000R1		
KU59-GBP	16	WH	TXL	239481R1		DS10	-	2644000R1		
KU59-GDA	18	WH	TXL	239481R1		DS10	-	2644000R1		
KU59-GDB	18	WH	TXL	239481R1		DS10	-	2644000R1		
KU59GEA	18	WH	TXL	239481R1		DS10	-	2644000R1		

Circuit Number	Gauge	Color	Insulation	Terminal / Splice Number	Connector Part number	Connector Number	Cavity	Seal/Sleeve	Lock 1	Lock 2
KS59SB	18	GY	TXL	239481R1		DS11	-	2644000R1		
KS59TA	18	GY	TXL	239481R1		DS11	-	2644000R1		
KS59U	18	GY	TXL	239481R1		DS11	-	2644000R1		
KT59SB	18	GY	TXL	239481R1		DS11	-	2644000R1		
KT59TA	18	GY	TXL	239481R1		DS11	-	2644000R1		
KU59SA	18	GY	TXL	239481R1		DS11	-	2644000R1		
KU59SB	18	GY	TXL	239481R1		DS11	-	2644000R1		
KU59SC	18	GY	TXL	239481R1		DS11	-	2644000R1		
KU59TA	18	GY	TXL	239481R1		DS11	-	2644000R1		
CD14C	8	RD	TXL	239481R1		DS12	-	2644000R1		
CD14D	4	RD	SGX	239481R1		DS12	-	2644000R1		
CD14DB	10	RD	TXL	239481R1		DS12	-	2644000R1		
CD14DC	8	RD	TXL	239481R1		DS12	-	2644000R1		
YD67COG	18	GY	TXL	239481R1		DS13	-	2644000R1		
YD67COG1	18	GY	TXL	239481R1		DS13	-	2644000R1		
YD67COG2	18	GY	TXL	239481R1		DS13	-	2644000R1		
YD11-GBP	18	WH	TXL	239481R1		DS14	-	2644000R1		
YD11COG	18	WH	TXL	239481R1		DS14	-	2644000R1		
YD11COG1	18	WH	TXL	239481R1		DS14	-	2644000R1		
YD67NB	16	VT	TXL	239481R1		DS14	-	2644000R1		
CD14	4	RD	SGX	239481R1		DS15	-	2644000R1		
CD14A	6	RD	SGX	239481R1		DS15	-	2644000R1		
CD14B	8	RD	TXL	239481R1		DS15	-	2644000R1		
CD14DA	10	RD	TXL	239481R1		DS15	-	2644000R1		
AA82	16	GY	TXL	239481R1		DS17	-	2644000R1		
AA82D	16	GY	TXL	239481R1		DS17	-	2644000R1		
EJ12C	18	LTBL	TXL	239481R1		DS18	-	2644000R1		
QA13A	18	PK	TXL	239481R1		DS2	-	2644000R1		
QA13DB	18	PK	TXL	239481R1		DS2	-	2644000R1		
ZC71	16	OR	TXL	239481R1		DS24	-	2644000R1		
ZJ71	16	OR	TXL	239481R1		DS24	-	2644000R1		
TA75A	20	LTGN	TXL	239481R1		DS28	-	2644000R1		
TA75AA	18	LTGN	TXL	239481R1		DS28	-	2644000R1		
TA75AB	18	LTGN	TXL	239481R1		DS28	-	2644000R1		
QA23BA	18	TN	TXL	239481R1		DS3	-	2644000R1		
QA23BD	18	TN	TXL	239481R1		DS3	-	2644000R1		
9B5H(+)	18	YL	TXL	239481R1		DS30	-	2644000R1	2033927C1	
9B5J(+)	18	YL	TXL	239481R1		DS30	-	2644000R1	2039342C1	
9B5K(+)	18	YL	TXL	239481R1		DS30	-	2644000R1	3518174C1	
9M5H(+)	18	YL	TXL	239481R1		DS30	-	2644000R1		
9M5J(+)	18	YL	TXL	239481R1		DS30	-	2644000R1		
9M5K(+)	18	YL	TXL	239481R1		DS30	-	2644000R1		
9N5H(+)	18	YL	TXL	239481R1		DS30	-	2644000R1		
9N5J(+)	18	YL	TXL	239481R1		DS30	-	2644000R1		
9N5K(+)	18	YL	TXL	239481R1		DS30	-	2644000R1		
9Q5H(+)	18	YL	TXL	239481R1		DS30	-	2644000R1		
9Q5J(+)	18	YL	TXL	239481R1		DS30	-	2644000R1		
9Q5K(+)	18	YL	TXL	239481R1		DS30	-	2644000R1		
GB5H(+)	18	YL	TXL	239481R1		DS30	-	2644000R1		
GB5J(+)	18	YL	TXL	239481R1		DS30	-	2644000R1		
GB5K(+)	18	YL	TXL	239481R1		DS30	-	2644000R1		
GF5H(+)	18	YL	TXL	239481R1		DS30	-	2644000R1		
GF5J(+)	18	YL	TXL	239481R1		DS30	-	2644000R1		
GF5K(+)	18	YL	TXL	239481R1		DS30	-	2644000R1		

Circuit Number	Gauge	Color	Insulation	Terminal / Splice Number	Connector Part number	Connector Number	Cavity	Seal/Sleeve	Lock 1	Lock 2
GG5H(+)	18	YL	TXL	239481R1		DS30	-	2644000R1		
GG5J(+)	18	YL	TXL	239481R1		DS30	-	2644000R1		
GG5P(+)	18	YL	TXL	239481R1		DS30	-	2644000R1		
GJ5H(+)	18	YL	TXL	239481R1		DS30	-	2644000R1		
GJ5J(+)	18	YL	TXL	239481R1		DS30	-	2644000R1		
GJ5P(+)	18	YL	TXL	239481R1		DS30	-	2644000R1		
GL5H(+)	18	YL	TXL	239481R1		DS30	-	2644000R1		
GL5J(+)	18	YL	TXL	239481R1		DS30	-	2644000R1		
GL5P(+)	18	YL	TXL	239481R1		DS30	-	2644000R1		
GN5H(+)	18	YL	TXL	239481R1		DS30	-	2644000R1		
GN5J(+)	18	YL	TXL	239481R1		DS30	-	2644000R1		
GN5K(+)	18	YL	TXL	239481R1		DS30	-	2644000R1		
GP5H(+)	18	YL	TXL	239481R1		DS30	-	2644000R1		
GP5J(+)	18	YL	TXL	239481R1		DS30	-	2644000R1		
GP5K(+)	18	YL	TXL	239481R1		DS30	-	2644000R1		
GT5H(+)	18	YL	TXL	239481R1		DS30	-	2644000R1		
GT5J(+)	18	YL	TXL	239481R1		DS30	-	2644000R1		
GT5P(+)	18	YL	TXL	239481R1		DS30	-	2644000R1		
GU5H(+)	18	YL	TXL	239481R1		DS30	-	2644000R1		
GU5J(+)	18	YL	TXL	239481R1		DS30	-	2644000R1		
GU5P(+)	18	YL	TXL	239481R1		DS30	-	2644000R1		
GV5H(+)	18	YL	TXL	239481R1		DS30	-	2644000R1		
GV5J(+)	18	YL	TXL	239481R1		DS30	-	2644000R1		
GV5P(+)	18	YL	TXL	239481R1		DS30	-	2644000R1		
KA60B	18	GY	TXL	239481R1		DS31	-	2644000R1		
KA9A	18	GY	TXL	239481R1		DS31	-	2644000R1		
KA9AA	18	GY	TXL	239481R1		DS31	-	2644000R1		
KA9C	18	GY	TXL	239481R1		DS31	-	2644000R1		
9B5H(-)	18	GN	TXL	239481R1		DS32	-	2644000R1	2039342C1	
9B5J(-)	18	GN	TXL	239481R1		DS32	-	2644000R1		
9B5K(-)	18	GN	TXL	239481R1		DS32	-	2644000R1	1661874C1	
9M5H(-)	18	GN	TXL	239481R1		DS32	-	2644000R1		
9M5J(-)	18	GN	TXL	239481R1		DS32	-	2644000R1		
9M5K(-)	18	GN	TXL	239481R1		DS32	-	2644000R1		
9N5H(-)	18	GN	TXL	239481R1		DS32	-	2644000R1		
9N5J(-)	18	GN	TXL	239481R1		DS32	-	2644000R1		
9N5K(-)	18	GN	TXL	239481R1		DS32	-	2644000R1		
9Q5H(-)	18	GN	TXL	239481R1		DS32	-	2644000R1		
9Q5J(-)	18	GN	TXL	239481R1		DS32	-	2644000R1		
9Q5K(-)	18	GN	TXL	239481R1		DS32	-	2644000R1		
GB5H(-)	18	GN	TXL	239481R1		DS32	-	2644000R1		
GB5J(-)	18	GN	TXL	239481R1		DS32	-	2644000R1		
GB5K(-)	18	GN	TXL	239481R1		DS32	-	2644000R1		
GF5H(-)	18	GN	TXL	239481R1		DS32	-	2644000R1		
GF5J(-)	18	GN	TXL	239481R1		DS32	-	2644000R1		
GF5K(-)	18	GN	TXL	239481R1		DS32	-	2644000R1		
GG5H(-)	18	GN	TXL	239481R1		DS32	-	2644000R1		
GG5J(-)	18	GN	TXL	239481R1		DS32	-	2644000R1		
GG5P(-)	18	GN	TXL	239481R1		DS32	-	2644000R1		
GJ5H(-)	18	GN	TXL	239481R1		DS32	-	2644000R1		
GJ5J(-)	18	GN	TXL	239481R1		DS32	-	2644000R1		
GJ5P(-)	18	GN	TXL	239481R1		DS32	-	2644000R1		
GL5H(-)	18	GN	TXL	239481R1		DS32	-	2644000R1		
GL5J(-)	18	GN	TXL	239481R1		DS32	-	2644000R1		

Circuit Number	Gauge	Color	Insulation	Terminal / Splice Number	Connector Part number	Connector Number	Cavity	Seal/Sleeve	Lock 1	Lock 2
GL5P(-)	18	GN	TXL	239481R1		DS32	-	2644000R1		
GN5H(-)	18	GN	TXL	239481R1		DS32	-	2644000R1		
GN5J(-)	18	GN	TXL	239481R1		DS32	-	2644000R1		
GN5K(-)	18	GN	TXL	239481R1		DS32	-	2644000R1		
GP5H(-)	18	GN	TXL	239481R1		DS32	-	2644000R1		
GP5J(-)	18	GN	TXL	239481R1		DS32	-	2644000R1		
GP5K(-)	18	GN	TXL	239481R1		DS32	-	2644000R1		
GT5H(-)	18	GN	TXL	239481R1		DS32	-	2644000R1		
GT5J(-)	18	GN	TXL	239481R1		DS32	-	2644000R1		
GT5P(-)	18	GN	TXL	239481R1		DS32	-	2644000R1		
GU5H(-)	18	GN	TXL	239481R1		DS32	-	2644000R1		
GU5J(-)	18	GN	TXL	239481R1		DS32	-	2644000R1		
GU5P(-)	18	GN	TXL	239481R1		DS32	-	2644000R1		
GV5H(-)	18	GN	TXL	239481R1		DS32	-	2644000R1		
GV5J(-)	18	GN	TXL	239481R1		DS32	-	2644000R1		
GV5P(-)	18	GN	TXL	239481R1		DS32	-	2644000R1		
AD11-GKD	18	WH	TXL	239481R1		DS33	-	2644000R1		
AD11-GR	18	WH	TXL	239481R1		DS33	-	2644000R1		
AD11-GS	12	WH	TXL	239481R1		DS33	-	2644000R1		
AD11-GY	18	WH	TXL	239481R1		DS33	-	2644000R1		
AD11-GZ	18	WH	TXL	239481R1		DS33	-	2644000R1		
AD60-G	18	WH	TXL	239481R1		DS33	-	2644000R1		
AD74-G	20	WH	TXL	239481R1		DS33	-	2644000R1		
AD74-GA	20	WH	TXL	239481R1		DS33	-	2644000R1		
AD75-G	12	WH	TXL	239481R1		DS33	-	2644000R1		
AD82-G	16	WH	TXL	239481R1		DS33	-	2644000R1		
AE11-GKD	18	WH	TXL	239481R1		DS33	-	2644000R1		
AE11-GR	18	WH	TXL	239481R1		DS33	-	2644000R1		
AE11-GS	12	WH	TXL	239481R1		DS33	-	2644000R1		
AE11-GY	18	WH	TXL	239481R1		DS33	-	2644000R1		
AE11-GZ	18	WH	TXL	239481R1		DS33	-	2644000R1		
AE60-G	18	WH	TXL	239481R1		DS33	-	2644000R1		
AE74-G	20	WH	TXL	239481R1		DS33	-	2644000R1		
AE74-GA	20	WH	TXL	239481R1		DS33	-	2644000R1		
AE75-G	12	WH	TXL	239481R1		DS33	-	2644000R1		
AE82-G	16	WH	TXL	239481R1		DS33	-	2644000R1		
XX24EAL	18	BN	TXL	239481R1		DS35	-	2644000R1		
XX44A	18	GY	TXL	239481R1		DS35	-	2644000R1		
XX44AA	18	GY	TXL	239481R1		DS35	-	2644000R1		
QU11-GA	18	WH	TXL	239481R1		DS4	-	2644000R1		
QU11-GA1	18	WH	TXL	239481R1		DS4	-	2644000R1		
QU11-GA2	18	WH	TXL	239481R1		DS4	-	2644000R1		
KS59KE	18	GY	TXL	239481R1		DS42	-	2644000R1		
KT59KE	18	GY	TXL	239481R1		DS42	-	2644000R1		
KU59KE	18	GY	TXL	239481R1		DS42	-	2644000R1		
KS59JB	18	GY	TXL	239481R1		DS43	-	2644000R1		
KS59JD	18	GY	TXL	239481R1		DS43	-	2644000R1		
KT59JB	18	GY	TXL	239481R1		DS43	-	2644000R1		
KT59JD	18	GY	TXL	239481R1		DS43	-	2644000R1		
KU59JB	18	GY	TXL	239481R1		DS43	-	2644000R1		
KU59JD	18	GY	TXL	239481R1		DS43	-	2644000R1		
KS62DA	16	DKBL	TXL	239481R1		DS44	-	2644000R1		
KS62P	18	DKBL	TXL	239481R1		DS44	-	2644000R1		
KS62Q	18	DKBL	TXL	239481R1		DS44	-	2644000R1		

Circuit Number	Gauge	Color	Insulation	Terminal / Splice Number	Connector Part number	Connector Number	Cavity	Seal/Sleeve	Lock 1	Lock 2
KS62R	18	DKBL	TXL	239481R1		DS44	-	2644000R1		
KT62D	16	DKBL	TXL	239481R1		DS44	-	2644000R1		
KT62DA	16	DKBL	TXL	239481R1		DS44	-	2644000R1		
KT62DB	16	DKBL	TXL	239481R1		DS44	-	2644000R1		
KU62DA	16	DKBL	TXL	239481R1		DS44	-	2644000R1		
KU62P	18	DKBL	TXL	239481R1		DS44	-	2644000R1		
KU62Q	18	DKBL	TXL	239481R1		DS44	-	2644000R1		
KU62R	18	DKBL	TXL	239481R1		DS44	-	2644000R1		
KU62S	18	DKBL	TXL	239481R1		DS44	-	2644000R1		
QL13A	18	RD	TXL	239481R1		DS45	-	2644000R1		
QL13AA	18	RD	TXL	239481R1		DS45	-	2644000R1		
QL13RB	18	RD	TXL	239481R1		DS45	-	2644000R1		
QU14R	18	RD	TXL	239481R1		DS45	-	2644000R1		
QU14RA	18	RD	TXL	239481R1		DS45	-	2644000R1		
QU14RB	18	RD	TXL	239481R1		DS45	-	2644000R1		
QU14RC	18	RD	TXL	239481R1		DS45	-	2644000R1		
QU11-GB	18	WH	TXL	239481R1		DS46	-	2644000R1		
QU11-GB1	18	WH	TXL	239481R1		DS46	-	2644000R1		
QU11-GB2	18	WH	TXL	239481R1		DS46	-	2644000R1		
NP14DCA	18	RD	TXL	239481R1		DS47	-	2644000R1		
NP14DCE	18	RD	GXL	239481R1		DS47	-	2644000R1		
NP14DCF	18	RD	TXL	239481R1		DS47	-	2644000R1		
NP13DCB	18	PK	TXL	239481R1		DS48	-	2644000R1		
NP13DCG	18	PK	TXL	239481R1		DS48	-	2644000R1		
NP13DCH	18	PK	TXL	239481R1		DS48	-	2644000R1		
NP11-GA	18	WH	TXL	239481R1		DS49	-	2644000R1		
NP11-GC	18	WH	TXL	239481R1		DS49	-	2644000R1		
NP11-GD	18	WH	TXL	239481R1		DS49	-	2644000R1		
AA73A	20	LTGN	TXL	239481R1		DS5	-	2644000R1		
AA73B	20	LTGN	TXL	239481R1		DS5	-	2644000R1		
AA73C	20	LTGN	TXL	239481R1		DS5	-	2644000R1		
CD14A	6	RD	SGX	239481R1		DS50	-	2644000R1		
CD14AB	12	RD	TXL	239481R1		DS50	-	2644000R1		
CD14AC	12	RD	TXL	239481R1		DS50	-	2644000R1		
CD14AD	12	RD	TXL	239481R1		DS50	-	2644000R1		
CD14AE	12	RD	TXL	239481R1		DS50	-	2644000R1		
CD14AF	12	RD	TXL	239481R1		DS50	-	2644000R1		
CD14AG	12	RD	TXL	239481R1		DS50	-	2644000R1		
CD14B	8	RD	TXL	239481R1		DS51	-	2644000R1		
CD14BA	12	RD	TXL	239481R1		DS51	-	2644000R1		
CD14BB	12	RD	TXL	239481R1		DS51	-	2644000R1		
CD14BC	12	RD	TXL	239481R1		DS51	-	2644000R1		
CD14BD	12	RD	TXL	239481R1		DS51	-	2644000R1		
CD14BE	12	RD	TXL	239481R1		DS51	-	2644000R1		
CD14BG	12	RD	TXL	239481R1		DS51	-	2644000R1		
CD14CA	8	RD	TXL	239481R1		DS53	-	2644000R1		
CD14CB	12	RD	TXL	239481R1		DS53	-	2644000R1		
CD14CC	12	RD	TXL	239481R1		DS53	-	2644000R1		
CD14CD	12	RD	TXL	239481R1		DS53	-	2644000R1		
CD14CE	12	RD	TXL	239481R1		DS53	-	2644000R1		
CD14CF	12	RD	TXL	239481R1		DS53	-	2644000R1		
CD14CG	12	RD	TXL	239481R1		DS53	-	2644000R1		
CD14CH	12	RD	TXL	239481R1		DS53	-	2644000R1		
CD14CJ	12	RD	TXL	239481R1		DS53	-	2644000R1		

Circuit Number	Gauge	Color	Insulation	Terminal / Splice Number	Connector Part number	Connector Number	Cavity	Seal/Sleeve	Lock 1	Lock 2
EH12E	18	LTBL	TXL	239481R1		DS54	-	2644000R1		
EH12F	12	LTBL	TXL	239481R1		DS54	-	2644000R1		
EH12G	16	LTBL	TXL	239481R1		DS54	-	2644000R1		
EH12H	16	LTBL	TXL	239481R1		DS54	-	2644000R1		
EH12J	18	LTBL	TXL	239481R1		DS54	-	2644000R1		
EJ12E	18	LTBL	TXL	239481R1		DS54	-	2644000R1		
EJ12F	12	LTBL	TXL	239481R1		DS54	-	2644000R1		
EJ12G	16	LTBL	TXL	239481R1		DS54	-	2644000R1		
EJ12H	16	LTBL	TXL	239481R1		DS54	-	2644000R1		
EJ12J	18	LTBL	TXL	239481R1		DS54	-	2644000R1		
DJ13DH	8	RD	TXL	239481R1		DS55	-	2644000R1		
DJ13DJ	12	PK	TXL	239481R1		DS55	-	2644000R1		
DJ13DK	12	PK	TXL	239481R1		DS55	-	2644000R1		
DJ13DL	12	PK	TXL	239481R1		DS55	-	2644000R1		
DJ13DM	12	PK	TXL	239481R1		DS55	-	2644000R1		
DJ13DN	12	PK	TXL	239481R1		DS55	-	2644000R1		
DJ13DP	12	PK	TXL	239481R1		DS55	-	2644000R1		
DJ13DT	12	PK	TXL	239481R1		DS55	-	2644000R1		
TJ70E	10	RD	TXL	239481R1		DS56	-	2644000R1		
TJ70ER	18	RD	TXL	239481R1		DS56	-	2644000R1		
TJ70T	10	RD	TXL	239481R1		DS56	-	2644000R1		
UF92#163A	16	TN	TXL	239481R1		DS57	-	2644000R1		
UF92#163B	16	TN	TXL	239481R1		DS57	-	2644000R1		
UF92#163C	16	TN	TXL	239481R1		DS57	-	2644000R1		
VB62RA	18	TN	TXL	239481R1		DS58	-	2644000R1		
VB62RB	18	TN	TXL	239481R1		DS58	-	2644000R1		
VB62RC	18	TN	TXL	239481R1		DS58	-	2644000R1		
DE13DD	18	PK	TXL	239481R1		DS59	-	2644000R1		
DE13DE	18	PK	TXL	239481R1		DS59	-	2644000R1		
DF13DD	18	PK	TXL	239481R1		DS59	-	2644000R1		
DF13DE	18	PK	TXL	239481R1		DS59	-	2644000R1		
ZP68	16	BN	TXL	239481R1		DS6	-	2644000R1		
ZP68A	16	BN	TXL	239481R1		DS6	-	2644000R1		
ZP68TB	16	BN	TXL	239481R1		DS6	-	2644000R1		
VJ70D	18	OR	TXL	239481R1		DS60	-	2644000R1		
VJ70DA	18	OR	TXL	239481R1		DS60	-	2644000R1		
VJ70DB	18	OR	TXL	239481R1		DS60	-	2644000R1		
MM14EA	14	RD	GXL	239481R1		DS61	-	2644000R1		
MM14EB	18	RD	GXL	239481R1		DS61	-	2644000R1		
MM14ED	18	RD	GXL	239481R1		DS61	-	2644000R1		
VQ042DAL	12	OR	GXL	239481R1		DS62	-	2644000R1		
VQ04DAL	14	RD	TXL	239481R1		DS62	-	2644000R1		
VQ70TA	12	OR	TXL	239481R1		DS62	-	2644000R1		
VQ70TB	12	OR	TXL	239481R1		DS62	-	2644000R1		
RN78RC	18	LTGN	TXL	239481R1		DS63	-	2644000R1		
PC92-GAJ	18	WH	TXL	239481R1		DS64	-	2644000R1		
PC92-GN1	18	WH	GXL	239481R1		DS64	-	2644000R1		
PC92-GN2	18	WH	TXL	239481R1		DS64	-	2644000R1		
PC92DN	18	TN	GXL	239481R1		DS65	-	2644000R1		
PC92DN1	18	TN	GXL	239481R1		DS65	-	2644000R1		
PC92DN3	18	TN	GXL	239481R1		DS65	-	2644000R1		
RK78BD	16	LTGN	TXL	239481R1		DS66	-	2644000R1		
RK78F	18	LTGN	TXL	239481R1		DS66	-	2644000R1		
XT90E	18	GY	TXL	239481R1		DS67	-	2644000R1		

Circuit Number	Gauge	Color	Insulation	Terminal / Splice Number	Connector Part number	Connector Number	Cavity	Seal/Sleeve	Lock 1	Lock 2
XT90F	18	GY	TXL	239481R1		DS67	-	2644000R1		
XT90G	18	GY	TXL	239481R1		DS67	-	2644000R1		
AC60C	18	OR	TXL	239481R1		DS68	-	2644000R1		
AC62	18	DKBL	TXL	239481R1		DS68	-	2644000R1		
AC62DD	18	DKBL	TXL	239481R1		DS68	-	2644000R1		
RM78AC	16	LTGN	TXL	239481R1		DS69	-	2644000R1		
RM78AD	16	LTGN	TXL	239481R1		DS69	-	2644000R1		
QA11-GAD	18	WH	TXL	239481R1		DS70	-	2644000R1		
QA11-GAM	18	WH	TXL	239481R1		DS70	-	2644000R1		
QA23-G	18	WH	TXL	239481R1		DS70	-	2644000R1		
QA23-GT	18	WH	TXL	239481R1		DS70	-	2644000R1		
KK18B	16	GY	TXL	239481R1		DS71	-	2644000R1		
KK18C	16	GY	TXL	239481R1		DS71	-	2644000R1		
KM18C	16	GY	TXL	239481R1		DS71	-	2644000R1		
KM18D	16	GY	TXL	239481R1		DS71	-	2644000R1		
DL13AB	18	PK	TXL	239481R1		DS72	-	2644000R1		
DL13BA	18	PK	TXL	239481R1		DS72	-	2644000R1		
DL13BB	18	PK	TXL	239481R1		DS72	-	2644000R1		
GZ92#103A	18	TN	TXL	239481R1		DS73	-	2644000R1		
GZ92#103B	18	TN	TXL	239481R1		DS73	-	2644000R1		
GZ92#103C	18	TN	TXL	239481R1		DS73	-	2644000R1		
WE24EAL	18	BK	TXL	239481R1		ES1	-	2644000R1		
WE44AA	16	GY	TXL	239481R1		ES1	-	2644000R1		
WE44AB	16	GY	TXL	239481R1		ES1	-	2644000R1		
LD149AA	18	GY	TXL	239481R1		ES2	-	2644000R1		
LD149AB	18	GY	TXL	239481R1		ES2	-	2644000R1		
LD149AC	18	GY	TXL	239481R1		ES2	-	2644000R1		
LD149B	16	GY	TXL	239481R1		ES2	-	2644000R1		
LE149AA	18	GY	TXL	239481R1		ES2	-	2644000R1		
LE149AB	18	GY	TXL	239481R1		ES2	-	2644000R1		
LE149B	16	GY	TXL	239481R1		ES2	-	2644000R1		
YG96A	18	YL	TXL	239481R1		ES7	-	2644000R1		
YG96B	18	YL	TXL	239481R1		ES7	-	2644000R1		
YG96C	18	YL	TXL	239481R1		ES7	-	2644000R1		
YG96D	18	YL	TXL	239481R1		ES7	-	2644000R1		
YG96E	18	YL	TXL	239481R1		ES7	-	2644000R1		
VB92RE	18	TN	TXL	239481R1		GS5	-	2644000R1		
VB92RF	18	TN	TXL	239481R1		GS5	-	2644000R1		
VB92RH	18	TN	TXL	239481R1		GS5	-	2644000R1		
ZQ68	16	BN	TXL	239481R1		GS8	-	2644000R1		
ZQ68A	16	BN	TXL	239481R1		GS8	-	2644000R1		
ZQ68TB	16	BN	TXL	239481R1		GS8	-	2644000R1		
XC90-D	14	GY	TXL	239481R1		HS1	-	2644000R1		
XC90-K	18	GY	TXL	239481R1		HS1	-	2644000R1		
XC90-M	18	GY	TXL	239481R1		HS1	-	2644000R1		
XX90-D	14	GY	TXL	239481R1		HS1	-	2644000R1		
XX90-K	18	GY	TXL	239481R1		HS1	-	2644000R1		
XX90-M	18	GY	TXL	239481R1		HS1	-	2644000R1		
YG96-GA	18	YL	TXL	239481R1		HS4	-	2644000R1		
YG96-GB	18	YL	TXL	239481R1		HS4	-	2644000R1		
YG96-GC	18	YL	TXL	239481R1		HS4	-	2644000R1		
YG96-GD	18	YL	TXL	239481R1		HS4	-	2644000R1		
YG96-GE	18	YL	TXL	239481R1		HS4	-	2644000R1		
ND10AA	20	WH	TXL	239481R1		JS1	-	2644000R1		

Circuit Number	Gauge	Color	Insulation	Terminal / Splice Number	Connector Part number	Connector Number	Cavity	Seal/Sleeve	Lock 1	Lock 2
ND10AB	20	WH	TXL	239481R1		JS1	-	2644000R1		
ND10AC	20	WH	TXL	239481R1		JS1	-	2644000R1		
ND10AD	20	LTGN	TXL	239481R1		JS1	-	2644000R1		
ND11-GAL	16	WH	TXL	239481R1		JS1	-	2644000R1		
RF78B	16	LTGN	TXL	239481R1		JS3	-	2644000R1		
RF78RJ	16	LTGN	TXL	239481R1		JS3	-	2644000R1		
9S5AG(+)	18	YL	TXL	239481R1		JS6	-	2644000R1		
9S5AH(+)	18	YL	TXL	239481R1		JS6	-	2644000R1	3683466C1	3573833C1
9S5AJ(+)	18	YL	TXL	239481R1		JS6	-	2644000R1		
9T5AJ(+)	18	YL	TXL	239481R1		JS6	-	2644000R1		
9T5AK(+)	18	YL	TXL	239481R1		JS6	-	2644000R1		
9T5AL(+)	18	YL	TXL	239481R1		JS6	-	2644000R1		
9W5AG(+)	18	YL	TXL	239481R1		JS6	-	2644000R1		
9W5AH(+)	18	YL	TXL	239481R1		JS6	-	2644000R1		
9W5AJ(+)	18	YL	TXL	239481R1		JS6	-	2644000R1		
9Y5AJ(+)	18	YL	TXL	239481R1		JS6	-	2644000R1		
9Y5AK(+)	18	YL	TXL	239481R1		JS6	-	2644000R1		
9Y5AL(+)	18	YL	TXL	239481R1		JS6	-	2644000R1		
QU11-GG	18	WH	TXL	239481R1		JS7	-	2644000R1		
QU11-GG1	18	WH	TXL	239481R1		JS7	-	2644000R1		
QU11-GG2	18	WH	TXL	239481R1		JS7	-	2644000R1		
9S5AG(-)	18	GN	TXL	239481R1		JS8	-	2644000R1		
9S5AH(-)	18	GN	TXL	239481R1		JS8	-	2644000R1		
9S5AJ(-)	18	GN	TXL	239481R1		JS8	-	2644000R1		
9T5AJ(-)	18	GN	TXL	239481R1		JS8	-	2644000R1		
9T5AK(-)	18	GN	TXL	239481R1		JS8	-	2644000R1		
9T5AL(-)	18	GN	TXL	239481R1		JS8	-	2644000R1		
9W5AG(-)	18	GN	TXL	239481R1		JS8	-	2644000R1		
9W5AH(-)	18	GN	TXL	239481R1		JS8	-	2644000R1		
9W5AJ(-)	18	GN	TXL	239481R1		JS8	-	2644000R1		
9Y5AJ(-)	18	GN	TXL	239481R1		JS8	-	2644000R1		
9Y5AK(-)	18	GN	TXL	239481R1		JS8	-	2644000R1		
9Y5AL(-)	18	GN	TXL	239481R1		JS8	-	2644000R1		
QU11-G	18	WH	TXL	239481R1		JS9	-	2644000R1		
QU11-G1	18	WH	TXL	239481R1		JS9	-	2644000R1		
QU11-G2	18	WH	TXL	239481R1		JS9	-	2644000R1		
QU11-G3	18	WH	TXL	239481R1		JS9	-	2644000R1		
MQ86-GD1	18	WH	TXL	239481R1		KS1	-	2644000R1		
MQ86-GD2	18	WH	TXL	239481R1		KS1	-	2644000R1		
MQ86-GD3	18	WH	TXL	239481R1		KS1	-	2644000R1		
QV11-GD	18	WH	TXL	239481R1		KS4	-	2644000R1		
QV11-GD1	18	WH	TXL	239481R1		KS4	-	2644000R1		
QV11-GD2	18	WH	TXL	239481R1		KS4	-	2644000R1		
QX11-GD1	18	WH	TXL	239481R1		KS4	-	2644000R1		
QX11-GD2	18	WH	TXL	239481R1		KS4	-	2644000R1		
QX11-GD3	18	WH	TXL	239481R1		KS4	-	2644000R1		
QY11-GF1	18	WH	TXL	239481R1		KS5	-	2644000R1		
QY11-GF2	18	WH	TXL	239481R1		KS5	-	2644000R1		
QY11-GF3	18	WH	TXL	239481R1		KS5	-	2644000R1		
QV11-GE	18	WH	TXL	239481R1		KS6	-	2644000R1		
QV11-GE1	18	WH	TXL	239481R1		KS6	-	2644000R1		
QV11-GE2	18	WH	TXL	239481R1		KS6	-	2644000R1		
QX11-GE1	18	WH	TXL	239481R1		KS6	-	2644000R1		
QX11-GE2	18	WH	TXL	239481R1		KS6	-	2644000R1		

Circuit Number	Gauge	Color	Insulation	Terminal / Splice Number	Connector Part number	Connector Number	Cavity	Seal/Sleeve	Lock 1	Lock 2
QX11-GE3	18	WH	TXL	239481R1		KS6	-	2644000R1		
QZ11-GA1	18	WH	TXL	239481R1		KS6	-	2644000R1		
QZ11-GA2	18	WH	TXL	239481R1		KS6	-	2644000R1		
QZ11-GA3	18	WH	TXL	239481R1		KS6	-	2644000R1		
QV11-GK	18	WH	TXL	239481R1		KS7	-	2644000R1		
QV11-GK1	18	WH	TXL	239481R1		KS7	-	2644000R1		
QV11-GK2	18	WH	TXL	239481R1		KS7	-	2644000R1		
QX11-GK1	18	WH	TXL	239481R1		KS7	-	2644000R1		
QX11-GK2	18	WH	TXL	239481R1		KS7	-	2644000R1		
QX11-GK3	18	WH	TXL	239481R1		KS7	-	2644000R1		
QZ11-GB1	18	WH	TXL	239481R1		KS7	-	2644000R1		
QZ11-GB2	18	WH	TXL	239481R1		KS7	-	2644000R1		
QZ11-GB3	18	WH	TXL	239481R1		KS7	-	2644000R1		
QV11-GL	18	WH	TXL	239481R1		KS8	-	2644000R1		
QV11-GL1	18	WH	TXL	239481R1		KS8	-	2644000R1		
QV11-GL2	18	WH	TXL	239481R1		KS8	-	2644000R1		
QX11-GL1	18	WH	TXL	239481R1		KS8	-	2644000R1		
QX11-GL2	18	WH	TXL	239481R1		KS8	-	2644000R1		
QX11-GL3	18	WH	TXL	239481R1		KS8	-	2644000R1		
QZ11-GG1	18	WH	TXL	239481R1		KS8	-	2644000R1		
QZ11-GG2	18	WH	TXL	239481R1		KS8	-	2644000R1		
QZ11-GG3	18	WH	TXL	239481R1		KS8	-	2644000R1		
QV11-GM	18	WH	TXL	239481R1		KS9	-	2644000R1		
QV11-GM1	18	WH	TXL	239481R1		KS9	-	2644000R1		
QV11-GM2	18	WH	TXL	239481R1		KS9	-	2644000R1		
QZ11-GH1	18	WH	TXL	239481R1		KS9	-	2644000R1		
QZ11-GH2	18	WH	TXL	239481R1		KS9	-	2644000R1		
QZ11-GH3	18	WH	TXL	239481R1		KS9	-	2644000R1		
QU5(+)	18	YL	TXL	239481R1		LS11	-	2644000R1		
QU5A(+)	18	YL	TXL	239481R1		LS11	-	2644000R1		
QU5B(+)	18	YL	TXL	239481R1		LS11	-	2644000R1		
QU5(-)	18	GN	TXL	239481R1		LS12	-	2644000R1		
QU5A(-)	18	GN	TXL	239481R1		LS12	-	2644000R1		
QU5B(-)	18	GN	TXL	239481R1		LS12	-	2644000R1		
QZ5D1(+)	18	YL	TXL	239481R1		LS13	-	2644000R1		
QZ5D2(+)	18	YL	TXL	239481R1		LS13	-	2644000R1		
QZ5D3(+)	18	YL	TXL	239481R1		LS13	-	2644000R1		
QZ5D1(-)	18	GN	TXL	239481R1		LS14	-	2644000R1		
QZ5D2(-)	18	GN	TXL	239481R1		LS14	-	2644000R1		
QZ5D3(-)	18	GN	TXL	239481R1		LS14	-	2644000R1		
QA23DC	18	TN	TXL	239481R1		LS2	-	2644000R1		
QA23DD	18	PK	TXL	239481R1		LS2	-	2644000R1		
9G5BH(+)	18	YL	TXL	239481R1		LS3	-	2644000R1		
9G5BJ(+)	18	YL	TXL	239481R1		LS3	-	2644000R1		
9G5BK(+)	18	YL	TXL	239481R1		LS3	-	2644000R1		
9L5BH(+)	18	YL	TXL	239481R1		LS3	-	2644000R1		
9L5BJ(+)	18	YL	TXL	239481R1		LS3	-	2644000R1		
9L5CK(+)	18	YL	TXL	239481R1		LS3	-	2644000R1		
9V5BH(+)	18	YL	TXL	239481R1		LS3	-	2644000R1	2039342C1	
9V5BJ(+)	18	YL	TXL	239481R1		LS3	-	2644000R1	3525873C1	
9V5CK(+)	18	YL	TXL	239481R1		LS3	-	2644000R1	1661874C1	
9Z5BH(+)	18	YL	TXL	239481R1		LS3	-	2644000R1		
9Z5BJ(+)	18	YL	TXL	239481R1		LS3	-	2644000R1		
9Z5BK(+)	18	YL	TXL	239481R1		LS3	-	2644000R1		

Circuit Number	Gauge	Color	Insulation	Terminal / Splice Number	Connector Part number	Connector Number	Cavity	Seal/Sleeve	Lock 1	Lock 2
9G5BH(-)	18	GN	TXL	239481R1		LS4	-	2644000R1		
9G5BJ(-)	18	GN	TXL	239481R1		LS4	-	2644000R1		
9G5BK(-)	18	GN	TXL	239481R1		LS4	-	2644000R1		
9L5BH(-)	18	GN	TXL	239481R1		LS4	-	2644000R1		
9L5BJ(-)	18	GN	TXL	239481R1		LS4	-	2644000R1		
9L5CK(-)	18	GN	TXL	239481R1		LS4	-	2644000R1		
9V5BH(-)	18	GN	TXL	239481R1		LS4	-	2644000R1		
9V5BJ(-)	18	GN	TXL	239481R1		LS4	-	2644000R1		
9V5CK(-)	18	GN	TXL	239481R1		LS4	-	2644000R1	3554019C1	
9Z5BH(-)	18	GN	TXL	239481R1		LS4	-	2644000R1		
9Z5BJ(-)	18	GN	TXL	239481R1		LS4	-	2644000R1		
9Z5BK(-)	18	GN	TXL	239481R1		LS4	-	2644000R1		
KR59H	18	GY	TXL	239481R1		LS8	-	2644000R1		
KR59J	18	GY	TXL	239481R1		LS8	-	2644000R1		
KR59K	18	GY	TXL	239481R1		LS8	-	2644000R1		
9B5K(+)	18	YL	TXL	239481R1		MS1	-	2644000R1	1689501C1	
9B5N(+)	18	YL	TXL	239481R1		MS1	-	2644000R1	3539784C1	
9B5P(+)	18	YL	TXL	239481R1		MS1	-	2644000R1	2005242C1	
9C5H(+)	18	YL	TXL	239481R1		MS1	-	2644000R1		
9C5N(+)	18	YL	TXL	239481R1		MS1	-	2644000R1		
9C5P(+)	18	YL	TXL	239481R1		MS1	-	2644000R1		
9K5H(+)	18	YL	TXL	239481R1		MS1	-	2644000R1		
9K5N(+)	18	YL	TXL	239481R1		MS1	-	2644000R1		
9K5P(+)	18	YL	TXL	239481R1		MS1	-	2644000R1		
9M5K(+)	18	YL	TXL	239481R1		MS1	-	2644000R1		
9M5N(+)	18	YL	TXL	239481R1		MS1	-	2644000R1		
9M5P(+)	18	YL	TXL	239481R1		MS1	-	2644000R1		
9N5K(+)	18	YL	TXL	239481R1		MS1	-	2644000R1		
9N5N(+)	18	YL	TXL	239481R1		MS1	-	2644000R1		
9N5P(+)	18	YL	TXL	239481R1		MS1	-	2644000R1		
9Q5K(+)	18	YL	TXL	239481R1		MS1	-	2644000R1		
9Q5N(+)	18	YL	TXL	239481R1		MS1	-	2644000R1		
9Q5P(+)	18	YL	TXL	239481R1		MS1	-	2644000R1		
9R5H(+)	18	YL	TXL	239481R1		MS1	-	2644000R1		
9R5N(+)	18	YL	TXL	239481R1		MS1	-	2644000R1		
9R5P(+)	18	YL	TXL	239481R1		MS1	-	2644000R1		
9U5H(+)	18	YL	TXL	239481R1		MS1	-	2644000R1		
9U5N(+)	18	YL	TXL	239481R1		MS1	-	2644000R1		
9U5P(+)	18	YL	TXL	239481R1		MS1	-	2644000R1		
GB5K(+)	18	YL	TXL	239481R1		MS1	-	2644000R1		
GB5N(+)	18	YL	TXL	239481R1		MS1	-	2644000R1		
GB5P(+)	18	YL	TXL	239481R1		MS1	-	2644000R1		
GF5K(+)	18	YL	TXL	239481R1		MS1	-	2644000R1		
GF5N(+)	18	YL	TXL	239481R1		MS1	-	2644000R1		
GF5P(+)	18	YL	TXL	239481R1		MS1	-	2644000R1		
GM5H(+)	18	YL	TXL	239481R1		MS1	-	2644000R1		
GM5N(+)	18	YL	TXL	239481R1		MS1	-	2644000R1		
GM5P(+)	18	YL	TXL	239481R1		MS1	-	2644000R1		
GN5K(+)	18	YL	TXL	239481R1		MS1	-	2644000R1		
GN5N(+)	18	YL	TXL	239481R1		MS1	-	2644000R1		
GN5P(+)	18	YL	TXL	239481R1		MS1	-	2644000R1		
GP5K(+)	18	YL	TXL	239481R1		MS1	-	2644000R1		
GP5N(+)	18	YL	TXL	239481R1		MS1	-	2644000R1		
GP5P(+)	18	YL	TXL	239481R1		MS1	-	2644000R1		

Circuit Number	Gauge	Color	Insulation	Terminal / Splice Number	Connector Part number	Connector Number	Cavity	Seal/Sleeve	Lock 1	Lock 2
9B5K(-)	18	GN	TXL	239481R1		MS2	-	2644000R1		
9B5N(-)	18	GN	TXL	239481R1		MS2	-	2644000R1	3554019C1	
9B5P(-)	18	GN	TXL	239481R1		MS2	-	2644000R1	3576263C1	
9C5H(-)	18	GN	TXL	239481R1		MS2	-	2644000R1		
9C5N(-)	18	GN	TXL	239481R1		MS2	-	2644000R1		
9C5P(-)	18	GN	TXL	239481R1		MS2	-	2644000R1		
9K5H(-)	18	GN	TXL	239481R1		MS2	-	2644000R1		
9K5N(-)	18	GN	TXL	239481R1		MS2	-	2644000R1		
9K5P(-)	18	GN	TXL	239481R1		MS2	-	2644000R1		
9M5K(-)	18	GN	TXL	239481R1		MS2	-	2644000R1		
9M5N(-)	18	GN	TXL	239481R1		MS2	-	2644000R1		
9M5P(-)	18	GN	TXL	239481R1		MS2	-	2644000R1		
9N5K(-)	18	GN	TXL	239481R1		MS2	-	2644000R1		
9N5N(-)	18	GN	TXL	239481R1		MS2	-	2644000R1		
9N5P(-)	18	GN	TXL	239481R1		MS2	-	2644000R1		
9Q5K(-)	18	GN	TXL	239481R1		MS2	-	2644000R1		
9Q5N(-)	18	GN	TXL	239481R1		MS2	-	2644000R1		
9Q5P(-)	18	GN	TXL	239481R1		MS2	-	2644000R1		
9R5H(-)	18	GN	TXL	239481R1		MS2	-	2644000R1		
9R5N(-)	18	GN	TXL	239481R1		MS2	-	2644000R1		
9R5P(-)	18	GN	TXL	239481R1		MS2	-	2644000R1		
9U5H(-)	18	GN	TXL	239481R1		MS2	-	2644000R1		
9U5N(-)	18	GN	TXL	239481R1		MS2	-	2644000R1		
9U5P(-)	18	GN	TXL	239481R1		MS2	-	2644000R1		
GB5K(-)	18	GN	TXL	239481R1		MS2	-	2644000R1		
GB5N(-)	18	GN	TXL	239481R1		MS2	-	2644000R1		
GB5P(-)	18	GN	TXL	239481R1		MS2	-	2644000R1		
GF5K(-)	18	GN	TXL	239481R1		MS2	-	2644000R1		
GF5N(-)	18	GN	TXL	239481R1		MS2	-	2644000R1		
GF5P(-)	18	GN	TXL	239481R1		MS2	-	2644000R1		
GM5H(-)	18	GN	TXL	239481R1		MS2	-	2644000R1		
GM5N(-)	18	GN	TXL	239481R1		MS2	-	2644000R1		
GM5P(-)	18	GN	TXL	239481R1		MS2	-	2644000R1		
GN5K(-)	18	GN	TXL	239481R1		MS2	-	2644000R1		
GN5N(-)	18	GN	TXL	239481R1		MS2	-	2644000R1		
GN5P(-)	18	GN	TXL	239481R1		MS2	-	2644000R1		
GP5K(-)	18	GN	TXL	239481R1		MS2	-	2644000R1		
GP5N(-)	18	GN	TXL	239481R1		MS2	-	2644000R1		
GP5P(-)	18	GN	TXL	239481R1		MS2	-	2644000R1		
ZR12-GA	16	WH	TXL	239481R1		MS3	-	2644000R1		
ZR12-GB	12	WH	TXL	239481R1		MS3	-	2644000R1		
ZR12-GC	16	WH	TXL	239481R1		MS3	-	2644000R1		
ZR12-GE	18	WH	TXL	239481R1		MS3	-	2644000R1		
XF94SV	16	GY	TXL	239481R1		PS1	-	2644000R1		
XF94SVC	16	GY	TXL	239481R1		PS1	-	2644000R1		
XF94SVD	16	GY	TXL	239481R1		PS1	-	2644000R1		
XK94SVC	18	GY	TXL	239481R1		PS1	-	2644000R1		
XK94SVD	18	GY	TXL	239481R1		PS1	-	2644000R1		
XK94SVE	18	GY	TXL	239481R1		PS1	-	2644000R1		
EK149A	14	GY	TXL	239481R1		PS10	-	2644000R1		
EK149B	18	LTBL	TXL	239481R1		PS10	-	2644000R1		
LA17A	16	PK	TXL	239481R1		PS11	-	2644000R1		
LA17B	16	PK	TXL	239481R1		PS11	-	2644000R1		
LA17C	16	PK	TXL	239481R1		PS11	-	2644000R1		

Circuit Number	Gauge	Color	Insulation	Terminal / Splice Number	Connector Part number	Connector Number	Cavity	Seal/Sleeve	Lock 1	Lock 2
XF94SZC	16	GY	TXL	239481R1		PS2	-	2644000R1		
XF94SZD	16	GY	TXL	239481R1		PS2	-	2644000R1		
XF94SZE	16	GY	TXL	239481R1		PS2	-	2644000R1		
XK94SZC	18	GY	TXL	239481R1		PS2	-	2644000R1		
XK94SZD	18	GY	TXL	239481R1		PS2	-	2644000R1		
XK94SZE	18	GY	TXL	239481R1		PS2	-	2644000R1		
TC9AAJ	18	GY	TXL	239481R1		PS3	-	2644000R1		
TC9AE	18	GY	TXL	239481R1		PS3	-	2644000R1		
TC9E	18	GY	TXL	239481R1		PS3	-	2644000R1		
XS90-G	16	WH	GXL	239481R1		PS5	-	2644000R1		
XS90-GA	12	WH	GXL	239481R1		PS5	-	2644000R1		
XS90-GM	10	WH	GXL	239481R1		PS5	-	2644000R1		
XS90CA	16	GY	GXL	239481R1		PS6	-	2644000R1		
[XS90C]	16	-	GXL	239481R1		PS6	-	2644000R1		
XS014	10	RD	TXL	239481R1		PS7	-	2644000R1		
XS14B	8	GY	GXL	239481R1		PS7	-	2644000R1		
XS90NA	14	GY	GXL	239481R1		PS7	-	2644000R1		
XS90A	16	GY	TXL	239481R1		PS8	-	2644000R1		
XS90MA	18	GY	TXL	239481R1		PS8	-	2644000R1		
[XS90B]	16	-	GXL	239481R1		PS8	-	2644000R1		
XS90N	16	GY	TXL	239481R1		PS9	-	2644000R1		
XS90NB	14	GY	GXL	239481R1		PS9	-	2644000R1		
RO10-GB	18	WH	GXL	239481R1		SBS1	-	2644000R1		
RO49-G	18	WH	GXL	239481R1		SBS1	-	2644000R1		
RO49-GA	18	WH	GXL	239481R1		SBS1	-	2644000R1		
MZ11-G	12	WH	TXL	468358C1		SBS3	-	2644000R1		
MZ11-GA	14	WH	GXL	468358C1		SBS3	-	2644000R1		
MZ11-GB	14	WH	GXL	468358C1		SBS3	-	2644000R1		
MZ11-GC	12	WH	GXL	468358C1		SBS3	-	2644000R1		
MZ85-GA	16	WH	GXL	468358C1		SBS3	-	2644000R1		
BG6H	18	GY	GXL	239481R1		SCS1	-	2644000R1		
BG6HA	18	GY	TXL	239481R1		SCS1	-	2644000R1		
BG6HB	18	GY	TXL	239481R1		SCS1	-	2644000R1		
BG6HC	18	GY	TXL	239481R1		SCS1	-	2644000R1		
BL6H	18	GY	GXL	239481R1		SCS1	-	2644000R1		
BL6HA	18	GY	TXL	239481R1		SCS1	-	2644000R1		
BL6HB	18	GY	TXL	239481R1		SCS1	-	2644000R1		
BL6HC	18	GY	TXL	239481R1		SCS1	-	2644000R1		
CA6H	18	GY	GXL	239481R1		SCS1	-	2644000R1		
CA6HA	18	GY	TXL	239481R1		SCS1	-	2644000R1		
CA6HB	18	GY	TXL	239481R1		SCS1	-	2644000R1		
CA6HC	18	GY	TXL	239481R1		SCS1	-	2644000R1		
CB6H	18	GY	GXL	239481R1		SCS1	-	2644000R1		
CB6HA	18	GY	TXL	239481R1		SCS1	-	2644000R1		
CB6HB	18	GY	TXL	239481R1		SCS1	-	2644000R1		
CB6HC	18	GY	TXL	239481R1		SCS1	-	2644000R1		
BG9R	18	GY	TXL	239481R1		SCS2	-	2644000R1		
BG9S	18	GY	TXL	239481R1		SCS2	-	2644000R1		
BG9V	18	GY	GXL	239481R1		SCS2	-	2644000R1		
BG9VC	18	GY	TXL	239481R1		SCS2	-	2644000R1		
BG9VD	18	GY	TXL	239481R1		SCS2	-	2644000R1		
BG9VE	18	GY	TXL	239481R1		SCS2	-	2644000R1		
BG9VF	18	GY	TXL	239481R1		SCS2	-	2644000R1		
BG9VG	18	GY	TXL	239481R1		SCS2	-	2644000R1		

Circuit Number	Gauge	Color	Insulation	Terminal / Splice Number	Connector Part number	Connector Number	Cavity	Seal/Sleeve	Lock 1	Lock 2
BG9VH	18	GY	TXL	239481R1		SCS2	-	2644000R1		
BL9S	18	GY	TXL	239481R1		SCS2	-	2644000R1		
BL9V	18	GY	GXL	239481R1		SCS2	-	2644000R1		
BL9VA	20	GY	TXL	239481R1		SCS2	-	2644000R1		
BL9VC	18	GY	TXL	239481R1		SCS2	-	2644000R1		
BL9VD	18	GY	TXL	239481R1		SCS2	-	2644000R1		
BL9VE	18	GY	TXL	239481R1		SCS2	-	2644000R1		
BL9VF	18	GY	TXL	239481R1		SCS2	-	2644000R1		
BL9VG	18	GY	TXL	239481R1		SCS2	-	2644000R1		
BL9VH	18	GY	TXL	239481R1		SCS2	-	2644000R1		
BV9R	18	GY	TXL	239481R1		SCS2	-	2644000R1		
BV9S	18	GY	TXL	239481R1		SCS2	-	2644000R1		
BV9V	18	GY	TXL	239481R1		SCS2	-	2644000R1		
BV9VF	18	GY	GXL	239481R1		SCS2	-	2644000R1		
BVBLK1	18	BK	GXL	239481R1		SCS2	-	2644000R1		
BW9R	18	GY	TXL	239481R1		SCS2	-	2644000R1		
BW9S	18	GY	TXL	239481R1		SCS2	-	2644000R1		
BW9V	18	GY	TXL	239481R1		SCS2	-	2644000R1		
BW9VC	18	GY	TXL	239481R1		SCS2	-	2644000R1		
BW9VD	18	GY	TXL	239481R1		SCS2	-	2644000R1		
BW9VF	18	GY	GXL	239481R1		SCS2	-	2644000R1		
BX9S	18	GY	TXL	239481R1		SCS2	-	2644000R1		
BX9V	18	GY	TXL	239481R1		SCS2	-	2644000R1		
BX9VA	20	GY	TXL	239481R1		SCS2	-	2644000R1		
BX9VF	18	GY	GXL	239481R1		SCS2	-	2644000R1		
BXBLK1	18	BK	GXL	239481R1		SCS2	-	2644000R1		
BZ9S	18	GY	TXL	239481R1		SCS2	-	2644000R1		
BZ9V	18	GY	TXL	239481R1		SCS2	-	2644000R1		
BZ9VA	20	GY	TXL	239481R1		SCS2	-	2644000R1		
BZ9VC	18	GY	TXL	239481R1		SCS2	-	2644000R1		
BZ9VD	18	GY	TXL	239481R1		SCS2	-	2644000R1		
BZ9VF	18	GY	GXL	239481R1		SCS2	-	2644000R1		
CA9S	18	GY	TXL	239481R1		SCS2	-	2644000R1		
CA9V	18	GY	GXL	239481R1		SCS2	-	2644000R1		
CA9VA	20	GY	TXL	239481R1		SCS2	-	2644000R1		
CA9VB	18	GY	TXL	239481R1		SCS2	-	2644000R1		
CA9VC	18	GY	TXL	239481R1		SCS2	-	2644000R1		
CA9VD	18	GY	TXL	239481R1		SCS2	-	2644000R1		
CA9VE	18	GY	TXL	239481R1		SCS2	-	2644000R1		
CA9VF	18	GY	TXL	239481R1		SCS2	-	2644000R1		
CA9VG	18	GY	TXL	239481R1		SCS2	-	2644000R1		
CA9VH	18	GY	TXL	239481R1		SCS2	-	2644000R1		
CB9R	18	GY	TXL	239481R1		SCS2	-	2644000R1		
CB9S	18	GY	TXL	239481R1		SCS2	-	2644000R1		
CB9V	18	GY	GXL	239481R1		SCS2	-	2644000R1		
CB9VB	18	GY	TXL	239481R1		SCS2	-	2644000R1		
CB9VC	18	GY	TXL	239481R1		SCS2	-	2644000R1		
CB9VD	18	GY	TXL	239481R1		SCS2	-	2644000R1		
CB9VE	18	GY	TXL	239481R1		SCS2	-	2644000R1		
CB9VF	18	GY	TXL	239481R1		SCS2	-	2644000R1		
CB9VG	18	GY	TXL	239481R1		SCS2	-	2644000R1		
CB9VH	18	GY	TXL	239481R1		SCS2	-	2644000R1		
CC9S	18	GY	TXL	239481R1		SCS2	-	2644000R1		
CC9V	18	GY	TXL	239481R1		SCS2	-	2644000R1		

Circuit Number	Gauge	Color	Insulation	Terminal / Splice Number	Connector Part number	Connector Number	Cavity	Seal/Sleeve	Lock 1	Lock 2
CC9VA	20	GY	TXL	239481R1		SCS2	-	2644000R1		
CC9VB	18	GY	TXL	239481R1		SCS2	-	2644000R1		
CC9VC	18	GY	TXL	239481R1		SCS2	-	2644000R1		
CC9VD	18	GY	TXL	239481R1		SCS2	-	2644000R1		
CC9VF	18	GY	GXL	239481R1		SCS2	-	2644000R1		
CD9S	18	GY	TXL	239481R1		SCS2	-	2644000R1		
CD9V	18	GY	TXL	239481R1		SCS2	-	2644000R1		
CD9VA	20	GY	TXL	239481R1		SCS2	-	2644000R1		
CD9VB	18	GY	TXL	239481R1		SCS2	-	2644000R1		
CD9VF	18	GY	GXL	239481R1		SCS2	-	2644000R1		
CDBLK1	18	BK	GXL	239481R1		SCS2	-	2644000R1		
CE9R	18	GY	TXL	239481R1		SCS2	-	2644000R1		
CE9S	18	GY	TXL	239481R1		SCS2	-	2644000R1		
CE9V	18	GY	TXL	239481R1		SCS2	-	2644000R1		
CE9VB	18	GY	TXL	239481R1		SCS2	-	2644000R1		
CE9VC	18	GY	TXL	239481R1		SCS2	-	2644000R1		
CE9VD	18	GY	TXL	239481R1		SCS2	-	2644000R1		
CE9VF	18	GY	GXL	239481R1		SCS2	-	2644000R1		
CF9R	18	GY	TXL	239481R1		SCS2	-	2644000R1		
CF9S	18	GY	TXL	239481R1		SCS2	-	2644000R1		
CF9V	18	GY	TXL	239481R1		SCS2	-	2644000R1		
CF9VB	18	GY	TXL	239481R1		SCS2	-	2644000R1		
CF9VF	18	GY	GXL	239481R1		SCS2	-	2644000R1		
CFBLK1	18	BK	GXL	239481R1		SCS2	-	2644000R1		
BN94SV	18	GY	GXL	239481R1		SCS3	-	2644000R1		
BN94SVA	18	GY	GXL	239481R1		SCS3	-	2644000R1		
BN94SVB	18	GY	GXL	239481R1		SCS3	-	2644000R1		
BN94SZ	18	GY	GXL	239481R1		SCS4	-	2644000R1		
BN94SZA	18	GY	GXL	239481R1		SCS4	-	2644000R1		
BN94SZB	18	GY	GXL	239481R1		SCS4	-	2644000R1		
BE11-GAA	18	WH	TXL	239481R1		SDS1	-	2644000R1		
BE62-GDD	18	WH	TXL	239481R1		SDS1	-	2644000R1		
BE87-G	18	WH	TXL	239481R1		SDS1	-	2644000R1		
BL11-GAA	18	WH	GXL	239481R1		SDS1	-	2644000R1		
BL62-GDD	18	WH	TXL	239481R1		SDS1	-	2644000R1		
BL87-G	18	WH	TXL	239481R1		SDS1	-	2644000R1		
CA11-GAA	18	WH	GXL	239481R1		SDS1	-	2644000R1		
CA62-GDD	18	WH	TXL	239481R1		SDS1	-	2644000R1		
CA87-G	18	WH	TXL	239481R1		SDS1	-	2644000R1		
MT78-GA	16	WH	GXL	239481R1		SDS1	-	2644000R1		
MT78-GB	16	WH	GXL	239481R1		SDS1	-	2644000R1		
MT78-GC	16	WH	GXL	239481R1		SDS1	-	2644000R1		
MC57B	16	OR	TXL	239481R1		SDS4	-	2644000R1		
MC57C	16	OR	GXL	239481R1		SDS4	-	2644000R1		
MC57D	16	OR	GXL	239481R1		SDS4	-	2644000R1		
NE70E	10	RD	GXL	505040C1		SES1	-	2644027R1		
NE70F	10	RD	GXL	505040C1		SES1	-	2644027R1		
NE70T	10	RD	GXL	505040C1		SES1	-	2644027R1		
MA54B	14	BN	GXL	382181C1		SES1	-	2644000R1		
MA54C	14	BN	GXL	382181C1		SES1	-	2644000R1		
MA54D	14	BN	GXL	382181C1		SES1	-	2644000R1		
NE68E	10	BN	GXL	505040C1		SES2	-	2644027R1		
NE68F	10	BN	GXL	505040C1		SES2	-	2644027R1		
NE68T	10	BN	GXL	505040C1		SES2	-	2644027R1		

Circuit Number	Gauge	Color	Insulation	Terminal / Splice Number	Connector Part number	Connector Number	Cavity	Seal/Sleeve	Lock 1	Lock 2
MB54B	14	BN	GXL	382182C1		SES2	-	2644000R1		
MB54C	14	BN	GXL	382182C1		SES2	-	2644000R1		
MB54D	14	BN	GXL	382182C1		SES2	-	2644000R1		
MB54H	16	BN	GXL	382182C1		SES2	-	2644000R1		
MB54J	16	BN	GXL	382182C1		SES2	-	2644000R1		
NE54E	10	BN	GXL	505040C1		SES3	-	2644027R1		
NE54F	10	BN	GXL	505040C1		SES3	-	2644027R1		
NE54T	10	BN	GXL	505040C1		SES3	-	2644027R1		
NB70B	10	RD	GXL	505040C1		SES4	-	2644027R1		
NB70C	10	RD	GXL	505040C1		SES4	-	2644027R1		
NB70T	10	RD	GXL	505040C1		SES4	-	2644027R1		
NB68B	10	BN	GXL	505040C1		SES5	-	2644027R1		
NB68C	10	BN	GXL	505040C1		SES5	-	2644027R1		
NB68T	10	BN	GXL	505040C1		SES5	-	2644027R1		
NB54B	10	BN	GXL	505040C1		SES6	-	2644027R1		
NB54C	10	BN	GXL	505040C1		SES6	-	2644027R1		
NB54T	10	BN	GXL	505040C1		SES6	-	2644027R1		
NE94E	10	GY	GXL	505040C1		SES9	-	2644027R1		
NE94F	10	GY	GXL	505040C1		SES9	-	2644027R1		
NE94T	10	GY	GXL	505040C1		SES9	-	2644027R1		
RM9	18	GY	GXL	239481R1		SFS1	-	2644000R1		
RM9A	18	GY	GXL	239481R1		SFS1	-	2644000R1		
RM9B	18	GY	GXL	239481R1		SFS1	-	2644000R1		
MC56B	16	OR	TXL	239481R1		SGS1	-	2644000R1		
MC56C	16	OR	GXL	239481R1		SGS1	-	2644000R1		
MC56D	16	OR	GXL	239481R1		SGS1	-	2644000R1		
NE56E	10	YL	GXL	505040C1		SRS7	-	2644027R1		
NE56F	10	YL	GXL	505040C1		SRS7	-	2644027R1		
NE56T	10	YL	GXL	505040C1		SRS7	-	2644027R1		
NB56B	10	YL	GXL	505040C1		SRS8	-	2644027R1		
NB56C	10	YL	GXL	505040C1		SRS8	-	2644027R1		
NB56T	10	YL	GXL	505040C1		SRS8	-	2644027R1		
KA14A	10	RD	GXL	239481R1		SS1	-	2644000R1		
KA14A5	16	RD	TXL	239481R1		SS1	-	2644000R1	3606532C1	
KA14A7	10	RD	GXL	239481R1		SS1	-	2644000R1	3683466C1	3573833C1
AJ10-GB	18	WH	GXL	239481R1		SS1	-	2644000R1		
AJ49-G	18	WH	GXL	239481R1		SS1	-	2644000R1		
AJ49-GA	18	WH	GXL	239481R1		SS1	-	2644000R1		
YJ11-GD	16	WH	TXL	239481R1		SS1	-	2644000R1		
YJ112-GD	16	WH	GXL	239481R1		SS1	-	2644000R1		
YJ65-G	16	WH	GXL	239481R1		SS1	-	2644000R1		
PT78-GA	16	WH	GXL	239481R1		SS1	-	2644000R1		
PT78-GB	16	WH	GXL	239481R1		SS1	-	2644000R1		
PT78-GC	16	WH	GXL	239481R1		SS1	-	2644000R1		
KA95GBA	16	BK	TXL	382181C1		SS10	-	2644000R1		
KA95GBB	16	BK	TXL	382181C1		SS10	-	2644000R1		
KA95GBD	16	BK	TXL	382181C1		SS10	-	2644000R1		
KA95GBE	16	BK	TXL	382181C1		SS10	-	2644000R1		
KA95PA	10	PK	TXL	505040C1		SS10	-	2644027R1		
KA95PB	10	PK	TXL	505040C1		SS10	-	2644027R1		
KA95PC	10	PK	TXL	505040C1		SS10	-	2644027R1		
MY11-G	12	WH	TXL	505040C1		SS10	-	2644027R1		
MY11-GA	14	WH	GXL	505040C1		SS10	-	2644027R1		
MY11-GB	14	WH	GXL	505040C1		SS10	-	2644027R1		

Circuit Number	Gauge	Color	Insulation	Terminal / Splice Number	Connector Part number	Connector Number	Cavity	Seal/Sleeve	Lock 1	Lock 2
MY11-GC	12	WH	GXL	505040C1		SS10	-	2644027R1		
MY11-GD	12	WH	GXL	505040C1		SS10	-	2644027R1		
MY85-GA	16	WH	GXL	505040C1		SS10	-	2644027R1		
MY11-G	12	WH	TXL	505040C1		SS10	-	2644027R1		
MY11-GA	14	WH	GXL	505040C1		SS10	-	2644027R1		
MY11-GB	14	WH	GXL	505040C1		SS10	-	2644027R1		
MY11-GC	12	WH	GXL	505040C1		SS10	-	2644027R1		
MY11-GD	12	WH	GXL	505040C1		SS10	-	2644027R1		
MY85-GA	16	WH	GXL	505040C1		SS10	-	2644027R1		
VJ95AT1	18	TN	TXL	239481R1		SS100	-	2644000R1		
VJ95AT3	16	TN	TXL	239481R1		SS100	-	2644000R1		
VJ95B	20	TN	TXL	239481R1		SS100	-	2644000R1		
VJ95AU2	20	TN	TXL	239481R1		SS101	-	2644000R1		
VJ95AU3	16	TN	TXL	239481R1		SS101	-	2644000R1		
VJ95C	18	TN	TXL	239481R1		SS101	-	2644000R1		
WW2	2	RD	SGX	1613947C1		SS102	-	2644000R1	3612513C1	3553652C1
WW2-FLA	10	RS	FUS	1613947C1		SS102	-	2644000R1		
WW2-FLB	10	RS	FUS	1613947C1		SS102	-	2644000R1		
WX2	0	RD	SGX	239481R1		SS103	-	2644000R1		
WX2-FL	2	BK	FUS	239481R1		SS103	-	2644000R1		
WP2	1	RD	SGX	239481R1		SS104	-	2644000R1		
WP2-FL	6	TN	FUS	239481R1		SS104	-	2644000R1		
WS2	1	RD	SGX	1613947C1		SS105	-	2644000R1		
WS2-FL	6	TN	FUS	1613947C1		SS105	-	2644000R1		
WT2	1	RD	SGX	1613947C1		SS106	-	2644000R1		
WT2-FL	6	TN	FUS	1613947C1		SS106	-	2644000R1		
WU2	1	RD	SGX	1613947C1		SS107	-	2644000R1		
WU2-FL	6	TN	FUS	1613947C1		SS107	-	2644000R1	1661263C1	
WM2	2	RD	SGX	1613947C1		SS108	-	2644000R1		
WM2-FLA	10	RS	FUS	1613947C1		SS108	-	2644000R1		
WM2-FLB	10	RS	FUS	1613947C1		SS108	-	2644000R1		
WV2	2	RD	SGX	1613947C1		SS109	-	2644000R1		
WV2-FLA	10	RS	FUS	1613947C1		SS109	-	2644000R1		
WV2-FLB	10	RS	FUS	1613947C1		SS109	-	2644000R1	3515764C1	
KZ9A	20	TN	150	239481R1		SS11	-	2644000R1		
KZ9B	18	GY	TXL	239481R1		SS11	-	2644000R1		
KZ9C	20	TN	150	239481R1		SS11	-	2644000R1		
KA95GBC	16	TN	TXL	239481R1		SS11	-	2644000R1		
KA95GBD	18	BK	TXL	239481R1		SS11	-	2644000R1		
KA95GBE	16	TN	TXL	239481R1		SS11	-	2644000R1		
WR2	0	RD	SGX	239481R1		SS110	-	2644000R1		
WR2-FL	2	BK	FUS	239481R1		SS110	-	2644000R1		
PV14A	12	RD	TXL	239481R1		SS111	-	2644000R1		
PV14B	18	RD	TXL	239481R1		SS111	-	2644000R1		
PV14C	18	RD	TXL	239481R1		SS111	-	2644000R1		
RU10A	10	BK	GXL	239481R1		SS112	-	2644000R1		
RU10B	18	BK	TXL	239481R1		SS112	-	2644000R1		
RU10C	18	BK	TXL	239481R1		SS112	-	2644000R1		
RT5#106	18	YL	TXL	239481R1		SS113	-	2644000R1		
RT5C(+)	18	YL	TXL	239481R1		SS113	-	2644000R1		
RT5D(+)	18	YL	TXL	239481R1		SS113	-	2644000R1		
RT5#127	18	GN	TXL	239481R1		SS114	-	2644000R1		
RT5C(-)	18	GN	TXL	239481R1		SS114	-	2644000R1		
RT5D(-)	18	GN	TXL	239481R1		SS114	-	2644000R1		

Circuit Number	Gauge	Color	Insulation	Terminal / Splice Number	Connector Part number	Connector Number	Cavity	Seal/Sleeve	Lock 1	Lock 2
RT5A(-)	18	GN	TXL	239481R1		SS115	-	2644000R1		
RT5B(-)	20	GN	193	239481R1		SS115	-	2644000R1		
RT5C(-)	18	GN	TXL	239481R1		SS115	-	2644000R1		
RT5A(+)	18	YL	TXL	239481R1		SS116	-	2644000R1		
RT5B(+)	20	YL	193	239481R1		SS116	-	2644000R1		
RT5C(+)	18	YL	TXL	239481R1		SS116	-	2644000R1		
RS92#103	18	YL	TXL	239481R1		SS117	-	2644000R1		
RS92B103	18	YL	TXL	239481R1		SS117	-	2644000R1		
RS92C103	18	YL	TXL	239481R1		SS117	-	2644000R1		
PU92#145	18	OR	TXL	239481R1		SS118	-	2644000R1		
PU92A145	18	OR	TXL	239481R1		SS118	-	2644000R1		
PU92B145	18	OR	TXL	239481R1		SS118	-	2644000R1		
PU92#123	18	LTGN	TXL	239481R1		SS119	-	2644000R1		
PU92A123	18	LTGN	TXL	239481R1		SS119	-	2644000R1		
PU92B123	18	LTGN	TXL	239481R1		SS119	-	2644000R1		
VJ95AR1	18	TN	TXL	239481R1		SS12	-	2644000R1		
VJ95AR2	18	TN	TXL	239481R1		SS12	-	2644000R1		
VJ95AR3	16	TN	TXL	239481R1		SS12	-	2644000R1		
VL95AU1	18	TN	TXL			SS12	-	N/A		
VL95AU2	20	TN	TXL			SS12	-	N/A		
VL95AU3	18	TN	TXL			SS12	-	N/A		
KA95H1	16	PK	TXL	382181C1		SS13	-	2644000R1		
KA95H3	16	PK	TXL	382181C1		SS13	-	2644000R1		
KA95H5	16	PK	TXL	382181C1		SS13	-	2644000R1		
KA95H9	18	PK	TXL	382181C1		SS13	-	2644000R1		
VL95AT1	18	TN	TXL			SS13	-	N/A		
VL95AT2	20	TN	TXL			SS13	-	N/A		
VL95AT3	18	TN	TXL			SS13	-	N/A		
MC54B	14	BN	GXL	382182C1		SS13	-	2644000R1		
MC54C	14	BN	GXL	382182C1		SS13	-	2644000R1		
MC54D	14	BN	GXL	382182C1		SS13	-	2644000R1		
MC54F	14	BN	GXL	382182C1		SS13	-	2644000R1		
MC54B	14	BN	GXL	382182C1		SS13	-	2644000R1		
MC54C	14	BN	GXL	382182C1		SS13	-	2644000R1		
MC54D	14	BN	GXL	382182C1		SS13	-	2644000R1		
MC54F	14	BN	GXL	382182C1		SS13	-	2644000R1		
PK92#103	18	YL	TXL	239481R1		SS14	-	2644000R1	2007316C1	
PK92B103	18	YL	TXL	239481R1		SS14	-	2644000R1		
PK92C103	18	YL	TXL	239481R1		SS14	-	2644000R1		
WG2	1	RD	SGX			SS14	-	N/A		
WG2-FLA	8	LTBL	FUS			SS14	-	N/A		
WG2-FLB	8	LTBL	FUS			SS14	-	N/A		
PH14A	12	RD	TXL	382181C1		SS15	-	2644000R1		
PH14B	18	RD	TXL	382181C1		SS15	-	2644000R1		
PH14C	18	RD	TXL	382181C1		SS15	-	2644000R1		
VL95AS1	18	TN	TXL			SS15	-	N/A		
VL95AS2	20	TN	TXL			SS15	-	N/A		
VL95AS3	18	TN	TXL			SS15	-	N/A		
KE10A	10	BK	GXL	239481R1		SS16	-	2644000R1		
KE10B	18	BK	TXL	239481R1		SS16	-	2644000R1		
KE10C	18	BK	TXL	239481R1		SS16	-	2644000R1		
VB95	20	TN	TXL	6102309C1		SS17	-	2644000R1		
VB95A	18	TN	GXL	6102309C1		SS17	-	2644000R1		
WB2	1	RD	SGX			SS17	-	N/A		

Circuit Number	Gauge	Color	Insulation	Terminal / Splice Number	Connector Part number	Connector Number	Cavity	Seal/Sleeve	Lock 1	Lock 2
WB2-FLA	8	LTBL	FUS			SS17	-	N/A		
WB2-FLB	8	LTBL	FUS			SS17	-	N/A		
KT34	20	TN	TXL	6102309C1		SS18	-	2644000R1		
KT34A	18	TN	TXL	6102309C1		SS18	-	2644000R1		
VE70E	10	RD	GXL	6102309C1		SS19	-	2644000R1		
VE70F	10	RD	GXL	6102309C1		SS19	-	2644000R1		
VE70T	10	RD	GXL	6102309C1		SS19	-	2644000R1		
WB2	1	RD	SGX	239481R1		SS2	-	2644000R1		
WB2-FL	6	TN	FUS	239481R1		SS2	-	2644000R1		
KA10-GC	16	WH	TXL	382182C1		SS2	-	2644000R1		
KA10-GD	16	WH	TXL	382182C1		SS2	-	2644000R1		
KA10-GE	16	WH	TXL	382182C1		SS2	-	2644000R1		
KA10-GF	10	WH	GXL	382182C1		SS2	-	2644000R1		
VD11-G	8	WH	GXL	382182C1		SS2	-	2644001R1		
VD11-GA	10	WH	TXL	382182C1		SS2	-	2644001R1		
YU11-GD	16	WH	GXL	239481R1		SS2	-	2644000R1		
YU112-GD	16	WH	TXL	239481R1		SS2	-	2644000R1		
YU65-G	16	WH	GXL	239481R1		SS2	-	2644000R1		
PU78-GA	16	WH	GXL	239481R1		SS2	-	2644000R1		
PU78-GB	16	WH	GXL	239481R1		SS2	-	2644000R1		
PU78-GC	16	WH	GXL	239481R1		SS2	-	2644000R1		
YU11-GD	16	WH	GXL	239481R1		SS2	-	2644000R1		
YU112-GD	16	WH	TXL	239481R1		SS2	-	2644000R1		
YU65-G	16	WH	GXL	239481R1		SS2	-	2644000R1		
VA95	20	TN	TXL	6102309C1		SS20	-	2644000R1		
VA95A	18	TN	GXL	6102309C1		SS20	-	2644000R1		
VA95	20	TN	TXL			SS20	-	N/A		
VA95A	18	TN	GXL			SS20	-	N/A		
VE68E	10	BN	GXL	6102309C1		SS20	-	2644000R1		
VE68F	10	BN	GXL	6102309C1		SS20	-	2644000R1		
VE68T	10	BN	GXL	6102309C1		SS20	-	2644000R1		
WE2	1	RD	SGX	1613947C1		SS21	-	2644000R1		
WE2-FL	6	TN	FUS	1613947C1		SS21	-	2644000R1		
VJ13AA	18	PK	TXL	468358C1		SS21	-	2644000R1		
VJ13AB	18	RD	TXL	468358C1		SS21	-	2644000R1		
VJ13R2	10	PK	TXL	468358C1		SS21	-	2644000R1		
VJ95KD	10	TN	TXL	468358C1		SS21	-	2644000R1		
VE54E	10	BN	GXL	6102309C1		SS21	-	2644000R1		
VE54F	10	BN	GXL	6102309C1		SS21	-	2644000R1		
VE54T	10	BN	GXL	6102309C1		SS21	-	2644000R1		
VJ13R2	10	PK	TXL	382182C1		SS22	-	2644000R1		
VJ13RA	12	PK	150	382182C1		SS22	-	2644000R1		
VE94E	10	GY	GXL	239481R1		SS22	-	2644000R1		
VE94F	10	GY	GXL	239481R1		SS22	-	2644000R1		
VE94T	10	GY	GXL	239481R1		SS22	-	2644000R1		
VE94Z	10	GY	GXL	239481R1		SS22	-	2644000R1		
MN57B	16	OR	TXL	239481R1		SS22	-	2644000R1		
MN57C	16	OR	GXL	239481R1		SS22	-	2644000R1		
MN57D	16	OR	GXL	239481R1		SS22	-	2644000R1		
RD57B	16	OR	TXL	239481R1		SS22	-	2644000R1		
RD57C	16	OR	TXL	239481R1		SS22	-	2644000R1		
RD57D	16	OR	GXL	239481R1		SS22	-	2644000R1		
VE56E	10	YL	GXL	6102309C1		SS23	-	2644000R1		
VE56F	10	YL	GXL	6102309C1		SS23	-	2644000R1		

Circuit Number	Gauge	Color	Insulation	Terminal / Splice Number	Connector Part number	Connector Number	Cavity	Seal/Sleeve	Lock 1	Lock 2
VE56T	10	YL	GXL	6102309C1		SS23	-	2644000R1		
MN56B	16	OR	TXL	239481R1		SS23	-	2644000R1		
MN56C	16	OR	GXL	239481R1		SS23	-	2644000R1		
MN56D	16	OR	GXL	239481R1		SS23	-	2644000R1		
MC57B	16	OR	TXL	239481R1		SS23	-	2644000R1		
MC57C	16	OR	GXL	239481R1		SS23	-	2644000R1		
MC57D	16	OR	GXL	239481R1		SS23	-	2644000R1		
KA14A3	16	RD	TXL	239481R1		SS24	-	2644000R1		
KA14A4	16	RD	TXL	239481R1		SS24	-	2644000R1	3606525C1	
KA14A6	10	RD	GXL	239481R1		SS24	-	2644000R1		
KA14A3	16	RD	TXL	382182C1		SS24	-	2644000R1		
KA14A4	16	RD	TXL	382182C1		SS24	-	2644000R1		
KA14A5	16	RD	TXL	382182C1		SS24	-	2644000R1		
KA14A6	10	RD	GXL	382182C1		SS24	-	2644000R1		
VE57E	10	LTGN	GXL	6102309C1		SS24	-	2644000R1		
VE57F	10	LTGN	GXL	6102309C1		SS24	-	2644000R1		
VE57T	10	LTGN	GXL	6102309C1		SS24	-	2644000R1		
MW56B	16	OR	TXL	239481R1		SS24	-	2644000R1		
MW56C	16	OR	GXL	239481R1		SS24	-	2644000R1		
MW56D	16	OR	GXL	239481R1		SS24	-	2644000R1		
ML57B	16	OR	TXL	382181C1		SS24	-	2644000R1		
ML57C	16	OR	TXL	382181C1		SS24	-	2644000R1		
ML57D	14	OR	GXL	382181C1		SS24	-	2644000R1		
VL95AR1	18	TN	TXL	239481R1		SS25	-	2644000R1		
VL95AR2	18	RD	TXL	239481R1		SS25	-	2644000R1		
VL95AR3	18	TN	TXL	239481R1		SS25	-	2644000R1		
VE10D	8	WH	GXL	1613947C1		SS25	-	2644000R1		
VE10E	8	WH	GXL	1613947C1		SS25	-	2644000R1		
VE10F	8	WH	GXL	1613947C1		SS25	-	2644000R1		
VE10GC	8	WH	GXL	1613947C1		SS25	-	2644000R1		
VE10GD	8	WH	GXL	1613947C1		SS25	-	2644000R1		
MW54B	14	BN	GXL	382182C1		SS25	-	2644000R1		
MW54C	14	BN	GXL	382182C1		SS25	-	2644000R1		
MW54D	14	BN	GXL	382182C1		SS25	-	2644000R1		
MW54F	14	BN	GXL	382182C1		SS25	-	2644000R1		
RB56B	16	OR	TXL	239481R1		SS25	-	2644000R1		
RB56C	16	OR	GXL	239481R1		SS25	-	2644000R1		
RB56D	16	OR	GXL	239481R1		SS25	-	2644000R1		
KA14A1	16	RD	TXL	239481R1		SS26	-	2644000R1	3540454C1	3551897C1
KA14A2	16	RD	TXL	239481R1		SS26	-	2644000R1		
KA14A6	10	RD	GXL	239481R1		SS26	-	2644000R1	3610532C1	
KA14A7	10	RD	GXL	239481R1		SS26	-	2644000R1	3662518C1	
KA14A	10	RD	GXL	468358C1		SS26	-	2644000R1		
KA14A1	16	RD	TXL	468358C1		SS26	-	2644000R1		
KA14A2	16	RD	TXL	468358C1		SS26	-	2644000R1		
KA14A6	10	RD	GXL	468358C1		SS26	-	2644000R1		
MN54B	14	BN	GXL	382182C1		SS26	-	2644000R1		
MN54C	14	BN	GXL	382182C1		SS26	-	2644000R1		
MN54D	14	BN	GXL	382182C1		SS26	-	2644000R1		
MN54F	14	BN	GXL	382182C1		SS26	-	2644000R1		
RD56B	16	OR	TXL	239481R1		SS26	-	2644000R1		
RD56C	16	OR	TXL	239481R1		SS26	-	2644000R1		
RD56D	16	OR	TXL	239481R1		SS26	-	2644000R1		
KA14AA	18	RD	TXL	382182C1		SS27	-	2644000R1		

Circuit Number	Gauge	Color	Insulation	Terminal / Splice Number	Connector Part number	Connector Number	Cavity	Seal/Sleeve	Lock 1	Lock 2
KA14C	10	RD	TXL	382182C1		SS27	-	2644000R1		
KA14D	12	RD	TXL	382182C1		SS27	-	2644000R1		
MC53E	14	YL	GXL	382181C1		SS27	-	2644000R1		
MC53F	14	YL	GXL	382181C1		SS27	-	2644000R1		
MC64LO	14	YL	GXL	382181C1		SS27	-	2644000R1		
RD54B	14	BN	GXL	382182C1		SS27	-	2644000R1		
RD54C	14	BN	GXL	382182C1		SS27	-	2644000R1		
RD54D	14	BN	GXL	382182C1		SS27	-	2644000R1		
RD54F	14	BN	GXL	382182C1		SS27	-	2644000R1		
KP6A	20	TN	TXL	239481R1		SS28	-	2644000R1		
KP6B	18	TN	TXL	239481R1		SS28	-	2644000R1		
KP6C	18	TN	150	239481R1		SS28	-	2644000R1		
KP6D	18	TN	TXL	239481R1		SS28	-	2644000R1		
KP6A	20	GY	TXL			SS28	-	N/A		
KP6B	18	GY	TXL			SS28	-	N/A		
KP6C	18	GY	TXL			SS28	-	N/A		
KP6D	18	TN	150			SS28	-	N/A		
RB52B	14	YL	GXL	382181C1		SS28	-	2644000R1		
RB52E	14	YL	GXL	382181C1		SS28	-	2644000R1		
RB64HI	14	YL	GXL	382181C1		SS28	-	2644000R1		
ML54B	14	BN	GXL	382182C1		SS28	-	2644000R1		
ML54C	14	BN	GXL	382182C1		SS28	-	2644000R1		
ML54D	14	BN	GXL	382182C1		SS28	-	2644000R1		
ML54F	14	BN	GXL	382182C1		SS28	-	2644000R1		
KZ9	18	GY	150			SS29	-	N/A		
KZ9A	20	GY	TXL			SS29	-	N/A		
KZ9B	18	GY	TXL			SS29	-	N/A		
RB53E	14	YL	GXL	382181C1		SS29	-	2644000R1		
RB53F	14	YL	GXL	382181C1		SS29	-	2644000R1		
RB64LO	14	YL	GXL	382181C1		SS29	-	2644000R1		
MC53E	14	YL	GXL	382181C1		SS29	-	2644000R1		
MC53F	14	YL	GXL	382181C1		SS29	-	2644000R1		
MC64LO	14	YL	GXL	382181C1		SS29	-	2644000R1		
KW5(+)	20	YL	193	239481R1		SS3	-	2644000R1		
KW5A(+)	18	YL	TXL	239481R1		SS3	-	2644000R1		
KW5B(+)	18	YL	TXL	239481R1		SS3	-	2644000R1		
KW5(+)	20	YL	193			SS3	-	N/A		
KW5A(+)	18	YL	TXL			SS3	-	N/A		
KW5B(+)	18	YL	TXL			SS3	-	N/A		
VE11-G	8	WH	GXL	382182C1		SS3	-	2644001R1		
VE11-GA	10	WH	TXL	382182C1		SS3	-	2644001R1		
YT11-GD	16	WH	GXL	239481R1		SS3	-	2644000R1		
YT112-GD	16	WH	TXL	239481R1		SS3	-	2644000R1		
YT65-G	16	WH	GXL	239481R1		SS3	-	2644000R1		
RB57B	16	OR	TXL	239481R1		SS3	-	2644000R1		
RB57C	16	OR	GXL	239481R1		SS3	-	2644000R1		
RB57D	16	OR	GXL	239481R1		SS3	-	2644000R1		
RB57B	16	OR	TXL	239481R1		SS3	-	2644000R1		
RB57C	16	OR	GXL	239481R1		SS3	-	2644000R1		
RB57D	16	OR	GXL	239481R1		SS3	-	2644000R1		
VG6A	20	TN	TXL	239481R1		SS30	-	2644000R1		
VG6B	18	TN	TXL	239481R1		SS30	-	2644000R1		
VG6C	18	TN	150	239481R1		SS30	-	2644000R1		
VG6A	20	PL	TXL			SS30	-	N/A		

Circuit Number	Gauge	Color	Insulation	Terminal / Splice Number	Connector Part number	Connector Number	Cavity	Seal/Sleeve	Lock 1	Lock 2
VG6B	18	PL	TXL			SS30	-	N/A		
VG6D	18	TN	150			SS30	-	N/A		
RD57B	16	OR	TXL	239481R1		SS30	-	2644000R1		
RD57C	16	OR	TXL	239481R1		SS30	-	2644000R1		
RD57D	16	OR	GXL	239481R1		SS30	-	2644000R1		
ML53E	14	YL	GXL	382181C1		SS30	-	2644000R1		
ML53F	14	YL	GXL	382181C1		SS30	-	2644000R1		
ML64LO	14	YL	GXL	382181C1		SS30	-	2644000R1		
KA18R	18	PK	TXL	239481R1		SS31	-	2644000R1	3743662C1	
KA18S	18	PK	TXL	239481R1		SS31	-	2644000R1		
KA18T	18	PK	TXL	239481R1		SS31	-	2644000R1		
KA18R	18	PK	TXL	239481R1		SS31	-	2644000R1		
KA18S	18	PK	TXL	239481R1		SS31	-	2644000R1		
KA18T	18	PK	TXL	239481R1		SS31	-	2644000R1		
RD52B	14	YL	GXL	382181C1		SS31	-	2644000R1		
RD52E	14	YL	GXL	382181C1		SS31	-	2644000R1		
RD64HI	14	YL	GXL	382181C1		SS31	-	2644000R1		
RB52B	14	YL	GXL	382181C1		SS31	-	2644000R1		
RB52E	14	YL	GXL	382181C1		SS31	-	2644000R1		
RB64HI	14	YL	GXL	382181C1		SS31	-	2644000R1		
KA13A	14	PK	GXL	239481R1		SS32	-	2644000R1	1671608C1	
KA13B	18	PK	TXL	239481R1		SS32	-	2644000R1	1661376C1	
KA13A	14	PK	GXL	239481R1		SS32	-	2644000R1		
KA13B	18	PK	TXL	239481R1		SS32	-	2644000R1		
RD54B	14	BN	GXL	382182C1		SS32	-	2644000R1		
RD54C	14	BN	GXL	382182C1		SS32	-	2644000R1		
RD54D	14	BN	GXL	382182C1		SS32	-	2644000R1		
RD54F	14	BN	GXL	382182C1		SS32	-	2644000R1		
RD52B	14	YL	GXL	382181C1		SS32	-	2644000R1		
RD52E	14	YL	GXL	382181C1		SS32	-	2644000R1		
RD64HI	14	YL	GXL	382181C1		SS32	-	2644000R1		
KA95H2	16	PK	TXL	382181C1		SS33	-	2644000R1		
KA95H4	16	PK	TXL	382181C1		SS33	-	2644000R1		
KA95H6	16	PK	TXL	382181C1		SS33	-	2644000R1		
KA95H8	16	PK	TXL	382181C1		SS33	-	2644000R1		
KT9	18	GY	150			SS33	-	N/A		
KT9A	20	GY	TXL			SS33	-	N/A		
RD56B	16	OR	TXL	239481R1		SS33	-	2644000R1		
RD56C	16	OR	TXL	239481R1		SS33	-	2644000R1		
RD56D	16	OR	TXL	239481R1		SS33	-	2644000R1		
ML56B	16	OR	TXL	382181C1		SS33	-	2644000R1		
ML56C	16	OR	TXL	382181C1		SS33	-	2644000R1		
ML56D	16	OR	TXL	382181C1		SS33	-	2644000R1		
AB6A	20	GY	TXL	239481R1		SS34	-	2644000R1		
AB6B	18	GY	TXL	239481R1		SS34	-	2644000R1		
AB6D	18	GY	TXL	239481R1		SS34	-	2644000R1		
AB6E	18	GY	TXL	239481R1		SS34	-	2644000R1		
AB6A	20	GY	TXL			SS34	-	N/A		
AB6B	18	GY	TXL			SS34	-	N/A		
AB6C	18	GY	TXL			SS34	-	N/A		
AB6D	18	TN	150			SS34	-	N/A		
AB6G	18	GY	TXL			SS34	-	N/A		
RD53E	14	YL	GXL	382181C1		SS34	-	2644000R1		
RD53F	14	YL	GXL	382181C1		SS34	-	2644000R1		

Circuit Number	Gauge	Color	Insulation	Terminal / Splice Number	Connector Part number	Connector Number	Cavity	Seal/Sleeve	Lock 1	Lock 2
RD64LO	14	YL	GXL	382181C1		SS34	-	2644000R1		
MA54B	14	BN	GXL	382181C1		SS34	-	2644000R1		
MA54C	14	BN	GXL	382181C1		SS34	-	2644000R1		
MA54D	14	BN	GXL	382181C1		SS34	-	2644000R1		
PG92#123	18	LTGN	TXL	239481R1		SS35	-	2644000R1		
PG92A123	18	LTGN	TXL	239481R1		SS35	-	2644000R1		
PG92B123	18	LTGN	TXL	239481R1		SS35	-	2644000R1		
KX5B(-)	18	GN	TXL	239481R1		SS35	-	2644000R1		
KX5TA(-)	18	GN	TXL	239481R1		SS35	-	2644000R1		
KX5V(-)	18	GN	TXL	239481R1		SS35	-	2644000R1		
ML53E	14	YL	GXL	382181C1		SS35	-	2644000R1		
ML53F	14	YL	GXL	382181C1		SS35	-	2644000R1		
ML64LO	14	YL	GXL	382181C1		SS35	-	2644000R1		
MF54B	14	BN	GXL	382181C1		SS35	-	2644000R1		
MF54C	14	BN	GXL	382181C1		SS35	-	2644000R1		
MF54D	14	BN	GXL	382181C1		SS35	-	2644000R1		
PG92#145	18	OR	TXL	239481R1		SS36	-	2644000R1		
PG92A145	18	OR	TXL	239481R1		SS36	-	2644000R1		
PG92B145	18	OR	TXL	239481R1		SS36	-	2644000R1		
KX5R(-)	18	GN	TXL			SS36	-	2644000R1		
KX5S(-)	20	GN	193			SS36	-	2644000R1		
KX5TA(-)	18	GN	TXL			SS36	-	2644000R1		
ML56B	16	OR	TXL	239481R1		SS36	-	2644000R1		
ML56C	16	OR	TXL	239481R1		SS36	-	2644000R1		
ML56D	16	OR	TXL	239481R1		SS36	-	2644000R1		
MB54B	14	BN	GXL	382182C1		SS36	-	2644000R1		
MB54C	14	BN	GXL	382182C1		SS36	-	2644000R1		
MB54D	14	BN	GXL	382182C1		SS36	-	2644000R1		
MB54H	16	BN	GXL	382182C1		SS36	-	2644000R1		
MB54J	16	BN	GXL	382182C1		SS36	-	2644000R1		
AF6C	20	TN	150	239481R1		SS37	-	2644000R1		
AF6D	18	GY	TXL	239481R1		SS37	-	2644000R1		
AF6G	18	GY	TXL	239481R1		SS37	-	2644000R1		
KX5B(+)	18	YL	TXL	239481R1		SS37	-	2644000R1		
KX5TA(+)	18	YL	TXL	239481R1		SS37	-	2644000R1		
KX5V(+)	18	YL	TXL	239481R1		SS37	-	2644000R1		
MU56B	16	OR	TXL	239481R1		SS37	-	2644000R1		
MU56C	16	OR	TXL	239481R1		SS37	-	2644000R1		
MU56D	16	OR	TXL	239481R1		SS37	-	2644000R1		
MJ54B	14	BN	GXL	382182C1		SS37	-	2644000R1		
MJ54C	14	BN	GXL	382182C1		SS37	-	2644000R1		
MJ54D	14	BN	GXL	382182C1		SS37	-	2644000R1		
MJ54H	16	BN	GXL	382182C1		SS37	-	2644000R1		
MJ54J	16	BN	GXL	382182C1		SS37	-	2644000R1		
AF6A	20	GY	TXL	239481R1		SS38	-	2644000R1		
AF6B	18	GY	TXL	239481R1		SS38	-	2644000R1		
AF6D	18	GY	TXL	239481R1		SS38	-	2644000R1		
AF6A	20	GY	TXL			SS38	-	N/A		
AF6B	18	GY	TXL			SS38	-	N/A		
AF6D	18	TN	150			SS38	-	N/A		
AF6G	18	GY	TXL			SS38	-	N/A		
ML57B	16	OR	TXL	382181C1		SS38	-	2644000R1		
ML57C	16	OR	TXL	382181C1		SS38	-	2644000R1		
ML57D	14	OR	GXL	382181C1		SS38	-	2644000R1		

Circuit Number	Gauge	Color	Insulation	Terminal / Splice Number	Connector Part number	Connector Number	Cavity	Seal/Sleeve	Lock 1	Lock 2
MT78-GA	16	WH	GXL	239481R1		SS38	-	2644000R1		
MT78-GB	16	WH	GXL	239481R1		SS38	-	2644000R1		
MT78-GC	16	WH	GXL	239481R1		SS38	-	2644000R1		
KX5R(+)	18	YL	TXL			SS39	-	2644000R1		
KX5S(+)	20	YL	193			SS39	-	2644000R1		
KX5TA(+)	18	YL	TXL			SS39	-	2644000R1		
ML54B	14	BN	GXL	382182C1		SS39	-	2644000R1		
ML54C	14	BN	GXL	382182C1		SS39	-	2644000R1		
ML54D	14	BN	GXL	382182C1		SS39	-	2644000R1		
ML54F	14	BN	GXL	382182C1		SS39	-	2644000R1		
PM78-GA	16	WH	GXL	239481R1		SS39	-	2644000R1		
PM78-GB	16	WH	GXL	239481R1		SS39	-	2644000R1		
PM78-GC	16	WH	GXL	239481R1		SS39	-	2644000R1		
AP11-G1	10	WH	GXL	239481R1		SS4	-	2644000R1		
AP18D	18	WH	TXL	239481R1		SS4	-	2644000R1		
AP18E	10	WH	TXL	239481R1		SS4	-	2644000R1		
KA41	18	TN	TXL			SS4	-	N/A		
KA41A	20	TN	TXL			SS4	-	N/A		
MV59-GA	18	WH	GXL	239481R1		SS4	-	2644000R1		
MV59-GC	18	WH	GXL	239481R1		SS4	-	2644000R1		
MV59-GD	18	WH	GXL	239481R1		SS4	-	2644000R1		
RB54B	14	BN	GXL	382182C1		SS4	-	2644000R1		
RB54C	14	BN	GXL	382182C1		SS4	-	2644000R1		
RB54D	14	BN	GXL	382182C1		SS4	-	2644000R1		
RB54F	14	BN	GXL	382182C1		SS4	-	2644000R1		
RB54B	14	BN	GXL	382182C1		SS4	-	2644000R1		
RB54C	14	BN	GXL	382182C1		SS4	-	2644000R1		
RB54D	14	BN	GXL	382182C1		SS4	-	2644000R1		
RB54F	14	BN	GXL	382182C1		SS4	-	2644000R1		
SR92#103	18	YL	TXL	239481R1		SS40	-	2644000R1		
SR92B103	18	YL	TXL	239481R1		SS40	-	2644000R1		
SR92C103	18	YL	TXL	239481R1		SS40	-	2644000R1		
SR92D103	18	YL	TXL	239481R1		SS40	-	2644000R1		
KH10-G	10	WH	TXL	505040C1		SS40	-	2644027R1		
KH10-GA	8	WH	GXL	505040C1		SS40	-	2644027R1		
KH10-GE	14	WH	TXL	505040C1		SS40	-	2644027R1		
KH11-G1	16	WH	TXL	505040C1		SS40	-	2644027R1		
ML52B	14	YL	GXL	382181C1		SS40	-	2644000R1		
ML52E	14	YL	GXL	382181C1		SS40	-	2644000R1		
ML64HI	14	YL	GXL	382181C1		SS40	-	2644000R1		
RB53E	14	YL	GXL	382181C1		SS40	-	2644000R1		
RB53F	14	YL	GXL	382181C1		SS40	-	2644000R1		
RB64LO	14	YL	GXL	382181C1		SS40	-	2644000R1		
WF2	1	RD	SGX	1613947C1		SS41	-	2644000R1		
WF2-FL	6	TN	FUS	1613947C1		SS41	-	2644000R1		
KV13	16	PK	TXL	382181C1		SS41	-	2644000R1		
KV13C	14	PK	GXL	382181C1		SS41	-	2644000R1		
MF54B	14	BN	GXL	382181C1		SS41	-	2644000R1		
MF54C	14	BN	GXL	382181C1		SS41	-	2644000R1		
MF54D	14	BN	GXL	382181C1		SS41	-	2644000R1		
RD53E	14	YL	GXL	382181C1		SS41	-	2644000R1		
RD53F	14	YL	GXL	382181C1		SS41	-	2644000R1		
RD64LO	14	YL	GXL	382181C1		SS41	-	2644000R1		
WA2	2	RD	SGX	1613947C1		SS42	-	2644000R1		

Circuit Number	Gauge	Color	Insulation	Terminal / Splice Number	Connector Part number	Connector Number	Cavity	Seal/Sleeve	Lock 1	Lock 2
WA2-FLA	10	RS	FUS	1613947C1		SS42	-	2644000R1		
WA2-FLB	10	RS	FUS	1613947C1		SS42	-	2644000R1		
WA2	2	RD	SGX			SS42	-	N/A		
WA2-FLA	10	RS	FUS			SS42	-	N/A		
WA2-FLB	10	RS	FUS			SS42	-	N/A		
WX2	2	RD	SGX			SS42	-	N/A		
WX2-FLA	10	RS	FUS			SS42	-	N/A		
WX2-FLB	10	RS	FUS			SS42	-	N/A		
MJ54B	14	BN	GXL	382182C1		SS42	-	2644000R1		
MJ54C	14	BN	GXL	382182C1		SS42	-	2644000R1		
MJ54D	14	BN	GXL	382182C1		SS42	-	2644000R1		
MJ54H	16	BN	GXL	382182C1		SS42	-	2644000R1		
MJ54J	16	BN	GXL	382182C1		SS42	-	2644000R1		
MW57B	16	OR	TXL	239481R1		SS42	-	2644000R1		
MW57C	16	OR	GXL	239481R1		SS42	-	2644000R1		
MW57D	16	OR	GXL	239481R1		SS42	-	2644000R1		
KA13	16	PK	TXL	239481R1		SS43	-	2644000R1	1667734C1	
KA13C	14	PK	GXL	239481R1		SS43	-	2644000R1	3515185C1	
WK2	2	RD	SGX	1613947C1		SS43	-	2644000R1		
WK2-FLA	10	RS	FUS	1613947C1		SS43	-	2644000R1		
WK2-FLB	10	RS	FUS	1613947C1		SS43	-	2644000R1		
PM78-GA	16	WH	GXL	239481R1		SS43	-	2644000R1		
PM78-GB	16	WH	GXL	239481R1		SS43	-	2644000R1		
PM78-GC	16	WH	GXL	239481R1		SS43	-	2644000R1		
NF57B	16	OR	TXL	239481R1		SS43	-	2644000R1		
NF57C	16	OR	GXL	239481R1		SS43	-	2644000R1		
NF57D	16	OR	GXL	239481R1		SS43	-	2644000R1		
AC23-G	20	TN	TXL			SS44	-	N/A		
AC23-G1	20	TN	TXL			SS44	-	N/A		
AC95AB	20	TN	TXL			SS44	-	N/A		
NF57B	16	OR	TXL	239481R1		SS44	-	2644000R1		
NF57C	16	OR	TXL	239481R1		SS44	-	2644000R1		
NF57D	16	OR	GXL	239481R1		SS44	-	2644000R1		
MN57B	16	OR	TXL	239481R1		SS44	-	2644000R1		
MN57C	16	OR	GXL	239481R1		SS44	-	2644000R1		
MN57D	16	OR	GXL	239481R1		SS44	-	2644000R1		
NF54B	14	BN	GXL	382182C1		SS45	-	2644000R1		
NF54C	14	BN	GXL	382182C1		SS45	-	2644000R1		
NF54D	14	BN	GXL	382182C1		SS45	-	2644000R1		
NF54F	14	BN	GXL	382182C1		SS45	-	2644000R1		
MU57B	16	OR	TXL	239481R1		SS45	-	2644000R1		
MU57C	16	OR	GXL	239481R1		SS45	-	2644000R1		
MU57D	16	OR	GXL	239481R1		SS45	-	2644000R1		
KH14S	10	RD	GXL	468358C1		SS46	-	2644000R1		
KH14SA	10	RD	TXL	468358C1		SS46	-	2644000R1		
NF56B	16	OR	TXL	239481R1		SS46	-	2644000R1		
NF56C	16	OR	TXL	239481R1		SS46	-	2644000R1		
NF56D	16	OR	TXL	239481R1		SS46	-	2644000R1		
MW56B	16	OR	TXL	239481R1		SS46	-	2644000R1		
MW56C	16	OR	GXL	239481R1		SS46	-	2644000R1		
MW56D	16	OR	GXL	239481R1		SS46	-	2644000R1		
MU57B	16	OR	TXL	382181C1		SS47	-	2644000R1		
MU57C	16	OR	TXL	382181C1		SS47	-	2644000R1		
MU57D	14	OR	GXL	382181C1		SS47	-	2644000R1		

Circuit Number	Gauge	Color	Insulation	Terminal / Splice Number	Connector Part number	Connector Number	Cavity	Seal/Sleeve	Lock 1	Lock 2
NF56B	16	OR	TXL	239481R1		SS47	-	2644000R1		
NF56C	16	OR	GXL	239481R1		SS47	-	2644000R1		
NF56D	16	OR	GXL	239481R1		SS47	-	2644000R1		
MU54B	14	BN	GXL	382182C1		SS48	-	2644000R1		
MU54C	14	BN	GXL	382182C1		SS48	-	2644000R1		
MU54D	14	BN	GXL	382182C1		SS48	-	2644000R1		
MU54F	14	BN	GXL	382182C1		SS48	-	2644000R1		
MN56B	16	OR	TXL	239481R1		SS48	-	2644000R1		
MN56C	16	OR	GXL	239481R1		SS48	-	2644000R1		
MN56D	16	OR	GXL	239481R1		SS48	-	2644000R1		
KA10-G	10	WH	GXL	239481R1		SS49	-	2644000R1		
KA10-GA	16	WH	TXL	239481R1		SS49	-	2644000R1		
KA10-GB	16	WH	TXL	239481R1		SS49	-	2644000R1		
KA10-GF	10	WH	GXL	239481R1		SS49	-	2644000R1	1675053C1	
KA10-G	10	WH	GXL	468358C1		SS49	-	2644000R1		
KA10-GA	16	WH	TXL	468358C1		SS49	-	2644000R1		
KA10-GB	16	WH	TXL	468358C1		SS49	-	2644000R1		
KA10-GF	10	WH	GXL	468358C1		SS49	-	2644000R1		
MU56B	16	OR	TXL	239481R1		SS49	-	2644000R1		
MU56C	16	OR	GXL	239481R1		SS49	-	2644000R1		
MU56D	16	OR	GXL	239481R1		SS49	-	2644000R1		
KW5(-)	20	GN	193	239481R1		SS5	-	2644000R1		
KW5A(-)	18	GN	TXL	239481R1		SS5	-	2644000R1		
KW5B(-)	18	GN	TXL	239481R1		SS5	-	2644000R1		
KW5(-)	20	GN	193			SS5	-	N/A		
KW5A(-)	18	GN	TXL			SS5	-	N/A		
KW5B(-)	18	GN	TXL			SS5	-	N/A		
MX59-GA	18	WH	GXL	239481R1		SS5	-	2644000R1		
MX59-GB	18	WH	GXL	239481R1		SS5	-	2644000R1		
MX59-GC	18	WH	GXL	239481R1		SS5	-	2644000R1		
RB56B	16	OR	TXL	239481R1		SS5	-	2644000R1		
RB56C	16	OR	GXL	239481R1		SS5	-	2644000R1		
RB56D	16	OR	GXL	239481R1		SS5	-	2644000R1		
MC56B	16	OR	TXL	382181C1		SS5	-	2644000R1		
MC56C	16	OR	GXL	382181C1		SS5	-	2644000R1		
MC56D	16	OR	GXL	382181C1		SS5	-	2644000R1		
MW54B	14	BN	GXL	382182C1		SS50	-	2644000R1		
MW54C	14	BN	GXL	382182C1		SS50	-	2644000R1		
MW54D	14	BN	GXL	382182C1		SS50	-	2644000R1		
MW54F	14	BN	GXL	382182C1		SS50	-	2644000R1		
NF54B	14	BN	GXL	382182C1		SS51	-	2644000R1		
NF54C	14	BN	GXL	382182C1		SS51	-	2644000R1		
NF54D	14	BN	GXL	382182C1		SS51	-	2644000R1		
NF54F	14	BN	GXL	382182C1		SS51	-	2644000R1		
KA10-GC	16	WH	TXL	382181C1		SS52	-	2644000R1		
KA10-GD	16	WH	TXL	382181C1		SS52	-	2644000R1		
KA10-GE	16	WH	TXL	382181C1		SS52	-	2644000R1		
KA10-GF	10	WH	GXL	382181C1		SS52	-	2644000R1	1661874C1	
SR92#103	18	YL	TXL	239481R1		SS52	-	2644000R1		
SR92B103	18	YL	TXL	239481R1		SS52	-	2644000R1		
SR92C103	18	YL	TXL	239481R1		SS52	-	2644000R1		
SR92D103	18	YL	TXL	239481R1		SS52	-	2644000R1		
MN54B	14	BN	GXL	382182C1		SS52	-	2644000R1		
MN54C	14	BN	GXL	382182C1		SS52	-	2644000R1		

Circuit Number	Gauge	Color	Insulation	Terminal / Splice Number	Connector Part number	Connector Number	Cavity	Seal/Sleeve	Lock 1	Lock 2
MN54D	14	BN	GXL	382182C1		SS52	-	2644000R1		
MN54F	14	BN	GXL	382182C1		SS52	-	2644000R1		
LA10-GG	10	WH	GXL	239481R1		SS53	-	2644000R1		
LA92#109	18	WH	TXL	239481R1		SS53	-	2644000R1		
LA92#169	18	WH	TXL	239481R1		SS53	-	2644000R1		
MU54B	14	BN	GXL	382182C1		SS53	-	2644000R1		
MU54C	14	BN	GXL	382182C1		SS53	-	2644000R1		
MU54D	14	BN	GXL	382182C1		SS53	-	2644000R1		
MU54F	14	BN	GXL	382182C1		SS53	-	2644000R1		
LB10-GG	10	WH	GXL	239481R1		SS54	-	2644000R1		
LB92#109	18	WH	TXL	239481R1		SS54	-	2644000R1		
LB92#169	18	WH	TXL	239481R1		SS54	-	2644000R1		
MZ11-G	12	WH	TXL	468358C1		SS54	-	2644000R1		
MZ11-GA	14	WH	GXL	468358C1		SS54	-	2644000R1		
MZ11-GB	14	WH	GXL	468358C1		SS54	-	2644000R1		
MZ11-GC	12	WH	GXL	468358C1		SS54	-	2644000R1		
MZ85-GA	16	WH	GXL	468358C1		SS54	-	2644000R1		
WK2	2	RD	SGX	1613947C1		SS55	-	2644000R1		
WK2-FLA	10	RS	FUS	1613947C1		SS55	-	2644000R1		
WK2-FLB	10	RS	FUS	1613947C1		SS55	-	2644000R1		
NC11-G	12	WH	TXL	505040C1		SS55	-	2644027R1		
NC11-GA	14	WH	GXL	505040C1		SS55	-	2644027R1		
NC11-GB	14	WH	GXL	505040C1		SS55	-	2644027R1		
NC11-GC	12	WH	GXL	505040C1		SS55	-	2644027R1		
NC11-GD	12	WH	GXL	505040C1		SS55	-	2644027R1		
NC85-GA	16	WH	GXL	505040C1		SS55	-	2644027R1		
WG2	2	RD	SGX	1613947C1		SS56	-	2644000R1		
WG2-FLA	10	RS	FUS	1613947C1		SS56	-	2644000R1		
WG2-FLB	10	RS	FUS	1613947C1		SS56	-	2644000R1		
ND11-G	12	WH	TXL	468358C1		SS56	-	2644000R1		
ND11-GA	14	WH	GXL	468358C1		SS56	-	2644000R1		
ND11-GB	14	WH	GXL	468358C1		SS56	-	2644000R1		
ND11-GC	12	WH	GXL	468358C1		SS56	-	2644000R1		
ND85-GA	16	WH	GXL	468358C1		SS56	-	2644000R1		
WC2	0	RD	SGX	239481R1		SS57	-	2644000R1		
WC2-FL	2	BK	FUS	239481R1		SS57	-	2644000R1		
WL2	0	RD	SGX			SS57	-	N/A		
WL2-FLA	10	RS	FUS			SS57	-	N/A		
WL2-FLB	10	RS	FUS			SS57	-	N/A		
WL2-FLC	10	RS	FUS			SS57	-	N/A		
WL2-FLD	10	RS	FUS			SS57	-	N/A		
WL2	0	RD	SGX	239481R1		SS58	-	2644000R1		
WL2-FL	2	BK	FUS	239481R1		SS58	-	2644000R1		
WF2	1	RD	SGX			SS58	-	N/A		
WF2-FLA	8	LTBL	FUS			SS58	-	N/A		
WF2-FLB	8	LTBL	FUS			SS58	-	N/A		
PN92#103	18	YL	TXL	239481R1		SS59	-	2644000R1		
PN92B103	18	YL	TXL	239481R1		SS59	-	2644000R1	1618846C1	1618847C1
PN92C103	18	YL	TXL	239481R1		SS59	-	2644000R1		
PN92#103	18	YL	TXL	239481R1		SS59	-	2644000R1		
PN92B103	18	YL	TXL	239481R1		SS59	-	2644000R1		
PN92C103	18	YL	TXL	239481R1		SS59	-	2644000R1		
AB6C	18	TN	150	239481R1		SS6	-	2644000R1		
AB6D	18	GY	TXL	239481R1		SS6	-	2644000R1		

Circuit Number	Gauge	Color	Insulation	Terminal / Splice Number	Connector Part number	Connector Number	Cavity	Seal/Sleeve	Lock 1	Lock 2
AB6G	18	GY	TXL	239481R1		SS6	-	2644000R1		
TC11-G	12	WH	TXL	468358C1		SS6	-	2644000R1		
TC11-GA	14	WH	GXL	468358C1		SS6	-	2644000R1		
TC11-GB	14	WH	GXL	468358C1		SS6	-	2644000R1		
TC85-GB	16	WH	GXL	468358C1		SS6	-	2644000R1		
TC85-GC	16	WH	GXL	468358C1		SS6	-	2644000R1		
TC11-G	12	WH	TXL	468358C1		SS6	-	2644000R1		
TC11-GA	14	WH	GXL	468358C1		SS6	-	2644000R1		
TC11-GB	14	WH	GXL	468358C1		SS6	-	2644000R1		
TC85-GB	16	WH	GXL	468358C1		SS6	-	2644000R1		
TC85-GC	16	WH	GXL	468358C1		SS6	-	2644000R1		
SN92#103	18	YL	TXL	239481R1		SS60	-	2644000R1		
SN92B103	18	YL	TXL	239481R1		SS60	-	2644000R1		
SN92C103	18	YL	TXL	239481R1		SS60	-	2644000R1		
SN92#103	18	YL	TXL	239481R1		SS60	-	2644000R1		
SN92B103	18	YL	TXL	239481R1		SS60	-	2644000R1		
SN92C103	18	YL	TXL	239481R1		SS60	-	2644000R1		
PM14A	12	RD	TXL	382181C1		SS61	-	2644000R1	3522253C1	
PM92#110	18	RD	TXL	382181C1		SS61	-	2644000R1	3540615C1	
PM92#170	18	RD	TXL	382181C1		SS61	-	2644000R1		
PM14A	12	RD	TXL	382181C1		SS61	-	2644000R1		
PM92#110	18	RD	TXL	382181C1		SS61	-	2644000R1		
PM92#170	18	RD	TXL	382181C1		SS61	-	2644000R1		
RM92A117	18	LTBL	TXL	239481R1		SS62	-	2644000R1		
RM92A142	18	WH	TXL	239481R1		SS62	-	2644000R1		
RM92DL	18	LTBL	TXL	239481R1		SS62	-	2644000R1		
RM92A117	18	LTBL	TXL	239481R1		SS62	-	2644000R1		
RM92A142	18	WH	TXL	239481R1		SS62	-	2644000R1		
RM92DL	18	LTBL	TXL	239481R1		SS62	-	2644000R1		
PR92#103	18	YL	TXL	239481R1		SS63	-	2644000R1	1655705C1	
PR92B103	18	YL	TXL	239481R1		SS63	-	2644000R1		
PR92C103	18	YL	TXL	239481R1		SS63	-	2644000R1		
PR92D103	18	YL	TXL	239481R1		SS63	-	2644000R1		
PR92#103	18	YL	TXL	239481R1		SS63	-	2644000R1		
PR92B103	18	YL	TXL	239481R1		SS63	-	2644000R1		
PR92C103	18	YL	TXL	239481R1		SS63	-	2644000R1		
PR92D103	18	YL	TXL	239481R1		SS63	-	2644000R1		
TM92A117	18	LTBL	TXL	239481R1		SS64	-	2644000R1		
TM92A142	18	WH	TXL	239481R1		SS64	-	2644000R1		
TM92DL	18	LTBL	TXL	239481R1		SS64	-	2644000R1		
TM92A117	18	LTBL	TXL	239481R1		SS64	-	2644000R1		
TM92A142	18	WH	TXL	239481R1		SS64	-	2644000R1		
TM92DL	18	LTBL	TXL	239481R1		SS64	-	2644000R1		
SM14A	12	RD	TXL	382181C1		SS66	-	2644000R1		
SM92#110	18	RD	TXL	382181C1		SS66	-	2644000R1		
SM92#170	18	RD	TXL	382181C1		SS66	-	2644000R1		
SM14A	12	RD	TXL	382181C1		SS66	-	2644000R1		
SM92#110	18	RD	TXL	382181C1		SS66	-	2644000R1		
SM92#170	18	RD	TXL	382181C1		SS66	-	2644000R1		
PB5#127	18	GN	TXL	239481R1		SS67	-	2644000R1		
PB5C(-)	18	GN	TXL	239481R1		SS67	-	2644000R1		
PB5D(-)	18	GN	TXL	239481R1		SS67	-	2644000R1		
PB5#106	18	YL	TXL	239481R1		SS69	-	2644000R1		
PB5C(+)	18	YL	TXL	239481R1		SS69	-	2644000R1		

Circuit Number	Gauge	Color	Insulation	Terminal / Splice Number	Connector Part number	Connector Number	Cavity	Seal/Sleeve	Lock 1	Lock 2
PB5D(+)	18	YL	TXL	239481R1		SS69	-	2644000R1		
KC9A-G	20	GY	TXL	6102309C1		SS7	-	2644000R1		
KC9B-G	20	GY	TXL	6102309C1		SS7	-	2644000R1		
KC9C-G	20	GY	TXL	6102309C1		SS7	-	2644000R1		
AH6A	20	GY	TXL			SS7	-	N/A		
AH6B	18	GY	TXL			SS7	-	N/A		
AH6C	18	GY	TXL			SS7	-	N/A		
AH6D	18	TN	150			SS7	-	N/A		
TD11-G	12	WH	TXL	382182C1		SS7	-	2644000R1		
TD11-GA	14	WH	GXL	382182C1		SS7	-	2644000R1		
TD11-GB	14	WH	GXL	382182C1		SS7	-	2644000R1		
TD85-GC	16	WH	GXL	382182C1		SS7	-	2644000R1		
TD11-G	12	WH	TXL	382182C1		SS7	-	2644000R1		
TD11-GA	14	WH	GXL	382182C1		SS7	-	2644000R1		
TD11-GB	14	WH	GXL	382182C1		SS7	-	2644000R1		
TD85-GC	16	WH	GXL	382182C1		SS7	-	2644000R1		
AD41	18	TN	TXL	6102309C1		SS71	-	2644000R1		
AD41A	20	TN	TXL	6102309C1		SS71	-	2644000R1		
KT34	20	TN	TXL			SS71	-	N/A		
KT34A	18	TN	TXL			SS71	-	N/A		
SR92#175	18	OR	TXL	6102309C1		SS73	-	2644000R1		
SR92A175	18	OR	GXL	6102309C1		SS73	-	2644000R1		
SR92#175	18	OR	TXL	6102309C1		SS73	-	2644000R1		
SR92A175	18	OR	GXL	6102309C1		SS73	-	2644000R1		
SR92A112	18	PK	TXL	239481R1		SS74	-	2644000R1		
SR92B112	18	PK	TXL	239481R1		SS74	-	2644000R1		
SR92C112	18	PK	150	239481R1		SS74	-	2644000R1		
SR92A112	18	PK	TXL	239481R1		SS74	-	2644000R1		
SR92B112	18	PK	TXL	239481R1		SS74	-	2644000R1		
SR92C112	18	PK	150	239481R1		SS74	-	2644000R1		
SR92A131	18	PK	TXL	239481R1		SS75	-	2644000R1		
SR92B131	18	YL	150	239481R1		SS75	-	2644000R1		
SR92C131	18	YL	TXL	239481R1		SS75	-	2644000R1		
SR92D131	18	YL	TXL	239481R1		SS75	-	2644000R1		
SR92A131	18	PK	TXL	239481R1		SS75	-	2644000R1		
SR92B131	18	YL	150	239481R1		SS75	-	2644000R1		
SR92C131	18	YL	TXL	239481R1		SS75	-	2644000R1		
SR92D131	18	YL	TXL	239481R1		SS75	-	2644000R1		
SR92A158	18	LTGN	TXL	239481R1		SS76	-	2644000R1		
SR92B158	18	LTGN	150	239481R1		SS76	-	2644000R1		
SR92C158	18	LTGN	GXL	239481R1		SS76	-	2644000R1		
SR92D158	18	LTGN	TXL	239481R1		SS76	-	2644000R1		
SR92A158	18	LTGN	TXL	239481R1		SS76	-	2644000R1		
SR92B158	18	LTGN	150	239481R1		SS76	-	2644000R1		
SR92C158	18	LTGN	GXL	239481R1		SS76	-	2644000R1		
SR92D158	18	LTGN	TXL	239481R1		SS76	-	2644000R1		
PB5A(-)	18	GN	TXL	239481R1		SS77	-	2644000R1		
PB5B(-)	20	GN	193	239481R1		SS77	-	2644000R1		
PB5C(-)	18	GN	TXL	239481R1		SS77	-	2644000R1		
AG11-G1	10	WH	TXL	239481R1		SS8	-	2644000R1		
AG18D	18	WH	TXL	239481R1		SS8	-	2644000R1		
AG18E	10	WH	TXL	239481R1		SS8	-	2644000R1		
AG77-G	18	WH	TXL	239481R1		SS8	-	2644000R1		
KA95H1	18	PK	TXL			SS8	-	N/A		

Circuit Number	Gauge	Color	Insulation	Terminal / Splice Number	Connector Part number	Connector Number	Cavity	Seal/Sleeve	Lock 1	Lock 2
KA95H2	18	PK	TXL			SS8	-	N/A		
KA95H3	18	PK	TXL			SS8	-	N/A		
KA95H4	18	PK	TXL			SS8	-	N/A		
KA95H5	18	PK	TXL			SS8	-	N/A		
KA95H6	18	PK	TXL			SS8	-	N/A		
KA95H7	18	PK	TXL			SS8	-	N/A		
MC52B	14	YL	GXL	382181C1		SS8	-	2644000R1		
MC52E	14	YL	GXL	382181C1		SS8	-	2644000R1		
MC64HI	14	YL	GXL	382181C1		SS8	-	2644000R1		
MC52B	14	YL	GXL	382181C1		SS8	-	2644000R1		
MC52E	14	YL	GXL	382181C1		SS8	-	2644000R1		
MC64HI	14	YL	GXL	382181C1		SS8	-	2644000R1		
PB5A(+)	18	YL	TXL	239481R1		SS80	-	2644000R1		
PB5B(+)	20	YL	193	239481R1		SS80	-	2644000R1		
PB5C(+)	18	YL	TXL	239481R1		SS80	-	2644000R1		
PC5C(-)	18	GN	TXL	239481R1		SS81	-	2644000R1		
PC5D(-)	20	GN	193	239481R1		SS81	-	2644000R1		
PC5E(-)	18	GN	TXL	239481R1		SS81	-	2644000R1		
PC5C(-)	18	GN	TXL			SS81	-	N/A		
PC5D(-)	20	GN	193			SS81	-	N/A		
PC5E(-)	18	GN	TXL			SS81	-	N/A		
PC5C(+)	18	YL	TXL	239481R1		SS82	-	2644000R1		
PC5D(+)	20	YL	193	239481R1		SS82	-	2644000R1		
PC5E(+)	18	YL	TXL	239481R1		SS82	-	2644000R1		
PC5C(+)	18	YL	TXL			SS82	-	N/A		
PC5D(+)	20	YL	193			SS82	-	N/A		
PC5E(+)	18	YL	TXL			SS82	-	N/A		
PC5#127	18	GN	TXL	239481R1		SS83	-	2644000R1		
PC5A(-)	18	GN	TXL	239481R1		SS83	-	2644000R1		
PC5C(-)	18	GN	TXL	239481R1		SS83	-	2644000R1		
PC5#127	18	GN	TXL	239481R1		SS83	-	2644000R1		
PC5A(-)	18	GN	TXL	239481R1		SS83	-	2644000R1		
PC5C(-)	18	GN	TXL	239481R1		SS83	-	2644000R1		
PC5#106	18	YL	TXL	239481R1		SS84	-	2644000R1		
PC5A(+)	18	YL	TXL	239481R1		SS84	-	2644000R1		
PC5C(+)	18	YL	TXL	239481R1		SS84	-	2644000R1		
PC5#106	18	YL	TXL	239481R1		SS84	-	2644000R1		
PC5A(+)	18	YL	TXL	239481R1		SS84	-	2644000R1		
PC5C(+)	18	YL	TXL	239481R1		SS84	-	2644000R1		
SB5A(-)	18	GN	TXL	239481R1		SS85	-	2644000R1		
SB5B(-)	20	GN	193	239481R1		SS85	-	2644000R1		
SB5E(-)	18	GN	TXL	239481R1		SS85	-	2644000R1		
SB5A(-)	18	GN	TXL			SS85	-	N/A		
SB5B(-)	20	GN	193			SS85	-	N/A		
SB5E(-)	18	GN	TXL			SS85	-	N/A		
PR92#175	18	OR	TXL	6102309C1		SS86	-	2644000R1	3683466C1	3573833C1
PR92A175	18	OR	GXL	6102309C1		SS86	-	2644000R1	1661263C1	3540454C1
PR92#175	18	OR	TXL	6102309C1		SS86	-	2644000R1		
PR92A175	18	OR	GXL	6102309C1		SS86	-	2644000R1		
PR92A112	18	PK	TXL	239481R1		SS87	-	2644000R1		
PR92B112	18	PK	TXL	239481R1		SS87	-	2644000R1		
PR92C112	18	PK	150	239481R1		SS87	-	2644000R1		
PR92A112	18	PK	TXL	239481R1		SS87	-	2644000R1		
PR92B112	18	PK	TXL	239481R1		SS87	-	2644000R1		

Circuit Number	Gauge	Color	Insulation	Terminal / Splice Number	Connector Part number	Connector Number	Cavity	Seal/Sleeve	Lock 1	Lock 2
PR92C112	18	PK	150	239481R1		SS87	-	2644000R1		
PR92A131	18	YL	TXL	6102309C1		SS88	-	2644000R1	3539892C1	3539893C1
PR92B131	18	YL	150	6102309C1		SS88	-	2644000R1		
PR92C131	18	YL	TXL	6102309C1		SS88	-	2644000R1	4064677C1	
PR92D131	18	YL	TXL	6102309C1		SS88	-	2644000R1	3557682C1	
PR92A131	18	YL	TXL	239481R1		SS88	-	2644000R1		
PR92B131	18	YL	150	239481R1		SS88	-	2644000R1		
PR92C131	18	YL	TXL	239481R1		SS88	-	2644000R1		
PR92D131	18	YL	TXL	239481R1		SS88	-	2644000R1		
PR92A158	18	LTGN	TXL	239481R1		SS89	-	2644000R1	3573833C1	
PR92B158	18	LTGN	150	239481R1		SS89	-	2644000R1		
PR92C158	18	LTGN	GXL	239481R1		SS89	-	2644000R1		
PR92D158	18	LTGN	TXL	239481R1		SS89	-	2644000R1		
PR92A158	18	LTGN	TXL	239481R1		SS89	-	2644000R1		
PR92B158	18	LTGN	150	239481R1		SS89	-	2644000R1		
PR92C158	18	LTGN	GXL	239481R1		SS89	-	2644000R1		
PR92D158	18	LTGN	TXL	239481R1		SS89	-	2644000R1		
WD2	1	RD	SGX	1613947C1		SS9	-	2644000R1		
WD2-FL	6	TN	FUS	1613947C1		SS9	-	2644000R1		
KA95GBA	18	BK	TXL	239481R1		SS9	-	2644000R1		
KA95GBB	18	BK	TXL	239481R1		SS9	-	2644000R1		
KA95GBC	16	TN	TXL	239481R1		SS9	-	2644000R1		
MW57B	16	OR	TXL	239481R1		SS9	-	2644000R1		
MW57C	16	OR	GXL	239481R1		SS9	-	2644000R1		
MW57D	16	OR	GXL	239481R1		SS9	-	2644000R1		
ML52B	14	YL	GXL	382181C1		SS9	-	2644000R1		
ML52E	14	YL	GXL	382181C1		SS9	-	2644000R1		
ML64HI	14	YL	GXL	382181C1		SS9	-	2644000R1		
SB5A(+)	18	YL	TXL	239481R1		SS90	-	2644000R1		
SB5B(+)	20	YL	193	239481R1		SS90	-	2644000R1		
SB5E(+)	18	YL	TXL	239481R1		SS90	-	2644000R1		
SB5A(+)	18	YL	TXL			SS90	-	N/A		
SB5B(+)	20	YL	193			SS90	-	N/A		
SB5E(+)	18	YL	TXL			SS90	-	N/A		
SB5#127	18	GN	TXL	239481R1		SS91	-	2644000R1		
SB5C(-)	18	GN	TXL	239481R1		SS91	-	2644000R1		
SB5E(-)	18	GN	TXL	239481R1		SS91	-	2644000R1		
SB5#127	18	GN	TXL	239481R1		SS91	-	2644000R1		
SB5C(-)	18	GN	TXL	239481R1		SS91	-	2644000R1		
SB5E(-)	18	GN	TXL	239481R1		SS91	-	2644000R1		
SB5#106	18	YL	TXL	239481R1		SS92	-	2644000R1		
SB5C(+)	18	YL	TXL	239481R1		SS92	-	2644000R1		
SB5E(+)	18	YL	TXL	239481R1		SS92	-	2644000R1		
SB5#106	18	YL	TXL	239481R1		SS92	-	2644000R1		
SB5C(+)	18	YL	TXL	239481R1		SS92	-	2644000R1		
SB5E(+)	18	YL	TXL	239481R1		SS92	-	2644000R1		
VB18C	10	PK	TXL	6102309C1		SS93	-	2644000R1		
VB18G	10	PK	GXL	6102309C1		SS93	-	2644000R1		
YA41-GE	10	WH	TXL	1613947C1		SS93	-	2644000R1		
YA41-GF	10	WH	TXL	1613947C1		SS93	-	2644000R1		
YA41-GH	4	WH	SGX	1613947C1		SS93	-	2644000R1		
KA95H7	16	PK	TXL	239481R1		SS94	-	2644000R1		
KA95H8	16	PK	TXL	239481R1		SS94	-	2644000R1		
KA95H9	18	PK	TXL	239481R1		SS94	-	2644000R1		

Circuit Number	Gauge	Color	Insulation	Terminal / Splice Number	Connector Part number	Connector Number	Cavity	Seal/Sleeve	Lock 1	Lock 2
KA95PA	14	PK	TXL	382181C1		SS96	-	2644000R1		
KA95PB	14	PK	TXL	382181C1		SS96	-	2644000R1		
KA95PC	16	PK	TXL	382181C1		SS96	-	2644000R1		
VX6A	20	GY	TXL			SS96	-	2644000R1		
VX6B	18	GY	TXL			SS96	-	2644000R1		
VX6C	18	GY	TXL			SS96	-	2644000R1		
VX6D	18	TN	150			SS96	-	2644000R1		
VJ13A	14	PK	150	239481R1		SS97	-	2644000R1		
VJ13B	18	PK	TXL	239481R1		SS97	-	2644000R1		
VJ13R	16	PK	150	239481R1		SS97	-	2644000R1		
VJ95KD	14	RD	TXL	239481R1		SS97	-	2644000R1		
VJ14	16	RD	TXL	382181C1		SS98	-	2644000R1		
VJ14A	12	RD	TXL	382181C1		SS98	-	2644000R1		
VJ14C	14	RD	TXL	382181C1		SS98	-	2644000R1		
VJ95A1	20	TN	TXL	239481R1		SS99	-	2644000R1		
VJ95AS1	18	TN	TXL	239481R1		SS99	-	2644000R1		
VJ95AS3	16	TN	TXL	239481R1		SS99	-	2644000R1		
NE57E	10	LTGN	GXL	505040C1		STS1	-	2644027R1		
NE57F	10	LTGN	GXL	505040C1		STS1	-	2644027R1		
NE57T	10	LTGN	GXL	505040C1		STS1	-	2644027R1		
NE10D	8	WH	GXL	505040C1		STS2	-	2644027R1		
NE10E	8	WH	GXL	505040C1		STS2	-	2644027R1		
NE10F	8	WH	GXL	505040C1		STS2	-	2644027R1		
NB57B	10	LTGN	GXL	505040C1		STS3	-	2644027R1		
NB57C	10	LTGN	GXL	505040C1		STS3	-	2644027R1		
NB57T	10	LTGN	GXL	505040C1		STS3	-	2644027R1		
NB10A	8	WH	GXL	1613947C1		STS4	-	2644000R1		
NB10B	8	WH	GXL	1613947C1		STS4	-	2644000R1		
NB10C	8	WH	GXL	1613947C1		STS4	-	2644000R1		
ST22-G	16	WH	GXL	382181C1		STS5	-	2644000R1		
ST22-GB	18	WH	GXL	382181C1		STS5	-	2644000R1		
ST22-GC	18	WH	GXL	382181C1		STS5	-	2644000R1		
ST22-GD	18	WH	GXL	382181C1		STS5	-	2644000R1		
ST22-GE	18	WH	GXL	382181C1		STS5	-	2644000R1		
ST22-GF	18	WH	GXL	382181C1		STS5	-	2644000R1		
YK11-GD	16	WH	TXL	239481R1		SWS2	-	2644000R1		
YK112-GD	16	WH	TXL	239481R1		SWS2	-	2644000R1		
YK65-G	16	WH	GXL	239481R1		SWS2	-	2644000R1		
WIRE3				*********	**********	***** WI	E END	OT FOUND *		
WIRE3				**********	* *******	********	******	**********		
[RW94WX]	18	-	GXL	V-TERM	PAS2(1	2)	4951	1		
[RW94WZ]	18	-	GXL	V-TERM	PAS2(1	2)	4951	2		
[RE94P]	18	-	GXL	V-TERM	PAS2(1	2)	9505	1		
[RE94R]	18	-	GXL	V-TERM	PAS2(1	2)	9505	2		
[RV94WL]	18	-	GXL	V-TERM	PAS2(1	2)	9516	1		
[RV94WM]	18	-	GXL	V-TERM	PAS2(1	2)	9516	2		
[RV94WS]	18	-	GXL	V-TERM	PAS2(1	2)	9517	1		
[RV94WT]	18	-	GXL	V-TERM	PAS2(1	2)	9517	2		
[RV94G7]	18	-	GXL	V-TERM	PAS3(1	2)	9518	2		
[RV94WN]	18	-	GXL	V-TERM	PAS3(1	2)	9518	1		
[RV94WR]	18	-	GXL	V-TERM	PAS3(1	2)	9518	3		
[RV94G6]	18	-	GXL	V-TERM	PAS3(1	2)	9519	2		
[RV94WU]	18	-	GXL	V-TERM	PAS3(1	2)	9519	1		
[RV94WW]	18	-	GXL	V-TERM	PAS3(1	2)	9519	3		

Circuit Number	Gauge	Color	Insulation	Terminal / Splice Number	Connector Part number	Connector Number	Cavity	Seal/Sleeve	Lock 1	Lock 2
[UH94A]	18	-	GXL	V-TERM	PAS3(1	2)	9544	3		
[UH94B]	18	-	GXL	V-TERM	PAS3(1	2)	9544	1		
[UH94G6]	18	-	GXL	V-TERM	PAS3(1	2)	9544	2		
[UH94E]	18	-	GXL	V-TERM	PAS2(1	2)	9545	1		
[UH94F]	18	-	GXL	V-TERM	PAS2(1	2)	9545	2		
[UH94C]	18	-	GXL	V-TERM	PAS3(1	2)	9546	3		
[UH94D]	18	-	GXL	V-TERM	PAS3(1	2)	9546	1		
[UH94G7]	18	-	GXL	V-TERM	PAS3(1	2)	9546	2		
[UH94H]	18	-	GXL	V-TERM	PAS2(1	2)	9547	2		
[UH94N]	18	-	GXL	V-TERM	PAS2(1	2)	9547	1		
[UH94J]	18	-	GXL	V-TERM	PAS2(1	2)	9552	1		
[UH94K]	18	-	GXL	V-TERM	PAS2(1	2)	9552	2		
[UH94G8]	18	-	GXL	V-TERM	PAS3(1	2)	9553	2		
[UH94L]	18	-	GXL	V-TERM	PAS3(1	2)	9553	1		
[UH94M]	18	-	GXL	V-TERM	PAS3(1	2)	9553	3		
[UH94T]	18	-	GXL	V-TERM	PAS2(1	2)	9554	1		
[UH94U]	18	-	GXL	V-TERM	PAS2(1	2)	9554	2		
[UH94G9]	18	-	GXL	V-TERM	PAS3(1	2)	9555	2		
[UH94P]	18	-	GXL	V-TERM	PAS3(1	2)	9555	1		
[UH94S]	18	-	GXL	V-TERM	PAS3(1	2)	9555	3		
[UM94A]	18	-	GXL	V-TERM	PAS3(1	2)	9564	3		
[UM94B]	18	-	GXL	V-TERM	PAS3(1	2)	9564	1		
[UM94G6]	18	-	GXL	V-TERM	PAS3(1	2)	9564	2		
[UM94E]	18	-	GXL	V-TERM	PAS2(1	2)	9565	1		
[UM94F]	18	-	GXL	V-TERM	PAS2(1	2)	9565	2		
[UM94G8]	18	-	GXL	V-TERM	PAS3(1	2)	9566	2		
[UM94L]	18	-	GXL	V-TERM	PAS3(1	2)	9566	1		
[UM94M]	18	-	GXL	V-TERM	PAS3(1	2)	9566	3		
[UM94J]	18	-	GXL	V-TERM	PAS2(1	2)	9567	1		
[UM94K]	18	-	GXL	V-TERM	PAS2(1	2)	9567	2		
[UM94T]	18	-	GXL	V-TERM	PAS2(1	2)	9568	1		
[UM94U]	18	-	GXL	V-TERM	PAS2(1	2)	9568	2		
[UM94G9]	18	-	GXL	V-TERM	PAS3(1	2)	9569	2		
[UM94P]	18	-	GXL	V-TERM	PAS3(1	2)	9569	1		
[UM94S]	18	-	GXL	V-TERM	PAS3(1	2)	9569	3		
[UM94C]	18	-	GXL	V-TERM	PAS3(1	2)	9570	3		
[UM94D]	18	-	GXL	V-TERM	PAS3(1	2)	9570	1		
[UM94G7]	18	-	GXL	V-TERM	PAS3(1	2)	9570	2		
[UM94H]	18	-	GXL	V-TERM	PAS2(1	2)	9571	2		
[UM94N]	18	-	GXL	V-TERM	PAS2(1	2)	9571	1		
[RE94M]	18	-	GXL	V-TERM	PAS2(1	2)	9911	1		
[RE94N]	18	-	GXL	V-TERM	PAS2(1	2)	9911	2		
[SECORE]	NONE	-	NON	V-TERM	PAS2(1	2)	1A	1		
[SESHLD]	NONE	-	NON	V-TERM	PAS2(1	2)	1A	2		
[MLBRN]	22	-	TXL	V-TERM	PAS8(1	2)	20A	2		
[MLGRN]	22	-	TXL	V-TERM	PAS8(1	2)	20A	3		
[MLGRY]	22	-	TXL	V-TERM	PAS8(1	2)	20A	5		
[MLRED]	22	-	TXL	V-TERM	PAS8(1	2)	20A	8		
[MLWHT]	22	-	TXL	V-TERM	PAS8(1	2)	20A	1		
[MLYEL]	22	-	TXL	V-TERM	PAS8(1	2)	20A	4		
[MPBRN]	22	-	TXL	V-TERM	PAS8(1	2)	20A	2		
[MPGRN]	22	-	TXL	V-TERM	PAS8(1	2)	20A	3		
[MPGRY]	22	-	TXL	V-TERM	PAS8(1	2)	20A	5		
[MPRED]	22	-	TXL	V-TERM	PAS8(1	2)	20A	8		

Circuit Number	Gauge	Color	Insulation	Terminal / Splice Number	Connector Part number	Connector Number	Cavity	Seal/Sleeve	Lock 1	Lock 2
[MPWHT]	22	-	TXL	V-TERM	PAS8(1	2)	20A	1		
[MPYEL]	22	-	TXL	V-TERM	PAS8(1	2)	20A	4		
[MLBRN]	22	-	TXL	V-TERM	PAS8(1	2)	21A	2		
[MLGRN]	22	-	TXL	V-TERM	PAS8(1	2)	21A	3		
[MLGRY]	22	-	TXL	V-TERM	PAS8(1	2)	21A	5		
[MLRED]	22	-	TXL	V-TERM	PAS8(1	2)	21A	8		
[MLWHT]	22	-	TXL	V-TERM	PAS8(1	2)	21A	1		
[MLYEL]	22	-	TXL	V-TERM	PAS8(1	2)	21A	4		
[MPBRN]	22	-	TXL	V-TERM	PAS8(1	2)	21A	2		
[MPGRN]	22	-	TXL	V-TERM	PAS8(1	2)	21A	3		
[MPGRY]	22	-	TXL	V-TERM	PAS8(1	2)	21A	5		
[MPRED]	22	-	TXL	V-TERM	PAS8(1	2)	21A	8		
[MPWHT]	22	-	TXL	V-TERM	PAS8(1	2)	21A	1		
[MPYEL]	22	-	TXL	V-TERM	PAS8(1	2)	21A	4		
[SECORE]	NONE	-	NON	V-TERM	PAS2(1	2)	2A	1		
[SESHLD]	NONE	-	NON	V-TERM	PAS2(1	2)	2A	2		
[SFCORE]	NONE	-	NON	V-TERM	PAS2(1	2)	3A	1		
[SFSHLD]	NONE	-	NON	V-TERM	PAS2(1	2)	3A	2		
[SFCORE]	NONE	-	NON	V-TERM	PAS2(1	2)	4A	1		
[SFSHLD]	NONE	-	NON	V-TERM	PAS2(1	2)	4A	2		
[XS90B]	16	-	GXL	V-TERM	PAS2(A	B)	6064	B		
[XS90C]	16	-	GXL	V-TERM	PAS2(A	B)	6064	A		

A

A01-4450M:2039311C91 . . . 1312
A01-4460M:1686834C1 . . . 1314
A01_250M:4064551C1 . . . 1315
A01_250M:4064551C1 . . . 1316
A01_250M:4064551C1 . . . 1317
A01_250M:4064551C1 . . . 1318
A26 - (Rand Mcnallly) GPS Display Design . . . 241
A26 - 2-Way Radio Design . . . 257
A26 - 26" Fuel Tank - Secondary Design . . . 980
A26 - 26" Fuel Tank Design . . . 975
A26 - ABS Private J1939 Design . . . 31
A26 - Aftertreatment PDM Design . . . 85
A26 - Ambient Air Temperature Design . . . 1067
A26 - Ambient Temperature Monitoring Design . . . 1068
A26 - Antilock Brake System (ABS) Bendix Design . . . 467
A26 - Antilock Brake System (ABS)-Wabco 4 Channel Implementation Design 470
A26 - Auxilary Power Fuse Design . . . 88
A26 - Auxiliary Air Solenoids Normally Closed Design . . . 277
A26 - Auxillary Air Solenoids Normally Open Design . . . 278
A26 - Axle Lift Controls Design . . . 1130
A26 - Axle Temperature Monitoring (Single Rear Aux Gauge) Design . . . 1146
A26 - Axle Temperature Monitoring (Single Rear Virtual Gauge) Design . . . 1147
A26 - Axle Temperature Monitoring (Tandem Rear Aux Gauge) Design . . . 1148
A26 - Axle Temperature Monitoring (Tandem Rear Virtual Gauge) Design . . . 1149
A26 - Back-Up Alarm (Automatic) W/ Tailboard Design . . . 125
A26 - Back-Up Alarm (Automatic) W/O Tailboard Design . . . 124
A26 - Back-Up Alarm (Manual) W/ Tailboard Design . . . 131
A26 - Back-Up Alarm (Manual) W/O Tailboard Design . . . 130
A26 - Back-Up Alarm (Relay to 5 Pin 08TKC Tailboard to Alarm) (Automatic) Design . . . 126
A26 - Back-Up Alarm (Relay to 5 Pin 08TKC Tailboard. Alarm Plugs In) (Automatic) Design . . . 127
A26 - Backup Alarm (Switch to 5 Pin 08TKC Tailboard to Alarm) (Manual) Design . . . 128
A26 - Backup Alarm (Switch to 5 Pin 08TKC Tailboard. Alarm Plugs In) (Manual) Design . . . 129
A26 - Backup Light (Dual Daisy Reverse LT)Allison/ZF Trans 3K/4K Design . . . 555
A26 - Backup Light (Dual Reverse Light)Allison/ZF Trans 3K/4K Design . . . 557
A26 - Backup Light (Single Reverse Light) Allison 3K/4K Design . . . 563
A26 - Backup Light (Single Reverse Light) Allison 3K/4K Option2 Design . . . 565
A26 - Backup Light (Single Reverse Light) W/Less Power Module Allison 3K/4K Design . . . 567
A26 - Backup Light (Single Reverse Light)Allison 3K/4K Design . . . 561
A26 - Backup Lights (Dual Daisy Reverse Light) Eaton/Manual Trans Design . . . 559
A26 - Backup Lights (Dual Reverse Light) Eaton/Manual Trans Design . . . 560
A26 - Backup Lights (Reverse) W/Less Power Module Eaton/Manual Trans Design . . . 569
A26 - Backup Lights (Single Reverse Light) Eaton/Manual Trans Design . . . 573
A26 - Backup Lights (Single Reverse Lights) Eaton/Manual Trans Design . . . 570
A26 - Backup Lights (Single Reverse Lights) Eaton/Manual Trans Option2 Design . . . 572
A26 - Backup Lights (Single Reverse Lights) Eaton/Manual Transmission Design . . . 571
A26 - Battery International (4) 12V Design . . . 1309
A26 - Bendix Tractor or Towing Truck N/ Air SUSP J1939 Driven Lamp Design . . . 489
A26 - Bendix Tractor or Towing Truck W/ Air SUSP J1939 Driven Lamp Design . . . 493
A26 - Body Builder - Powertrain Design . . . 337
A26 - Body Builder Lighting - BOC, 08HBX (Automatic) Design . . . 305
A26 - Body Builder Lighting - BOC, 08HBX (Manual) Design . . . 306
A26 - Body Builder Lighting - Combined Turn and Stop Lamps (Automatic) Design . . . 307
A26 - Body Builder Lighting - Combined Turn and Stop Lamps (Manual) Design . . . 310

A26 - Body Builder Lighting - Separate Turn and Stop Lamps (Blunt Cut) - Option 1 Design . . . 313
A26 - Body Builder Lighting - Separate Turn and Stop Lamps (Blunt Cut) - Option 2 Design . . . 314
A26 - Body J1939 (250kbps) Design . . . 32
A26 - Bosch LIL165 LIL200 Alternator W/Sensor Design . . . 1241
A26 - Brake Pressure (Auxiliary Gauge) Design . . . 1072
A26 - Brake Pressure (Virtual Gauge) Design . . . 1073
A26 - Brake Switch Design . . . 616
A26 - Cab J1939 (250Kbps) Design . . . 33
A26 - CAN Layout Design . . . 9
A26 - Center Chassis Ground Splice Packs Design . . . 71
A26 - Chassis PDM Design . . . 91
A26 - City Horn (W/ 4PIN Park Brake) Design . . . 203
A26 - City Horn (W/ 4PIN) Design . . . 207
A26 - City Horn (W/ 10PIN Park Brake) Design . . . 199
A26 - City Horn (W/ 10PIN) Design . . . 201
A26 - Clutch Switch/Monitoring (High and Low Switch to BCM) Design . . . 1296
A26 - Coolant Level Monitoring (No Coolant Module) Design . . . 517
A26 - Cooling Fan Control Two-Speed Design . . . 522
A26 - Cranking (Starter) GEN4 BCM W/ Thermal Overcrank Design . . . 1280
A26 - Cranking (Starter) GEN4 BCM W/O Thermal Overcrank Design . . . 1274
A26 - Cranking Request (w/ Key Switch w/ BCM) Design . . . 1289
A26 - Delco Remy 28SI Alternator W/Sensor Design . . . 1243
A26 - Delco Remy 36SI Alternator W/Sensor Design . . . 1245
A26 - Delco Remy 40SI Alternator W/Sensor Design . . . 1247
A26 - Diagnostic Private J1939 Design . . . 34
A26 - Directional Signal (Turn) W/ Daisy Chain Box Lamps Design . . . 633
A26 - Directional Signal (Turn) W/ Daisy Chain Box Lamps, W/Plow Lights Design . . . 637
A26 - Directional Signal (Turn) W/ LED BOX LAMPS Design . . . 634
A26 - Directional Signal (Turn) W/ LED BOX LAMPS, W/Plow Lights Design . . . 639
A26 - Directional Signal (Turn) W/ Less Power Module Tail Board, W/Hazard SW Design . . . 635
A26 - Directional Signal (Turn) W/ Less Power Module Tail Board, W/Hazard SW, W/Plow Lights Design . . . 641
A26 - Directional Signal (Turn) W/ Single Tail Board W/Hazard SW Design . . . 636
A26 - Directional Signal (Turn) W/ Single Tail Board, W/Hazard SW, W/Plow Lights Design . . . 643
A26 - DLB - Remote Power Module (3 RPM n/Switch Pack) Design . . . 358
A26 - DLB - Remote Power Module (3 RPM n/Switch Pack)Option2 Design . . . 359
A26 - DLB - Remote Power Modules (1 RPM n/ Switch Packs) Design . . . 341
A26 - DLB - Remote Power Modules (1 RPM w/ Switch Packs) Design . . . 344
A26 - DLB - Remote Power Modules (2 RPM n/ Switch Pack) Design . . . 347
A26 - DLB - Remote Power Modules (2 RPM n/ Switch Pack)Option2 Design . . . 350
A26 - DLB - Remote Power Modules (2 RPM w/ Switch Packs) Design . . . 351
A26 - DLB - Remote Power Modules (2 RPM w/ Switch Packs)Option2 Design . . . 352
A26 - DLB - Remote Power Modules (3 RPM w/ Swtich Packs) Design . . . 355
A26 - DLB - Remote Power Modules (3 RPM w/ Swtich Packs)Option2 Design . . . 356
A26 - Drain Valve Heater Design . . . 441
A26 - Driver Controlled Locking Differential FR and RR Axle (Dana w/ one switch) Design . . . 1157
A26 - Driver Controlled Locking Differential FR and RR Axle (Meritor w/ one sw) Design . . . 1160
A26 - Driver Controlled Locking Differential FR and RR Axles (Dana w/ two sw) Design . . . 1156
A26 - Driver Controlled Locking Differential FR and RR Axles (Meritor w/ two sw) Design . . . 1159
A26 - Driver Controlled Locking Differential RR Axle (Dana w/ one sw) Design . . . 1158
A26 - Driver Controlled Locking Differential RR Axle (Meritor w/ one sw) Design . . . 1161
A26 - ECM Design . . . 58
A26 - Engine Brake Mux Switch Design . . . 529
A26 - Engine Brake W/ Stalk Shifter Design . . . 530

A26 - Engine Private J1939 (250kbps) Design . . . 35
A26 - Engine Speed (Tachometer) Design . . . 1087
A26 - Exhaust Brake Design . . . 533
A26 - Forward Chassis Ground Splice Packs 8800 Design . . . 74
A26 - Front Fog Lamps LED Design . . . 695
A26 - Front Fog Lights W CONNECTOR Halogen Design . . . 697
A26 - Front Marker Lights Design . . . 716
A26 - Front Marker Lights W/Plow Lights Design . . . 717
A26 - Fuel Heater (Vehicle Powered)(Davco) Design . . . 929
A26 - Hazard Warning Light N/Trlr Socket Design . . . 731
A26 - Headlight W/Plowlights, W/LOWW, W/O Interrupt Design . . . 743
A26 - Headlight W/Plowlights, W/O LOWW, W/O Interrupt Design . . . 747
A26 - Headlights W/LOWW, W/Interrupt - 10 PIN CLK Design . . . 739
A26 - Headlights W/LOWW, W/O Interrupt Design . . . 735
A26 - Headlights W/O LOWW, W/Interrupt - 10 PIN CLK Design . . . 741
A26 - Headlights W/O LOWW, W/O Interrupt Design . . . 737
A26 - Headlights W/PlowLights, W/LOWW, W/Interrupt - 10 PIN CLK Design . . . 751
A26 - Headlights W/PlowLights, W/O LOWW, W/Interrupt - 10 PIN CLK Design . . . 755
A26 - Heated Mirrors (Hood with Door Pods) Design . . . 165
A26 - Heated Mirrors (RT Hood with Door Pods) Design . . . 166
A26 - Heating Ventilation & Air Conditioning (HVAC) Auto Temp Control Design . . . 1054
A26 - Heating Ventilation & Air Conditioning (HVAC) Design . . . 1063
A26 - Hill Start Aid (Bendix) Design . . . 1228
A26 - I/O Expansion Design . . . 334
A26 - Leece-Neville - LN 325A Alternator W/Sensor Design . . . 1253
A26 - Leece-Neville 320PAH Alternator Design . . . 1252
A26 - Leece-Neville AVI160 Alternator Design . . . 1249
A26 - Leece-Neville AVI160-210A/240A Alternator W/Sensor Design . . . 1250
A26 - License Plate Light (LED BOX LAMP Daisy Chain Tail Light) Design . . . 855
A26 - License Plate Light (LED BOX LAMP Tail Light) Design . . . 856
A26 - License Plate Light (Tail Light Single Assembly) Design . . . 857
A26 - License Plate Light (Tail Light Single Assembly)Option2 Design . . . 858
A26 - License Plate Light (Tail Light Single Assembly)Option3 Design . . . 859
A26 - License Plate Light (Tail Light Single Assy.) W/Less Power Module (W/08TKC, 08THM) Design . . . 860
A26 - Lift Axle Controls (Center Pedestal Controls f/ 1 lift axle) Design . . . 1132
A26 - Lift Axle Controls (Center Pedestal Controls f/ 2 Lift Axles) Design . . . 1134
A26 - Lift Axle Controls (Center Pedestal Controls f/ 3 lift axles) Design . . . 1135
A26 - Low Speed J1939 (125Kbps) Design . . . 36
A26 - Mirrors (Heat) Switch Pack Actuated includes Hood Mirrors Design . . . 167
A26 - Mirrors (Heat) Switch Pack Actuated includes RT Hood Mirror Design . . . 168
A26 - Park Brake Control (Monitoring)(GEN IV BCM) Design . . . 485
A26 - Power Lift Gate Design . . . 338
A26 - Powertrain J1939 Allison 3k/4k Design . . . 38
A26 - Powertrain J1939 UltraShift Transmission Design . . . 39
A26 - Powertrain Splice Pack 6704 Design . . . 77
A26 - Rear Light (LED BOX LAMP Tail Light) W/08TPS, 08TPR Design . . . 881
A26 - Rear Light (Tail Light) W/08THK Design . . . 883
A26 - Rear Light (Tail Light) W/08TKB Design . . . 884
A26 - Rear Light (Tail Light) W/08TKJ Design . . . 885
A26 - Rear Light (Tail Light) W/Less Power Module (W/08TKC, 08THM) Design . . . 882
A26 - Rear Light (Tail Light) W_Daisy Chain pair of Box Lamps W/08TRS Design . . . 886
A26 - Rear Lights Stop - Daisy Chain Design . . . 619
A26 - Rear Lights Stop - Dual Assembly Design . . . 620
A26 - Rear Lights Stop - Single Assemby Design . . . 621
A26 - Rear Lights Stop - Single Assemby Jumper Harness W/08TKC, 08THM Design . . . 622
A26 - Rear Lights Stop - Single Assemby W/08TKJ Design . . . 623
A26 - Relays Design . . . 97
A26 - Remote Keyless Access Design . . . 245
A26 - Remote Start/Stop Design . . . 393
A26 - Rightside Air Dryer Design . . . 413

A26 - Selective Catalytic Reduction (SCR) Design 266
A26 - Separate Rear Lights (Stop) W/08TVH Design 624
A26 - Snow Valve Control Design 536
A26 - Stability Control (Bendix Straight Truck J1939 Driven Lamp) Design 497
A26 - Starter Interlock (BCM Controlled with Input from Allison 3K/4K TCM) Design 1297
A26 - Starter Interlock (BCM LSD Controlled w/ Relay & N/ Auto SS) Design . 1299
A26 - Starting Aid (Flame Start) Design 543
A26 - Telematics (PEOPLE NET, DAYCAB) Design 250
A26 - Telematics J1708 (9.6kbps) Design 37
A26 - TEM Electric Trailer Brake Controller Activated Stop LT (Option2) Design 1190
A26 - TEM Electric Trailer Brake Controller Activated Stop LT Design 1189
A26 - Traction Control (Bendix) Design 511
A26 - Transmission (Allison 3K/4K) Design 1214
A26 - Transmission Oil Temperature-Manual Trans Design 1095
A26 - Transmission Oil Temperature-Manual Trans w/Aux Gauge Design 1097
A26 - Transmission Power Take Off (Auto Trans Dual PTO W/ 42 Parameters) Design 398
A26 - Transmission Power Take Off (Auto Trans Single PTO w/21 Parameters) Design 400
A26 - Transmission Power Take Off (Manual Trans Dual PTO W/ 42 Parameters) Design 399
A26 - Transmission Power Take Off (Manual Trans Single PTO w/ 21 Parameters) Design 401
A26 - Transmission Power Take Off (Single Input Configurable pull up or pull down) Design 402
A26 - Transmission Shifter (Stalk Shifter Allison) Design 1197
A26 - Transmissions Electrical I/O (Eaton Ultrashift) Design 1226
A26 - Two Speed Axle (Multiplex SW on Dash) Design 1177
A26 - Ultrashift Plus Design 1212
A26 - Underhood PDM Design 103
A26 - Vehicle Acceleration (w/ Two PWR Two GND & Two STS) Design 546
A26 - Vehicle Speedometer System (Manual XMSN) Design 1106
A26 - Water In Fuel (WIF) Davco N/ Heater Design 1004
A26 - Water In Fuel (WIF) Davco W/ Heater Design 1013
A26 - Windshield Wipers Design 1238
A26 - WORK LIGHT 1 BULB Design 908
A26 - WORK LIGHT W Backup 1 Bulb Design 898
A26 - WORK LIGHT W BackUP 1 BULB Design 900
A26 - WORK LIGHT W RKE 1 BULB Design 902
A26 - Work Light W/ Backup 1 Bulb W/Automatic W/ RKE Design 904
A26 - Work Light W/ Backup 1 Bulb W/Manual W/ RKE Design 906
A26 - Work Lights LED W/ Sw Pack - Day Cab Design 896
A26 - ZVR Splice Packs 6702 & 6704B Design 78
A26- Bosch LH160 LH200 Alternator Design 1255
A26/B6.7/L9 - A26 - Adaptive Cruise Control w/o Display (Bendix) Design 516
A26/B6.7/L9 - ABS CAN Splice Pack - 1410 Design 100
A26/B6.7/L9 - Adjustable Engine Speed Control (PTO) 4-pin Design 276
A26/B6.7/L9 - Adjustable Engine Speed Control (PTO) 10-pin Design 274
A26/B6.7/L9 - Alternate Flashing (Wig Wag) - Park Brake disables High Beams Design 549
A26/B6.7/L9 - Alternate Flashing (Wig Wag) - Park Brake disables Wig Wag Design 550
A26/B6.7/L9 - Automatic Lighting - Dual Sensor Twilight/Solar Design 551
A26/B6.7/L9 - Automatic Lighting - Single Sensor Twilight Design 553
A26/B6.7/L9 - Auxiliary Power (40A) HSD Design 123
A26/B6.7/L9 - Axle Lift Controls Design 1126
A26/B6.7/L9 - Banana Plugs Receptacle Design 142
A26/B6.7/L9 - Battery Feed Design 93
A26/B6.7/L9 - BCM (Body Control Module) Design 1
A26/B6.7/L9 - Body Builder Aux Power (In Cab, BOC, or EOF) Design 302
A26/B6.7/L9 - Cab Dome Light W/ Combo in Diamond Trim Design 1121
A26/B6.7/L9 - Cab Dome Light W/Classic Trim Design 1120
A26/B6.7/L9 - CB Radio - Power Only (Single Antenna) Design 144
A26/B6.7/L9 - CB Radio - Power Only Design 143

A26/B6.7/L9 - Cigar Lighter Aux APO Design 146
A26/B6.7/L9 - Cigar Lighter Design 145
A26/B6.7/L9 - Clearance and Identification Lights Design 631
A26/B6.7/L9 - Compressed Air Supply Design 1078
A26/B6.7/L9 - Courtesy Light 4 Door Design 1124
A26/B6.7/L9 - Courtesy Light Cab 2 door Design 1123
A26/B6.7/L9 - Crank Inhibit (Engine Speed Inhibit Only) Design 1273
A26/B6.7/L9 - Cruise Control (W/ One Telltale 4 Pin) Design 156
A26/B6.7/L9 - Cruise Control (W/ One Telltale 10 Pin) Design 153
A26/B6.7/L9 - Daytime Running Lights (Output to Plow Lights) Design 632
A26/B6.7/L9 - DEF Economy Monitor (GEN IV) Design 1079
A26/B6.7/L9 - Door Ajar Reminder (Entry /Exit):4 Door Design 159
A26/B6.7/L9 - Door Ajar Reminder (Entry/Exit) 2 Door Design 160
A26/B6.7/L9 - Door Pod Module (2 Door) Design 161
A26/B6.7/L9 - Door Pod Module (4 Door) Design 162
A26/B6.7/L9 - DPF Regen Switch Only Design 263
A26/B6.7/L9 - DPF With Bistable Inhibit Switch Design 264
A26/B6.7/L9 - DPF With Monostable Inhibit Switch Design 265
A26/B6.7/L9 - Driver and Passenger Seats - RollTek (Hard Wired) Design . . . 1181
A26/B6.7/L9 - Engine Block Heater Design 525
A26/B6.7/L9 - Engine Fuel and Block Heaters (Purchased Assembly) Design . 526
A26/B6.7/L9 - Engine Oil and Block Heaters (Purchased Assembly) Design . . . 527
A26/B6.7/L9 - Engine Oil Fuel and Block Heaters Design 528
A26/B6.7/L9 - Engine Oil Level Monitoring Design 1083
A26/B6.7/L9 - Engine Oil Pressure Design 1084
A26/B6.7/L9 - Engine Oil Temperature (NA Mux) Design 1085
A26/B6.7/L9 - Engine Oil Temperature(NA MUX AUX Gauge) Design 1086
A26/B6.7/L9 - Engine Usage Monitoring (Base) NA Design 1081
A26/B6.7/L9 - Engine Usage Monitoring (VID Option) Design 1082
A26/B6.7/L9 - Engine Warning_MUX Design 1112
A26/B6.7/L9 - Exterior Lamp Check Design 693
A26/B6.7/L9 - Exterior Lamp Reminder Design 694
A26/B6.7/L9 - Fifth Wheel Slide Design 926
A26/B6.7/L9 - Four Speakers Daycab BT n/QC Design 111
A26/B6.7/L9 - Four Speakers Daycab n/BT n/QC Design 112
A26/B6.7/L9 - Fuel Economy Monitor Design 1089
A26/B6.7/L9 - Ground Splice Pack 1022 & 1023 Design 67
A26/B6.7/L9 - Ground Splice Pack 1027 Design 68
A26/B6.7/L9 - Heated Windshield Design 242
A26/B6.7/L9 - Height Control Design 1170
A26/B6.7/L9 - High Exhaust System Temperature (HEST) Monitoring Design 1113
A26/B6.7/L9 - HVAC Assembly Actuators Design 1064
A26/B6.7/L9 - Instrument Cluster (Premium) Design 61
A26/B6.7/L9 - Instrument Cluster (Standard) Design 63
A26/B6.7/L9 - Instrument Cluster - Bulb Check Design 65
A26/B6.7/L9 - Instrument Cluster - Request and Status Design 66
A26/B6.7/L9 - Interior Dual Post Ground Stud-Cowl Wall Design 69
A26/B6.7/L9 - Interior PDM Chart Design 94
A26/B6.7/L9 - Interior Task Lights (Map) - Dome Combo Design 1122
A26/B6.7/L9 - Jaw Unlock Control Design 927
A26/B6.7/L9 - Jaw Unlock Control W/ SOLENOIDS W/SWITCH PACKS Design 928
A26/B6.7/L9 - Key Switch (Operator Input) Design 1291
A26/B6.7/L9 - Key Switch Accessory Design 95
A26/B6.7/L9 - Key Switch Ignition Design 96
A26/B6.7/L9 - Lighting Control Module Design 83
A26/B6.7/L9 - Mirrors (Heat) Switch Pack Actuated Relay Driven Design 164
A26/B6.7/L9 - Mirrors (Heated) Design 163
A26/B6.7/L9 - Multiplexed Switch Pack (Primary Switch) Design 243
A26/B6.7/L9 - Odometer (via BCM/EGC) Design 1090
A26/B6.7/L9 - One USB Design 253
A26/B6.7/L9 - Over The Air Electrical I/O (OnCommand Link / N2 Module) Design 248
A26/B6.7/L9 - Over the Air Programming (OnCommand Link / N2 Module) Design 249
A26/B6.7/L9 - Panel Backlighting (Cabin Dimmer) Design 1125

A26/B6.7/L9 - Panel Light Dimmer Splice Pack - 1021 Design 101
A26/B6.7/L9 - Park / Turn Lights Splice Packs 1623/1625/400 Design 102
A26/B6.7/L9 - PARK LIGHTS - N/Marker Interrupt Design 874
A26/B6.7/L9 - PARK LIGHTS - W/Marker Interrupt 4 pin clockspring Design . . 878
A26/B6.7/L9 - PARK LIGHTS - W/Marker Interrupt 10pin CLCKSPRING Design 876
A26/B6.7/L9 - Power Divider Lock Control and Monitoring Design 1171
A26/B6.7/L9 - Power Mirrors (Control Switch Actuated) Design 197
A26/B6.7/L9 - PTO Hour Meter Design 1094
A26/B6.7/L9 - Radio Design 105
A26/B6.7/L9 - Radio w/Bluetooth Design 106
A26/B6.7/L9 - Radio w/Bluetooth without Steering Wheel Pod Design 108
A26/B6.7/L9 - Radio w/Steering Wheel Pod Design 109
A26/B6.7/L9 - Real Time Clock (RTC) (BCM Controlled) Design 244
A26/B6.7/L9 - Rear Suspension Pressure Monitoring (Auxiliary Gauge) Design 1173
A26/B6.7/L9 - Rear Suspension Pressure Monitoring (Virtual Gauge) Design . 1175
A26/B6.7/L9 - Seatbelt Reminder (Warning)(Driver & Passenger in parallel) Design 1187
A26/B6.7/L9 - Seatbelt Reminder (Warning)(Driver only) Design 1186
A26/B6.7/L9 - Seatbelt Reminder 6 Seats Design 1185
A26/B6.7/L9 - Seats (RollTek) Drivers Seat Only (Hard Wired) - Leather Design 1182
A26/B6.7/L9 - Seats (RollTek) Drivers Seat Only (Hard Wired) - Mordular Design 1183
A26/B6.7/L9 - Seats (RollTek) Drivers Seat Only (Hard Wired) - Vinyl Design 1184
A26/B6.7/L9 - Snow Plow Lights Design 880
A26/B6.7/L9 - Snow Valve Control Design 538
A26/B6.7/L9 - Standard APO Aux APO Design 150
A26/B6.7/L9 - Standard APO Design 149
A26/B6.7/L9 - Theft Deterrent (Grid Controlled) Design 252
A26/B6.7/L9 - Trans Range Inhibit (J1939 Comm) Design 1115
A26/B6.7/L9 - Transfer Case - High/Low Air Sol Design 1210
A26/B6.7/L9 - Transfer Case - High/Neu/Low Air Sol Design 1211
A26/B6.7/L9 - Transmission - MODE Selection Design 1233
A26/B6.7/L9 - Trip Odometer (w/ECM & TCM) Design 1093
A26/B6.7/L9 - Trip Odometer (Gen 4 Cluster) Design 1092
A26/B6.7/L9 - Trip Odometer w/VID Design 1091
A26/B6.7/L9 - Two Speakers Daycab BT n/QC Design 113
A26/B6.7/L9 - Two Speakers Daycab n/BT n/QC Design 114
A26/B6.7/L9 - Two USB Design 254
A26/B6.7/L9 - Up Shift Indicator Design 1114
A26/B6.7/L9 - Vehicle Information Display (With Bluetooth) Design 1119
A26/B6.7/L9 - Vehicle Information Display (Without Bluetooth) Design 1118
A26/B6.7/L9 - Vehicle Information Display Premium w/ Wi-Fi (VID) Design . . . 1117
A26/B6.7/L9 - Vehicle Sleep Mode Design 256
A26/B6.7/L9 - Vehicle Speed Control (Cruise Control) 4 Pin Design 158
A26/B6.7/L9 - Vehicle Speed Control (Cruise Control) 10 Pin Design 155
A26/B6.7/L9 - Vehicle Speed Limit Override Design 1109
A26/B6.7/L9 - Vehicle Speedometer System (Automatic XMSN) Design 1105
A26/B6.7/L9 - Voltage Monitoring (Voltmeter) (with Aux gauge) Design 1111
A26/B6.7/L9 - Voltage Monitoring (Voltmeter) Design 1110
A26/B6.7/L9 - ZVR Splice Pack - 1620 Design 70

B

B6.7 & L9 - Engine Speed (Tachometer) Design 1088
B6.7 - 2-Way Radio Design 259
B6.7 - 26 inch Fuel Tank - Secondary Design 990
B6.7 - 26 inch Fuel Tank Design 987
B6.7 - ABS Private J1939 Design 40
B6.7 - Aftertreatment PDM Design 86
B6.7 - Antilock Brake System (ABS) BENDIX 4 Channel Implemenation Design 471
B6.7 - Auxilary Power Fuse Design 89
B6.7 - Auxiliary Air Solenoids (1 Normally Closed) Option 1 Design 284
B6.7 - Auxiliary Air Solenoids (1 Normally Closed) Option 2 Design 285

B6.7 - Auxiliary Air Solenoids (1 Normally Closed) Option 3 Design 288
B6.7 - Axle Loading (Weight) Rear Design 1142
B6.7 - Axle Temperature Monitoring (Single Rear Aux Gauge) Design 1150
B6.7 - Axle Temperature Monitoring (Single Rear Virtual Gauge) Design 1151
B6.7 - Back-Up Alarm (Automatic) W/ Tailboard Design 133
B6.7 - Back-Up Alarm (Automatic) W/O Tailboard Design 132
B6.7 - Back-Up Alarm (Manual) W/ Tailboard Design 135
B6.7 - Back-Up Alarm (Manual) W/O Tailboard Design 134
B6.7 - Backup Light (Dual Daisy Reverse LT)Allison/ZF Trans 1K/2K Design . . 574
B6.7 - Backup Light (Dual Daisy Reverse LT)Allison/ZF Trans 3K/4K Design . . 575
B6.7 - Backup Light (Dual Reverse Light)Allison/ZF Trans 1K/2K Design 577
B6.7 - Backup Light (Dual Reverse Light)Allison/ZF Trans 3K/4K Design 578
B6.7 - Backup Light (Single Reverse Light) Allison 1K/2K Option 1 Design 582
B6.7 - Backup Light (Single Reverse Light) Allison 1K/2K Option 2 Design 583
B6.7 - Backup Light (Single Reverse Light) Allison 1K/2K Option 3 Design 584
B6.7 - Backup Light (Single Reverse Light) Allison 3K/4K Option 1 Design 585
B6.7 - Backup Light (Single Reverse Light) Allison 3K/4K Option 2 Design 587
B6.7 - Backup Light (Single Reverse Light) Allison 3K/4K Option 3 Design 589
B6.7 - Backup Lights (Dual Daisy Reverse Light) Eaton/Manual Trans Design . 580
B6.7 - Backup Lights (Dual Reverse Light) Eaton/Manual Trans Design 581
B6.7 - Backup Lights (Single Reverse Light) Eaton/Manual Trans Design 593
B6.7 - Backup Lights (Single Reverse Lights) Eaton/Manual Trans Option 1 Design 591
B6.7 - Backup Lights (Single Reverse Lights) Eaton/Manual Trans Option 2 Design 592
B6.7 - Battery International (4) 12V Design 1310
B6.7 - Body Builder Lighting - Combined Turn and Stop Lamps (Automatic) Design 315
B6.7 - Body Builder Lighting - Combined Turn and Stop Lamps (Manual) Design 318
B6.7 - Body Builder Lighting - Separate Turn and Stop Lamps (Blunt Cut) Option 1 Design 321
B6.7 - Body Builder Lighting - Separate Turn and Stop Lamps (Blunt Cut) Option 2 Design 322
B6.7 - Body J1939 (250kbps) Design 41
B6.7 - Bosch LH160_LH200 Alternator Design 1256
B6.7 - Brake Pressure (Auxiliary Gauge) Design 1074
B6.7 - Brake Pressure (Virtual Gauge) Design 1075
B6.7 - Brake Switch Design 617
B6.7 - Cab J1939 (250kbps) Design 42
B6.7 - CAN Layout Design 17
B6.7 - Center Chassis Ground Splice Packs Design 72
B6.7 - City Horn (W/ 4PIN CLK & Park Brake) Design 217
B6.7 - City Horn (W/ 4PIN CLK) Design 223
B6.7 - City Horn (W/ 10PIN CLK & Park Brake) Design 211
B6.7 - City Horn (W/ 10PIN CLK) Design 214
B6.7 - Clutch Switch/Monitoring (High and Low Switch to BCM) Design 1300
B6.7 - Coolant Level Monitoring (No Coolant Module) Design 518
B6.7 - Cooling Fan Control Two-Speed Design 523
B6.7 - Cranking (Starter) GEN4 BCM W/O Thermal Overcrank Design 1286
B6.7 - Cranking Request (w/ Key Switch w/ BCM) Design 1293
B6.7 - Current Monitoring (Ammeter) Design 1070
B6.7 - Delco Remy 28SI Alternator W/Sensor Option 1 Design 1258
B6.7 - Delco Remy 28SI Alternator W/Sensor Option 2 Design 1259
B6.7 - Delco Remy 36SI Alternator W/Sensor Design 1260
B6.7 - Delco Remy 40SI Alternator W/Sensor Design 1261
B6.7 - Directional Signal (Turn) W/ DAISY CHAIN BOX LAMPS Design 645
B6.7 - Directional Signal (Turn) W/ Daisy Chain Box Lamps W/Plow Lights Design 653
B6.7 - Directional Signal (Turn) W/ LED BOX LAMPS Design 647
B6.7 - Directional Signal (Turn) W/ LED BOX LAMPS W/Plow Lights Design . . 657
B6.7 - Directional Signal (Turn) W/ Less Power Module Tail Board W/Hazard SW Design 649
B6.7 - Directional Signal (Turn) W/ Less Power Module Tail Board W/Hazard SW W/PLOW LIGHTS Design 661

B6.7 - Directional Signal (Turn) W/ Single Tail Board W/Hazard SW Design . . . 651
B6.7 - Directional Signal (Turn) W/ Single Tail Board W/Plow Lights Design . . . 665
B6.7 - DLB - Remote Power Module (3 RPM n/Switch Pack) Design 376
B6.7 - DLB - Remote Power Modules (1 RPM n/ Switch Packs) Design 361
B6.7 - DLB - Remote Power Modules (1 RPM w/ Switch Packs) Design 364
B6.7 - DLB - Remote Power Modules (2 RPM n/ Switch Pack) Design 367
B6.7 - DLB - Remote Power Modules (2 RPM w/ Switch Packs) Design 371
B6.7 - DLB - Remote Power Modules (3 RPM w/ Swtich Packs) Design 375
B6.7 - Drain Valve Heater Design 451
B6.7 - Driver Controlled Locking Differential - RR Axle (Dana w/ one sw) Design 1162
B6.7 - Driver Controlled Locking Differential - RR Axle (Meritor w/ one sw) Design 1163
B6.7 - ECM Cummins CM2350A Design 59
B6.7 - Engine Private J1939 (250kbps) Design 43
B6.7 - Exhaust Brake (Cummins) Design 534
B6.7 - Fog Lights (Halogen White) Design 699
B6.7 - Fog Lights (LED White) Design 702
B6.7 - Forward Chassis Ground Splice Packs 8800 Design 75
B6.7 - Front Fog Lamps Design 705
B6.7 - Front Fog Lights W CONNECTOR Design 708
B6.7 - Front Marker Lights - With Plow Lights Design 721
B6.7 - Front Marker Lights - Without Snow Plow Lights Design 719
B6.7 - Fuel Heater (Vehicle Powered)(Davco) Design 938
B6.7 - Fuel Heater (Vehicle Powered)(Racor) Design 945
B6.7 - Headlight W/Plowlights W/LOWW W/O Headlight Interrupt -10 PIN CLK Design 783
B6.7 - Headlights W 10PIN CLK W/LOWW W/Interrupt Design 771
B6.7 - Headlights W 10PIN CLK W/LOWW W/O Interrupt Design 767
B6.7 - Headlights W/O Lights ON with wipers (LOWW) W/ Headlights Interrupt Design 763
B6.7 - Headlights W/O Lights ON With Wipers (LOWW) W/O Headlights Interrupt Design 759
B6.7 - Headlights W/PlowLights W/Headlight Interrupt -10PIN CLK W/LOWW W/Interrupt Design 791
B6.7 - Headlights W/PlowLights W/O Lights ON with wipers (LOWW) W/ Headlights Interrupt Design 799
B6.7 - Headlights W/Plowlights W/O Lights ON With Wipers (LOWW) W/O Headlights Interrupt Design 775
B6.7 - Heated Mirrors (Hood with Door Pods) Design 169
B6.7 - Heated Mirrors (RT Hood with Door Pods) Design 171
B6.7 - Heating Ventilation & Air Conditioning (HVAC) Auto Temp Control Design 1057
B6.7 - Heating Ventilation & Air Conditioning (HVAC) Design 1065
B6.7 - I/O Expansion Design 335
B6.7 - Leece-Neville - LN 325A Alternator W/Sensor Design 1265
B6.7 - Leece-Neville 320PAH Alternator Design 1264
B6.7 - Leece-Neville AVI160 Alternator Design 1262
B6.7 - Leece-Neville AVI160-210A/240A Alternator W/Sensor Design 1263
B6.7 - License Plate Light (LED BOX LAMP Daisy Chain Tail Light) Design . . . 861
B6.7 - License Plate Light (LED BOX LAMP Tail Light) Design 862
B6.7 - License Plate Light (Tail Light Single Assy) Option 1 Design 863
B6.7 - License Plate Light (Tail Light Single Assy) Option 2 Design 864
B6.7 - License Plate Light (Tail Light Single Assy) Option 3 Design 865
B6.7 - License Plate Light (Tail Light Single Assy) Option 4 Design 866
B6.7 - License Plate Light (Tail Light Single Assy) W/Less Power Module Design 867
B6.7 - Low Speed J1939 (125kbps) Design 44
B6.7 - Mirrors (Heat) Switch Pack Actuated includes Hood Mirrors Design 175
B6.7 - Mirrors (Heat) Switch Pack Actuated includes RT Hood Mirror Design . . 177
B6.7 - Park Brake Controls (Monitoring) (Door Switch City Horn) Design 486
B6.7 - Power Lift Gate Design 339
B6.7 - Powertrain J1939 Allison 1k/2k Design 46
B6.7 - Powertrain J1939 Allison 3k/4k Design 47
B6.7 - Powertrain J1939 Manual Transmission Design 48
B6.7 - Powertrain Splice Pack 6704 Design 79

B6.7 - Range Inhibit (sixth gear inhibit switch) Design 1116
B6.7 - Rear Light (LED BOX LAMP Tail Light) Design 887
B6.7 - Rear Light (Tail Light) Option 1 Design 888
B6.7 - Rear Light (Tail Light) Option 2 Design 889
B6.7 - Rear Light (Tail Light) Option 3 Design 890
B6.7 - Rear Light (Tail Light) Option 4 Design 891
B6.7 - Rear Light (Tail Light) W_Daisy Chain pair of Box Lamps Design 892
B6.7 - Rear Lights Stop - Daisy Chain Design 625
B6.7 - Rear Lights Stop - Dual Assembly Design 626
B6.7 - Rear Lights Stop - Single Assemby Design 627
B6.7 - Relays Design 98
B6.7 - Remote Keyless Access Design 246
B6.7 - Remote Start/Stop Design 394
B6.7 - Remote Start/Stop w/ Emergency Pump Design 395
B6.7 - RIGHTSIDE AIR DRYER Design 424
B6.7 - Selective Catalytic Reduction (SCR) Design 270
B6.7 - Snow Valve Control Design 539
B6.7 - Speaker:Four Speakers Daycab w/BT w/QC Design 118
B6.7 - Speakers:Four Speakers Daycab n/BT w/QC Design 115
B6.7 - Speakers:Two Speakers n/BT w/QC Design 116
B6.7 - Speakers:Two Speakers w/BT w/QC Design 117
B6.7 - Stability Control (Bendix Straight Truck J1939 Driven Lamp) Design 501
B6.7 - Starter Interlocks (BCM Controlled with Input from Allison 1K/2K TCM) Design 1301
B6.7 - Starter Interlocks (BCM Controlled with Input from Allison 3K/4K TCM) Design 1302
B6.7 - Starting Aid (Grid Heater) Design 544
B6.7 - T-Handle for Allison Without Park Position Design 1203
B6.7 - Telematics J1708 (9.6kbps) Design 45
B6.7 - TEM Electric Trailer Brake Controller Activated Stop LT Option 2 Design 1191
B6.7 - TEM _Electric Trailer Brake Controller Activated Stop LT Option 1 Design 1192
B6.7 - Traction Control (Bendix) Design 513
B6.7 - Trailer Interface (Lighting) – BLUNT CUT (Part of Electric Trailer Brakes) Option 1 Design 1193
B6.7 - Trailer Interface (Lighting) – BLUNT CUT (Part of Electric Trailer Brakes) Option 2 Design 1194
B6.7 - Transmission (Allison 1K/2K) Design 1220
B6.7 - Transmission (Allison 3K/4K) Design 1221
B6.7 - Transmission Oil Temperature-Manual Trans (w/Aux Gauge) Design 1100
B6.7 - Transmission Oil Temperature-Manual Trans Design 1099
B6.7 - Transmission Power Take Off (Auto Trans Single PTO w/21 Parameters) Design 403
B6.7 - Transmission Power Take Off (Manual Trans Single PTO w/21 Parameters) Design 404
B6.7 - Transmission Power Take Off (Single Input configurable pull up or pull down) Design 405
B6.7 - Transmission Shifter (Stalk Shifter Allison) Design 1199
B6.7 - Transmission Shifter (T-Handle for Allison With Park Position) Design 1201
B6.7 - Transmission Shifter Allison 5th Gen Push Button(SURHD) Design 1205
B6.7 - Two Speed Axle (AirShift on Shifter) Design 1178
B6.7 - Vehicle Acceleration (w/ Two PWR Two GND & Two STS) Design 547
B6.7 - Vehicle Speedometer System (Manual XMSN) Design 1107
B6.7 - Water In Fuel (WIF) Racor N/ Heater Design 1022
B6.7 - Water In Fuel (WIF) Racor W/ Heater Design 1029
B6.7 - Windshield Washer Pump & Low Fluid Sensor Design 1235
B6.7 - Windshield Washer Pump Design 1234
B6.7 - Windshield Wipers Design 1239
B6.7 - WORK LIGHT 1 BULB Design 913
B6.7 - WORK LIGHT W BackUP 1 BULB Design 911
B6.7 - WORK LIGHT W RKE 1 BULB Design 912
B6.7 - Work Lights LED W/ Sw Pack - Day Cab Design 910
B6.7 - ZVR Splice Pack - 6747 Design 80
B6.7/L9 - Chassis PDM Design 92
B6.7/L9 - Engine Brake Mux Switch Design 531

B6.7/L9 - Engine Brake W/ Stalk Shifter Design 532
B6.7/L9 - Underhood PDM Design 104

C

Connector Assembly List HV 3343

D

D49_240:3709924C1 1320
D49_240:3709924C1 1321
D49_250F:4064552C1 1322
D49_250F:4064552C1 1323
D49_250F:4064552C1 1324
D49_250F:4064552C1 1325
D49_2000F:3544687C1 1319

H

HV B6.7 - Coolant Level Monitoring (With Coolant Module) Design 520
HV L9 - Coolant Level Monitoring (With Coolant Module) Design 521

J

J1-1603:3598711C1 1326
J2-1604:3598710C1 1344
J3-1600:3598706C1 1362
J4-1601:3598707C1 1384
J5-1602:3598705C1 1398
J5:RING-E-1-2_0 1424
J6-1606:3759005C1 1425
J6-1606:3759005C1 1452
J7-1607:3710061C1 1453
J7:RING-M-12_0 1457

K

K19-2000:3710089C1 1458
K19-2001:3710089C1 1459
K19_1000:RING-E-1-4_0 1460
K19_1001:RING-E-1-4_0 1461
K20_7500W:1661778C1 1462
K22-2000:3710089C1 1463
K22-2001:3710089C1 1464
K22-7205F:3525872C1 1465
K22-7206F:3525874C1 1467
K22-7500:3605713C1 1469
K22_1200:RING-E-1-2_0 1472
K22_1701:RING-E-1-2_0 1473
K22_6305M:RING-M-5_0 1474

L

L9 - 2-Way Radio Design 261
L9 - 26 inch Fuel Tank - Secondary Design 997
L9 - 26 inch Fuel Tank Design 991
L9 - ABS Private J1939 Design 49
L9 - Aftertreatment PDM Design 87
L9 - Ambient Air Temperature Design 1069
L9 - Antilock Brake System (ABS) BENDIX 4 Channel Implemenation Design . 474
L9 - Antilock Brake System (ABS) Bendix 6 Channel Implementation Design . . 475
L9 - Antilock Brake System (ABS) Wabco 4 Channel Implementation Design . . 484
L9 - Auto Neutral (Allison with Multiplex Switch and Confirmation Telltale) Design 1218
L9 - Auto Neutral (Allison without Multiplex Switch and Confirmation Telltale) Design 1216
L9 - Auxilary Power Fuse Design 90
L9 - Auxiliary Air Solenoids (1 Normally Closed) Design 291
L9 - Auxillary Air Solenoids Normally Closed Design 292
L9 - Axle Lift Controls Option 2 Design 1136
L9 - Axle Loading (Weight) Rear Design 1144

L9 - Axle Temperature Monitoring (Tandem Rear Aux Gauge) Option 1 Design 1152
L9 - Axle Temperature Monitoring (Tandem Rear Aux Gauge) Option 2 Design 1153
L9 - Axle Temperature Monitoring (Tandem Rear Virtual Gauge) Option 1 Design 1154
L9 - Axle Temperature Monitoring (Tandem Rear Virtual Gauge) Option 2 Design 1155
L9 - Back-Up Alarm (Automatic) W/ Tailboard Design 137
L9 - Back-Up Alarm (Automatic) W/O Tailboard Design 136
L9 - Back-Up Alarm (Manual) W/ Tailboard Design 140
L9 - Back-Up Alarm (Manual) W/O Tailboard Design 138
L9 - Backup Light (Dual Daisy Reverse Light)Allison/ZF Trans 3K/4K Design . . 594
L9 - Backup Light (Single Reverse Light) Allison 3K/4K Option 1 Design 602
L9 - Backup Light (Single Reverse Light) Allison 3K/4K Option 2 Design 604
L9 - Backup Light (Single Reverse Light) Allison 3K/4K Option 3 Design 606
L9 - Backup Light (Single Reverse Light)Allison Design 600
L9 - Backup Lights (Dual Daisy Reverse Light) Eaton/Manual Trans Design . . . 596
L9 - Backup Lights (Dual Reverse Light) Eaton/Manual Trans Design 598
L9 - Backup Lights (Single Reverse Light) Eaton/Manual Trans Option 1 Design 608
L9 - Backup Lights (Single Reverse Light) Eaton/Manual Trans Option 2 Design 610
L9 - Backup Lights (Single Reverse Light) Eaton/Manual Trans Option 3 Design 612
L9 - Backup Lights (Single Reverse Light) Eaton/Manual Trans Option 4 Design 614
L9 - Battery International (4) 12V Design 1311
L9 - Bendix Tractor or Towing Truck W/ Air SUSP J1939 Driven Lamp Design . 505
L9 - Body Builder Lighting - Combined Turn and Stop Lamps (Automatic) Design 323
L9 - Body Builder Lighting - Combined Turn and Stop Lamps (Manual) Design 326
L9 - Body Builder Lighting - Separate Turn and Stop Lamps (Blunt Cut) Option 1 Design 332
L9 - Body Builder Lighting - Separate Turn and Stop Lamps (Blunt Cut) Option 2 Design 333
L9 - Body J1939 (250kbps) Design 50
L9 - Bosch LH160_LH200 Alternator Design 1266
L9 - Brake Pressure (Auxiliary Gauge) Design 1076
L9 - Brake Pressure (Virtual Gauge) Design 1077
L9 - Brake Switch Design 618
L9 - Cab J1939 (250kbps) Design 51
L9 - CAN Layout Design 24
L9 - Center Chassis Ground Splice Packs Design 73
L9 - City Horn (W/ 4PIN CLK & Park Brake) Design 233
L9 - City Horn (W/ 4PIN CLK) Design 237
L9 - City Horn (W/ 10PIN CLK & Park Brake) Design 229
L9 - City Horn (W/ 10PIN CLK) Design 231
L9 - Clutch Switch/Monitoring (High and Low Switch to BCM) Design 1304
L9 - Coolant Level Monitoring (No Coolant Module) Design 519
L9 - Coolant Temperature Monitoring (J1939 Comm) Design 1080
L9 - Cranking (Starter) GEN4 BCM W/ Thermal Overcrank - External Switch Design 1288
L9 - Cranking (Starter) GEN4 BCM W/O Thermal Overcrank Design 1287
L9 - Cranking Request (w/ Key Switch w/ BCM) Design 1295
L9 - Delco Remy 28SI Alternator W/Sensor Design 1267
L9 - Delco Remy 36SI Alternator W/Sensor Design 1268
L9 - Delco Remy 40SI Alternator W/Sensor Design 1269
L9 - Directional Signal (Turn) W/ DAISY CHAIN BOX LAMPS Design 669
L9 - Directional Signal (Turn) W/ Daisy Chain Box Lamps W/Plow Lights Design 677
L9 - Directional Signal (Turn) W/ LED BOX LAMPS Design 671
L9 - Directional Signal (Turn) W/ LED BOX LAMPS W/Plow Lights Design 681
L9 - Directional Signal (Turn) W/ Less Power Module Tail Board W/Hazard SW Design 673

L9 - Directional Signal (Turn) W/ Less Power Module Tail Board W/Hazard SW W/PLOW LIGHTS Design . . . 685
L9 - Directional Signal (Turn) W/ Single Tail Board W/Hazard SW Design . . . 675
L9 - Directional Signal (Turn) W/ Single Tail Board W/Plow Lights Design . . . 689
L9 - DLB - Remote Power Module (3 RPM n/Switch Pack) Design . . . 392
L9 - DLB - Remote Power Modules (1 RPM n/ Switch Packs) Design . . . 377
L9 - DLB - Remote Power Modules (1 RPM w/ Switch Packs) Design . . . 380
L9 - DLB - Remote Power Modules (2 RPM n/ Switch Pack) Design . . . 383
L9 - DLB - Remote Power Modules (2 RPM w/ Switch Packs) Design . . . 387
L9 - DLB - Remote Power Modules (3 RPM w/ Swtich Packs) Design . . . 391
L9 - Drain Valve Heater Design . . . 458
L9 - Driver Controlled Locking Differential - FR and RR Axle (Dana w/ one sw) Design . . . 1165
L9 - Driver Controlled Locking Differential - FR and RR Axle (Meritor w/ one sw) Design . . . 1168
L9 - Driver Controlled Locking Differential - FR and RR Axles (Dana w/ two sw) Design . . . 1164
L9 - Driver Controlled Locking Differential - FR and RR Axles (Meritor w/ two sw) Design . . . 1167
L9 - Driver Controlled Locking Differential - RR Axle (Dana w/ one sw) Design . . . 1166
L9 - Driver Controlled Locking Differential - RR Axle (Meritor w/ one sw) Design . . . 1169
L9 - ECM Cummins CM2350A Design . . . 60
L9 - Engine Private J1939 (250kbps) Design . . . 52
L9 - Exhaust Brake (Cummins) Design . . . 535
L9 - Fog Lights (Halogen White) Design . . . 710
L9 - Fog Lights (LED White) Design . . . 712
L9 - Forward Chassis Ground Splice Packs 8800 Design . . . 76
L9 - Four Auxillary Air Solenoids Design . . . 298
L9 - Front Fog Lights W CONNECTOR Design . . . 714
L9 - Front Marker Lights - With Plow Lights Design . . . 727
L9 - Front Marker Lights - Without Snow Plow Lights Design . . . 725
L9 - Fuel Heater (Vehicle Powered)(Davco) Design . . . 952
L9 - Fuel Heater (Vehicle Powered)(Racor) Design . . . 967
L9 - Hazard Warning Light N/Trlr Socket Design . . . 733
L9 - Headlight W/Plowlights W/LOWW W/O Headlight Interrupt -10 PIN CLK Design . . . 823
L9 - Headlights W 10PIN CLK W/LOWW W/Interrupt Design . . . 851
L9 - Headlights W 10PIN CLK W/LOWW W/O Interrupt Design . . . 847
L9 - Headlights W/O Lights ON with wipers (LOWW) W/ Headlights Interrupt Design . . . 811
L9 - Headlights W/O Lights ON With Wipers (LOWW) W/O Headlights Interrupt Design . . . 807
L9 - Headlights W/PlowLights W/Headlight Interrupt -10PIN CLK W/LOWW W/Interrupt Design . . . 831
L9 - Headlights W/PlowLights W/O Lights ON with wipers (LOWW) W/ Headlights Interrupt Design . . . 839
L9 - Headlights W/Plowlights W/O Lights ON With Wipers (LOWW) W/O Headlights Interrupt Design . . . 815
L9 - Heated Mirrors (Hood with Door Pods) Design . . . 181
L9 - Heated Mirrors (RT Hood with Door Pods) Design . . . 185
L9 - Heating Ventilation & Air Conditioning (HVAC) Auto Temp Control Design . . . 1060
L9 - Heating Ventilation & Air Conditioning (HVAC) Design . . . 1066
L9 - Hill Start Aid (Bendix) Design . . . 1230
L9 - Hill Start Aid (WABCO) Design . . . 1232
L9 - I/O Expansion Design . . . 336
L9 - Leece-Neville - LN 325A Alternator W/Sensor Design . . . 1272
L9 - Leece-Neville AVI160 Alternator Design . . . 1270
L9 - Leece-Neville AVI160-210A/240A Alternator W/Sensor Design . . . 1271
L9 - License Plate Light (LED BOX LAMP Daisy Chain Tail Light) Design . . . 868
L9 - License Plate Light (LED BOX LAMP Tail Light) Design . . . 869
L9 - License Plate Light (Tail Light Single Assy) Option 1 Design . . . 870
L9 - License Plate Light (Tail Light Single Assy) Option 2 Design . . . 871
L9 - License Plate Light (Tail Light Single Assy) Option 3 Design . . . 872

L9 - License Plate Light (Tail Light Single Assy) Option 4 Design 873
L9 - Lift Axle Controls (Center Pedestal Controls f/ 1 lift axle) Design 1138
L9 - Lift Axle Controls (Center Pedestal Controls f/ 2 Lift Axles) Design 1140
L9 - Lift Axle Controls (Center Pedestal Controls f/ 3 lift axles) Design 1141
L9 - Low Speed J1939 (125kbps) Design 53
L9 - Mirrors (Heat) Switch Pack Actuated includes Hood Mirrors Design 189
L9 - Mirrors (Heat) Switch Pack Actuated includes RT Hood Mirror Design 193
L9 - Park Brake Control (Monitoring)(GEN IV BCM) Design 488
L9 - Park Brake Controls (Monitoring) (Door Switch City Horn) Design 487
L9 - Power Lift Gate Design 340
L9 - Powertrain J1939 Allison 3k/4k Design 55
L9 - Powertrain J1939 Eaton Design 56
L9 - Powertrain J1939 Manual Transmission Design 57
L9 - Powertrain Splice Pack 6704 & 6704B Design 81
L9 - Rear Axle Load Distribution Design 1172
L9 - Rear Light (LED BOX LAMP Tail Light) Design 893
L9 - Rear Light (Tail Light) Design 894
L9 - Rear Light (Tail Light) W Daisy Chain pair of Box Lamps Design 895
L9 - Rear Lights Stop - Daisy Chain Design 628
L9 - Rear Lights Stop - Dual Assembly Design 629
L9 - Rear Lights Stop - Single Assemby Design 630
L9 - Relays Design 99
L9 - Remote Keyless Access Design 247
L9 - Remote Start/Stop Design 396
L9 - Remote Start/Stop w/ Emergency Pump Design 397
L9 - RIGHTSIDE AIR DRYER Design 430
L9 - Selective Catalytic Reduction (SCR) Design 272
L9 - Snow Valve Control Design 541
L9 - Speaker:Four Speakers Daycab w/BT w/QC Design 122
L9 - Speakers:Four Speakers Daycab n/BT w/QC Design 119
L9 - Speakers:Two Speakers n/BT w/QC Design 120
L9 - Speakers:Two Speakers w/BT w/QC Design 121
L9 - Stability Control (Bendix Straight Truck J1939 Driven Lamp) Design 507
L9 - Starter Interlock (BCM HSD controlled W/ Clutch SW & N/Auto SS) Design 1307
L9 - Starter Interlock (BCM LSD Controlled w/ Relay & N/ Auto SS)_EATON XMSN Design 1308
L9 - Starter Interlocks (BCM Controlled with Input from Allison 3K/4K TCM) Design 1305
L9 - Starting Aid (Grid Heater) Design 545
L9 - Telematics (PEOPLE NET DAYCAB) Design 251
L9 - Telematics J1708 (9.6kbps) Design 54
L9 - TEM Electric Trailer Brake Controller Activated Stop LT Design 1188
L9 - Three Auxillary Air Solenoids Design 299
L9 - Traction Control (Bendix) Design 515
L9 - Trailer Interface (Lighting) – BLUNT CUT (Part of Electric Trailer Brakes) Option 1 Design 1195
L9 - Trailer Interface (Lighting) – BLUNT CUT (Part of Electric Trailer Brakes) Option 2 Design 1196
L9 - Transmission (Allison 3K/4K) Design 1224
L9 - Transmission I/O (Allison 3K with Body Builder) - 13WUC Design 1223
L9 - Transmission Oil Temperature-Automatic Trans Design 1101
L9 - Transmission Oil Temperature-Automatic Trans w/Aux Gauge Design . . . 1102
L9 - Transmission Oil Temperature-Manual Trans w/Aux Gauge Design 1104
L9 - Transmission Oil Temperature-Manual Transmission Design 1103
L9 - Transmission Power Take Off (Auto Trans Single PTO w/21 Parameters) Design 406
L9 - Transmission Power Take Off (Auto Trans with Lectradrive) Design 407
L9 - Transmission Power Take Off (Lectrashift PTO with Manual Trans) Design 408
L9 - Transmission Power Take Off (Manual Trans Single PTO w/21 Parameters) Design 409
L9 - Transmission Power Take Off (Single Input configurable pull up or pull down) Design 410
L9 - Transmission Power Take Off (Single PTO W/ RPM and Auto Trans) Design 411

L9 - Transmission Power Take Off (Single PTO W/ RPM and Manual Trans) Design . . . 412
L9 - Transmission Shifter (Stalk Shifter Allison) Design . . . 1208
L9 - Transmission Shifter Allison 5th Gen Push Button(SURHD) Design . . . 1207
L9 - Transmissions Electrical I/O (Eaton Ultrashift) Design . . . 1227
L9 - Two Speed Axle (AirShift on Shifter) Design . . . 1179
L9 - Two Speed Axle (Multiplex SW on Dash) Design . . . 1180
L9 - Ultrashift Plus Design . . . 1213
L9 - Vehicle Acceleration (w/ Two PWR Two GND & Two STS) Design . . . 548
L9 - Vehicle Speedometer System (Manual XMSN) Design . . . 1108
L9 - Water In Fuel (WIF) Davco N/ Heater Design . . . 1036
L9 - Water In Fuel (WIF) Davco W/ Heater Design . . . 1045
L9 - Windshield Washer Pump & Low Fluid Sensor Design . . . 1236
L9 - Windshield Wipers Design . . . 1240
L9 - WORK LIGHT 1 BULB Design . . . 924
L9 - WORK LIGHT W BackUP 1 BULB Option 1 Design . . . 916
L9 - WORK LIGHT W BackUP 1 BULB Option 2 Design . . . 920
L9 - WORK LIGHT W RKE 1 BULB Design . . . 922
L9 - Work Lights LED W/ Sw Pack - Day Cab Design . . . 914
L9 - ZVR Splice Pack - 6747 Design . . . 82
L67-19:2241353C1 . . . 1475

M

M8 B:RING-M-8_0 . . . 1476

N

N01-4450M:2039311C91 . . . 1477
N04_4450M:2039311C91 . . . 1478
N04_4460M:1686834C1 . . . 1480

P

P1L-829:RING-10_0 . . . 1481
P1L-830:RING-10_0 . . . 1482
P4X_1:RING-M-8_0 . . . 1485
P6P_943:RING-10_0 . . . 1488
P6P_943:RING-M-5_0 . . . 1487
P6P_943e:RING-M-5_0 . . . 1486
P6P_945:3866817C1 . . . 1489
P97-20:2241353C1 . . . 1493
P97-20A:2241353C1 . . . 1492
P1898:3678796C1 . . . 1484
P9073:1661778C1 . . . 1490
P9074:1661778C1 . . . 1491
P16400:3544688C1 . . . 1483

R

R01-4450BM:1686834C1 . . . 1494
R01-4460BM:2039311C91 . . . 1495
R01-9303D:587574C91 . . . 1497

S

S96_9256:3866817C1 . . . 1498
S96_9257:3866817C1 . . . 1499
S96_9257:3866817C1 . . . 1500
S97_9250:3866817C1 . . . 1502
S97_9251:3866817C1 . . . 1503
S97_9251:3866817C1 . . . 1505

T

T11_6101:RING-M-6_0 . . . 1507
T11_6101D:RING-M-8_0 . . . 1506
T12_6101:RING-M-8_0 . . . 1509
T12_6101D:RING-M-8_0 . . . 1508
T12_7000:RING-M-5_0 . . . 1510

T13_6101:RING-M-8_0 . . . 1512
T13_6101D:RING-M-8_0 . . . 1511
T14_6101:RING-M-10_0 . . . 1516
T14_6101A:RING-M-8_0 . . . 1513
T14_6101D:RING-M-8_0 . . . 1515
T14_6101DA:RING-M-8_0 . . . 1514
T14_7000:RING-M-5_0 . . . 1517
T15_6101:RING-M-6_0 . . . 1521
T15_6101A:RING-E-1-4_0 . . . 1518
T15_6101D:RING-M-8_0 . . . 1520
T15_6101DA:RING-E-1-4_0 . . . 1519
T15_7000:RING-M-5_0 . . . 1523
T15_7000A:RING-10_0 . . . 1522
T16_6101:RING-E-5-16_0 . . . 1525
T16_6101D:RING-E-5-16_0 . . . 1524

0

0004:3710061C1 . . . 1526
0009:4063156C1 . . . 1534
0009B:4063156C1 . . . 1529

1

1:RING-M-8_0 . . . 2278
1F:1667639C1 . . . 1544
1F:1667639C1 . . . 1546
16A:3540612C1 . . . 1822
16B:3540613C1 . . . 1823
100:3510243C1 . . . 1552
100:3767577C1 . . . 1554
100:4124472C1 . . . 1555
101:475961C1 . . . 1634
101:3753293C1 . . . 1632
101:4124471C1 . . . 1633
123:3626435C1 . . . 1752
1000:RING-E-1-4_0 . . . 1548
1001:RING-E-1-4_0 . . . 1549
1002:2015884C1 . . . 1550
1003:2015884C1 . . . 1551
1010:3768015C1 . . . 1558
1010:3768015C1 . . . 1562
1010:RING-E-5-16_0 . . . 1556
1010:RING-M-8_0 . . . 1557
1011 - B2:3768010C1 . . . 1563
1011 - B2:3768010C1 . . . 1564
1011 - B2:3768010C1 . . . 1565
1011 - B2:3768010C1 . . . 1566
1011 - B2:3768010C1 . . . 1567
1011 - B2:3768010C1 . . . 1568
1011:3768010C1 . . . 1571
1011:RING-E-5-16_0 . . . 1569
1011:RING-M-8_0 . . . 1570
1012:3768010C1 . . . 1577
1012:3768010C1 . . . 1584
1012:3768010C1 . . . 1586
1013:3768010C1 . . . 1587
1014 - B5:3768010C1 . . . 1594
1014 - B5:3768010C1 . . . 1595
1014 - B5:3768010C1 . . . 1596
1014 - B5:3768010C1 . . . 1597
1014 - B5:3768010C1 . . . 1598
1014:3768010C1 . . . 1599
1014:3768010C1 . . . 1600
1015:3768015C1 . . . 1604
1016 - B7:4100070C1 . . . 1608
1016 - B7:4100070C1 . . . 1609
1016 - B7:4100070C1 . . . 1610

1016 - B7:4100070C1 . . . 1611
1016 - B7:4100070C1 . . . 1612
1016 - B7:4100070C1 . . . 1613
1016 - B7:4100070C1 . . . 1614
1016 - B7:4100070C1 . . . 1615
1016 - B7:4100070C1 . . . 1616
1016 - B7:4100070C1 . . . 1617
1016 - B7:4100070C1 . . . 1618
1016 - B7:4100070C1 . . . 1619
1017:3768015C1 . . . 1620
1017:3768015C1 . . . 1623
1017:3768015C1 . . . 1624
1018:3768015C1 . . . 1627
1018:3768015C1 . . . 1628
1020:4063041C1 . . . 1636
1020:RING-M-8_0 . . . 1635
1021:3613769C1 . . . 1638
1021:RING-M-8_0 . . . 1637
1022:3613769C1 . . . 1640
1023:3613769C1 . . . 1645
1023A:3928059C1 . . . 1642
1023B:3928059C1 . . . 1644
1024:3601838C1 . . . 1647
1025:3601838C1 . . . 1649
1026:3601838C1 . . . 1652
1027:3613769C1 . . . 1655
1027F:1667529C1 . . . 1654
1028:3601838C1 . . . 1657
1032F:3709924C1 . . . 1659
1040:RING-M-6_0 . . . 1660
1040:RING-M-6_0 . . . 1661
1041:RING-M-8_0 . . . 1662
1041:RING-M-8_0 . . . 1663
1050:RING-M-6_0 . . . 1664
1050:RING-M-6_0 . . . 1665
1051:RING-M-8_0 . . . 1666
1051:RING-M-8_0 . . . 1667
1052:1661259C1 . . . 1668
1053:4116776C1 . . . 1669
1060:RING-M-10_0 . . . 1671
1061:RING-M-8_0 . . . 1672
1070:RING-M-8_0 . . . 1673
1070:RING-M-8_0 . . . 1674
1071:RING-M-8_0 . . . 1675
1071:RING-M-8_0 . . . 1676
1080:RING-M-8_0 . . . 1677
1080:RING-M-8_0 . . . 1678
1081:RING-M-8_0 . . . 1679
1081:RING-M-8_0 . . . 1680
1100:3546518C1 . . . 1683
1100MA:3546518C1 . . . 1681
1101F:3768593C1 . . . 1685
1101M:3522071C1 . . . 1686
1101M:3522071C1 . . . 1687
1106:3928059C1 . . . 1688
1107:3928059C1 . . . 1689
1108:3928059C1 . . . 1691
1112:1661260C1 . . . 1693
1113:1661260C1 . . . 1694
1127R:1667741C1 . . . 1695
1200:RING-E-1-2_0 . . . 1714
1200:RING-M-12_0 . . . 1717
1200A:3768152C1 . . . 1696
1200B:3768153C1 . . . 1700
1200C:4057474C1 . . . 1703
1200D:4061870C1 . . . 1708

1200E:4057658C1 . . . 1709
1200F:4116508C1 . . . 1713
1201:RING-M-12_0 . . . 1718
1202:3767197C1 . . . 1720
1202:RING-E-1-2_0 . . . 1719
1227:1661889C1 . . . 1722
1234:3605713C1 . . . 1723
1234:3605713C1 . . . 1732
1234:3605713C1 . . . 1733
1235:3627615C1 . . . 1734
1235:3627615C1 . . . 1737
1236:2042685C1 . . . 1740
1236:2042685C1 . . . 1741
1236:2042685C1 . . . 1744
1237:2018589C1 . . . 1747
1237:2018589C1 . . . 1748
1237:2018589C1 . . . 1749
1300:3597143C1 . . . 1754
1300:RING-M-12_0 . . . 1753
1301:3600061C1 . . . 1758
1301:RING-M-12_0 . . . 1757
1400:3596926C1 . . . 1760
1401:3596929C1 . . . 1765
1402:3596928C1 . . . 1768
1403:3596927C1 . . . 1772
1410:3601838C1 . . . 1776
1420:3557922C1 . . . 1781
1421:3557921C1 . . . 1784
1500A:3710061C1 . . . 1787
1500A:3710061C1 . . . 1796
1501:2018589C1 . . . 1797
1501:2018589C1 . . . 1801
1502:1661601C1 . . . 1805
1502:1661603C1 . . . 1808
1502:1661603C1 . . . 1809
1503:3627615C1 . . . 1813
1503:3627615C1 . . . 1814
1503:3627615C1 . . . 1816
1605:373759C2 . . . 1824
1620:2007315C1 . . . 1825
1623:2007315C1 . . . 1827
1625:3543733C1 . . . 1829
1650:3757649C1 . . . 1833
1650MA:3544066C1 . . . 1831
1651:3757649C1 . . . 1835
1651:3757649C1 . . . 1836
1651:3757649C1 . . . 1837
1651:3757649C1 . . . 1838
1657M:3683465C1 . . . 1839
1660:2006789C1 . . . 1840
1661:2006789C1 . . . 1841
1700:3595624C1 . . . 1843
1700:3595624C1 . . . 1887
1700:3595625C1 . . . 1889
1700:3595625C1 . . . 1917
1700:RING-M-12_0 . . . 1842
1701:3595623C1 . . . 1988
1701:3595623C1 . . . 2016
1701:RING-E-1-2_0 . . . 1985
1701:RING-M-12_0 . . . 1987
1701F:3595622C1 . . . 1919
1701F:3595622C1 . . . 1945
1702:3595620C1 . . . 2033
1702:3595620C1 . . . 2054
1702:3595620C1 . . . 2055
1702:3595620C1 . . . 2056

1702:3595621C1 . . . 2057
1702:3595621C1 . . . 2075
1702:3595621C1 . . . 2076
1702:3595621C1 . . . 2078
1702:RING-E-1-2_0 . . . 2032
1703:3595624C1 . . . 2132
1703:3595625C1 . . . 2133
1703:RING-M-12_0 . . . 2131
1703F:3595624C1 . . . 2080
1703F:3595624C1 . . . 2090
1703F:3595624C1 . . . 2102
1703F:3595624C1 . . . 2104
1703M:3595625C1 . . . 2106
1703M:3595625C1 . . . 2116
1703M:3595625C1 . . . 2129
1703M:3595625C1 . . . 2130
1800:3553649C1 . . . 2156
1800:3553649C1 . . . 2174
1800F:3612512C1 . . . 2134
1800F:3612512C1 . . . 2154
1801:3539212C1 . . . 2176
1802:3608496C1 . . . 2178
1804:1687790C1 . . . 2183
1806:1661777C1 . . . 2185
1808:1661777C1 . . . 2186
1809:3547870C1 . . . 2187
1810:3539212C1 . . . 2189
1811:3540757C1 . . . 2199
1812:1678137C1 . . . 2201
1820F:1667529C1 . . . 2202
1820M:1667305C1 . . . 2204
1821:3601800C1 . . . 2207
1822:1678137C1 . . . 2210
1823:1661777C1 . . . 2211
1824:1661777C1 . . . 2212
1825:4064551C1 . . . 2215
1825F:4064551C1 . . . 2213
1826:1678137C1 . . . 2216
1828:1678137C1 . . . 2218
1852:3605445C91 . . . 2220
1852:3605446C91 . . . 2221
1873:593385C1 . . . 2243
1873B:593385C1 . . . 2222
1873D:593385C1 . . . 2223
1873E:593385C1 . . . 2228
1873F:593385C1 . . . 2233
1873G:593385C1 . . . 2238
1874B:3602747C1 . . . 2245
1901:3590298C1 . . . 2247
1901:4094648C1 . . . 2249
1901A:4094648C1 . . . 2246
1902:3517473C1 . . . 2250
1903:3590298C1 . . . 2252
1903:4094648C1 . . . 2253
1903B:4094648C1 . . . 2251
1904:3768147C1 . . . 2254
1905A:3768147C1 . . . 2255
1913:BLUNT_SL_VC . . . 2257
1913A:BLUNT_SL_VC . . . 2256
1916A:2005836C1 . . . 2259
1917F:188393R1 . . . 2260
1923:BLUNT_SL_VC . . . 2261
1926:3544677C1 . . . 2262
1935N:3683465C1 . . . 2263
1938M:3554818C1 . . . 2264
1939-125A:3683465C1 . . . 2267

1939-125B:3683465C1 . . . 2268
1939-125C:3683465C1 . . . 2269
1939-250A:3683465C1 . . . 2270
1939-250B:3683465C1 . . . 2271
1939:2011340C1 . . . 2272
1939M:3553404C1 . . . 2265
1939_250C:3683465C1 . . . 2273
1939_500K-250K:3683465C1 . . . 2274
1940:BLUNT_SL_VC . . . 2275
1979:3831401C1 . . . 2277
1979A:4061584C1 . . . 2276

2

2:BLUNT_SL_VC . . . 2335
2:RING-M-8_0 . . . 2336
2F:1667639C1 . . . 2279
23XX:3534156C1 . . . 2297
23XX:3534156C1 . . . 2299
200:1661259C1 . . . 2290
201:1661260C1 . . . 2291
254F:3662108C1 . . . 2315
254M:3510243C1 . . . 2317
254M:3510243C1 . . . 2319
2000:3544688C1 . . . 2283
2000F:3544687C1 . . . 2281
2002M:1661259C1 . . . 2285
2003M:1661259C1 . . . 2286
2004M:1661259C1 . . . 2287
2005M:1661259C1 . . . 2288
2006M:1661259C1 . . . 2289
2100M:1661889C1 . . . 2292
2223:1669972C1 . . . 2293
2224:3833917C1 . . . 2294
2225:3834322C1 . . . 2295
2300:3535769C1 . . . 2300
2300_R:3535769C1 . . . 2302
2303F:1661196C1 . . . 2304
2303M:1661197C1 . . . 2305
2310:BLUNT_SL_VC . . . 2306
2311:BLUNT_SL_VC . . . 2307
2312:3533975C1 . . . 2308
2313:3533975C1 . . . 2310
2500F:3515763C1 . . . 2311
2500M:3515762C1 . . . 2312
2505:3811207C1 . . . 2314
2505M:3811181C1 . . . 2313
2600:2005835C1 . . . 2321
2600:2005836C1 . . . 2323
2990:1661260C1 . . . 2325
2991:1661260C1 . . . 2326
2992:1661260C1 . . . 2327
2993:1661260C1 . . . 2328
2994:1661260C1 . . . 2329
2995:1661260C1 . . . 2330
2996:1661260C1 . . . 2331
2997:1661260C1 . . . 2332
2998:1661260C1 . . . 2333
2999:1661260C1 . . . 2334

3

3000:1661260C1 . . . 2354
3000F:1661201C1 . . . 2337
3000M:1661200C1 . . . 2339
3000M:1661200C1 . . . 2341
3000M:3538634C1 . . . 2343
3000M:3538634C1 . . . 2344

3000M:3538634C1 . . . 2345
3000M:3538634C1 . . . 2346
3000M:3538634C1 . . . 2347
3000M:3538634C1 . . . 2351
3001:899167R1 . . . 2355
3002:1661260C1 . . . 2357
3002M:3767181C1 . . . 2356
3004:899167R1 . . . 2358
3005:899167R1 . . . 2359
3100F:1661201C1 . . . 2360
3100M:3767181C1 . . . 2362
3100M:3767181C1 . . . 2363
3112M:1671610C1 . . . 2364
3200F:1661201C1 . . . 2365
3200F:1661201C1 . . . 2367
3200F:1661201C1 . . . 2370
3200M:1661200C1 . . . 2372
3201F:1667529C1 . . . 2375
3201F:1667529C1 . . . 2376
3201M:3709437C1 . . . 2377
3201M:3709437C1 . . . 2379
3202L:1661200C1 . . . 2381
3202L:1661200C1 . . . 2382
3202L:1661200C1 . . . 2383
3202L:1661200C1 . . . 2384
3202M:3820176C1 . . . 2387
3202M:3820176C1 . . . 2389
3202M:3820176C1 . . . 2391
3202M:3820176C1 . . . 2393
3202M:3820176C1 . . . 2394
3202R:1661200C1 . . . 2395
3203M:3709924C1 . . . 2396
3203M:3709924C1 . . . 2398
3203M:3709924C1 . . . 2400
3203M:3709924C1 . . . 2402
3204M:1661200C1 . . . 2404
3205F:1667529C1 . . . 2406
3205F:1667529C1 . . . 2408
3205M:1667305C1 . . . 2409
3206M:1667305C1 . . . 2411
3208F:1661201C1 . . . 2412
3208F:1661201C1 . . . 2413
3208F:1661201C1 . . . 2414
3208F:1661201C1 . . . 2415
3209M:3709437C1 . . . 2416
3210M:3820176C1 . . . 2417
3211M:3709924C1 . . . 2418
3300M:3535769C1 . . . 2420
3300MR:3535769C1 . . . 2419
3400:1661259C1 . . . 2423
3400L:1667305C1 . . . 2421
3400R:1667305C1 . . . 2422
3500:239808R1 . . . 2426
3500B:239808R1 . . . 2425
3501:239808R1 . . . 2428
3501B:239808R1 . . . 2427
3502:239808R1 . . . 2430
3502B:239808R1 . . . 2429
3503:239808R1 . . . 2432
3503B:239808R1 . . . 2431

4

400:3543733C1 . . . 2435
422F:3540756C1 . . . 2463
4004:3525613C1 . . . 2433
4004:3525613C1 . . . 2434

4028C:RING-M-10_0 . . . 2439
4028C:RING-M-10_0 . . . 2440
4042A:1671610C1 . . . 2441
4042B:1671610C1 . . . 2444
4042C:1671610C1 . . . 2445
4042D:1671610C1 . . . 2446
4042E:1671610C1 . . . 2447
4042F:1671610C1 . . . 2448
4042G:1671610C1 . . . 2449
4060:6112506C1 . . . 2452
4060A:3690369C1 . . . 2450
4069:BLUNT_SL_VC . . . 2454
4087:3553404C1 . . . 2457
4087B:3553404C1 . . . 2455
4101:1671610C1 . . . 2459
4120:3522251C1 . . . 2461
4307:3581768C1 . . . 2464
4320M:3517760C1 . . . 2465
4320M:3517760C1 . . . 2466
4320M:3517760C1 . . . 2468
4320M:3517760C1 . . . 2469
4320M:3517760C1 . . . 2470
4328:3602454C1 . . . 2471
4410A:3572899C1 . . . 2472
4410A:3572899C1 . . . 2474
4410A:3572899C1 . . . 2475
4410A:3572899C1 . . . 2476
4410A:3572899C1 . . . 2478
4410A:3572899C1 . . . 2479
4410A:3572899C1 . . . 2481
4410A:3572899C1 . . . 2482
4410B:3572899C1 . . . 2484
4410B:3572899C1 . . . 2485
4410B:3572899C1 . . . 2486
4410B:3572899C1 . . . 2487
4410B:3572899C1 . . . 2488
4410B:3572899C1 . . . 2489
4410B:3572899C1 . . . 2490
4410BA:3572899C1 . . . 2483
4410D:3572899C1 . . . 2494
4410D:3572899C1 . . . 2495
4410D:3572899C1 . . . 2496
4410DF:3572900C1 . . . 2491
4410DM:3572899C1 . . . 2492
4410DM:3572899C1 . . . 2493
4410E:3572899C1 . . . 2497
4410F:3572899C1 . . . 2498
4410F:3572899C1 . . . 2499
4410F:3572900C1 . . . 2500
4410F:3572900C1 . . . 2502
4410G:3572899C1 . . . 2503
4410G:3572899C1 . . . 2504
4410H:3572899C1 . . . 2505
4410H:3572899C1 . . . 2506
4410L:3572899C1 . . . 2508
4410L:3572899C1 . . . 2509
4410M:3572899C1 . . . 2510
4410M:3572899C1 . . . 2512
4411:3517760C1 . . . 2541
4411DM:3572899C1 . . . 2514
4411F:3517759C1 . . . 2515
4411F:3517759C1 . . . 2516
4411F:3517759C1 . . . 2518
4411M1:3517760C1 . . . 2519
4411M1:3517760C1 . . . 2520
4411M1:3517760C1 . . . 2522

4411M2:3517760C1 . . . 2523
4411M2:3517760C1 . . . 2524
4411M2:3517760C1 . . . 2525
4411M4:3517760C1 . . . 2526
4411M4:3572899C1 . . . 2527
4411M5:3517760C1 . . . 2528
4411M5:3517760C1 . . . 2529
4411M6:3517760C1 . . . 2530
4411M:3517760C1 . . . 2531
4411M:3517760C1 . . . 2532
4411M:3517760C1 . . . 2533
4411M:3517760C1 . . . 2534
4411M:3517760C1 . . . 2535
4411M:3517760C1 . . . 2536
4411M_1:3517760C1 . . . 2537
4411N:3517759C1 . . . 2538
4411P:3517760C1 . . . 2539
4411P:3517760C1 . . . 2540
4412F:3517759C1 . . . 2543
4412F:3517759C1 . . . 2545
4412F:3517759C1 . . . 2546
4412F:3517759C1 . . . 2547
4412M:3517760C1 . . . 2548
4412M:3517760C1 . . . 2550
4412M:3517760C1 . . . 2551
4412M:3517760C1 . . . 2552
4412M:3517760C1 . . . 2553
4412M:3517760C1 . . . 2554
4412M:3517760C1 . . . 2555
4412M:3517760C1 . . . 2556
4413F1:3517759C1 . . . 2557
4413F1:3517759C1 . . . 2558
4413F1:3517759C1 . . . 2559
4413F2:3517759C1 . . . 2561
4413F2:3517759C1 . . . 2562
4413F2:3517759C1 . . . 2563
4413F3:3517759C1 . . . 2564
4413F:3517759C1 . . . 2565
4413F:3517759C1 . . . 2567
4413F:3517759C1 . . . 2568
4413M:3517760C1 . . . 2569
4414:3517760C1 . . . 2570
4450AM:2039311C91 . . . 2571
4450BF:2039312C91 . . . 2573
4450BM:1686834C1 . . . 2575
4450D:2039312C91 . . . 2576
4450E:BLUNT_SL_VC . . . 2578
4450M:2039311C91 . . . 2579
4450M:2039311C91 . . . 2581
4450M:2039311C91 . . . 2584
4460AM:1686834C1 . . . 2586
4460BF:3553961C1 . . . 2587
4460BM:2039311C91 . . . 2589
4460D:3553961C1 . . . 2591
4460E:BLUNT_SL_VC . . . 2592
4460M:1686834C1 . . . 2593
4460M:1686834C1 . . . 2594
4460M:1686834C1 . . . 2596
4500:1661375C2 . . . 2597
4705:3538634C1 . . . 2599
4706:3538635C1 . . . 2601
4800:373756C2 . . . 2603
4952:3678796C1 . . . 2604

5

500:1667732C1 . . . 2605

6

600:3522068C1 . . . 2636
670A/670B:3573078C1 . . . 2703
670A:3573078C1 . . . 2704
670B:3573078C1 . . . 2706
674:6114576C1 . . . 2723
674:6114576C1 . . . 2724
674:6114576C1 . . . 2726
674:6114577C1 . . . 2729
674:6114577C1 . . . 2733
674B:6114577C1 . . . 2719
675:3854665C91 . . . 2736
675:3854665C91 . . . 2737
675:3854665C91 . . . 2738
676:3854666C91 . . . 2739
676:3854666C91 . . . 2740
676:3854666C91 . . . 2741
677:3854645C91 . . . 2742
677:3854645C91 . . . 2743
677:3854645C91 . . . 2744
678:3991593C1 . . . 2745
678:3991593C1 . . . 2746
680:3993814C1 . . . 2747
680:3993814C1 . . . 2748
680:3993814C1 . . . 2749
681:3683465C1 . . . 2750
690:3765646C91 . . . 2755
690:3765646C91 . . . 2759
690:3765646C92 . . . 2764
691:3714731C1 . . . 2766
691:3714731C1 . . . 2767
691:3714731C1 . . . 2768
6000:3945694C1 . . . 2607
6000:3945694C1 . . . 2616
6000:3945694C1 . . . 2623
6000:3945694C1 . . . 2634
6018:3952655C1 . . . 2637
6018:3952655C1 . . . 2641
6018:3952655C1 . . . 2651
6019:3952656C1 . . . 2652
6033:3917967C1 . . . 2655
6049:3866817C1 . . . 2657
6051:3866817C1 . . . 2658
6100:1667639C1 . . . 2659
6100:1667639C1 . . . 2660
6101A:RING-M-6_0 . . . 2661
6101DA:RING-M-8_0 . . . 2662
6104:6113104C1 . . . 2663
6200:1671610C1 . . . 2664
6200:1671610C1 . . . 2666
6200:1671610C1 . . . 2668
6201:3662921C1 . . . 2672
6201A:3662921C1 . . . 2669
6201A:3662921C1 . . . 2670
6202:3590299C1 . . . 2673
6202:3590299C1 . . . 2674
6301E:RING-E-1-2_0 . . . 2675
6305:RING-M-12_0 . . . 2677
6306/6307:RING-M-6_0 . . . 2679
6306:RING-M-6_0 . . . 2680
6316M:2036583C1 . . . 2681
6316M:2036583C1 . . . 2682
6317:RING-M-5_0 . . . 2683
6332:1664531C1 . . . 2685
6332M:1664531C1 . . . 2684
6335:RING-M-12_0 . . . 2686

6400:3522068C1 . . . 2687
6401:3662425C1 . . . 2694
6401:3662425C1 . . . 2695
6401M:1687789C1 . . . 2688
6401M:1687789C1 . . . 2690
6401R:1671610C1 . . . 2692
6401R:1671610C1 . . . 2693
6407:3662425C1 . . . 2696
6407:3662425C1 . . . 2697
6564:374377C2 . . . 2698
6565:3752570C1 . . . 2699
6566:6113338C1 . . . 2700
6567:6113341C1 . . . 2701
6702:3543729C1 . . . 2708
6704:3551896C1 . . . 2714
6704:3551896C1 . . . 2716
6704B:3551896C1 . . . 2710
6704B:3551896C1 . . . 2712
6747:3543733C1 . . . 2720
6748:3602454C1 . . . 2722
6900:1661198C1 . . . 2751
6900:1661199C1 . . . 2753
6925:3678796C1 . . . 2770
6925A:3678796C1 . . . 2769

7

71:1661375C2 . . . 2833
71:1661375C2 . . . 2836
71:1677851C1 . . . 2837
71:1677851C1 . . . 2839
72:1661375C2 . . . 2841
72:1661375C2 . . . 2844
72:1661375C2 . . . 2846
72:1661375C2 . . . 2847
73:1661375C2 . . . 2848
73:1661375C2 . . . 2850
7000:RING-10_0 . . . 2773
7000:RING-M-5_0 . . . 2771
7000:RING-M-5_0 . . . 2772
7100:3866817C1 . . . 2774
7103M:1661198C1 . . . 2775
7103M:1661198C1 . . . 2776
7105:3599542C1 . . . 2778
7105:3599542C1 . . . 2783
7105A:3599542C1 . . . 2777
7110:3683465C1 . . . 2784
7112:3539778C1 . . . 2785
7112:3539778C1 . . . 2788
7112:3854645C91 . . . 2793
7113:3590390C1 . . . 2810
7113A:3590390C1 . . . 2795
7113A:3977821C1 . . . 2796
7113C:3977821C1 . . . 2797
7113E:3977821C1 . . . 2798
7113G:3977821C1 . . . 2799
7113J:3977821C1 . . . 2800
7113L:3977821C1 . . . 2801
7113N:3977821C1 . . . 2802
7113S:3590390C1 . . . 2803
7113T:3590390C1 . . . 2804
7113U:3590390C1 . . . 2805
7113V:3590390C1 . . . 2806
7113W:3590390C1 . . . 2807
7113X:3590390C1 . . . 2808
7113Y:3590390C1 . . . 2809
7150:3605713C1 . . . 2813

7150:3605713C1 . . . 2823
7150:3605713C1 . . . 2824
7151:3605713C1 . . . 2825
7151:3605713C1 . . . 2832
7200:3626435C1 . . . 2840
7500:3605713C1 . . . 2858
7500:3605713C1 . . . 2868
7500:3605713C1 . . . 2869
7500:3605713C1 . . . 2870
7500M:1661778C1 . . . 2851
7500M:1661778C1 . . . 2852
7500M:1661778C1 . . . 2853
7500W:1661778C1 . . . 2854
7500W:1661778C1 . . . 2855
7500W:1661778C1 . . . 2856
7500W:1661778C1 . . . 2857
7501:3577412C1 . . . 2871
7501:3577412C1 . . . 2872
7502:587567C91 . . . 2873
7600:3662425C1 . . . 2874
7600:3662425C1 . . . 2875
7700K:3536864C1 . . . 2876
7700L:3536864C1 . . . 2877
7700M:3536864C1 . . . 2878
7800:BLUNT_SL_VC . . . 2879
7801:BLUNT_SL_VC . . . 2883
7801A:3683465C1 . . . 2880
7801B:3683465C1 . . . 2881
7801M:3683465C1 . . . 2882
7803:3950690C1 . . . 2884
7900F:4064551C1 . . . 2885
7900F:4064551C1 . . . 2886
7900M:4064552C1 . . . 2888
7900M:4064552C1 . . . 2889

8

828:1671611C1 . . . 2961
8000-RT:1677851C1 . . . 2899
8000:1677851C1 . . . 2905
8000:1677851C1 . . . 2909
8000:1677851C1 . . . 2910
8000A-RT:1677851C1 . . . 2891
8000A:1677851C1 . . . 2898
8001-LF:1677851C1 . . . 2918
8001:1677851C1 . . . 2925
8001:1677851C1 . . . 2929
8001:1677851C1 . . . 2930
8001A-LF:1677851C1 . . . 2911
8001A:1677851C1 . . . 2917
8102:2039311C91 . . . 2934
8102:2039311C91 . . . 2936
8102A:2039311C91 . . . 2931
8103:2039311C91 . . . 2942
8103:2039311C91 . . . 2944
8103A:2039311C91 . . . 2939
8200:587567C91 . . . 2953
8200A:587567C91 . . . 2947
8200A:6131286C1 . . . 2948
8200B:6131286C1 . . . 2949
8200C:6131286C1 . . . 2950
8200X:587567C91 . . . 2951
8200X:6131286C1 . . . 2952
8201:587567C91 . . . 2960
8201A:587567C91 . . . 2954
8201A:6131286C1 . . . 2955
8201B:6131286C1 . . . 2956

8201C:6131286C1 . . . 2957
8201X:587567C91 . . . 2958
8201X:6131286C1 . . . 2959
8301:1661778C1 . . . 2965
8301:1661778C1 . . . 2967
8301A:1661778C1 . . . 2962
8301A:1661778C1 . . . 2963
8301b:1661778C1 . . . 2964
8410:3664985C1 . . . 2968
8500:1686834C1 . . . 2970
8500:1686834C1 . . . 2971
8500:1686834C1 . . . 2972
8500:6114576C1 . . . 2973
8501:1686834C1 . . . 2975
8501:1686834C1 . . . 2976
8501:1686834C1 . . . 2977
8502:3539777C1 . . . 2980
8502A:1684261C1 . . . 2978
8503A:1684261C1 . . . 2982
8503A:1684261C1 . . . 2983
8503B:1684261C1 . . . 2984
8503C:1684261C1 . . . 2985
8506A:6111844C1 . . . 2986
8507A:6111844C1 . . . 2987
8507A:6111844C1 . . . 2988
8508A:3919376C1 . . . 2989
8509A:3919376C1 . . . 2991
8600:587566C91 . . . 2994
8600A:587566C91 . . . 2993
8700-DA:587567C91 . . . 2999
8700A-DB:587567C91 . . . 2996
8700B-LF-DC:587567C91 . . . 2997
8700C-LF-DD:587567C91 . . . 2998
8701-RT-DA:587567C91 . . . 3001
8701A-RT-DB:587567C91 . . . 3000
8702-RT-DC:587567C91 . . . 3003
8702A-RT-DD:587567C91 . . . 3002
8800:3551896C1 . . . 3004
8800:3551896C1 . . . 3008
8802:3551896C1 . . . 3011
8802:3551896C1 . . . 3013
8805:3551896C1 . . . 3015
8806:3551896C1 . . . 3022
8807:3551896C1 . . . 3024
8807:3551896C1 . . . 3028
8807:3551896C1 . . . 3031
8809:3551896C1 . . . 3035
8809:3551896C1 . . . 3037
8809:3551896C1 . . . 3039
8881:3553404C1 . . . 3041
8884A:6099041C1 . . . 3042
8884D:3602454C1 . . . 3043
8884G:3602454C1 . . . 3044
8903:6111813C1 . . . 3045
8903:6111813C1 . . . 3046
8998:3553404C1 . . . 3047
8999:2018590C1 . . . 3048

9

945:3866817C1 . . . 3116
9001:1671610C1 . . . 3050
9002:1671610C1 . . . 3052
9002A:1671610C1 . . . 3051
9003:1671610C1 . . . 3053
9004:1671610C1 . . . 3054
9005:1671610C1 . . . 3057

9100:1661778C1 . . . 3059
9100:1661778C1 . . . 3060
9100A:1661778C1 . . . 3058
9101:1661778C1 . . . 3062
9101:1661778C1 . . . 3063
9102C:1661778C1 . . . 3066
9102C:1661778C1 . . . 3068
9102V:1661778C1 . . . 3069
9102X:1661778C1 . . . 3070
9108A:587567C91 . . . 3071
9108B:587567C91 . . . 3072
9108C:587567C91 . . . 3073
9108D:587567C91 . . . 3074
9108E:587567C91 . . . 3075
9108F:587567C91 . . . 3076
9108G:587567C91 . . . 3077
9108H:587567C91 . . . 3078
9108J:587567C91 . . . 3079
9108K:587567C91 . . . 3080
9108L:587567C91 . . . 3081
9108M:587567C91 . . . 3082
9108N:587567C91 . . . 3083
9108N:587567C91 . . . 3086
9108P:587567C91 . . . 3087
9109:587567C91 . . . 3088
9200A:1671610C1 . . . 3089
9200B:1671610C1 . . . 3090
9200C:1671610C1 . . . 3091
9200J:1671610C1 . . . 3092
9260:1667733C1 . . . 3093
9262F:1669834C1 . . . 3094
9262M:1664531C1 . . . 3095
9263F:1669834C1 . . . 3096
9263M:1664531C1 . . . 3097
9264F:1669834C1 . . . 3098
9264M:1664531C1 . . . 3099
9265:3512967C1 . . . 3100
9303A:1661375C2 . . . 3102
9303A:1661375C2 . . . 3104
9303A:1661375C2 . . . 3108
9303A:1661375C2 . . . 3111
9303A:1661375C2 . . . 3113
9303A:1661375C2 . . . 3115
9303Ac:1661375C2 . . . 3101
9501:1684261C1 . . . 3117
9501:3539777C1 . . . 3118
9502:1686834C1 . . . 3119
9503:1684261C1 . . . 3120
9503:3539777C1 . . . 3121
9504:1686834C1 . . . 3122
9510:1667740C1 . . . 3125
9510B:1678137C1 . . . 3123
9510M:1667741C1 . . . 3124
9512:3678796C1 . . . 3127
9512C:3678796C1 . . . 3126
9513:1686834C1 . . . 3129
9514/9514H:3601685C1 . . . 3134
9514:3601685C1 . . . 3135
9514D/9514F:3601685C1 . . . 3130
9514D:3601685C1 . . . 3131
9514F:3601685C1 . . . 3132
9514H:3601685C1 . . . 3133
9516:6111844C1 . . . 3136
9517:6111844C1 . . . 3137
9518:3919376C1 . . . 3138
9519:3919376C1 . . . 3139

9524:3549412C1 . . . 3140
9524:3576268C1 . . . 3144
9531F:6112506C1 . . . 3147
9531M:3690369C1 . . . 3149
9532F:6112506C1 . . . 3151
9532M:3690369C1 . . . 3153
9540:3539777C1 . . . 3159
9540A:3539777C1 . . . 3158
9541:1686834C1 . . . 3161
9541A:1686834C1 . . . 3160
9542:3539777C1 . . . 3164
9542A:3539777C1 . . . 3163
9543:1686834C1 . . . 3166
9543A:1686834C1 . . . 3165
9548:1686834C1 . . . 3168
9548A:1686834C1 . . . 3167
9549:3539777C1 . . . 3170
9549A:3539777C1 . . . 3169
9550:1686834C1 . . . 3172
9550A:1686834C1 . . . 3171
9551:3539777C1 . . . 3174
9551A:3539777C1 . . . 3173
9556:1686834C1 . . . 3175
9557:3539777C1 . . . 3176
9558:1686834C1 . . . 3177
9559:3539777C1 . . . 3178
9560:3539777C1 . . . 3179
9561:1686834C1 . . . 3180
9562:1686834C1 . . . 3181
9563:3539777C1 . . . 3182
9715:1667733C1 . . . 3187
9715:1667733C1 . . . 3188
9715F:1667732C1 . . . 3183
9715F:1667732C1 . . . 3185
9716:1667732C1 . . . 3194
9716:1667732C1 . . . 3195
9716M1:1667733C1 . . . 3190
9716M:1667733C1 . . . 3192
9717:3700151C1 . . . 3200
9717:3700151C1 . . . 3201
9717:3700151C1 . . . 3202
9717F1:3537133C1 . . . 3197
9717F:3517817C1 . . . 3198
9717F:3517817C1 . . . 3199
9718A:1661778C1 . . . 3203
9719:3543888C1 . . . 3205
9719:3543888C1 . . . 3207
9720:3543888C1 . . . 3211
9720A:3543888C1 . . . 3208
9720A:3543888C1 . . . 3209
9724:BLUNT_SL_VC . . . 3216
9724:BLUNT_SL_VC . . . 3217
9724A:BLUNT_SL_VC . . . 3213
9736:1661375C2 . . . 3220
9736:1661375C2 . . . 3222
9736:1661375C2 . . . 3224
9740:1661375C2 . . . 3248
9740A:1661375C2 . . . 3226
9740B:1661375C2 . . . 3228
9740B:1661375C2 . . . 3230
9740C:1661375C2 . . . 3232
9740D:1661375C2 . . . 3234
9740D:1661375C2 . . . 3236
9740E:1661375C2 . . . 3238
9740E:1661375C2 . . . 3240
9740F:1661375C2 . . . 3242

9740G:1661375C2 . . . 3244
9740H:1661375C2 . . . 3246
9745:3536864C1 . . . 3252
9745:3536864C1 . . . 3253
9745A:3536864C1 . . . 3250
9745A:3536864C1 . . . 3251
9746:3554317C1 . . . 3256
9746A:3554317C1 . . . 3254
9746A:3554317C1 . . . 3255
9761F:3522252C1 . . . 3257
9761M:3522251C1 . . . 3259
9762:1661778C1 . . . 3262
9762F:3543888C1 . . . 3260
9762M:1661778C1 . . . 3261
9763:1661778C1 . . . 3264
9764:1661778C1 . . . 3266
9766:1661778C1 . . . 3267
9766:3543888C1 . . . 3268
9767:1661778C1 . . . 3269
9775F:1667740C1 . . . 3271
9778:587567C91 . . . 3273
9800:3558022C1 . . . 3274
9800:3558026C1 . . . 3296
9813:3536864C1 . . . 3312
9814:587567C91 . . . 3315
9814A:3593684C91 . . . 3314
9815:587567C91 . . . 3317
9815A:3593684C91 . . . 3316
9820F:3543888C1 . . . 3318
9820F:3543888C1 . . . 3319
9820M:1661778C1 . . . 3320
9820M:1661778C1 . . . 3321
9824:1661778C1 . . . 3322
9830:1678137C1 . . . 3323
9832:1678137C1 . . . 3325
9865M:1667741C1 . . . 3326
9900A:1673790C1 . . . 3334
9900AA:1673790C1 . . . 3327
9900AC:1673790C1 . . . 3328
9900AE:1673790C1 . . . 3329
9900AJ:1673790C1 . . . 3330
9900AP:1673790C1 . . . 3331
9900AQ:1673790C1 . . . 3332
9900AR:1673790C1 . . . 3333
9900C:1673790C1 . . . 3335
9900D:1673790C1 . . . 3336
9900E:1673790C1 . . . 3337
9900G:1673790C1 . . . 3338
9913B:587570C91 . . . 3339
9915:3539777C1 . . . 3340
9916:4105324C1 . . . 3341