Electrical Circuit Diagrams

- 3200
Start Date: 03/11/2004 End Date: 09/30/2005

- 4100
Start Date: 08/01/2005 End Date: 09/30/2005

- 4200, 4300, 4400, 4400
Start Date: 03/11/2004 End Date: 09/30/2005

- 7300, 7400, 7500
Start Date: 03/11/2004 End Date: 09/30/2005

- 8500, 8600
Start Date: 03/11/2004 End Date: 09/30/2005

Supersedes S082854

Navistar, Inc.

2701 Navistar Drive, Lisle, IL 60532 USA

© 2020 Navistar, Inc. All rights reserved. All marks are trademarks of their respective owners.

0000017581
Revision 2
May 2020

TABLE OF CONTENTS

2. INSTRUCTIONS AND CHARTS (CHAPTER 1)..... 1
2.1. CIRCUIT NUMBER IDENTIFICATION AND LOCATION CHART, P. 1..... 1
2.2. CIRCUIT NUMBER IDENTIFICATION AND LOCATION CHART, P. 2..... 2
2.3. CIRCUIT NUMBER IDENTIFICATION AND LOCATION CHART, P. 3..... 3
2.4. CIRCUIT NUMBER IDENTIFICATION AND LOCATION CHART, P. 4..... 4
2.5. CIRCUIT NUMBER IDENTIFICATION AND LOCATION CHART, P. 5..... 5
2.6. NAVPAK/ECM I6 ENGINE CONTROLLER CONNECTOR PIN NUMBER IDENTIFICATION, P. 6..... 6
2.7. CIRCUIT DIAGRAM INSTRUCTIONS, P. 7..... 7
2.8. CIRCUIT DIAGRAM INSTRUCTIONS, P. 8..... 8
2.9. SCHEMATIC SYMBOL CHART, P. 9..... 9
2.10. RELAY FUNCTIONS, P. 10..... 10
2.11. LAMP BULB CHART, P. 11..... 11
2.12. INTERNATIONAL V8 AND I6 ECM CONTROLLER CONNECTORS PIN NUMBER IDENTIFICATION, P. 12..... 12

3. 12 VOLT POWER DISTRIBUTION CIRCUIT DIAGRAMS (CHAPTER 2)..... 13
3.1. ACCESSORY, P. 1..... 13
3.2. BATTERY FEEDS, CAB, P. 2..... 14
3.3. BATTERY, P. 3..... 15
3.4. 1708 DATA LINK CHASSIS, P. 4..... 16
3.5. SWITCH DATA LINK, P. 5..... 17
3.6. DRIVETRAIN 1939 DATA LINK (CAB), P. 6..... 18
3.7. DRIVETRAIN 1939 DATA LINK (CHASSIS), P. 7..... 19
3.8. GROUNDS CHASSIS, P. 8..... 20
3.9. GROUNDS CHASSIS, P. 9..... 21
3.10. GROUNDS IP, P. 10..... 22
3.11. GROUNDS IP, P. 11..... 23
3.12. IGNITION CAB, P. 12..... 24
3.13. IGNITION CAB, P. 13..... 25
3.14. IGNITION FEEDS, CHASSIS, P. 14..... 26
3.15. START, P. 15..... 27

4. CAB ACCESSORIES (CHAPTER 3)..... 28
4.1. CIGAR LIGHTER AND POWER FEEDS, P. 1..... 28
4.2. CB POWER, P. 2..... 29
4.3. COMPASS AND TEMPERATURE DISPLAY, P. 3..... 30
4.4. FRONT DOORS WINDOWS AND LOCKS (POWER), P. 4..... 31
4.5. CREW DOORS WINDOWS AND LOCKS (POWER), P. 5..... 32
4.6. HORN, DUAL ELECTRIC, P. 6..... 33
4.7. MIRRORS (HEATED, LIGHTED AND POWER), P. 7..... 34
4.8. RADIO (ENTERTAINMENT), SPEAKERS, P. 8..... 35
4.9. WINDSHIELD WIPER AND WASHER PUMP, P. 9..... 36
4.10. 2–WAY RADIO, P. 10..... 37
4.11. SWITCH PACK, OPTIONAL GAUGE PACK, P. 11..... 38
4.12. LIGHTED AIR SHIELD, P. 12..... 39
4.13. ROOF AUX. LOAD, P. 13..... 40
4.14. SATELLITE COMMUNICATION QUALCOMM-MCT AND IMCT SYSTEMS, P. 14..... 41
4.15. SELF CONTAINED AIR SEAT, P. 15..... 42
4.16. DIGITAL CLOCK PTC, P. 16..... 43
4.17. TRANSMISSION ALLISON LCT COLUMN SHIFTER, P. 17..... 44

TABLE OF CONTENTS (CONT.)

4.18. HEATED SEATS FOR 7700 MODELS ONLY, P. 18 45
4.19. BACKUP CAMERA, P. 19 46
4.20. XATA COMPUTER, P. 20 47
4.21. KEYLESS IGNITION SYSTEM, P. 21 48

5. 12V CHARGING + CRANKING SYSTEM (CHAPTER 4) 49
5.1. I6 EGR ENGINES, P. 1 49
5.2. V8 AVNT ENGINES, P. 2 50
5.3. CATERPILLAR, CUMMINS ISM ENGINES, P. 3 51
5.4. I6 HEUI ENGINES, P. 4 52
5.5. CATERPILLAR ENGINES, CUMMINS ISM AND WITH EATON ULTRASHIFT/DM2, P. 5 53
5.6. I6 EGR ENGINES WITH AIR START, P. 6 54

6. FANS AND ENGINE ACCESSORIES (CHAPTER 5) 55
6.1. FAN WIRING, P. 1 55
6.2. ETHER START, P. 2 56
6.3. SNOW VALVE, P. 3 57
6.4. FAN WIRING, CATERPILLAR AND CUMMINS, P. 4 58

7. ELECTRONIC ENGINES (CHAPTER 6) 59
7.1. ELECTRONIC ENGINE CONTROLS, I6–EGR ENGINES, P. 1 59
7.2. ELECTRONIC ENGINE CONTROLS, I6-EGR ENGINE CRUISE CONTROL AND BODY BUILDER CONNECTIONS, P. 2 60
7.3. ELECTRONIC ENGINE CONTROLS, (V8–AVNT) ENGINES, P. 3 61
7.4. ELECTRONIC ENGINE CONTROLS, V8–AVNT ENGINE CRUISE CONTROL AND BODY BUILDER CONNECTIONS, P. 4 62
7.5. CATERPILLAR C10, C11, C12, AND C13 ENGINES, P. 5 63
7.6. CUMMINS ISM ENGINE, P. 6 64
7.7. I6 HEUI ENGINE, P. 7 65
7.8. I6 HEUI ENGINE CRUISE CONTROL AND BODY BUILDER CONNECTIONS WITH MANUAL TRANSMISSION, P. 8 66

8. GAUGES WITH AND WITHOUT INTEGRAL WARNING LIGHT (CHAPTER 7) 67
8.1. IP/GAUGE LIST, P. 1 67
8.2. WARNING LIGHT LIST, P. 2 68
8.3. WARNING LIGHTS CONTROLLED BY ENGINE, TRANSMISSION, ABS CONTROLLER, P. 3 69
8.4. ENGINE OIL PRESSURE AND TEMP, SPEEDOMETER, TACH, VOLTMETER AND WATER TEMP GAUGE CIRCUITS, P. 4 70
8.5. IP/GAUGES AND WARNING LIGHTS — GAUGE CLUSTER, P. 5 71
8.6. AIR PRESSURE INPUT CIRCUIT, P. 6 72
8.7. AXLE TEMPERATURE, FWD REAR AND REAR AXLES, GAUGE INPUT CIRCUIT, P. 7 73
8.8. FUEL GAUGE INPUT CIRCUIT (SINGLE TANK) DIFFERENTIAL LOCK WARNING LAMPS, P. 8 74
8.9. GAUGES AND WARNING LIGHTS — FUEL FILTER RESTRICTION AND WATER IN FUEL LIGHTS, P. 9 75
8.10. GAUGES AND WARNING LIGHTS — PARK BRAKE LIGHT AND TRANSMISSION OIL TEMP. GAUGE, P. 10 76
8.11. GAUGES AND WARNING LIGHTS — AMMETER, P. 11 77
8.12. ENGINE OIL TEMPERATURE GAUGE WITH CATERPILLAR, P. 12 78
8.13. FRONT AXLE ENGAGEMENT LAMP, P. 13 79

TABLE OF CONTENTS (CONT.)

9. LIGHTS (CHAPTER 8)..... 80
9.1. BACK UP LIGHTS, P. 1..... 80
9.2. LIGHT SYSTEMS — CLEARANCE, MARKER, PARK, TAIL, TURN AND STOP LAMPS, P. 2... 81
9.3. LIGHT SYSTEMS — CLEARANCE, MARKER, PARK, TAIL, TURN AND STOP LAMPS (CONT.), P. 3..... 82
9.4. LIGHT SYSTEMS — TURN SIGNAL AND STOP SWITCHES, P. 4..... 83
9.5. DOME LIGHT, MAP LIGHT, P. 5..... 84
9.6. DOME LIGHT, MAP LIGHT (CONT.), P. 6..... 85
9.7. FOG LIGHT AND WORK LIGHT, P. 7..... 86
9.8. HEADLIGHTS, P. 8..... 87
9.9. AUX. HEADLIGHTS, AUX. PARK, AUX. TURN, P. 9..... 88
9.10. PANEL LIGHTS, P. 10..... 89

10. CHASSIS ACCESSORIES (CHAPTER 9)..... 90
10.1. AIR DRYER AND HEATED DRAIN VALVE, P. 1..... 90
10.2. ANTILOCK BRAKE SYSTEM (ABS), AIR, P. 2..... 91
10.3. ANTILOCK BRAKE SYSTEM (ABS), AIR, TRACTION CONTROL, P. 3..... 92
10.4. ANTILOCK BRAKE SYSTEM (ABS), AIR, TRACTION CONTROL, P. 3A..... 93
10.5. ANTILOCK BRAKE SYSTEM (ABS), AIR, TRACTION CONTROL, P. 3B..... 94
10.6. ANTILOCK BRAKE SYSTEM (ABS), HYDRAULIC, P. 4..... 95
10.7. ANTILOCK BRAKE SYSTEM (ABS), HYDRAULIC (CONT.), P. 5..... 96
10.8. ANTILOCK BRAKE SYSTEM (ABS), HYDRAULIC (CONT.), P. 6..... 97
10.9. TWO SPEED AXLE SWITCH WITH MANUAL TRANSMISSION AND I6 HEUI FUEL HEATER N/WARN LIGHTS, P. 7..... 98
10.10. BRAKE SYSTEM, HYDRAULIC, P. 8..... 99
10.11. FUEL TRANSFER PUMP, P. 9..... 100
10.12. BACK OF CAB BODY BUILDER AND TRAILER STOP, TAIL, MARKER, P. 10..... 101
10.13. BODY BUILDER AND TRAILER TURNS, CENTER PIN ABS, CENTER PIN AUX, P. 11..... 102
10.14. BODY BUILDER AND TRAILER SOCKET BACK OF CAB SOCKETS, P. 12..... 103
10.15. BODY BUILDER AND TRAILER SOCKET END OF FRAME (EOF) SOCKET AND BODY BUILDER, P. 13..... 104
10.16. AIR SOLENOID 4–WAY PACK, P. 14..... 105
10.17. REMOTE POWER UNITS, SOLENOID PACKS, REMOTE ENGINE SPEED CONTROLLER, P. 15..... 106
10.18. HYD POWER PARK, P. 16..... 107
10.19. AIR SUSPENSION, P. 17..... 108
10.20. AUX. TRAILER, ACC CONTROLLED, P. 18..... 109
10.21. AUX. TRAILER, BATTERY CONTROLLED, P. 19..... 110
10.22. LIFT AXLES (NON-STEERABLE), P. 20..... 111
10.23. LIFT AXLES (STEERABLE), P. 21..... 112
10.24. AIR ACTUATED PARK BRAKE, P. 22..... 113
10.25. ANTILOCK BRAKE SYSTEM, WABCO AIR, P. 23..... 114
10.26. ANTILOCK BRAKE SYSTEM, WABCO AIR, P. 24..... 115
10.27. LIFT AXLES, WITH NON-STEERABLE FOR SS MODELS, P. 25..... 116
10.28. FUEL / WATER SEPARATOR WITH 12VDC FUEL PREHEATER, P. 26..... 117
10.29. ELECTRONIC TRAILER BRAKE ACCOMMODATION, P. 27..... 118
10.30. LECTRASHIFT ACCOMMODATION, P. 28..... 119
10.31. AUXILIARY 40 AMP CIRCUIT, P. 29..... 120
10.32. HOURMETER, CUSTOMER MOUNTED PTO, P. 30..... 121
10.33. REMOTE START/ STOP, P. 31..... 122
10.34. LIFT AXLE WITH 14RAR, P. 32..... 123

TABLE OF CONTENTS (CONT.)

10.35. LIFT GATE, P. 33 124
10.36. LIFT AXLE MULTIPLEX, P. 34 125

11. TRANSMISSIONS (CHAPTER 10) 126
11.1. ALLISON LCT TRANSMISSION OR ALLISON 1000, 2000, 2400, P. 1 126
11.2. ALLISON MD TRANSMISSION, P. 2 127
11.3. ALLISON MD TRANSMISSION (WTEC), P. 3 128
11.4. ALLISON MD TRANSMISSION (CONT.), P. 4 129
11.5. TRANSMISSION, WTEC MD W/AUTO NEUTRAL, P. 5 130
11.6. EATON AUTOSHIFT TRANSMISSION, P. 6 131
11.7. EATON AUTOSHIFT TRANSMISSION (CONT.), P. 7 132
11.8. EATON LIGHTNING TRANSMISSION, P. 8 133
11.9. ALLISON HD TRANSMISSION, P. 9 134
11.10. ALLISON HD TRANSMISSION, P. 10 135
11.11. ALLISON HD TRANSMISSION, P. 11 136
11.12. ALLISON HD TRANSMISSION WITH AUTO NEUTRAL, P. 12 137
11.13. ALLISON HD TRANSMISSION WITH AUTO NEUTRAL AND WITH 0013WUA, P. 13 138
11.14. ALLISON LCT TRANSMISSION (ALLISON 1000, 2000, 2400) WITH I6 HEUI, P. 14 139
11.15. TRANSMISSION RETARDER CONTROL WIRING WITH MD XMSN, HARD WIRED EFFECTS, P. 15 140
11.16. TRANSMISSION RETARDER CONTROL WIRING WITH MD XMSN, HARD WIRED EFFECTS, P. 16 141

12. AIR CONDITIONING (CHAPTER 11) 142
12.1. HVAC SYSTEMS, P. 1 142
12.2. AIR CONDITIONING (ONLY), P. 2 143
12.3. AUTOTHERM SYSTEMS, P. 3 144

13. CONNECTOR COMPOSITES (CHAPTER 12) 145
13.1. CONNECTOR COMPOSITES (10M), (71), (72), (345F), P. 1 145
13.2. CONNECTOR COMPOSITES (420F), (420M), (520), (521), (522), (523), (524), P. 2 146
13.3. CONNECTOR COMPOSITES (1002), (1003), (1010), P. 3 147
13.4. CONNECTOR COMPOSITE (1011), P. 4 148
13.5. CONNECTOR COMPOSITE (1012), P. 5 149
13.6. CONNECTOR COMPOSITE (1013), P. 6 150
13.7. CONNECTOR COMPOSITE (1014), P. 7 151
13.8. CONNECTOR COMPOSITES (1018), (1019M), (1020M), (1021M), (1022M), P. 8 152
13.9. CONNECTOR COMPOSITES (1027M, F), (1100), (1101A), (1101), (1102), P. 9 153
13.10. CONNECTOR COMPOSITES (1104), (1106), (1200), (1210), P. 10 154
13.11. CONNECTOR COMPOSITES (1300), (1301), (1400), (1402), (1410), (1500), (1510), P. 11 155
13.12. CONNECTOR COMPOSITES (1553), (1554F), (1555), (1600), (1601), (1650), P. 12 156
13.13. CONNECTOR COMPOSITES (1652), (1657M), (1658), (1659), (1800), P. 13 157
13.14. CONNECTOR COMPOSITES (1804), (1807), (1808), (1809), (1810), (1811), (1812), (1813), (1814), (1815), P. 14 158
13.15. CONNECTOR COMPOSITES (1820), (1822), (1823), (1824), (1828), (1860), (1861), (1901M), (1915), P. 15 159
13.16. CONNECTOR COMPOSITES (1918), (1935), (1920), (2000), (2002M), (2003M), (2004M), (2005M), P. 16 160
13.17. CONNECTOR COMPOSITES (2006M), (2007F), (2021F), (2021M), (2022F), (2022M), (2111M), (2112M), (2113M), (2114M), (2115M), (2116M), (2117M), (2301M), (2302M), (2303M), P. 17 161

TABLE OF CONTENTS (CONT.)

13.18. CONNECTOR COMPOSITES (2304M), (2305M), (2306M), (2307F), (2308F), (2502F), (2502M), (2503F, M), (2600F, M), P. 18 162
13.19. CONNECTOR COMPOSITES (2601M, F), (2602M, F), (3000M), (3000F), (3002M), (3003), (3100M), (3200F, M), (3201M), (3202), (3203M), P. 19 163
13.20. CONNECTOR COMPOSITES (3204M, F), (3209), (3210M), (3211M), (4000), P. 20 164
13.21. CONNECTOR COMPOSITE (4001), P. 21 165
13.22. CONNECTOR COMPOSITE (4002), P. 22 166
13.23. CONNECTOR COMPOSITE (4003), P. 23 167
13.24. CONNECTOR COMPOSITES (4004), (4007), (4008), P. 24 168
13.25. CONNECTOR COMPOSITE (4014), P. 25 169
13.26. CONNECTOR COMPOSITE (4014/1700), P. 26 170
13.27. CONNECTOR COMPOSITES (4015), (4017), (4018), (4019), (4020), (4021), (4022), (4023), P. 27 171
13.28. CONNECTOR COMPOSITES (4024), (4030), (4031), (4032), (4033), (4040), (4041), P. 28 172
13.29. CONNECTOR COMPOSITES (4070), (4071), (4087), (4098), (4101), P. 29 173
13.30. CONNECTOR COMPOSITE (4103), P. 30 174
13.31. CONNECTOR COMPOSITES (4105), (4111), (4120), (4301), P. 31 175
13.32. CONNECTOR COMPOSITES (4305), (4410), (4410B), (4410C), (4410D), (4410E), (4410H), (4410M), (4411), P. 32 176
13.33. CONNECTOR COMPOSITES (4411A), (4411B), (4412), (4415), (4450), (4450A), (4460A), (4460), P. 33 177
13.34. CONNECTOR COMPOSITE (4705), P. 34 178
13.35. CONNECTOR COMPOSITES (4810), (4712F), (4820), (4713F), (4830), (4840), (4850), P. 35 179
13.36. CONNECTOR COMPOSITES (4900), (4910), (4950), (4951), P. 36 180
13.37. CONNECTOR COMPOSITES (6007), (6011), P. 37 181
13.38. CONNECTOR COMPOSITES (6013M), (6014), P. 38 182
13.39. CONNECTOR COMPOSITES (6015), (6020), (6021), P. 39 183
13.40. CONNECTOR COMPOSITES (6200), (6316), (6323), (6332), (6333), (6334), (6400), (6401M), (6401), (6406), (6407), (6407D), (6409), (6500), P. 40 184
13.41. CONNECTOR COMPOSITES (6550), (6703), (6704), (6708), (7103), (7104), (7104A), (7105), (7106), (7111), P. 41 185
13.42. CONNECTOR COMPOSITES (7200), (7202), (7203), P. 42 186
13.43. CONNECTOR COMPOSITES (7204), (7205), (7206), (7211), (7212), (7213), P. 43 187
13.44. CONNECTOR COMPOSITES (7214), (7300), (7301), P. 44 188
13.45. CONNECTOR COMPOSITES (7302), (7304), (7305), (7306), (7500), (7502), (7600), (7601), P. 45 189
13.46. CONNECTOR COMPOSITES (7603), (7604), (7605), (7606), (7607), (7608), (7609), (7610), (7611), (7612), (7613), (7615), (7700), (7702), (7703), (7703A), P. 46 190
13.47. CONNECTOR COMPOSITES (7800), (7801M), (7803), (7900), (7901), P. 47 191
13.48. CONNECTOR COMPOSITES (7905), (7906), (8000), (8001), (8102), (8150), (8151), (8200), P. 48 192
13.49. CONNECTOR COMPOSITES (8201), (8301), (8310), (8311), (8312), (8400), (8500), (8501), (8502), (8502A), P. 49 193
13.50. CONNECTOR COMPOSITES (8503), (8503A), (8505), (8506), (8507), (8508), (8509), (8600), (8601), (8602), P. 50 194
13.51. CONNECTOR COMPOSITES (8700), (8701), (8800), (8801), (8802), (8803), (8805), P. 51 195
13.52. CONNECTOR COMPOSITES (9001), (9002), (9100), (9101), (9102), (9103), (9104), (9254), (9255), P. 52 196
13.53. CONNECTOR COMPOSITES (9260), (9261), (9262), (9263), (9264), (9265), (9303A), P. 53 197

TABLE OF CONTENTS (CONT.)

13.54. CONNECTOR COMPOSITES (9405), (9501), (9502), (9503), (9504), (9505), (9506), P. 54... 198
13.55. CONNECTOR COMPOSITES (9507), (9508), (9509), (9510), (9511), (9512), (9513), (9514), (9515), P. 55... 199
13.56. CONNECTOR COMPOSITES (9516), (9517), (9518), (9519), P. 56... 200
13.57. CONNECTOR COMPOSITE (9700), P. 57... 201
13.58. CONNECTOR COMPOSITE (9700), P. 58... 202
13.59. CONNECTOR COMPOSITES (9715), (9715A), (9715B), P. 59... 203
13.60. CONNECTOR COMPOSITES (9716), (9716A), (9716B), P. 60... 204
13.61. CONNECTOR COMPOSITES (9717A), (9717B), P. 61... 205
13.62. CONNECTOR COMPOSITES (9718), (9719), (9720), (9733), (9734), (9736), (9754), (9762), (9763), P. 62... 206
13.63. CONNECTOR COMPOSITES (9777), (9778), (9800), P. 63... 207
13.64. CONNECTOR COMPOSITES (9870), (9871), (9811), (9812), (9814), (9815), (9830), (9850), (9860), (9865M), (9900), (9900A), (9913A), P. 64... 208
13.65. CONNECTOR COMPOSITES (9913B), (9914), (4100), (4109), (4112), (6502), (7107), (7208), (7615), P. 65... 209

INSTRUCTIONS AND CHARTS (CHAPTER 1)

2.1. CIRCUIT NUMBER IDENTIFICATION AND LOCATION CHART, P. 1

INTERNATIONAL TRUCK AND ENGINE CORPORATION THIS PRINT IS PROVIDED ON A RESTRICTED BASIS AND IS NOT TO BE USED IN ANY WAY DETRIMENTAL TO THE INTEREST OF INTERNATIONAL TRUCK AND ENGINE CORPORATION.	ELECTRICAL CIRCUIT DIAGRAM CHAPTER 1 INTERNATIONAL CIRCUIT NUMBER IDENTIFICATIOIN AND LOCATION

PREFIX DESIGNATIONS

PREFIX	LOCATION
A	Cab-instrument Panel Module
B	Cab-Driver Control Module
C	Cab-Header/Clearance Lights
D	Cab-Roof/Rear Panel
E	Cab-Left Door/Doors
F	Cab-Right Door/Doors
H	Cab-Sleeper
J	Cab-Dash(outside)
K	Engine/Radiator
L	Transmission
M	Chassis/Front End (Cab Dash Panel Forward)
N	Chassis/Center Section (Cab Dash Panel to Cab RR Xmbr)
P	Chassis/Wheel Base Section
R	Chassis/Suspension/Rear Axle/Axles
S	Chassis/AF Section/Stop/Tail/Turn Lights

CIRCUIT NUMBER AND IDENTIFICATIONS

CIRCUIT NUMBER	COLOR	DESCRIPTION
1	LTBL	ALTERNATOR - FIELD
2	RD	ALTERNATOR - CHARGE
3	DKBL GY	1708 DATA LINK, SWITCH DATA LINK (+) 1708 DATA LINK, SWITCH DATA LINK (-)
4		SERIAL/DATA COMMUNICATION J1922
5	YL GN	DRIVE TRAIN J1939 DATA LINK (+) DRIVE TRAIN J1939 DATA LINK (-)
6	GY	LOW VOLTAGE ELECTRONIC FEED (< 9 VOLTS)
7	RD	ALTERNATOR - RESISTANCE
8		

CHK	DATE	CHANGE	REV	REFERENCE	DRAWN	NAME		
PEC	16JAN01	PRODUCTION RELEASE.	A	P54304U	U00DLCK	42/43/44/85/8600 & 73/74/7500 CIRC DIAGRAMS		
					RELEASE NO.	DATE	PART NO.	SHEET
					P52778H	09AUG00	AE08-52365	01

Figure 1 Circuit Number Identification and Location Chart

2.2. CIRCUIT NUMBER IDENTIFICATION AND LOCATION CHART, P. 2

INTERNATIONAL TRUCK AND ENGINE CORPORATION

THIS PRINT IS PROVIDED ON A RESTRICTED BASIS AND IS NOT TO BE USED IN ANY WAY DETRIMENTAL TO THE INTEREST OF INTERNATIONAL TRUCK AND ENGINE CORPORATION.

ELECTRICAL CIRCUIT DIAGRAM CHAPTER 1

INTERNATIONAL CIRCUIT NUMBER IDENTIFICATION AND LOCATION (CONT.)

CIRCUIT NUMBER AND IDENTIFICATIONS (CONT.)

CIRCUIT NUMBER	COLOR	DESCRIPTION
9	GY	ZERO VOLT REFERENCE (ZVR)
10	WH	CHASSIS/ENGINE GROUND
11	WH	CAB/SLEEPER GROUND
12	LTBL	ACCESSORY FEED
13	PK BK	IGNITION FEED IGNITION FEED (BODY BUILDER CONNECTOR)
14	RD	BATTERY FEED
15	RD	KEY SWITCH FEED
16		
17	PK	STARTER CONTROL
18	PK	GLOW PLUG/PRE-HEATER
19	GY	ENGINE SHUTDOWN
20	LTGN	REMOTE POWER MODULE
21	TN	COLD START CONTROLS (ETHER)
22		
23	TN	ENGINE FAN/SHUTTERS
24	GY	ENGINE EXHAUST BRAKE
25	TN	PYROMETER
26	TN	AMMETER
27	TN	VOLTMETER
28	TN	INSTRUMENTS AND GAUGES
29	TN	ENGINE WATER TEMPERATURE
30	TN	ENGINE OIL TEMPERATURE
31	TN	TRANSMISSION OIL TEMPERATURE
32	TN	AXLE OIL TEMPERATURE

CHK	DATE	CHANGE	REV	REFERENCE	DRAWN	NAME		
					U00JXP9	42/43/44/85/8600 & 73/74/7500 CIRC DIAGRAMS		
PEC	16JAN01	PRODUCTION RELEASE.	A	P54304U	RELEASE NO.	DATE	PART NO.	SHEET
					P52778H	09AUG00	AE08-52365	02

Figure 2 Circuit Number Identification and Location Chart (Cont.)

2.3. CIRCUIT NUMBER IDENTIFICATION AND LOCATION CHART, P. 3

INTERNATIONAL TRUCK AND ENGINE CORPORATION

THIS PRINT IS PROVIDED ON A RESTRICTED BASIS AND IS NOT TO BE USED IN ANY WAY DETRIMENTAL TO THE INTEREST OF INTERNATIONAL TRUCK AND ENGINE CORPORATION.

ELECTRICAL CIRCUIT DIAGRAM CHAPTER 1

INTERNATIONAL CIRCUIT NUMBER IDENTIFICATION AND LOCATION (CONT.)

CIRCUIT NUMBER AND IDENTIFICATIONS (CONT.)

CIRCUIT NUMBER	COLOR	DESCRIPTION
33	TN	ENGINE OIL LEVEL
34	TN	COOLANT LEVEL
35	TN	ENGINE OIL PRESSURE
36	TN	FUEL LEVEL
37	TN	FUEL PUMP
38		
39	GY	AIR DRYER HEATER
40	GY	LOW AIR PRESSURE WARNING
41	TN	AIR TEMPERATURE
42	GY	FRONT AXLE ENGAGED
43	GY	POWER DIVIDER LOCK (PDL) WARNING
44	GY	PARK BRAKE WARNING
45	LTGN	ANTI - THEFT WARNING
46	GY	POWER TAKE - OFF WARNING
47	GY	SPEEDOMETER
48	GY	TACHOMETER
49	GY	DIFFERENTIAL LOCK WARNING
50	YL	LIGHT SWITCH FEED
51	YL	DIMMER SWITCH FEED
52	YL	HEADLIGHT HI - BEAM
53	YL	HEADLIGHT LO - BEAM
54	BN	PARKING/MARKER LIGHTS
55	OR	TURN SIGNAL - FEED
56	OR	TURN SIGNAL LIGHTS - LEFT
	YL	TURN SIGNAL LIGHTS - LEFT (BODY BUILDER CONNECTION)
57	OR	TURN SIGNAL LIGHTS - RIGHT
	LT GN	TURN SIGNAL LIGHTS - RIGHT (BODY BUILDER CONNECTION)

CHK	DATE	CHANGE	REV	REFERENCE	DRAWN	NAME		
PEC	16JAN01	PRODUCTION RELEASE.	A	P54304U	U00DLCK	42/43/44/85/8600 & 73/74/7500 CIRC DIAGRAMS		
					RELEASE NO.	DATE	PART NO.	SHEET
					P52778H	15 MAY 00	AE08-52365	03

Figure 3 Circuit Number Identification and Location Chart (Cont.)

2.4. CIRCUIT NUMBER IDENTIFICATION AND LOCATION CHART, P. 4

INTERNATIONAL TRUCK AND ENGINE CORPORATION

THIS PRINT IS PROVIDED ON A RESTRICTED BASIS AND IS NOT TO BE USED IN ANY WAY DETRIMENTAL TO THE INTEREST OF INTERNATIONAL TRUCK AND ENGINE CORPORATION.

ELECTRICAL CIRCUIT DIAGRAM CHAPTER 1

INTERNATIONAL CIRCUIT NUMBER IDENTIFICATION AND LOCATION (CONT.)

CIRCUIT NUMBER AND IDENTIFICATIONS (CONT.)

CIRCUIT NUMBER	COLOR	DESCRIPTION
58	BN	CLEARANCE/IDENTIFICATION LIGHTS
59	GY	SOLENOID
60	OR	HAZARD LIGHTS
61	GY	AIR SUSPENSION
62	DKBL	PANEL LIGHTS
63	DKBL	COURTESY/DOME LIGHTS
64	YL	FOG/DRIVING LIGHTS
65	OR	CAB REAR FLOOD LIGHT
66	YL	DAYTIME RUNNING LIGHTS
67		
68	BN	TAIL LIGHTS
69	BN	LICENSE PLATE LIGHT
70	OR RD	STOP LIGHTS STOP LIGHTS (BODY BUILDER CONNECTION)
71	OR LTBL	BACK - UP LIGHTS BACK - UP LIGHTS (BODY BUILDER CONNECTION)
72	OR	TRAILER AUXILIARY FEED - BATTERY
73	LTGN	PWM
74	LTGN	HEATER RECIRC MOTOR
75	LTGN	HEATER BLOWER MOTOR
76	LTGN	AUXILIARY FAN
77	LTGN	AIR CONDITIONER
78	LTGN	MIRRORS - HEATED; MOTORIZED
79	GY	SEAT BELTS
80	BK	SLEEPER BOX RELAY - FEED
81	LTGN	POWER DOOR LOCKS

CHK	DATE	CHANGE	REV	REFERENCE	DRAWN	NAME		
PEC	16JAN01	PRODUCTION RELEASE.	A	P54304U	U00DLCK	42/43/44/85/8600 & 73/74/7500 CIRC DIAGRAMS		
					RELEASE NO.	DATE	PART NO.	SHEET
					P52778H	15MAY00	AE08-52365	04

Figure 4 Circuit Number Identification and Location Chart (Cont.)

2.5. CIRCUIT NUMBER IDENTIFICATION AND LOCATION CHART, P. 5

INTERNATIONAL TRUCK AND ENGINE CORPORATION

THIS PRINT IS PROVIDED ON A RESTRICTED BASIS AND IS NOT TO BE USED IN ANY WAY DETRIMENTAL TO THE INTEREST OF THE INTERNATIONAL TRUCK AND ENGINE CORPORATION.

ELECTRICAL CIRCUIT DIAGRAM

CHAPTER 1

INTERNATIONAL CIRCUIT NUMBER IDENTIFICATION AND LOCTION (CONT.)

CIRCUIT NUMBER AND IDENTIFICATIONS (CONT.)

CIRCUIT NUMBER	COLOR	DESCRIPTION
82	GY	WINDSHIELD WIPER
83	LTGN	POWER WINDOWS
84	LTGN	CIGAR LIGHTER
85	GY	HORN
86	LTGN	RADIO - ENTERTAINMENT/CLOCK
87	GY	WINDSHIELD WASHER
88	LTGN	CLOCK/HOURMETER
89	VT	AIR BAG
90	GY	HYDRAULIC BRAKE PUMP
91	VT	INTERCOMMUNICATIONS
92	TN	TRANSMISSION CONTROLS - ELECTRONIC
93	TN	AXLE SHIFT CONTROL
94	GY	ANTILOCK BRAKE SYSTEM
95	TN	EXHAUST EMISSION
96	YL	SNOW PLOW LIGHTS/CRUISE CONTROL
97	VT	ENGINE CONTROLS - ELECTRONIC
98	BK	DATALINK AND DIAGNOSTICS
99	VT	ACCELERATOR POSITION SENSOR (APS)
100	GY	AIR HORN (ELECTRIC SOLENOID ACTUATED)
101	TN	BRAKE APPLICATION AIR
102	YL	FLASH TO PASS
103	LTGN	BODY BUILDER AUX. FEED
104	DKBL	REMOTE START/STOP
105	LTGN	HEATED SEATS

CHK	DATE	CHANGE	REV	REFERENCE	DRAWN	NAME		
JKP	30MAY03	ADDED 103, 104, 105 & COLOR TO 100, 101, 102.	C	58205F	U00DLCK	42/43/44/85/8600 & 73/74/7500 CIRC DIAGRAMS		
					RELEASE NO.	DATE	PART NO.	SHEET
					P52778H	15MAY00	AE08-52365	05

Figure 5 Circuit Number Identification and Location Chart (Cont.)

2.6. NAVPAK/ECM I6 ENGINE CONTROLLER CONNECTOR PIN NUMBER IDENTIFICATION, P. 6

INTERNATIONAL TRUCK AND ENGINE CORPORATION

THIS PRINT IS PROVIDED ON A RESTRICTED BASIS AND IS NOT TO BE USED IN ANY WAY DETRIMENTAL TO THE INTEREST OF INTERNATIONAL TRUCK AND ENGINE CORPORATION.

ELECTRICAL CIRCUIT DIAGRAM

CHAPTER 1

INTERNATIONAL NAVPAK/ECM I6 ENGINE CONTROLLER CONNECTOR PIN NUMBER IDENTIFICATION

ECM PIN #	TERM	DESCRIPTION	ECM PIN #	TERM	DESCRIPTION
12	AAT	AMBIENT AIR TEMP. SENSOR	27	IVS	IDLE VALIDATION SWITCH
33	ACD	A/C DEMAND	54	OWL	OIL/WATER WARNING LIGHT
8	APS	ACCELERATOR POS. SENSOR	25	PWR RLY	CEC MAIN POWER RELAY SIGNAL
16	ATA(+)	J1708 DATALINK (+)	31	RAS	RESUME/ACCELERATE
17	ATA(-)	J1708 DATALINK (-)	37	RPRF	PRESET SPEED
29	BAP	BAROMETRIC AIR PRESS. SENSOR	30	RPS	REMOTE ACCELERATOR POS. SENS. SIG.
43	BN01	BRAKE STATUS #1	6	RPS_RTN	REMOTE ACCELERATOR POS. SENS RTN.
44	BN02	BRAKE STATUS #2	36	RVAR	VARIBLE SPEED SWITCH
18	CAN SHLD	DRIVETRAIN J1939 DATALINK SHLD	32	SCS	SET/COAST
19	CAN(+)	DRIVETRAIN J1939 DATALINK (+)	45	SIL	SERVICE INTERVAL LIGHT
20	CAN(-)	DRIVETRAIN J1939 DATALINK (-)	34	STI	SELF TEST INPUT
15	CBE_SEL1	RETARDER/EXHAUST BRAKE REQUEST	48	SUL	SHIFT UP LIGHT
10	CLS	COOLANT LEVEL SENSOR	59	TACA	TACHOMETER A
35	COD	CRUISE ON/OFF	60	TACB	TACHOMETER B
21	DC (+)	POWER	38	TCSS	TORQUE CURVE SELECTION INPUT
22	DC (+)	POWER	28	TSA	TWO SPEED AXLE
1	DC (-)	GROUND	3	VBREF(5V)	ACCELERATOR SENSOR SUPPLY
2	DC (-)	GROUND	11	VBREF GND	ACCELERATOR SENSOR GROUND
26	DDS	DRIVELINE DISENGAUGED INPUT	5	VCREF(5V)	REMOTE ACCELERATOR SENS. SUPPLY
42	DPS	GROUND	7	VCREF GND	REMOTE ACCELERATOR SENSOR GND
46	ECI	ENGINE CRANK INHIBIT	24	VIGN	IGNITION FEED
56	EDL	TRANSMISSION KICKDOWN	47	VRE	RETARDER/EXHAUST BRAKE ENABLE
53	GPL	GLOW PLUG LIGHT	39	VSS(+)	VEHICLE SPEED SENSOR (+)
4	HGE	HYD. PRESS GOVERNOR ENABLE	40	VSS(-)	VEHICLE SPEED SENSOR (-)
49	HMI	HYDRAULIC PRESS GOVERNOR IND. LT	58	VSSCALA	SPEEDOMETER SIGNAL A
13	HPS	HYDRAULIC PRESSURE SENSOR	57	VSSCALB	SPEEDOMETER SIGNAL B
41	HSO (+)	POWER	55	WARN	ENGINE WARNING LIGHT
23	HSO (-)	GROUND			

CHK	DATE	CHANGE	REV	REFERENCE	DRAWN	NAME
CNA	12SEP03	ADDED PIN # CHART.	C	58774T	U00JXP9	42/43/44/85/8600 & 73/74/7500 CIRC DIAGRAMS
					RELEASE NO. P52778H	DATE 09AUG00 PART NO. AE08-52365 SHEET 06

Figure 6 NAVPAK/ECM I6 Engine Controller Connector Pin Number Identification

2.7. CIRCUIT DIAGRAM INSTRUCTIONS, P. 7

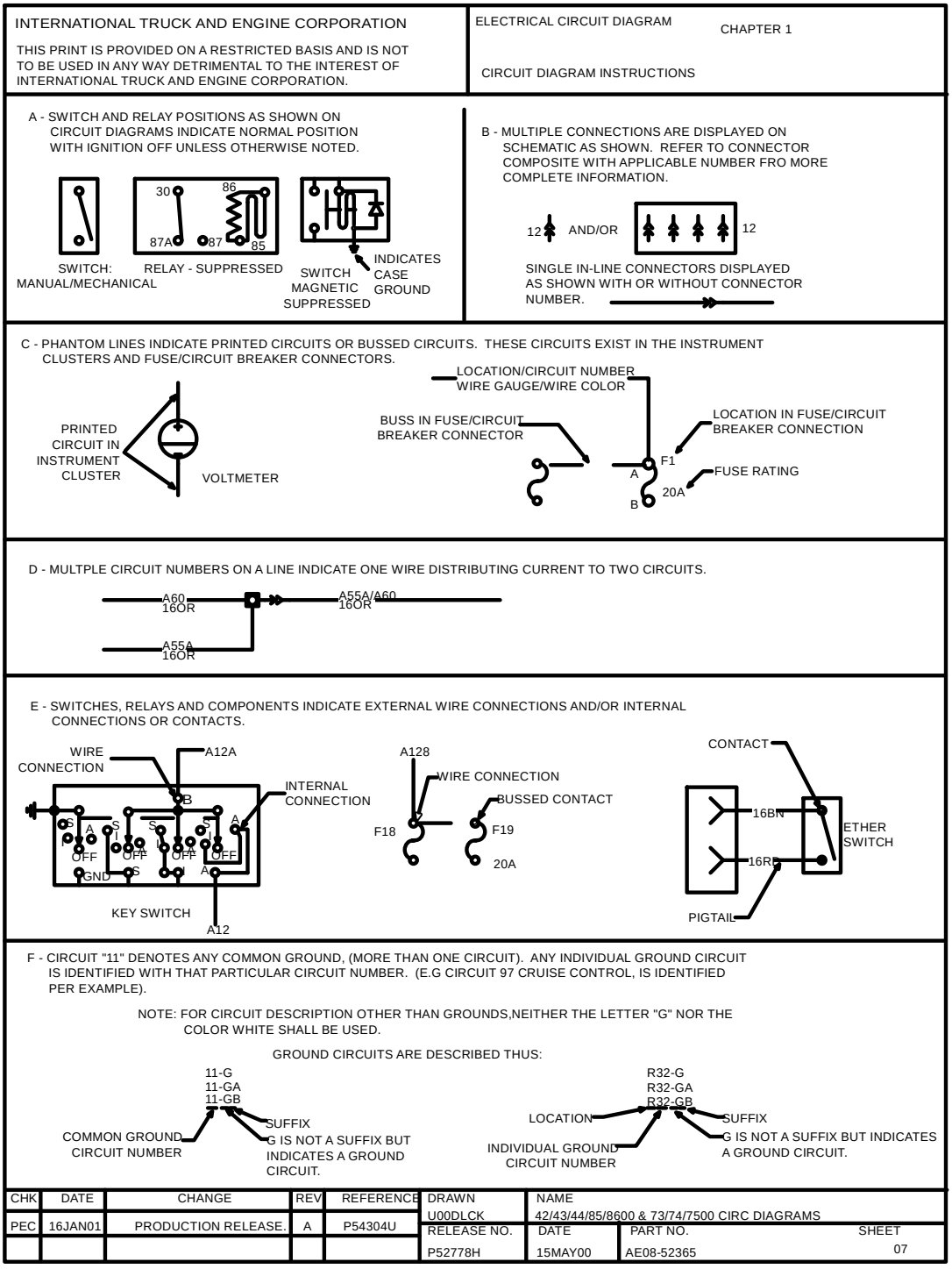

Figure 7 Circuit Diagram Instructions

2.8. CIRCUIT DIAGRAM INSTRUCTIONS, P. 8

INTERNATIONAL TRUCK AND ENGINE CORPORATION

THIS PRINT IS PROVIDED ON A RESTRICTED BASIS AND IS NOT TO BE USED IN ANY WAY DETRIMENTAL TO THE INTEREST OF INTERNATIONAL TRUCK AND ENGINE CORPORATION.

ELECTRICAL CIRCUIT DIAGRAM

CHAPTER 1

CIRCUIT DIAGRAM INSTRUCTIONS

G - ABBREVIATIONS: COLOR, NOUN AND ENGINE

COLOR ABBREVIATION

AQ - AQUA
BK - BLACK
BL - BLUE
BN - BROWN
DK GN - DARK GREEN
GD - GOLD
GY - GRAY
GN - GREEN
LT BL - LIGHT BLUE
LT GN - LIGHT GREEN
OR - ORANGE
PK - PINK
PL - PURPLE
RD - RED
SIL - SILVER
TN - TAN
VT - VIOLET
WH - WHITE
YL - YELLOW

NOUN ABBREVIATION

A, ACC - ACCESSORY
AC - AIR CONDITIONER
AUX - AUXILIARY
AWG - AMERICAN WIRE GAUGE
B, BAT - BATTERY
CONN - CONNECTION OR CONNECTOR
DRL - DAYTIME RUNNING LIGHTS
ENG - ENGINE
FWD - FORWARD
GA - GAUGE
G, GND - GROUND
I, IGN - IGNITION
IND - INDICATOR
L - LEFT
LT - LIGHT
W/O - WITHOUT
OPT - OPTIONAL
R - RIGHT
S - START OR SENDER
THERMO - THERMOSTAT
W/ - WITH

ENGINE ABBREVIATION

ISM - MFG (CUMMINS) 10.8 LITER ELECTRONIC ENGINE CONTROL

N14E PLUS - MFG (CUMMINS) 14 LITER ELECTRONIC ENGINE CONTROL

C-10,C-12 - MFG (CATERPILLAR) 10.3 LITER ELECTRONIC ENGINE CONTROL

V8-AVNT - MFG (INTERNATIONAL) V8 6.0 LITER ELECTRONIC ENGINE CONTROL

I6-HEUI - MFG (INTERNATIONAL) NGD I6 DT466 & DT/HT530 ELECTRONIC ENGINE CONTROL

CHK	DATE	CHANGE	REV	REFERENCE	DRAWN	NAME		
PEC	16JAN01	PRODUCTION RELEASE.	A	P54304U	U00JXP9	42/43/44/85/8600 & 73/74/7500 CIRC DIAGRAMS		
					RELEASE NO.	DATE	PART NO.	SHEET
					P52778H	10AUG00	AE08-52365	08

Figure 8 Circuit Diagram Instructions (Cont.)

2.9. SCHEMATIC SYMBOL CHART, P. 9

INTERNATIONAL TRUCK AND ENGINE CORPORATION

THIS PRINT IS PROVIDED ON A RESTRICTED BASIS AND IS NOT TO BE USED IN ANY WAY DETRIMENTAL TO THE INTEREST OF INTERNATIONAL TRUCK AND ENGINE CORPORATION.

ELECTRICAL CIRCUIT DIAGRAM

CHAPTER 1

SCHEMATIC SYMBOL CHART

SYMBOL	DESCRIPTION
	MALE/FEMALE IN-LINE CONNECTION
	FEMALE TERMINAL
	MALE TERMINAL
	GROUND
	FUSE
	LIGHT EMITTING DIODE
	RESISTOR
	SWITCH CONTACT, NORMALLY OPEN
	SWITCH CONTACT, NORMALLY CLOSED
	JUNCTION POINT
	SPLICE
	SWITCH-PRESSURE
	SWITCH-MANUAL/MECHANICAL
30 86 87A 87 85	RELAY-SUPPRESSED
	SOLENOID - GENERAL USAGE
	MOTOR - ELECTRIC
	CIGAR LIGHTER

DESCRIPTION	SYMBOL
HORN	
SPEAKER - SOUND SYSTEM	
MAGNETIC SWITCH	
LIGHT - SINGLE FILMENT	
LIGHT - DOUBLE FILAMENT	
SENDER - OIL, WATER, FUEL, TEMPERATURE	

CHK	DATE	CHANGE	REV	REFERENCE	DRAWN	NAME		
PEC	16JAN01	PRODUCTION RELEASE.	A	P54304U	U00DLCK	42/43/44/85/8600 & 73/74/7500 CIRC DIAGRAMS		
					RELEASE NO.	DATE	PART NO.	SHEET
					P52778H	19MAY00	AE08-52365	09

Figure 9 Schematic Symbol Chart

2.10. RELAY FUNCTIONS, P. 10

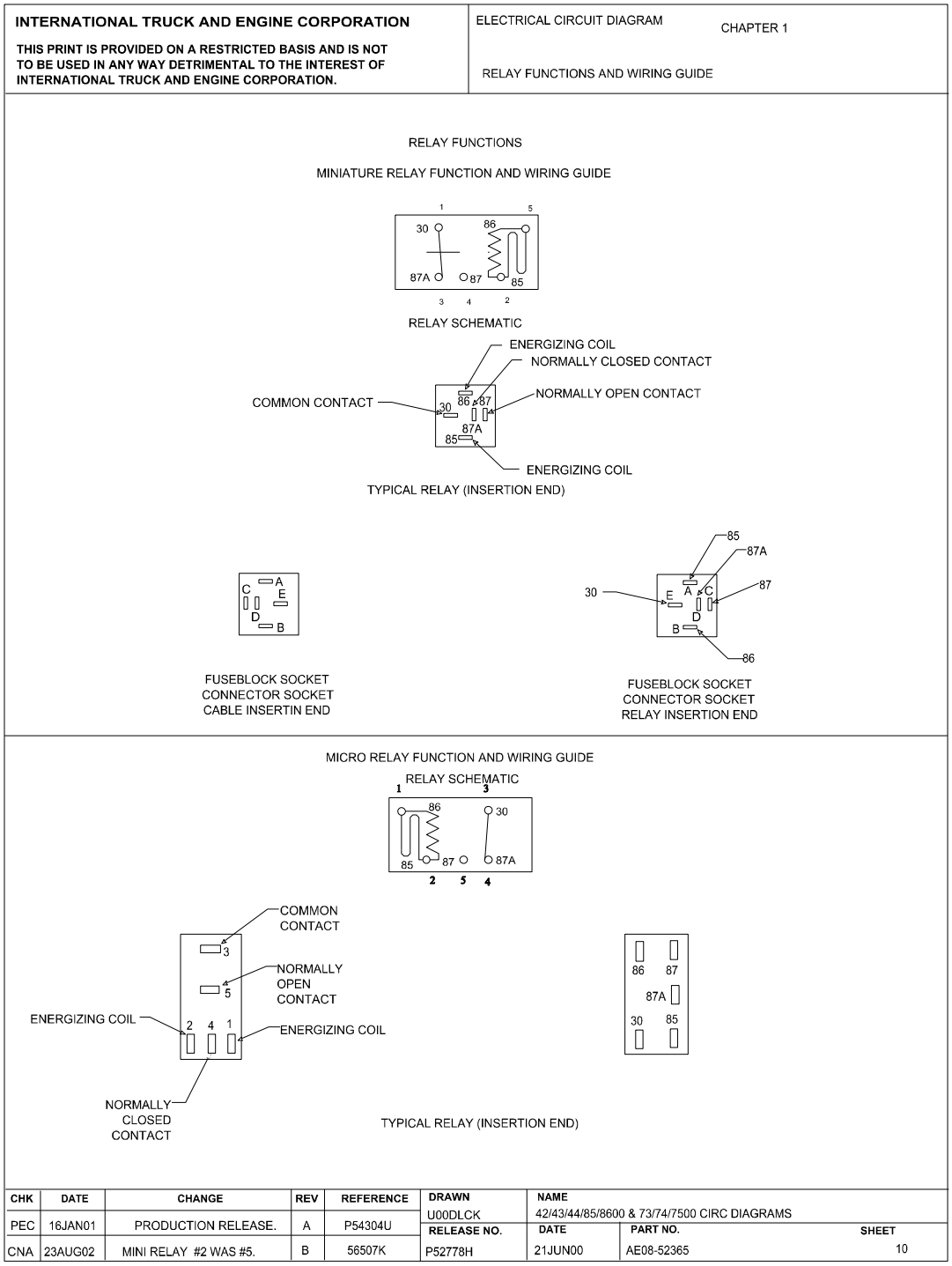

Figure 10 Relay Functions

2.11. LAMP BULB CHART, P. 11

INTERNATIONAL TRUCK AND ENGINE CORPORATION

THIS PRINT IS PROVIDED ON A RESTRICTED BASIS AND IS NOT TO BE USED IN ANY WAY DETRIMENTAL TO THE INTEREST OF INTERNATIONAL TRUCK AND ENGINE CORPORATION.

ELECTRICAL CIRCUIT DIAGRAM CHAPTER 1

LAMP BULB CHART

BULB APPLICATION	CANDLEPOWER OR WATTS	BULB TRADE NUMBER
BACK-UP LIGHTS	32 CANDLEPOWER	GE1156
CLEARANCE & INDENTIFICATION	3 CANDLEPOWER	GE193
COURTESY LIGHT	3 CANDLEPOWER	GE168
DOME LIGHTS	12 CANDLEPOWER	GE561
FOG LIGHTS	55 CANDLEPOWER	VH550
HEAD LIGHTS:		
LOW BEAMS	65 WATTS	GE9007
HIGH BEAMS	65 WATTS	GE9007
INSTRUMENT CLUSTER:		
GAUGE BACK LIGHT		082S270538-3
GAUGE WARNING LED (RED)		082S272109-3
RANGE INHIBIT LED (YELLOW)		082S272109-4
COLD AMBIENT PROTECTION LED (YELLOW)		082S272109-4
FUEL FILTER LED (YELLOW)		082S272109-4
WARN ENGINE LED (YELLOW)		082S272109-4
STOP ENGINE LED (RED)		082S272109-3
BRAKE PRESSURE LED (RED)		082S272109-3
BRAKE FLUID LED (RED)		082S272109-3
WAIT TO START LED (YELLOW)		082S272109-4
CHECK TRANSMISSION LED (YELLOW)		082S272109-4
TRAILER ABS LED (YELLOW)		082S272109-4
WASHER FLUID LED (YELLOW)		082S272109-4
LEFT TURN SIGNAL LED (GREEN)		082S272109-2
TRACTION CONTROL LED (GREEN)		082S272109-2
WATER IN FUEL LED(YELLOW)		082S272109-4
PARK FLUID LED LIGHT (RED)		082S272109-3
CHECK ELECTRICAL SYSTEMS LED (YELLOW)		082S272109-4
PARK BRAKE LED (RED)		082S272109-3
CRUISE CTRL ACTIVE LED (GREEN)		082S272109-2
ANTILOCK BRAKING SYSTEM LED (YELLOW)		082S272109-4
RIGHT TURN LED (GREEN)		082S272109-2
COOLANT LEVEL LED (RED)		082S272109-3
SEAT BELT LED (RED)		082S272109-3
HIGH BEAM ICON LED (BLUE)		082S272109-5
CHECK AIR CONDITIONER LED (YELLOW)		082S272109-4
RETARD OVER HEAT LED (RED)		082S272109-3
PTO/THROTTLE LED (RED)		082S272109-3
MAP LIGHT	3 CANDLEPOWER	1816
SIDE MARKER		2458
STOP & TURN/TAIL & LICENSE PLATE	32/3 CANDLEPOWER	1157
TURN SIGNAL/MARKER (FENDER)		3157
TURN SIGNAL & MARKER LIGHT		2356
WORK (TRAILER HOOK-UP) LIGHT		4411

CHK	DATE	CHANGE	REV	REFERENCE	DRAWN	NAME
PEC	16JAN01	PRODUCTION RELEASE.	A	P54304U	U00DLCK	42/43/44/85/8600 & 73/74/7500 CIRC DIAGRAMS
PEC	18JUN01	REVISED DRWG SHEET.	B	P54634F	RELEASE NO. P52778H	DATE 20JUN00 / PART NO. AE08-52365 / SHEET 11

Figure 11 Lamp Bulb Chart

2.12. INTERNATIONAL V8 AND I6 ECM CONTROLLER CONNECTORS PIN NUMBER IDENTIFICATION, P. 12

INTERNATIONAL TRUCK AND ENGINE CORPORATION

THIS PRINT IS PROVIDED ON A RESTRICTED BASIS AND IS NOT TO BE USED IN ANY WAY DETRIMENTAL TO THE INTEREST OF INTERNATIONAL TRUCK AND ENGINE CORPORATION.

ELECTRICAL CIRCUIT DIAGRAM CHAPTER 1

INTERNATIONAL V8 & I6 ECM
CONTROLLER CONN. PIN NUMBER IDENTIFICATION

CONNECTOR X3 REFERENCE
(6020)

ECM PIN#	TERM	DESCRIPTION
1	FPM	FUEL PUMP MONITIOR
2	FLI	FUEL LEVEL INDICATOR
3	KL.15	IGNITION FEED
4	ECL	ENGINE COOLANT LEVEL
5	MPR	MAIN POWER RELAY
6	KL.31	GROUND
7	KL.31	GROUND
8	DDS	DRIVELINE DISENGAGE SWITCH
9	FPC	FUEL PUMP CONTROL
10	TCSS	TORQUE CURVE SELECT SWITCH
11	TACH	TACHOMETER CONTROL
12	CAN1+	DRIVETRAIN J1939 DATALINK +
13	CAV1-	DRIVETRAIN J1939 DATALINK -
14	RAS	RESUME/ACCELERATE
15	CAN1-SHLD	DRIVETRAIN 1939 DATALINK SHLD
16		NOT POPULATED
17	VSS_CAL	VEHICLE SPEED SENSOR CALIBRATION
18	VRE	VEHICLE RETARDER ENABLE
19	RPRE	REMOTE PRESET PTO ENABLE
20	RVAR	REMOTE VARIABLE PTO ENABLE
21	SCS	SET/COAST
22	ESHTR	ELECTRONIC SHUTTER RELAY
23	ECI	ENGINE CRANK INHIBIT
24	BAP	BAROMETRIC AIR PRESSURE

CONNECTOR X4 REFERENCE
(6021)

ECM PIN#	TERM	DESCRIPTION
1	KL.87	BATTERY POWER
2	KL.87	BATTERY POWER
3		NOT POPULATED
4	VBREF	SENSOR REFERENCE VOLTAGE
5		NOT POPULATED
6	LS1_SPARE2	LOW SPEED INPUT 2
7		NOT POPULATED
8		NOT POPULATED
9	VSS-	VEHICLE SPEED SENSOR-
10	VSS+	VEHICLE SPEED SENSOR+
11		NOT POPULATED
12	IVS	IDLE VALIDATION SWITCH
13		NOT POPULATED
14	EFAN	ELECTRIC FAN CONTROL
15	LSO_SPARE4	LOW SIDE OUTPUT 4
16		NOT POPULATED
17		NOT POPULATED
18	APS	ACCELERATION POSITION SENSOR
19		NOT POPULATED
20	ATA+	J1708 DATALINK +
21	ATA-	J1708 DATALINK -
22		NOT POPULATED
23	GSC	GENSET SPEED CONTROL
24	KL.318	SENSOR REFERENCE GROUND

CHK	DATE	CHANGE	REV	REFERENCE	DRAWN	NAME
2	15SEP05	CONVERSION FROM SABER TO U8	C	59756E	UOODLCK	42/43/44/85/8600 & 73/74/7500 CIRC DIAGRAMS
					RELEASE NO. 52778H	DATE 16JAN01 · PART NO. AE08-52365 · SHEET 12

Figure 12 International V8 and I6 ECM Controller Connectors Pin Number Identification

12 VOLT POWER DISTRIBUTION CIRCUIT DIAGRAMS (CHAPTER 2)

3.1. ACCESSORY, P. 1

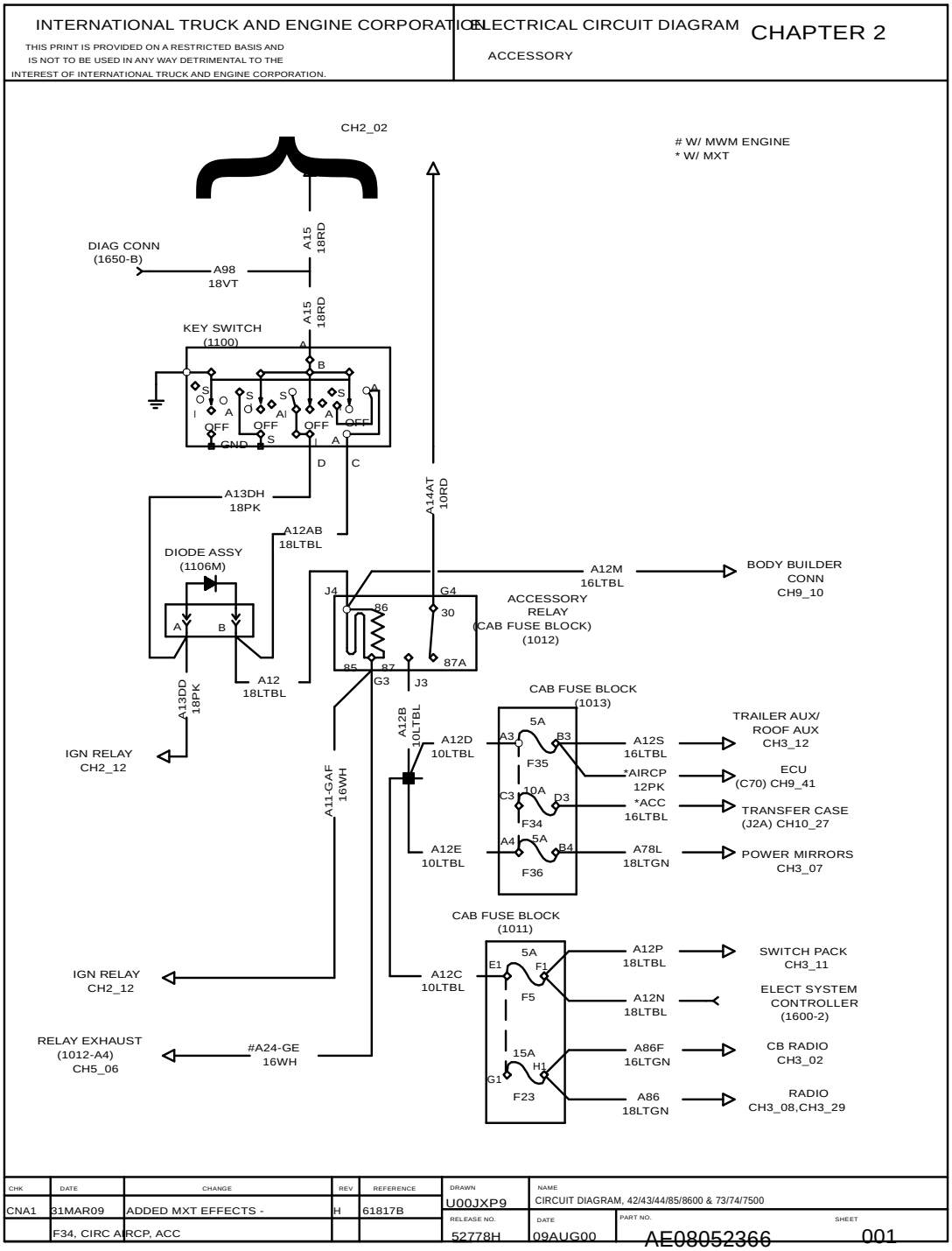

Figure 13 Accessory

3.2. BATTERY FEEDS, CAB, P. 2

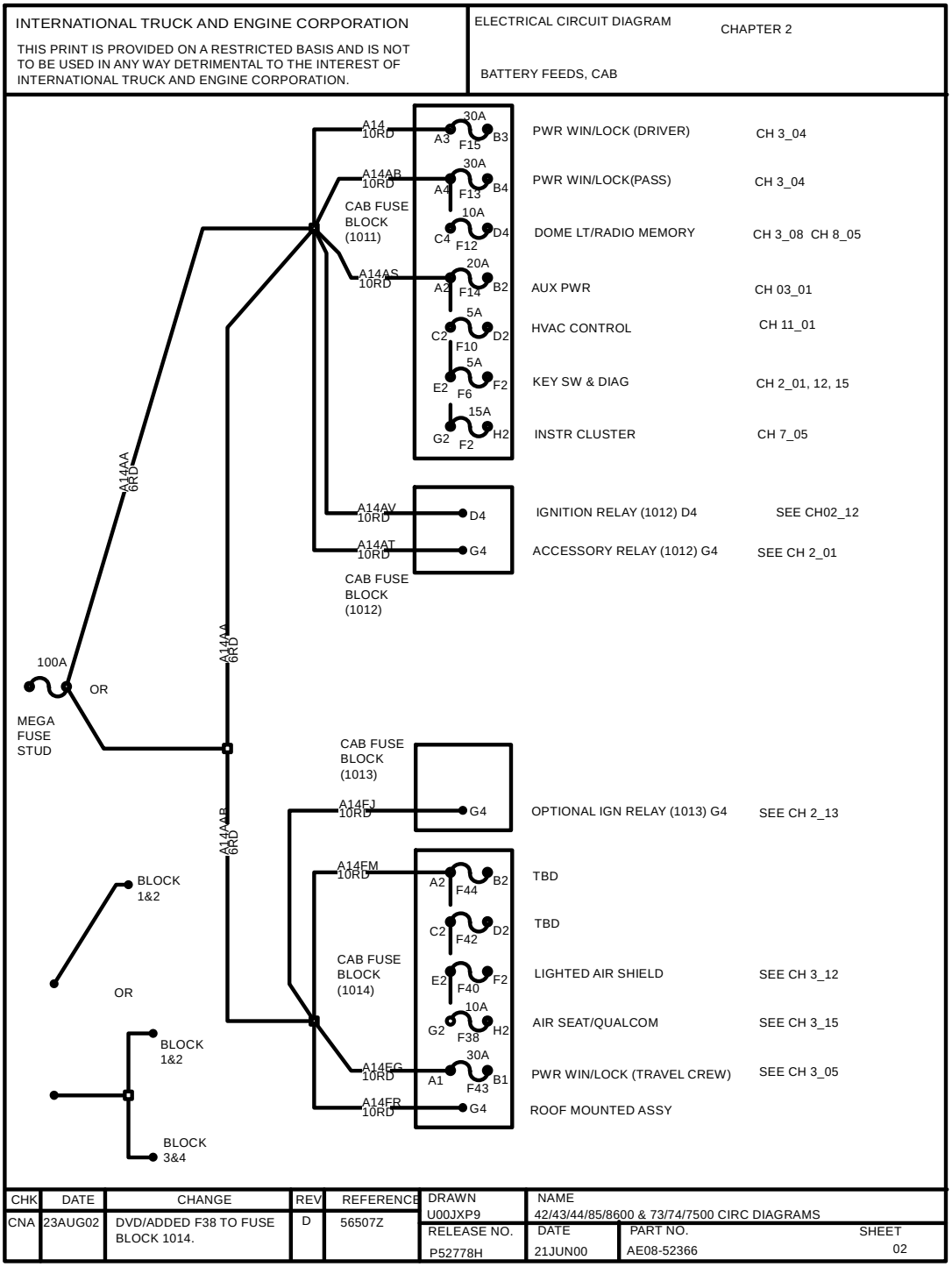

Figure 14 Battery Feeds, Cab

3.3. BATTERY, P. 3

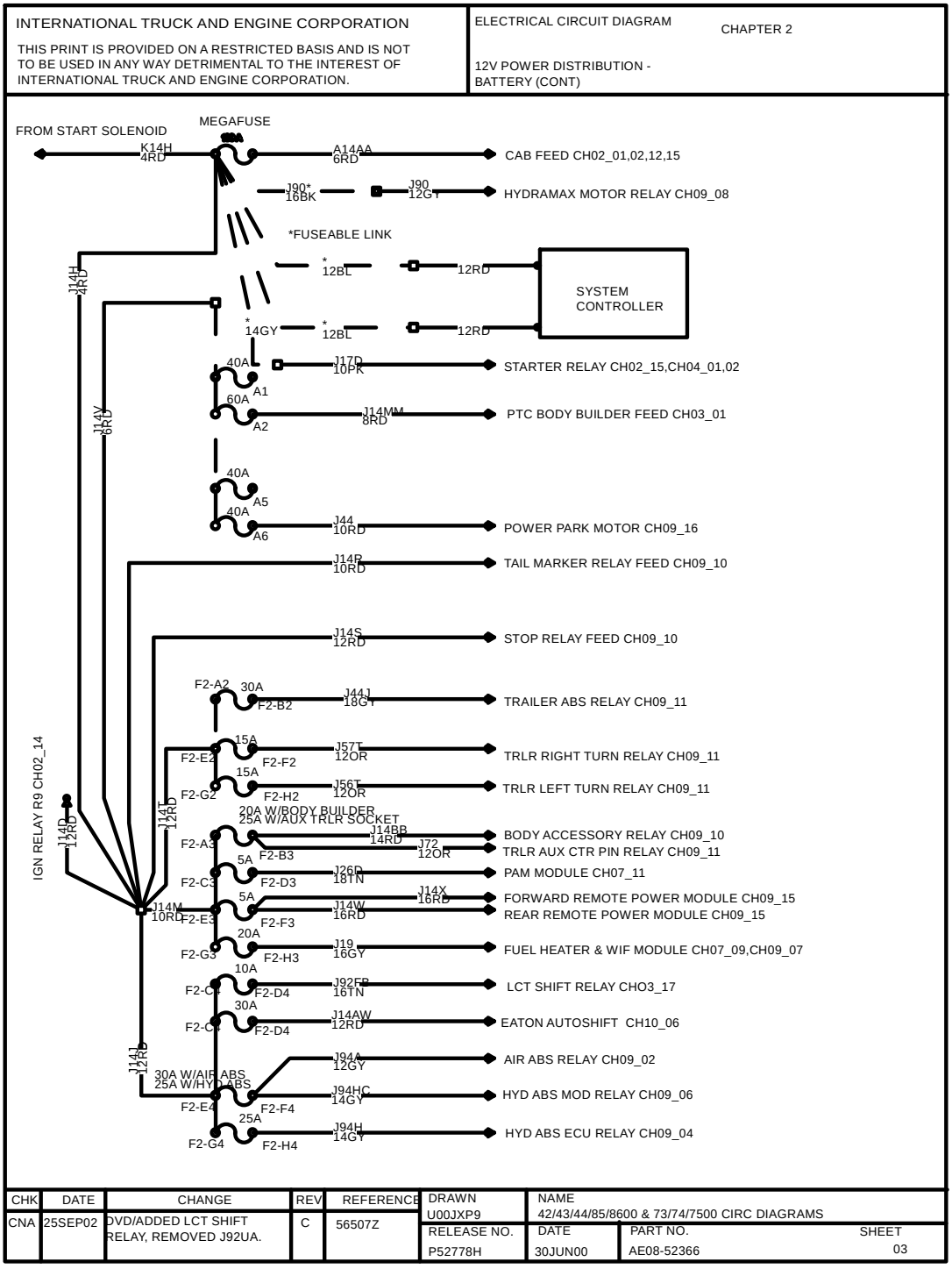

Figure 15 Battery

3.4. 1708 DATA LINK CHASSIS, P. 4

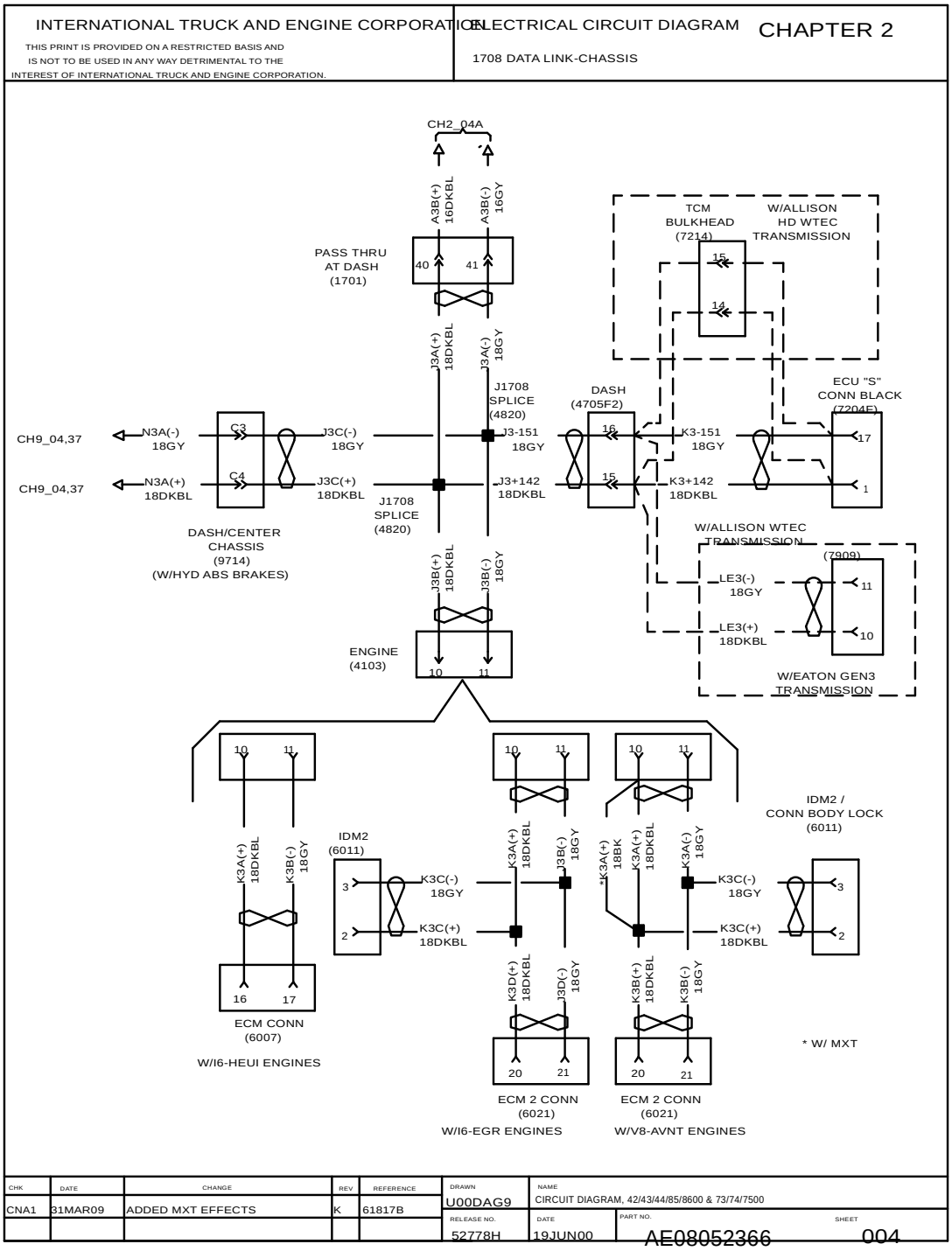

Figure 16 1708 Data Link Chassis

3.5. SWITCH DATA LINK, P. 5

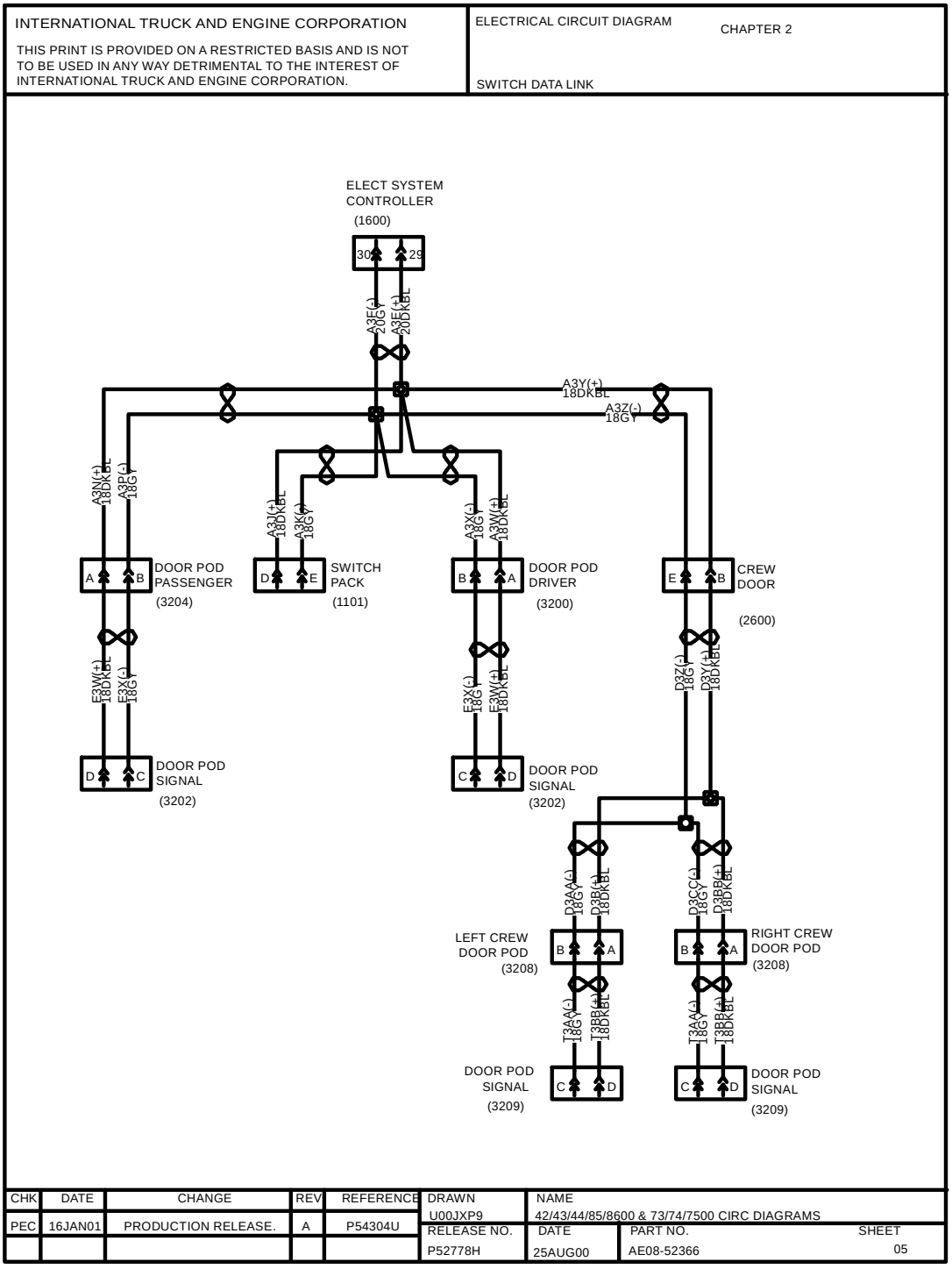

Figure 17 Switch Data Link

3.6. DRIVETRAIN 1939 DATA LINK (CAB), P. 6

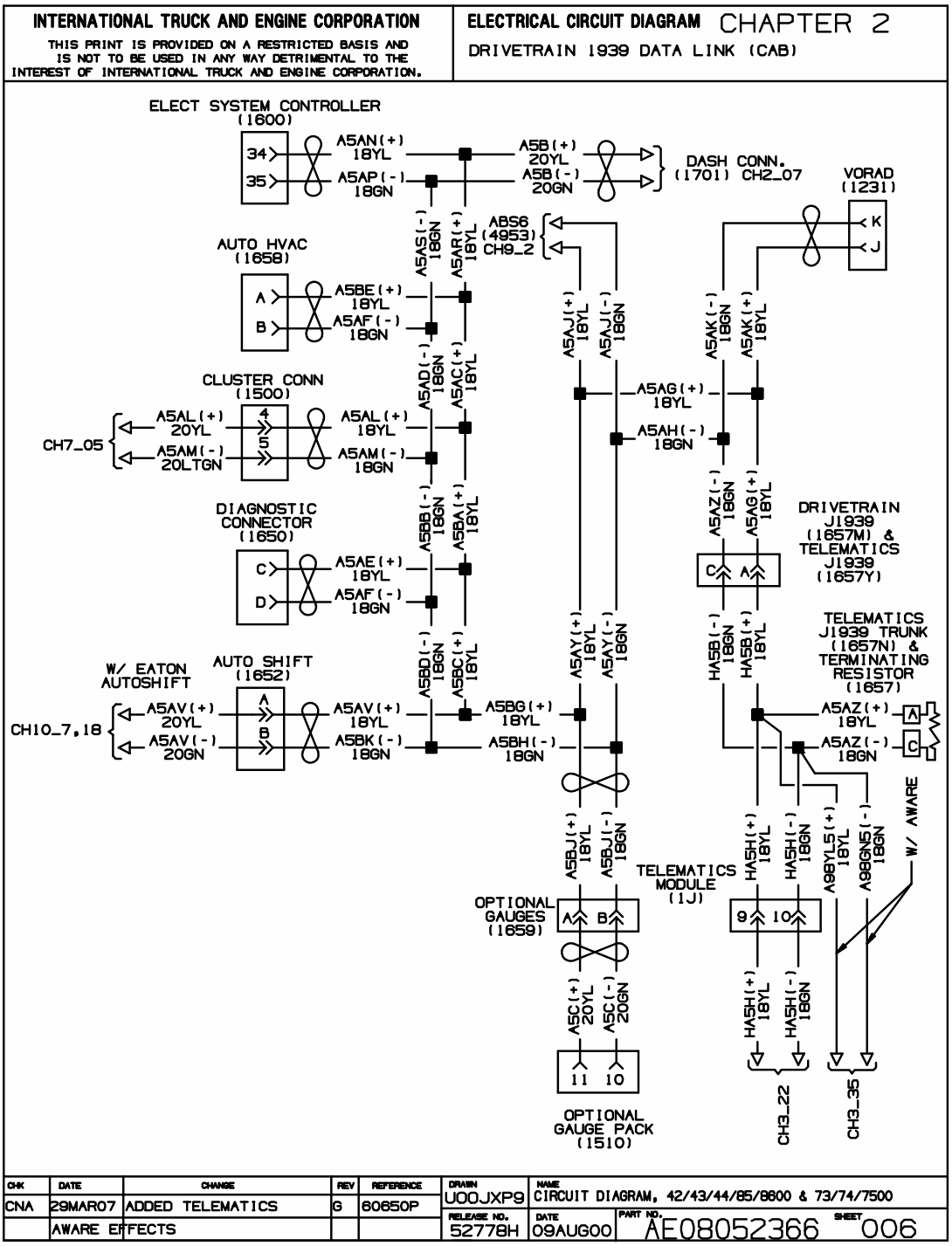

Figure 18 Drivetrain 1939 Data Link (Cab)

3.7. DRIVETRAIN 1939 DATA LINK (CHASSIS), P. 7

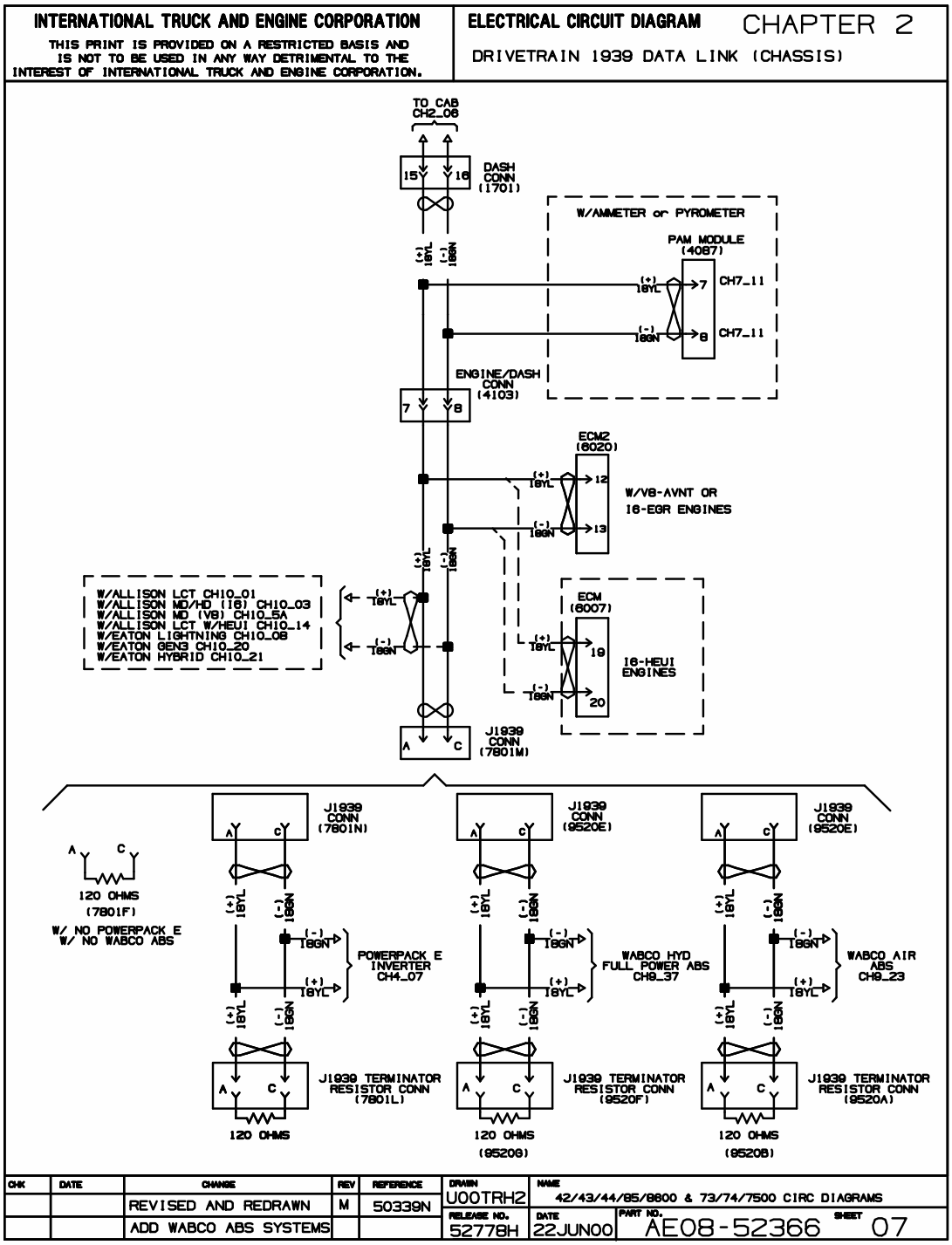

Figure 19 Drivetrain 1939 Data Link (Chassis)

3.8. GROUNDS CHASSIS, P. 8

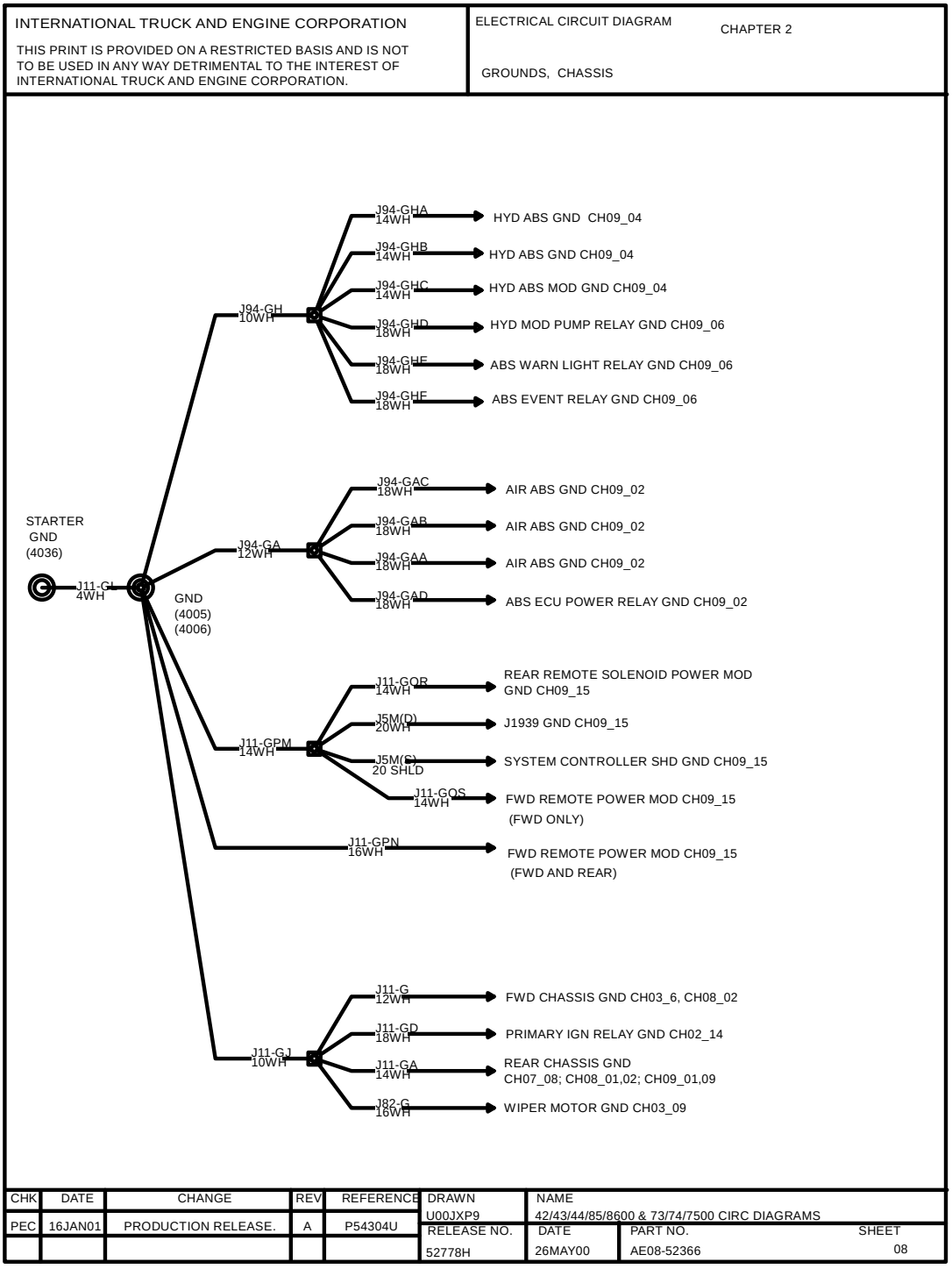

Figure 20 Grounds Chassis

3.9. GROUNDS CHASSIS, P. 9

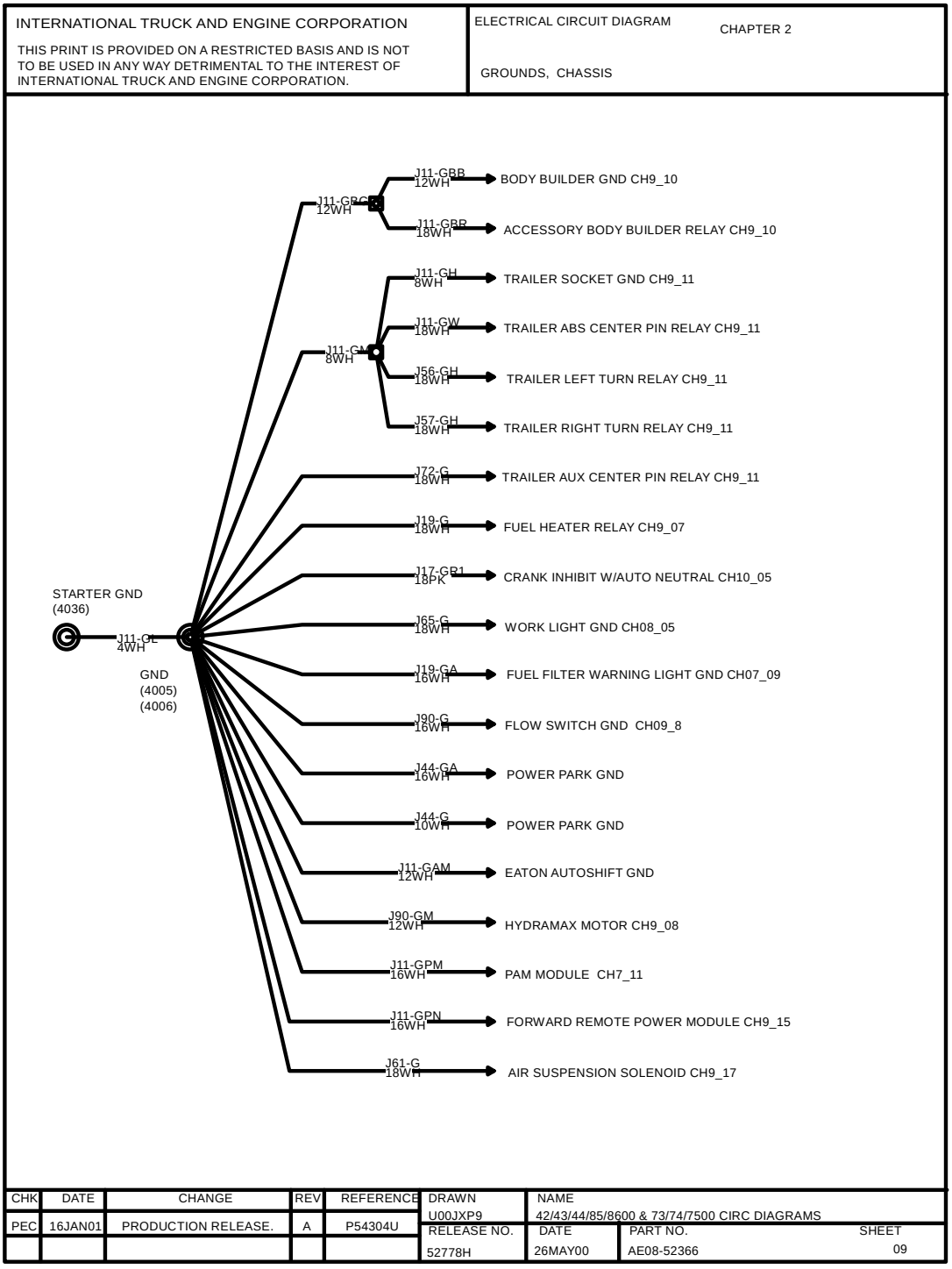

Figure 21 Grounds Chassis (Cont.)

3.10. GROUNDS IP, P. 10

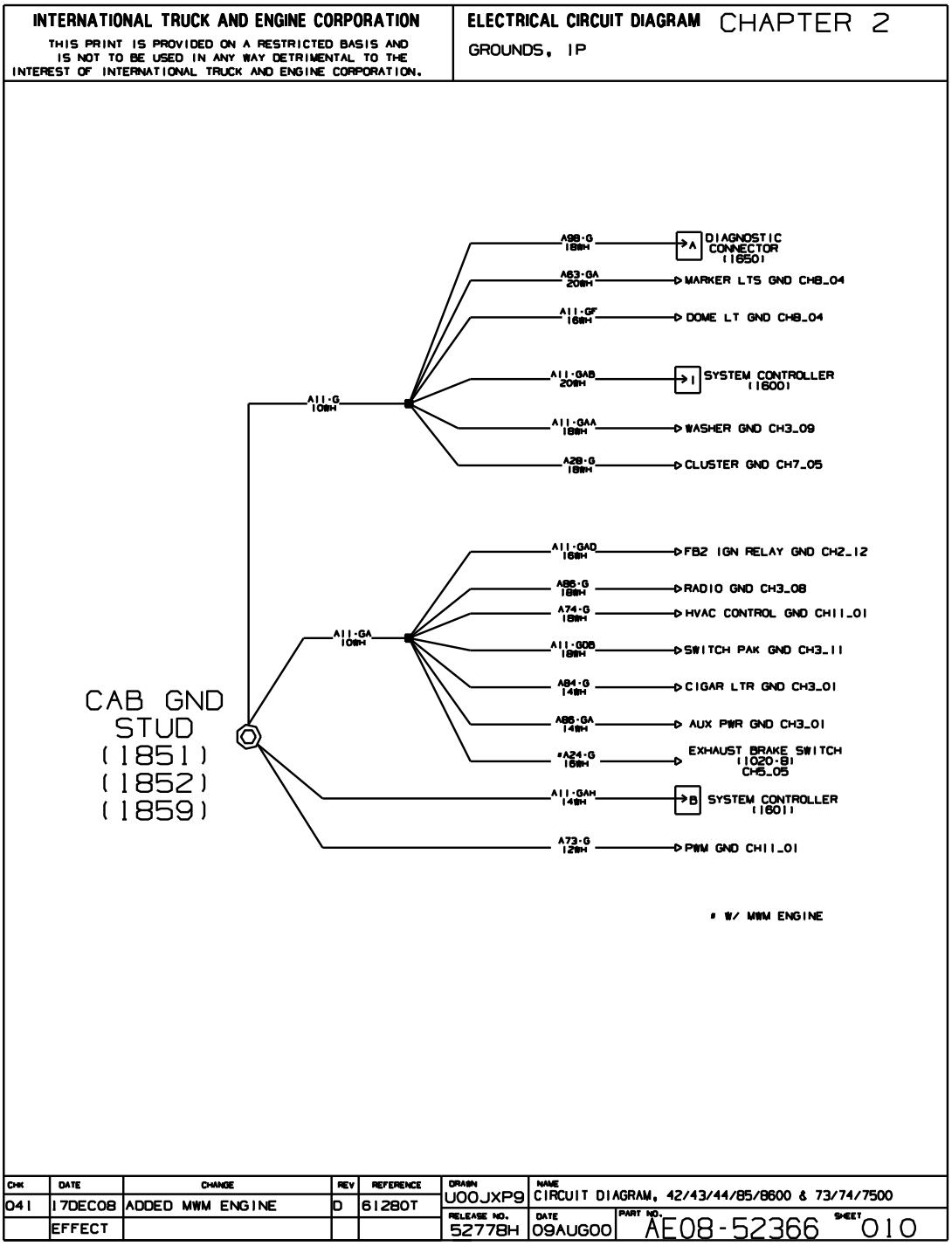

Figure 22 Grounds IP

3.11. GROUNDS IP, P. 11

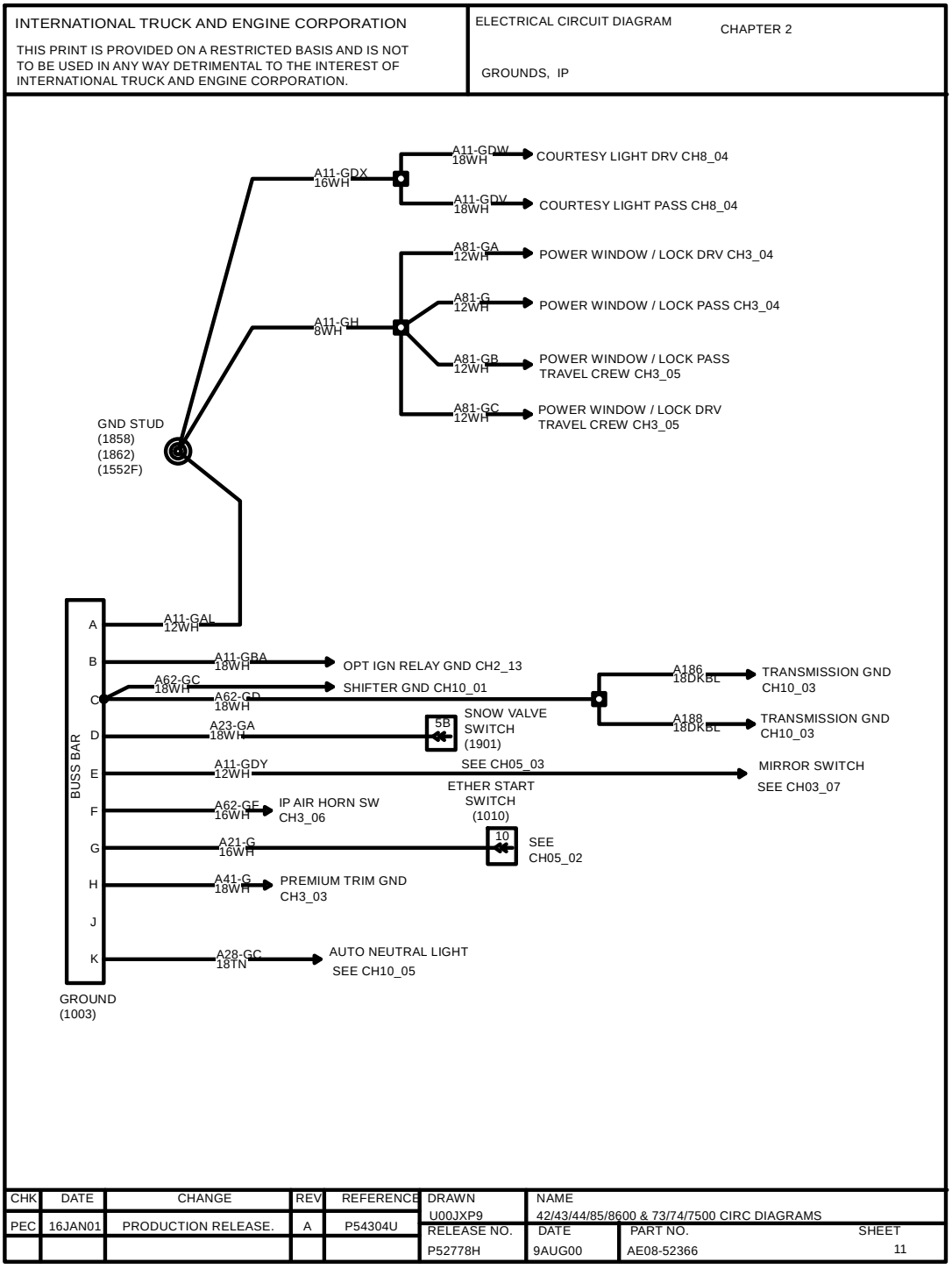

Figure 23 Grounds IP

3.12. IGNITION CAB, P. 12

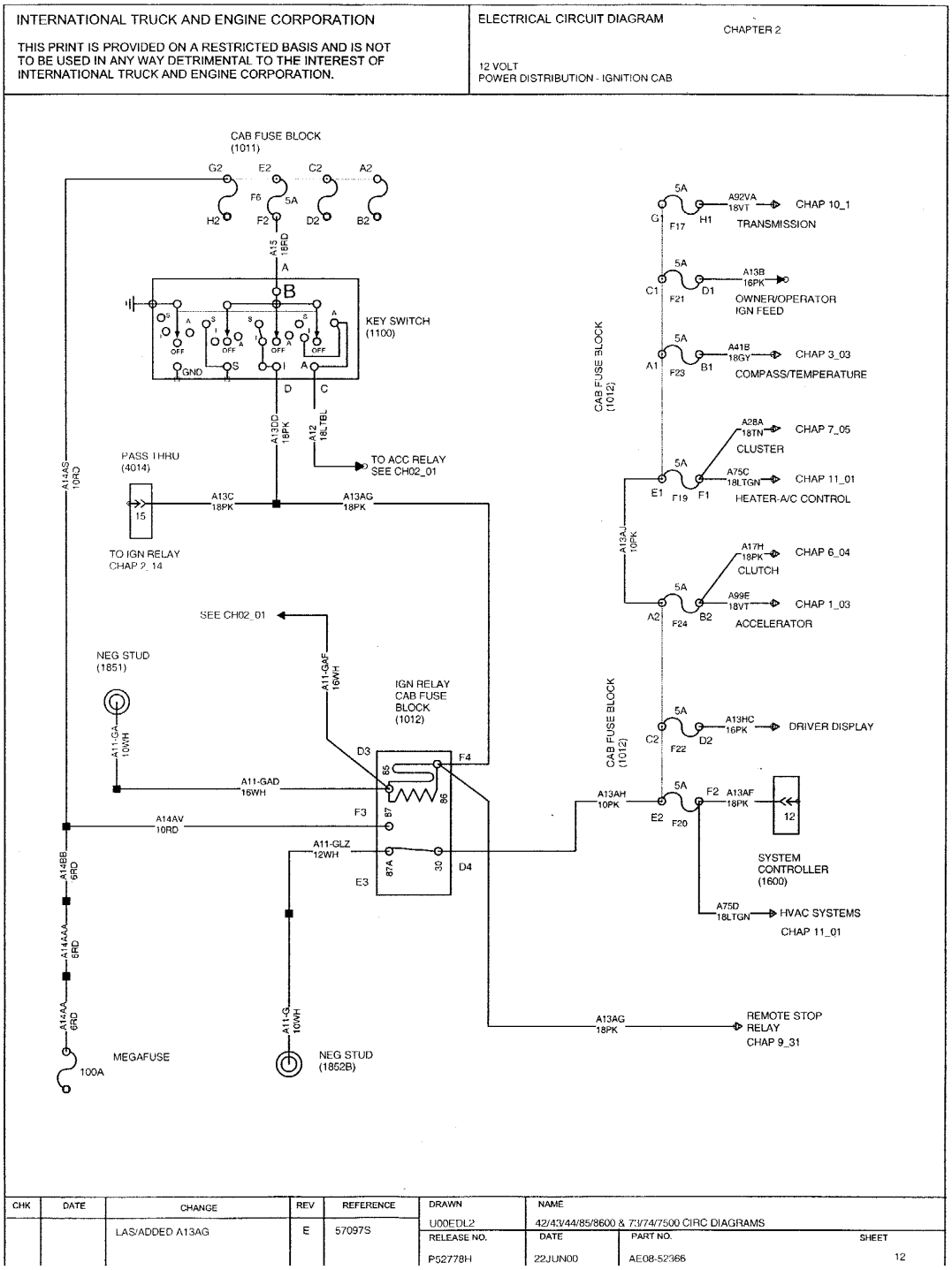

Figure 24 Ignition Cab

3.13. IGNITION CAB, P. 13

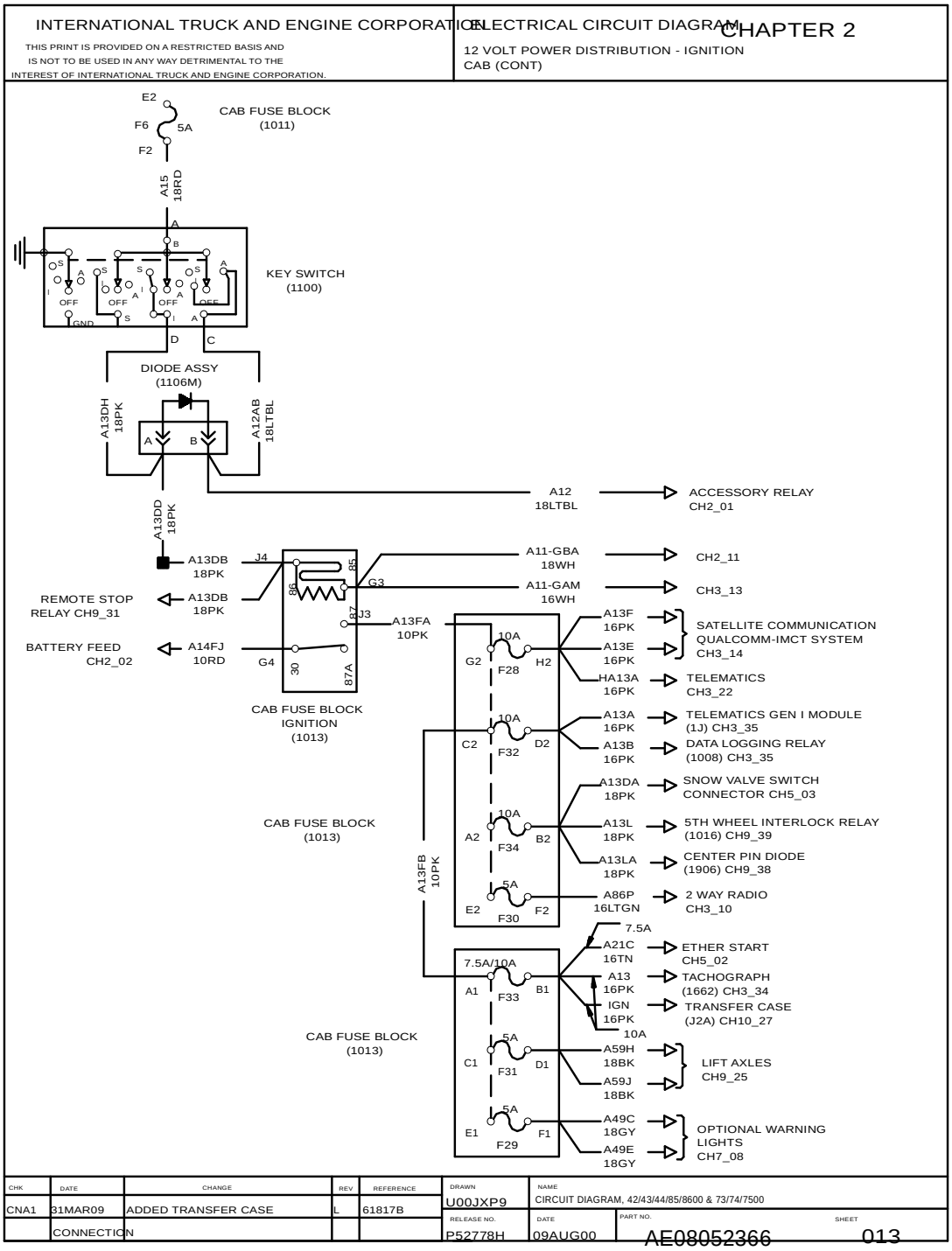

Figure 25 Ignition Cab (Cont.)

3.14. IGNITION FEEDS, CHASSIS, P. 14

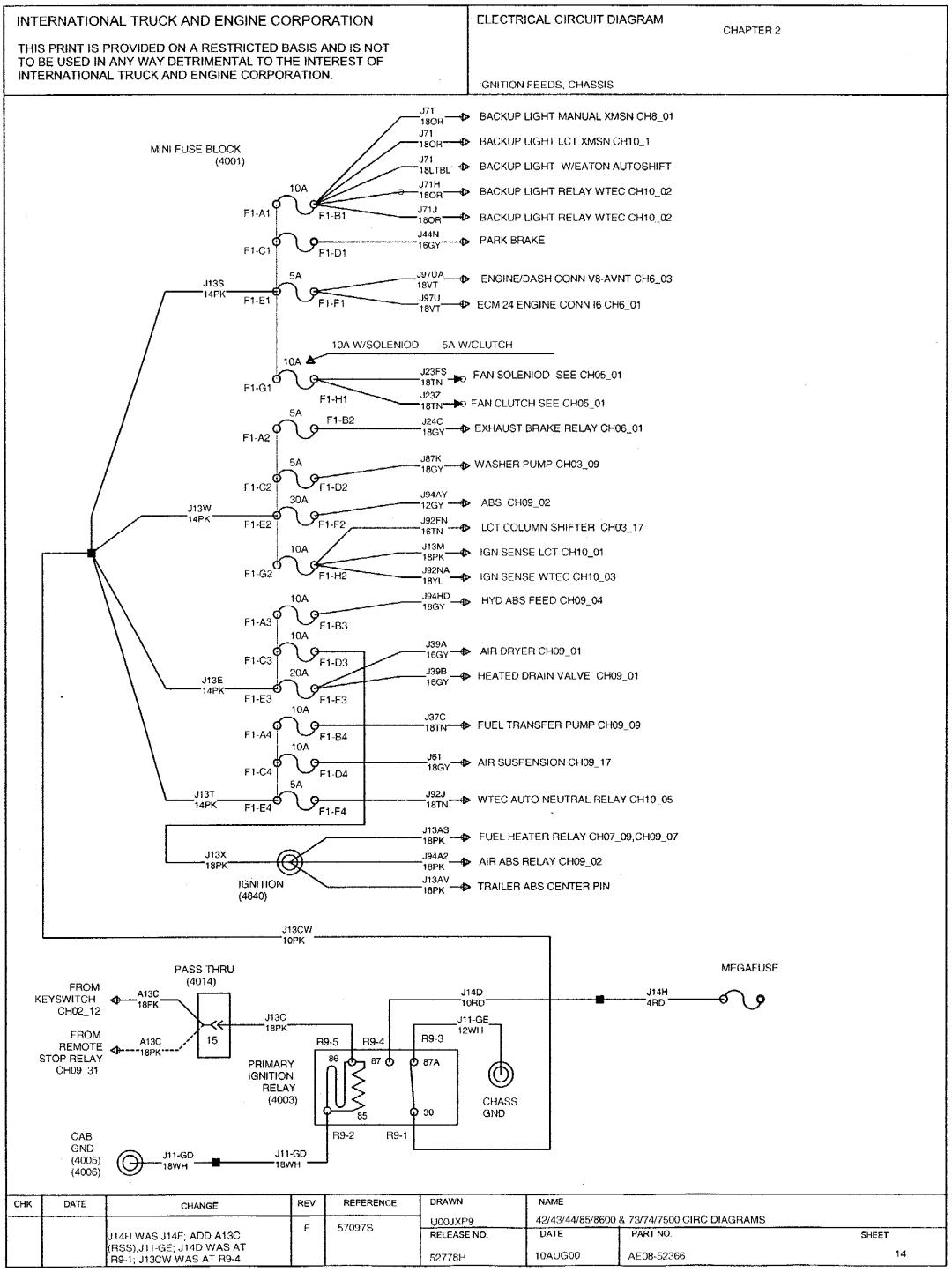

Figure 26 Ignition Feeds, Chassis

3.15. START, P. 15

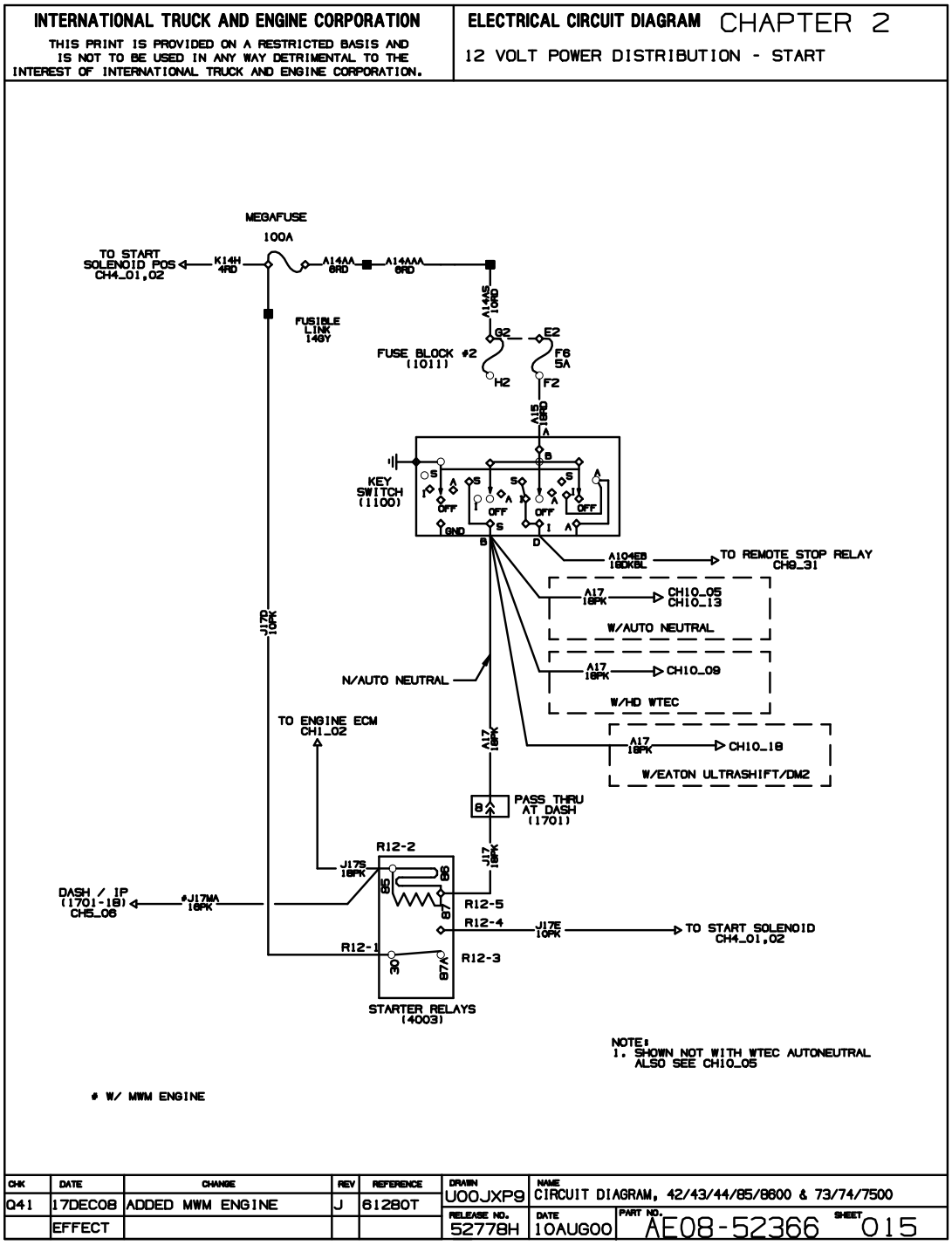

Figure 27 Start

CAB ACCESSORIES (CHAPTER 3)

4.1. CIGAR LIGHTER AND POWER FEEDS, P. 1

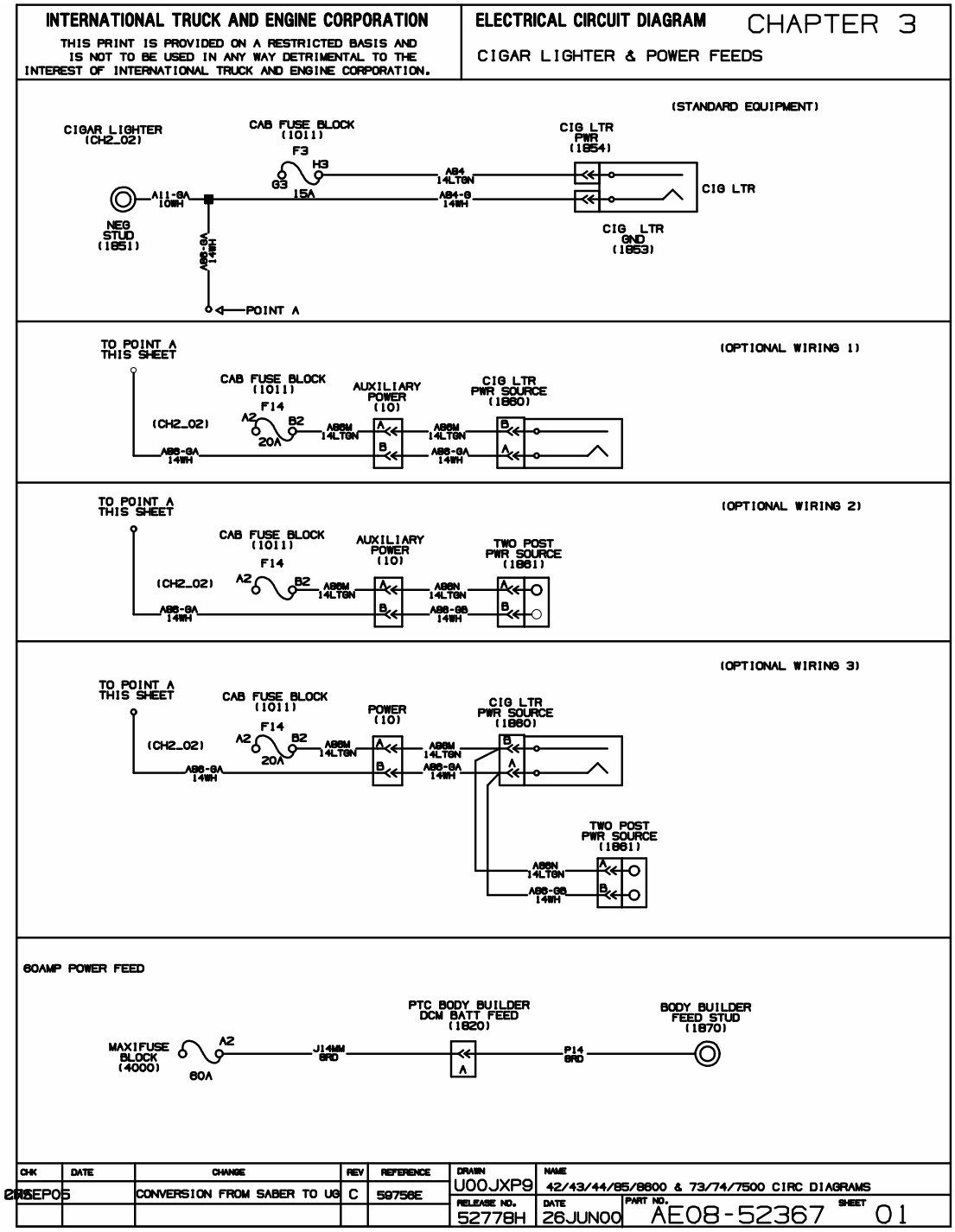

Figure 28 Cigar Lighter and Power Feeds

4.2. CB POWER, P. 2

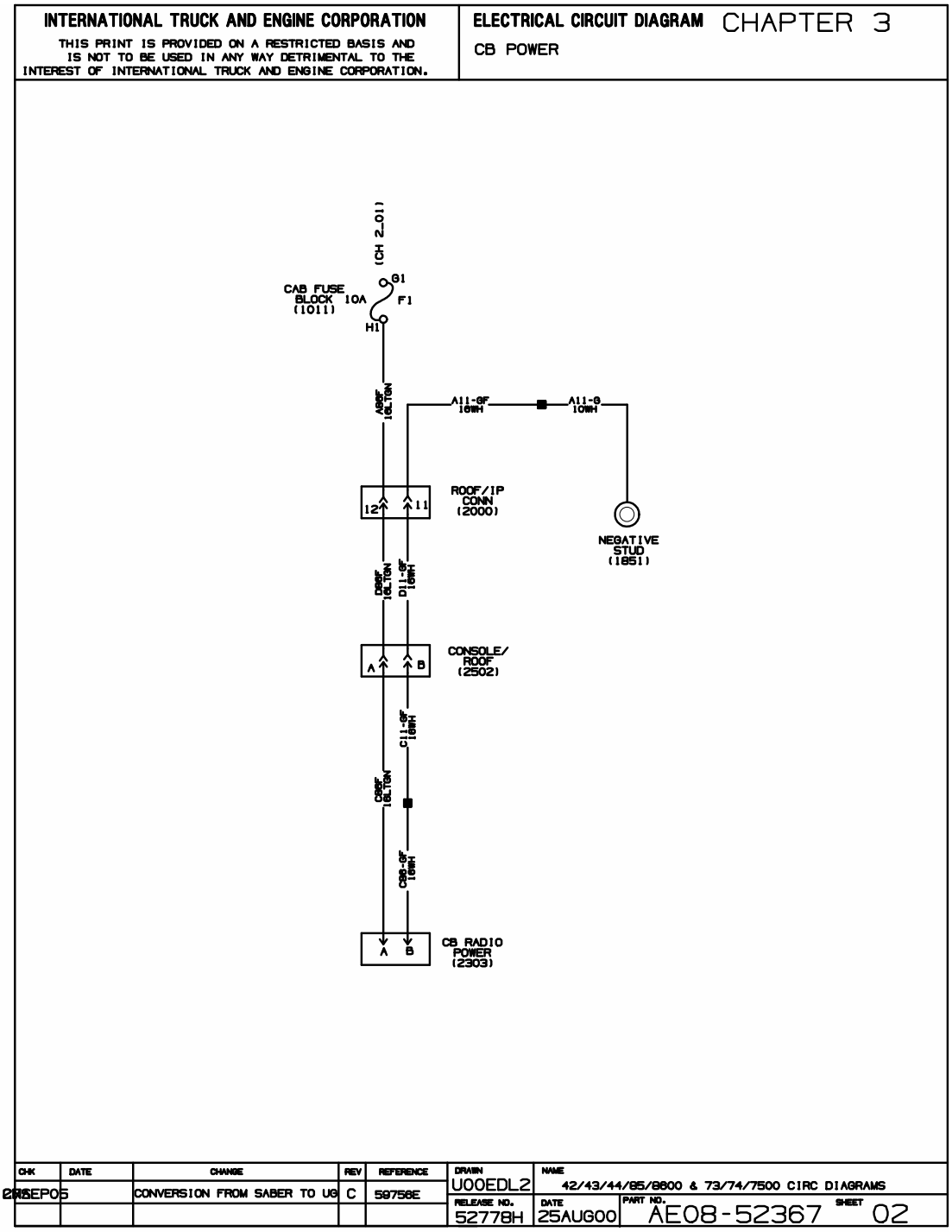

Figure 29 CB Power

4.3. COMPASS AND TEMPERATURE DISPLAY, P. 3

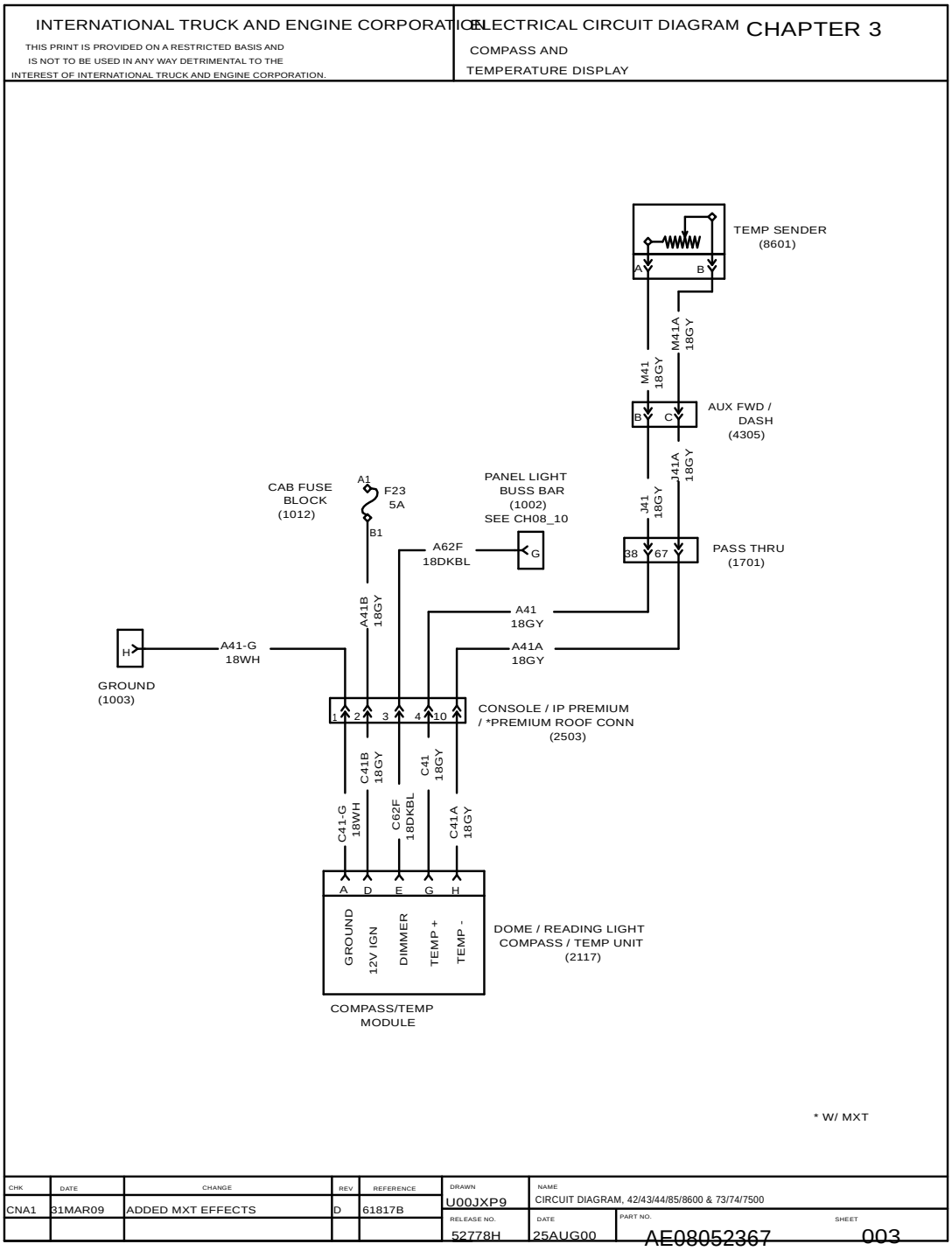

Figure 30 Compass and Temperature Display

4.4. FRONT DOORS WINDOWS AND LOCKS (POWER), P. 4

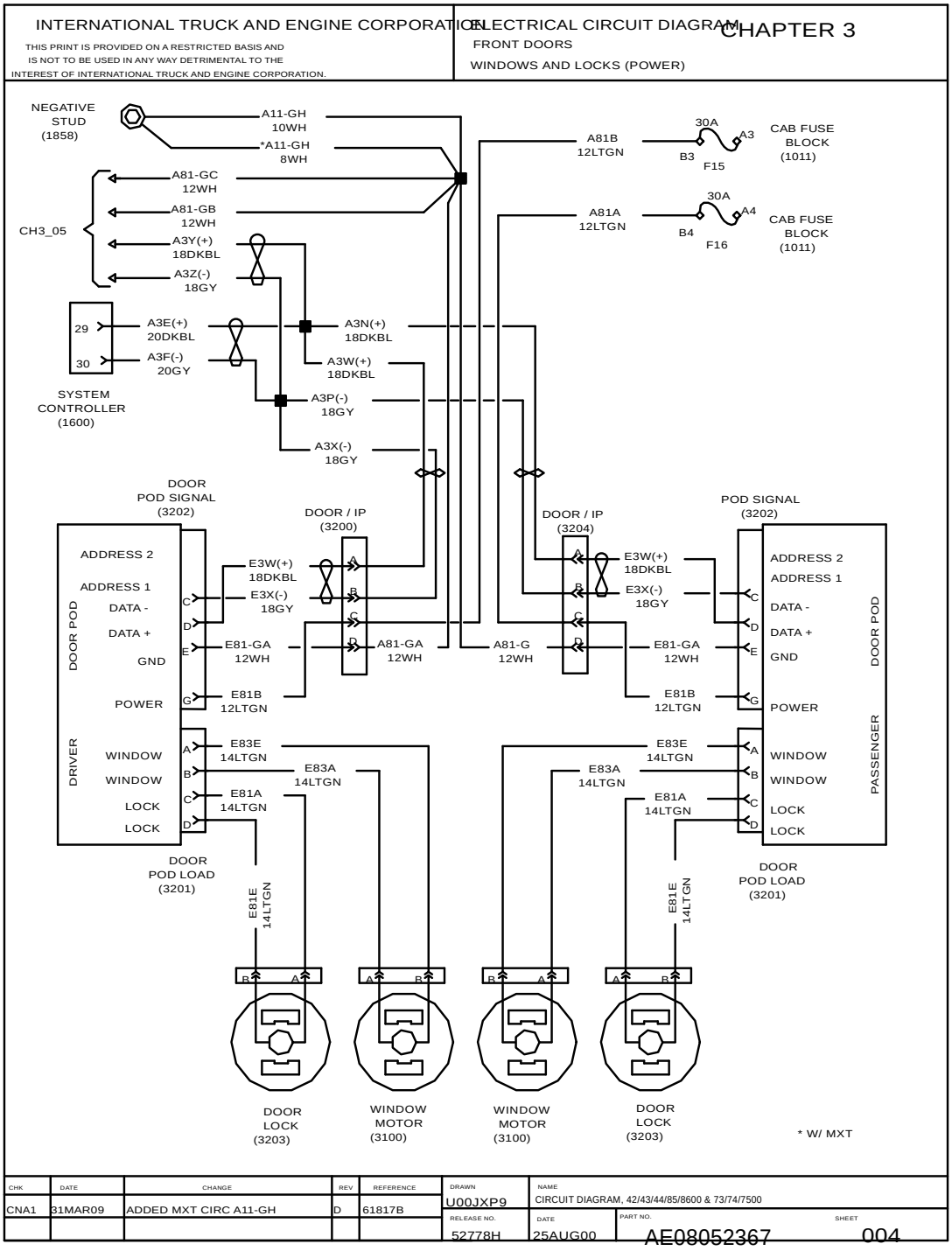

Figure 31 Front Doors Windows and Locks (Power)

4.5. CREW DOORS WINDOWS AND LOCKS (POWER), P. 5

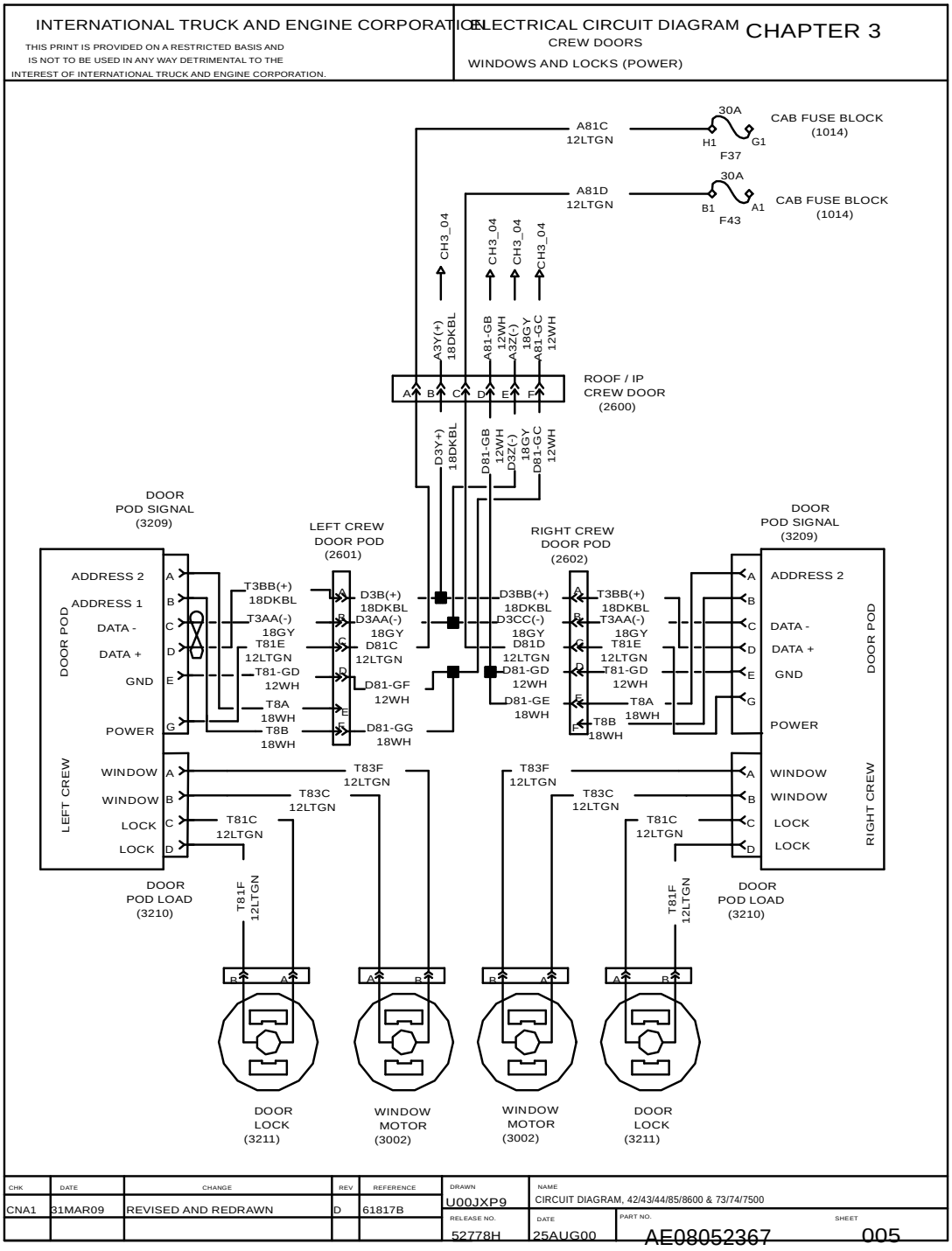

Figure 32 Crew Doors Windows and Locks (Power)

4.6. HORN, DUAL ELECTRIC, P. 6

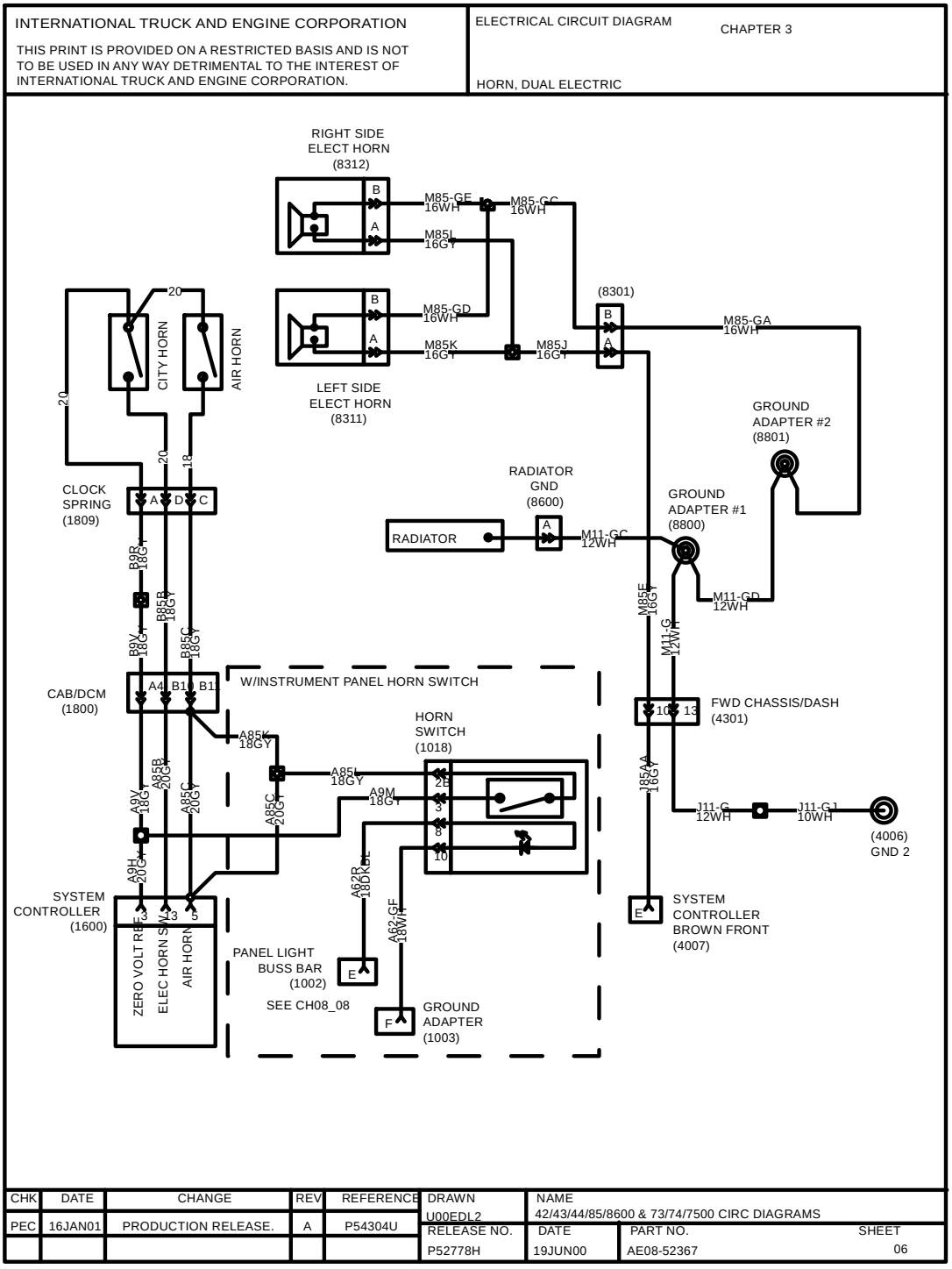

Figure 33 Horn, Dual Electric

4.7. MIRRORS (HEATED, LIGHTED AND POWER), P. 7

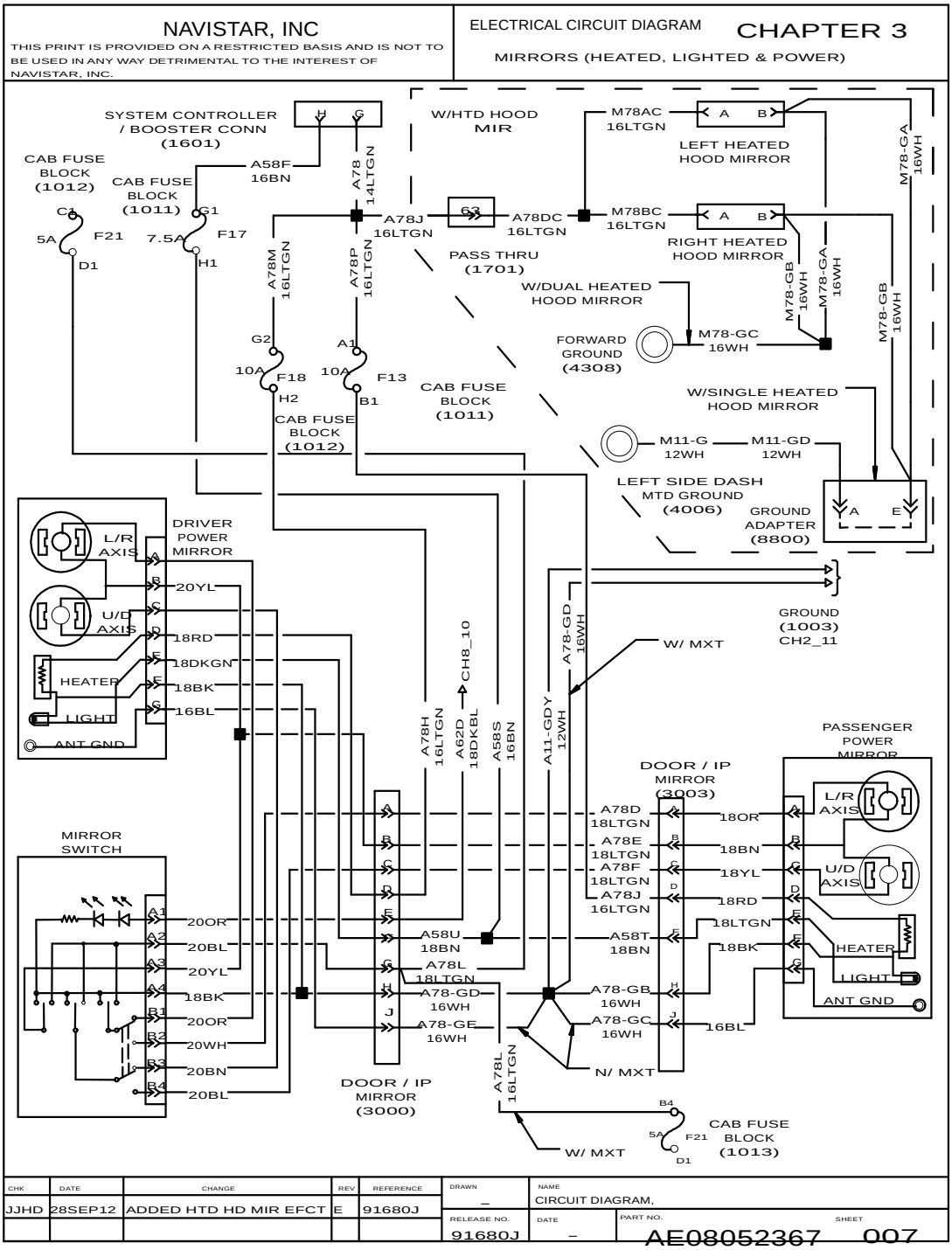

Figure 34 Mirrors (Heated, Lighted and Power)

4.8. RADIO (ENTERTAINMENT), SPEAKERS, P. 8

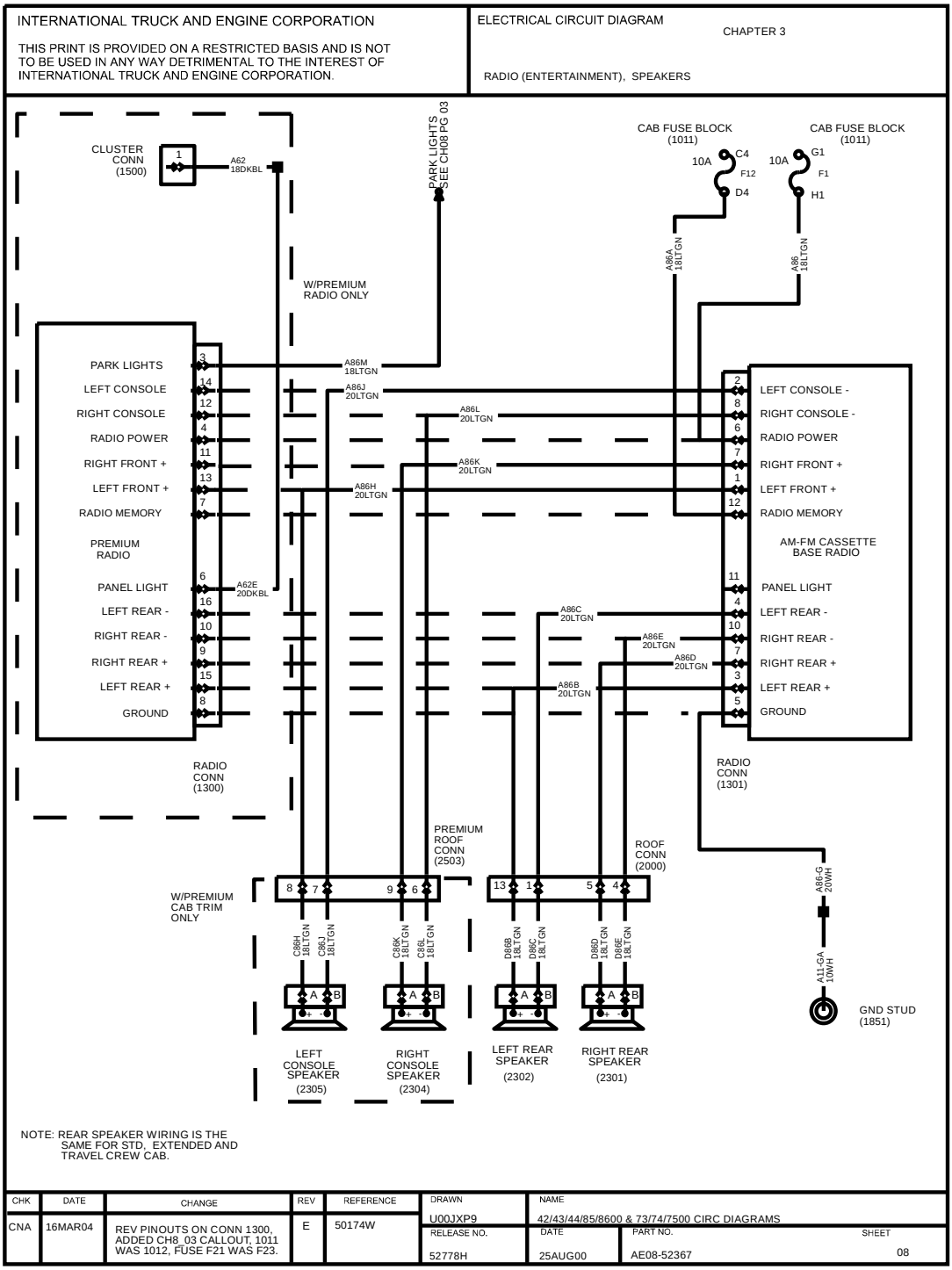

Figure 35 Radio (Entertainment), Speakers

4.9. WINDSHIELD WIPER AND WASHER PUMP, P. 9

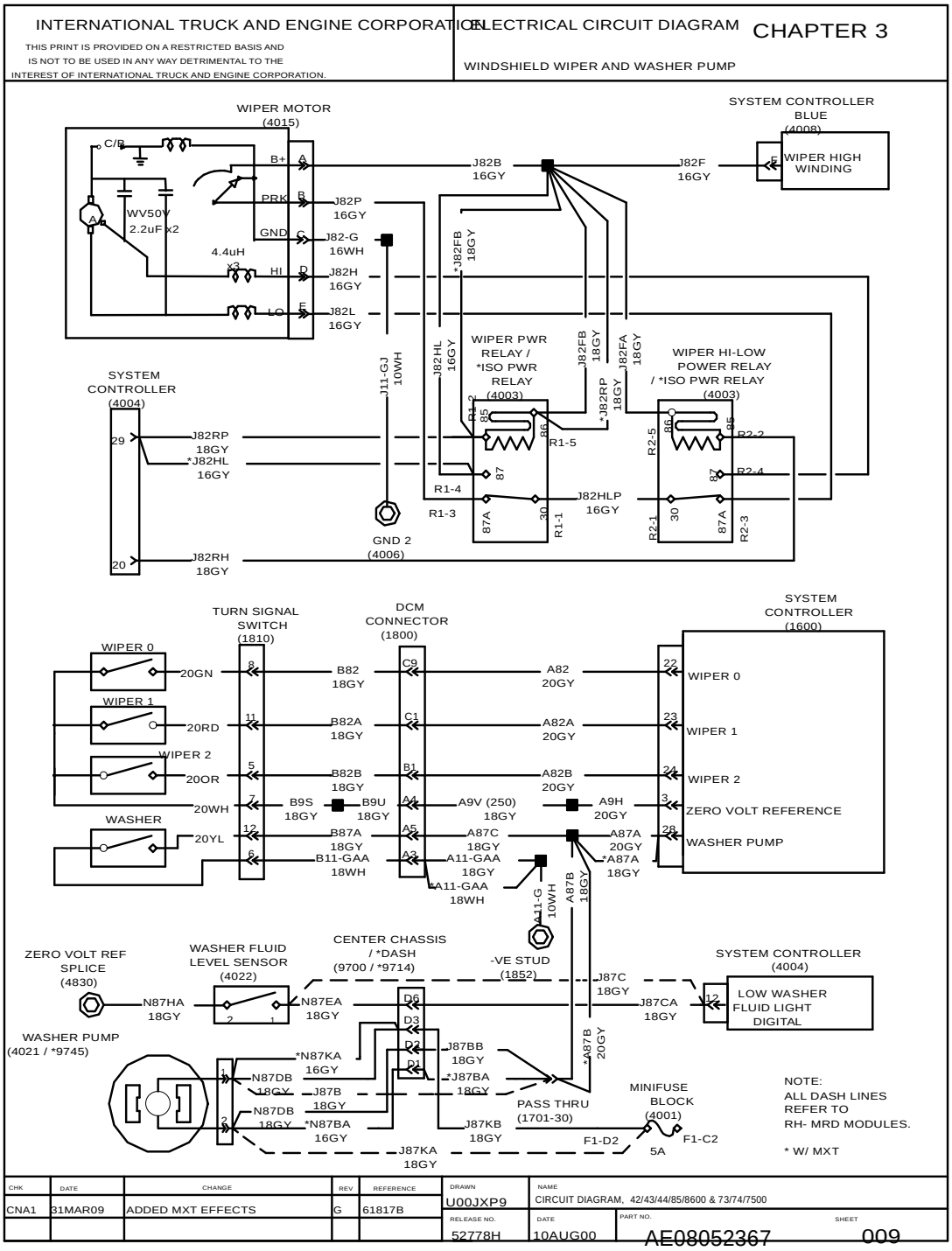

Figure 36 Windshield Wiper and Washer Pump

4.10. 2–WAY RADIO, P. 10

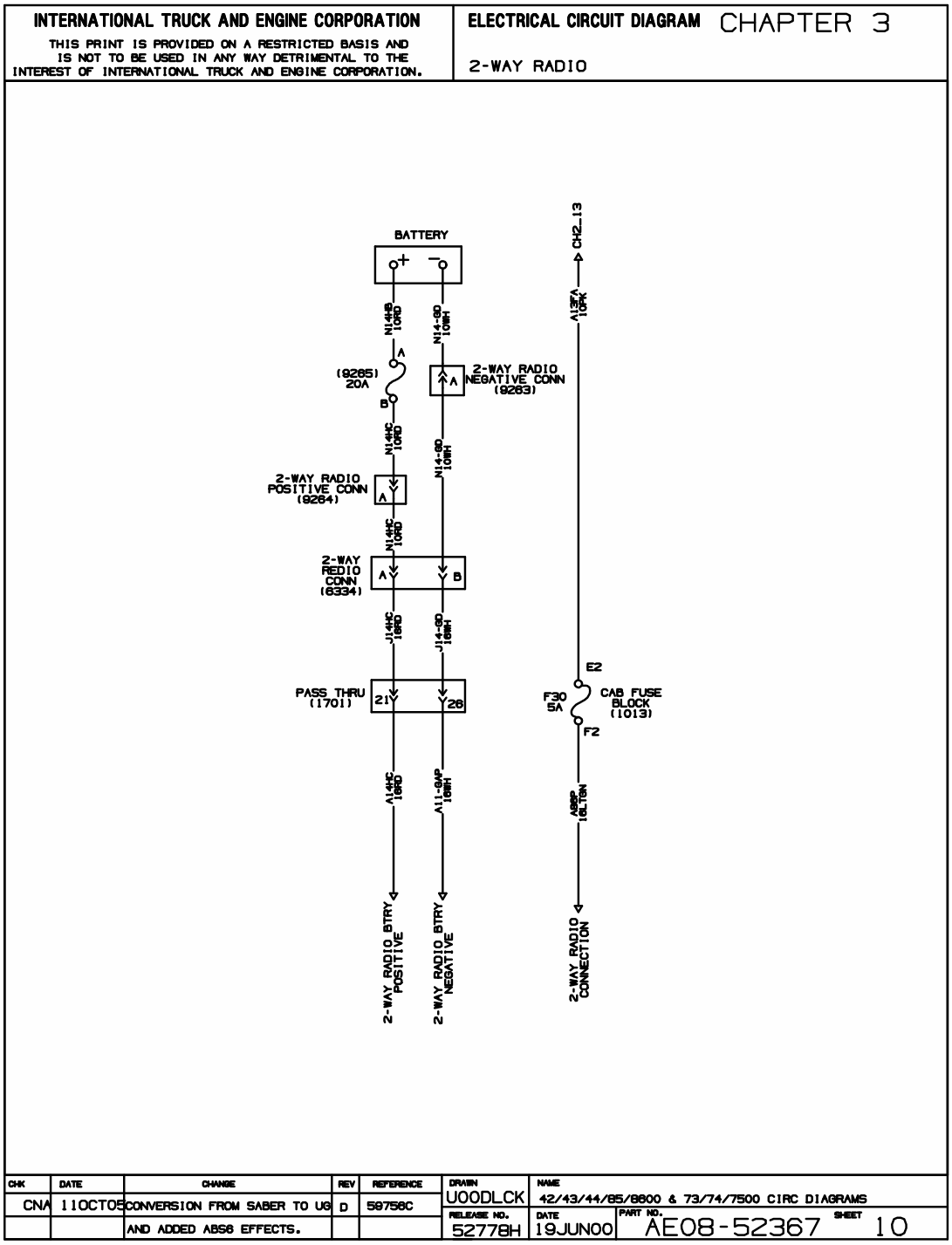

Figure 37 2–Way Radio

4.11. SWITCH PACK, OPTIONAL GAUGE PACK, P. 11

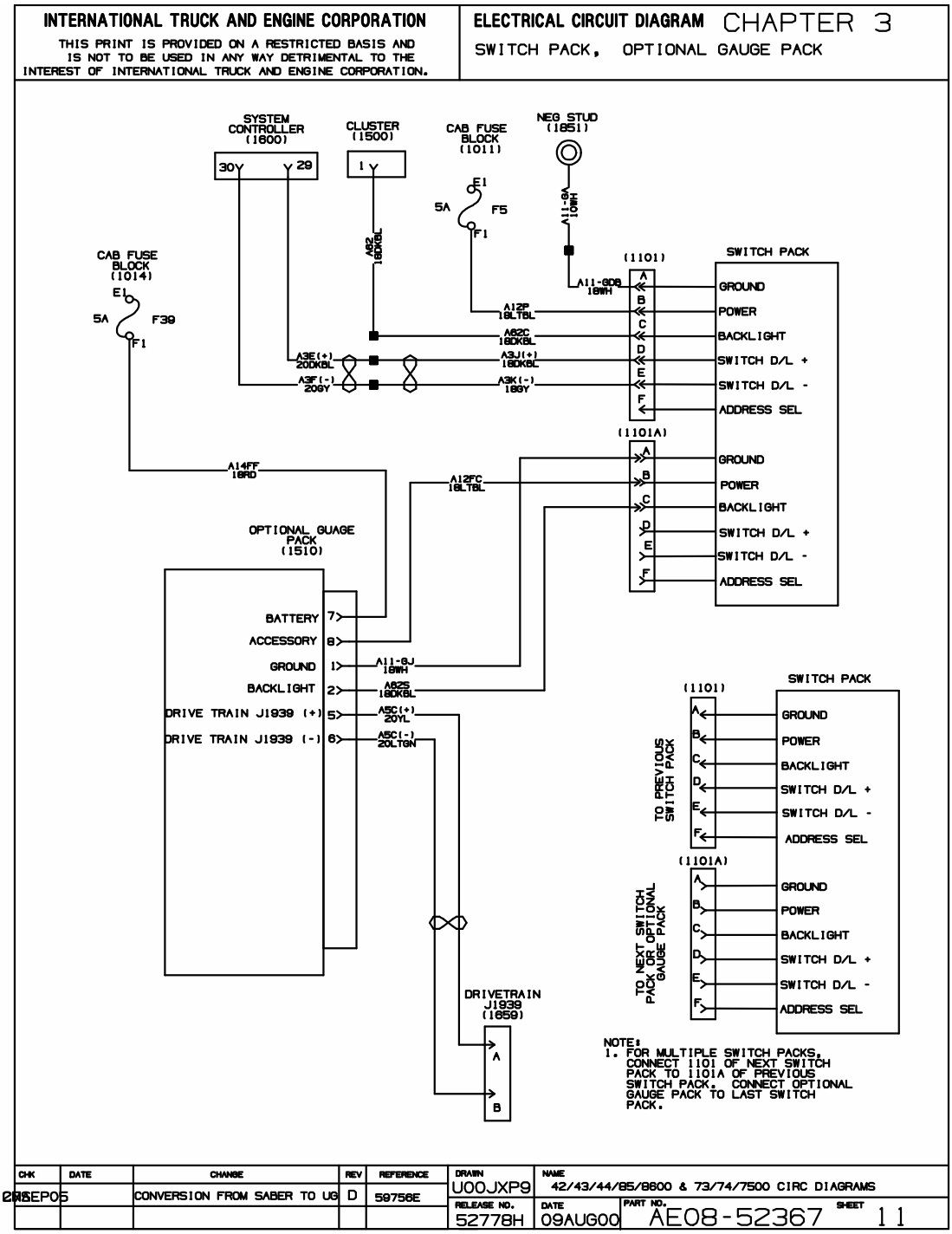

Figure 38 Switch Pack, Optional Gauge Pack

4.12. LIGHTED AIR SHIELD, P. 12

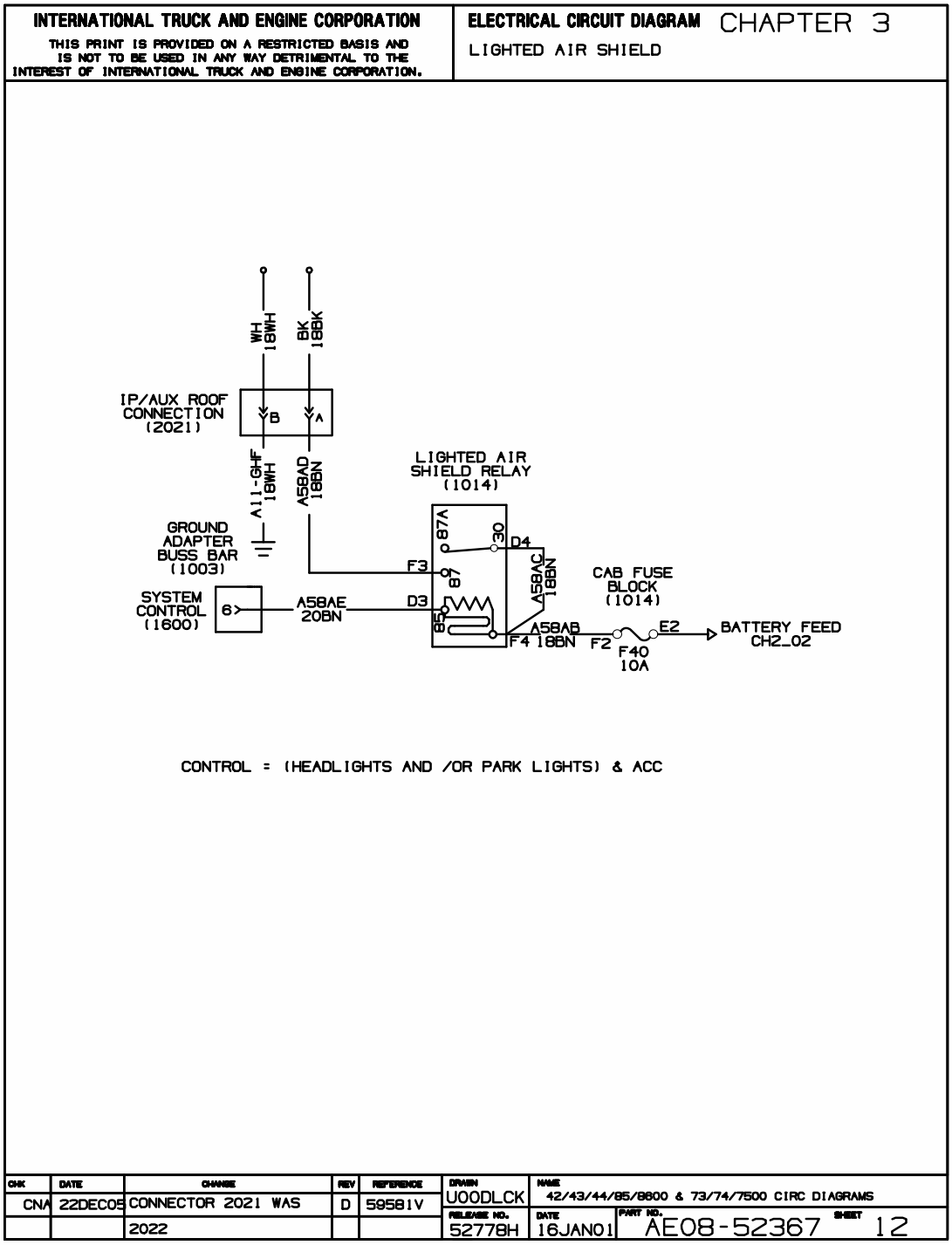

Figure 39 Lighted Air Shield

4.13. ROOF AUX. LOAD, P. 13

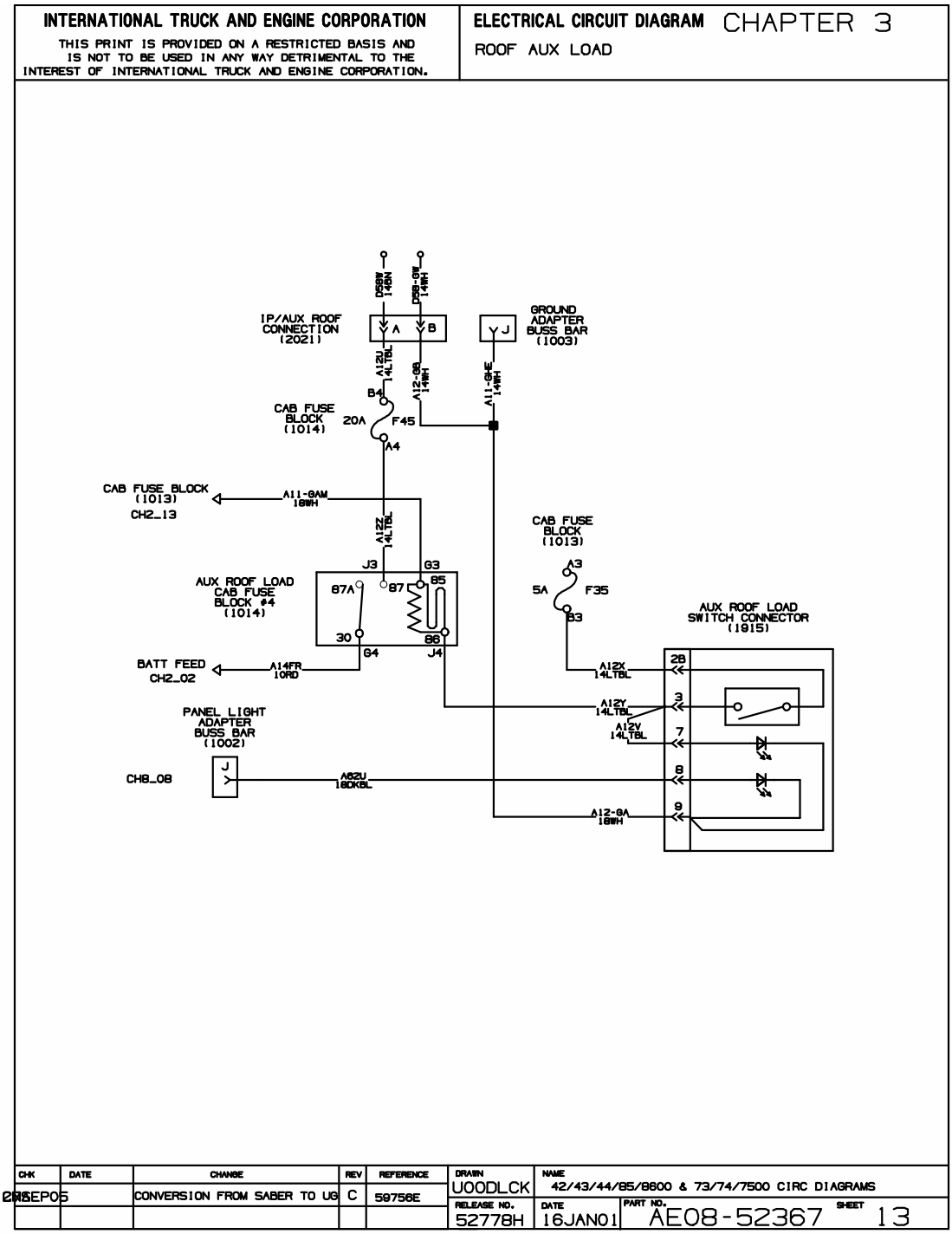

Figure 40 Roof Aux. Load

4.14. SATELLITE COMMUNICATION QUALCOMM-MCT AND IMCT SYSTEMS, P. 14

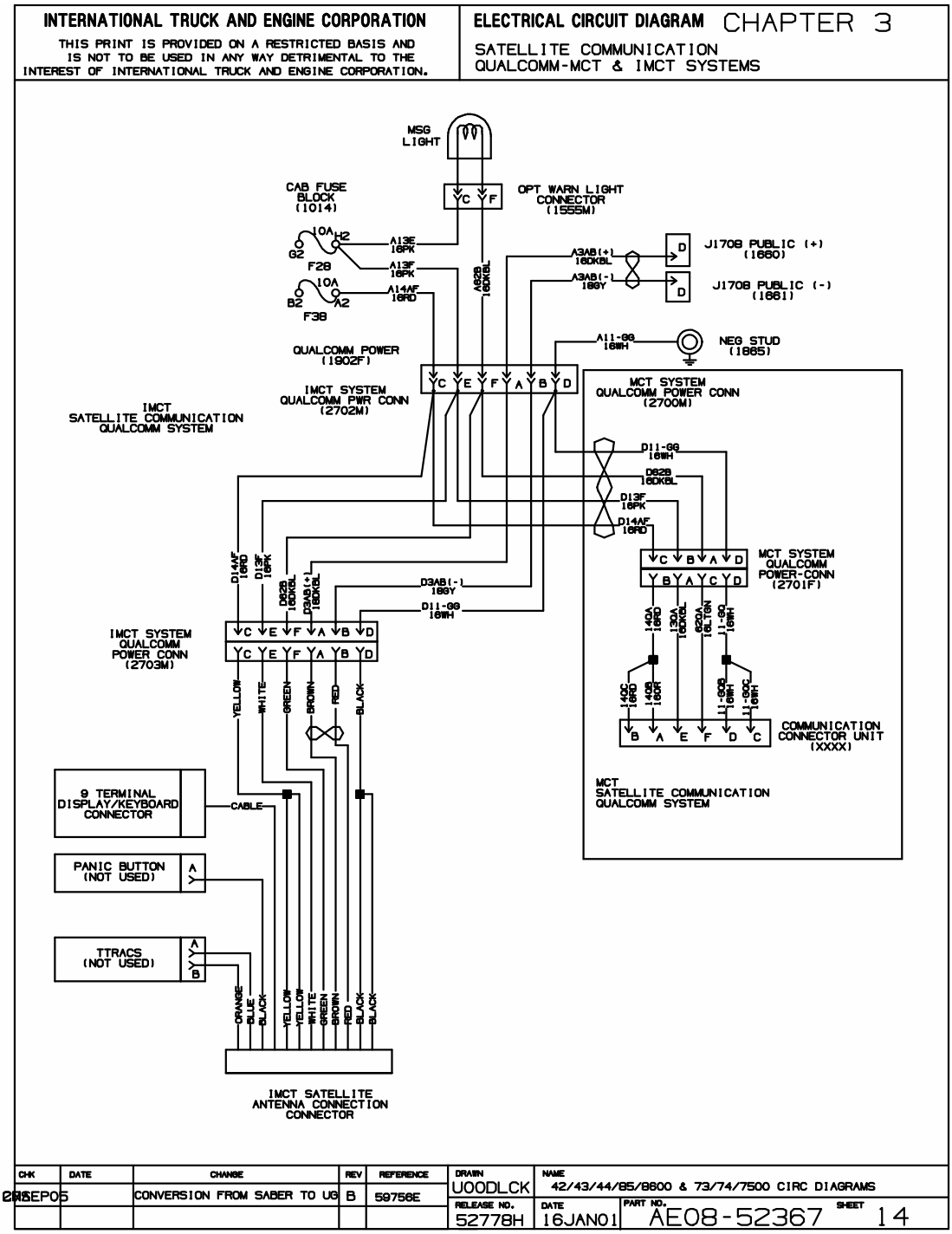

Figure 41 Satellite Communication Qualcomm-MCT and IMCT Systems

4.15. SELF CONTAINED AIR SEAT, P. 15

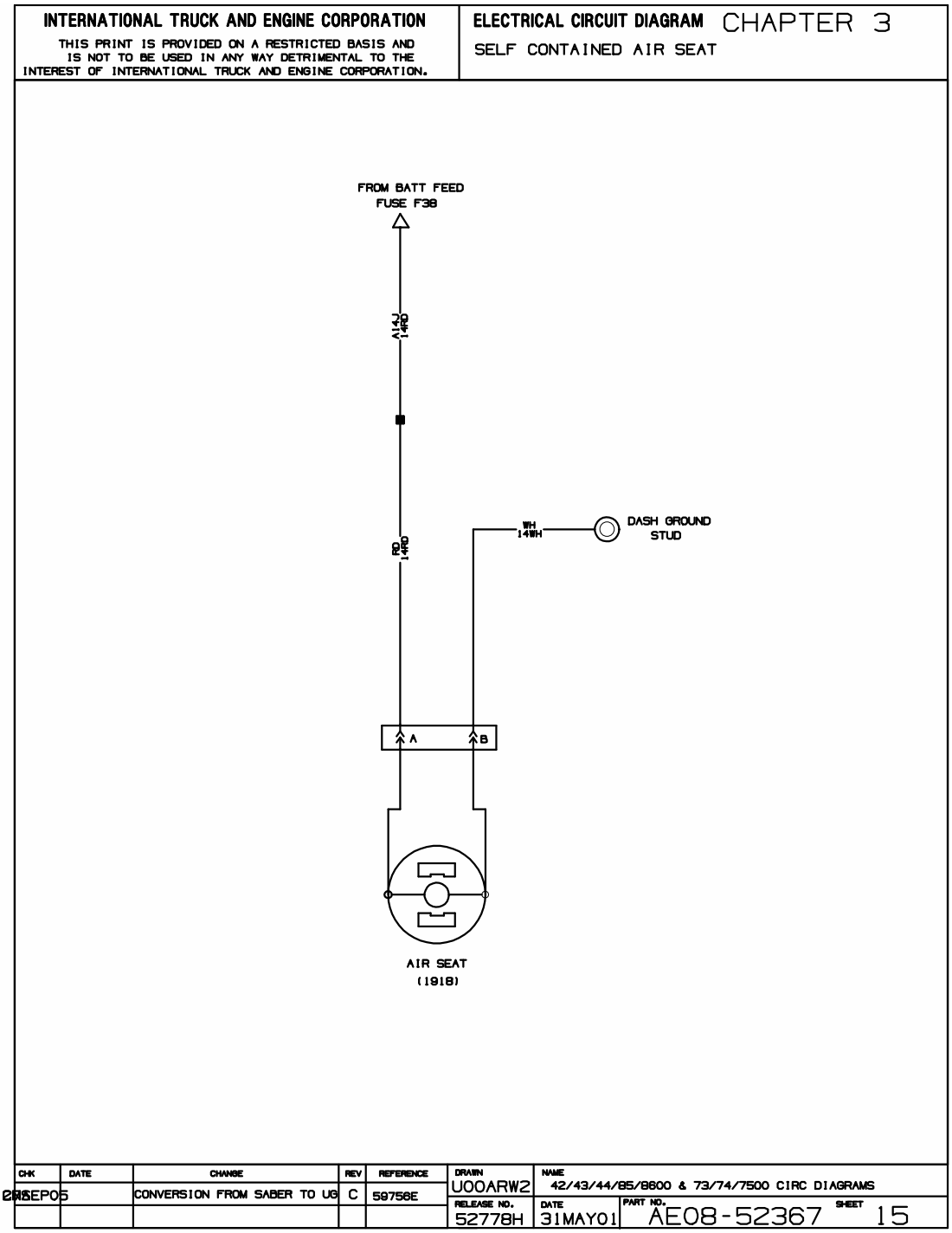

Figure 42 Self Contained Air Seat

4.16. DIGITAL CLOCK PTC, P. 16

INTERNATIONAL TRUCK AND ENGINE CORPORATION THIS PRINT IS PROVIDED ON A RESTRICTED BASIS AND IS NOT TO BE USED IN ANY WAY DETRIMENTAL TO THE INTEREST OF INTERNATIONAL TRUCK AND ENGINE CORPORATION.	ELECTRICAL CIRCUIT DIAGRAM CHAPTER 3 DIGITAL CLOCK PTC

GEOMETRY
REMOVED

CHK	DATE	CHANGE	REV	REFERENCE	DRAWN	NAME		
02SEP05		CONVERSION FROM SABER TO UG	C	59756E	UOODLCK	42/43/44/85/8600 & 73/74/7500 CIRC DIAGRAMS		
					RELEASE NO. 52778H	DATE 05MAY01	PART NO. AE08-52367	SHEET 16

Figure 43 Digital Clock PTC

4.17. TRANSMISSION ALLISON LCT COLUMN SHIFTER, P. 17

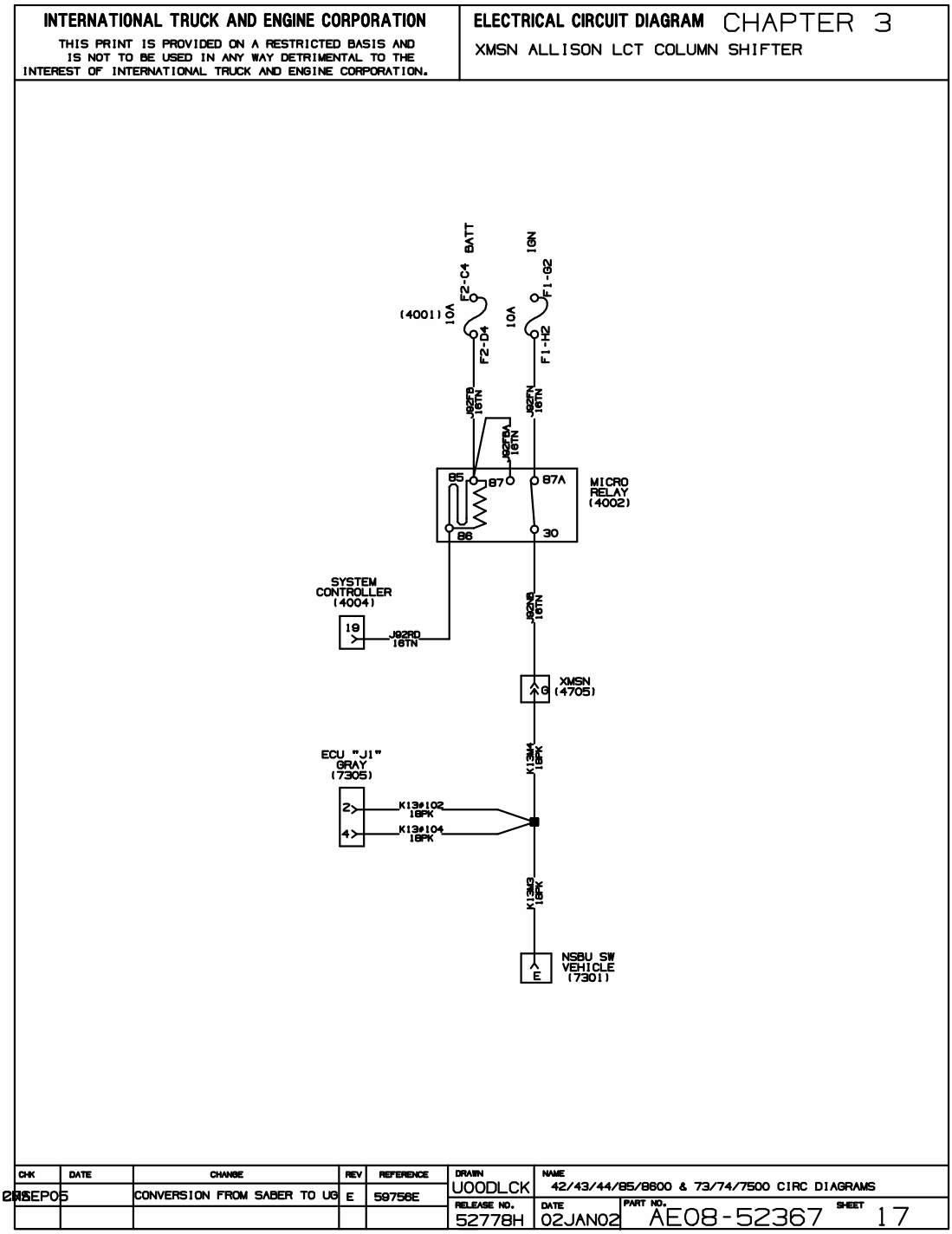

Figure 44 Transmission Allison LCT Column Shifter

4.18. HEATED SEATS FOR 7700 MODELS ONLY, P. 18

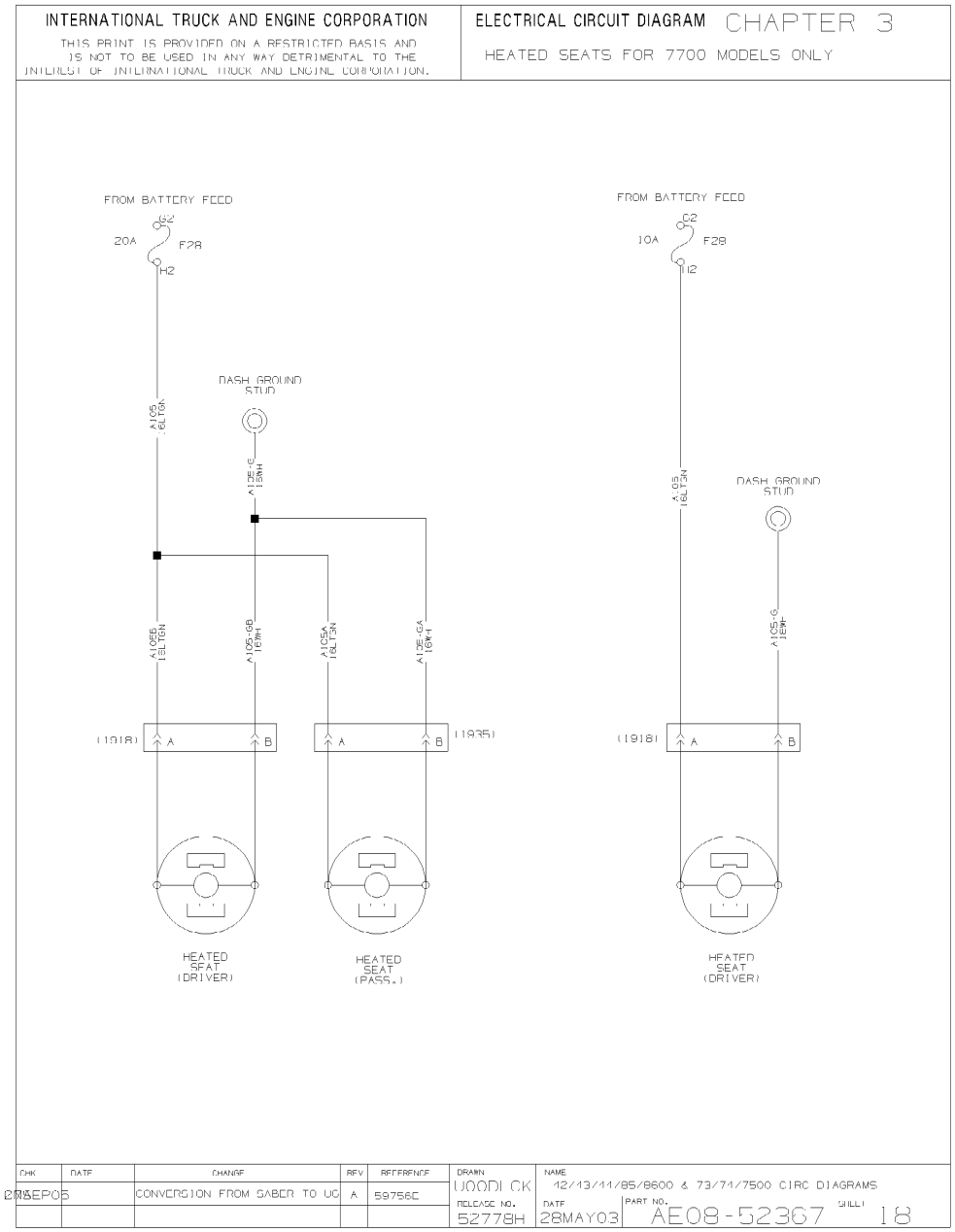

Figure 45 Heated Seats for 7700 Models Only

4.19. BACKUP CAMERA, P. 19

INTERNATIONAL TRUCK AND ENGINE CORPORATION

THIS PRINT IS PROVIDED ON A RESTRICTED BASIS AND IS NOT TO BE USED IN ANY WAY DETRIMENTAL TO THE INTEREST OF THE INTERNATIONAL TRUCK AND ENGINE CORPORATION.

ELECTRICAL CIRCUIT DIAGRAM

CHAPTER 3

BACKUP CAMERA

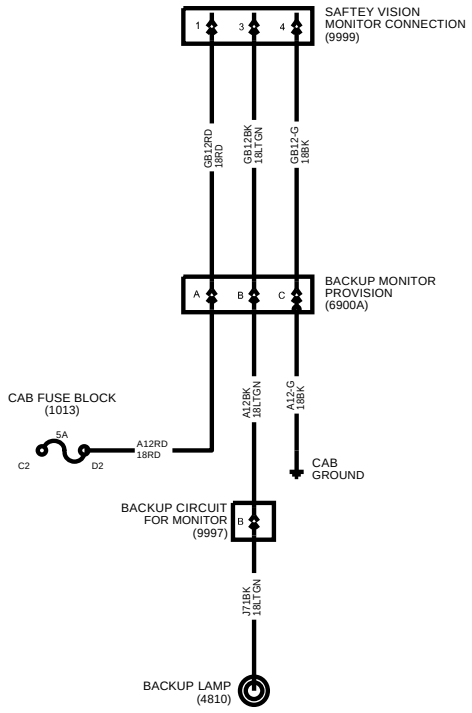

CHK	DATE	CHANGE	REV	REFERENCE	DRAWN	NAME		
CNA	11MAR04	RELEASE FOR PRODUCTION.	-	59169P	U00DLCK	42/43/44/85/8600 & 73/74/7500 CIRC DIAGRAMS		
					RELEASE NO. 59169P	DATE 09MAR04	PART NO. AE08-52367	SHEET 19

Figure 46 Backup Camera

4.20. XATA COMPUTER, P. 20

INTERNATIONAL TRUCK AND ENGINE CORPORATION

THIS PRINT IS PROVIDED ON A RESTRICTED BASIS AND IS NOT TO BE USED IN ANY WAY DETRIMENTAL TO THE INTEREST OF THE INTERNATIONAL TRUCK AND ENGINE CORPORATION.

ELECTRICAL CIRCUIT DIAGRAM

CHAPTER 3

XATA COMPUTER

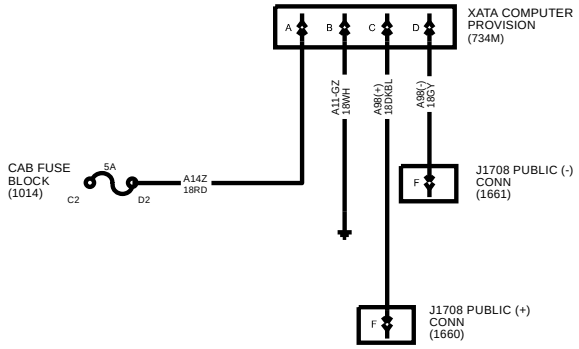

CHK	DATE	CHANGE	REV	REFERENCE	DRAWN	NAME		
CNA	11MAR04	RELEASE FOR PRODUCTION.	-	59169P	U00DLCK	42/43/44/85/8600 & 73/74/7500 CIRC DIAGRAMS		
					RELEASE NO.	DATE	PART NO.	SHEET
					59169P	09MAR04	AE08-52367	20

Figure 47 XATA Computer

4.21. KEYLESS IGNITION SYSTEM, P. 21

INTERNATIONAL TRUCK AND ENGINE CORPORATION

THIS PRINT IS PROVIDED ON A RESTRICTED BASIS AND IS NOT TO BE USED IN ANY WAY DETRIMENTAL TO THE INTEREST OF THE INTERNATIONAL TRUCK AND ENGINE CORPORATION.

ELECTRICAL CIRCUIT DIAGRAM

CHAPTER 3

KEYLESS IGNITION SYSTEM

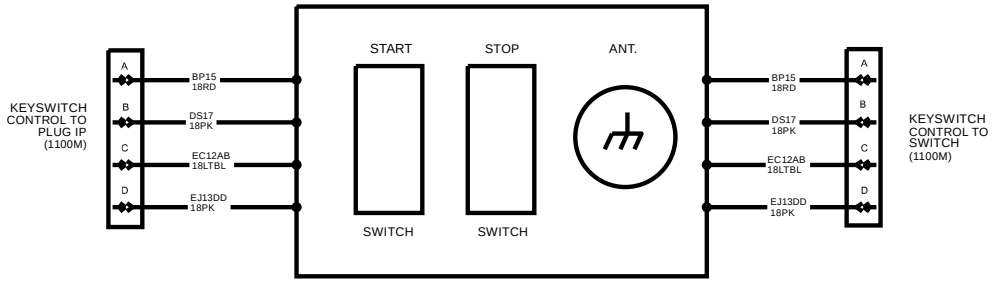

CHK	DATE	CHANGE	REV	REFERENCE	DRAWN	NAME		
CNA	11MAR04	RELEASE FOR PRODUCTION.	-	59169P	U00DLCK	42/43/44/85/8600 & 73/74/7500 CIRC DIAGRAMS		
					RELEASE NO.	DATE	PART NO.	SHEET
					59169P	09MAR04	AE08-52367	21

Figure 48 Keyless Ignition System

12V CHARGING + CRANKING SYSTEM (CHAPTER 4)

5.1. I6 EGR ENGINES, P. 1

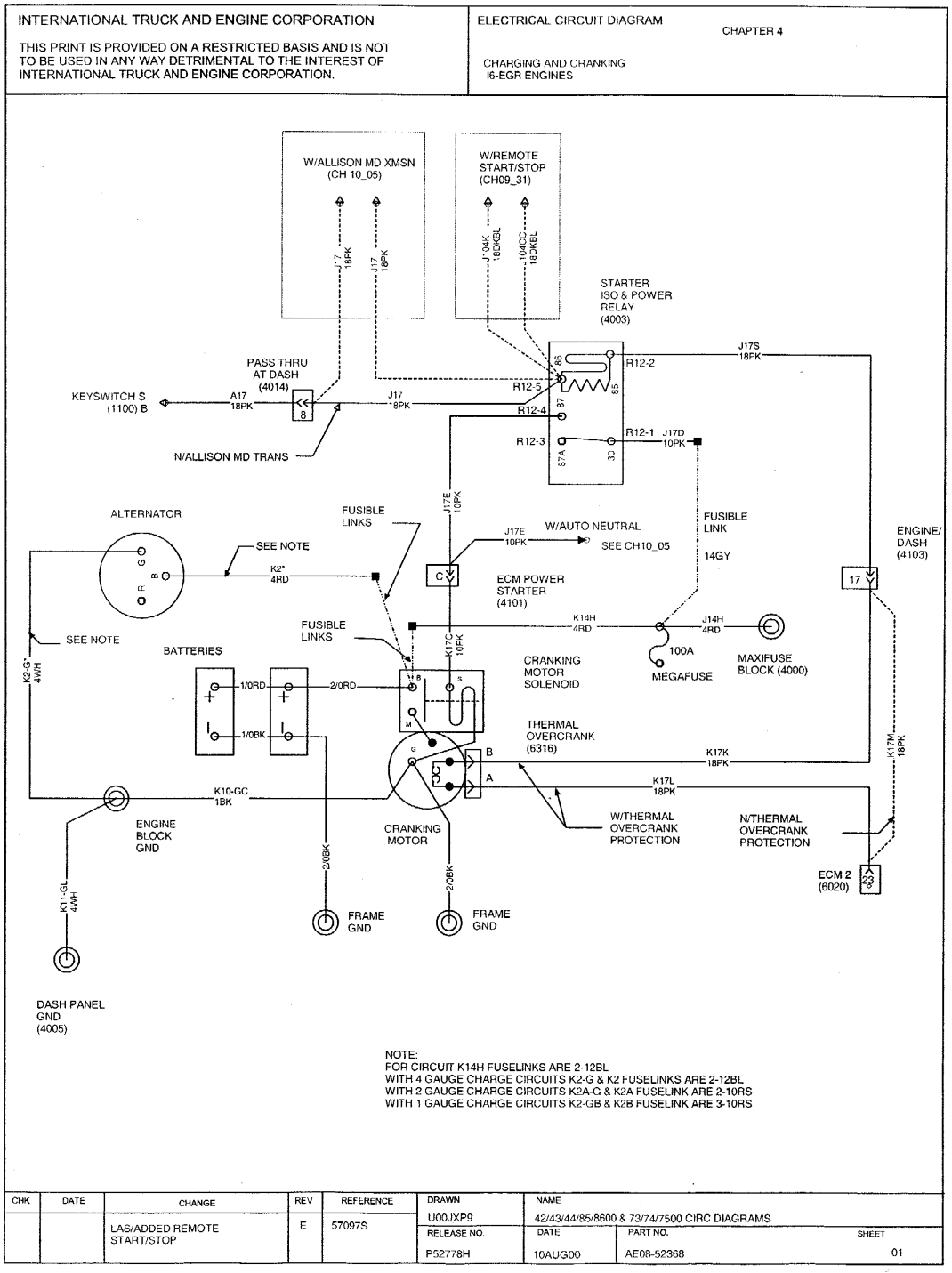

Figure 49 I6 EGR Engines

5.2. V8 AVNT ENGINES, P. 2

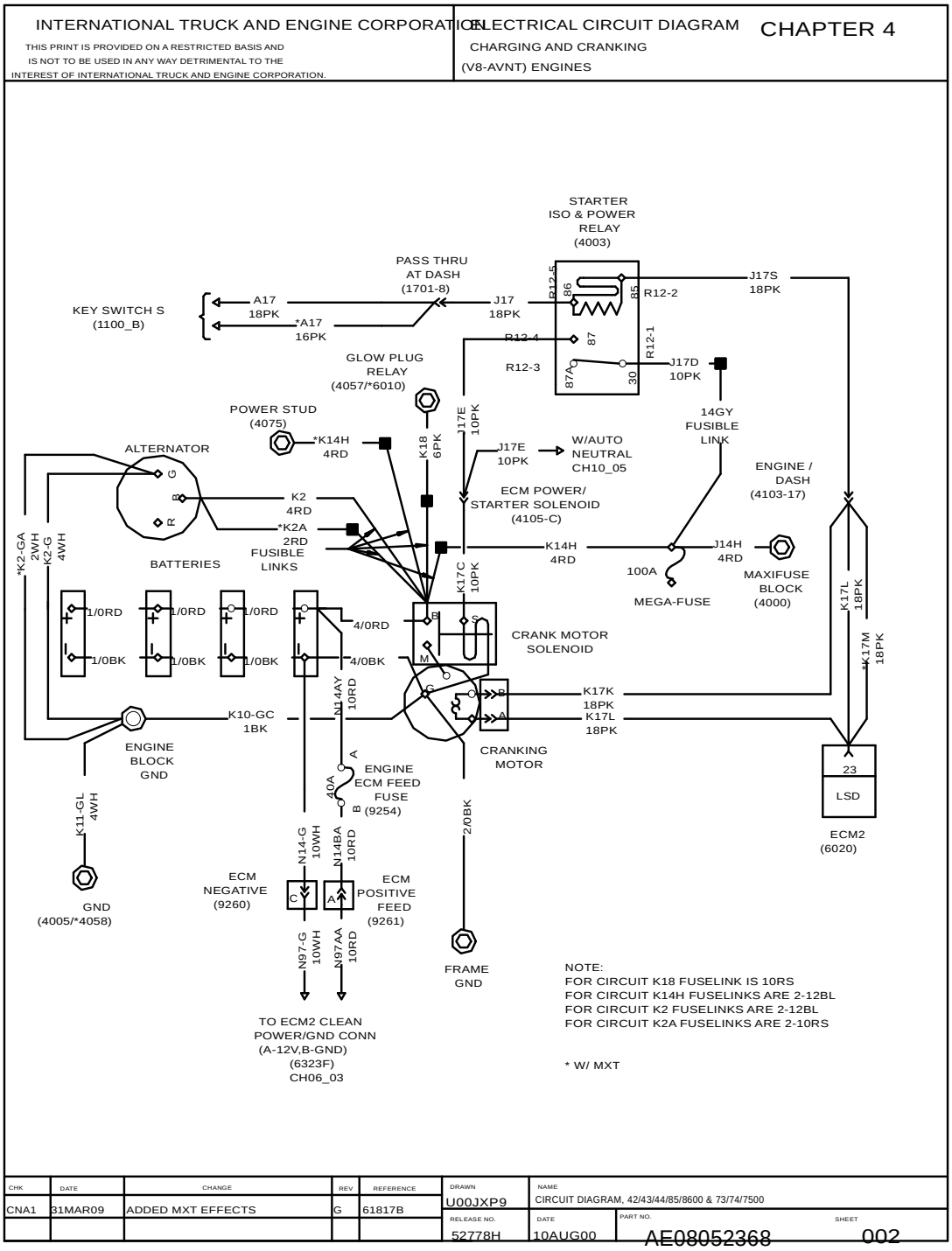

Figure 50 V8 AVNT Engines

5.3. CATERPILLAR, CUMMINS ISM ENGINES, P. 3

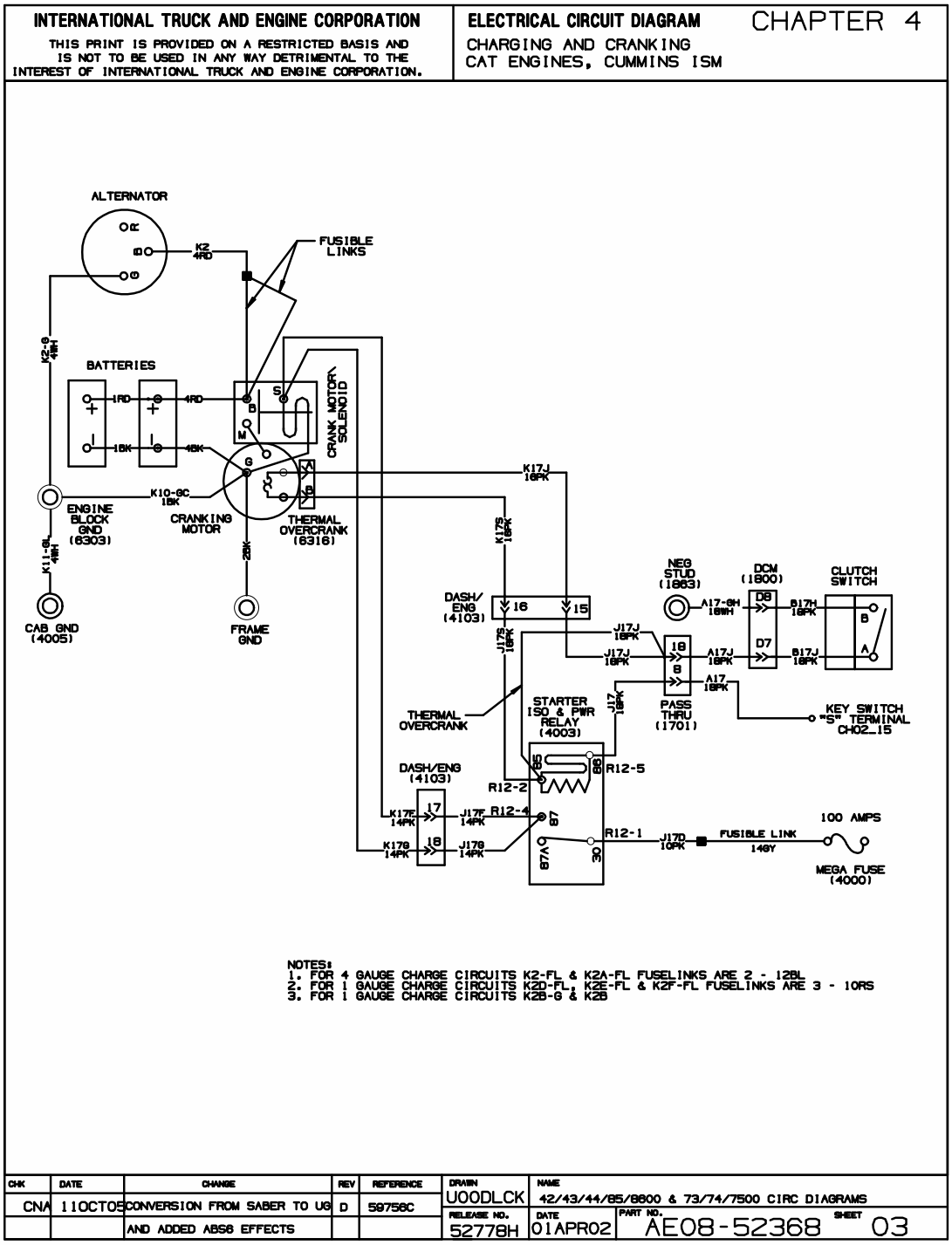

Figure 51 Caterpillar, Cummins ISM Engines

5.4. I6 HEUI ENGINES, P. 4

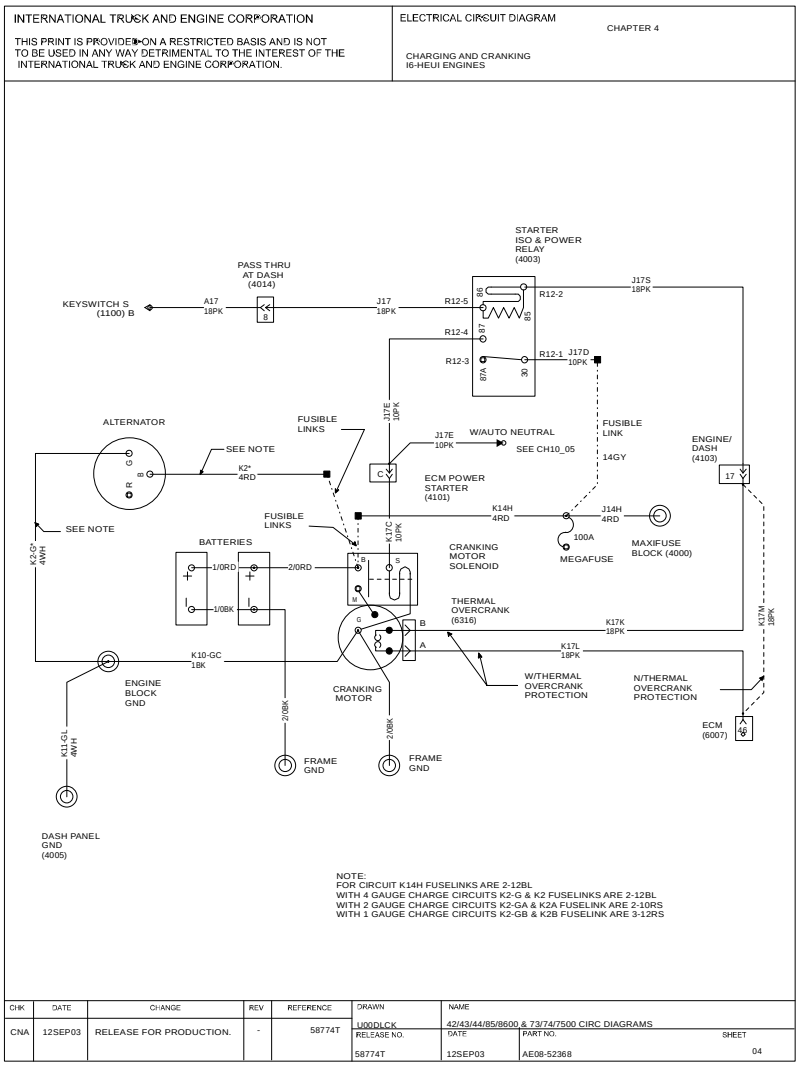

Figure 52 I6 HEUI Engines

5.5. CATERPILLAR ENGINES, CUMMINS ISM AND WITH EATON ULTRASHIFT/DM2, P. 5

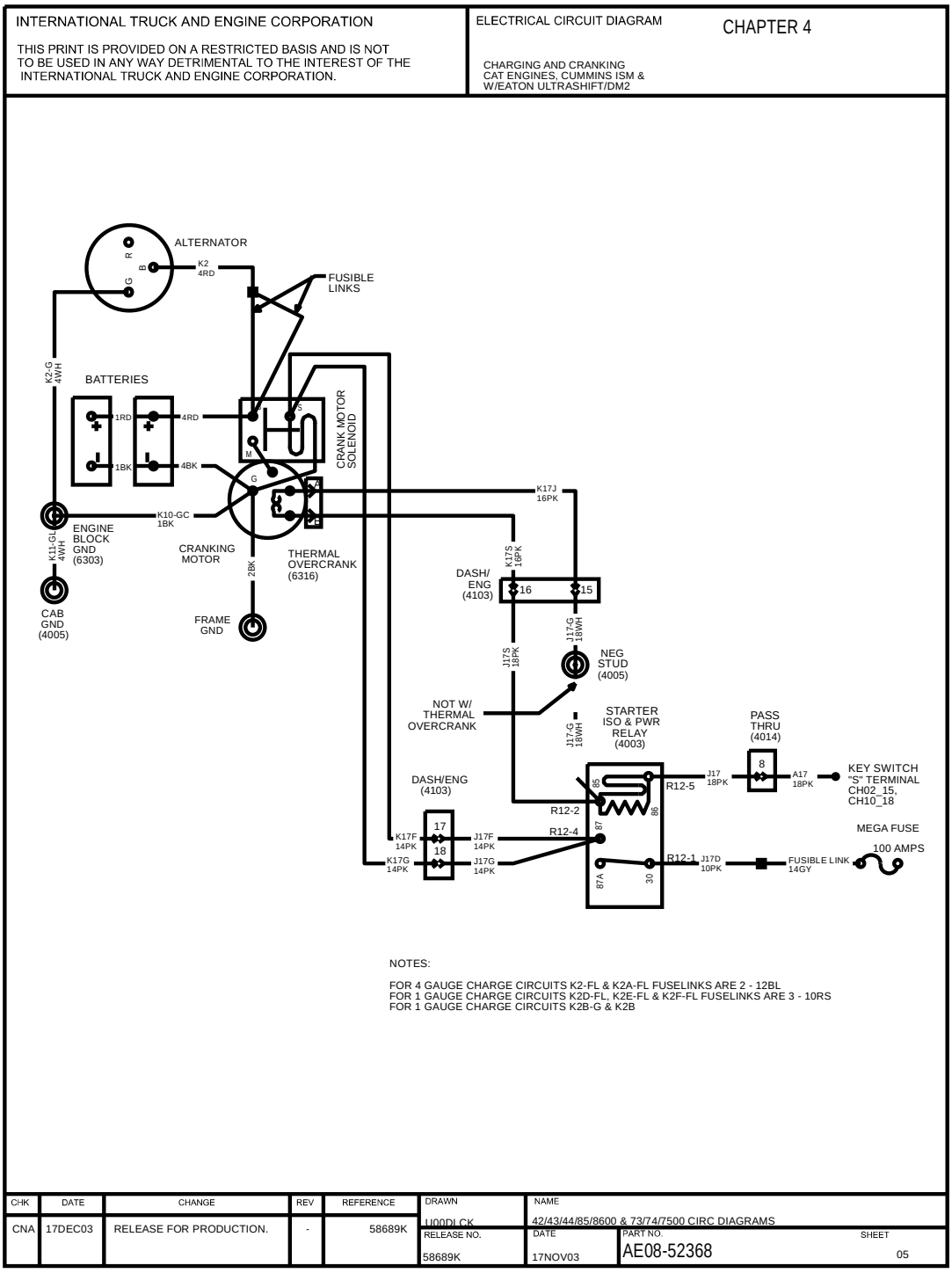

Figure 53 Caterpillar Engines, Cummins ISM and with Eaton Ultrashift/DM2

5.6. I6 EGR ENGINES WITH AIR START, P. 6

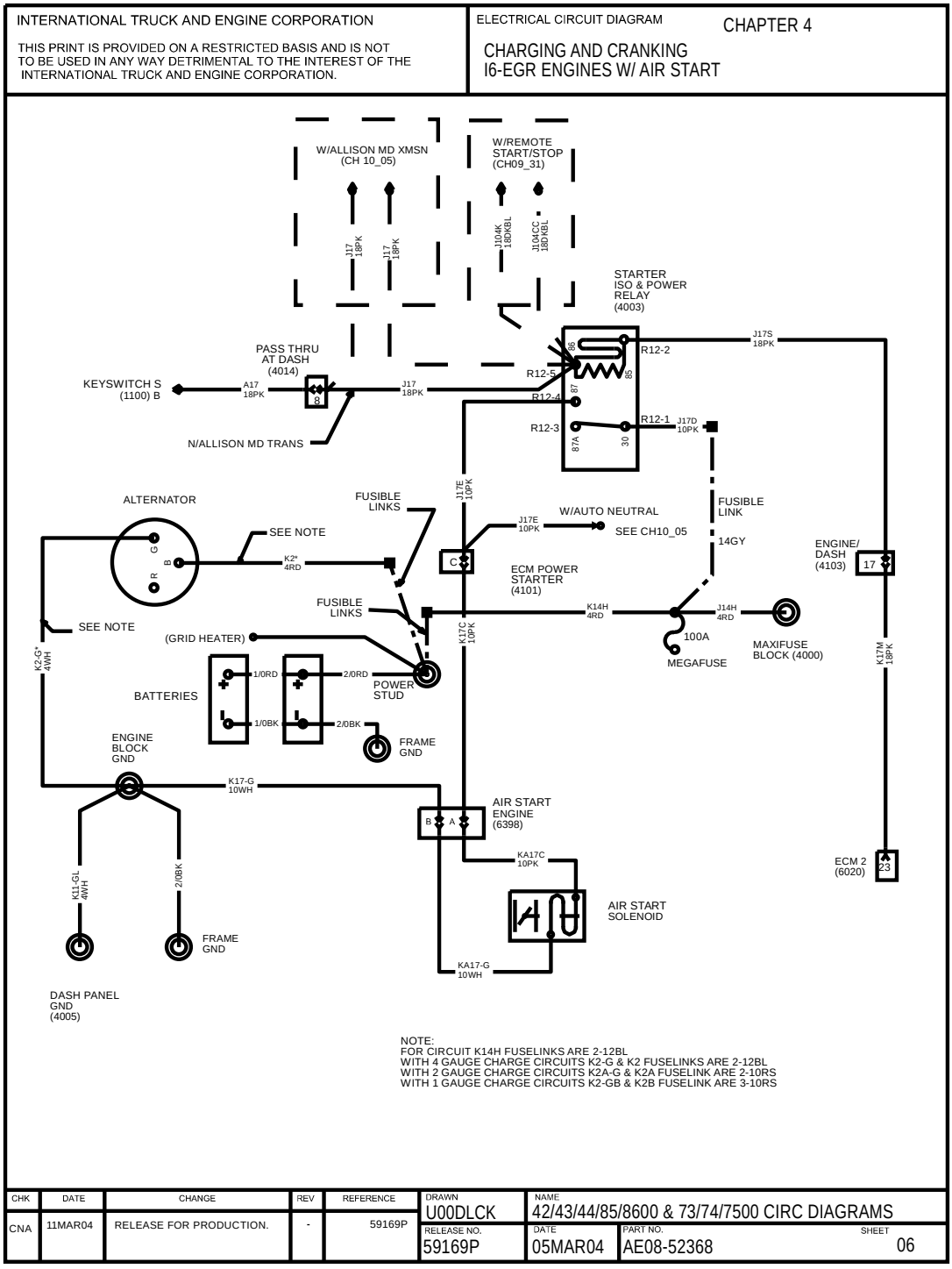

Figure 54 I6 EGR Engines with Air Start

FANS AND ENGINE ACCESSORIES (CHAPTER 5)

6.1. FAN WIRING, P. 1

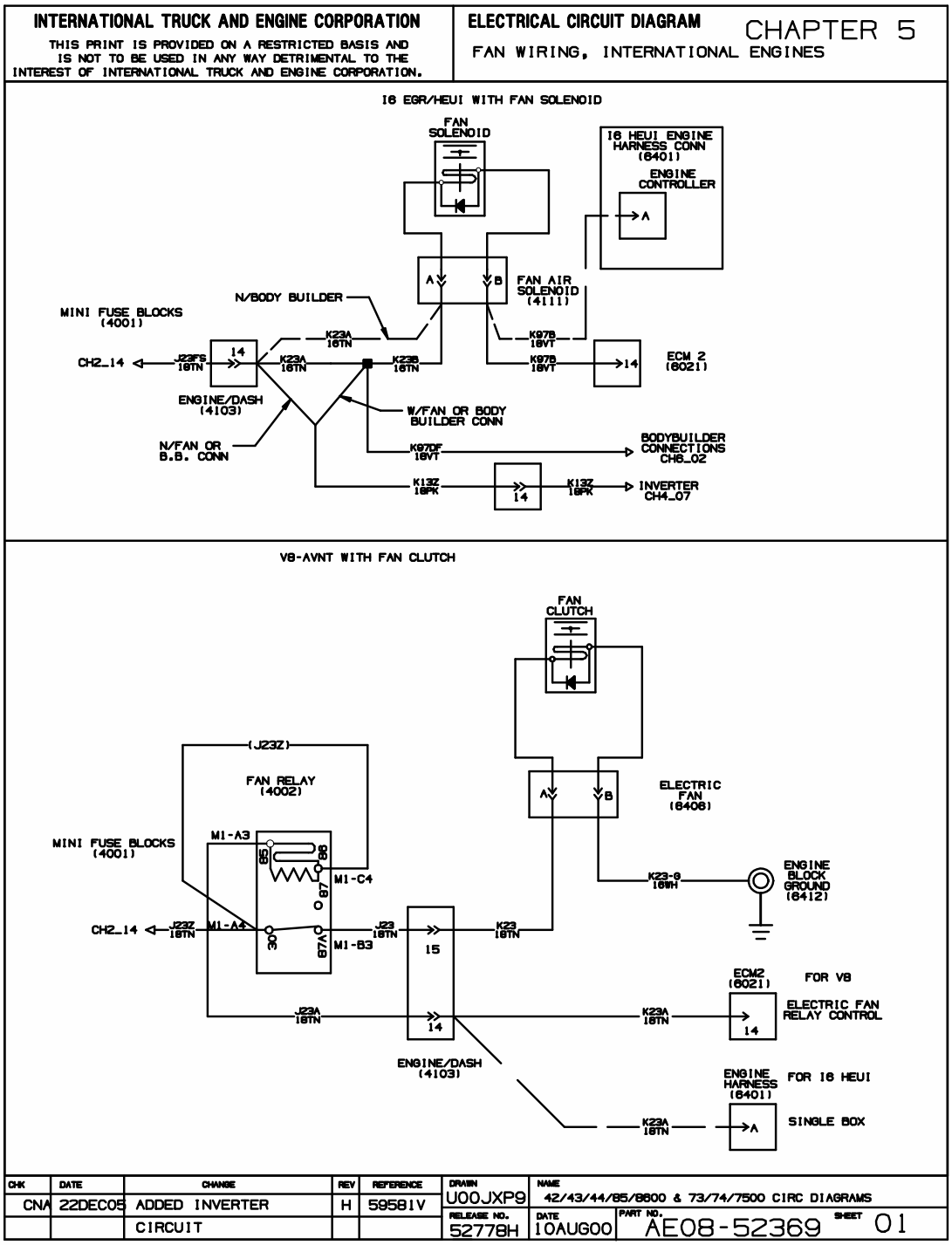

Figure 55 Fan Wiring

6.2. ETHER START, P. 2

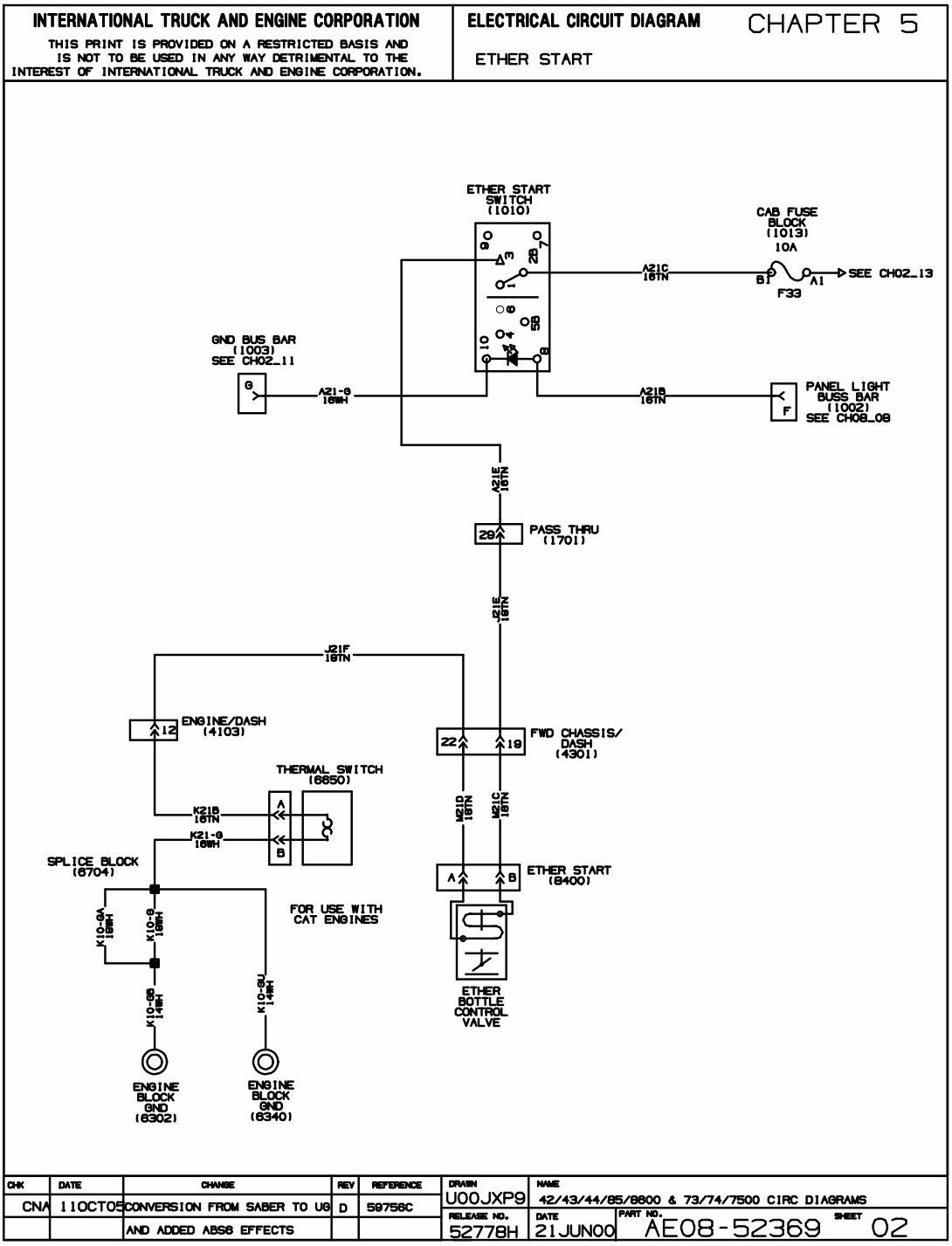

Figure 56 Ether Start

6.3. SNOW VALVE, P. 3

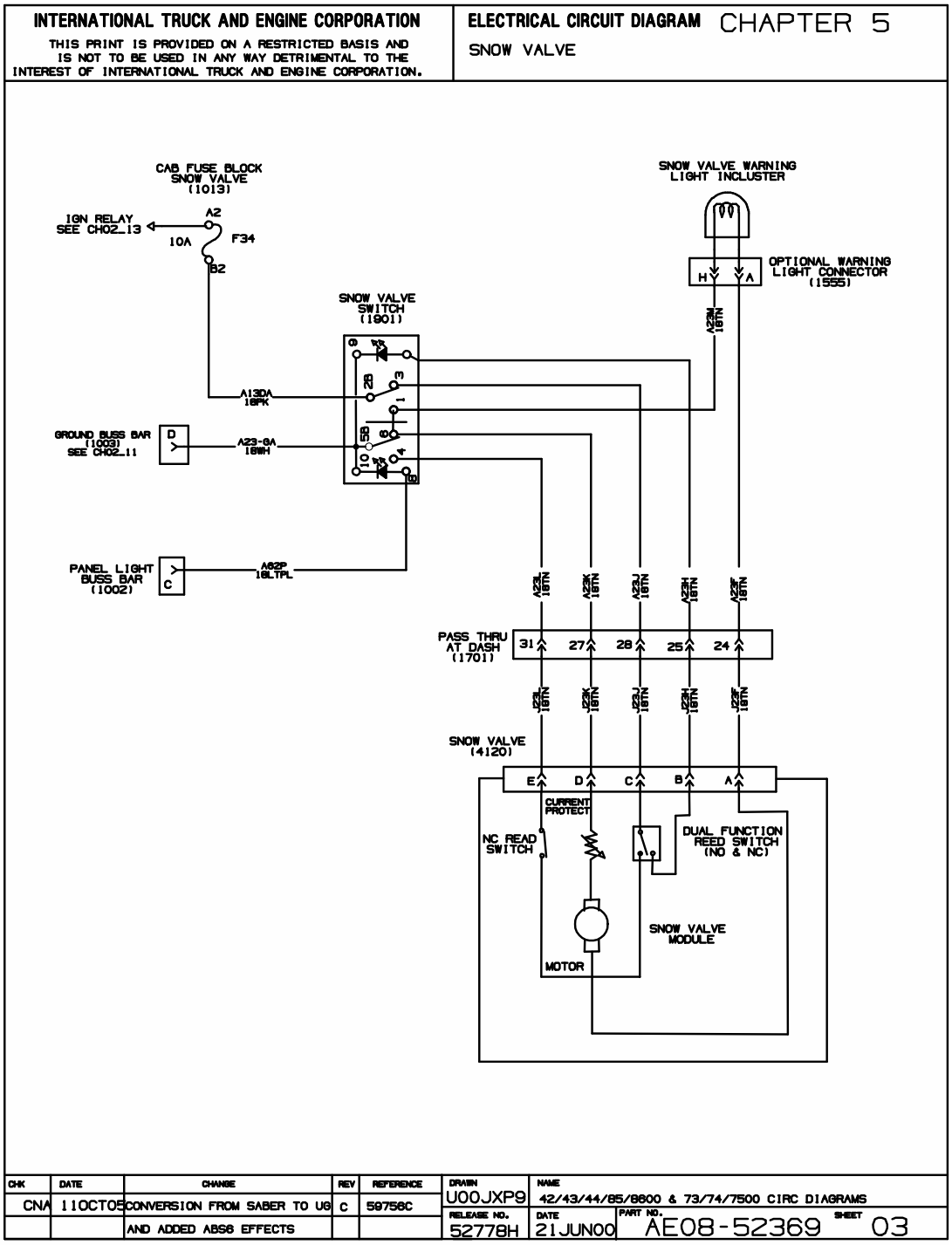

Figure 57 Snow Valve

6.4. FAN WIRING, CATERPILLAR AND CUMMINS, P. 4

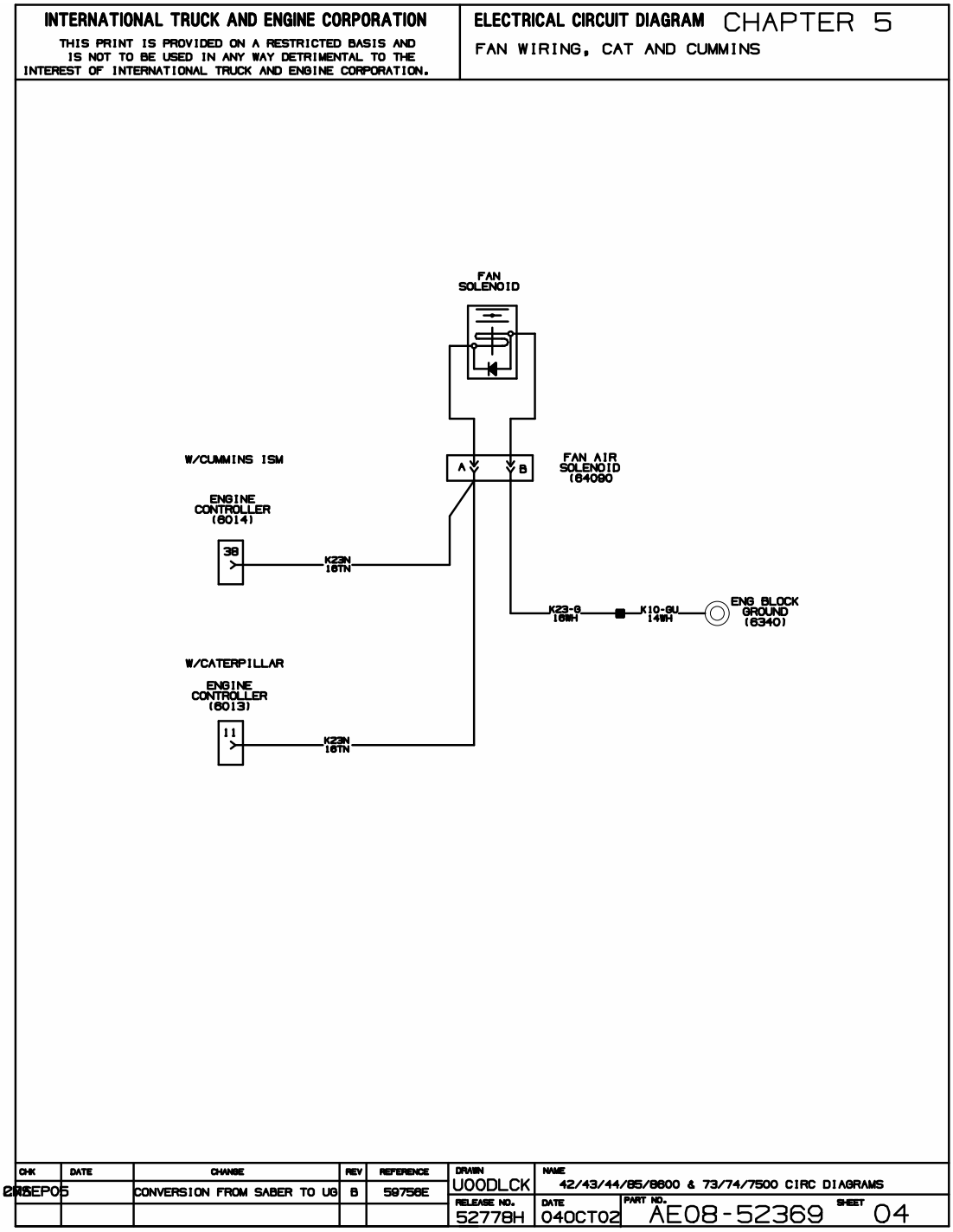

Figure 58 Fan Wiring, Caterpillar and Cummins

ELECTRONIC ENGINES (CHAPTER 6)

7.1. ELECTRONIC ENGINE CONTROLS, I6–EGR ENGINES, P. 1

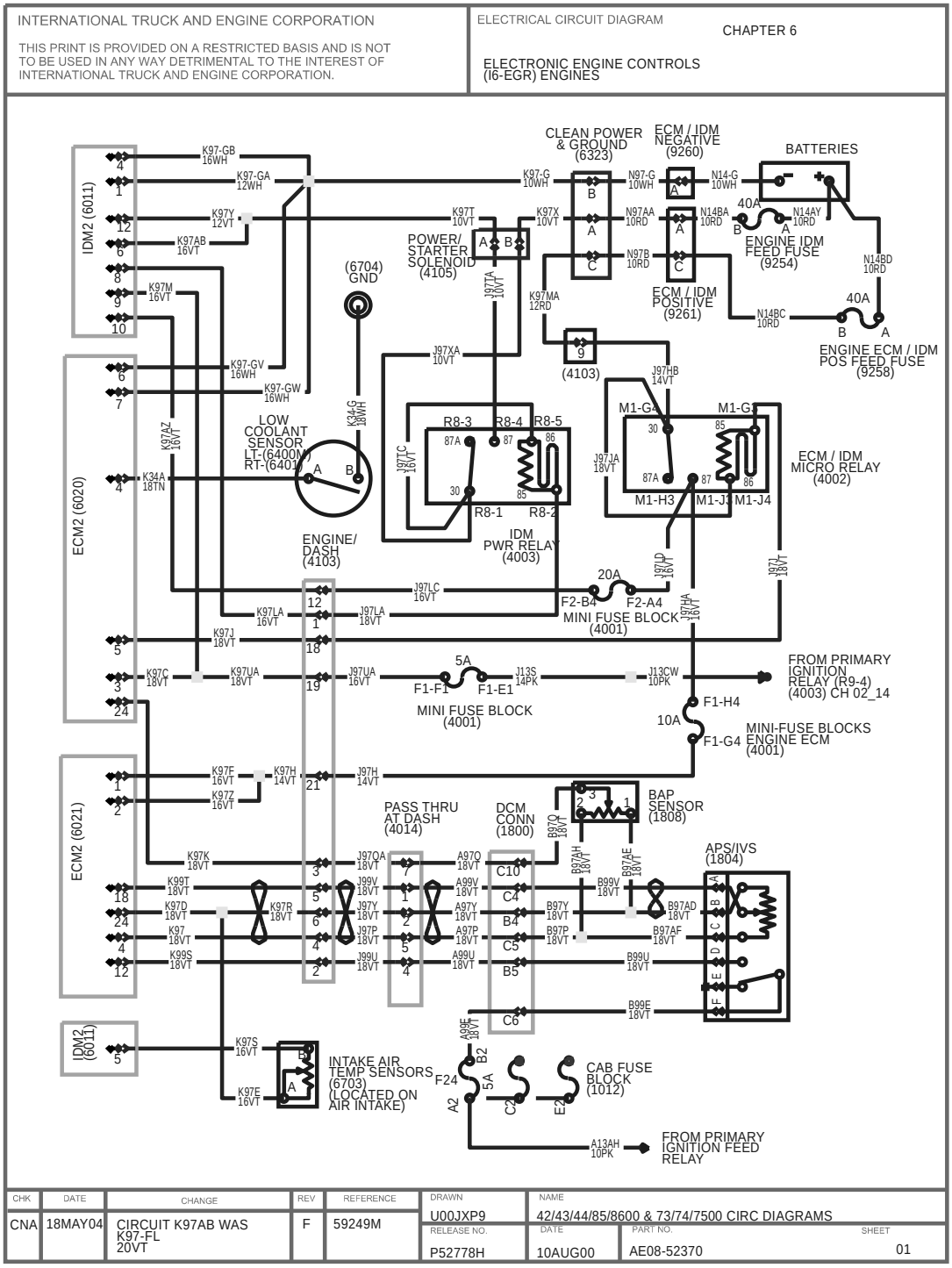

Figure 59 Electronic Engine Controls, I6–EGR Engines

7.2. ELECTRONIC ENGINE CONTROLS, I6-EGR ENGINE CRUISE CONTROL AND BODY BUILDER CONNECTIONS, P. 2

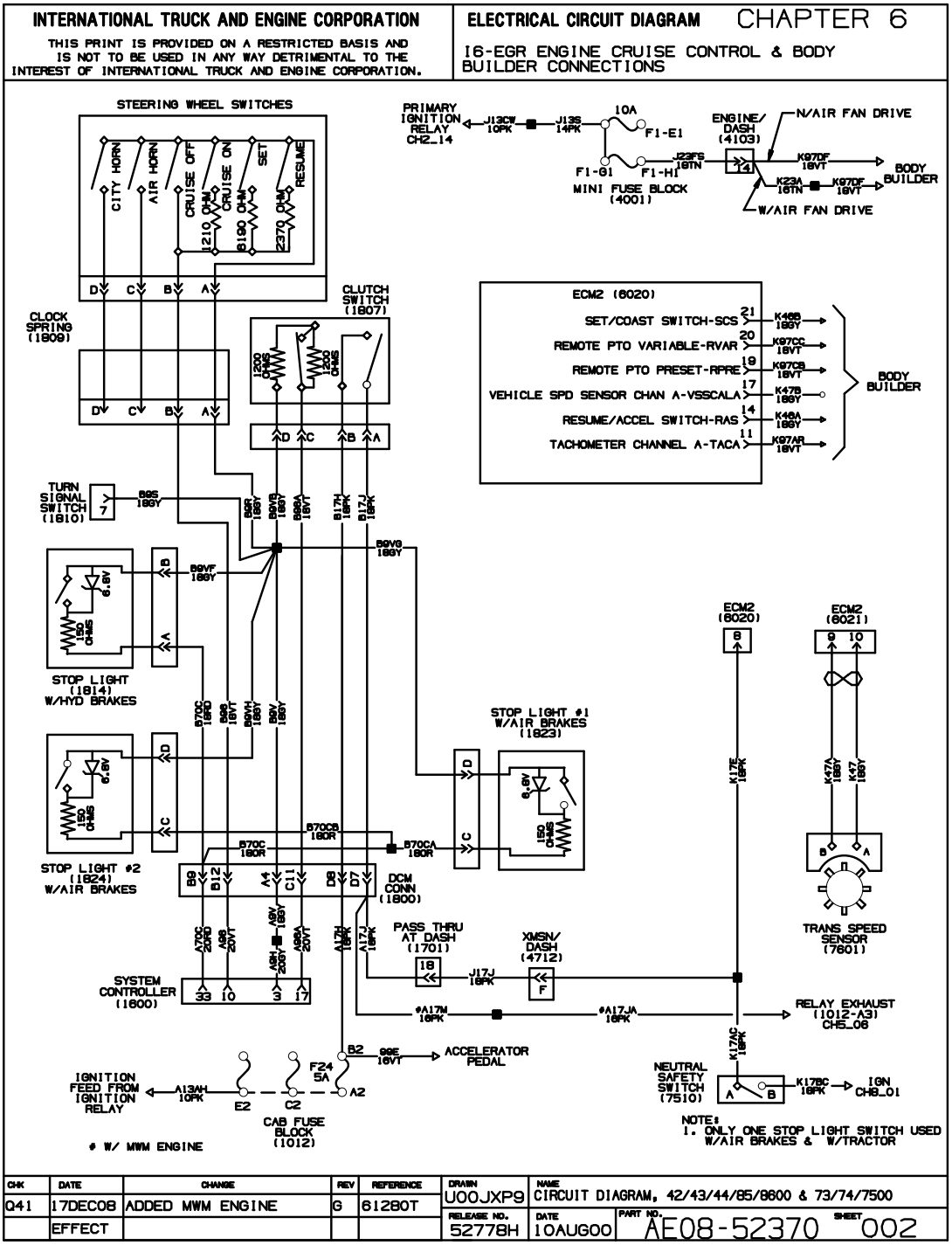

Figure 60 Electronic Engine Controls, I6-EGR Engine Cruise Control and Body Builder Connections

7.3. ELECTRONIC ENGINE CONTROLS, (V8–AVNT) ENGINES, P. 3

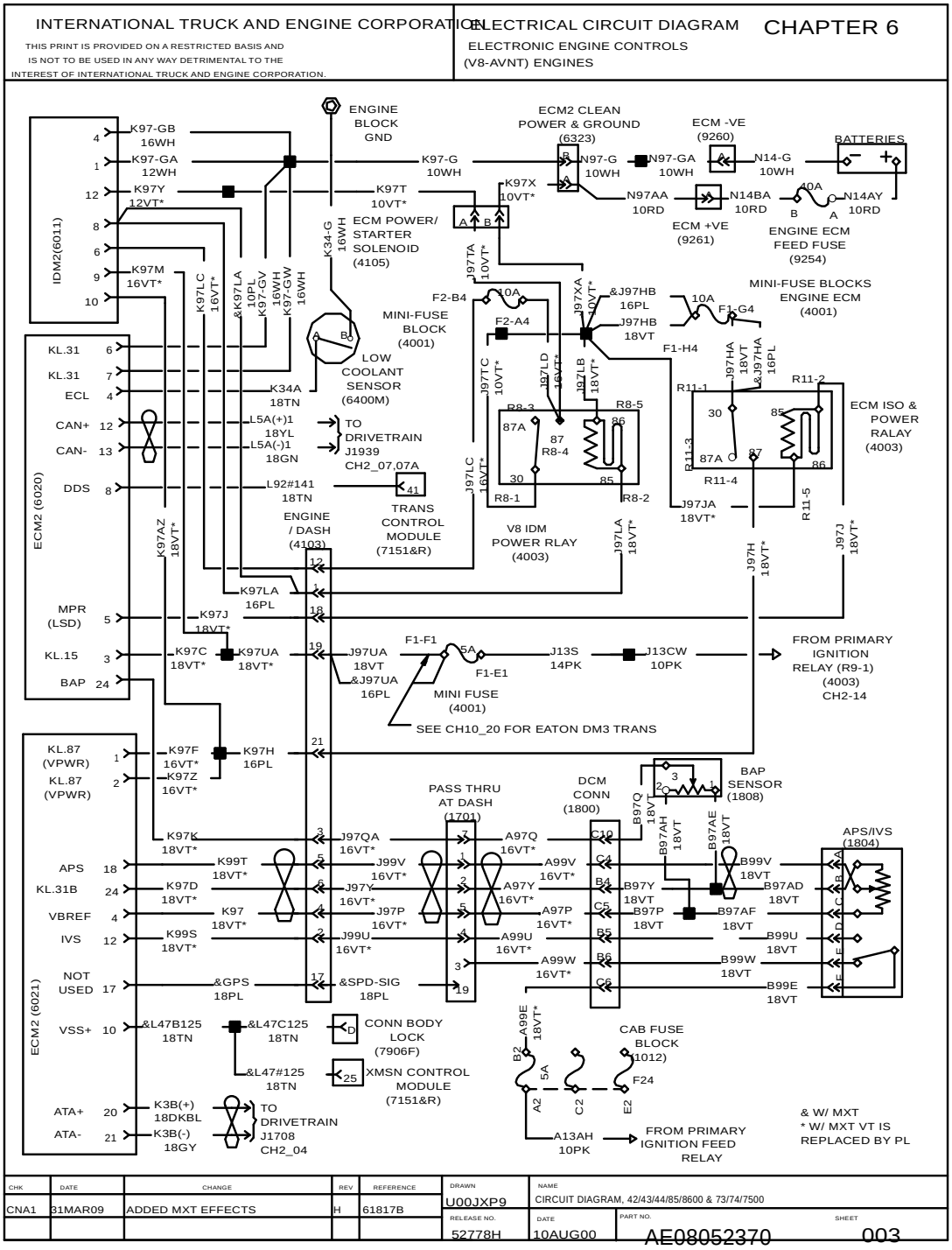

Figure 61 Electronic Engine Controls, (V8–AVNT) Engines

7.4. ELECTRONIC ENGINE CONTROLS, V8–AVNT ENGINE CRUISE CONTROL AND BODY BUILDER CONNECTIONS, P. 4

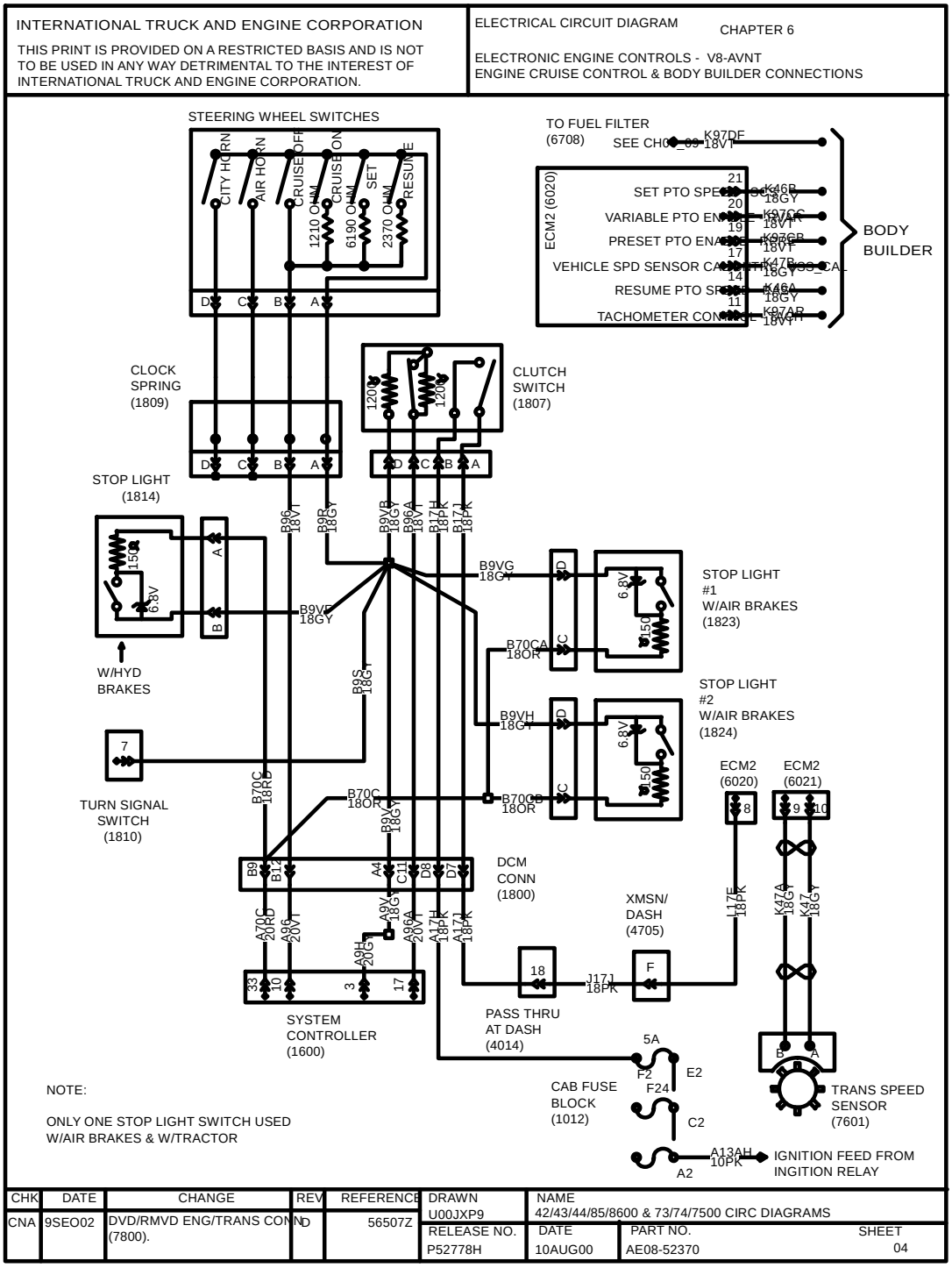

Figure 62 Electronic Engine Controls, V8–AVNT Engine Cruise Control and Body Builder Connections

7.5. CATERPILLAR C10, C11, C12, AND C13 ENGINES, P. 5

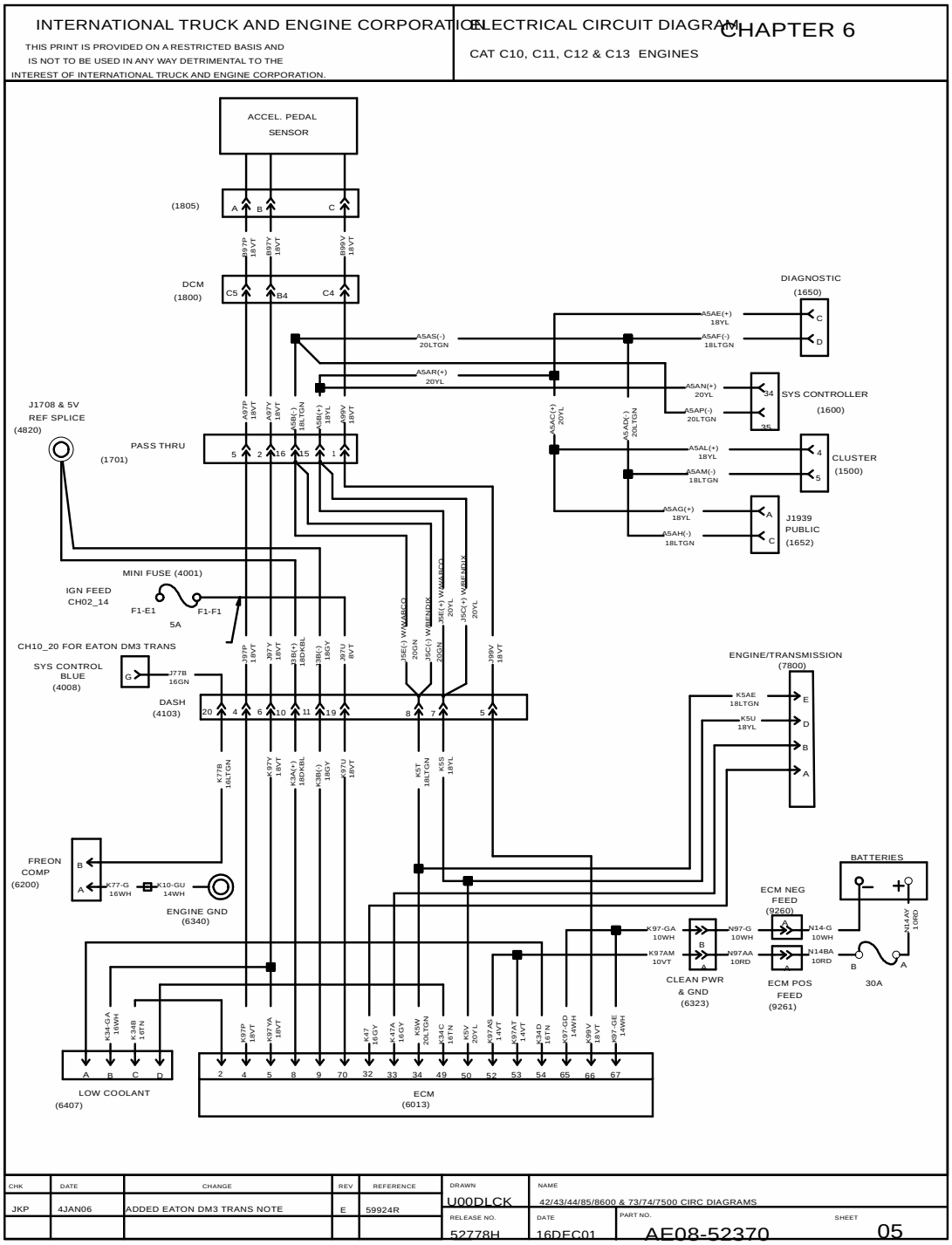

Figure 63 Caterpillar C10, C11, C12, and C13 Engines

7.6. CUMMINS ISM ENGINE, P. 6

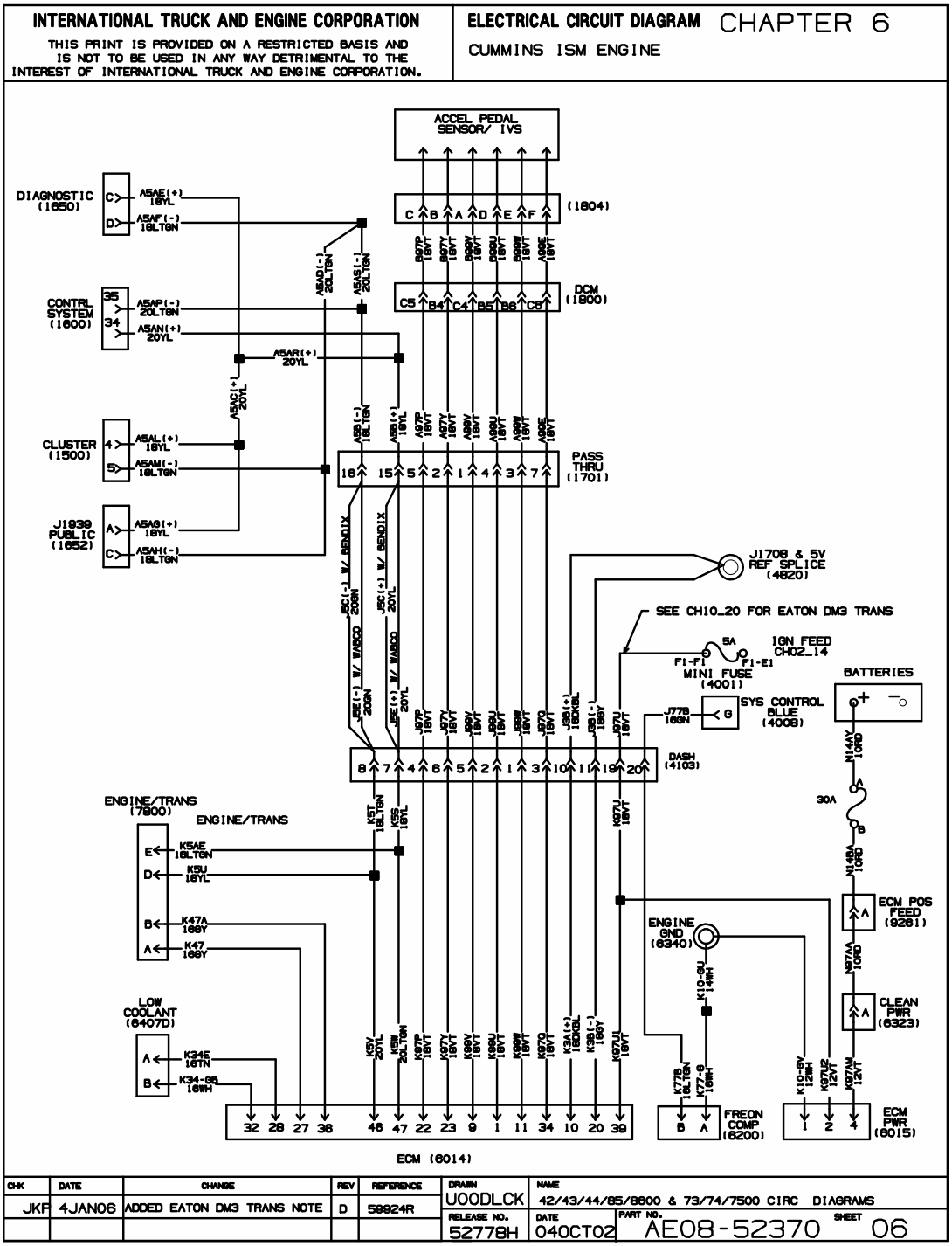

Figure 64 Cummins ISM Engine

7.7. I6 HEUI ENGINE, P. 7

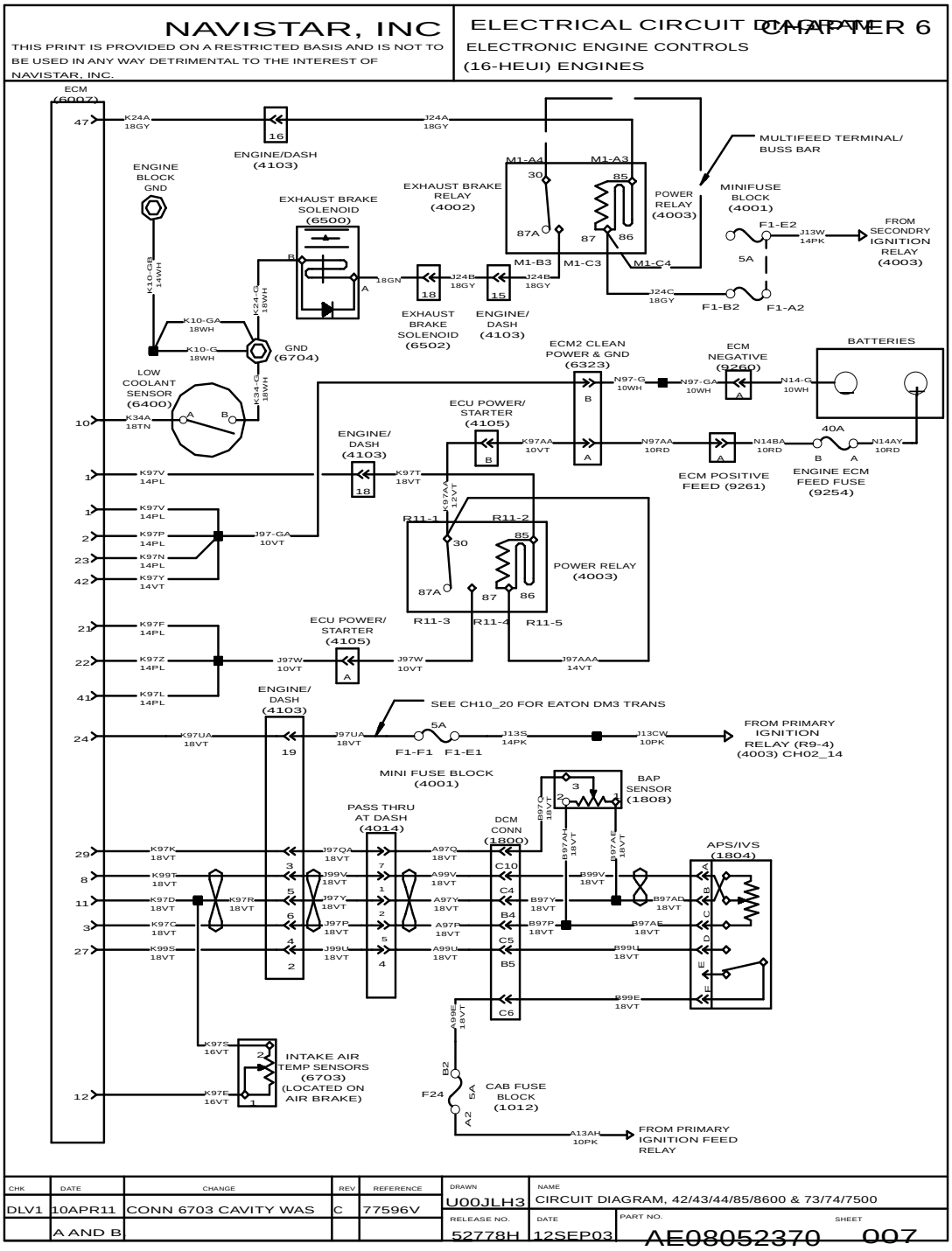

Figure 65 I6 HEUI Engine

7.8. I6 HEUI ENGINE CRUISE CONTROL AND BODY BUILDER CONNECTIONS WITH MANUAL TRANSMISSION, P. 8

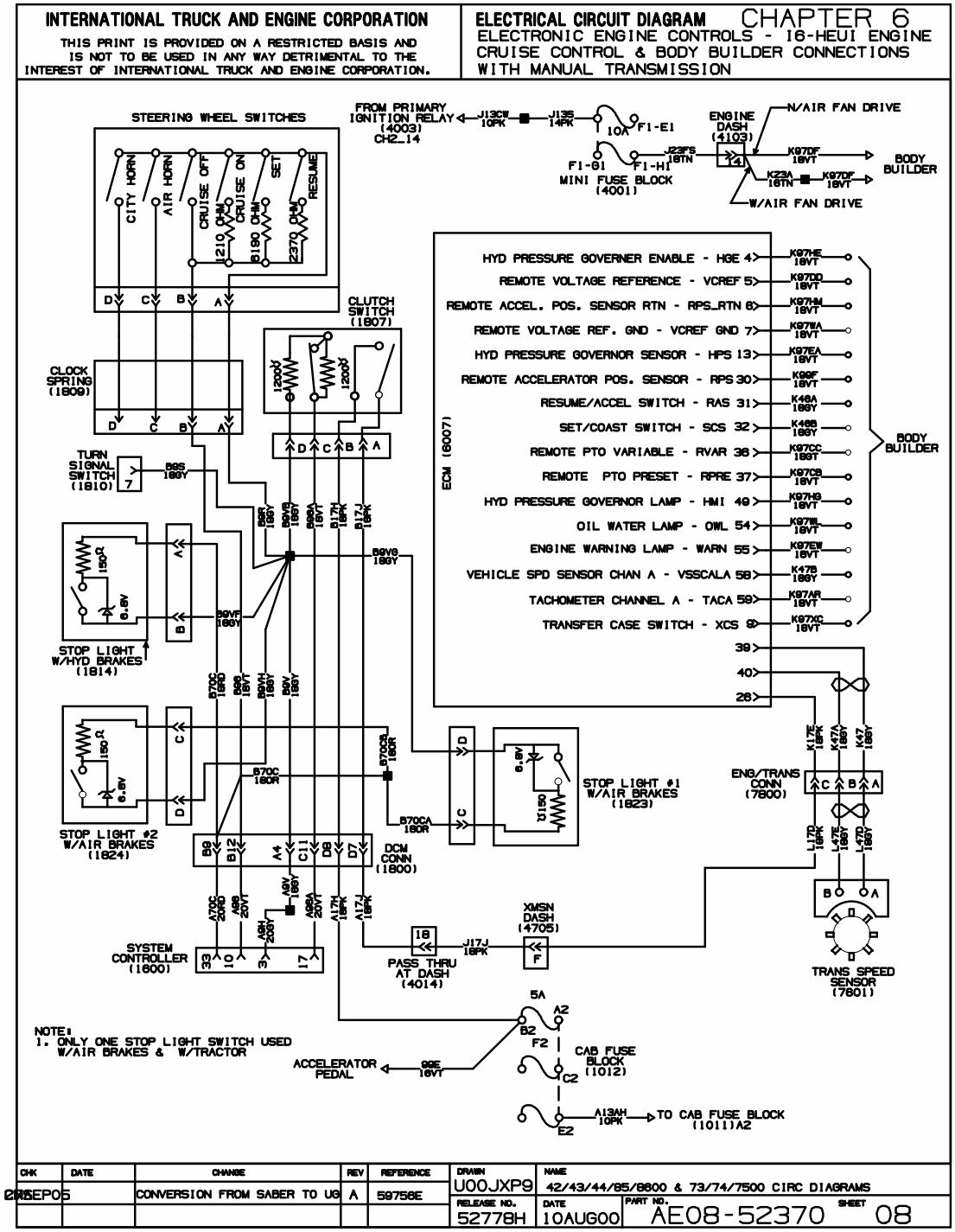

Figure 66 I6 HEUI Engine Cruise Control and Body Builder Connections with Manual Transmission

GAUGES WITH AND WITHOUT INTEGRAL WARNING LIGHT (CHAPTER 7)

8.1. IP/GAUGE LIST, P. 1

INTERNATIONAL TRUCK AND ENGINE CORPORATION

THIS PRINT IS PROVIDED ON A RESTRICTED BASIS AND IS NOT TO BE USED IN ANY WAY DETRIMENTAL TO THE INTEREST OF INTERNATIONAL TRUCK AND ENGINE CORPORATION.

ELECTRICAL CIRCUIT DIAGRAM CHAPTER 7

IP/GAUGES

INSTRUMENT PANEL GAUGES

GAUGE	WARN LIGHT	SIGNAL PATH	SENSOR LOCATION
RPM (TACH)	NO	ENGINE CTRLR/DRIVE TRAIN J1939/CLUSTER	ENGINE
MPH/KPH (SPD)	NO	ENGINE CTRLR/DRIVE TRAIN J1939/CLUSTER	TRANSMISSION
FUEL	YES	SYSTEM CTRLR/DRIVE TRAIN J1939/CLUSTER	FUEL TANK
VOLT	YES	SYSTEM CTRLR/DRIVE TRAIN J1939/CLUSTER	----------
AIR 1 (PRES)	YES	SYSTEM CTRLR/DRIVE TRAIN J1939/CLUSTER	INSIDE CAB - DASH PNL
AIR 2 (PRES)	YES	SYSTEM CTRLR/DRIVE TRAIN J1939/CLUSTER	STEERING COL AREA
WATER (TEMP)	YES	ENGINE CTRLR/DRIVE TRAIN J1939/CLUSTER	ENGINE
ENG OIL (TEMP)	YES	ENGINE CTRLR/DRIVE TRAIN J1939/CLUSTER	ENGINE
OIL (PRES)	YES	ENGINE CTRLR/DRIVE TRAIN J1939/CLUSTER	ENGINE
TRANS (TEMP)	YES	XMSN CTRLR/SYSTEM CTRLR/DRIVE TRAIN J1939/CLUSTER	TRANSMISSION
AIR APPLICATION	NO	SYSTEM CTRLR/DRIVE TRAIN J1939/CLUSTER	FWD CHASSIS
REAR AXLE TEMP	YES	SYSTEM CTRLR/DRIVE TRAIN J1939/CLUSTER	AXLE

NOTES:

1) WARNING LIGHTS ARE PART OF THE GAUGES AND LOCATED IN THE GAUGE

CHK	DATE	CHANGE	REV	REFERENCE	DRAWN	NAME		
PEC	16JAN01	PRODUCTION RELEASE.	A	P54304U	U00JXP9	42/43/44/85/8600 & 73/74/7500 CIRC DIAGRAMS		
					RELEASE NO.	DATE	PART NO.	SHEET
					P52778H	09AUG00	AE08-52371	01

Figure 67 IP/Gauge List

8.2. WARNING LIGHT LIST, P. 2

INTERNATIONAL TRUCK AND ENGINE CORPORATION

THIS PRINT IS PROVIDED ON A RESTRICTED BASIS AND IS NOT TO BE USED IN ANY WAY DETRIMENTAL TO THE INTEREST OF INTERNATIONAL TRUCK AND ENGINE CORPORATION.

ELECTRICAL CIRCUIT DIAGRAM CHAPTER 7

WARNING LIGHTS LIST

IP WARNING LIGHTS		
WARNING LIGHT TITLE	SIGNAL PATH	SENSOR LOCATION
RANGE INHIBITED	TRANS CTRLR/DRIVE TRAIN J1939/CLUSTER	
FUEL FILTER	SYSTEM CTRLR/DRIVE TRAIN J1939/CLUSTER	FUEL FILTER
ENGINE (YELLOW LED)	ENGINE CTRLR/DRIVE TRAIN J1939/CLUSTER	
ENGINE (RED LED)	ENGINE CTRLR/DRIVE TRAIN J1939/CLUSTER	
BRAKE PRESSURE (O)	SYSTEM CTRLR/DRIVE TRAIN J1939/CLUSTER	SWITCH
BRAKE FLUID	SYSTEM CTRLR/DRIVE TRAIN J1939/CLUSTER	BRK RESEVOIR
TRAC CTRL	TRUCK ABS CTRLR/DRIVE TRAIN J1939/CLUSTER	
CHECK TRANS	TRANS CTRLR/DRIVE TRAIN J1939/CLUSTER	
TRAILER ABS	TRLR ABS CTRLR/DRIVE TRAIN J1939/CLUSTER	
WASHER FLUID	SYSTEM CTRLR/DRIVE TRAIN J1939/CLUSTER	WASHER BOTTLE
(LEFT TURN)	SYSTEM CTRLR/DRIVE TRAIN J1939/CLUSTER	TURN SIG SW
AIR BAG	DISCRETE NOT ON DATA BUS	
WATER IN FUEL	SYSTEM CTRLR/DRIVE TRAIN J1939/CLUSTER	FUEL FILTER
COOLANT LEVEL	ENGINE CTRLR/DRIVE TRAIN J1939/CLUSTER	SURGE TANK
CHECK ELECT SYS	SYSTEM CTRLR/DRIVE TRAIN J1939/CLUSTER	
PARK (P)	SYSTEM CTRLR/DRIVE TRAIN J1939/CLUSTER	SWITCH
CRUISE	SYSTEM CTRLR/DRIVE TRAIN J1939/CLUSTER	
ABS	TRUCK CTRLR/DRIVE TRAIN J1939/CLUSTER	
(RIGHT TURN)	SYSTEM CTRLR/DRIVE TRAIN J1939/CLUSTER	
WAIT TO START	ENGINE CTRLR/DRIVE TRAIN J1939/CLUSTER	
FASTEN BELTS	SYSTEM CTRLR/DRIVE TRAIN J1939/CLUSTER	
(HIGH BEAM IND)	SYSTEM CTRLR/DRIVE TRAIN J1939/CLUSTER	
COLD AMB PROTEC	SYSTEM CTRLR/DRIVE TRAIN J1939/CLUSTER	
RETARD OVERHEAT	TRANS CTRLR/DRIVE TRAIN J1939/CLUSTER	TRANSMISSION
CHECK AC	SYSTEM CTRLR/DRIVE TRAIN J1939/CLUSTER	
AUTO NEUTRAL	DISCRETE NOT ON DATA BUS	SWITCH
ALTERNATOR	DISCRETE NOT ON DATA BUS	
PTO/THROTTLE	SYSTEM CTRLR/DRIVE TRAIN J1939/CLUSTER	
OPTIMIZED IDLE	DISCRETE NOT ON DATA BUS	
SNOW VALVE	DISCRETE NOT ON DATA BUS	SNOW VALVE
FR AXLE DIFF LOCK	DISCRETE NOT ON DATA BUS	FWD RR AXLE
RR AXLE DIFF LOCK	DISCRETE NOT ON DATA BUS	RR RR AXLE
MESSAGE WAIT	DISCRETE NOT ON DATA BUS	
PTO	DISCRETE NOT ON DATA BUS	
CONVERTER TEMP	DISCRETE NOT ON DATA BUS	
TOUCHLOC RELEASE	DISCRETE NOT ON DATA BUS	
PARK FLUID	SYSTEM CTRLR/DRIVE TRAIN	
FR AXLE ENGAGED	DISCRETE NOT ON DATA BUS	TRANSFER CASE

CHK	DATE	CHANGE	REV	REFERENCE	DRAWN	NAME
50BT05		CONVERSION FROM SABER TO UG	C	59756E	U00JXP9	42/43/44/85/8600 & 73/74/7500 CIRC DIAGRAMS
					RELEASE NO. 52778H	DATE 09AUG00 · PART NO. AE08-52371 · SHEET 02

Figure 68 Warning Light List

8.3. WARNING LIGHTS CONTROLLED BY ENGINE, TRANSMISSION, ABS CONTROLLER, P. 3

INTERNATIONAL TRUCK AND ENGINE CORPORATION THIS PRINT IS PROVIDED ON A RESTRICTED BASIS AND IS NOT TO BE USED IN ANY WAY DETRIMENTAL TO THE INTEREST OF INTERNATIONAL TRUCK AND ENGINE CORPORATION.	ELECTRICAL CIRCUIT DIAGRAM CHAPTER 7 WARNING LIGHTS CONTROLLED BY ENGINE, TRANSMISSION, ABS CONTROLLER

THE FOLLOWING WARNING LIGHTS ARE CONTROLLED BY THE ENGINE, TRANSMISSION, OR ABS CONTROLLER OVER THE DATA BUS AND DO NOT HAVE INDEPENDENT CIRCUITRY THAT CAN BE OR NEEDS TO BE SHOWN:

RANGE INHIBIT

ENGINE (YELLOW LED)

ENGINE (RED LED)

TRAC CTRL

CHECK TRANS

TRAILER ABS

CHECK ELECTR SYS

ABS

WAIT TO START

RETARD OVERHEAT

AUTO NEUTRAL (NOT ON DATA BUS TO CLUSTER)

OPTIMIZED IDLE (NOT ON DATA BUS TO CLUSTER)

CHK	DATE	CHANGE	REV	REFERENCE	DRAWN	NAME		
PEC	16JAN01	PRODUCTION RELEASE.	A	P54304U	U00JXP9	42/43/44/85/8600 & 73/74/7500 CIRC DIAGRAMS		
					RELEASE NO.	DATE	PART NO.	SHEET
					P52778H	20JUN00	AE08-52371	03

Figure 69 Warning Lights Controlled by Engine, Transmission, ABS Controller

8.4. ENGINE OIL PRESSURE AND TEMP, SPEEDOMETER, TACH, VOLTMETER AND WATER TEMP GAUGE CIRCUITS, P. 4

INTERNATIONAL TRUCK AND ENGINE CORPORATION

THIS PRINT IS PROVIDED ON A RESTRICTED BASIS AND IS NOT TO BE USED IN ANY WAY DETRIMENTAL TO THE INTEREST OF INTERNATIONAL TRUCK AND ENGINE CORPORATION.

ELECTRICAL CIRCUIT DIAGRAM

CHAPTER 7

ENG OIL PRESS & TEMP, SPEEDOMETER, TACH, VOLTMETER & WATER TEMP GAUGE CIRCUITS

REFER TO CONSOLIDATED ENGINE/VEHICLE CONTROLLER DIAGNOSTICS MANUAL EGES-175 (DT466), EGES-190 (V8-AVNT), FOR CIRCUIT DIAGRAMS SHOWING INPUT CIRCUITRY FOR THE FOLLOWING DATALINK DRIVEN SYSTEM:

ENGINE OIL PRESSURE GAUGE

ENGINE OIL TEMPERATURE GAUGE

SPEEDOMETER GAUGE

TACHOMETER GAUGE

WATER TEMPERATURE GAUGE

CHK	DATE	CHANGE	REV	REFERENCE	DRAWN	NAME		
					U00JXP9	42/43/44/85/8600 & 73/74/7500 CIRC DIAGRAMS		
PEC	16JAN01	PRODUCTION RELEASE.	A	P54304U	RELEASE NO.	DATE	PART NO.	SHEET
					P52778H	20JUN00	AE08-52371	04

Figure 70 Engine Oil Pressure and Temp, Speedometer, Tach, Voltmeter and Water Temp Gauge Circuits

8.5. IP/GAUGES AND WARNING LIGHTS — GAUGE CLUSTER, P. 5

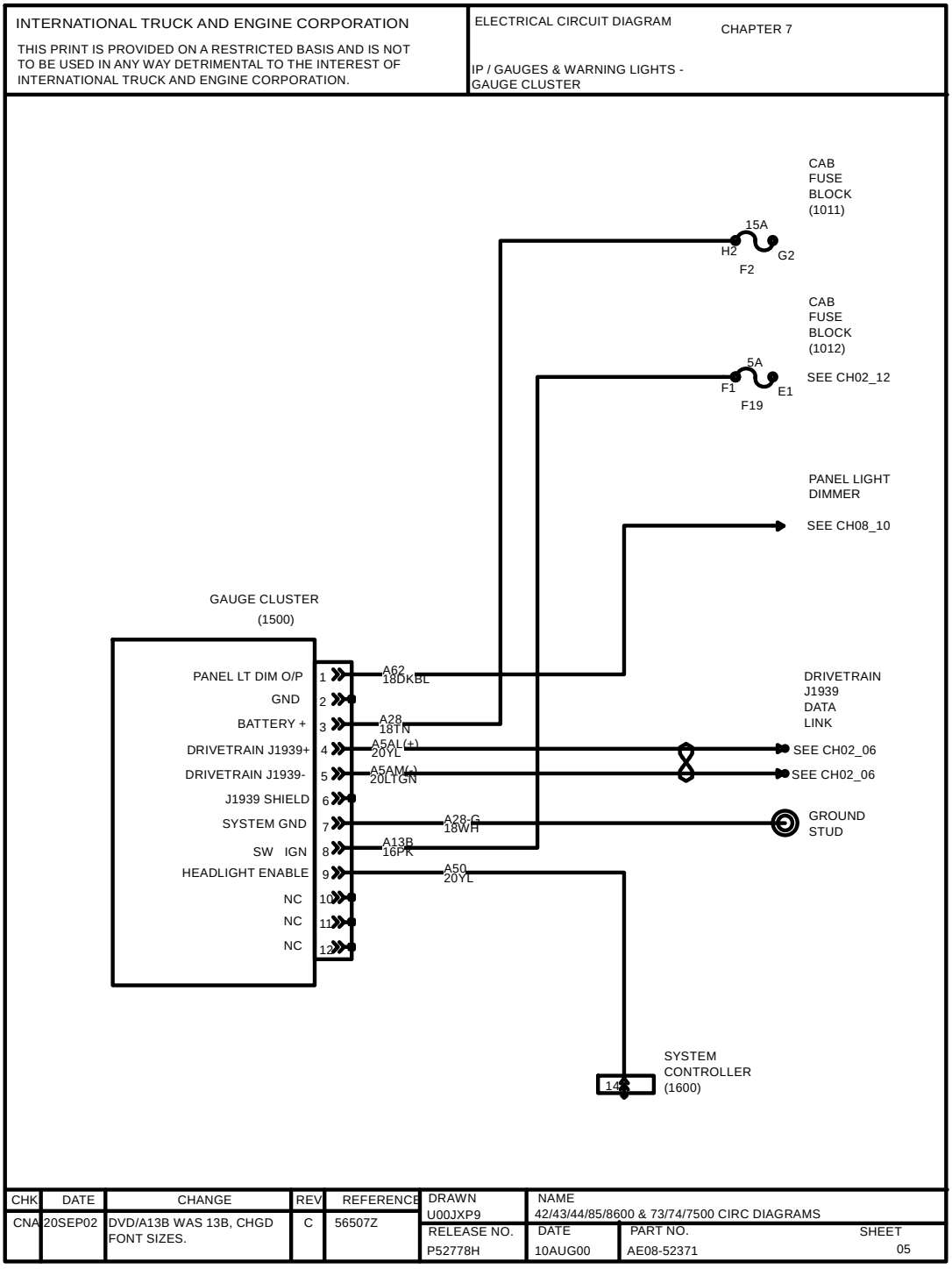

Figure 71 IP/Gauges and Warning Lights — Gauge Cluster

8.6. AIR PRESSURE INPUT CIRCUIT, P. 6

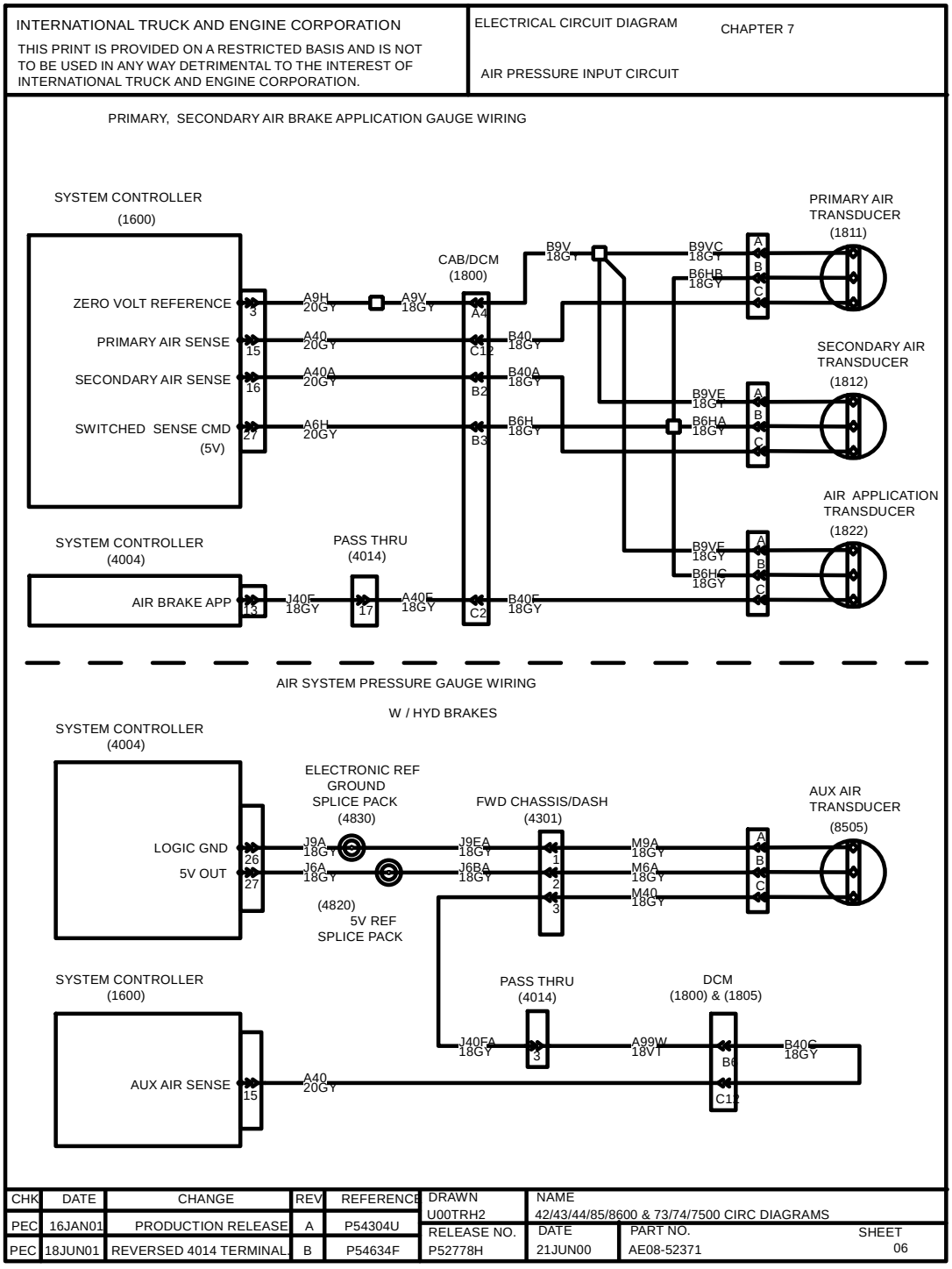

Figure 72 Air Pressure Input Circuit

8.7. AXLE TEMPERATURE, FWD REAR AND REAR AXLES, GAUGE INPUT CIRCUIT, P. 7

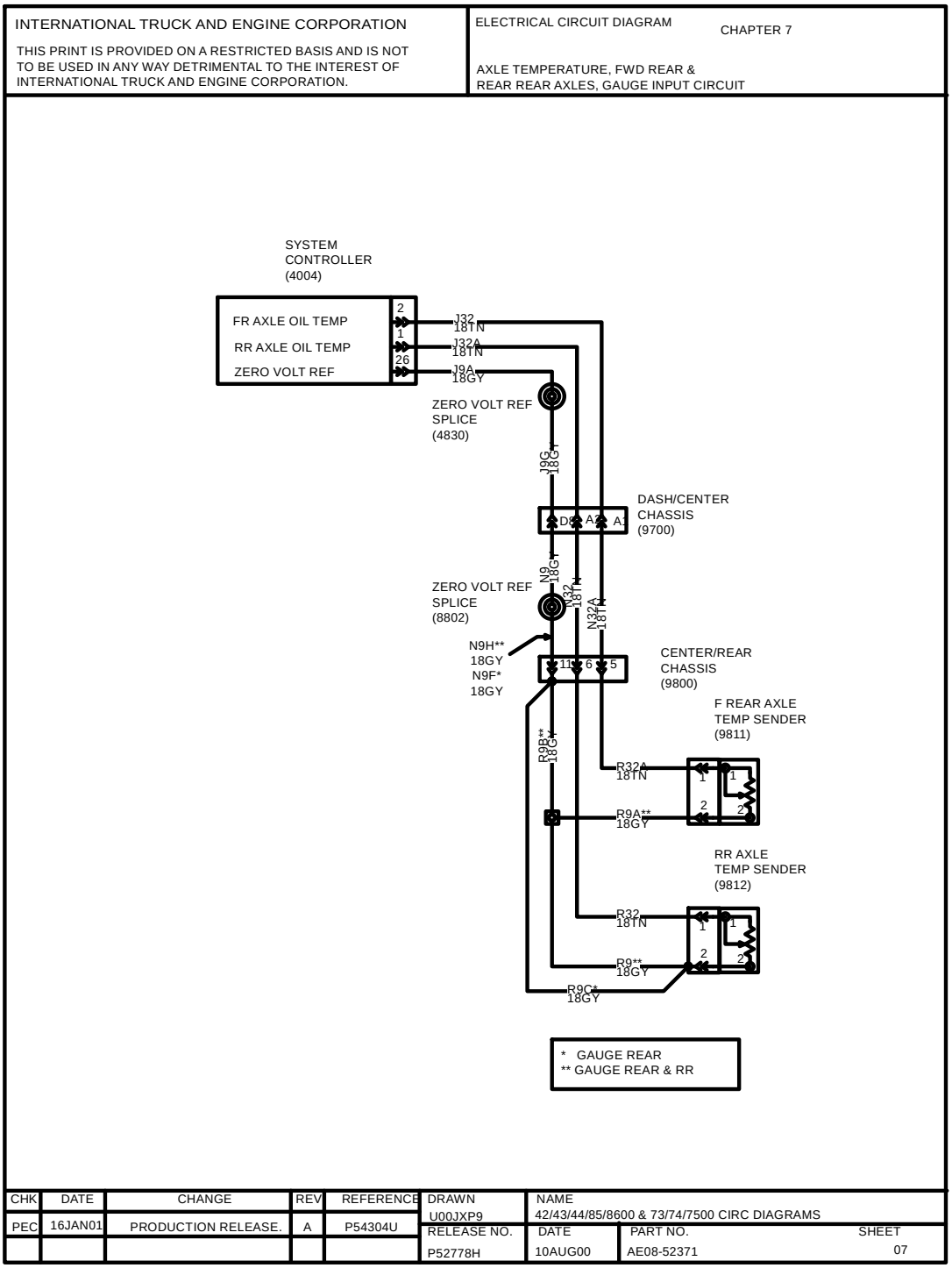

Figure 73 Axle Temperature, FWD Rear and Rear Axles, Gauge Input Circuit

8.8. FUEL GAUGE INPUT CIRCUIT (SINGLE TANK) DIFFERENTIAL LOCK WARNING LAMPS, P. 8

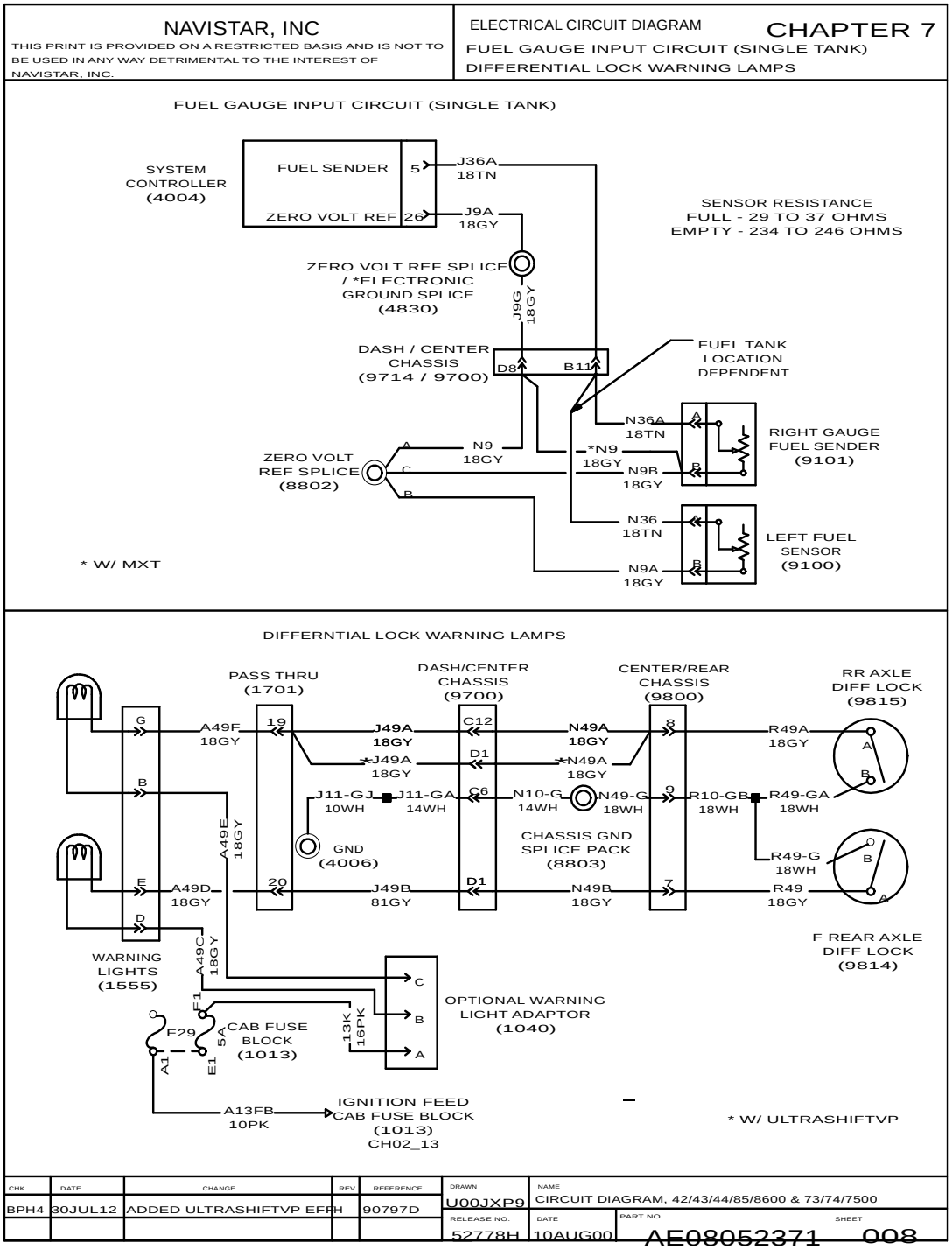

Figure 74 Fuel Gauge Input Circuit (Single Tank) Differential Lock Warning Lamps

8.9. GAUGES AND WARNING LIGHTS — FUEL FILTER RESTRICTION AND WATER IN FUEL LIGHTS, P. 9

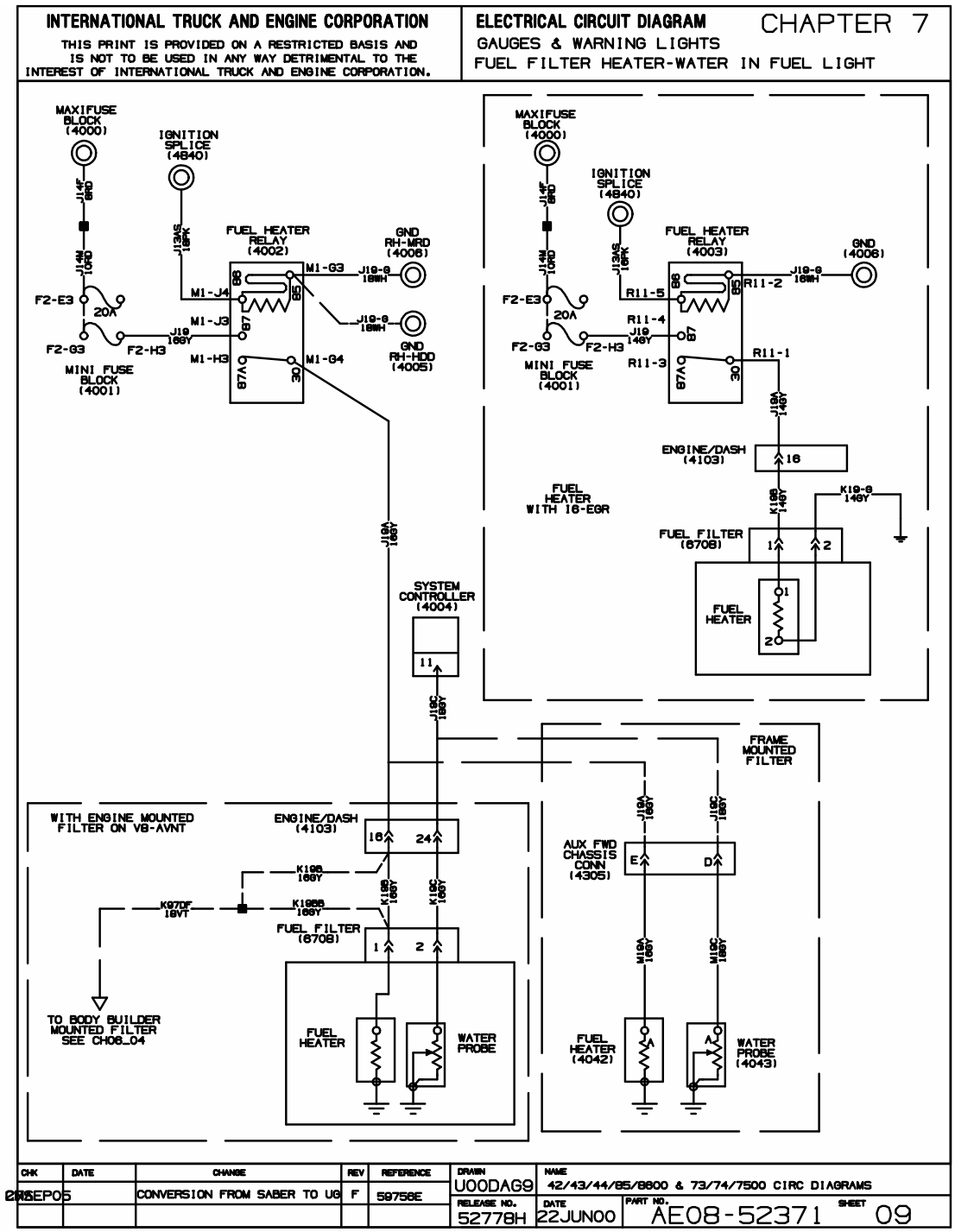

Figure 75 Gauges and Warning Lights — Fuel Filter Restriction and Water in Fuel Lights

8.10. GAUGES AND WARNING LIGHTS — PARK BRAKE LIGHT AND TRANSMISSION OIL TEMP. GAUGE, P. 10

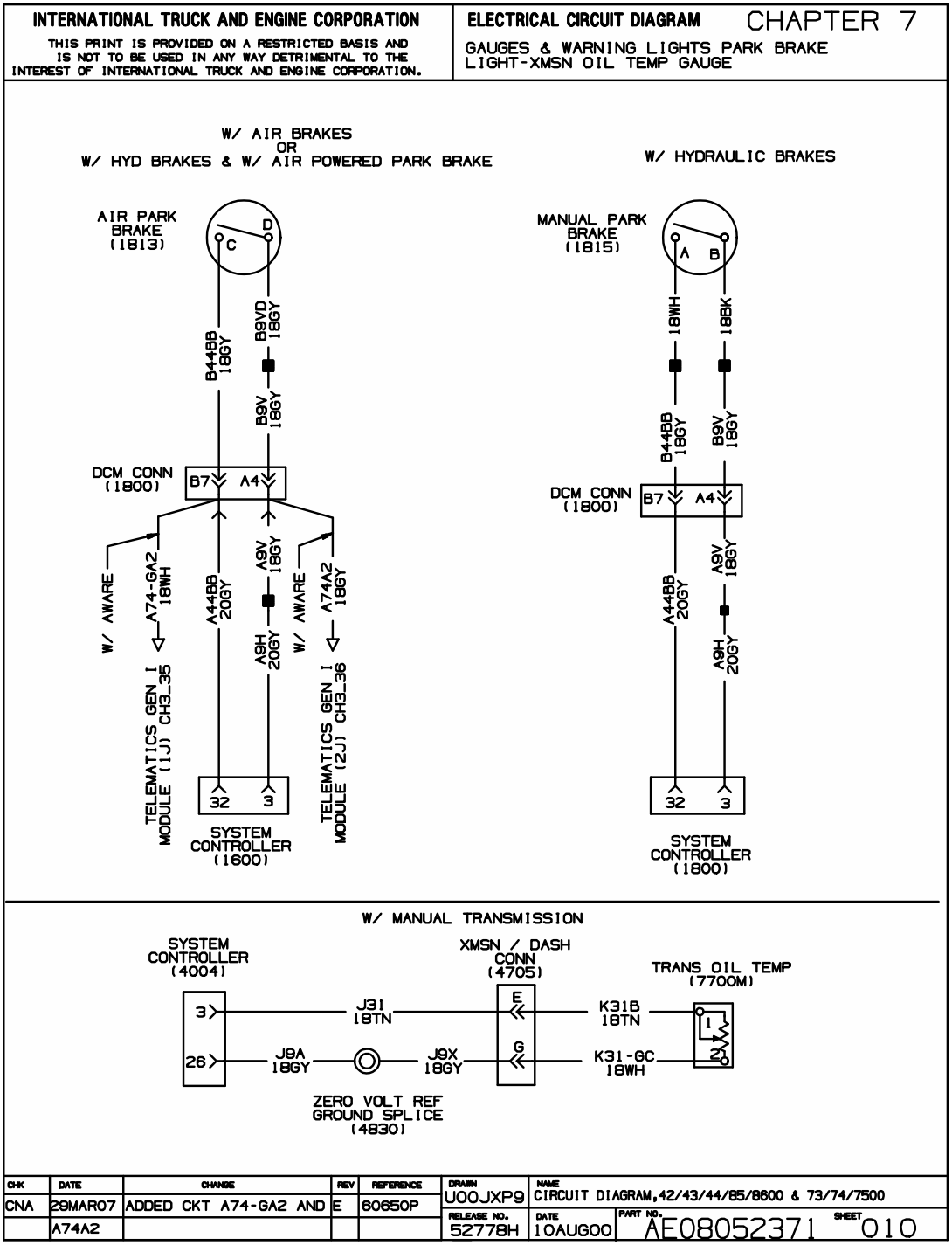

Figure 76 Gauges and Warning Lights — Park Brake Light and Transmission Oil Temp. Gauge

8.11. GAUGES AND WARNING LIGHTS — AMMETER, P. 11

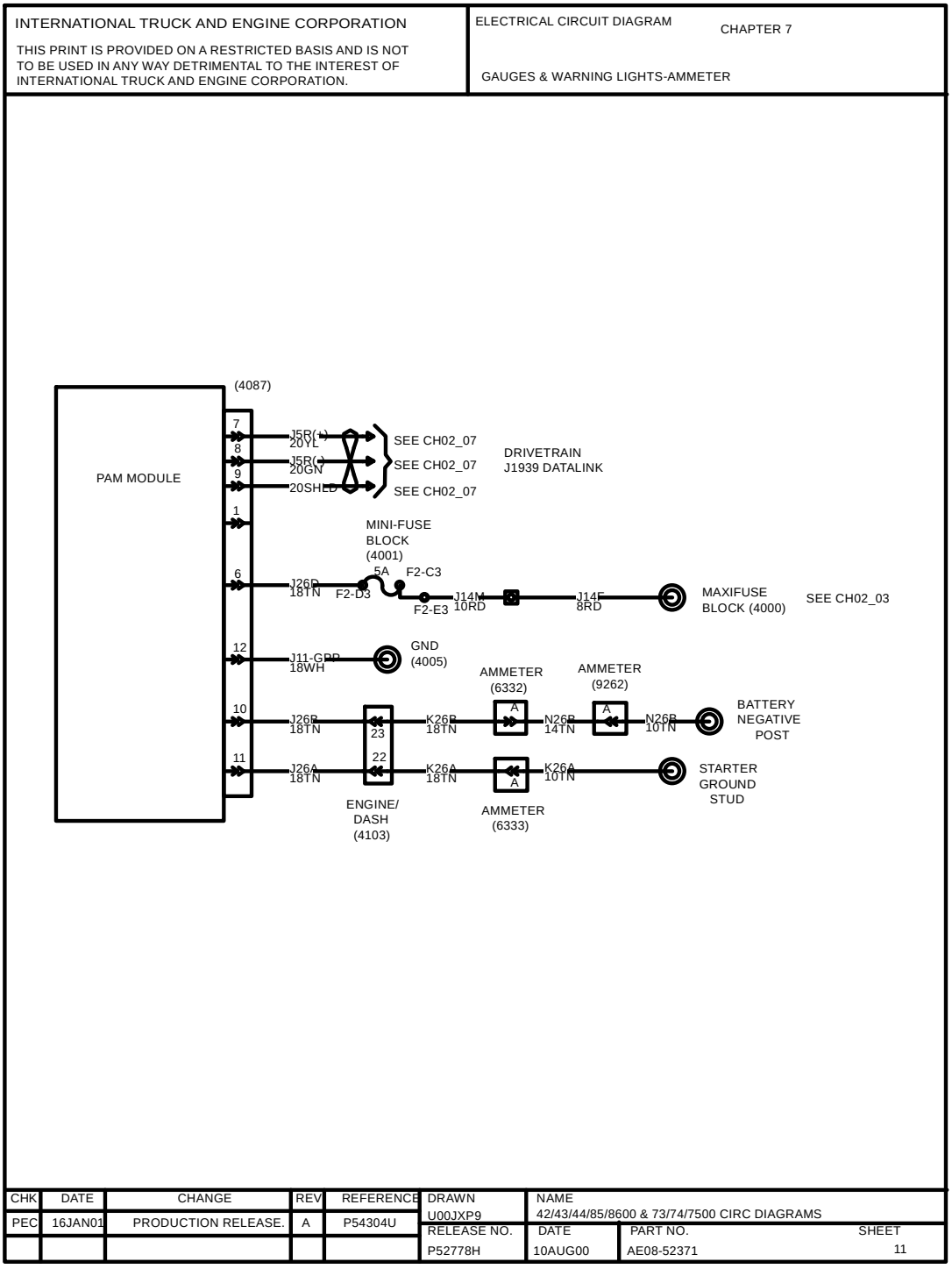

Figure 77 Gauges and Warning Lights — Ammeter

8.12. ENGINE OIL TEMPERATURE GAUGE WITH CATERPILLAR, P. 12

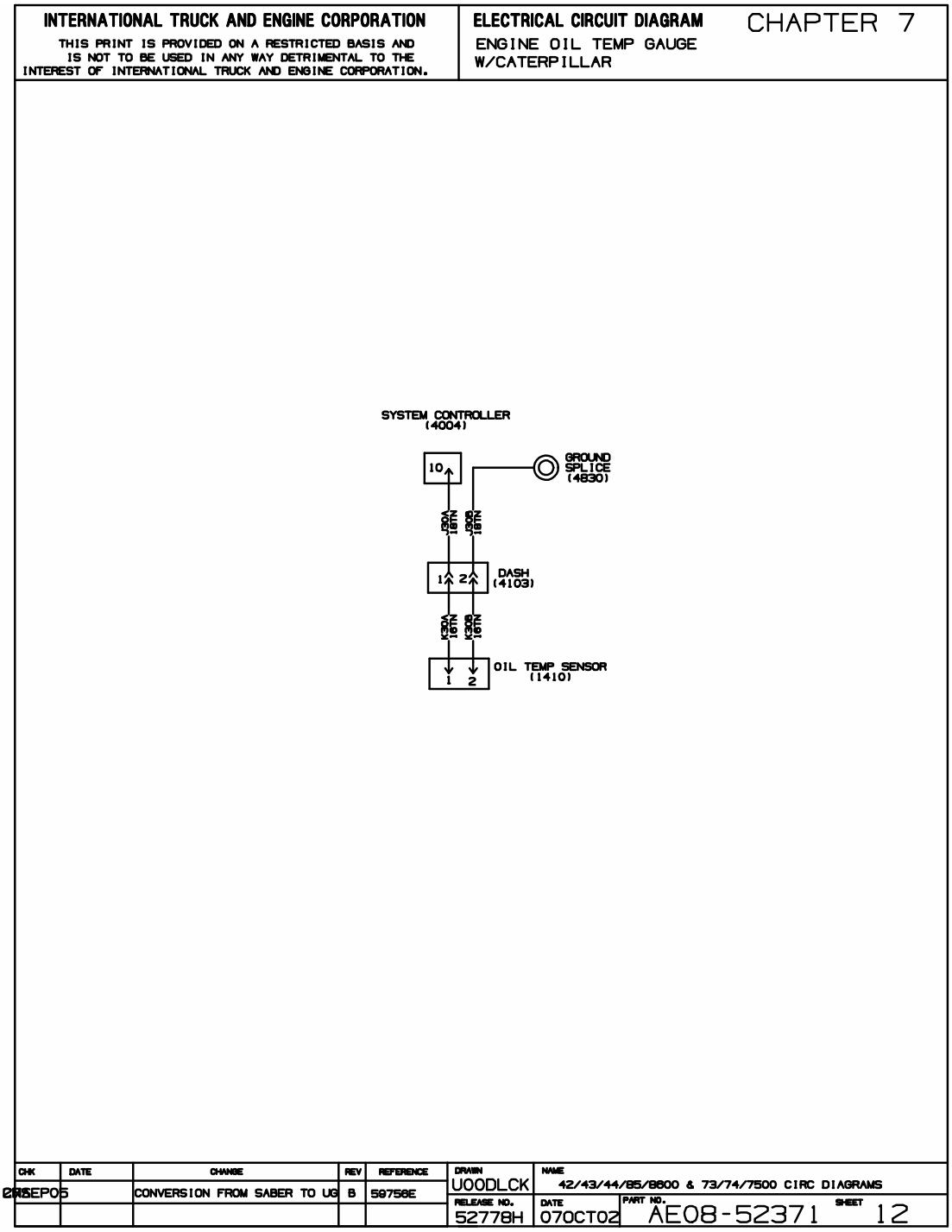

Figure 78 Engine Oil Temperature Gauge With Caterpillar

8.13. FRONT AXLE ENGAGEMENT LAMP, P. 13

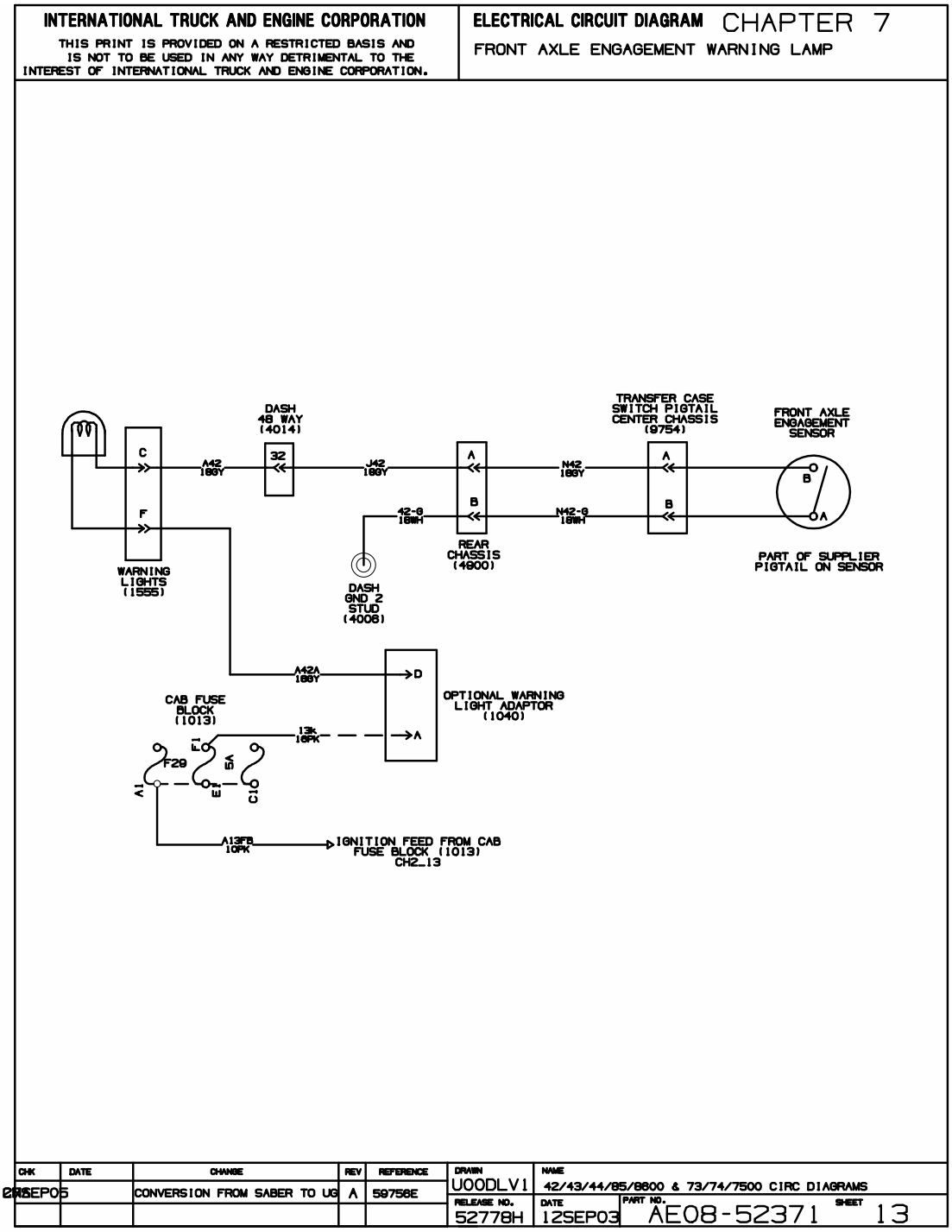

Figure 79 Front Axle Engagement Lamp

LIGHTS (CHAPTER 8)

9.1. BACK UP LIGHTS, P. 1

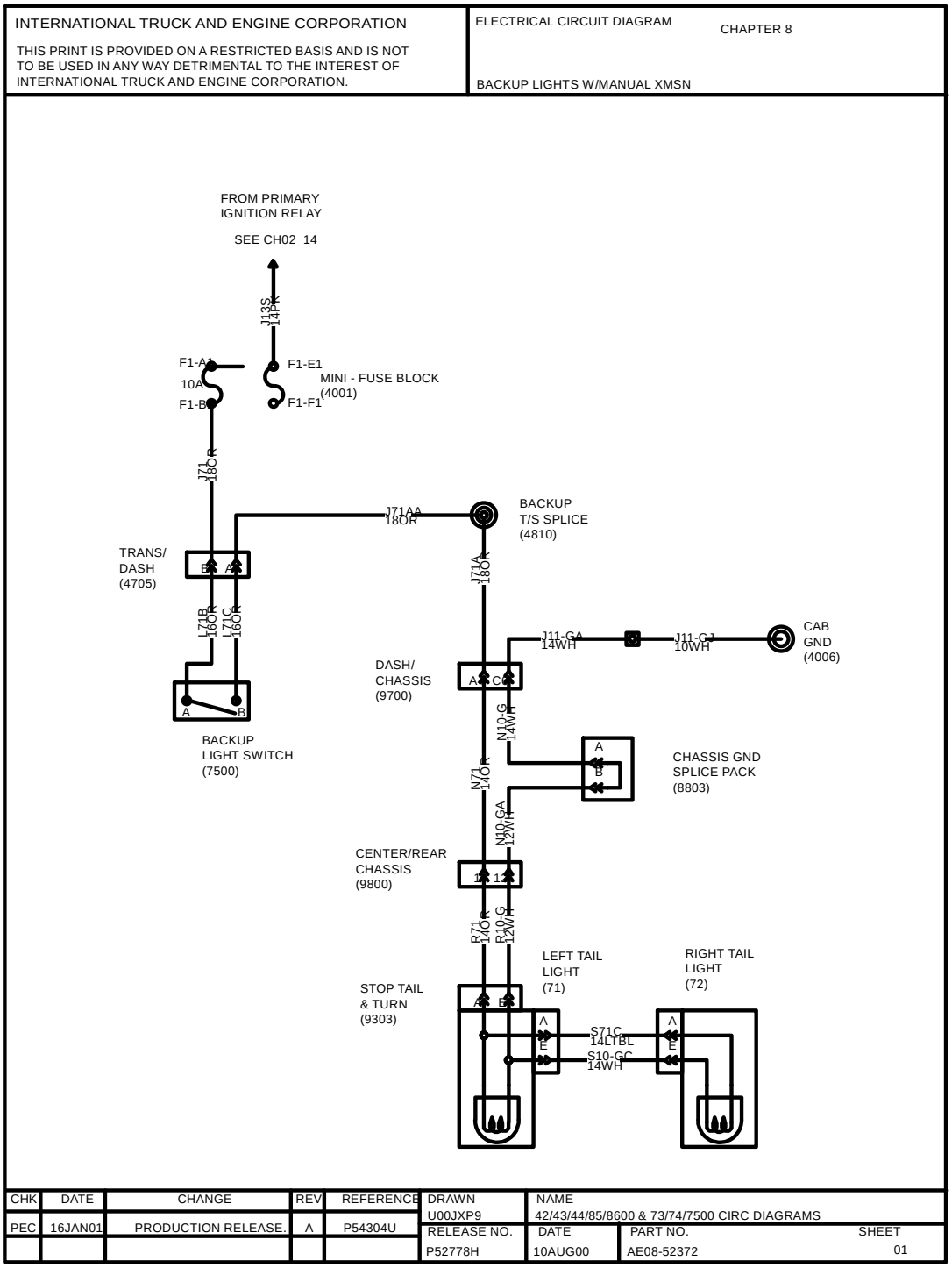

Figure 80 Back Up Lights

9.2. LIGHT SYSTEMS — CLEARANCE, MARKER, PARK, TAIL, TURN AND STOP LAMPS, P. 2

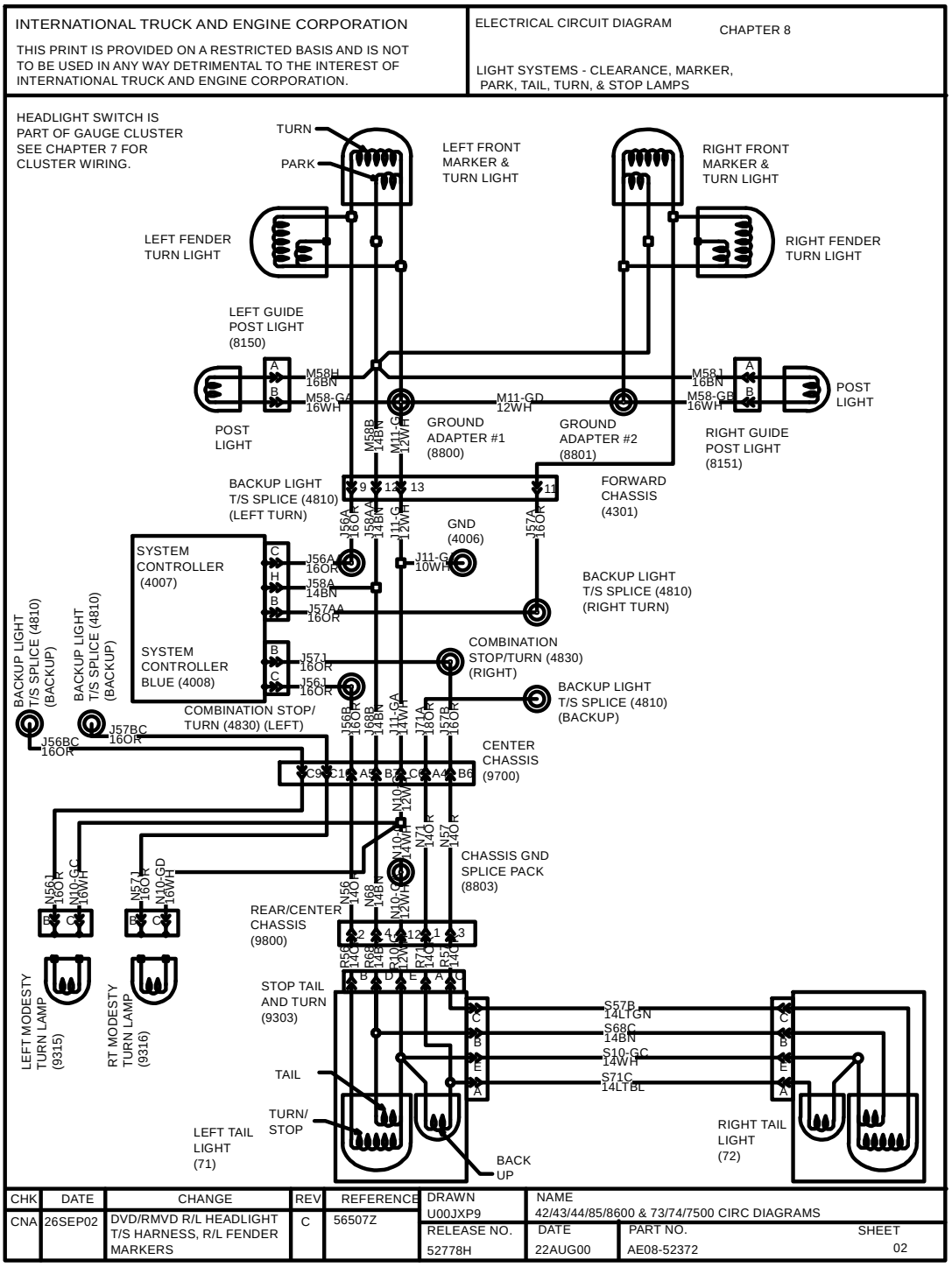

Figure 81 Light Systems — Clearance, Marker, Park, Tail, Turn and Stop Lamps

9.3. LIGHT SYSTEMS — CLEARANCE, MARKER, PARK, TAIL, TURN AND STOP LAMPS (CONT.), P. 3

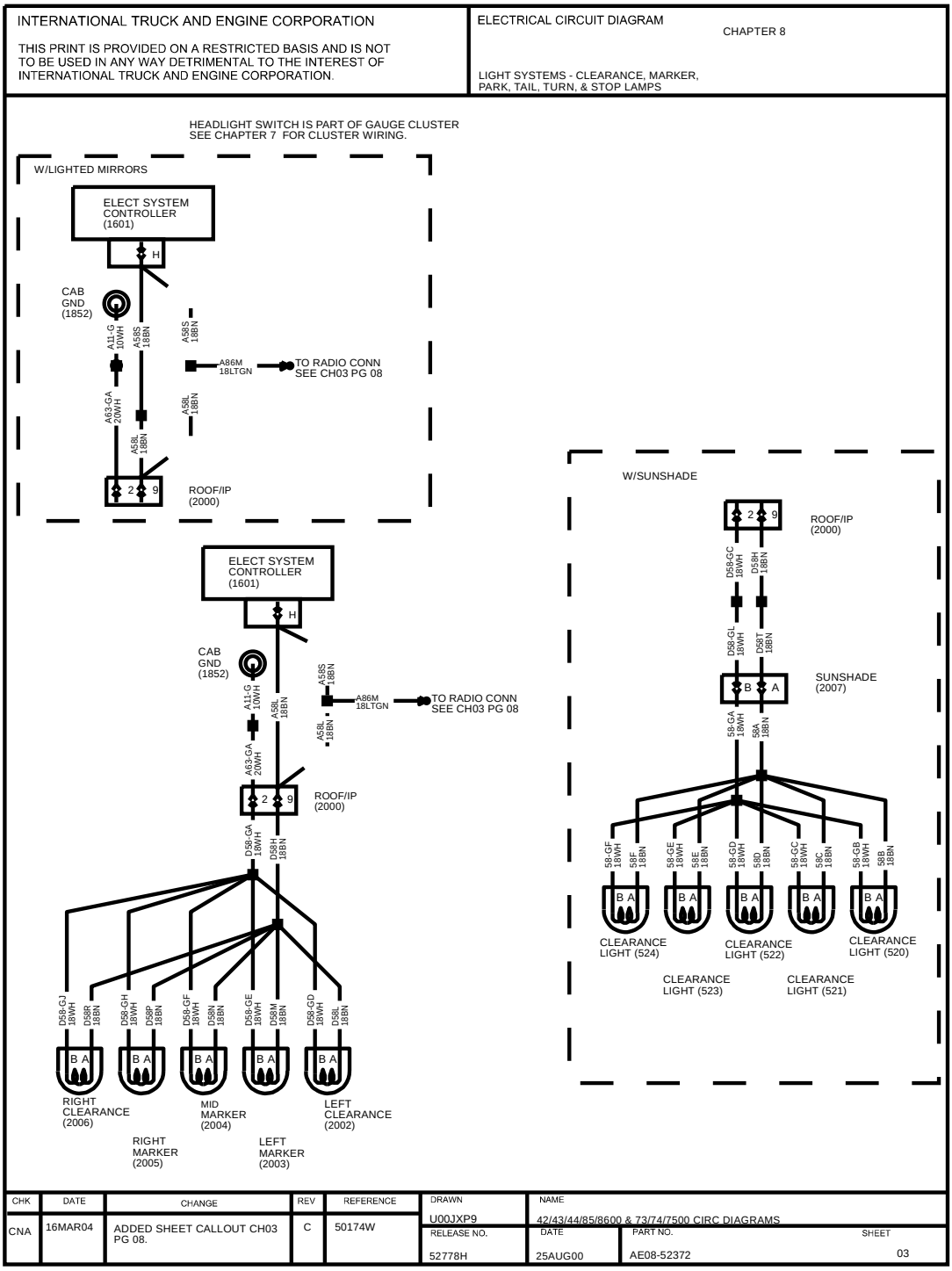

Figure 82 Light Systems — Clearance, Marker, Park, Tail, Turn and Stop Lamps (Cont.)

9.4. LIGHT SYSTEMS — TURN SIGNAL AND STOP SWITCHES, P. 4

INTERNATIONAL TRUCK AND ENGINE CORPORATION

THIS PRINT IS PROVIDED ON A RESTRICTED BASIS AND IS NOT TO BE USED IN ANY WAY DETRIMENTAL TO THE INTEREST OF INTERNATIONAL TRUCK AND ENGINE CORPORATION.

ELECTRICAL CIRCUIT DIAGRAM

CHAPTER 8

LIGHT SYSTEMS - TURN SIGNAL & STOP SWITCHES

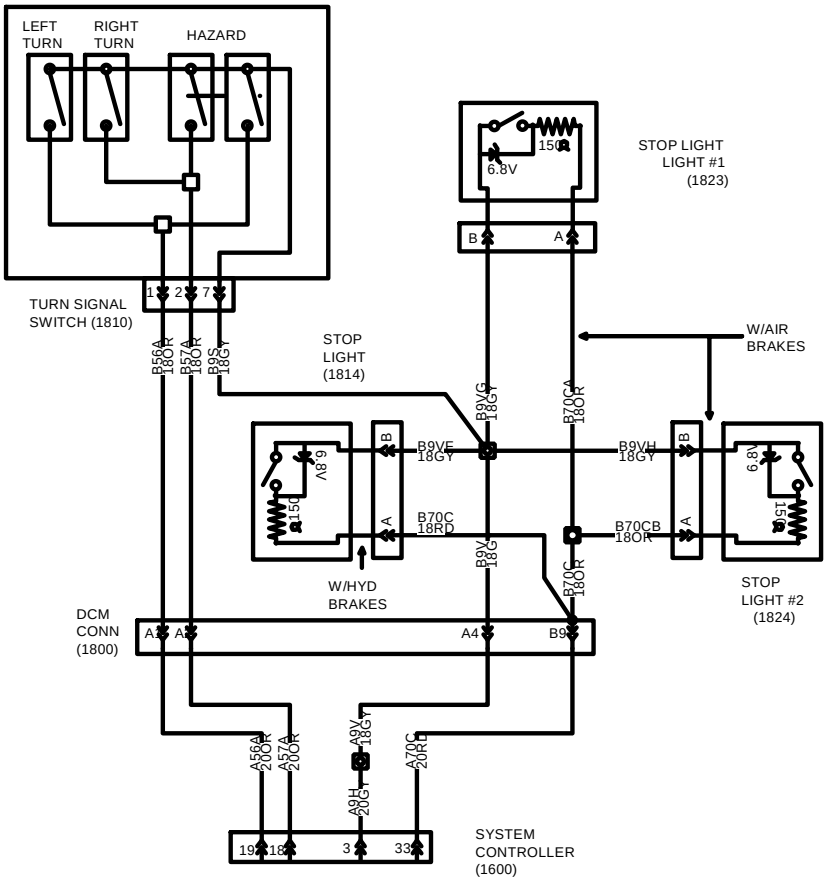

NOTE:

ONLY ONE STOP LIGHT SWITCH USED W/AIR BRAKES, W/TRACTOR

CHK	DATE	CHANGE	REV	REFERENCE	DRAWN	NAME		
PEC	16JAN01	PRODUCTION RELEASE.	A	P54304U	U00JXP9	42/43/44/85/8600 & 73/74/7500 CIRC DIAGRAMS		
					RELEASE NO.	DATE	PART NO.	SHEET
					P52778H	10AUG00	AE08-52372	04

Figure 83 Light Systems — Turn Signal and Stop Switches

9.5. DOME LIGHT, MAP LIGHT, P. 5

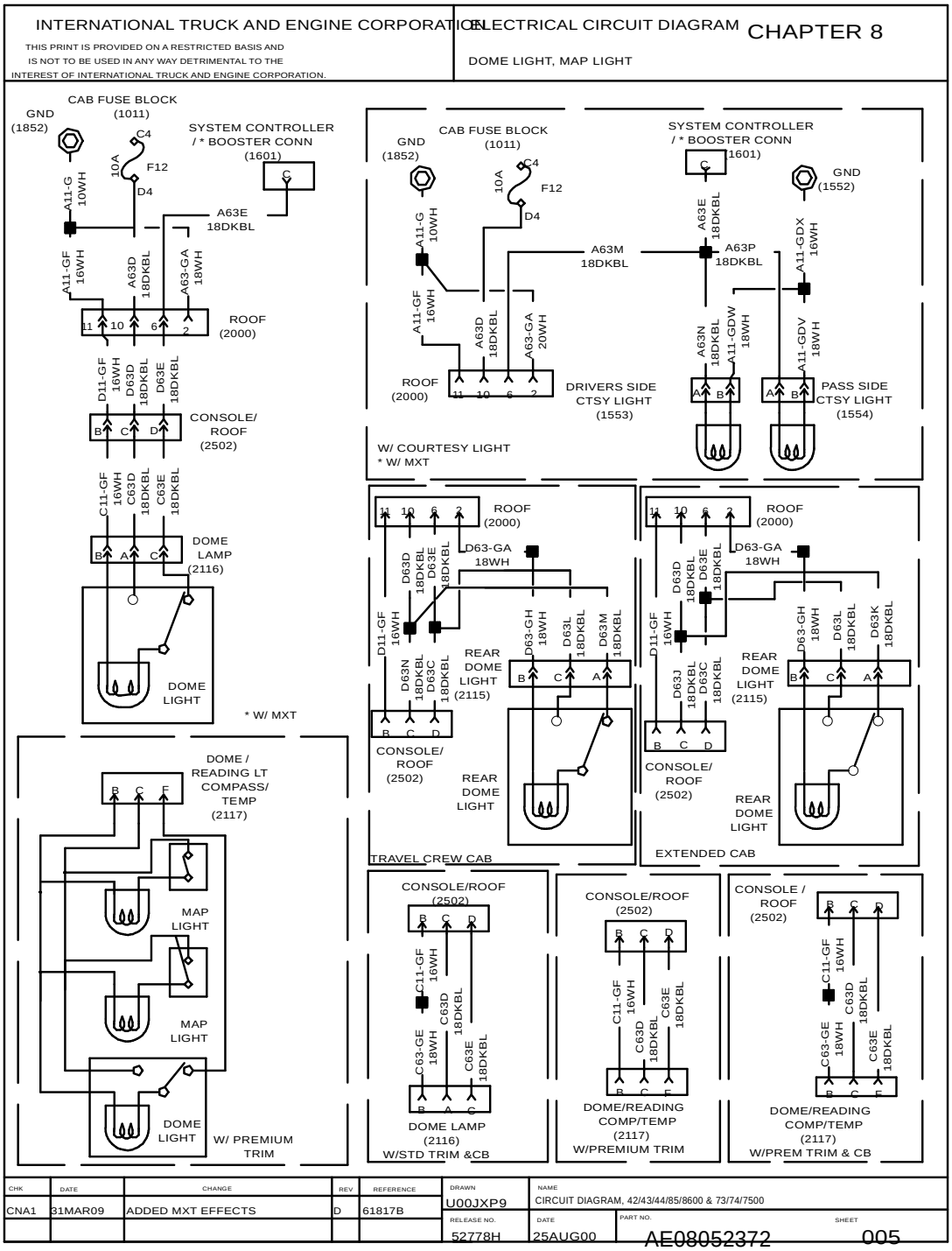

Figure 84 Dome Light, Map Light

9.6. DOME LIGHT, MAP LIGHT (CONT.), P. 6

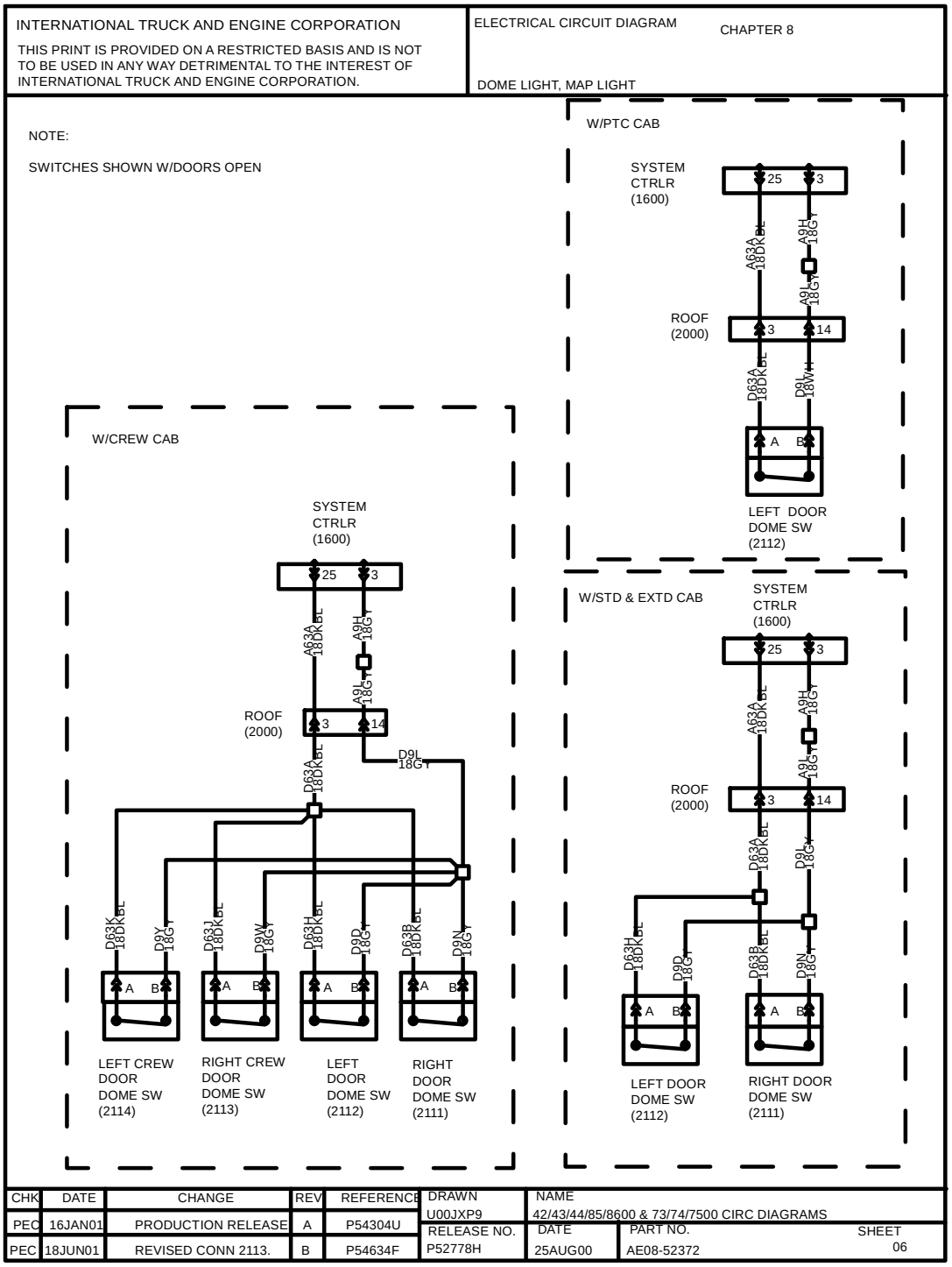

Figure 85 Dome Light, Map Light (Cont.)

9.7. FOG LIGHT AND WORK LIGHT, P. 7

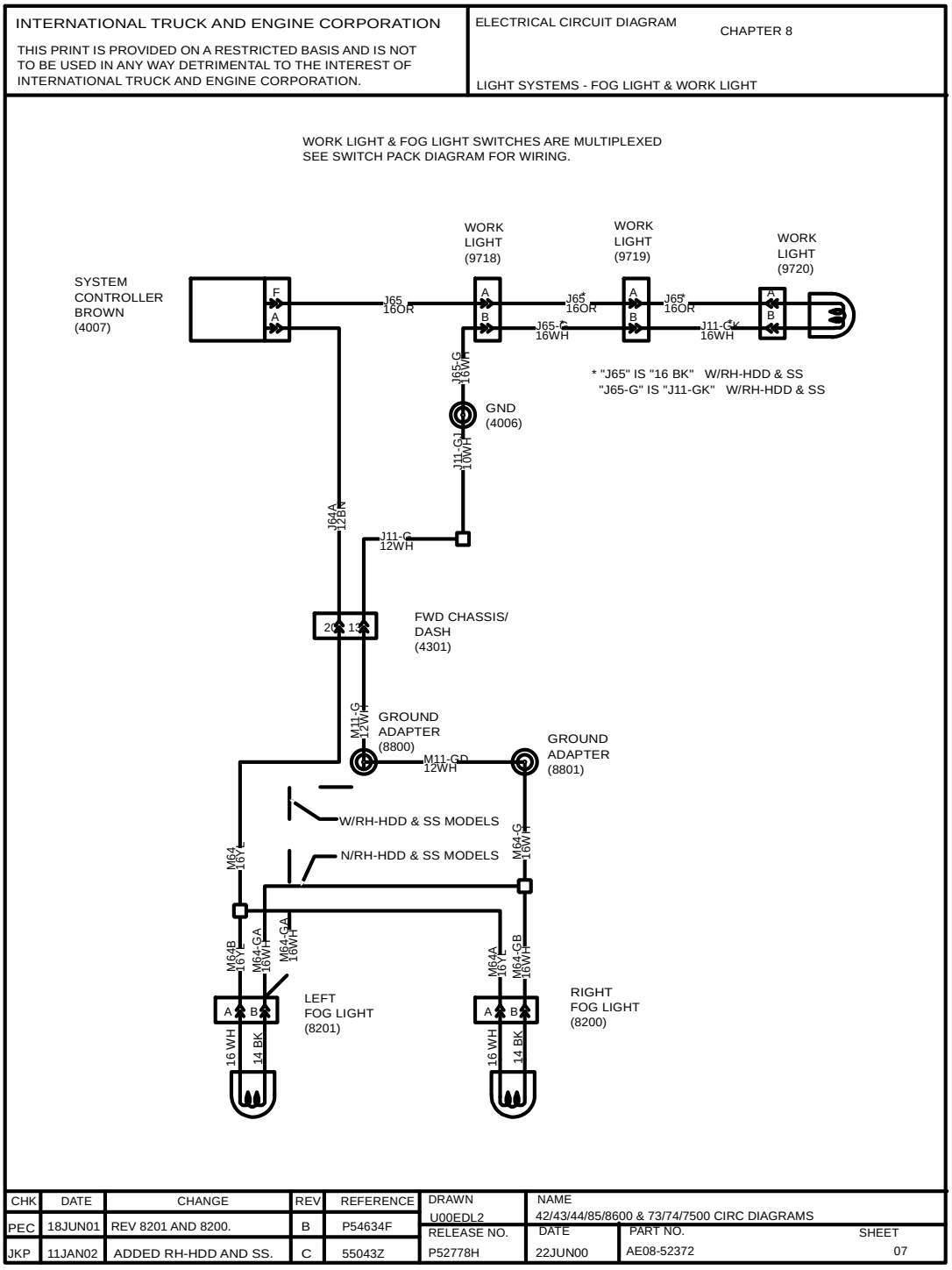

Figure 86 Fog Light and Work Light

9.8. HEADLIGHTS, P. 8

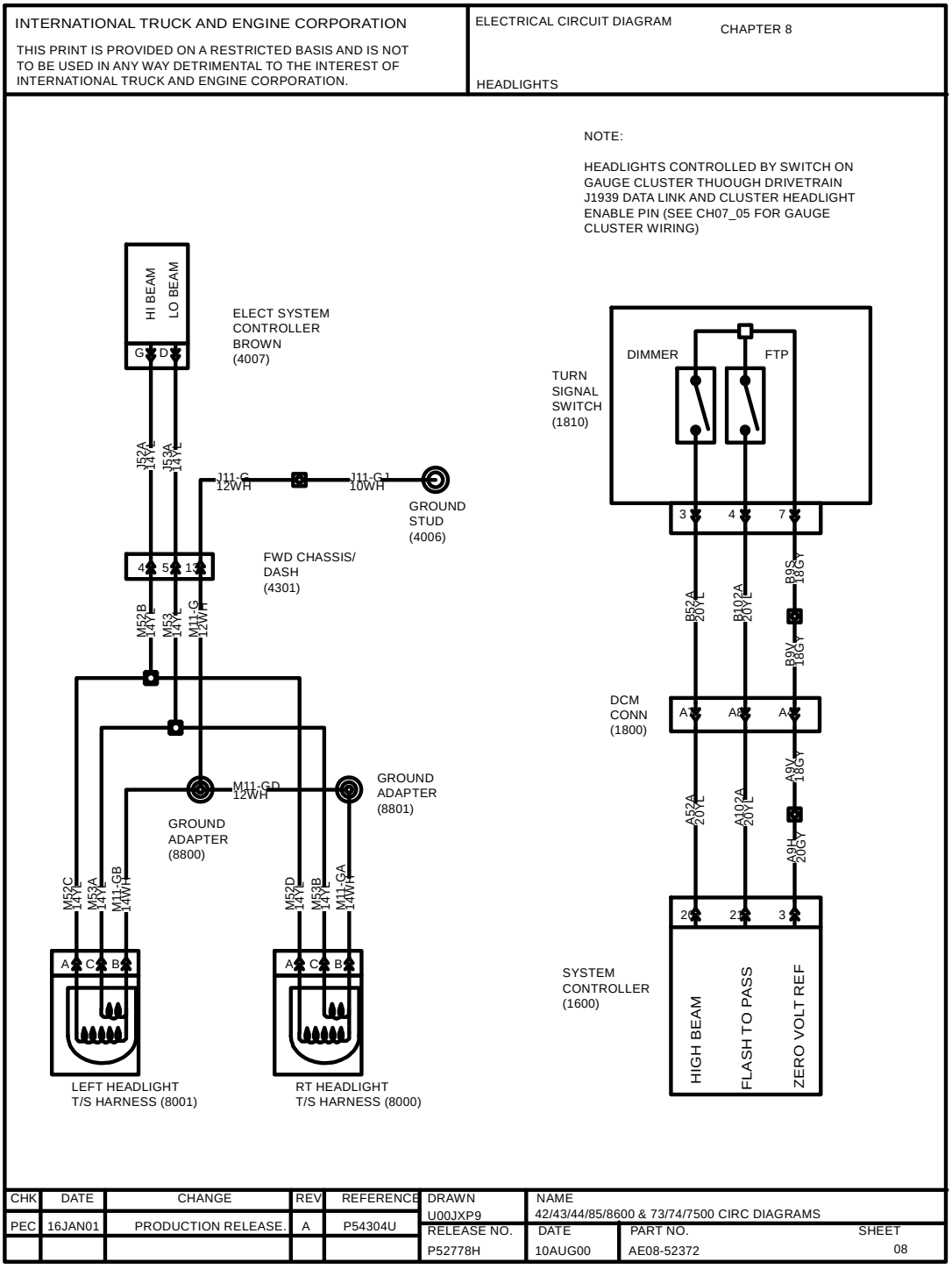

Figure 87 Headlights

9.9. AUX. HEADLIGHTS, AUX. PARK, AUX. TURN, P. 9

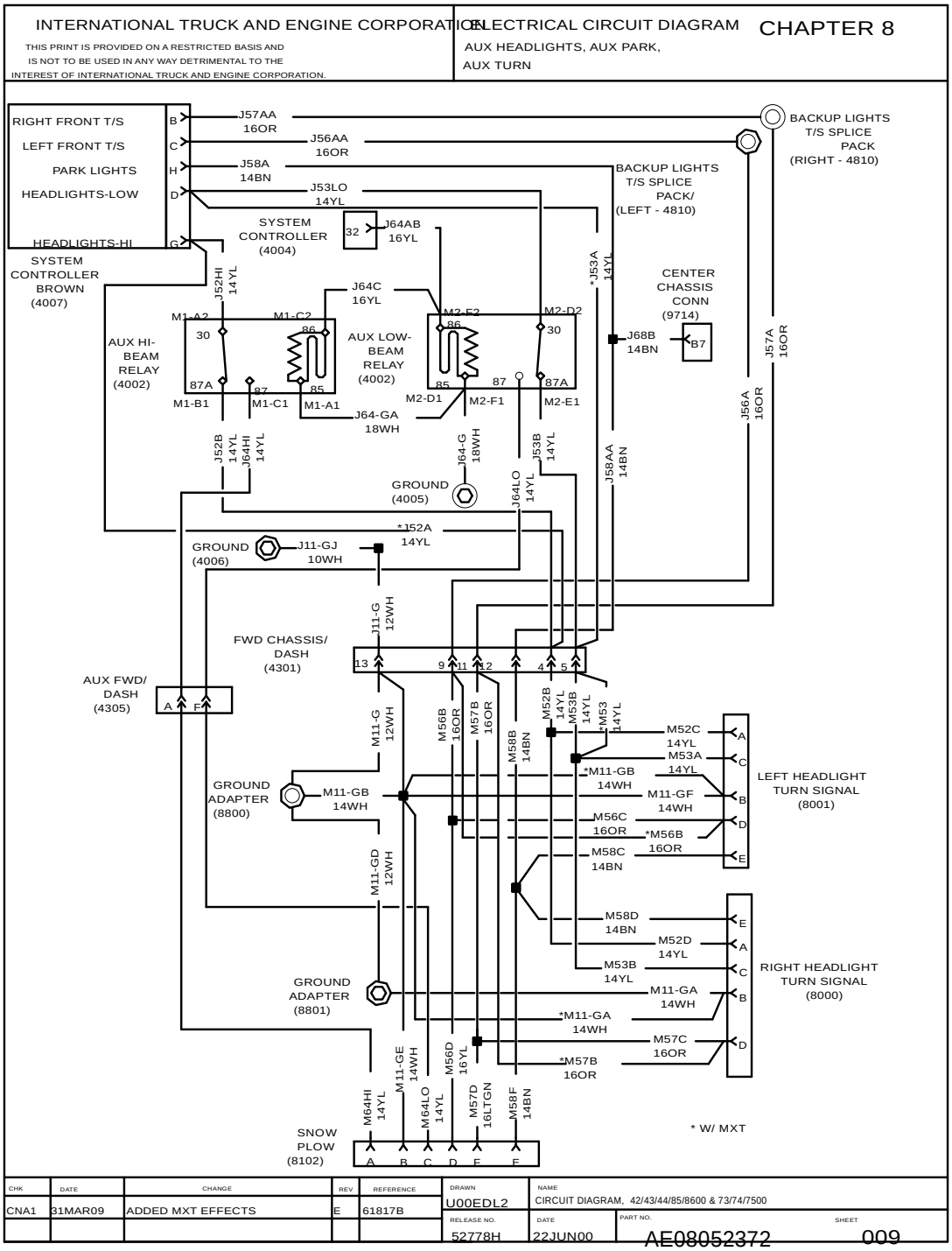

Figure 88 Aux. Headlights, Aux. Park, Aux Turn

9.10. PANEL LIGHTS, P. 10

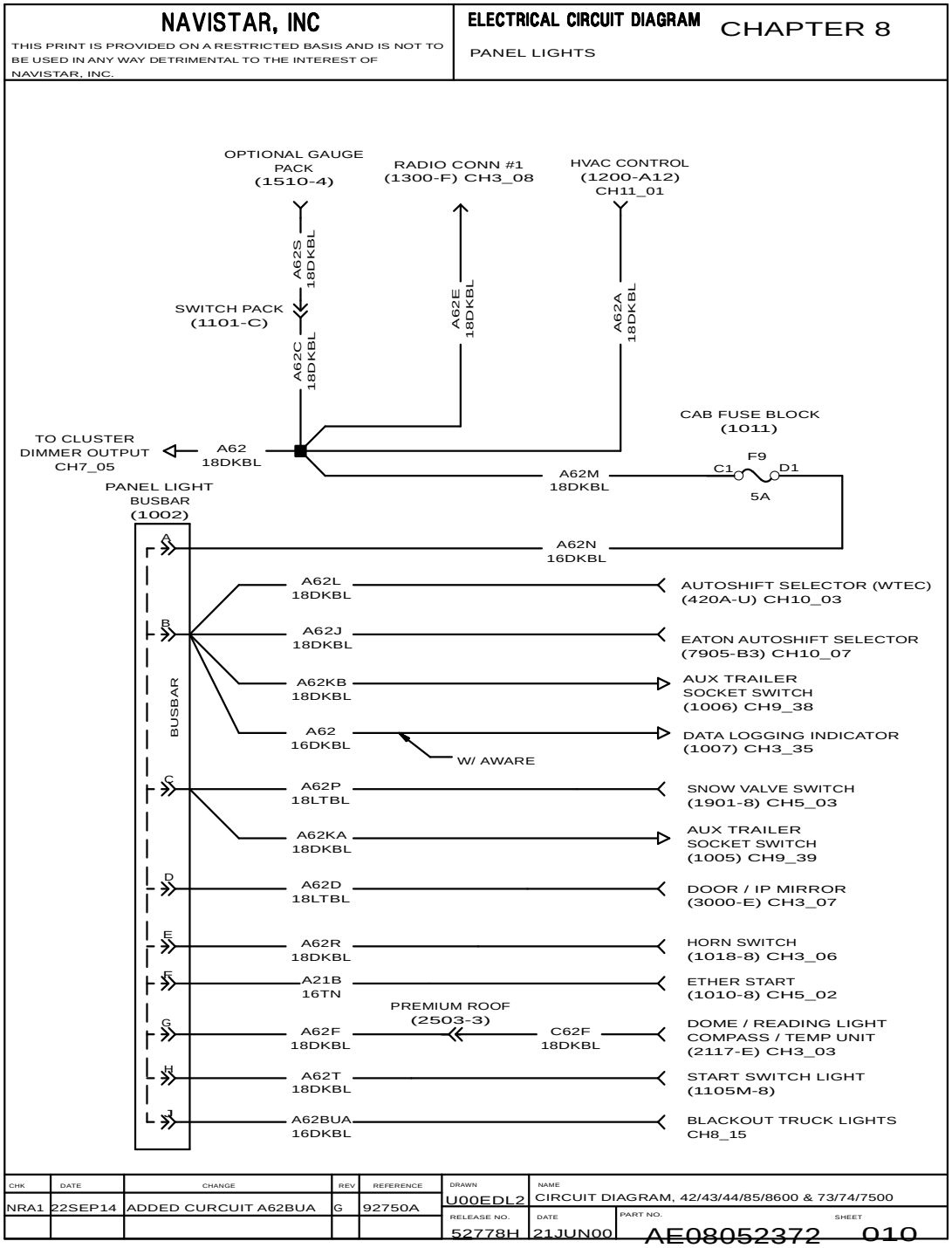

Figure 89 Panel Lights

CHASSIS ACCESSORIES (CHAPTER 9)

10.1. AIR DRYER AND HEATED DRAIN VALVE, P. 1

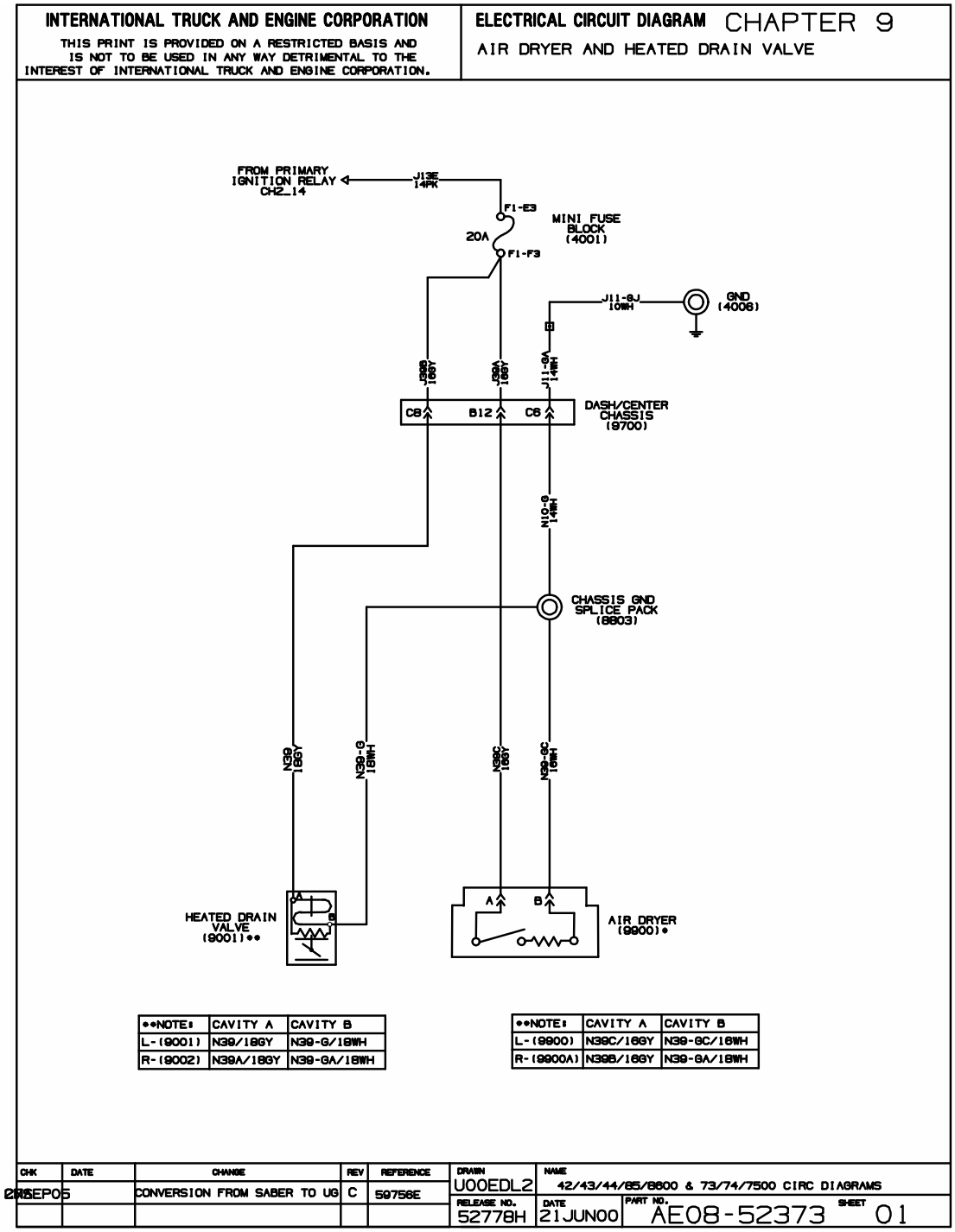

Figure 90 Air Dryer and Heated Drain Valve

10.2. ANTILOCK BRAKE SYSTEM (ABS), AIR, P. 2

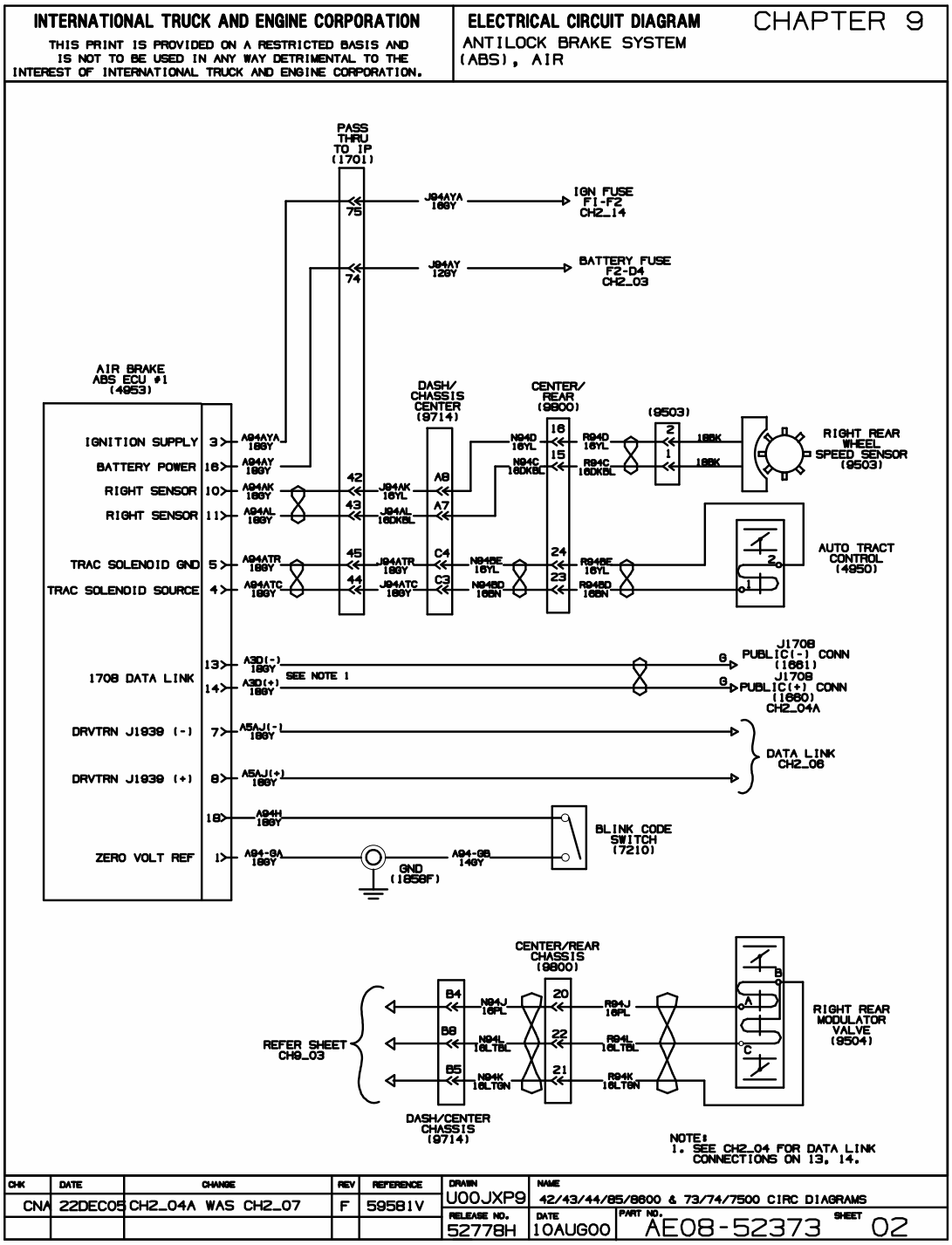

Figure 91 Antilock Brake System (ABS), Air

10.3. ANTILOCK BRAKE SYSTEM (ABS), AIR, TRACTION CONTROL, P. 3

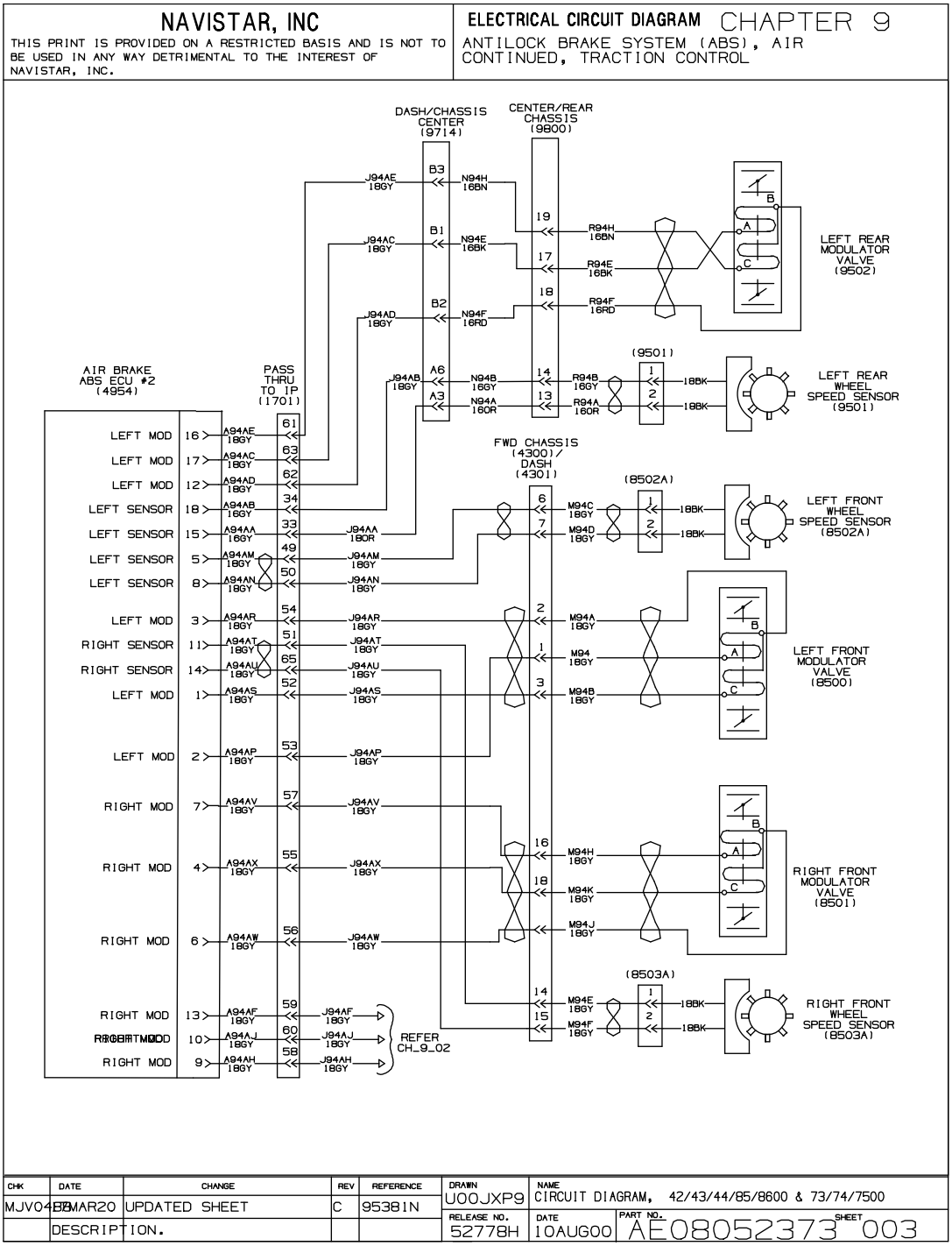

Figure 92 Antilock Brake System (ABS), Air, Traction Control

10.4. ANTILOCK BRAKE SYSTEM (ABS), AIR, TRACTION CONTROL, P. 3A

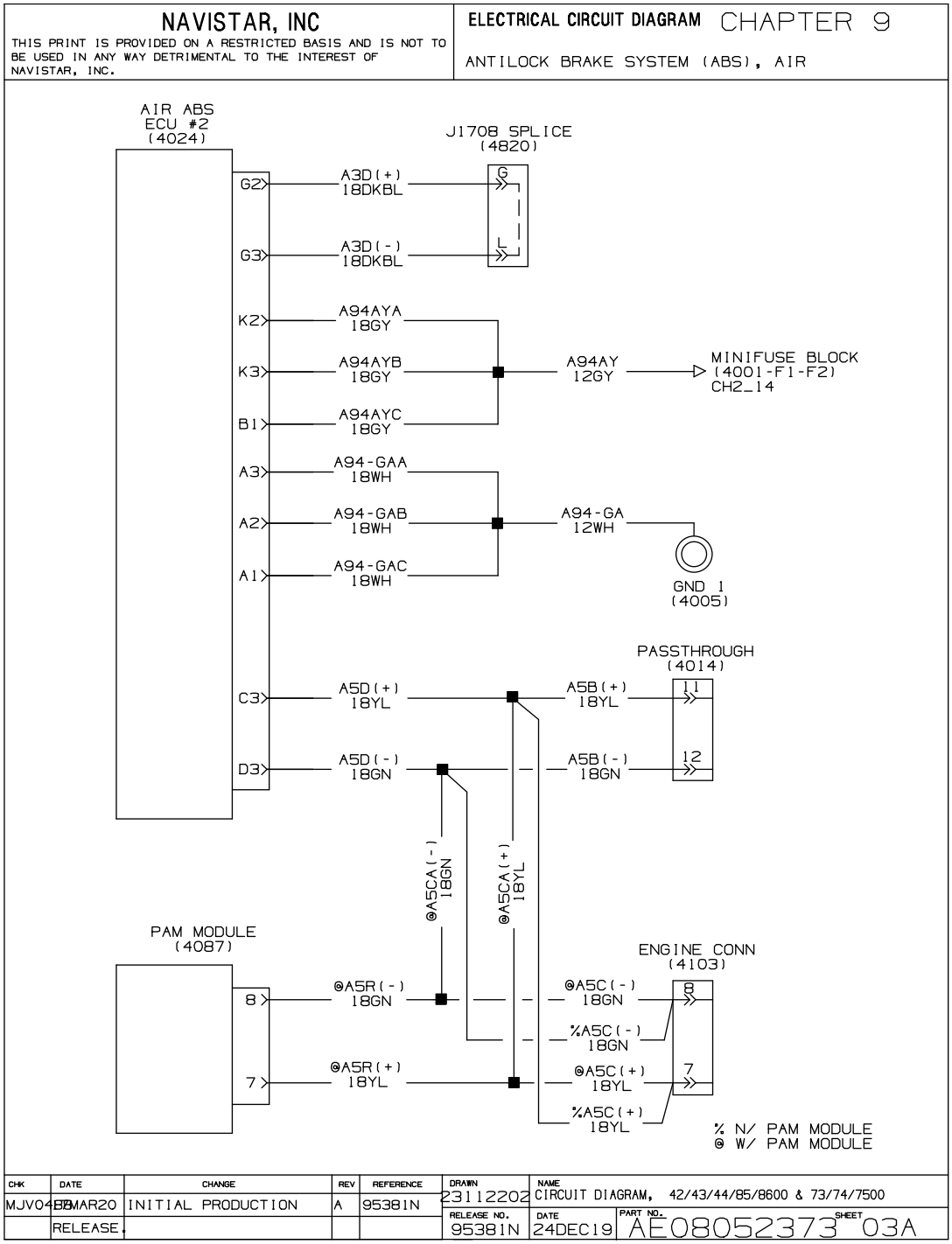

Figure 93 Antilock Brake System (ABS), Air, Traction Control

10.5. ANTILOCK BRAKE SYSTEM (ABS), AIR, TRACTION CONTROL, P. 3B

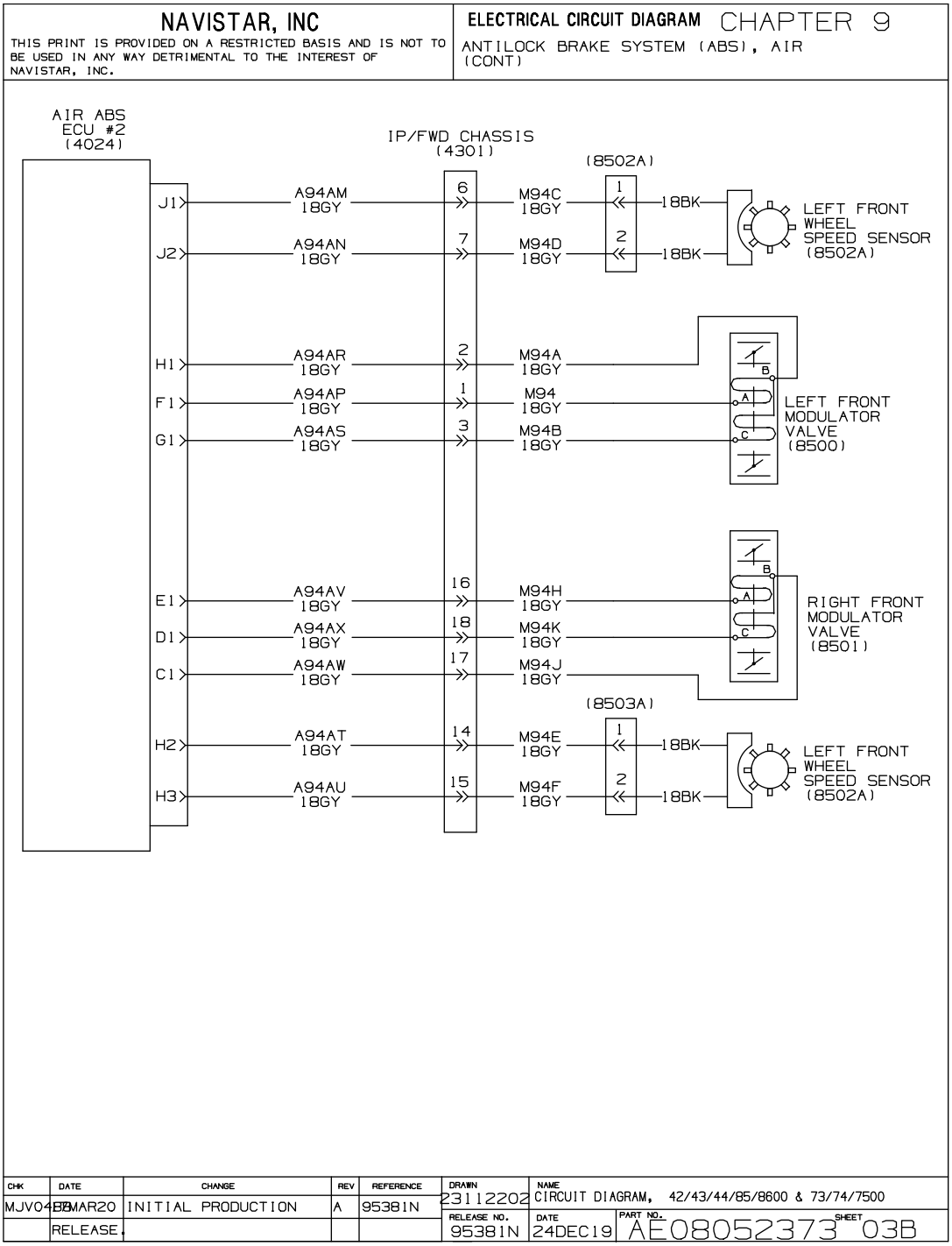

Figure 94 Antilock Brake System (ABS), Air, Traction Control

10.6. ANTILOCK BRAKE SYSTEM (ABS), HYDRAULIC, P. 4

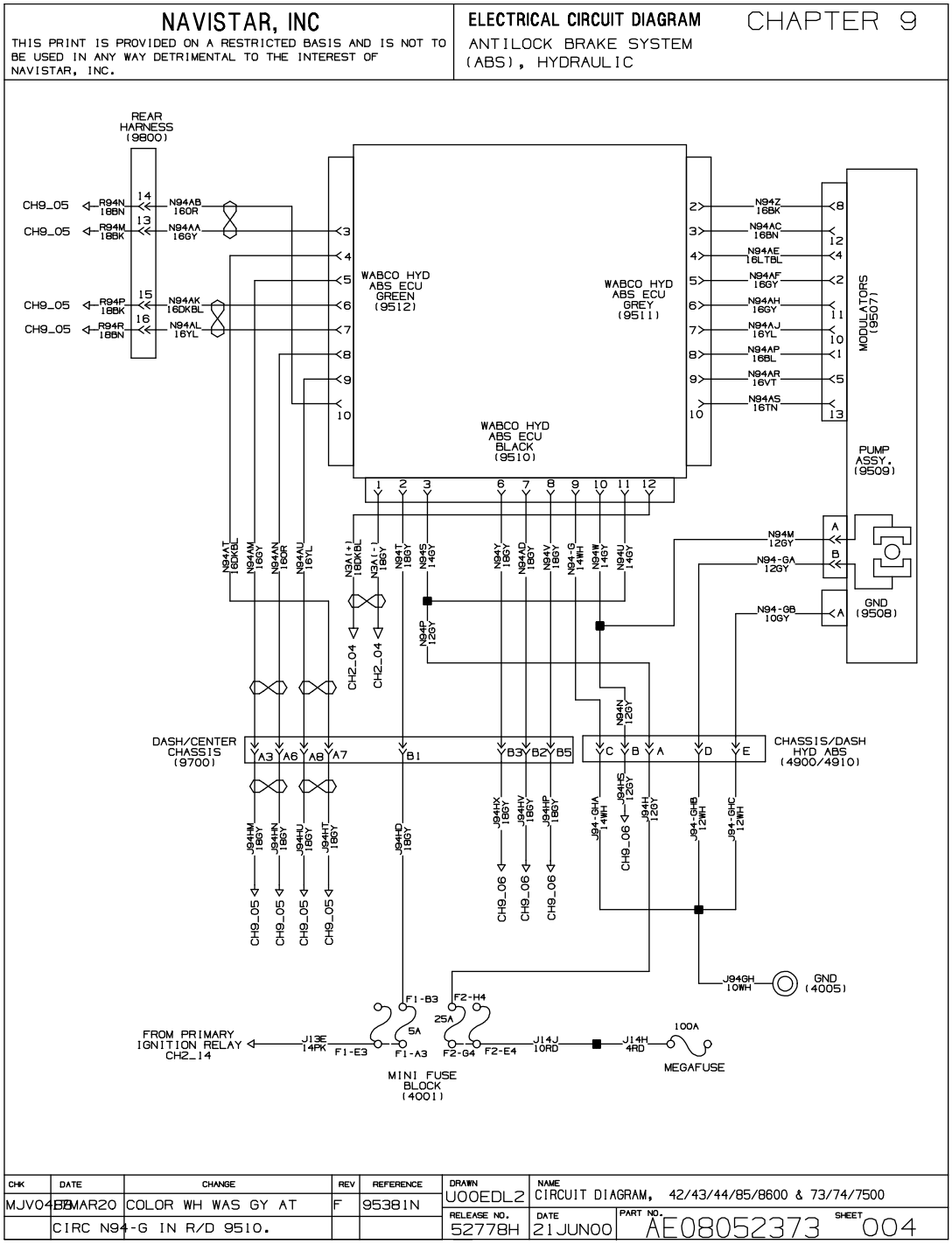

Figure 95 Antilock Brake System (ABS), Hydraulic

10.7. ANTILOCK BRAKE SYSTEM (ABS), HYDRAULIC (CONT.), P. 5

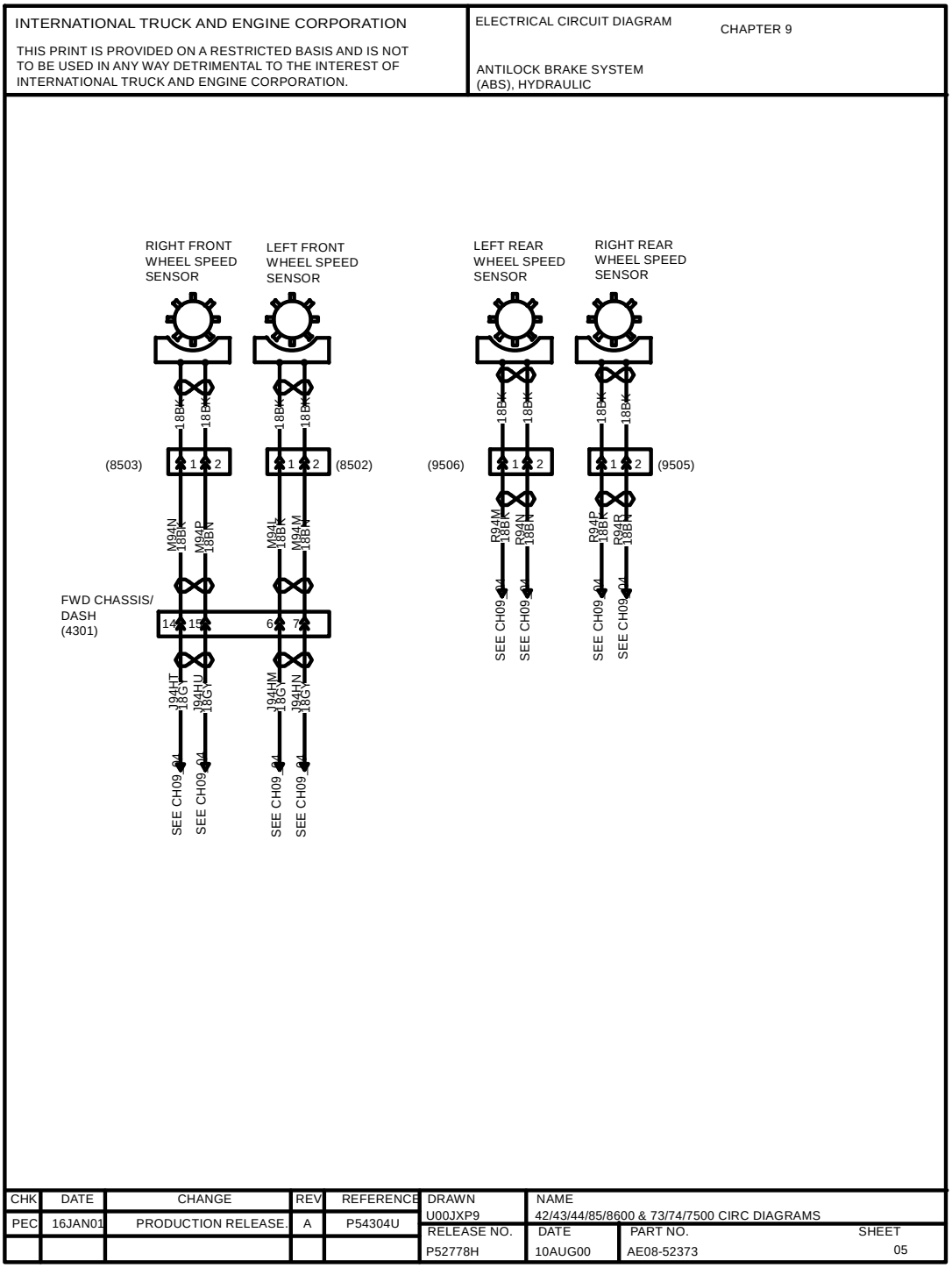

Figure 96 Antilock Brake System (ABS), Hydraulic (Cont.)

10.8. ANTILOCK BRAKE SYSTEM (ABS), HYDRAULIC (CONT.), P. 6

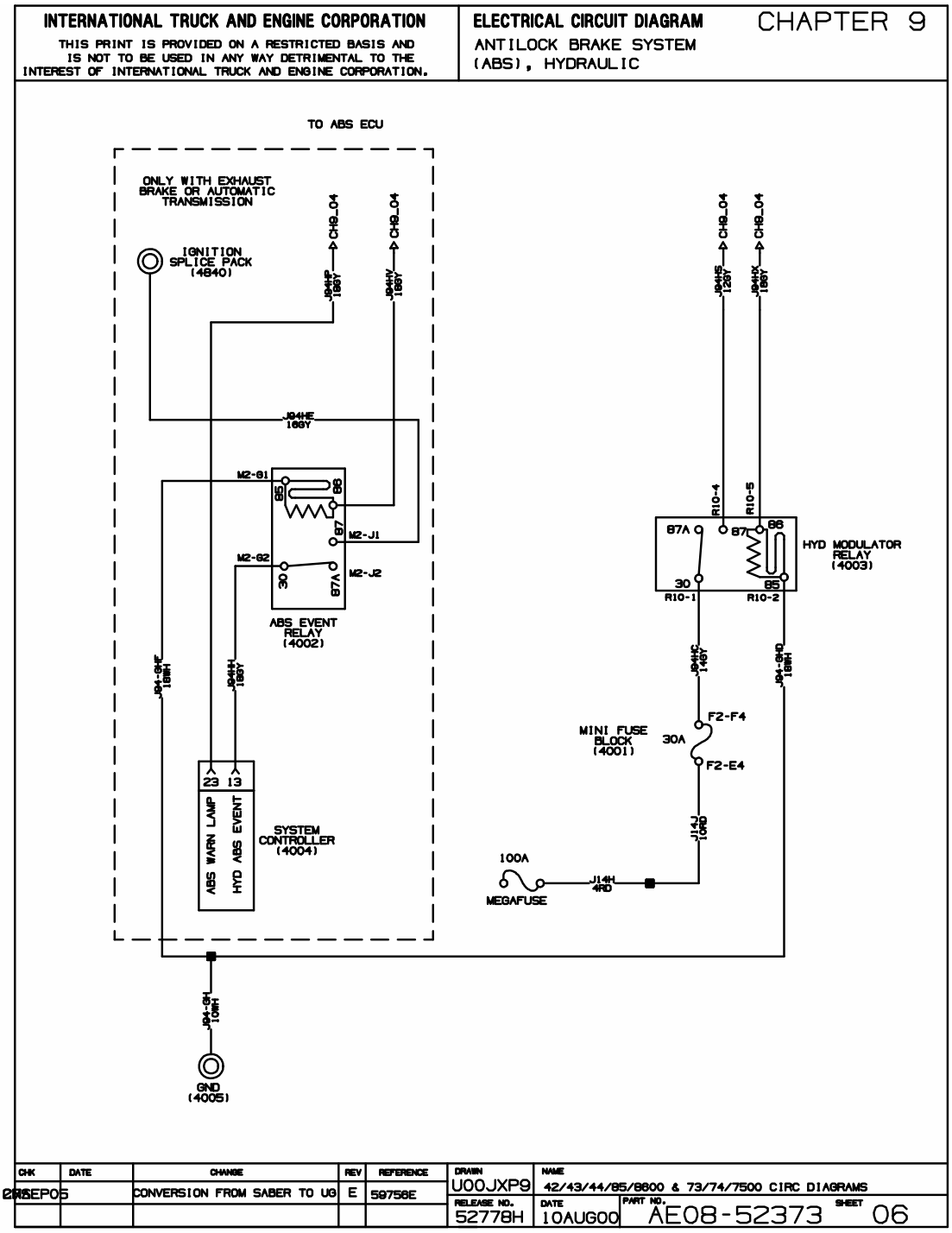

Figure 97 Antilock Brake System (ABS), Hydraulic (Cont.)

10.9. TWO SPEED AXLE SWITCH WITH MANUAL TRANSMISSION AND I6 HEUI FUEL HEATER N/WARN LIGHTS, P. 7

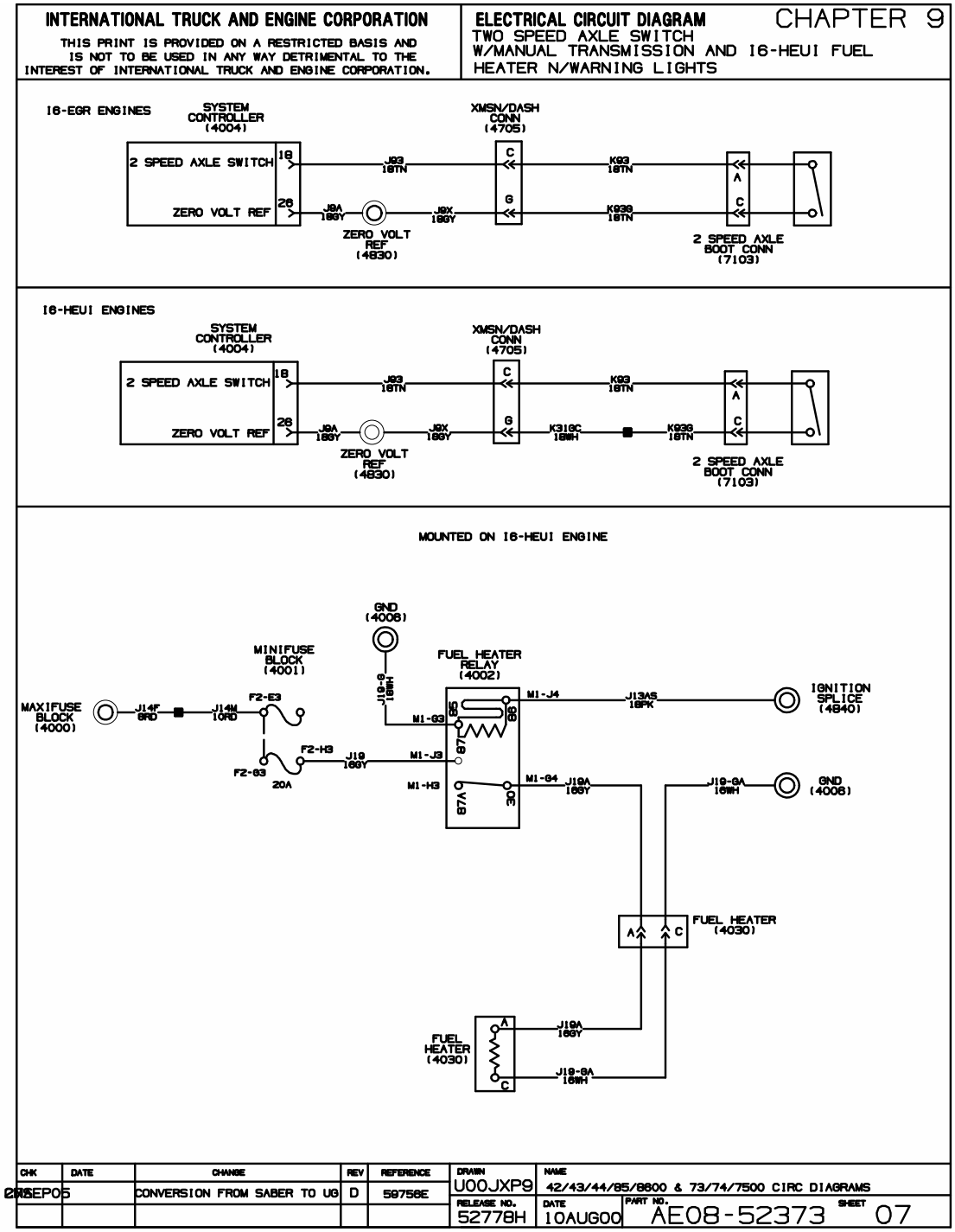

Figure 98 Two Speed Axle Switch With Manual Transmission and I6 HEUI Fuel Heater N/Warn Lights

10.10. BRAKE SYSTEM, HYDRAULIC, P. 8

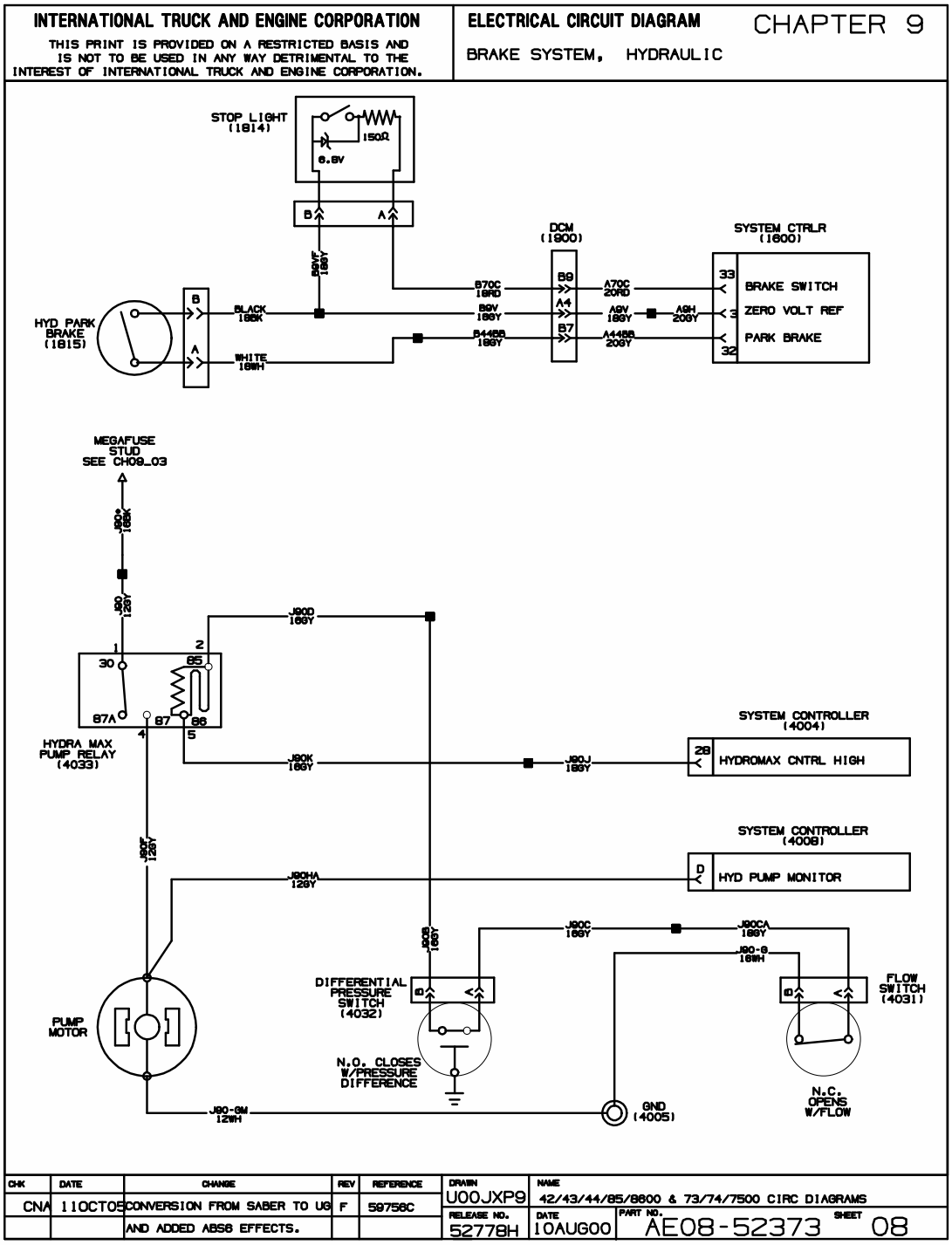

Figure 99 Brake System, Hydraulic

10.11. FUEL TRANSFER PUMP, P. 9

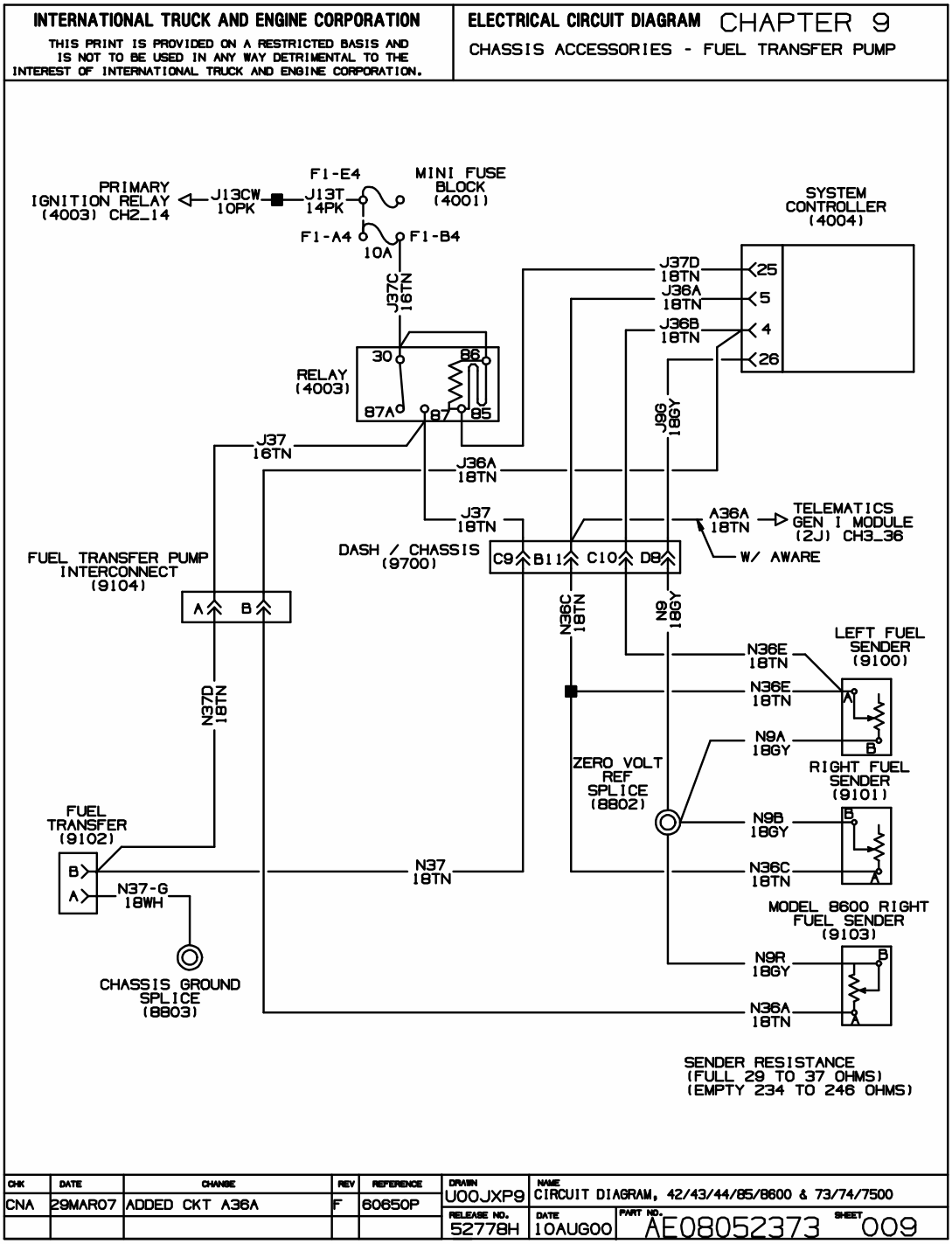

Figure 100 Fuel Transfer Pump

10.12. BACK OF CAB BODY BUILDER AND TRAILER STOP, TAIL, MARKER, P. 10

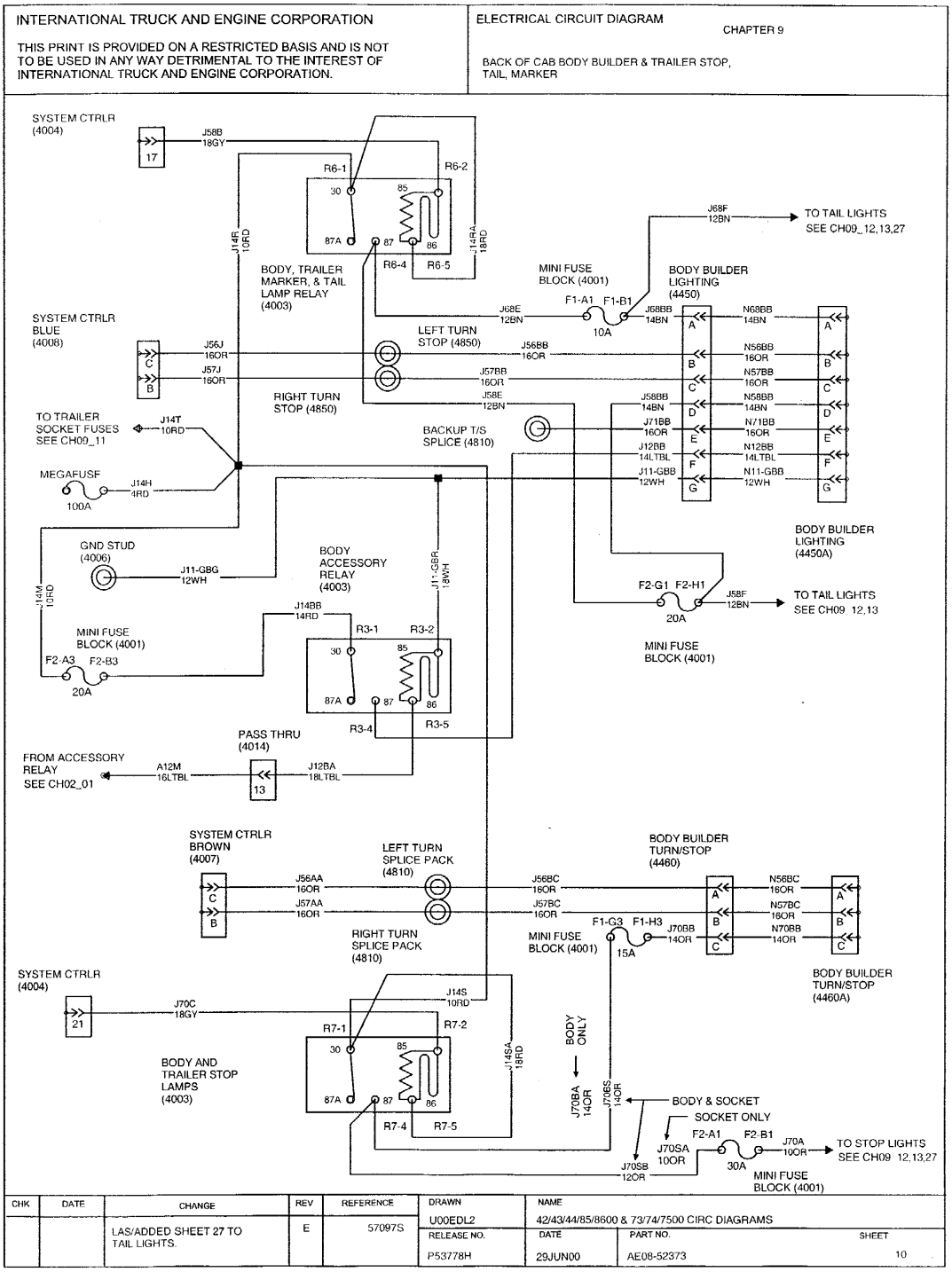

Figure 101 Back of Cab Body Builder and Trailer Stop, Tail, Marker

10.13. BODY BUILDER AND TRAILER TURNS, CENTER PIN ABS, CENTER PIN AUX, P. 11

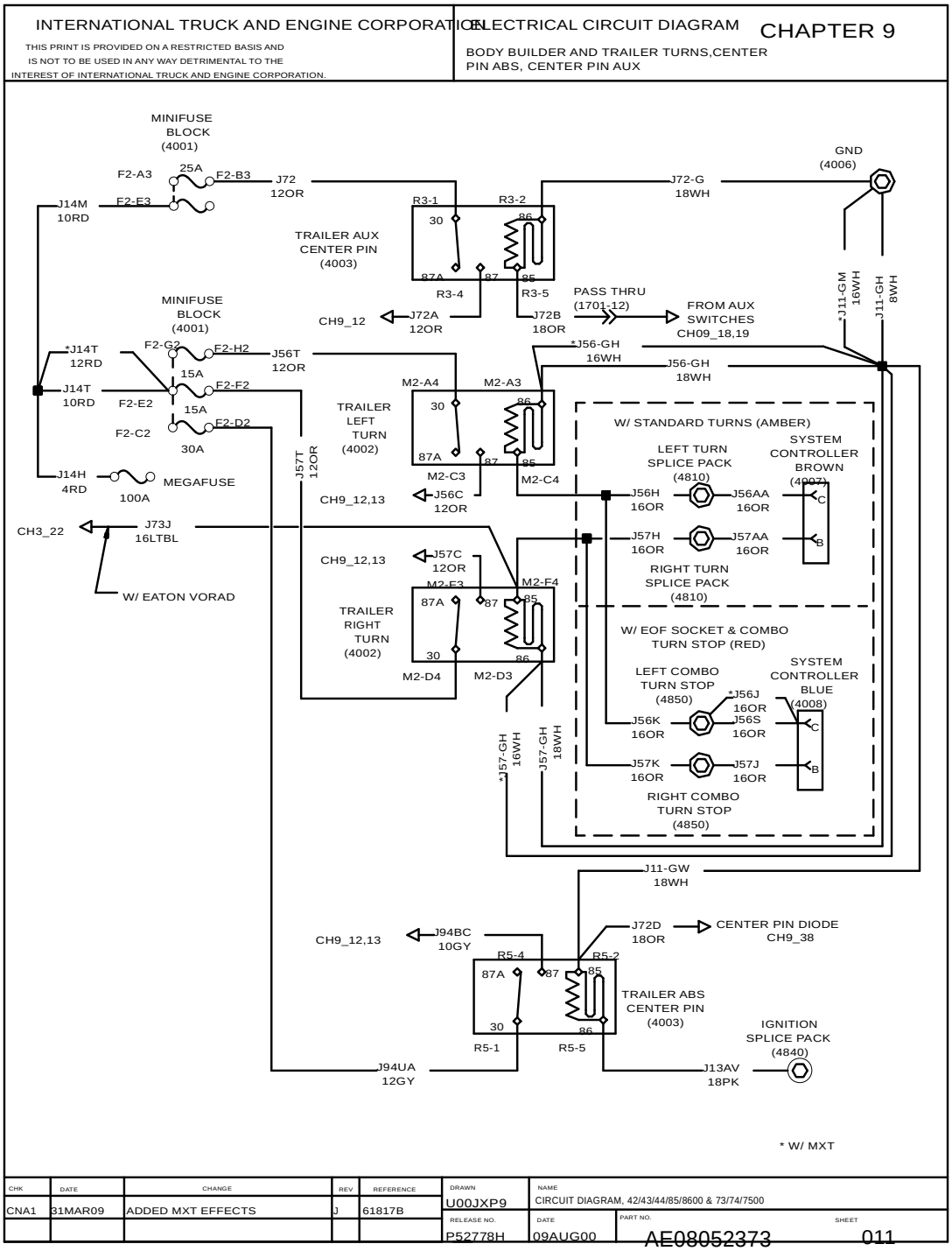

Figure 102 Body Builder and Trailer Turns, Center Pin ABS, Center Pin Aux

10.14. BODY BUILDER AND TRAILER SOCKET BACK OF CAB SOCKETS, P. 12

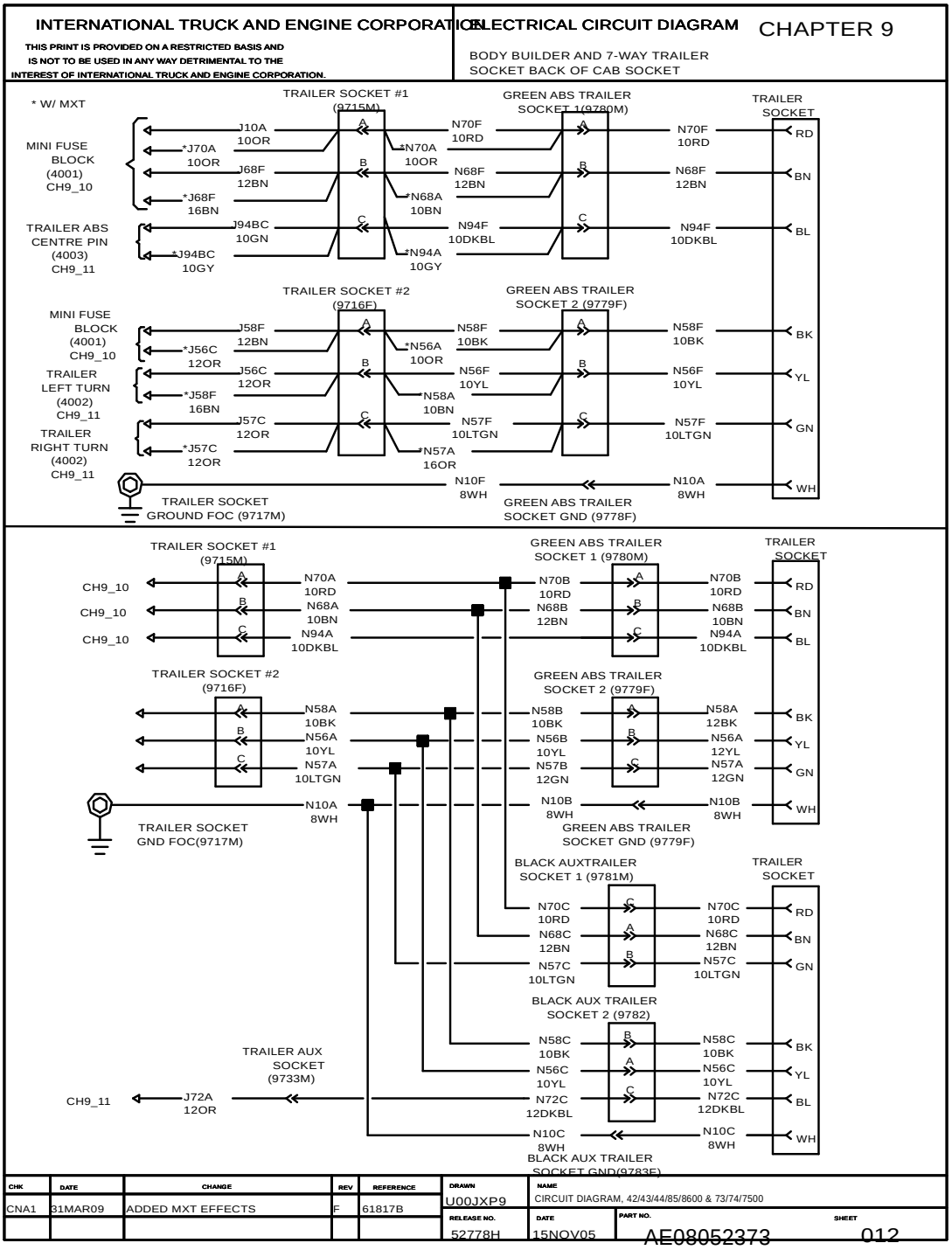

Figure 103 Body Builder and Trailer Socket Back of Cab Sockets

10.15. BODY BUILDER AND TRAILER SOCKET END OF FRAME (EOF) SOCKET AND BODY BUILDER, P. 13

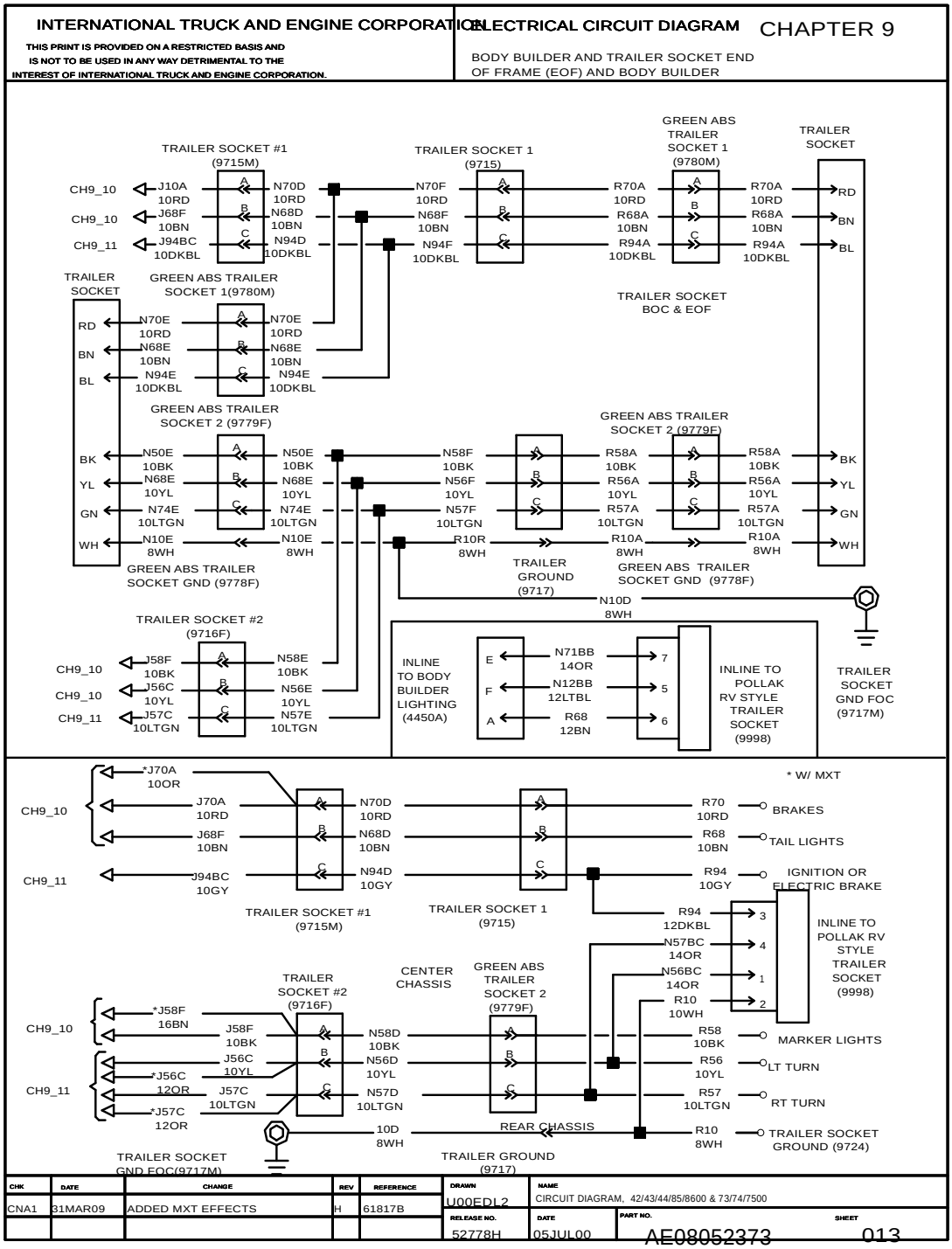

Figure 104 Body Builder and Trailer Socket End of Frame (EOF) Socket and Body Builder

10.16. AIR SOLENOID 4–WAY PACK, P. 14

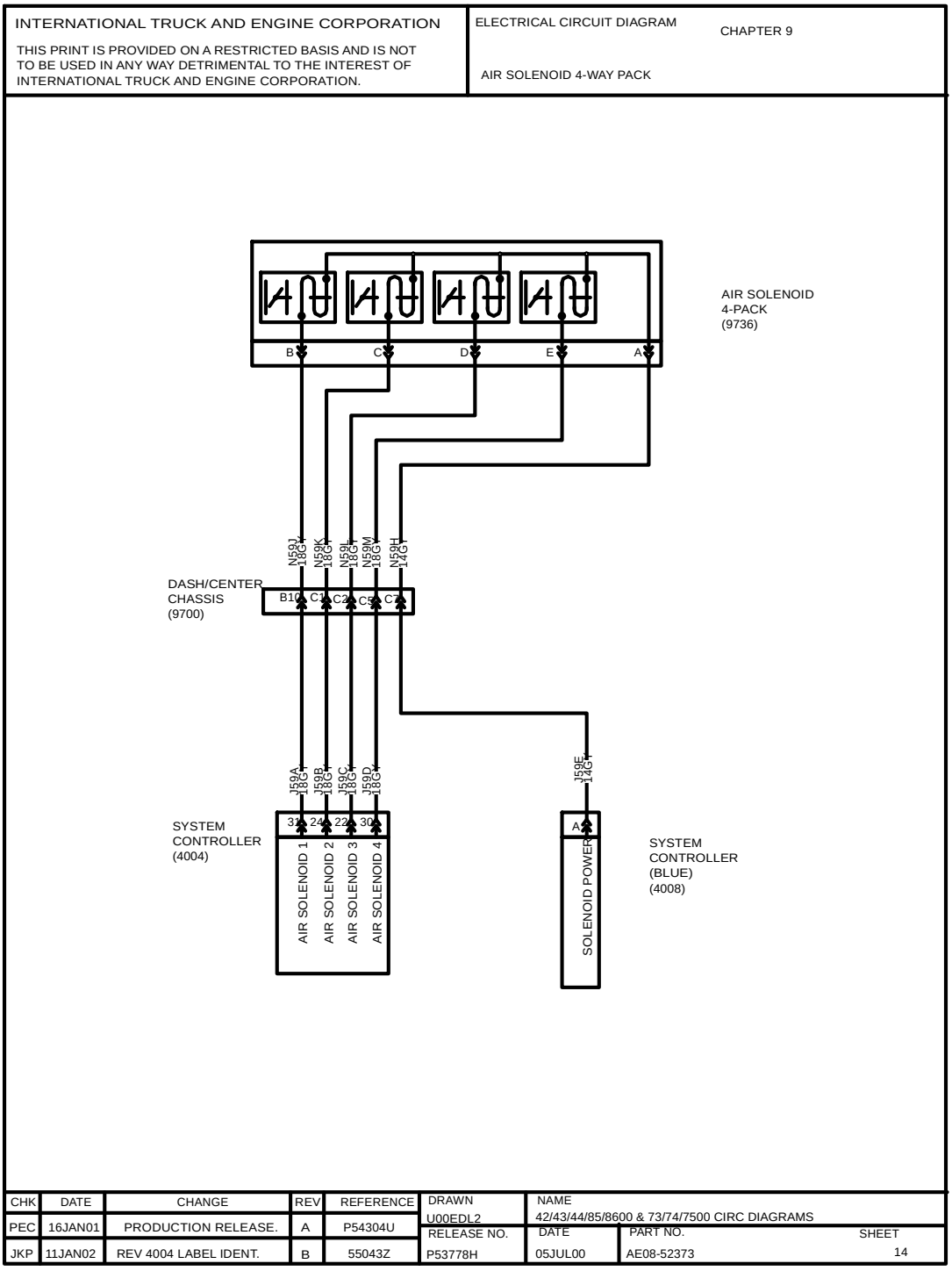

Figure 105 Air Solenoid 4–Way Pack

10.17. REMOTE POWER UNITS, SOLENOID PACKS, REMOTE ENGINE SPEED CONTROLLER, P. 15

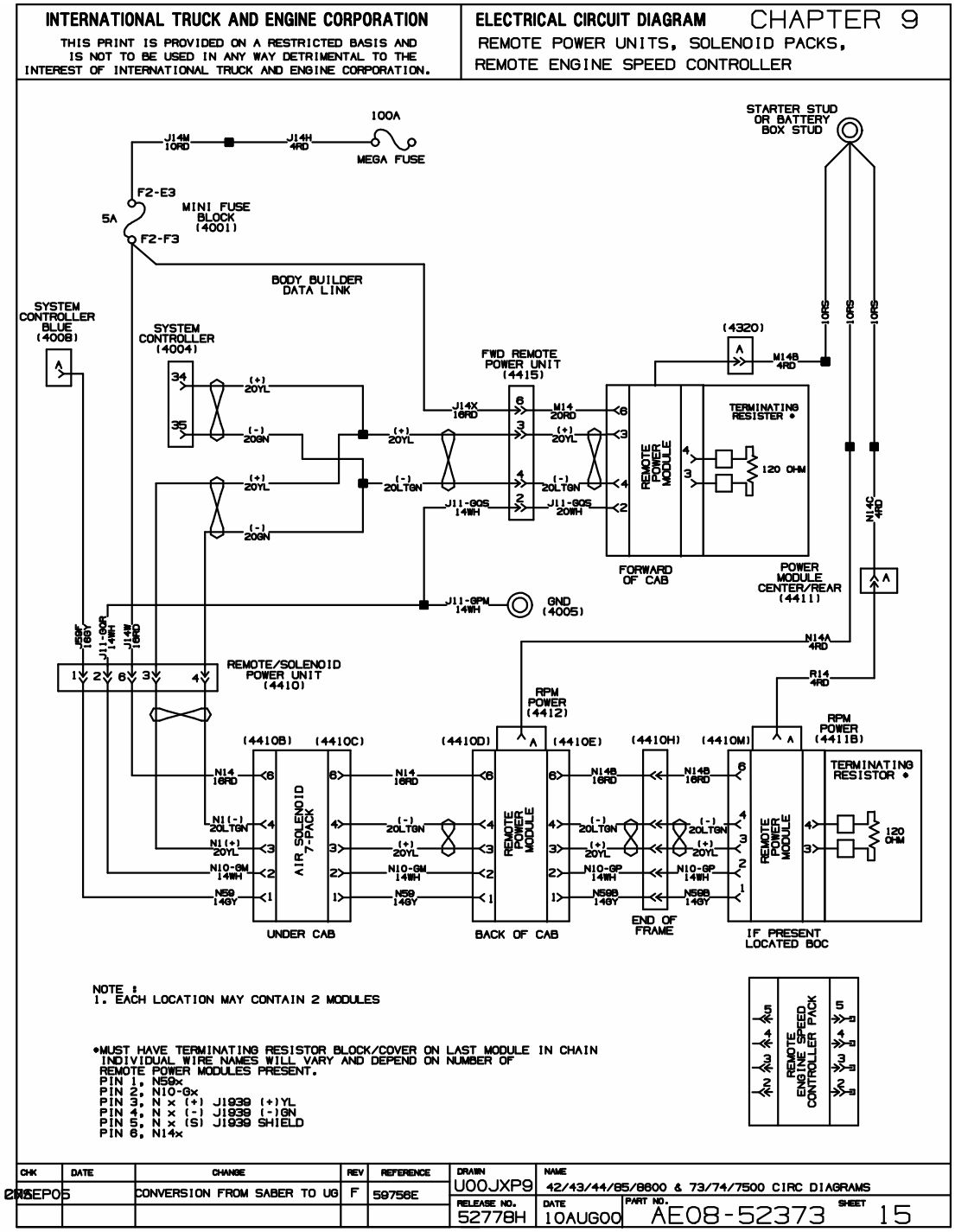

Figure 106 Remote Power Units, Solenoid Packs, Remote Engine Speed Controller

10.18. HYD POWER PARK, P. 16

INTERNATIONAL TRUCK AND ENGINE CORPORATION

THIS PRINT IS PROVIDED ON A RESTRICTED BASIS AND IS NOT TO BE USED IN ANY WAY DETRIMENTAL TO THE INTEREST OF INTERNATIONAL TRUCK AND ENGINE CORPORATION.

ELECTRICAL CIRCUIT DIAGRAM

CHAPTER 9

CHASSIS ACCESSORIES - HYD POWER PARK

DIAGRAM NOT AVAILABLE

CHK	DATE	CHANGE	REV	REFERENCE	DRAWN	NAME		
PEC	16JAN01	PRODUCTION RELEASE.	A	P54304U	U00EDL2	42/43/44/85/8600 & 73/74/7500 CIRC DIAGRAMS		
					RELEASE NO.	DATE	PART NO.	SHEET
					P52778H	10JUL00	AE08-52373	16

Figure 107 HYD Power Park

10.19. AIR SUSPENSION, P. 17

INTERNATIONAL TRUCK AND ENGINE CORPORATION

THIS PRINT IS PROVIDED ON A RESTRICTED BASIS AND IS NOT TO BE USED IN ANY WAY DETRIMENTAL TO THE INTEREST OF INTERNATIONAL TRUCK AND ENGINE CORPORATION.

ELECTRICAL CIRCUIT DIAGRAM

CHAPTER 9

CHASSIS ACCESSORIES - AIR SUSPENSION

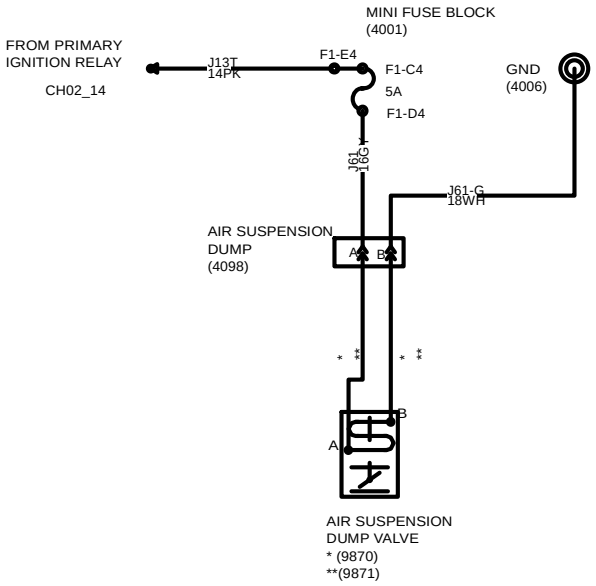

* 4 X 2
(9870-A N61A / 18 GY)
(9870-B N61-GA / 18 GY)

** 6 X 4
(9871-A N61AA / 18 GY)
(9871-B N61-GB / 18 GY)

NOTE: 2ND AIR SUSPENSION SOLENOID
IS IN AIR SOLENOID PACK
SEE CH09_14
CH09_15

CHK	DATE	CHANGE	REV	REFERENCE	DRAWN	NAME		
PEC	16JAN01	PRODUCTION RELEASE.	A	P54304U	U00EDL2	42/43/44/85/8600 & 73/74/7500 CIRC DIAGRAMS		
JKP	11JAN02	ADDED NOTE,9870 & 9871.	B	55043Z	RELEASE NO. P52778H	DATE 10JUL00	PART NO. AE08-52373	SHEET 17

Figure 108 Air Suspension

10.20. AUX. TRAILER, ACC CONTROLLED, P. 18

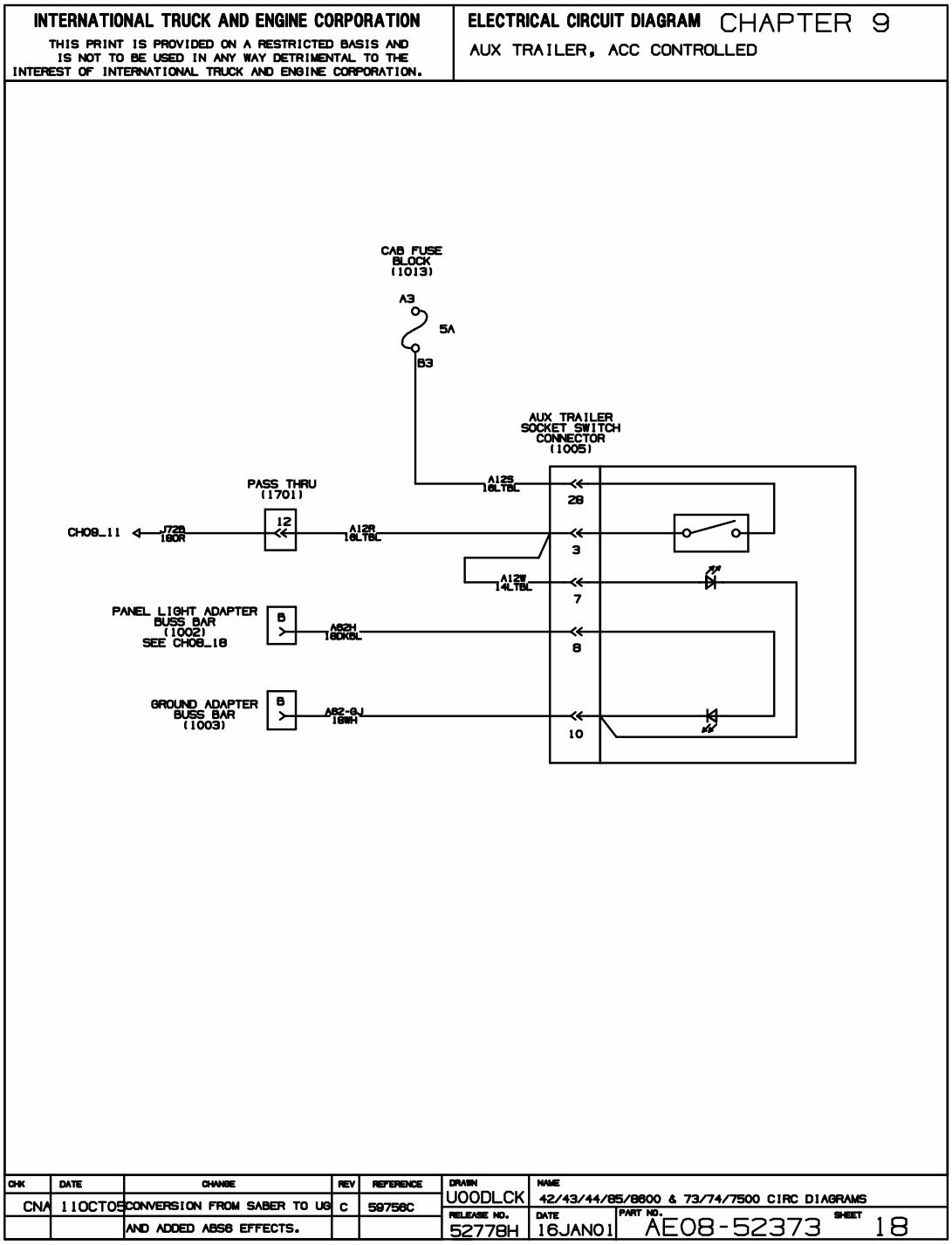

Figure 109 Aux. Trailer, Acc Controlled

10.21. AUX. TRAILER, BATTERY CONTROLLED, P. 19

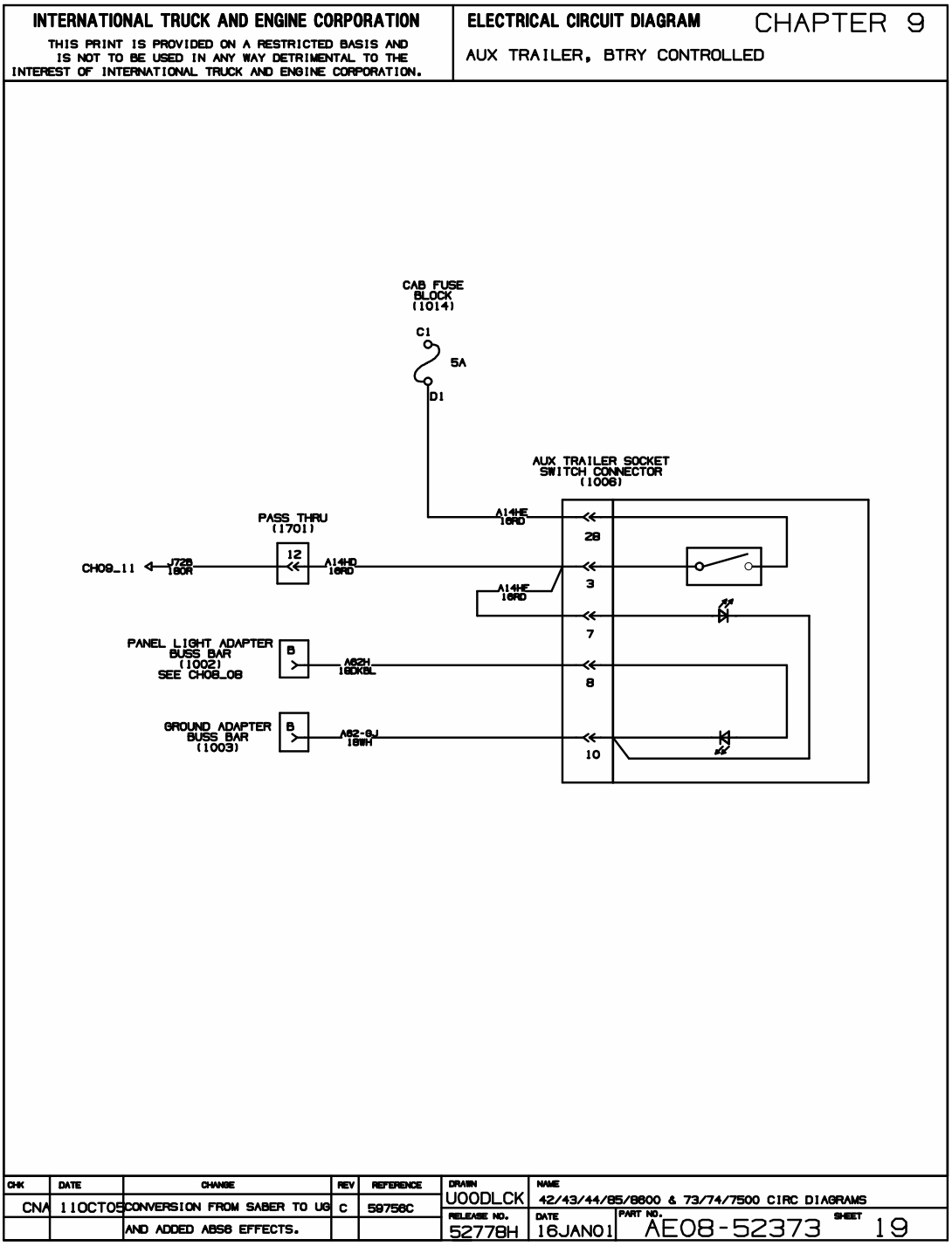

Figure 110 Aux. Trailer, Battery Controlled

10.22. LIFT AXLES (NON-STEERABLE), P. 20

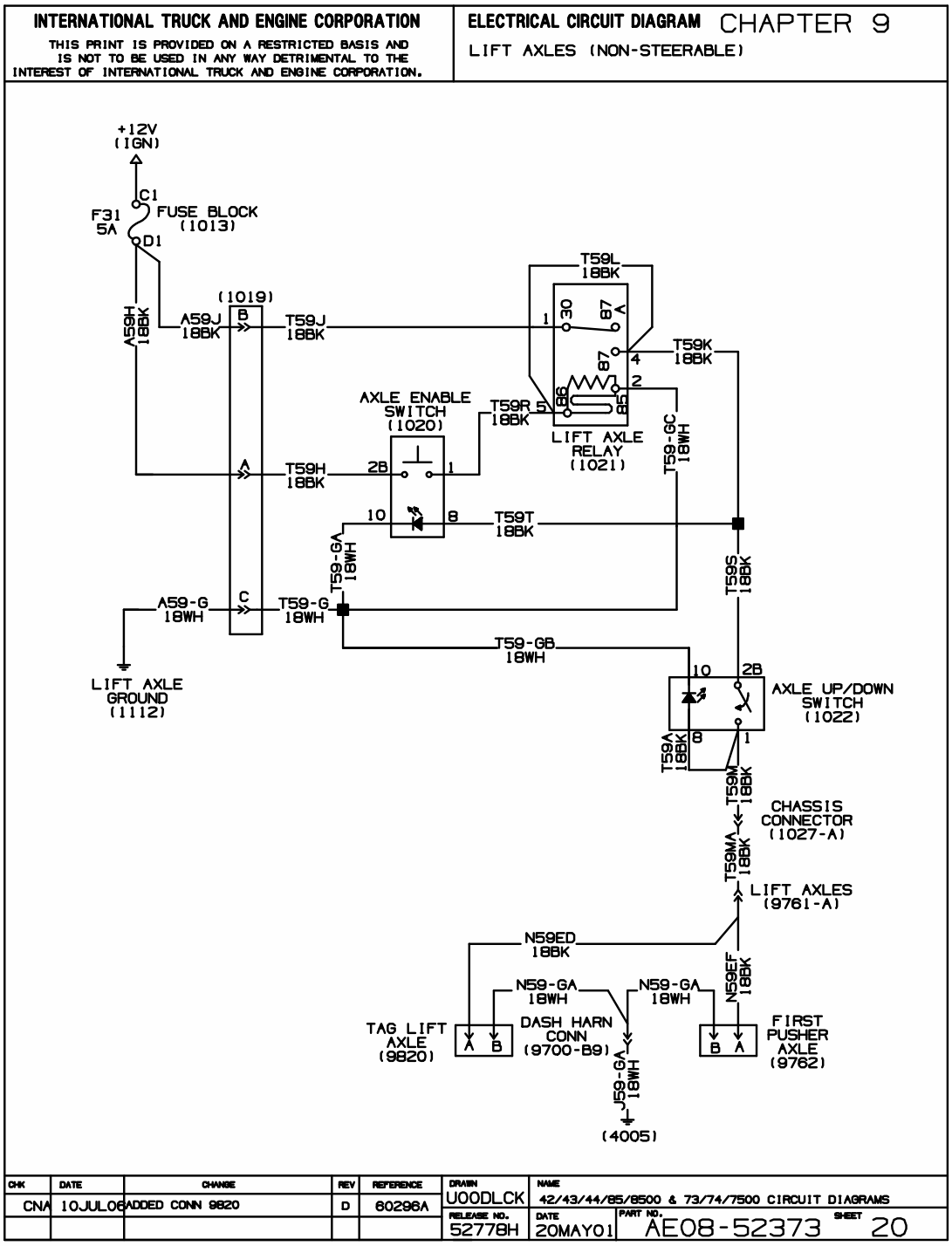

Figure 111 Lift Axles (Non-Steerable)

10.23. LIFT AXLES (STEERABLE), P. 21

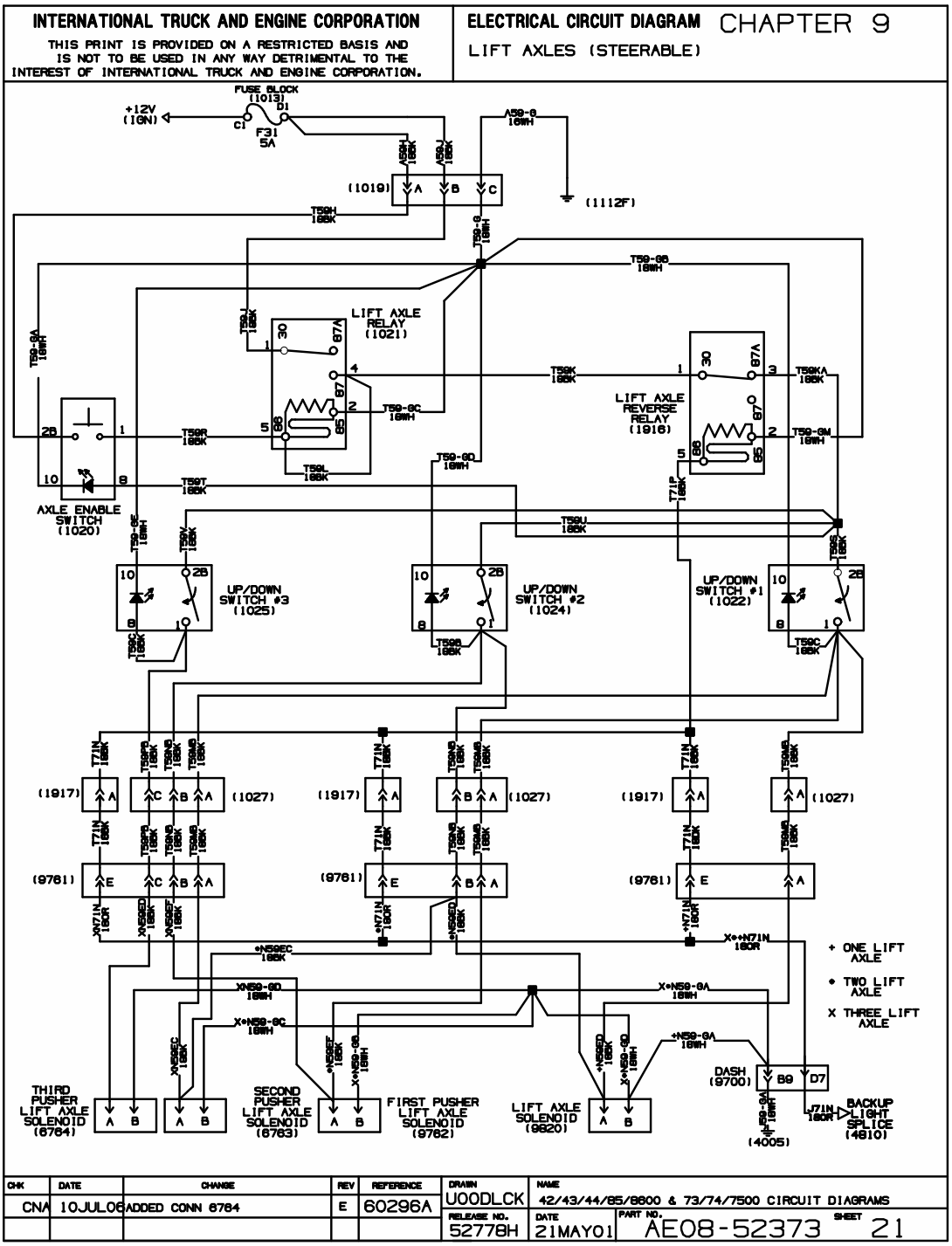

Figure 112 Lift Axles (Non-Steerable)

10.24. AIR ACTUATED PARK BRAKE, P. 22

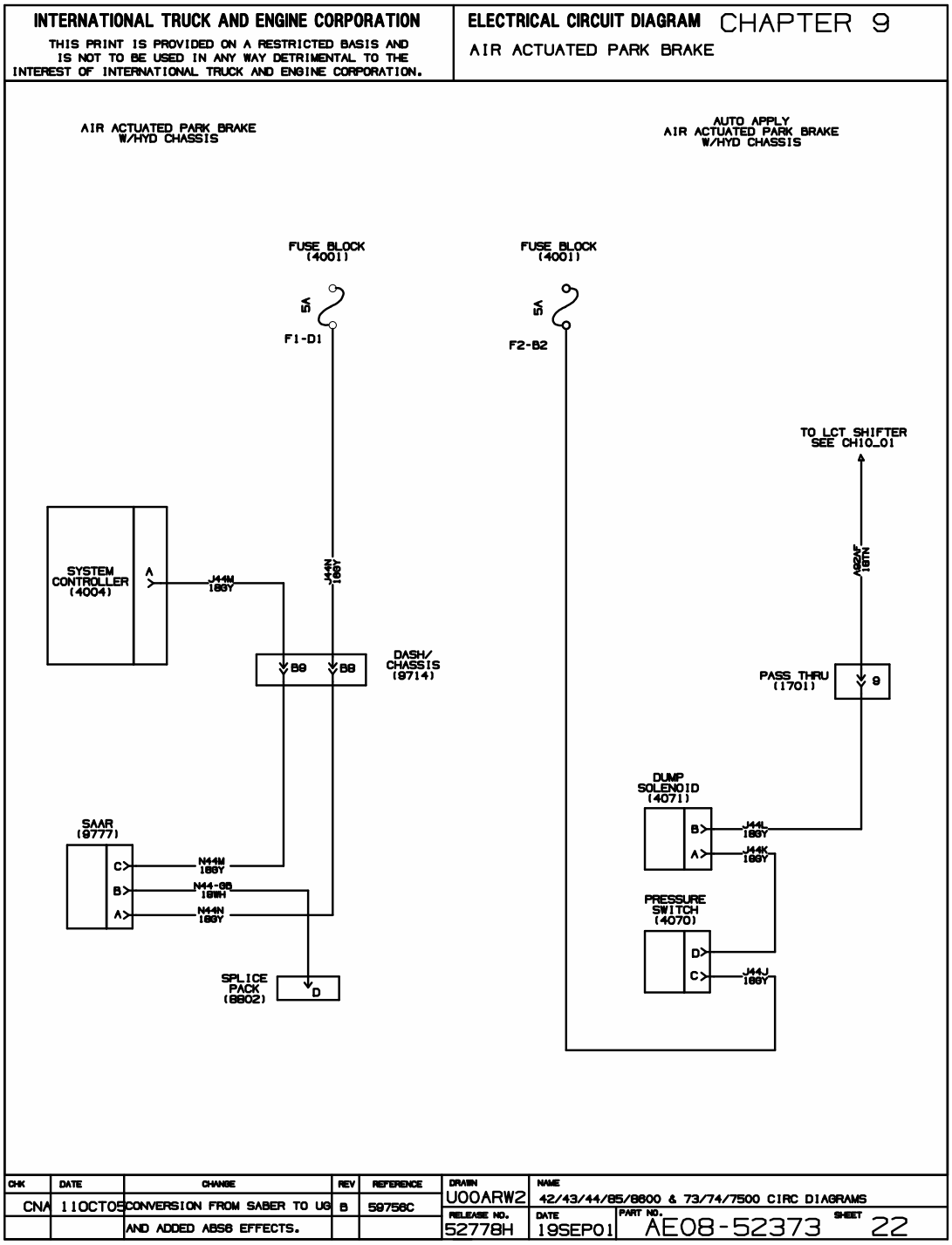

Figure 113 Air Actuated Park Brake

10.25. ANTILOCK BRAKE SYSTEM, WABCO AIR, P. 23

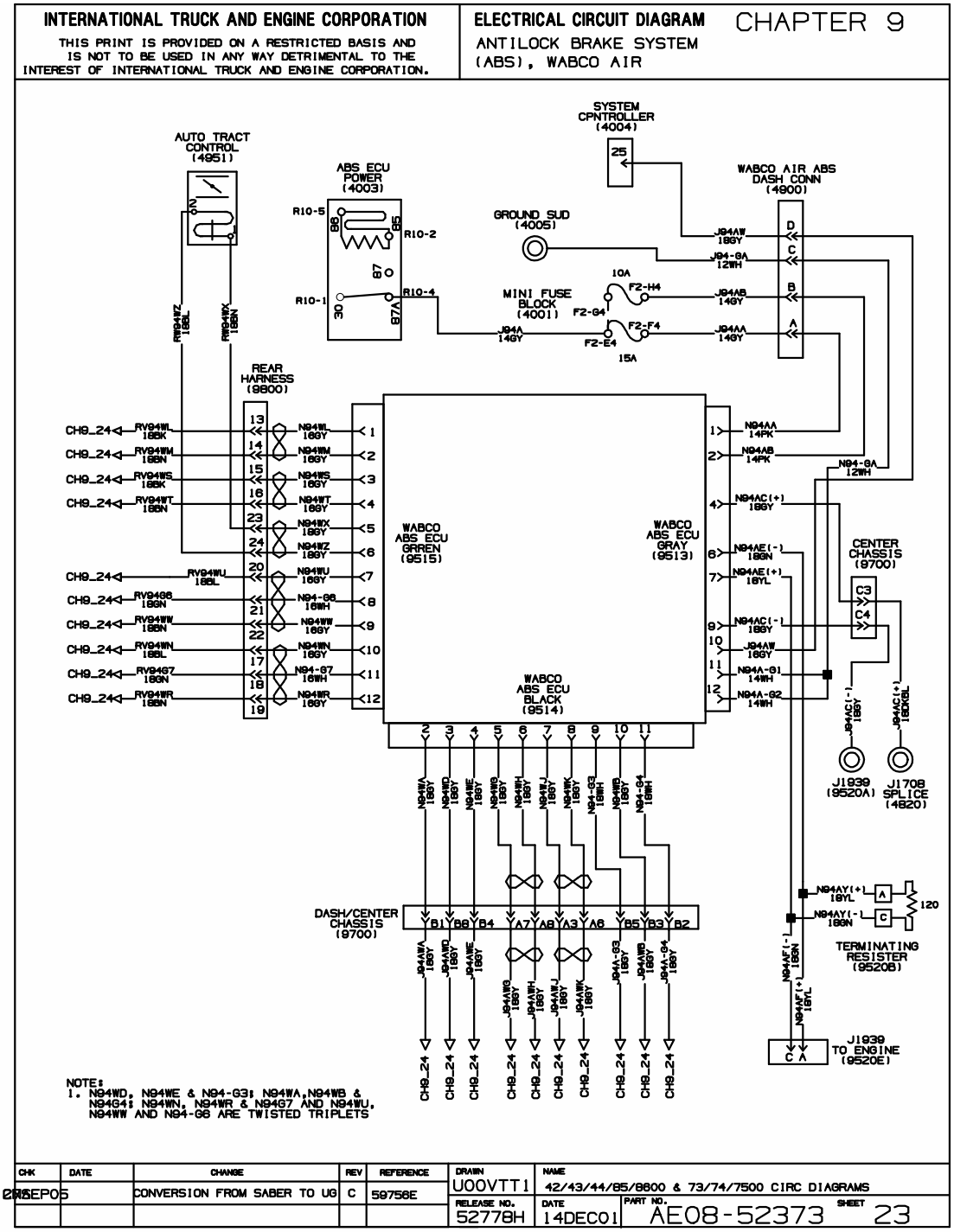

Figure 114 Antilock Brake System, WABCO Air

10.26. ANTILOCK BRAKE SYSTEM, WABCO AIR, P. 24

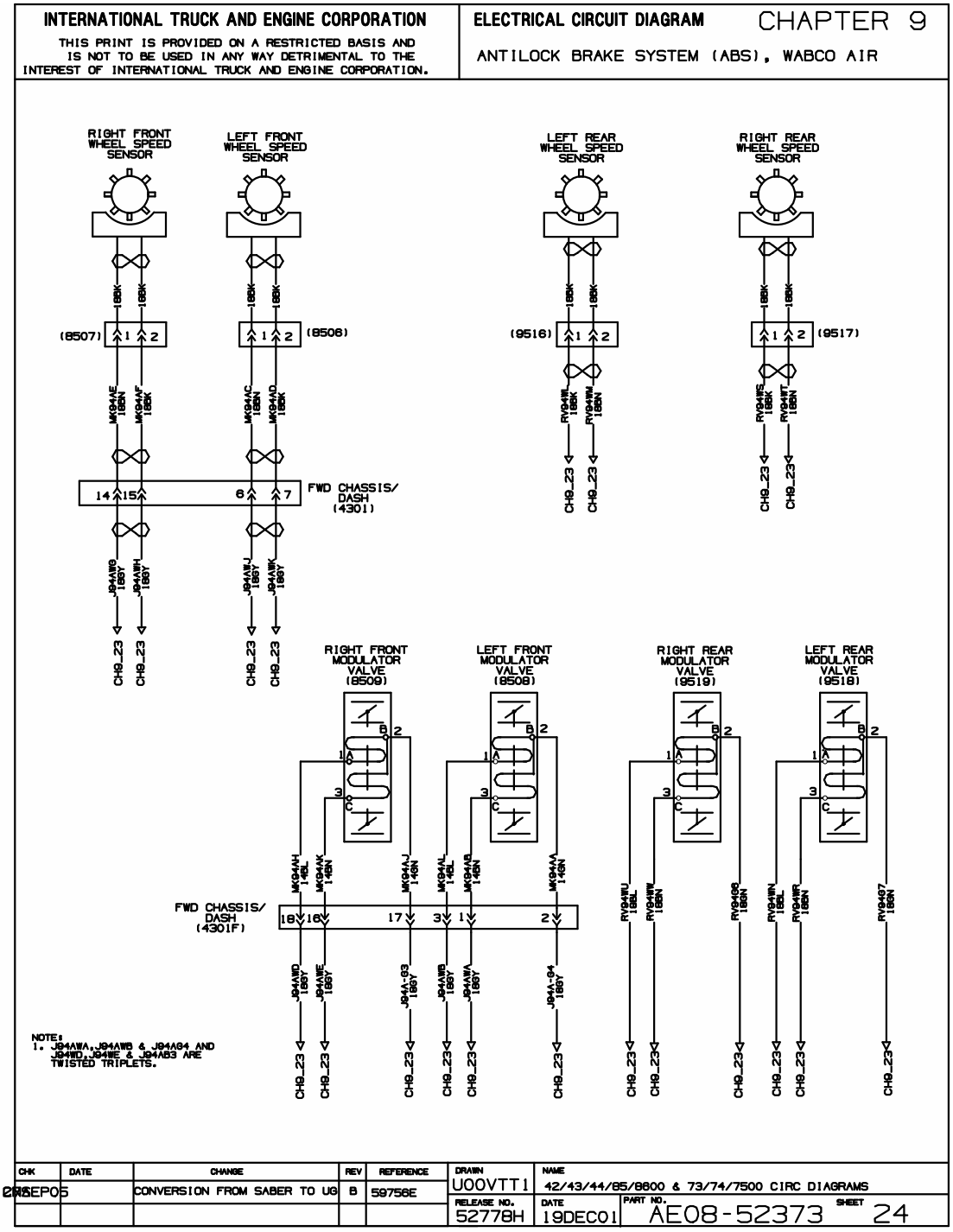

Figure 115 Antilock Brake System, WABCO Air

10.27. LIFT AXLES, WITH NON-STEERABLE FOR SS MODELS, P. 25

INTERNATIONAL TRUCK AND ENGINE CORPORATION THIS PRINT IS PROVIDED ON A RESTRICTED BASIS AND IS NOT TO BE USED IN ANY WAY DETRIMENTAL TO THE INTEREST OF INTERNATIONAL TRUCK AND ENGINE CORPORATION.	ELECTRICAL CIRCUIT DIAGRAM CHAPTER 9 LIFT AXLES, W/NON-STEERABLE FOR SS MODELS

INTENTIONALLY
LEFT BLANK

CHK	DATE	CHANGE	REV	REFERENCE	DRAWN	NAME		
CNA	10JUL06	GEOMETRY REMOVED	D	60296A	UOODLCK	42/43/44/85/8600 & 73/74/7500 CIRCUIT DIAGRAMS		
					RELEASE NO. 52778H	DATE 15DEC01	PART NO. AE08-52373	SHEET 25

Figure 116 Lift Axles, With Non-Steerable for SS Models

10.28. FUEL / WATER SEPARATOR WITH 12VDC FUEL PREHEATER, P. 26

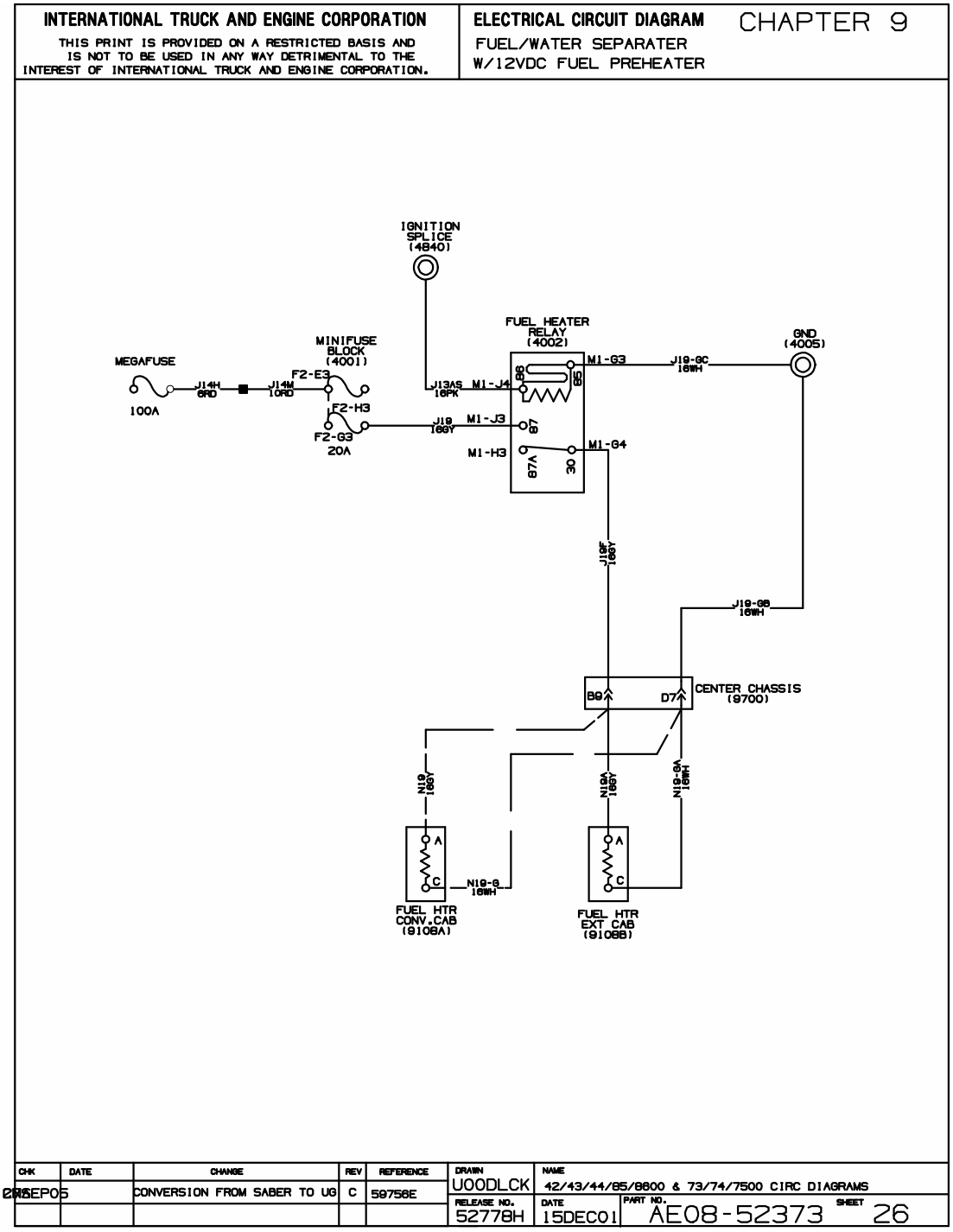

Figure 117 Fuel / Water Separator With 12VDC Fuel Preheater

10.29. ELECTRONIC TRAILER BRAKE ACCOMMODATION, P. 27

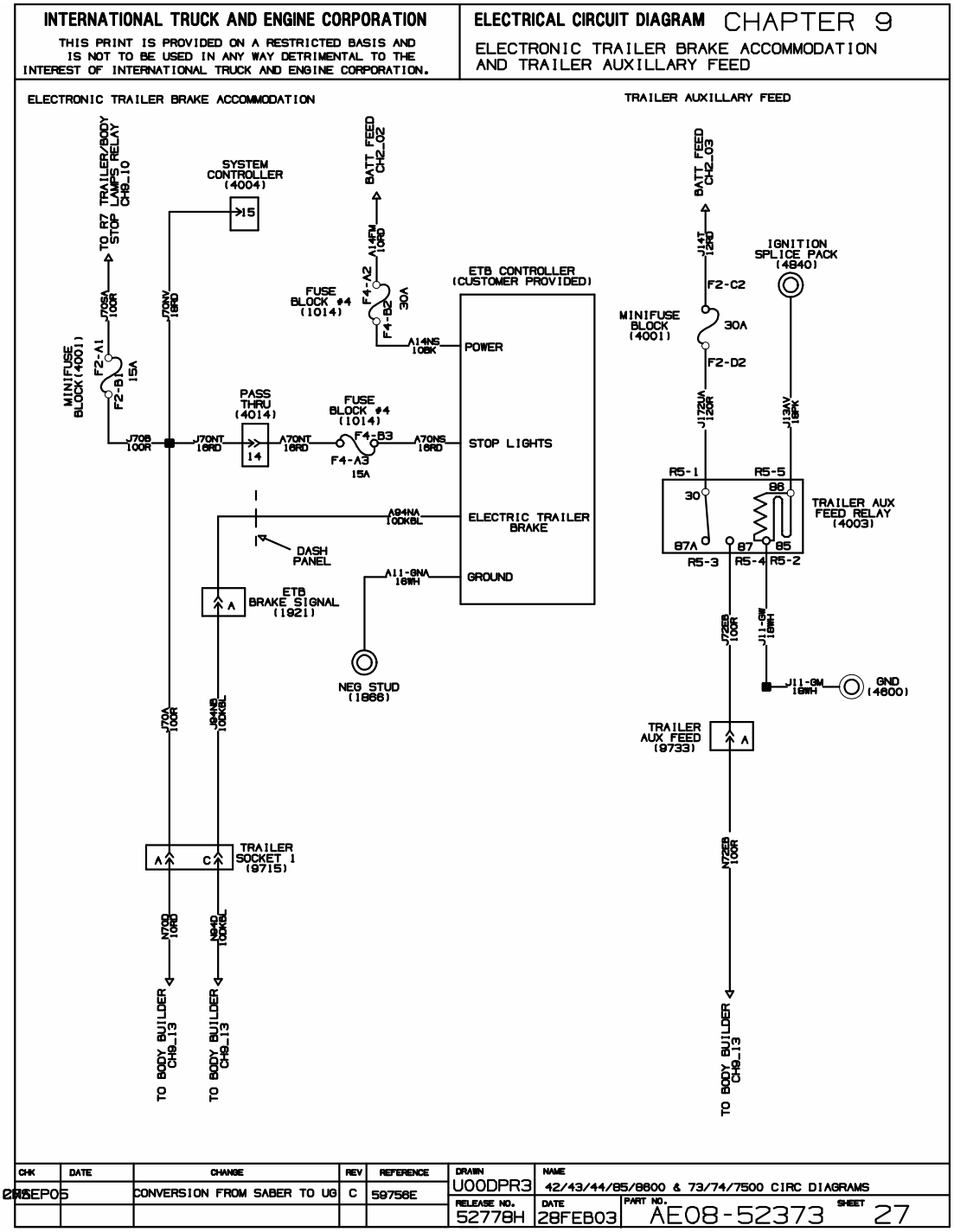

Figure 118 Electronic Trailer Brake Accommodation

10.30. LECTRASHIFT ACCOMMODATION, P. 28

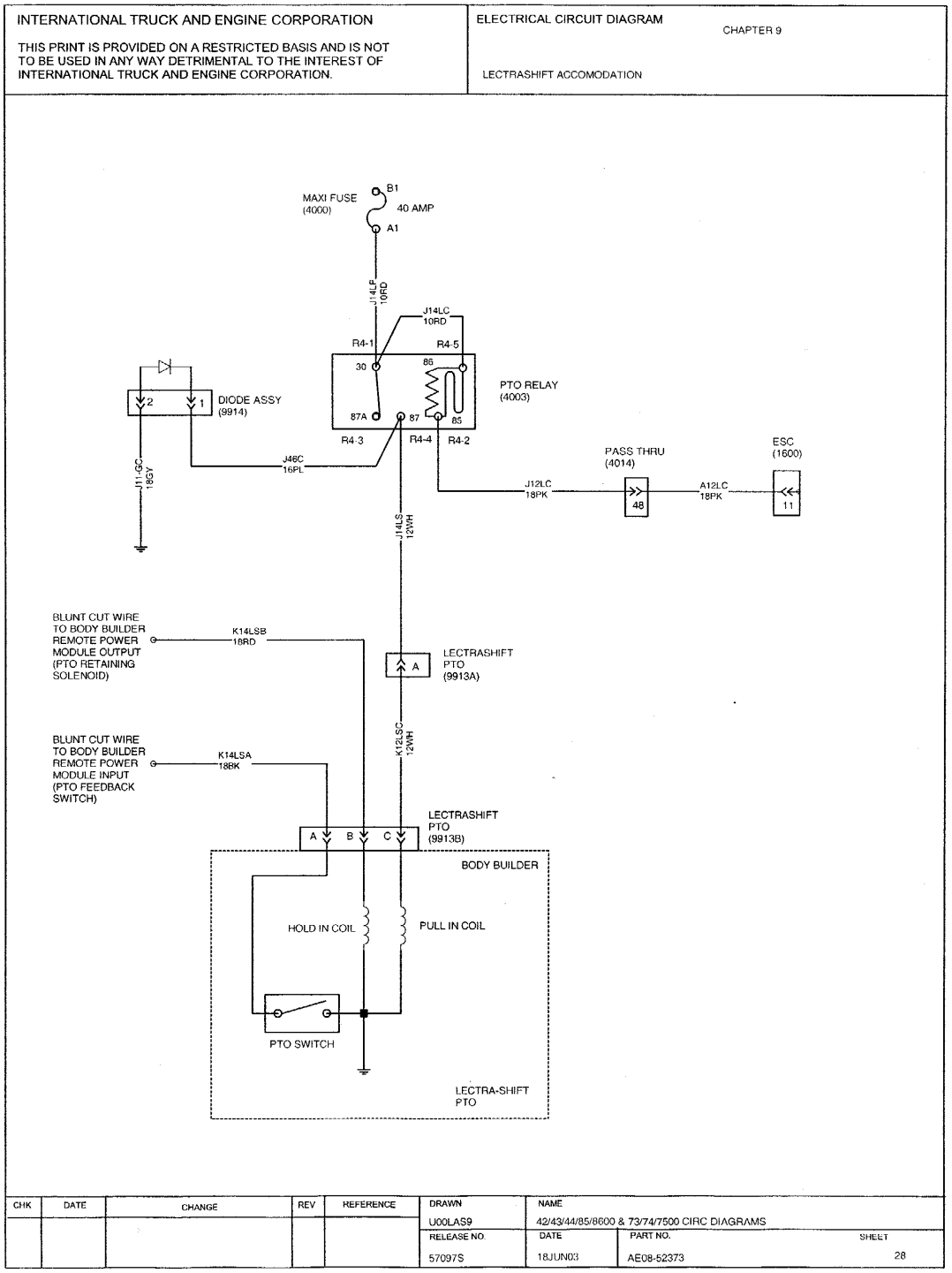

Figure 119 Lectrashift Accommodation

10.31. AUXILIARY 40 AMP CIRCUIT, P. 29

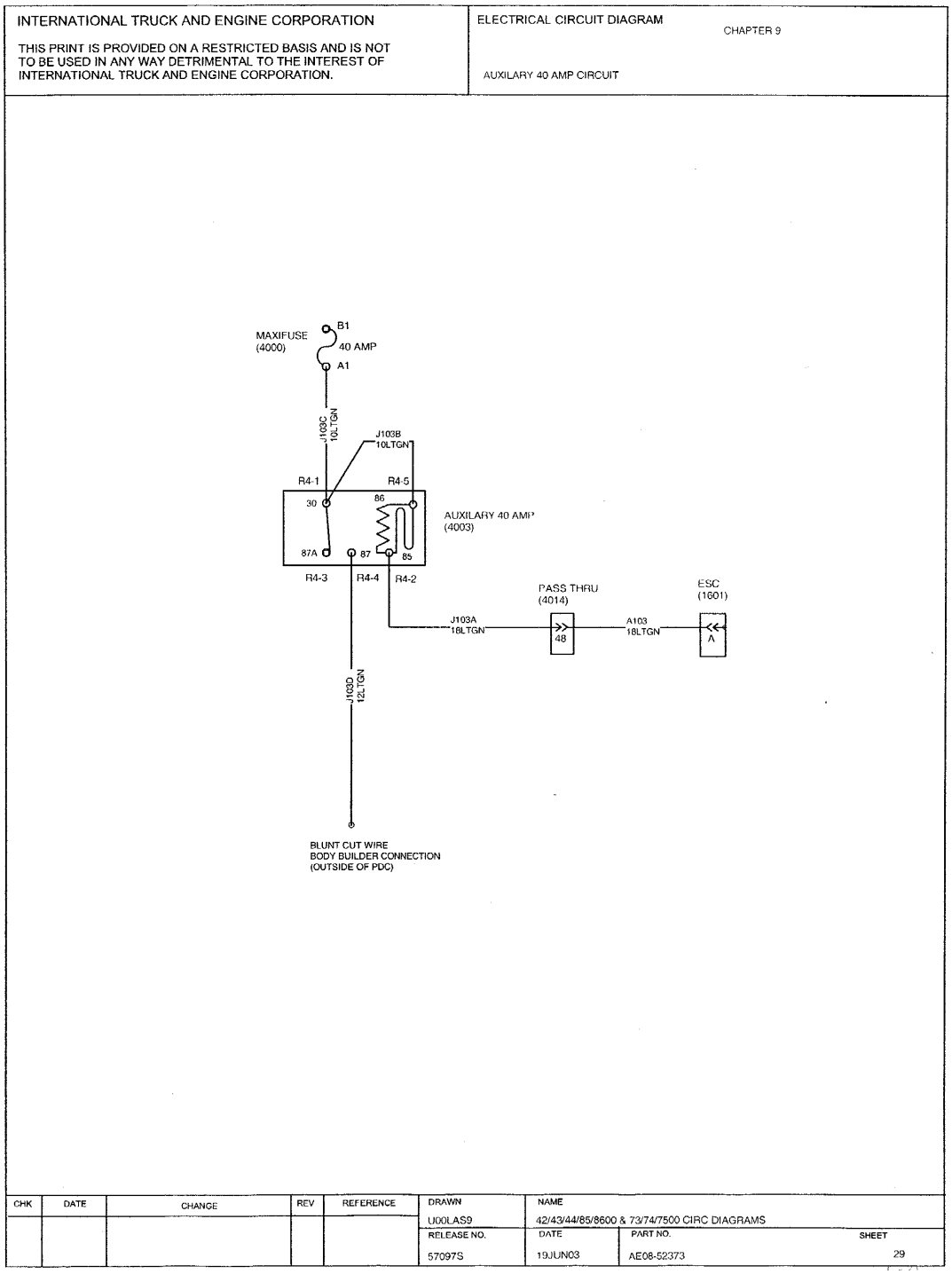

Figure 120 Auxiliary 40 Amp Circuit

10.32. HOURMETER, CUSTOMER MOUNTED PTO, P. 30

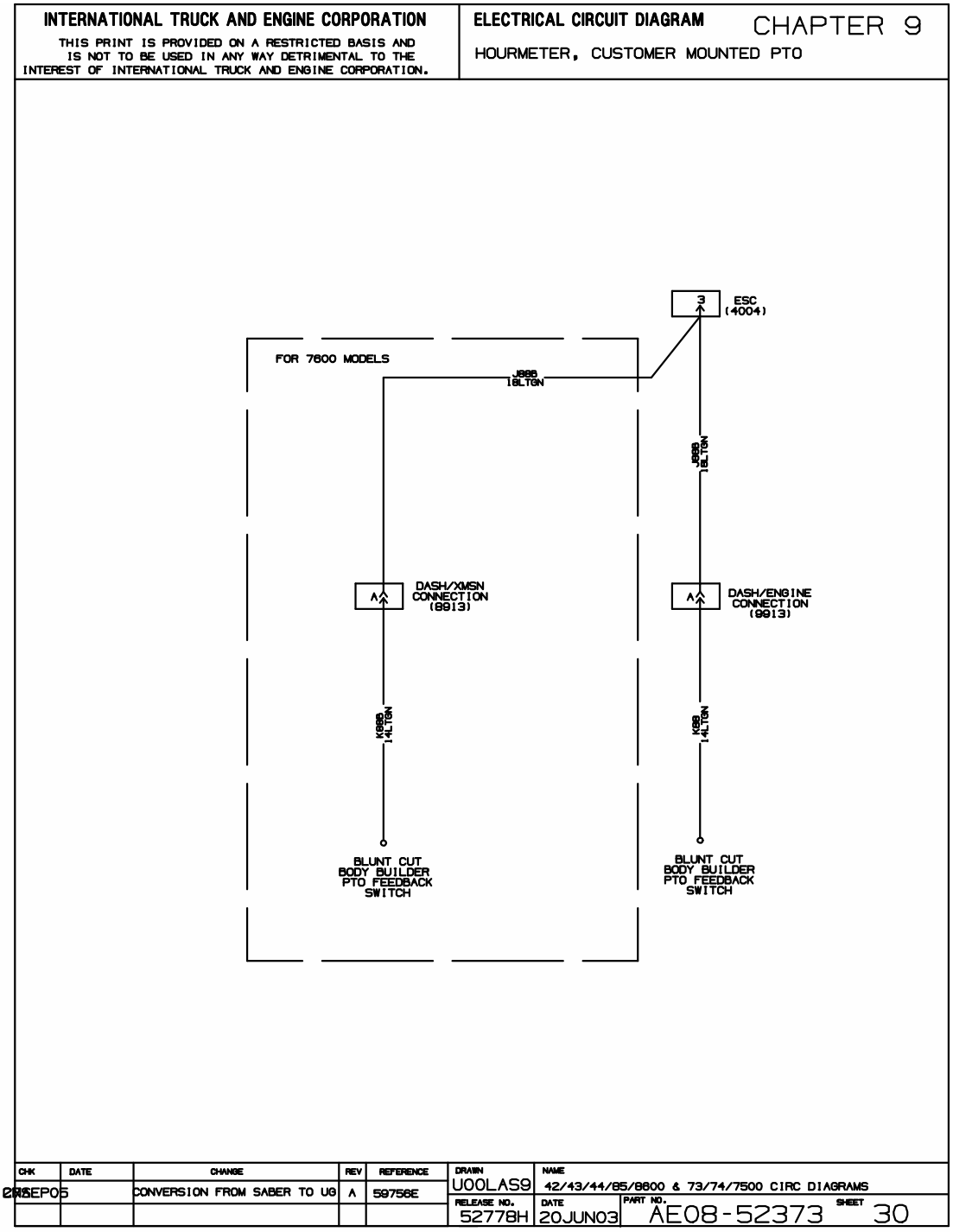

Figure 121 Hourmeter, Customer Mounted PTO

10.33. REMOTE START/ STOP, P. 31

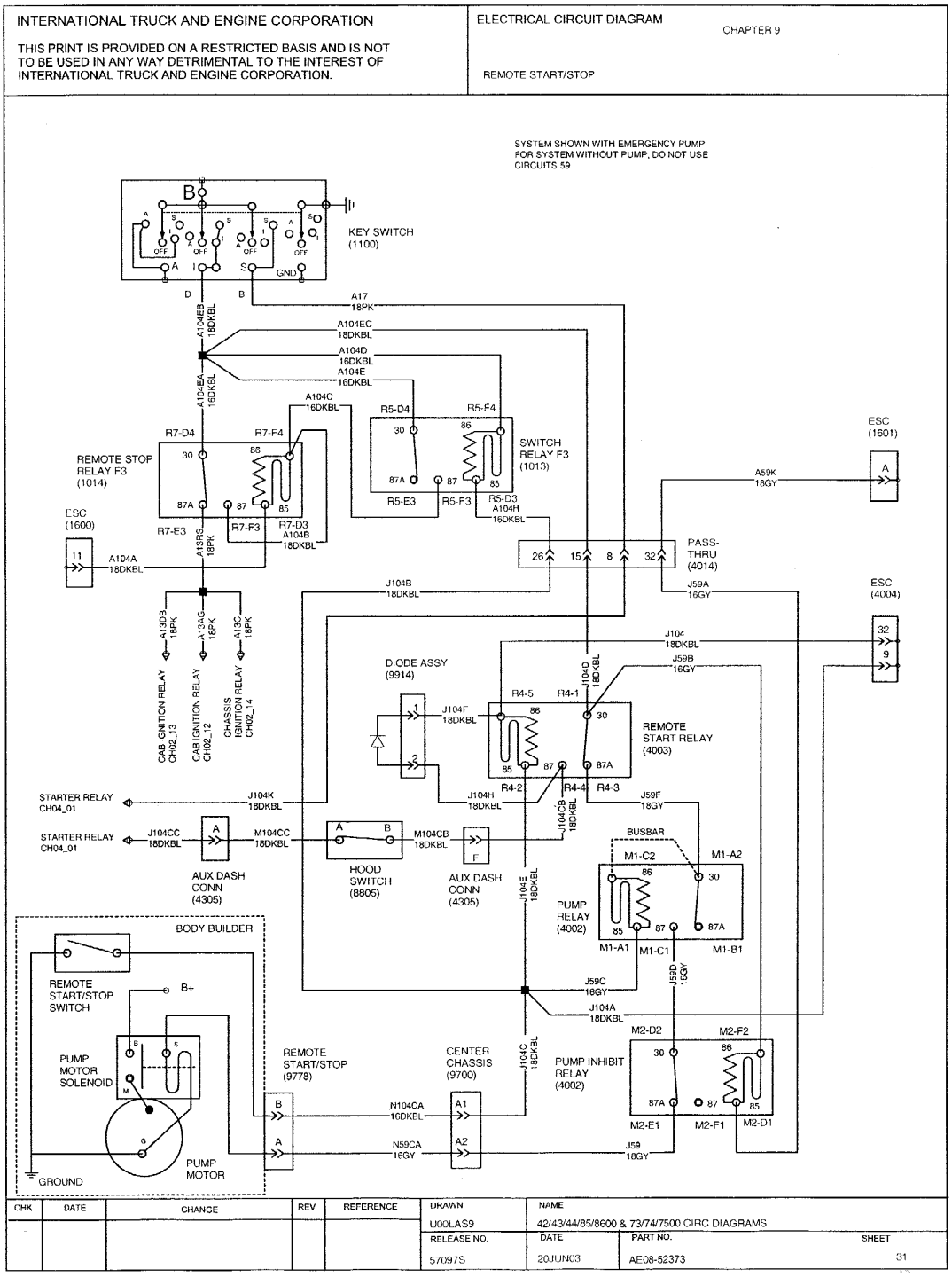

Figure 122 Remote Start/ Stop

10.34. LIFT AXLE WITH 14RAR, P. 32

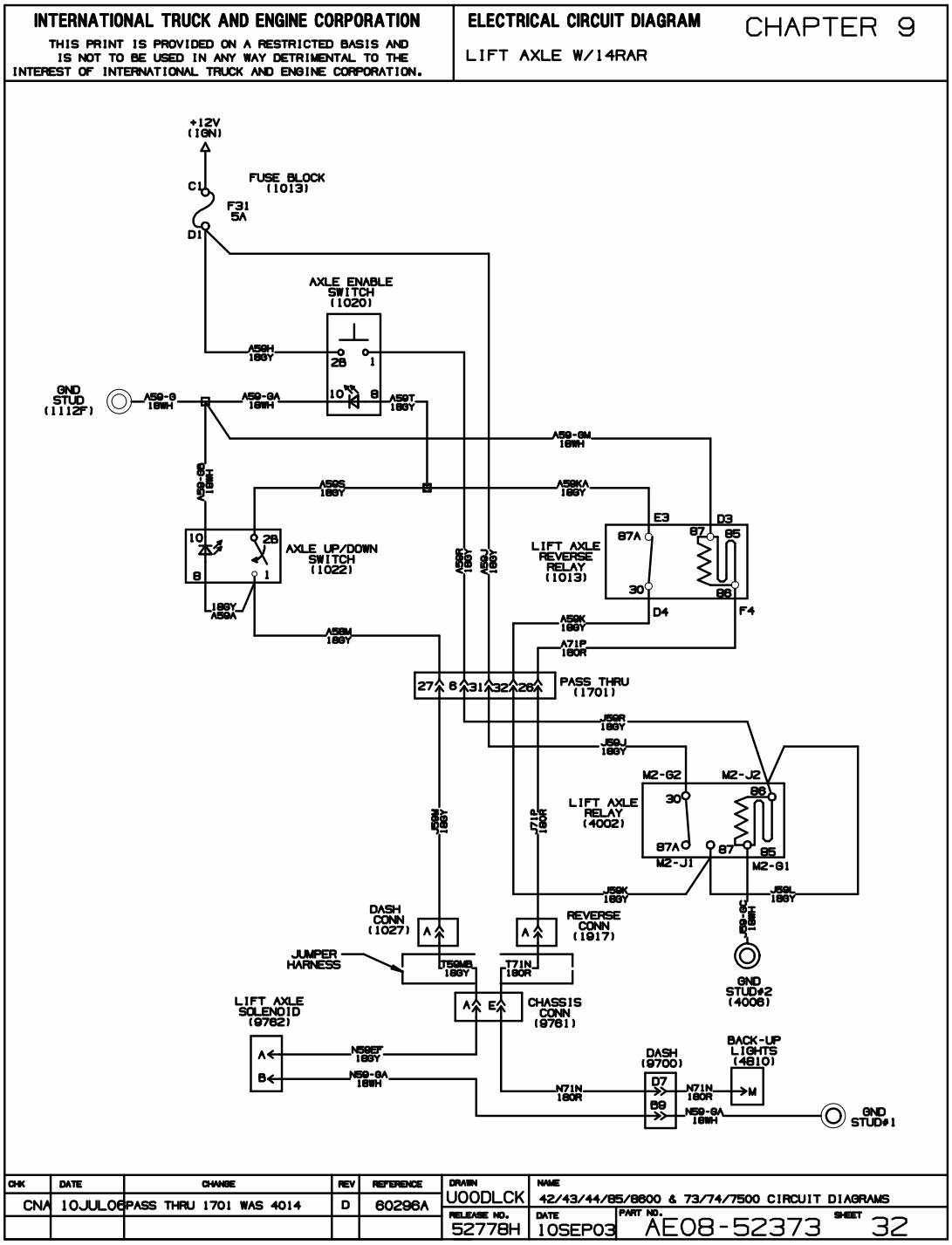

Figure 123 Lift Axle with 14RAR

10.35. LIFT GATE, P. 33

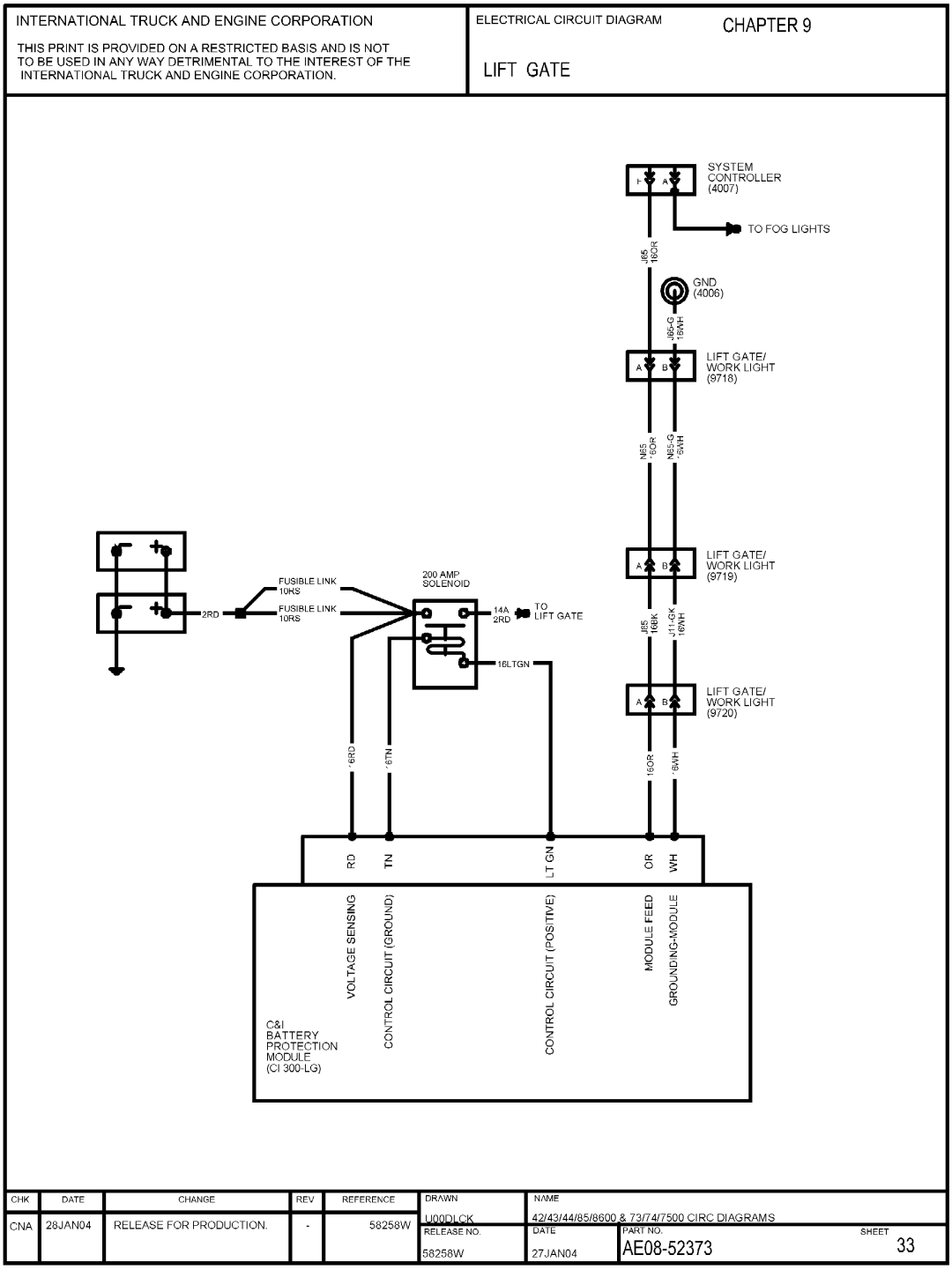

Figure 124 Lift Gate

10.36. LIFT AXLE MULTIPLEX, P. 34

INTERNATIONAL TRUCK AND ENGINE CORPORATION

THIS PRINT IS PROVIDED ON A RESTRICTED BASIS AND IS NOT TO BE USED IN ANY WAY DETRIMENTAL TO THE INTEREST OF THE INTERNATIONAL TRUCK AND ENGINE CORPORATION.

ELECTRICAL CIRCUIT DIAGRAM

CHAPTER 9

LIFT AXLE MULTIPLEX

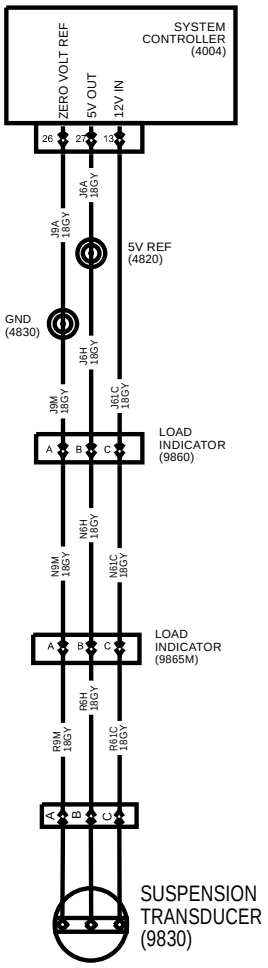

CHK	DATE	CHANGE	REV	REFERENCE	DRAWN	NAME		
CNA	11MAR04	RELEASE FOR PRODUCTION.	-	59169R	U00DLCK	42/43/44/85/8600 & 73/74/7500 CIRC DIAGRAMS		
					RELEASE NO. 59169R	DATE 04MAR04	PART NO. AE08-52373	SHEET 34

Figure 125 Lift Axle Multiplex

TRANSMISSIONS (CHAPTER 10)

11.1. ALLISON LCT TRANSMISSION OR ALLISON 1000, 2000, 2400, P. 1

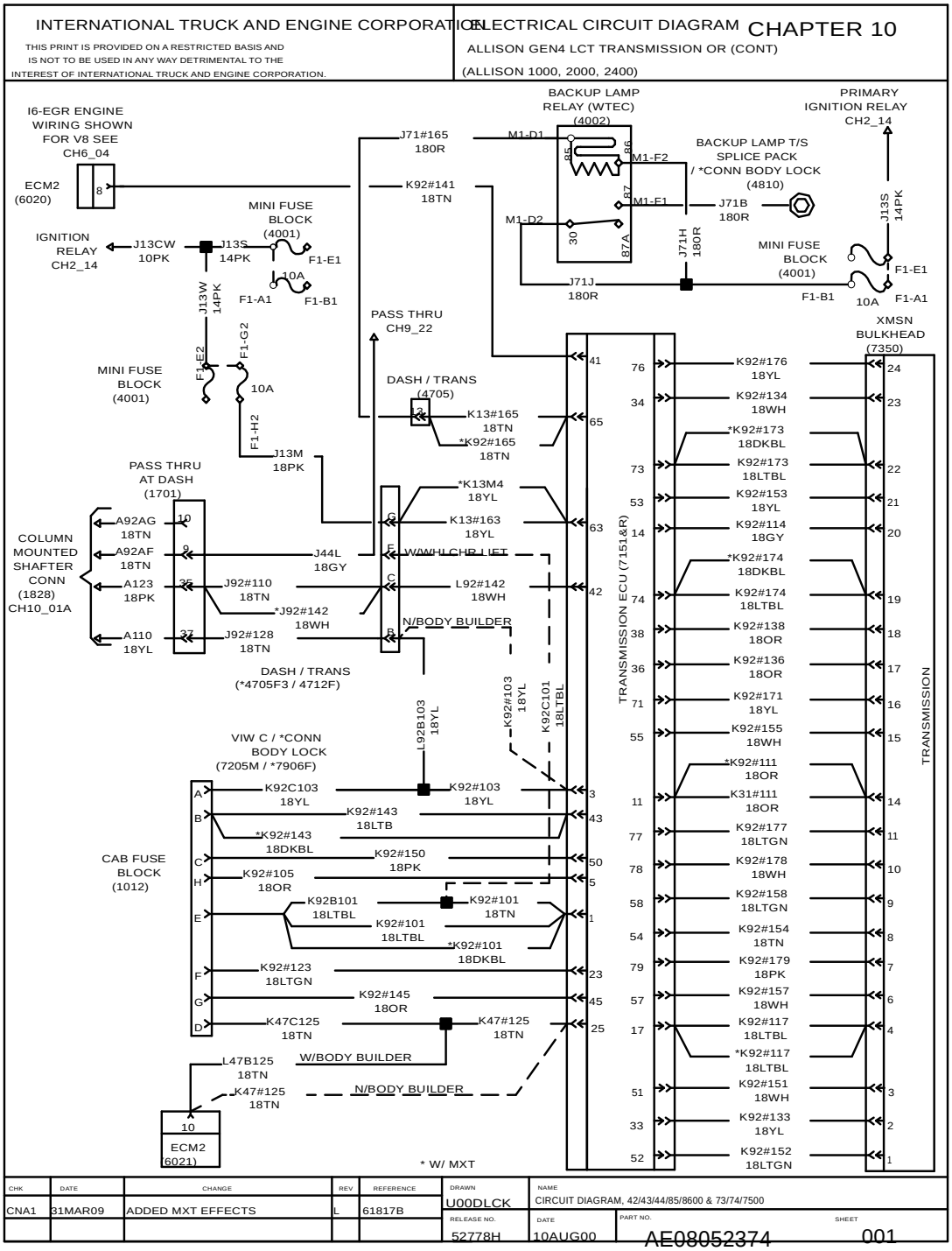

Figure 126 Allison LCT Transmission or Allison 1000, 2000, 2400

11.2. ALLISON MD TRANSMISSION, P. 2

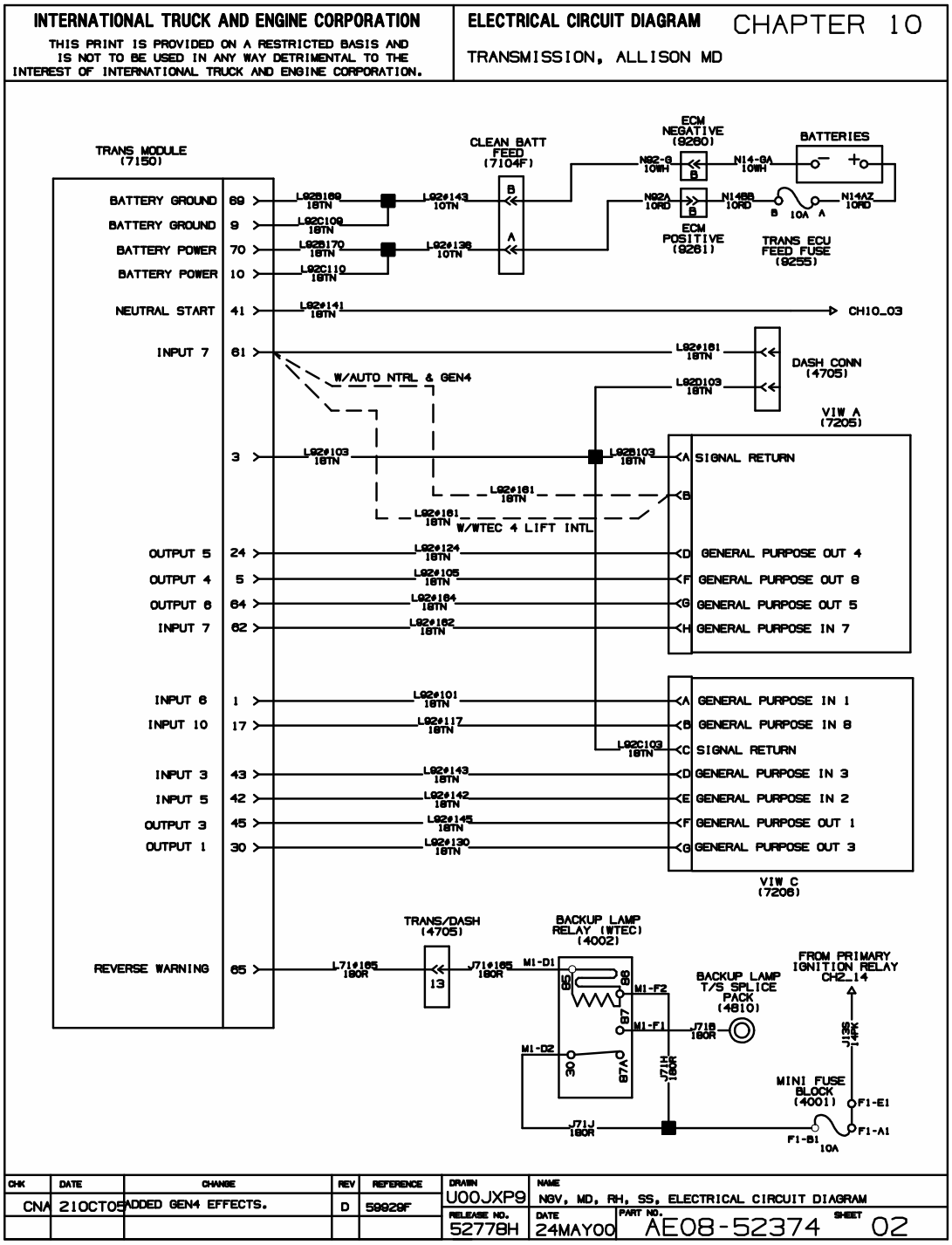

Figure 127 Allison MD Transmission

11.3. ALLISON MD TRANSMISSION (WTEC), P. 3

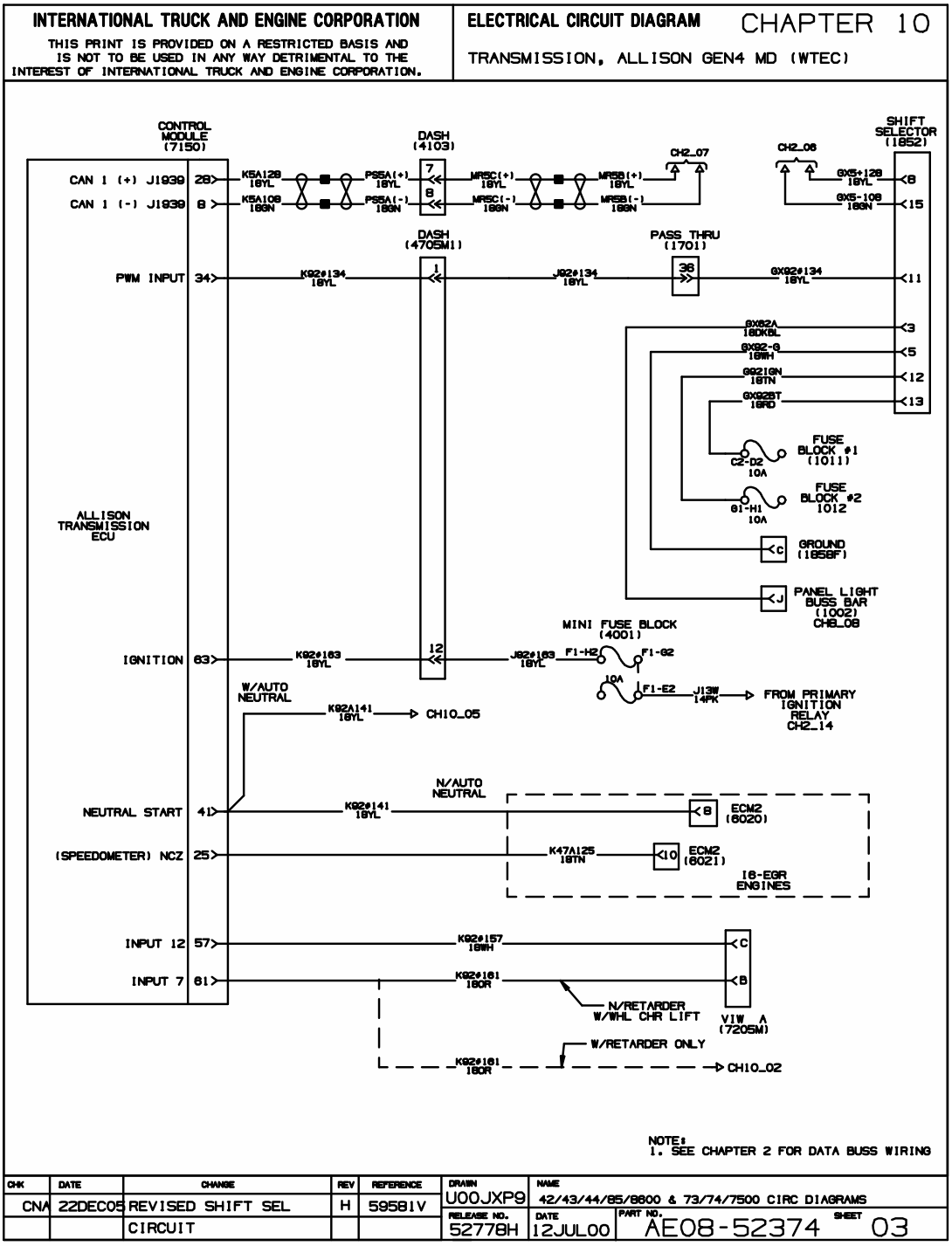

Figure 128 Allison MD Transmission (WTEC)

11.4. ALLISON MD TRANSMISSION (CONT.), P. 4

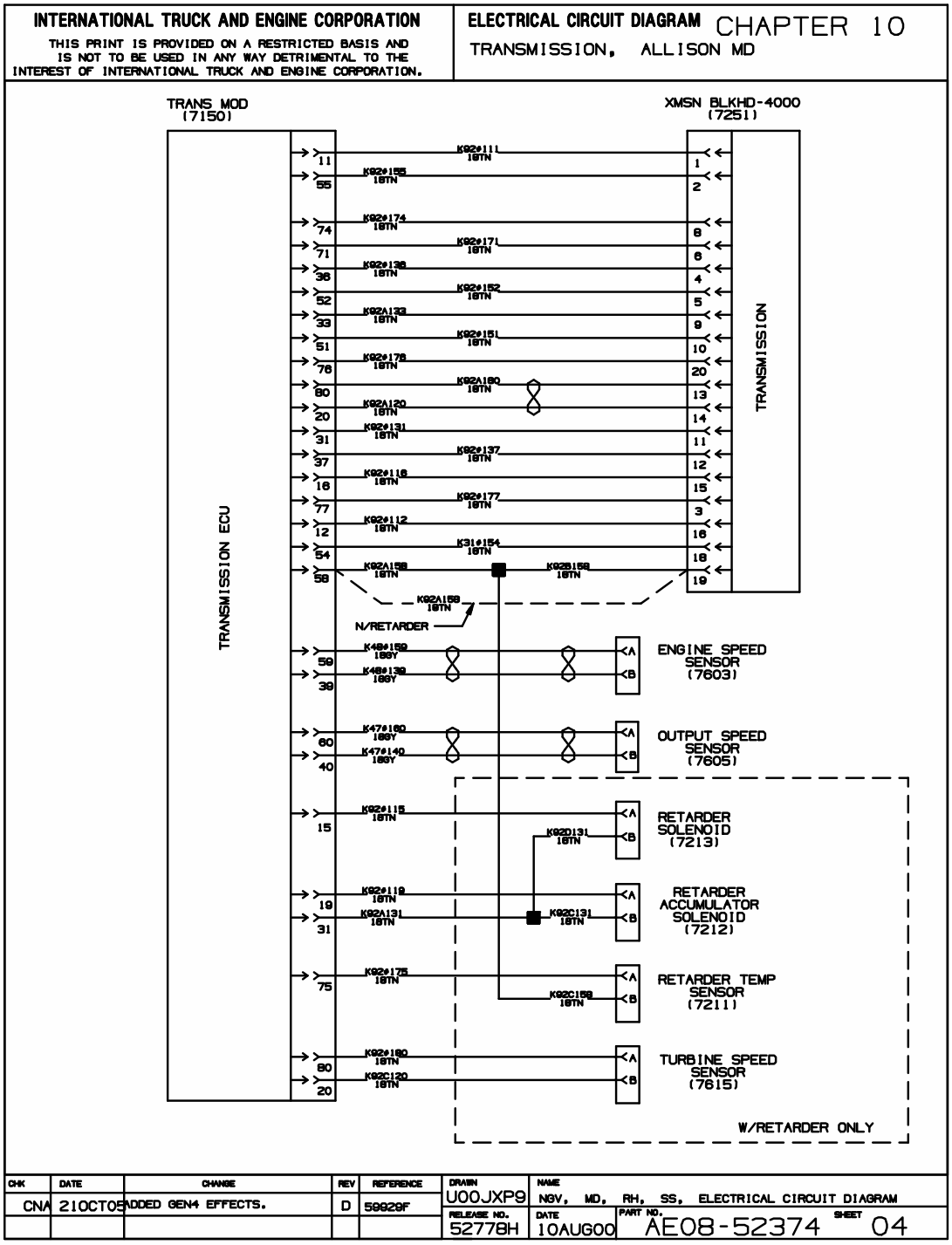

Figure 129 Allison MD Transmission (Cont.)

11.5. TRANSMISSION, WTEC MD W/AUTO NEUTRAL, P. 5

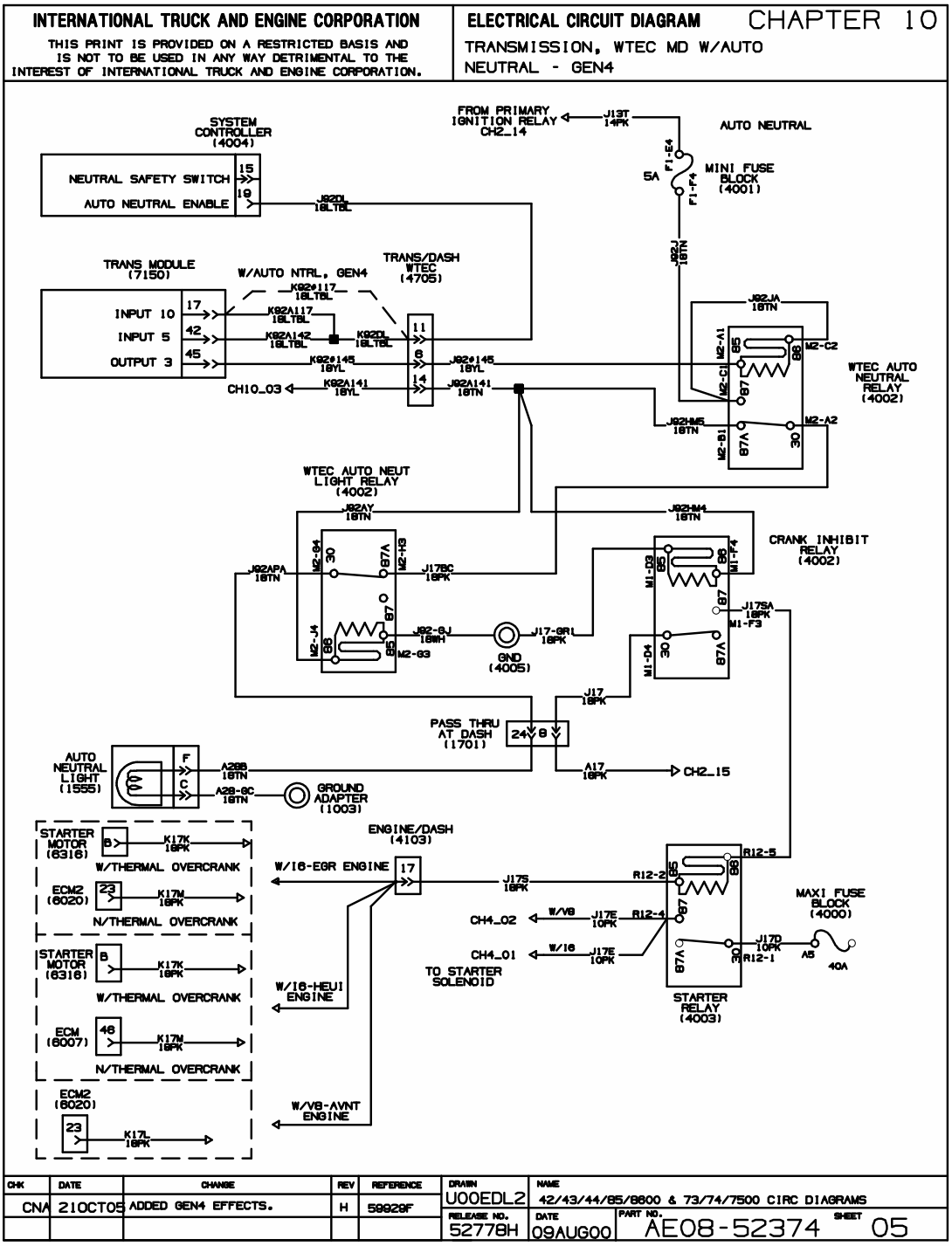

Figure 130 Transmission, WTEC MD W/Auto Neutral

11.6. EATON AUTOSHIFT TRANSMISSION, P. 6

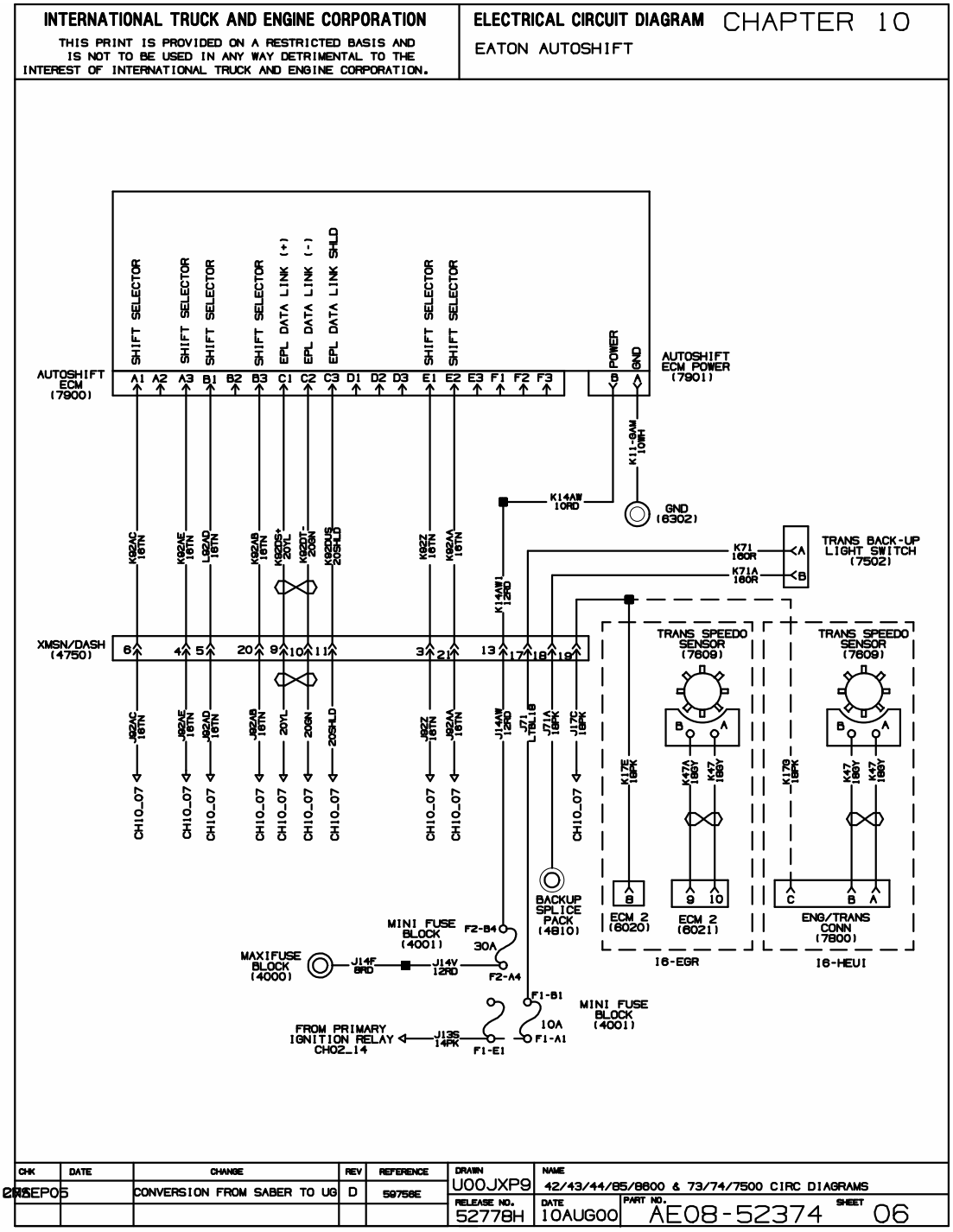

Figure 131 Eaton Autoshift Transmission

11.7. EATON AUTOSHIFT TRANSMISSION (CONT.), P. 7

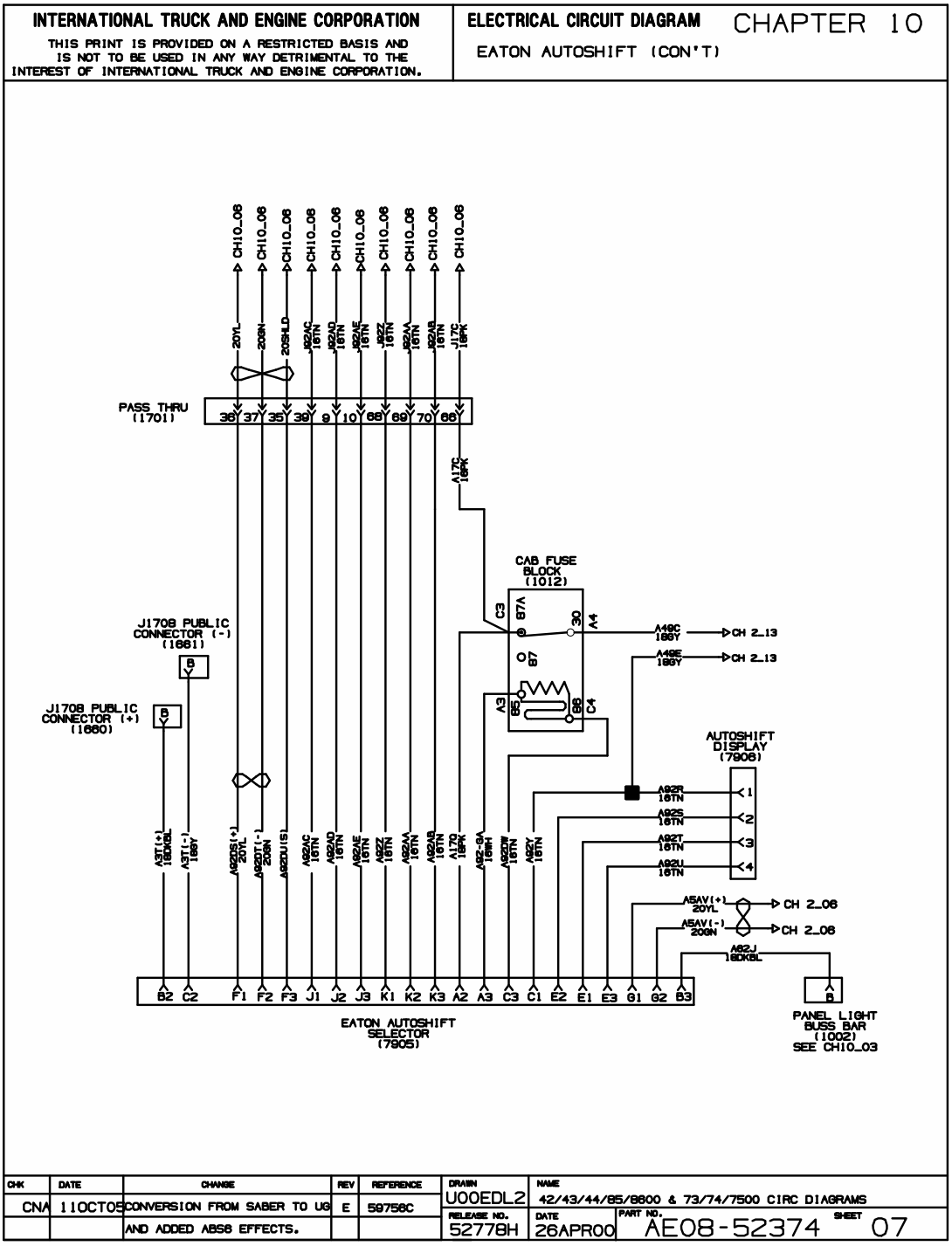

Figure 132 Eaton Autoshift Transmission (Cont.)

11.8. EATON LIGHTNING TRANSMISSION, P. 8

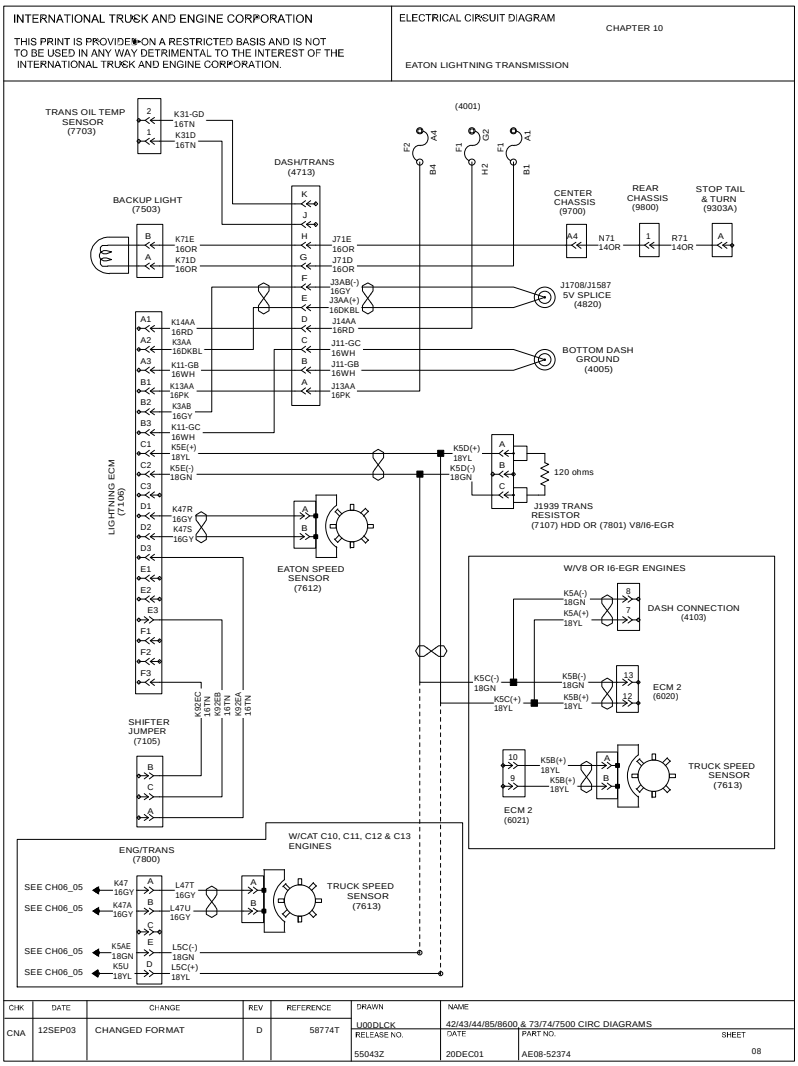

Figure 133 Eaton Lightning Transmission

11.9. ALLISON HD TRANSMISSION, P. 9

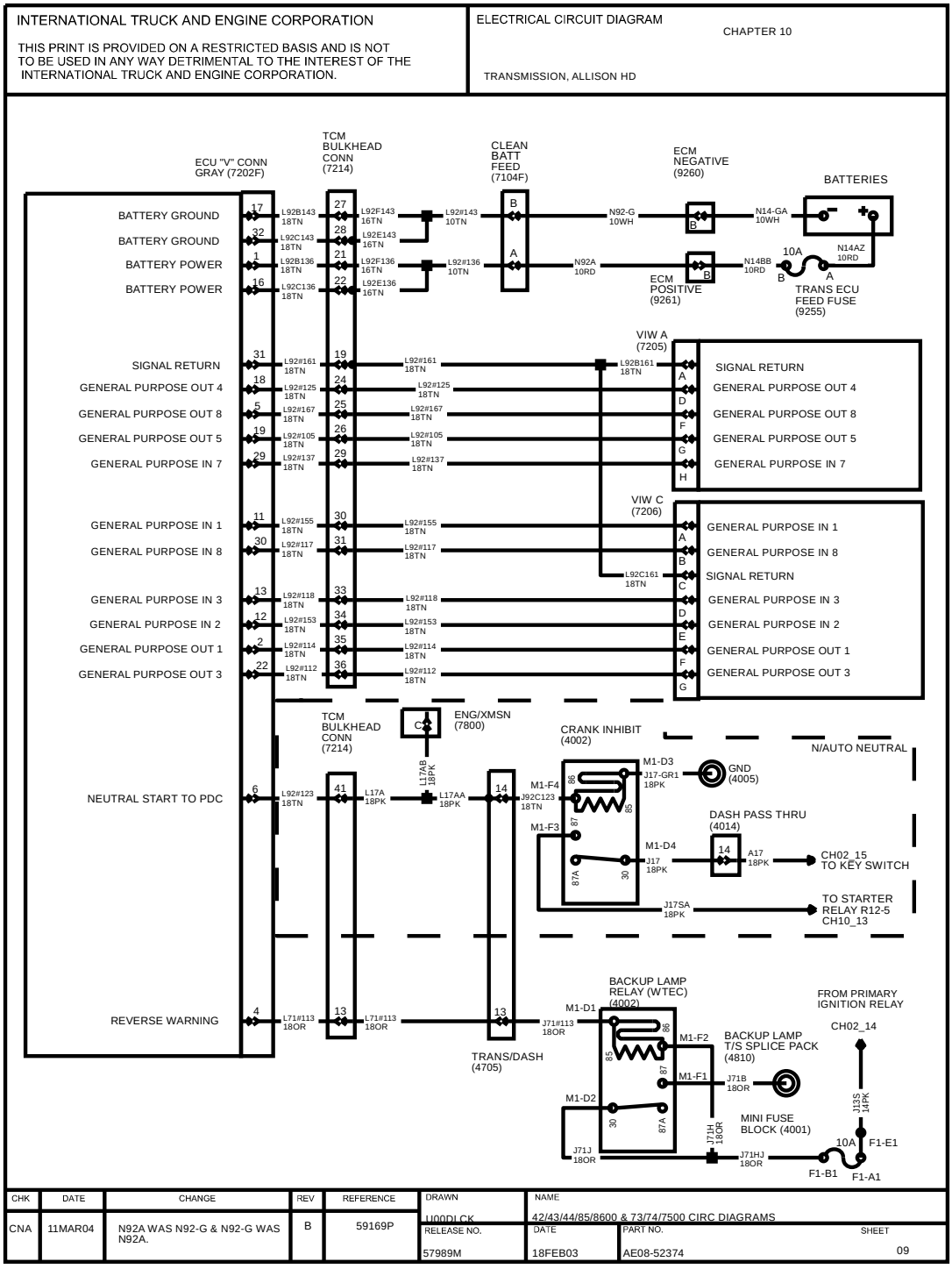

Figure 134 Allison HD Transmission

11.10. ALLISON HD TRANSMISSION, P. 10

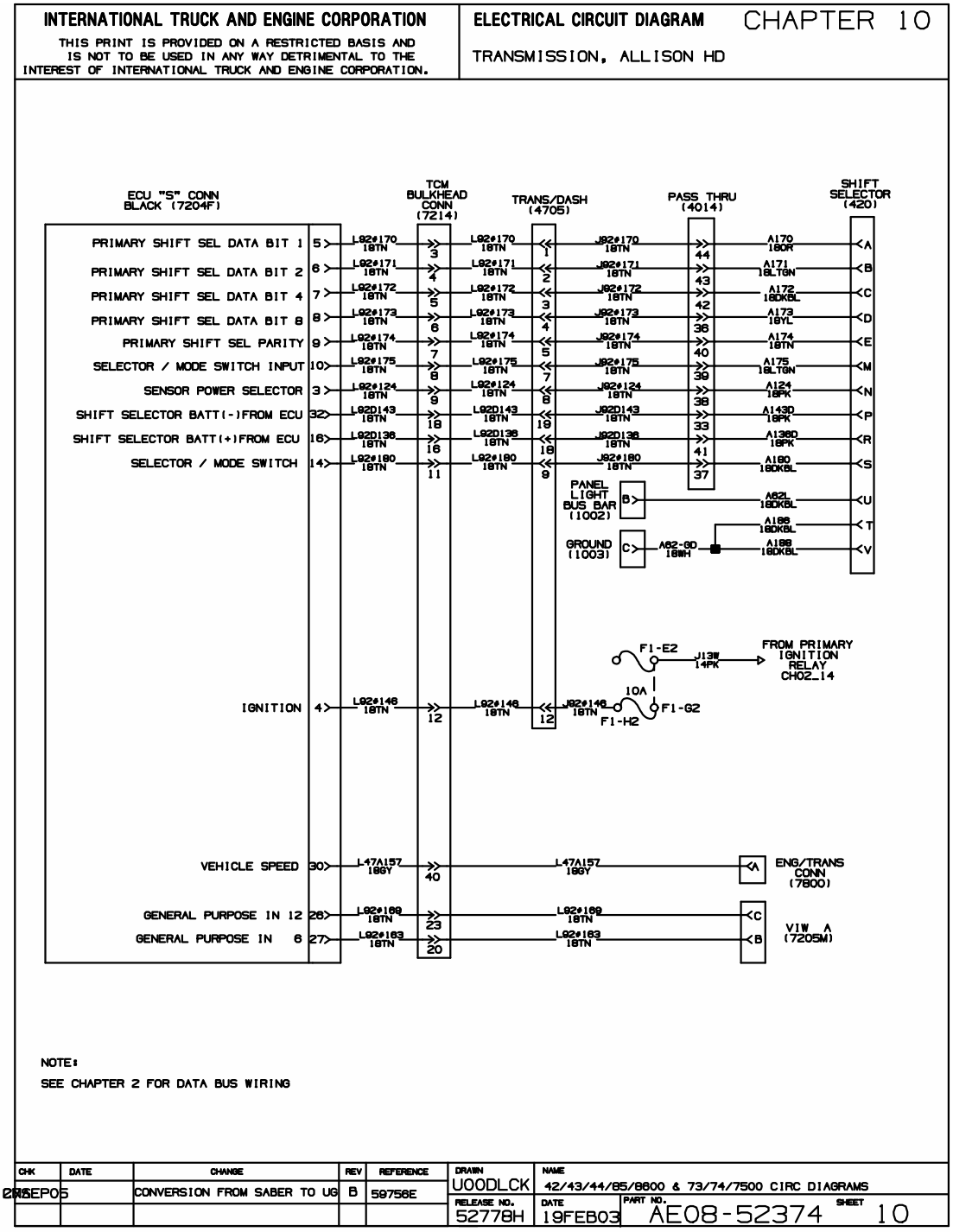

Figure 135 Allison HD Transmission (Cont.)

11.11. ALLISON HD TRANSMISSION, P. 11

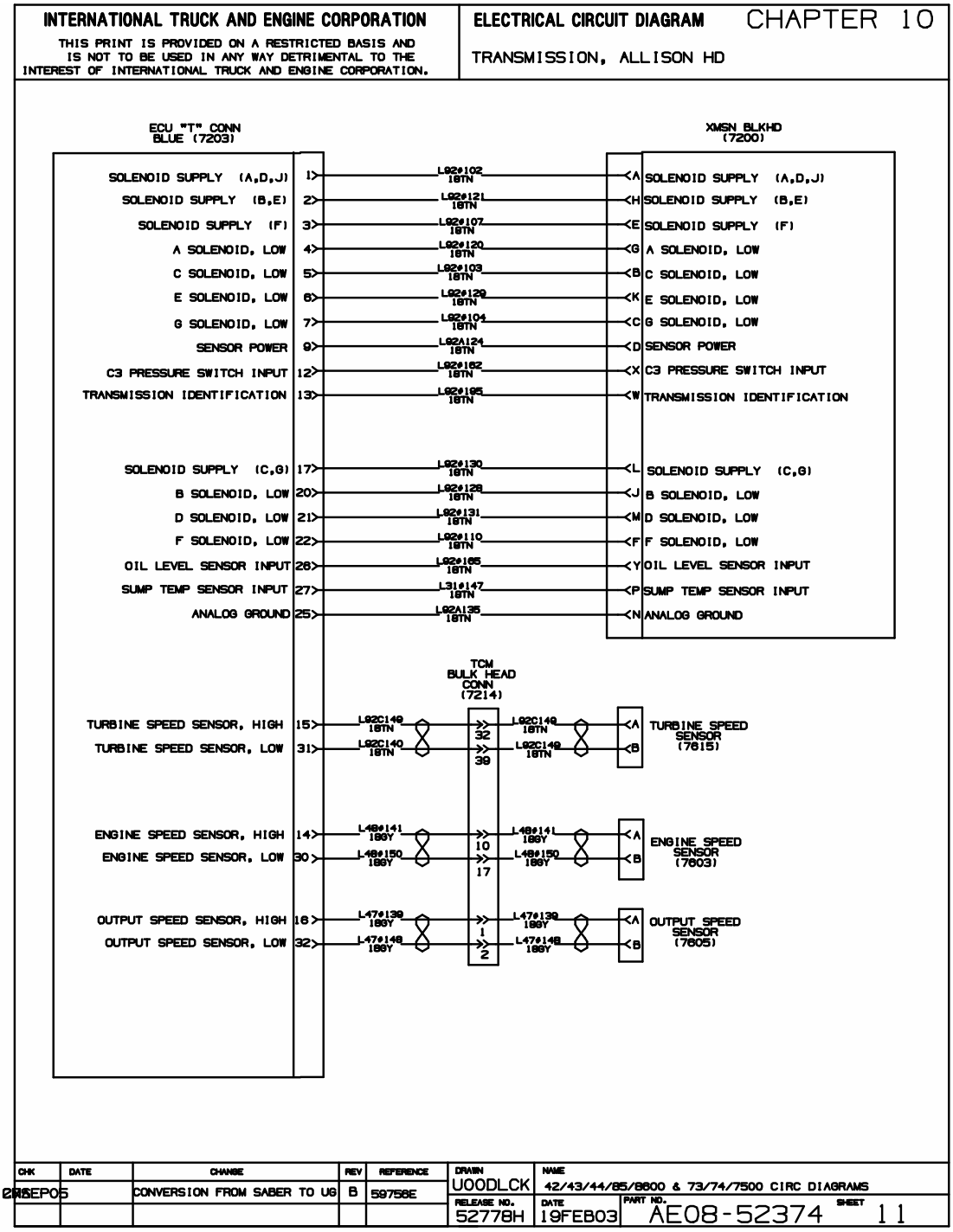

Figure 136 Allison HD Transmission (Cont.)

11.12. ALLISON HD TRANSMISSION WITH AUTO NEUTRAL, P. 12

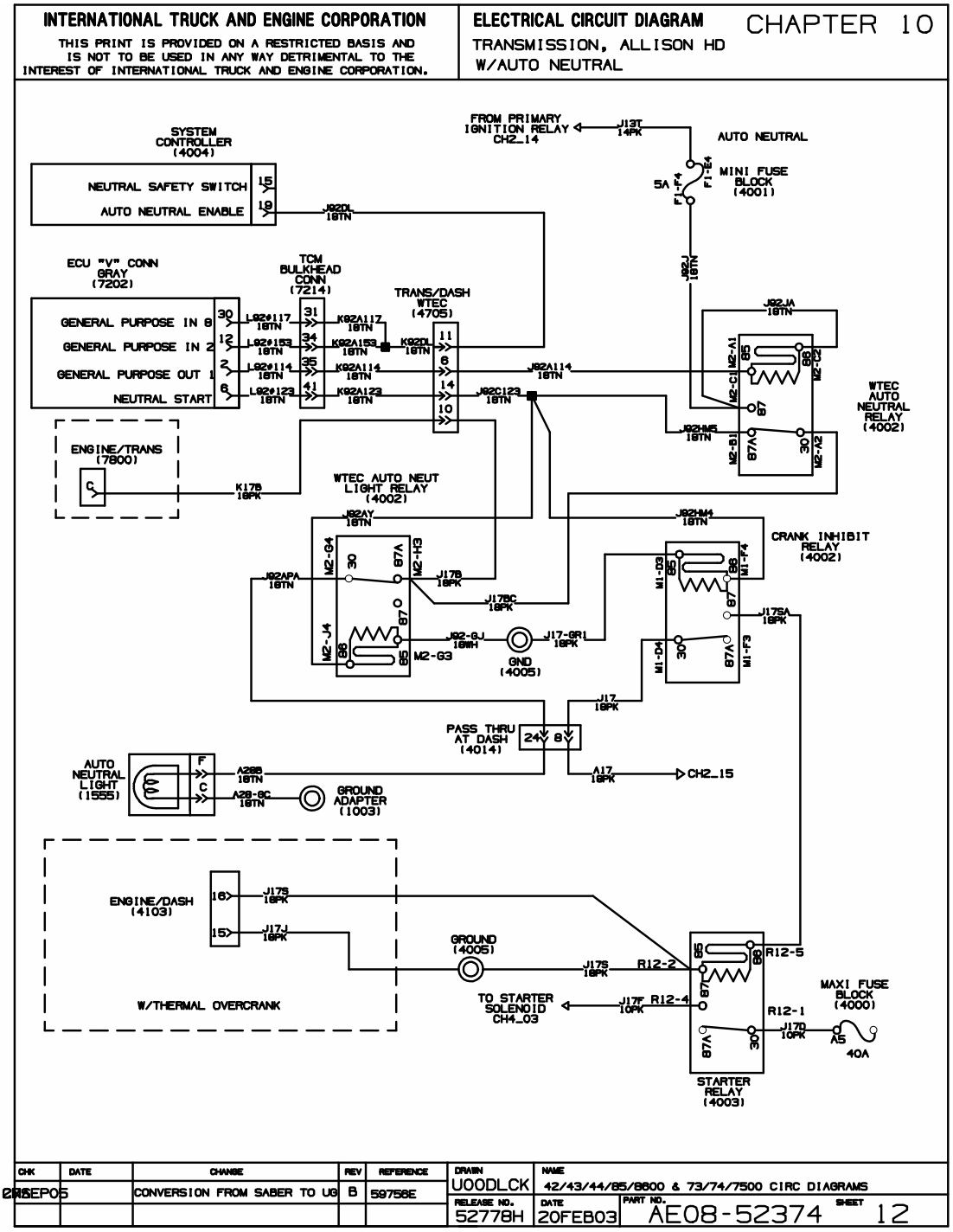

Figure 137 Allison HD Transmission With Auto Neutral

11.13. ALLISON HD TRANSMISSION WITH AUTO NEUTRAL AND WITH 0013WUA, P. 13

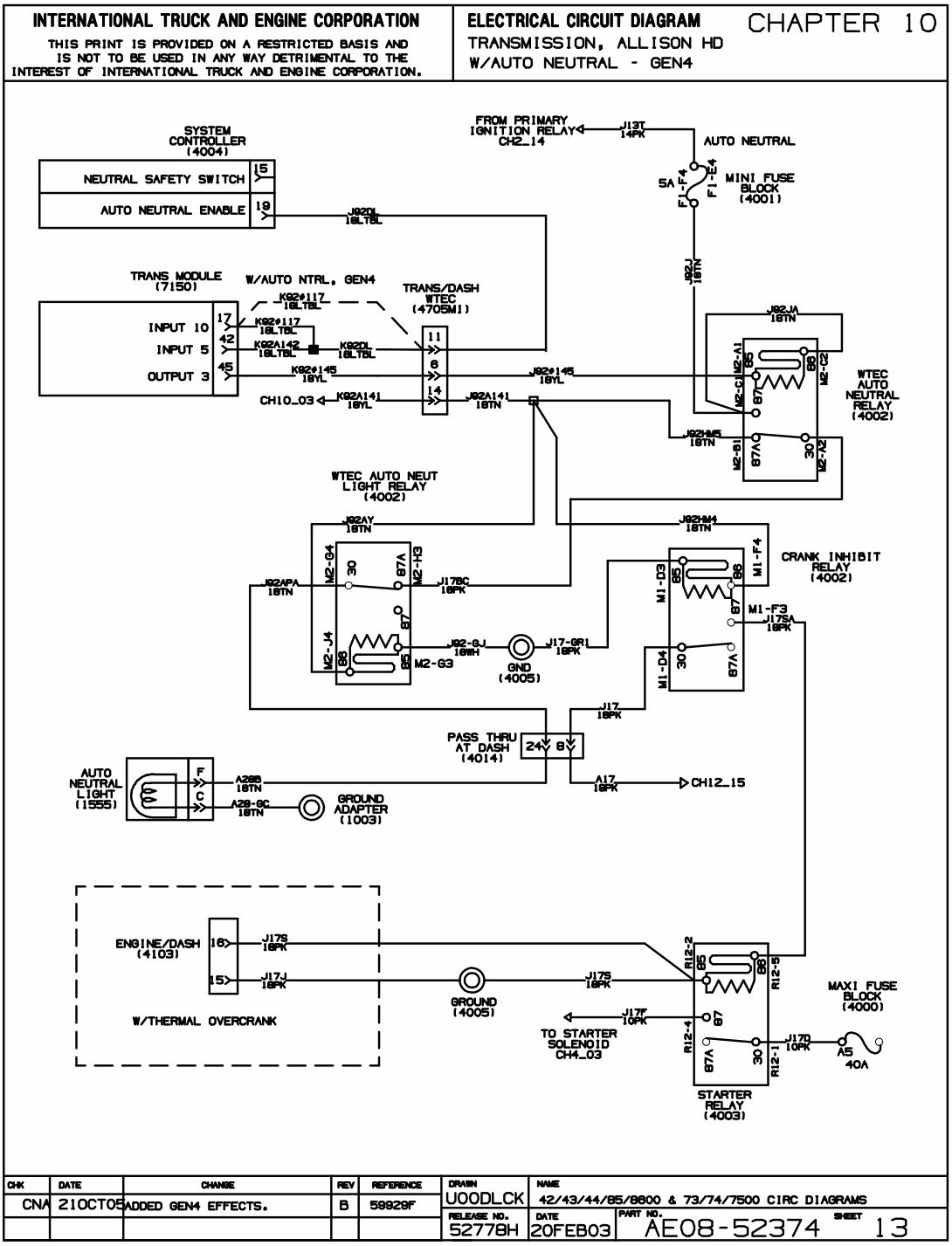

Figure 138 Allison HD Transmission With Auto Neutral and with 0013WUA

11.14. ALLISON LCT TRANSMISSION (ALLISON 1000, 2000, 2400) WITH I6 HEUI, P. 14

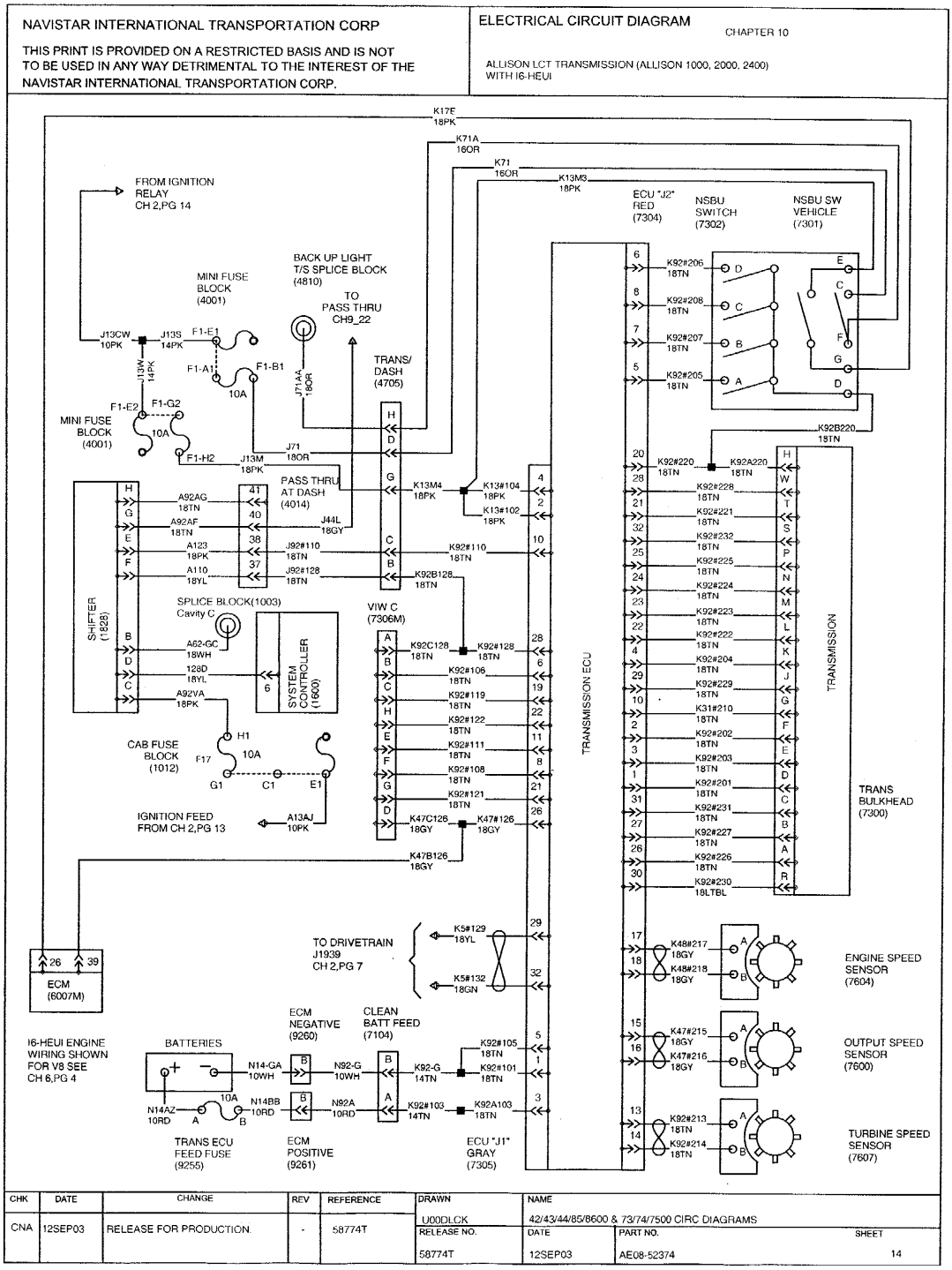

Figure 139 Allison LCT Transmission (Allison 1000, 2000, 2400) with I6 HEUI

11.15. TRANSMISSION RETARDER CONTROL WIRING WITH MD XMSN, HARD WIRED EFFECTS, P. 15

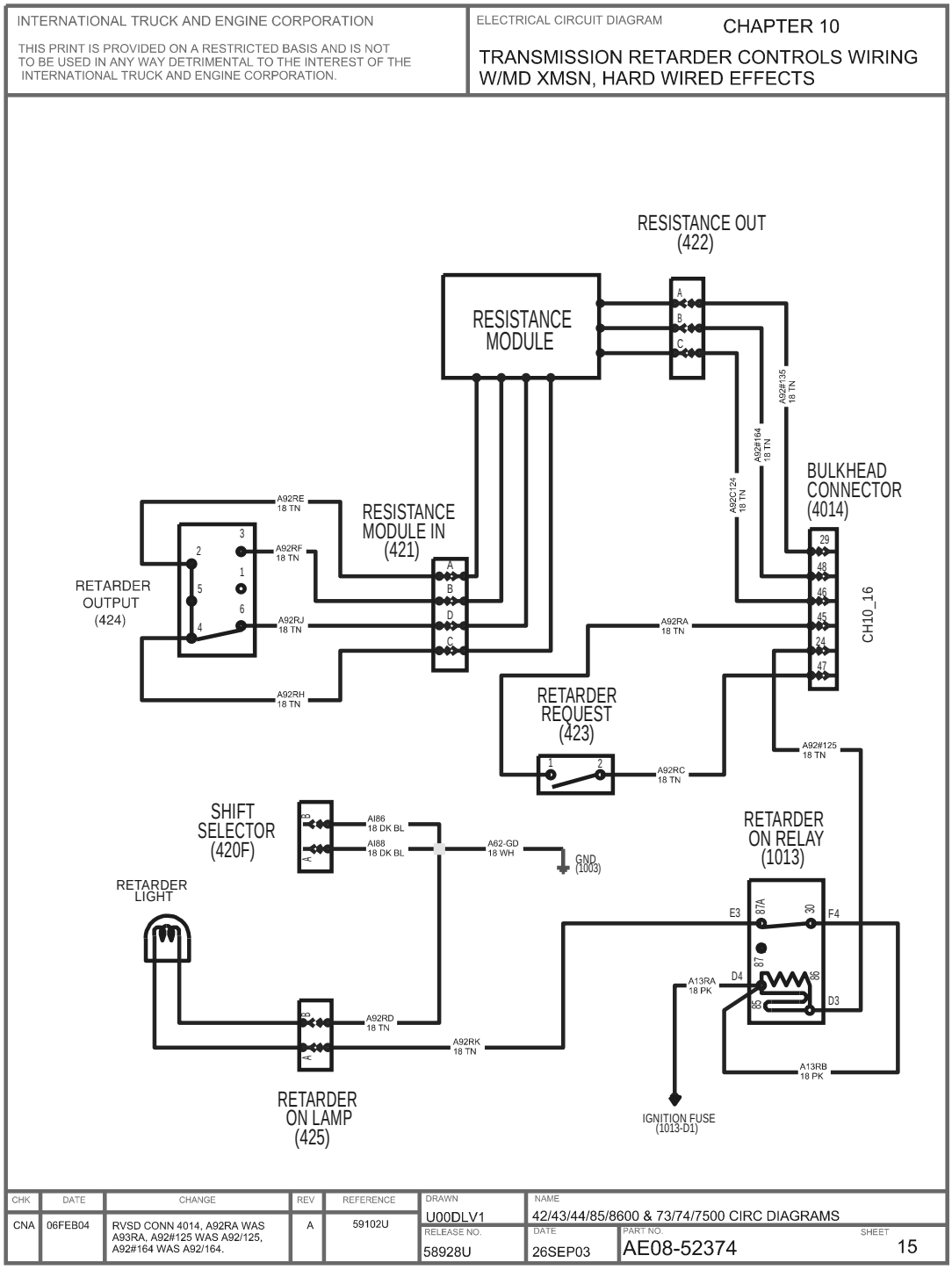

Figure 140 Transmission Retarder Control Wiring with MD Transmission, Hard Wired Effects

11.16. TRANSMISSION RETARDER CONTROL WIRING WITH MD XMSN, HARD WIRED EFFECTS, P. 16

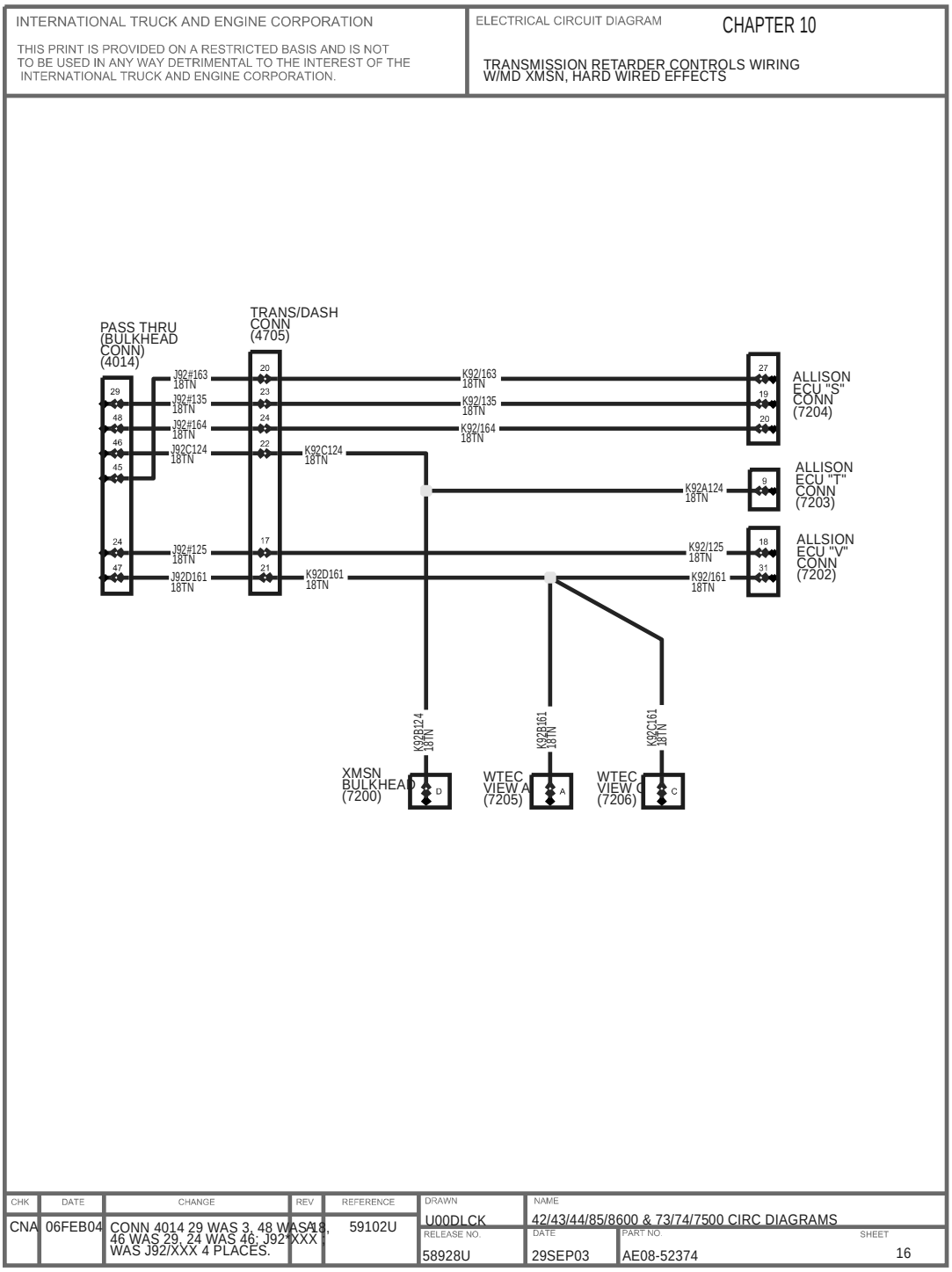

Figure 141 Transmission Retarder Control Wiring with MD Transmission, Hard Wired Effects

AIR CONDITIONING (CHAPTER 11)

12.1. HVAC SYSTEMS, P. 1

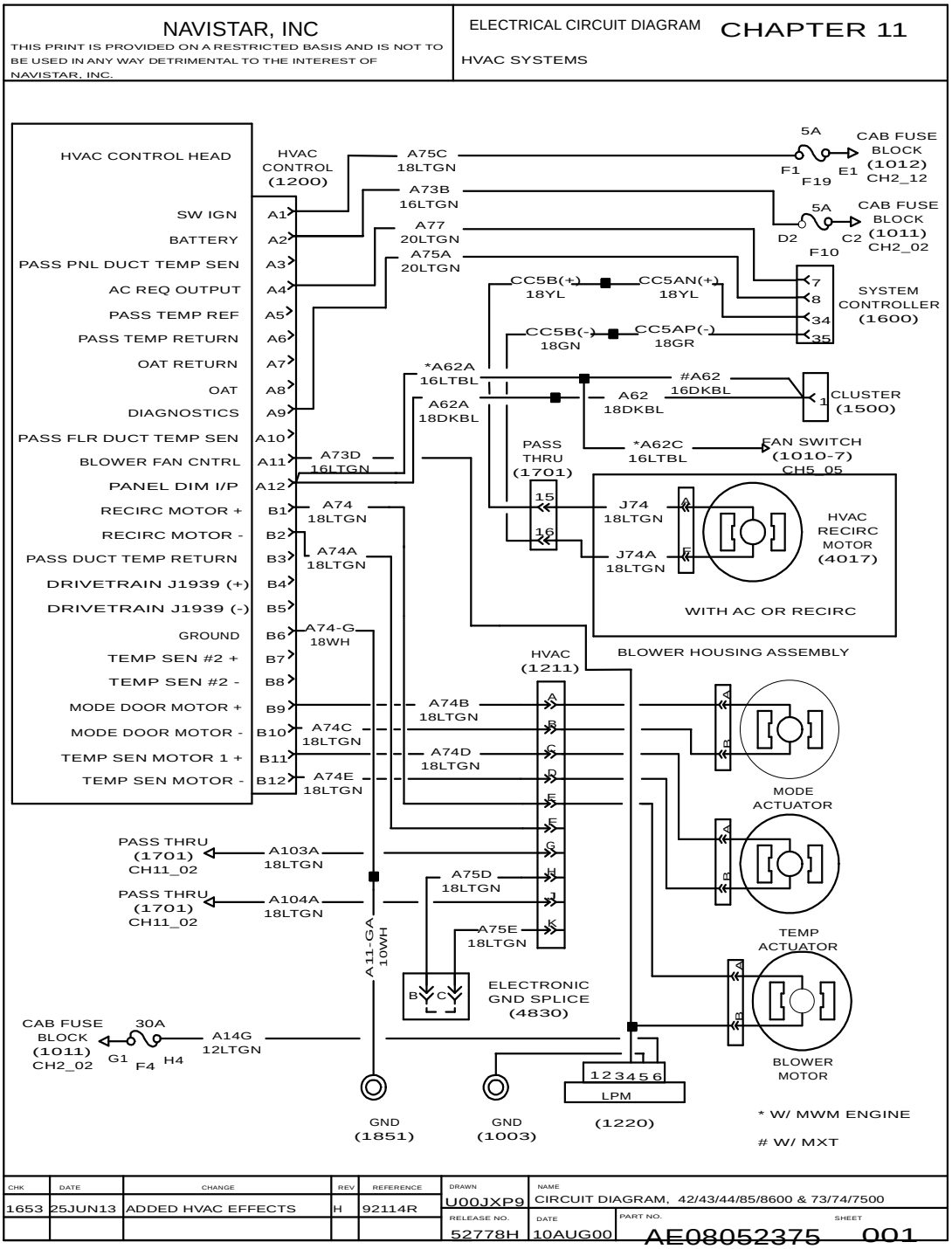

Figure 142 HVAC Systems

12.2. AIR CONDITIONING (ONLY), P. 2

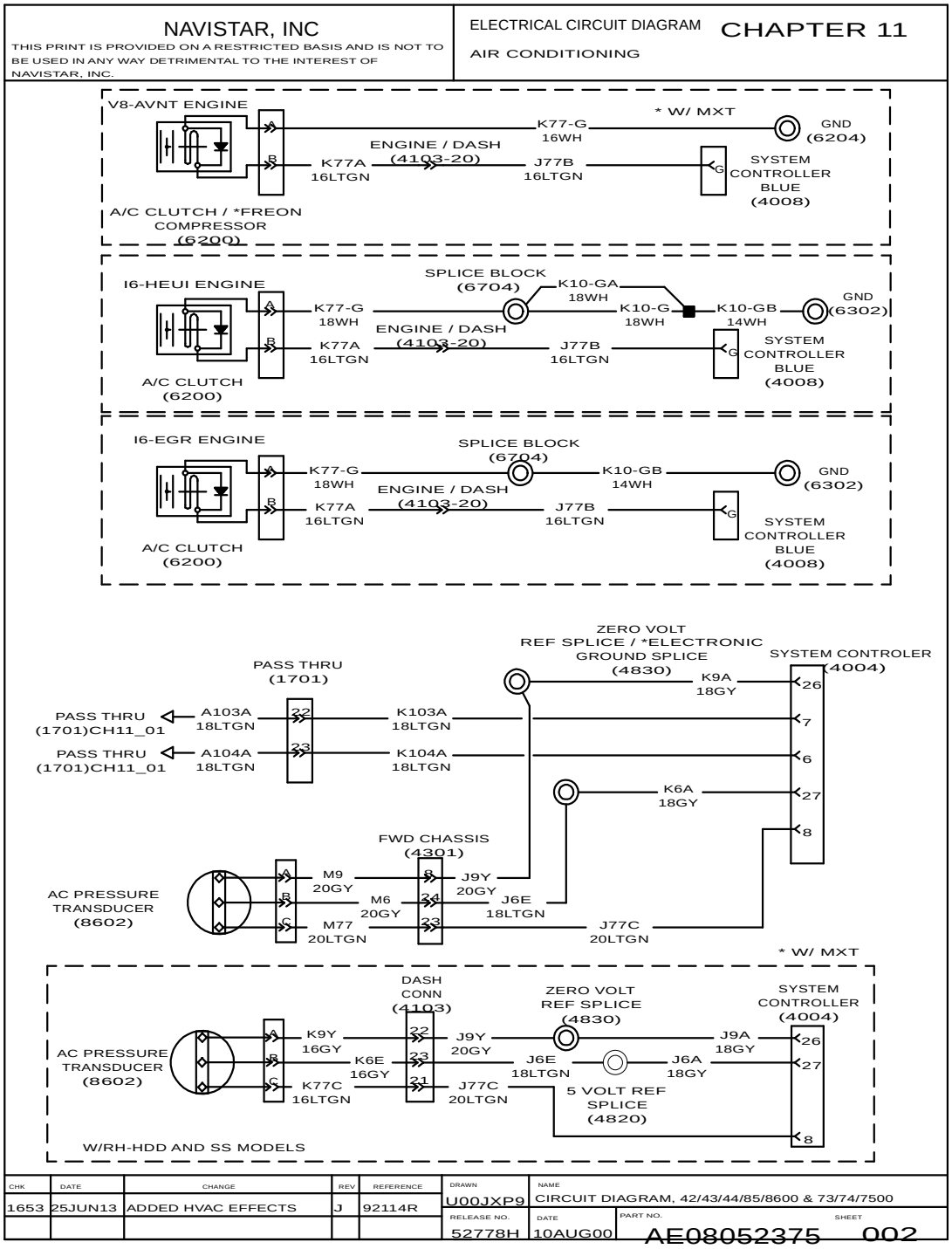

Figure 143 Air Conditioning (Only)

12.3. AUTOTHERM SYSTEMS, P. 3

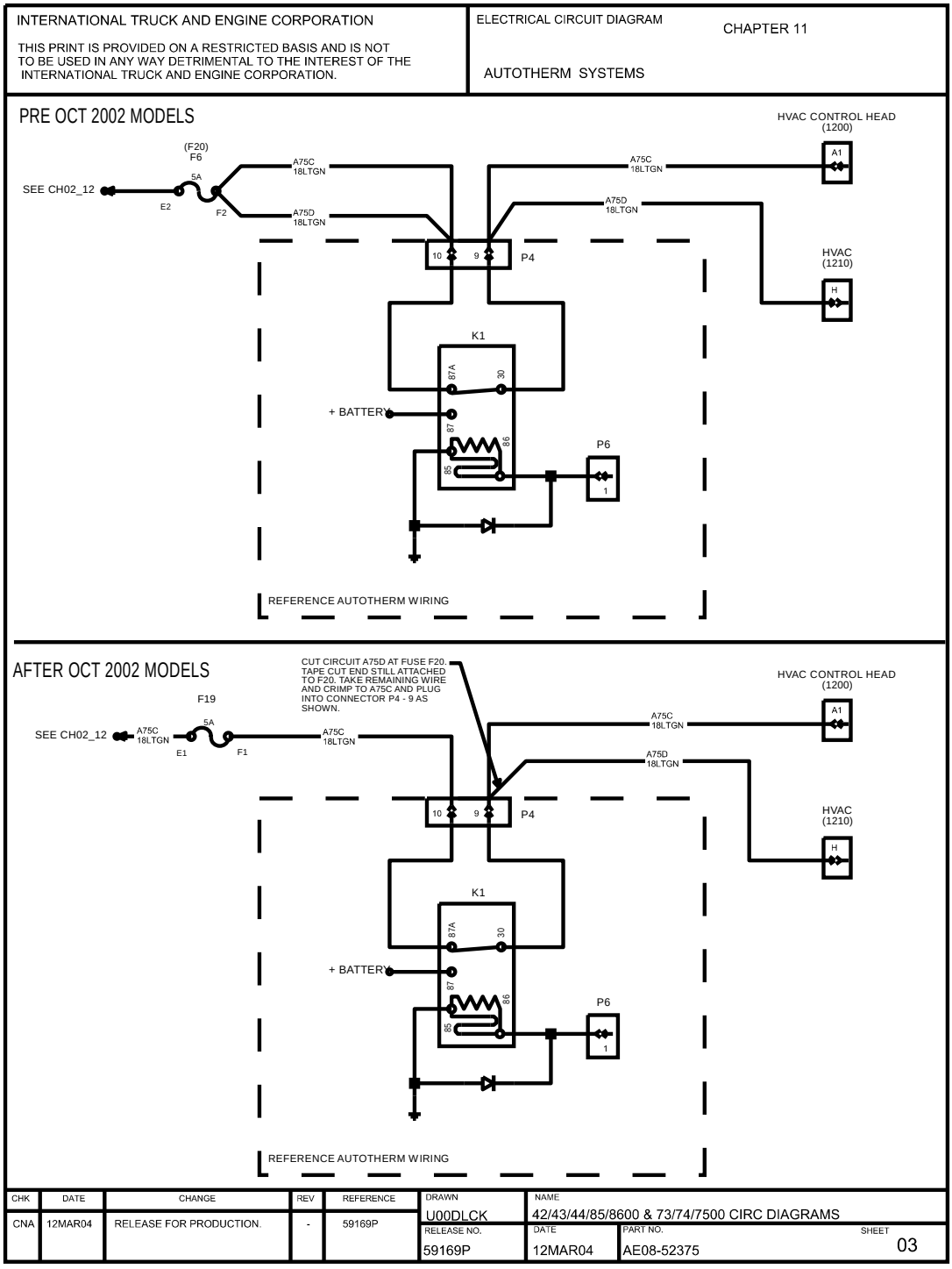

Figure 144 Air Conditioning (Only)

CONNECTOR COMPOSITES (CHAPTER 12)

13.1. CONNECTOR COMPOSITES (10M), (71), (72), (345F), P. 1

INTERNATIONAL TRUCK AND ENGINE CORPORATION

THIS PRINT IS PROVIDED ON A RESTRICTED BASIS AND
IS NOT TO BE USED IN ANY WAY DETRIMENTAL TO THE
INTEREST OF INTERNATIONAL TRUCK AND ENGINE CORPORATION.

ELECTRICAL CIRCUIT DIAGRAM CHAPTER 12

CONNECTOR COMPOSITES - MATING VIEW SHOWN

AUXILIARY POWER (10M)
(LOCATED IN INSTRUMENT PANEL)

CONNECTOR - 1661197C1

CIGAR LIGHTER TYPE

CAV	CIR	GAUGE	COLOR	TERM
A	A86M	14	LT GN	3534167C1
B	A86-GA	14	WH	3534167C1

TWO POST TYPE

CAV	CIR	GAUGE	COLOR	TERM
A	A86N	14	LT GN	3534167C1
B	A86-GB	14	WH	3534167C1

CONNECTOR - 1661196C1

CAV	CIR	GAUGE	COLOR	TERM
A	A86M	14	LT GN	1661209C1
B	A86-GA	14	WH	1661209C1

LEFT TAIL LIGHT (71)
(LOCATED AT TAIL LIGHTS)

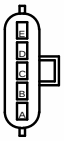

CONNECTOR - 1661375C2
BODY LOCK - 1661376C1
PLUG - 0587579C1

STOP & TAIL LIGHT TO LIGHT

CAV	CIR	GAUGE	COLOR	TERM	SEAL
A	S71C	14	LT BL	2033816C1	0589391C1
B	S68C	14	BN	2033816C1	0589391C1
C	S57B	14	LT GN	2033816C1	0589391C1
D	PLUG	-	-	-	-
E	S10-GC	14	WH	2033816C1	0589391C1

RIGHT TAIL LIGHT (72)
(LOCATED AT TAIL LIGHTS)

CONNECTOR - 1661375C2
BODY LOCK - 1661376C1
PLUG - 0587579C1

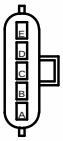

STOP & TAIL LIGHT TO LIGHT

CAV	CIR	GAUGE	COLOR	TERM	SEAL
A	S71C	14	LT BL	2033816C1	0589391C1
B	S68C	14	BN	2033816C1	0589391C1
C	S57B	14	LT GN	2033816C1	0589391C1
D	PLUG	-	-	-	-
E	S10-GC	14	WH	2033816C1	0589391C1

CLEARANCE LIGHT
(345F)
(LOCATED IN ROOF OF CAB)

CONNECTOR - 1661260C1
BODY LOCK - 1661264C1

CAV	CIR	GAUGE	COLOR	TERM
A	58A	18	BN	1661261C1
B	58-GA	18	WH	1661261C1

CHK	DATE	CHANGE	REV	REFERENCE	DRAWN	NAME
		10M WAS 10. 345F WAS	B	56507K	U00DAG9	42/43/44/85/8600 & 73/74/7500 CIRC DIAGRAMS
		345. RMV'D CHART (72)			RELEASE NO. P52778H	DATE 28JUN00 · PART NO. AE08-52376 · SHEET 01

Figure 145 Connector Composites (10M), (71), (72), (345F)

13.2. CONNECTOR COMPOSITES (420F), (420M), (520), (521), (522), (523), (524), P. 2

INTERNATIONAL TRUCK AND ENGINE CORPORATION

THIS PRINT IS PROVIDED ON A RESTRICTED BASIS AND IS NOT TO BE USED IN ANY WAY DETRIMENTAL TO THE INTEREST OF INTERNATIONAL TRUCK AND ENGINE CORPORATION.

ELECTRICAL CIRCUIT DIAGRAM CHAPTER 12

CONNECTOR COMPOSITES - MATING VIEW SHOWN

SHIFT SELECTOR (420F) (LOCATED IN INSTRUMENT PANEL)

CONNECTOR - 3522536C91
BODY LOCK - 3518287C1
PLUG - 3518314C1

CAV	CIR	GAUGE	COLOR	TERM
A	A170	18	OR	3517243C1
B	A171	18	LT GN	3517243C1
C	A172	18	DK BL	3517243C1
D	A173	18	YL	3517243C1
E	A174	18	TN	3517243C1
L	-	-	-	-
M	A175	18	LT GN	3517243C1
N	A124	18	PK	3517243C1
P	A143D	18	GY	3517243C1
R	A136D	18	PK	3517243C1
S	A180	18	DK BL	3517243C1
T	A186	18	DK BL	3517243C1
U	A62L	18	DK BL	3517243C1
V	A188	18	DK BL	3517243C1

SHIFTER (420M) (LOCATED IN INSTRUMENT PANEL)

CONNECTOR - 3525872C1
BODY LOCK - 3525873C1
PLUG - 2025431C1

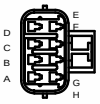

CAV	CIR	GAUGE	COLOR	TERM	SEAL
A	PLUG	-	-	-	-
B	A62-GC	18	WH	1661875C1	1661872C1
C	A92VA	18	PK	1661875C1	1661872C1
D	128D	18	YL	1661875C1	1661872C1
E	A123	18	PK	1661875C1	1661872C1
F	A110	18	YL	1661875C1	1661872C1
G	A92AE	18	TN	1661875C1	1661872C1
H	A92AG	18	TN	1661875C1	1661872C1

CLEARANCE LIGHT (520) (LOCATED IN SUNSHADE)

CONNECTOR - 1661259C1
BODY LOCK - 1661263C1

CAV	CIR	GAUGE	COLOR	TERM
A	58B	18	BN	1661261C1
B	58-GB	18	WH	1661261C1

CLEARANCE LIGHT (521) (LOCATED IN SUNSHADE)

CONNECTOR - 1661259C1
BODY LOCK - 1661263C1

CAV	CIR	GAUGE	COLOR	TERM
A	58C	18	BN	1661261C1
B	58-GC	18	WH	1661261C1

CLEARANCE LIGHT (522) (LOCATED IN SUNSHADE)

CONNECTOR - 1661259C1
BODY LOCK - 1661263C1

CAV	CIR	GAUGE	COLOR	TERM
A	58D	18	BN	1661261C1
B	58-GD	18	WH	1661261C1

CLEARANCE LIGHT (523) (LOCATED IN SUNSHADE)

CONNECTOR - 1661259C1
BODY LOCK - 1661263C1

CAV	CIR	GAUGE	COLOR	TERM
A	58E	18	BN	1661261C1
B	58-GE	18	WH	1661261C1

CLEARANCE LIGHT (524) (LOCATED IN SUNSHADE)

CONNECTOR - 1661259C1
BODY LOCK - 1661263C1

CAV	CIR	GAUGE	COLOR	TERM
A	58E	18	BN	1661261C1
B	58-GE	18	WH	1661261C1

CHK	DATE	CHANGE	REV	REFERENCE	DRAWN	NAME
		REF 420F WAS 420A	B	56507K	U00DAG9	42/43/44/85/8600 & 73/74/7500 CIRC DIAGRAMS
		REF 420M WAS 420B.			RELEASE NO. P52778H	DATE 31MAY00 · PART NO. AF08-52376 · SHEET 02

Figure 146 Connector Composites (420F), (420M), (520), (521), (522), (523), (524)

13.3. CONNECTOR COMPOSITES (1002), (1003), (1010), P. 3

INTERNATIONAL TRUCK AND ENGINE CORPORATION

THIS PRINT IS PROVIDED ON A RESTRICTED BASIS AND IS NOT TO BE USED IN ANY WAY DETRIMENTAL TO THE INTEREST OF INTERNATIONAL TRUCK AND ENGINE CORPORATION.

ELECTRICAL CIRCUIT DIAGRAM CHAPTER 12

CONNECTOR COMPOSITES - MATING VIEW SHOWN

PANEL LIGHT ADAPTER (1002)
(LOCATED IN INSTRUMENT PANEL)

CAV	CIR	GAUGE	COLOR	TERM
A	A62N	16	DK BL	1661209C1
B	A62L	18	DK BL	1661208C1
B	A62J	18	DK BL	1661208C1
C	A62P	18	LT BL	1661208C1
D	A62D	18	DK BL	1661208C1
E	A62R	18	DK BL	1661208C1
F	A21B	16	TN	1661209C1
G	A62F	18	DK BL	1661208C1
H	-	-	-	-
J	-	-	-	-
K	-	-	-	-

CONNECTOR - 2007315C1

NOTE:
A62L USED WITH WTEC TRANSMISSION
A62J USED WITH EATON AUTO SHIFT

GROUND ADAPTER (1003)
(LOCATED IN INSTRUMENT PANEL)

CAV	CIR	GAUGE	COLOR	TERM
A	A11-GAL	12	WH	1661211C1
B	A11-GBA	18	WH	1661208C1
C	A62-GC	18	WH	1661208C1
C	A62-GD	18	WH	1661208C1
D	A23-GA	18	WH	1661208C1
E	A11-GDY	12	WH	1661211C1
E	A11-GDY	12	WH	1661211C1
F	A62-GF	18	WH	1661208C1
G	A21-G	16	WH	1661209C1
H	A41-G	18	WH	1661208C1
J	-	-	-	-
K	-	-	-	-

CONNECTOR - 2007315C1

NOTE:
A62-GC USED WITH LCT TRANSMISSIONS
A62-GD USED WITH WTEC TRANSMISSIONS

ETHER START (1010)
(LOCATED IN INSTRUMENT PANEL)

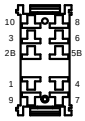

CONNECTOR - 3520850C1

CAV	CIR	GAUGE	COLOR	TERM
1	-	-	-	-
2B	A21C	16	TN	1661226C1
3	A21E	16	TN	1661226C1
4	-	-	-	-
5B	-	-	-	-
6	-	-	-	-
7	-	-	-	-
8	A21B	16	TN	1661226C1
9	-	-	-	-
10	A21-G	16	WH	1661226C1

CHK	DATE	CHANGE	REV	REFERENCE	DRAWN	NAME
PEC	19JAN01	PRODUCTION RELEASE.	A	P54304U	U00JXP9	42/43/44/85/8600 & 73/74/7500 CIRC DIAGRAMS
					RELEASE NO. P52778H	DATE 21JUN00 · PART NO. AE08-52376 · SHEET 03

Figure 147 Connector Composites (1002), (1003), (1010)

13.4. CONNECTOR COMPOSITE (1011), P. 4

INTERNATIONAL TRUCK AND ENGINE CORPORATION

THIS PRINT IS PROVIDED ON A RESTRICTED BASIS AND IS NOT TO BE USED IN ANY WAY DETRIMENTAL TO THE INTEREST OF INTERNATIONAL TRUCK AND ENGINE CORPORATION.

ELECTRICAL CIRCUIT DIAGRAM CHAPTER 12

CONNECTOR COMPOSITES - MATING VIEW SHOWN

FUSE BLOCK #1 (1011)
LOCATED IN INSTRUMENT PANEL

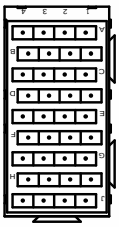

CONNECTOR - 3534572C1

BODY LOCK - 3536085C1

CAV	CIR	GAUGE	COLOR	TERM
A1	A78P	16	LT GN	3573312C1
A2	A14AS	10	RD	3536303C1
A3	A14	10	RD	3536303C1
A4	A14AB	10	RD	3536303C1
B1	A78J	16	LT GN	3573312C1
B2	A86M	14	LT GN	3573312C1
B3	A81B	12	LT GN	3573311C1
B4	A81A	12	LT GN	3573311C1
C1	A62M	16	DK BL	3573312C1
C2	(A14AS)	-	-	3536303C1
C3	(A14)	-	-	3536303C1
C4	(A14AB)	-	-	3536303C1
D1	A62N	16	DK BL	3573312C1
D2	A73B	16	LT GN	3573312C1
D3	-	-	-	-
D4	A63D	18	DK BL	3573312C1
D4	A86A	20	LT GN	3573312C1
E1	A12C	10	LT BL	3536298C1
E1	A12B	10	LT BL	3573311C1
E2	(A14AS)	-	-	3536303C1
E3	(A14)	-	-	3536303C1
E4	A14AB	-	-	3536303C1
E1	A12P	18	LT BL	3573312C1
E1	A12N	18	LT BL	3573312C1
E2	A15	18	RD	3573312C1
E2	A98	18	VT	3573312C1
E3	A84	14	LT GN	3573312C1
E4	-	-	-	-
G1	(A12C)	-	-	3536298C1
G1	(A12B)	-	-	3536298C1
G2	(A14AS)	-	-	3536303C1
G3	(A14)	-	-	3536303C1
G4	(A14AB)	-	-	3536303C1
H1	A86E	18	LT GN	3573312C1
H1	A86	20	LT GN	3573312C1
H2	A28	16	TN	3573312C1
H3	A14G	16	RD	3573312C1
H4	A73C	12	LT GN	3573311C1

LOCATION	CAVITY	RATING	PART NUMBER FUSE	PART NUMBER BREAKER	DESCRIPTION
E13	A1, B1	10 AMPS	3534209C1	3536178C1	RIGHT MIRROR HEAT
E9	C1, D1	5 AMPS	3534208C1	-	OPTIONAL PANEL LIGHTS
E5	E1, F1	5 AMPS	3534208C1	-	SYSTEM CONTROLLER/6 SW PACK
E1	G1, H1	10 AMPS	3534209C1	3536178C1	CB/RADIO
E14	A2, B2	20 AMPS	353421C1	3536180C1	AUX POWER SOURCE
E10	C2, D2	5 AMPS	3534208C1	-	HEATER-A/C CONTROL
E6	E2, F2	5 AMPS	3534208C1	-	KEY SWITCH/DIAGNOSTIC CONN
E2	G2, H2	15 AMPS	3534210C1	3536179C1	INSTRUMENT CLUSTER
E15	A3, B3	30 AMPS	3534213C1	3536182C1	POWER WINDOW/LOCK-DRIVERS DOOR
E11	C3, D3	N/A	-	-	-
E7	E3, F3	15 AMPS	3534210C1	3536179C1	CIGAR LIGHTER
E3	G3, H3	15 AMPS	3534210C1	3536179C1	OWNER/OPERATOR
E16	A4, B4	30 AMPS	3534213C1	3536182C1	POWER WINDOW/LOCK-PASS RT FRT DR
E12	C4, D4	10 AMPS	3534209C1	3536178C1	DOME LIGHTS/MAP LIGHTS/RADIO
E8	E4, F4	-	-	-	NOT AVAILABLE
E4	G4, H4	30 AMPS	3534213C1	3536182C1	HEATER-A/C BLOWER

NOTE:

CIRCUIT NAMES DEGINATED WITH PARENTESES REPRESENT BUSS BARS

CHK	DATE	CHANGE	REV	REFERENCE	DRAWN	NAME
		RMVD & ADDED MULTIPLE	B	56507K	U00DAG9	42/43/44/85/8600 & 73/74/7500 CIRC DIAGRAMS
		CIR NUMBERS TO (1011).			RELEASE NO. P52778H	DATE 31MAY00 / PART NO. AE08-52376 / SHEET 04

Figure 148 Connector Composite (1011)

13.5. CONNECTOR COMPOSITE (1012), P. 5

INTERNATIONAL TRUCK AND ENGINE CORPORATION

THIS PRINT IS PROVIDED ON A RESTRICTED BASIS AND IS NOT TO BE USED IN ANY WAY DETRIMENTAL TO THE INTEREST OF INTERNATIONAL TRUCK AND ENGINE CORPORATION.

ELECTRICAL CIRCUIT DIAGRAM CHAPTER 12

CONNECTOR COMPOSITES - MATING VIEW SHOWN

FUSE BLOCK #2 (1012)
LOCATED IN INSTRUMENT PANEL

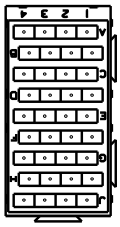

CONNECTOR - 3534572C1

BODY LOCK - 3536085C1

CAV	CIR	GAUGE	COLOR	TERM
A1	A13AJ	10	PK	3536303C1
A2	A13AJ	10	PK	3515516C1
A2	(A13AH)	-	-	3515516C1
A3	A92-GA	16	WH	3515517C1
A3•	A17JA	16	PK	3573312C1
A4	A13DE	16	PK	3515517C1
A4•	A24-GE	16	WH	3573312C1
B1	A41B	16	GY	3573312C1
B2	A99E	16	VT	3573311C1
B2•	A17H	16	PK	3573312C1
B3•	A24-GF	16	WH	3573312C1
B4	-	-	-	-
C1	(A13AJ)	-	-	3536303C1
C2	(A13AH)	-	-	3515516C1
C3	A17C	16	PK	3536295C1
C4	A92DW	16	TN	3515517C1
C4•	A17H	16	PK	3573312C1
D1	A13B	16	PK	3573312C1
D2	A13HC	18	PK	3515517C1
D2	A13HC	16	PK	3573312C1
D3	A11-GAD	16	WH	3573311C1
D3	A11-GAF	16	WH	3573311C1
D4	A14AV	10	RD	3573311C1
E1	(A13AJ)	-	-	3536303C1
E2	A13AH	10	PK	3515516C1
E3	-	-	-	-
E4	-	-	-	-
F1	A75C	18	LT GN	3536295C1
F1	A28A	16	TN	3536295C1
F2	A13AF	18	PK	3515517C1
F2	A75D	18	LT GN	3515517C1
F3	A13AH	10	PK	3573311C1
F4	A13AG	16	PK	3573312C1
G1	(A13AJ)	-	-	3536303C1
G2	A78W	16	LT GN	3573312C1
G3	A11-GAF	16	WH	3573312C1
G3•	A24-GE	16	WH	3573311C1
G4	A14AT	10	RD	3573311C1
H1	A13DE	16	PK	3536295C1
H1	A92Y	16	TN	3536295C1
H1	A92VA	16	PK	3573312C1
H2	A78H	16	LT GN	3573312C1
H3	-	-	-	-
H4	-	-	-	-
J1	-	-	-	-
J2	-	0	-	-
J3	A12B	10	LT BL	3573311C1
J4	A12M	16	LT BL	3573312C1

LOCATION	CAVITY	RATING	PART NUMBER FUSE	PART NUMBER BREAKER	DESCRIPTION
F23	A1, B1	5 AMPS	3534208C1	-	COMPASS/TEMP
F21	C1, D1	5 AMPS	3534208C1	-	OWNER/OPERATOR
F19	E1, F1	5 AMPS	3534208C1	-	INST CLUSTER/HTR-A/C CONTROLS
F17	G1, H1	10 AMPS	3534209C1	3536178C1	ALLISON LCT/EATON AUTOSHIFT-AUTOCLUTCH
F24	A2, B2	5 AMPS	3534208C1	-	ACCELERATOR/CLUTCH SW
F22	C2, D2	5 AMPS	3534208C1	-	HYD BRK MON/DRIVERS INFO CENTER
F20	E2, F2	5 AMPS	3534208C1	-	SYSTEM CONTROLLER & HVAC LPM
F18	G2, H2	10 AMPS	3534209C1	3536178C1	LEFT MIRROR HEAT

RELAY PIN #		
85, 86, 30, 87, 87a		
CAVITY	PART NUMBER	RELAY DESCRIPTION
D3, F4, D4, F3, E3	3519350C1	IGNITION
G3, J4, G4, J3, H3	3519350C1	ACCESSORY
A3, C4, A4, C3, B3	3519350C1	AUTO SHIFT

NOTE:

CIRCUIT NAMES DEGINATED WITH PARENTESES REPRESENT BUSS BARS

• W/ MWM ENGINE

CHK	DATE	CHANGE	REV	REFERENCE	DRAWN	NAME
041	17DEC08	ADDED MWM ENGINE	D	61280T	U00DAG9	CIRCUIT DIAGRAM, 42/43/44/85/8600 & 73/74/7500
	EFFECT				RELEASE NO. P52778H	DATE 31MAY00 / PART NO. AE08-52376 / SHEET 005

Figure 149 Connector Composite (1012)

13.6. CONNECTOR COMPOSITE (1013), P. 6

INTERNATIONAL TRUCK AND ENGINE CORPORATION

THIS PRINT IS PROVIDED ON A RESTRICTED BASIS AND IS NOT TO BE USED IN ANY WAY DETRIMENTAL TO THE INTEREST OF INTERNATIONAL TRUCK AND ENGINE CORPORATION.

ELECTRICAL CIRCUIT DIAGRAM CHAPTER 12

CONNECTOR COMPOSITES - MATING VIEW SHOWN

FUSE BLOCK #3 (1013)
LOCATED IN INSTRUMENT PANEL

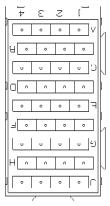

CONNECTOR - 3534572C1

BODY LOCK 3536005C1

	CIR	GAUGE	COLOR	TERM
A1	A13FB	10	PK	3515516C1
A2	A13FB/(A13FA)	10/	PK/	3536303C1
A3	A12D	10	LT BL	3573311C1
A4	A12E	10	LT BL	3573311C1
B1	A21C	16	TN	3573312C1
B2	A13DA	16	PK	3573312C1
B3	A12X	14	LT BL	3573312C1
B4	A12S	16	LT BL	3573312C1
C1	A7H	16	LT GN	3573312C1
C2	(A13FB)	-	-	3515516C1
C3	(A13FA)			3536303C1
C4				
D1	A13G	16	WH	3573312C1
D2	A59H	18	BK	3573312C1
D3	A13RA	18	PK	3536295C1
D4	A92#125	18	TN	3515517C1
E1	A104H	16	DK BL	3573312C1
E2	A13	16	PK	3573312C1
E3	A13RB	18	PK	3536295C1
E4	A104E	16	DK BL	3573312C1
F1	(A13FB)			3515516C1
F2	(A13FA)			3536303C1
F3	-	-	-	-
F4	-	-	-	-
G1	A13K	16	PK	3573312C1
G2				
G3	A92RK	18	TN	3515517C1
G4	A104C	16	DK BL	3573312C1
H1	A13RA	18	PK	3515517C1
H2	A104D	18	DK BL	3573312C1
H3				
H4	A13FA	10	PK	3536303C1
J1	A11-GBA	18	WH	3515517C1
J2	A14FJ	10	RD	3573311C1
J3	-	-	-	-
J4	A13F	16	PK	3573311C1
	-	-	-	-
	-	-	-	-
	-	-	-	-
	-	-	-	-
	A13FA	10	PK	3573311C1
	A13DD	18	PK	3515517C1

LOCATION	CAVITY	RATING	PART NUMBER	PART NUMBER	DESCRIPTION
			FUSE	BREAKER	
F33	A1, B1	10 AMPS	3534209C1	3536178C1	EITHER START
F31	C1, D1	5 AMPS	3534208C1	-	LIFT AXLE
F29	E1, F1	5 AMPS	3534208C1	-	OPT WARNING LTS
F27	G1, H1	5 AMPS	3534208C1		OPEN
F34	A2, D2	10 AMPS	3534209C1	3536178C1	SNOW VALVE
F42	C2, D2	OPEN	-	-	-
F30	E2, F2	5 AMPS	3534208C1	-	2-WAY RADIO
F28	G2, H2	10 AMPS	3534209C1	3536178C1	DUALCOM
F35	A3, B3	5 AMPS	3534208C1		TRLR AUX/ROOF AUX
F36	A4, D4	5 AMPS	3534208C1	-	POWER MIRROR

RELAY PIN # 85, 86, 30, 87, 87a CAVITY	PART NUMBER	RELAY DESCRIPTION
D3, F4, D4, F3, E3	3519350C1	EATON AUTOSHIFT
D3, F4, D4, F3, E3	3519350C1	REMOTE STOP
G3, J4, G4, J3, H3	3519350C1	IGNITION

NOTE:

CIRCUIT NAMES DEGINATED WITH PARENTESES REPRESENT BUSS BARS

CHK	DATE	CHANGE	REV	REFERENCE	DRAWN	NAME
CNA	115EP03	A13K WAS A49C.	E	58774T	U00DAG9	42/43/44/85/8600 & 73/74/7500 CIRC DIAGRAMS
					RELEASE NO. P52778H	DATE 31MAY00 PART NO. AF08-52376 SHEET 06

Figure 150 Connector Composite (1013)

13.7. CONNECTOR COMPOSITE (1014), P. 7

INTERNATIONAL TRUCK AND ENGINE CORPORATION

THIS PRINT IS PROVIDED ON A RESTRICTED BASIS AND IS NOT TO BE USED IN ANY WAY DETRIMENTAL TO THE INTEREST OF INTERNATIONAL TRUCK AND ENGINE CORPORATION.

ELECTRICAL CIRCUIT DIAGRAM CHAPTER 12

CONNECTOR COMPOSITES - MATING VIEW SHOWN

FUSE BLOCK #4 (1014)
LOCATED IN INSTRUMENT PANEL

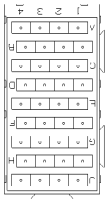

CONNECTOR - 3534572C1

BODY LOCK 3536005C1

CAV	CIR	GAUGE	COLOR	TERM
A1	A14FG	10	RD	3536208C1
A2	A14FM	10	RD	3536303C1
A3	A70NS	16	RD	3573120C1
A4	A12Z	14	LT BL	3573312C1
B1	A81D	12	LT GN	3573311C1
B2	A14NS	10	BK	3573311C1
B3	A70ND	16	RD	3573312C1
B4	A12U	14	LT BL	3573312C1
C1	A14FG	10	RD	3536208C1
C2	A14FM	10	RD	3536303C1
C3				
C4				
D1	A14HE	16	RD	3573312C1
D2	-	-	-	-
D3	A58AE	20	BN	3536204C1
D3	A104A	18	DK BL	3515517C1
D4	A50AC	16	BN	3573311C1
D4	A104EA	16	DK BL	3573312C1
E1	A14FG	10	RD	3536208C1
E2	A14FM	10	RD	3536303C1
E3	A72B	12	OR	3573311C1
E3	A13RG	18	PK	3515517C1
E4	-	-	-	-
F1	A14FF	16	RD	3573312C1
F2	A58AB	16	BN	3573312C1
F3	A50AB	16	BN	3573312C1
F3	A72C	12	OR	3573311C1
F3	A104B	16	DK BL	3573312C1
F4	A58AB	16	BN	3573312C1
F4	A104C/A104B	16/18	DK BL	3573311C1
G1	A14FG	10	RD	3536303C1
G2	A14FM	10	RD	3536303C1
G3	-	-	-	-
G4	A14FR	10	RD	3573311C1
H1	A81C	12	LT GN	3573311C1
H2	A14J	14	RD	3573312C1
H3	-	-	-	-
H4	-	-	-	-
J1	-	-	-	-
J2	-	-	-	-
J3	A12Z	14	LT BL	3573312C1
J4	A12Y	14	LT BL	3573312C1

LOCATION	CAVITY	RATING	PART NUMBER FUSE	PART NUMBER BREAKER	DESCRIPTION
F43	A1, B1	30 AMPS	3534213C1	3536182C1	POWER WINDOW/LOCK-PASS RT RR DR
F41	C1, D1	5 AMPS	3534208C1	-	TRAILER AUX
F39	E1, F1	5 AMPS	3534208C1		AUX GA & SW PACK/DRIVERS INFO CTR
F37	G1, H1	30 AMPS	3534213C1	3536182C1	POWER WINDOW/LOCK-PASS LT RR DR
F44	A2,B2	OPEN	-	-	-
F42	C2,D2	OPEN	-	-	-
F40	E2, F2	10 AMPS	3534209C1	3536178C1	AIR SHIELD LIGHT
F38	G2, H2	10 AMPS	3534209C1	3536178C1	W/QUALCOM ON
F36	G2, H2	20 AMPS	3534211C1	3536180C1	W/AIR SEAT,HYD CHASSIS
F45	A3,B3	OPEN	-	-	-
F46	A4, B4	20 AMPS	3534211C1	3536180C1	ROOF AUX

RELAY PIN #		
85, 86, 30, 87, 87a		
CAVITY	PART NUMBER	RELAY DESCRIPTION
D3, F1, D1, F3, F3	3510350C1	LIGHTED AIR SHIELD
G3, J4, C4, J3, H3	3519350C1	ROOF MTD ACCESSORY
G3, J4, C4, J3, H3	3519350C1	REMOTE STOP

NOTE:

CIRCUIT NAMES DEGINATED WITH PARENTESES REPRESENT BUSS BARS

CHK	DATE	CHANGE	REV	REFERENCE	DRAWN	NAME
CNA	10JUL03	ADDED A104A,A104B, A104C,A104EA & A13RS.	D	5/09/S	U00DAG9	42/43/44/85/8600 & 73/74/7500 CIRC DIAGRAMS
					RELEASE NO. P52778H	DATE 31MAY00 / PART NO. AF08-52376 / SHEET 07

Figure 151 Connector Composite (1014)

13.8. CONNECTOR COMPOSITES (1018), (1019M), (1020M), (1021M), (1022M), P. 8

INTERNATIONAL TRUCK AND ENGINE CORPORATION

THIS PRINT IS PROVIDED ON A RESTRICTED BASIS AND IS NOT TO BE USED IN ANY WAY DETRIMENTAL TO THE INTEREST OF INTERNATIONAL TRUCK AND ENGINE CORPORATION.

ELECTRICAL CIRCUIT DIAGRAM CHAPTER 12

CONNECTOR COMPOSITES - MATING VIEW SHOWN

5TH WHEEL INTERLOCK RELAY (1016)

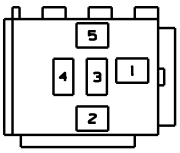

CAV	CIRC	GAUGE	COLOR	TERMINAL
1	A13L	18	PK	-
	A13LB	18	PK	-
2	A44AA	18	GY	-
3	-	-	-	-
4	A59CC	18	GY	-
	A59CD	18	GY	-
5	A59CA	18	GY	-
	A59CB	18	GY	-

CONNECTOR - 0593385C1
BODY LOCK - 0593387C1

HORN SWITCH (1018) (LOCATED IN INSTRUMENT PANEL)

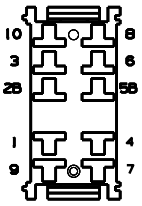

CAV	CIRC	GAUGE	COLOR	TERMINAL
1	-	-	-	-
2B	A85L	18	GY	1661224C1
3	A9M	18	GY	1661224C1
4	-	-	-	-
5B	-	-	-	-
6	-	-	-	-
7	-	-	-	-
8	A62R	18	DKBL	1661224C1
9	-	-	-	-
10	A62-GF	18	WH	1661224C1

CONNECTOR - 3520850C1

DUAL AXLE SWITCH (1018)

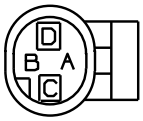

CONNECTOR - 1661777C1
BVODY LOCK - 1661873C1

CAV	CIRCUIT	GAUGE	COLOR	TERMINAL	SEAL/SLV
C	K93A	18	TN	1661875C1	3568570C1
D	K93	18	TN	1661875C1	3568570C1

W/ MWM ENGINE

SPEED SENSOR (1019)

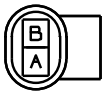

CONNECTOR - 2036583C1

CAV	CIRCUIT	GAUGE	COLOR	TERMINAL
A	K47	18	GY	2036586C1
B	K47A	18	GY	2036586C1

W/ MWM ENGINE

LIFT AXLE CONTROLS

(1019M)

CONNECTOR - 1661889C1
BODY BLOCK - 1661890C1

CAV	CIRCUIT	GAUGE	COLOR	TERMINAL
A	A59H	18	BK	1661261C1
B	A59J	18	BK	1661261C1
C	A59-G	16	WH	1661261C1

(1019F)

CONNECTOR - 1661891C1
BODY BLOCK - 1661892C1

CAV	CIRCUIT	GAUGE	COLOR	TERMINAL
A	T59H	18	BK	1661262C1
B	T59J	18	BK	1661262C1
C	T59-G	18	WH	1661262C1

AXLE ENABLE SWITCH (1020M)

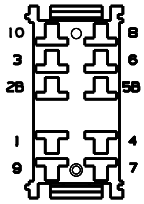

CONNECTOR - 3520850C1
BODY LOCK - 0593387C1

CAV	CIRC	GAUGE	COLOR	TERMINAL
1	T59R	18	BK	1661224C1
2B	T59H	18	BK	1661224C1
8	T59T	18	BK	1661224C1
10	T59-GA	18	WH	1661224C1

CHK	DATE	CHANGE	REV	REFERENCE	DRAWN	NAME
041	17DEC08	REVISED AND REDRAWN	E	61280T	U00DAG9	CIRCUIT DIAGRAM, 42/43/44/85/8600 & 73/74/7500
					RELEASE NO. P52778H	DATE 31MAY00 · PART NO. AE08-52376 · SHEET 008

Figure 152 Connector Composites (1018), (1019M), (1020M), (1021M), (1022M)

13.9. CONNECTOR COMPOSITES (1027M, F), (1100), (1101A), (1101), (1102), P. 9

INTERNATIONAL TRUCK AND ENGINE CORPORATION

THIS PRINT IS PROVIDED ON A RESTRICTED BASIS AND IS NOT TO BE USED IN ANY WAY DETRIMENTAL TO THE INTEREST OF INTERNATIONAL TRUCK AND ENGINE CORPORATION.

ELECTRICAL CIRCUIT DIAGRAM CHAPTER 12
CONNECTOR COMPOSITES - MATING VIEW SHOWN

CHASSIS CONN
(LIFT AXLE)

(1027M)

CONNECTOR - 1667305C1
BODY LOCK - 1661263C1

CAV	CIR	GAUGE	COLOR	TERM
A	T59MB	18	BK	1661261C1
B	-	-	-	-
C	-	-	-	-
D	-	-	-	-

(1027F)

CONNECTOR - 0475081C1

CAV	CIR	GAUGE	COLOR	TERM
A	T59M	18	BK	0241117R1

OPTIONAL WARNING LIGHTS ADAPTOR (1040)

CONNECTOR - 2006789C1

CAV	CIR	GAUGE	COLOR	TERM
A	A13K	16	PK	1661208C1
B	A49C	18	GY	1661208C1
C	A49E	18	GY	1661208C1
D	A42A	18	GY	1661208C1

KEY SWITCH (1100)
(LOCATED IN INSTRUMENT PANEL)

CONNECTOR - 3546518C1
BODY LOCK - 3546519C1

CAV	CIR	GAUGE	COLOR	TERM
A	A15	18	RD	1661209C1
B	A17	18	PK	1661209C1
C	A12AB	18	LT BL	1661209C1
C	A12	18	LT BL	1661209C1
D	A13DH	18	PK	1661209C1
D	A104EB	18	DK BL	1661209C1
D	A13DD	18	PK	1661209C1

SWITCH PACK (1101A)
(LOCATED IN INSTRUMENT PANEL)

CONNECTOR - 2031872C1
BODY LOCK - 2031874C1

CAV	CIR	GAUGE	COLOR	TERM
A	A11-GJ	18	WH	1661262C1
B	A12FC	18	LTBL	1661262C1
C	A62S	18	DK BL	1661262C1

SWITCH PACK (1101)
(LOCATED IN INSTRUMENT PANEL)

CONNECTOR - 2031871C1
BODY LOCK - 2031873C1

CAV	CIR	GAUGE	COLOR	TERM
A	A11-GDB	18	WH	1661261C1
B	A12P	18	LT BL	1661261C1
C	A62C	18	DK BL	1661261C1
D	A3E(+)	20	DK BL	3544254C1
D	A3J(+)	18	DK BL	1661261C1
E	A3F(-)	20	GY	3544254C1
E	A3K(-)	18	GY	1661261C1

FUSE BLOCKS 3 & 4 IGN FEED (1102)
(LOCATED IN INSTRUMENT PANEL)

CONNECTOR - 1661260C1
BODY LOCK - 1661264C1

CAV	CIR	GAUGE	COLOR	TERM
A	A13DC	18	PK	1661262C1
B	-	-	-	-

CONNECTOR - 1661259C1
BODY LOCK - 1661263C1

CAV	CIR	GAUGE	COLOR	TERM
A	A13DB	18	PK	1661261C1
B	-	-	-	-

CHK	DATE	CHANGE	REV	REFERENCE
CNA	10JUL03	LAS9//ADDED A104EB.	D	57097S
CNA	11SEP03	ADDED 1040.	E	58774T

DRAWN U00DAG9 — NAME 42/43/44/85/8600 & 73/74/7500 CIRC DIAGRAMS
RELEASE NO. P52778H — DATE 31MAY00 — PART NO. AE08-52376 — SHEET 09

Figure 153 Connector Composites (1027M, F), (1100), (1101A), (1101), (1102)

13.10. CONNECTOR COMPOSITES (1104), (1106), (1200), (1210), P. 10

INTERNATIONAL TRUCK AND ENGINE CORPORATION

THIS PRINT IS PROVIDED ON A RESTRICTED BASIS AND IS NOT TO BE USED IN ANY WAY DETRIMENTAL TO THE INTEREST OF INTERNATIONAL TRUCK AND ENGINE CORPORATION.

ELECTRICAL CIRCUIT DIAGRAM CHAPTER 12

CONNECTOR COMPOSITES - MATING VIEW SHOWN

HYD BRAKE SWITCH (1104)
(LOCATED IN INSTRUMENT PANEL)

CAV	CIR	GAUGE	COLOR	TERM
A	A44K	16	GY	1661261C1
B	A44E	16	GY	1661261C1
C	A44H	16	GY	1661261C1
D	A44J	16	GY	1661261C1

CONNECTOR - 1667305C1
BODY LOCK - 1661263C1

DIODE ASSEMBLY
(1106)
(LOCATED ABOVE ACCELERATOR PEDAL)

BASE HARNESS

DIODE ASSY

CONNECTOR - 0872291R1
TERMINAL - 0879630R1

DIODE ASSY - 0467404C91

CAV	CIR	GAUGE	COLOR
A	-	-	-
B	A12	1031	LTBL
B	A12AB	18	LTBL

HVAC CONTROL (1200)
(LOCATED IN INSTRUMENT PANEL)

CONNECTOR - 3534302C1

BODY LOCK - 3539892C1

BODY LOCK - 3539893C1

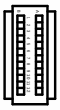

CAV	CIR	GAUGE	COLOR	TERM
A1	A75C	18	LT GN	3522073C1
A2	A73B	16	LT GN	3522073C1
A3	-	-	-	-
A4	A77	20	LT GN	3534303C1
A5	-	-	-	-
A6	-	-	-	-
A7	-	-	-	-
A8	-	-	-	-
A9	A75A	20	LT GN	3534303C1
A10	-	-	-	-
A11	A73D	16	LT GN	3522073C1
A12	A62A	18	DK BL	3522073C1
B1	A74	18	LT GN	3522073C1
B2	A74A	18	LT GN	3522073C1
B3	-	-	-	-
B4	-	-	-	-
B5	-	-	-	-
B6	A74-G	18	WH	3522073C1
B7	-	-	-	-
B8	-	-	-	-
B9	A74B	18	LT GN	3522073C1
B10	A74C	18	LT GN	3522073C1
B11	A74D	18	LT GN	3522073C1
B12	A74E	18	LT GN	3522073C1

HVAC UNIT (1210)
(LOCATED IN INSTRUMENT PANEL)

CONNECTOR - 2005835C1

BODY LOCK - 2006503C1

CAV	CIR	GAUGE	COLOR	TERM
A	A74B	18	LT GN	1661208C1
B	A74C	18	LT GN	1661208C1
C	A74D	18	LT GN	1661208C1
D	A74E	18	LT GN	1661208C1
E	A73C	12	LT GN	1661211C1
F	A73D	16	LT GN	1661209C1
G	A73-G	12	WH	1661211C1
H	A75D	18	LT GN	1661208C1

CHK	DATE	CHANGE	REV	REFERENCE	DRAWN	NAME
		ADDED CIRCUIT A75D.	C	56507K	U00DAG9	42/43/44/85/8600 & 73/74/7500 CIRC DIAGRAMS
					RELEASE NO. P52778H	DATE 21JUN00 · PART NO. AE08-52376 · SHEET 10

Figure 154 Connector Composites (1104), (1106), (1200), (1210)

13.11. CONNECTOR COMPOSITES (1300), (1301), (1400), (1402), (1410), (1500), (1510), P. 11

INTERNATIONAL TRUCK AND ENGINE CORPORATION

THIS PRINT IS PROVIDED ON A RESTRICTED BASIS AND IS NOT TO BE USED IN ANY WAY DETRIMENTAL TO THE INTEREST OF INTERNATIONAL TRUCK AND ENGINE CORPORATION.

ELECTRICAL CIRCUIT DIAGRAM CHAPTER 12

CONNECTOR COMPOSITES - MATING VIEW SHOWN

PREMIUM RADIO (1300) (LOCATED IN INSTRUMENT PANEL)

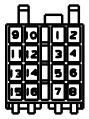

CONNECTOR - 3597143C1

CAV	CIR	GAUGE	COLOR	TERM	CAV	CIR	GAUGE	COLOR	TERM
1	-	-	-	-	9	A86D	20	LT GN	3597102C1
2	-	-	-	-	10	A86E	20	LT GN	3597102C1
3	A86M	18	LT GN	3597102C1	11	A86K	20	LT GN	3597102C1
4	A86	18	LT GN	3597102C1	12	A86L	20	LT GN	3597102C1
5	-	-	-	-	13	A86H	20	LT GN	3597102C1
6	A62E	20	DK BL	3597102C1	14	A86J	20	LT GN	3597102C1
7	A86A	20	LT GN	3597102C1	15	A86B	20	LT GN	3597102C1
8	A86-G	20	WH	3597102C1	16	A86C	20	LT GN	3597102C1

STANDARD RADIO (1301) (LOCATED IN INSTRUMENT PANEL)

CONNECTOR - 3580403C1

CAV	CIR	GAUGE	COLOR	TERM	CAV	CIR	GAUGE	COLOR	TERM	TERM
1	A86H	20	LT GN	3580404C1	7	A86K	20	LT GN	3580404C1	3580404C1
2	A86J	20	LT GN	3580404C1	8	A86L	20	LT GN	3580404C1	3580404C1
3	A86B	20	LT GN	3580404C1	9	A86D	20	LT GN	3580404C1	3580404C1
4	A86C	20	LT GN	3580404C1	10	A86E	20	LT GN	3580404C1	3580404C1
5	A86-G	20	WH	3580404C1	11	-	-	-	-	-
6	A86	20	LT GN	3580404C1	12	A86A	20	LT GN	3580404C1	3580404C1

BRAKE MONITOR MODULE (1400) (LOCATED IN INSTRUMENT PANEL)

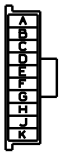

CONNECTOR - 1654231C1

CAV	CIR	GAUGE	COLOR	TERM
A	A90N	18	GY	3507202C1
C	A90P	18	GY	3507202C1
D	A90-GA	18	WH	3507202C1
F	A90M	18	GY	3507202C1
G	A90L	18	GY	3507202C1
H	A90L	18	GY	3507202C1

HYD PARK BRAKE CONTROL (1402) (LOCATED IN INSTRUMENT PANEL)

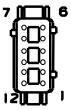

CONNECTOR - 3553404C1
BODY LOCK - 3553460C1
PLUG - 3527278C1

CAV	CIR	GAUGE	COLOR	TERM
1	A14HB	16	RD	3518963C1
2	A44K	16	GY	3518963C1
3	A44H	16	GY	3518963C1
4	A13HB	16	PK	3518963C1
5	A44J	16	GY	3518963C1
6	A11-GBC	16	WH	3518963C1

OIL TEMP SENSOR (1410)

CONNECTOR - 3536864C1
TERMINAL - 3536865C1
SEAL - 3536867C1
SEAL - 3536868C1

CAV	CIR	GAUGE	COLOR
1	K30A	16	TN
2	K30B	16	TN

CLUSTER (1500) (LOCATED IN INSTRUMENT PANEL)

CONNECTOR - 2018590C1

CAV	CIR	GAUGE	COLOR	TERM
1	A62	18	DKBL	2018639C1
1•	A62	16	DKBL	2018639C1
2	A62-G	18	WH	2018639C1
3	A28	18	TN	2018639C1
4	A5AL(+)	20	YL	2018639C1
4•	A5AL(+)	18	YL	2018639C1
5	A5AM(-)	20	GN	2018639C1
5•	A5AM(-)	18	GN	2018639C1
7	A28-G	18	WH	2018639C1
8	A28A	18	TN	2018639C1
9	A50	20	YL	2018639C1
10	-	-	-	-
11	-	-	-	-
12	-	-	-	-

• W/ MWM ENGINE

OPTIONAL GAUGE PACK (1510) (LOCATED IN INSTRUMENT PANEL)

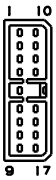

CONNECTOR - 3548792C1

CAV	CIR	GAUGE	COLOR	TERM
1	A14FF	18	RD	2018639C1
2	A12FC	18	LTBL	2018639C1
3	A11-GJ	18	WH	2018639C1
4	A62S	18	DKBL	2018639C1
10	A5C(-)	20	GN	2018639C1
11	A5C(+)	20	YL	2018639C1

CHK	DATE	CHANGE	REV	REFERENCE	DRAWN	NAME
041	17DEC08	ADDED MWM ENGINE	G	61280T	U00DAG9	CIRCUIT DIAGRAM, 42/43/44/85/8600 & 73/74/7500
	EFFECT				RELEASE NO. P52778H	DATE 31MAY00 · PART NO. AE08-52376 · SHEET 011

Figure 155 Connector Composites (1300), (1301), (1400), (1402), (1410), (1500), (1510)

13.12. CONNECTOR COMPOSITES (1553), (1554F), (1555), (1600), (1601), (1650), P. 12

INTERNATIONAL TRUCK AND ENGINE CORPORATION

THIS PRINT IS PROVIDED ON A RESTRICTED BASIS AND IS NOT TO BE USED IN ANY WAY DETRIMENTAL TO THE INTEREST OF INTERNATIONAL TRUCK AND ENGINE CORPORATION.

ELECTRICAL CIRCUIT DIAGRAM CHAPTER 12

CONNECTOR COMPOSITES - MATING VIEW SHOWN

DRIVERS SIDE COURTESY LIGHT (1553)
(LOCATED IN INSTRUMENT PANEL)

CONNECTOR: 3544198C1
BODY LOCK: 3544199C1

CAV	CIRCUIT	GAUGE	COLOR	TERMINAL
A	A63N	18	DK BL	3544200C1
B	A11-GDW	18	WH	3544200C1

PASSENGER SIDE COURTESY LIGHT CONN.
(1554F)

CONNECTOR: 3544198C1
BODY LOCK: 3544199C1

CAV	CIRCUIT	GAUGE	COLOR	TERMINAL
A	A63P	18	DK BL	3544200C1
B	A11-GDV	18	WH	3544200C1

WARNING LIGHT CONN
(1555)

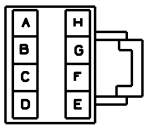

CONNECTOR: 2005835C1
BODY LOCK: 2006503C1

CAV	CIRCUIT	GAUGE	COLOR	TERMINAL
B	A49E	18	GY	1661208C1
D	A49C	18	GY	1661208C1
E	A49D	18	GY	1661208C1
G	A49F	18	GY	1661208C1

OPT. WARNING
LIGHT CONN

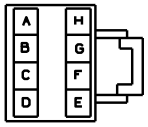

CONNECTOR: 2005835C1
BODY LOCK: 2006503C1

CAV	CIRCUIT	GAUGE	COLOR	TERMINAL
A	A23F	18	TN	1661208C1
C	A28C	18	RD	1661208C1
C	A42	18	GY	1661208C1
F	A28B	18	WH	1661208C1
F	A42A	18	GY	1661208C1
H	A23M	18	TN	1661208C1

SYSTEM CONTROLLER
INSIDE CAB
(1600)

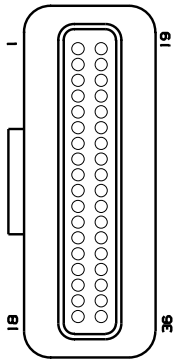

CONNECTOR ASSY: 3533832C1
CONNECTOR: 3533834C1
RETAINER: 3533833C1
SEAL: 3533835C1
CPA: 3533836C1
STRAIN RELIEF: 3533832C1
PLUG: 3518314C1

CAV	CIRCUIT	GAUGE	COLOR	TERMINAL
1	A11-GAB	20	WH	3533507C1
2	A12N	18	LT BL	3517243C1
3	A9H	20	GY	3533507C1
4	A44AA	18	GY	3517243C1
5	A85C	20	GY	3533507C1
6	A128D	18	YL	3517243C1
6	A58AE	20	BN	3533507C1
7	A77	20	LT GN	3533507C1
8	A75A	20	LT GN	3533507C1
9	A90P	18	GY	3517243C1
10	A96	20	VT	3533507C1
11	A12LC	18	PK	3517243C1
11	A104A	18	DK BL	3517243C1
12	A13AF	18	PK	3517243C1
13	A85B	20	GY	3533507C1
14	A50	20	YL	3533507C1
15	A40	20	GY	3533507C1
16	A40A	20	GY	3533507C1
17	A96A	20	VT	3533507C1
18	A57A	20	OR	3533507C1
19	A56A	20	OR	3533507C1
20	A52A	20	YL	3533507C1
21	A102A	20	YL	3533507C1
22	A82	20	GY	3533507C1
23	A82A	20	GY	3533507C1
24	A82B	20	GY	3533507C1
25	A63A	18	DK BL	3517243C1
27	A6H	20	GY	3533507C1
28	A87A	20	GY	3533507C1
29	A3E(+)	20	DK BL	3533507C1
30	A3F(-)	20	GY	3533507C1
32	A44BB	20	GY	3533507C1
33	A70C	20	RD	3533507C1
34	A5AN(+)	20	YL	3533507C1
34*	A5AN(+)	18	YL	3517243C1
35	A5AP(-)	20	GN	3533507C1
35*	A5AP(-)	18	GN	3517243C1

* W/ MWM ENGINE

ELECT SYSTEM CONTROLLER
(LOC. CAB)
(1601)

CONNECTOR: 3548934C1
BODY LOCK: 3548943C1
SEAL: 3535936C1 (18 AWG)
SEAL: 3535937C1 (14 AWG)

CAV	CIRCUIT	GAUGE	COLOR	TERMINAL	NOTES
A	A103	18	LT GN	3535930C1	W/ AUX 40 AMP CIRCUIT
A	A59RA	18	GY	3535930C1	W/ REMOTE START / STOP
B	A11-GAH	14	WH	3535931C1	-
C	A63E	18	DK BL	3535930C1	-
G	A78	14	LT GN	3535931C1	-
H	A58L	18	BN	3535930C1	-
H	A58S	18	BN	3535930C1	-

DIAGNOSTIC CONN
(1650)

CONNECTOR: 3538798C1

CAV	CIRC	GA	COLOR	TERMINAL
A	A98-G	18	WH	1651968C1
B	A98-G	18	VT	1651968C1
C	A5AE(+)	20	YL	1651968C1
D	A5AF(-)	20	GN	1651968C1
F	A3S(+)	18	DK BL	1651968C1
F*	A5AN(+)	18	YL	3517243C1
G	A3S(-)	18	GY	1651968C1
G*	A5AN(-)	18	GN	3517243C1

* W/ COMMUNICATIONS SYSTEM, AWARE

CHK	DATE	CHANGE	REV	REFERENCE	DRAWN	NAME
041	17DEC08	ADDED MWM ENGINE	L	61280T	UOODLCK	CIRCUIT DIAGRAM, 42/43/44/85/8600 & 73/74/7500
	EFFECT				RELEASE NO. P52778H	DATE 21JUN00 · PART NO. AE08-52376 · SHEET 012

Figure 156 Connector Composites (1553), (1554F), (1555), (1600), (1601), (1650)

13.13. CONNECTOR COMPOSITES (1652), (1657M), (1658), (1659), (1800), P. 13

INTERNATIONAL TRUCK AND ENGINE CORPORATION

THIS PRINT IS PROVIDED ON A RESTRICTED BASIS AND IS NOT TO BE USED IN ANY WAY DETRIMENTAL TO THE INTEREST OF INTERNATIONAL TRUCK AND ENGINE CORPORATION.

ELECTRICAL CIRCUIT DIAGRAM CHAPTER 12

CONNECTOR COMPOSITES - MATING VIEW SHOWN

DRIVETRAIN J1939 EATON AUTOSHIFT (1652)

IP HARNESS

CONNECTOR: 1661259C1
BODY LOCK: 1661263C1
TERMINAL: 3534481C1
(20 AWG)

CAV	CIR	GAUGE	COLOR
A	A5AV(+)	20	YL
B	A5AV(-)	20	GN

SHIFTER HARNESS

CONNECTOR: 1661260C1
BODY LOCK: 1661264C1
TERMINAL: 3534481C1
(20 AWG)

CAV	CIR	GAUGE	COLOR
A	A5AV(+)	20	YL
B	A5AV(-)	20	GN

DRIVETRAIN J1939 TERM. RESISTOR (1657M)

CONNECTOR: 1667741C1
BODY LOCK: 1667771C1
DIODE ASSY: 0467404C1

CAV	CIR	GAUGE	COLOR	TERM	SEAL
A	A5AG(+)	20	YL	1661875C1	1661872C1
C	A5AH(-)	20	GN	1661875C1	1661872C1

DRIVETRAIN J1939 AUTO HVAC (1658)

CONNECTOR: 1661259C1
BODY LOCK: 1661263C1

CAV	CIR	GAUGE	COLOR	TERM
A	A5BE(+)	20	YL	3544254C1
B	A5BE(-)	20	GN	3544254C1

DRIVETRAIN J1939 OPT. GAUGES (1659)

GAUGE HARNESS

CONNECTOR: 1661260C1
BODY LOCK: 1661264C1

CAV	CIR	GAUGE	COLOR	TERM
A	A5C(+)	20	YL	3534481C1
B	A5C(-)	20	GN	3534481C1

IP HARNESS

CONNECTOR: 1661259C1
BODY LOCK: 1661263C1

CAV	CIR	GAUGE	COLOR	TERM
A	A5BJ(+)	20	YL	3544254C1
B	A5BK(-)	20	GN	3544254C1

CAB/DCM (1800)

CAB HARNESS

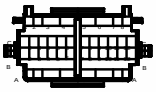

CONNECTOR: 3553649C1
BODY LOCK: 3553650C1
150 SERIES TERMINAL: 3544883C1 (20 AWG)
3544884C1 (18 AWG)
280 SERIES TERMINAL: 3544875C1 (20 AWG)
3544876C1 (18 AWG)

CAV	CIR	GAUGE	COLOR	NOTES
A1	A56A	20	OR	
A2	A57A	20	OR	
A3	A11-GAA	18	WH	280 SERIES TERTMINAL
A4	A9V	18	GY	280 SERIES TERMINAL
A5	A87C	20	GY	280 SERIES TERMINAL
A7	A52A	20	YL	
A8	A102A	20	YL	
B1	A82B	20	GY	
B10	A85B	20	GY	
B11	A85C	20	GY	
B11	A85K	18	GY	
B12	A96	20	VT	
B2	A40A	20	GY	
B3	A6H	20	GY	
B4	A97Y	18	VT	
B5	A99U	18	VT	
B6	A99W	18	VT	
B7	A44BB	20	GY	
B9	A70C	20	RD	
C1	A82A	20	GY	
C10	A97Q	18	VT	
C11	A96A	20	VT	
C12	A40	20	GY	
C2	A40F	18	GY	
C4	A99V	18	VT	
C5	A97P	18	VT	
C6	A99F	18	VT	
C9	A82	20	GY	
D7	A17J	18	PK	
D8	A17H	18	PK	
D8	A17-GH	18	WH	

DCM HARNESS

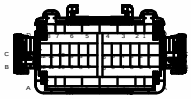

CONNECTOR: 3553651C1
BODY LOCK: 3544872C1
CONN CLIP: 3545905C1(1805A)
TERMINAL: 3544886C1
(18 AWG)

CAV	CIR	GAUGE	COLOR	NOTES
A1	B56A	18	OR	
A2	B57A	18	OR	
A3	B11-GAA	18	WH	
A4	B9V	18	GY	
A5	B87A	18	GY	
A7	B52A	18	YL	
A8	B102A	18	YL	
B1	B82B	18	GY	
B10	B85B	18	GY	
B11	B85C	18	GY	
B12	B96	18	VT	
B2	B40A	18	GY	
B3	B6H	18	GY	
B4	B97Y	18	VT	
B5	B99U	18	VT	
B6	B40G	18	GY	DCM W/HYD BRAKES
B6	B40G	18	GY	W/HYD BRAKES
B6	B99W	18	VT	DCM W/AIR BRAKES
B7	B44BB	18	GY	
B9	B70C	18	RD	
C1	B82A	18	GY	
C10	B97Q	18	VT	
C11	B96A	18	VT	
C12	B40	18	GY	
C2	B40F	18	GY	
C4	B99V	18	VT	
C5	B97P	18	VT	
C6	B99F	18	VT	
C9	B82	18	GY	
D7	B17J	18	PK	
D8	B17H	18	PK	
D8	B17-GH	18	WH	

CHK	DATE	CHANGE	REV	REFERENCE	DRAWN	NAME
		ADDED CIRS A17-GH &	C	56507K	U00DLCK	42/43/44/85/8600 & 73/74/7500 CIRC DIAGRAMS
		B17-GH TO (1800)			RELEASE NO. P52778H	DATE 21JUN00 · PART NO. AF08-52376 · SHEET 13

Figure 157 Connector Composites (1652), (1657M), (1658), (1659), (1800)

13.14. CONNECTOR COMPOSITES (1804), (1807), (1808), (1809), (1810), (1811), (1812), (1813), (1814), (1815), P. 14

INTERNATIONAL TRUCK AND ENGINE CORPORATION

THIS PRINT IS PROVIDED ON A RESTRICTED BASIS AND IS NOT TO BE USED IN ANY WAY DETRIMENTAL TO THE INTEREST OF INTERNATIONAL TRUCK AND ENGINE CORPORATION.

ELECTRICAL CIRCUIT DIAGRAM CHAPTER 12

CONNECTOR COMPOSITES - MATING VIEW SHOWN

ACCELERATOR PEDAL (1804)

CONNECTOR: 1687790C1
TERMINAL: 1651943C1(18 AWG)

CAV	CIR	GAUGE	COLOR
A	B99V	18	VT
B	B97AD	18	VT
C	B97AF	18	VT
D	B99U	18	VT
E	B99W	18	VT
F	B99E	18	VT

CLUTCH SWITCH (1807)

CONNECTOR: 3540757C1
BODY LOCK: 3540758C1
SEAL: 1661872C1
TERMINAL: 1667742C1
(18 AWG)

CAV	CIR	GAUGE	COLOR
A	B17J	18	PK
B	B17H	18	PK
C	B96A	18	VT
D	B9VB	18	GY

BAP SENSOR (1808)

CONNECTOR: 2016703C1
BODY LOCK: 2016704C1
TERMINAL: 2003343C1
(18 AWG)

CAV	CIR	GAUGE	COLOR
1	B97AE	18	VT
2	B97AH	18	VT
3	B97Q	18	VT

CLOCKSPRING (1809)

CONNECTOR: 3547870C1
TERMINAL: 1661261C1
(18 AWG)

CAV	CIR	GAUGE	COLOR
A	B9R	18	GY
B	B96	18	VT
C	B85C	18	GY
D	B85B	18	GY

TURN SIGNAL SWITCH (1810)

CONNECTOR: 3539212C1
TERMINAL: 3539213C1
(18 AWG)

CAV	CIR	GAUGE	COLOR
1	B56A	18	OR
2	B57A	18	OR
3	B52A	18	YL
4	B102A	18	YL
5	B82B	18	GY
6	B11-GAA	18	WH
7	B9S	18	GY
8	B82	18	GY
11	B82A	18	GY
12	B87A	18	GY

PRIMARY AIR TRANSDUCER (1811)

CONNECTOR: 1678137C1
TERMINAL: 1651934C1
(18 AWG)

CAV	CIR	GAUGE	COLOR
A	B9VC	18	GY
B	B6HB	18	GY
C	B40	18	GY

SECONDARY AIR TRANSDUCER (1812)

CONNECTOR: 1678137C1
TERMINAL: 1651934C1
(18 AWG)

CAV	CIR	GAUGE	COLOR
A	B9VE	18	GY
B	B6HA	18	GY
C	B40A	18	GY

PARK BRAKE (1813)

CONNECTOR: 1661777C1
BODY LOCK: 1661873C1
SEAL: 1661872C1
TERMINAL: 1661875C1
(18 AWG)

CAV	CIR	GAUGE	COLOR
C	B44BB	18	GY
D	B9VD	18	GY

STOP LIGHT (1814)

CONNECTOR: 2036584C1
TERMINAL: 2036586C1
(18 AWG)

CAV	CIR	GAUGE	COLOR
A	B70C	18	RD
B	B9VF	18	GY

PARK BRAKE (1815)

CONNECTOR: 1661259C1
TERMINAL: 1661261C1
(18 AWG)

CAV	CIR	GAUGE	COLOR
A	WHITE	18	WH
B	BLACK	18	BK

CHK	DATE	CHANGE	REV	REFERENCE	DRAWN	NAME
PEC	19JAN01	PRODUCTION RELEASE.	A	P54304U	U00DLCK	42/43/44/85/8600 & 73/74/7500 CIRC DIAGRAMS
PEC	29JUN01	ADDED CONN 1804-1815.	B	P54634F	RELEASE NO. P52778H	DATE 21JUN00 / PART NO. AE08-52376 / SHEET 14

Figure 158 Connector Composites (1804), (1807), (1808), (1809), (1810), (1811), (1812), (1813), (1814), (1815)

13.15. CONNECTOR COMPOSITES (1820), (1822), (1823), (1824), (1828), (1860), (1861), (1901M), (1915), P. 15

INTERNATIONAL TRUCK AND ENGINE CORPORATION

THIS PRINT IS PROVIDED ON A RESTRICTED BASIS AND IS NOT TO BE USED IN ANY WAY DETRIMENTAL TO THE INTEREST OF INTERNATIONAL TRUCK AND ENGINE CORPORATION.

ELECTRICAL CIRCUIT DIAGRAM CHAPTER 12

CONNECTOR COMPOSITES - MATING VIEW SHOWN

PTC BODY BUILDER DCM BATT FEED (1820)

IP HARNESS

CONNECTOR: 3517817C1
TERMINAL: 3517818C1
(8 AWG)

CAV	CIR	GAUGE	COLOR
A	P14	8	RD

DASH HARNESS

CONNECTOR: 3517441C1
TERMINAL: 3517439C1
(8 AWG)

CAV	CIR	GAUGE	COLOR
A	J14MM	8	RD

AIR APPLICATION TRANSDUCER (1822)

CONNECTOR: 1678137C1
TERMINAL: 1651943C1
(18 AWG)

CAV	CIR	GAUGE	COLOR
A	B9VF	18	GY
B	B6HC	18	GY
C	B40F	18	GY

STOP LIGHT #1 (1823)

CONNECTOR: 1661777C1
SEAL: 1661872C1
TERMINAL: 1661875C1
(18 AWG)

CAV	CIR	GAUGE	COLOR
C	B70CA	18	OR
D	B9VG	18	GY

STOP LIGHT #2 (1824)

CONNECTOR: 1661777C1
SEAL: 1661872C1
TERMINAL: 1661875C1
(18 AWG)

CAV	CIR	GAUGE	COLOR
C	B70CB	18	OR
D	B9VH	18	GY

SHIFTER (1828) (LOCATED IN INSTRUMENT PANEL)

CONNECTOR: 3525872C1
BODY LOCK: 3525873C1
PLUG: 2025431C1

CAV	CIR	GAUGE	COLOR	TERM	SEAL
A	PLUG	-	-	-	-
B	A62-GC	18	WH	1661875C1	1661872C1
C	A92VA	18	PK	1661875C1	1661872C1
D	128D	18	YL	1661875C1	1661872C1
E	A123	18	PK	1661875C1	1661872C1
F	A110	18	YL	1661875C1	1661872C1
G	A92AF	18	TN	1661875C1	1661872C1
H	A92AG	18	TN	1661875C1	1661872C1

CIGAR LIGHTER PWR SOURCE (1860)

CONNECTOR: 0872291R1
TERMINAL: (W/2 POST PWR): 0879633R1
TERMINAL: (W/LTR PWR): 0188396R1

CAV	CIR	GAUGE	COLOR
A	A86-GA	14	WH
B	A86M	14	LT GN

TWO POST POWER SOURCE (1861)

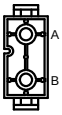

CONNECTOR: 3517473C1
TERMINAL: 3517476C1
(14 AWG)

CAV	CIR	GAUGE	COLOR
A	A86N	14	LT GN
B	A86-GB	14	WH

SNOW VALVE SWITCH CONN (1901M)

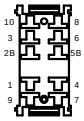

CONNECTOR: 3520850C1
TERMINAL: 1661224C1
(18 AWG)

CAV	CIR	GAUGE	COLOR
1	A23M	18	TN
3	A23J	18	TN
4	A23L	18	TN
6	A23K	18	TN
7	A23H	18	TN
8	A62P	18	LT BL
2B	A13DA	18	PK
5B	A23-GA	18	WH

AUX ROOF LOAD SWITCH CONN (1915)

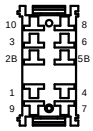

CONNECTOR: 3520850C1

CAV	CIR	GAUGE	COLOR	TERM
2B	A12X	14	LT BL	1661227C1
3	A12Y	14	LT BL	1661227C1
3	A12V	14	LT BL	1661227C1
7	A12V	14	LT BL	1661227C1
8	A62U	18	DK BL	1661224C1
9	A12-GA	18	WH	1661224C1

CHK	DATE	CHANGE	REV	REFERENCE	DRAWN	NAME
PEC	19JAN01	PRODUCTION RELEASE.	A	P54304U	U00DLCK	42/43/44/85/8600 & 73/74/7500 CIRC DIAGRAMS
PEC	25JUN01	ADDED CONN 1820-1915.	B	P54634F	RELEASE NO. P52778H	DATE 25AUG00 / PART NO. AE08-52376 / SHEET 15

Figure 159 Connector Composites (1820), (1822), (1823), (1824), (1828), (1860), (1861), (1901M), (1915)

13.16. CONNECTOR COMPOSITES (1918), (1935), (1920), (2000), (2002M), (2003M), (2004M), (2005M), P. 16

INTERNATIONAL TRUCK AND ENGINE CORPORATION

THIS PRINT IS PROVIDED ON A RESTRICTED BASIS AND IS NOT TO BE USED IN ANY WAY DETRIMENTAL TO THE INTEREST OF INTERNATIONAL TRUCK AND ENGINE CORPORATION.

ELECTRICAL CIRCUIT DIAGRAM CHAPTER 12

CONNECTOR COMPOSITES - MATING VIEW SHOWN

AIR SEAT (1918)

CONNECTOR: 0587567C91
TERMINAL: 0587577C1 (14 AWG)

CAV	CIR	GAUGE	COLOR
A	RD	14	RD
B	WH	14	WH

HEATED SEAT (DRIVER) (1918)

CONNECTOR: 0587567C91

CAV	CIR	GAUGE	COLOR	TERMINAL	NOTES
A	A105B	16	LTGN	0587577C1	DUAL HEATED SEATS
A	A105	18	LTGN	0587578C1	SINGLE HEATED SEAT
B	A105 GB	16	WH	0587577C1	DUAL HEATED SEATS
B	A105-G	18	WH	0587578C1	SINGLE HEATED SEAT

HEATED SEAT (PASS) (1935)

CONNECTOR: 0587567C91

CAV	CIR	GAUGE	COLOR	TERMINAL
A	A105A	16	LTGN	0587577C1
B	A105-GA	16	WH	0587577C1

DIGITAL CLOCK (1920)

CONNECTOR: 1667305C1
BODY LOCK: 1661263C1

CAV	CIR	GAUGE	COLOR	TERM
A	A86A	18	LTGN	1661261C1
B	A86-G	18	WH	1661261C1
C	A86	18	LTGN	1661261C1
D	A62F	18	DKBL	1661261C1

ROOF IP CONNECTION (2000)

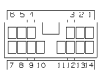

CONNECTOR: 3544689C1

CAV	CIR	GAUGE	COLOR	TERM
1	D86C	18	LT GN	3544691C1
2	D63-GA	18	WH	3544691C1
3	D63A	18	DK BL	3544691C1
4	D86E	18	LT GN	3544691C1
5	D86D	18	LT GN	3544691C1
6	D63E	18	DK BL	3544691C1
9	D58H	18	BN	3544691C1
10	D63D	18	DK BL	3544691C1
11	D11-GF	16	WH	3544693C1
12	D86F	16	LT GN	3544693C1
13	D068	18	LT GN	3544693C1
14	D63-GD	18	WH	3544691C1

CONNECTOR: 3544690C1

CAV	CIR	GAUGE	COLOR	TERM	NOTE
1	A86C	18	LT GN	3544692C1	
2	A63-GA	20	WH	3544692C1	
3	A63A	18	DK BL	3544692C1	
4	A06C	18	LT GN	3544692C1	
5	A86D	18	LT GN	3544692C1	
6	A63M	18	DK BL	3544692C1	W/OBWPJ
6	A63E	18	DK BL	3544692C1	N/OBWPJ
9	A50L	18	BN	3544692C1	
10	A63D	18	DK BL	3544692C1	
11	A11-GF	16	WH	3544694C1	
12	A86F	16	LT GN	3544694C1	
13	A86B	18	LT GN	3544694C1	
14	A9L	18	GY	3544692C1	

LEFT CLEARANCE (2002M)

CONNECTOR: 1661259C1
BODY LOCK: 1661263C1
TERMINAL: 1661261C1 (18 AWG)

CAV	CIR	GAUGE	COLOR
A	D58L	18	BN
B	D58-GD	18	WH

LEFT MARKER (2003M)

CONNECTOR: 1661259C1
BODY LOCK: 1661263C1
TERMINAL: 1661261C1 (18 AWG)

CAV	CIR	GAUGE	COLOR
A	D58M	18	BN
B	D50 GC	18	WH

MID MARKER (2004M)

CONNECTOR: 1661259C1
BODY LOCK: 1661263C1
TERMINAL: 1661261C1 (18 AWG)

CAV	CIR	GAUGE	COLOR
A	D58N	18	BN
B	D58-GF	18	WH

RIGHT MARKER (2005M)

CONNECTOR: 1661259C1
BODY LOCK: 1661263C1
TERMINAL: 1661261C1 (18 AWG)

CAV	CIR	GAUGE	COLOR
A	D58P	18	BN
B	D58-GH	18	WH

CHK	DATE	CHANGE	REV	REFERENCE	DRAWN	NAME
JKP	30MAY03	ADDED HEATED SEATS.	D	58205F	WOODLCK	12/13/14/85/8600 & 73/74/7500 CIRC DIAGRAMS

RELEASE NO. P52778H | DATE 25AUG00 | PART NO. AF08-52376 | SHEET 16

Figure 160 Connector Composites (1918), (1935), (1920), (2000), (2002M), (2003M), (2004M), (2005M)

13.17. CONNECTOR COMPOSITES (2006M), (2007F), (2021F), (2021M), (2022F), (2022M), (2111M), (2112M), (2113M), (2114M), (2115M), (2116M), (2117M), (2301M), (2302M), (2303M), P. 17

INTERNATIONAL TRUCK AND ENGINE CORPORATION

THIS PRINT IS PROVIDED ON A RESTRICTED BASIS AND IS NOT TO BE USED IN ANY WAY DETRIMENTAL TO THE INTEREST OF INTERNATIONAL TRUCK AND ENGINE CORPORATION.

ELECTRICAL CIRCUIT DIAGRAM CHAPTER 12

CONNECTOR COMPOSITES - MATING VIEW SHOWN

RIGHT CLEARANCE (2006M)

CONNECTOR: 1661259C1
BODY LOCK: 1661263C1
TERMINAL: 1661261C1
(18 AWG)

CAV	CIR	GAUGE	COLOR
A	D58R	18	BN
B	D58-GJ	18	WH

SUNSHADE (2007F)

CONNECTOR: 1661260C1
BODY LOCK: 1661264C1
TERMINAL: 1661262C1
(18 AWG)

CAV	CIR	GAUGE	COLOR
A	D58T	18	BN
B	D58-GL	18	WH

AUX ROOF/IP CONNECTION (2021F)

CONNECTOR: 3554818C1
BODY LOCK: 3554821C1
TERMINAL : 3534167C1
(14 AWG)

CAV	CIR	GAUGE	COLOR
A	D58W	14	BN
B	D58-GW	14	WH

IP/AUX ROOF CONNECTION (2021M)

CONNECTOR: 3554817C1
BODY LOCK: 3554820C1
TERMINAL : 3534165C1
(14 AWG)

CAV	CIR	GAUGE	COLOR
A	A12U	14	LT BL
B	A12-GB	14	WH

AUX ROOF/IP CONNECTION (2022F)

CONNECTOR: 3554818C1
BODY LOCK: 3554821C1
TERMINAL : 1661212C1
(18 AWG)

CAV	CIR	GAUGE	COLOR
A	BK	18	BK
B	WH	18	WH

IP/AUX ROOF CONNECTION (2022M)

CONNECTOR: 3554817C1
BODY LOCK: 3554820C1
TERMINAL : 3534164C1
(18 AWG)

CAV	CIR	GAUGE	COLOR
A	A58AD	18	BN
B	A11-GHF	18	WH

RIGHT DOOR DOME SWITCH (2111M)

CONNECTOR: 2036584C1
TERMINAL: 2036586C1
(18 AWG)

CAV	CIR	GAUGE	COLOR
A	D63B	18	DK BL
B	D9N	18	GY

LEFT DOOR DOME SWITCH (2112M)

CONNECTOR: 2036584C1
TERMINAL: 2036586C1
(18 AWG)

CAV	CIR	GAUGE	COLOR	NOTES
A	D63H	18	DK BL	
A	D63A	18	DK BL	PTC
B	D9D	18	GY	
B	D9L	18	GY	PTC

RIGHT CREW DOOR DOME SWITCH (2113M)

CONNECTOR: 2036584C1
TERMINAL: 2036586C1
(18 AWG)

CAV	CIR	GAUGE	COLOR
A	D63J	18	DK BL
B	D9W	18	GY

LEFT CREW DOOR DOME SWITCH (2114M)

CONNECTOR: 2036584C1
TERMINAL: 2036586C1
(18 AWG)

CAV	CIR	GAUGE	COLOR
A	D63K	18	DK BL
B	D9Y	18	GY

REAR DOME LIGHT (2115M)

CONNECTOR: 1661889C1
BODY LOCK: 1661890C1
TERMINAL: 1661261C1
(18 AWG)

CAV	CIR	GAUGE	COLOR
A	D63L	18	DK BL
B	D63-GH	18	WH
C	D63K	18	DK BL

DOME LAMP (2116M)

CONNECTOR: 3536187C1
BODY LOCK: 1661890C1
TERMINAL: 1661261C1
(18 AWG)

CAV	CIR	GAUGE	COLOR	NOTES
A	C63D	18	DK BL	
B	C63-GE	18	WH	W/DUAL CB
B	C11-GF	16	WH	W/O CB
C	C63E	18	DK BL	

DOME/READING LIGHT COMPASS/TEMP UNIT (2117M)

CONNECTOR: 3515762C1
BODY LOCK: 3515764C1-2
TERMINAL: 1661261C1(18 AWG)

CAV	CIR	GAUGE	COLOR
A	C41-G	18	WH
B	C63-GE	18	WH
C	C63D	18	DK BL
D	C41B	18	GY
E	C62F	18	DK BL
F	C63E	18	DK BL
G	C41	18	GY
H	C41A	18	GY

RIGHT REAR SPEAKER (2301M)

CONNECTOR: 3535769C1
BODY LOCK; 3535770C1

CAV	CIR	GAUGE	COLOR	TERM
A	D86D	18	LT GN	1661261C1
B	D86E	18	LT GN	1661261C1

LEFT REAR SPEAKER (2302M)

CONNECTOR: 3535769C1
BODY LOCK: 3535770C1
TERMINAL: 1661261C1
(18 AWG)

CAV	CIR	GAUGE	COLOR
A	D86B	18	LT GN
B	D86C	18	LT GN

CB RADIO POWER (2303M)

CONNECTOR: 1661197C1
TERMINAL: 1661212C1
(16 AWG)

CAV	CIR	GAUGE	COLOR
A	C86F	16	LT GN
B	C86-GF	16	WH

CHK	DATE	CHANGE	REV	REFERENCE	DRAWN	NAME
PEC	19JAN01	PRODUCTION RELEASE.	A	P54304U	U00DLCK	42/43/44/85/8600 & 73/74/7500 CIRC DIAGRAMS
PEC	25JUN01	ADDED 2006M-2303M.	B	P54634F	RELEASE NO. P52778H	DATE 25AUG00 / PART NO. AE08-52376 / SHEET 17

Figure 161 Connector Composites (2006M), (2007F), (2021F), (2021M), (2022F), (2022M), (2111M), (2112M), (2113M), (2114M), (2115M), (2116M), (2117M), (2301M), (2302M), (2303M)

13.18. CONNECTOR COMPOSITES (2304M), (2305M), (2306M), (2307F), (2308F), (2502F), (2502M), (2503F, M), (2600F, M), P. 18

INTERNATIONAL TRUCK AND ENGINE CORPORATION

THIS PRINT IS PROVIDED ON A RESTRICTED BASIS AND IS NOT TO BE USED IN ANY WAY DETRIMENTAL TO THE INTEREST OF INTERNATIONAL TRUCK AND ENGINE CORPORATION.

ELECTRICAL CIRCUIT DIAGRAM CHAPTER 12

CONNECTOR COMPOSITES - MATING VIEW SHOWN

RIGHT CONSOLE SPEAKER (2304M)

CONNECTOR: 3535769C1
BODY LOCK: 3535770C1
TERMINAL: 1661261C1 (18 AWG)

CAV	CIR	GAUGE	COLOR
A	C86K	18	LT GN
B	C86L	18	LT GN

LEFT CONSOLE SPEAKER (2305M)

CONNECTOR: 3535769C1
BODY LOCK: 3535770C1
TERMINAL: 1661261C1 (18 AWG)

CAV	CIR	GAUGE	COLOR
A	C86H	18	LT GN
B	C86J	18	LT GN

CB RADIO/CONSOLE CB ANTENNA (2306M)

CONNECTOR: 3554596C91
TERMINAL: ASSEMBLY

CAV	CIR	GAUGE	COLOR
1	[L-CB]	4	BK
1	[R-CB]	4	BK

CONSOLE/MIRROR CB ANTENNA (2307F)

CONNECTOR: 3554596C9Y
TERMINAL: ASSEMBLY

CAV	CIR	GAUGE	COLOR
1	[R-CB]	4	BK

CONSOLE/MIRROR CB ANTENNA (2308F)

CONNECTOR: 3554596C9X
TERMINAL: ASSEMBLY

CAV	CIR	GAUGE	COLOR
1	[L-CB]	4	BK

CONSOLE/ROOF STANDARD (2502F)

CONNECTOR: 1667529C1
BODY LOCK: 1667530C1

CAV	CIR	GAUGE	COLOR	TERM
A	C86F	16	LT GN	1661262C1
B	C11-GF	16	WH	1661262C1
C	C63D	18	DK BL	1661262C1
D	C63E	18	DK BL	1661262C1

CONSOLE/ROOF STANDARD (2502M)

CONNECTOR: 2036584C1
BODY LOCKS: 1661263C1(2 REQD)
TERMINAL: 1661261C1(16,18 AWG)

CAV	CIR	GAUGE	COLOR	NOTES
A	D86F	18	LT GN	
B	D11-GF	16	WH	
C	D63D	18	DK BL	STANDARD CAB
C	D63J	18	DK BL	EXTENDED CAB
C	D63N	18	DK BL	TRAVEL CREW CAB
D	D63E	18	DK BL	STANDARD CAB
D	D63C	18	DK BL	EXT & TRAVEL CREW CAB

CONSOLE/IP PREMIUM

(2503F)

CONNECTOR: 3544687C1
TERMINAL: 3544691C1 (18 AWG)

CAV	CIR	GAUGE	COLOR
1	C41-G	18	WH
2	C41B	18	GY
3	C62F	18	DK BL
4	C41	18	GY
6	C86L	18	LT GN
7	C86J	18	LT GN
8	C86H	18	LT GN
9	C86K	18	LT GN
10	C41A	18	GY

(2503M)

CONNECTOR: 3544688C1
TERMINAL: 3544692C1 (18 AWG)

CAV	CIR	GAUGE	COLOR
1	A41-G	18	WH
2	A41B	18	GY
3	A62F	18	DK BL
4	A41	18	GY
6	A86L	18	LT GN
7	A86J	18	LT GN
8	A86H	18	LT GN
9	A86K	18	LT GN
10	A41A	18	GY

ROOF/IP CREW DOOR

(2600F)

CONNECTOR: 3550639C1C1
TERMINAL: 3544877C1(12 AWG)
TERMINAL: 3544876C1(18 AWG)

CAV	CIR	GAUGE	COLOR
A	A81C	12	LT GN
B	A3Y(+)	18	DK BL
C	A81D	12	LT GN
D	A81-GB	12	WH
E	A3Z(-)	18	GY
F	A81-GC	12	WH

(2600M)

CONNECTOR: 3550638C1C1
TERMINAL: 3544881C1(12 AWG)
TERMINAL: 3544880C1(18 AWG)

CAV	CIR	GAUGE	COLOR
A	D14B	12	RD
B	D3A(+)	18	BK
C	D14A	12	RD
D	D11-GA	12	WH
E	D3A(-)	18	BK
F	D11-GB	12	WH

CHK	DATE	CHANGE	REV	REFERENCE	DRAWN	NAME
PEC	19JAN01	PRODUCTION RELEASE.	A	P54304U	U00DAG9	42/43/44/85/8600 & 73/74/7500 CIRC DIAGRAMS
PEC	25JUN01	ADDED 2304M-2600M.	B	P54634F	RELEASE NO. P52778H	DATE 25AUG00 / PART NO. AE08-52376 / SHEET 18

Figure 162 Connector Composites (2304M), (2305M), (2306M), (2307F), (2308F), (2502F), (2502M), (2503F, M), (2600F, M)

13.19. CONNECTOR COMPOSITES (2601M, F), (2602M, F), (3000M), (3000F), (3002M), (3003), (3100M), (3200F, M), (3201M), (3202), (3203M), P. 19

INTERNATIONAL TRUCK AND ENGINE CORPORATION

THIS PRINT IS PROVIDED ON A RESTRICTED BASIS AND IS NOT TO BE USED IN ANY WAY DETRIMENTAL TO THE INTEREST OF INTERNATIONAL TRUCK AND ENGINE CORPORATION.

ELECTRICAL CIRCUIT DIAGRAM CHAPTER 12

CONNECTOR COMPOSITES - MATING VIEW SHOWN

LEFT CREW DOOR POD

(2601M)

(2601F)

CONNECTOR: 1661200C1
TERMINAL: 1661211C1
(12 AWG)
TERMINAL: 1661208C1
(18 AWG)

CAV	CIR	GAUGE	COLOR
A	D3B(+)	18	BK
B	D3B(-)	18	BK
C	D14B	12	RD
D	D11-GBB	12	WH
E	D8B	18	WH

CONNECTOR: 1661201C1
TERMINAL: 3534167C1
(12 AWG)
TERMINAL: 1661212C1
(18 AWG)

CAV	CIR	GAUGE	COLOR
A	T3BB(+)	18	DK BL
B	T3AA(-)	18	GY
C	T81E	12	LT GN
D	T81-GD	12	WH
E	T8A	18	WH
F	T8B	18	WH

RIGHT CREW DOOR POD

(2602M)

(2602F)

CONNECTOR: 1661200C1
TERMINAL: 1661211C1
(12 AWG)
TERMINAL: 1661208C1
(18 AWG)

CAV	CIR	GAUGE	COLOR
A	D3C(+)	18	BK
B	D3C(-)	18	BK
C	D14A	12	RD
D	D11-GAA	12	WH
E	D8A	18	WH

CONNECTOR: 1661201C1
TERMINAL: 3534167C1
(12 AWG)
TERMINAL: 1661212C1
(18 AWG)

CAV	CIR	GAUGE	COLOR
A	T3BB(+)	18	DK BL
B	T3AA(-)	18	GY
C	T81E	12	LT GN
D	T81-GD	12	WH
E	T8A	18	WH
F	T8B	18	WH

DRIVER DOOR MIRROR CONN (3000M)

CONNECTOR: 3540612C1
TERMINAL: 1661261C1
(16,18 AWG)

CAV	CIR	GAUGE	COLOR
A	A78D	18	LTGN
B	A78E	18	LTGN
C	A78E	18	LTGN
D	A78H	16	LTGN
E	A62D	18	DKBL
F	A58U	18	BN
G	A78L	18	LTGN
H	A78-GD	16	WH
J	A78-GE	16	WH

DOOR I/P MIRROR (3000F)

CONNECTOR: 3540613C1
BODY LOCK: 3540615C1
TERMINAL: 3534481C1
(20 AWG)
TERMINAL: 1661262C1
(16 AWG)

CAV	CIR	GAUGE	COLOR
A	E78D	20	LTGN
B	E78E	20	LTGN
C	E78E	20	LTGN
D	E78H	16	LTGN
E	E62A	20	LTBL
F	E58A	16	BN
G	E14DLB	20	RD
H	E11-GDK	16	WH
J	E11-GDLL	16	WH

CREW W/POD WINDOW MOTOR (3002M)

CONNECTOR: 3534424C1
BODY LOCK: 3534425C1
SEAL: 0589390C1
TERMINAL: 2039344C1
(12 AWG)

CAV	CIR	GAUGE	COLOR
A	T83C	12	LTGN
B	T83E	12	LTGN

PASSENGER DOOR MIRROR CONN (3003)

CONNECTOR: 3540612C1
TERMINAL: 1661261C1
(16,18 AWG)

CAV	CIR	GAUGE	COLOR
A	A78D	18	LTGN
B	A78E	18	LTGN
C	A78E	18	LTGN
D	A78J	16	LTGN
E	A58T	18	BN
H	A78-GB	16	WH
J	A78-GC	16	WH

FRONT DOOR WINDOW MOTOR (3100M)

CONNECTOR: 3534424C1
BODY LOCK: 3534425C1
SEAL: 0589391C1
TERMINAL: 3535486C1
(14 AWG)

CAV	CIR	GAUGE	COLOR
A	E83A	14	LTGN
B	E83E	14	LTGN

DOOR/IP DOOR POD

(3200F)

CONNECTOR: 1661201C1
TERMINAL: 1661208C1
(18 AWG)
TERMINAL: 1661211C1
(12 AWG)

CAV	CIR	GAUGE	COLOR
A	E3W(+)	18	DKBL
B	E3X(-)	18	GY
C	E81B	12	LTGN
D	E81-GA	12	WH

(3200M)

CONNECTOR: 1661200C1
TERMINAL: 1661212C1
(18 AWG)
TERMINAL: 3534167C1
(12 AWG)

CAV	CIR	GAUGE	COLOR
A	A3W(+)	18	DKBL
B	A3X(-)	18	GY
C	A81B	12	LTGN
D	A81-GA	12	WH

DOOR POD LOAD (3201M)

CONNECTOR: 3535482C1
BODY LOCK: 3535483C1
SEAL: 0589391C1
TERMINAL: 2033816C1
(14 AWG)

CAV	CIR	GAUGE	COLOR
A	E83F	14	LTGN
B	E83A	14	LTGN
C	E81A	14	LTGN
D	E81E	14	LTGN

DOOR POD SIGNAL (3202)

CONNECTOR: 3540565C1
BODY LOCK: 3540617C1
SEAL(18 AWG):1661872C1
SEAL(12 AWG):2025427C1
TERMINAL: 1661875C1
(18 AWG)
TERMINAL: 2031531C1
(12 AWG)

CAV	CIR	GAUGE	COLOR
C	F3X(-)	18	GY
D	F3W(+)	18	DKBL
F	F81-GA	12	WH
G	F81B	12	LTGN

DOOR LOCK (3203M)

CONNECTOR: 1661201C1
BODY LOCK: 1671608C1
SEAL: 0589391C1
TERMINAL: 2033816C1
(14 AWG)

CAV	CIR	GAUGE	COLOR
A	F81A	14	LTGN
B	F81E	14	LTGN

CHK	DATE	CHANGE	REV	REFERENCE	DRAWN	NAME
PEC	25JUN01	ADDED 2601M-3203M.	B	P54634F	U00DAG9	42/43/44/85/8600 & 73/74/7500 CIRC DIAGRAMS
PEC	15JAN02	REV 3000M & 3003.	C	55043Z	RELEASE NO. P52778H	DATE 28JUN00

PART NO. AF08-52376 SHEET 19

Figure 163 Connector Composites (2601M, F), (2602M, F), (3000M), (3000F), (3002M), (3003), (3100M), (3200F, M), (3201M), (3202), (3203M)

13.20. CONNECTOR COMPOSITES (3204M, F), (3209), (3210M), (3211M), (4000), P. 20

INTERNATIONAL TRUCK AND ENGINE CORPORATION

THIS PRINT IS PROVIDED ON A RESTRICTED BASIS AND IS NOT TO BE USED IN ANY WAY DETRIMENTAL TO THE INTEREST OF INTERNATIONAL TRUCK AND ENGINE CORPORATION.

ELECTRICAL CIRCUIT DIAGRAM CHAPTER 12

CONNECTOR COMPOSITES - MATING VIEW SHOWN

DOOR/IP DOOR POD

(3204M)

CONNECTOR: 1661200C1
TERMINAL: 1661211C1 (12 AWG)
TERMINAL: 1661208C1 (18 AWG)

CAV	CIR	GAUGE	COLOR
A	A3N(+)	18	DKBL
B	A3P(-)	18	GY
C	A81A	12	LTGN
D	A81-G	12	WH

(3204F)

CONNECTOR: 1661201C1
TERMINAL: 3534167C1 (20 AWG)
TERMINAL: 1661212C1 (14 AWG)

CAV	CIR	GAUGE	COLOR
A	E3W(+)	18	DKBL
B	E3X(-)	18	GY
C	E81B	14	LTGN
D	E81-GA	14	WH

DOOR POD SIGNAL (3209)

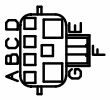

CONNECTOR: 1661200C1
BODY LOCK: 3540617C1
SEAL(18 AWG): 1661872C1
SEAL(12 AWG): 2025427C1
TERMINAL: 2031531C1 (12 AWG)
TERMINAL: 1661875C1 (18 AWG)

CAV	CIR	GAUGE	COLOR
A	T8A	18	WH
B	T8B	18	WH
C	T3AA(-)	18	GY
D	T3BB(+)	18	DKBL
E	T81-GD	12	WH
G	T81E	12	LTGN

DOOR POD LOAD (3210M)

CONNECTOR: 3535482C1
BODY LOCK: 3535483C1
SEAL: 0589390C1
TERMINAL: 2033816C1 (12 AWG)

CAV	CIR	GAUGE	COLOR
A	T83F	12	LTGN
B	T83C	12	LTGN
C	T81C	12	LTGN
D	T81F	12	LTGN

DOOR LOCK (3211M)

CONNECTOR: 1671610C1
BODY LOCK: 1671608C1
SEAL: 0589390C1
TERMINAL: 2033816C1 (12 AWG)

CAV	CIR	GAUGE	COLOR
A	T81C	12	LTGN
B	T81F	12	LTGN

MAXI-FUSE BLOCK (4000)

(LOCATED IN POWER DISTRIBUTION CENTER)

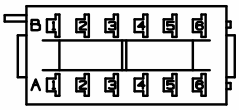

CONNECTOR - 3545997C1
LOCK - 3515520C1
BOLT - 22726R1
WASHER - 178474
NUT - 9413992

CAV	CIR	GAUGE	COLOR	TERM
A1	J14LP	10	RD	3515522C1
A1	J103C	10	LT GN	3515522C1
A2	J14MM	8	RD	3516157C1
A3	-	-	-	-
A4	-	-	-	-
A5	-	-	-	-
A6	-	-	-	-
STUD	J14V	6	RD	0373759C2

LOCATION	FUSE	PART NUMBER	DESCRIPTION
A1-B1	40 AMP	3534204C1	LECTRA-SHIFT, PTO
A1-B1	40 AMP	3534204C1	AUX 40 AMP CIRCUIT
A2-B2	60 AMP	3525615C1	60 AMP PWR FEED
A3-B3	-	-	-
A4-B4	-	-	-
A5-B5	-	-	-
A6-B6	-	-	-

CHK	DATE	CHANGE	REV	REFERENCE	DRAWN	NAME
CNA	10JUL03	LAS9//ADDED J103C.	D	57097S	U00DAG9	42/43/44/85/8600 & 73/74/7500 CIRC DIAGRAMS
					RELEASE NO. P52778H	DATE 23JUN00 · PART NO. AE08-52376 · SHEET 20

Figure 164 Connector Composites (3204M, F), (3209), (3210M), (3211M), (4000)

13.21. CONNECTOR COMPOSITE (4001), P. 21

INTERNATIONAL TRUCK AND ENGINE CORPORATION

THIS PRINT IS PROVIDED ON A RESTRICTED BASIS AND IS NOT TO BE USED IN ANY WAY DETRIMENTAL TO THE INTEREST OF INTERNATIONAL TRUCK AND ENGINE CORPORATION.

ELECTRICAL CIRCUIT DIAGRAM CHAPTER 12
CONNECTOR COMPOSITES - MATING VIEW SHOWN

MINI-FUSE BLOCKS (4001)
(LOCATED IN POWER DISTRIBUTION CENTER)

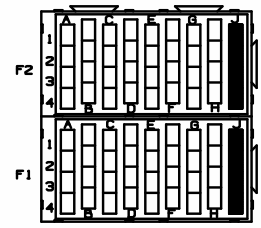

CONNECTOR ASSY - 3545599C91
LOCK - 3536085C1

CAV	CIR	GAUGE	COLOR	TERM	CAV	CIR	GAUGE	COLOR	TERM
F1-A1	(J13S)			3536304C1	F2-A1	J70SA	10	OR	3515518C1
F1-A2	(J13W)			3536304C1	F2-A1	J70SB	12	OR	3516158C1
F1-A3	(J13E)			3536301C1	F2-A2	(J14T)			3536303C1
F1-A4	(J13T)			3536301C1	F2-A3	(J14M)			3536303C1
F1-B1	J71H/J71J	16	OR	3573312C1	F2-A4	J97LD	16	VT	3573312C1
F1-B1	J71	16	OR	3573312C1	F2-B1	J70A	10	OR	3515518C1
F1-B2	J24C	18	GY	3515517C1	F2-B1	J70B	10	OR	3573311C1
F1-B2	J97DF	18	TN	3515517C1	F2-B2	J44J	18	GY	3515517C1
F1-B3	J94HD	18	GY	3536295C1	F2-B3	J72	12	OR	3516158C1
F1-B4	J37C	18	TN	3515517C1	F2-B3	J148B	14	RD	3516158C1
F1-C1	(J13S)			3536304C1	F2-B4	J97LC	16	VT	3573312C1
F1-C2	(J13W)			3536304C1	F2-C1	J90HA	12	GY	3516158C1
F1-C3	(J13E)			3536301C1	F2-C2	(J14T)			3536303C1
F1-C4	(J13T)			3536301C1	F2-C3	(J14M)			3536303C1
F1-D1	J44N	16	GY	3573312C1	F2-C4	(J14J)			3536301C1
F1-D2	J87KA	16	GY	3573312C1	F2-D1	J90H	18	GY	3515517C1
F1-D2	J87KB	16	GY	3573312C1	F2-D2	J94UA	12	GY	3573311C1
F1-D3	J13X	18	PK	3515517C1	F2-D3	J28D	18	TN	3515517C1
F1-D4	J61	18	GY	3515517C1	F2-D4	J92FB	16	TN	3573312C1
F1-E1	J13S	14	PK	3536304C1	F2-D4	J14AW	16	TN	3573312C1
F1-E2	J13W	14	PK	3536304C1	F2-E1	J68E	12	BN	3516158C1
F1-E3	J13E	14	PK	3536301C1	F2-E2	J14T	10	RD	3536303C1
F1-E4	J13T	14	PK	3536301C1	F2-E3	J14M	10	RD	3536303C1
F1-F1	J97U	18	VT	3515517C1	F2-E4	J14J	10	RD	3536298C1
F1-F1	J97UA	18	VT	3515517C1	F2-F1	J68BB	16	BN	3536295C1
F1-F2	J94AY	12	GY	3573311C1	F2-F1	J68BB	14	BN	3516158C1
F1-F3	J39A	16	GY	3536295C1	F2-F1	J68F	12	BN	3516158C1
F1-F4	J82J	18	TN	3515517C1	F2-F1	J68F	16	BN	3536295C1
F1-G1	(J13S)			3536304C1	F2-F2	J57T	12	OR	3516158C1
F1-G2	(J13W)			3536304C1	F2-F3	J14W	16	RD	3515517C1
F1-G3	J70SA	14	OR	3516158C1	F2-F3	J14W	16	RD	3536295C1
F1-G3	J70SS	14	OR	3516158C1	F2-F3	J14X	16	RD	3515517C1
F1-G4	J97HA	18	VT	3515517C1	F2-F3	J14X	16	RD	3536295C1
F1-H1	J23FS	18	TN	3515512C1	F2-F4	J94HC	14	GY	3516158C1
F1-H1	J23Z	18	TN	3536295C1	F2-G1	J58E	12	BN	3516158C1
F1-H2	J92#146	18	TN	3515517C1	F2-G2	(J14T)			3536303C1
F1-H2	J13M	18	PK	3515517C1	F2-G3	(J14M)			3536303C1
F1-H3	J70SB	14	OR	3516158C1	F2-G4	(J14J)			3536298C1
F1-H4	J97HB	18	VT	3515517C1	F2-H1	J58BB	14	BN	3516158C1
					F2-H1	J58F	12	BN	3516158C1
					F2-H1	J58F	16	BN	3536295C1
					F2-H1	J58BB	16	BN	3536295C1
					F2-H2	J56T	12	OR	3516158C1
					F2-H3	J19	16	GY	3515517C1
					F2-H4	J94H	14	GY	3516158C1
					F2-H4	J94AB	14	GY	3516158C1

MINI-FUSE BLOCKS (4001)

LOCATION	FUSE	PART NUMBER	DESCRIPTION	LOCATION	FUSE	PART NUMBER	DESCRIPTION
F1-A1&B1	10 AMP	3534209C1	BACK UP LAMPS	F2-A1&B1	30 AMP	3534213C1	TRAILER STOP LAMPS
F1-C1&D1	5 AMP	3534208C1	POWER PARK BRAKE	F2-C1&D1	5 AMP	3534208C1	HYDRAMAX SENSE
F1-E1&F1	5 AMP	3534208C1	ENGINE IGN	F2-E1&F1	20 AMP	3534211C1	TRAILER/BODY TAIL LAMPS
F1-G1&H1	10 AMP	3534209C1	FAN SOLENOID	F2-G1&H1	20 AMP	3534211C1	TRAILER/BODY MARKER LAMPS
F1-G1&H1	5 AMP	3534208C1	FAN CLUTCH	F2-A2&B2	30 AMP	3534213C1	TRAILER ABS
F1-A2&B2	5 AMP	3534208C1	EXHAUST BRAKE	F2-C2&D2	-	-	-
F1-C2&D2	5 AMP	3534208C1	WASHER PUMP	F2-E2&F2	15 AMP	3534210C1	TRAILER RIGHT TURNS
F1-E2&F2	-	-	-	F2-G2&H2	15 AMP	3534210C1	TRAILER LEFT TURNS
F1-G2&H2	10 AMP	3534209C1	XMSN IGN/NEUTRAL	F2-A3&B3	25 AMP	3534212C1	TRAILER AUX/BODY BUILDER ACC
F1-A3&B3	5 AMP	3534208C1	HYD ABS ECU IGN	F2-A3&B3	20 AMP	3534212C1	BODY BUILDER ACC
F1-C3&D3	10 AMP	3534209C1	IGNITION	F2-C3&D3	5 AMP	3534208C1	PAM MODULE
F1-E3&F3	20 AMP	3534211C1	AIR DRYER/DRAIN VALVE	F2-E3&F3	5 AMP	3534208C1	REMOTE POWER MODULES
F1-G3&H3	15 AMP	3534210C1	BODY BUILDER STOP LAMPS	F2-G3&H3	20 AMP	3534211C1	FUEL HEATER
F1-A4&B4	10 AMP	3534209C1	FUEL TRANSFER PUMP	F2-A4&B4	30 AMP	3534213C1	AUTOSHIFT XMSN
F1-C4&D4	5 AMP	3534208C1	AIR SUSPENSION	F2-C4&D4	-	-	-
F1-E4&F4	5 AMP	3534208C1	AUTO NEUTRAL	F2-E4&F4	30 AMP	3534213C1	AIR ABS ECU
F1-G4&H4	5 AMP	3534208C1	V8 ENGINE ECM	F2-E4&F4	30 AMP	3534213C1	HYD ABS MODULATOR
				F2-G4&H4	25 AMP	3534212C1	HYD ABS ECU BATT
				F2-A3&B3	20 AMP	3534211C1	BODY BUILDER ACCESSORY

CHK	DATE	CHANGE	REV	REFERENCE	DRAWN	NAME
CNA	11SEP03	TFW3/CORRECT TERM	E	58774T	U00DAG9	42/43/44/85/8600 & 73/74/7500 CIRC DIAGRAMS
		F1-H1: WAS 3515517C1			RELEASE NO. P52778H	DATE 21JUN00 / PART NO. AE08-52376 / SHEET 21

Figure 165 Connector Composite (4001)

13.22. CONNECTOR COMPOSITE (4002), P. 22

INTERNATIONAL TRUCK AND ENGINE CORPORATION

THIS PRINT IS PROVIDED ON A RESTRICTED BASIS AND IS NOT TO BE USED IN ANY WAY DETRIMENTAL TO THE INTEREST OF INTERNATIONAL TRUCK AND ENGINE CORPORATION.

ELECTRICAL CIRCUIT DIAGRAM CHAPTER 12

CONNECTOR COMPOSITES - MATING VIEW SHOWN

MICRO RELAY BLOCKS (4002)
(LOCATED IN POWER DISTRIBUTION CENTER)

CAV	CIR	GAUGE	COLOR	TERM		CAV	CIR	GAUGE	COLOR	TERM
M1-A1	J59C	16	GY	3573312C1		M2-C4	J56H	16	OR	3515517C1
M1-C1	J59D	16	GY	3573312C1		M2-C4	J56K	16	OR	3515517C1
M1-A2	J59F	16	GY	3536300C1		M2-A4	J56T	12	OR	3516158C1
M1-B2	PLUG	-	-	-		M2-C3	J56C	12	OR	3516158C1
M1-C2	(J59F)	-	-	3536300C1		M2-A3	J56-GH	18	WH	3515517C1
M1-C4	(J23Z)	-	-	3536300C1		M2-B4	PLUG	-	-	-
M1-A4	J23Z	18	TN	3536300C1		M2-F2	J64AB	16	YL	3573311C1
M1-A3	J23A	18	TN	3515517C1		M2-F2	J64C	16	YL	3573311C1
M1-B3	J23	18	TN	3515517C1		M2-D2	J53LO	14	YL	3573312C1
M1-C4	J24C	18	GY	3536300C1		M2-E1	J53B	14	YL	3573312C1
M1-A4	(J24C)	-	-	3536300C1		M2-E2	PLUG	-	-	-
M1-C3	J24B	18	GY	3515517C1		M2-D2	J53LO	14	YL	3516158C1
M1-A3	J24A	18	GY	3515517C1		M2-E1	J53B	14	YL	3516158C1
M1-B4	PLUG	-	-	-		M2-F1	J64LO	14	YL	3516158C1
M1-D1	J71#113	18	OR	3515517C1		M2-D1	J64-GA/J64-G	18/18	WH	3573312C1
M1-D2	J71J	18	OR	3515517C1		M2-E2	PLUG	-	-	-
M1-F1	J71B	18	OR	3515517C1		M2-D1	J59A	16	GY	3573312C1
M1-F2	J71H	18	OR	3515517C1		M2-E1	J59	16	GY	3573312C1
M1-E2	PLUG	-	-	-		M2-D2	J59D	16	GY	3573312C1
M1-F4	J92-M4	18	TN	3536295C1		M2-F2	J59B	16	GY	3573312C2
M1-D4	J17	18	PK	3515517C1		M2-E2	PLUG	-	-	-
M1-F3	J17SA	18	PK	3515517C1		M2-F4	J57H	16	OR	3515517C1
M1-D3	J17-GR1	18	PK	3515517C1		M2-F4	J57K	16	OR	3515517C1
M1-E4	PLUG	-	-	-		M2-D4	J57T	12	OR	3516158C1
M1-J4	J13AS	18	PK	3515517C1		M2-F3	J57C	12	OR	3516158C1
M1-G4	J19A	16	GY	3515517C1		M2-D3	J57-GH	18	WH	3515517C1
M1-G4	J19E	16	GY	3536295C1		M2-E4	PLUG	-	-	-
M1-J3	J19	16	GY	3515517C1		M2-J2	J94HV	18	GY	3515517C1
M1-G3	J19-G	18	WH	3515517C1		M2-J2	J64C	16	YL	3515517C1
M1-H4	PLUG	-	-	-		M2-G2	J94HH	18	GY	3515517C1
M1-A1	J92RB	16	TN	3573312C1		M2-J1	J94HE	18	GY	3515517C1
M1-C1	J92D161	16	TN	3573312C1		M2-G1	J94-GHF	18	WH	3515517C1
M1-A2	J92#163	16	TN	3573312C1		M2-H2	PLUG	-	-	-
M1-C2	J13RA	16	TN	3573312C1		M2-G2	J52HI	14	YL	3516158C1
M1-G1	J37D	18	TN	3515517C1		M2-H1	J52B	14	YL	3516158C1
M1-J1	J37	16	TN	353312C1		M2-J1	J64HI	14	YL	3516158C1
M1-G2	J37C	16	TN	353312C1		M2-G1	J64-GA	18	WH	3515517C1
M1-J2	(J37C)	-	-	3536300C1		M2-H2	PLUG	-	-	-
M1-G3	J97J	18	VT	3515517C1		M2-G3	J92-GJ	18	WH	3515517C1
M1-J3	J97H	18	VT	3515517C2		M2-G3	J92RD	18	TN	3515517C1
M1-J4	J97JA	18	VT	3515517C3		M2-G4	J92APA	18	TN	3515517C1
M1-G4	J97HA	16	VT	3573312C1		M2-G4	J92NB	16	TN	3573312C1
M2-A1	J92A114	18	TN	3515517C1		M2-H3	J17B	18	PK	3515517C1
M2-A2	J17BC	18	PK	3515517C1		M2-H3	J92FN	16	TN	3573312C1
M2-B1	J92-M5	18	TN	3515517C1		M2-J4	J92AY	18	TN	3515517C1
M2-C1	J92J	18	TN	3536295C1		M2-J4	J92FBA	16	TN	3573312C1
M2-C1	J92JA	18	TN	3536295C1		M2-H4	PLUG	-	-	-
M2-C2	J92JA	18	TN	3536295C1		M2-J3	J92FB	16	TN	3573312C1
M2-B2	PLUG	-	-	-						

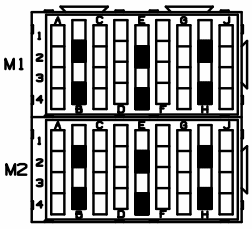

CONNECTOR ASSY - 3545598C91
LOCK - 3536085C1
MICRO RELAY - 3519350C1
PLUG - 3555842C1

LOCATION	DESCRIPTION
M1-A1,M1-C2	REMOTE START/STOP
M1-A3,M1-C4	EXHAUST BRAKE
M1-A3,M1-C4	FAN CLUTCH
M1-D1,M1-F2	BACK UP LAMPS W/WTEC XMSN
M1-D3,M1-F4	CRANK ENABLE W/AUTONEUTRAL
M1-G3,M1-J4	FUEL HEATER
M2-A1,M2-C2	NEUTRAL W/WTEC AUTONEUTRAL
M2-A3,M2-C4	TRAILER LEFT TURNS
M2-D1,M2-F2	REMOTE START/STOP
M2-D1,M2-F2	AUX HEADLIGHT LO BEAM
M2-D3,M2-F4	TRAILER RIGHT TURNS
M2-G1,M2-J2	HYD ABS EVENT
M2-G1,M2-J2	AUX HEADLIGHT HI BEAM
M2-G3,M2-J4	WTEC AUTO NEUTRAL LAMP

CHK	DATE	CHANGE	REV	REFERENCE	DRAWN	NAME
CNA	10JUL03	LAS9/MULTIPLE CHANGES	F	57097S	U00DAG9	42/43/44/85/8600 & 73/74/7500 CIRC DIAGRAMS
		FOR REMOTE START/STOP.			RELEASE NO. P52778H	DATE 28JUN00 / PART NO. AE08-52376 / SHEET 22

Figure 166 Connector Composite (4002)

13.23. CONNECTOR COMPOSITE (4003), P. 23

INTERNATIONAL TRUCK AND ENGINE CORPORATION

THIS PRINT IS PROVIDED ON A RESTRICTED BASIS AND IS NOT TO BE USED IN ANY WAY DETRIMENTAL TO THE INTEREST OF INTERNATIONAL TRUCK AND ENGINE CORPORATION.

ELECTRICAL CIRCUIT DIAGRAM CHAPTER 12

CONNECTOR COMPOSITES - MATING VIEW SHOWN

ISO & POWER RELAYS (4003)
(LOCATED IN POWER DISTRIBUTION CENTER)

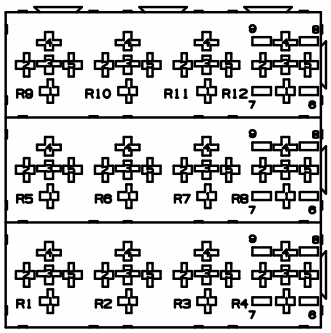

LOCATION	DESCRIPTION
R1	WIPER POWER
R2	WIPER HI-LOW
R3	BODY BUILDER ACC
R3	TRAILER AUX
R4	LECTRASHIFT PTO
R4	AUXILARY 40 AMP CIRCUIT
R4	REMOTE START/STOP
R5	TRAILER ABS
R6	TRAILER/BODY TAIL & MARKERS
R7	TRAILER/BODY STOP LAMPS
R8	V8 ENGINE IDM
R9	PRIMARY IGNITION
R10	HYD ABS MOD PUMP
R10	AIR ABS ECU
R11	I6 ENGINE ECM
R11	V8 ENGINE ECM
R12	STARTER
R12	STARTER W/AUTONEUTRAL

CONNECTOR ASSY - 3545600C91
LOCK - 3536093C1
ISO RELAY - 2012557C1

CAV	CIR	GAUGE	COLOR	TERM	CAV	CIR	GAUGE	COLOR	TERM
R1-1	J82HLP	16	GY	1661226C1	R8-1	J97TC	10	VT	1661227C1
R1-2	J82RP	18	GY	1661224C1	R8-5	J97LB	18	VT	1661224C1
R1-3	J82P	16	GY	1661226C1	R8-4	J97TA	10	VT	1661227C1
R1-4	J82HL	16	GY	1661226C1	R8-2	J97LA	18	VT	1661224C1
R1-5	J82FB	18	GY	1661224C1	R9-1	J13CW	10	PK	1661227C1
R2-1	J82HLP	16	GY	1661226C1	R9-5	J13C	18	PK	1661224C1
R2-2	J82RH	18	GY	1661224C1	R9-4	J14D	10	RD	1661227C1
R2-3	J82L	16	GY	1661226C1	R9-2	J11-GD	18	WH	1661224C1
R2-4	J82H	16	GY	1661226C1	R9-3	J11-GE	12	WH	1661227C1
R2-5	J82FA	18	GY	1661224C1	R10-1	J94HC	14	GY	1661228C1
R3-2	J11-GBR	18	WH	1661224C1	R10-5	J94HX	18	GY	1661224C1
R3-1	J14BB	14	RD	1661228C1	R10-4	J94HS	12	GY	1661227C1
R3-5	J12BA	18	LT BL	1661224C1	R10-4	J94A	14	GY	1661228C1
R3-4	J12BB	14	LT BL	1661226C1	R10-2	J94-GHD	18	WH	1661224C1
R3-2	J72-G	18	WH	1661224C1	R11-1	J97AA	12	VT	1661228C1
R3-1	J72	12	OR	1661227C1	R11-1	J97AAA	14	VT	1661228C1
R3-5	J72B	18	OR	1661224C1	R11-1	J97HA	18	VT	1661224C1
R3-4	J72A	12	OR	1661227C1	R11-1	J19A	14	GY	1661228C1
R4-1	J14LC/J14LP	10/10	RD	1661228C1	R11-2	J97T	18	VT	1661224C1
R4-1	J103C/J103B	10/10	LTGN	1661228C1	R11-2	J97J	18	VT	1661224C1
R4-1	J104D/J59B	18/18	DKBL/GY	1661226C1	R11-2	J19-G	16	WH	1661228C1
R4-2	J12LC	18	PK	1661224C1	R11-4	J97W	10	VT	1661227C1
R4-2	J103A	18	LTGN	1661224C1	R11-4	J97H	18	VT	1661224C1
R4-2	J104E	18	DKBL	1661224C1	R11-4	J19	14	GY	1661228C1
R4-3	J59F	18	GY	1661224C1	R11-5	J97AAA	14	VT	1661228C1
R4-4	J14LS/J46C	12/16	WH/PL	1661227C1	R11-5	J97JA	18	VT	1661224C1
R4-4	J103D	12	LTGN	1661227C1	R11-5	J13AS	16	PK	1661228C1
R4-4	J104CB/J104H	18/18	DKBL	1661226C1	R12-1	J17D	10	PK	1661227C1
R4-5	J14LC	10	RD	1661227C1	R12-2	J17S	18	PK	1661224C1
R4-5	J103B	10	LTGN	1661227C1	R12-4	J17E	10	PK	1661227C1
R4-5	J104/J104F	18/18	DKBL	1661226C1	R12-4	J17F/J17G	14/14	PK	1661227C1
R5-1	J94UA	12	GY	1661227C1	R12-5	J17	18	PK	1661224C1
R5-5	J13AV	18	PK	1661224C1	R12-5	J17SA	18	PK	1661224C1
R5-4	J94BC	10	GY	1661227C1	R12-5	J104K/J104CC	18/18	DKBL	3541250C1
R5-2	J11-GW	18	WH	1661224C1					
R6-1	J14R/J14RA	12/16	RD	1661227C1					
R6-5	J14RA	16	RD	1661226C1					
R6-4	J58E	12	BN	1661228C1					
R6-4	J88E	12	BN	1661228C1					
R6-2	J58B	18	GY	1661224C1					
R7-1	J14S/J14SA	12/16	RD	1661227C1					
R7-5	J14SA	16	RD	1661226C1					
R7-4	J70SA	10	OR	1661227C1					
R7-4	J70BS	14	OR	1661228C1					
R7-4	J70SB	12	OR	1661228C1					
R7-4	J70BA	14	OR	1661226C1					
R7-2	J70C	18	GY	1661224C1					

CHK	DATE	CHANGE	REV	REFERENCE	DRAWN	NAME
CNA	10JUL03	LAS//MULTIPLE CHANGES	D	57097S	U00DAG9	42/43/44/85/8600 & 73/74/7500 CIRC DIAGRAMS
					RELEASE NO. P52778H	DATE 28JUN00 · PART NO. AE08-52376 · SHEET 23

Figure 167 Connector Composite (4003)

13.24. CONNECTOR COMPOSITES (4004), (4007), (4008), P. 24

INTERNATIONAL TRUCK AND ENGINE CORPORATION

THIS PRINT IS PROVIDED ON A RESTRICTED BASIS AND IS NOT TO BE USED IN ANY WAY DETRIMENTAL TO THE INTEREST OF INTERNATIONAL TRUCK AND ENGINE CORPORATION.

ELECTRICAL CIRCUIT DIAGRAM CHAPTER 12

CONNECTOR COMPOSITES - MATING VIEW SHOWN

SYSTEM CONTROLLER (4004)

(LOCATED ON EXTERIOR DASH PANEL LEFT SIDE)

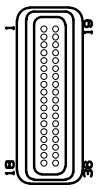

CONNECTOR - 3533834C1
BACKSHELL - 3533832C1
CPA - 3533836C1
RETAINER - 3533833C1
COVER - 3533834C1
SEAL - 3533835C1
PLUG - 3518314C1

CAV	CIR	GAUGE	COLOR	TERM	NOTES		CAV	CIR	GAUGE	COLOR	TERM
1	J32A	18	TN	3517243C1			19	J92DL	18	TN	3517243C1
2	J32	18	TN	3517243C1	W/AXLE TEMP		19	J92RD	18	TN	3517243C1
3	J31	18	TN	3517243C1			20	J92RH	18	GY	3517243C1
3	J31F	18	TN	3517243C1			21	J70C	18	GY	3517243C1
3	J88B	18	LT GN	3517243C1	W/HOURMETER		22	J59C	18	GY	3517243C1
4	J36B	18	TN	3517243C1			23	J94HP	18	GY	3517243C1
5	J36A	18	TN	3517243C1			24	J59B	18	GY	3517243C1
6	J77A	20	LT GN	3517243C1			25	J37D	18	TN	3517243C1
7	J77D	20	LT GN	3517243C1			26	J9A	18	GY	3517243C1
8	J77C	20	LT GN	3517243C1			27	J8A	18	GY	3517243C1
9	J104A	18	DK BL	3517243C1	W/REMOTE START/STOP		28	J90J	18	GY	3517243C1
10	J30A	18	TN	3517243C1			29	J82RP	18	GY	3517243C1
11	J19D	18	GY	3517243C1			30	J59D	18	GY	3517243C1
11	J19C	18	GY	3517243C1			31	J59A	18	GY	3517243C1
12	J87C	18	GY	3517243C1			32	J104	18	DK BL	3517243C1
12	J87CA	18	GY	3517243C1			33	PLUG	-	-	-
13	J61C	18	GY	3517243C1			34	J5M(+)	20	YL	3517243C1
13	J94HH	18	GY	3517243C1	W/HYD ABS		35	J5M(-)	20	GN	3517243C1
13	J40F	18	GY	3517243C1	W/AIR APP GAUGE		36	PLUG	-	-	-
14	PLUG	-	-	-							
15	J70NV	18	RD	3517243C1							
15	PLUG	-	-	-							
16	J44M	18	GY	3517243C1							
17	J58B	18	GY	3517243C1							
18	J93	18	TN	3517243C1	W/2SPD AXLE&MAN XMSN						

SYSTEM CONTROLLER BROWN (4007)

(LOCATED ON EXTERIOR DASH PANEL LEFT SIDE)

CONNECTOR - 3548934C1
LOCK - 3548943C1
PLUG - 3535938C1

CAV	CIR	GAUGE	COLOR	TERM	SEAL	NOTES
A	J84AB	16	YL	3535930C1	3535936C1	W/AUX HEADLIGHTS
A	J84A	12	BN	3534163C1	3548945C1	W/FOG LIGHTS
B	J57AA	16	OR	3535930C1	3535936C1	
C	J56AA	16	OR	3535930C1	3535936C1	
D	J53A	14	YL	3535931C1	3535937C1	N/AUX HEADLIGHTS
D	J53LO	14	YL	3535931C1	3535937C1	W/AUX HEADLIGHTS
E	J85AA	16	GY	3535930C1	3535936C1	
F	J65	16	OR	3535930C1	3535936C1	
G	J52HI	14	YL	3535931C1	3535937C1	W/AUX HEADLIGHTS
G	J52A	14	YL	3535931C1	3535937C1	N/AUX HEADLIGHTS
H	J58A	14	BN	3535931C1	3535937C1	

SYSTEM CONTROLLER BLUE (4008)

(LOCATED ON EXTERIOR DASH PANEL LEFT SIDE)

CONNECTOR - 3548933C1
LOCK - 3548943C1
PLUG - 3535938C1

CAV	CIR	GAUGE	COLOR	TERM	SEAL	NOTES
A	J59F	16	GY	3535930C1	3535936C1	W/SOLENOID 7-PACK
A	J59E	14	GY	3535931C1	3535937C1	W/SOLENOID 4-PACK
B	J57J	16	OR	3535930C1	3535936C1	
C	J56J	16	OR	3535930C1	3535936C1	
D	J90HA	12	GY	3534163C1	3548945C1	
E	PLUG	-	-	-	-	
F	J82F	16	GY	3535930C1	3535936C1	
G	J77B	16	LT GN	3535930C1	3535936C1	
H	PLUG	-	-	-	-	

CHK	DATE	CHANGE	REV	REFERENCE	DRAWN	NAME
CNA	12MAR04	CIR J61C WAS IN CAV	F	59169R	U00DAG9	42/43/44/85/8600 & 73/74/7500 CIRC DIAGRAMS
		10 ON CONN (4004).			RELEASE NO. P52778H	DATE 26JUN00 · PART NO. AE08-52376 · SHEET 24

Figure 168 Connector Composites (4004), (4007), (4008)

13.25. CONNECTOR COMPOSITE (4014), P. 25

INTERNATIONAL TRUCK AND ENGINE CORPORATION

THIS PRINT IS PROVIDED ON A RESTRICTED BASIS AND IS NOT TO BE USED IN ANY WAY DETRIMENTAL TO THE INTEREST OF INTERNATIONAL TRUCK AND ENGINE CORPORATION.

ELECTRICAL CIRCUIT DIAGRAM CHAPTER 12

CONNECTOR COMPOSITES - MATING VIEW SHOWN

PASS THROUGH AT DASH (4014)

(LOCATED ON DASH PANEL LEFT SIDE)

OUTSIDE

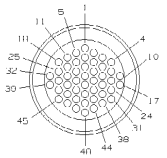

CONNECTOR ASSY - 3566554C91
COVER - 3566555C1
WAFER - 3566572C1

CAV	CIR	GAUGE	COLOR	TERM	NOTES
1	J99V	10	VT	3566558C1	
2	J97Y	18	VT	3566558C1	
3	J401 A	18	GY	3566558C1	
3	J99W	18	VT	3566558C1	
4	J99U	18	VT	3566558C1	
5	J97D	10	VT	3566558C1	
6	J1	18	LT BL	3566558C1	
7	J97A	18	VI	3566558C1	W/V8 ENGINE
7	J97C	18	VT	3566558C1	W/16 ENGINE
8	J17	18	PK	3566558C1	
9	J104K	10	DK BL	3566558C1	W/REMOTE START/STOP
9	J3A(+)	18	DK BL	3566558C1	
10	J3A(-)	18	GY	3566558C1	
11	J5A(+)	18	YI	3566558C1	N/AIR ABS
11	J5E(+)	10	YL	3566558C1	N/AIR ABS
12	J5B(-)	10	GN	3566558C1	N/AIR ABS
12	J5E(-)	18	GN	3566558C1	N/AIR ABS
13	J12MA	18	LT BL	3566558C1	
14	J70NT	16	RD	3566558C1	
15	J13C	10	PK	3566558C1	
15	J104D	10	DK BL	3566558C1	W/REMOTE START/STOP
16	J72D	18	OR	3566558C1	W/AUX SOCKET
17	J40F	18	GY	3566558C1	W/AIR BRAKES
18	J17J	18	PK	3566558C1	
18	J17S	10	PK	3566558C1	
19	J49A	10	GY	3566558C1	W/DIFF LOCK
20	J49D	18	GY	3566558C1	W/TANDEM DIFF LOCK
21	J14HC	16	RD	3567154C1	
22	J74	18	LT GN	3566558C1	
23	J74A	10	LT GN	3566558C1	
24	J23F	10	TN	3566558C1	W/SNOW VALVE
24	J92APA	18	TN	3566558C1	W/AUTONEUTRAL
24	J92#125	18	TN	3566558C1	
25	J23H	18	TN	3566558C1	
26	J23J	10	TN	3566558C1	
26	J104D	18	DK BL	3566558C1	W/REMOTE START/STOP
27	J23K	18	TN	3566558C1	
28	J14-GD	16	WH	3567154C1	
29	J21E	18	TN	3566558C1	
30	J07BA	10	CY	3566558C1	
30	J87DD	18	GY	3566558C1	
31	J23L	18	TN	3566558C1	
32	J59A	18	GY	3566558C1	W/REMOTE START/STOP
32	J42	18	GY	3566558C1	W/TXFER CASE WARNING LIGHT
33	J92D143	10	TN	3566558C1	W/WTEC XMSN
33	J17C	18	PK	3566558C1	W/EATON XMSN
34	J41A	18	GY	3566558C1	
35	J41	18	GY	3566558C1	
36	J92#173	18	TN	3566558C1	W/WTEC XMSN
36	J92S(+)	20	YL	3566558C1	W/EATON XMSN
37	J92#128	18	TN	3566558C1	W/LCT XMSN
37	J92#180	18	TN	3566558C1	W/WTEC XMSN
37	J02T(-)	20	GN	3566558C1	W/EATON XMSN
38	J92#110	18	TN	3566558C1	W/LCT XMSN
38	J92#124	18	TN	3566558C1	W/WTEC XMSN
38	J92U(S)	20	NONE	3566558C1	W/EATON XMSN
39	J92#175	18	TN	3566558C1	W/WTEC XMSN
39	J02AC	16	TN	3566558C1	W/EATON XMSN
40	J92#174	18	TN	3566558C1	W/WTEC XMSN
40	J92AD	16	TN	3566558C1	W/EATON XMSN
40	J44L	18	GY	3566558C1	
41	J92AF	16	TN	3566558C1	W/EATON XMSN
41	J02D136	18	TN	3566558C1	W/WTEC XMSN
42	J92#172	18	TN	3566558C1	W/WTEC XMSN
42	J92Z	16	TN	3566558C1	W/EATON XMSN
43	J92#171	18	TN	3566558C1	W/WTEC XMSN
43	J92AA	16	TN	3566558C1	W/EATON XMSN
44	J02#170	18	OR	3566558C1	W/WTEC XMSN
44	J92AB	16	TN	3566558C1	W/EATON XMSN
45	J92RA	18	TN	3566558C1	
46	J92D124	18	TN	3566558C1	
47	J92#135	18	TN	3566558C1	
48	J02#164	18	TN	3566558C1	
49	J12LC	10	PK	3566558C1	
48	J103A	18	LT GN	3566558C1	W/LECTRASHIFT PTO

CHK	DATE	CHANGE	REV	REFERENCE	DRAWN	NAME
CNA	10JUL03	LASO/MULTIPLE CHANGES	D	57097S	U00DAG9	42/43/44/85/8600 & 73/74/7500 CIRC DIAGRAMS
CNA	11SEP03	ADDED CKT J42.	E	58774I	RELEASE NO. P52778H	DATE 26JUN00

PART NO. AF08-52376 SHEET 25

Figure 169 Connector Composite (4014)

13.26. CONNECTOR COMPOSITE (4014/1700), P. 26

INTERNATIONAL TRUCK AND ENGINE CORPORATION

THIS PRINT IS PROVIDED ON A RESTRICTED BASIS AND IS NOT TO BE USED IN ANY WAY DETRIMENTAL TO THE INTEREST OF INTERNATIONAL TRUCK AND ENGINE CORPORATION.

ELECTRICAL CIRCUIT DIAGRAM CHAPTER 12

CONNECTOR COMPOSITES - MATING VIEW SHOWN

PASS THROUGH AT DASH (4014/1700)

(LOCATED ON DASH PANEL LEFT SIDE)

INSIDE

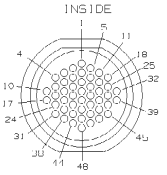

CONNECTOR - 3566553C1
GASKET - 3566556C1
JAM NUT - 3566557C1

CAV	CIR	GAUGE	COLOR	TERM	NOTES
1	A99V	18	VT	3566559C1	
2	A97Y	18	VT	3566559C1	
3	A00W	18	VT	3566559C1	W/CUM OR DD ENG OR W/AUX AIR
4	A99U	18	VT	3566559C1	N/CAT ENG
5	A97P	18	VT	3566559C1	
6	-	-	-	-	
7	A97O	18	VT	3566559C1	W/16 OR V8 ENG
7	A99E	18	VT		NOT USED
8	A17	18	PK	3566559C1	
9	A3A1+1	18	DKBL	3566559C1	N/EATON XMSN
9	A3B1+1	18	DKBL	3566559C1	W/EATON XMSN
10	A3A1-1	18	GY	3566559C1	N/EATON XMSN
10	A3D1-1	18	GY	3566559C1	W/EATON XMSN
11	A5B1+1	20	YL	3566559C1	
12	A5B1-1	20	GN	3566559C1	
13	A12M	16	LT BL	3566559C1	
14	A70N1	16	RD	3566559C1	
15	A13C	18	PK	3566559C1	
15	A104D	18	DKBL	3566559C1	W/REMOTE START/STOP
16	A14HD	16	RD	3566559C1	W/AUX SOCKET
16	A12R	16	LT BL	3566559C1	W/AUX SOCKET
17	A10F	18	GY	3566559C1	W/AIR APP GAUGE
18	A17J	18	PK	3566559C1	W/MANUAL OR EATON AUTOSHIFT XMSN
19	A49D	18	GY	3566559C1	W/RR AXLE DIFF LOCK
20	A90N	18	GY	3566559C1	W/HYD BRAKES
20	A49F	18	GY	3566559C1	W/FWD AXLE DIFF LOCK
21	A14HC	16	RD	3567157C1	W/2 WAY RADIO
22	A74	18	LTGN	3566559C1	W/HVAC
23	A71A	18	LTGN	3566559C1	W/HVAC
24	A92#125	18	TN	3566559C1	
24	A23F	18	TN	3566559C1	W/SNOW VALVE
25	A23H	18	TN	3566559C1	W/SNOW VALVE
26	A23J	18	TN	3566559C1	W/SNOW VALVE
26	A104H	16	DKBL	3566559C1	W/REMOTE START/STOP
27	A23K	18	TN	3566559C1	W/SNOW VALVE
28	A11-GAP	16	WH	3567157C1	W/2-WAY RADIO
29	A21E	16	TN	3566559C1	W/ETHER START
30	A07B	18	GY	3566559C1	
31	A23L	18	TN		W/SNOW VALVE
31	A104FC	18	DKBL	3566559C1	W/REMOTE START/STOP
32	A59K	18	GY	3566559C1	W/REMOTE START/STOP
32	A42	18	GY	3566559C1	W/XFERCASE WARNING LIGHT
33	A17C	16	PK	3566559C1	W/EATON XMSN
33	A143D	18	GY	3566559C1	W/WTEC XMSN
34	A41A	18	GY	3566559C1	W/COMPASS/TEMP
35	A41	18	GY	3566559C1	W/COMPASS/TEMP
36	A173	18	YL	3566559C1	W/WTEC XMSN
36	A92D1+1	20	YL	3566559C1	W/EATON XMSN
37	A100	18	DKBL	3566559C1	W/WTEC XMSN
37	A110	18	YL	3566559C1	W/LCT XMSN
37	A92D1-1	20	GN	3566559C1	W/EATON XMSN
38	A124	18	PK	3566559C1	W/WTEC XMSN
38	A123	18	PK	3566559C1	W/LCT XMSN
39	A92D1S1	20	NONE	3566559C1	W/EATON XMSN
39	A92AC	16	TN	3566559C1	W/EATON XMSN
39	A175	18	LTGN	3566559C1	W/WTEC XMSN
40	A92AD	16	TN	3566559C1	W/EATON XMSN
40	A174	18	TN	3566559C1	W/WTEC XMSN
40	A92AF	18	TN	3566559C1	W/LCT XMSN
41	A92AE	16	TN	3566559C1	W/EATON XMSN
41	A136D	18	PK	3566559C1	W/WTEC XMSN
41	A92AG	18	TN	3566559C1	W/LCT XMSN
42	A172	18	DKBL	3566559C1	W/WTEC XMSN
42	A92Z	16	TN	3566559C1	W/EATON XMSN
43	A92AA	16	TN	3566559C1	W/EATON XMSN
43	A171	18	LTGN	3566559C1	W/WTEC XMSN
44	A92AB	16	TN	3566559C1	W/EATON XMSN
44	A170	18	TN	3566559C1	W/WTEC XMSN
45	A28D	18	TN	3566559C1	
45	A92RA	18	TN	3566559C1	
46	A92C124	18	TN	3566559C1	
47	A92#135	18	TN	3566559C1	
48	A12LC	18	PK	3566559C1	W/LECTRASHIFT PTO
48	A92#164	18	TN	3566559C1	
49	A103	18	LT GN	3566559C1	W/AUX 40 AMP CIRCUIT

CHK	DATE	CHANGE	REV	REFERENCE	DRAWN	NAME
CNA	10JUL03	LAS9/MULTIPLE CHANGES	E	5709/S	U00DAG9	42/43/44/85/8600 & 73/74/7500 CIRC DIAGRAMS
CNA	11SEP03	ADDED CKT A42.	F	5877/41	RELEASE NO. P52778H	DATE 31MAY00

PART NO. AF08-52376 SHEET 26

Figure 170 Connector Composite (4014/1700)

13.27. CONNECTOR COMPOSITES (4015), (4017), (4018), (4019), (4020), (4021), (4022), (4023), P. 27

INTERNATIONAL TRUCK AND ENGINE CORPORATION

THIS PRINT IS PROVIDED ON A RESTRICTED BASIS AND IS NOT TO BE USED IN ANY WAY DETRIMENTAL TO THE INTEREST OF INTERNATIONAL TRUCK AND ENGINE CORPORATION.

ELECTRICAL CIRCUIT DIAGRAM CHAPTER 12

CONNECTOR COMPOSITES - MATING VIEW SHOWN

WIPER MOTOR (4015)

(LOCATED ON EXTERIOR DASH PANEL, CENTER)

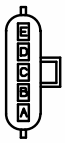

CAV	CIR	GAUGE	COLOR	TERM	SEAL
A	J82B	16	GY	2033819C1	1652325C1
B	J82P	16	GY	2033819C1	1652325C1
C	J82-G	16	WH	2033819C1	1652325C1
D	J82H	16	GY	2033819C1	1652325C1
E	J82L	16	GY	2033819C1	1652325C1

CONNECTOR - 1661375C2
LOCK - 1661376C1

HVAC RECIRC MOTOR (4017)

(LOCATED ON EXTERIOR DASH PANEL, RIGHT SIDE)

CAV	CIR	GAUGE	COLOR	TERM	SEAL
A	J74	18	LT GN	1661875C1	1661872C1
B	PLUG	-	-	-	-
C	PLUG	-	-	-	-
D	PLUG	-	-	-	-
E	PLUG	-	-	-	-
F	J74A	18	LT GN	1661875C1	1661872C1

CONNECTOR - 2011340C1
LOCK - 2011364C1
PLUG - 2025431C1

A/C ACCUMULATOR THERMISTOR #2 (4018)

(LOCATED ON EXTERIOR DASH PANEL RIGHT SIDE)

CAV	CIR	GAUGE	COLOR	TERM
A	J77A	20	LT GN	3536590C1
B	J9J	20	GY	3536590C1

CONNECTOR - 3535379C1
LOCK - 3536591C1

A/C ACCUMULATOR THERMISTOR #1 (4019)

(LOCATED ON EXTERIOR DASH PANEL RIGHT SIDE)

CAV	CIR	GAUGE	COLOR	TERM
A	J77D	20	LT GN	3536590C1
B	J9K	20	GY	3536590C1

CONNECTOR - 3535379C1
LOCK - 3536591C1

FUEL FILTER & WARN LIGHTS (4020)

(LOCATED NEAR WIPER MOTOR BRACKET)

DASH HARNESS

CAV	CIR	GAUGE	COLOR	TERM	SEAL
A	J19A	16	GY	2033819C1	1652325C1
B	J19B	18	GY	2033819C1	3517771C1
C	J19C	18	GY	2033819C1	1652325C1

CONNECTOR - 1888834C1
LOCK - 1664408C1
PLUG - 0587579C1

ENGINE HARNESS

CAV	CIR	GAUGE	COLOR	TERM	SEAL
A	[J19A]	16	GY	2033911C1	1652325C1
B	[J19B]	16	GY	2033911C1	1652325C1
C	J19C	16	GY	2033911C1	1652325C1

CONNECTOR - 3553981C1
LOCK - 3554019C1
PLUG - 0587579C1

WASHER PUMP (4021)

(LOCATED AT WASHER BOTTLE)

CAV	CIR	GAUGE	COLOR	TERM	SEAL
1	J87B	18	GY	3554326C1	3554319C1
2	J87K	18	GY	3554326C1	3554319C1

CONNECTOR - 35554294C1

WASHER FLUID LEVEL SENSOR (4022)

(LOCATED AT WASHER BOTTLE)

CAV	CIR	GAUGE	COLOR	TERM	SEAL
1	J87C	18	GY	3554322C1	3554318C1
2	J87H	18	GY	3554322C1	3554318C1

CONNECTOR - 3554317C1

AIR ABS ECU #2 (4023)

(LOCATED NEAR EXTERIOR DASH PANEL LEFT SIDE ON ABS CONTROLLER)

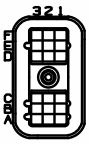

CONNECTOR - 3554088C1
PLUG - 1687788C1

CAV	CIR	GAUGE	COLOR	TERM	CAV	CIR	GAUGE	COLOR	TERM
A1	J94AH	18	GY	3565443C1	D1	J94AC	18	GY	3565443C1
A2	PLUG	-	-	-	D2	J94ATC	18	GY	3565443C1
A3	PLUG	-	-	-	D3	J94ATR	18	GY	3565443C1
B1	J94AJ	18	GY	3565443C1	E1	J94AE	18	GY	3565443C1
B2	PLUG	-	-	-	E2	J94AL	18	GY	3565443C1
B3	PLUG	-	-	-	E3	J94AK	18	GY	3565443C1
C1	J94AF	18	GY	3565443C1	F1	J94AD	18	GY	3565443C1
C2	PLUG	-	-	-	F2	J94AB	18	GY	3565443C1
C3	PLUG	-	-	-	F3	J94AA	18	GY	3565443C1

CHK	DATE	CHANGE	REV	REFERENCE	DRAWN	NAME
PEC	90CT02	DVD/3554088C1 WAS	C	56507Z	U00DAG9	42/43/44/85/8600 & 73/74/7500 CIRC DIAGRAMS
		2010376C1.			RELEASE NO. P52778H	DATE 26JUN00 · PART NO. AE08-52376 · SHEET 27

Figure 171 Connector Composites (4015), (4017), (4018), (4019), (4020), (4021), (4022), (4023)

13.28. CONNECTOR COMPOSITES (4024), (4030), (4031), (4032), (4033), (4040), (4041), P. 28

INTERNATIONAL TRUCK AND ENGINE CORPORATION

THIS PRINT IS PROVIDED ON A RESTRICTED BASIS AND IS NOT TO BE USED IN ANY WAY DETRIMENTAL TO THE INTEREST OF INTERNATIONAL TRUCK AND ENGINE CORPORATION.

ELECTRICAL CIRCUIT DIAGRAM CHAPTER 12

CONNECTOR COMPOSITES - MATING VIEW SHOWN

AIR ABS ECU #1 (4024)

(LOCATED NEAR EXTERIOR DASH PANEL LEFT SIDE ON ABS CONTROLLER)

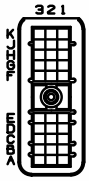

CONNECTOR - 3554087C1
LOCK - 1687788C1

CAV	CIR	GAUGE	COLOR	TERM	CAV	CIR	GAUGE	COLOR	TERM
A1	J94-GAC	18	WH	3565443C1	F1	J94AP	18	GY	3565443C1
A2	J94-GAB	18	WH	3565443C1	F2	PLUG	-	-	-
A3	J94-GAA	18	WH	3565443C1	F3	PLUG	-	-	-
B1	J94AYC	18	GY	3565443C1	G1	J94AS	18	GY	3565443C1
B2	PLUG	-	-	-	G2	J3D(+)	18	DK BL	3565443C1
B3	PLUG	-	-	-	G3	J3D(-)	18	GY	3565443C1
C1	J94AW	18	GY	3565443C1	H1	J94AR	18	GY	3565443C1
C2	PLUG	-	-	-	H2	J94AT	18	GY	3565443C1
C3	J5D(+)	20	YL	3565443C1	H3	J94AU	18	GY	3565443C1
D1	J94AX	18	GY	3565443C1	J1	J94AM	18	GY	3565443C1
D2	J5D(S)	20	NONE	3565443C1	J2	J94AN	18	GY	3565443C1
D3	J5D(-)	20	GN	3565443C1	J3	PLUG	-	-	-
E1	J94AV	18	GY	3565443C1	K1	PLUG	-	-	-
E2	PLUG	-	-	-	K2	J94AYA	18	GY	3565443C1
E3	PLUG	-	-	-	K3	J94AYB	18	GY	3565443C1

FUEL FILTER (4030)

(LOCATED IN ENGINE COMPARTMENT AT FUEL FILTER)

CAV	CIR	GAUGE	COLOR	TERM	SEAL
A	J19A	16	GY	1687738C1	1684232C1
B	PLUG	-	-	-	-
C	J19-GA	16	WH	1687738C1	1684232C1

CONNECTOR - 1687733C1
LOCK - 1687734C1
PLUG - 1675451C1

FLOW SWITCH (4031)

(LOCATED NEAR BRAKE FLUID RESERVOIR)

CAV	CIR	GAUGE	COLOR	TERM
A	J90CA	18	GY	2036586C1
B	J90-G	16	WH	2036586C1

CONNECTOR - 3519587C1

DIFFERENTIAL PRESSURE SWITCH (4032)

(LOCATED NEAR BRAKE FLUID RESERVOIR)

CAV	CIR	GAUGE	COLOR	TERM
A	[J90C]	16	GY	ASSY
B	[J90B]	16	GY	ASSY

CONNECTOR ASSY INCLUDING
TERMINALS & WIRES - 3518873C91

HYDRAMAX PUMP RELAY (4033)

(LOCATED NEAR HYDRAMAX PUMP MOTOR)

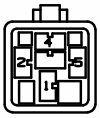

CAV	CIR	GAUGE	COLOR	TERM
1	J90	12	GY	1661706C1
2	J90D	16	GY	1661707C1
4	J90F	12	GY	1661706C1
5	J90K	16	GY	1661707C1

CONNECTOR - 1661747C91

WIF MODULE (4040)

(LOCATED NEAR EXTERIOR DASH PANEL, LEFT SIDE)

CAV	CIR	GAUGE	COLOR	TERM
A	J19E	16	GY	2036586C1
B	J19D	18	GY	2036586C1
C	PLUG	-	-	-
D	J19C	18	GY	2036586C1

CONNECTOR - 2038585C1
PLUG - 1687788C1
WIF MODULE - 1811164C2

FUEL FILTER (4041)

(LOCATED ON FUEL FILTER)

CAV	GAUGE	COLOR	TERM
A	16	GY	ASSY

CONNECTOR ASSY INCLUDING
TERMINAL & WIRE - 1684023C91

CHK	DATE	CHANGE	REV	REFERENCE	DRAWN	NAME
PEC	90CT02	DVD/3554087C1 WAS	D	56507Z	U00DAG9	42/43/44/85/8600 & 73/74/7500 CIRC DIAGRAMS
		1687789C1			RELEASE NO. P52778H	DATE 28JUN00 · PART NO. AE08-52376 · SHEET 28

Figure 172 Connector Composites (4024), (4030), (4031), (4032), (4033), (4040), (4041)

13.29. CONNECTOR COMPOSITES (4070), (4071), (4087), (4098), (4101), P. 29

INTERNATIONAL TRUCK AND ENGINE CORPORATION

THIS PRINT IS PROVIDED ON A RESTRICTED BASIS AND IS NOT TO BE USED IN ANY WAY DETRIMENTAL TO THE INTEREST OF INTERNATIONAL TRUCK AND ENGINE CORPORATION.

ELECTRICAL CIRCUIT DIAGRAM CHAPTER 12

CONNECTOR COMPOSITES - MATING VIEW SHOWN

THIS SPACE INTENTIONALLY LEFT BLANK

THIS SPACE INTENTIONALLY LEFT BLANK

PRESSURE SWITCH (4070)

LOCATED IN ENGINE COMPARTMENT

CAV	CIR	GAUGE	COLOR	TERM
C	J44J	18	GY	1661875C1
D	J44K	18	GY	1661875C1

CONNECTOR-1661777C1
LOCK 1661073C1

DUMP SOLENOID (4071)

LOCATED IN ENGINE COMPARTMENT

CAV	CIR	GAUGE	COLOR	TERM
A	J44K	18	GY	2033819C1
D	J44L	18	GY	2033819C1

CONNECTOR-1671610C1
LOCK-1671608C1

PAM MODULE (4087)

(LOCATED NEAR AIR FILTER IN ENGINE COMPARTMENT)

CONNECTOR - 3553401C1
BODY LOCK - 3553460C1
PLUG - 3527270C1

CAV	CIR	GAUGE	COLOR	TERM
1	PLUG	-	-	-
2	PLUG			
3	PLUG			
4	PLUG	-	-	-
5	PLUG	-	-	-
6	J26D	18	TN	3518963C1
7	J5P(1)	20	YL	3510963C1
8	J5P(1)	20	GN	3510963C1
9	J5P(5)	20	NONE	3518903C1
10	J26A	18	TN	3518963C1
11	J26B	18	TN	3518963C1
12	J11 CPM	18	WH	3510963C1

AIR SUSPENSION (4098)

(LOCATED IN ENGINE COMPARTMENT NEAR LEFT FRAME RAIL)

DASH HARNESS

CONNECTOR - 1671610C1
BODY LOCK - 1671608C1
SEAL - 1652325C1
TERMINAL - 2033819C1(18 AWG)

CAV	CIR	GAUGE	COLOR
A	J61	16	GY
D	J61-G	18	GY

CHASSIS HARNESS

CONNECTOR - 1671611C1
BODY LOCK - 1671608C1
SEAL - 1652325C1
TERMINAL - 2033911C1(18 AWG)

CAV	CIR	GAUGE	COLOR
A	J61A	16	GY
B	J61-GA	16	WH

THIS SPACE INTENTIONALLY LEFT BLANK

THIS SPACE INTENTIONALLY LEFT BLANK

DASH CONNECTOR STARTER/CEC POWER (4101)

CAV	CIR	GAUGE	COLOR	TERM	SEAL
A	K97T	10	VT	1667737C1	1667735C1
B	K97X	10	VT	1667737C1	1667735C1
C	K17C	10	PK	1667737C1	1667735C1

CONNECTOR-1667733C1

THIS SPACE INTENTIONALLY LEFT BLANK

CHK	DATE	CHANGE	REV	REFERENCE	DRAWN	NAME
CNA	11SEP03	ADDED 4101.	E	58771T	U00DAG9	42/43/44/85/8600 & 73/74/7500 CIRC DIAGRAMS
					RELEASE NO. P52778H	DATE 28JUN00 · PART NO. AF08-52376 · SHEET 29

Figure 173 Connector Composites (4070), (4071), (4087), (4098), (4101)

13.30. CONNECTOR COMPOSITE (4103), P. 30

INTERNATIONAL TRUCK AND ENGINE CORPORATION

THIS PRINT IS PROVIDED ON A RESTRICTED BASIS AND IS NOT TO BE USED IN ANY WAY DETRIMENTAL TO THE INTEREST OF INTERNATIONAL TRUCK AND ENGINE CORPORATION.

ELECTRICAL CIRCUIT DIAGRAM CHAPTER 12

CONNECTOR COMPOSITES - MATING VIEW SHOWN

CONNECTOR - 3558022C1
SEAL - 3559074C1
LOCK - 3558056C1
SMALL PLUG - 3532129C1

ENGINE/DASH (4103)

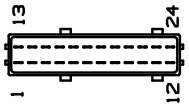

I6 - EGR - ENGINE HARNESS

CAV	CIR	GAUGE	COLOR	TERM	SEAL	NOTES
1	K97LA	16	VT	3559037C1	3509903C1	
2	K99S	18	VT	3559036C1	3509903C1	
3	K97K	18	VT	3559036C1	3509903C1	
4	K97C	18	VT	3559036C1	3509903C1	
5	K99T	18	VT	3559036C1	3509903C1	
6	K97R	18	VT	3559036C1	3509903C1	
7	K5A(+)	18	YL	3559036C1	3532128C1	
8	K5A(-)	18	GN	3559036C1	3532128C1	
9	PLUG	-	-	-	-	
10	K3A(+)	18	DK BL	3559036C1	3509903C1	
11	K3B(-)	18	GY	3559036C1	3509903C1	
12	K21B	18	TN	3559036C1	3509903C1	
13	K1	16	LT BL	3559037C1	3509903C1	
14	K23A	16	TN	3559037C1	3509903C1	W/AIR FAN
14	K97DF	18	VT	3559036C1	3509903C1	W/BODY BUILDER
15	K24B	18	GY	3559036C1	3509903C1	
16	K24A	18	GY	3559036C1	3509903C1	
17	K17K	18	PK	3559036C1	3509903C1	W/OVERCRANK PROT
17	K17M	18	WH	3559036C1	3509903C1	N/OVERCRANK PROT
18	K97J	16	VT	3559037C1	3509903C1	
19	K97M	16	VT	3559037C1	3509903C1	
20	K77A	16	LT GN	3559037C1	3509903C1	
21	PLUG	-	-	-	-	
22	K26A	18	TN	3559036C1	3509903C1	
23	K26B	18	TN	3559036C1	3509903C1	
24	PLUG	-	-	-	-	

V8 ENGINE HARNESS

CAV	CIR	GAUGE	COLOR	TERM	SEAL
1	K97LA	16	VT	3559037C1	3509903C1
2	K99S	18	VT	3559036C1	3509903C1
3	K97K	18	VT	3559036C1	3509903C1
4	K97	18	VT	3559036C1	3509903C1
5	K99T	18	VT	3559036C1	3509903C1
6	K97D	18	VT	3559036C1	3509903C1
7	K5S	20	YL	3559036C1	3509903C1
8	K5T	20	GN	3559036C1	3509903C1
9	K5U	20	NONE	3559036C1	3509903C1
10	K3A(+)	18	BK	3559036C1	3509903C1
11	K3B(-)	18	BK	3559036C1	3509903C1
12	K97LC	16	VT	3559037C1	3509903C1
13	K1	16	LT BL	3559037C1	3509903C1
14	K23A	18	TN	3559036C1	3509903C1
15	K23	18	TN	3559036C1	3509903C1
16	K19B	16	GY	3559037C1	3509903C1
17	K17L	18	PK	3559036C1	3509903C1
18	K97J	18	VT	3559036C1	3509903C1
19	K97UA	18	VT	3559036C1	3509903C1
20	K77A	16	LT GN	3559037C1	3509903C1
21	K97H	16	VT	3559037C1	3509903C1
22	K26A	18	TN	3559036C1	3509903C1
23	K26B	18	TN	3559036C1	3509903C1
24	K19C	16	GY	3559037C1	3509903C1

ENGINE/DASH (4103)

DASH HARNESS

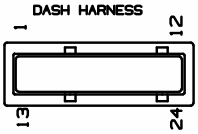

CONNECTOR - 3558026C1
LOCK - 3558056C1
SMALL PLUG - 3532129C1

CAV	CIR	GAUGE	COLOR	TERM	SEAL	NOTES
1	J97LA	18	VT	3509874C1	3509903C1	
1	J92RA	18	TN	3509874C1	3509903C1	
1	J99W	18	VT	3509874C1	3509903C1	
1	J30A	18	TN	3509874C1	3509903C1	
2	J99U	18	VT	3509874C1	3509903C1	
2	J30B	18	TN	3509874C1	3509903C1	
3	J97QA	18	VT	3509874C1	3509903C1	
3	J97Q	18	VT	3509874C1	3509903C1	
4	J97P	18	VT	3509874C1	3509903C1	
5	J99V	18	VT	3509874C1	3509903C1	
6	J97Y	18	VT	3509874C1	3509903C1	
7	J5E(+)	20	YL	3509874C1	3509903C1	N/AIR ABS
7	J5C(+)	20	YL	3509874C1	3509903C1	W/AIR ABS
8	J5E(-)	20	GN	3509874C1	3509903C1	N/AIR ABS
8	J5C(-)	20	GN	3509874C1	3509903C1	W/AIR ABS
9	PLUG	-	-	-	-	
10	J3B(+)	18	DK BL	3509874C1	3509903C1	
11	J3B(-)	18	GY	3509874C1	3509903C1	
12	J97LC	16	VT	3559035C1	3509903C1	W/V8
12	J21F	18	TN	3509874C1	3509903C1	W/ETHER START
13	J1	18	LT BL	3509874C1	3509903C1	
13	J97DF	18	TN	3509874C1	3509903C1	
14	J23FS	18	TN	3509874C1	3509903C1	W/AIR FAN
14	J23A	18	TN	3509874C1	3509903C1	W/ELECT FAN
15	J23	18	TN	3509874C1	3509903C1	W/ELECT FAN
15	J24B	18	GY	3509874C1	3509903C1	W/EXHAUST BRAKE
15	LM17J	18	PK	3509874C1	3509903C1	
15	J23	18	TN	3509874C1	3509903C1	
16	J19A	16	GY	3559035C1	3509903C1	W/V8
16	J24A	18	GY	3509874C1	3509903C1	W/EXHAUST BRAKE
16	J17S	18	PK	3509874C1	3509903C1	
16	J92RB	16	TN	3559035C1	3509903C1	
16	J19A	14	GY	3559035C1	3509903C1	
17	J17S	18	PK	3509874C1	3509903C1	
17	J17F	14	PK	3559035C1	3509903C1	
18	J97J	18	VT	3509874C1	3509903C1	W/V8
18	J97T	18	VT	3509874C1	3509903C1	W/I6
18	J17G	14	PK	3559035C1	3509903C1	
19	J97UA	18	VT	3509874C1	3509903C1	W/V8
19	J97U	18	VT	3509874C1	3509903C1	W/I6
19	J97BB	18	VT	3509874C1	3509903C1	
20	J77B	16	LT GN	3559035C1	3509903C1	
21	J97H	18	VT	3509874C1	3509903C1	
22	J26A	18	TN	3509874C1	3509903C1	
23	J26B	18	TN	3509874C1	3509903C1	
24	J19C	18	GY	3509874C1	3509903C1	

CHK	DATE	CHANGE	REV	REFERENCE	DRAWN	NAME
CNA	11SEP03	MULTIPLE CHANGES.	E	58774T	U00DAG9	42/43/44/85/8600 & 73/74/7500 CIRC DIAGRAMS
					RELEASE NO. P52778H	DATE 28JUN00 · PART NO. AE08-52376 · SHEET 30

Figure 174 Connector Composite (4103)

13.31. CONNECTOR COMPOSITES (4105), (4111), (4120), (4301), P. 31

INTERNATIONAL TRUCK AND ENGINE CORPORATION

THIS PRINT IS PROVIDED ON A RESTRICTED BASIS AND IS NOT TO BE USED IN ANY WAY DETRIMENTAL TO THE INTEREST OF INTERNATIONAL TRUCK AND ENGINE CORPORATION.

ELECTRICAL CIRCUIT DIAGRAM CHAPTER 12

CONNECTOR COMPOSITES - MATING VIEW SHOWN

ECM POWER/STARTER (4105)

(LOCATED NEAR WIPER MOTOR BRACKET)

ENGINE HARNESS

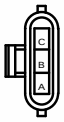

CAV	CIR	GAUGE	COLOR	TERM	SEAL	NOTES
A	K97W	10	VT	1667737C1	1667735C1	W/I6
A	K97T	10	VT	1667737C1	1667735C1	W/V8
B	K97AA	10	VT	1667737C1	1667735C1	W/I6
B	K97X	10	VT	1667737C1	1667735C1	W/V8
C	K17C	10	PK	1667737C1	1667735C1	

CONNECTOR - 1667733C1
LOCK - 1667734C1

DASH HARNESS

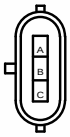

CAV	CIR	GAUGE	COLOR	TERM	SEAL	NOTES
A	J97W	10	VT	2025425C1	1667735C1	W/I6
A	J97TA	10	VT	2025425C1	1667735C1	W/V8
B	J97AA	12	VT	2025424C1	1671603C1	W/I6
B	J97XA	10	VT	2025425C1	1667735C1	W/V8
C	J17E	10	PK	2025425C1	1667735C1	

CONNECTOR - 1667732C1
LOCK - 1667734C1

FAN AIR SOLENOID (4111)

(LOCATED NEAR WIPER MOTOR BRACKET)

CAV	CIR	GAUGE	COLOR	TERM	SEAL	NOTES
A	K23B	18	TN	2033819C1	1652325C1	W/BODY BUILDER
A	K23A	16	TN	2033819C1	1652325C1	N/BODY BUILDER
B	K97B	18	VT	2033819C1	1652325C1	

CONNECTOR - 1671610C1
LOCK - 1671608C1

SNOW VALVE (4120)

(LOCATED ON AIR INTAKE FILTER)

CAV	CIR	GAUGE	COLOR	TERM	SEAL
A	J23F	18	TN	1661875C1	1661872C1
B	J23H	18	TN	1661875C1	1661872C1
C	J23J	18	TN	1661875C1	1661872C1
D	J23K	18	TN	1661875C1	1661872C1
E	J23L	18	TN	1661875C1	1661872C1

CONNECTOR - 3522251C1
LOCK - 3522253C1C1

FORWARD CHASSIS/DASH (4301)

(LOCATED IN ENGINE COMPARTMENT NEAR LEFT FRAME RAIL)

CONNECTOR - 3558026C1
LOCK - 3558056C1
PLUG - 3532129C1

DASH HARNESS

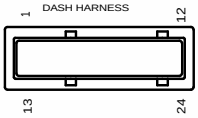

FORWARD CHASSIS HARNESS

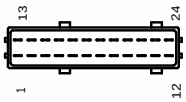

CONNECTOR - 3558022C1
SEAL - 3559047C1
LOCK - 3558056C1
PLUG - 3532129C1

FORWARD CHASSIS HARNESS

CAV	CIR	GAUGE	COLOR	TERM	SEAL	NOTES
1	M9	18	GY	3559036C1	3509903C1	W/AUX AIR
1	M94	18	GY	3559036C1	3509903C1	W/AIR ABS
1	M94AJ	14	BL	3559037C1	3558022C1	W/WABCO AIR
2	M94A	18	GY	3559036C1	3509903C1	W/AIR ABS
2	M6	18	GY	3559036C1	3509903C1	W/AUX AIR
2	M94AA	14	GN	3559037C1	3558022C1	W/WABCO AIR
3	M40	18	GY	3559036C1	3509903C1	W/AUX AIR
3	M94B	18	GY	3559036C1	3509903C1	W/AIR ABS
3	M94AB	14	BN	3559037C1	3558022C1	W/WABCO AIR
4	M52B	14	YL	3559037C1	3509903C1	
5	M53	14	YL	3559037C1	3509903C1	
6	M94C	18	GY	3559036C1	3509903C1	W/AIR ABS
6	[M94L]	18	BK	3559036C1	3509903C1	W/HYD ABS
6	M94AC	18	BN	3559036C1	3558022C1	W/WABCO AIR
7	M94D	18	GY	3559036C1	3509903C1	W/AIR ABS
7	[M94M]	18	BN	3559036C1	3509903C1	W/HYD ABS
7	M94AD	18	BK	3559036C1	3558022C1	W/WABCO AIR
8	M9	20	GY	3559036C1	3532128C1	
9	M56B	16	OR	3559037C1	3509903C1	
10	M85E	16	GY	3559037C1	3509903C1	
11	M57B	16	OR	3559037C1	3509903C1	
12	M58B	14	BN	3559037C1	3509903C1	
13	M11-G	12	WH	3559037C1	3509903C1	
14	M94E	18	GY	3559036C1	3509903C1	W/AIR ABS
14	[M94N]	18	BK	3559036C1	3509903C1	W/HYD ABS
14	M94AE	18	BN	3559036C1	3558022C1	W/WABCO AIR
15	M94F	18	GY	3559036C1	3509903C1	W/AIR ABS
15	[M94P]	18	BN	3559036C1	3509903C1	W/HYD ABS
15	M94AF	18	BK	3559036C1	3558022C1	W/WABCO AIR
16	M94H	18	GY	3559036C1	3509903C1	
16	M94AH	14	BL	3559037C1	3558022C1	W/WABCO AIR
17	M94J	18	GY	3559036C1	3509903C1	
17	M94AJ	14	GN	3559037C1	3558022C1	W/WABCO AIR
18	M94K	18	GY	3559036C1	3509903C1	
18	M94AK	14	BN	3559037C1	3558022C1	W/WABCO AIR
19	M21C	18	TN	3559036C1	3509903C1	
20	M64LO	14	YL	3559037C1	3509903C1	W/AUX LIGHTS
20	M64	16	YL	3559037C1	3509903C1	W/FOG LIGHTS
21	M78H	16	LT GN	3559037C1	3509903C1	
22	M21D	18	TN	3559036C1	3509903C1	
23	M77	20	LT GN	3559036C1	3532128C1	
24	M6	20	GY	3559036C1	3532128C1	

FORWARD CHASSIS/DASH (4301)

DASH HARNESS

CAV	CIR	GAUGE	COLOR	TERM	SEAL	NOTES
1	J94AP	18	GY	3509874C1	3509903C1	W/AIR ABS
1	J9FA	18	GY	3509874C1	3509903C1	W/AUX AIR
2	J94AR	18	GY	3509874C1	3509903C1	W/AIR ABS
2	J6BA	18	GY	3509874C1	3509903C1	W/AUX AIR
3	J40FA	18	GY	3509874C1	3509903C1	W/AUX AIR
3	J94AS	18	GY	3509874C1	3509903C1	W/AIR ABS
4	J52A	14	YL	3559035C1	3509903C1	W/STD LIGHTS
4	J52B	14	YL	3559035C1	3509903C1	W/AUX LIGHTS
5	J53A	14	YL	3559035C1	3509903C1	W/STD LIGHTS
5	J53B	14	YL	3559035C1	3509903C1	W/AUX LIGHTS
6	J94HM	18	GY	3509874C1	3509903C1	W/HYD ABS
6	J94AM	18	GY	3509874C1	3509903C1	W/AIR ABS
7	J94HN	18	GY	3509874C1	3509903C1	W/HYD ABS
7	J94AN	18	GY	3509874C1	3509903C1	W/AIR ABS
8	J9Y	20	GY	3509874C1	3532128C1	
9	J56A	16	OR	3559035C1	3509903C1	
10	J85AA	16	GY	3559035C1	3509903C1	
11	J57A	16	OR	3559035C1	3509903C1	
12	J58AA	14	BN	3559035C1	3509903C1	
13	J11-G	12	WH	3559035C1	3509903C1	
14	J94AT	18	GY	3509874C1	3509903C1	W/AIR ABS
14	J94HT	18	GY	3509874C1	3509903C1	W/HYD ABS
15	J94AU	18	GY	3509874C1	3509903C1	W/AIR ABS
15	J94HU	18	GY	3509874C1	3509903C1	W/HYD ABS
16	J94AV	18	GY	3509874C1	3509903C1	
17	J94AW	18	GY	3509874C1	3509903C1	
18	J94AX	18	GY	3509874C1	3509903C1	
19	J21E	18	TN	3509874C1	3509903C1	
20	J64A	12	BN	3559035C1	3509903C1	W/FOG LIGHTS
20	J64LO	14	YL	3559035C1	3509903C1	W/AUX LIGHTS
21	J78K	16	LT GN	3559035C1	3509903C1	
22	J21F	18	TN	3509874C1	3509903C1	
23	J77C	20	LT GN	3509874C1	3532128C1	
24	J6F	18	LT GN	3509874C1	3509903C1	

CHK	DATE	CHANGE	REV	REFERENCE	DRAWN	NAME
		ADDED CAV 14 TO 4301	D	56507K	U00DAG9	42/43/44/85/8600 & 73/74/7500 CIRC DIAGRAMS
		SWITCHED NOTES CAV 5.			RELEASE NO. P52778H	DATE 21JUN00 / PART NO. AF08-52376 / SHEET 31

Figure 175 Connector Composites (4105), (4111), (4120), (4301)

13.32. CONNECTOR COMPOSITES (4305), (4410), (4410B), (4410C), (4410D), (4410E), (4410H), (4410M), (4411), P. 32

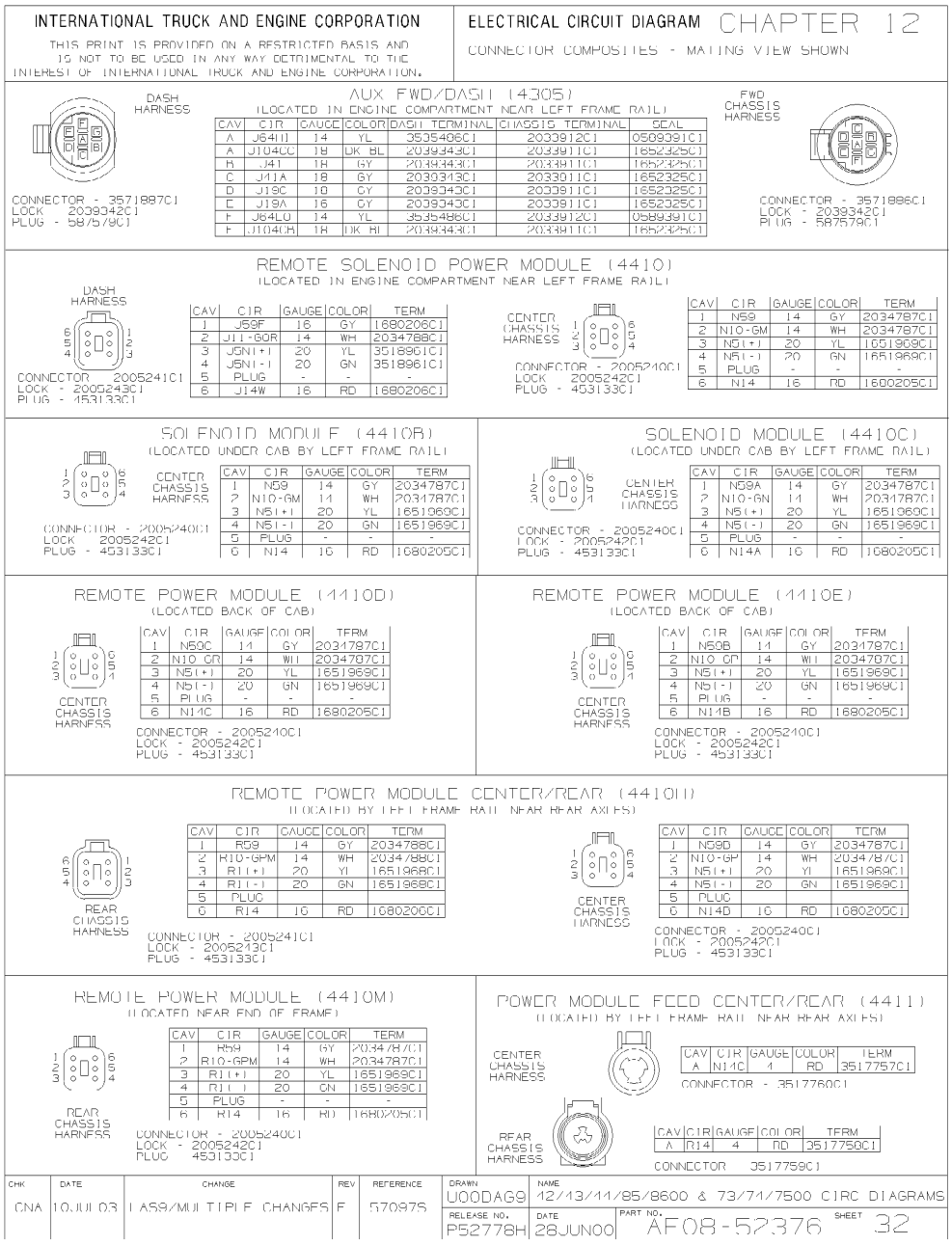

Figure 176 Connector Composites (4305), (4410), (4410B), (4410C), (4410D), (4410E), (4410H), (4410M), (4411)

13.33. CONNECTOR COMPOSITES (4411A), (4411B), (4412), (4415), (4450), (4450A), (4460A), (4460), P. 33

INTERNATIONAL TRUCK AND ENGINE CORPORATION

THIS PRINT IS PROVIDED ON A RESTRICTED BASIS AND IS NOT TO BE USED IN ANY WAY DETRIMENTAL TO THE INTEREST OF INTERNATIONAL TRUCK AND ENGINE CORPORATION.

ELECTRICAL CIRCUIT DIAGRAM CHAPTER 12

CONNECTOR COMPOSITES - MATING VIEW SHOWN

POWER MODULE FEED CENTER/REAR (4411A)

(LOCATED BY LEFT FRAME RAIL NEAR REAR AXLES)

CENTER CHASSIS HARNESS

CAV	CIR	GAUGE	COLOR	TERM
A	N14C	4	RD	3517757C1

CONNECTOR - 3517760C1

REAR CHASSIS HARNESS

CAV	CIR	GAUGE	COLOR	TERM
A	R14	4	RD	3517758C1

CONNECTOR - 3517759C1

REMOTE POWER MODULE POWER (4411B)

(LOCATED NEAR END OF FRAME)

REAR CHASSIS HARNESS

CAV	CIR	GAUGE	COLOR	TERM
A	R14	4	RD	3517757C1

CONNECTOR - 3517760C1

REMOTE POWER MODULE POWER (4412)

(LOCATED BACK OF CAB)

CENTER CHASSIS HARNESS

CAV	CIR	GAUGE	COLOR	TERM
A	N14A	4	RD	3517757C1

CONNECTOR - 3517760C1

FORWARD REMOTE POWER MODULE (4415)

(LOCATED IN ENGINE COMPARTMENT NEAR LEFT FRAME RAIL)

FORWARD CHASSIS HARNESS

CONNECTOR - 2005240C1
LOCK - 2005242C1
PLUG - 453133C1

CAV	CIR	GAUGE	COLOR	TERM
1	PLUG	-	-	-
2	M11-GPN	16	WH	1680205C1
3	M5P(+)	20	YL	1651969C1
4	M5P(-)	20	GN	1651969C1
5	M5P(S)	20	NONE	1651969C1
6	M14X	16	RD	1680205C1

DASH HARNESS

CONNECTOR - 2005241C1
LOCK - 2005243C1
PLUG - 453133C1

CAV	CIR	GAUGE	COLOR	TERM
1	PLUG	-	-	-
2	J11-GPN	16	WH	1680206C1
3	J5P(+)	20	YL	1651968C1
4	J5P(-)	20	GN	1651968C1
5	J5P(S)	20	NONE	1651968C1
6	J14X	16	RD	1680206C1

BODY BUILDER LIGHTING (4450)

(LOCATED IN ENGINE COMPARTMENT NEAR LEFT FRAME RAIL)

DASH HARNESS

CAV	CIR	GAUGE	COLOR	TERM	SEAL
A	J68BB	14	BN	3535486C1	0589391C1
B	J56BB	16	OR	2039343C1	1652325C1
C	J57BB	16	OR	2039343C1	1652325C1
D	J58BB	14	BN	3535486C1	0589391C1
E	J71BB	16	OR	2039343C1	1652325C1
F	J12BB	14	LT BL	3535486C1	0589391C1
G	J11-GBB	12	WH	2039344C1	0589390C1

CONNECTOR - 2039311C1
LOCK - 2039342C1
PLUG - 587579C1

CENTER CHASSIS HARNESS

CAV	CIR	GAUGE	COLOR	TERM	SEAL
A	N68BB	14	BN	2033912C1	0589391C1
B	N56BB	16	OR	2033911C1	1652325C1
C	N57BB	16	OR	2033911C1	1652325C1
D	N58BB	14	BN	2033912C1	0589391C1
E	N71BB	16	OR	2033911C1	1652325C1
F	N12BB	14	LT BL	2033912C1	0589391C1
G	N11-GBB	12	WH	1687848C1	0589390C1

CONNECTOR - 2039312C1
LOCK - 2039342C1
PLUG - 587579C1

BODY BUILDER LIGHTING (4450A)

(LOCATED BACK OF CAB NEAR LEFT FRAME RAIL)

CENTER CHASSIS HARNESS

CAV	CIR	GAUGE	COLOR	TERM	SEAL
A	N68BB	14	BN	3535486C1	0589391C1
B	N56BB	16	OR	2039343C1	1652325C1
C	N57BB	16	OR	2039343C1	1652325C1
D	N58BB	14	BN	3535486C1	0589391C1
E	N71BB	16	OR	2039343C1	1652325C1
F	N12BB	14	LT BL	3535486C1	0589391C1
G	N11-GBB	12	WH	2039344C1	0589390C1

CONNECTOR - 2039311C1
LOCK - 2039342C1
PLUG - 587579C1

BODY BUILDER TURN/STOP (4460A)

(LOCATED BACK OF CAB NEAR LEFT FRAME RAIL)

CENTER CHASSIS HARNESS

CAV	CIR	GAUGE	COLOR	TERM	SEAL
A	N56BC	16	OR	2033819C1	1652325C1
B	N57BC	16	OR	2033819C1	1652325C1
C	N70BB	14	OR	2033816C1	0589391C1

CONNECTOR - 1686834C1
LOCK - 1664408C1
PLUG - 0587579C1

BODY BUILDER TURN/STOP (4460)

(LOCATED IN ENGINE COMPARTMENT NEAR LEFT FRAME RAIL)

DASH HARNESS

CAV	CIR	GAUGE	COLOR	TERM	SEAL
A	J56BC	16	OR	2033819C1	1652325C1
B	J57BC	16	OR	2033819C1	1652325C1
C	J70BB	14	OR	2033816C1	0589391C1

CONNECTOR - 1686834C1
LOCK - 1664408C1
PLUG - 0587579C1

CENTER CHASSIS HARNESS

CAV	CIR	GAUGE	COLOR	TERM	SEAL
A	N56BC	16	OR	2033911C1	1652325C1
B	N57BC	16	OR	2033911C1	1652325C1
C	N70BB	14	OR	2033912C1	0589391C1

CONNECTOR - 3553961C1
LOCK - 3554019C1
PLUG - 587579C1

CHK	DATE	CHANGE	REV	REFERENCE	DRAWN	NAME
PEC	15JAN02	ADDED 4411A-4415	C	55043Z	U00DAG9	42/43/44/85/8600 & 73/74/7500 CIRC DIAGRAMS
					RELEASE NO. P52778H	DATE 31MAY00 · PART NO. AE08-52376 · SHEET 33

Figure 177 Connector Composites (4411A), (4411B), (4412), (4415), (4450), (4450A), (4460A), (4460)

13.34. CONNECTOR COMPOSITE (4705), P. 34

INTERNATIONAL TRUCK AND ENGINE CORPORATION

THIS PRINT IS PROVIDED ON A RESTRICTED BASIS AND IS NOT TO BE USED IN ANY WAY DETRIMENTAL TO THE INTEREST OF INTERNATIONAL TRUCK AND ENGINE CORPORATION.

ELECTRICAL CIRCUIT DIAGRAM CHAPTER 12

CONNECTOR COMPOSITES - MATING VIEW SHOWN

TRANSMISSION/DASH (4705)

(LOCATED IN ENGINE COMPARTMENT BY WIPER MOTOR BRACKET)

DASH HARNESS

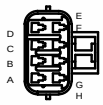

CONNECTOR - 3525872C1
LOCK - 3525873C1
PLUG - 2025431C1

W/MANUAL XMSN

CAV	CIR	GAUGE	COLOR	TERM	SEAL
A	J71AA	18	OR	1661875C1	1661872C1
B	J71	18	OR	1661875C1	1661872C1
C	J93	18	TN	1661875C1	1661872C1
D	PLUG	-	-	-	-
E	J31	18	TN	1661875C1	1661872C1
F	J17J	18	PK	1661875C1	1661872C1
G	J9Y	18	GY	1661875C1	1661872C1
H	PLUG	-	-	-	-

W/ALLISON LCT XMSN

CAV	CIR	GAUGE	COLOR	TERM	SEAL
A	PLUG	-	-		
B	J92#128	18	TN	1661875C1	1661872C1
C	J92#110	18	TN	1661875C1	1661872C1
D	J71	18	OR	1661875C1	1661872C1
E	PLUG	-	-	-	-
F	PLUG	-	-	-	-
G	J13M	18	PK	1661875C1	1661872C1
H	J71AA	18	OR	1661875C1	1661872C1

XMSN HARNESS

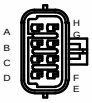

CONNECTOR - 3525874C1
LOCK - 3525875C1
PLUG - 2025431C1

W/MANUAL XMSN

CAV	CIR	GAUGE	COLOR	TERM	SEAL
A	L71C	16	OR	1667742C1	1661872C1
B	L71B	16	OR	1667742C1	1661872C1
C	L93	18	TN	1667742C1	1661872C1
D	PLUG	-	-	-	-
E	L31B	18	TN	1667742C1	1661872C1
F	L17D	18	PK	1667742C1	1661872C1
G	L31GC	18	WH	1667742C1	1661872C1
H	PLUG	-	-	-	-

W/ALLISON LCT XMSN

CAV	CIR	GAUGE	COLOR	TERM	SEAL
A	PLUG	-	-	-	-
B	L92B128	18	TN	1667742C1	1661872C1
C	L92#110	18	TN	1667742C1	1661872C1
D	L71	16	OR	1667742C1	1661872C1
E	PLUG	-	-	-	-
F	PLUG	-	-	-	-
G	L13M4	18	PK	1667742C1	1661872C1
H	L71A	16	OR	1667742C1	1661872C1

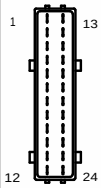

CONNECTOR - 3558022C1
SEAL - 3559074C1
LOCK - 3558056C1
PLUG - 3532129C1

W/EATON AUTOSHIFT XMSN

CAV	CIR	GAUGE	COLOR	TERM	SEAL
1	PLUG	-	-	-	-
2	PLUG	-	-	-	-
3	J92Z	16	TN	3559037C1	3509903C1
4	J92AE	16	TN	3559037C1	3509903C1
5	J92AD	16	TN	3559037C1	3509903C1
6	J92AC	16	TN	3559037C1	3509903C1
7	J31E	18	TN	3559036C1	3532128C1
8	J31GE	18	TN	3559036C2	3509903C1
9	-	-	-	-	-
10	-	-	-	-	-
11	-	-	-	-	-
12	J11-GAM	12	WH	3559037C1	3509903C1
13	J14AW	12	RD	3559037C1	3509903C1
14	PLUG	-	-	-	-
15	PLUG	-	-	-	-
16	PLUG	-	-	-	-
17	J71	18	LT BL	3559036C1	3532128C1
18	J71A	18	PK	3559036C1	3532128C1
19	J17C	18	PK	3559036C1	3532128C1
20	J92AB	16	TN	3559037C1	3509903C1
21	J92AA	16	TN	3559037C1	3509903C1
22	PLUG	-	-	-	-
23	PLUG	-	-	-	-
24	PLUG	-	-	-	-

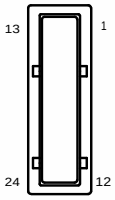

CONNECTOR - 3558026C1
LOCK - 3558022C1
PLUG - 3532129C1

W/EATON AUTOSHIFT XMSN

CAV	CIR	GAUGE	COLOR	TERM	SEAL
1	PLUG	-	-	-	-
2	PLUG	-	-	-	-
3	L92Z	16	TN	3559035C1	3509903C1
4	L92AE	16	TN	3559035C1	3509903C1
5	L92AD	16	TN	3559035C1	3509903C1
6	L92AC	16	TN	3559035C1	3509903C1
7	L31E	18	TN	3509874C1	3509903C1
8	L31GE	18	TN	3509874C1	3509903C1
9	-	-	-	-	-
10	-	-	-	-	-
11	-	-	-	-	-
12	L11-GAM	12	WH	3559035C1	3509903C1
13	L14AW	12	RD	3559035C1	3509903C1
14	PLUG	-	-	-	-
15	PLUG	-	-	-	-
16	PLUG	-	-	-	-
17	L71	18	OR	3559035C1	3509903C1
18	L71A	18	OR	3559035C1	3509903C1
19	L17C	18	PK	3509874C1	3509903C1
20	L92AB	16	TN	3559035C1	3509903C1
21	L92AA	16	TN	3559035C1	3509903C1
22	PLUG	-	-	-	-
23	PLUG	-	-	-	-
24	PLUG	-	-	-	-

DASH HARNESS — W/ALLISON WTEC XMSN

CAV	CIR	GAUGE	COLOR	TERM	SEAL	NOTES
1	J92#170	18	TN	3559036C1	3509903C1	
2	J92#171	18	TN	3559036C1	3509903C1	
3	J92#172	18	TN	3559036C1	3509903C1	
4	J92#173	18	TN	3559036C1	3509903C1	
5	J92#174	18	TN	3559036C1	3509903C1	
6	J92A114	18	TN	3559036C1	3509903C1	W/AUTO NEUTRAL
7	J92#175	18	TN	3559036C1	3509903C1	
8	J92#124	18	TN	3559036C1	3509903C1	
9	J92#180	18	TN	3559036C1	3509903C1	
10	J17B	18	PK	3559036C1	3509903C1	W/AUTO NEUTRAL
11	J92DI	18	TN	3559036C1	3509903C1	W/AUTO NEUTRAL
12	J92#146	18	TN	3559036C1	3509903C1	
13	J71#113	18	OR	3559036C1	3509903C1	
14	J92C123	18	TN	3559036C1	3509903C1	
15	J3+142	18	DK BL	3559036C1	3509903C1	
16	J3-151	18	GY	3559036C1	3509903C1	
17	J92#125	18	TN	3559036C1	3509903C2	
18	J92D136	18	TN	3559036C1	3509903C1	
19	J92D143	18	TN	3559036C1	3509903C1	
20	J92#163	16	TN	3559037C1	3509903C1	
21	J92D161	16	TN	3559037C1	3509903C1	
22	J92C124	18	TN	3559036C1	3509903C2	
23	J92#135	18	TN	3559036C1	3509903C2	
24	J92#164	18	TN	3559036C1	3509903C2	

XMSN HARNESS — W/ALLISON WTEC XMSN

CAV	CIR	GAUGE	COLOR	TERM	SEAL	NOTES
1	L92#170	18	TN	3509874C1	3532128C1	
2	L92#171	18	TN	3509874C1	3532128C1	
3	L92#172	18	TN	3509874C1	3532128C1	
4	L92#173	18	TN	3509874C1	3532128C1	
5	L92#174	18	TN	3509874C1	3532128C1	
6	L92A114	18	TN	3509874C1	3532128C1	
7	L92#175	18	TN	3509874C1	3532128C1	
8	L92#124	18	TN	3509874C1	3532128C1	
9	L92#180	18	TN	3509874C1	3532128C1	
10	L17B	18	PK	3509874C1	3532128C1	
11	L92DI	18	TN	3509874C1	3532128C1	
12	L92#146	18	TN	3509874C1	3532128C1	
13	L71#113	18	OR	3509874C1	3532128C1	
14	L92A123	18	TN	3509874C1	3532128C1	W/AUTO NEUTRAL
14	L93C123	18	TN	3509874C1	3532128C1	N/AUTO NEUTRAL
15	L3+142	18	WH	3509874C1	3532128C1	
16	L3-151	18	DK BL	3509874C1	3532128C1	
17	L92#125	18	TN	3509874C1	3532128C1	
18	L92D136	18	TN	3509874C1	3532128C1	
19	L92D143	18	TN	3509874C1	3532128C1	
20	L92#163	16	TN	3509874C1	3532128C1	
21	L92D161	16	TN	3509874C1	3532128C1	
22	L92C124	18	TN	3509874C1	3532128C1	
23	L92#135	18	TN	3509874C1	3532128C1	
24	L92#164	18	TN	3509874C1	3532128C1	

CHK	DATE	CHANGE	REV	REFERENCE	DRAWN	NAME
DEC	25JUN01	ADDED 4705.	B	P54634F	U00DAG9	42/43/44/85/8600 & 73/74/7500 CIRC DIAGRAMS
		ADDED MISC. CIRC.	C	56507K	RELEASE NO. P52778H	DATE 31MAY00 / PART NO. AE08-52376 / SHEET 34

Figure 178 Connector Composite (4705)

13.35. CONNECTOR COMPOSITES (4810), (4712F), (4820), (4713F), (4830), (4840), (4850), P. 35

INTERNATIONAL TRUCK AND ENGINE CORPORATION

THIS PRINT IS PROVIDED ON A RESTRICTED BASIS AND IS NOT TO BE USED IN ANY WAY DETRIMENTAL TO THE INTEREST OF INTERNATIONAL TRUCK AND ENGINE CORPORATION.

ELECTRICAL CIRCUIT DIAGRAM CHAPTER 12

CONNECTOR COMPOSITES - MATING VIEW SHOWN

BACKUP LIGHT TURN SIGNAL SPLICE (4810)

(LOCATED NEAR POWER DISTRIBUTION CENTER)

CONNECTOR - 3543733C1
LOCK - 3543732C1
PLUG - 3535425C1
BUS BAR - 3543736C1

CAV	CIR	GAUGE	COLOR	TERM	SEAL	NOTES
	RIGHT	TURN	BUS	BAR		
A	J57AA	16	OR	3535303C1	3535424C1	
B	J57A	16	OR	3535303C1	3535424C1	
C	J57H	16	OR	3535303C1	3535424C1	
D	J57BC	16	OR	3535303C1	3535424C1	
	LEFT	TURN	BUS	BAR		
E	J56AA	16	OR	3535303C1	3535424C1	
F	J56A	16	OR	3535303C1	3535424C1	
G	J56H	16	OR	3535303C1	3535424C1	
H	J56BC	16	OR	3535303C1	3535424C1	
	BACK	UP	LIGHT	BUS	BAR	
J	J71A	18	OR	3535303C1	3535424C1	
K	J71BB	16	OR	3535303C1	3535424C1	
L	J71AA	18	OR	3535303C1	3535424C1	W/MANUAL XMSN
L	J71AA	18	OR	3535303C1	3535424C1	W/ALLISON LCT
L	J71B	18	OR	3535303C1	3535424C1	W/ALLISON WTEC
L	J71A	18	PK	3535303C1	3535424C1	W/EATON AUTOSHIFT
M	PLUG	-	-	-	-	

TRANS/DASH (4712F)

CONNECTOR - 3525874C1
LOCK - 3525875C1
PLUG - 2025431C1

CAV	CIR	GAUGE	COLOR	TERM	SEAL
A	K71C	16	OR	1667742C1	1661872C1
A #	K71E	16	OR	1667742C1	1661872C1
B	K71B	16	OR	1667742C1	1661872C1
B #	K71D	16	OR	1667742C1	1661872C1
B &	K92#128	18	TN	1667742C1	3568570C1
B &	K92B128	18	TN	1667742C1	3568570C1
C	K93	18	TN	1667742C1	1661872C1
C &	K92#110	18	TN	1667742C1	3568570C1
D	K13A	16	PK	1667742C1	1661872C1
D &	K71	16	OR	1667742C1	1661872C1
E #	K31B	18	TN	1667742C1	1661872C1
E #	K31E	16	TN	1667742C1	1661872C1
F #	K17D	18	PK	1667742C1	3568570C1
F #	K17E	18	PK	1667742C1	3568570C1
G	K93-G	18	TN	1667742C1	1661872C1
G #	K31-GC	18	WH	1667742C1	1661872C1
G #	K31-GE	16	TN	1667742C1	1661872C1
G &	K13M4	18	PK	1667742C1	1661872C1
H #	K11-G	16	WH	1667742C1	1661872C1
H &	K71A	16	OR	1667742C1	1661872C1

DASH/TRANS (4713F)

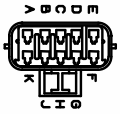

CONNECTOR - 3538635C1
LOCK - 3538636C1
PLUG - 2025431C1

CAV	CIR	GAUGE	COLOR	TERM	SEAL
A	K13AA	16	PK	1661875C1	1661872C1
B	K11-GB	16	WH	1661875C1	1661872C1
C	K11-GC	16	WH	1661875C1	1661872C1
D	K14AA	16	RD	1661875C1	1661872C1
E	K3AA	16	DKBL	1661875C1	1661872C1
F	K3AB	16	GY	1661875C1	1661872C1
G	K71D	16	OR	1661875C1	1661872C1
H	K71E	16	OR	1661875C1	1661872C1
J	K31D	16	TN	1661875C1	1661872C1
K	K31-GD	16	TN	1661875C1	1661872C1

J1708 & 5 VOLT REF SPLICE (4820)

(LOCATED NEAR WIPER MOTOR BRACKET)

CONNECTOR - 3543733C1
LOCK - 3543732C1
PLUG - 3535425C1
BUS BAR - 3543736C1

CAV	CIR	GAUGE	COLOR	TERM	SEAL	NOTES
	5 VOLT	REF	BUS	BAR		
A	J68A	18	GY	3535303C1	3535424C1	
B	J8A	18	GY	3535303C1	3535424C1	
C	J8E	18	LT GN	3535303C1	3535424C1	
D	PLUG	-	-	-	-	
	DATA	LINK	J1708	POSITIVE	BUS BAR	
E	J3A(+)	18	DK BL	3535303C1	3535424C1	
F	J3B(+)	18	DK BL	3535303C1	3535424C1	
G	J3D(+)	18	DK BL	3535303C1	3535424C1	BNDX AIR ABS
G	J94AC(+)	18	DK BL	3535303C1	3535424C1	WABCO AIR ABS
G	J3C(+)	18	DK BL	3535303C1	3535424C1	W/HYD ABS
H	J3+142	18	DK BL	3535303C1	3535424C1	
	DATA	LINK	J1708	NEGATIVE	BUS BAR	
J	J3A(-)	18	GY	3535303C1	3535424C1	
K	J3B(-)	18	GY	3535303C1	3535424C1	
L	J3D(-)	18	GY	3535303C1	3535424C1	BNDX AIR ABS
L	J94AC(-)	18	GY	3535303C1	3535424C1	WABCO AIR ABS
L	J3C(-)	18	GY	3535303C1	3535424C1	W/HYD ABS
M	J3-151	18	GY	3535303C1	3535424C1	

ELECTRONIC REF GROUND SPLICE (4830)

(LOCATED NEAR POWER DISTRIBUTION CENTER)

CONNECTOR - 3543730C1
LOCK - 3543732C1

PLUG - 3535425C1
BUS BAR - 3543735C1

CAV	CIR	GAUGE	COLOR	TERM	SEAL
A	J9G	18	GY	3535303C1	3535424C1
B	J9A	18	GY	3535303C1	3535424C1
C	PLUG	-	-	-	-
D	J9EA	18	GY	3535303C1	3535424C1
E	PLUG	-	-	-	-
F	PLUG	-	-	-	-
G	J9J	20	GY	3535302C1	3535424C1
H	J9K	20	GY	3535302C1	3535424C1
J	J9Y	20	GY	3535302C1	3535424C1
K	PLUG	-	-	-	-
L	J9X	18	GY	3535303C1	3535424C1
M	J87H	18	GY	3535303C1	3535424C1

RELAY COIL IGNITION SPLICE (4840)

(LOCATED INSIDE POWER DISTRIBUTION CENTER)

CAV	CIR	GAUGE	COLOR	TERM
A	J13X	18	PK	1661208C1
B	J94HE	18	GY	1661208C1
C	J13AS	18	PK	1661208C1
E	J13AV	18	PK	1661208C1

CONNECTOR - 2006789C1
LOCK - 2006792C1
COVER - 2006790C1
BUS BAR - 2006791C1

COMBINATION TURN STOP (4850)

(LOCATED NEAR POWER DISTRIBUTION CENTER)

CONNECTOR - 3543733C1
LOCK - 3543732C1
PLUG - 3535425C1
BUS BAR - 3543736C1

CAV	CIR	GAUGE	COLOR	TERM	SEAL
	RIGHT	TURN	STOP	BUS	BAR
A	J57J	16	OR	3535303C1	3535424C1
B	J57B	16	OR	3535303C1	3535424C1
C	J57K	16	OR	3535303C1	3535424C1
D	J57BB	16	OR	3535303C1	3535424C1
	LEFT	TURN	STOP	BUS	BAR
E	J56J	16	OR	3535303C1	3535424C1
F	J56B	16	OR	3535303C1	3535424C1
G	J56K	16	OR	3535303C1	3535424C1
H	J56BB	16	OR	3535303C1	3535424C1
	UNUSED	BUS	BAR		
J	PLUG	-	-	-	-
K	PLUG	-	-	-	-
L	PLUG	-	-	-	-
M	PLUG	-	-	-	-

CHK	DATE	CHANGE	REV	REFERENCE	DRAWN	NAME
CNA	11SEP03	ADDED 4712F	E	58774T	U00EDL2	42/43/44/85/8600 & 73/74/7500 CIRC DIAGRAMS
		AND 4713. MOVED 4900.			RELEASE NO. P52778H	DATE 31MAY00
					PART NO. AE08-52376	SHEET 35

Figure 179 Connector Composites (4810), (4712F), (4820), (4713F), (4830), (4840), (4850)

13.36. CONNECTOR COMPOSITES (4900), (4910), (4950), (4951), P. 36

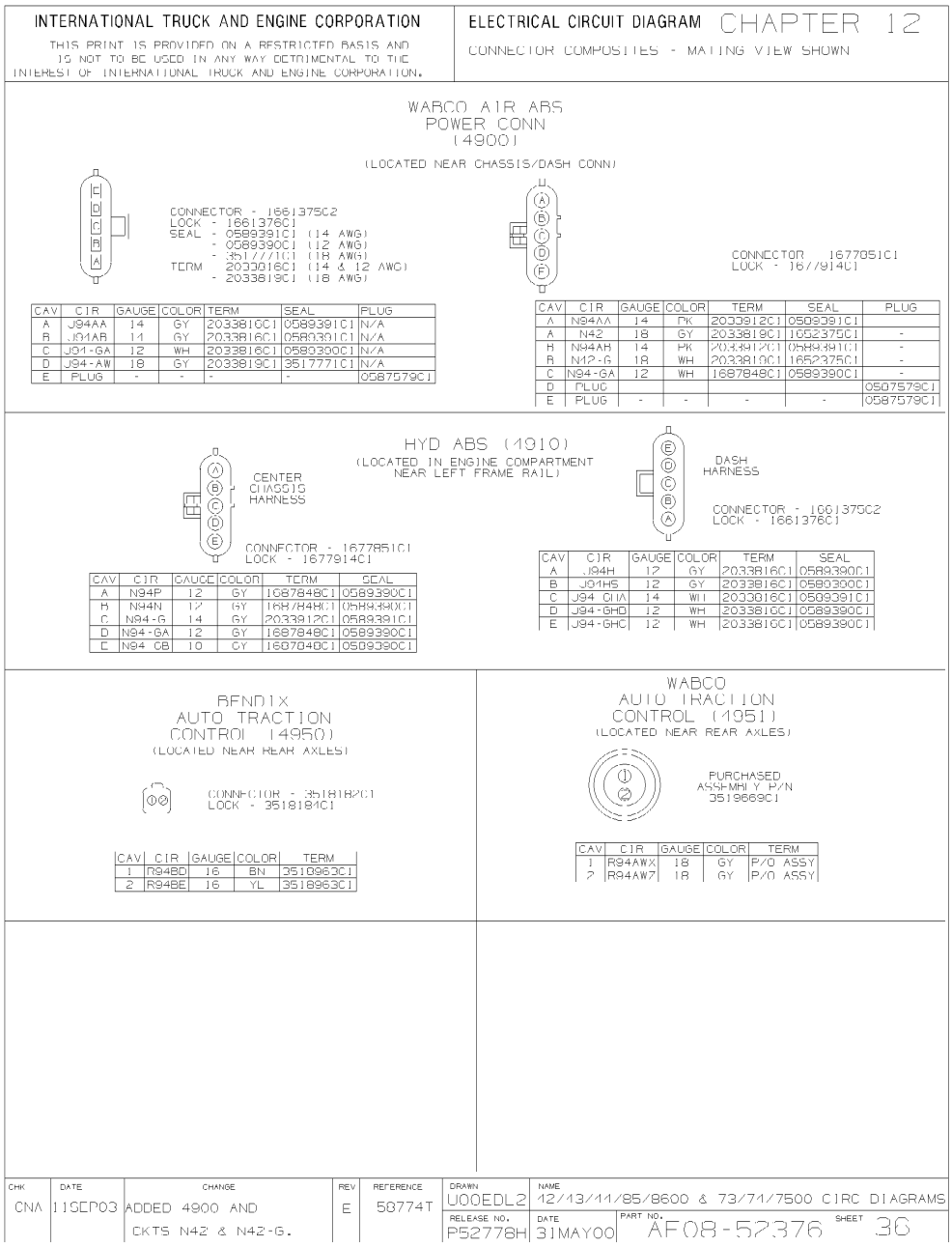

Figure 180 Connector Composites (4900), (4910), (4950), (4951)

13.37. CONNECTOR COMPOSITES (6007), (6011), P. 37

INTERNATIONAL TRUCK AND ENGINE CORPORATION

THIS PRINT IS PROVIDED ON A RESTRICTED BASIS AND IS NOT TO BE USED IN ANY WAY DETRIMENTAL TO THE INTEREST OF INTERNATIONAL TRUCK AND ENGINE CORPORATION.

ELECTRICAL CIRCUIT DIAGRAM CHAPTER 12

CONNECTOR COMPOSITES - MATING VIEW SHOWN

CLC (6007)
(LOCATED ON ENGINE ECM)

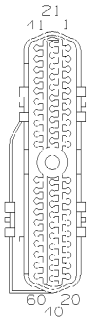

CONNECTOR - 3549197C1
LOCK - 2041418C1
PLUG - 2041421C2
COVER - 3541958C01

CAV	CIR	GAUGE	COLOR	TERM	CAV	CIR	GAUGE	COLOR	TERM	NOTES
1	K97V	14	VT	2041420C1	31	K46A	18	GY	2041419C1	
2	K97P	14	VT	2041420C1	32	K46B	18	GY	2041419C1	
3	K97C	18	VT	2041419C1	33	PLUG	-	-	-	
4	K97HE	18	VT	2041419C1	34	PLUG	-	-	-	
5	K97DD	18	VT	2041419C1	35	PLUG	-	-	-	
6	K97HM	18	VT	2041419C1	36	K97CC	18	VT	2041419C1	
7	K97WA	18	VT	2041419C1	37	K97CB	18	VT	2041419C1	
8	K99T	18	VT	2041419C1	38	PLUG	-	-	-	
9	K97XC	18	VT	2041419C1	39	K47	18	GY	2041419C1	
10	K34A	18	TN	2041419C1	40	K47A	18	GY	2041419C1	
11	K97D	18	VT	2041419C1	41	K97L	14	PL	2041420C1	
12	K97E	16	VT	2041420C1	42	K97Y	14	VT	2041420C1	
13	K97EA	18	VT	2041419C1	43	PLUG	-	-	-	
14	PLUG				44	PLUG				
15	PLUG	-	-	-	45	PLUG	-	-	-	
16	K3A(+)	18	DK BL	2041419C1	46	K17M	18	WH	2041419C1	
17	K3B(-)	18	GY	2041419C1	46	K17L	18	PK	2041419C1	
18	PLUG	-	-	-	47	K21A	18	GY	2041419C1	N/OVERCRANK PROT
19	K5B(+)	18	YL	2041419C1	48	PLUG				W/OVERCRANK PROT
20	K5D(-)	18	GN	2041419C1	49	K97HG	18	VT	2041419C1	
21	K97F	14	PL	2041420C1	50	PLUG	-	-	-	
22	K97Z	14	PL	2041420C1	51	PLUG	-	-	-	
23	K97N	14	VT	2041420C1	52	PLUG	-	-	-	
24	K97M	16	VT	2041420C1	53	PLUG				
25	K97J	16	VT	2041420C1	54	K97WL	18	VT	2041419C1	
26	K17R	18	VT	2041419C1	55	K97FW	18	VT	2041419C1	
27	K99S	18	VT	2041419C1	56	PLUG	-	-	-	
28	PLUG				57	PLUG				
29	K97K	18	VT	2041419C1	58	K47B	18	GY	2041419C1	
30	K99F	18	VT	2041419C1	59	K97AR	18	VT	2041419C1	
					60	PLUG	-	-	-	

THIS SPACE LEFT INTENTIONALLY BLANK

ENGINE IDM2 (6011)
(LOCATED NEAR ENGINE IDM)

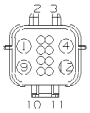

CAV	CIR	GAUGE	COLOR	TERM
1	K97 GA	12	WH	3549415C1
2	K3C(+)	18	DK BL	3549410C1
3	K3C(-)	18	GY	3549418C1
4	K97-GB	12	WH	3549415C1
5	K97S	16	VT	3549417C1
6	K97LC	16	VT	3549417C1
7	PLUG			
8	K97LA	16	VT	3549417C1
9	K97M	16	VT	3549416C1
10	K97AZ	16	VT	3549418C1
11	PLUG			
12	K97Y	12	VT	3549415C1

CONNECTOR 3549412C1

THIS SPACE LEFT INTENTIONALLY BLANK

CHK	DATE	CHANGE	REV	REFERENCE	DRAWN	NAME
CNA	11SEP03	MULTIPLE CHANGES.	C	58774T	U00EDL2	42/43/44/85/8600 & 73/74/7500 CIRC DIAGRAMS
					RELEASE NO. P52778H	DATE 31MAY00 / PART NO. AF08-52376 / SHEET 37

Figure 181 Connector Composites (6007), (6011)

13.38. CONNECTOR COMPOSITES (6013M), (6014), P. 38

INTERNATIONAL TRUCK AND ENGINE CORPORATION

THIS PRINT IS PROVIDED ON A RESTRICTED BASIS AND IS NOT TO BE USED IN ANY WAY DETRIMENTAL TO THE INTEREST OF INTERNATIONAL TRUCK AND ENGINE CORPORATION.

ELECTRICAL CIRCUIT DIAGRAM CHAPTER 12

CONNECTOR COMPOSITES - MATING VIEW SHOWN

ECM CONN (6013M)

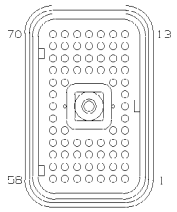

CONNECTOR - 3526965C1
PLUG - 2023143C1

CAV	CIR	GAUGE	COLOR	TERM	CAV	CIR	GAUGE	COLOR	TERM
1	PLUG				36	PLUG			
2	K31B	16	TN	3526966C1	37	PLUG			
3	PLUG				38	PLUG			
4	K97P	18	VT	3526966C1	39	PLUG			
5	K97YA	18	VT	3526966C1	40	PLUG			
6	PLUG				41	PLUG			
7	PLUG				42	PLUG			
8	K3A(+)	18	DK BL	3526966C1	43	PLUG			
9	K3B(-)	18	GY	3526966C1	44	PLUG			
10	PLUG				45	PLUG			
11	K23N	16	TN	3526966C1	46	PLUG			
12	PLUG				47	PLUG			
13	PLUG				48	PLUG			
14	PLUG				49	K34C	16	TN	3526966C1
15	PLUG				50	K5V	20	YL	3547816C1
16	PLUG				51	PLUG			
17	PLUG				52	K97AS	14	VT	3526966C1
18	PLUG				53	K97AT	14	VT	3526966C1
19	PLUG				54	K31D	16	TN	3526966C1
20	PLUG				55	PLUG			
21	PLUG				56	PLUG			
22	PLUG				57	PLUG			
23	PLUG				58	PLUG			
24	PLUG				59	PLUG			
25	PLUG				60	PLUG			
26	PLUG				61	PLUG			
27	PLUG				62	PLUG			
28	PLUG				63	PLUG			
29	PLUG				64	PLUG			
30	PLUG				65	K97-GD	14	WH	3526966C1
31	PLUG				66	K99V	18	VT	3526966C1
32	K47A	16	GY	3526966C1	67	K97-GE	14	WH	3526966C1
33	K47A	16	GY	3526966C1	68	PLUG			
34	K5W	20	GN	3547816C1	69	PLUG			
35	PLUG				70	K97U	18	VT	3526966C1

ENGINE CONTROLLER (6014)

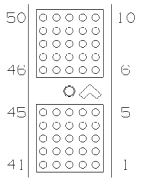

CONNECTOR - 3555048C1
PLUG - 3527278C1
TERMINAL - 3518963C1

CAV	CIRCUIT	GAUGE	COLOR	CAV	CIRCUIT	GAUGE	COLOR
1	K99U	18	VT	26	PLUG		
2	PLUG			27	K47	16	GY
3	PLUG			28	K31E	16	TN
4	PLUG			29	PLUG		
5	PLUG			30	PLUG		
6	PLUG			31	PLUG		
7	PLUG			32	K34-GD	16	WH
8	PLUG			33	PLUG		
9	K99V	18	VT	34	K97Q	18	VT
10	K3A(+)	18	DKBL	35	PLUG		
11	K99W	18	VT	36	K47A	16	GY
12	PLUG			37	PLUG		
13	PLUG			38	K23N	16	TN
14	PLUG			39	K97U1	18	VT
15	PLUG			40	PLUG		
16	PLUG			41	PLUG		
17	PLUG			42	PLUG		
18	PLUG			43	PLUG		
19	PLUG			44	PLUG		
20	K3B(-)	18	GY	45	PLUG		
21	PLUG			46	K5V	18	YL
22	K97D	18	VT	47	K5W	18	GN
23	K97Y	18	VT	48	PLUG		
24	PLUG			49	PLUG		
25	PLUG			50	PLUG		

CHK	DATE	CHANGE	REV	REFERENCE	DRAWN	NAME
CNA	11SEP03	REMOVED CIRCUIT K97AD.	E	58774T	U00EDL2	42/43/44/85/8600 & 73/74/7500 CIRC DIAGRAMS
					RELEASE NO. P52778H	DATE 31MAY00
					PART NO. AF08-52376	SHEET 38

Figure 182 Connector Composites (6013M), (6014)

13.39. CONNECTOR COMPOSITES (6015), (6020), (6021), P. 39

INTERNATIONAL TRUCK AND ENGINE CORPORATION

THIS PRINT IS PROVIDED ON A RESTRICTED BASIS AND IS NOT TO BE USED IN ANY WAY DETRIMENTAL TO THE INTEREST OF INTERNATIONAL TRUCK AND ENGINE CORPORATION.

ELECTRICAL CIRCUIT DIAGRAM CHAPTER 12

CONNECTOR COMPOSITES - MATING VIEW SHOWN

ECM POWER
(6015)

CONNECTOR - 3557533C1
WEDGE 3557539C1
TERMINAL - 3557534C1

CAV	CIR	GAUGE	COLOR	NOTES
1	K10-GV	12	WH	
2	K97U2	12	VT	N/2004 ISM ENGINES
2	PLUG			
3	PLUG			
4	K97AM	12	VT	

ECM2
(6020)

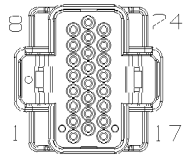

CONNECTOR
3562311C1

CAV	CIR	GA.	COLOR	TERM
1				
2				
3	K97C	18	VT	3562314C1
4	K34A	18	TN	3562314C1
5	K97J	18	VI	3562314C1
6	K97-GV	16	WH	3562315C1
7	K97-GW	16	WH	3562315C1
8	K97AD	18	VT	3562314C1
8	K17D	18	PK	3562314C1
8	K17F	18	PK	3562314C1
8	K92#123	18	TN	3562314C1
8	K17B	18	PK	3562314C1
9				
10				
11	K97AR	18	VI	3562314C1
12	K5B(+)	20	YI	3562314C1
12	K5V	18	YL	3562314C1
13	K5B(-)	20	GN	3562314C1
13	K5W	18	GN	3562314C1
14	K46A	18	GY	3562314C1
15				
16				
17	K47D	18	GY	3562314C1
18				
19	K97CU	18	VI	3562314C1
20	K97CC	18	VT	3562314C1
21	K46D	18	GY	3562314C1
22				
23	K17M	18	PK	3562314C1
23	K17I	18	PK	3562314C1
24	K97K	18	VI	3562314C1

SEALING PLUG
3562316C1

COVER
3562313C1

ECM2
(6021)

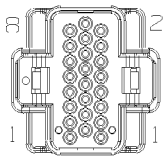

CONNECTOR
3562312C1

CAV	CIR	GA.	COLOR	TERM
1	K97F	16	VT	3562315C1
2	K97Z	16	VI	3562315C1
3				
4	K97	10	VT	3562315C1
5				
6				
7				
8				
9	K47A	10	GY	3562314C1
10	K47	18	GY	3562314C1
10	K47A126	18	GY	3562314C1
10	K47#126	18	GY	3562314C1
10	K47A157	18	GY	3562314C1
11				
12	K99S	18	VI	3562314C1
13				
14	K23A	18	TN	3562314C1
14	K97B	18	VT	3562314C1
15				
16				
17				
18	K99I	18	VI	3562314C1
19				
20	K3B(+)	10	DKBL	3562314C1
20	KA3D(-)	18	DKBL	3562314C1
21	K3B(-)	18	GY	3562314C1
21	KA3D(-)	18	GY	3562314C1
22				
23				
24	K97D	18	VT	3562314C1

CHK	DATE	CHANGE	REV	REFERENCE	DRAWN	NAME
CNA	17SEP03	REV 6015,ADDED CAV 2 & NOTE.	F	58689Z	U00EDL2	42/43/44/85/8600 & 73/74/7500 CIRC DIAGRAMS
					RELEASE NO. P52778H	DATE 31MAY00 / PART NO. AF08-52376 / SHEET 39

Figure 183 Connector Composites (6015), (6020), (6021)

13.40. CONNECTOR COMPOSITES (6200), (6316), (6323), (6332), (6333), (6334), (6400), (6401M), (6401), (6406), (6407), (6407D), (6409), (6500), P. 40

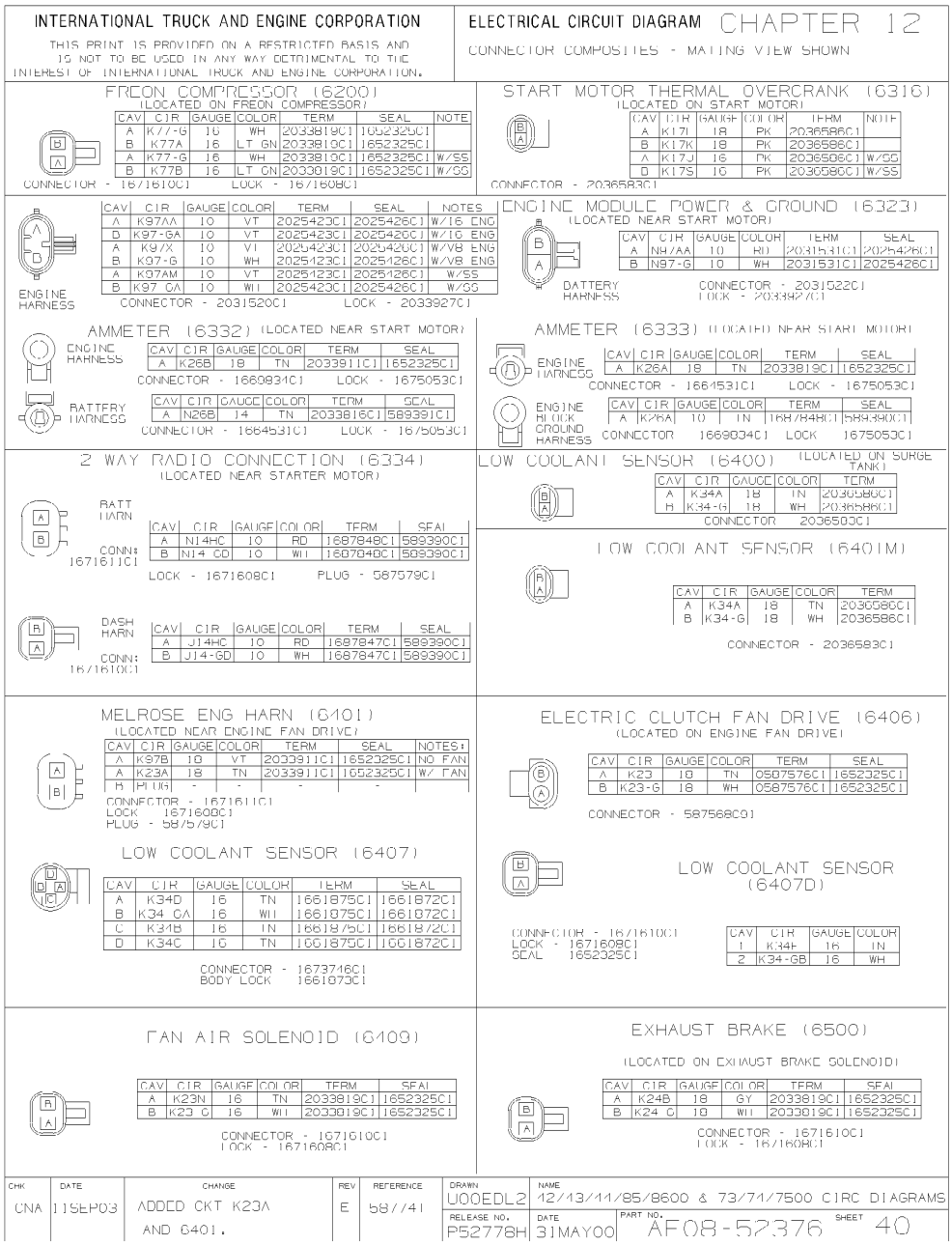

Figure 184 Connector Composites (6200), (6316), (6323), (6332), (6333), (6334), (6400), (6401M), (6401), (6406), (6407), (6407D), (6409), (6500)

13.41. CONNECTOR COMPOSITES (6550), (6703), (6704), (6708), (7103), (7104), (7104A), (7105), (7106), (7111), P. 41

INTERNATIONAL TRUCK AND ENGINE CORPORATION

THIS PRINT IS PROVIDED ON A RESTRICTED BASIS AND IS NOT TO BE USED IN ANY WAY DETRIMENTAL TO THE INTEREST OF INTERNATIONAL TRUCK AND ENGINE CORPORATION.

ELECTRICAL CIRCUIT DIAGRAM CHAPTER 12

CONNECTOR COMPOSITES - MATING VIEW SHOWN

ETHER START THERMOSTAT (6550)

(LOCATED NEAR ENGINE ECM)

CAV	CIR	GAUGE	COLOR	TERM	SEAL
A	K21B	10	TN	2033819C1	1652325C1
* A	K21I	16	TN	2033819C1	1652325C1
B	K21-G	18	WH	2033819C1	1652325C1
* B	K21-G	16	WH	2033819C1	1652325C1

*USED FOR SS 4GAUGE

CONNECTOR - 1671610C1
LOCK - 1671608C1
SEAL 1652325C1

AMBIENT AIR TEMP SENSOR (6703)

(LOCATED ON AIR FILTER HOUSING)

CAV	CIR	GAUGE	COLOR	TERM
A	K97E	16	VT	1689464C1
B	K97S	16	VT	1689464C1

CONNECTOR - 1689462C1
LOCK - 1684163C1

GROUND SPLICE (6704) (LOCATED NEAR ENGINE ECM)

CAV	CIR	GAUGE	COLOR	TERM	SEAL
1	K24-G	18	WH	3535303C1	3535424C1
2	K77-G	18	WH	3535303C1	3535424C1
3	K10-G	18	WH	3535303C1	3535424C1
4	K10 CA	18	WH	3535303C1	3535424C1
5	K34-G	18	WH	3535303C1	3535424C1
6	K21-G	18	WH	3535303C1	3535424C1

CONNECTOR: 3543729C1 LOCK: 3543731C1 BUS BAR: 3543734C1

GROUND SPLICE (6704)

CAV	CIR	GAUGE	COLOR	TERM	SEAL
A	PLUG				
B	K77-G	18	WH	2033819C1	1652325C1
C	K10 CB	14	WH	2033816C1	0589391C1
D	PLUG				
E	K34-G	18	WH	2033819C1	1652325C1
F	PLUG				

CONNECTOR: 3551896C1 LOCK: 3551897C1
PLUG: 0587579C1 BUS BAR: 3543734C1

FUEL FILTER (6708) (1-313 ONLY)

CAV	CIR	GAUGE	COLOR	TERM	SEAL
1	K19B	12	GY	3559035C1	3575783C1
2	K19-G	12	GY	3559035C1	3575783C1

CONNECTOR: 3578645C1 BODY LOCK: N/A

FUEL FILTER (6708) (V-8 ONLY)

CAV	CIR	GAUGE	COLOR	TERM	SEAL
1	K19A	16	GY	3561584C1	3536868C1
1	K19BB	16	GY	3561584C1	3536868C1
2	K19C	16	GY	3561584C1	3536868C1

CONNECTOR: 3562053C1 BODY LOCK: N/A

2 SPEED AXLE BOOT CONNECTOR (7103)

CAV	CIR	GAUGE	COLOR	TERM	SEAL
A	L93	10	TN	1661200C1	N/A
B	-	-	-	-	-
C	L93G	18	TN	1661208C1	N/A

CONNECTOR 1661190C1

CLEAN BATTERY FEED (7104)

CAV	CIR	GAUGE	COLOR	TERM	SEAL
A	N92A	10	RD	1687847C1	0589390C1
B	N92-G	10	WH	1687847C1	0589390C1

CONNECTOR - 1671610C1 LOCK - 1671608C1

WTEC W/16

CAV	CIR	GAUGE	COLOR	TERM	SEAL
A	L92#136	10	TN	1687848C1	0589390C1
B	L92#143	10	TN	1687848C1	0589390C1

LCT W/16

CAV	CIR	GAUGE	COLOR	TERM	SEAL
A	L92#103	18	TN	2033911C1	3517771C1
B	L92-G	18	TN	2033911C1	1652325C1

WTEC OR LCT W/V8

CAV	CIR	GAUGE	COLOR	TERM	SEAL
A	K92B	10	TN	1687848C1	0589390C1
B	K92-G	10	TN	1687848C1	0589390C1

CONNECTOR - 1671611C1 LOCK - 1671608C1

ENG/TRANS POWER & GND (7104A)

CAV	CIR	GAUGE	COLOR	TERM	SEAL
A	K92B	10	TN	1687847C1	0589390C1
B	K92-G	10	TN	1687847C1	0589390C1

CONNECTOR - 1671610C1 LOCK - 1671608C1

WTEC W/V8

CAV	CIR	GAUGE	COLOR	TERM	SEAL
A	L92#136	10	TN	1687848C1	0589390C1
B	L92#143	10	TN	1687848C1	0589390C1

LCT W/V8

CAV	CIR	GAUGE	COLOR	TERM	SEAL
A	L92#103	18	TN	2033911C1	3517771C1
B	L92-G	18	TN	2033911C1	1652325C1

CONNECTOR - 1671611C1 LOCK - 1671608C1

SHIFTER JUMPER (7105)

CAV	CIR	GAUGE	COLOR	TERM	SEAL
A	K92EA	16	TN	1661875C1	1661872C1
B	K92EC	16	TN	1661875C1	1661872C1
C	K92EB	16	TN	1661875C1	1661872C1

CONNECTOR - 1667741C1 LOCK - 1667771C1

MERITOR POWER (7111)

CAV	CIR	GAUGE	COLOR	TERM	SEAL
A	K13A	16	PK	2033019C1	1652325C1
B	K11 C	16	WH	2033019C1	1652325C1

CONNECTOR - 1671610C1 LOCK - 1671608C1

LIGHTING ECM (7106)

CONNECTOR: 2010376C1 LOCK: N/A PLUG: 1687788C1

CAV	CIR	GAUGE	COLOR	TERM	SEAL
A1	K14AA	16	RD	1651943C1	N/A
A2	K3AA	16	DKBL	1651943C1	N/A
A3	K11-GD	16	WH	1651943C1	N/A
B1	K13AA	16	PK	1651943C1	N/A
B2	K3AB	16	GY	1651943C1	N/A
B3	K11-GC	16	WH	1651943C1	N/A
C1	K5E1+1	18	YL	1651943C1	N/A
C2	K5E1-1	18	GN	1651943C1	N/A
C3	PLUG				
D1	K47R	16	GY	1651943C1	N/A
D2	K47S	16	GY	1651943C1	N/A
D3	K92EA	16	TN	1651943C1	N/A
E1	PLUG				
E2	PLUG				
E3	K92EB	16	TN	1651943C1	N/A
F1	PLUG				
F2	PLUG				
F3	K92EC	16	TN	1651943C1	N/A

CHK	DATE	CHANGE	REV	REFERENCE	DRAWN	NAME
CNA	11SEP03	ADDED 6704, 6708, 7105, 7106, & 7111.	E	58774T	U00EDL2	12/13/14/85/8600 & 73/74/7500 CIRC DIAGRAMS
					RELEASE NO. P52778H	DATE 31MAY00

PART NO. AF08-52376 SHEET 41

Figure 185 Connector Composites (6550), (6703), (6704), (6708), (7103), (7104), (7104A), (7105), (7106), (7111)

13.42. CONNECTOR COMPOSITES (7200), (7202), (7203), P. 42

INTERNATIONAL TRUCK AND ENGINE CORPORATION

THIS PRINT IS PROVIDED ON A RESTRICTED BASIS AND IS NOT TO BE USED IN ANY WAY DETRIMENTAL TO THE INTEREST OF INTERNATIONAL TRUCK AND ENGINE CORPORATION.

ELECTRICAL CIRCUIT DIAGRAM

CHAPTER 12

CONNECTOR COMPOSITES - MATING VIEW SHOWN

TRANSMISSION BULKHEAD CONNECTION (WTEC) (7200)

CONNECTOR - 3508926C1
PLUG - 3508928C1

CAV	CIR	GAUGE	COLOR	TERM	SEAL
A	L92#102	18	TN	3508927C1	N/A
B	L92#103	18	TN	3508927C1	N/A
C	L92#104	18	TN	3508927C1	N/A
D	L92A124	18	TN	3508927C1	N/A
E	L92#107	18	TN	3508927C1	N/A
F	L92#110	18	TN	3508927C1	N/A
G	L92#120	18	TN	3508927C1	N/A
H	L92#121	18	TN	3508927C1	N/A
J	L92#128	18	TN	3508927C1	N/A
K	L92#129	18	TN	3508927C1	N/A
L	L92#130	18	TN	3508927C1	N/A
M	L92#131	18	TN	3508927C1	N/A
N	L92B135	18	TN	3508927C1	N/A

CAV	CIR	GAUGE	COLOR	TERM	SEAL
P	L31#147	18	TN	3508927C1	N/A
U	L92A140	18	TN	3508927C1	N/A
V	L92A149	18	TN	3508927C1	N/A
W	L92#195	18	TN	3508927C1	N/A
X	L92#162	18	TN	3508927C1	N/A
Y	L92#165	18	TN	3508927C1	N/A
a	PLUG				
b	PLUG				
c	PLUG				
d	PLUG				
e	PLUG				
f	PLUG				
g	PLUG				

ECU "V"
CONN GRAY
(ALLISON WTEC)
(7202)

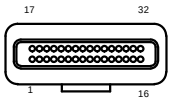

CONNECTOR - 3548957C91
PLUG - 3518314C1

CAV	CIR	GAUGE	COLOR	TERM
1	L92B136	18	TN	3517243C1
2	L92#114	18	TN	3517243C1
3	PLUG	-		
4	L71#113	18	OR	3517243C1
5	L92#167	18	TN	3517243C1
6	L92#123	18	TN	3517243C1
7	PLUG	-		
8	PLUG	-		
9	PLUG	-		
10	PLUG	-		
11	L92#155	18	TN	3517243C1
12	L92#153	18	TN	3517243C1
13	L92#118	18	TN	3517243C1
14	PLUG	-		
15	PLUG	-		
16	L92C136	18	TN	3517243C1
17	L92B143	18	TN	3517243C1
18	L92#125	18	TN	3517243C1
19	L92#105	18	TN	3517243C1
20	PLUG	-		
21	PLUG	-		
22	L92#112	18	TN	3517243C1
23	PLUG	-		
24	PLUG	-		
25	PLUG	-		
26	PLUG	-		
27	PLUG	-		
28	PLUG	-		
29	L92#137	18	TN	3517243C1
30	L92#117	18	TN	3517243C1
31	L92#161	18	TN	3517243C1
32	L92C143	18	TN	3517243C1

W/ & NOT W/RETARDER

CAV	CIR	GAUGE	COLOR	TERM
1	L92B136	18	TN	3517243C1
2	L92A114	18	TN	3517243C1
3	PLUG	-		
4	L71#113	18	OR	3517243C1
5	L92#167	18	TN	3517243C1
6	L92A123	18	TN	3517243C1
7	PLUG	-		
8	PLUG	-		
9	PLUG	-		
10	PLUG	-		
11	L92#155	18	TN	3517243C1
12	L92A153	18	TN	3517243C1
13	L92#118	18	TN	3517243C1
14	PLUG	-		
15	PLUG	-		
16	L92C136	18	TN	3517243C1
17	L92B143	18	TN	3517243C1
18	L92#125	18	TN	3517243C1
19	L92#105	18	TN	3517243C1
20	PLUG	-		
21	PLUG	-		
22	L92#112	18	TN	3517243C1
23	PLUG	-		
24	PLUG	-		
25	PLUG	-		
26	PLUG	-		
27	PLUG	-		
28	PLUG	-		
29	L92#137	18	TN	3517243C1
30	L92A117	18	TN	3517243C1
31	L92#161	18	TN	3517243C1
32	L92C143	18	TN	3517243C1

W/AUTO NEUTRAL

ECU "T"
CONN BLUE
(ALLISON WTEC)
(7203)

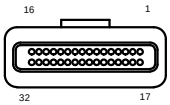

CONNECTOR - 3548958C91
PLUG - 3518314C1

* - W/RETARDER ONLY

CAV	CIR	GAUGE	COLOR	TERM		CAV	CIR	GAUGE	COLOR	TERM
1	L92#102	18	TN	3517243C1		17	L92#130	18	TN	3517243C1
2	L92#121	18	TN	3517243C1		18	PLUG	-		
3	L92#107	18	TN	3517243C1	*	19	L92A116	18	TN	3517243C1
4	L92#120	18	TN	3517243C1		20	L92#128	18	TN	3517243C1
5	L92#103	18	TN	3517243C1		21	L92#131	18	TN	3517243C1
6	L92#129	18	TN	3517243C1		22	L92#110	18	TN	3517243C1
7	L92#104	18	TN	3517243C1	*	23	L92#127	18	TN	3517243C1
8	PLUG	-				24	L92#101	18	TN	3517243C1
9	L92A124	18	TN	3517243C1		25	L92A135	18	TN	3517243C1
10	PLUG	-				26	L92#165	18	TN	3517243C1
11	PLUG	-				27	L31#147	18	TN	3517243C1
12	L92#162	18	TN	3517243C1	*	28	L92#138	18	TN	3517243C1
13	L92#195	18	TN	3517243C1		29	PLUG	-		
14	L48#141	18	GY	3517243C1		30	L48#150	18	GY	3517243C1
15	L92A149	18	TN	3517243C1		31	L92A140	18	TN	3517243C1
16	L47#139	18	GY	3517243C1		32	L47#148	18	GY	3517243C1

CHK	DATE	CHANGE	REV	REFERENCE	DRAWN	NAME
PEC	25JUN01	ADDED 7207-7300.	B	P54634F	U00EDL2	42/43/44/85/8600 & 73/74/7500 CIRC DIAGRAMS
PEC	15JAN02	ADDED 7200-7203.	C	55043Z	RELEASE NO. P52778H	DATE 31MAY00 / PART NO. AE08-52376 / SHEET 42

Figure 186 Connector Composites Connector Composites (7200), (7202), (7203)

13.43. CONNECTOR COMPOSITES (7204), (7205), (7206), (7211), (7212), (7213), P. 43

INTERNATIONAL TRUCK AND ENGINE CORPORATION

THIS PRINT IS PROVIDED ON A RESTRICTED BASIS AND IS NOT TO BE USED IN ANY WAY DETRIMENTAL TO THE INTEREST OF INTERNATIONAL TRUCK AND ENGINE CORPORATION.

ELECTRICAL CIRCUIT DIAGRAM CHAPTER 12

CONNECTOR COMPOSITES - MATING VIEW SHOWN

ECU "S"
CONN BLACK
(ALLISON WTEC)
(7204)

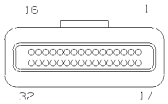

CONNECTOR - 3548956C91
PLUG - 3518314C1

CAV	CIR	GAUGE	COLOR	TERM
1	L3+142	18	WH	3517243C1
2	PLUG	-		
3	L92#124	18	TN	3517243C1
4	L92#146	18	TN	3517243C1
5	L92#170	18	TN	3517243C1
6	L92#171	18	TN	3517243C1
7	L92#172	18	TN	3517243C1
8	L92#173	18	TN	3517243C1
9	L92#174	18	TN	3517243C1
10	L92#175	18	TN	3517243C1
11	PLUG			
12	L5A182	20	NONE	3517243C1
13	L5A183	20	YL	3517243C1
14	L92#180	18	TN	3517243C1
15	(HOSE)	18	BK	3517243C1
16	L92D136	18	TN	3517243C1
17	L3-151	18	DK BL	3517243C1
18	PLUG	-		
19	PLUG	-		
20	PLUG	-		
21	PLUG			
22	PLUG	-		
23	PLUG	-		
24	PLUG	-		
25	PLUG	-		
26	L92#169	18	TN	3517243C1
27	L92#163	18	TN	3517243C1
28	PLUG	-		
29	L5A184	20	GN	3517243C1
30	L47A157	18	GY	3517243C1
31	PLUG			
32	L92D143	18	TN	3517243C1

VIW - A
(VEHICLE INTERFACE
WIRING)
(7205)

CONNECTOR - 3525872C1
PLUG 2025431C1
LOCK - 3525873C1

	CAV	CIR	GAUGE	COLOR	TERM	SEAL
	A	L92A161	18	TN	1661875C1	1661872C1
*	B	L92#163	18	TN	1661875C1	1661872C1
	C	L92#169	18	TN	1661875C1	1661872C1
	D	L92#125	18	TN	1661875C1	1661872C1
	E	L92#167	18	TN	1661875C1	1661872C1
	G	L92#105	18	TN	1661875C1	1661872C1
	H	L92#137	18	TN	1661875C1	1661872C1

* - FOR WTEC W/RETARDER, THERE IS NO CIRCUIT IN THIS CAVITY (PLUG ONLY).

VIW - C
(VEHICLE INTERFACE
WIRING)
(7206)

CONNECTOR 3525874C1
PLUG - 2025431C1
LOCK - 3525875C1

	CAV	CIR	GAUGE	COLOR	TERM	SEAL
	A	L92#159	18	TN	1667742C1	1661872C1
*	B	L92#117	18	TN	1667742C1	1661872C1
	C	L92C161	18	TN	1667742C1	1661872C1
	D	L92#118	18	TN	1667742C1	1661872C1
*	E	L92#153	18	TN	1667742C1	1661872C1
*	F	L92#114	18	TN	1667742C1	1661872C1
	G	L92#112	18	TN	1667742C1	1661872C1

* - FOR WTEC W/AUTO NEUTRAL, THERE IS NO CIRCUIT IN THIS CAVITY (PLUG ONLY).

RETARDER
TEMP SENDER
(7211)

CONNECTOR - 3524377C1
PLUG - 1687788C1

CAV	CIR	GAUGE	COLOR	TERM
A	L92#130	18	TN	2036506C1
B	L92C135	18	TN	2030580C1

RETARDER
ACCUMULATOR SOLENOID
(7212)

CONNECTOR - 3524378C1
PLUG - 1687788C1

CAV	CIR	GAUGE	COLOR	TERM
A	L92#101	18	TN	2036506C1
B	L92N116	18	TN	2030580C1

RETARDER
SOLENOID
(7213)

CONNECTOR - 2036584C1
PLUG 1687788C1

CAV	CIR	GAUGE	COLOR	TERM
A	L92#127	18	TN	2036586C1
B	L92C116	18	TN	2036586C1

CHK	DATE	CHANGE	REV	REFERENCE	DRAWN	NAME
DEC 15	5JAN02	ADDED 7204 7206.	C	55043Z	U00EDL2	42/43/44/85/8600 & 73/74/7500 CIRC DIAGRAMS
CNA	16APR03	ADDED 7211 7213.	D	57989M	RELEASE NO. P52778H	DATE 31MAY00 / PART NO. AF08-52376 / SHEET 43

Figure 187 Connector Composites (7204), (7205), (7206), (7211), (7212), (7213)

13.44. CONNECTOR COMPOSITES (7214), (7300), (7301), P. 44

INTERNATIONAL TRUCK AND ENGINE CORPORATION

THIS PRINT IS PROVIDED ON A RESTRICTED BASIS AND IS NOT TO BE USED IN ANY WAY DETRIMENTAL TO THE INTEREST OF INTERNATIONAL TRUCK AND ENGINE CORPORATION.

ELECTRICAL CIRCUIT DIAGRAM CHAPTER 12

CONNECTOR COMPOSITES - MATING VIEW SHOWN

TCM BULKHEAD CONNECTION (7214)

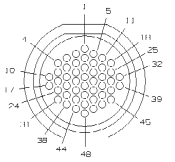

(7214F)

CONNECTOR - 3573045C91
GASKET - 3566556C1
JAM NUT - 3566557C1
TERMINAL - 3566559C1

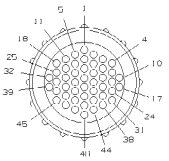

(7214M)

CONNECTOR - 3573046C91
BODY LOCK - 3566572C1
TERMINAL - 3566560C1

CAV	CIR	GAUGE	COLOR	CAV	CIR	GAUGE	COLOR
1	L47#139	18	GY	25	L92#167	18	TN
2	L47#140	18	GY	26	L92#105	18	TN
3	L92#170	18	TN	27	L92B143	16	TN
4	L92#171	18	TN	28	L92E143	16	TN
5	L92#172	18	TN	29	L92#137	18	TN
6	L92#173	18	TN	30	L92#155	18	TN
7	L92#174	18	TN	31	L92#117	18	TN
8	L92#175	18	TN	32	L92C149	18	TN
9	L92#124	18	TN	33	L92#118	18	TN
10	L48#141	18	GY	34	L92#153	18	TN
11	L92#180	18	TN	35	L92#114	18	TN
12	L92#146	18	TN	36	L92#112	18	TN
13	L71#113	18	OR	37	L58183	18	YL
14	L3+142	18	WH	38	L58184	18	GN
15	L3-151	18	DKBL	39	L92C140	18	TN
16	L92D136	18	TN	40	L47A157	18	GY
17	L48#150	18	GY	41	L17A	18	PK
18	L92D143	18	TN	42			
19	L92#161	18	TN	43	-		
20	L92#163	18	TN	44	-		
21	L92F136	16	TN	45	-		
22	L92E136	16	TN	46	-		
23	L92#169	18	TN	47			
24	L92#125	18	TN	48	-		

CAV	CIR	GAUGE	COLOR	CAV	CIR	GAUGE	COLOR
1	L47#139	18	GY	25	L92#167	18	TN
2	L47#140	18	GY	26	L92#105	18	TN
3	L92#170	18	TN	27	L92B143	18	TN
4	L92#171	18	TN	28	L92C143	18	TN
5	L92#172	18	TN	29	L92#137	18	TN
6	L92#173	18	TN	30	L92#155	18	TN
7	L92#174	18	TN	31	L92#117	18	TN
8	L92#175	18	TN	32	L92C149	18	TN
9	L92#124	18	TN	33	L92#118	18	TN
10	L48#141	18	GY	34	L92#153	18	TN
11	L92#180	18	TN	35	L92#114	18	TN
12	L92#146	18	TN	36	L92#112	18	TN
13	L71#113	18	OR	37	L58183	18	YL
14	L3+142	18	WH	38	L58184	18	GN
15	L3-151	18	DKBL	39	L92C140	18	TN
16	L92D136	18	TN	40	L47A157	18	GY
17	L48#150	18	GY	41	L92#123	18	TN
18	L92D143	18	TN	42	-		
19	L92#161	18	TN	43	-		
20	L92#163	18	TN	44	-		
21	L92B136	18	TN	45	-		
22	L92C136	18	TN	46	-		
23	L92#169	18	TN	47	-		
24	L92#125	18	TN	48	-		

TRANSMISSION BULKHEAD (LCT) (7300)

CONNECTOR - 3522537C91
PLUG - 3518314C1
LOCK - 3518287C1

CAV	CIR	GAUGE	COLOR	TERM
A	L92#226	18	TN	3517243C1
B	L92#227	18	TN	3517243C1
C	L92#231	18	TN	3517243C1
D	L92#201	18	TN	3517243C1
E	L92#203	18	IN	3517243C1
F	L92#202	18	TN	3517243C1
G	L21#210	18	TN	3517243C1
H	L92A220	18	TN	3517243C1
J	L92#229	18	IN	3517243C1
K	L92#204	18	IN	3517243C1
L	L92#222	18	TN	3517243C1
M	L92#223	18	TN	3517243C1
N	L92#224	18	TN	3517243C1
P	L92#225	18	IN	3517243C1
R	L92#230	18	IN	3517243C1
S	L92#232	18	TN	3517243C1
T	L92#221	18	TN	3517243C1
U	PLUG			
V	PLUG	-	-	-
W	L92#228	18	IN	3517243C1

NSBU SWITCH VEHICLE (INFUTRAI SAFFTY BACK-UP) (7301)

CONNECTOR - 3531635C1
PLUG - 2025431C1
LOCK - 3534634C1

CAV	CIR	GAUGE	COLOR	TERM	SEAL
A	PLUG	-	-	-	-
B	PLUG	-	-	-	-
C	L71	16	OR	1661875C1	1661872C1
D	L92B220	18	TN	1661875C1	1661872C1
E	L13M3	18	PK	2033819C1	1652325C1
F	L71A	16	OR	1661875C1	1661872C1
G	L17F	18	PK	2033810C1	3517771C1

CHK	DATE	CHANGE	REV	REFERENCE	DRAWN	NAME
CNA	11SEP03	ADDED CIRCUIT L92#230.	F	58774T	U00EDL2	42/43/44/85/8600 & 73/74/7500 CIRC DIAGRAMS
					RELEASE NO. P52778H	DATE 31MAY00 PART NO. AF08-52376 SHEET 44

Figure 188 Connector Composites (7214), (7300), (7301)

13.45. CONNECTOR COMPOSITES (7302), (7304), (7305), (7306), (7500), (7502), (7600), (7601), P. 45

INTERNATIONAL TRUCK AND ENGINE CORPORATION

THIS PRINT IS PROVIDED ON A RESTRICTED BASIS AND IS NOT TO BE USED IN ANY WAY DETRIMENTAL TO THE INTEREST OF INTERNATIONAL TRUCK AND ENGINE CORPORATION.

ELECTRICAL CIRCUIT DIAGRAM CHAPTER 12

CONNECTOR COMPOSITES - MATING VIEW SHOWN

NSBU SWITCH (NEUTRAL SAFETY BACK-UP) (7302)

CAV	CIR	GAUGE	COLOR	TERM	SEAL
A	L92#205	18	TN	1661875C1	1661872C1
B	L92#207	18	TN	1661875C1	1661872C1
C	L92#208	18	TN	1661875C1	1661872C1
D	L92#206	18	TN	1661875C1	1661872C1

CONNECTOR - 3534633C1
LOCK - 3534633C1

LCU "J2" CONN RED (ALLISON LCT) (7304)

CAV	CIR	GAUGE	COLOR	TERM
1	L92#201	18	TN	3517243C1
2	L92#202	18	TN	3517243C1
3	L92#203	18	TN	3517243C1
4	L92#204	18	TN	3517243C1
5	L92#205	18	TN	3517243C1
6	L92#206	18	TN	3517243C1
7	L92#207	18	TN	3517243C1
8	L92#208	18	TN	3517243C1
9	PLUG	-	-	-
10	L31#210	18	TN	3517243C1
11	PLUG	-	-	-
12	PLUG	-	-	-
13	L92#213	18	TN	3517243C1
14	L92#214	18	TN	3517243C1
15	L47#215	18	GY	3517243C1
16	L47#216	18	GY	3517243C1
17	L48#217	18	GY	3517243C1
18	L48#218	18	GY	3517243C1
19	PLUG			
20	L92#220	18	TN	3517243C1
21	L92#221	18	TN	3517243C1
22	L92#222	18	TN	3517243C1
23	L92#223	18	TN	3517243C1
24	L92#224	18	TN	3517243C1
25	L92#225	18	TN	3517243C1
26	L92#226	18	TN	3517243C1
27	L92#227	18	TN	3517243C1
28	L92#228	18	TN	3517243C1
29	L92#229	18	TN	3517243C1
30	L92#230	18	LI UL	3517243C1
31	L92#231	18	TN	3517243C1
32	L92#232	18	TN	3517243C1

CONNECTOR - 3541172C91
PLUG - 3518314C1

ECU - "J1" CONN GRAY (ALLISON LCT) (7305)

CAV	CIR	GAUGE	COLOR	TERM
1	L92#101	18	TN	3517243C1
2	L13#102	18	PK	3517243C1
3	L92#103	18	TN	3517243C1
4	L13#104	18	PK	3517243C1
5	L92#105	18	TN	3517243C1
6	L92#106	18	TN	3517243C1
7	PLUG	-	-	-
8	L92#108	18	TN	3517243C1
9	PLUG			
10	L92#110	18	TN	3517243C1
11	L92#111	18	TN	3517243C1
12	PLUG	-	-	-
13	PLUG	-	-	-
14	PLUG	-	-	-
15	PLUG	-	-	-
16	PLUG	-	-	-
17	PLUG	-	-	-
18	PLUG	-	-	-
19	L92#119	18	TN	3517243C1
20	PLUG			
21	L92#121	18	TN	3517243C1
22	L92#122	18	TN	3517243C1
23	PLUG	-	-	-
24	PLUG	-	-	-
25	L HOSF 1	18	PK	3517243C1
26	L47#126	18	GY	3517243C1
27	PLUG	-	-	-
28	L92#128	18	TN	3517243C1
20	L5#120	20	YL	3517243C1
30	PLUG	-	-	-
31	PLUG	-	-	-
32	L5#132	20	GN	3517243C1

CONNECTOR-3541172C91
PLUG-3518314C1

VIW - C (VEHICLE INTIGRATED WIRING) (ALLISON LCT) (7306)

CAV	CIR	GAUGE	COLOR	TERM	SEAL
A	L92C128	18	TN	1661875C1	1661872C1
B	L92#106	18	TN	1661875C1	1661872C1
C	L92#119	18	TN	1661875C1	1661872C1
D	L47C126	18	GY	1661875C1	1661872C1
E	L92#111	18	TN	1661875C1	1661872C1
F	L92#108	18	TN	1661875C1	1661872C1
G	L92#121	18	TN	1661875C1	1661872C1
H	L92#122	18	TN	1661875C1	1661872C1

CONNECTOR - 3525872C1
PLUG - 2025431C1
LOCK - 3525873C1

BACK-UP LIGHT SWITCH (7500)

CAV	CIR	GAUGE	COLOR	TERM	SEAL
A	L71B	16	OR	1661875C1	1661872C1
A	K71D	16	OR	1661875C1	1661872C1
D	L71C	16	OR	1661875C1	1661872C1
B	L71F	16	OR	1661875C1	1661872C1

CONNECTOR - 1661778C1
PLUG - 1687788C1
LOCK - 1661874C1

BACK-UP LIGHT (7502)

CAV	CIR	GAUGE	COLOR	TERM	SEAL
A	L71	16	OR	1661875C1	1661872C1
B	L71A	16	OR	1661875C1	1661872C1

CONNECTOR - 1661778C1
PLUG - 1687788C1
LOCK - 1661874C1

BACK-UP LIGHT SWITCH (7503)

CAV	CIR	GAUGE	COLOR	TERM	SEAL
A	K71D	16	OR	1661875C1	1661872C1
B	K71E	16	OR	1661875C1	1661872C1

CONNECTOR - 1661778C1
PLUG 1687788C1
LOCK - 1661874C1

OUTPUT SPEED SENSOR (7600)

CAV	CIR	GAUGE	COLOR	TERM
A	L47#215	18	GY	2036586C1
B	L47#216	18	GY	2036586C1

CONNECTOR - 2036583C1

SPEEDO SENSOR (7601)

CAV	CIR	GAUGE	COLOR	TERM
A	K47	18	GY	2036586C1
B	K47A	18	GY	2036586C1

CONNECTOR - 2036583C1

CHK	DATE	CHANGE	REV	REFERENCE	DRAWN	NAME
CNA	11SEP03	MULTIPLE CHANGES.	E	587/41	U00EDL2	42/43/44/85/8600 & 73/74/7500 CIRC DIAGRAMS
					RELEASE NO. P52778H	DATE 31MAY00 / PART NO. AF08-52376 / SHEET 45

Figure 189 Connector Composites (7302), (7304), (7305), (7306), (7500), (7502), (7600), (7601)

13.46. CONNECTOR COMPOSITES (7603), (7604), (7605), (7606), (7607), (7608), (7609), (7610), (7611), (7612), (7613), (7615), (7700), (7702), (7703), (7703A), P. 46

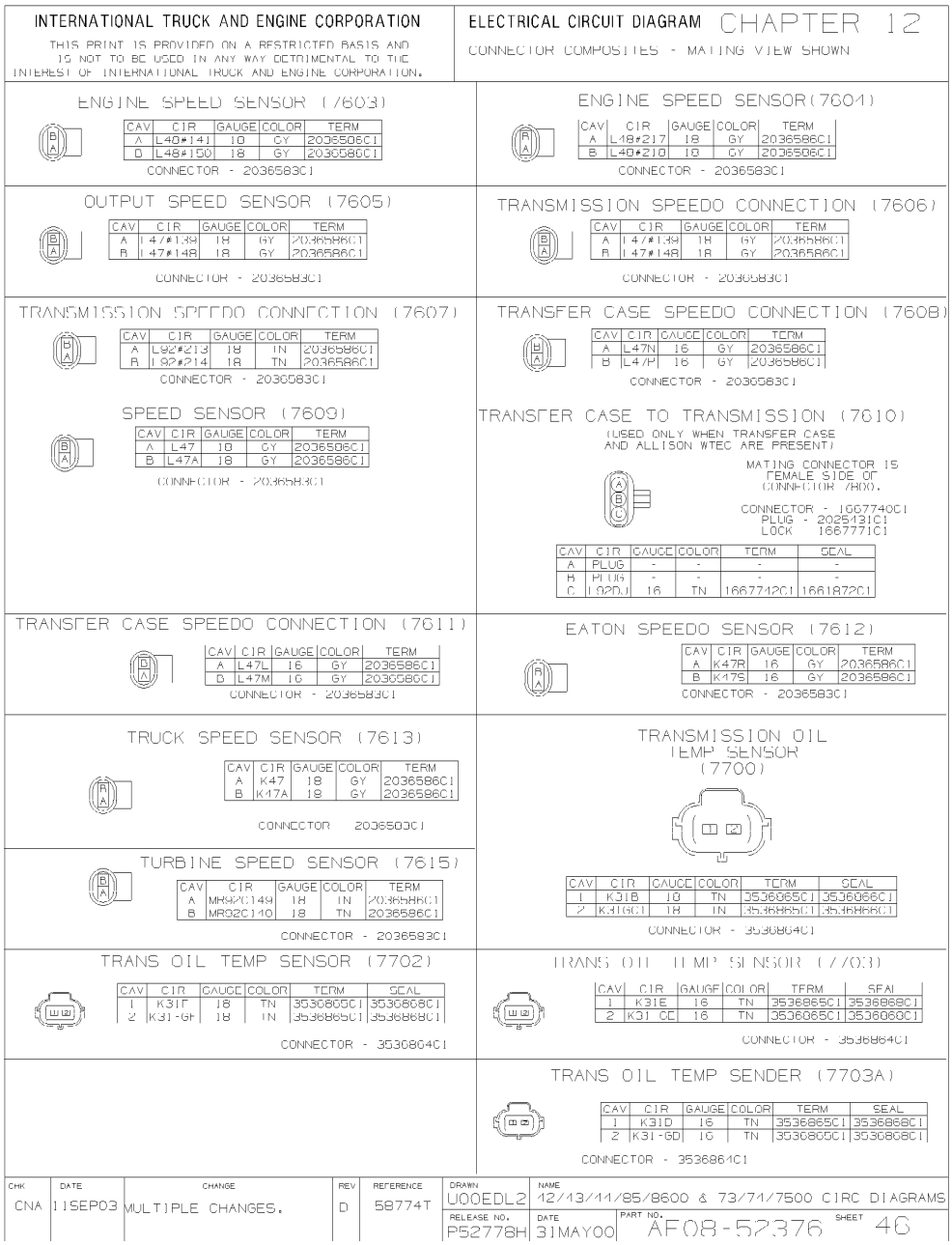

Figure 190 Connector Composites (7603), (7604), (7605), (7606), (7607), (7608), (7609), (7610), (7611), (7612), (7613), (7615), (7700), (7702), (7703), (7703A)

13.47. CONNECTOR COMPOSITES (7800), (7801M), (7803), (7900), (7901), P. 47

INTERNATIONAL TRUCK AND ENGINE CORPORATION

THIS PRINT IS PROVIDED ON A RESTRICTED BASIS AND IS NOT TO BE USED IN ANY WAY DETRIMENTAL TO THE INTEREST OF INTERNATIONAL TRUCK AND ENGINE CORPORATION.

ELECTRICAL CIRCUIT DIAGRAM CHAPTER 12

CONNECTOR COMPOSITES - MATING VIEW SHOWN

ENG/TRANS CONNECTOR (7800)

CONNECTOR 1667740C1
PLUG - 2025431C1
LOCK - 1667771C1

W/16 ENGINES

CAV	CIR	GAUGE	COLOR	TERM	SEAL
A	K47	18	GY	1667742C1	1661872C1
B	K47A	18	GY	1667742C1	1661872C1
C	K17E	18	VT	1667742C1	1661872C1

W/V8 ENGINES

CAV	CIR	GAUGE	COLOR	TERM	SEAL
A	K47	18	GY	1667742C1	1661872C1
B	K47A	18	GY	1667742C1	1661872C1
C	K97AD	18	VT	1667742C1	1661872C1

CONNECTOR - 3522251C1
LOCK - 3522253C1
PLUG - 2025431C1

W/CAT C10, CAT C12, CUMMING

CAV	CIR	GAUGE	COLOR	TERM	SEAL
A	K47	16	GY	1661875C1	1661872C1
B	K47A	16	GY	1661875C1	1661872C1
C	PLUG	-	-	-	-
D	K5U	18	YL	1661875C1	1661872C1
E	K5AE	18	GN	1661875C1	1661872C1

CONNECTOR - 1667741C1
PLUG - 2025431C1
LOCK - 1667771C1

W/EATON AUTOSHIFT

CAV	CIR	GAUGE	COLOR	TERM	SEAL
A	L47	18	GY	1661875C1	1661872C1
B	L47A	18	GY	1661875C1	1661872C1
C	L17C	18	PK	1661875C1	1661872C1

W/ALLISON WTEC (W/ & NOT W/RETARDER)

CAV	CIR	GAUGE	COLOR	TERM	SEAL
A	L47A157	18	GY	1661875C1	1661872C1
B	PLUG	-	-	-	-
C	L17A	18	PK	1661875C1	1661872C1

W/ALLISON WTEC W/AUTO NEUTRAL

CAV	CIR	GAUGE	COLOR	TERM	SEAL
A	L47A157	18	GY	1661875C1	1661872C1
B	PLUG				
C	L17D	18	PK	1661875C1	1661872C1

W/ALLISON ICI

CAV	CIR	GAUGE	COLOR	TERM	SEAL
A	L47B126	18	GY	1661875C1	1661872C1
B	PLUG	-	-	-	-
C	L17E	18	PK	1661875C1	1661872C1

W/MANUAL TRANS

CAV	CIR	GAUGE	COLOR	TERM	SEAL
A	L47D	18	GY	1661875C1	1661872C1
B	L47E	18	GY	1661875C1	1661872C1
C	L17D	18	PK	1661875C1	1661872C1

TERMINATING RESISTOR (7801M)

CAV	CIR	GAUGE	COLOR	TERM	SEAL	NOTES
A	K5C(+)	18	YL	1661875C1	3568570C1	
A	K5D(+)	18	YL	1661875C1	3568570C1	
A	K5C183	18	YL	1661875C1	3568570C1	
A	K5AF	18	GN	1661875C1	3568570C1	V-80NLY
C	K5C(-)	18	GN	1661875C1	3568570C1	
C	K5D(-)	18	GN	1661875C1	3568570C1	
C	K5C184	18	GN	1661875C1	3568570C1	
C	K5U	18	YL	1661875C1	3568570C1	V-80NLY

CONNECTOR - 1667741C1
PLUG - 2025431C1
LOCK - 1667771C1

ENG TO TRANSFER CASE HARNESS CONN (7803)

(USED ONLY WHEN TRANSFER CASE AND ALLISON WTEC ARE PRESENT)
MATING CONNECTOR IS MALE SIDE OF CONNECTOR 7800.

CAV	CIR	GAUGE	COLOR	TERM	SEAL
A	L47L	16	GY	1661875C1	1661872C1
B	L47M	16	GY	1661875C1	1661872C1
C	L92DJ	16	TN	1661875C1	1661872C1

CONNECTOR 1667741C1
PLUG - 2025431C1
LOCK - 1667771C1

EATON AUTOSHIFT ECM (7900)

CAV	CIR	GAUGE	COLOR	TERM
A1	L92AC	16	TN	1651943C1
A2	PLUG	-	-	-
A3	L92AF	16	TN	1651943C1
B1	L92AD	16	TN	1651943C1
B2	PLUG			
D3	L92AD	16	TN	1651943C1
C1	L5AX(+)	20	YL	1651943C1
C2	L5AX(-)	20	GN	1651943C1
C3	L5AX(S)	20	NONE	1651943C1
D1	PLUG	-	-	-
D2	PLUG	-	-	-
D3	PLUG	-	-	-
E1	L92Z	16	TN	1651943C1
E2	L92AA	16	TN	1651943C1
E3	PLUG	-	-	-
F1	PLUG	-	-	-
F2	PLUG	-	-	-
F3	PLUG	-	-	-

CONNECTOR - 2010376C1
PLUG - 1687788C1

EATON AUTOSHIFT ECM POWER (7901)

CONNECTOR 3552915C1
PLUG - 1679451C1

CAV	CIR	GAUGE	COLOR	TERM
A	L11-GAM	12	WH	1661708C1
B	L14AW	12	RD	1661708C1

CHK	DATE	CHANGE	REV	REFERENCE	DRAWN	NAME
CNA	11SEP03	ADDED 7801M.	E	58774T	U00EDL2	42/43/44/85/8600 & 73/74/7500 CIRC DIAGRAMS
					RELEASE NO. P52778H	DATE 28JUN00 / PART NO. AF08-52376 / SHEET 47

Figure 191 Connector Composites (7800), (7801M), (7803), (7900), (7901)

13.48. CONNECTOR COMPOSITES (7905), (7906), (8000), (8001), (8102), (8150), (8151), (8200), P. 48

INTERNATIONAL TRUCK AND ENGINE CORPORATION

THIS PRINT IS PROVIDED ON A RESTRICTED BASIS AND IS NOT TO BE USED IN ANY WAY DETRIMENTAL TO THE INTEREST OF INTERNATIONAL TRUCK AND ENGINE CORPORATION.

ELECTRICAL CIRCUIT DIAGRAM CHAPTER 12

CONNECTOR COMPOSITES - MATING VIEW SHOWN

EATON AUTOSHIFT SELECTOR (7905)

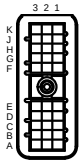

CAV	CIR	GAUGE	COLOR	TERM
A1	PLUG	-	-	-
A2	A17Q	18	PK	1651943C1
A3	A17-GB	16	WH	1651943C1
B1	PLUG	-	-	-
B2	A3T(+)	18	DK BL	1651943C1
B3	A62J	18	DK BL	1651943C1
C1	A92Y	16	TN	1651943C1
C2	A3T(-)	18	GY	1651943C1
C3	A17N	16	PK	1651943C1
D1	PLUG	-	-	-
D2	PLUG	-	-	-
D3	PLUG	-	-	-
E1	A92T	16	TN	1651943C1
E2	A92S	16	TN	1651943C1
E3	A92U	16	TN	1651943C1
F1	A5AX(+)	20	YL	1651943C1
F2	A5AX(-)	20	GN	1651943C1
F3	A5AX(S)	20	WH	1651943C1
G1	A5AV(+)	20	YL	1651943C1
G2	A5AV(-)	20	GN	1651943C1
J1	A92AC	16	TN	1651943C1
J2	A92AD	16	TN	1651943C1
J3	A92AE	16	TN	1651943C1
K1	A92Z	16	TN	1651943C1
K2	A92AA	16	TN	1651943C1
K3	A92AB	16	TN	1651943C1

CONNECTOR - 3537833C1
PLUG - 1687788C1

AUTOSHIFT DISPLAY (7906)

CAV	CIR	GAUGE	COLOR	TERM
1	A92R	16	TN	1661539C1
2	A92S	16	TN	1661539C1
3	A92T	16	TN	1661539C1
4	A92U	16	TN	1661539C1

CONNECTOR - 3512117C1

RIGHT HEADLIGHT T/S HARNESS CONN(8000)

CONNECTOR - 1661375C2
PLUG - 0587579C1
LOCK - 1661376C1

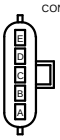

CAV	CIR	GAUGE	COLOR	TERM	SEAL
A	M52D	14	YL	2033816C1	0589391C1
B	M11-GA	14	WH	2033816C1	0589391C1
C	M53B	14	YL	2033816C1	0589391C1
* D	M57B	16	OR	2033819C1	1652325C1
E	M58D	14	BN	2033816C1	0589391C1

* - FOR SINGLE HORN W/SNOW PLOW LIGHTS, CIRCUIT NUMBER IS M57C.

LEFT HEADLIGHT T/S HARNESS CONN(8001)

CONNECTOR - 1661375C2
PLUG - 0587579C1
LOCK - 1661376C1

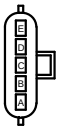

CAV	CIR	GAUGE	COLOR	TERM	SEAL
A	M52C	14	YL	2033816C1	0589391C1
* B	M11-GB	14	WH	2033816C1	0589391C1
C	M53A	14	YL	2033816C1	0589391C1
** D	M56B	16	OR	2033819C1	1652325C1
E	M58C	14	BN	2033816C1	0589391C1

* - FOR SINGLE HORN W/SNOW PLOW LIGHTS, CIRCUIT NUMBER IS M11-GF.

** - FOR SINGLE HORN W/ SNOW PLOW LIGHT, CIRCUIT NUMBER IS M56C

SNOW PLOW HARNESS CONN (8102)

CAV	CIR	GAUGE	COLOR	TERM	SEAL
A	M64HI	14	YL	3535486C1	0589391C1
B	M11-GE	14	WH	3535486C1	0589391C1
C	M64LO	14	YL	3535486C1	0589391C1
D	M56D	16	YL	2039343C1	1652325C1
E	M58F	14	BN	3535486C1	0589391C1
F	M57D	16	LT GN	2039343C1	1652325C1

CONNECTOR - 2039311C91
PLUG - 0587579C1
LOCK - 2039342C1

LEFT GUIDE POST LIGHT (8150)

CAV	CIR	GAUGE	COLOR	TERM	SEAL
A	M58H	16	BN	1661875C1	1661872C1
B	M58-GA	16	WH	1661875C1	1661872C1

CONNECTOR - 1661778C1
PLUG - 1687788C1
LOCK - 1661874C1

RIGHT GUIDE POST LIGHT (8151)

CAV	CIR	GAUGE	COLOR	TERM	SEAL
A	M58J	16	BN	1661875C1	1661872C1
B	M58-GB	16	WH	1661875C1	1661872C1

CONNECTOR - 1661778C1
PLUG - 1687788C1
LOCK - 1661874C1

RIGHT FOGLIGHT (8200)

CAV	CIR	GAUGE	COLOR	TERM	SEAL
A	M64A	16	YL	0587577C1	1652325C1
B	M64-GB	16	WH	0587577C1	1652325C1

CONNECTOR - 0587567C91
PLUG - 0587579C1

CHK	DATE	CHANGE	REV	REFERENCE
PEC	29JUN01	ADDED 8000-8200.	B	P54634F
PEC	15JAN02	ADDED 7905 & 7906.	C	55043Z

DRAWN U00EDL2 | NAME 42/43/44/85/8600 & 73/74/7500 CIRC DIAGRAMS
RELEASE NO. P52778H | DATE 31MAY00 | PART NO. AE08-52376 | SHEET 48

Figure 192 Connector Composites (7905), (7906), (8000), (8001), (8102), (8150), (8151), (8200)

13.49. CONNECTOR COMPOSITES (8201), (8301), (8310), (8311), (8312), (8400), (8500), (8501), (8502), (8502A), P. 49

INTERNATIONAL TRUCK AND ENGINE CORPORATION

THIS PRINT IS PROVIDED ON A RESTRICTED BASIS AND IS NOT TO BE USED IN ANY WAY DETRIMENTAL TO THE INTEREST OF INTERNATIONAL TRUCK AND ENGINE CORPORATION.

ELECTRICAL CIRCUIT DIAGRAM CHAPTER 12

CONNECTOR COMPOSITES - MATING VIEW SHOWN

LEFT FOGLIGHT
(8201)

CONNECTOR - 0587567C91
PLUG - 0587579C1

CAV	CIR	GAUGE	COLOR	TERM	SEAL
A	M64B	16	YL	0587577C1	1652325C1
B	M64-GA	16	WH	0587577C1	1652325C1

ELECTRIC HORN
(8301)

CONNECTOR - 1661778C1
PLUG - 1687788C1
LOCK - 1661874C1

CAV	CIR	GAUGE	COLOR	TERM	SEAL
A	M85E	16	GY	1661875C1	1661872C1
B	M85-GA	16	WH	1661875C1	1661872C1

DUAL ELECTRIC
HORNS
(8310)

CONNECTOR - 3543888C1
PLUG - 2025431C1
LOCK - 1661874C1

CAV	CIR	GAUGE	COLOR	TERM	SEAL
A	M85J	16	GY	1667742C1	1661872C1
B	M85-GC	16	WH	1667742C1	1661872C1

ELECTRIC
HORN #1
(8311)

CONNECTOR - 1661778C1
PLUG - 1687788C1
LOCK - 1661874C1

W/SINGLE HORN

CAV	CIR	GAUGE	COLOR	TERM	SEAL
A	M85J	16	GY	1661875C1	1661872C1
B	M85-GC	16	WH	1661875C1	1661872C1

W/DUAL HORNS

CAV	CIR	GAUGE	COLOR	TERM	SEAL
A	M85K	16	GY	1661875C1	1661872C1
B	M85-GD	16	WH	1661875C1	1661872C1

ELECTRIC
HORN #2
(8312)

CONNECTOR - 1661778C1
PLUG - 1687788C1
LOCK - 1661874C1

CAV	CIR	GAUGE	COLOR	TERM	SEAL
A	M85L	16	GY	1661875C1	1661872C1
B	M85-GE	16	WH	1661875C1	1661872C1

ETHER START
(8400)

CONNECTOR - 0587568C91
PLUG - 0587579C1

CAV	CIR	GAUGE	COLOR	TERM	SEAL
A	M21D	18	TN	0587576C1	1652325C1
B	M21C	18	TN	0587576C1	1652325C1

BENDIX
LEFT ABS
MODULATOR
(8500)

CONNECTOR - 1686834C1
PLUG - 0587579C1
LOCK - 1664408C1

CAV	CIR	GAUGE	COLOR	TERM	SEAL
A	M94	18	GY	2033819C1	1652325C1
B	M94A	18	GY	2033819C1	1652325C1
C	M94B	18	GY	2033819C1	1652325C1

BENDIX
RIGHT ABS
MODULATOR
(8501)

CONNECTOR - 1686834C1
PLUG - 0587579C1
LOCK - 1664408C1

CAV	CIR	GAUGE	COLOR	TERM	SEAL
A	M94H	18	GY	2033819C1	1652325C1
B	M94J	18	GY	2033819C1	1652325C1
C	M94K	18	GY	2033819C1	1652325C1

LEFT HYD ABS
WHEEL SENSOR
(8502)

PURCHACED
ASSEMBLY P/N
3519878C1

CAV	CIR	GAUGE	COLOR	TERM
1	[M94L]	18	BK	ASSY
2	[M94M]	18	BN	ASSY

BENDIX
LEFT AIR ABS
WHEEL SENSOR
(8502A)

CONNECTOR - 1684261C1
PLUG - 0453133C1
LOCK - 1684263C1

CAV	CIR	GAUGE	COLOR	TERM
1	M94C	18	GY	1680205C1
2	M94D	18	GY	1680205C1

CHK	DATE	CHANGE	REV	REFERENCE	DRAWN	NAME
PEC	19JAN01	PRODUCTION RELEASE.	A	P54304U	U00EDL2	42/43/44/85/8600 & 73/74/7500 CIRC DIAGRAMS
PEC	25JUN01	ADDED 8201-8502A.	B	P54634F	RELEASE NO. P52778H	DATE 31MAY00 / PART NO. AE08-52376 / SHEET 49

Figure 193 Connector Composites (8201), (8301), (8310), (8311), (8312), (8400), (8500), (8501), (8502), (8502A)

13.50. CONNECTOR COMPOSITES (8503), (8503A), (8505), (8506), (8507), (8508), (8509), (8600), (8601), (8602), P. 50

INTERNATIONAL TRUCK AND ENGINE CORPORATION

THIS PRINT IS PROVIDED ON A RESTRICTED BASIS AND IS NOT TO BE USED IN ANY WAY DETRIMENTAL TO THE INTEREST OF INTERNATIONAL TRUCK AND ENGINE CORPORATION.

ELECTRICAL CIRCUIT DIAGRAM CHAPTER 12

CONNECTOR COMPOSITES - MATING VIEW SHOWN

RIGHT HYD ABS WHEEL SENSOR (8503)

PURCHACED ASSEMBLY P/N 3519878C1

CAV	CIR	GAUGE	COLOR	TERM
1	[M94N]	18	BK	ASSY
2	[M94P]	18	BN	ASSY

BENDIX RIGHT AIR ABS WHEEL SENSOR (8503A)

CONNECTOR - 1684261C1
PLUG - 0453133C1
LOCK - 1684263C1

CAV	CIR	GAUGE	COLOR	TERM
1	M94E	18	GY	1680205C1
2	M94F	18	GY	1680205C1

AIR COMPRESSOR FOR HYD BRAKES (8505)

CONNECTOR - 1678137C1

CAV	CIR	GAUGE	COLOR	TERM
A	M9	18	GY	1651943C1
B	M6	18	GY	1651943C1
C	M40	18	GY	1651943C1

WABCO LEFT FRONT AIR ABS WHEEL SPEED SENSOR (8506)

PURCHACED ASSEMBLY P/N 3519878C1

CAV	CIR	GAUGE	COLOR	TERM
1	M94AC	18	BN	ASSY
2	M94AD	18	BK	ASSY

WABCO RIGHT FRONT AIR ABS WHEEL SPEED SENSOR (8507)

PURCHACED ASSEMBLY P/N 3519666C1

CAV	CIR	GAUGE	COLOR	TERM
1	M94AE	18	BN	ASSY
2	M94AF	18	BK	ASSY

WABCO LEFT FRONT AIR ABS MODULATOR (8508)

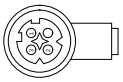

PURCHACED ASSEMBLY P/N 3554539C1

CAV	CIR	GAUGE	COLOR	TERM
1	M94AL	14	BL	ASSY
2	M94AA	14	GN	ASSY
3	M94AB	14	BN	ASSY

WABCO RIGHT FRONT AIR ABS MODULATOR (8509)

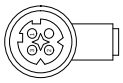

PURCHACED ASSEMBLY P/N 3554539C1

CAV	CIR	GAUGE	COLOR	TERM
1	M94AH	14	BL	ASSY
2	M94AJ	14	GN	ASSY
3	M94AK	14	BN	ASSY

RADIATOR GROUND (8600)

CONNECTOR - 0587566C91
PLUG - 0587579C1

CAV	CIR	GAUGE	COLOR	TERM	SEAL
A	M11-GC	12	WH	1673747C1	0589390C1

TEMP SENDER (8601)

CONNECTOR - 3522068C1
PLUG - 1687788C1
LOCK - 1661874C1

CAV	CIR	GAUGE	COLOR	TERM	SEAL
A	M41	18	GY	1661875C1	1661872C1
B	M41A	18	GY	1661875C1	1661872C1

A/C TRANSDUCER (8602)

CONNECTOR - 1678137C1

CAV	CIR	GAUGE	COLOR	TERM
A	M9	20	GY	1651943C1
B	M6	20	GY	1651943C1
C	M77	20	LT GN	1651943C1

CHK	DATE	CHANGE	REV	REFERENCE	DRAWN	NAME
PEC	19JAN01	PRODUCTION RELEASE.	A	P54304U	U00EDL2	42/43/44/85/8600 & 73/74/7500 CIRC DIAGRAMS
PEC	25JUN01	ADDED 8503-8602.	B	P54634F	RELEASE NO. P52778H	DATE 31MAY00 / PART NO. AE08-52376 / SHEET 50

Figure 194 Connector Composites (8503), (8503A), (8505), (8506), (8507), (8508), (8509), (8600), (8601), (8602)

13.51. CONNECTOR COMPOSITES (8700), (8701), (8800), (8801), (8802), (8803), (8805), P. 51

INTERNATIONAL TRUCK AND ENGINE CORPORATION

THIS PRINT IS PROVIDED ON A RESTRICTED BASIS AND IS NOT TO BE USED IN ANY WAY DETRIMENTAL TO THE INTEREST OF INTERNATIONAL TRUCK AND ENGINE CORPORATION.

ELECTRICAL CIRCUIT DIAGRAM CHAPTER 12

CONNECTOR COMPOSITES - MATING VIEW SHOWN

LEFT HEATED MIRROR FWD HOOD MTD (8700)

CONNECTOR 1671610C1
PLUG - 0587579C1
LOCK - 1671608C1

CAV	CIR	GAUGE	COLOR	TERM	SEAL
A	M78J	16	LT GN	2033819C1	1652325C1
B	M70 C	18	WH	2033819C1	1652325C1

RIGHT HEATED MIRROR FWD HOOD MTD (8701)

CONNECTOR - 1671610C1
PLUG - 0587579C1
LOCK - 1671608C1

CAV	CIR	GAUGE	COLOR	TERM	SEAL
A	M78K	16	LT GN	2033819C1	1652325C1
B	M70 GA	18	WH	2033819C1	1652325C1

GROUND ADAPTER #1 (8800)

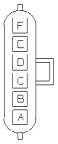

CONNECTOR 3551096C1
PLUG - 0587579C1
LOCK - 3551897C1
COVER 3551792C1

CAV	CIR	GAUGE	COLOR	TERM	SEAL
A	M11 G	12	WH	2033816C1	0509390C1
B	M11-GD	14	WH	2033816C1	0589391C1
C	M58-GA	16	WH	2033819C1	1652325C1
D	M11-GC	12	WH	2033816C1	0509390C1
E	M78-G	18	WH	2033819C1	1652325C1
F	M11 GD	12	WH	2033816C1	0509390C1

GROUND ADAPTER #2 (8801)

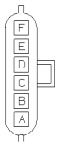

CONNECTOR - 3551896C1
PLUG 0587579C1
LOCK - 3551897C1
COVER - 3551792C1

CAV	CIR	GAUGE	COLOR	TERM	SEAL
A	M11-GD	12	WH	2033816C1	0589390C1
B	M11-GA	14	WH	2033816C1	0589391C1
C	M50 GB	16	WH	2033819C1	1652325C1
D	M85-GA	16	WH	2033819C1	1652325C1
E	M78-GA	18	WH	2033819C1	1652325C1
F	M61-G	16	WH	2033819C1	1652325C1

ISOLATED GND SPLICE PACK (8802)

CONNECTOR - 3551896C1
PLUG - 0587579C1
LOCK - 3551897C1
COVER - 3551792C1

	CAV	CIR	GAUGE	COLOR	TERM	SEAL
	A	N9	18	GY	2033819C1	1652325C1
*	B	N9A	18	GY	2033819C1	1652325C1
	C	N9B	18	GY	2033819C1	1652325C1
	D	N44-GD	18	WH	2033819C1	1652325C1
	E	N9I	18	GY	2033819C1	1652325C1
**	F	N9F	18	GY	2033819C1	1652325C1

* - FOR AF MID FUEL TANK, CIRCUIT NUMBER IS N9G.

** - FOR RR AXLE TEMP, CIRCUIT NUMBER IS N9H.

CHASSIS GND SPLICE PACK (8803)

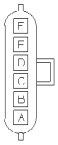

CONNECTOR 3551096C1
PLUG - 0587579C1
LOCK - 3551897C1
COVER - 3551792C1

	CAV	CIR	GAUGE	COLOR	TERM	SEAL
	A	N10-G	14	WH	2033816C1	0589391C1
	B	N10 GA	12	WH	2033816C1	0509390C1
*	C	N39-G	18	WH	2033819C1	1652325C1
**	D	N39-GB	16	WH	2033819C1	1652325C1
	E	N10-G	18	WH	2033819C1	1652325C1
	F	N10-GF	16	WH	2033819C1	1652325C1

* - FOR RIGHT SIDE MID DRAIN VALVE, CIRCUIT NUMBER IS N39-GA.

** - FOR RIGHT SIDE MID AIR DRYER, CIRCUIT NUMBER IS N39-GC

HOOD SWITCH (8805)

CAV	CIR	GAUGE	COLOR	TERMINAL	SEAL
A	M104CC	18	DKBL	0587576C1	1652325C1
D	M104CD	18	DKBL	0587576C1	1652325C1

CONNECTOR - 0587568C1

THIS SPACE INTENTIONALLY LEFT BLANK

CHK	DATE	CHANGE	REV	REFERENCE	DRAWN	NAME
PEC	15JAN02	ADDED N44-GB TO 8802	C	550437	U00EDL2	12/13/11/85/8600 & 73/71/7500 CIRC DIAGRAMS
CNA	10JULD3	LAS//ADDED 8805.	D	570975	RELEASE NO. P52778H	DATE 31MAY00 PART NO. AF08-52376 SHEET 51

Figure 195 Connector Composites (8700), (8701), (8800), (8801), (8802), (8803), (8805)

13.52. CONNECTOR COMPOSITES (9001), (9002), (9100), (9101), (9102), (9103), (9104), (9254), (9255), P. 52

INTERNATIONAL TRUCK AND ENGINE CORPORATION

THIS PRINT IS PROVIDED ON A RESTRICTED BASIS AND IS NOT TO BE USED IN ANY WAY DETRIMENTAL TO THE INTEREST OF INTERNATIONAL TRUCK AND ENGINE CORPORATION.

ELECTRICAL CIRCUIT DIAGRAM CHAPTER 12

CONNECTOR COMPOSITES - MATING VIEW SHOWN

LEFT SIDE HEATED DRAIN (9001)

CONNECTOR - 1661770C1
PLUG - 1687788C1
LOCK - 1661874C1

CAV	CIR	GAUGE	COLOR	TERM	SEAL
A	N39	18	GY	1661875C1	1661872C1
B	N39-G	18	WH	1661875C1	1661872C1

RIGHT SIDE HEATED DRAIN (9002)

CONNECTOR - 1661778C1
PLUG - 1687788C1
LOCK - 1661874C1

CAV	CIR	GAUGE	COLOR	TERM	SEAL
A	N39A	18	GY	1661875C1	1661872C1
D	N39-GA	18	WH	1661875C1	1661872C1

LEFT FUEL SENDER (9100)

CONNECTOR - 1661778C1
PLUG - 1687788C1
LOCK - 1661874C1

	CAV	CIR	GAUGE	COLOR	TERM	SEAL
*	A	N36	18	TN	1661875C1	1661872C1
**	B	N9A	10	GY	1661075C1	1661072C1

* - FOR DUAL MTD FUEL TANKS, CIRCUIT NUMBER IS N36E.
** - FOR AF MTD FUEL TANK, CIRCUIT NUMBER IS N9D.

RIGHT FUEL SENDER (9101)

CONNECTOR - 1661778C1
PLUG - 1687788C1
LOCK - 1661874C1

	CAV	CIR	GAUGE	COLOR	TERM	SEAL
*	A	N36A	18	TN	1661875C1	1661872C1
	B	N9B	10	GY	1661075C1	1661072C1

* - FOR DUAL MTD FUEL TANKS, CIRCUIT NUMBER IS N36C.

FUEL TRANSFER PUMP (9102)

CONNECTOR - 3522060C1
LOCK - 1661874C1

CAV	CIR	GAUGE	COLOR	TERM
A	N37-G	18	WH	1661875C1
B	N37D	10	TN	1661075C1
D	N37	18	TN	1661875C1

RIGHT SIDE FUEL SENDER (9103)

CONNECTOR - 1661778C1
PLUG - 1661874C1
LOCK - 2025431C1

CAV	CIR	GA	COLOR	TERM	SEAL
A	N36	10	TN	1661075C1	1661072C1
B	N9R	18	GY	1661875C1	1661872C1

THIS SPACE INTENTIONALLY LEFT BLANK

FUEL TRANSFER PUMP INTERCONNECT (9104)

CONNECTOR - 0587568C91
PLUG - 0587579C1
LOCK - N/A

CAV	CIR	GAUGE	COLOR	TERM	SEAL
A	N37D	18	TN	0587575C1	1652325C1
B	N36B	18	TN	0587576C1	1652325C1

ENG ECM FEED FUSE CONN (9254)

CONNECTOR - 1667639C1
PLUG - 1675451C1

CAV	CIR	GAUGE	COLOR	TERM
A	N14AY	10	RD	1661708C1
B	N14BA	10	RD	1661708C1

TRANS ECU FEED FUSE CONN (9255)

CONNECTOR - 1667639C1
PLUG - 1675451C1

CAV	CIR	GAUGE	COLOR	TERM
A	N14AZ	10	RD	1661708C1
D	N14DD	10	RD	1661708C1

CHK	DATE	CHANGE	REV	REFERENCE	DRAWN	NAME
CNA	11SEP03	ADDED 9103, 9104. ADDED CKT N37 TO 9102.	D	58774T	U00EDL2	12/13/11/85/8600 & 73/71/7500 CIRC DIAGRAMS
					RELEASE NO. P52778H	DATE 28JUN00
					PART NO. AF08-52376	SHEET 52

Figure 196 Connector Composites (9001), (9002), (9100), (9101), (9102), (9103), (9104), (9254), (9255)

13.53. CONNECTOR COMPOSITES (9260), (9261), (9262), (9263), (9264), (9265), (9303A), P. 53

INTERNATIONAL TRUCK AND ENGINE CORPORATION

THIS PRINT IS PROVIDED ON A RESTRICTED BASIS AND IS NOT TO BE USED IN ANY WAY DETRIMENTAL TO THE INTEREST OF INTERNATIONAL TRUCK AND ENGINE CORPORATION.

ELECTRICAL CIRCUIT DIAGRAM CHAPTER 12

CONNECTOR COMPOSITES - MATING VIEW SHOWN

BATT ECM NEGATIVE CONN (9260)

CONNECTOR - 2031522C1
PLUG - 2025432C1
LOCK - 2033927C1

CAV	CIR	GAUGE	COLOR	TERM	SEAL
A	N97-G	10	WH	2031531C1	2025426C1
B	N92-G	10	WH	2031531C1	2025426C1

CONNECTOR - 2031520C1
PLUG - 2025432C1
LOCK - 2033927C1

CAV	CIR	GAUGE	COLOR	TERM	SEAL
A	N14-G	10	WH	2025423C1	2025426C1
B	N14-GA	10	WH	2025423C1	2025426C1

BATT ECM POSITIVE CONN (9261)

CONNECTOR - 2031522C1
PLUG - 2025432C1
LOCK - 2033927C1

CAV	CIR	GAUGE	COLOR	TERM	SEAL
A	N14BA	10	RD	2031531C1	2025426C1
B	N14BB	10	RD	2031531C1	2025426C1

CONNECTOR - 2031520C1
PLUG - 2025432C1
LOCK - 2033927C1

CAV	CIR	GAUGE	COLOR	TERM	SEAL
A	N97AA	10	RD	2025423C1	2025426C1
B	N92A	10	RD	2025423C1	2025426C1

AMMETER (9262)

(LOCATED AT BATTERY)

BATTERY HARNESS

CAV	CIR	GAUGE	COLOR	TERM	SEAL
A	N26B	14	TN	2033816C1	589391C1

CONNECTOR - 1664531C1
LOCK - 1675053C1

BATTERY INTERCONNECT

CAV	CIR	GAUGE	COLOR	TERM	SEAL
A	N26B	10	TN	1687848C1	589390C1

CONNECTOR - 1669834C1
LOCK - 1675053C1

2-WAY RADIO NEGATIVE CONNECTION (9263)

(LOCATED IN BATTERY BOX)

BATTERY CABLE

CAV	CIR	GAUGE	COLOR	TERM	SEAL
A	N14-GD	10	WH	1687847C1	589390C1

CONNECTOR - 1664531C1
LOCK - 1675053C1

BATTERY HARNESS

CAV	CIR	GAUGE	COLOR	TERM	SEAL
A	N14-GD	10	WH	1687848C1	589390C1

CONNECTOR - 1669834C1
LOCK - 1675053C1

2-WAY RADIO POSITIVE CONNECTION (9264)

(LOCATED IN BATTERY BOX)

BATTERY HARNESS

CAV	CIR	GAUGE	COLOR	TERM	SEAL
A	N14HC	10	RD	1687847C1	589390C1

CONNECTOR - 1664531C1
LOCK - 1675053C1

BATTERY CABLE

CAV	CIR	GAUGE	COLOR	TERM	SEAL
A	N14HC	10	RD	1687848C1	589390C1

CONNECTOR - 1669834C1
LOCK - 1675053C1

2-WAY RADIO FEED FUSE CONNECTOR (9265)

(LOCATED IN BATTERY BOX)

CONNECTOR - 3512967C1
PLUG - 453133C1

CAV	CIR	GAUGE	COLOR	TERM	SEAL
A	N14HB	10	RD	1661708C1	N/A
B	N14HC	10	RD	1661708C1	N/A

STOP TAIL AND TURN (9303A)

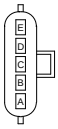

CONNECTOR - 1661375C2
PLUG - 0587579C1
LOCK - 1661376C1

CAV	CIR	GAUGE	COLOR	TERM	SEAL
A	R71	14	OR	2033816C1	0589391C1
B	R56	14	OR	2033816C1	0589391C1
C	R57	14	OR	2033816C1	0589391C1
D	R68	14	BN	2033816C1	0589391C1
E	R10-G	12	WH	2033816C1	0589390C1

CHK	DATE	CHANGE	REV	REFERENCE	DRAWN	NAME
PEC	19JAN01	PRODUCTION RELEASE.	A	P54304U	U00EDL2	42/43/44/85/8600 & 73/74/7500 CIRC DIAGRAMS
PEC	25JUN01	ADDED 9260-9303A.	B	P54634F	RELEASE NO. P52778H	DATE 28JUN00

PART NO. AE08-52376 SHEET 53

Figure 197 Connector Composites (9260), (9261), (9262), (9263), (9264), (9265), (9303A)

13.54. CONNECTOR COMPOSITES (9405), (9501), (9502), (9503), (9504), (9505), (9506), P. 54

INTERNATIONAL TRUCK AND ENGINE CORPORATION

THIS PRINT IS PROVIDED ON A RESTRICTED BASIS AND IS NOT TO BE USED IN ANY WAY DETRIMENTAL TO THE INTEREST OF INTERNATIONAL TRUCK AND ENGINE CORPORATION.

ELECTRICAL CIRCUIT DIAGRAM CHAPTER 12

CONNECTOR COMPOSITES - MATING VIEW SHOWN

THIS SPACE INTENTIONALLY LEFT BLANK

TRAILER SOCKET (9405)

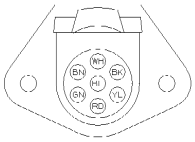

CONNECTOR 1663570C1
UOOI - 0481849C1
GASKET - 1666090C1

CAV	CIR	GAUGE	COLOR	TERM
BK	N58C	10	BK	INCLUDED
UL	N72	12	DK UL	INCLUDED
BN	N68C	10	BN	INCLUDED
GN	N57C	10	LT GN	INCLUDED
RD	N70C	10	RD	INCLUDED
WH	N10C	8	WH	INCLUDED
YL	N56C	10	YL	INCLUDED

LEFT WHEEL SPEED SENSOR (9501)

CONNECTOR - 1684261C1
PLUG - 0453133C1
LOCK - 1684263C1

CAV	CIR	GAUGE	COLOR	TERM
1	R94A	16	GY	1680205C1
2	R94B	16	OR	1680205C1

LEFT MODULATOR (9502)

CONNECTOR - 1686834C1
PLUG - 0587579C1
LOCK - 1664408C1

CAV	CIR	GAUGE	COLOR	TERM	SEAL
A	R94E	16	DK	2033819C1	1652325C1
B	R94F	16	RD	2033819C1	1652325C1
C	R94H	16	BN	2033819C1	1652325C1

RIGHT WHEEL SPEED SENSOR (9503)

CONNECTOR - 1684261C1
PLUG - 0453133C1
LOCK - 1684263C1

CAV	CIR	GAUGE	COLOR	TERM
1	R94C	16	DK BL	1680205C1
2	R94D	16	YL	1680205C1

RIGHT MODULATOR (9504)

CONNECTOR - 1686834C1
PLUG - 0587579C1
LOCK - 1664408C1

CAV	CIR	GAUGE	COLOR	TERM	SEAL
A	R94J	16	PL	2033819C1	1652325C1
B	R94K	16	LT GN	2033819C1	1652325C1
C	R94L	16	LT BL	2033819C1	1652325C1

RIGHT REAR WHEEL SPEED SENSOR (9505)

PURCHASED ASSEMBLY - 3519878C1

CAV	CIR	GAUGE	COLOR	TERM
1	[R94P]	18	BK	ASSY
2	[R94R]	18	BN	ASSY

LEFT REAR WHEEL SPEED SENSOR (9506)

PURCHASED ASSEMBLY 3519878C1

CAV	CIR	GAUGE	COLOR	TERM
1	[R94M]	18	BK	ASSY
2	[R94N]	18	BN	ASSY

CHK	DATE	CHANGE	REV	REFERENCE	DRAWN	NAME
CNA	11SEP03	DELETED 9401.	C	58771T	U00EDL2	12/13/14/85/8600 & 73/74/7500 CIRC DIAGRAMS

RELEASE NO.	DATE	PART NO.	SHEET
P52778H	28JUN00	AF08-52376	54

Figure 198 Connector Composites (9405), (9501), (9502), (9503), (9504), (9505), (9506)

13.55. CONNECTOR COMPOSITES (9507), (9508), (9509), (9510), (9511), (9512), (9513), (9514), (9515), P. 55

INTERNATIONAL TRUCK AND ENGINE CORPORATION

THIS PRINT IS PROVIDED ON A RESTRICTED BASIS AND IS NOT TO BE USED IN ANY WAY DETRIMENTAL TO THE INTEREST OF INTERNATIONAL TRUCK AND ENGINE CORPORATION.

ELECTRICAL CIRCUIT DIAGRAM CHAPTER 12

CONNECTOR COMPOSITES - MATING VIEW SHOWN

MODULATOR (9507)

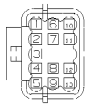

CONNECTOR - 3536987C1
PLUG - 3536991C1
LOCK - 3536988C1

CAV	CIR	GAUGE	COLOR	TERM	SEAL
1	N94AP	16	BL	3536989C1	3536990C1
2	N94AF	16	GY	3536989C1	3536990C1
3	PLUG	-	-	-	-
4	N94AH	16	LT BL	3536989C1	3536990C1
5	N94AR	16	VT	3536989C1	3536990C1
6	PLUG				
7	PLUG	-	-	-	-
8	N94A	16	BK	3536989C1	3536990C1
9	PLUG	-	-	-	-
10	N94AJ	16	YL	3536989C1	3536990C1
11	N94AU	16	GY	3536989C1	3536990C1
12	N94AC	16	DN	3536989C1	3536990C1
13	N94AS	16	TN	3536989C1	3536990C1

MODULATOR GROUND (9508)

CONNECTOR - 3537134C1

CAV	CIR	GAUGE	COLOR	TERM	SEAL
A	N94-GB	10	GY	3537134C1	3561662C1

PUMP ASSY (9509)

CONNECTOR - 3537138C1

CAV	CIR	GAUGE	COLOR	TERM
A	N94M	12	GY	3537138C1
B	N94 CA	12	GY	3537138C1

WABCO HYD ABS ECU BLACK CONN (9510)

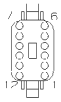

CONNECTOR - 1689500C1
PLUG - 0453133C1
LOCK - 1689420C1

CAV	CIR	GAUGE	COLOR	TERM
1	N3AI-1	18	GY	1680205C1
2	N94T	18	GY	1680205C1
3	N94G	14	GY	2034787C1
4	N94AV	18	GY	1680205C1
5	PLUG	-	-	-
6	N94Y	18	GY	1680205C1
7	N94AD	18	GY	1680205C1
8	N94V	18	GY	1680205C1
9	N94 G	14	GY	2034787C1
10	N94W	18	GY	1680205C1
11	N94U	14	GY	2034787C1
12	N3AI+1	18	DK BL	1680205C1

WABCO HYD ABS ECU GRAY CONN (9511)

CONNECTOR - 1689427C1
PLUG - 0453133C1
LOCK - 1689428C1

CAV	CIR	GAUGE	COLOR	TERM
1	PLUG			
2	N94Z	18	BK	1680205C1
3	N94AC	16	BN	1680205C1
4	N94AF	16	LT BL	1680205C1
5	N94AF	16	GY	1680205C1
6	N94AU	16	GY	1680205C1
7	N94AJ	16	YL	1680205C1
8	N94AP	16	BL	1680205C1
9	N94AR	16	VT	1680205C1
10	N94AS	16	TN	1680205C1
11	PLUG			
12	PLUG	-	-	-

WABCO HYD ABS ECU GREEN CONN (9512)

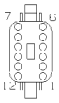

CONNECTOR - 3519423C1
PLUG - 0453133C1
LOCK - 1689428C1

CAV	CIR	GAUGE	COLOR	TERM
1	PLUG	-	-	-
2	PLUG	-	-	-
3	N94AA	16	GY	1680205C1
4	N94AT	16	DK BL	1680205C1
5	N94AM	16	GY	1680205C1
6	N94AK	16	DK BL	1680205C1
7	N94AL	16	YL	1680205C1
8	N94AN	16	OR	1680205C1
9	N94AU	16	YL	1680205C1
10	N94AB	16	OR	1680205C1
11	PLUG	-	-	-
12	PLUG			

WABCO AIR ABS ECU GRAY CONN (9513)

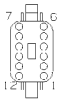

CONNECTOR - 1689427C1
PLUG - 0453133C1
LOCK - 1689420C1

CAV	CIR	GAUGE	COLOR	TERM
1	N94AA	14	PK	2034787C1
2	N94AB	14	PK	2034787C1
3	N94ATC	16	GY	1680205C1
4	N94AC(1)	10	GY	1680205C1
5	PLUG	-	-	-
6	N94AF(-)	18	GN	1680205C1
7	N94AF(+)	18	YL	1680205C1
8	PLUG	-	-	-
9	N94AC(1)	10	GY	1680205C1
10	N94AW	16	GY	1680205C1
11	N94A-G1	14	WH	2034787C1
12	N94A-G2	14	WH	2034787C1

WABCO AIR ABS ECU BLACK CONN (9514)

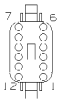

CONNECTOR - 1689500C1
PLUG - 0453133C1
LOCK - 1689428C1

CAV	CIR	GAUGE	COLOR	TERM
1	PLUG			
2	N94WA	18	GY	1680205C1
3	N94WD	18	GY	1680205C1
4	N94WF	18	GY	1680205C1
5	N94WG	18	GY	1680205C1
6	N94WH	18	GY	1680205C1
7	N94WJ	18	GY	1680205C1
8	N94WK	18	GY	1680205C1
9	N94-G3	18	WH	1680205C1
10	N94WB	18	GY	1680205C1
11	N94 G4	18	WH	1680205C1
12	PLUG			

WABCO AIR ABS ECU GREEN CONN (9515)

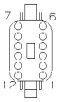

CONNECTOR - 3519423C1
PLUG - 0453133C1
LOCK - 1689420C1

CAV	CIR	GAUGE	COLOR	TERM
1	N94WL	16	GY	1680205C1
2	N94WM	16	GY	1680205C1
3	N94WS	16	GY	1680205C1
4	N94WT	16	GY	1680205C1
5	PLUG	-	-	-
6	PLUG	-	-	-
7	N94WU	16	GY	1680205C1
8	N94-G6	16	WH	1680205C1
9	N94WW	16	GY	1680205C1
10	N94WN	16	GY	1680205C1
11	N94-G7	16	WH	1680205C1
12	N94WR	16	GY	1680205C1

CHK	DATE	CHANGE	REV	REFERENCE	DRAWN	NAME
CNA	115FP03	ADDED CKT N94AW.	D	58774T	U00DAG9	12/13/14/85/8600 & 73/74/7500 CIRC DIAGRAMS
					RELEASE NO. P52778H	DATE 31MAY00 / PART NO. AF08-52376 / SHEET 55

Figure 199 Connector Composites (9507), (9508), (9509), (9510), (9511), (9512), (9513), (9514), (9515)

13.56. CONNECTOR COMPOSITES (9516), (9517), (9518), (9519), P. 56

INTERNATIONAL TRUCK AND ENGINE CORPORATION

THIS PRINT IS PROVIDED ON A RESTRICTED BASIS AND
IS NOT TO BE USED IN ANY WAY DETRIMENTAL TO THE
INTEREST OF INTERNATIONAL TRUCK AND ENGINE CORPORATION.

ELECTRICAL CIRCUIT DIAGRAM CHAPTER 12

CONNECTOR COMPOSITES - MATING VIEW SHOWN

WABCO LEFT REAR AIR
ABS WHEEL SPEED SENSOR
(9516)

PURCHASED
ASSEMBLY P/N
3519878C1

CAV	CIR	GAUGE	COLOR
1	R94AWL	18	GY
2	R94AWM	18	GY

WABCO RIGHT REAR AIR
ABS WHEEL SPEED SENSOR
(9517)

PURCHASED
ASSEMBLY P/N
3519878C1

CAV	CIR	GAUGE	COLOR
1	R94AWS	18	GY
2	R94AWT	18	GY

WABCO LEFT REAR AIR
ABS MODULATOR
(9518)

CONNECTOR: 3519879C1

CAV	CIR	GAUGE	COLOR
1	R94A-G7	18	GN
2	R94AWN	18	BK
3	R94AWR	18	BN

WABCO RIGHT REAR AIR
ABS MODULATOR
(9519)

CONNECTOR: 3519879C1

CAV	CIR	GAUGE	COLOR
1	R94A-G6	18	GN
2	R94AWH	18	BK
3	R94AWW	18	BN

CHK	DATE	CHANGE	REV	REFERENCE	DRAWN	NAME
		RMVD 9520A, 9520B,	C	56507K	U00DAG9	42/43/44/85/8600 & 73/74/7500 CIRC DIAGRAMS
		9520D & 9520E			RELEASE NO. P52778H	DATE 28JUN00 · PART NO. AF08-52376 · SHEET 56

Figure 200 Connector Composites (9516), (9517), (9518), (9519)

13.57. CONNECTOR COMPOSITE (9700), P. 57

INTERNATIONAL TRUCK AND ENGINE CORPORATION

THIS PRINT IS PROVIDED ON A RESTRICTED BASIS AND IS NOT TO BE USED IN ANY WAY DETRIMENTAL TO THE INTEREST OF INTERNATIONAL TRUCK AND ENGINE CORPORATION.

ELECTRICAL CIRCUIT DIAGRAM CHAPTER 12

CONNECTOR COMPOSITES - MATING VIEW SHOWN

THIS SPACE LEFT INTENTIONALLY BLANK

(CHASSIS SIDE)

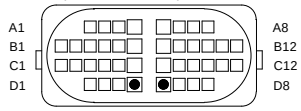

CONNECTOR - 3535310C1
PLUG1 - 3535425C1 (ALL CAVITIES EXCEPT THOSE LISTED FOR PLUG2)
PLUG2 - 3535938C1 (CAVITIES A4,A5,B6, B7,C6,& C7 ONLY)
LOCKS - 3535311C1 (2)
3535312C1 (1)

CHASSIS/DASH INTERCONNECT (9700)

(DASH SIDE)

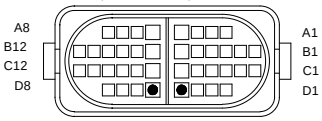

CONNECTOR - 3535306C1
PLUG1 - 3535425C1 (ALL CAVITIES EXCEPT THOSE LISTED FOR PLUG2)
PLUG2 - 3535938C1 (CAVITIES A4,A5,B6, B7,C6,& C7 ONLY)
LOCKS - 3535307C1 (2)
3535309C1 (1)

CONT. ON NEXT PAGE

CHK	DATE	CHANGE	REV	REFERENCE	DRAWN	NAME
PEC	19JAN01	PRODUCTION RELEASE.	A	P54304U	U00DAG9	42/43/44/85/8600 & 73/74/7500 CIRC DIAGRAMS
PEC	25JUN01	ADDED 9700.	B	P54634F	RELEASE NO. P52778H	DATE 28JUN00 / PART NO. AE08-52376 / SHEET 57

Figure 201 Connector Composite (9700)

13.58. CONNECTOR COMPOSITE (9700), P. 58

INTERNATIONAL TRUCK AND ENGINE CORPORATION

THIS PRINT IS PROVIDED ON A RESTRICTED BASIS AND IS NOT TO BE USED IN ANY WAY DETRIMENTAL TO THE INTEREST OF INTERNATIONAL TRUCK AND ENGINE CORPORATION.

ELECTRICAL CIRCUIT DIAGRAM CHAPTER 12

CONNECTOR COMPOSITES - MATING VIEW SHOWN

(CHASSIS SIDE)

CAV	CIR	GAUGE	COLOR	TERM	SEAL	NOTES
A1	N32A	18	TN	3535305C1	3535424C1	
A1	N104CA	16	DK BL	3535305C1	3535424C1	W/REMOTE START/STOP
A2	N32	18	TN	3535305C1	3535424C1	
A2	N50CA	16	GY	3535305C1	3535424C1	W/REMOTE START/STOP
A3	N94A	16	GY	3535305C1	3535424C1	W/AIR ABS
A3	N94AM	18	GY	3535305C1	3535424C1	W/HYD ABS
A3	N94WJ	18	GY	3535305C1	3535310C1	W/WABCO AIR
A4	N71	14	OR	3535934C1	3535937C1	
A5	N56	14	OR	3535934C1	3535937C1	
A6	N94B	16	OR	3535305C1	3535424C1	W/AIR ABS
A6	N94AN	16	OR	3535305C1	3535424C1	W/HYD ABS
A6	N94WK	18	GY	3535305C1	3535310C1	W/WABCO AIR
A7	N94C	16	DK BL	3535305C1	3535424C1	W/AIR ABS
A7	N94AT	16	DK BL	3535305C1	3535424C1	W/HYD ABS
A7	N94WG	18	GY	3535305C1	3535310C1	W/WABCO AIR
A8	N94D	16	YL	3535305C1	3535424C1	W/AIR ABS
A8	N94AU	16	YL	3535305C1	3535424C1	W/HYD ABS
A8	N94WH	18	GY	3535305C1	3535310C1	W/WABCO AIR
B1	N94E	16	BK	3535305C1	3535424C1	W/AIR ABS
B1	N94T	18	GY	3535305C1	3535424C1	W/HYD ABS
B1	N94WA	18	GY	3535305C1	3535310C1	W/WABCO AIR
B2	N94F	16	RD	3535305C1	3535424C1	W/AIR ABS
B2	N94AD	18	GY	3535305C1	3535424C1	W/HYD ABS
B2	N94-G4	18	WH	3535305C1	3535310C1	W/WABCO AIR
B3	N94H	16	BN	3535305C1	3535424C1	W/AIR ABS
B3	N94Y	18	GY	3535305C1	3535424C1	W/HYD ABS
B3	N94WB	18	GY	3535305C1	3535310C1	W/WABCO AIR
B4	N94J	16	PL	3535305C1	3535424C1	W/AIR ABS
B4	N94WE	18	GY	3535305C1	3535310C1	W/WABCO AIR
B5	N94K	16	LT GN	3535305C1	3535424C1	W/AIR ABS
B5	N94V	18	GY	3535305C1	3535424C1	W/HYD ABS
B5	N94-G3	18	WH	3535305C1	3535310C1	W/WABCO AIR
B6	N57	14	OR	3535934C1	3535937C1	
B7	N68	14	BN	3535934C1	3535937C1	
B8	N94L	16	LT BL	3535305C1	3535424C1	
B8	N44N	18	GY	3535305C1	3535424C1	
B8	N94WD	18	GY	3535305C1	3535310C1	W/WABCO AIR
B9	N59-GA	18	WH	3535305C1	3535310C1	
B9	N19	16	GY	3535305C1	3535424C1	
B9	N19A	16	GY	3535305C1	3535424C1	
B9	N44M	18	GY	3535305C1	3535424C1	
B10	N59J	18	GY	3535305C1	3535424C1	
B10	N59U	18	GY	3535305C1	3535424C1	
B11	*	18	TN	3535305C1	3535424C1	
B12	**	16	GY	3535305C1	3535424C1	
C1	N59K	18	GY	3535305C1	3535424C1	
C1	N59V	18	GY	3535305C1	3535424C1	
C2	N59L	18	GY	3535305C1	3535424C1	
C2	N59W	18	GY	3535305C1	3535424C1	
C3	N94BD	16	BN	3535305C1	3535424C1	W/AIR ABS
C3	N3A(-)	18	GY	3535305C1	3535424C1	W/HYD ABS
C3	N94C(+)	18	GY	3535305C1	3535310C1	W/WABCO AIR
C4	N94BE	16	YL	3535305C1	3535424C1	W/AIR ABS
C4	N3A(+)	18	DK BL	3535305C1	3535424C1	W/HYD ABS
C4	N94C(-)	18	GY	3535305C1	3535310C1	W/WABCO AIR
C5	N59M	18	GY	3535305C1	3535424C1	
C5	N59X	18	GY	3535305C1	3535424C1	
C6	N10-G	14	WH	3535934C1	3535937C1	
C7	N59H	14	GY	3535934C1	3535937C1	
C7	N59T	14	GY	3535934C1	3548945C1	
C8	***	18	GY	3535305C1	3535424C1	
C9	N56J	16	OR	3535305C1	3535424C1	
C9	N37D	18	TN	3535305C1	3535424C1	
C10	****	18	TN	3535305C1	3535424C1	
C11	PLUG	-	-	-	-	
C12	N49A	18	GY	3535305C1	3535424C1	
D1	N49B	18	GY	3535305C1	3535424C1	
D2	N87BB	18	GY	3535305C1	3535424C1	
D2	N87DB	18	GY	3535305C1	3535424C1	
D3	N87KB	18	GY	3535305C1	3535424C1	
D3	N87MB	18	GY	3535305C1	3535424C1	
D6	N87CA	18	GY	3535305C1	3535424C1	
D6	N87EA	18	GY	3535305C1	3535424C1	
D7	N71N	18	OR	3535305C1	3535424C1	
D7	N19-G	16	WH	3535305C1	3535424C1	
D7	N19-GA	16	WH	3535305C1	3535424C1	
D8	N9	18	GY	3535305C1	3535424C1	

CHASSIS/DASH INTERCONNECT (9700)

CONT. FROM PREVIOS PAGE

(DASH SIDE)

CAV	CIR	GAUGE	COLOR	TERM	SEAL	NOTES
A1	J32	18	TN	3535303C1	3535424C1	
A1	J104C	18	DK BL	3535303C1	3535424C1	W/REMOTE START/STOP
A2	J32A	18	TN	3535303C1	3535424C1	
A2	J59	16	GY	3535930C1	3535936C1	W/REMOTE START/STOP
A3	J94AB	18	GY	3535303C1	3535424C1	W/AIR ABS
A3	J94HM	18	GY	3535303C1	3535424C1	W/HYD ABS
A4	J71A	18	OR	3535930C1	3535936C1	
A5	J56B	16	OR	3535930C1	3535936C1	
A6	J94AA	18	OR	3535303C1	3535424C1	W/AIR ABS
A6	J94HN	18	OR	3535303C1	3535424C1	W/HYD ABS
A7	J94AL	18	DK BL	3535303C1	3535424C1	W/AIR ABS
A7	J94HT	18	DK BL	3535303C1	3535424C1	W/HYD ABS
A8	J94AK	18	YL	3535303C1	3535424C1	W/AIR ABS
A8	J94HU	18	YL	3535303C1	3535424C1	W/HYD ABS
B1	J94AC	18	BK	3535303C1	3535424C1	W/AIR ABS
B1	J94HD	18	GY	3535303C1	3535424C1	W/HYD ABS
B2	J94AD	18	RD	3535303C1	3535424C1	W/AIR ABS
B2	J94HV	18	GY	3535303C1	3535424C1	W/HYD ABS
B3	J94AE	18	BN	3535303C1	3535424C1	W/AIR ABS
B3	J94HX	18	GY	3535303C1	3535424C1	W/HYD ABS
B4	J94AF	18	PL	3535303C1	3535424C1	W/AIR ABS
B5	J94AH	18	LT GN	3535303C1	3535424C1	W/AIR ABS
B5	J94HP	18	GY	3535303C1	3535424C1	W/HYD ABS
B6	J57B	16	OR	3535930C1	3535936C1	
B7	J68B	14	BN	3535931C1	3535937C1	
B8	J94AJ	18	GY	3535303C1	3535424C1	
B8	J44N	18	GY	3535303C1	3535424C1	
B9	N59-GA	18	WH	3535303C1	3535424C1	
B9	J44M	18	GY	3535303C1	3535424C1	
B10	J59A	18	GY	3535303C1	3535424C1	
B11	J36A	18	TN	3535303C1	3535424C1	
B12	J39A	16	GY	3535303C1	3535424C1	
C1	J59B	18	GY	3535303C1	3535424C1	
C2	J59C	18	GY	3535303C1	3535424C1	
C3	J94ATC	18	GY	3535303C1	3535424C1	W/AIR ABS
C3	J3C(-)	18	GY	3535303C1	3535424C1	W/HYD ABS
C4	J94ATR	18	GY	3535303C1	3535424C1	W/AIR ABS
C4	J3C(+)	18	DK BL	3535303C1	3535424C1	W/HYD ABS
C5	J59D	18	GY	3535303C1	3535424C1	
C6	J11-GA	14	WH	3535931C1	3535937C1	
C7	J59E	14	GY	3535931C1	3535937C1	
C8	J39B	16	GY	3535303C1	3535424C1	
C9	J37	16	TN	3535303C1	3535424C1	
C10	J38B	18	TN	3535303C1	3535424C1	
C11	PLUG	-	-	-	-	
C12	J49A	18	GY	3535303C1	3535424C1	
D1	J49B	18	GY	3535303C1	3535424C1	
D2	J87BB	18	GY	3535303C1	3535424C1	
D3	J87KB	18	GY	3535303C1	3535424C1	
D6	J87CA	18	GY	3535303C1	3535424C1	
D7	J71N	18	OR	3535303C1	3535424C1	
D8	J9G	18	GY	3535303C1	3535424C1	

* - FOR LEFT SIDE MTD FUEL TANKS, CIR NUM IS N36;
FOR RIGHT SIDE MTD FUEL TANKS, CIR NUM IS N36A;
FOR DUAL FUEL TANKS, CIR NUM IS N36B;
FOR AF MTD FUEL TANKS, CIR NUM IS N36C;

** - FOR LEFT SIDE MTD AIR DRYERS, CIR NUM IS N39B;
FOR RIGHT SIDE MTD AIR DRYERS, CIR NUM IS N39C;

*** - FOR LEFT SIDE MTD DRAIN VALVES, CIR NUM IS N39;
FOR RIGHT SIDE MTD DRAIN VALVES, CIR NUM IS N39A;

**** - FOR SINGLE TANK, CIR NUM IS N38;
FOR DUAL TANKS, CIR NUM IS N38H;

CHK	DATE	CHANGE	REV	REFERENCE	DRAWN	NAME
		ADDED CIRC EACH CHART	A	56507K	UOODLCK	42/43/44/85/8600 & 73/74/7500 CIRC DIAGRAMS
CNA	10JUL03	LAS/MULTIPLE CHANGES	B	57097S	RELEASE NO. P54634F	DATE 14JUN01 / PART NO. AE08-52376 / SHEET 58

Figure 202 Connector Composite (9700)

13.59. CONNECTOR COMPOSITES (9715), (9715A), (9715B), P. 59

INTERNATIONAL TRUCK AND ENGINE CORPORATION

THIS PRINT IS PROVIDED ON A RESTRICTED BASIS AND
IS NOT TO BE USED IN ANY WAY DETRIMENTAL TO THE
INTEREST OF INTERNATIONAL TRUCK AND ENGINE CORPORATION.

ELECTRICAL CIRCUIT DIAGRAM CHAPTER 12

CONNECTOR COMPOSITES - MATING VIEW SHOWN

TRAILER
SOCKET #1
(9715)

CONNECTOR - 1667733C1
PLUG - 1675451C1
LOCK - 1667734C1

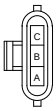

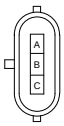

CONNECTOR - 1667732C1
PLUG - 1675451C1
LOCK - 1667734C1

W/EOF OR BOC TRAILER SOCKET &
EOF BODY BUILDER CONNECTOR

CAV	CIR	GAUGE	COLOR	TERM	SEAL
A	N70D	10	RD	1667737C1	1667735C1
B	N68D	10	BN	1667737C1	1667735C1
C	N94D	10	GY	1667737C1	1667735C1

NOT W/BOC BODY BUILDER CONNECTORS

CAV	CIR	GAUGE	COLOR	TERM	SEAL
A	J70A	10	OR	2025425C1	1667735C1
B	J68F	12	BN	2025424C1	1671603C1
C	J94BC	10	GY	2025425C1	1667735C1

W/BOC TRAILER SOCKET

CAV	CIR	GAUGE	COLOR	TERM	SEAL
A	N70	10	RD	1667737C1	1667735C1
B	N68	10	BN	1667737C1	1667735C1
C	N94	10	DK BL	1667737C1	1667735C1

W/BOC BODY BUILDER CONNECTORS

CAV	CIR	GAUGE	COLOR	TERM	SEAL
A	J70A	10	OR	2025425C1	1667735C1
B	J68F	16	BN	1667736C1	1664232C1
C	J94BC	10	GY	2025425C1	1667735C1

W/BOC AND AUX BOC TRAILER SOCKET

CAV	CIR	GAUGE	COLOR	TERM	SEAL
A	N70A	10	RD	1667737C1	1667735C1
B	N68A	10	BN	1667737C1	1667735C1
C	N94A	10	DK BL	1667737C1	1667735C1

TRAILER
SOCKET #1
(9715A)

CONNECTOR - 1667733C1
PLUG - 1675451C1
LOCK - 1667734C1

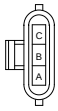

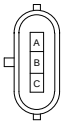

CONNECTOR - 1667732C1
PLUG - 1675451C1
LOCK - 1667734C1

W/EOF TRAILER SOCKET OR
EOF BODY BUILDER CONNECTOR

CAV	CIR	GAUGE	COLOR	TERM	SEAL
A	N70D	10	RD	1667737C1	1667735C1
B	N68D	10	BN	1667737C1	1667735C1
C	N94D	10	GY	1667737C1	1667735C1

W/EOF TRAILER SOCKET

CAV	CIR	GAUGE	COLOR	TERM	SEAL
A	R70A	10	RD	2025425C1	1667735C1
B	R68A	10	BN	2025425C1	1667735C1
C	R94A	10	DK BL	2025425C1	1667735C1

W/BOC TRAILER SOCKET AND
EOF BODY BUILDER CONNECTOR

CAV	CIR	GAUGE	COLOR	TERM	SEAL
A	N70F	10	RD	1667737C1	1667735C1
B	N68F	10	BN	1667737C1	1667735C1
C	N94F	10	GY	1667737C1	1667735C1

W/EOF BODY BUILDER CONNECTOR

CAV	CIR	GAUGE	COLOR	TERM	SEAL
A	R70	10	RD	2025425C1	1667735C1
B	R68	10	BN	2025425C1	1667735C1
C	R94	10	GY	2025425C1	1667735C1

TRAILER
SOCKET #1
(9715B)

CONNECTOR - 1667733C1
PLUG - 1675451C1
LOCK - 1667734C1

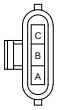

CAV	CIR	GAUGE	COLOR	TERM	SEAL
A	R70	10	RD	1667737C1	1667735C1
B	R68	10	BN	1667737C1	1667735C1
C	R94	10	GY	1667737C1	1667735C1

BOC - BACK OF CAB
EOF - END OF FRAME

CHK	DATE	CHANGE	REV	REFERENCE	DRAWN	NAME		
					U00DLCK	42/43/44/85/8600 & 73/74/7500 CIRC DIAGRAMS		
					RELEASE NO. P54634F	DATE 14JUN01	PART NO. AE08-52376	SHEET 59

Figure 203 Connector Composites (9715), (9715A), (9715B)

13.60. CONNECTOR COMPOSITES (9716), (9716A), (9716B), P. 60

INTERNATIONAL TRUCK AND ENGINE CORPORATION

THIS PRINT IS PROVIDED ON A RESTRICTED BASIS AND IS NOT TO BE USED IN ANY WAY DETRIMENTAL TO THE INTEREST OF INTERNATIONAL TRUCK AND ENGINE CORPORATION.

ELECTRICAL CIRCUIT DIAGRAM CHAPTER 12

CONNECTOR COMPOSITES - MATING VIEW SHOWN

TRAILER SOCKET #2 (9716)

CONNECTOR - 1667733C1
PLUG - 1675451C1
LOCK - 1667734C1

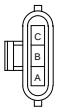

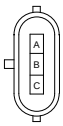

CONNECTOR - 1667732C1
PLUG - 1675451C1
LOCK - 1667734C1

NOT W/BOC BODY BUILDER CONNECTORS

CAV	CIR	GAUGE	COLOR	TERM	SEAL
A	J58F	12	BN	1667737C1	1671603C1
B	J56C	12	OR	1667737C1	1671603C1
C	J57C	12	OR	1667737C1	1671603C1

W/BOC BODY BUILDER CONNECTORS

CAV	CIR	GAUGE	COLOR	TERM	SEAL
A	J58F	16	BN	1667738C1	1664232C1
B	J56C	12	OR	1667737C1	1671603C1
C	J57C	12	OR	1667737C1	1671603C1

W/EOF OR BOC TRAILER SOCKET & EOF BODY BUILDER CONNECTOR

CAV	CIR	GAUGE	COLOR	TERM	SEAL
A	N58D	10	BN	2025425C1	1667735C1
B	N56D	10	YL	2025425C1	1667735C1
C	N57D	10	LT GN	2025425C1	1667735C1

W/BOC TRAILER SOCKET

CAV	CIR	GAUGE	COLOR	TERM	SEAL
A	N58	10	BK	2025425C1	1667735C1
B	N56	10	YL	2025425C1	1667735C1
C	N57	10	LT GN	2025425C1	1667735C1

W/BOC AND AUX BOC TRAILER SOCKET

CAV	CIR	GAUGE	COLOR	TERM	SEAL
A	N58A	10	BK	2025425C1	1667735C1
B	N56A	10	YL	2025425C1	1667735C1
C	N57A	10	LT GN	2025425C1	1667735C1

TRAILER SOCKET #2 (9716A)

CONNECTOR - 1667733C1
PLUG - 1675451C1
LOCK - 1667734C1

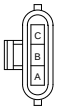

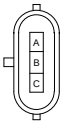

CONNECTOR - 1667732C1
PLUG - 1675451C1
LOCK - 1667734C1

W/EOF TRAILER SOCKET

CAV	CIR	GAUGE	COLOR	TERM	SEAL
A	R58A	10	BK	1667737C1	1667735C1
B	R56A	10	YL	1667737C1	1667735C1
C	R57A	10	LT GN	1667737C1	1667735C1

W/EOF BODY BUILDER CONNECTOR

CAV	CIR	GAUGE	COLOR	TERM	SEAL
A	R58	10	BN	1667737C1	1667735C1
B	R56	10	YL	1667737C1	1667735C1
C	R57	10	LT GN	1667737C1	1667735C1

W/EOF TRAILER SOCKET OR EOF BODY BUILDER CONNECTOR

CAV	CIR	GAUGE	COLOR	TERM	SEAL
A	N58D	10	BN	2025425C1	1667735C1
B	N56D	10	YL	2025425C1	1667735C1
C	N57D	10	LT GN	2025425C1	1667735C1

W/BOC TRAILER SOCKET AND EOF BODY BUILDER CONNECTOR

CAV	CIR	GAUGE	COLOR	TERM	SEAL
A	N58F	10	BK	2025425C1	1667735C1
B	N56F	10	YL	2025425C1	1667735C1
C	N57F	10	LT GN	2025425C1	1667735C1

TRAILER SOCKET #2 (9716B)

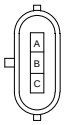

CONNECTOR - 1667732C1
PLUG - 1675451C1
LOCK - 1667734C1

CAV	CIR	GAUGE	COLOR	TERM	SEAL
A	R58	10	BN	2025425C1	1667735C1
B	R56	10	YL	2025425C1	1667735C1
C	R57	10	LT GN	2025425C1	1667735C1

BOC - BACK OF CAB
EOF - END OF FRAME

CHK	DATE	CHANGE	REV	REFERENCE	DRAWN	NAME
					U00DLCK	42/43/44/85/8600 & 73/74/7500 CIRC DIAGRAMS
					RELEASE NO. P54634F	DATE 14JUN01 · PART NO. AE08-52376 · SHEET 60

Figure 204 Connector Composites (9716), (9716A), (9716B)

13.61. CONNECTOR COMPOSITES (9717A), (9717B), P. 61

INTERNATIONAL TRUCK AND ENGINE CORPORATION

THIS PRINT IS PROVIDED ON A RESTRICTED BASIS AND IS NOT TO BE USED IN ANY WAY DETRIMENTAL TO THE INTEREST OF INTERNATIONAL TRUCK AND ENGINE CORPORATION.

ELECTRICAL CIRCUIT DIAGRAM CHAPTER 12

CONNECTOR COMPOSITES - MATING VIEW SHOWN

THIS SPACE INTENTIONALLY LEFT BLANK

TRAILER SOCKET GROUND (9717A)

CONNECTOR - 3517441C1

CONNECTOR - 3517817C1

W/EOF OR BOC TRAILER SOCKET OR EOF BODY BUILDER CONNECTOR

CAV	CIR	GAUGE	COLOR	TERM
A	N10D	8	WH	3517439C1

W/BOC TRAILER SOCKET AND EOF BODY BUILDER CONNECTOR

CAV	CIR	GAUGE	COLOR	TERM
A	N10F	8	WH	3517439C1

W/EOF TRAILER SOCKET

CAV	CIR	GAUGE	COLOR	TERM
A	R10A	8	WH	3517818C1

W/EOF BODY BUILDER CONNECTOR

CAV	CIR	GAUGE	COLOR	TERM
A	R10	8	WH	3517818C1

TRAILER SOCKET GROUND (9717B)

CONNECTOR - 3517441C1

CAV	CIR	GAUGE	COLOR	TERM
A	R10	8	WH	3517439C1

BOC - BACK OF CAB
EOF - END OF FRAME

CHK	DATE	CHANGE	REV	REFERENCE	DRAWN	NAME
CNA	11SEP03	REMOVED 9717.	A	58774T	UOODLCK	42/43/44/85/8600 & 73/74/7500 CIRC DIAGRAMS
					RELEASE NO. P54634F	DATE 14JUN01 / PART NO. AF08-52376 / SHEET 61

Figure 205 Connector Composites (9717A), (9717B)

13.62. CONNECTOR COMPOSITES (9718), (9719), (9720), (9733), (9734), (9736), (9754), (9762), (9763), P. 62

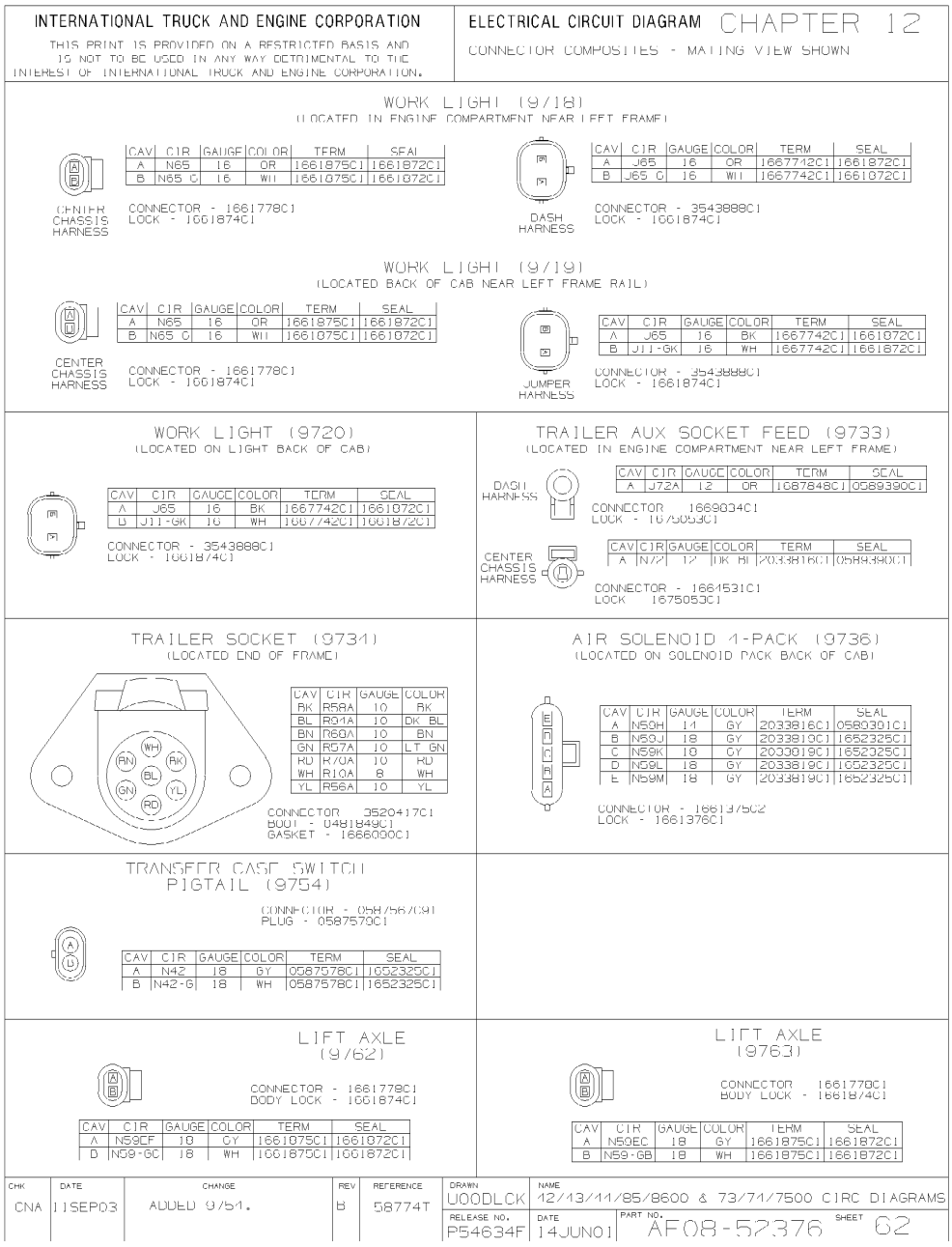

Figure 206 Connector Composites (9718), (9719), (9720), (9733), (9734), (9736), (9754), (9762), (9763)

13.63. CONNECTOR COMPOSITES (9777), (9778), (9800), P. 63

INTERNATIONAL TRUCK AND ENGINE CORPORATION

THIS PRINT IS PROVIDED ON A RESTRICTED BASIS AND IS NOT TO BE USED IN ANY WAY DETRIMENTAL TO THE INTEREST OF INTERNATIONAL TRUCK AND ENGINE CORPORATION.

ELECTRICAL CIRCUIT DIAGRAM CHAPTER 12

CONNECTOR COMPOSITES - MATING VIEW SHOWN

SAAR (9777)

(LOCATED ON FRAME RAIL)

CONNECTOR - 1661410C1
SEAL - 1661872C1

CAV	CIR	GAUGE	COLOR	TERM
A	N44N	18	GY	1661875C1
B	N44-GB	18	WH	1661875C1
C	N44M	18	GY	1661875C1

RLMOTL START/STOP BODY BUILDER CONNECTION (9778)

(LOCATED ON FRAME RAIL)

CONNECTOR - 0587567C91
SEAL - 1652425C1

CAV	CIR	GAUGE	COLOR	TERMINAL
A	N59CA	16	GY	0587575C1
B	N104CA	16	DK BL	0587575C1

CENTER CHASSIS/REAR CHASSIS (9800)

(LOCATED BY LEFT FRAME RAIL NEAR REAR AXLES)

CENTER CHASSIS HARNESS

CONNECTOR - 3558020C1
LOCK - 3558056C1
PLUG - 3532129C1

CAV	CIR	GAUGE	COLOR	TERM	SEAL	NOTES
1	N71	14	OR	3559035C1	3509903C1	
2	N66	14	OR	3559035C1	3509903C1	
3	N57	14	OR	3559035C1	3509903C1	
4	N68	14	BN	3559035C1	3509903C1	
5	N32A	18	TN	3509874C1	3509903C1	W/2 AXLE TEMPS
5	N36C	18	TN	3509874C1	3509903C1	W/AF FUEL TANK
6	N32	18	TN	3509874C1	3509903C1	
7	N49B	18	GY	3509874C1	3509903C1	
8	N49A	18	GY	3509874C1	3509903C1	
9	N49-G	18	WH	3509874C1	3509903C1	
10	N9G	18	GY	3509874C1	3509903C1	
11	N9F	18	GY	3509874C1	3509903C1	W/1 AXLE TEMP
11	N9H	18	GY	3509874C1	3509903C1	W/2 AXLE TEMP
12	N10 CA	12	WH	3559035C1	3509903C1	
13	N94AA	16	GY	3559035C1	3509903C1	W/HYD ABS
13	N94A	16	GY	3559035C1	3509903C1	W/AIR ABS
13	N94WL	16	GY	3559035C1	3509903C1	W/WABCO AIR
14	N94AB	16	OR	3559035C1	3509903C1	W/HYD ABS
14	N94B	16	OR	3559035C1	3509903C1	W/AIR ABS
14	N94WM	16	GY	3559035C1	3509903C1	W/WABCO AIR
15	N94AK	16	DK BL	3559035C1	3509903C1	W/HYD ABS
15	N94C	16	DK BL	3559035C1	3509903C1	W/AIR ABS
15	N94WS	16	GY	3559035C1	3509903C1	W/WABCO AIR
16	N94AL	16	YL	3559035C1	3509903C1	W/HYD ABS
16	N94D	16	YL	3559035C1	3509903C1	W/AIR ABS
16	N94WT	16	GY	3559035C1	3509903C1	W/WABCO AIR
17	N94E	16	BK	3559035C1	3509903C1	
17	N94WN	16	GY	3559035C1	3509903C1	W/WABCO AIR
18	N94F	16	RD	3559035C1	3509903C1	
18	N94-G7	16	WH	3559035C1	3509903C1	W/WABCO AIR
19	N94H	16	BN	3559035C1	3509903C1	
19	N94WR	16	GY	3559035C1	3509903C1	W/WABCO AIR
20	N94J	16	PL	3559035C1	3509903C1	
20	N94WU	16	GY	3559035C1	3509903C1	W/WABCO AIR
21	N94K	16	LT GN	3559035C1	3509903C1	
21	N94-G6	16	WH	3559035C1	3509903C1	W/WABCO AIR
22	N94L	16	LT BL	3559035C1	3509903C1	
22	N94WW	16	GY	3559035C1	3509903C1	W/WABCO AIR
23	N94BD	16	BN	3559035C1	3509903C1	
23	N94WX	18	GY	3509874C1	3509903C1	W/WABCO AIR
24	N94BF	16	YL	3559035C1	3509903C1	
24	N94WZ	18	GY	3509874C1	3509903C1	W/WABCO AIR

REAR CHASSIS HARNESS

CONNECTOR - 3558022C1
SEAL - 3559047C1
LOCK - 3558056C1
PLUG - 3532129C1

CAV	CIR	GAUGE	COLOR	TERM	SEAL	NOTES
1	R71	14	OR	3559037C1	3509903C1	
2	R66	14	OR	3559037C1	3509903C1	
3	R57	14	OR	3559037C1	3509903C1	
4	R68	14	BN	3559037C1	3509903C1	
5	R32A	18	TN	3559036C1	3509903C1	W/2 AXLE TEMPS
5	R36	18	TN	3559036C1	3509903C1	W/AF FUEL TANKS
6	R32	18	TN	3559036C1	3509903C1	
7	R49	18	GY	3559036C1	3509903C1	
8	R10A	18	GY	3559036C1	3509903C1	
9	R49 CA	18	WH	3559036C1	3509903C1	W/1 DIFF LOCK
9	R10-GB	18	WH	3559036C1	3509903C1	W/2 DIFF LOCK
10	R9D	18	GY	3559036C1	3509903C1	
11	R9C	18	GY	3559036C1	3509903C1	W/1 AXLE TEMP
11	R9B	18	GY	3559036C1	3509903C1	W/2 AXLE TEMPS
12	R10 C	12	WH	3559037C1	3509903C1	
13	(R94MJ)	18	BK	3559036C1	3509903C1	W/HYD ABS
13	R94A	16	GY	3559037C1	3509903C1	W/AIR ABS
13	R94WI	18	GY	3559036C1	3509903C1	W/WABCO AIR
14	(R94NJ)	18	BN	3559036C1	3509903C1	W/HYD ABS
14	R94B	16	OR	3559037C1	3509903C1	W/AIR ABS
14	R94WM	18	GY	3559036C1	3509903C1	W/WABCO AIR
15	(R94PJ)	18	BK	3559036C1	3509903C1	W/HYD ABS
15	R94C	16	DK BL	3559037C1	3509903C1	W/AIR ABS
15	R94WS	18	GY	3559036C1	3509903C1	W/WABCO AIR
16	(R94RJ)	18	BN	3559036C1	3509903C1	W/HYD ABS
16	R94D	16	YL	3559037C1	3509903C1	W/AIR ABS
16	R94WT	18	GY	3559036C1	3509903C1	W/WABCO AIR
17	R94E	16	BK	3559037C1	3509903C1	
17	R94WN	18	BK	3559036C1	3509903C1	W/WABCO AIR
18	R94F	16	RD	3559037C1	3509903C1	
18	R94-G7	18	GN	3559036C1	3509903C1	W/WABCO AIR
19	R94H	16	BN	3559037C1	3509903C1	
19	R94WR	18	BN	3559036C1	3509903C1	W/WABCO AIR
20	R94J	16	PL	3559037C1	3509903C1	
20	R94WU	18	DK	3559036C1	3509903C1	W/WABCO AIR
21	R94K	16	LT GN	3559037C1	3509903C1	
21	R94-G6	18	GN	3559036C1	3509903C1	W/WABCO AIR
22	R94L	16	LT BL	3559037C1	3509903C1	
22	R94WW	18	BN	3559036C1	3509903C1	W/WABCO AIR
23	R94DD	16	DN	3559037C1	3509903C1	
23	R94WX	18	GY	3559036C1	3509903C1	W/WABCO AIR
24	R94BF	16	YL	3559037C1	3509903C1	
24	R94WZ	18	GY	3559036C1	3509903C1	W/WABCO AIR

CHK	DATE	CHANGE	REV	REFERENCE
		CHNGED CIRC. IN 9800	B	5650/K
CNA	10JUL03	LAS97/ADDED (9778)	C	5/09/5

DRAWN	NAME
U00DLCK	42/43/44/85/8600 & 73/74/7500 CIRC DIAGRAMS

RELEASE NO.	DATE	PART NO.	SHEET
P54634F	14JUN01	AF08-52376	63

Figure 207 Connector Composites (9777), (9778), (9800)

13.64. CONNECTOR COMPOSITES (9870), (9871), (9811), (9812), (9814), (9815), (9830), (9850), (9860), (9865M), (9900), (9900A), (9913A), P. 64

INTERNATIONAL TRUCK AND ENGINE CORPORATION

THIS PRINT IS PROVIDED ON A RESTRICTED BASIS AND IS NOT TO BE USED IN ANY WAY DETRIMENTAL TO THE INTEREST OF INTERNATIONAL TRUCK AND ENGINE CORPORATION.

ELECTRICAL CIRCUIT DIAGRAM CHAPTER 12

CONNECTOR COMPOSITES - MATING VIEW SHOWN

AIR SUSPENSION DUMP VALVE 4X2 (9870)

(LOCATED NEAR REAR AXLE ON CROSSMEMBER)

CONNECTOR - 0587568C91
SEAL - 1652325C1
TERMINAL - 0587576C1

CAV	CIR	GAUGE	COLOR
A	N61A	18	GY
B	N61-GA	18	GY

AIR SUSPENSION DUMP VALVE 6X4 (9871)

(LOCATED NEAR REAR AXLE ON CROSSMEMBER)

CONNECTOR - 0587568C91
SEAL - 1652325C1
TERMINAL - 0587576C1

CAV	CIR	GAUGE	COLOR
A	N61AA	18	GY
B	N61-GB	18	GY

FR AXLE TEMP SENDER (9811)

(LOCATED ON AXLE)

CAV	CIR	GAUGE	COLOR	TERM	SEAL
1	R32A	18	TN	3536865C1	3536866C1
2	R9A	18	GY	3536865C1	3536866C1

CONNECTOR - 3536864C1

RR AXLE TEMP SENDER (9812)

(LOCATED ON AXLE)

CAV	CIR	GAUGE	COLOR	TERM	SEAL	NOTES
1	R32	18	TN	3536865C1	3536866C1	
2	R9	18	GY	3536865C1	3536866C1	W/TANDEM
2	R9C	18	GY	3536865C1	3536866C1	N/TANDEM

CONNECTOR - 3536864C1

FR AXLE DIFF LOCK WARN LIGHT (9814)

(LOCATED ON AXLE)

CAV	CIR	GAUGE	COLOR	TERM	SEAL
A	R49	18	GY	0587578C1	1652325C1
B	R49-G	18	WH	0587578C1	1652325C1

CONNECTOR - 587567C91

RR AXLE DIFF LOCK WARN LIGHT (9815)

(LOCATED ON AXLE)

CAV	CIR	GAUGE	COLOR	TERM	SEAL
A	R49A	18	GY	0587578C1	1652325C1
B	R49-GA	18	WH	0587578C1	1652325C1

CONNECTOR - 587567C91

SUSPENSION TRANSDUCER (9830)

CAV	CIR	GAUGE	COLOR	TERM
A	R9W	18	GY	1651943C1
B	R6H	18	GY	1651943C1
C	R61C	18	GY	1651943C1

CONNECTOR - 1678137C1
SEAL - 1661872C1
PLUG - 2025431C1

AIR SUSPENSION SOLENOID (9850)

(LOCATED ON LEFT FRAME RAIL NEAR REAR AXLES)

CAV	CIR	GAUGE	COLOR	TERM	SEAL
A	J61A	16	GY	0587575C1	1652325C1
B	J61-GA	16	WH	0587575C1	1652325C1

CONNECTOR - 587568C91

LOAD INDICATOR (9860)

CAV	CIR	GAUGE	COLOR	TERM
A	N9W	18	GY	1667742C1
B	N6H	18	GY	1667742C1
C	N61C	18	GY	1667742C1

CONNECTOR - 1667740C1
SEAL - 1661872C1
LOCK - 1667771C1

LOAD INDICATOR (9865M)

CAV	CIR	GUAGE	COLOR	TERM
A	N9W	18	GY	1661875C1
B	N6H	18	GY	1661875C2
C	N61C	18	GY	1661875C3

CONNECTOR - 1667741C1
SEAL - 1661872C1
LOCK - 1667771C1

RIGHT SIDE AIR DRYER (9900)

(LOCATED ON AIR DRYER)

CAV	CIR	GAUGE	COLOR	TERM	SEAL
A	N39C	16	GY	2033819C1	1652325C1
B	N39-GC	16	WH	2033819C1	1652325C1

CONNECTOR - 1673790C1
LOCK - 1673791C1

LEFT SIDE AIR DRYER (9900A)

(LOCATED ON AIR DRYER)

CAV	CIR	GAUGE	COLOR	TERM	SEAL
A	N39B	16	GY	2033819C1	1652325C1
B	N39-GB	16	WH	2033819C1	1652325C1

CONNECTOR - 1673790C1
LOCK - 1673791C1

LECTRASHIFT PTO/HOURMETER (9913A)

(LOCATED NEAR DASH TO ENGINE CONNECTION)

(DASH HARNESS)

CAV	CIR	GAUGE	COLOR	TERMINAL	SEAL
A	J14LS	12	WH	2033816C1	0589391C1
A	J88B	18	LT GN	2033819C1	3517771C1

CONNECTOR - 1664531C1
LOCK - 1675053C1

(ENGINE/XMSN HARNESS)

CAV	CIR	GAUGE	COLOR	TERMINAL	SEAL
A	K12LSC	12	WH	2033912C1	0589390C1
A	K188B	14	LT GN	2033912C1	0589391C1

CONNECTOR - 1669834C1
LOCK - 1675053C1

CHK	DATE	CHANGE	REV	REFERENCE	DRAWN	NAME	
CNA	12MAR04	ADDED 9830, 9860,	D	59169R	U00DLCK	42/43/44/85/8600 & 73/74/7500 CIRC DIAGRAMS	
		AND 9865M.			RELEASE NO. P54634F	DATE 14JUN01	PART NO. AE08-52376 SHEET 64

Figure 208 Connector Composites (9870), (9871), (9811), (9812), (9814), (9815), (9830), (9850), (9860), (9865M), (9900), (9900A), (9913A)

13.65. CONNECTOR COMPOSITES (9913B), (9914), (4100), (4109), (4112), (6502), (7107), (7208), (7615), P. 65

INTERNATIONAL TRUCK AND ENGINE CORPORATION

THIS PRINT IS PROVIDED ON A RESTRICTED BASIS AND IS NOT TO BE USED IN ANY WAY DETRIMENTAL TO THE INTEREST OF INTERNATIONAL TRUCK AND ENGINE CORPORATION.

ELECTRICAL CIRCUIT DIAGRAM CHAPTER 12

CONNECTOR COMPOSITES - MATING VIEW SHOWN

LECTRASHIFT PTO (9913B)

(LOCATED NEAR XMSN)

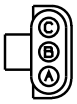

CAV	CIR	GAUGE	COLOR	TERMINAL	SEAL
A	K14LSA	18	BK	0587576C1	1652325C1
B	K14LSB	18	RD	0587576C1	1652325C1
C	K14LSC	12	WH	1673747C1	0589390C1

CONNECTOR - 0587570C91

DIODE ASSY (9914)

(LOCATED OUTSIDE CAB NEAR ESC)

CONNECTOR - 3539777C1

CAV	CIR	GAUGE	COLOR	TERMINAL	NOTES
1	J46C	16	PL	1659751C1	W/LECTRASHIFT PTO
1	J104F	18	DK BL	1651969C1	W/REMOTE START/STOP
2	J11-GC	18	GY	1651969C1	W/LECTRASHIFT PTO
2	J104H	18	DK BL	1651969C1	W/REMOTE START/STOP

DASH CONNECTOR (4100)

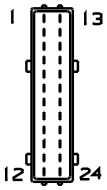

CAV	CIR	GAUGE	COLOR	TERM	SEAL
1	PLUG	-	-	-	-
2	K99S	18	VT	3559036C1	3509903C1
3	K97K	18	VT	3559036C1	3509903C1
4	K97C	18	VT	3559036C1	3509903C1
5	K99T	18	VT	3559036C1	3509903C1
6	K97R	18	VT	3559036C1	3509903C1
7	K5A1+1	18	YL	3559036C1	3532128C1
8	K5A1-1	18	GN	3559036C1	3532128C1
9	PLUG	-	-	-	-
10	K3A1+1	18	DKBL	3559036C1	3509903C1
11	K3A1-1	18	GY	3559036C1	3509903C1
12	K21B	18	TN	3559036C1	3509903C1
13	K97DF	18	VT	3559036C1	3509903C1
14	K23A	18	TN	3559036C1	3509903C1
14	K23A	16	TN	3559037C1	3509903C1
14	K97DF	18	VT	3559036C1	3509903C1
14	K23A	16	TN	3559037C1	3509903C1
14	K23A	16	TN	3559037C1	3509903C1
15	K23	18	TN	3559036C1	3509903C1
15	K23	18	TN	3559036C1	3509903C1
15	K24B	16	GY	3559037C1	3509903C1
16	K24A	18	GY	3559036C1	3509903C1
17	K17W	18	WH	3559036C1	3509903C1
17	K17K	18	PK	3559036C1	3509903C1
18	K97J	16	VT	3559037C1	3509903C1
19	K97M	16	VT	3559037C1	3509903C1
20	K77A	16	LTGN	3559037C1	3509903C1
21	PLUG	-	-	-	-
22	K26A	18	TN	3559036C1	3509903C1
23	K26B	18	TN	3559036C1	3509903C1
24	PLUG	-	-	-	-

CONNECTOR - 3558022C1
LOCK - 3558056C1
PLUG - 3532128C1

BODY BUILDER CIRCUITS (4109)

CONNECTOR - 2005835C1
LOCK - 2006503C1
PLUG - N/A

CAV	CIR	GAUGE	COLOR	TERM
A	K97AR	18	VT	1661208C1
B	K47B	18	GY	1661208C1
C	K46A	18	GY	1661208C1
D	K97DF	18	VT	1661208C1
E	K97WA	18	VT	1661208C1
F	K97EA	18	VT	1661208C1
G	K99F	18	VT	1661208C1
H	K97CB	18	VT	1661208C1

BODY BUILDER CIRCUITS (4112)

CONNECTOR - 2005835C1
LOCK - 2006503C1
PLUG - N/A

CAV	CIR	GAUGE	COLOR	TERM
A	K97XC	18	VT	1661208C1
B	-	-	-	-
C	-	-	-	-
D	-	-	-	-
E	-	-	-	-
F	-	-	-	-
G	-	-	-	-
H	-	-	-	-

EXHAUST BRAKE SOLENOID (6502)

CAV	CIR	GAUGE	COLOR	TERM
A	K24B	16	GY	0188398R1

CONNECTOR - 0188395R1
LOCK - N/A
PLUG - N/A

J1939 TRANS (7107)

CAV	CIR	GAUGE	COLOR	TERM	SEAL
A	K5D1+1	18	YL	1661875C1	3568570C1
B	PLUG	-	-	-	-
C	K5D1-1	18	GN	1661875C1	3568570C1

CONNECTOR - 1667741C1
LOCK - 1667771C1
PLUG - 2025431C1

J1939 TRANS (7208)

CAV	CIR	GAUGE	COLOR	TERM	SEAL
A	L5C183	18	YL	1661875C1	3568570C1
A	L5D1+1	18	YL	1661875C1	3568570C1
B	PLUG	-	-	-	-
C	L5C184	18	GN	1661875C1	3568570C1
C	L5D1-1	18	GN	1661875C1	3568570C1

CONNECTOR - 1667741C1
LOCK - 1667771C1
PLUG - 2025431C1

TURBINE SPEED SENSOR (7615)

CAV	CIR	GAUGE	COLOR	TERM
A	L92C149	18	TN	1651943C1
B	L92C140	18	TN	1651943C1

CONNECTOR - 2002712C1
LOCK - N/A
PLUG - N/A

THIS SPACE INTENTIONALLY LEFT BLANK

CHK	DATE	CHANGE	REV	REFERENCE	DRAWN	NAME
CNA	12MAR04	ADDED 9913B AND 9914.	A	59169R	U00TFW3	42/43/44/85/8600 & 73/74/7500 CIRC DIAGRAMS
					RELEASE NO. 58774T	DATE 12SEP03 · PART NO. AE08-52376 · SHEET 65

Figure 209 Connector Composites (9913B), (9914), (4100), (4109), (4112), (6502), (7107), (7208), (7615)