ELECTRICAL CIRCUIT DIAGRAM MANUAL
Electrical Circuit Diagrams - 9900 Series
US, Canada, Mexico

Electrical Circuit Diagrams

9900 Series

Navistar, Inc.

2701 Navistar Drive, Lisle, IL 60532 USA

© 2020 Navistar, Inc. All rights reserved. All marks are trademarks of their respective owners.

0000003261
Revision 4
May 2020

TABLE OF CONTENTS

2. INSTRUCTIONS AND CHARTS (CHAPTER 2)..... 1
2.1. ABBREVIATIONS, P. 1..... 1
2.2. ACRONYMS, P. 2..... 2
2.3. CIRCUIT DIAGRAM INSTRUCTIONS, P. 3..... 3
2.4. CIRCUIT NUMBER IDENTIFICATION AND COLOR, P. 4..... 4
2.5. CIRCUIT NUMBER IDENTIFICATION AND COLOR (CONT.), P. 5..... 5
2.6. CIRCUIT NUMBER IDENTIFICATION AND COLOR (CONT.), P. 6..... 6
2.7. LAMP BULB CHART, P. 7..... 7
2.8. RELAY FUNCTION AND WIRING GUIDE, P. 8..... 8
2.9. SCHEMATIC SYMBOL CHART, P. 9..... 9
2.10. SCHEMATIC SYMBOL CHART (CONT.), P. 10..... 10
2.11. SCHEMATIC SYMBOL CHART (CONT.), P. 11..... 11
2.12. SCHEMATIC SYMBOL CHART (CONT.), P. 12..... 12

3. 12 VOLT POWER DISTRIBUTION AND DATA LINK (CHAPTER 3)..... 13
3.1. BATTERY FEED WITH ENGINE BRAKE, P. 1..... 13
3.2. BATTERY FEED WITH ENGINE BRAKE (CONT.), P. 2..... 14
3.3. BATTERY FEED WITH ENGINE BRAKE (CONT.), P. 3..... 15
3.4. BATTERY FEED WITH ENGINE BRAKE (CONT.), P. 4..... 16
3.5. BATTERY FEED WITHOUT ENGINE BRAKE, P. 5..... 17
3.6. BATTERY FEED WITHOUT ENGINE BRAKE (CONT.), P. 6..... 18
3.7. BATTERY FEED WITHOUT ENGINE BRAKE (CONT.), P. 7..... 19
3.8. IGNITION FEED, P. 8..... 20
3.9. IGNITION FEED (CONT.), P. 9..... 21
3.10. IGNITION FEED (CONT.), P. 10..... 22
3.11. POWER FEED, P. 11..... 23
3.12. ACCESSORY FEED, P. 12..... 24
3.13. CAB J1939 DATA LINK, P. 13..... 25
3.14. CAB J1939 DATA LINK (CONT.), P. 14..... 26
3.15. DIAGNOSTIC DATA LINK, P. 15..... 27
3.16. GROUND – IP, P. 16..... 28
3.17. GROUND – IP (CONT.), P. 17..... 29
3.18. GROUND – IP (CONT.), P. 18..... 30
3.19. GROUND – IP (CONT.), P. 19..... 31
3.20. ZERO VOLT REFERENCE, P. 20..... 32
3.21. PANEL LIGHT ADAPTER, P. 21..... 33
3.22. ECA POWER, P. 22..... 34
3.23. START FEED ADAPTER, P. 23..... 35
3.24. GROUND ADAPTER, P. 24..... 36
3.25. 137M DATA LINK, P. 25..... 37
3.26. SART MODULE, P. 26..... 38
3.27. BATTERY DISCHARGE PROTECTION SYSTEM, P. 27..... 39

4. CAB ACCESSORIES (CHAPTER 4)..... 40
4.1. CIGAR LIGHTER, P. 1..... 40
4.2. ELECTRIC WINDOW – RIGHT AND LEFT, P. 2..... 41
4.3. ELECTRIC WINDOW – RIGHT, P. 3..... 42
4.4. DEFROSTER FAN – SINGLE AND DUAL, P. 4..... 43
4.5. ELECTRIC HORN, P. 5..... 44
4.6. MIRROR LIGHTS AND HEATED MIRRORS, P. 6..... 45
4.7. LEFT AND RIGHT MOTORIZED MIRRORS, P. 7..... 46

TABLE OF CONTENTS (CONT.)

4.8. DUAL AXIS MOTORIZED MIRRORS, P. 8 47
4.9. POWER SOURCE (CB), P. 9 48
4.10. RADIO – CB COMMUNICATION PACKAGE, P. 10 49
4.11. RADIO – CAB SPEAKERS, P. 11 50
4.12. ELECTRIC LOCK – RIGHT AND LEFT, P. 12 51
4.13. ELECTRIC LOCK – RIGHT AND LEFT (CONT.), P. 13 52
4.14. TEMPERATURE / COMPASS DISPLAY, P. 14 53
4.15. HEATED SEAT – DRIVER, P. 15 54
4.16. HEATED SEAT – PASSENGER, P. 16 55
4.17. ELECTRIC WINDSHIELD WIPER WITH INTERMITTENT WIPE AND WASH, P. 17 56
4.18. TELEGRAPHIC ADAPTER MODULE, P. 18 57
4.19. SPARE SWITCHES, P. 19 58
4.20. SPARE SWITCHES (CONT.), P. 20 59
4.21. SPARE SWITCHES AND AXLE CONTROL SWITCHES, P. 21 60
4.22. THROTTLE EFFECTS, P. 22 61

5. CHARGING AND CRANKING (CHAPTER 5) 62
5.1. STARTER INTERLOCK, P. 1 62
5.2. STARTER INTERLOCK (CONT.), P. 2 63
5.3. STARTER INTERLOCK (CONT.), P. 3 64
5.4. ENGINE – CHARGING CIRCUITS, P. 4 65
5.5. ENGINE – CHARGING CIRCUITS (CONT.), P. 5 66

6. FAN WIRING (CHAPTER 6) 67
6.1. FAN WIRING – IBB ENGINE, P. 1 67
6.2. FAN WIRING – IBB ENGINE (CONT.), P. 2 68
6.3. FAN WIRING – VARIABLE SPEED FAN DRIVE, P. 3 69
6.4. FAN WIRING – FAN AND ETHER START WITH ISX ENGINE, P. 4 70
6.5. FAN WIRING – FAN DRIVE AND OVERRIDE SWITCH, P. 5 71

7. ENGINE SYSTEM (CHAPTER 7) 72
7.1. ELECTRONICS ENGINE CONTROL (ISX ENGINE), P. 1 72
7.2. ELECTRONICS ENGINE CONTROL (ISX ENGINE) (CONT.), P. 2 73
7.3. ELECTRONICS ENGINE CONTROL (ISX ENGINE) (CONT.), P. 3 74
7.4. ELECTRONICS ENGINE CONTROL (ISX ENGINE) (CONT.), P. 4 75
7.5. ISX 2013 DEF AND AFTERTREATMENT, P. 5 76
7.6. ISX 2013 DEF AND AFTERTREATMENT (CONT.), P. 5A 77
7.7. ISX 2013 DEF AND AFTERTREATMENT (CONT.), P. 6 78
7.8. ISX 2013 DEF AND AFTERTREATMENT (CONT.), P. 6A 79
7.9. ISX 2013 DEF AND AFTERTREATMENT (CONT.), P. 7 80
7.10. ISX 2013 DEF AND AFTERTREATMENT (CONT.), P. 8 81
7.11. ISX 2013 DEF AND AFTERTREATMENT (CONT.), P. 8A 82
7.12. 15L ISX ENGINE THROTTLE POSITION, P. 9 83
7.13. ELECTRONIC ENGINE CONTROLS (ISX ENGINE) (CONT.), P. 10 84
7.14. ELECTRONIC ENGINE CONTROLS (ISX ENGINE) (CONT.), P. 11 85
7.15. ELECTRONIC ENGINE CONTROLS (2010 IBB ENGINE), P. 12 86
7.16. ELECTRONIC ENGINE CONTROLS (2010 IBB ENGINE) (CONT.), P. 13 87
7.17. ELECTRONIC ENGINE CONTROLS (2010 IBB ENGINE) (CONT.), P. 14 88
7.18. ELECTRONIC ENGINE CONTROLS (2010 IBB ENGINE) (CONT.), P. 15 89
7.19. ELECTRONIC ENGINE CONTROLS (2010 IBB ENGINE) (CONT.), P. 16 90
7.20. ELECTRONIC ENGINE CONTROLS (2010 IBB ENGINE) (CONT.), P. 17 91

TABLE OF CONTENTS (CONT.)

7.21. ELECTRONIC ENGINE CONTROLS (2010 IBB ENGINE) (CONT.), P. 18..... 92
7.22. ELECTRONIC ENGINE CONTROLS (2010 IBB ENGINE) (CONT.), P. 19..... 93
7.23. ELECTRONIC ENGINE CONTROLS (2010 IBB ENGINE) (CONT.), P. 20..... 94
7.24. AFTERTREATMENT CONTROL, P. 21..... 95
7.25. AFTERTREATMENT CONTROL (CONT.), P. 22..... 96
7.26. AFTERTREATMENT CONTROL (CONT.), P. 23..... 97
7.27. AUXILIARY SPEED SENSOR WITH ALLISON TRANSMISSION, P. 24..... 98
7.28. BODY BUILDER WITH ENGINE CONTROL PTO, P. 25..... 99
7.29. CABLE ASM ALTERNATIVE REMOTE SENSE, P. 26..... 100
7.30. ENGINE SHUT DOWN RELAY, P. 27..... 101
7.31. ELECTRONICS ENGINE CONTROLS CUMMINS ICON, P. 28..... 102
7.32. ELECTRONICS ENGINE CONTROLS CUMMINS ICON (CONT.), P. 29..... 103

8. GAUGES AND WARNING LIGHTS (CHAPTER 8)..... 104
8.1. LOW FUEL LEVEL WARNING, LOW AIR PRESSURE LIGHTS, P. 1..... 104
8.2. ENGINE OIL PRESSURE, ENGINE WATER TEMPERATURE WARNING LIGHTS, P. 2..... 105
8.3. POWER DIVIDER LOCK (PDL) WARNING LIGHT AND BUZZER, IBB WAIT TO START LIGHT, P. 3..... 106
8.4. AIR SUSPENSION RELEASE WARNING LIGHT, P. 4..... 107
8.5. TRANSMISSION OIL TEMPERATURE GAUGE, AXLE FORWARD-REAR, AND REAR-REAR TEMPERATURE GAUGE, P. 5..... 108
8.6. MANIFOLD PRESSURE GAUGE, P. 6..... 109
8.7. TURBO BOOST GAUGE, P. 7..... 110
8.8. VOLTMETER AND FUEL LEVEL GAUGE, P. 8..... 111
8.9. ENGINE WATER TEMPERATURE ENGINE OIL PRESSURE SPEEDOMETER AND TACHOMETER GAUGE, P. 9..... 112
8.10. DIFFERENTIAL LOCK WARNING LAMPS AND ABS CLUSTER WARNING LIGHTS, P. 10... 113
8.11. DIFFERENTIAL LOCK WARNING LAMPS AND ABS CLUSTER WARNING LIGHTS (CONT.), P. 11..... 114
8.12. FUEL GAUGE CIRCUITRY (DUAL TANK) WITH 115 / 150 GAL., P. 12..... 115
8.13. AXLE TEMPERATURE GAUGES, P. 13..... 116
8.14. ENGINE OIL AND TRANSMISSION OIL TEMPERATURE GAUGE, P. 14..... 117
8.15. IDEAL CONTROL TEMPERATURE SENSOR, P. 15..... 118
8.16. DEF GAUGE, P. 16..... 119
8.17. CLUTCH STARTER INTERLOCK, P. 17..... 120

9. LIGHTING SYSTEM CLUTCH START INTERLOCK (CHAPTER 9)..... 121
9.1. BACK-UP LIGHTS, P. 1..... 121
9.2. CAB AND TRAILER LIGHT SWITCH AND RELAY, P. 2..... 122
9.3. CAB CLEARANCE LIGHTS, P. 3..... 123
9.4. WORK LIGHT WIRING TRAILER HOOK-UP LIGHT, P. 4..... 124
9.5. CAB DOME, READING, AND COURTESY LIGHTS, P. 5..... 125
9.6. CAB DOME, READING, AND COURTESY LIGHTS (CONT.), P. 6..... 126
9.7. DAYTIME RUNNING LIGHTS, P. 7..... 127
9.8. FOG LIGHTS, P. 8..... 128
9.9. HEADLIGHT SWITCH AND DIMMER SWITCH, P. 9..... 129
9.10. HEADLIGHTS – WITH BUMPER MOUNTED MARKER LIGHT, P. 10..... 130
9.11. HEADLIGHTS – WITHOUT BUMPER MOUNTED MARKER LIGHT, P. 11..... 131
9.12. PANEL LIGHTS, P. 12..... 132
9.13. PARK / TURN / SIDE MARKER LIGHTS WITH AUXILIARY HEADLIGHTS, P. 13..... 133
9.14. STOP, TAIL, TURN AND HAZARD SIGNAL LIGHTS WITH FLASHER, P. 14..... 134

TABLE OF CONTENTS (CONT.)

9.15. LIGHTS – STOP, TAIL, TURN AND BACK-UP (6 X 4), P. 15 135
9.16. LIGHTS – STOP, TAIL, TURN AND BACK-UP (6 X 4) (CONT.), P. 16 136
9.17. LIGHTS – STOP, TAIL, TURN AND BACK-UP (6 X 4) (CONT.), P. 17 137
9.18. LIGHTS – STOP, TAIL, TURN AND BACK-UP (4 X 2), P. 18 138
9.19. LIGHTS – STOP, TAIL, TURN AND BACK-UP (4 X 2) (CONT.), P. 19 139
9.20. ECE LIGHTS, P. 20 140
9.21. BEACON AND TAIL LIGHT, P. 21 141
9.22. BEACON AND TAIL LIGHT (CONT.), P. 22 142
9.23. DRL PARK BRAKE SWITCHES, P. 23 143
9.24. LEFT TURN / RIGHT TURN SIGNAL AND HIGH BEAM INDICATOR , P. 24 144
9.25. CUSTOMER FURNISHED WORK LIGHT WITH AUX HEATER WITH SLEEPER BOX WITH 08WHS, P. 25 145
9.26. CUSTOMER FURNISHED WORK LIGHT WITH AUX HEATER WITH SLEEPER BOX WITH 808TJW, P. 26 146
9.27. FLOOD LIGHT WIRING WITHOUT SLEEPER, DAYCAB (808THA), P. 27 147
9.28. FLOOD LIGHT WIRING WITH BACK-UP LIGHTS WITH LOWERED HEATER BOX, P. 28 148
9.29. WORK LIGHT WIRING WITH 5TH WHEEL, P. 29 149
9.30. WORK LIGHT WIRING WITH DUAL (DASH AND B PILLAR) SWITCHED CUSTOMER MOUNTING WITH 08WHS, P. 30 150
9.31. WORK LIGHT WIRING WITH DUAL (DASH AND B PILLAR) SWITCHED CUSTOMER MOUNTING WITH 08WHS (CONT.), P. 31 151
9.32. WORK LIGHT WIRING WITH DUAL (DASH AND B PILLAR) SWITCHED CUSTOMER MOUNTING WITH 08WHS (CONT.), P. 32 152
9.33. WORK LIGHT WIRING WITH 0808TLP, P. 33 153
9.34. WORK LIGHT WIRING WITH 118 PRO WITH 0808TJW WITH NO IDLE, P. 34 154
9.35. WORK LIGHT WIRING WITH 0808TJW, P. 35 155
9.36. WORK LIGHT WIRING WITH 97 AND 72 PRO-SLEEPER WITH LOW HEATER BOX WITH SLEEPER BOX P. 36 156

10. CHASSIS ACCESSORIES (CHAPTER 10) 157
10.1. AIR DRYER, P. 1 157
10.2. BENDIX AIR ABS 4CH WITH ATC, P. 2 158
10.3. WABCO AIR ABS WITH ATC, P. 3 159
10.4. WABCO AIR ABS WITH ATC (CONT.), P. 4 160
10.5. WABCO AIR ABS WITH ATC (CONT.), P. 5 161
10.6. BENDIX AIR ABS 6CH WITH ATC, P. 6 162
10.7. BENDIX AIR ABS 6CH WITH ATC (CONT.), P. 7 163
10.8. BENDIX AIR ABS 6CH WITH ATC (CONT.), P. 8 164
10.9. BENDIX AIR ABS 6CH WITH ATC (CONT.), P. 9 165
10.10. ABS – BENDIX AIR 6S / 6M (6 X 4) P. 10 166
10.11. BENDIX AIR ABS WITH ATC, P. 11 167
10.12. BENDIX AIR ABS WITH ATC (CONT.), P. 12 168
10.13. BENDIX ADVANCE AIR ABS, P. 13 169
10.14. BENDIX ADVANCE AIR ABS (CONT.), P. 14 170
10.15. BENDIX ADVANCE AIR ABS (CONT.), P. 15 171
10.16. BENDIX ADVANCE AIR ABS (CONT.), P. 16 172
10.17. TRAILER CONNECTION WITH FOUR WHEEL TRAILER FRAME MOUNTED, P. 17 173
10.18. TRAILER CONNECTION WITH TRAILER LIGHTING CABLE 808TGN, P. 18 174
10.19. TRAILER CONNECTION WITH 4092 (TRACTOR), P. 19 175
10.20. ANTILOCK BRAKE SYSTEM WITH WABCO, P. 20 176
10.21. ANTILOCK BRAKE SYSTEM WITH WABCO (CONT.), P. 21 177

TABLE OF CONTENTS (CONT.)

10.22. ANTILOCK BRAKE SYSTEM WITH WABCO (CONT.), P. 22 178
10.23. ANTILOCK BRAKE SYSTEM WITH WABCO (CONT.), P. 23 179
10.24. BRAKE SENSOR – WEAR / STROKE, P. 24 180
10.25. TIRE PRESSURE MONITOR / ANTENNA, P. 25 181
10.26. AIR SUSPENSION WITH LOAD INDICATOR, P. 26 182
10.27. CUSTOMER SUPPLIED LIGHTS, P. 27 183
10.28. VEHICLE SENSOR MODULE, P. 28 184
10.29. TRAILER AUX SWITCH, P. 29 185
10.30. TRAILER SOCKET AUX 7-WAY, P. 30 186
10.31. TRAILER SOCKET CONNECTIONS, P. 31 187
10.32. TRAILER SOCKET – BOC AND EOF, P. 32 188

11. TRANSMISSION CONTROL MODULE (CHAPTER 11) 189
11.1. EATON AUTOSHIFT AND ULTRASHIFT TRANSMISSION (IBB ENGINE), P. 1 189
11.2. EATON AUTOSHIFT AND ULTRASHIFT TRANSMISSION (IBB ENGINE) (CONT.), P. 2 190
11.3. ALLISON TRANSMISSION, P. 3 191
11.4. ALLISON TRANSMISSION (CONT.), P. 4 192
11.5. AUTOSHIFT TRANSMISSION, P. 5 193
11.6. ALLISON TRANSMISSION WITH RETARDER, P. 6 194
11.7. AUTOSHIFT TRANSMISSION WITHOUT ABS, P. 7 195

12. HVAC (CHAPTER 12) 196
12.1. AIR CONDITIONER – CAB , P. 1 196
12.2. HEATER – CAB, P. 2 197
12.3. LOWERED HEATER – CAB, P. 3 198

13. CONNECTOR COMPOSITE (CHAPTER 13) 199
13.1. CONNECTOR COMPOSITE (1 / 1F), P. 1 199
13.2. CONNECTOR COMPOSITE (1M), P. 2 200
13.3. CONNECTOR COMPOSITE (2), P. 3 201
13.4. CONNECTOR COMPOSITE (2M), P. 4 202
13.5. CONNECTOR COMPOSITE (2M1 / 2M2 / 3F), P. 5 203
13.6. CONNECTOR COMPOSITE (3F / 3M), P. 6 204
13.7. CONNECTOR COMPOSITE (3M / 4M), P. 7 205
13.8. CONNECTOR COMPOSITE (8 / 9F / 9M), P. 8 206
13.9. CONNECTOR COMPOSITE (10A / 18F / 18M / 20 / 29), P. 9 207
13.10. CONNECTOR COMPOSITE (30 / 40M), P. 10 208
13.11. CONNECTOR COMPOSITE (41M / 43M / 45ML / 45 / 66F / 67F), P. 11 209
13.12. CONNECTOR COMPOSITE (71 / 72 / 100 / 100M3), P. 12 210
13.13. CONNECTOR COMPOSITE (105M), P. 13 211
13.14. CONNECTOR COMPOSITE (112 / 113F1 / 113M1), P. 14 212
13.15. CONNECTOR COMPOSITE (115 / 116 / 129F / 137M), P. 15 213
13.16. CONNECTOR COMPOSITE (141M / 142M / 143M), P. 16 214
13.17. CONNECTOR COMPOSITE (144M / 145M / 146M), P. 17 215
13.18. CONNECTOR COMPOSITE (147M / 148M / 149M), P. 18 216
13.19. CONNECTOR COMPOSITE (152M / 153A / 153M / 161M), P. 19 217
13.20. CONNECTOR COMPOSITE (162F / 167M / 170M / 171M), P. 20 218
13.21. CONNECTOR COMPOSITE (190), P. 21 219
13.22. CONNECTOR COMPOSITE (190M), P. 22 220
13.23. CONNECTOR COMPOSITE (198M / 199M), P. 22A 221
13.24. CONNECTOR COMPOSITE (200M / 201M), P. 23 222

TABLE OF CONTENTS (CONT.)

13.25. CONNECTOR COMPOSITE (201M / 203), P. 23A. 223
13.26. CONNECTOR COMPOSITE (203G / 212M / 227 / 228), P. 24. 224
13.27. CONNECTOR COMPOSITE (228F / 228M / 236 / 236F), P. 25. 225
13.28. CONNECTOR COMPOSITE (241M / 243M / 260M), P. 26. 226
13.29. CONNECTOR COMPOSITES (267M / 268F / 275 / 294A), P. 27. 227
13.30. CONNECTOR COMPOSITES (294F / 296M / 303F2 / 303M2), P. 28. 228
13.31. CONNECTOR COMPOSITES (311 / 312 / 313 / 314M), P. 29. 229
13.32. CONNECTOR COMPOSITES (316M / 316M1), P. 29A. 230
13.33. CONNECTOR COMPOSITES (316M2 / 318F / 318F1 / 318F2), P. 30. 231
13.34. CONNECTOR COMPOSITES (319F / 319F2 / 319F3 / 320M / 328M / 340), P. 31. 232
13.35. CONNECTOR COMPOSITES (340 / 344 / 345F / 345M), P. 32. 233
13.36. CONNECTOR COMPOSITES (393 / 404F / 406M), P. 33. 234
13.37. CONNECTOR COMPOSITES (418M / 420M), P. 34. 235
13.38. CONNECTOR COMPOSITES (421M / 422M), P. 35. 236
13.39. CONNECTOR COMPOSITES (423M / 424M), P. 36. 237
13.40. CONNECTOR COMPOSITES (425M / 426M / 427F), P. 37. 238
13.41. CONNECTOR COMPOSITES (428 / 428F / 429), P. 38. 239
13.42. CONNECTOR COMPOSITES (429F / 429O / 429P), P. 39. 240
13.43. CONNECTOR COMPOSITES (430 / 433M / 434M), P. 40. 241
13.44. CONNECTOR COMPOSITES (435M / 436M / 437M), P. 41. 242
13.45. CONNECTOR COMPOSITES (438M / 440M / 441), P. 42. 243
13.46. CONNECTOR COMPOSITES (442), P. 42A. 244
13.47. CONNECTOR COMPOSITES (445 / 453 / 453M), P. 43. 245
13.48. CONNECTOR COMPOSITES (454M / 455M / 456M), P. 44. 246
13.49. CONNECTOR COMPOSITES (457M / 460F), P. 45. 247
13.50. CONNECTOR COMPOSITES (462M), P. 46. 248
13.51. CONNECTOR COMPOSITES (462M), P. 47. 249
13.52. CONNECTOR COMPOSITES (462M), P. 48. 250
13.53. CONNECTOR COMPOSITES (462M), P. 49. 251
13.54. CONNECTOR COMPOSITES (463M), P. 50. 252
13.55. CONNECTOR COMPOSITES (463M), P. 51. 253
13.56. CONNECTOR COMPOSITES (464M), P. 52. 254
13.57. CONNECTOR COMPOSITES (464M), P. 53. 255
13.58. CONNECTOR COMPOSITES (464M), P. 54. 256
13.59. CONNECTOR COMPOSITES (464M), P. 55. 257
13.60. CONNECTOR COMPOSITES (464M), P. 56. 258
13.61. CONNECTOR COMPOSITES (464M), P. 57. 259
13.62. CONNECTOR COMPOSITES (465M / 466M / 468F), P. 58. 260
13.63. CONNECTOR COMPOSITES (469F / 469ML / 469OL / 469PL), P. 59. 261
13.64. CONNECTOR COMPOSITES (471), P. 60. 262
13.65. CONNECTOR COMPOSITES (471A), P. 61. 263
13.66. CONNECTOR COMPOSITES (471AF), P. 62. 264
13.67. CONNECTOR COMPOSITES (471AM), P. 63. 265
13.68. CONNECTOR COMPOSITES (471M), P. 64. 266
13.69. CONNECTOR COMPOSITES (475FL / 475ML / 476M / 478M), P. 65. 267
13.70. CONNECTOR COMPOSITES (480F / 480M / 481M / 482M), P. 66. 268
13.71. CONNECTOR COMPOSITES (489 / 489F / 493ML / 493OL), P. 67. 269
13.72. CONNECTOR COMPOSITES (494M / 495M), P. 68. 270
13.73. CONNECTOR COMPOSITES (497M / 498M), P. 69. 271
13.74. CONNECTOR COMPOSITES (499M / 501M), P. 70. 272
13.75. CONNECTOR COMPOSITES (502 / 503M), P. 71. 273

TABLE OF CONTENTS (CONT.)

13.76. CONNECTOR COMPOSITES (504M / 506), P. 72 274
13.77. CONNECTOR COMPOSITES (506M / 509M), P. 73 275
13.78. CONNECTOR COMPOSITES (511M / 512F / 513F), P. 74 276
13.79. CONNECTOR COMPOSITES (513M / 514M / 515), P. 75 277
13.80. CONNECTOR COMPOSITES (515M / 516M / 517M), P. 76 278
13.81. CONNECTOR COMPOSITES (520 / 521 / 522 / 523), P. 77 279
13.82. CONNECTOR COMPOSITES (524 / 525F / 525M), P. 78 280
13.83. CONNECTOR COMPOSITES (527 / 527B / 528 / 529), P. 79 281
13.84. CONNECTOR COMPOSITES (530 / 531 / 559F), P. 80 282
13.85. CONNECTOR COMPOSITES (561ML / 571ML / 571OL / 572M), P. 81 283
13.86. CONNECTOR COMPOSITES (574 / 575 / 576), P. 82 284
13.87. CONNECTOR COMPOSITES (576 / 577), P. 83 285
13.88. CONNECTOR COMPOSITES (578 / 579), P. 83A 286
13.89. CONNECTOR COMPOSITES (580M / 604 / 653M / 659M), P. 84 287
13.90. CONNECTOR COMPOSITES (670 / 670G / 671), P. 85 288
13.91. CONNECTOR COMPOSITES (672 / 673 / 674), P. 86 289
13.92. CONNECTOR COMPOSITES (674E / 675 / 676), P. 87 290
13.93. CONNECTOR COMPOSITES (677 / 677M / 678 / 678M), P. 88 291
13.94. CONNECTOR COMPOSITES (679), P. 89 292
13.95. CONNECTOR COMPOSITES (679 / 679F), P. 90 293
13.96. CONNECTOR COMPOSITES (679F / 679M / 680 / 681), P. 91 294
13.97. CONNECTOR COMPOSITES (745 / 800/ 800F / 816F / 823M / 851F), P. 92 295
13.98. CONNECTOR COMPOSITES (851M / 887 / 922 / 922F / 922M), P. 93 296
13.99. CONNECTOR COMPOSITES (923 / 923F / 923M / 935F), P. 94 297
13.100.CONNECTOR COMPOSITES (935 / 935M / 935OL / 935PL), P. 94A 298
13.101.CONNECTOR COMPOSITES (946 / 957F / 958F / 958M / 959M), P. 95 299
13.102.CONNECTOR COMPOSITES (964F / 964M), P. 95A 300
13.103.CONNECTOR COMPOSITES (967M / 968M), P. 95B 301
13.104.CONNECTOR COMPOSITES (974F / 974M), P. 96 302
13.105.CONNECTOR COMPOSITES (975F / 979F), P. 97 303
13.106.CONNECTOR COMPOSITES (980M / 981F / 982M / 990F / 991F), P. 98 304
13.107.CONNECTOR COMPOSITES (992M / 993M / 1000), P. 98A 305
13.108.CONNECTOR COMPOSITES (1000), P. 99 306
13.109.CONNECTOR COMPOSITES (1010 / 1027 / 1033F), P. 100 307
13.110.CONNECTOR COMPOSITES (1034F / 1048F / 1049F), P. 101 308
13.111.CONNECTOR COMPOSITES (1050M / 1050ML / 1054M), P. 102 309
13.112.CONNECTOR COMPOSITES (1054ML / 1056M / 1057M), P. 103 310
13.113.CONNECTOR COMPOSITES (1058M / 1059M / 1060M / 1069M), P. 104 311
13.114.CONNECTOR COMPOSITES (1076 / 1084M / 1085M / 1090F), P. 105 312
13.115.CONNECTOR COMPOSITES (1090M / 1095F / 1097), P. 106 313
13.116.CONNECTOR COMPOSITES (1109M / 1116ML / 1116OL / 1129M / 1130M), P. 107 314
13.117.CONNECTOR COMPOSITES (1131M / 1132M / 1133M), P. 108 315
13.118.CONNECTOR COMPOSITES (1135M / 1137F / 1141), P. 109 316
13.119.CONNECTOR COMPOSITES (1157F / 1158M / 1162F), P. 110 317
13.120.CONNECTOR COMPOSITES (1164F / 1171M / 1172M), P. 111 318
13.121.CONNECTOR COMPOSITES (1173M / 1175M / 1176M / 1178M), P. 112 319
13.122.CONNECTOR COMPOSITES (1180F / 1181F / 1182F / 1183F / 1184F / 1185F / 1186M), P. 113 320
13.123.CONNECTOR COMPOSITES (1187F / 1187M / 1190 / 1199M / 1209F / 1212M), P. 114 321
13.124.CONNECTOR COMPOSITES (1213F / 1214FL / 1214ML / 1215F), P. 115 322
13.125.CONNECTOR COMPOSITES (1216F / 1217M / 1218M / 1226M), P. 116 323

TABLE OF CONTENTS (CONT.)

13.126.CONNECTOR COMPOSITES (1239 / 1244F), P. 117 324
13.127.CONNECTOR COMPOSITES (1245M / 1246F), P. 118 325
13.128.CONNECTOR COMPOSITES (1246M / 1247M / 1248M), P. 119 326
13.129.CONNECTOR COMPOSITES (1250 / 1251M / 1258F), P. 120 327
13.130.CONNECTOR COMPOSITES (1258M / 1262 / 1281F / 1281M), P. 121 328
13.131.CONNECTOR COMPOSITES (1282M / 1283 / 1284 / 1285F), P. 122 329
13.132.CONNECTOR COMPOSITES (1286F / 1316FL), P. 123 330
13.133.CONNECTOR COMPOSITES (1316ML / 1329M / 1331F / 1332F), P. 124 331
13.134.CONNECTOR COMPOSITES (1348 / 1349 / 1350), P. 125 332
13.135.CONNECTOR COMPOSITES (1350 / 1351), P. 126 333
13.136.CONNECTOR COMPOSITES (1360 / 1361 / 1363), P. 127 334
13.137.CONNECTOR COMPOSITES (1365 / 1366 / 1369 / 1370), P. 128 335
13.138.CONNECTOR COMPOSITES (1378 / 1386 / 1387), P. 129 336
13.139.CONNECTOR COMPOSITES (1387M / 1387M1 / 1399M), P. 130 337
13.140.CONNECTOR COMPOSITES (1402 / 1402M / 1403), P. 131 338
13.141.CONNECTOR COMPOSITES (1404 / 1405 / 1406), P. 132 339
13.142.CONNECTOR COMPOSITES (1407 / 1409M / 1410F), P. 133 340
13.143.CONNECTOR COMPOSITES (1415 / 1448M / 1449F / 1449M / 1450), P. 134 341
13.144.CONNECTOR COMPOSITES (1450 / 1451 / 1455), P. 135 342
13.145.CONNECTOR COMPOSITES (1456 / 1610 / 1874B), P. 136 343
13.146.CONNECTOR COMPOSITES (1874C / 1874D / 4328 / 4450BF), P. 137 344
13.147.CONNECTOR COMPOSITES (4450BM / 4460BF / 4460BM / 4705), P. 138 345
13.148.CONNECTOR COMPOSITES (4706 / 5118 / 5200A / 5501), P. 139 346
13.149.CONNECTOR COMPOSITES (5899 / 5899A), P. 140 347
13.150.CONNECTOR COMPOSITES (5899A / 5899B / 6000), P. 141 348
13.151.CONNECTOR COMPOSITES (6000 / 6001), P. 142 349
13.152.CONNECTOR COMPOSITES (6018), P. 143 350
13.153.CONNECTOR COMPOSITES (6019), P. 144 351
13.154.CONNECTOR COMPOSITES (6033 / 6200), P. 145 352
13.155.CONNECTOR COMPOSITES (6260VH / 6260VL / 6260VM / 6260VN / 6300), P. 146 353
13.156.CONNECTOR COMPOSITES (6400 / 6401 / 6550 / 6565), P. 147 354
13.157.CONNECTOR COMPOSITES (6704D / 6715 / 6720), P. 148 355
13.158.CONNECTOR COMPOSITES (6720A / 6720B / 6730 / 7100), P. 149 356
13.159.CONNECTOR COMPOSITES (7105), P. 150 357
13.160.CONNECTOR COMPOSITES (7110 / 7110A / 7250), P. 151 358
13.161.CONNECTOR COMPOSITES (7500W / 7501 / 7600), P. 152 359
13.162.CONNECTOR COMPOSITES (7603 / 7608 / 7615 / 7700K), P. 153 360
13.163.CONNECTOR COMPOSITES (7704 / 8103 / 8104), P. 154 361
13.164.CONNECTOR COMPOSITES (8107 / 8303 / 8310 / 8311), P. 155 362
13.165.CONNECTOR COMPOSITES (8410 / 8500 / 8501), P. 156 363
13.166.CONNECTOR COMPOSITES (8502 / 8503 / 8504 / 8505), P. 157 364
13.167.CONNECTOR COMPOSITES (8506 / 8507 / 8803 / 8951), P. 158 365
13.168.CONNECTOR COMPOSITES (8953F), P. 159 366
13.169.CONNECTOR COMPOSITES (8953M / 8953M1), P. 160 367
13.170.CONNECTOR COMPOSITES (8953M2 / 8957F1 / 8962 / 8963), P. 161 368
13.171.CONNECTOR COMPOSITES (8964 / 8965 / 8966 / 8967), P. 162 369
13.172.CONNECTOR COMPOSITES (8972 / 8973 / 8974 / 8975), P. 163 370
13.173.CONNECTOR COMPOSITES (8976 / 8977 / 8981 / 8982), P. 164 371
13.174.CONNECTOR COMPOSITES (8983 / 8984 / 9100D / 9100E), P. 165 372
13.175.CONNECTOR COMPOSITES (9303 / 9303A / 9303B), P. 166 373
13.176.CONNECTOR COMPOSITES (9303C / 9303D / 9303E), P. 167 374

TABLE OF CONTENTS (CONT.)

13.177.CONNECTOR COMPOSITES (9303F / 9303G / 9303H), P. 168..... 375
13.178.CONNECTOR COMPOSITES (9303K / 9303L / 9303M), P. 169..... 376
13.179.CONNECTOR COMPOSITES (9303N / 9304A / 9305), P. 170..... 377
13.180.CONNECTOR COMPOSITES (9305A / 9305B / 9305C / 9306), P. 171..... 378
13.181.CONNECTOR COMPOSITES (9331 / 9332 / 9501 / 9501F / 9501D / 9502), P. 172..... 379
13.182.CONNECTOR COMPOSITES (9502A / 9502B / 9502C / 9502D / 9503), P. 173..... 380
13.183.CONNECTOR COMPOSITES (9503D / 9504 / 9504A / 9504B / 9505), P. 174..... 381
13.184.CONNECTOR COMPOSITES (9505A / 9505D / 9506 / 9506D / 9506E), P. 175..... 382
13.185.CONNECTOR COMPOSITES (9506F / 9507 / 9507A / 9507B / 9507C), P. 176..... 383
13.186.CONNECTOR COMPOSITES (9508 / 9508D / 9508E / 9508F / 9509), P. 177..... 384
13.187.CONNECTOR COMPOSITES (9509A / 9509B / 9509C / 9510), P. 178..... 385
13.188.CONNECTOR COMPOSITES (9510A / 9510M / 9511), P. 179..... 386
13.189.CONNECTOR COMPOSITES (9511A / 9512 / 9513), P. 180..... 387
13.190.CONNECTOR COMPOSITES (9514 / 9515 / 9515C / 9516), P. 181..... 388
13.191.CONNECTOR COMPOSITES (9516M / 9517), P. 182..... 389
13.192.CONNECTOR COMPOSITES (9518 / 9519 / 9520 / 9521), P. 183..... 390
13.193.CONNECTOR COMPOSITES (9522 / 9523 / 9524 / 9525), P. 184..... 391
13.194.CONNECTOR COMPOSITES (9526 / 9527 / 9528 / 9529), P. 185..... 392
13.195.CONNECTOR COMPOSITES (9530 / 9531 / 9532 / 9533), P. 186..... 393
13.196.CONNECTOR COMPOSITES (9534 / 9535 / 9536 / 9537), P. 187..... 394
13.197.CONNECTOR COMPOSITES (9538 / 9715F / 9715M), P. 188..... 395
13.198.CONNECTOR COMPOSITES (9716F / 9716M / 9766), P. 189..... 396
13.199.CONNECTOR COMPOSITES (9773 / 9773A / 9773B / 9789F / 9789FA), P. 190..... 397
13.200.CONNECTOR COMPOSITES (9790M / 9790MA), P. 191..... 398
13.201.CONNECTOR COMPOSITES (9800 / 9800F), P. 192..... 399
13.202.CONNECTOR COMPOSITES (9800M), P. 193..... 400
13.203.CONNECTOR COMPOSITES (9801M / 9810 / 9811 / 9812), P. 194..... 401
13.204.CONNECTOR COMPOSITES (9813 / 9814 / 9815 / 9816 / 9830), P. 195..... 402
13.205.CONNECTOR COMPOSITES (9832 / 9865M / 9900 / 9901), P. 196..... 403
13.206.CONNECTOR COMPOSITES (9902 / 9911 / 9912), P. 197..... 404

INSTRUCTIONS AND CHARTS (CHAPTER 2)

2.1. ABBREVIATIONS, P. 1

NAVISTAR, INC

THIS PRINT IS PROVIDED ON A RESTRICTED BASIS AND IS NOT TO BE USED IN ANY WAY DETRIMENTAL TO THE INTEREST OF NAVISTAR, INC.

ELECTRICAL CIRCUIT DIAGRAM

CHAPTER 2

ABBREVIATIONS

ABBREVIATION	DESCRIPTION	ABBREVIATION	DESCRIPTION	ABBREVIATION	DESCRIPTION
ACCESS	ACCESSORY	CUR	CURRENT	PRESS	PRESSURE
AC	AIR CONDITIONING	DPNL	DASHPANEL	RAD	RADIO
AIR CLNR	AIR CLEANER	DFTR	DEFLECTOR	RR	REAR
ALT	ALTERNATOR	DFR	DEFROSTER	RLY	RELAY
AC	ALTERNATING CURRENT	DEG	DEGREE	RES	RESISTOR
AFTR	AFTERTREATMENT	DIAG	DIAGRAM	R	RIGHT
AMM	AMMETER	DSL	DIESEL	RTR	ROTOR
AMP	AMPERE	DIFF	DIFFERENTIAL	SNSR	SENSOR
AMP HR	AMPERE HOUR	DIMR	DIMMER	SHLD	SHIELD
AMPL	AMPLIFIER	ELEC	ELECTRICAL	SHFT	SHIFTER
ARM	ARMATURE	ELEX	ELECTRONICS	SLPR	SLEEPER
ARSR	ARRESTER	ENG	ENGINE	SLV	SLEEVE
ASSY	ASSEMBLY	EXH	EXHAUST	SPKR	SPEAKER
AUX	AUXILIARY	FL	FLUID	SPR	SPRING
B/U	BACK-UP	FWD	FORWARD	STD	STANDARD
BTRY	BATTERY	FR	FRONT	STRG	STEERING
BM	BENCHMARKING	FREQ	FREQUENCY	STLITE	SATELLITE
BLK	BLOCK	GA	GAUGE	SUNSH	SUNSHADE
BOOS	BOOSTER	GEN	GENERATOR	SW	SWITCH
BOT	BOTTOM	GND	GROUND	SYS	SYSTEM
BK	BRAKE	HARN	HARNESS	TACH	TACHOMETER
BRKR	BREAKER	HDLP	HEADLAMP	TEMP	TEMPERATURE
BRTHR	BREATHER	HTD	HEATED	TERM	TERMINAL
BRI	BRIGHT	HT TR	HEAT TREAT	THROT	THROTTLE
BUZ	BUZZER	HTR	HEATER	THRU	THROUGH
CA	CABLE	HP	HORSEPOWER	TRLR	TRAILER
CD	CANDELA	HYD	HYDRAULIC	XDCR	TRANSDUCER
CP	CANDLEPOWER	ID	IDENTIFICATION	XFER	TRANSFER
CAP	CAPACITOR	IGN	IGNITION	XFMR	TRANSFORMER
CAT	CATERPILLAR	ILLUM	ILLUMINATION	XSTR	TRANSISTOR
CHAS	CHASSIS	IND	INDICATOR	XMSN	TRANSMISSION
CH	CHOKE	INST	INSTRUMENT	XMTR	TRANSMITTER
CIRC	CIRCUIT	INT	INTERMITTENT	TRK	TRUCK
CLK	CLOCK	L	LEFT	UPR	UPPER
CW	CLOCKWISE	LT	LIGHT	VLV	VALVE
CLSTR	CLUSTER	LTR	LIGHTER	VERT	VERTICAL
CL	CLUTCH	LWR	LOWER	VM	VOLTMETER
COL	COLUMN	MAG	MAGNET	VOL	VOLUME
COMM	COMMUTATOR	MOD	MODULATOR	WSHR	WASHER
CMPNT	COMPONENT	MDL	MODULE	WHL	WHEEL
CPRSR	COMPRESSOR	MOT	MOTOR	WDO	WINDOW
CONN	CONNECT	MTD	MOUNTED	WSHLD	WINDSHIELD
CONT	CONTINUED	NEG	NEGATIVE	WPR	WIPER
CSL	CONSOLE	N/	NOT WITH	W/	WITH
CONT	CONTACT	NO.	NUMBER	W/O	WITHOUT
CONT	CONTROL	PASS	PASSENGER		
CONV	CONVERTER	POSN	POSITION		
CLR	COOLER	POS	POSITIVE		
CTSY	COURTESY	POT	POTENTIOMETER		
CRUS	CRUISE	PWR	POWER		

CHK	DATE	CHANGE	REV	REFERENCE	DRAWN	NAME
–	–	INITIAL RELEASE.	A	92159Y	310615	CIRCUIT DIAGRAM, 9900
					RELEASE NO. 92159Y	DATE 06AUG13 / PART NO. AE08076113 / SHEET 001

Figure 1 Abbreviations.

2.2. ACRONYMS, P. 2

NAVISTAR, INC

THIS PRINT IS PROVIDED ON A RESTRICTED BASIS AND IS NOT TO BE USED IN ANY WAY DETRIMENTAL TO THE INTEREST OF NAVISTAR, INC.

ELECTRICAL CIRCUIT DIAGRAM

ACRONYMS

CHAPTER 2

DESCRIPTION	ACRONYM
ANTILOCK BRAKING SYSTEM	ABS
ANTENNA COMMUNICATION UNIT	ACU
ALTERNATING CURRENT	AC
AXLE TO BACK OF CAB	AC
AXLE TO FRAME	AF
ACCELERATOR PEDAL MODULE	APM
ACCELERATOR POSITION SENSOR	APS
AUXILIARY POWER UNIT	APU
AUTOMATIC TRACTION CONTROL	ATC
AUDIO VIDEO INTERFACE	AVI
BRAKE HORSEPOWER	BHP
BACK OF CAB	BOC
CITIZEN BAND	CB
COLD CRANKING AMPERES	CCA
CLEAN POWER ELECTRICAL CONNECTOR	CEC
CAB OVER ENGINE	COE
DIRECT CURRENT	DC
DRIVER CONTROL MODULE	DCM
DIGITAL DATA LINK	DDL
DIESEL OXIDATION CATALYST INLET TEMPERATURE	DOCT
DIESEL PARTICULATE FILTER	DPF
DIESEL TURBOCHARGED	DT
DAY TIME RUNNING LIGHTS	DTRL
ELECTRONIC CONTROL MODULE	ECM
ELECTRONIC CONTROL UNIT	ECU
EXHAUST GAS RECIRCULATION	EGR
EXHAUST GAS TEMPERATURE	EGT
ELECTRO MAGNETIC INTERFACE	EMI
END OF FRAME	EOF
ELECTRIC TRAILER BRAKE	ETB
FRONT AXLE	FA
FRONT END	FE
FRONT OF DASH	FOD
FULL POWER BRAKE	FPB
GLOBAL POSITIONING SYSTEM	GPS
HYDRAULIC CONTROL UNIT	HCU
HEAVY DUTY	HD
HEAVY DUTY DIESEL	HDD
HIGH PERFORMANCE TRUCK	HPT
HEATING, VENTILATION, AND AIR CONDITIONING	HVAC

DESCRIPTION	ACRONYM
INJECTOR DRIVE MODULE	IDM
INPUT/OUTPUT	I / O
INTEGRATED MOBILE COMMUNICATIONS TERMINAL	IMCT
INSTRUMENT PANEL	I/P
INDEPENDENT POWER TAKE-OFF	IPTO
LIGHT COMMERCIAL TRANSMISSION	LCT
MEDIUM DUTY	MD
MALFUNCTION INDICATION LAMP	MIL
MULTIPLEX SWITCH MODULE	MSM
PYROMETER AMMETER MODULE	PAM
PROGRAMMABLE LOGIC CONTROLLER	PLC
POWER TAKE-OFF	PTO
PULSE WIDTH MODULATION	PWM
REAR AXLE	RA
RADIO FREQUENCY	RF
ROLL STABILITY PROGRAMM	RSP
SEVERE SERVICE	SS
TRANSMISSION CONTROL MODULE	TCM
TERRESTRIAL COMMUNICATION UNIT	TCU
TERRESTRIAL MOBILE COMMUNICATIONS TERMINAL	TMCT
THERMAL OVERCRANK PROTECTION	TOCP
THROTTLE POSITION SENSOR	TPS
VEHICLE INTERFACE MODULE	VIM
ZERO VOLT REFERENCE	ZVR

CHK	DATE	CHANGE	REV	REFERENCE	DRAWN	NAME
0610	27AUG13	INITIAL RELEASE.	A	92159Y	310615	CIRCUIT DIAGRAM, 9900
					RELEASE NO. 92159Y	DATE 06AUG13 / PART NO. AE08076113 / SHEET 002

Figure 2 Acronyms.

2.3. CIRCUIT DIAGRAM INSTRUCTIONS, P. 3

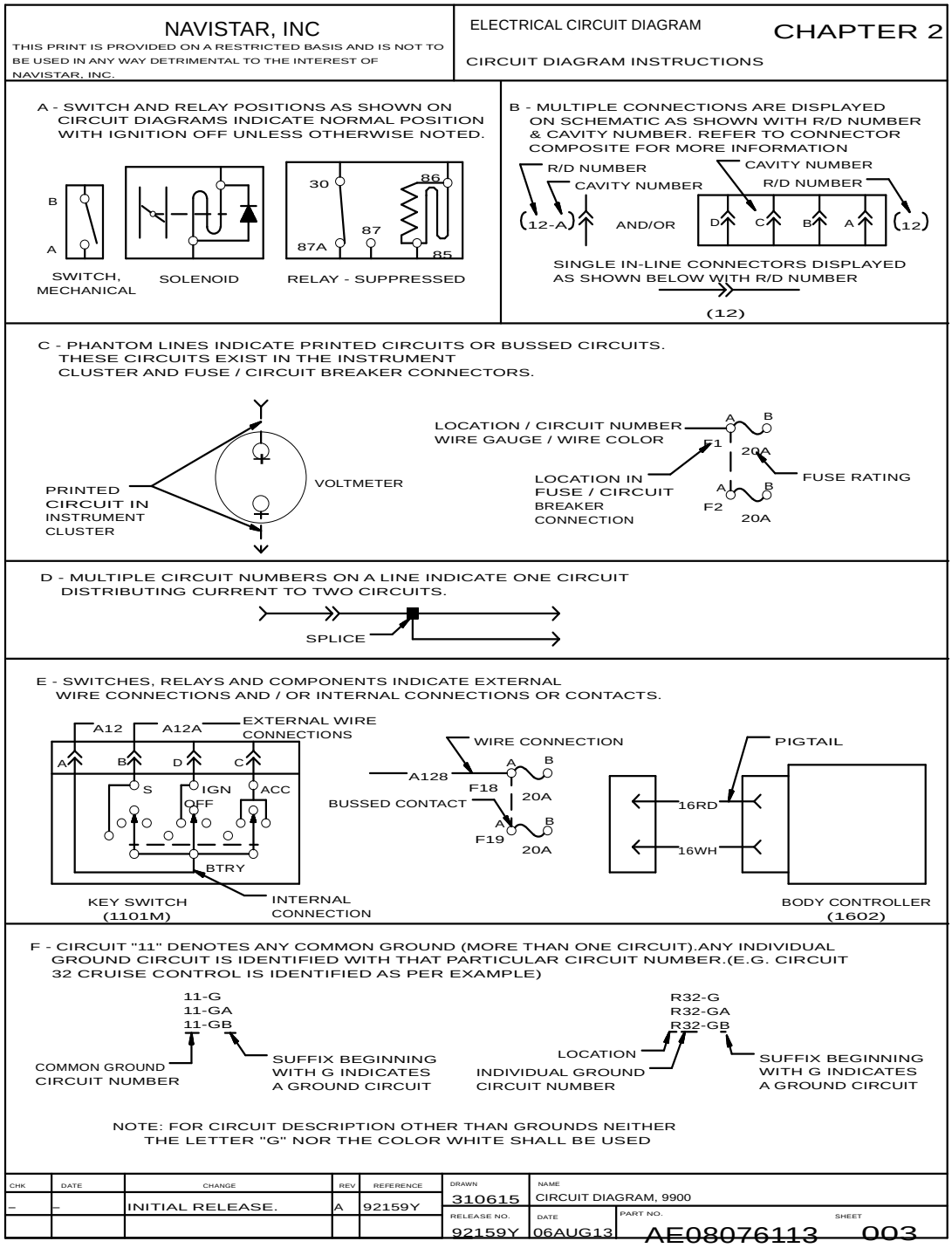

Figure 3 Circuit Diagram Instructions.

2.4. CIRCUIT NUMBER IDENTIFICATION AND COLOR, P. 4

NAVISTAR, INC

THIS PRINT IS PROVIDED ON A RESTRICTED BASIS AND IS NOT TO BE USED IN ANY WAY DETRIMENTAL TO THE INTEREST OF NAVISTAR, INC.

ELECTRICAL CIRCUIT DIAGRAM CHAPTER 2

CIRCUIT NUMBER IDENTIFICATION AND COLOR

CIRCUIT NUMBER	COLOR	DESCRIPTION
1	LTBL	ALTERNATOR - FIELD
2	RD	ALTERNATOR - CHARGE
3	DKBL	SERIAL / DATA COMMUNICATION J1587 / J1708 (+)
	GY	SERIAL / DATA COMMUNICATION J1587 / J1708 (-)
4	DKBL	SERIAL / DATA COMMUNICATION J1922 (+)
	GY	SERIAL / DATA COMMUNICATION J1922 (-)
5	YL	SERIAL / DATA COMMUNICATION J1939/11 / J1939/15 (+)
	GN	SERIAL / DATA COMMUNICATION J1939/11 / J1939/15 (-)
6	GY	LOW VOLTAGE ELECTRONIC FEED (LESS THAN 9 VOLTS)
7	RD	ALTERNATOR - RESISTANCE
8		
9	GY	LOW VOLTAGE ELECTRONIC GROUND
10	WH	CHASSIS / ENGINE GROUND
11	WH	CAB / SLEEPER GROUND
12	LTBL	ACCESSORY FEED
13	PK	IGNITION FEED
	BK	IGNITION FEED (BODY BUILDER CONNECTOR)
14	RD	BATTERY FEED
15	RD	KEY SWITCH FEED
16		
17	PK	STARTER CONTROL
18	PK	GLOW PLUG / PREHEATER
19	GY	ENGINE SHUTDOWN
20	LTGN	REMOTE POWER MODULE
21	TN	COLD START CONTROLS (ETHER)
22	TN	TIRE PRESSURE MONITORING / CONTROL
23	TN	ENGINE FAN / SHUTTERS
24	GY	ENGINE EXHAUST BRAKE
25	TN	PYROMETER
26	TN	AMMETER
27	TN	VOLTMETER
28	TN	INSTRUMENTS AND GAUGES
29	TN	ENGINE WATER TEMPERATURE
30	TN	ENGINE OIL TEMPERATURE
31	TN	TRANSMISSION OIL TEMPERATURE
32	TN	AXLE OIL TEMPERATURE
33	TN	ENGINE OIL LEVEL
34	TN	COOLANT LEVEL
35	TN	ENGINE OIL PRESSURE
36	TN	FUEL LEVEL
37	TN	FUEL PUMP
38	GY	LIFT AXLE
39	GY	AIR DRYER HEATER
40	GY	LOW AIR PRESSURE WARNING

CHK	DATE	CHANGE	REV	REFERENCE	DRAWN	NAME
0610	27AUG13	INITIAL RELEASE.	A	92159Y	310615	CIRCUIT DIAGRAM, 9900
					RELEASE NO. 92159Y	DATE 06AUG13 / PART NO. AE08076113 / SHEET 004

Figure 4 Circuit Number Identification and Color.

2.5. CIRCUIT NUMBER IDENTIFICATION AND COLOR (CONT.), P. 5

NAVISTAR, INC

THIS PRINT IS PROVIDED ON A RESTRICTED BASIS AND IS NOT TO BE USED IN ANY WAY DETRIMENTAL TO THE INTEREST OF NAVISTAR, INC.

ELECTRICAL CIRCUIT DIAGRAM CHAPTER 2

CIRCUIT NUMBER IDENTIFICATION AND COLOR (CONT)

CIRCUIT NUMBER	COLOR	DESCRIPTION
41	TN	AIR TEMPERATURE
42	GY	FRONT AXLE ENGAGED
43	GY	POWER DIVIDER LOCK (PDL) WARNING
44	GY	PARK BRAKE WARNING
45	LTGN	ANTITHEFT WARNING
46	GY	POWER TAKEOFF WARNING
47	GY	SPEEDOMETER
48	GY	TACHOMETER
49	GY	DIFFERENTIAL LOCK WARNING
50	YL	LIGHT SWITCH FEED
51	YL	DIMMER SWITCH FEED
52	YL	HEADLIGHT HI - BEAM
53	YL	HEADLIGHT LO - BEAM
54	BN	PARKING / MARKER LIGHTS
55	OR	TURN SIGNAL - FEED
56	OR	TURN SIGNAL LIGHTS - LEFT
	YL	TURN SIGNAL LIGHTS - LEFT (BODY BUILDER CONNECTION)
57	OR	TURN SIGNAL LIGHTS - RIGHT
	LTGN	TURN SIGNAL LIGHTS - RIGHT (BODY BUILDER CONNECTION)
58	BN	CLEARANCE / IDENTIFICATION LIGHTS
59	GY	SOLENOID
60	OR	HAZARD LIGHTS
61	GY	AIR SUSPENSION
62	DKBL	PANEL LIGHTS
63	DKBL	COURTESY / DOME LIGHTS
64	YL	FOG / DRIVING LIGHTS
65	OR	CAB REAR FLOOD LIGHTS
66	YL	DAYTIME RUNNING LIGHT
67	GY	OBSTACLE AVOIDANCE / REMOTE SENSOR
68	BN	TAIL LIGHTS
69	BN	LICENSE PLATE LIGHT
70	OR	STOP LIGHTS
	RD	STOP LIGHTS (BODY BUILDER CONNECTION)
71	OR	BACKUP - LIGHTS
	LTBL	BACKUP - LIGHTS (BODY BUILDER CONNECTION)
72	OR	TRAILER AUXILIARY FEED - BATTERY
73	LTGN	PWM
74	LTGN	HEATER RECIRC MOTOR
75	LTGN	HEATER BLOWER MOTOR
76	LTGN	AUXILIARY FAN
77	LTGN	AIR CONDITIONER
78	LTGN	MIRRORS - HEATED, MOTORIZED
79	GY	SEAT BELTS
80	BK	SLEEPER BOX RELAY - FEED

CHK	DATE	CHANGE	REV	REFERENCE	DRAWN	NAME
–	–	INITIAL RELEASE.	A	92159Y	310615	CIRCUIT DIAGRAM, 9900
					RELEASE NO. 92159Y	DATE 06AUG13 / PART NO. AE08076113 / SHEET 005

Figure 5 Circuit Number Identification and Color (Cont.)

2.6. CIRCUIT NUMBER IDENTIFICATION AND COLOR (CONT.), P. 6

NAVISTAR, INC

THIS PRINT IS PROVIDED ON A RESTRICTED BASIS AND IS NOT TO BE USED IN ANY WAY DETRIMENTAL TO THE INTEREST OF NAVISTAR, INC.

ELECTRICAL CIRCUIT DIAGRAM CHAPTER 2

CIRCUIT NUMBER IDENTIFICATION AND COLOR (CONT)

CIRCUIT NUMBER	COLOR	DESCRIPTION
81	LTGN	POWER DOOR LOCKS
82	GY	WINDSHIELD WIPER
83	LTGN	POWER WINDOWS
84	LTGN	CIGAR LIGHTER
85	GY	HORN
86	LTGN	RADIO - ENTERTAINMENT / CLOCK
87	GY	WINDSHIELD WASHER
88	LTGN	CLOCK / HOURMETER
89	VT	AIR BAG
90	GY	HYDRAULIC BRAKE PUMP
91	VT	INTERCOMMUNICATION
92	TN	TRANSMISSION CONTROLS - ELECTRONICS
93	TN	AXLE SHIFT CONTROL
94	GY	ANTILOCK BRAKE SYSTEM
95	TN	EXHAUST EMISSION
96	YL	SNOW PLOW LIGHTS / CRUISE CONTROLS
97	VT	ENGINE CONTROLS - ELECTRONIC
98	BK	DATALINK AND DIAGNOSTICS
99	VT	ACCELERATOR POSITION SENSOR (APS)
100	GY	AIR HORN (ELECTRIC SOLENOID ACTUATED)
101	TN	BRAKE APPLICATION AIR
102	YL	FLASH TO PASS
103	LTGN	BODY BUILDER AUXILIARY FEED
104	DKBL	REMOTE START / STOP
105	LTGN	HEATED SEATS
106	OR	HIGH VOLTAGE ALTERNATOR AC CHARGE
107	GY	INSTRUMENT CLUSTER ELECTRONIC FEED (5V)
108	GY	BRAKE PAD WEAR SENSOR
109	GY	BRAKE STROKE / SLACK ADJUSTER
110	GY	INSTRUMENT CLUSTER ELECTRONIC GROUND
111	TN	FUEL FILTER RESTRICTION TRANSDUCER
112	GY	LIFT GATE

PREFIX	LOCATION
A	CAB - INSTRUMENT PANEL MODULE
B	CAB - DRIVER CONTROL MODULE
C	CAB - HEADER / CLEARANCE LIGHTS
D	CAB - ROOF / REAR PANEL
E	CAB - LEFT DOOR / DOORS
F	CAB - RIGHT DOOR / DOORS
H	CAB - SLEEPER
J	CAB - DASH (OUTSIDE)
K	ENGINE / RADIATOR
L	TRANSMISSION
M	CHASSIS / FRONT END (CAB DASH PANEL FORWARD)
N	CHASSIS / CENTER SECTION (CAB DASH PANEL TO CAB REAR XMBR)
P	CHASSIS / WHEEL BASE SECTION
R	CHASSIS / SUSPENSION / REAR AXLE / AXLES
S	CHASSIS / AF SECTION / STOP / TAIL / TURN LIGHTS
T	TRAVEL DOORS
U	HOOD MTD HEADLIGHTS / MARKER LIGHTS
V	SLEEPER ROOF / BACK PANEL WIRING
W	WARDROBE CABINET WIRING

CHK	DATE	CHANGE	REV	REFERENCE	DRAWN	NAME
–	–	INITIAL RELEASE.	A	92159Y	310615	CIRCUIT DIAGRAM, 9900
					RELEASE NO. 92159Y	DATE 06AUG13 / PART NO. AE08076113 / SHEET 006

Figure 6 Circuit Number Identification and Color (Cont.)

2.7. LAMP BULB CHART, P. 7

NAVISTAR, INC

THIS PRINT IS PROVIDED ON A RESTRICTED BASIS AND IS NOT TO BE USED IN ANY WAY DETRIMENTAL TO THE INTEREST OF NAVISTAR, INC.

ELECTRICAL CIRCUIT DIAGRAM

LAMP BULB CHART

CHAPTER 2

BULB APPLICATION	CANDLE POWER OR WATT	BULB TRADE NUMBER
BACK-UP LIGHT	32 CP	GE1156
CLEARANCE & IDENTIFICATION	3 CP	GE168
COURTESY LIGHT	21 CP	1142
DOME LIGHTS	21 CP	1142
FOG LIGHT	100 WATT	4921-1
LOW BEAMS	55 WATT	GE9007
HIGH BEAMS	65 WATT	GE9007
CIGAR LIGHTER	1 CP	1455
GAUGE BACKLIGHT	2 CP	194
GAUGE WARNING LED (RED)	2 CP	194
COLD AMBIENT PROTECTION LED (RED)	2 CP	194
FUEL FILTER LED (YELLOW)	2 CP	194
WARN ENGINE LED (YELLOW)	2 CP	194
STOP ENGINE LED (RED)	2 CP	194
BRAKE PRESSURE LED	2 CP	194
CHECK TRANSMISSION LED	2 CP	194
TRAILER ABS LED	2 CP	194
LEFT TURN SIGNAL LED (GREEN)	2 CP	194
TRACTION CONTROL LED (GREEN)	2 CP	194
WATER IN FUEL LED (YELLOW)	2 CP	194
PARK FLUID LED (RED)	2 CP	194
CHECK ELECTRICAL SYSTEM LED (YELLOW)	2 CP	194
PARK BRAKE LED (RED)	2 CP	194
CRUISE CONTROL ACTIVE LED (YELLOW)	2 CP	194
ANTILOCK BRAKING SYSTEM LED (YELLOW)	2 CP	194
RIGHT TURN LED (GREEN)	2 CP	194
COOLANT LEVEL LED (RED)	2 CP	194
SEAT BELT LED (RED)	2 CP	194
HIGH BEAM ICON LED (BLUE)	2 CP	194
CHECK AIR CONDITIONER LED (YELLOW)	2 CP	82S272109-4
MAP LIGHT	3 CP	1816
SIDE MARKER	–	2548
STOP & TURN/TAIL & LICENSE PLATE	32/3 CP	3157
TURN SIGNAL/MARKER (FENDER)	32/3 CP	3157
TURN SIGNAL & MARKER LIGHT	–	2356
WORK (TRAILER HOOK)	35 WATT	4411
BACK-UP LIGHTS-UPPER AND LOWER BUNK READING LIGHT	15 CP	1003
CABINET / WARDROBE LIGHT	5 WATT	7575
UNDER BUNK LIGHT	21 CP / 2 (12CP)	577 / 211
ACCENT LIGHT	2 (12CP)	211
DOME LIGHT	15 WATT	F15T8-CW
SLEEPER FLOOR LIGHT	4 CP	W5W
HEATER AND AIR CONDITIONER CONTROL	3 CP	168
LUGGAGE COMPARTMENT LIGHT	6 CP	99
READING LIGHT	15 CP	1003

CHK	DATE	CHANGE	REV	REFERENCE	DRAWN	NAME		
–	–	INITIAL RELEASE.	A	92159Y	310615	CIRCUIT DIAGRAM, 9900		
					RELEASE NO. 92159Y	DATE 06AUG13	PART NO. AE08076113	SHEET 007

Figure 7 Lamp Bulb Chart.

2.8. RELAY FUNCTION AND WIRING GUIDE, P. 8

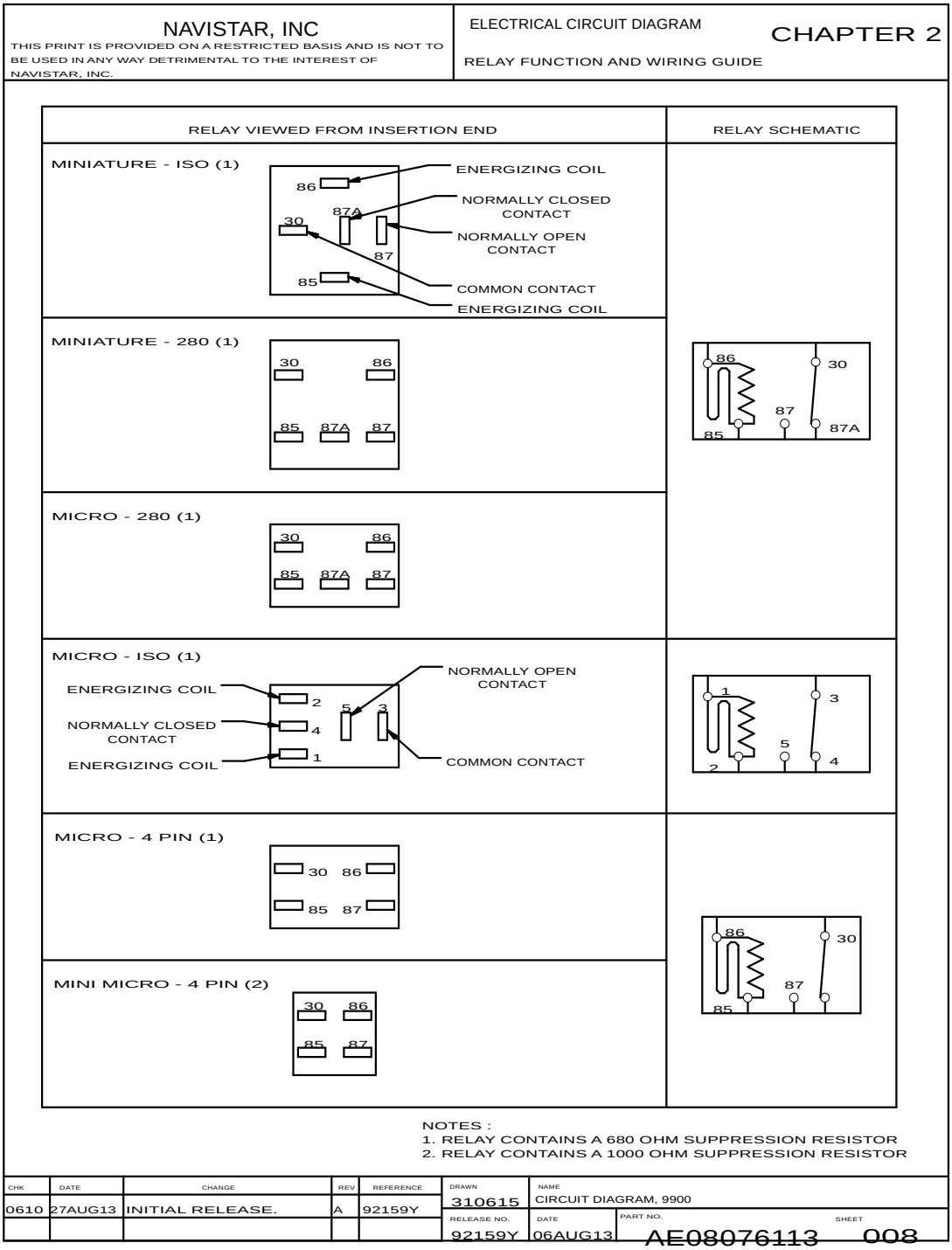

Figure 8 Relay Function and Wiring Guide.

2.9. SCHEMATIC SYMBOL CHART, P. 9

NAVISTAR, INC

THIS PRINT IS PROVIDED ON A RESTRICTED BASIS AND IS NOT TO BE USED IN ANY WAY DETRIMENTAL TO THE INTEREST OF NAVISTAR, INC.

ELECTRICAL CIRCUIT DIAGRAM

SCHEMATIC SYMBOL CHART

CHAPTER 2

SYMBOL	DESCRIPTION	SYMBOL	DESCRIPTION
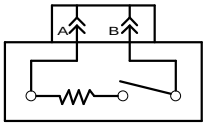	AIR DRYER	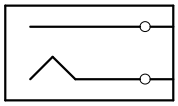	CIGAR LIGHTER
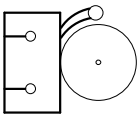	ALARM	TYPE 1 TYPE 2 OR 3	CIRCUIT BREAKER
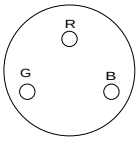	ALTERNATOR		DIODE
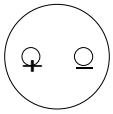	AMMETER		DIODE, LIGHT EMITTING
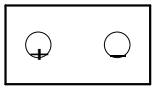	BATTERY	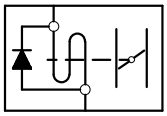	FAN SOLENOID
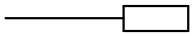	BLUNT CUT CIRCUIT		FEMALE TERMINAL
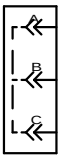	BUSBAR		FUSE

CHK	DATE	CHANGE	REV	REFERENCE	DRAWN	NAME
–	–	INITIAL RELEASE.	A	92159Y	310615	CIRCUIT DIAGRAM, 9900
					RELEASE NO. 92159Y	DATE 06AUG13 / PART NO. AE08076113 / SHEET 009

Figure 9 Schematic Symbol Chart.

2.10. SCHEMATIC SYMBOL CHART (CONT.), P. 10

NAVISTAR, INC

THIS PRINT IS PROVIDED ON A RESTRICTED BASIS AND IS NOT TO BE USED IN ANY WAY DETRIMENTAL TO THE INTEREST OF NAVISTAR, INC.

ELECTRICAL CIRCUIT DIAGRAM

CHAPTER 2

SCHEMATIC SYMBOL CHART (CONT)

SYMBOL	DESCRIPTION
	FUSES W/ BUSBAR
	FUSIBLE LINK
	GROUND N/ STUD
	GROUND W/ STUD
	HEATER
	HOLDER, FUSE W/ BUSBAR

SYMBOL	DESCRIPTION
	HORN
BATT, OFF, S, IGN, ACC, A, B, D, C	KEY SWITCH
S, A, OFF, F, B, A, C, E	KEY SWITCH, COMPLEX
	LIGHT W/ SWITCH
	LIGHT, DOUBLE FILAMENT
	LIGHT, SINGLE FILAMENT

CHK	DATE	CHANGE	REV	REFERENCE
0610	27AUG13	INITIAL RELEASE.	A	92159Y

DRAWN	NAME		
310615	CIRCUIT DIAGRAM, 9900		
RELEASE NO.	DATE	PART NO.	SHEET
92159Y	06AUG13	AE08076113	010

Figure 10 Schematic Symbol Chart (Cont.)

2.11. SCHEMATIC SYMBOL CHART (CONT.), P. 11

NAVISTAR, INC

THIS PRINT IS PROVIDED ON A RESTRICTED BASIS AND IS NOT TO BE USED IN ANY WAY DETRIMENTAL TO THE INTEREST OF NAVISTAR, INC.

ELECTRICAL CIRCUIT DIAGRAM

CHAPTER 2

SCHEMATIC SYMBOL CHART (CONT)

SYMBOL	DESCRIPTION
	MALE TERMINAL
	MOTOR
	PASS THRU CONNECTION
	PRESSURE SWITCH
86, 30, 87, 85, 87A	RELAY, FIVE TERMINAL
86, 30, 87, 85	RELAY, FOUR TERMINAL
B1, B2	RELAY, LATCHING

SYMBOL	DESCRIPTION
	RESISTOR
A, B, C	SENDER - FUEL, OIL, TEMP, WATER
	SENSOR, PRESSURE. ABS 6
	SENSOR, MAGNETIC
	SENSOR, YAW
	SOLENOID
	SOLENOID W/ DIODE

CHK	DATE	CHANGE	REV	REFERENCE	DRAWN	NAME
0610	27AUG13	INITIAL RELEASE.	A	92159Y	310615	CIRCUIT DIAGRAM, 9900
					RELEASE NO. 92159Y	DATE 06AUG13
					PART NO. AE08076113	SHEET 011

Figure 11 Schematic Symbol Chart (Cont.)

2.12. SCHEMATIC SYMBOL CHART (CONT.), P. 12

NAVISTAR, INC

THIS PRINT IS PROVIDED ON A RESTRICTED BASIS AND IS NOT TO BE USED IN ANY WAY DETRIMENTAL TO THE INTEREST OF NAVISTAR, INC.

ELECTRICAL CIRCUIT DIAGRAM

CHAPTER 2

SCHEMATIC SYMBOL CHART (CONT)

SYMBOL	DESCRIPTION
	SPEAKER
	SPLICE
	STUD
B S S G S B M B A	START MOTOR W/ TOCP
	SWITCH, MECHANICAL (NORMALLY OPEN)
	SWITCH, MECHANICAL (NORMALLY CLOSED)

SYMBOL	DESCRIPTION
	SWITCH, PUSH BUTTON
A 120 OHMS C	TERMINATING RESISTOR
	THERMOSTAT
	VALVE, ETHER BOTTLE
A B C	VALVE, MODULATOR
A B	THERMISTOR

CHK	DATE	CHANGE	REV	REFERENCE	DRAWN	NAME
–	–	INITIAL RELEASE.	A	92159Y	310615	CIRCUIT DIAGRAM, 9900
					RELEASE NO. 92159Y	DATE 06AUG13
					PART NO. AE08076113	SHEET 012

Figure 12 Schematic Symbol Chart (Cont.)

12 VOLT POWER DISTRIBUTION AND DATA LINK (CHAPTER 3)

3.1. BATTERY FEED WITH ENGINE BRAKE, P. 1

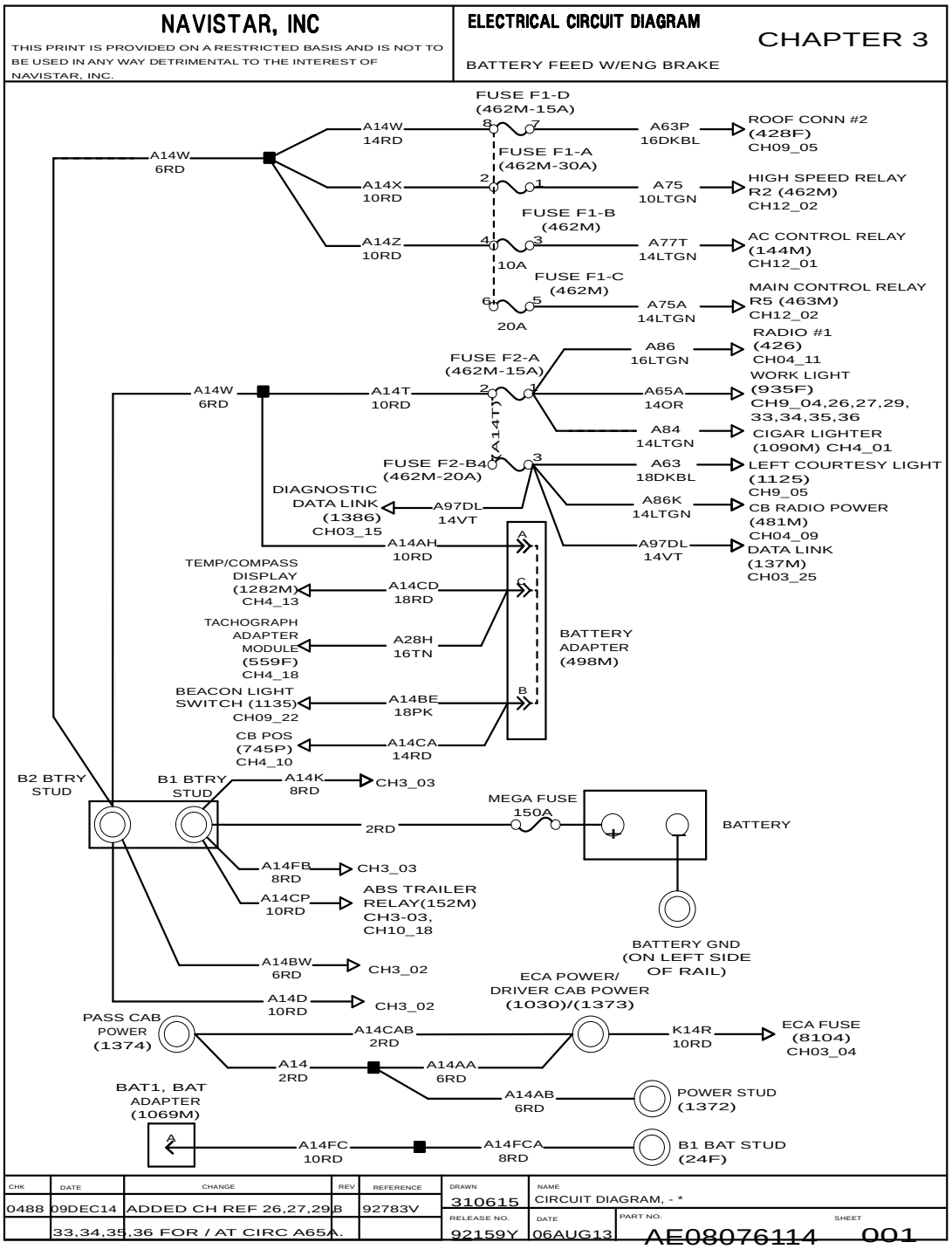

Figure 13 Battery Feed with Engine Brake.

3.2. BATTERY FEED WITH ENGINE BRAKE (CONT.), P. 2

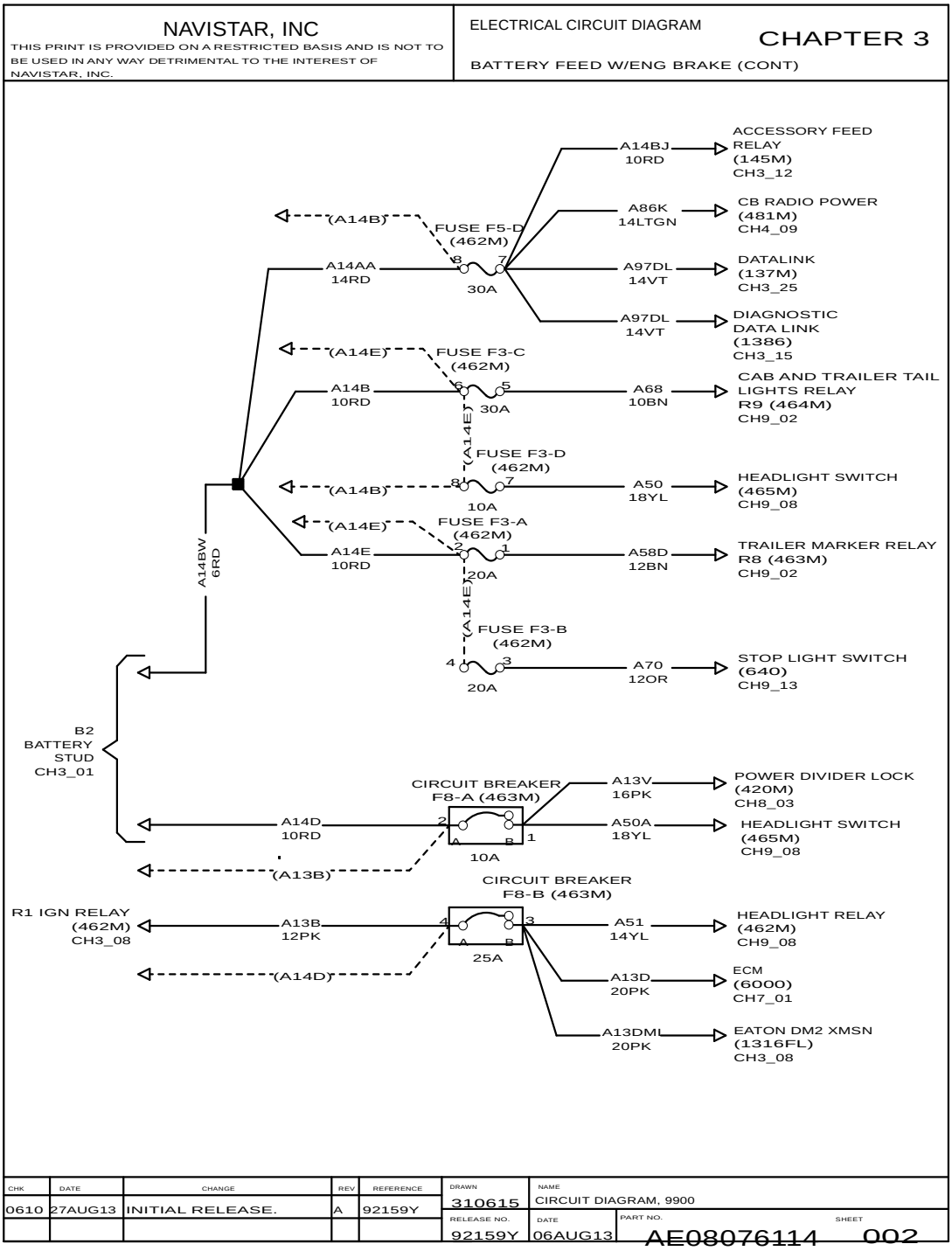

Figure 14 Battery Feed with Engine Brake (Cont.)

3.3. BATTERY FEED WITH ENGINE BRAKE (CONT.), P. 3

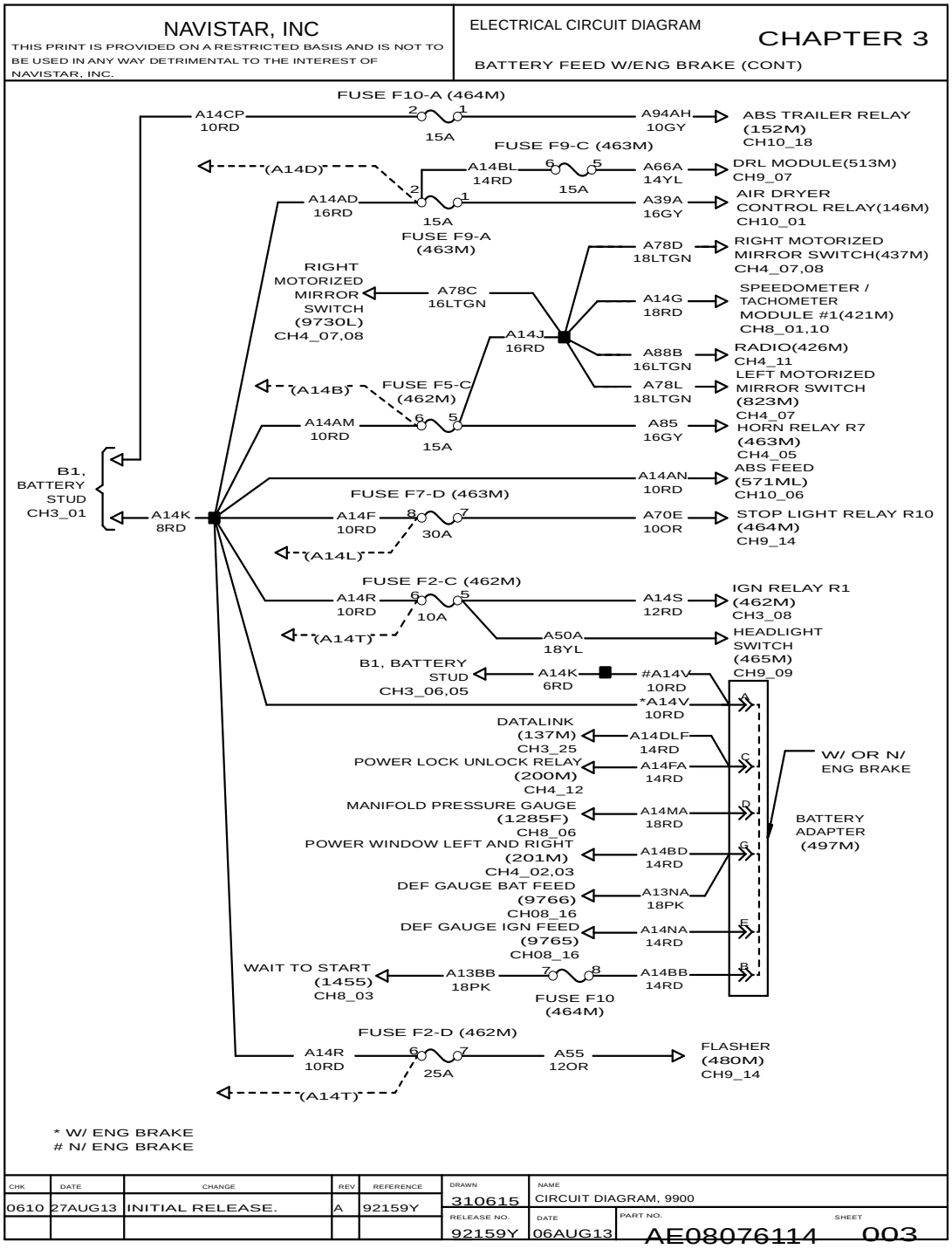

Figure 15 Battery Feed with Engine Brake (Cont.)

3.4. BATTERY FEED WITH ENGINE BRAKE (CONT.), P. 4

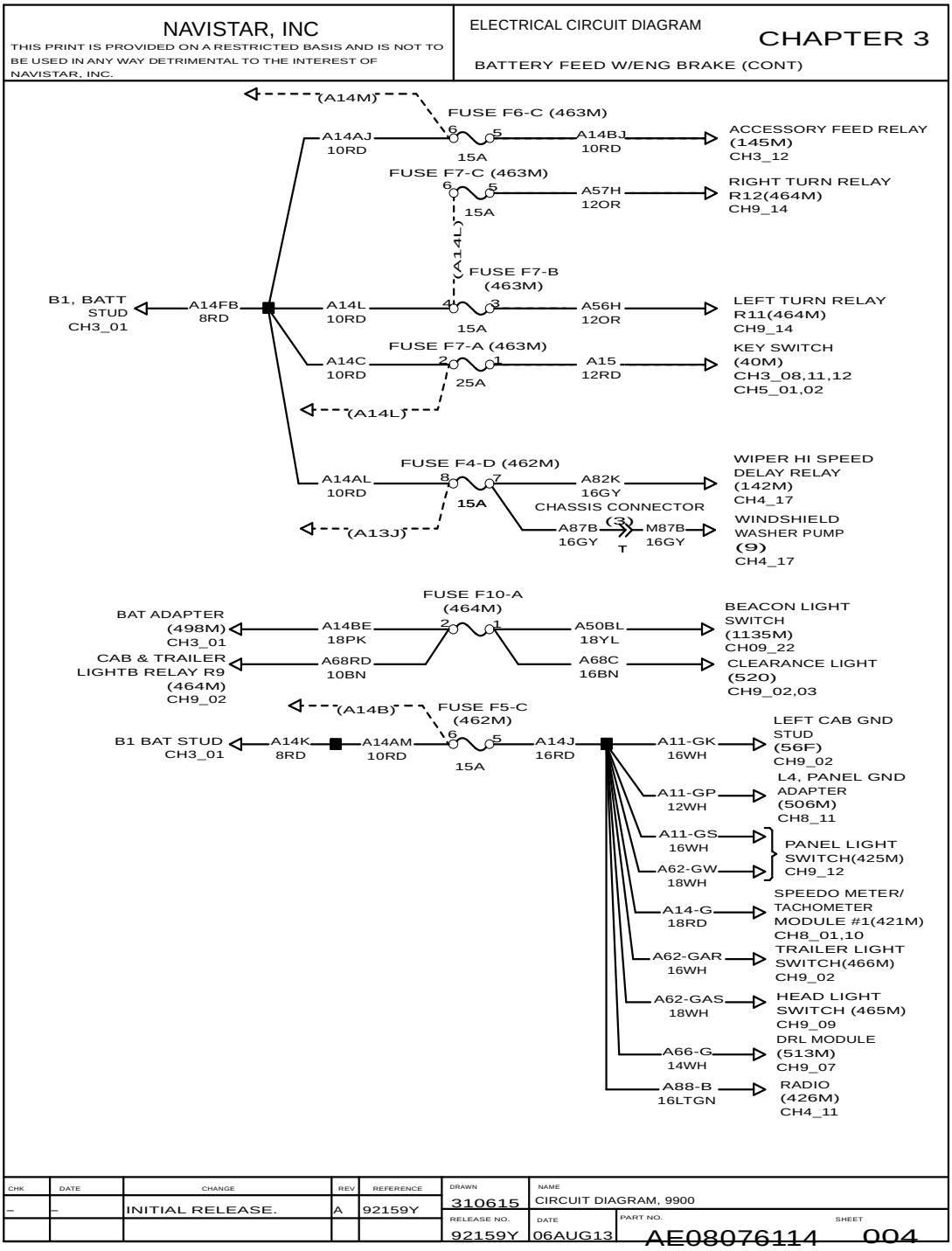

Figure 16 Battery Feed with Engine Brake (Cont.)

3.5. BATTERY FEED WITHOUT ENGINE BRAKE, P. 5

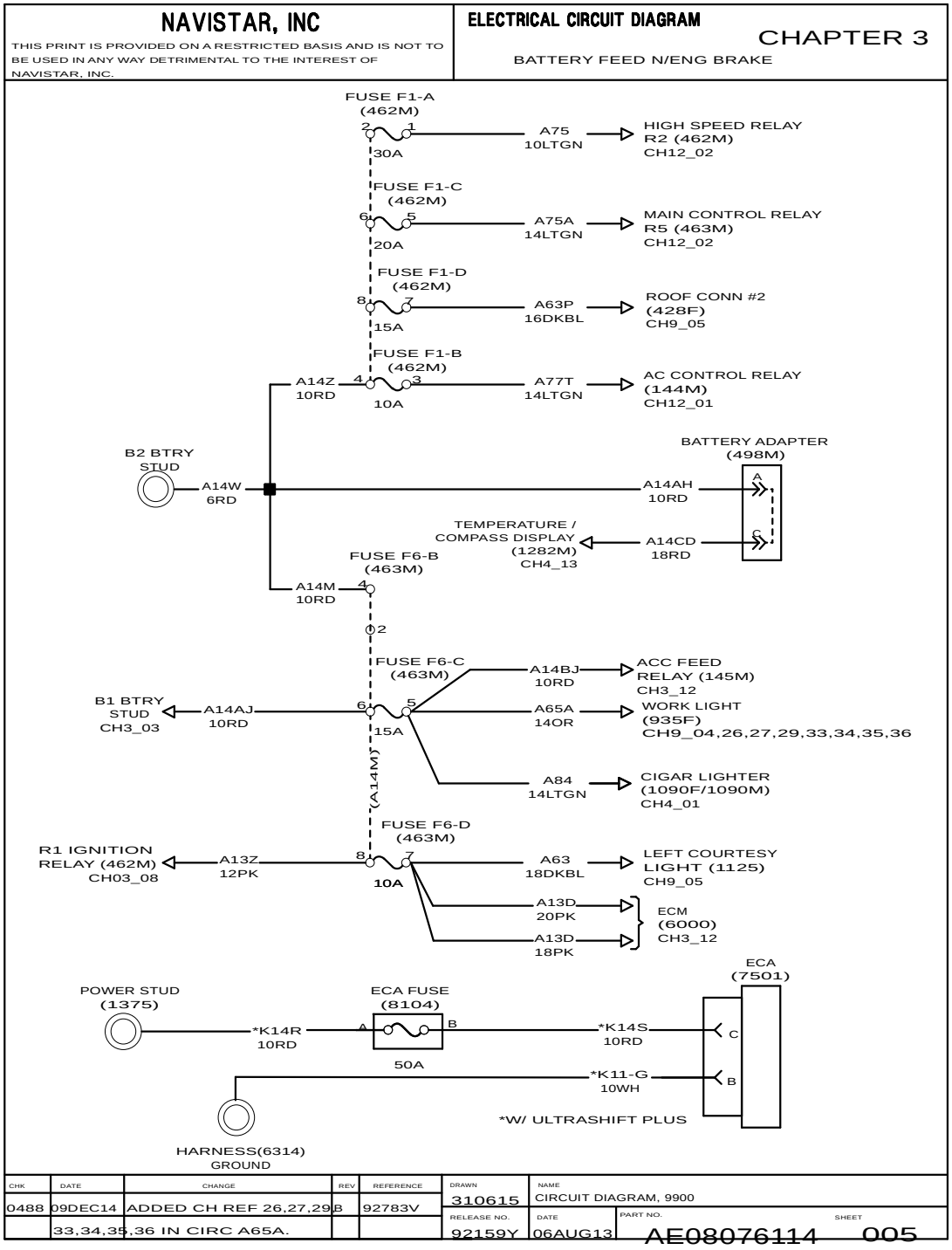

Figure 17 Battery Feed without Engine Brake.

3.6. BATTERY FEED WITHOUT ENGINE BRAKE (CONT.), P. 6

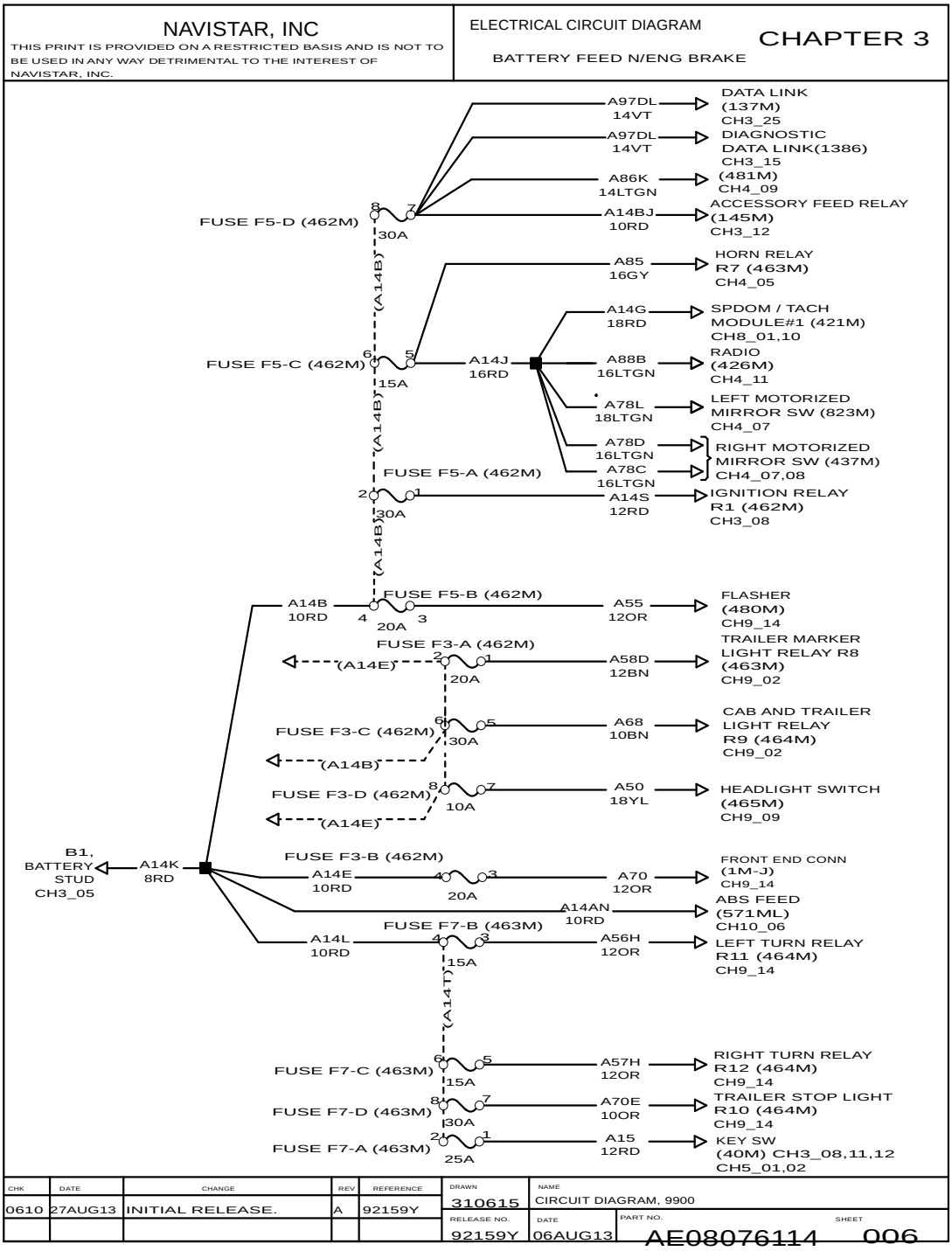

Figure 18 Battery Feed without Engine Brake (Cont.)

3.7. BATTERY FEED WITHOUT ENGINE BRAKE (CONT.), P. 7

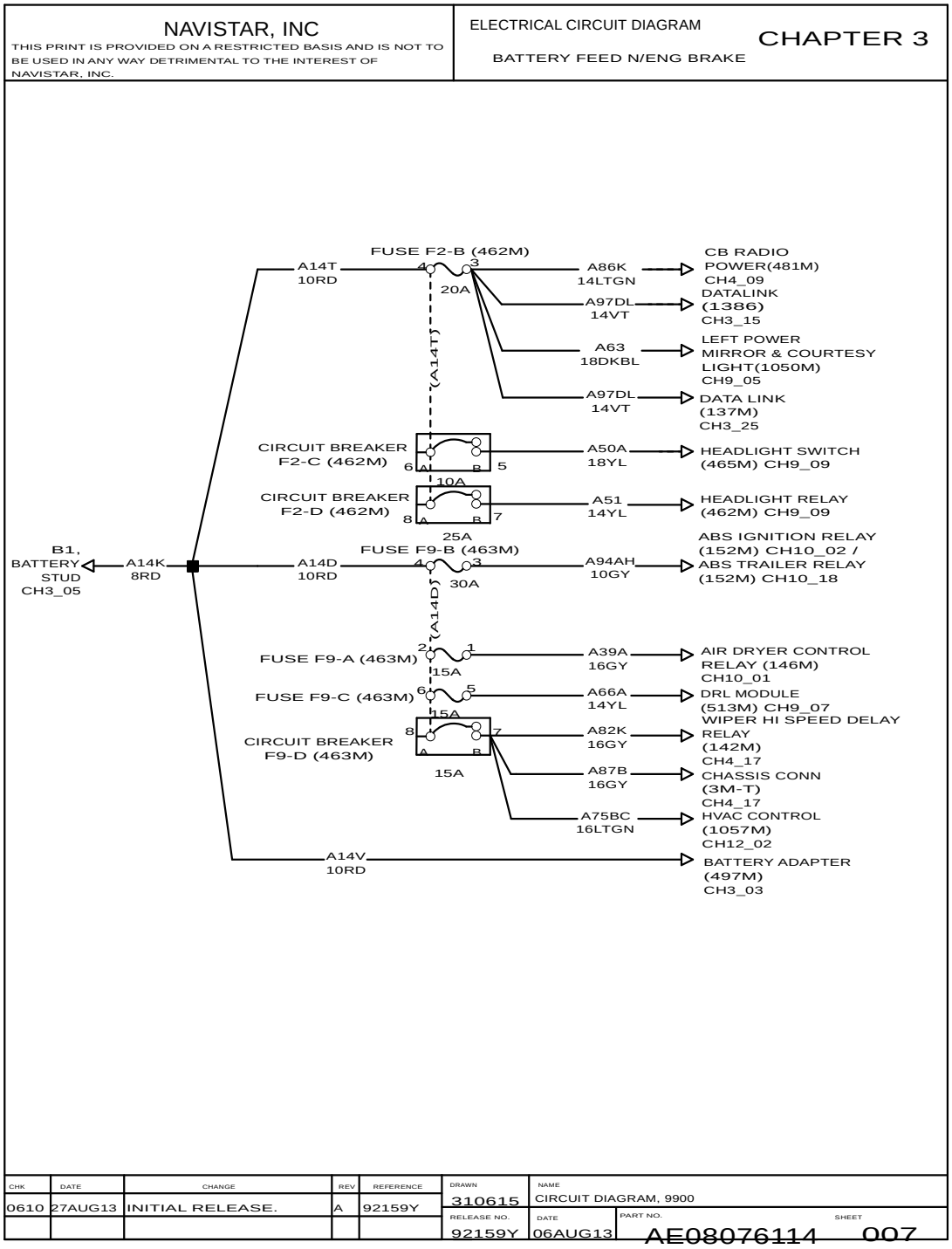

Figure 19 Battery Feed without Engine Brake (Cont.)

3.8. IGNITION FEED, P. 8

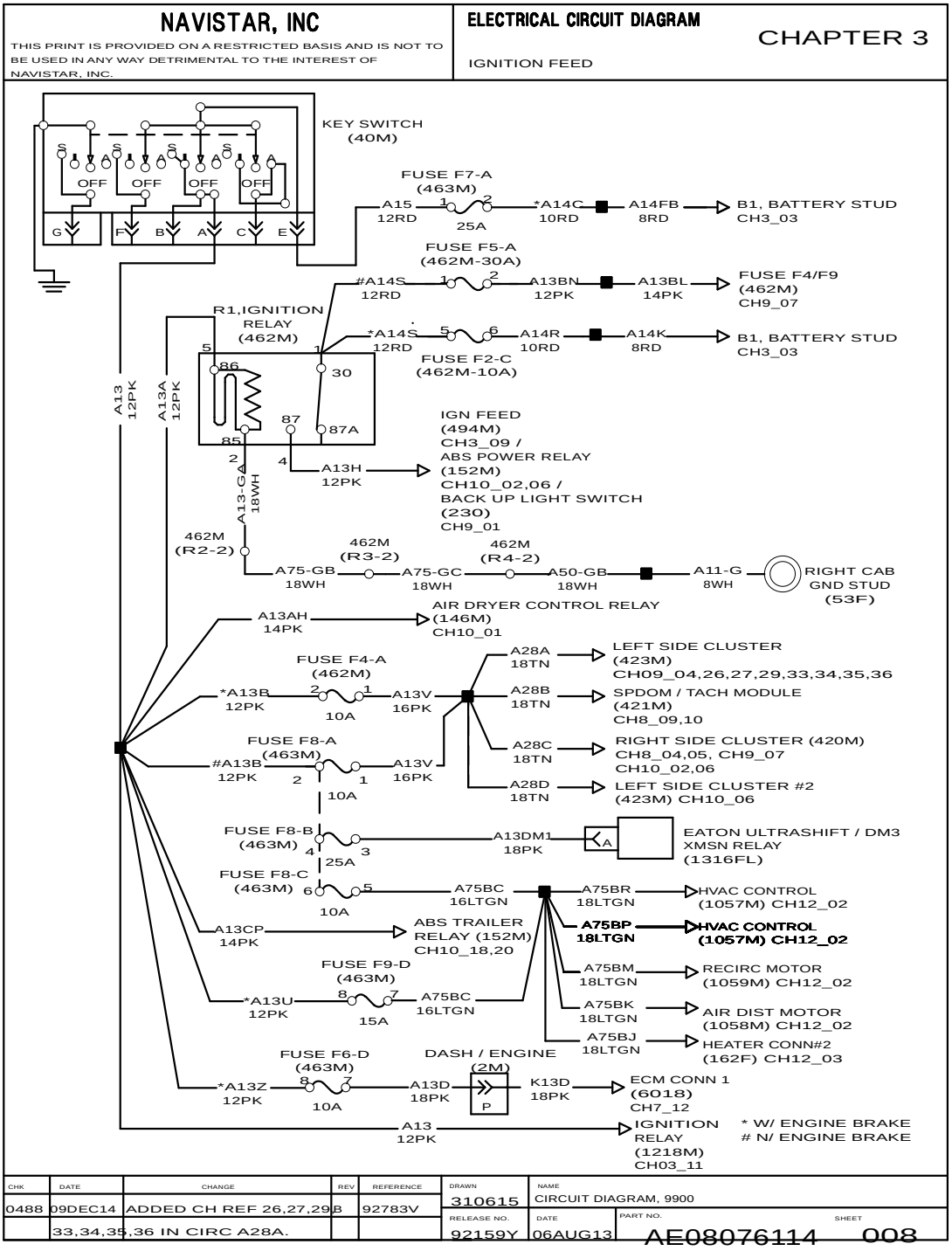

Figure 20 Ignition Feed.

3.9. IGNITION FEED (CONT.), P. 9

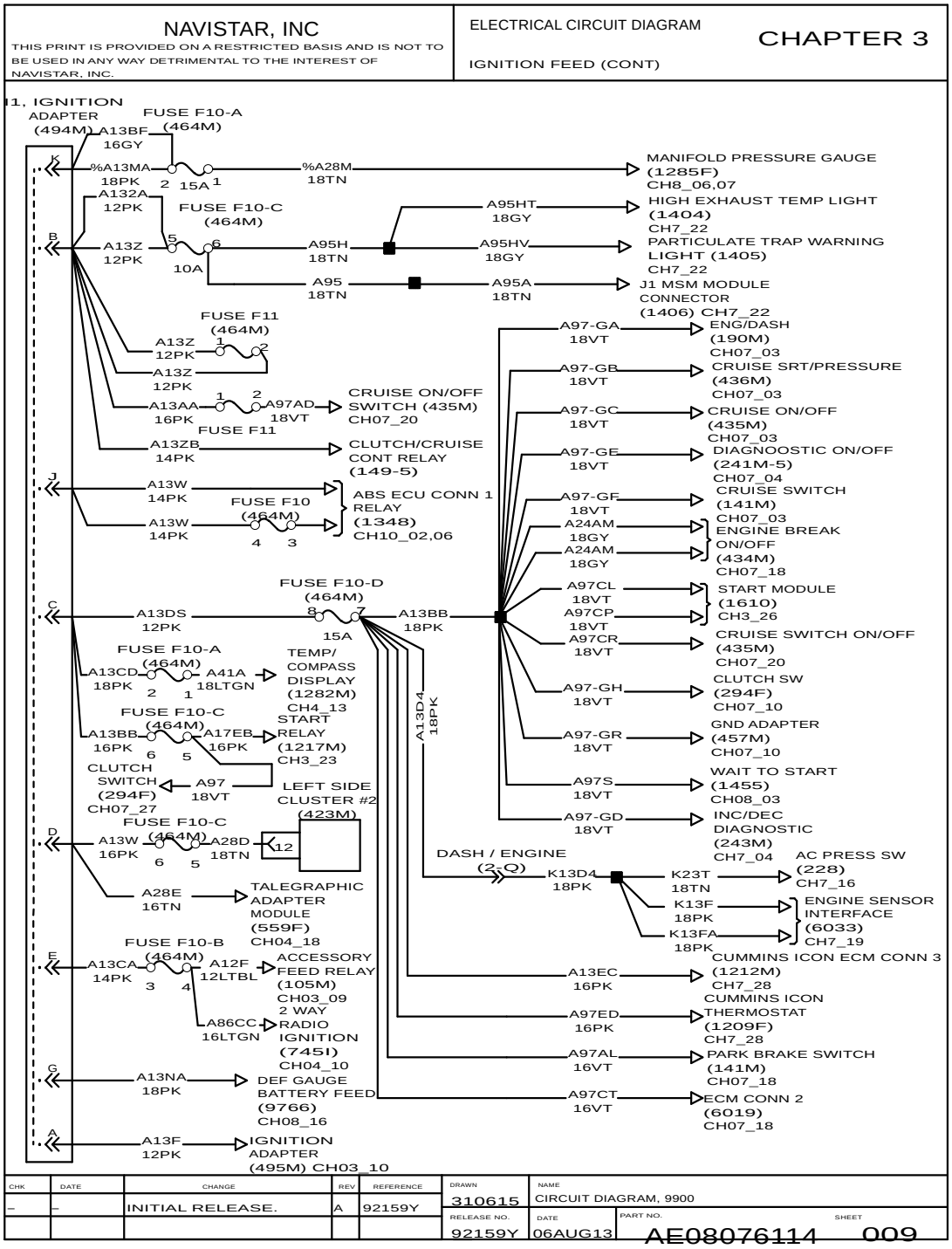

Figure 21 Ignition Feed (Cont.)

3.10. IGNITION FEED (CONT.), P. 10

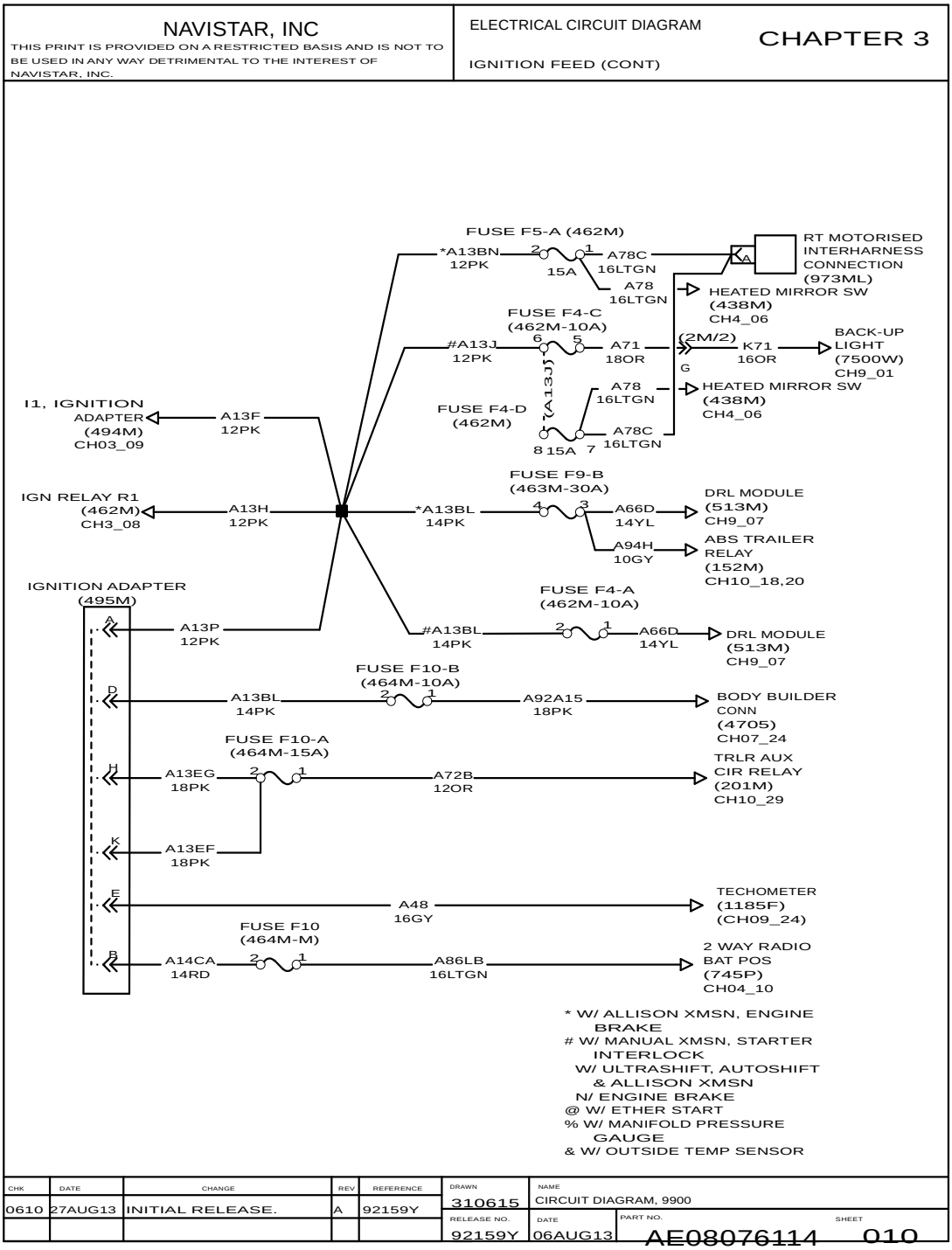

Figure 22 Ignition Feed (Cont.)

3.11. POWER FEED, P. 11

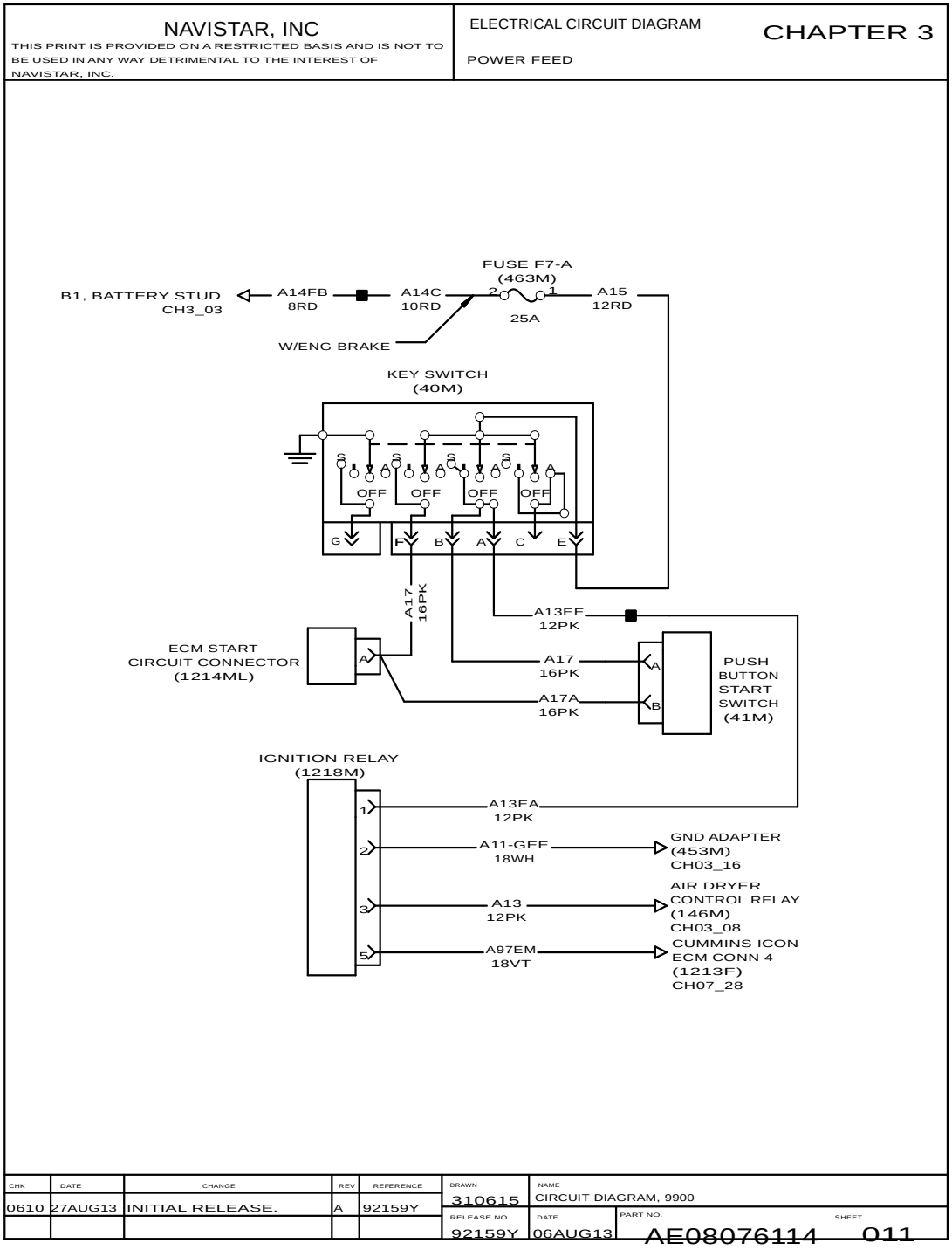

Figure 23 Power Feed.

3.12. ACCESSORY FEED, P. 12

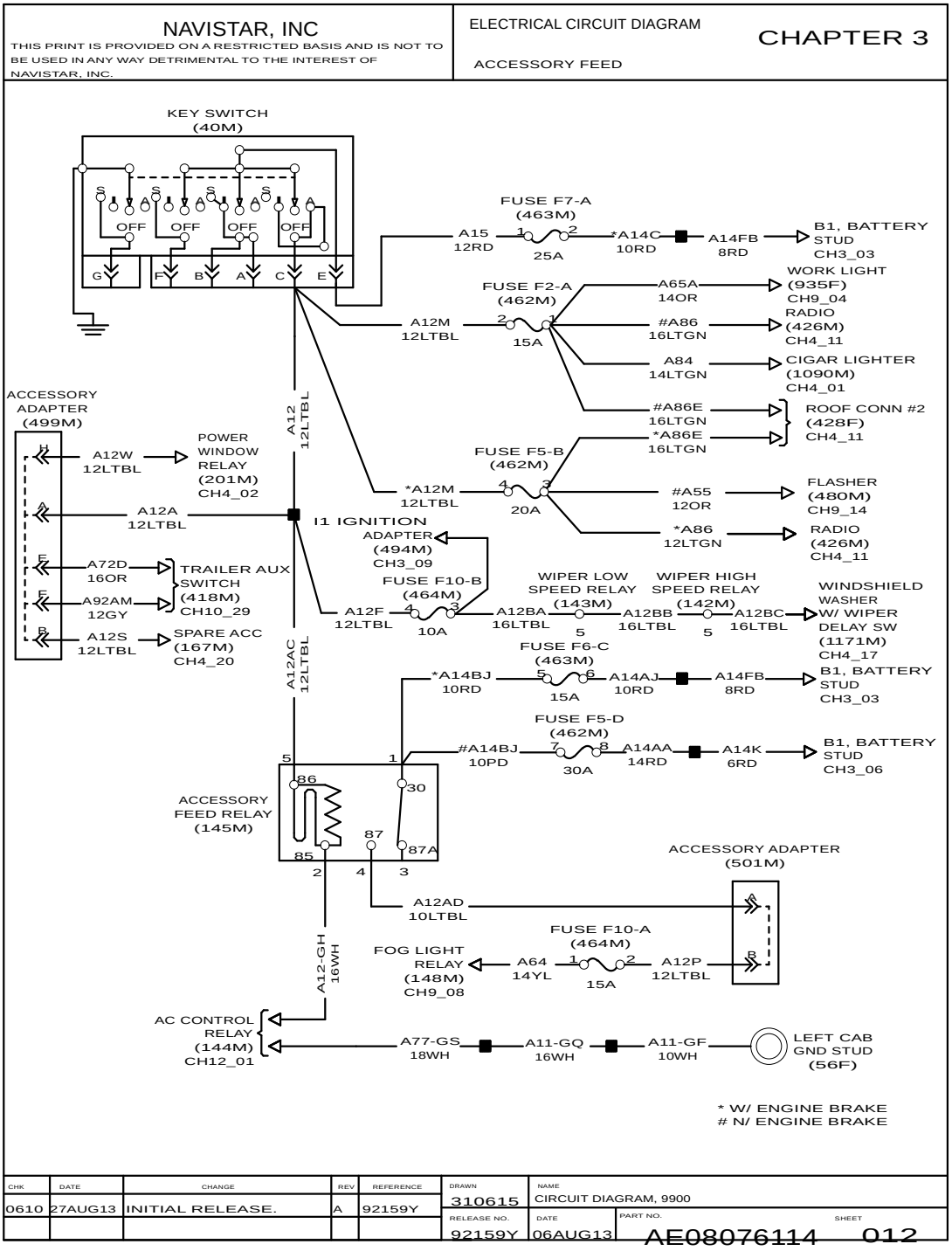

Figure 24 Accessory Feed.

3.13. CAB J1939 DATA LINK, P. 13

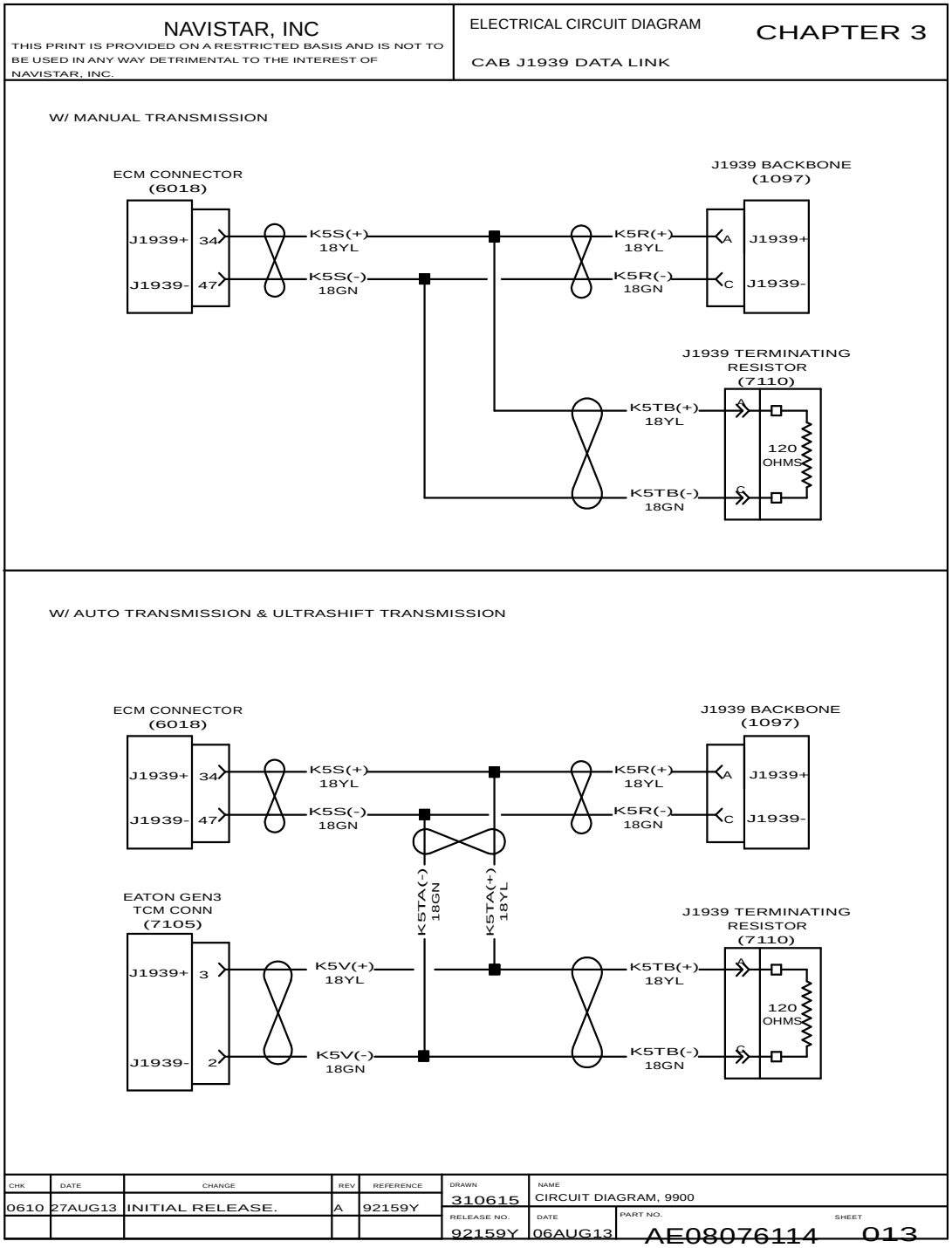

Figure 25 Cab J1939 Data Link.

3.14. CAB J1939 DATA LINK (CONT.), P. 14

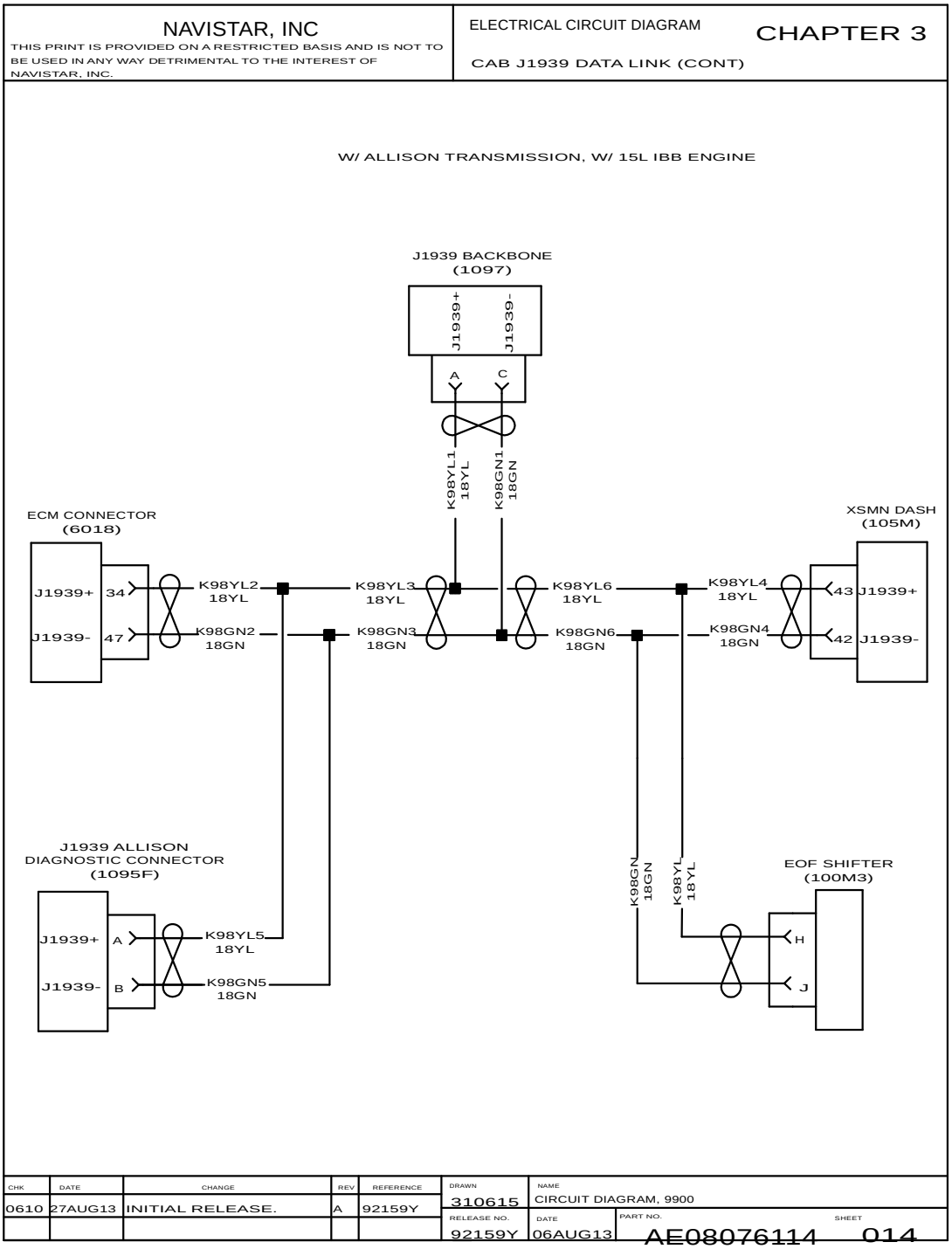

Figure 26 Cab J1939 Data Link (Cont.)

3.15. DIAGNOSTIC DATA LINK, P. 15

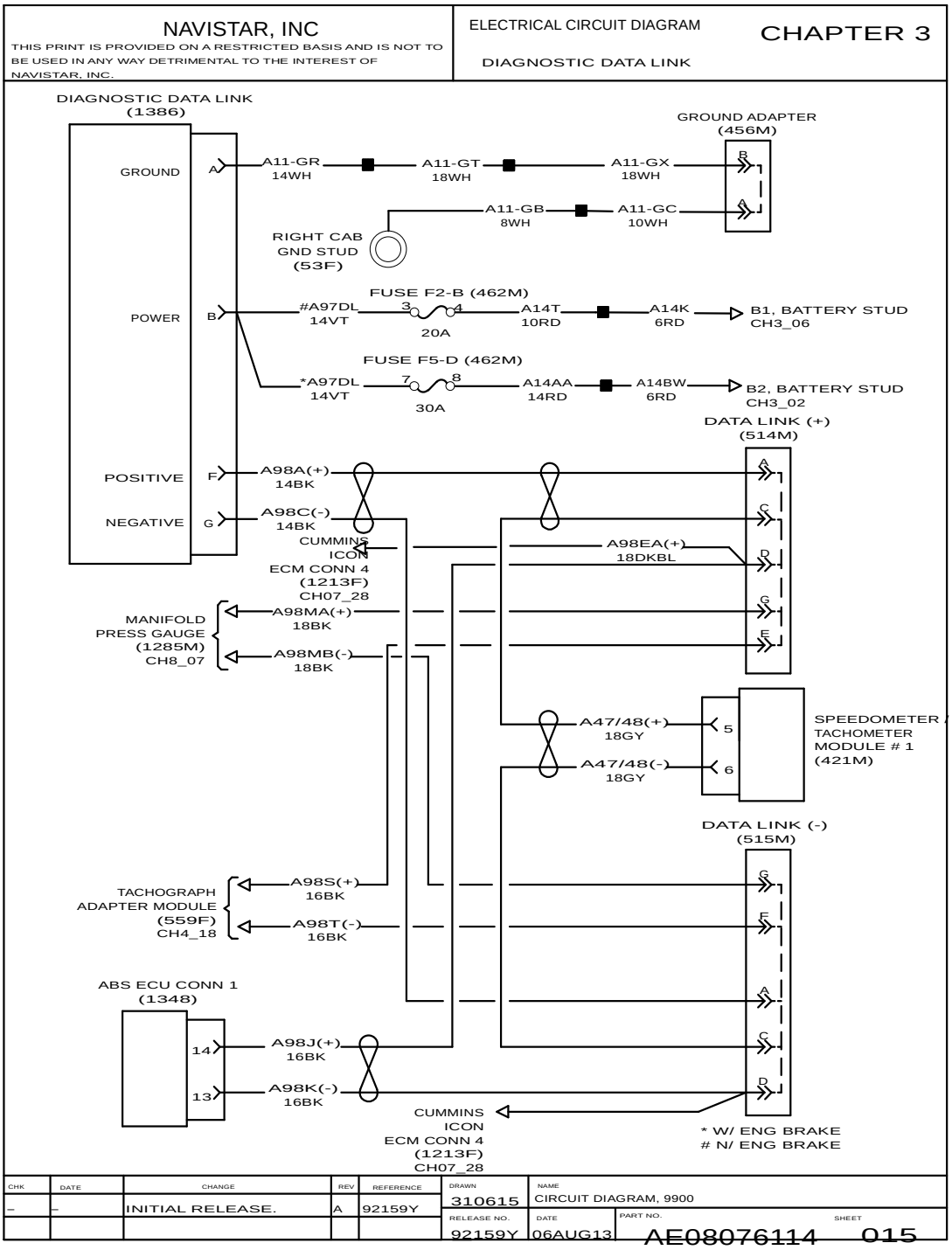

Figure 27 Diagnostic Data Link.

3.16. GROUND – IP, P. 16

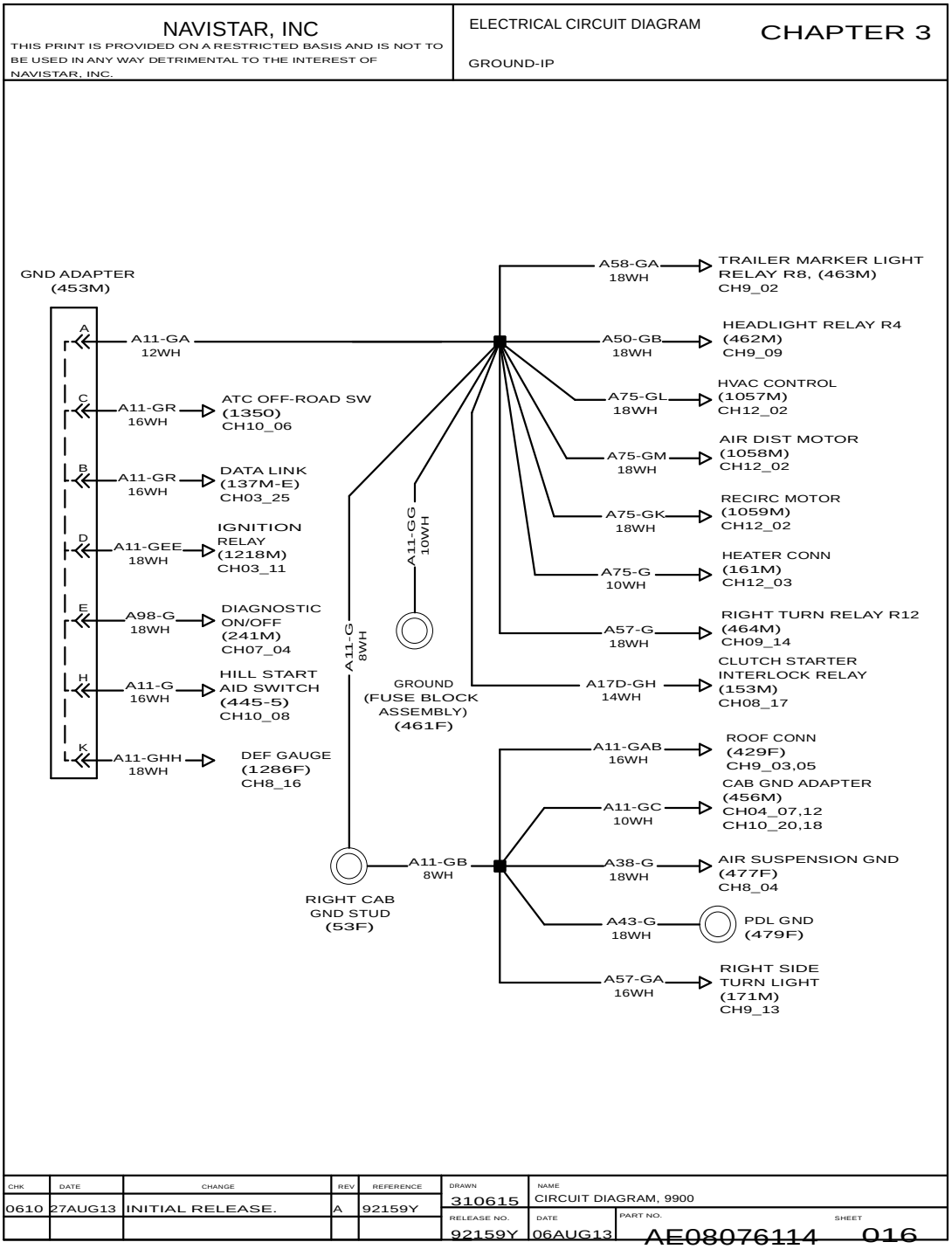

Figure 28 Ground – IP.

3.17. GROUND – IP (CONT.), P. 17

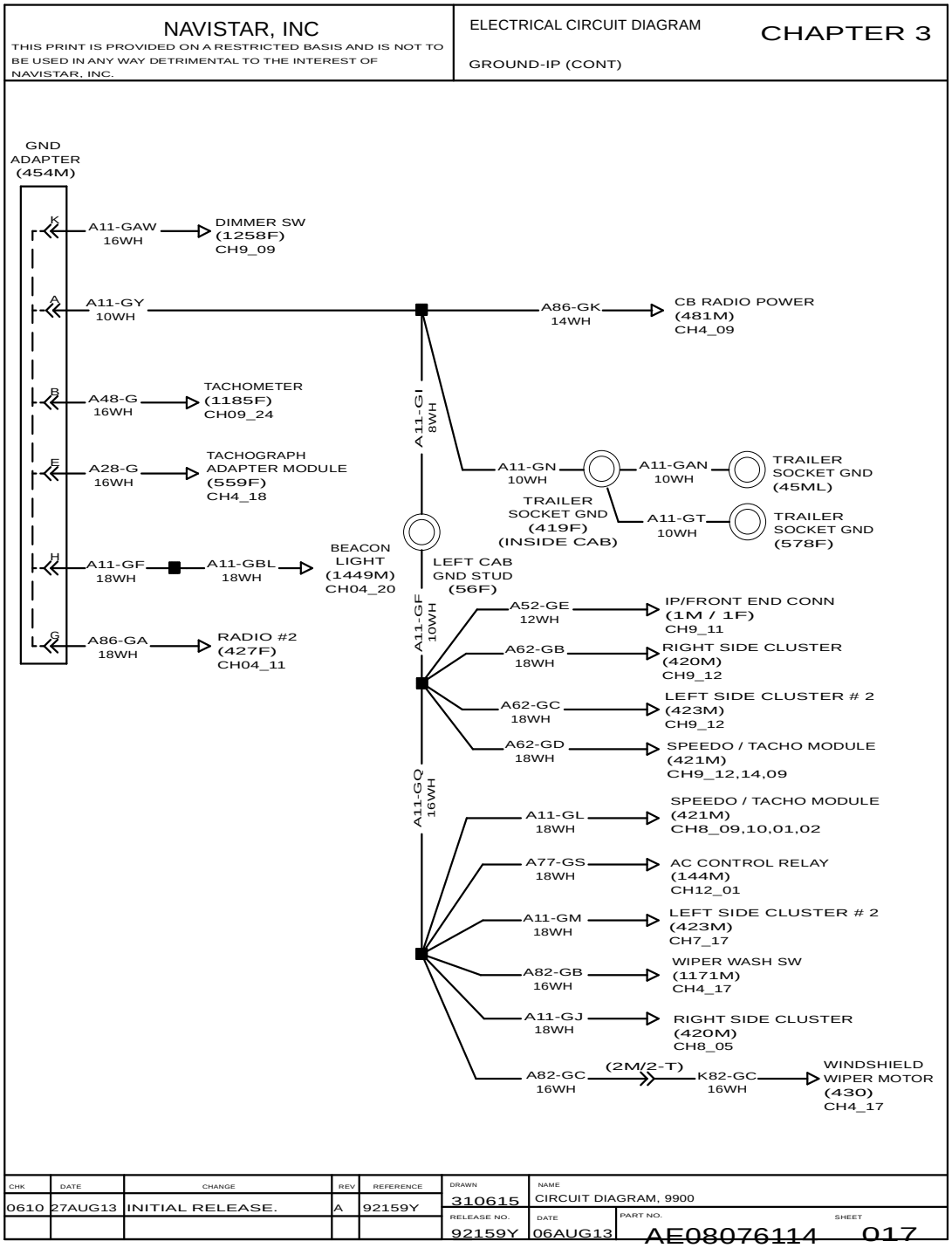

Figure 29 Ground – IP (Cont.)

3.18. GROUND – IP (CONT.), P. 18

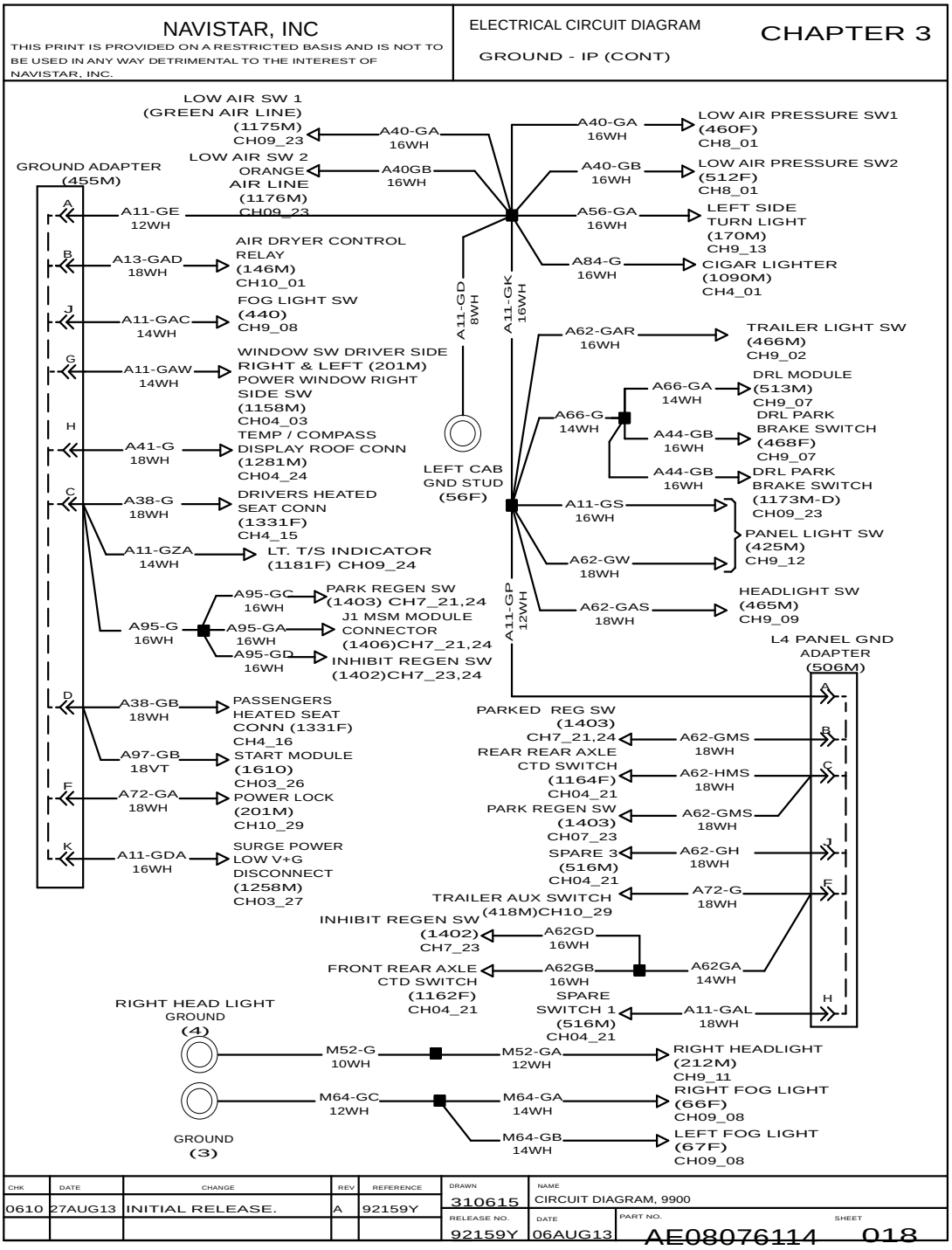

Figure 30 Ground – IP (Cont.)

3.19. GROUND – IP (CONT.), P. 19

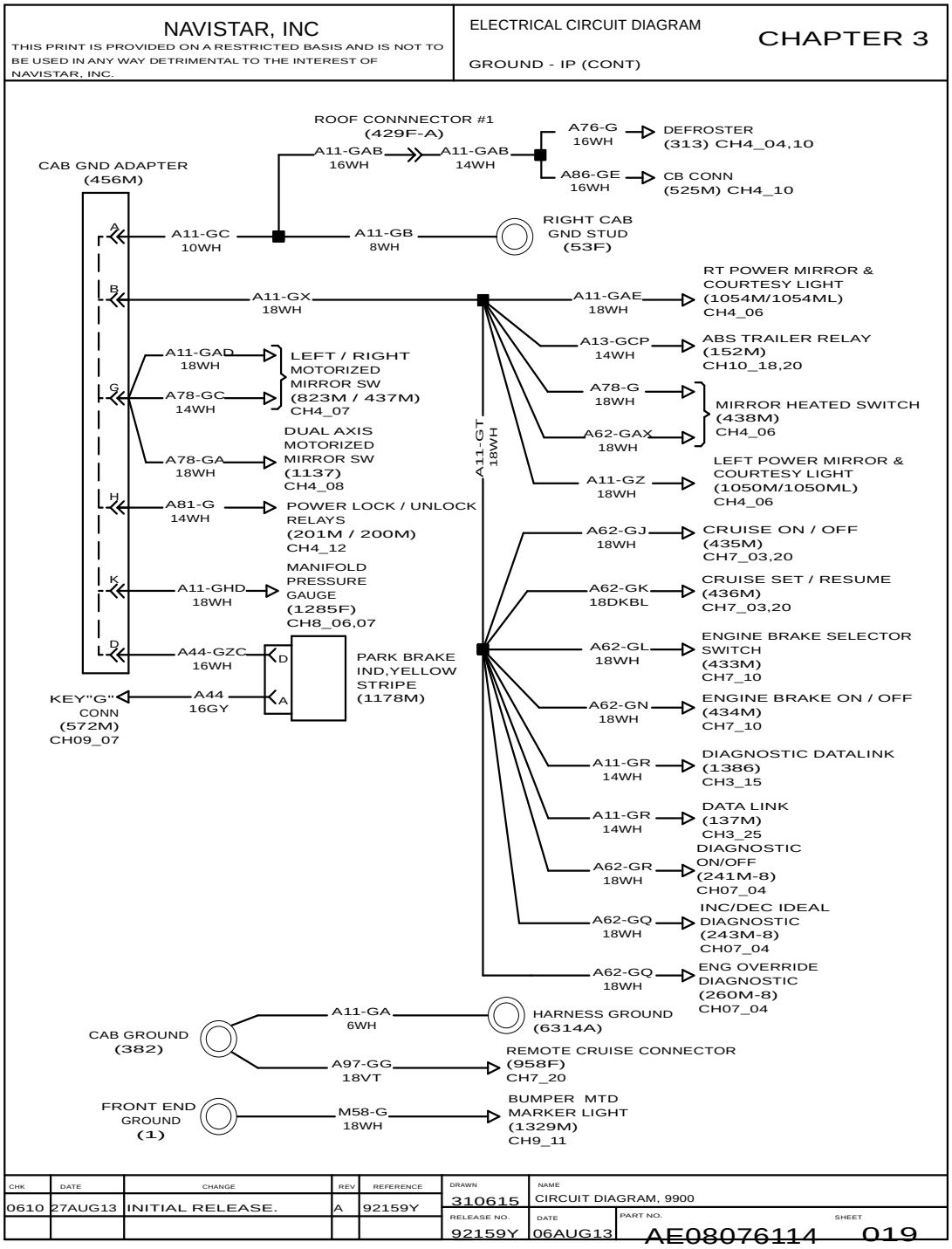

Figure 31 Ground – IP (Cont.)

3.20. ZERO VOLT REFERENCE, P. 20

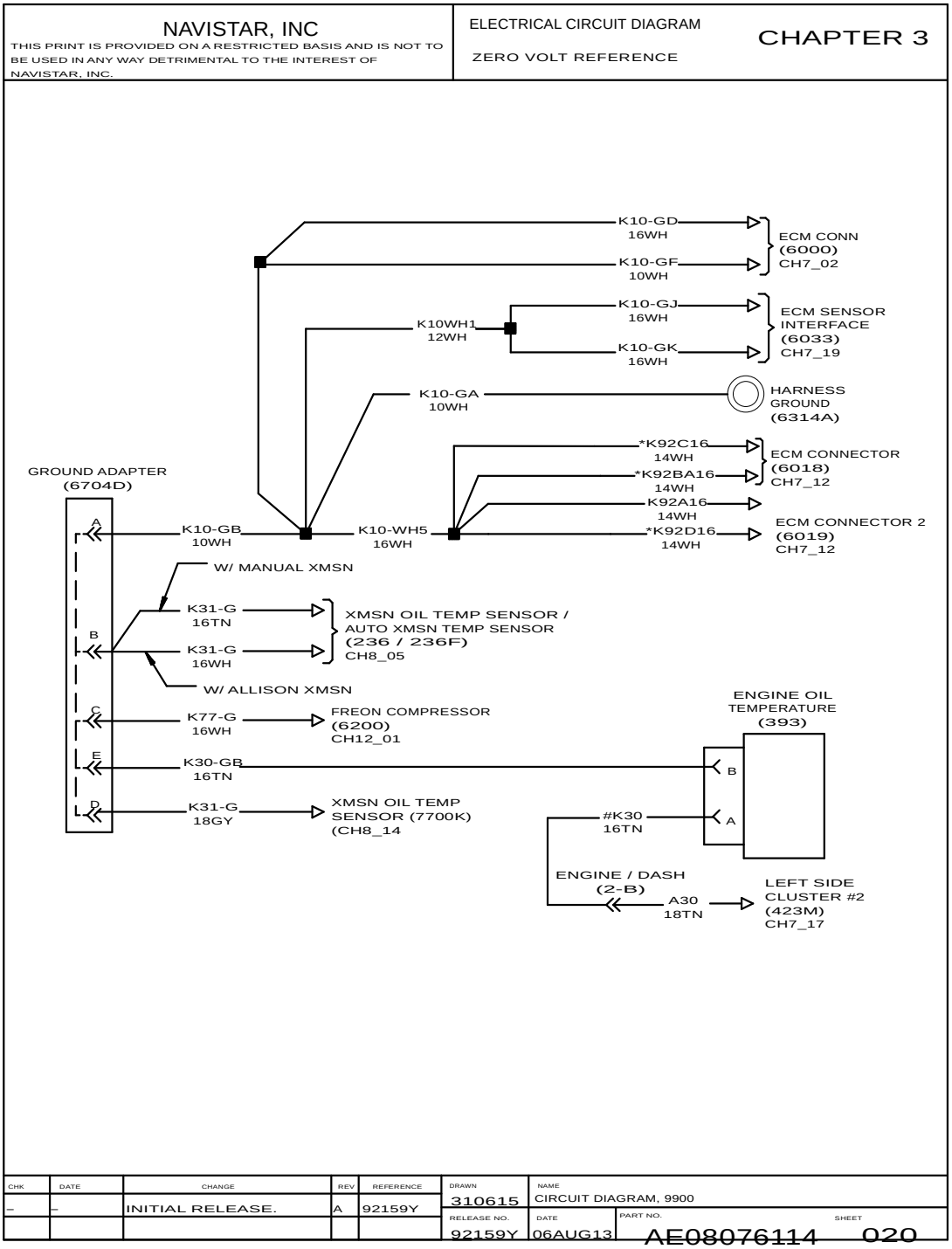

Figure 32 Zero Volt Reference.

3.21. PANEL LIGHT ADAPTER, P. 21

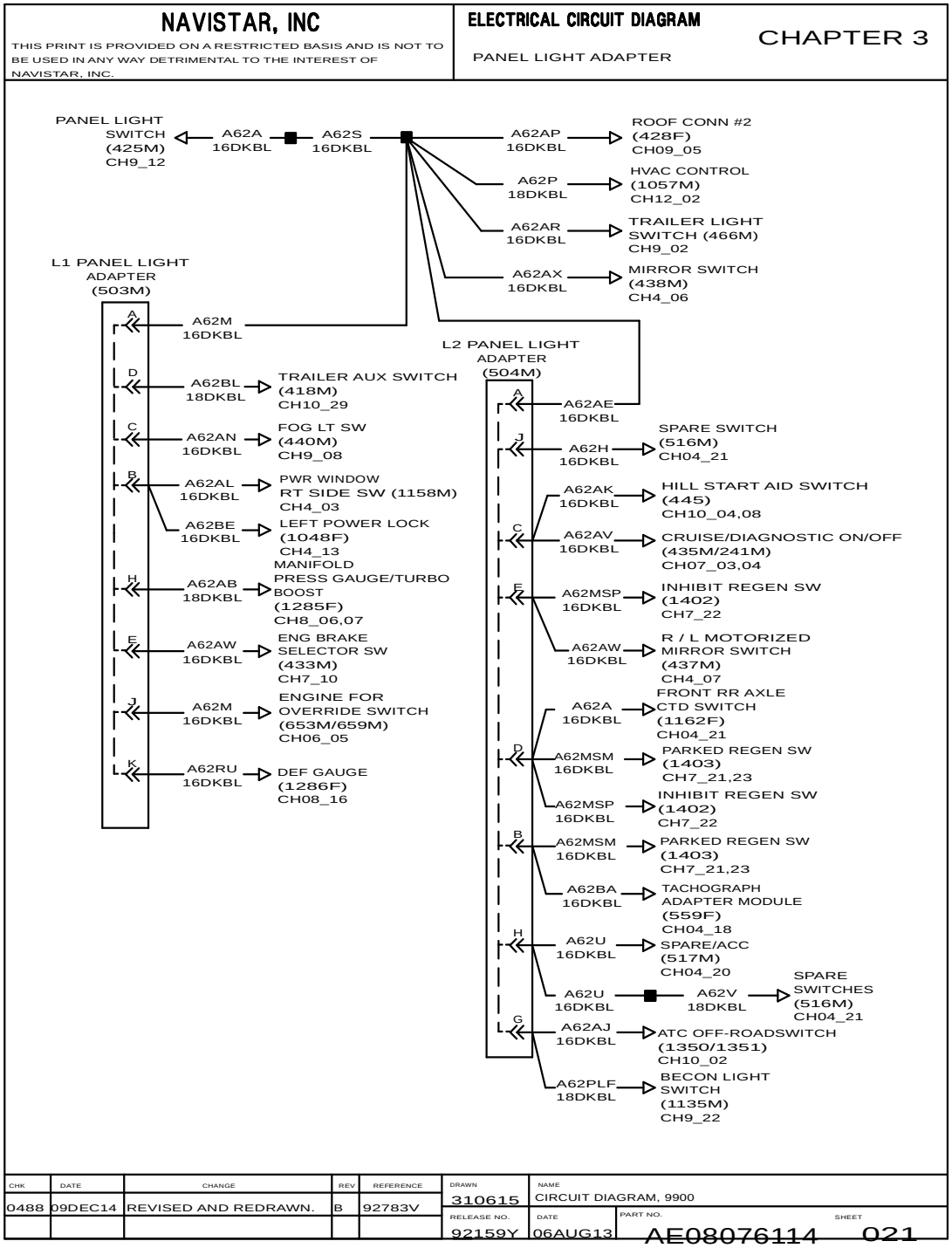

Figure 33 Panel Light Adapter.

3.22. ECA POWER, P. 22

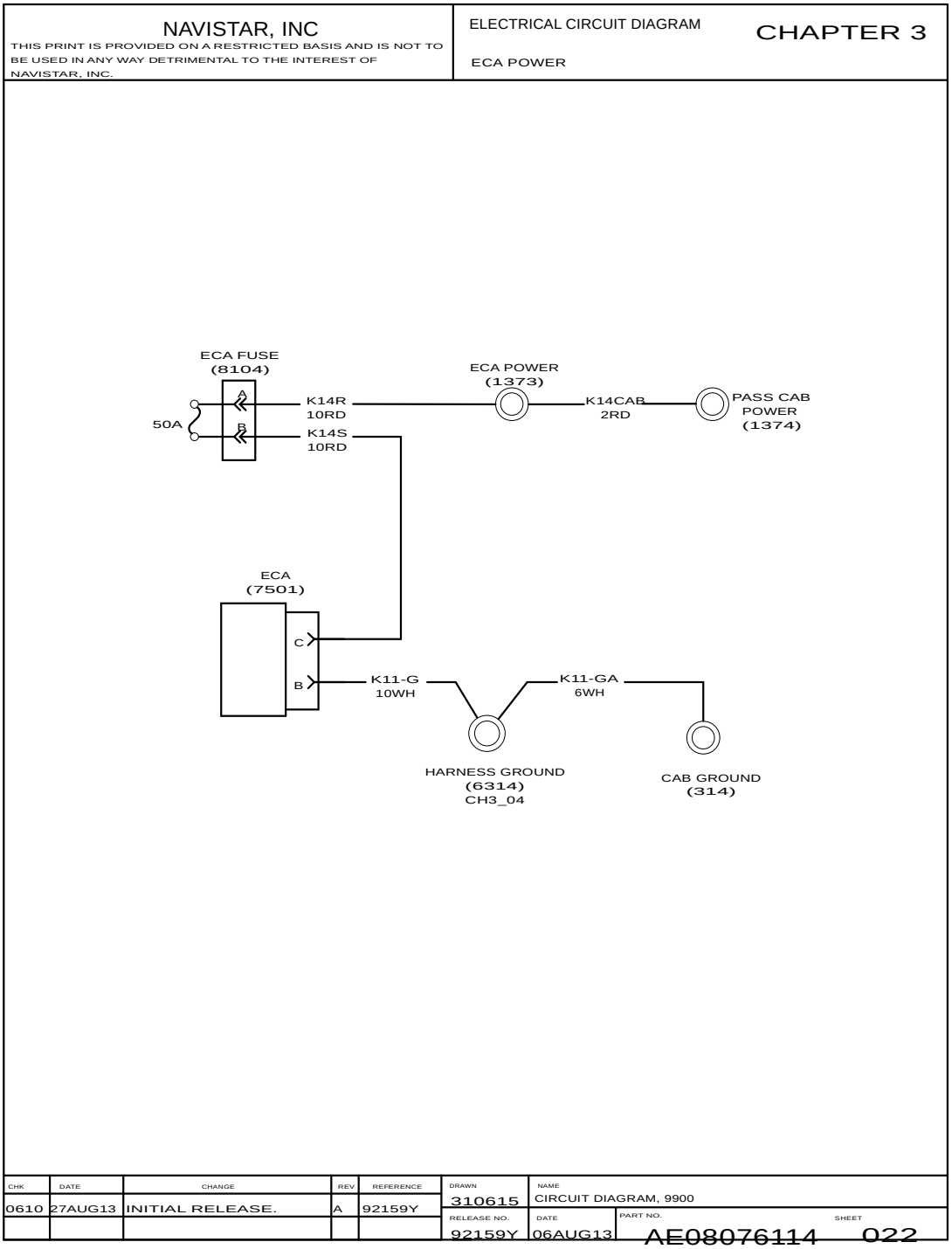

Figure 34 ECA Power.

3.23. START FEED ADAPTER, P. 23

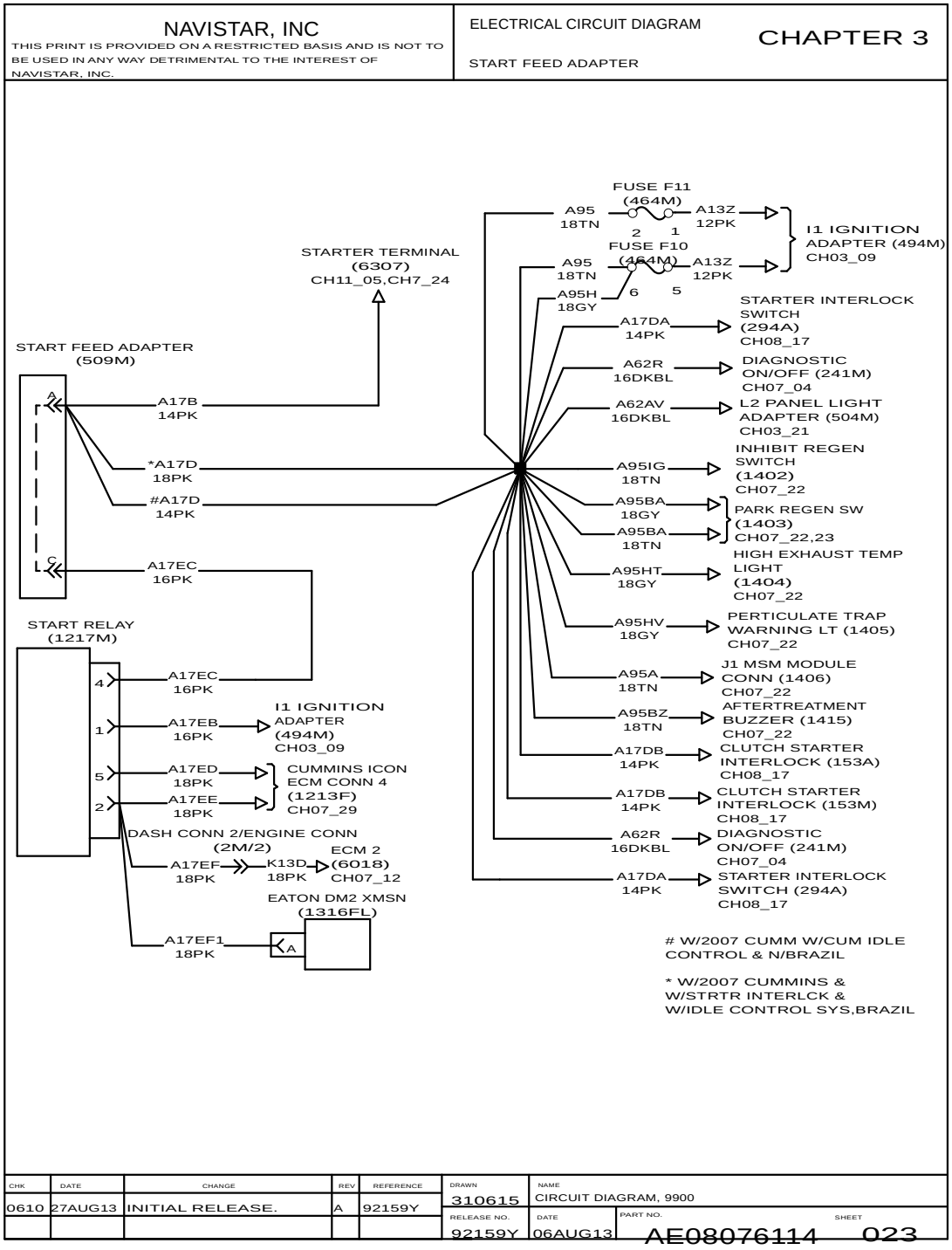

Figure 35 Start Feed Adapter.

3.24. GROUND ADAPTER, P. 24

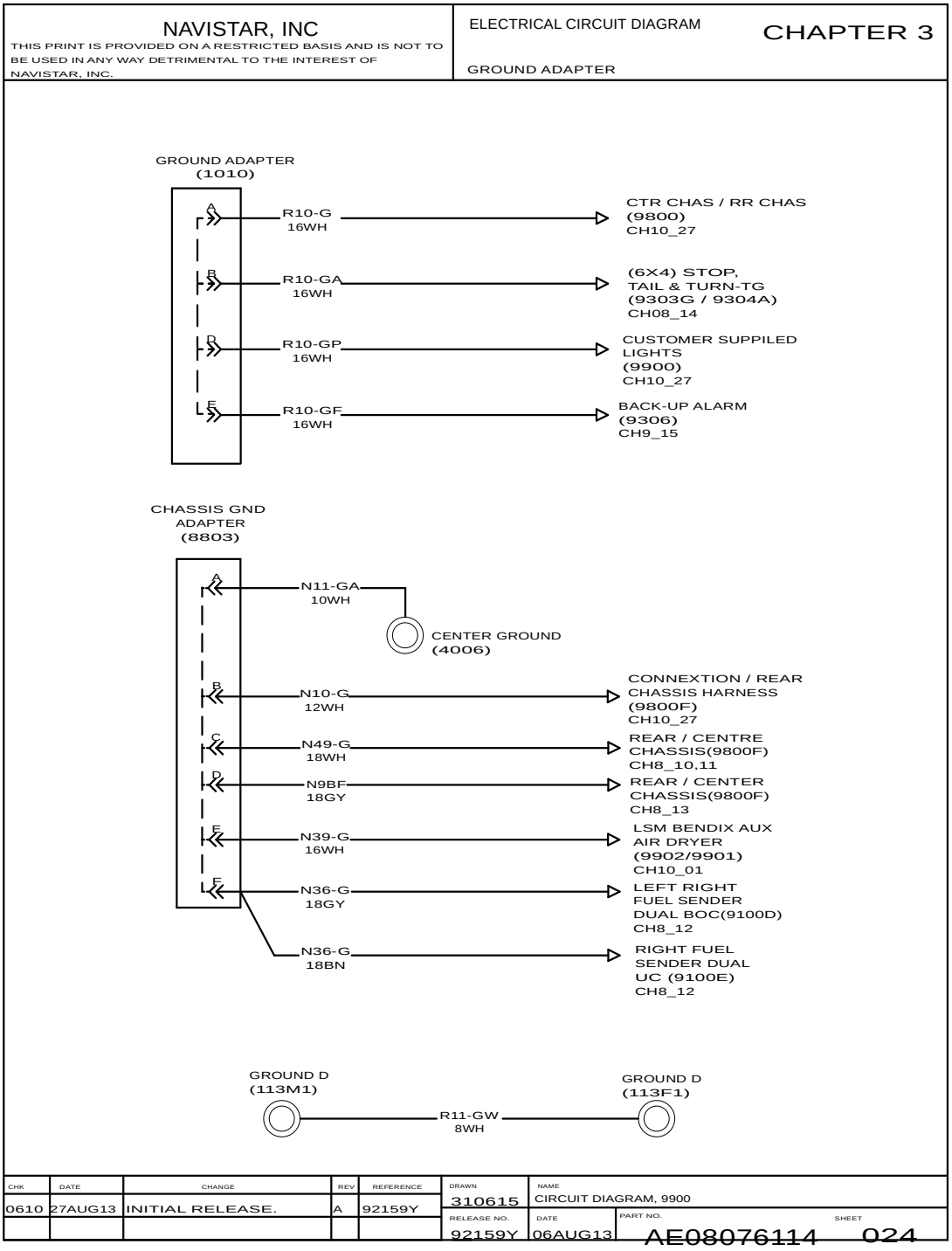

Figure 36 Ground Adapter.

3.25. 137M DATA LINK, P. 25

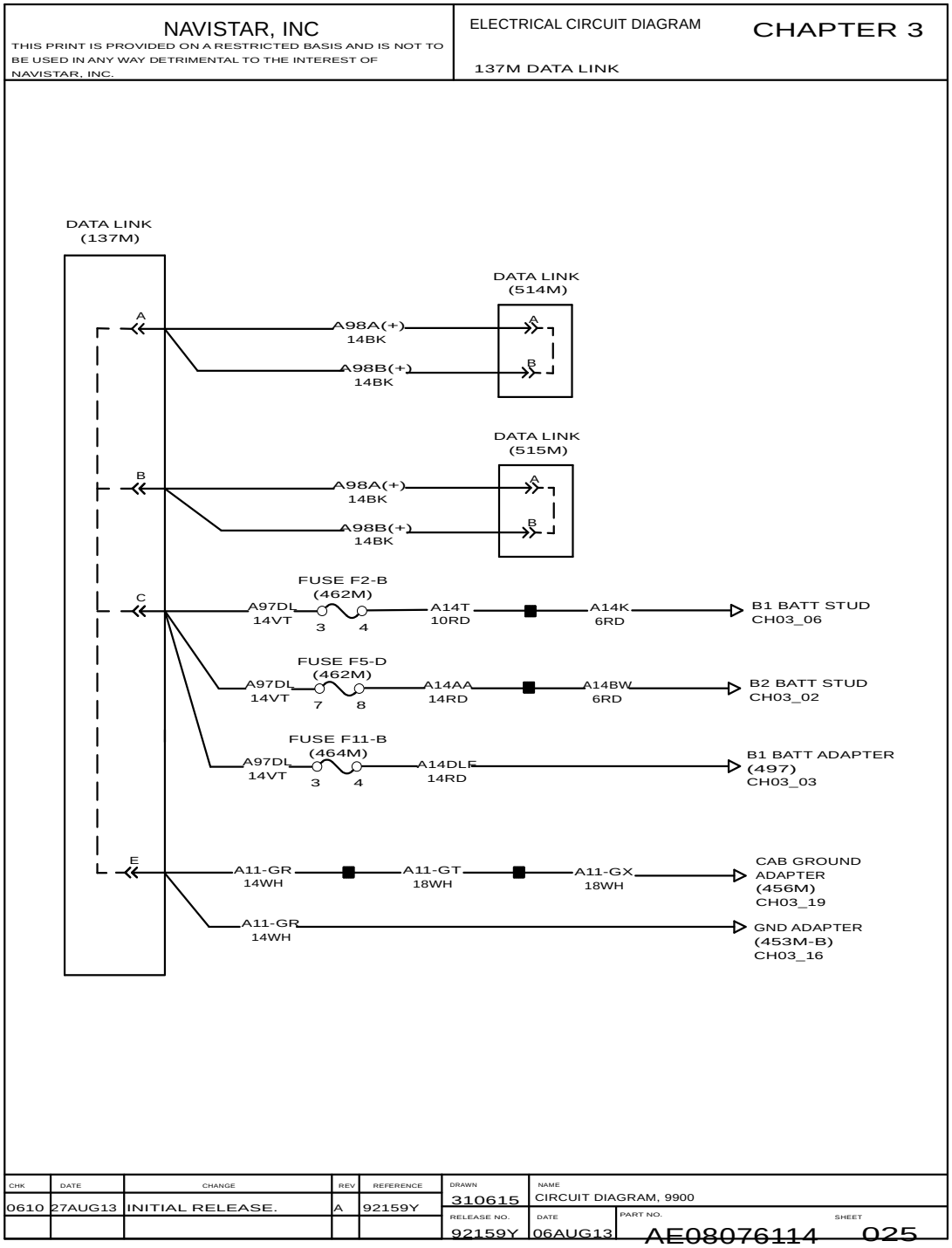

Figure 37 137M Data Link.

3.26. SART MODULE, P. 26

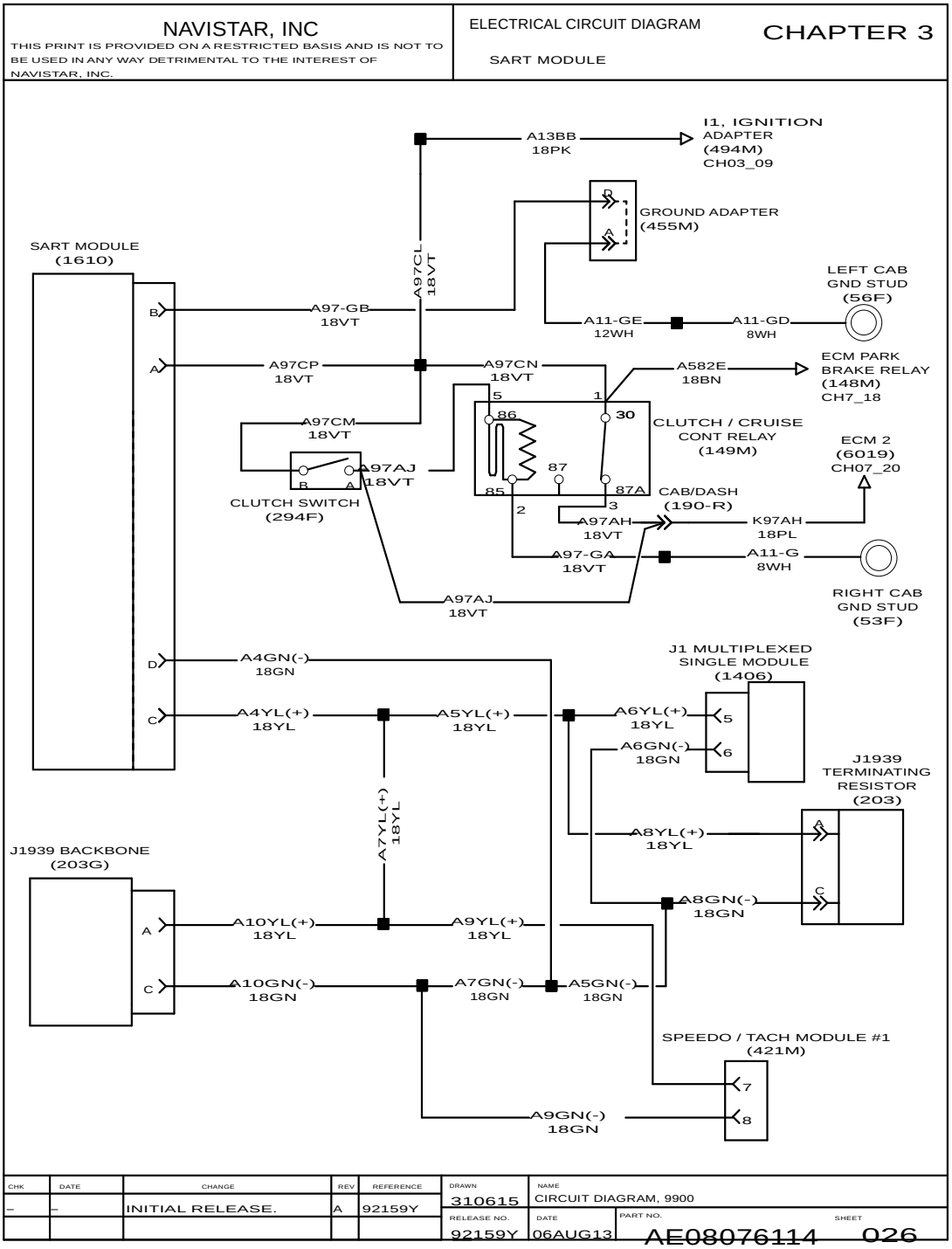

Figure 38 SART Module.

3.27. BATTERY DISCHARGE PROTECTION SYSTEM, P. 27

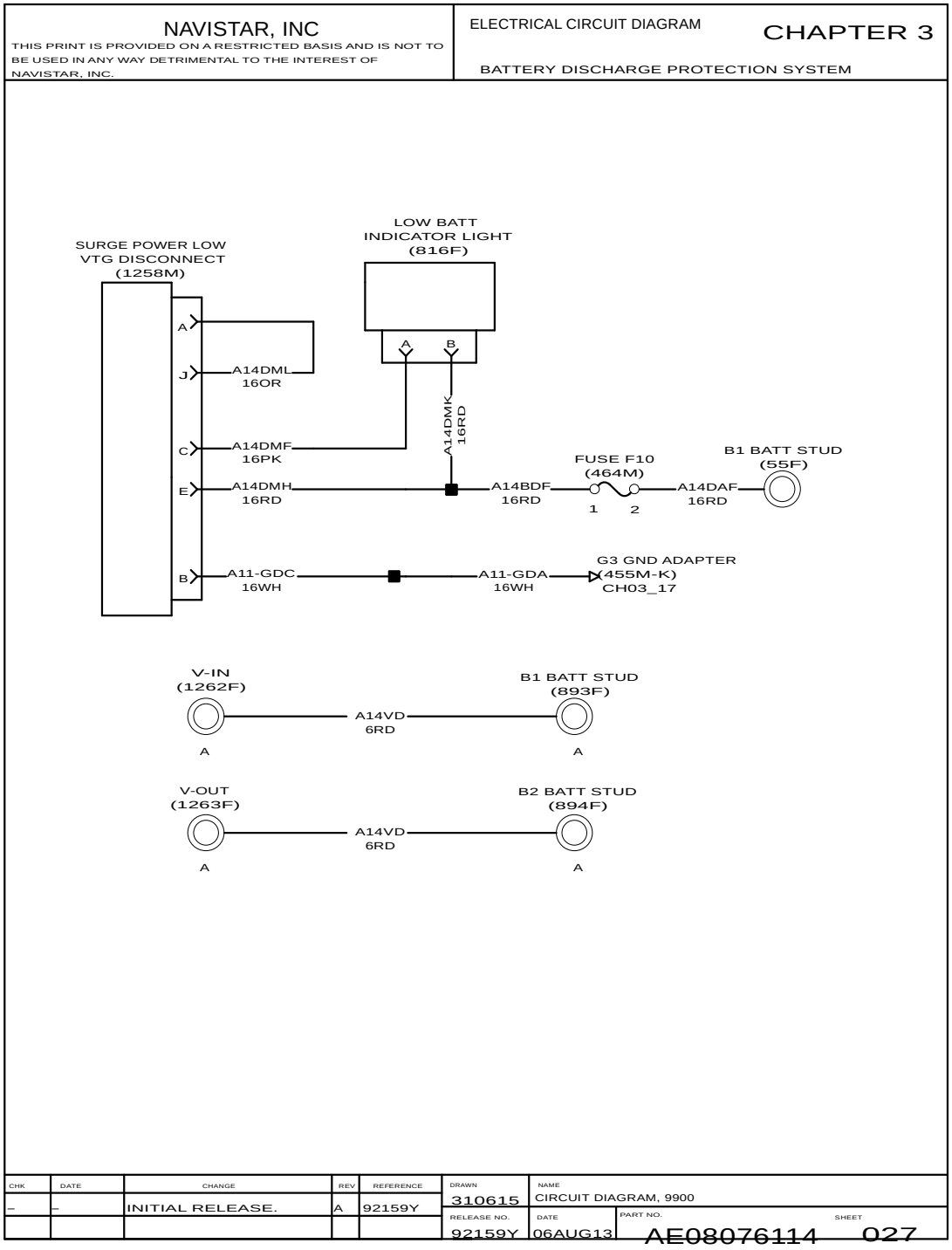

Figure 39 Battery Discharge Protection System.

CAB ACCESSORIES (CHAPTER 4)

4.1. CIGAR LIGHTER, P. 1

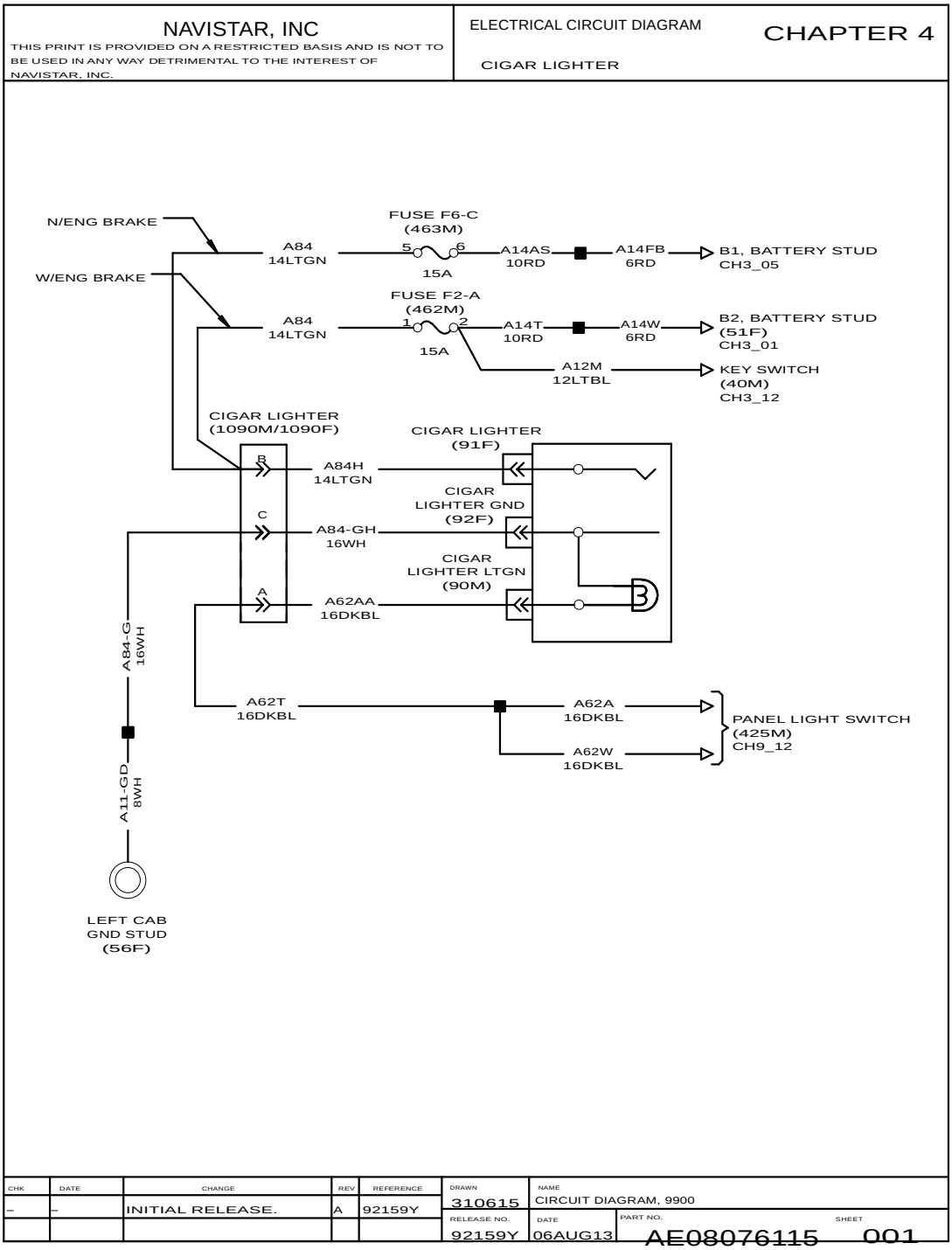

Figure 40 Cigar Lighter.

4.2. ELECTRIC WINDOW – RIGHT AND LEFT, P. 2

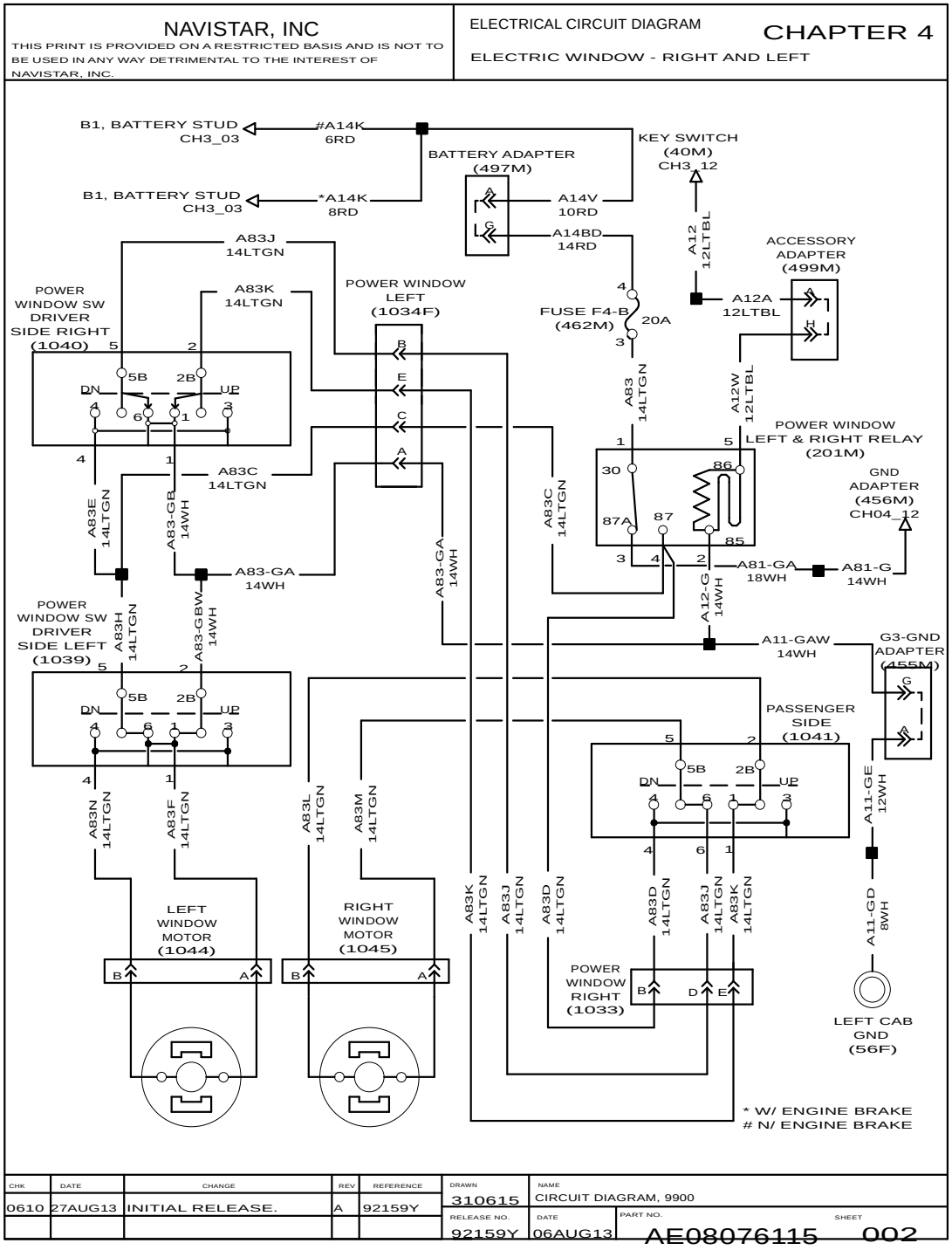

Figure 41 Electric Window – Right and Left.

4.3. ELECTRIC WINDOW – RIGHT, P. 3

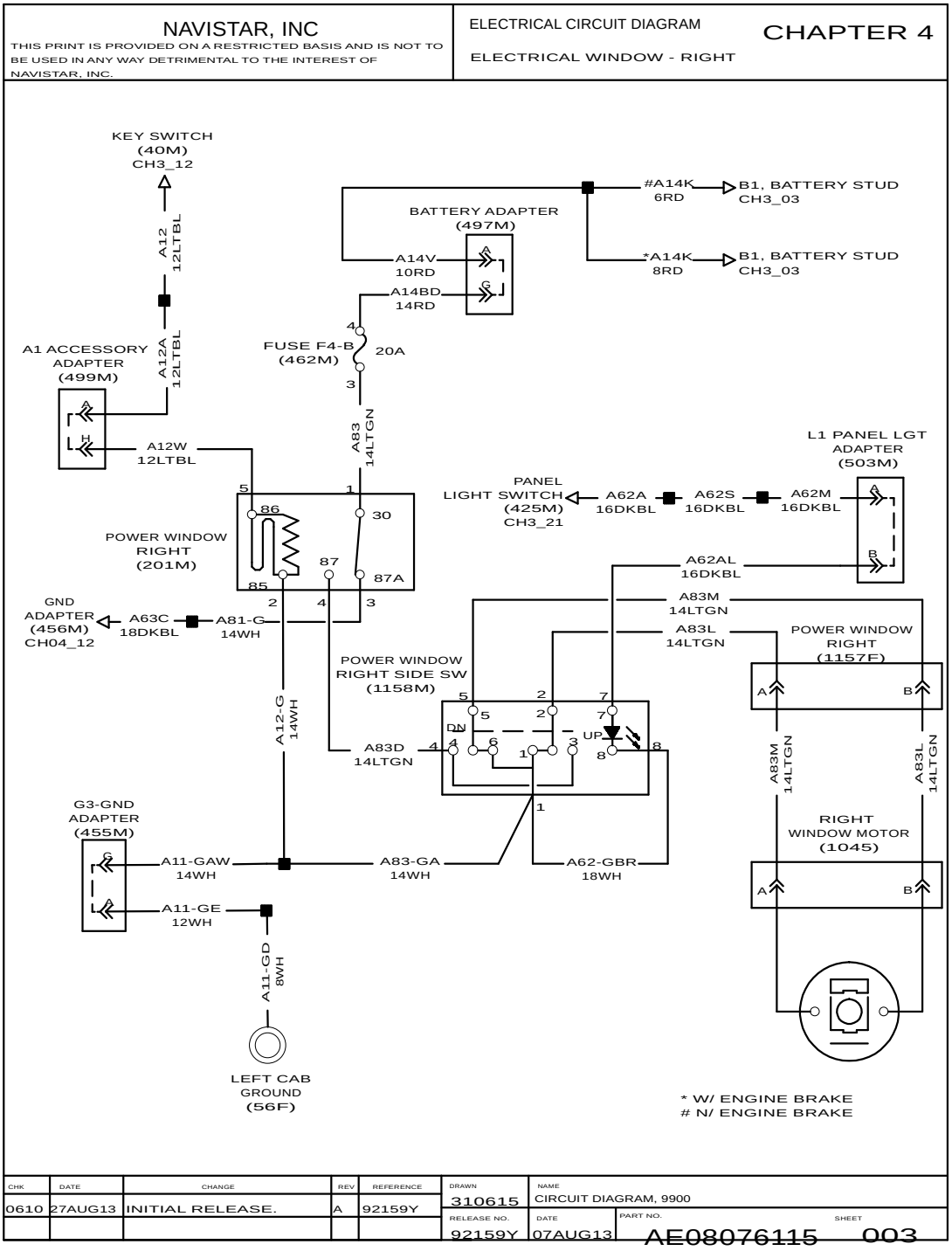

Figure 42 Electric Window – Right.

4.4. DEFROSTER FAN – SINGLE AND DUAL, P. 4

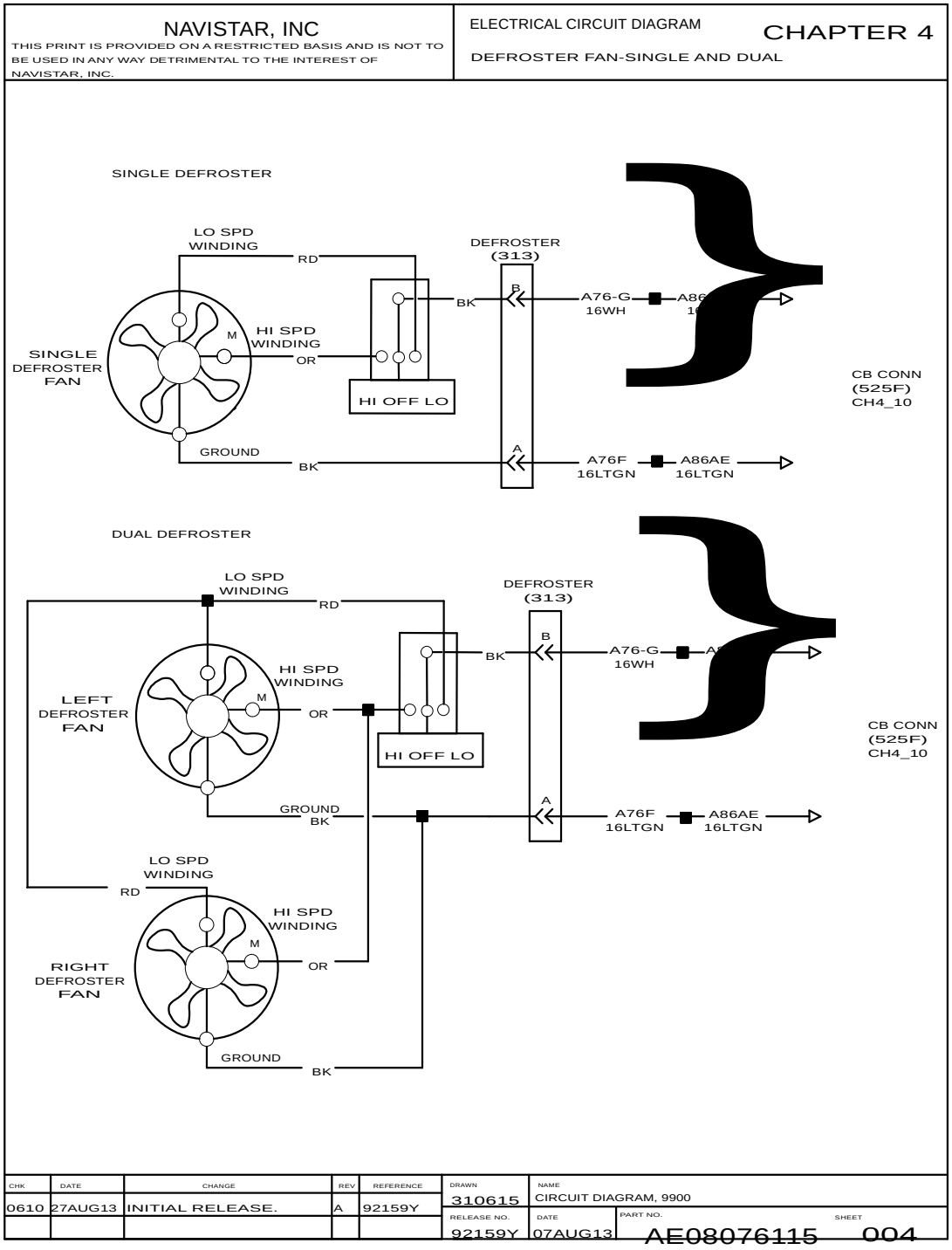

Figure 43 Defroster Fan – Single and Dual.

4.5. ELECTRIC HORN, P. 5

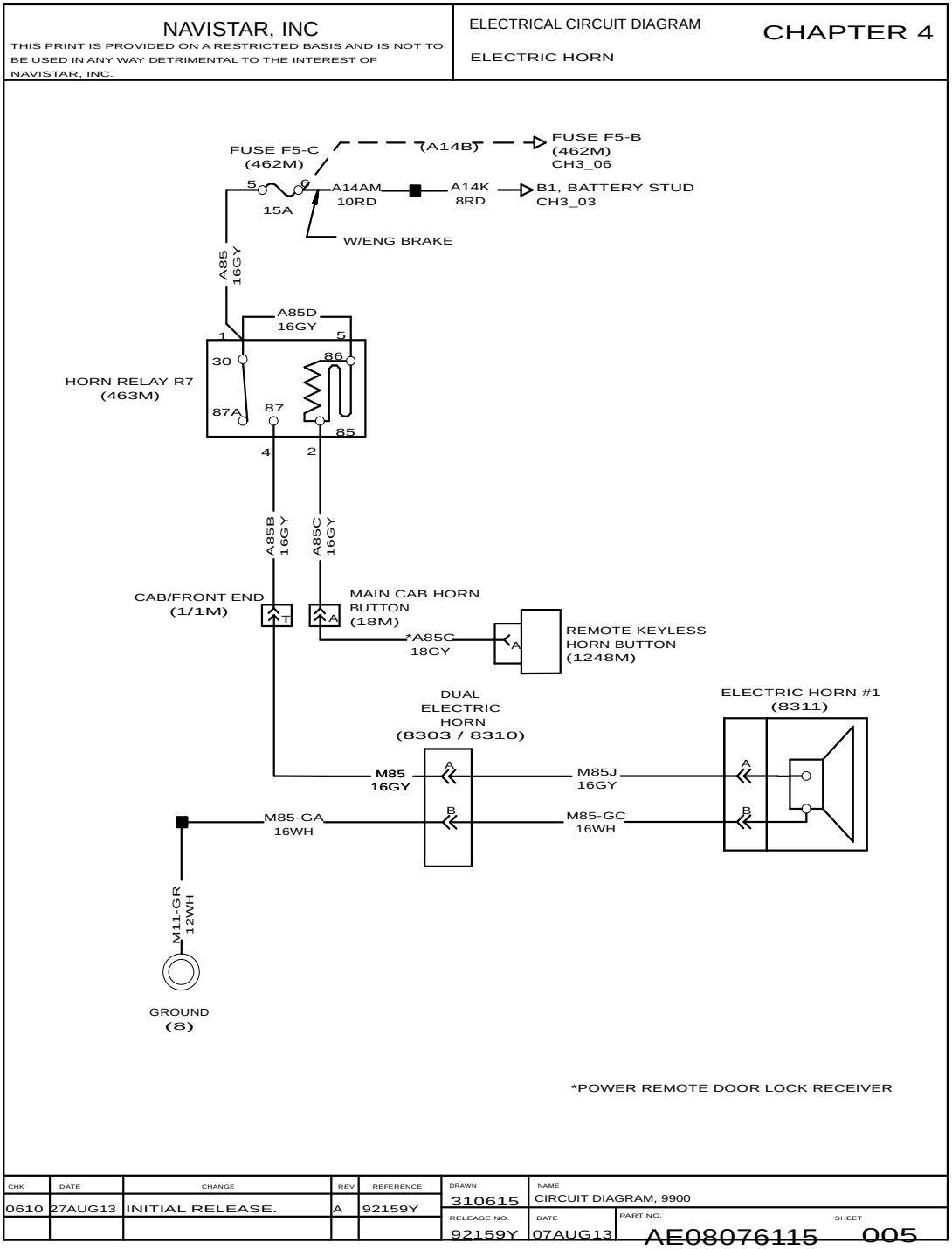

Figure 44 Electric Horn.

4.6. MIRROR LIGHTS AND HEATED MIRRORS, P. 6

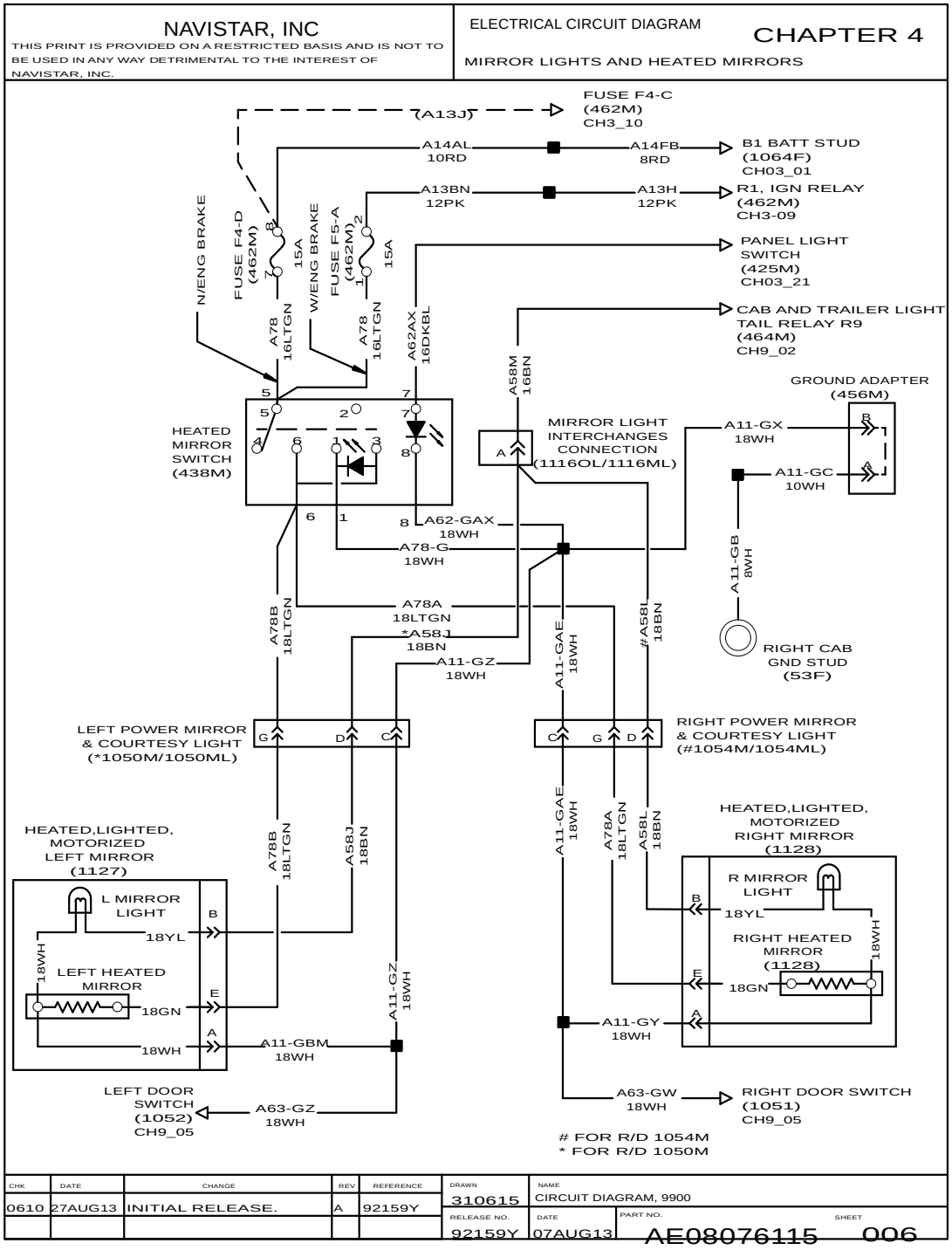

Figure 45 Mirror Lights and Heated Mirrors.

4.7. LEFT AND RIGHT MOTORIZED MIRRORS, P. 7

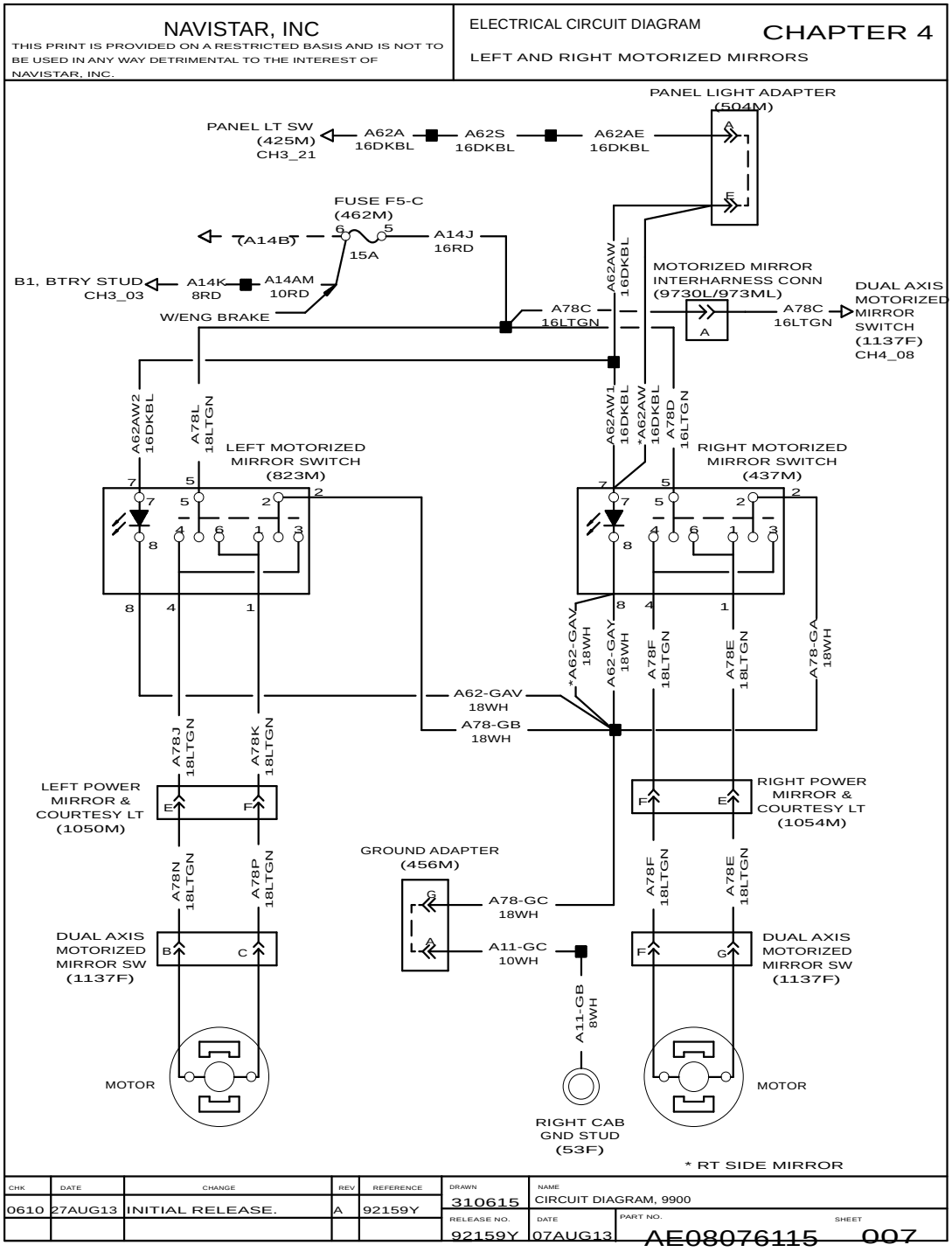

Figure 46 Left and Right Motorized Mirrors.

4.8. DUAL AXIS MOTORIZED MIRRORS, P. 8

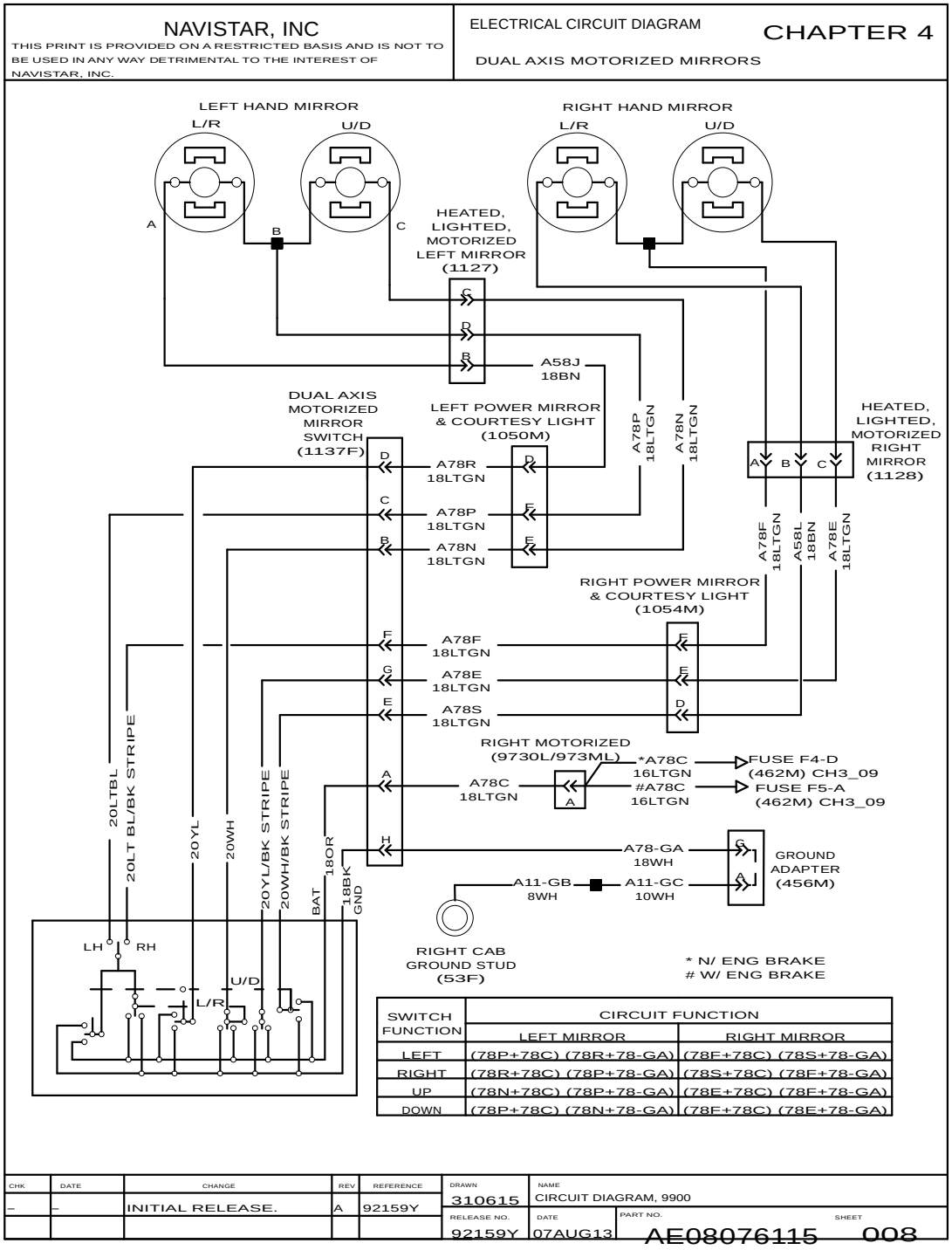

Figure 47 Dual Axis Motorized Mirrors.

4.9. POWER SOURCE (CB), P. 9

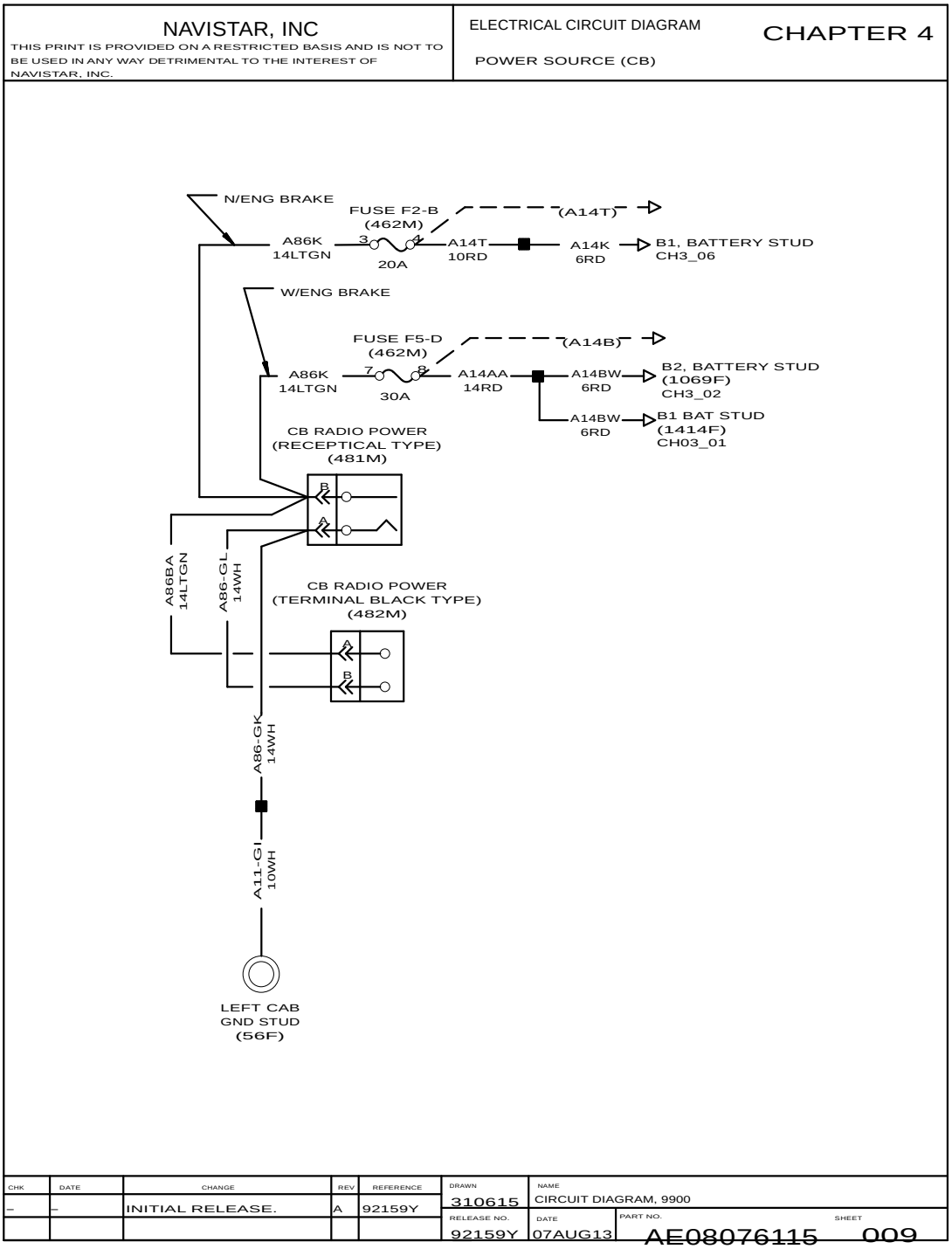

Figure 48 Power Source (CB)

4.10. RADIO – CB COMMUNICATION PACKAGE, P. 10

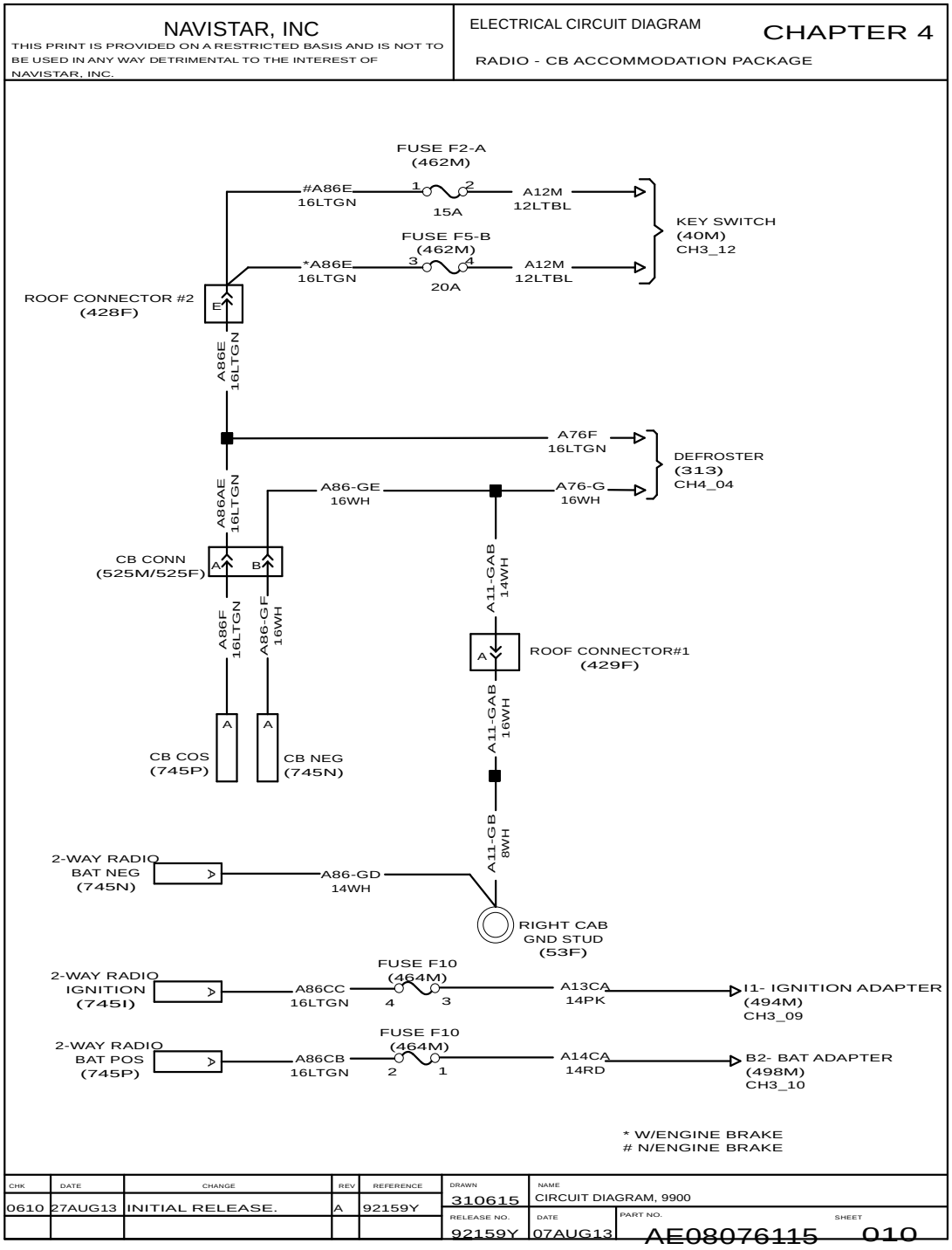

Figure 49 Radio – CB Communication Package.

4.11. RADIO – CAB SPEAKERS, P. 11

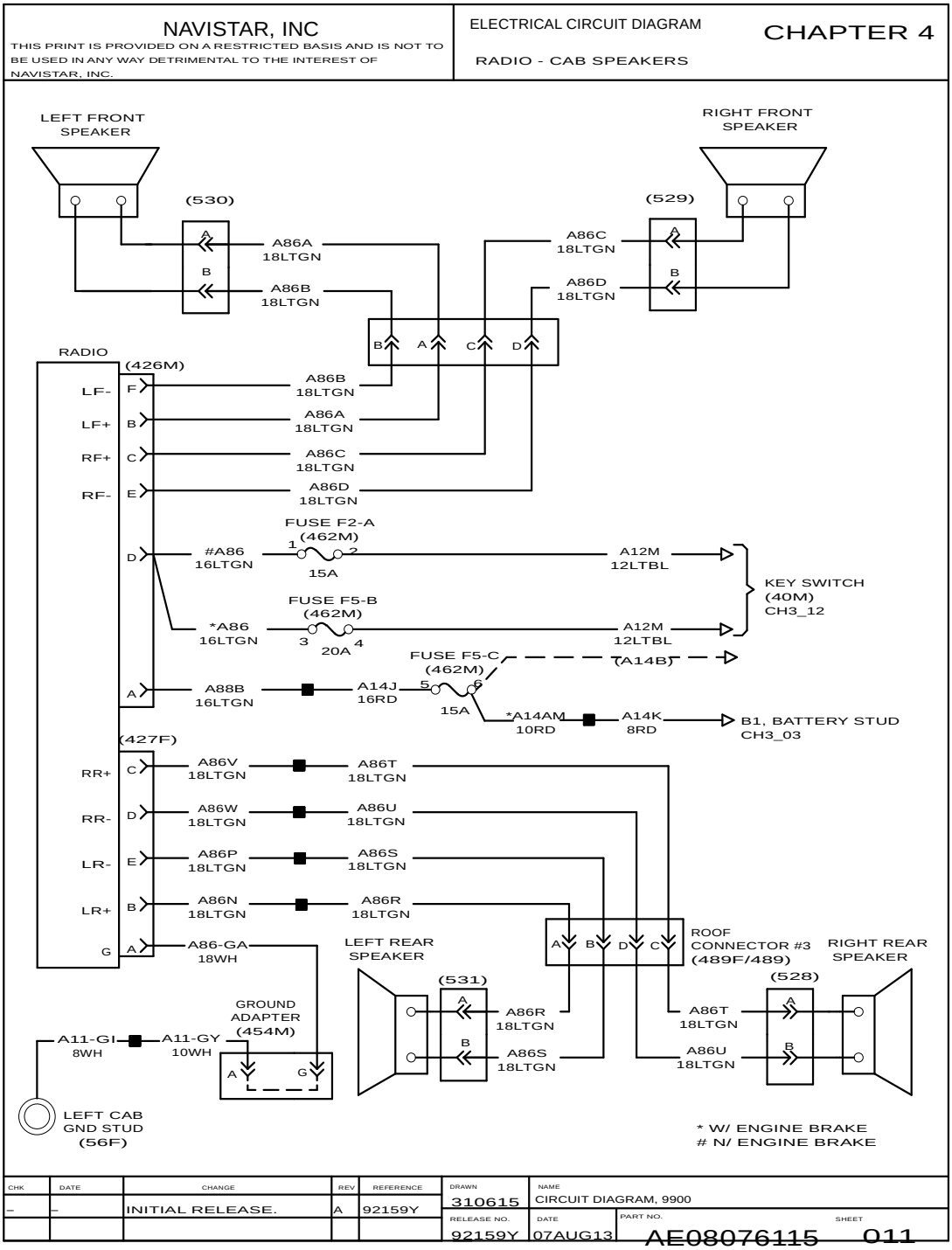

Figure 50 Radio – Cab Speakers.

4.12. ELECTRIC LOCK – RIGHT AND LEFT, P. 12

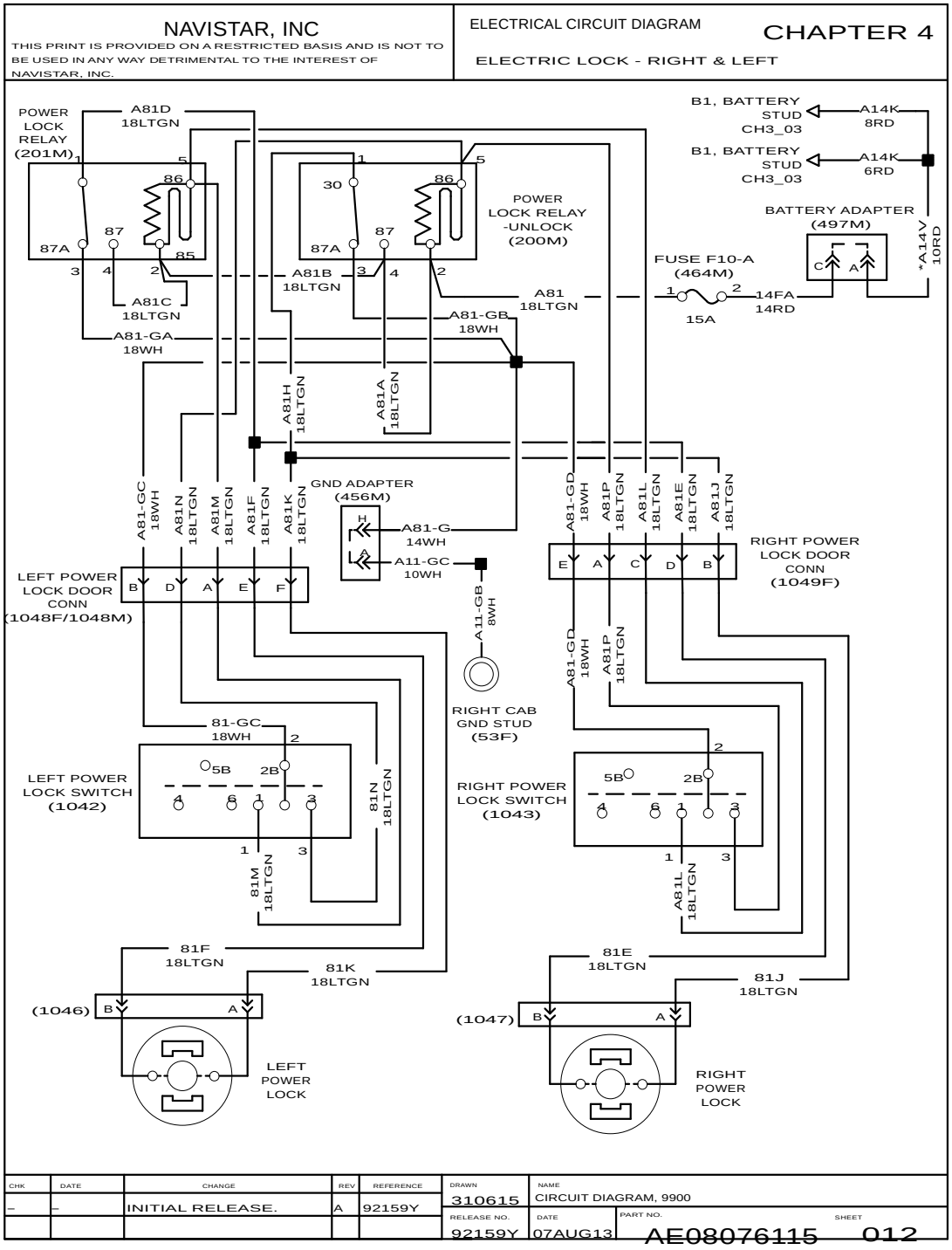

Figure 51 Electric Lock – Right and Left.

4.13. ELECTRIC LOCK – RIGHT AND LEFT (CONT.), P. 13

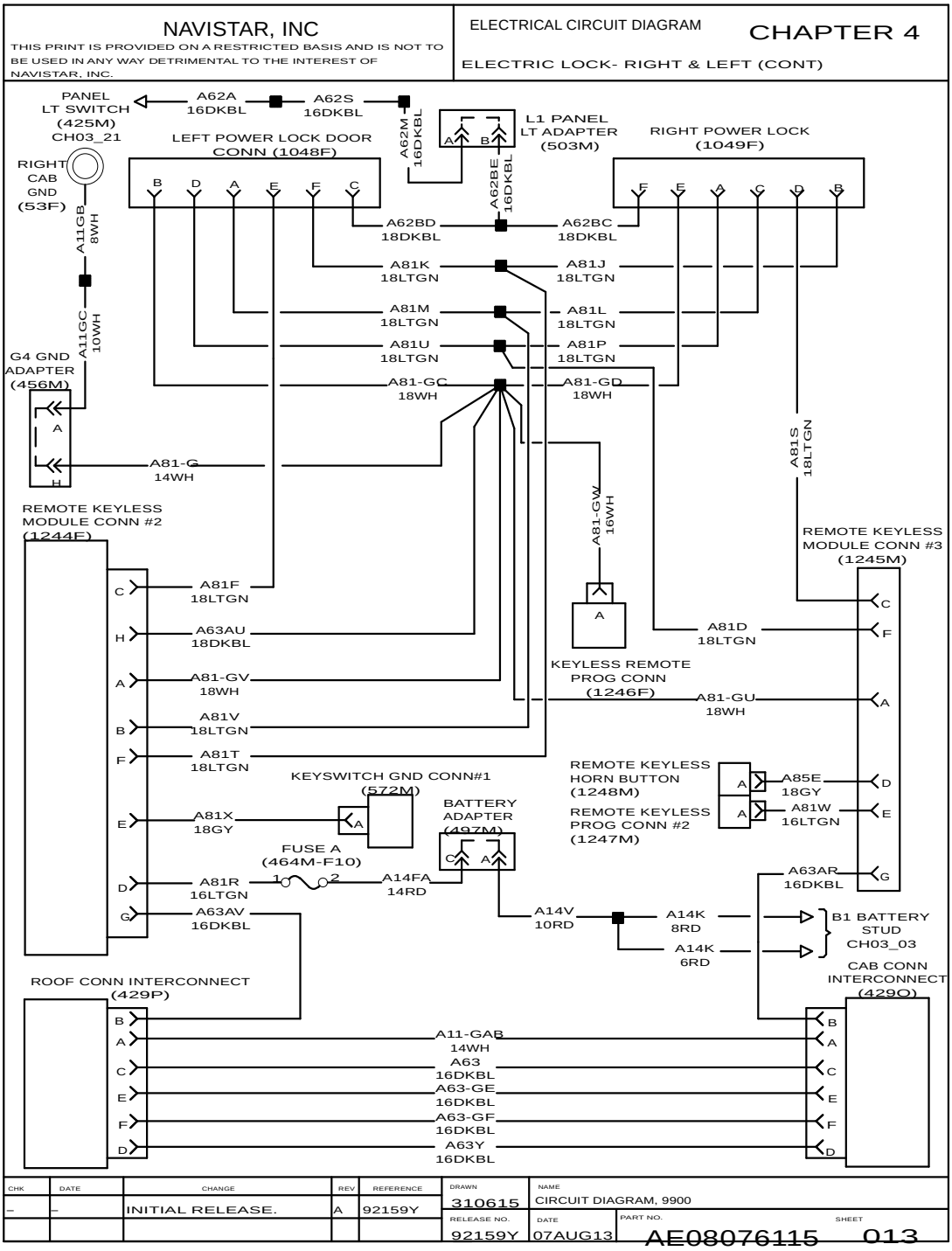

Figure 52 Electric Lock – Right and Left (Cont.)

4.14. TEMPERATURE / COMPASS DISPLAY, P. 14

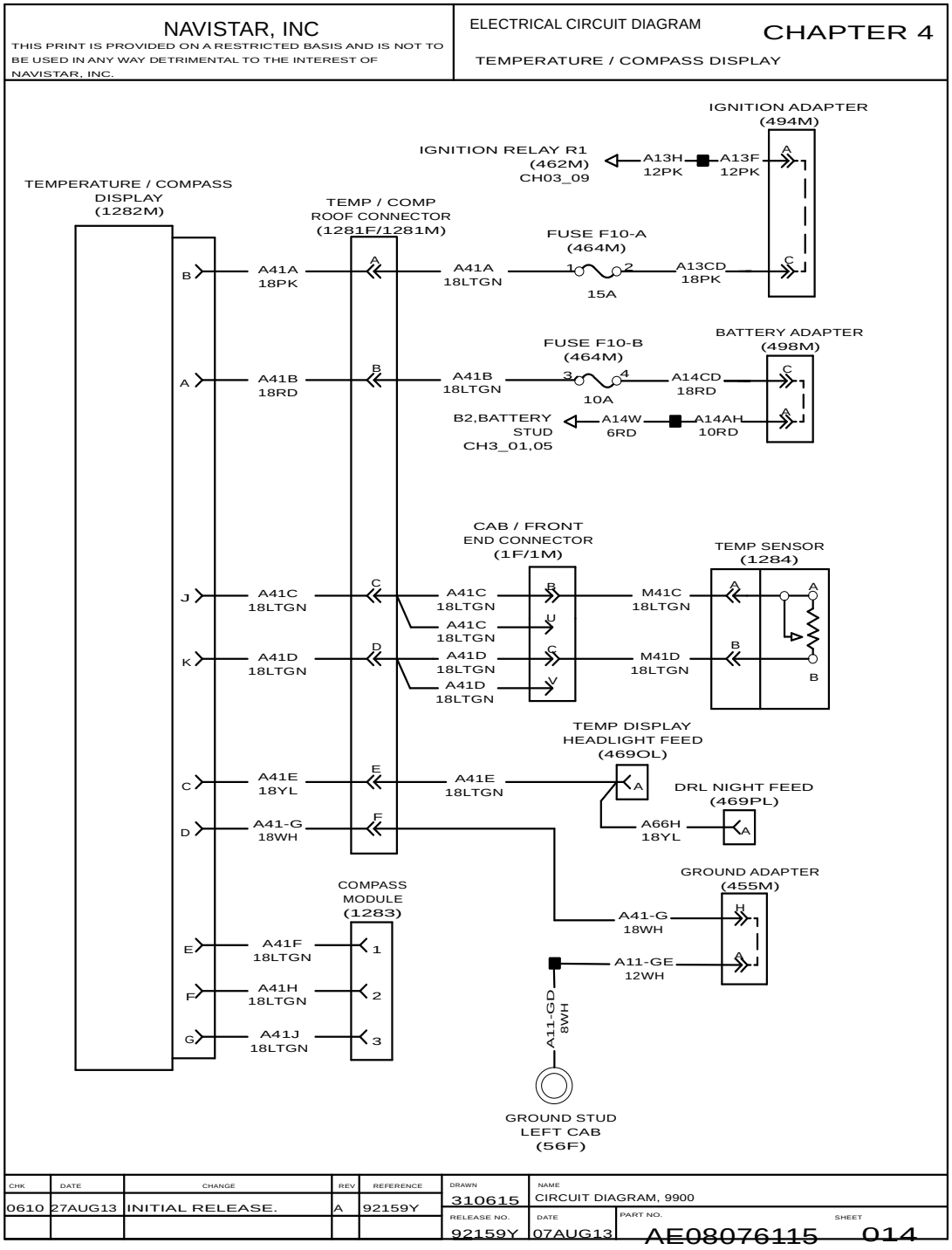

Figure 53 Temperature / Compass Display.

4.15. HEATED SEAT – DRIVER, P. 15

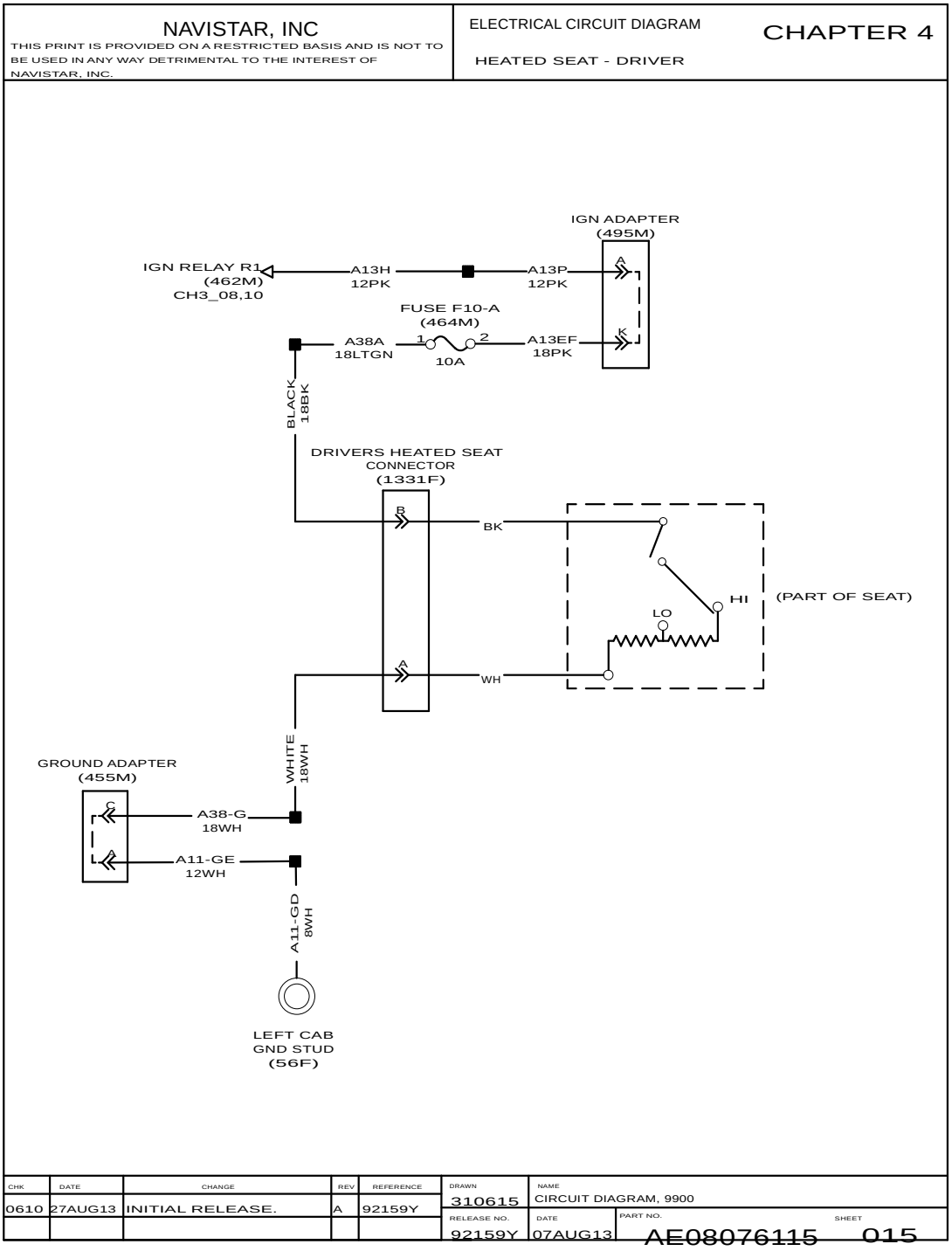

Figure 54 Heated Seat – Driver.

4.16. HEATED SEAT – PASSENGER, P. 16

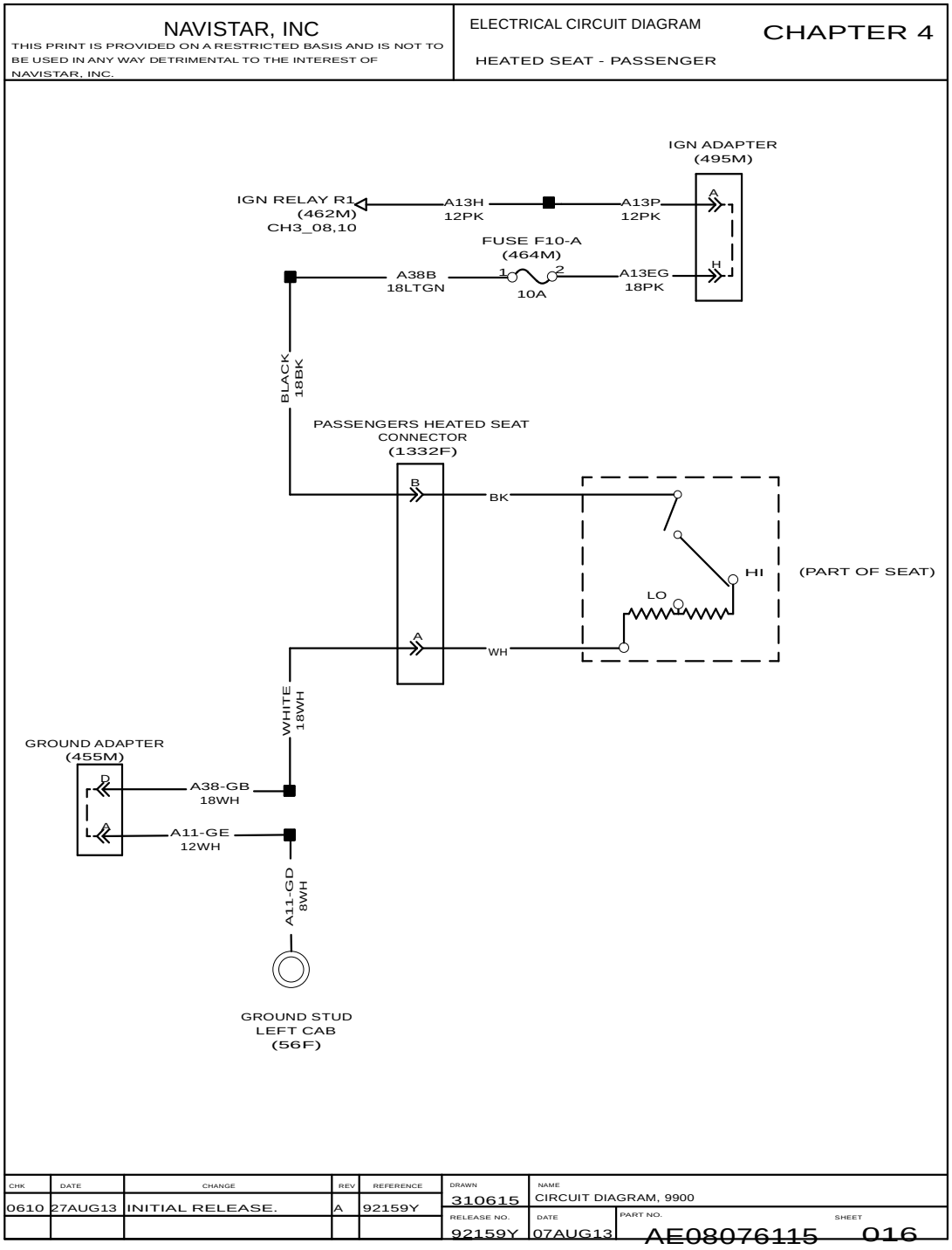

Figure 55 Heated Seat – Passenger.

4.17. ELECTRIC WINDSHIELD WIPER WITH INTERMITTENT WIPE AND WASH, P. 17

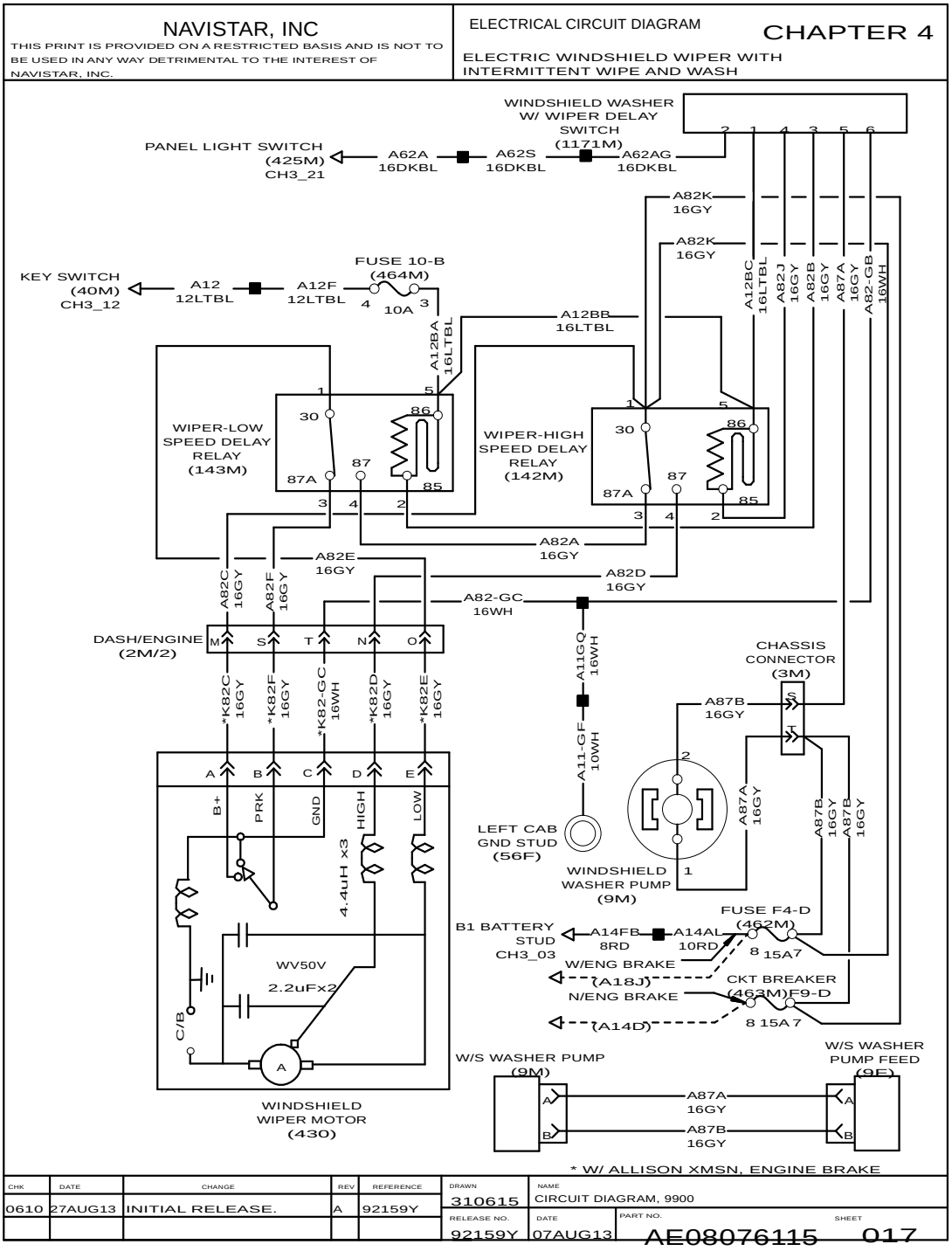

Figure 56 Electric Windshield Wiper with Intermittent Wipe and Wash.

4.18. TELEGRAPHIC ADAPTER MODULE, P. 18

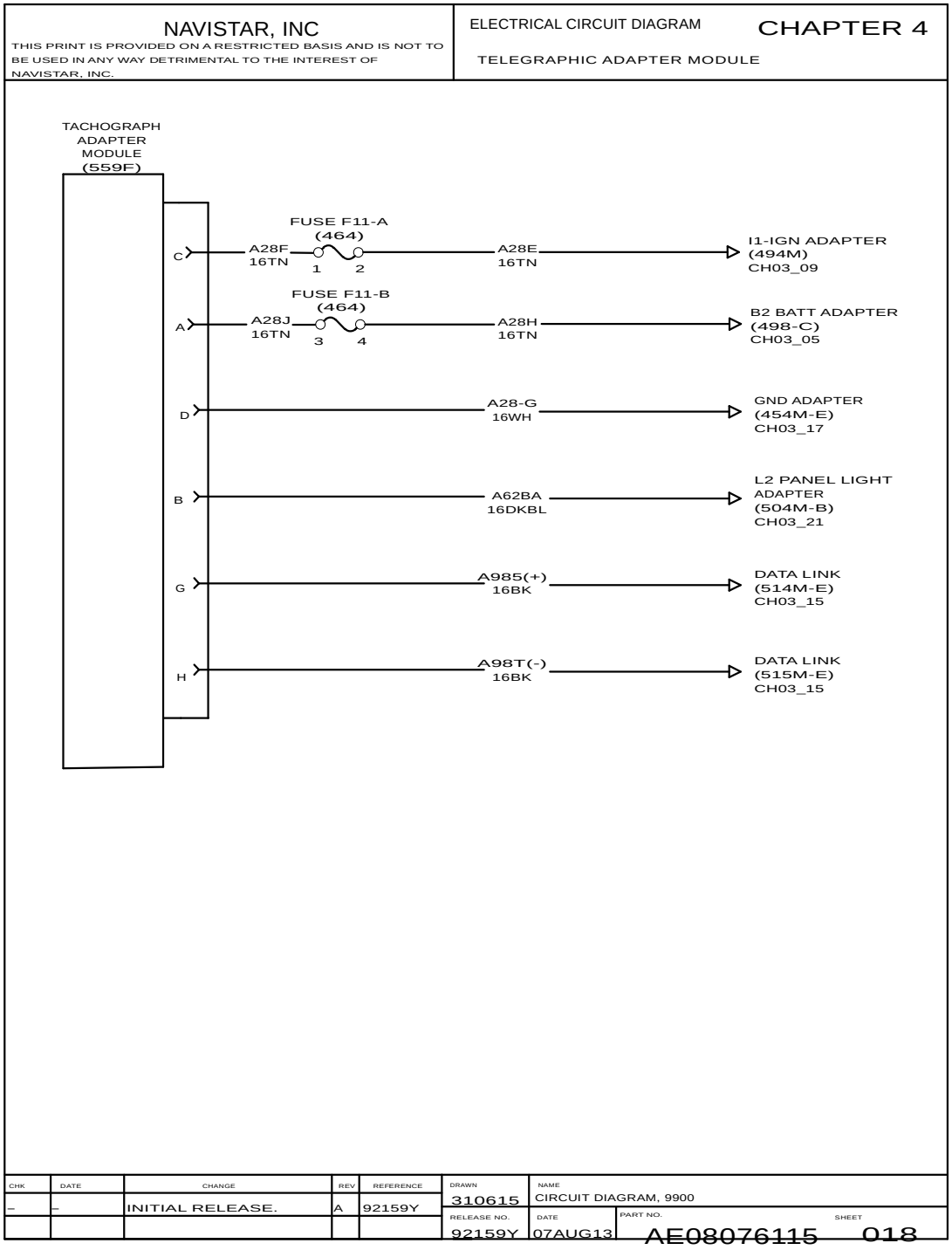

Figure 57 Telegraphic Adapter Module.

4.19. SPARE SWITCHES, P. 19

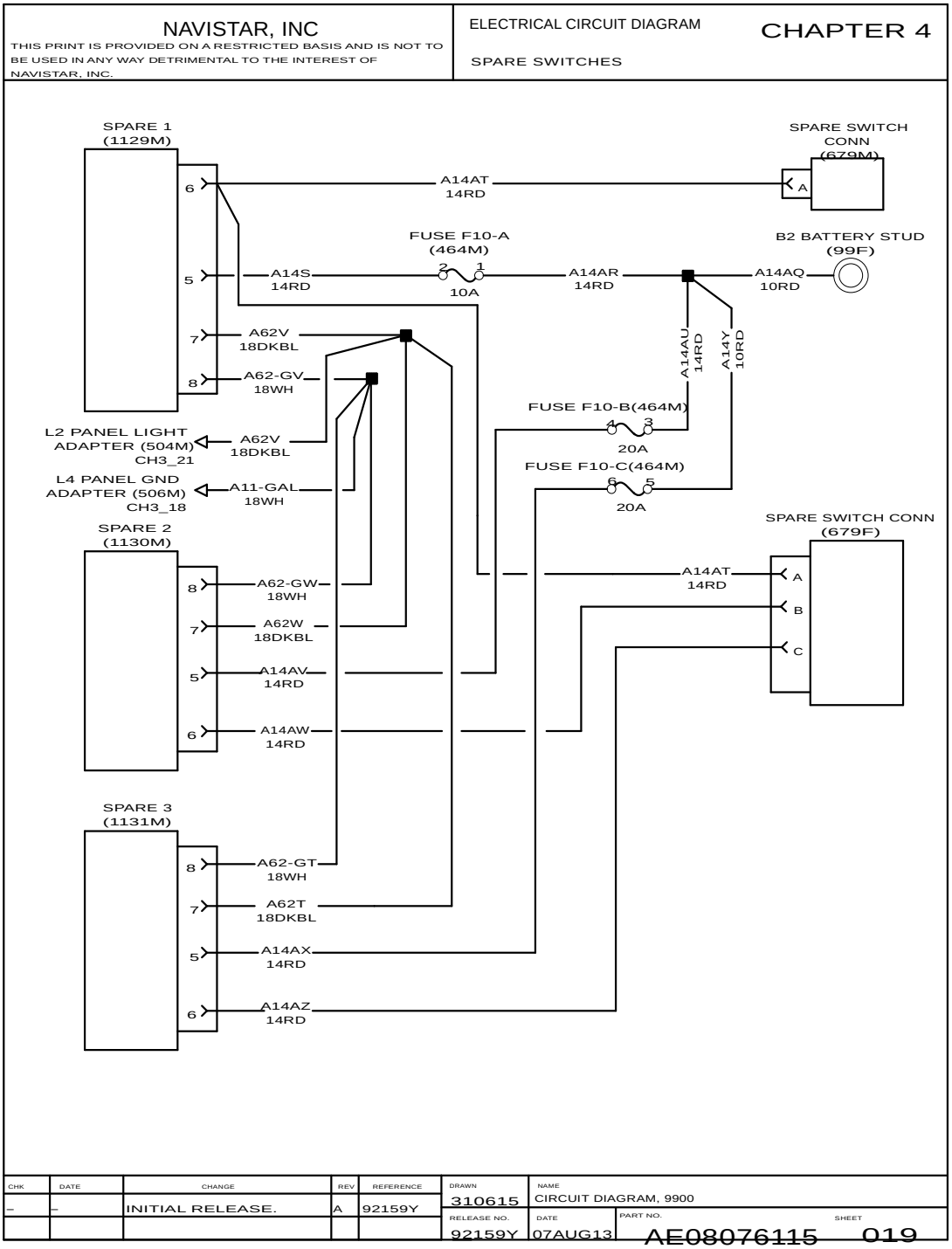

Figure 58 Spare Switches.

4.20. SPARE SWITCHES (CONT.), P. 20

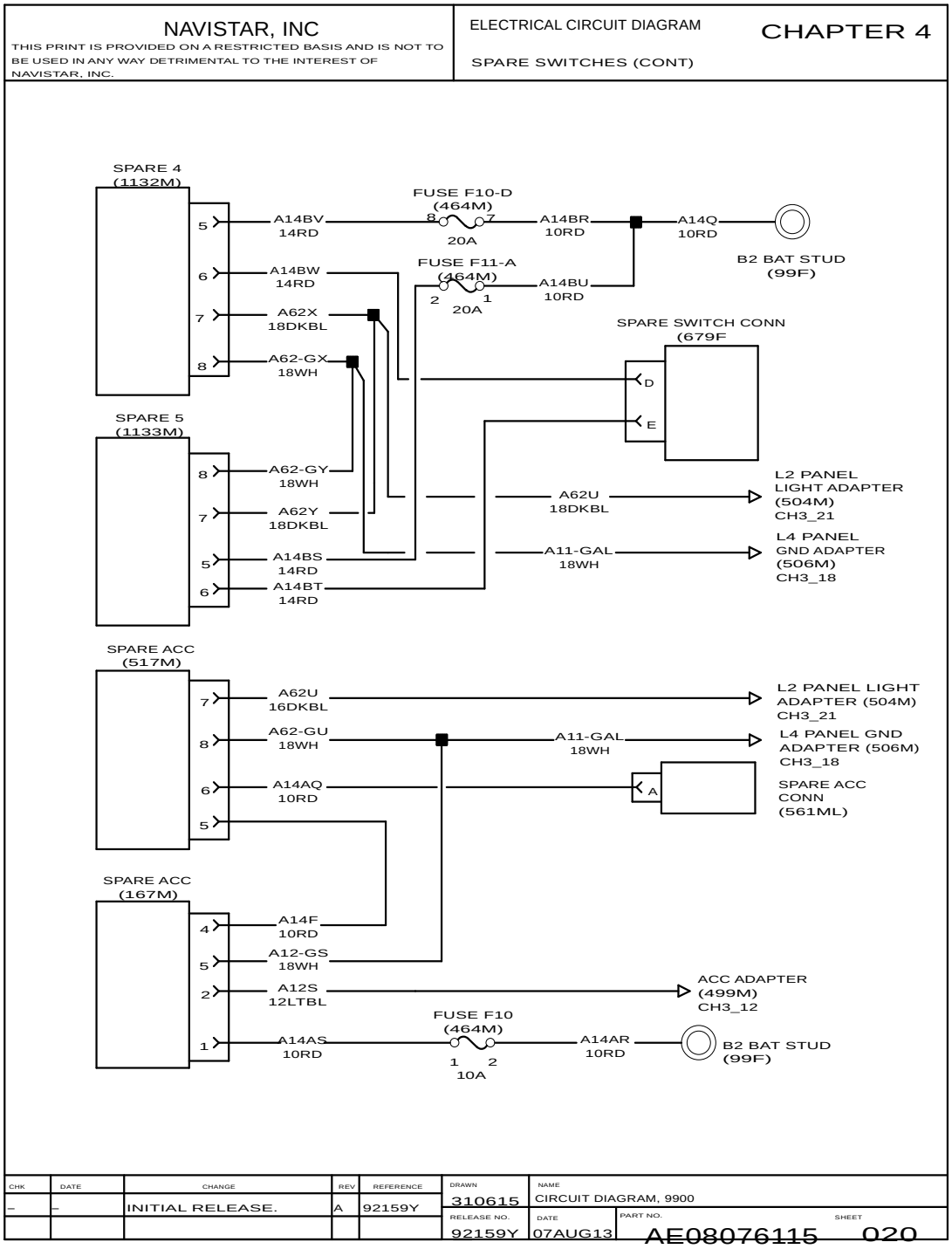

Figure 59 Spare Switches (Cont.)

4.21. SPARE SWITCHES AND AXLE CONTROL SWITCHES, P. 21

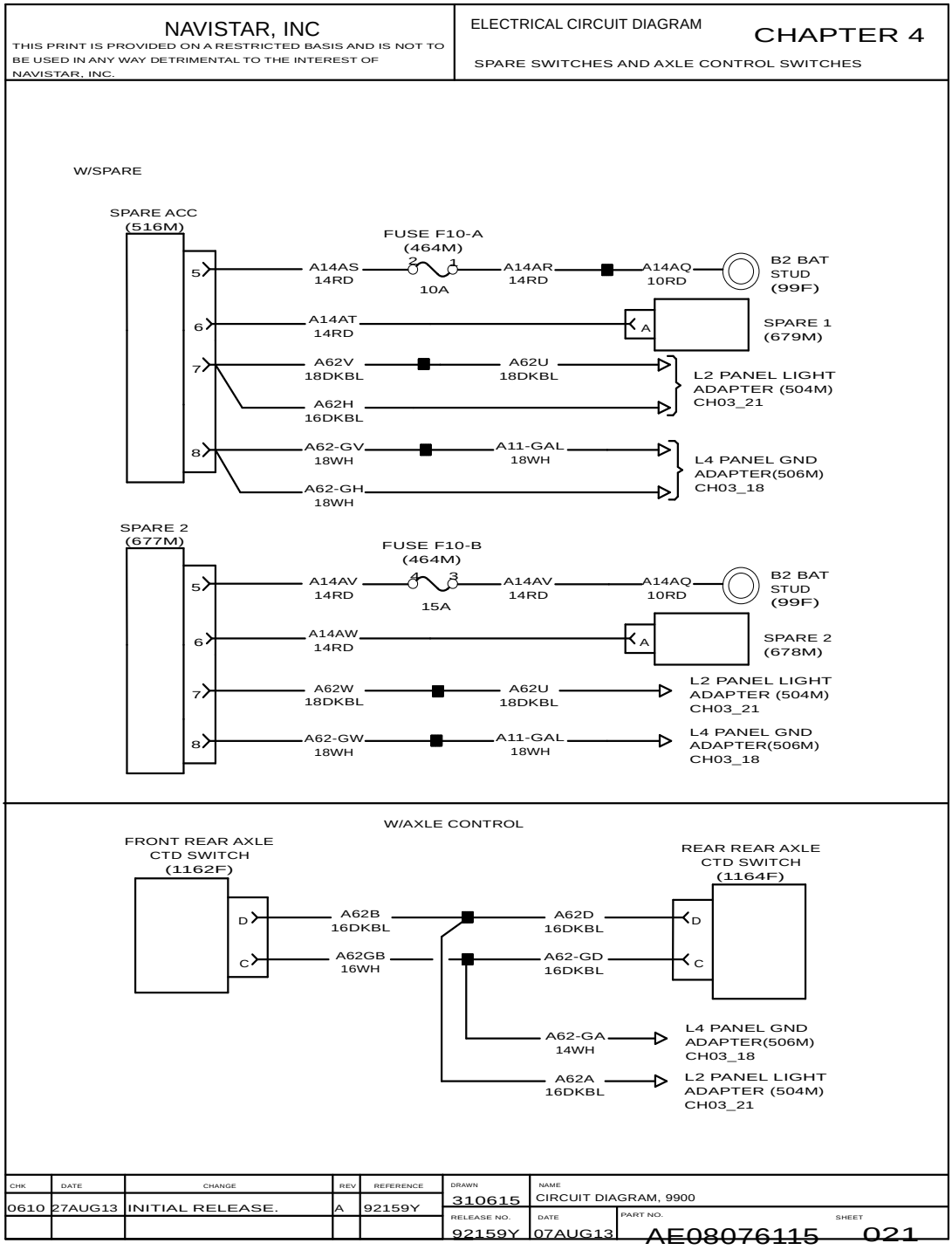

Figure 60 Spare Switches and Axle Control Switches.

4.22. THROTTLE EFFECTS, P. 22

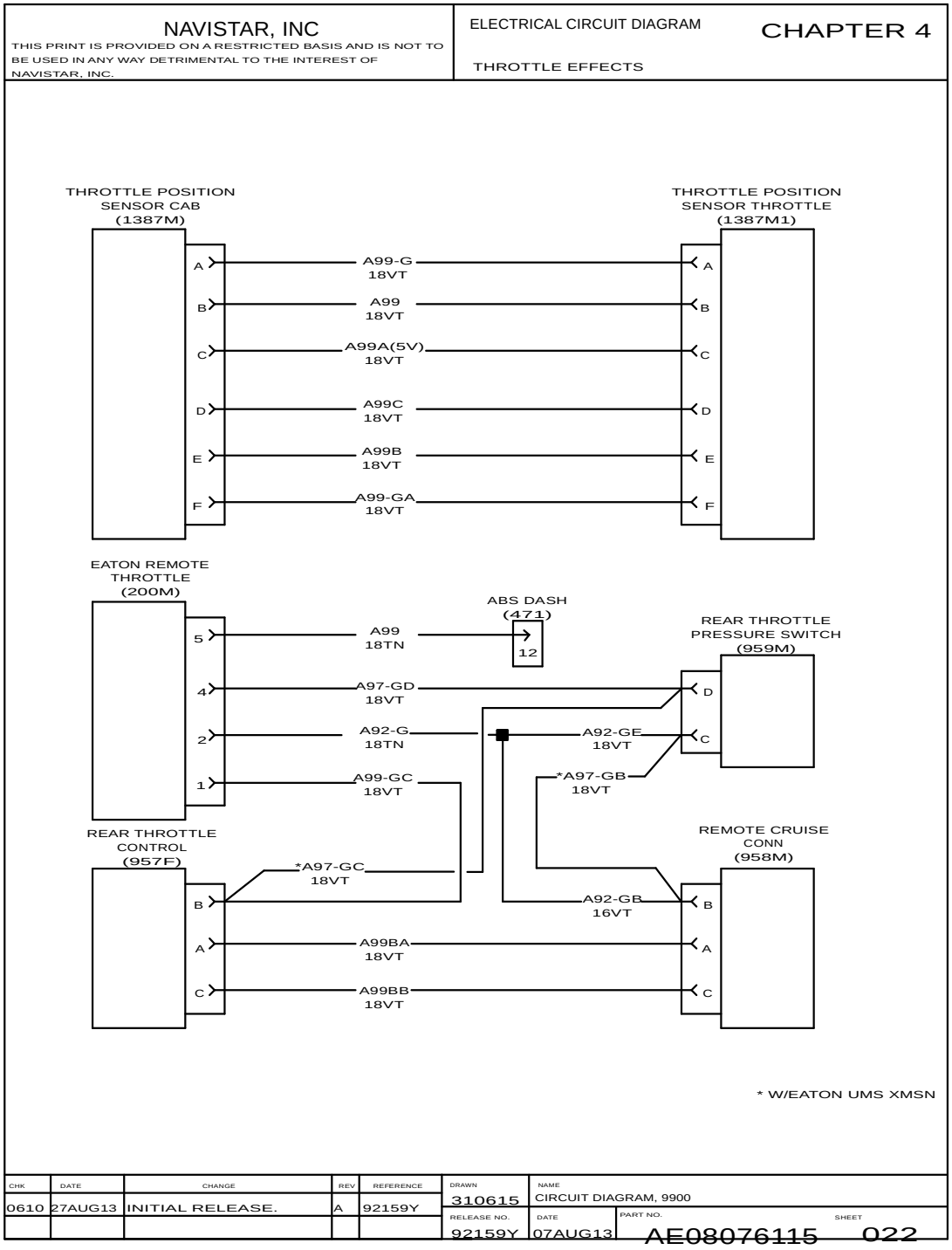

Figure 61 Throttle Effects.

CHARGING AND CRANKING (CHAPTER 5)

5.1. STARTER INTERLOCK, P. 1

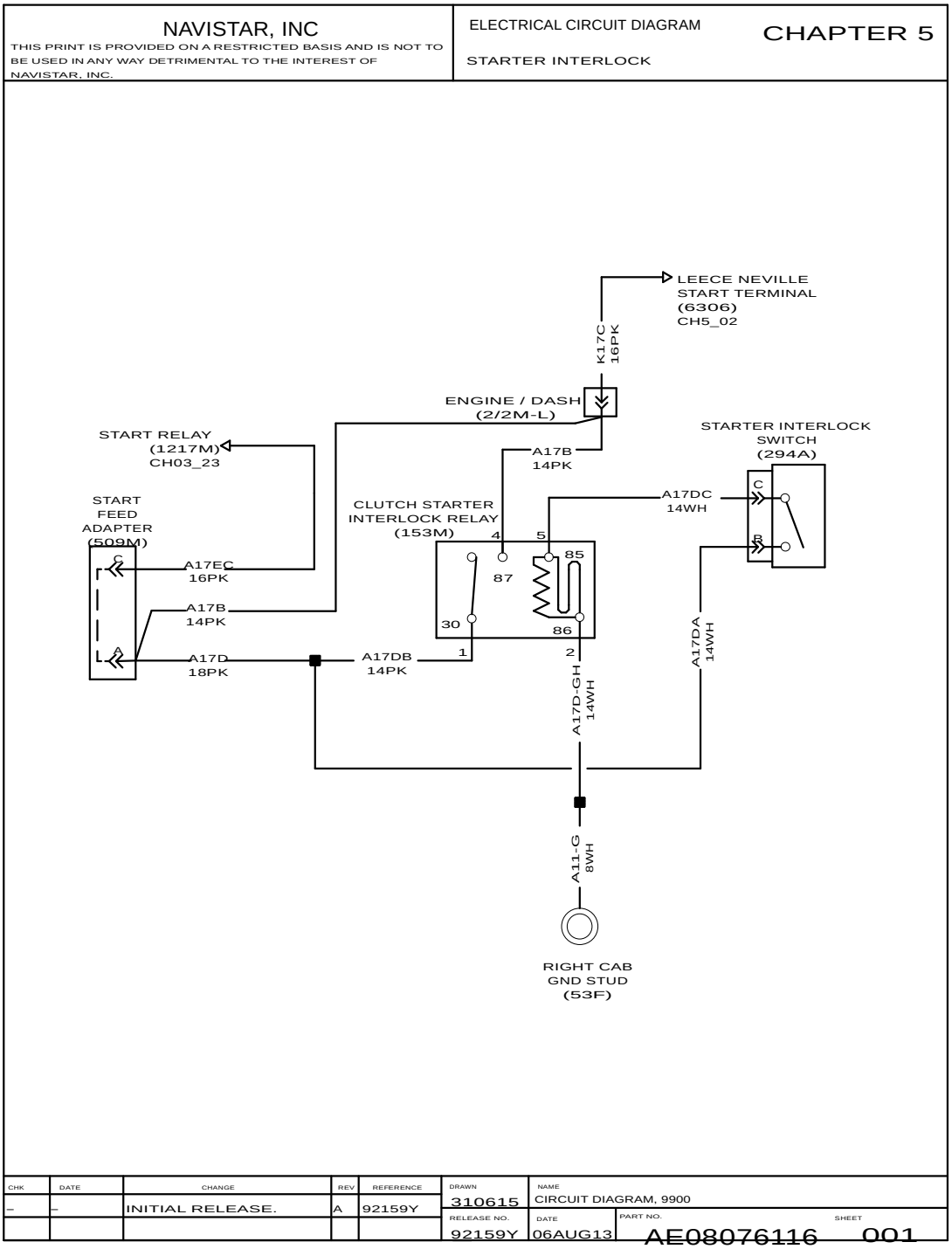

Figure 62 Starter Interlock.

5.2. STARTER INTERLOCK (CONT.), P. 2

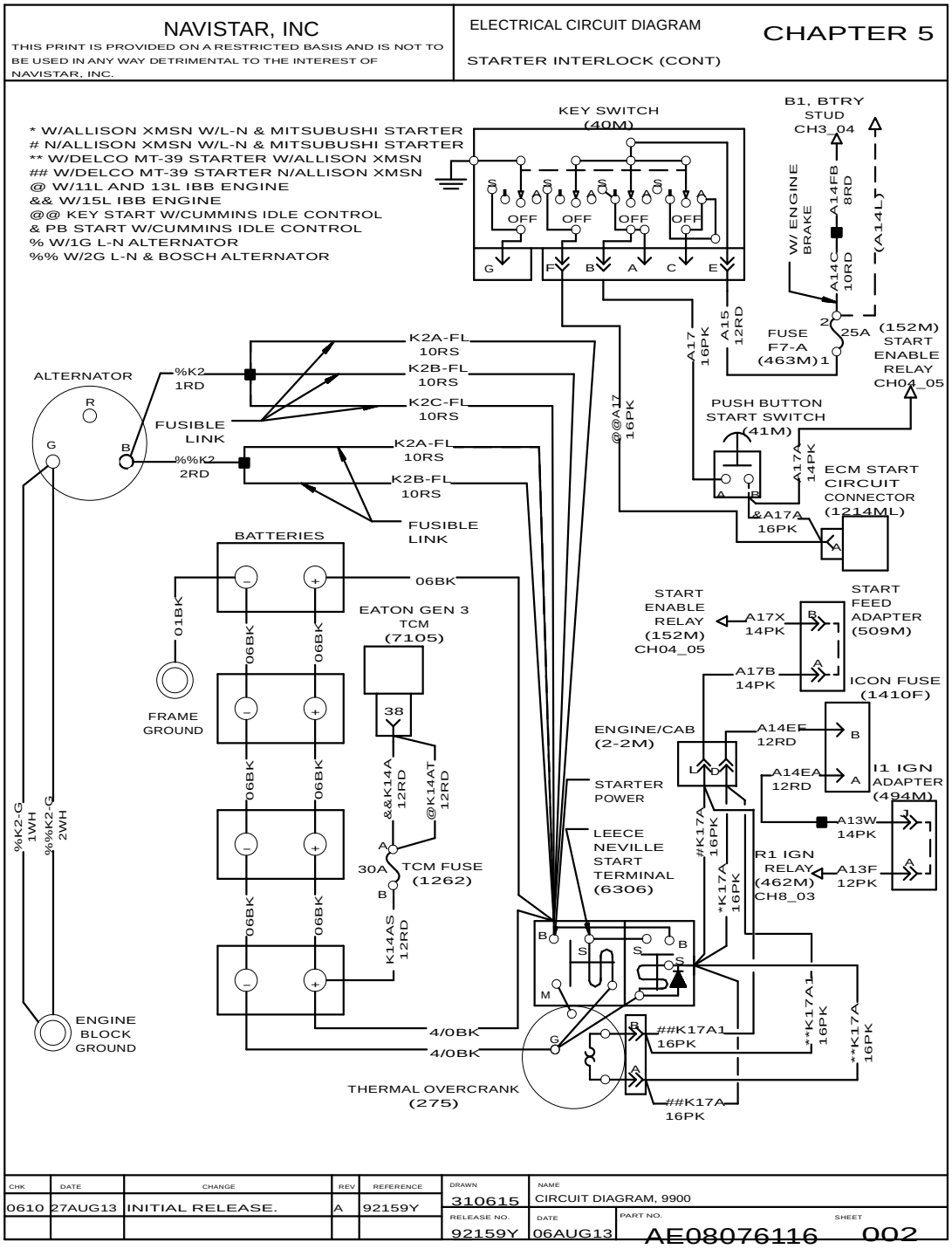

Figure 63 Starter Interlock (Cont.)

5.3. STARTER INTERLOCK (CONT.), P. 3

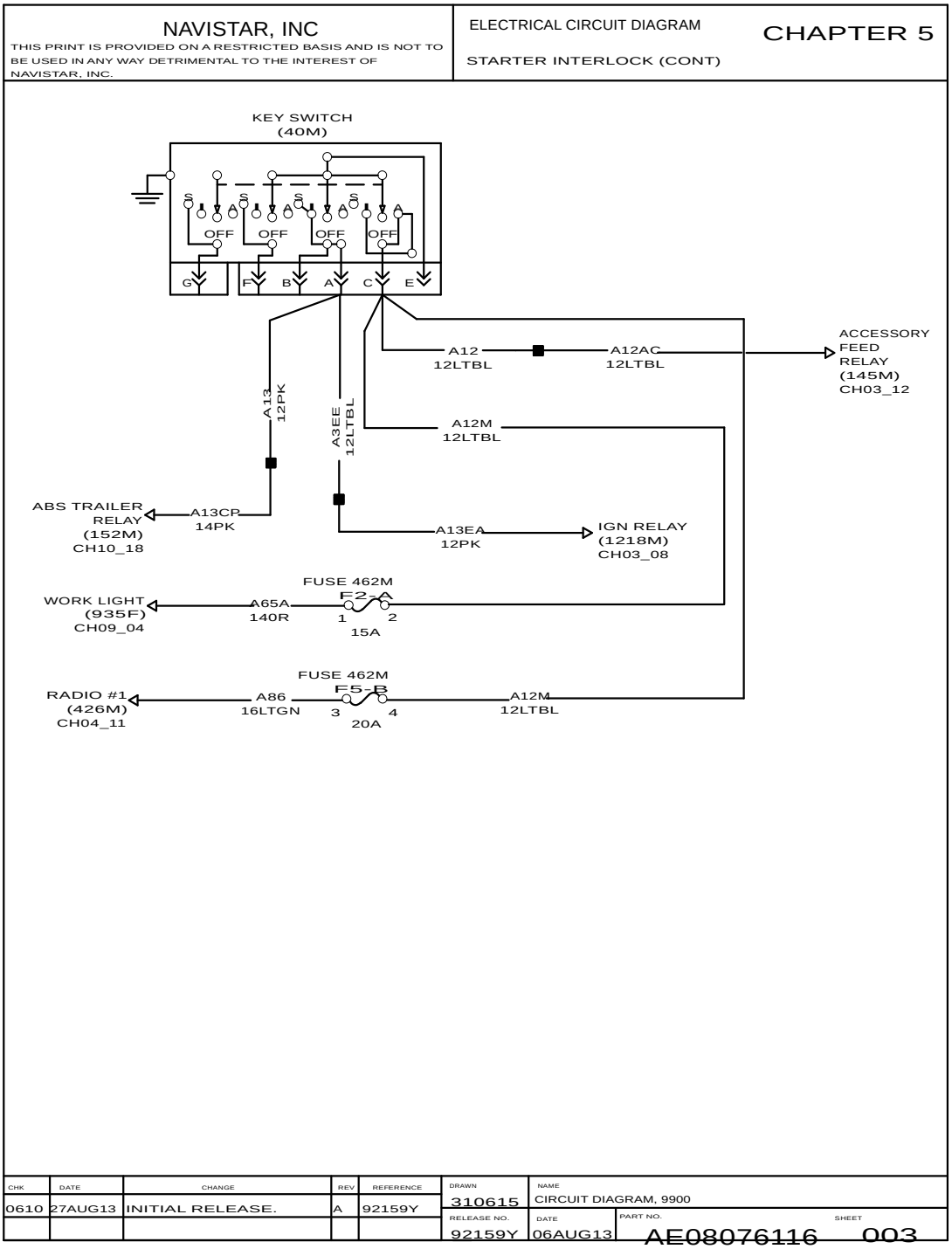

Figure 64 Starter Interlock (Cont.)

5.4. ENGINE – CHARGING CIRCUITS, P. 4

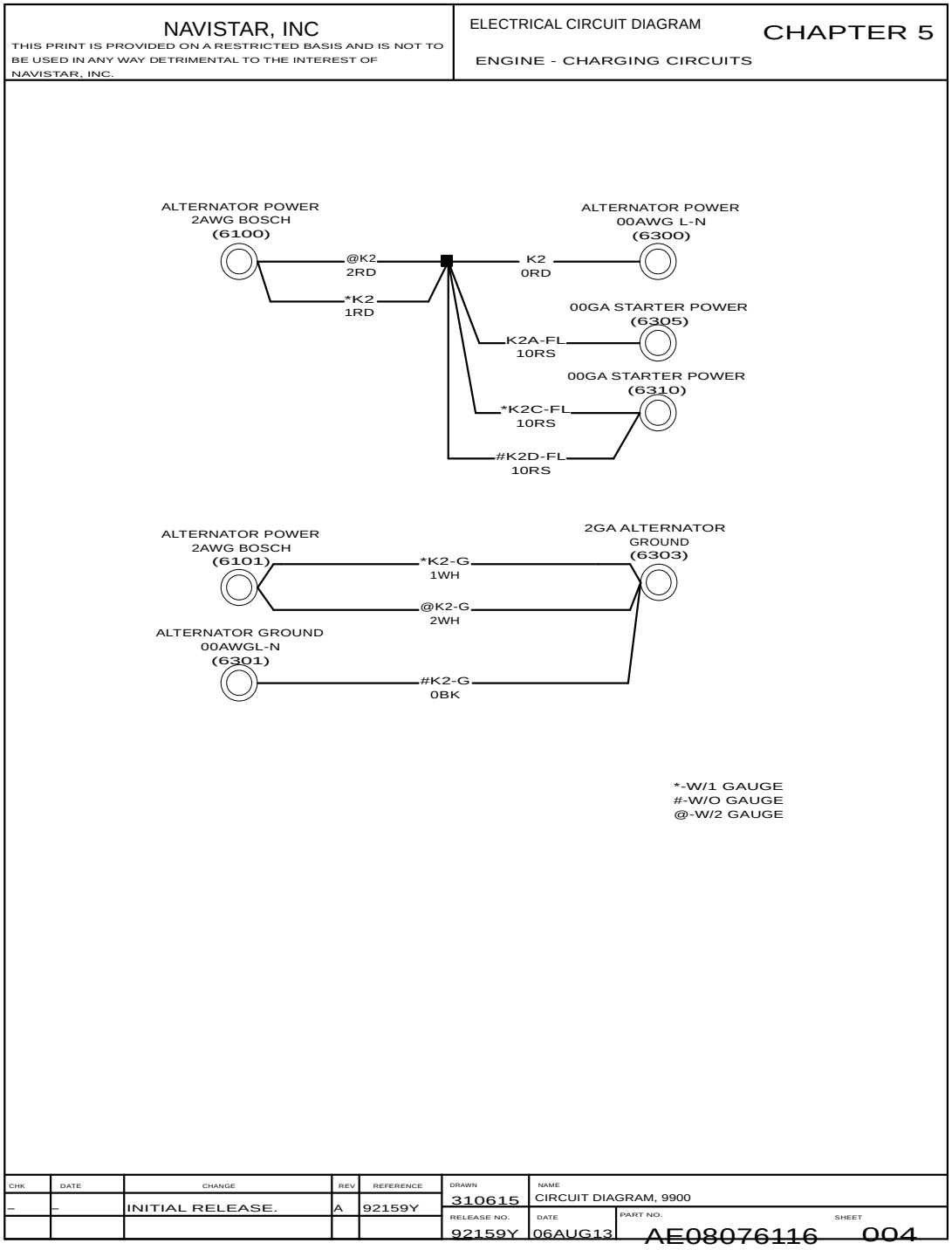

Figure 65 Engine – Charging Circuits.

5.5. ENGINE – CHARGING CIRCUITS (CONT.), P. 5

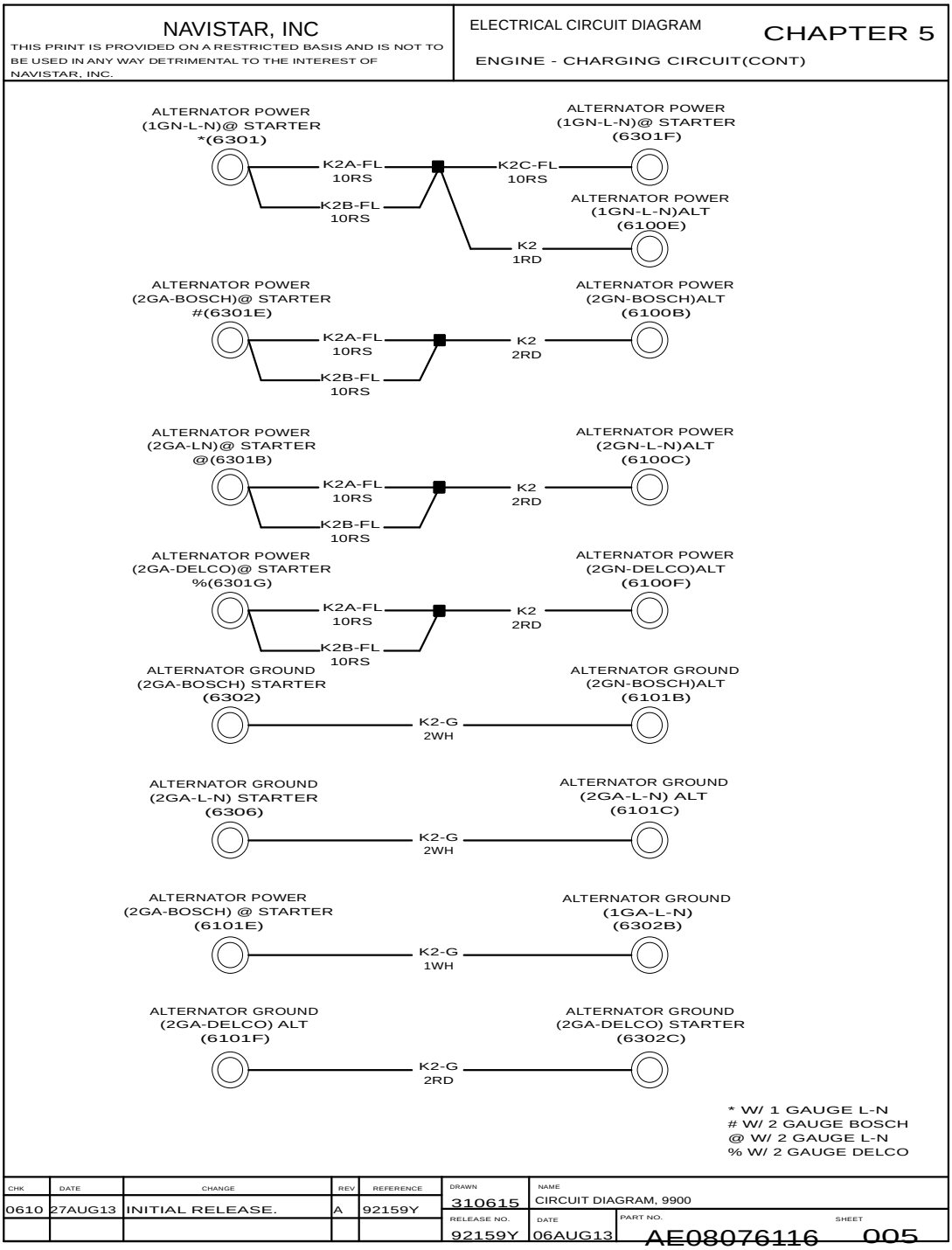

Figure 66 Engine – Charging Circuits (Cont.)

FAN WIRING (CHAPTER 6)

6.1. FAN WIRING – IBB ENGINE, P. 1

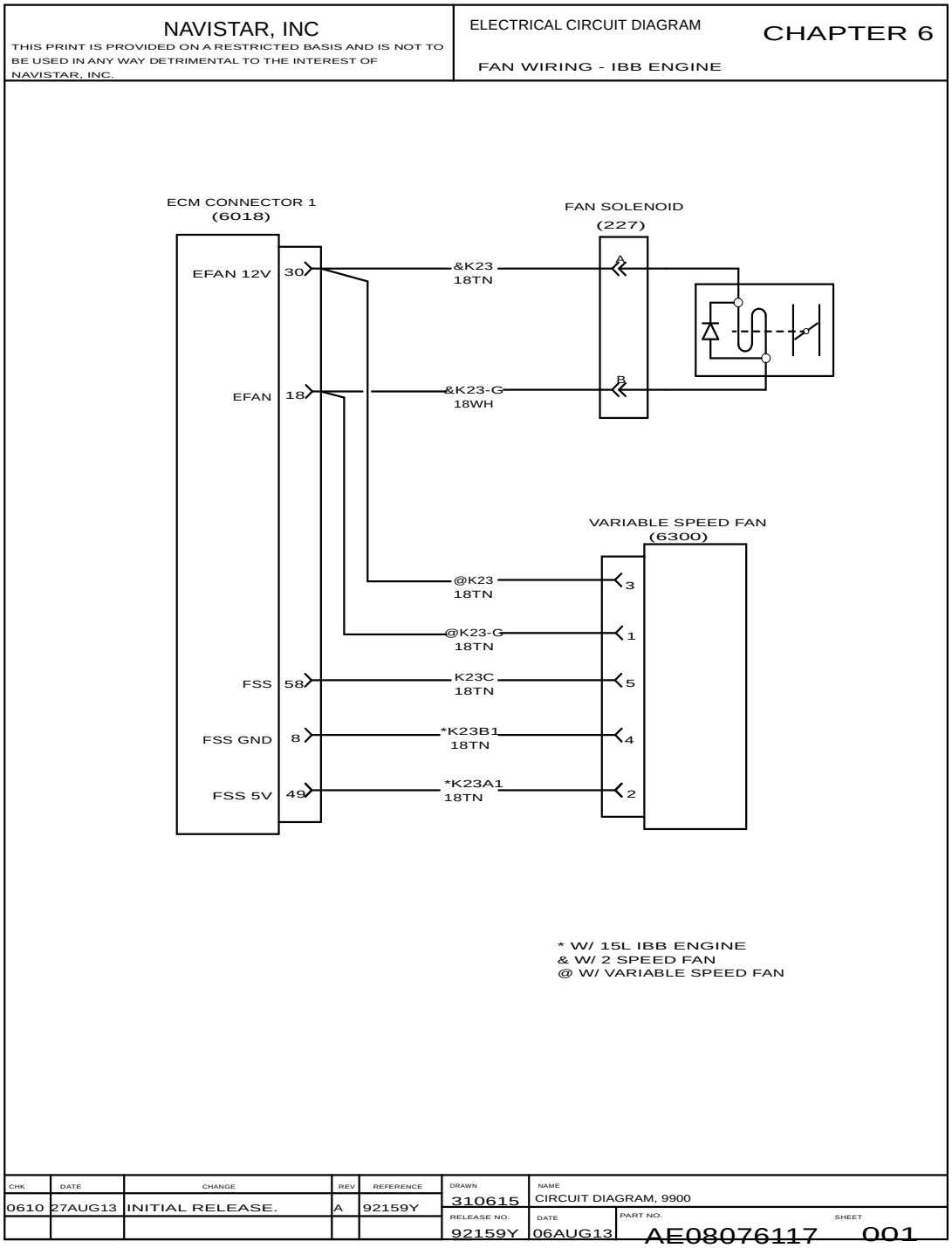

Figure 67 Fan Wiring – IBB Engine.

6.2. FAN WIRING – IBB ENGINE (CONT.), P. 2

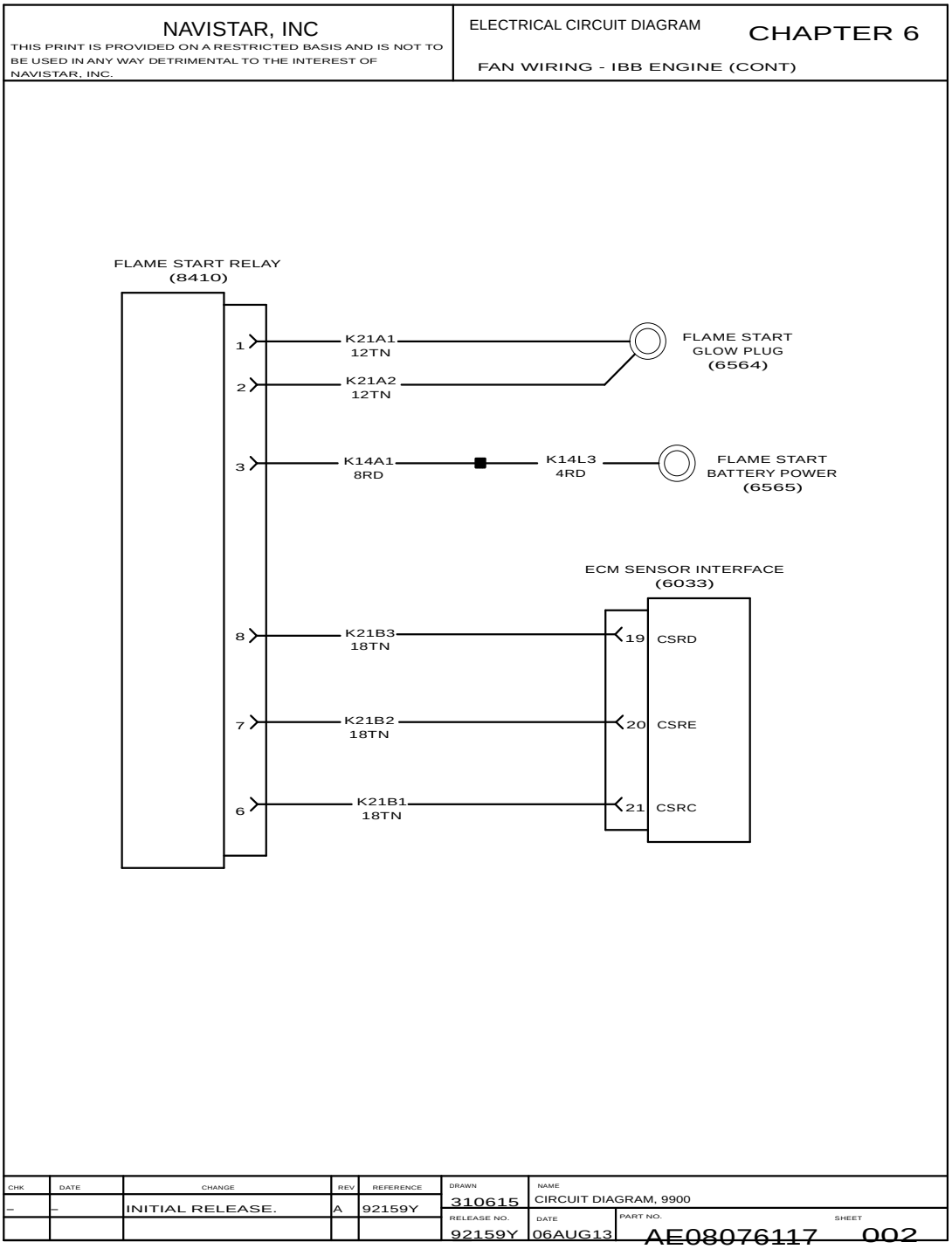

Figure 68 Fan Wiring – IBB Engine (Cont.)

6.3. FAN WIRING – VARIABLE SPEED FAN DRIVE, P. 3

NAVISTAR, INC

THIS PRINT IS PROVIDED ON A RESTRICTED BASIS AND IS NOT TO BE USED IN ANY WAY DETRIMENTAL TO THE INTEREST OF NAVISTAR, INC.

ELECTRICAL CIRCUIT DIAGRAM

CHAPTER 6

FAN WIRING- VARIABLE SPEED FAN DRIVE

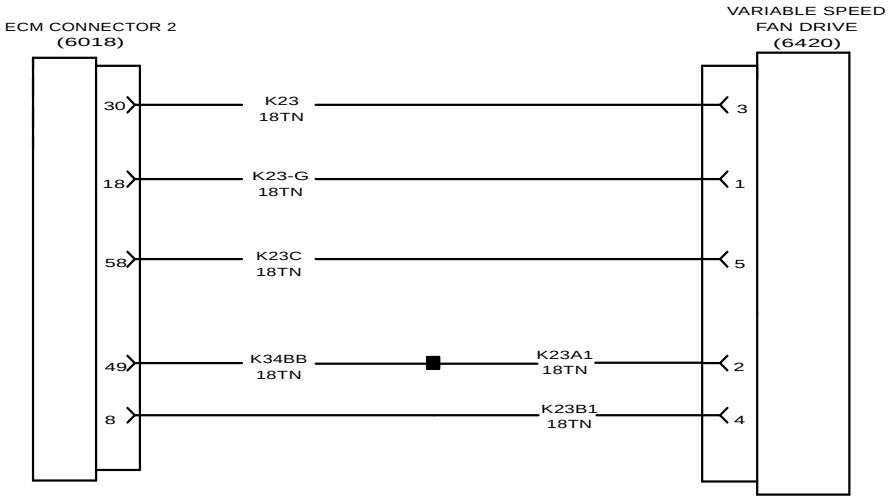

CHK	DATE	CHANGE	REV	REFERENCE	DRAWN	NAME
–	–	INITIAL RELEASE.	A	92159Y	310615	CIRCUIT DIAGRAM, 9900
					RELEASE NO. 92159Y	DATE 06AUG13 / PART NO. AE08076117 / SHEET 003

Figure 69 Fan Wiring – Variable Speed Fan Drive.

6.4. FAN WIRING – FAN AND ETHER START WITH ISX ENGINE, P. 4

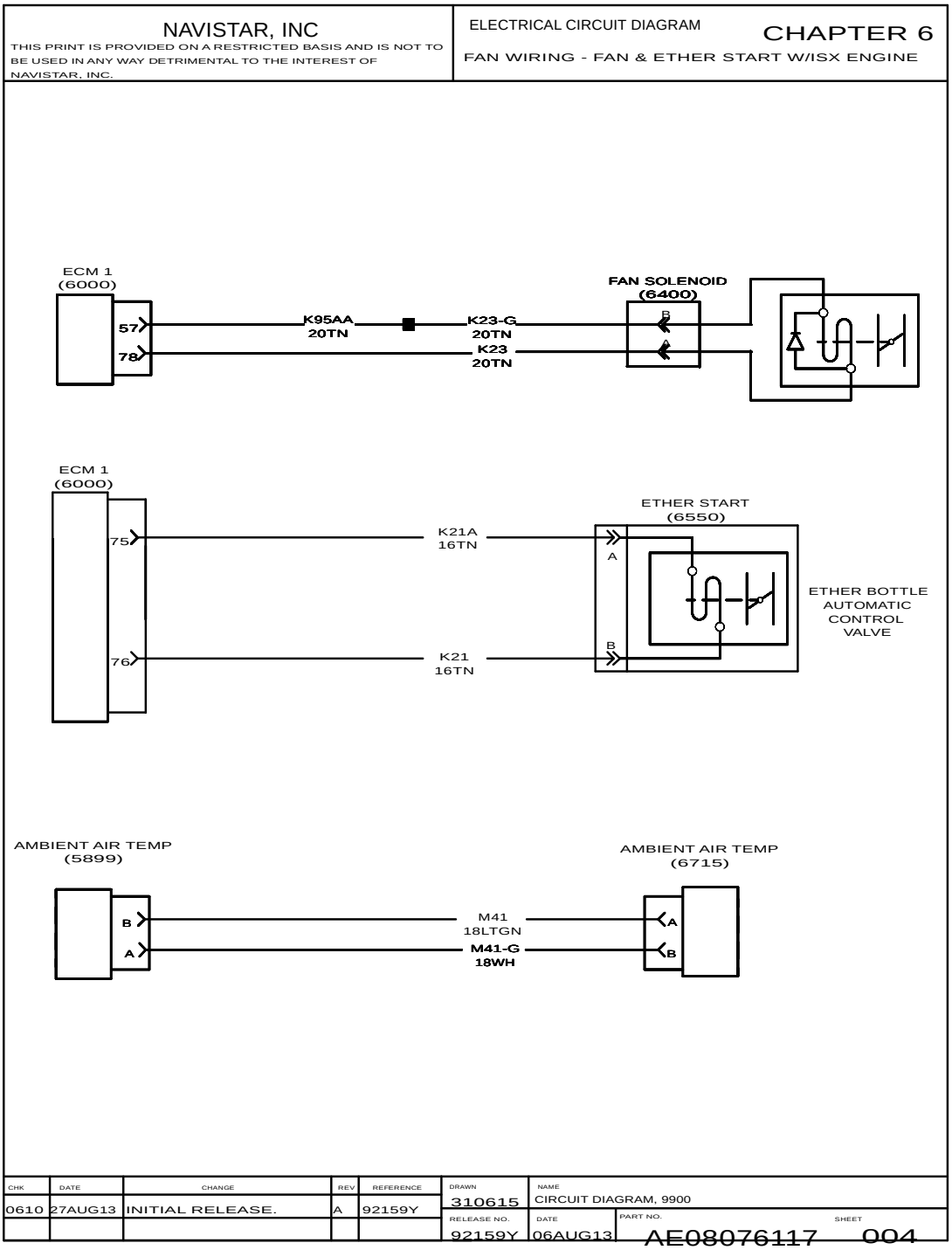

Figure 70 Fan Wiring – Fan and Ether Start with ISX Engine.

6.5. FAN WIRING – FAN DRIVE AND OVERRIDE SWITCH, P. 5

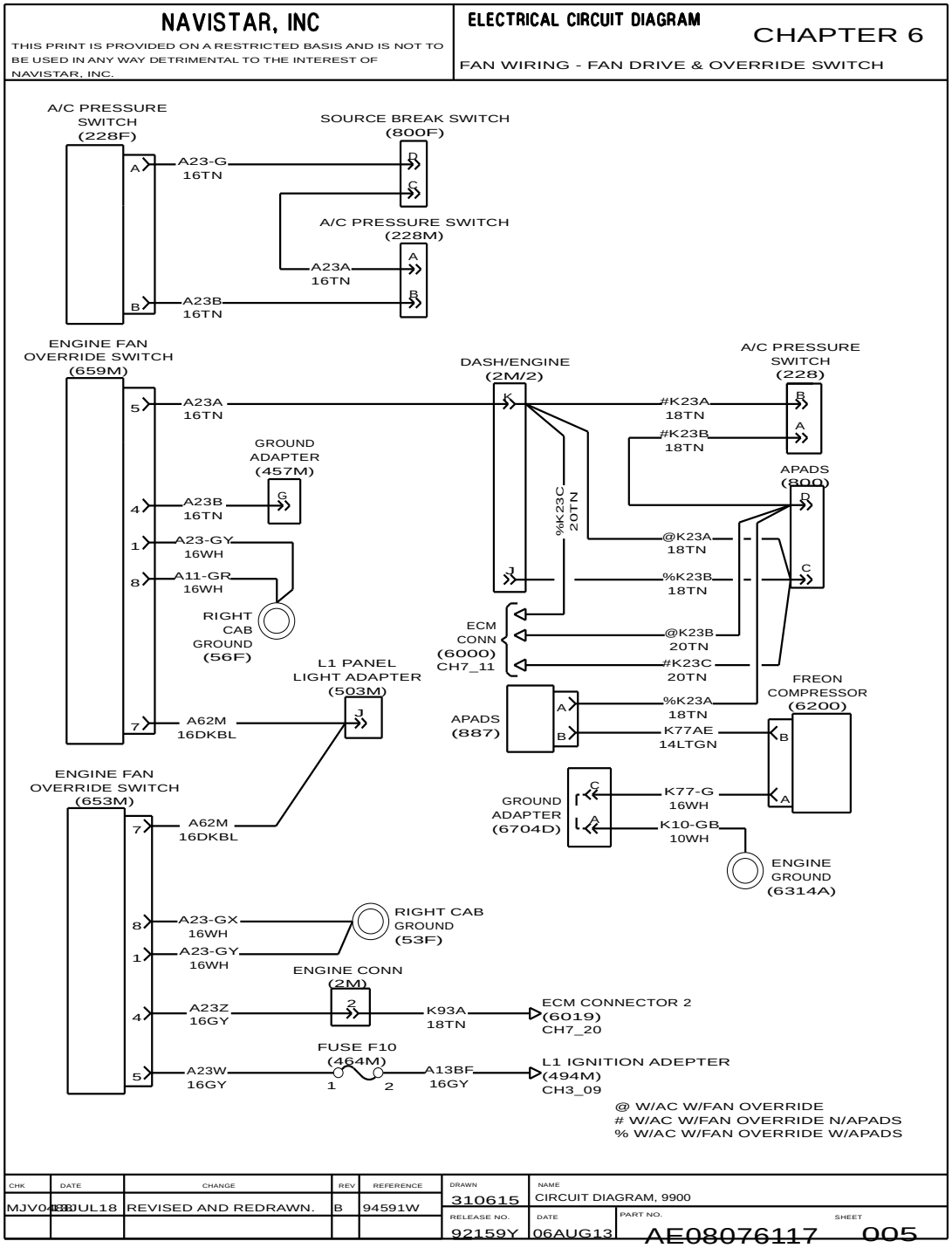

Figure 71 Fan Wiring – Fan Drive and Override Switch.

ENGINE SYSTEM (CHAPTER 7)

7.1. ELECTRONICS ENGINE CONTROL (ISX ENGINE), P. 1

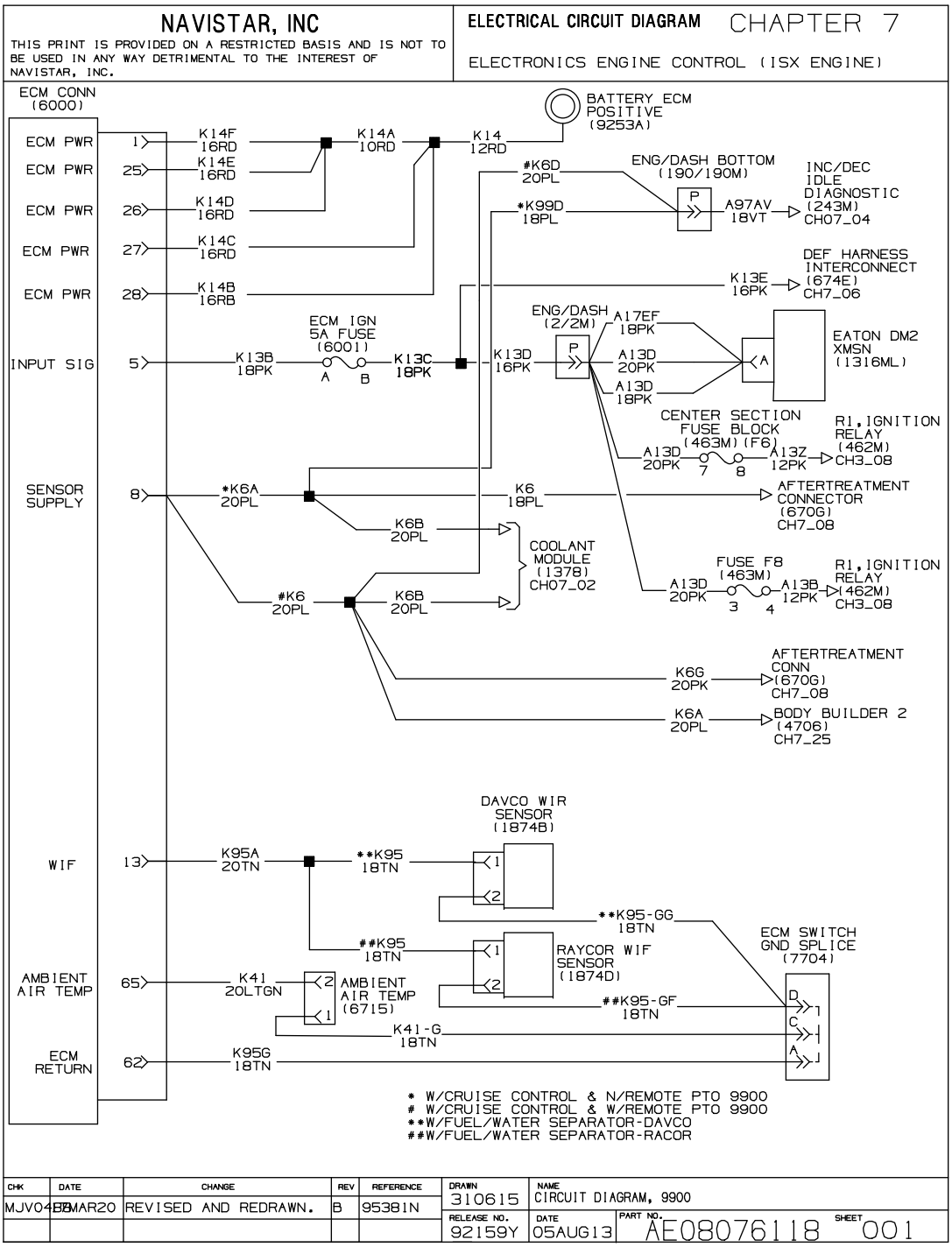

Figure 72 Electronics Engine Control (ISX Engine)

7.2. ELECTRONICS ENGINE CONTROL (ISX ENGINE) (CONT.), P. 2

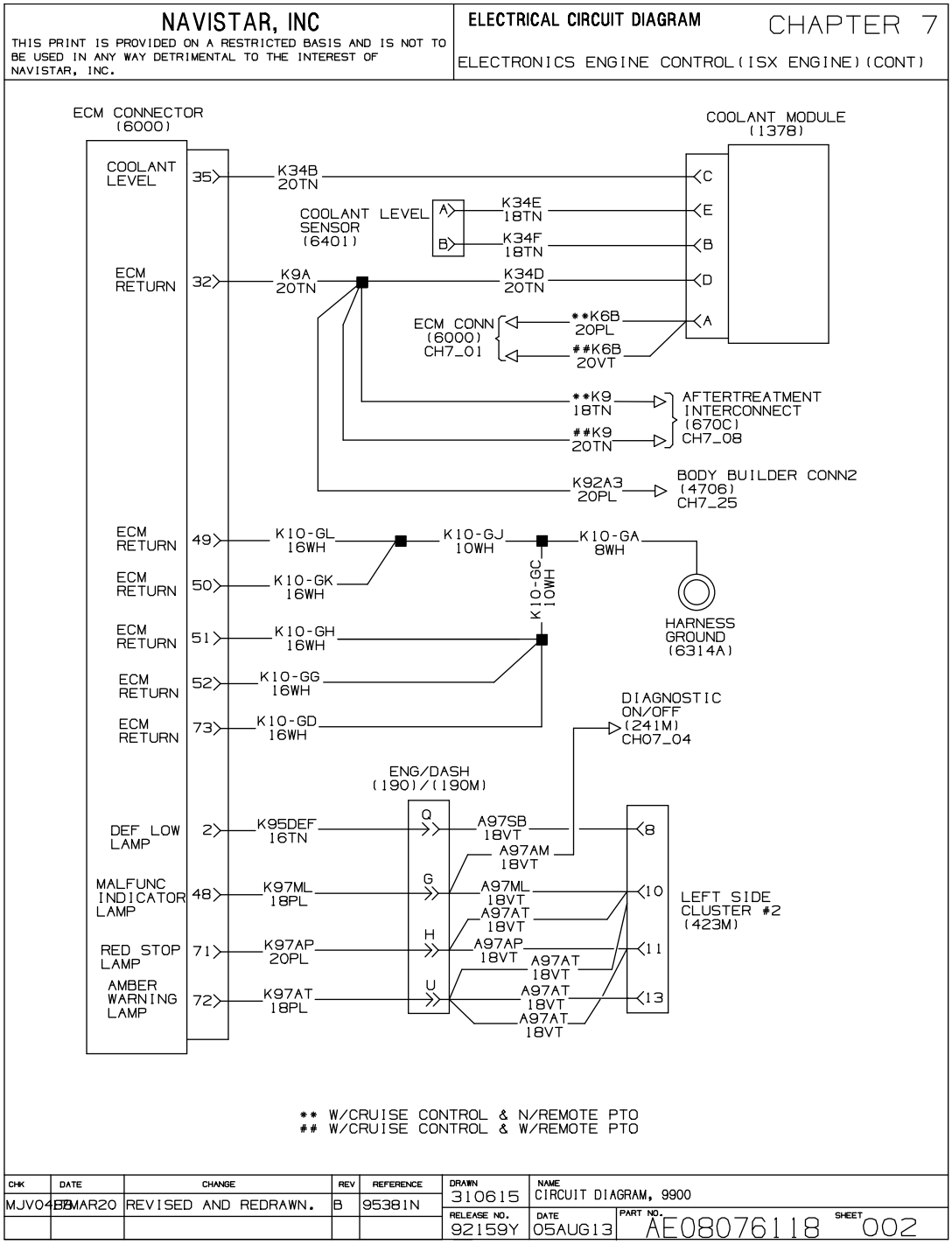

Figure 73 Electronics Engine Control (ISX Engine) (Cont.)

7.3. ELECTRONICS ENGINE CONTROL (ISX ENGINE) (CONT.), P. 3

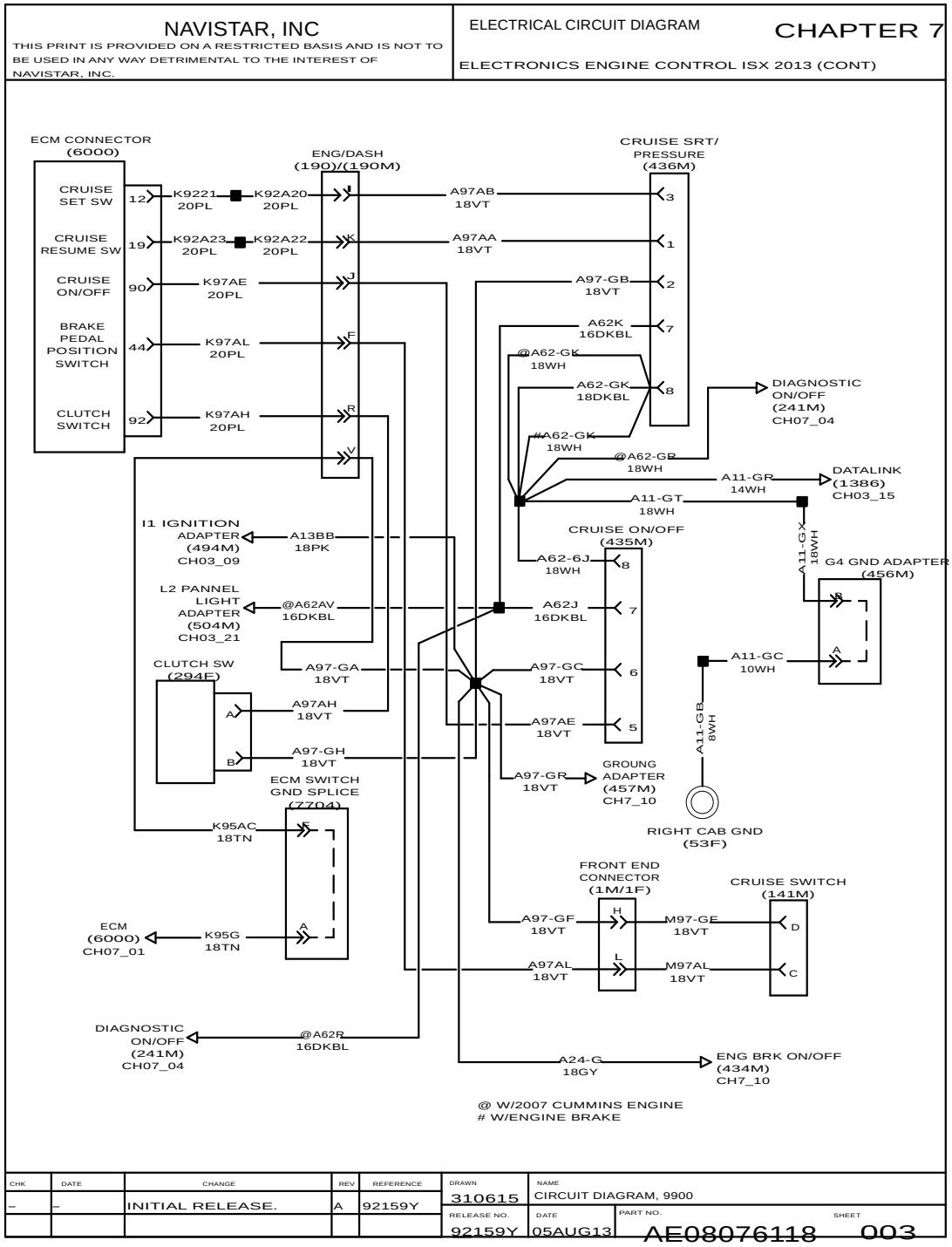

Figure 74 Electronics Engine Control (ISX Engine) (Cont.)

7.4. ELECTRONICS ENGINE CONTROL (ISX ENGINE) (CONT.), P. 4

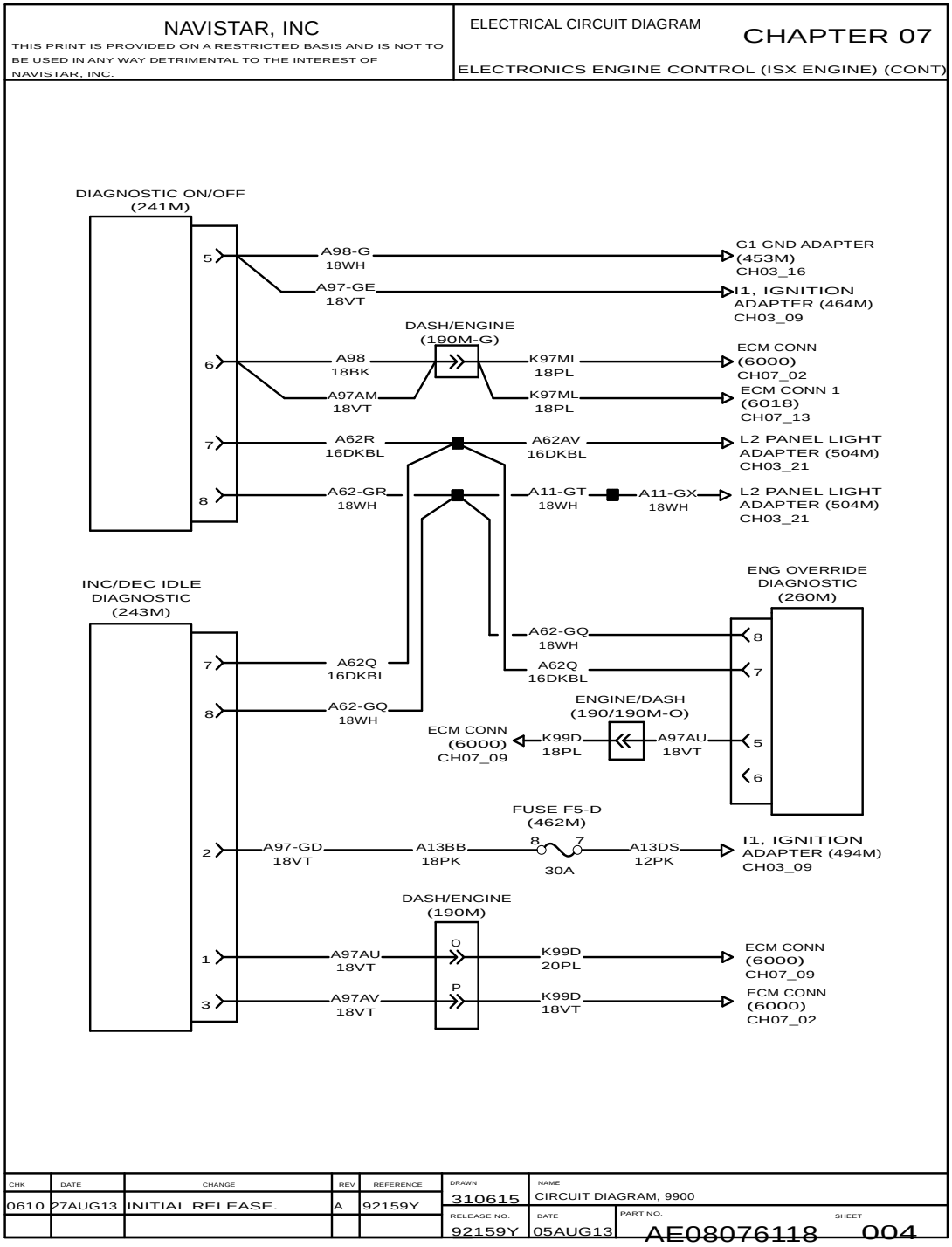

Figure 75 Electronics Engine Control (ISX Engine) (Cont.)

7.5. ISX 2013 DEF AND AFTERTREATMENT, P. 5

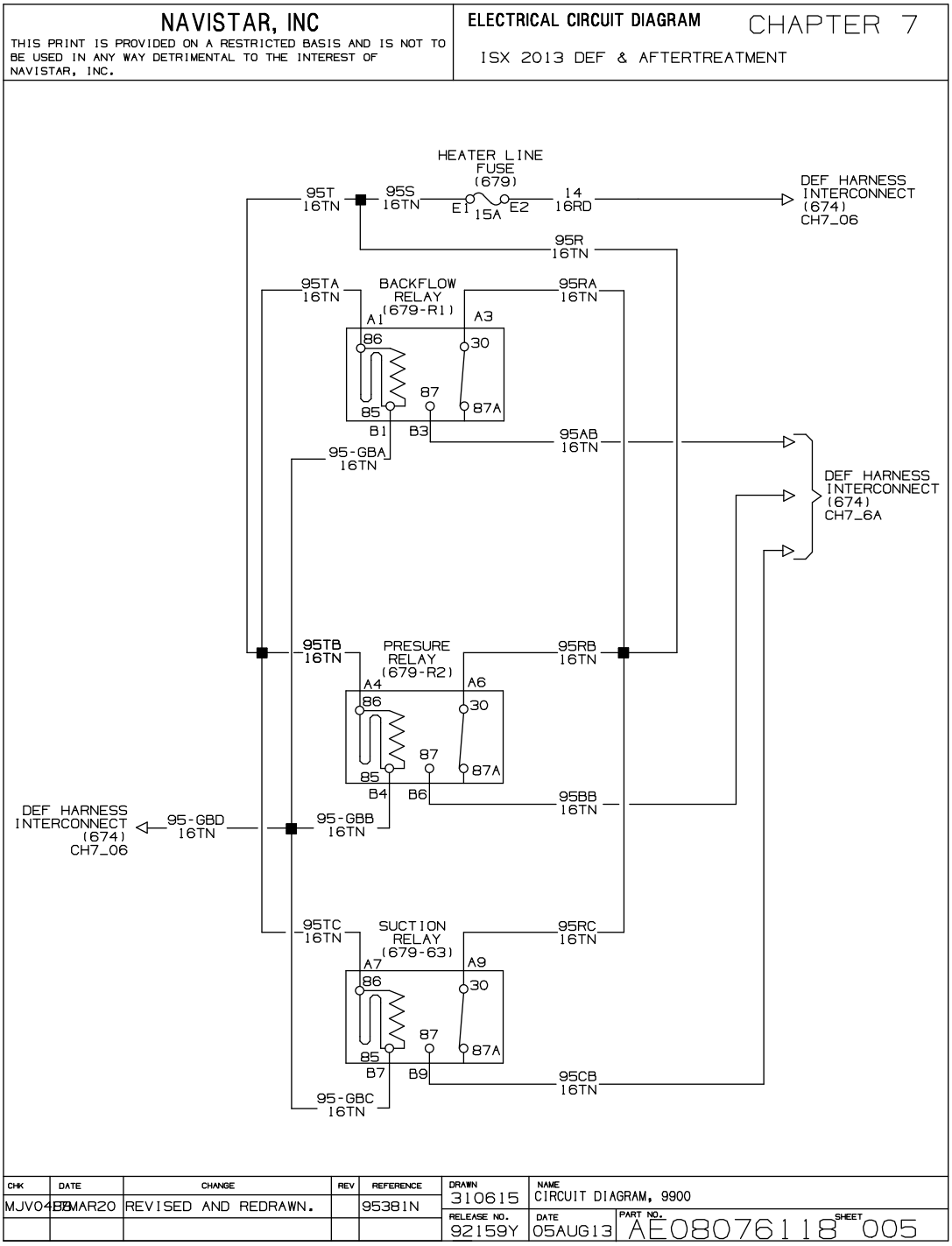

Figure 76 ISX 2013 DEF and Aftertreatment

7.6. ISX 2013 DEF AND AFTERTREATMENT (CONT.), P. 5A

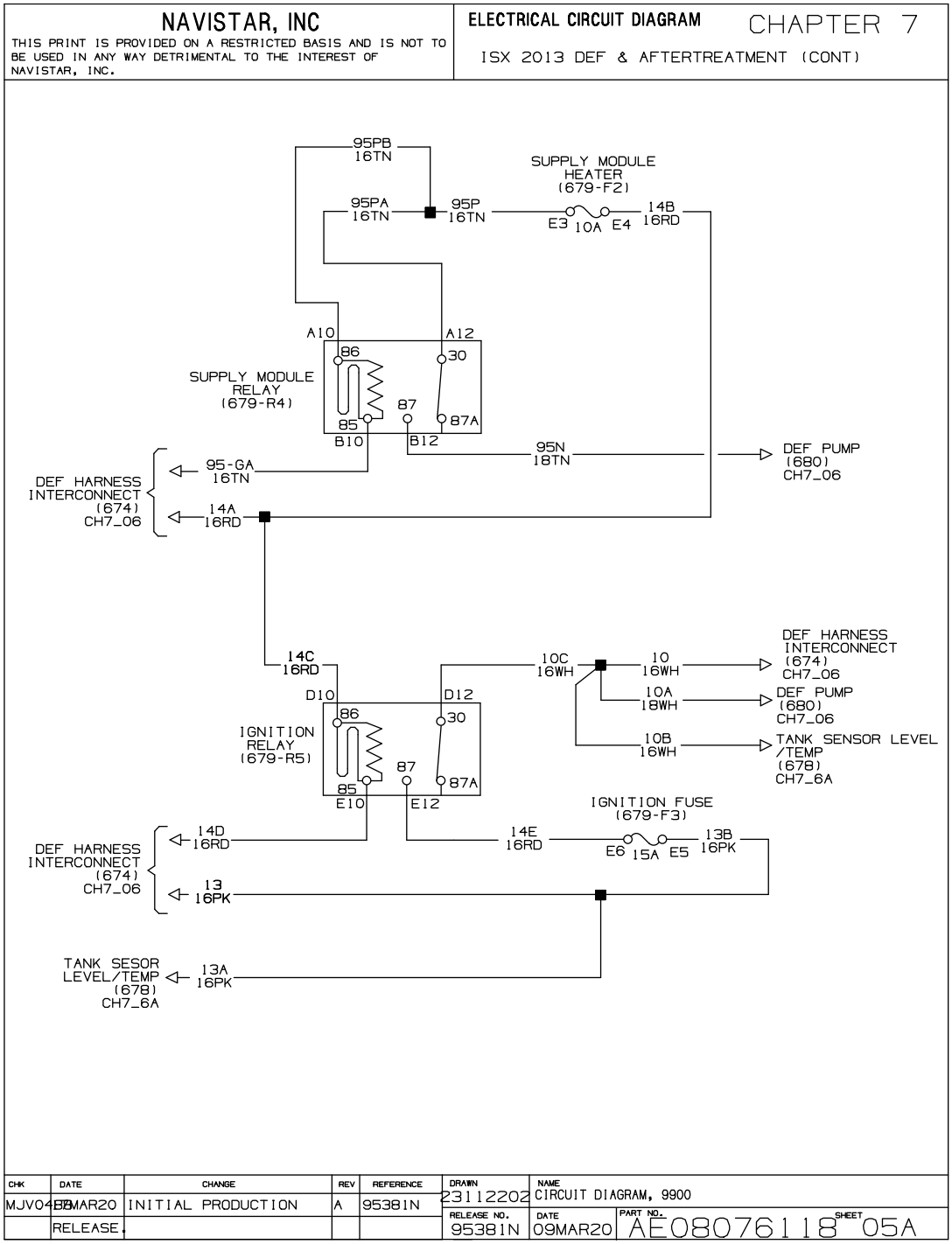

Figure 77 ISX 2013 DEF and Aftertreatment (Cont.)

7.7. ISX 2013 DEF AND AFTERTREATMENT (CONT.), P. 6

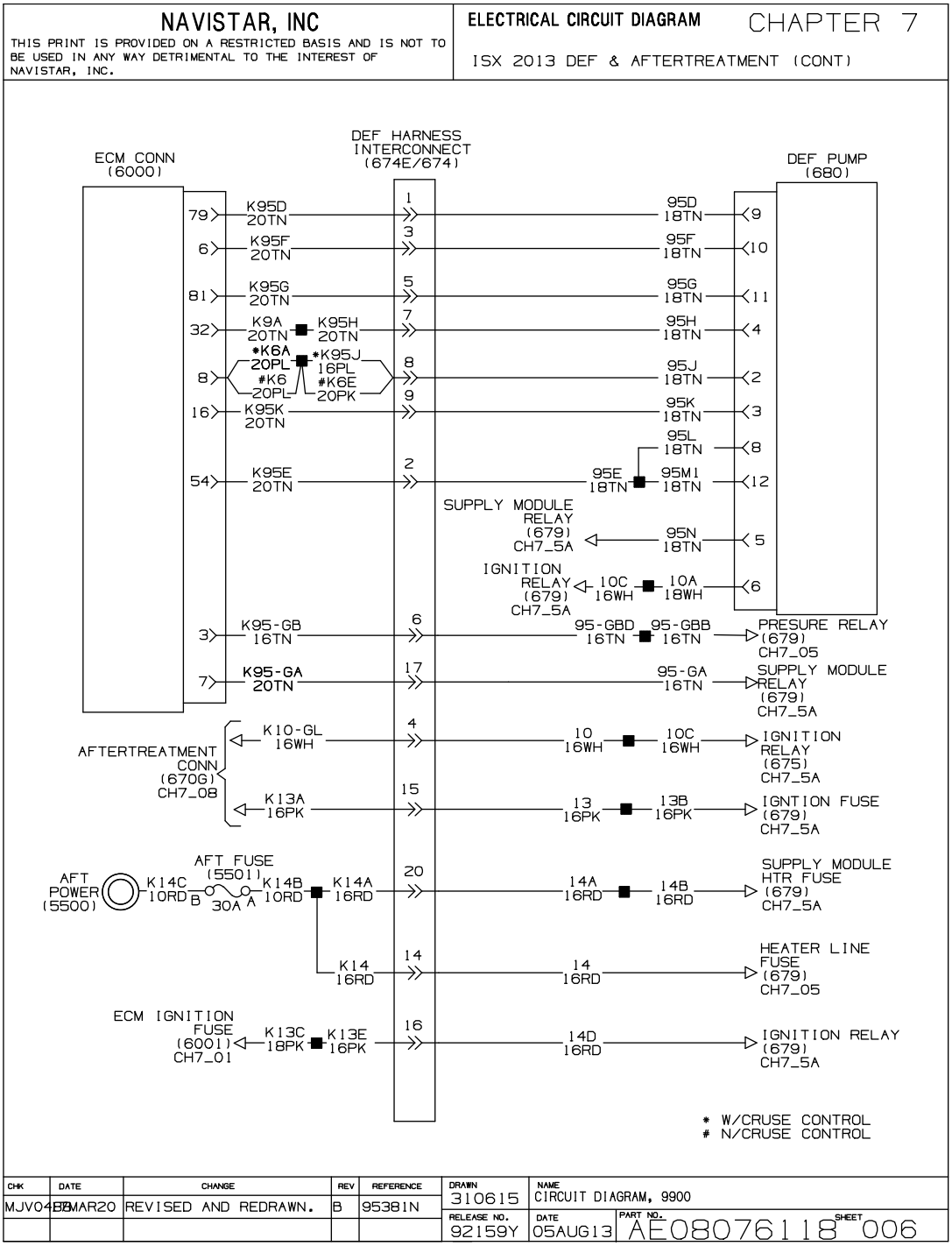

Figure 78 ISX 2013 DEF and Aftertreatment (Cont.)

7.8. ISX 2013 DEF AND AFTERTREATMENT (CONT.), P. 6A

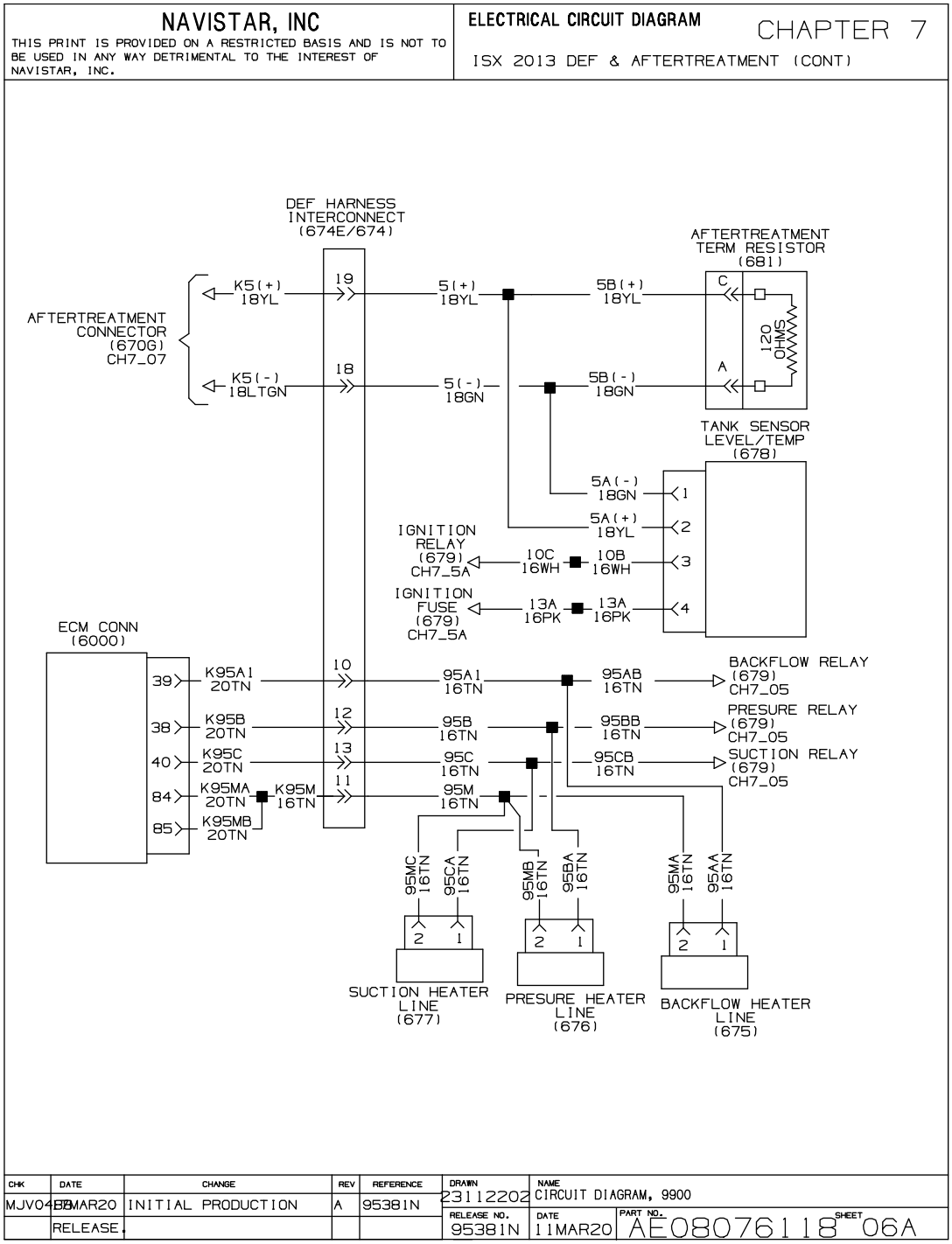

Figure 79 ISX 2013 DEF and Aftertreatment (Cont.)

7.9. ISX 2013 DEF AND AFTERTREATMENT (CONT.), P. 7

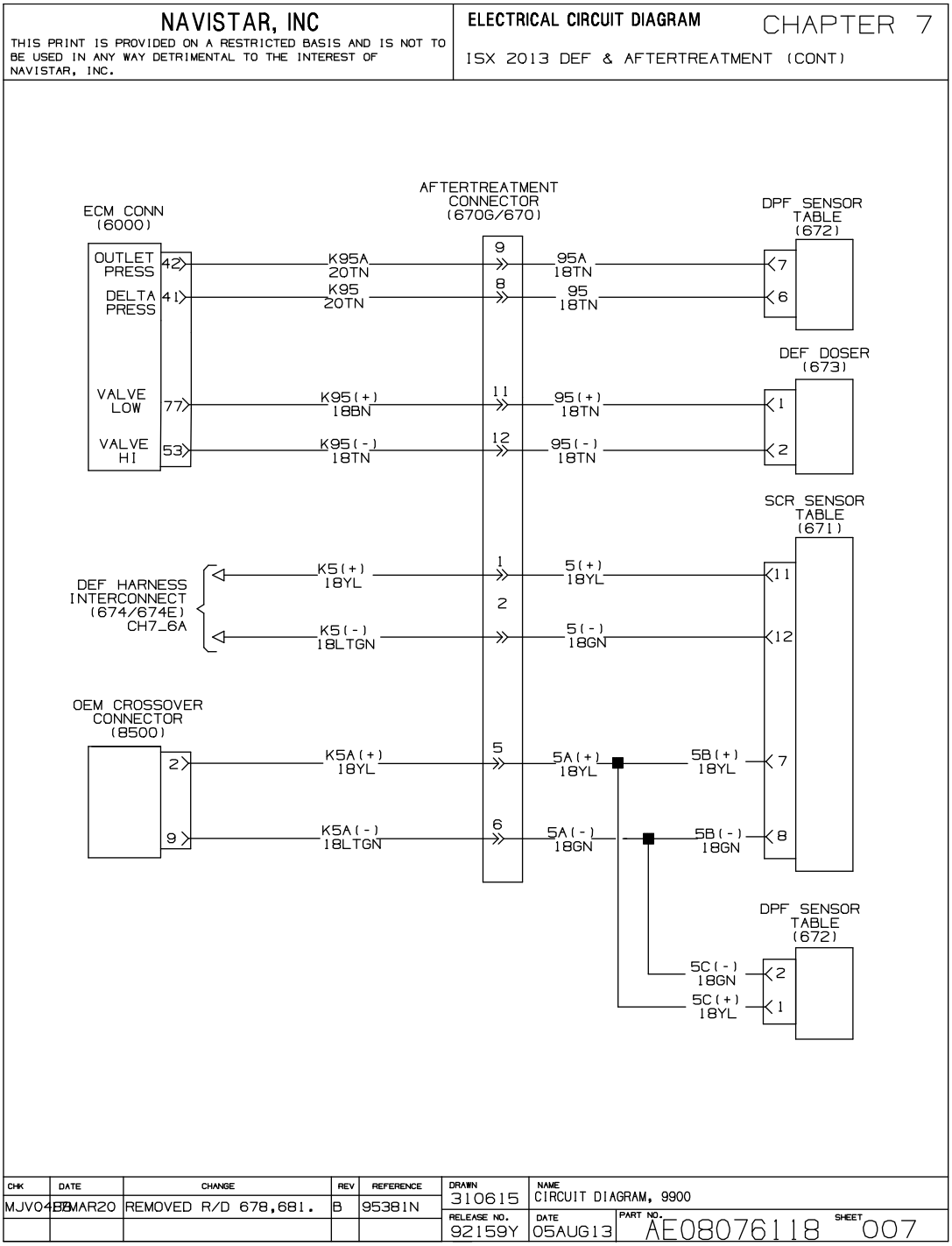

Figure 80 ISX 2013 DEF and Aftertreatment (Cont.)

7.10. ISX 2013 DEF AND AFTERTREATMENT (CONT.), P. 8

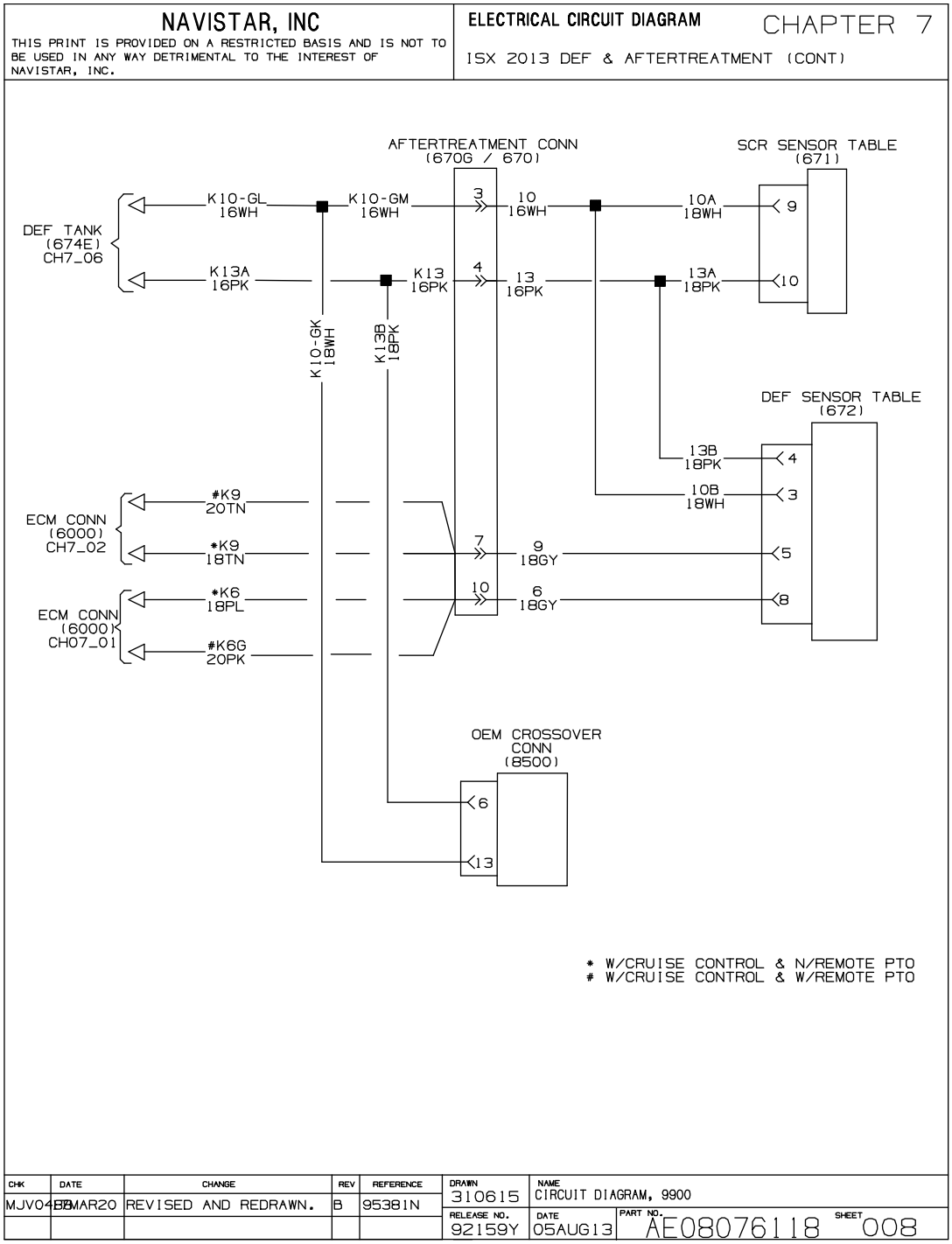

Figure 81 ISX 2013 DEF and Aftertreatment (Cont.)

7.11. ISX 2013 DEF AND AFTERTREATMENT (CONT.), P. 8A

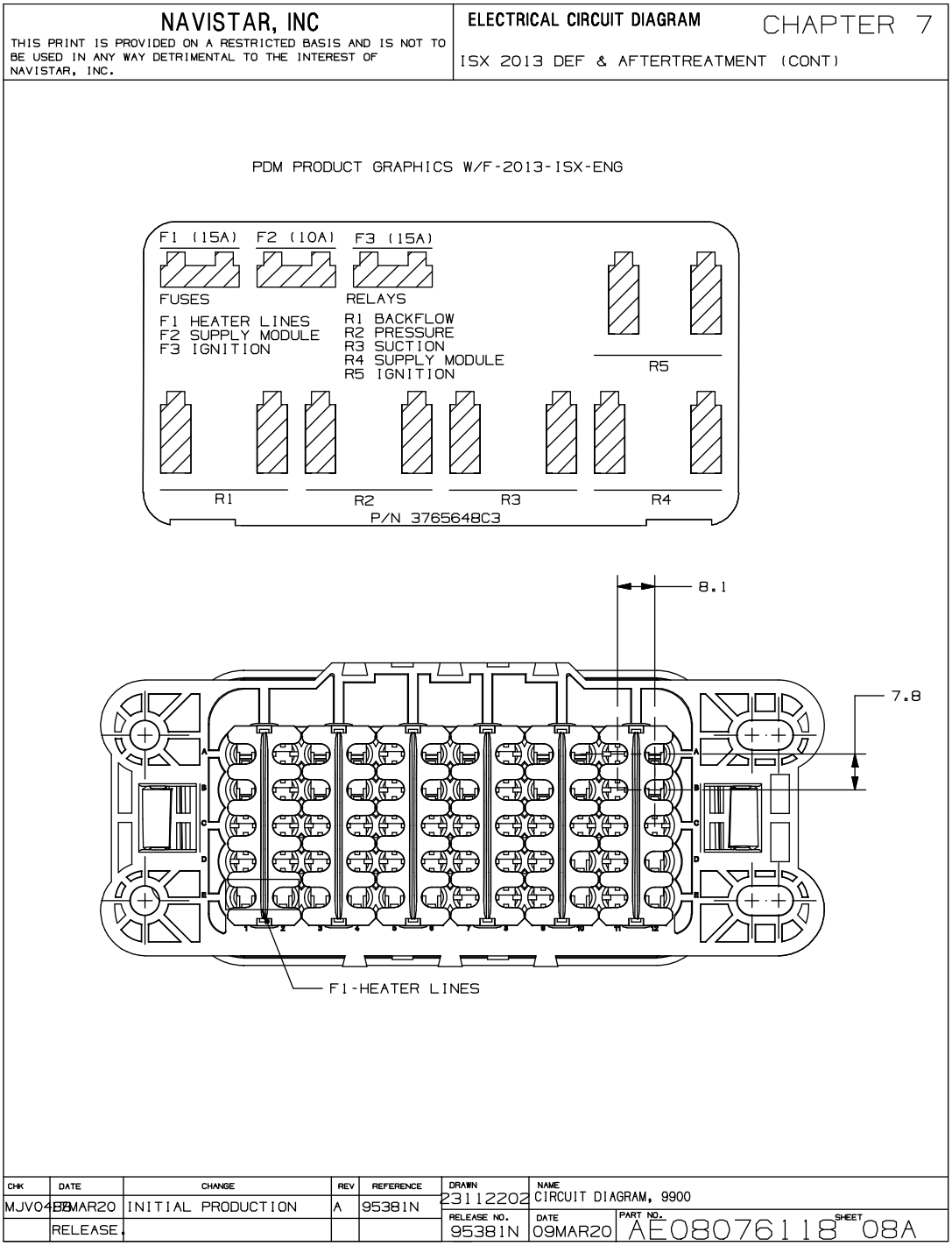

Figure 82 ISX 2013 DEF and Aftertreatment (Cont.)

7.12. 15L ISX ENGINE THROTTLE POSITION, P. 9

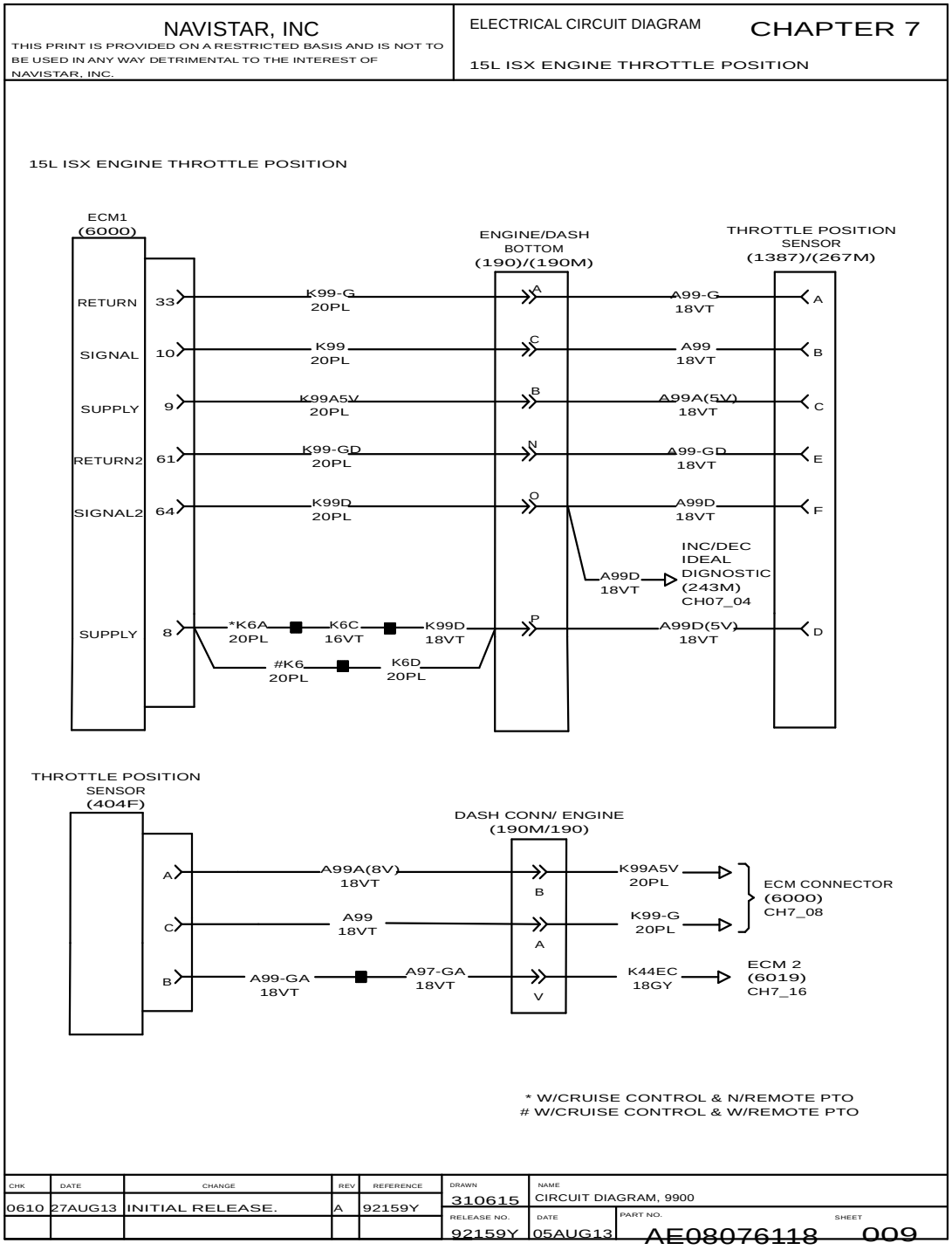

Figure 83 15L ISX Engine Throttle Position.

7.13. ELECTRONIC ENGINE CONTROLS (ISX ENGINE) (CONT.), P. 10

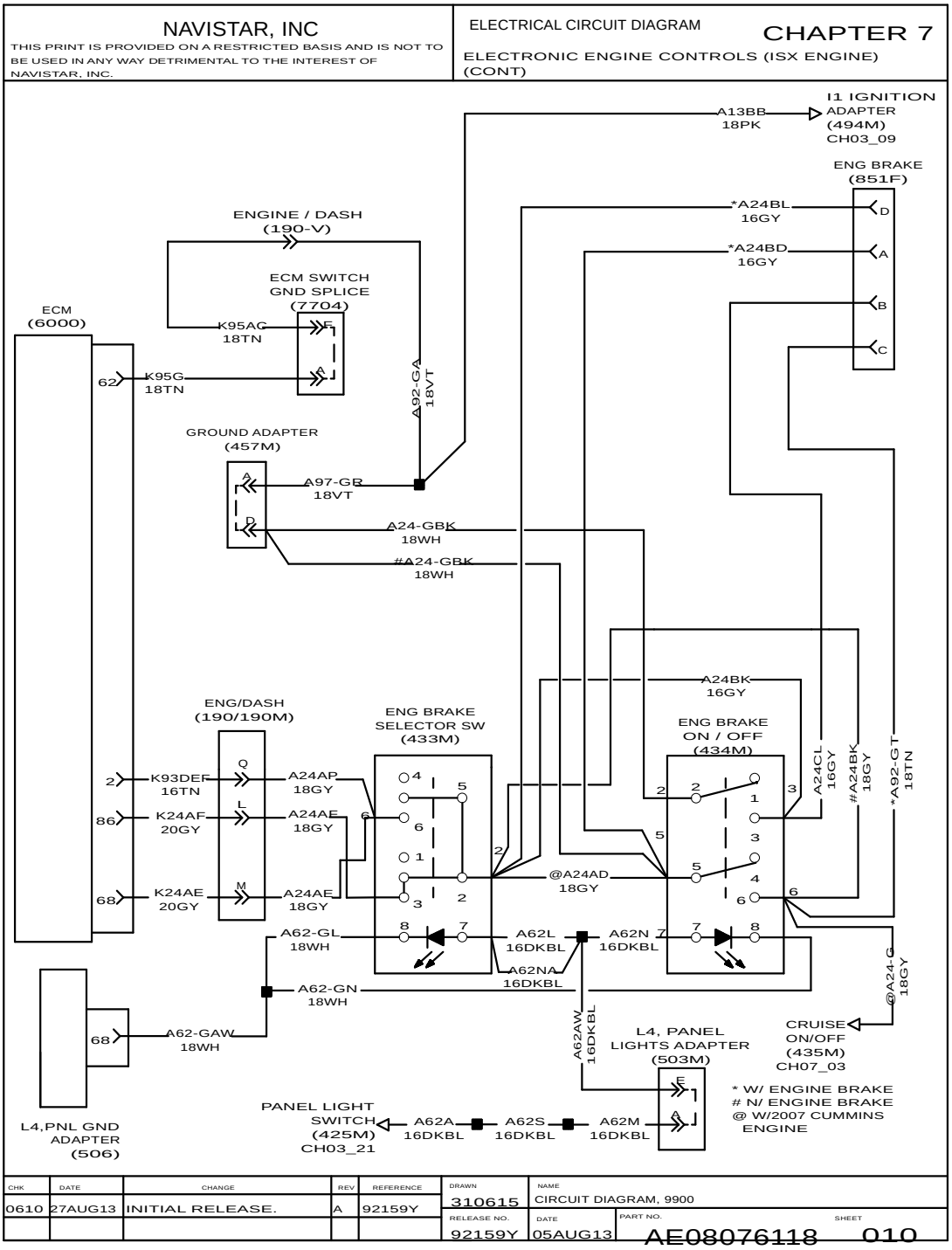

Figure 84 Electronic Engine Controls (ISX Engine) (Cont.)

7.14. ELECTRONIC ENGINE CONTROLS (ISX ENGINE) (CONT.), P. 11

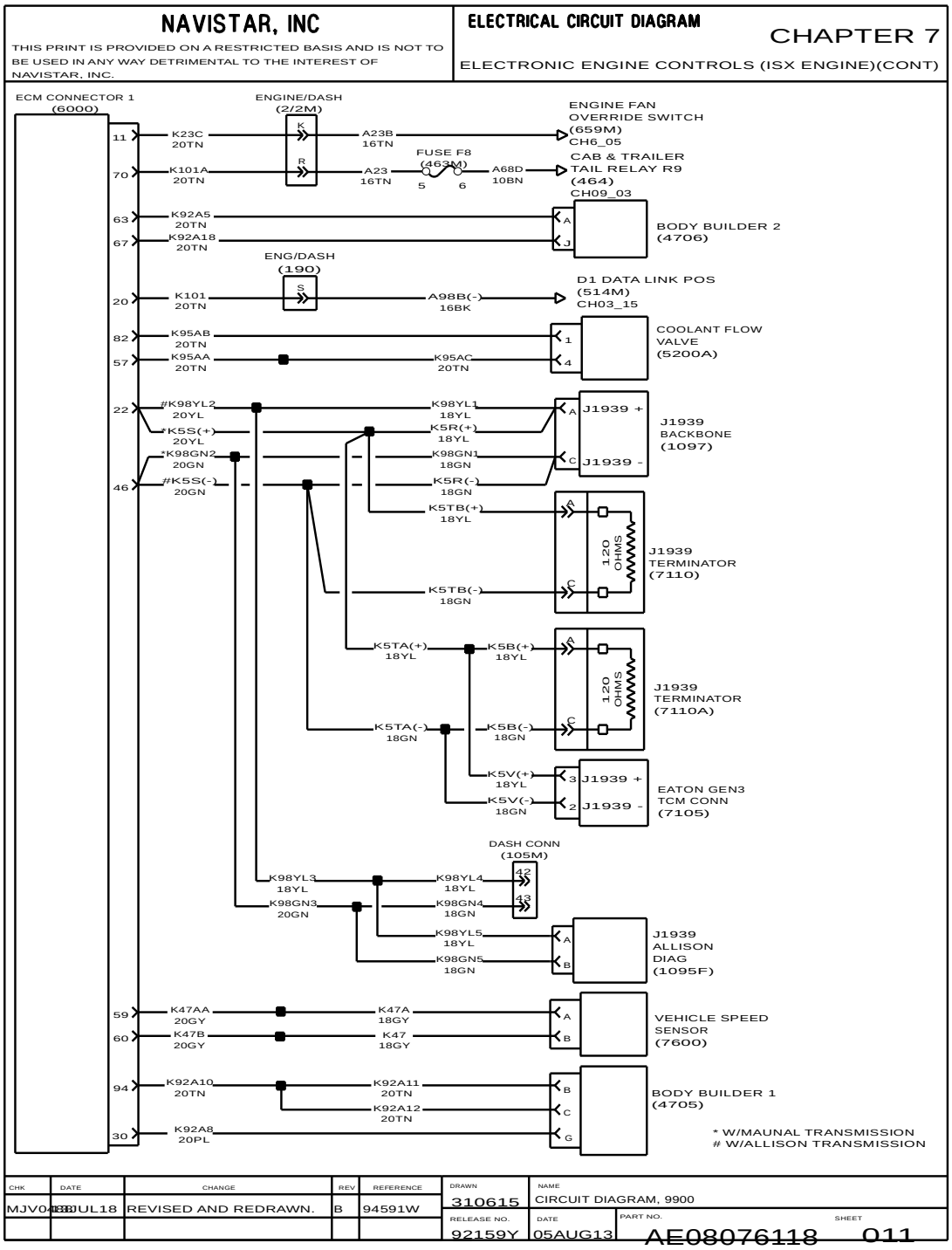

Figure 85 Electronic Engine Controls (ISX Engine) (Cont.)

7.15. ELECTRONIC ENGINE CONTROLS (2010 IBB ENGINE), P. 12

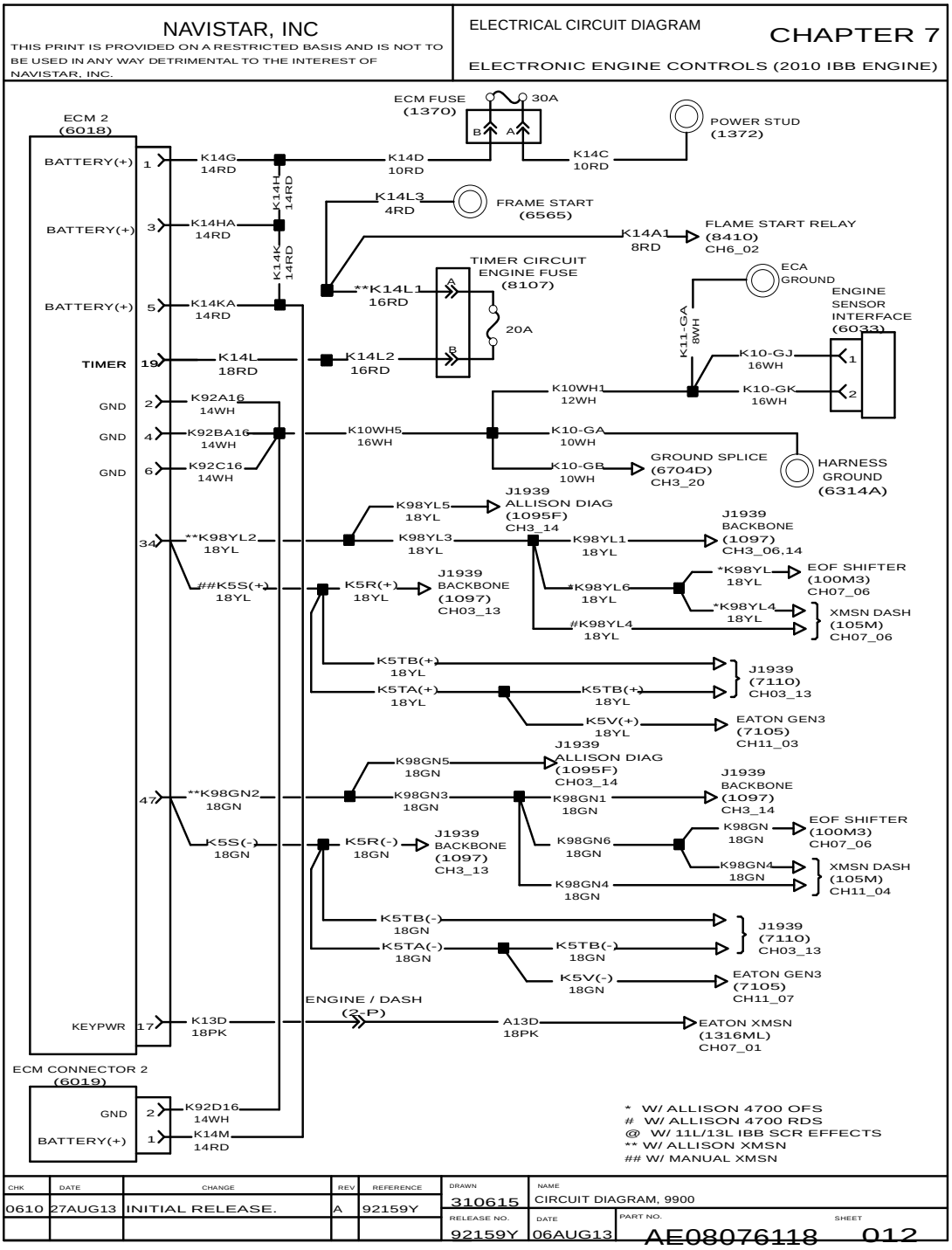

Figure 86 Electronic Engine Controls (2010 IBB Engine)

7.16. ELECTRONIC ENGINE CONTROLS (2010 IBB ENGINE) (CONT.), P. 13

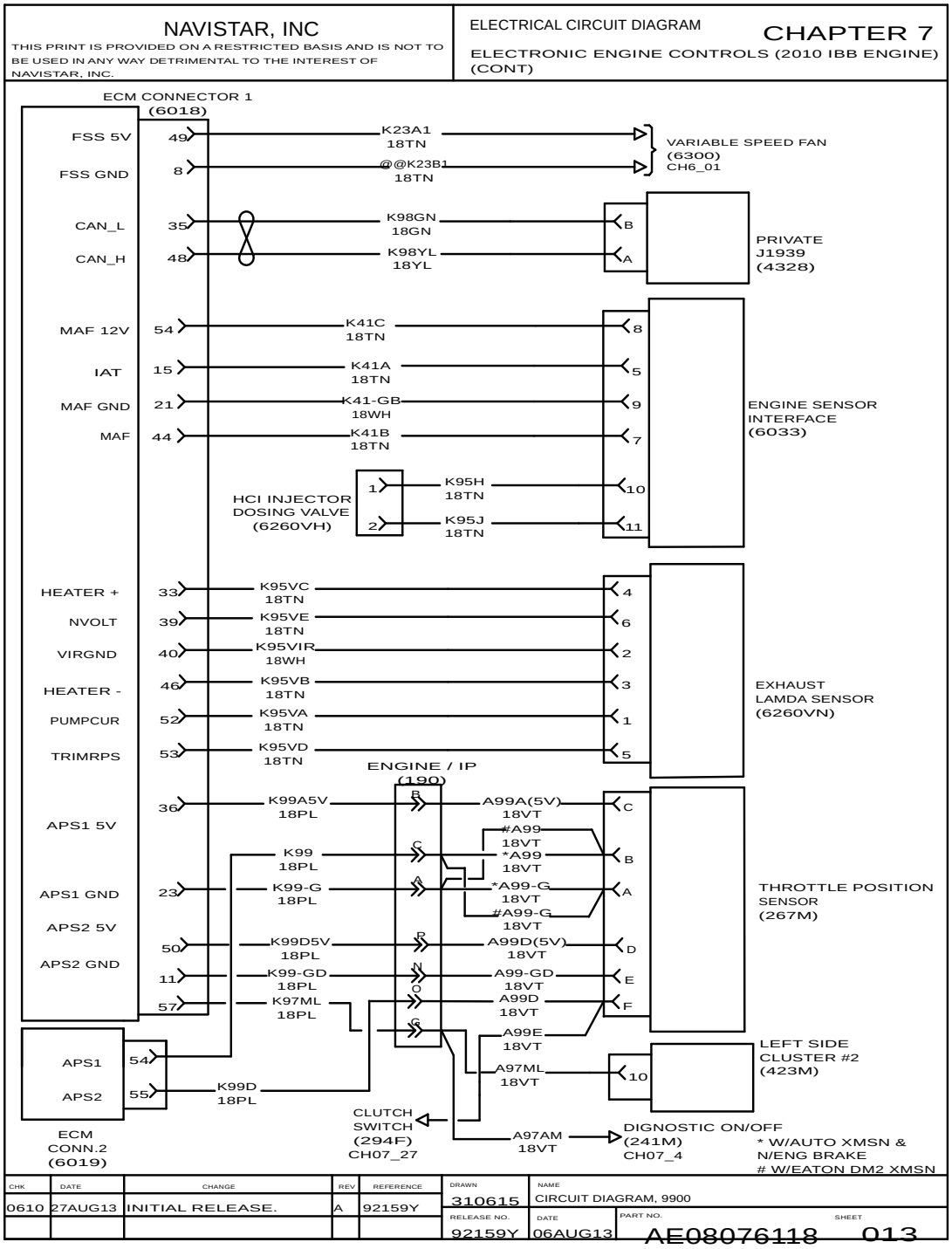

Figure 87 Electronic Engine Controls (2010 IBB Engine) (Cont.)

7.17. ELECTRONIC ENGINE CONTROLS (2010 IBB ENGINE) (CONT.), P. 14

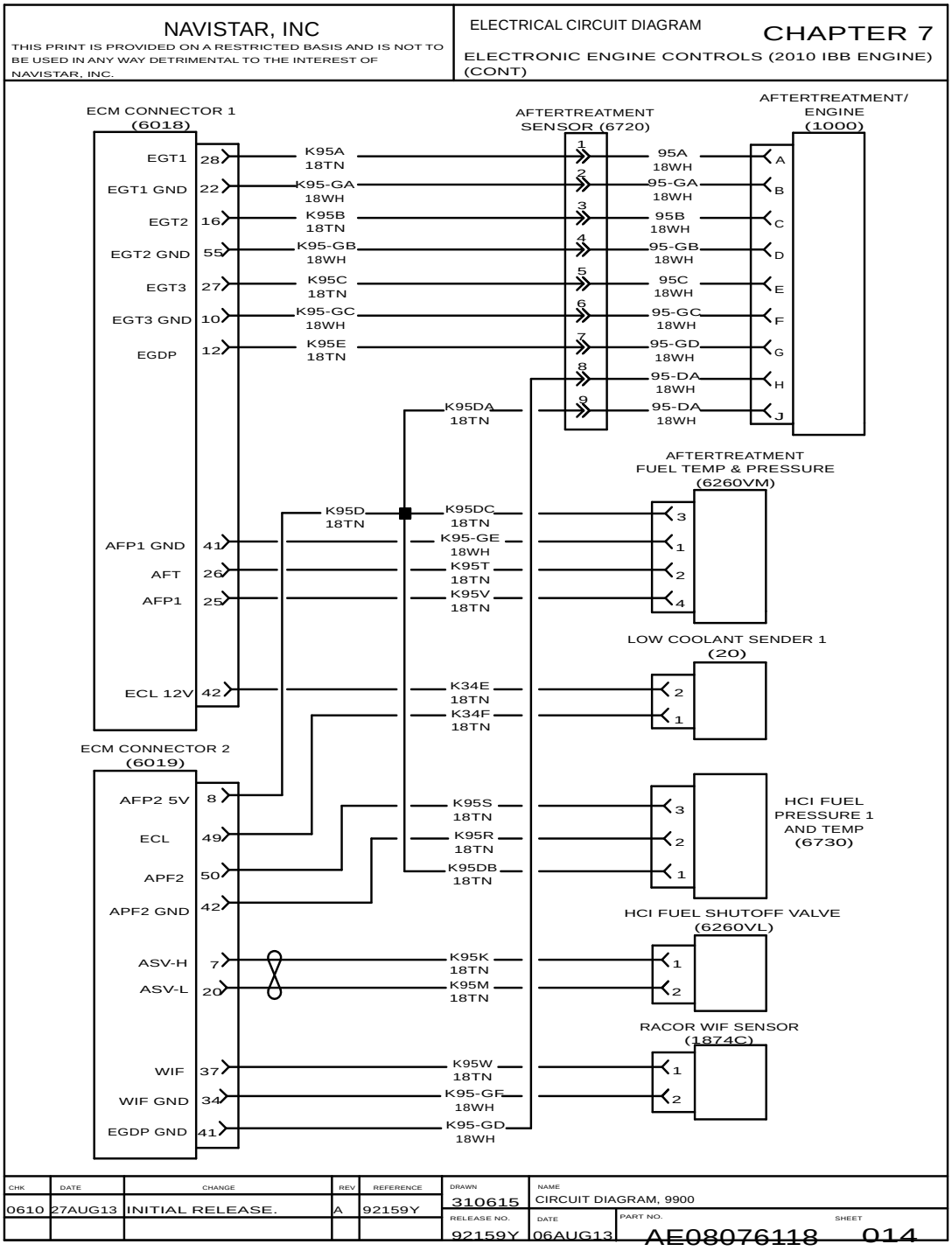

Figure 88 Electronic Engine Controls (2010 IBB Engine) (Cont.)

7.18. ELECTRONIC ENGINE CONTROLS (2010 IBB ENGINE) (CONT.), P. 15

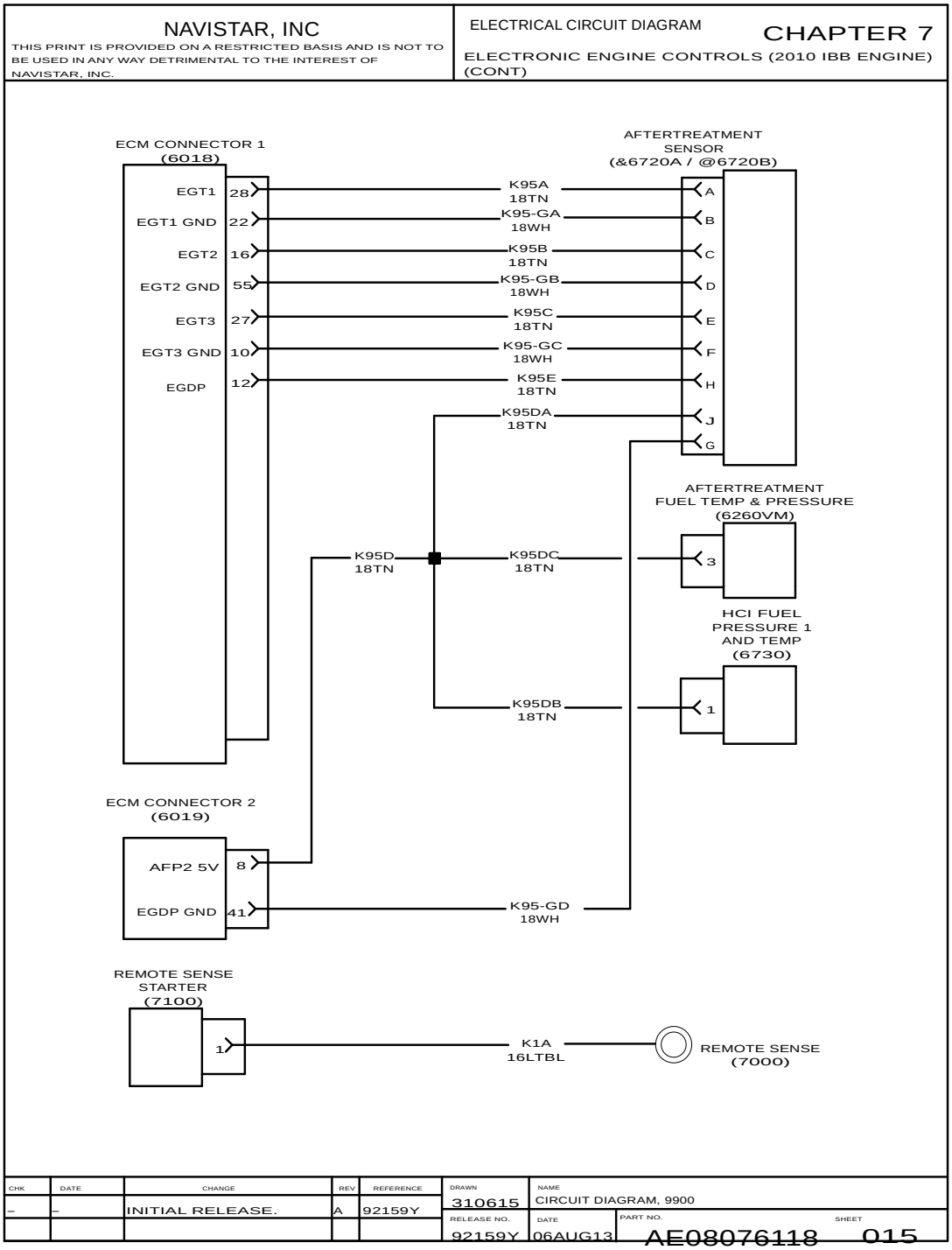

Figure 89 Electronic Engine Controls (2010 IBB Engine) (Cont.)

7.19. ELECTRONIC ENGINE CONTROLS (2010 IBB ENGINE) (CONT.), P. 16

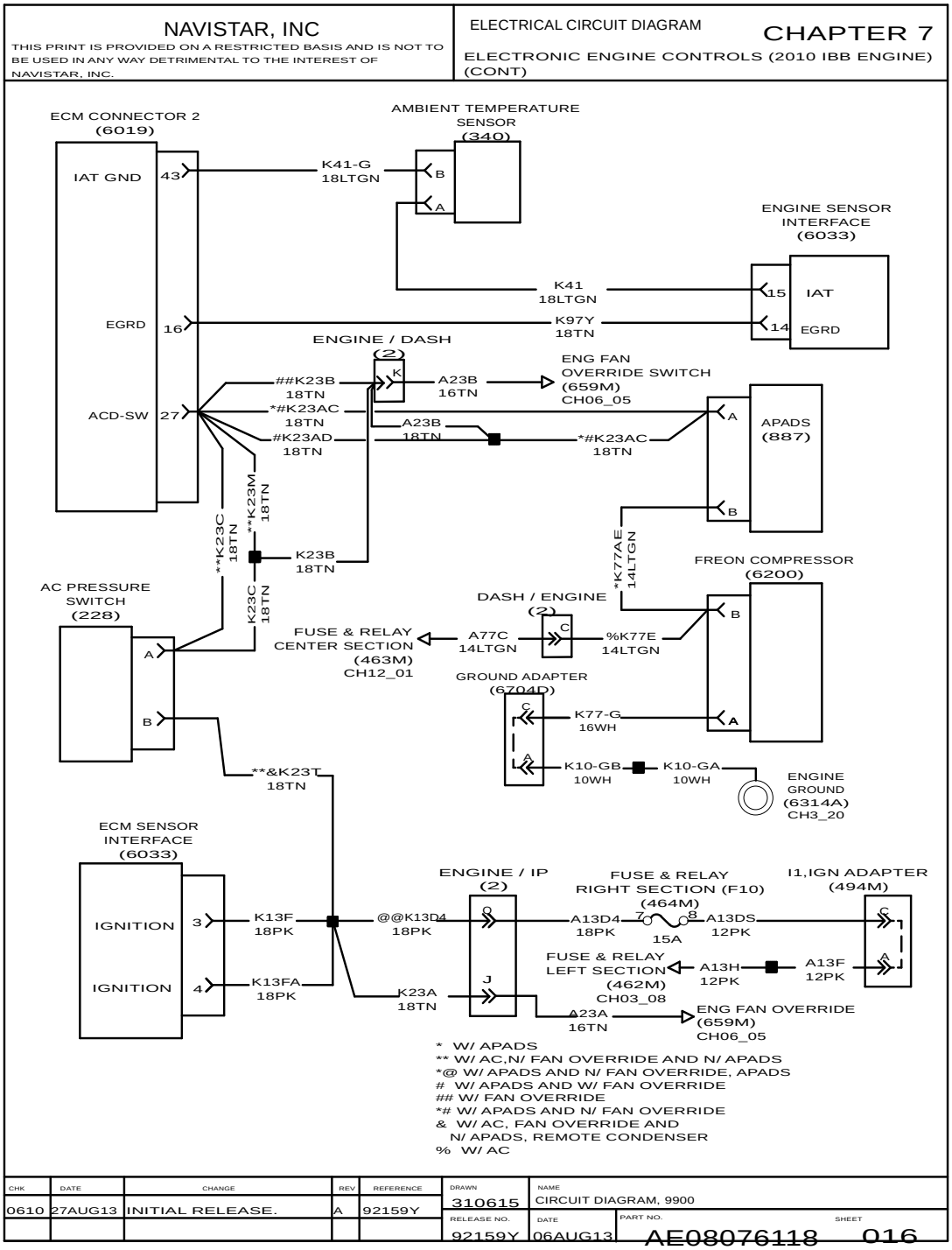

Figure 90 Electronic Engine Controls (2010 IBB Engine) (Cont.)

7.20. ELECTRONIC ENGINE CONTROLS (2010 IBB ENGINE) (CONT.), P. 17

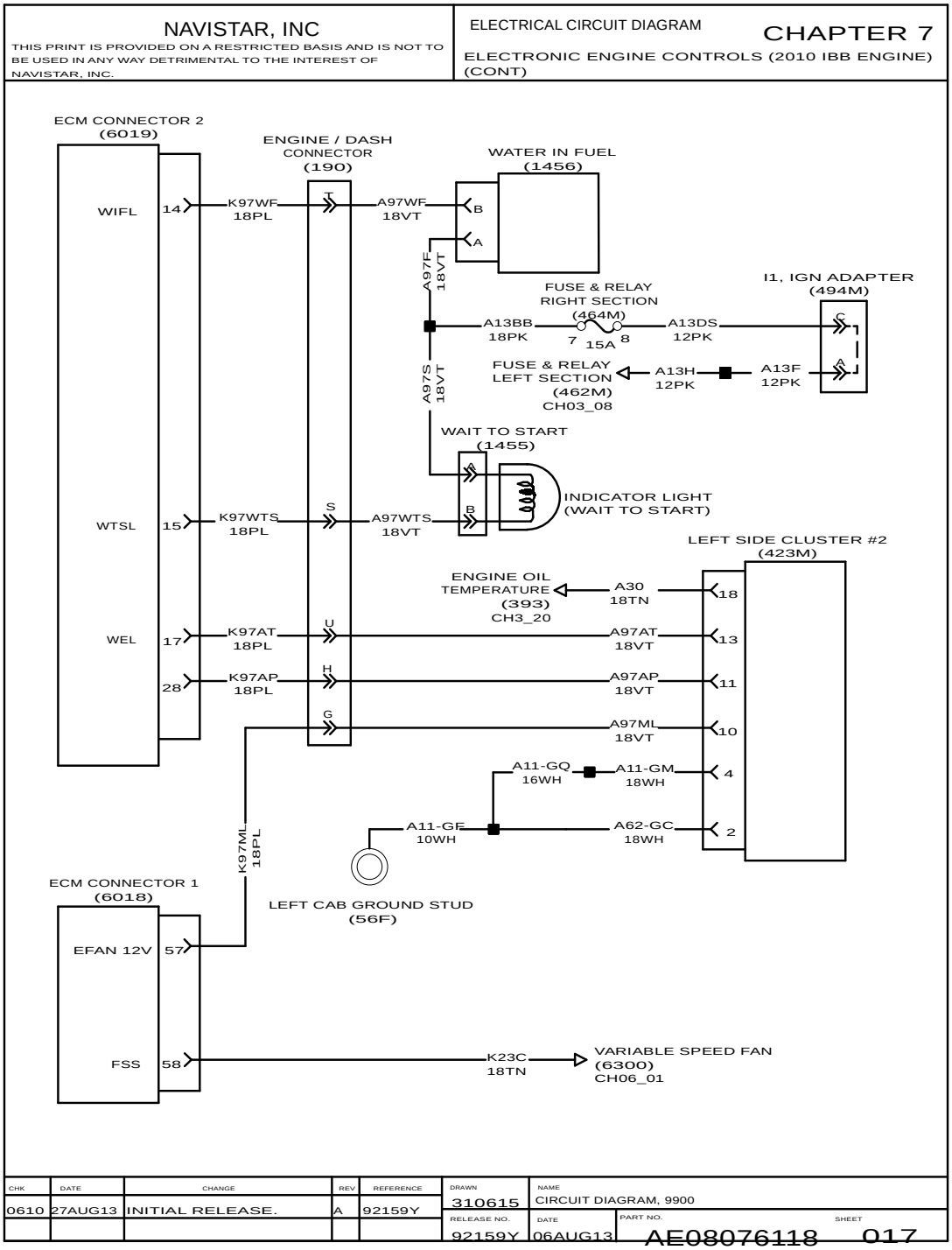

Figure 91 Electronic Engine Controls (2010 IBB Engine) (Cont.)

7.21. ELECTRONIC ENGINE CONTROLS (2010 IBB ENGINE) (CONT.), P. 18

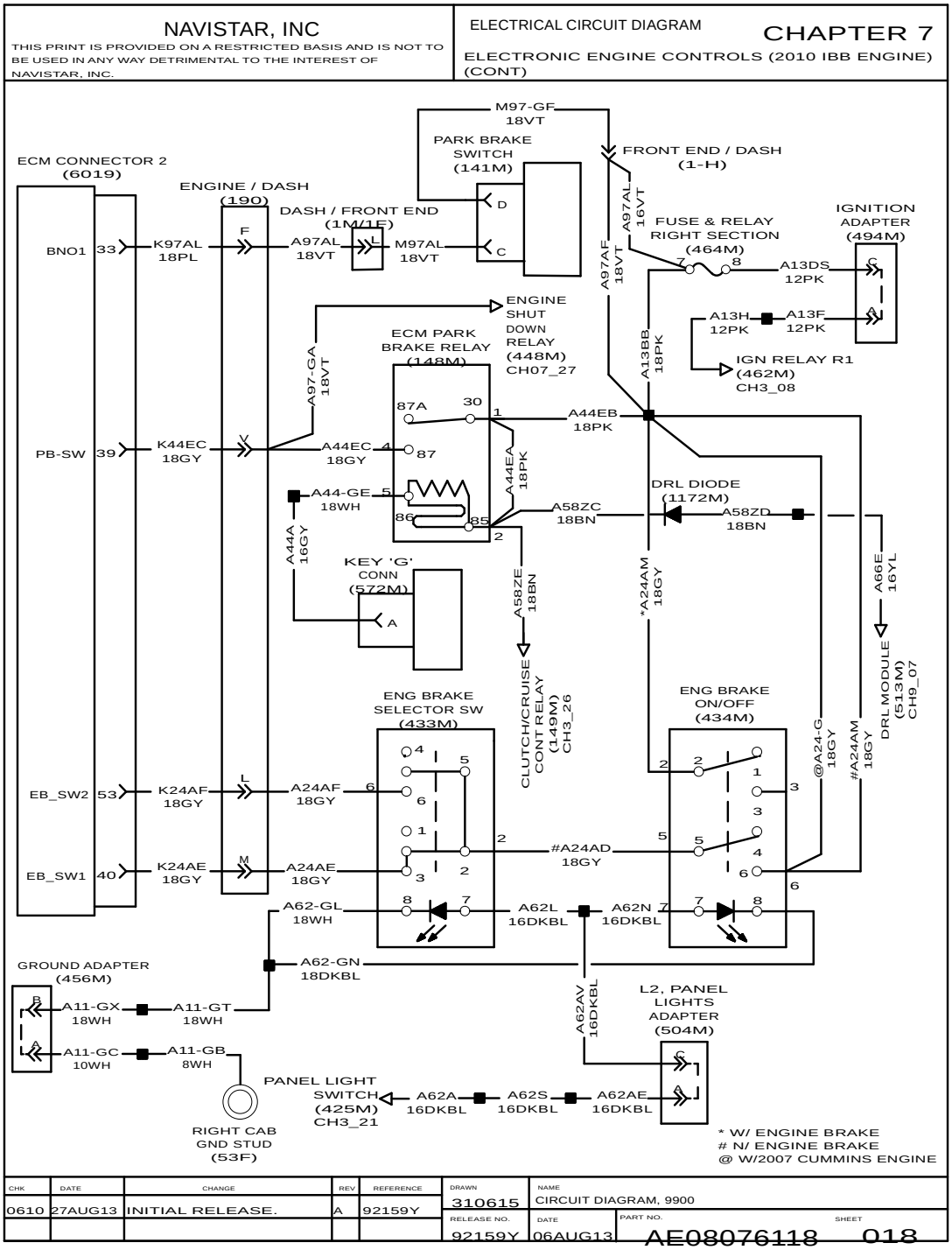

Figure 92 Electronic Engine Controls (2010 IBB Engine) (Cont.)

7.22. ELECTRONIC ENGINE CONTROLS (2010 IBB ENGINE) (CONT.), P. 19

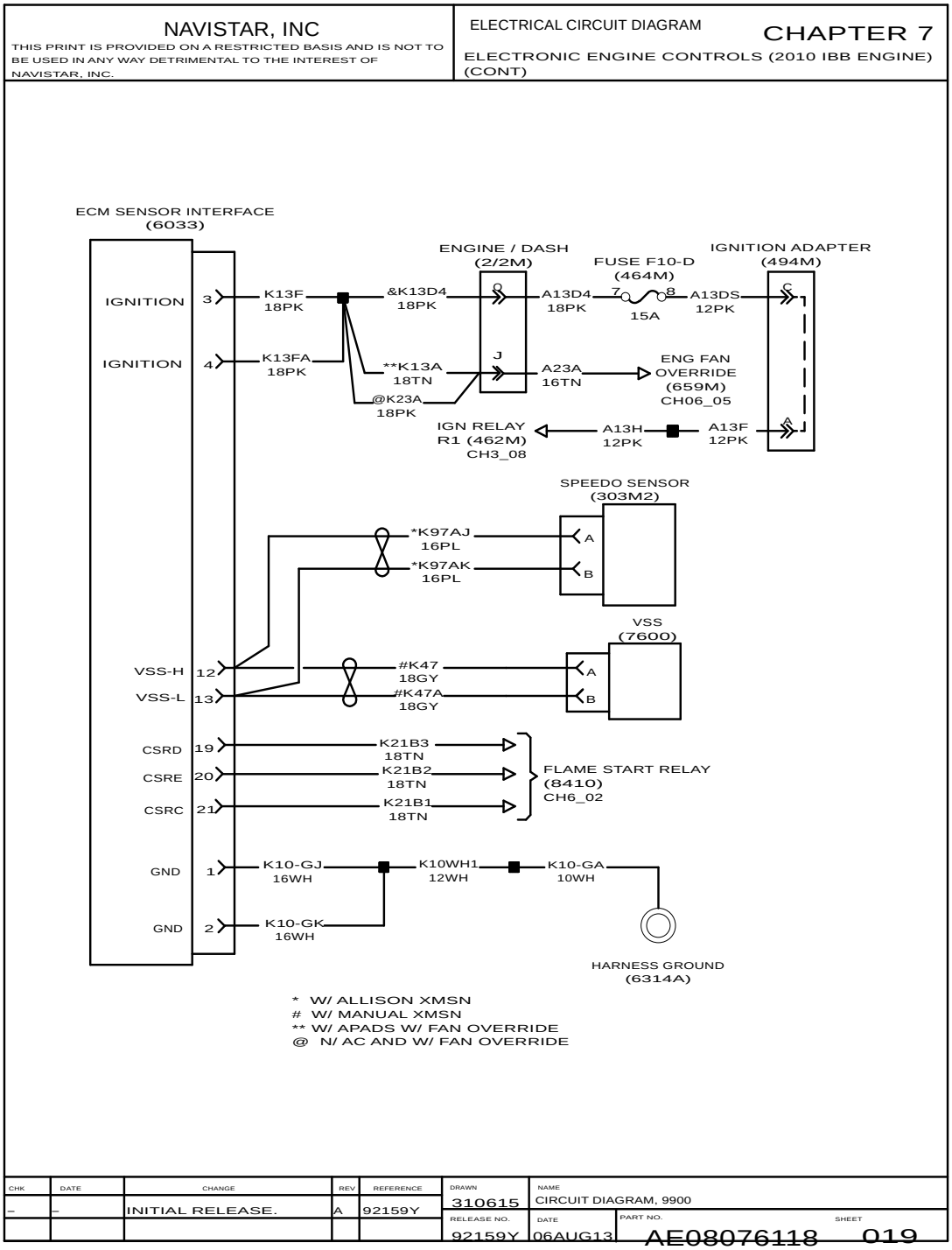

Figure 93 Electronic Engine Controls (2010 IBB Engine) (Cont.)

7.23. ELECTRONIC ENGINE CONTROLS (2010 IBB ENGINE) (CONT.), P. 20

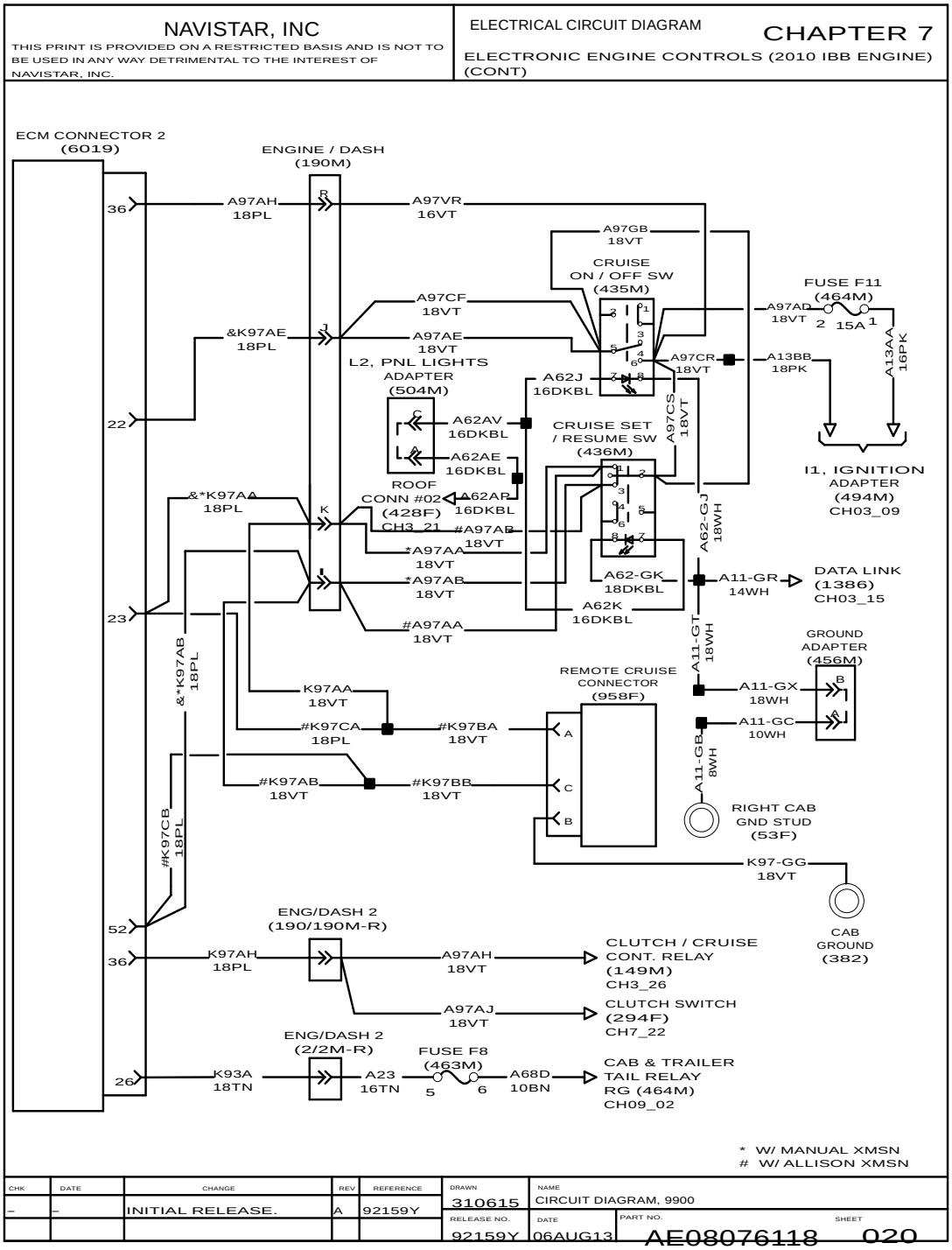

Figure 94 Electronic Engine Controls (2010 IBB Engine) (Cont.)

7.24. AFTERTREATMENT CONTROL, P. 21

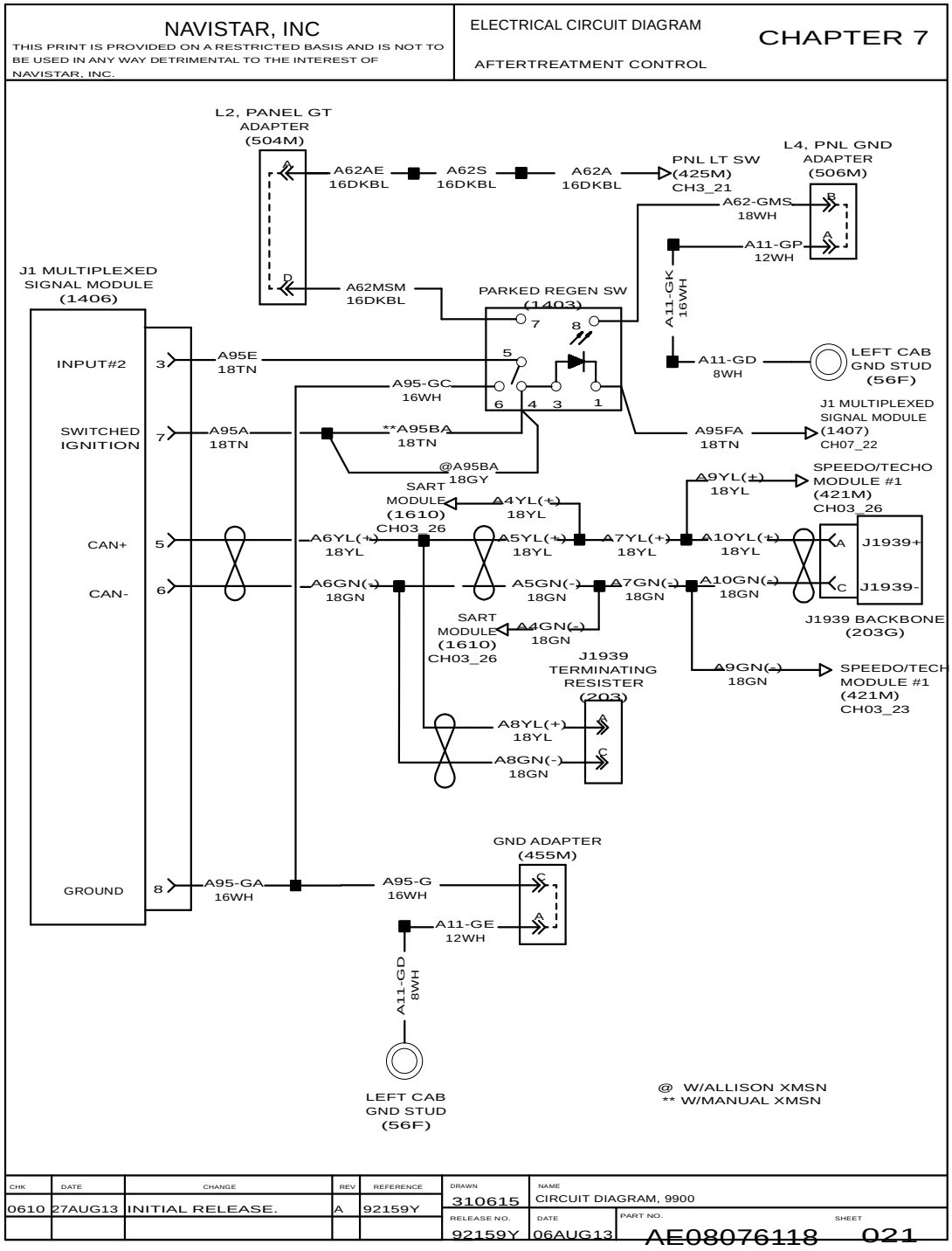

Figure 95 Aftertreatment Control.

7.25. AFTERTREATMENT CONTROL (CONT.), P. 22

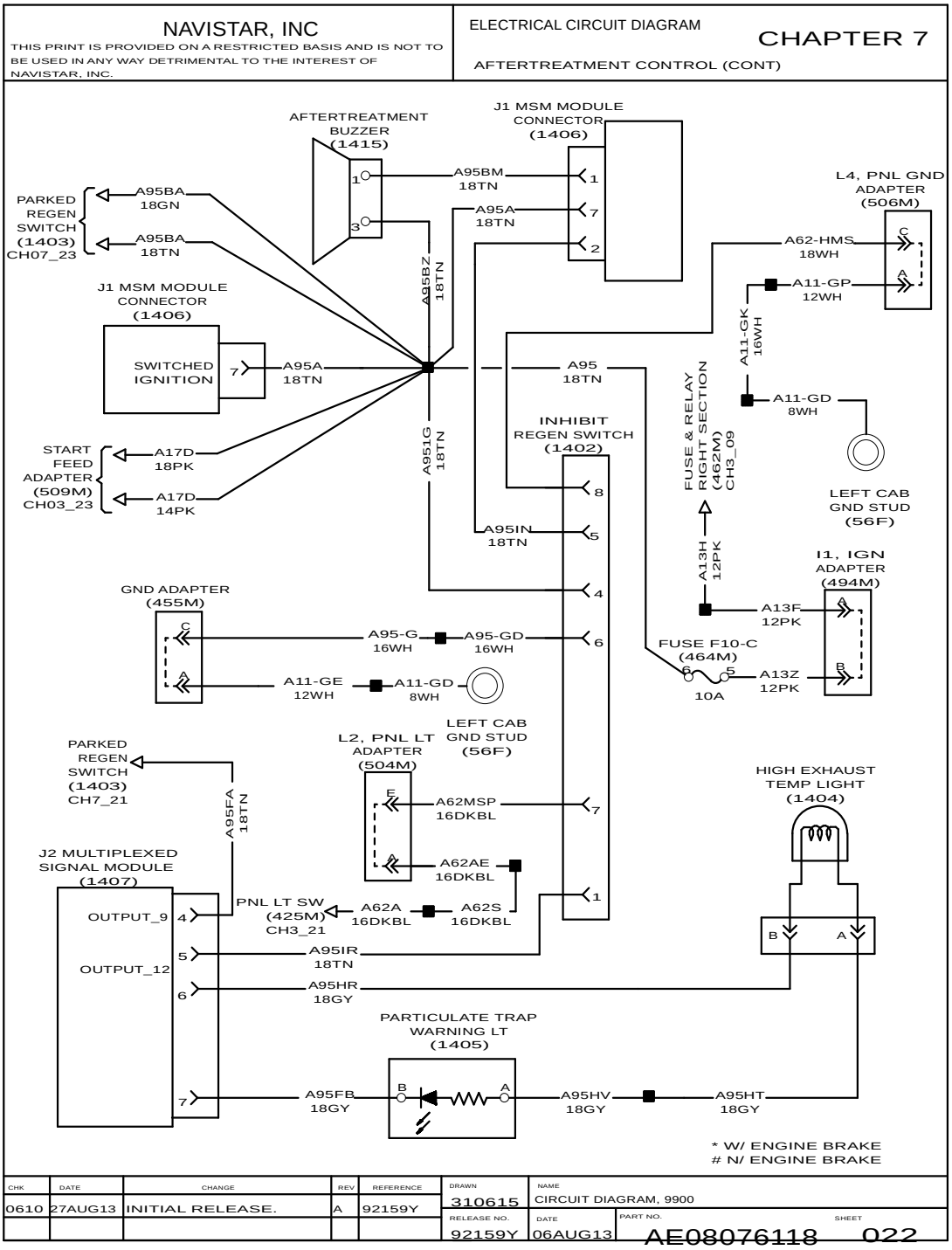

Figure 96 Aftertreatment Control (Cont.)

7.26. AFTERTREATMENT CONTROL (CONT.), P. 23

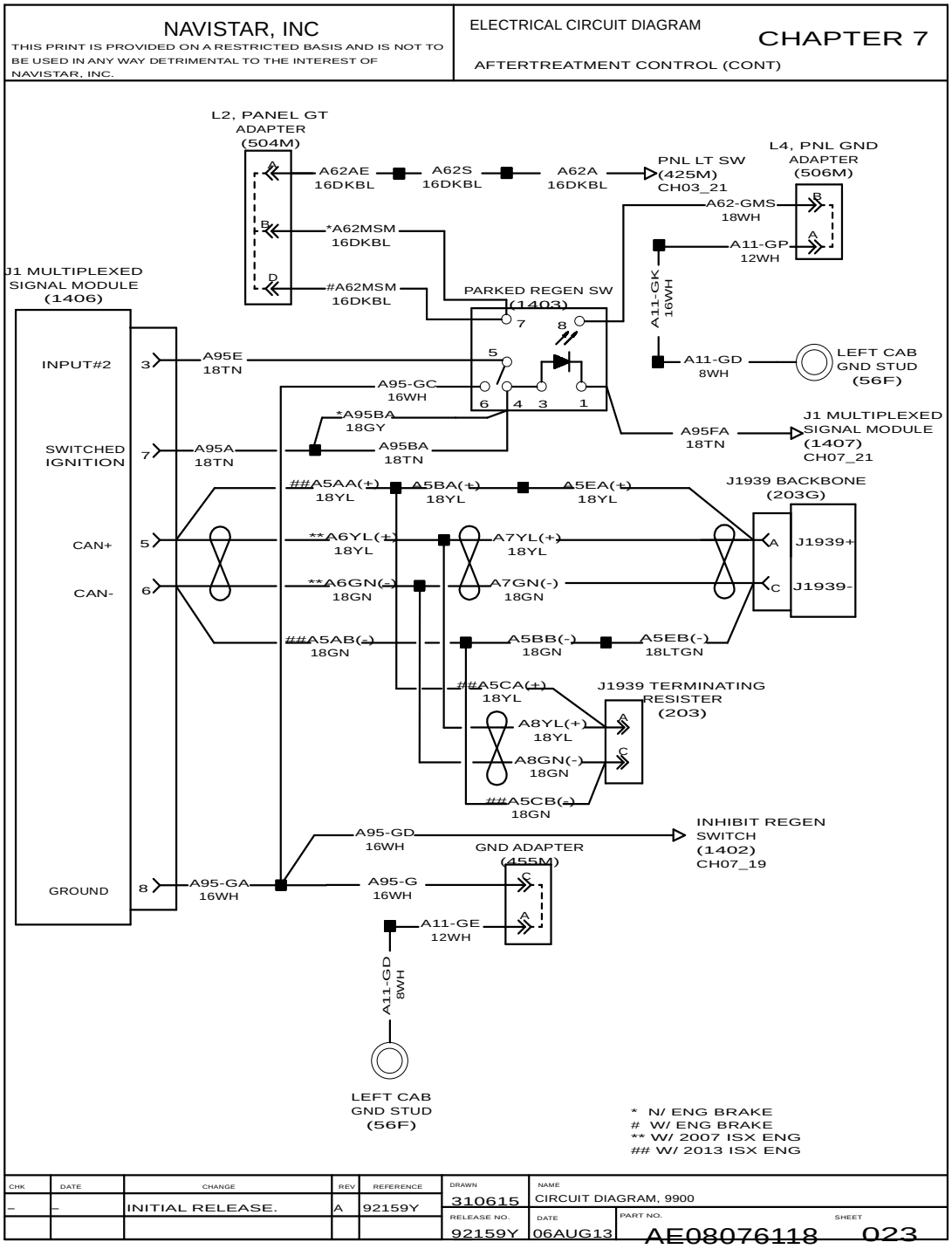

Figure 97 Aftertreatment Control (Cont.)

7.27. AUXILIARY SPEED SENSOR WITH ALLISON TRANSMISSION, P. 24

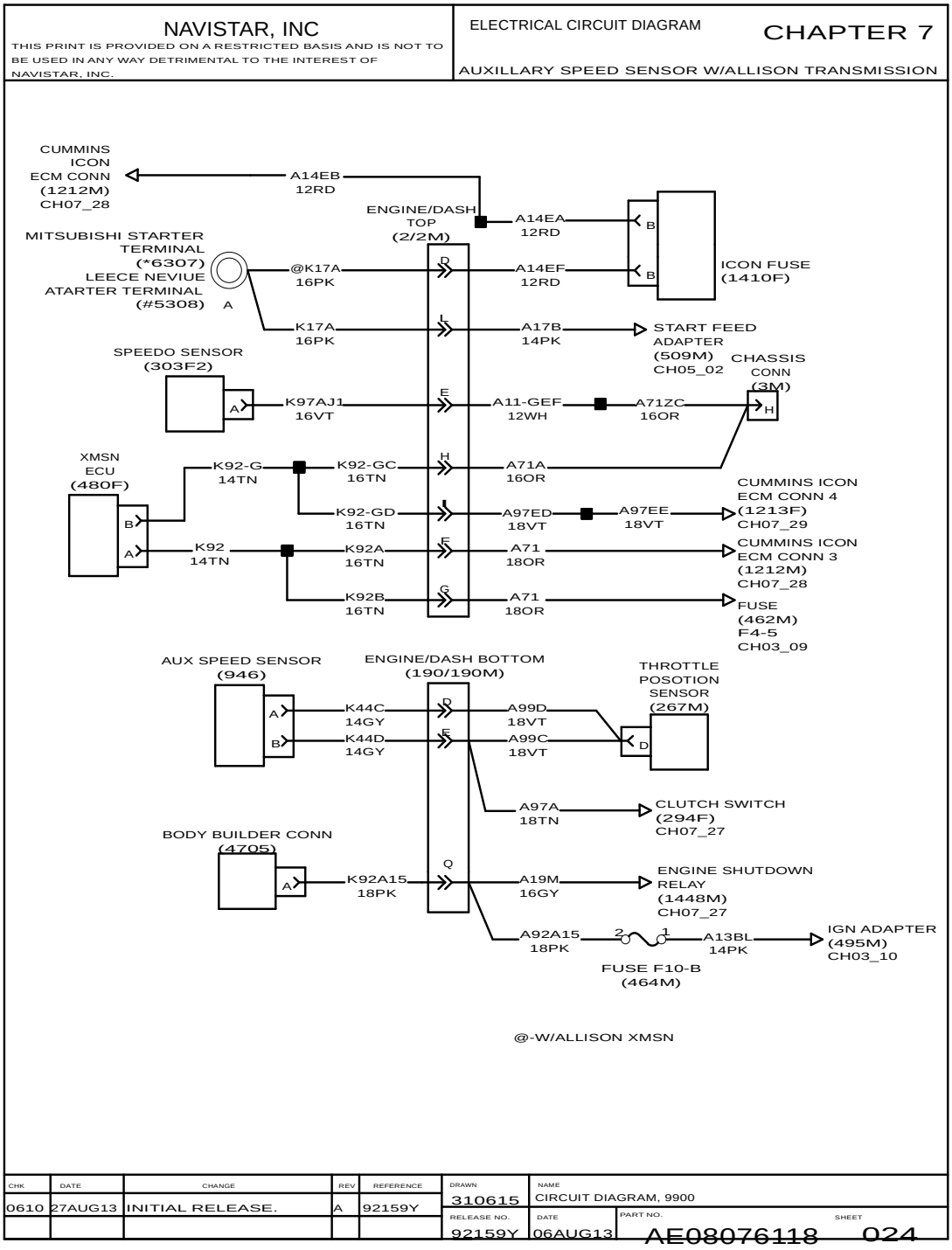

Figure 98 Auxiliary Speed Sensor with Allison Transmission.

7.28. BODY BUILDER WITH ENGINE CONTROL PTO, P. 25

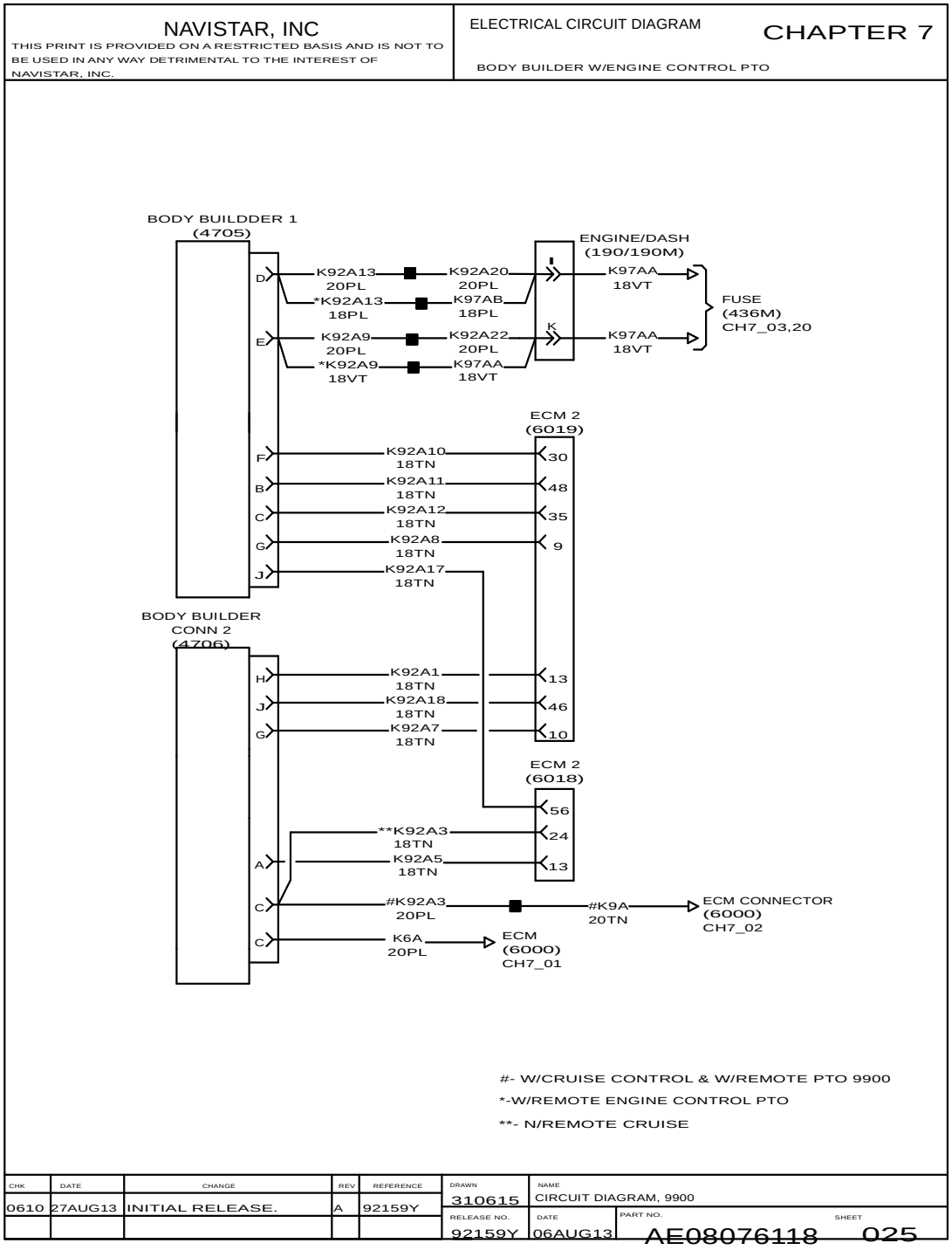

Figure 99 Body Builder with Engine Control PTO.

7.29. CABLE ASM ALTERNATIVE REMOTE SENSE, P. 26

NAVISTAR, INC

THIS PRINT IS PROVIDED ON A RESTRICTED BASIS AND IS NOT TO BE USED IN ANY WAY DETRIMENTAL TO THE INTEREST OF NAVISTAR, INC.

ELECTRICAL CIRCUIT DIAGRAM

CHAPTER 7

CABLE ASM ALTERNATOR REMOTE SENSE

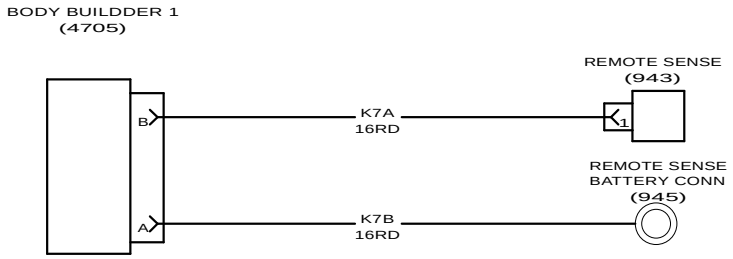

CHK	DATE	CHANGE	REV	REFERENCE	DRAWN	NAME
0610	27AUG13	INITIAL RELEASE.	A	92159Y	310615	CIRCUIT DIAGRAM, 9900
					RELEASE NO. 92159Y	DATE 06AUG13

PART NO. AE08076118 SHEET 026

Figure 100 Cable ASM Alternative Remote Sense.

7.30. ENGINE SHUT DOWN RELAY, P. 27

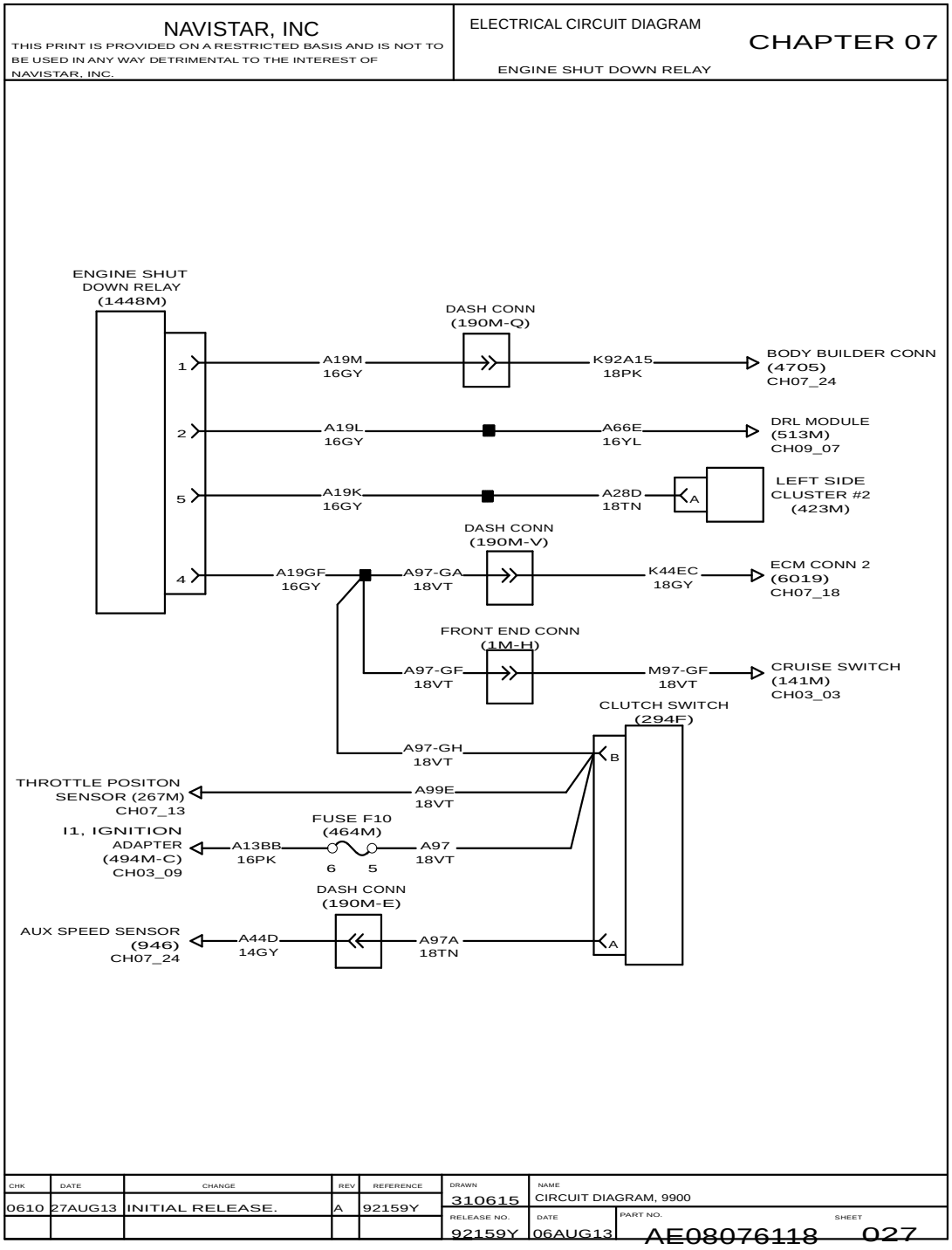

Figure 101 Engine Shut Down Relay.

7.31. ELECTRONICS ENGINE CONTROLS CUMMINS ICON, P. 28

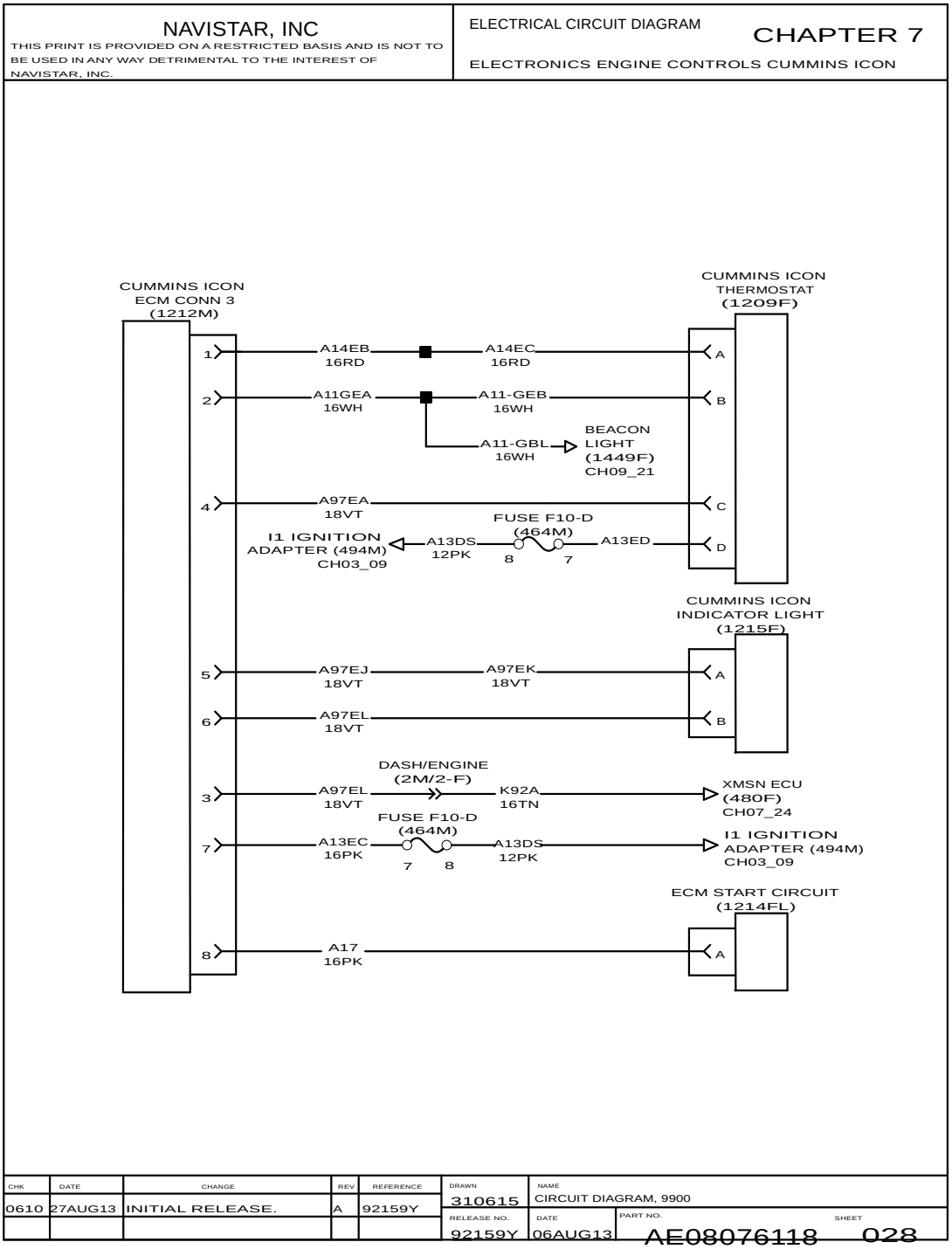

Figure 102 Electronics Engine Controls Cummins Icon.

7.32. ELECTRONICS ENGINE CONTROLS CUMMINS ICON (CONT.), P. 29

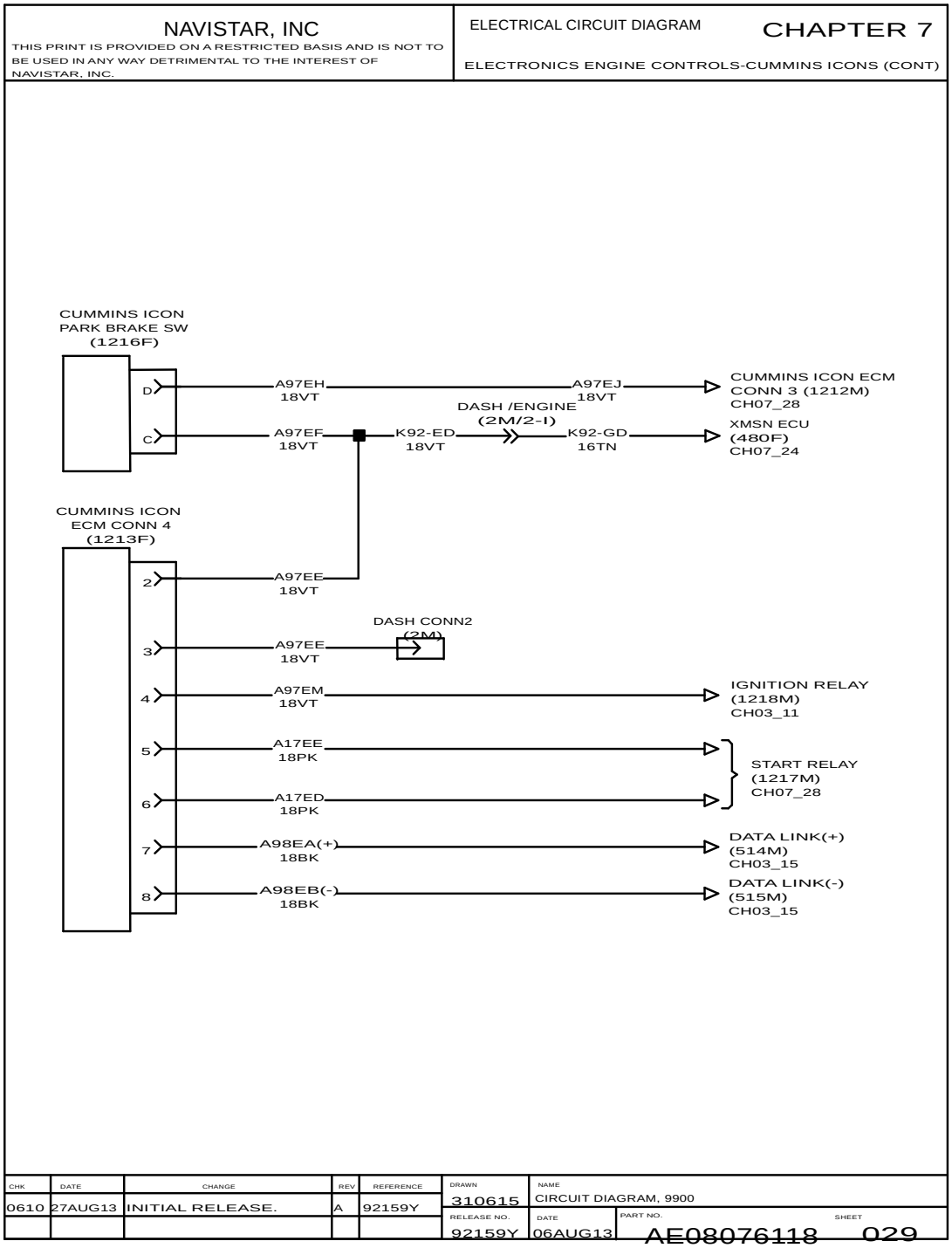

Figure 103 Electronics Engine Controls Cummins Icon (Cont.)

GAUGES AND WARNING LIGHTS (CHAPTER 8)

8.1. LOW FUEL LEVEL WARNING, LOW AIR PRESSURE LIGHTS, P. 1

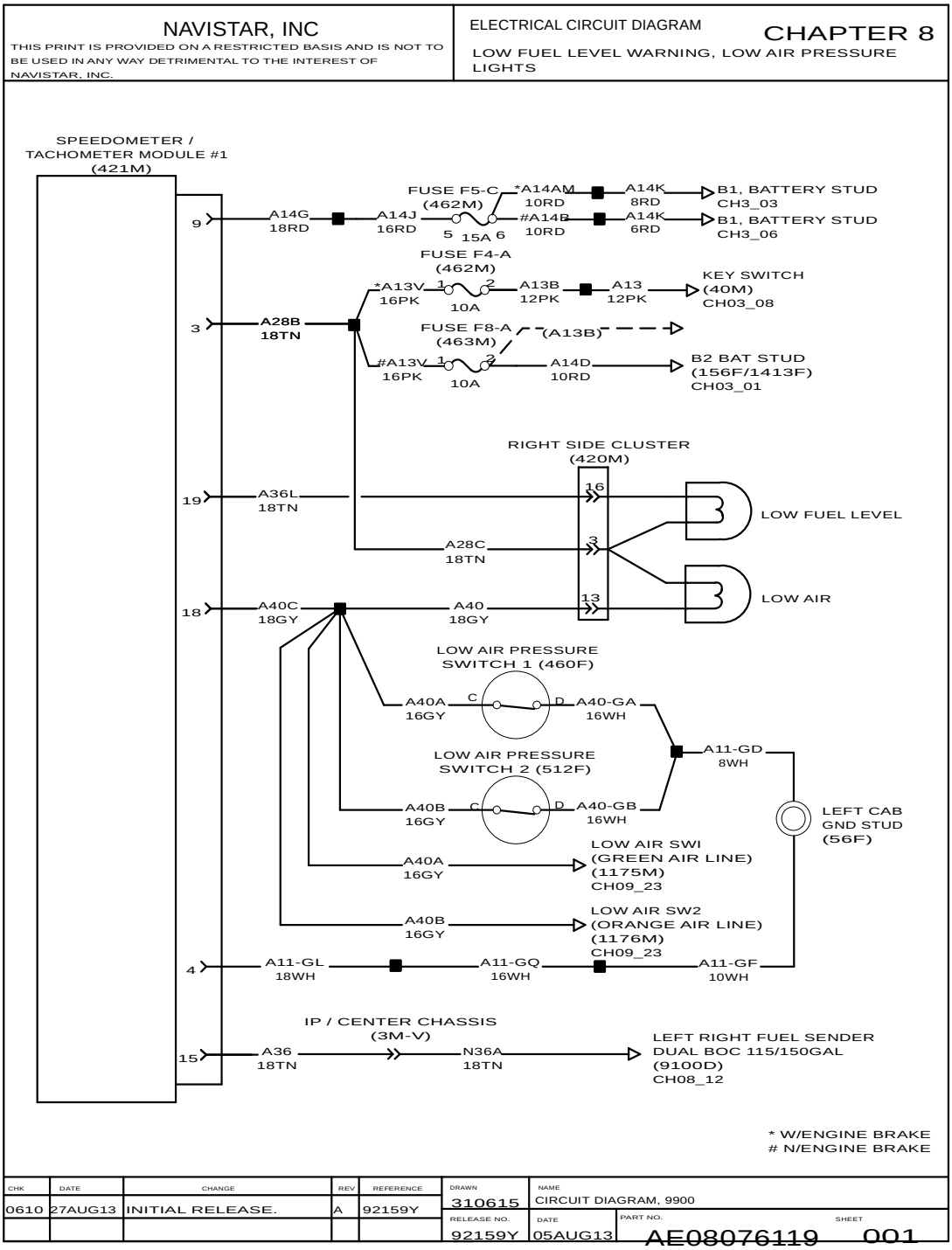

Figure 104 Low Fuel Level Warning, Low Air Pressure Lights.

8.2. ENGINE OIL PRESSURE, ENGINE WATER TEMPERATURE WARNING LIGHTS, P. 2

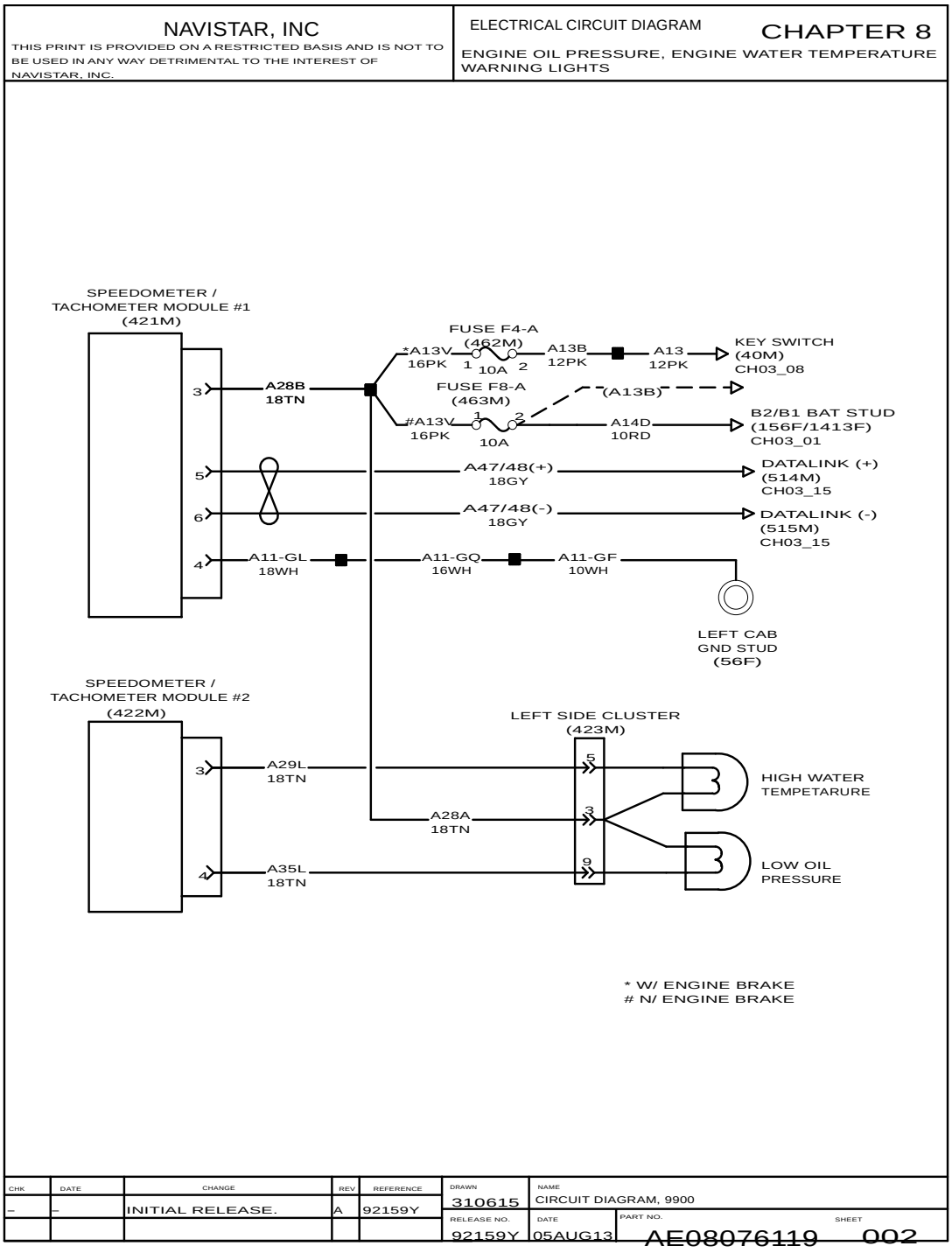

Figure 105 Engine Oil Pressure, Engine Water Temperature Warning Lights.

8.3. POWER DIVIDER LOCK (PDL) WARNING LIGHT AND BUZZER, IBB WAIT TO START LIGHT, P. 3

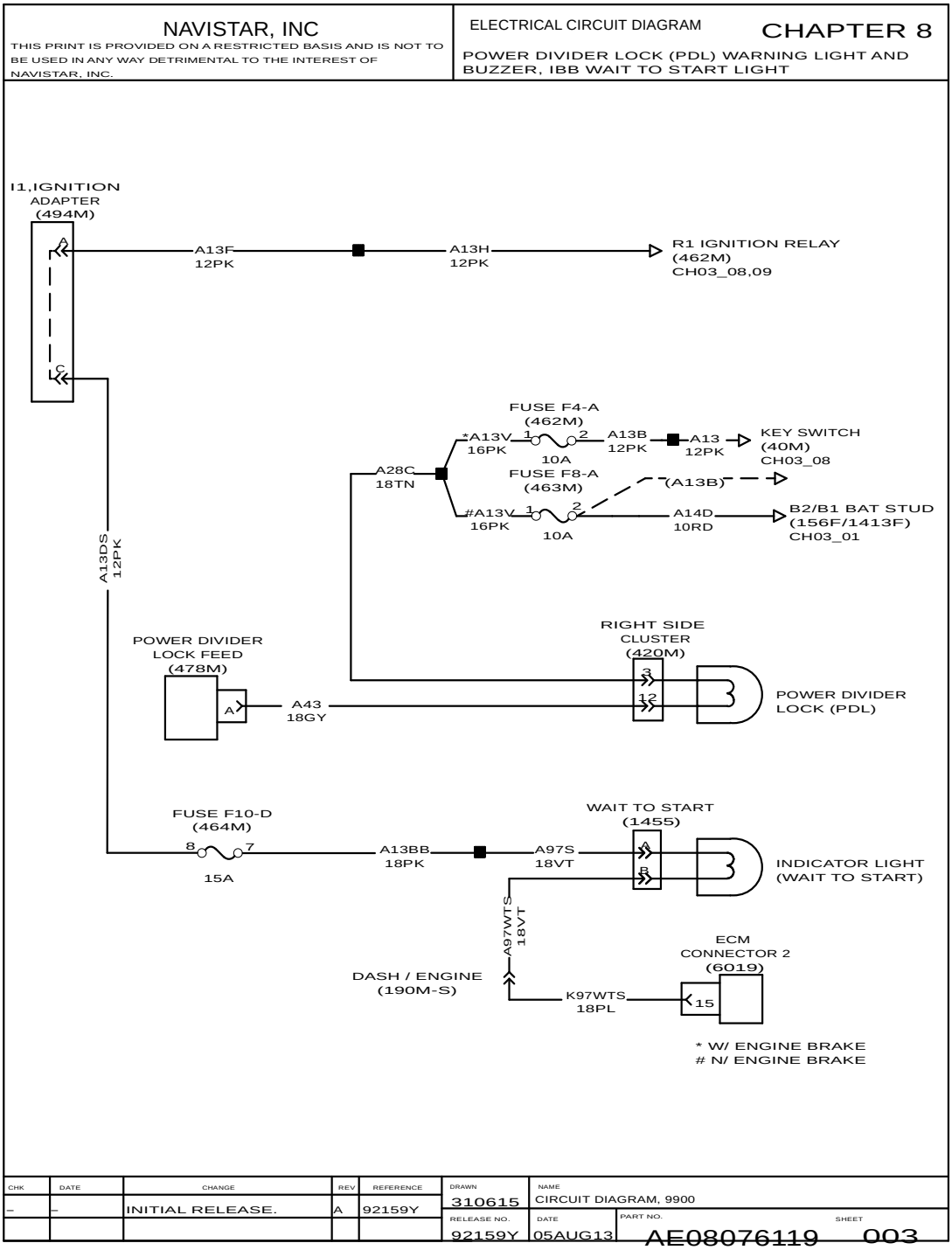

Figure 106 Power Divider Lock (PDL) Warning Light and Buzzer, IBB Wait to Start Light.

8.4. AIR SUSPENSION RELEASE WARNING LIGHT, P. 4

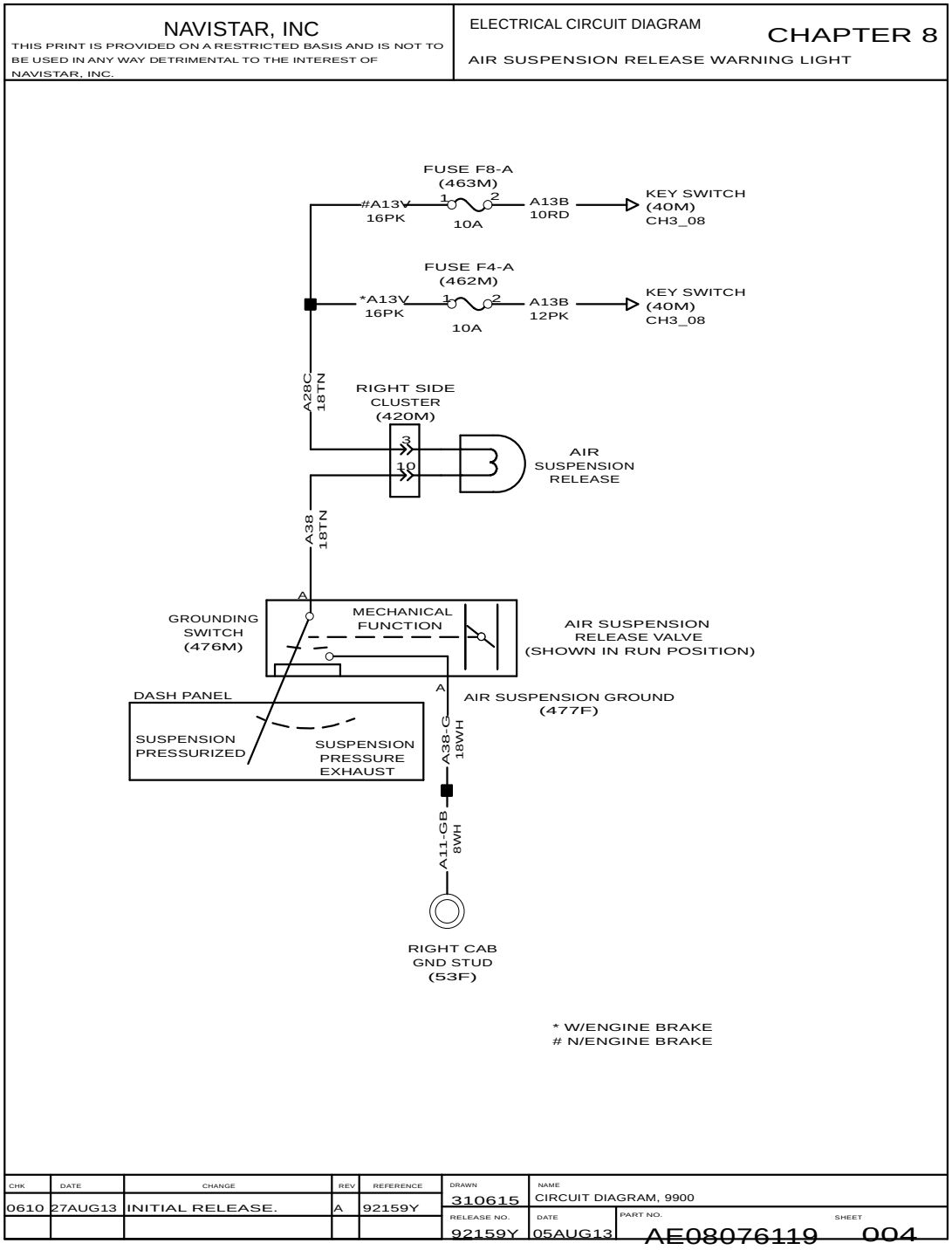

Figure 107 Air Suspension Release Warning Light.

8.5. TRANSMISSION OIL TEMPERATURE GAUGE, AXLE FORWARD-REAR, AND REAR-REAR TEMPERATURE GAUGE, P. 5

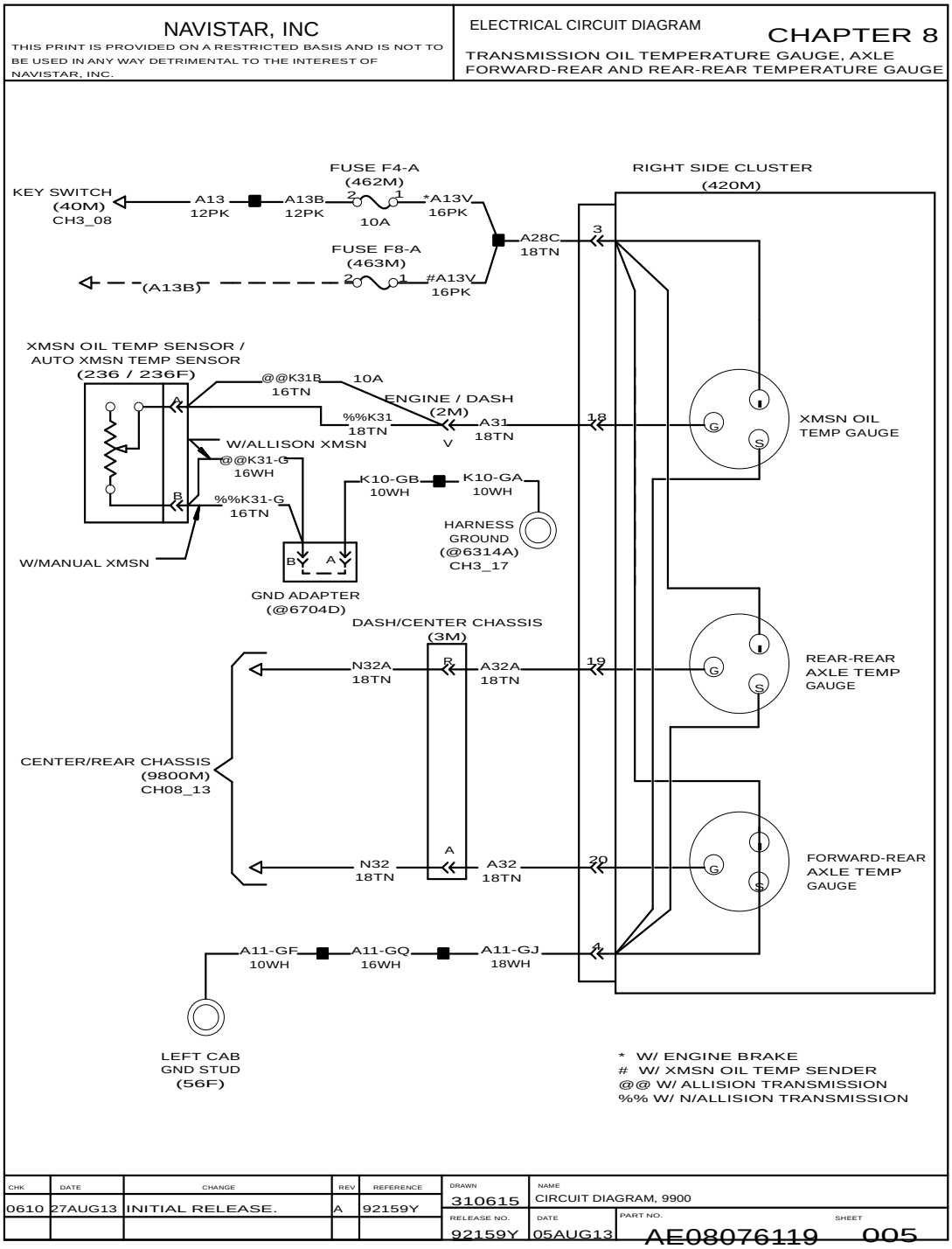

Figure 108 Transmission Oil Temperature Gauge, Axle Forward-Rear, and Rear-Rear Temperature Gauge.

8.6. MANIFOLD PRESSURE GAUGE, P. 6

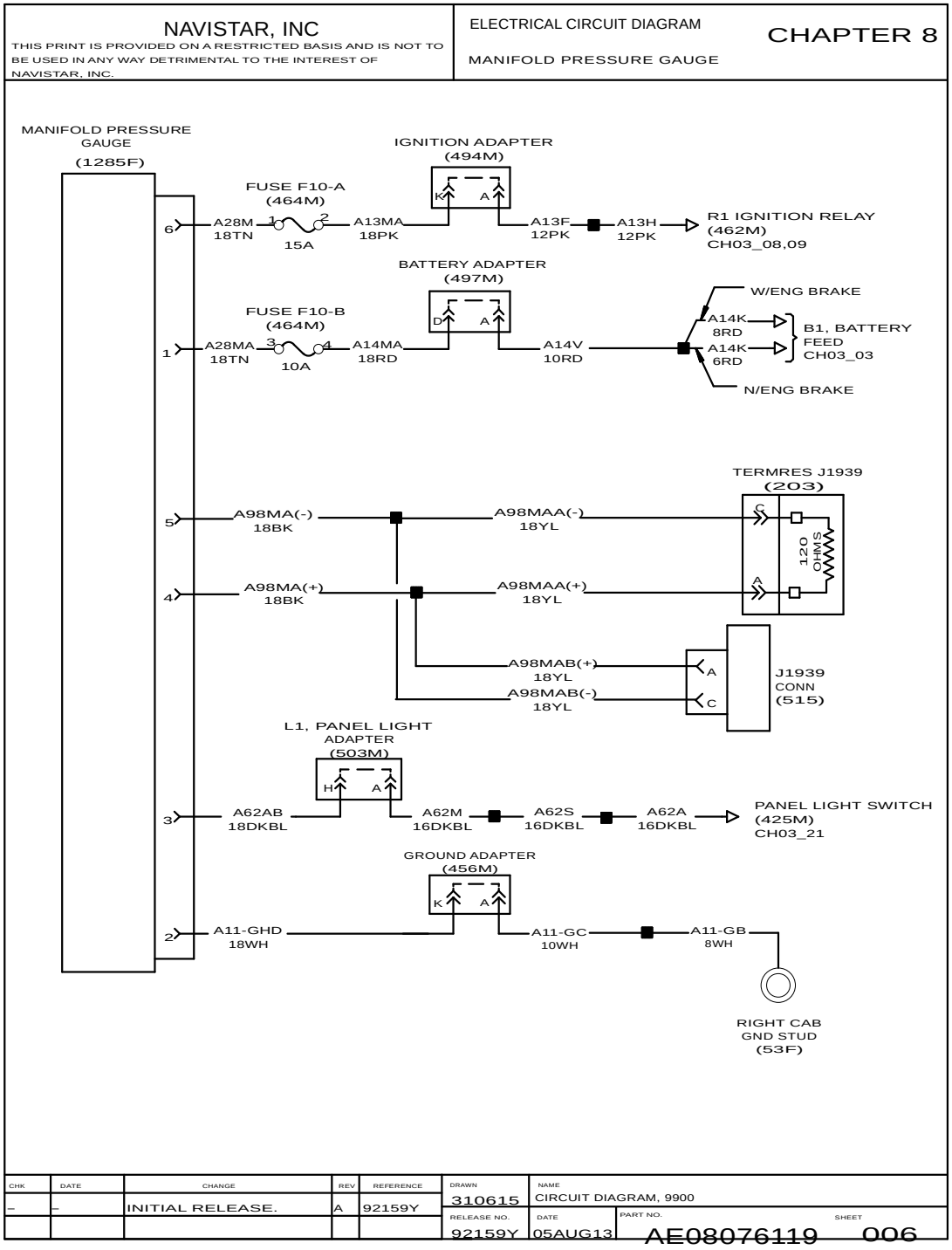

Figure 109 Manifold Pressure Gauge.

8.7. TURBO BOOST GAUGE, P. 7

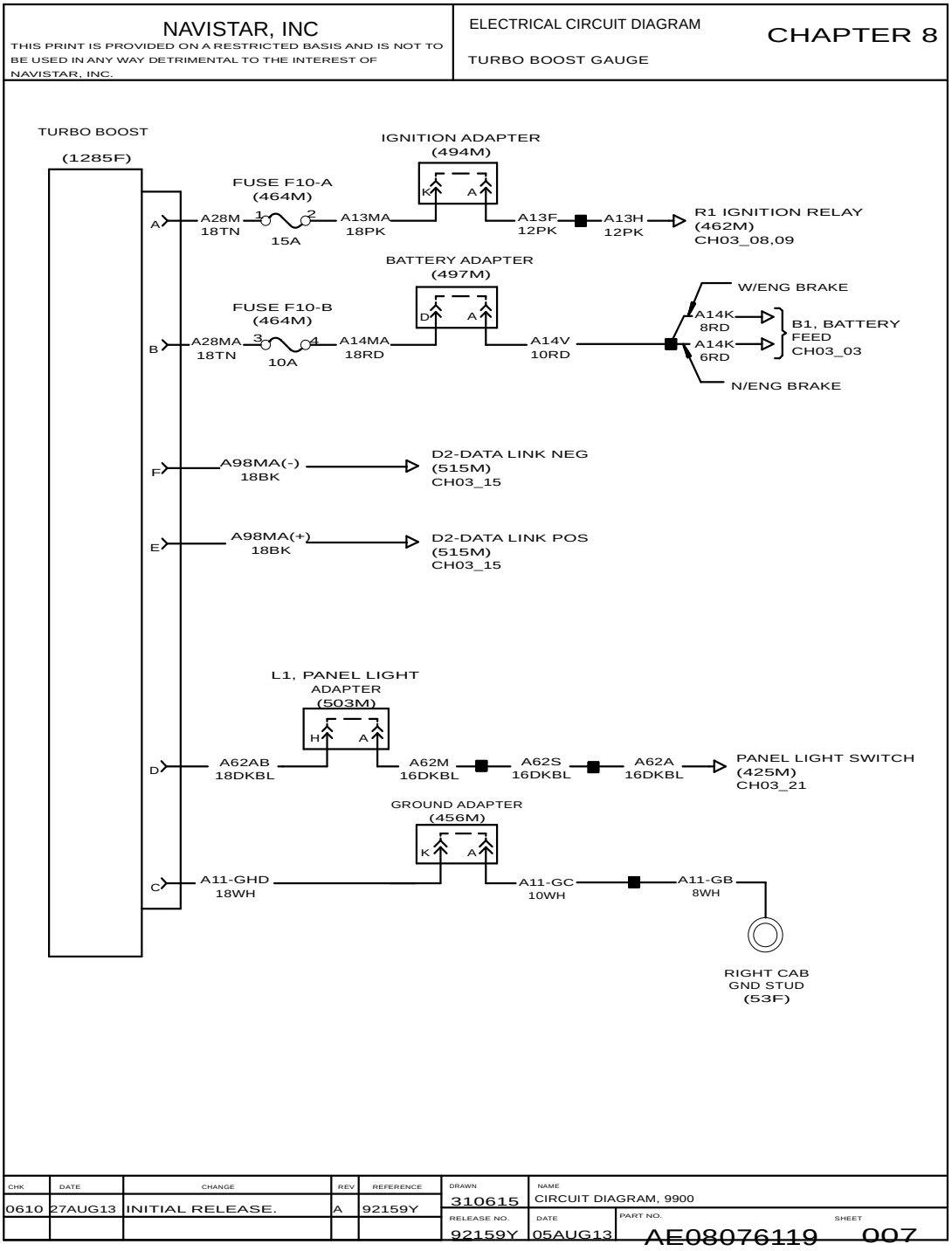

Figure 110 Turbo Boost Gauge.

8.8. VOLTMETER AND FUEL LEVEL GAUGE, P. 8

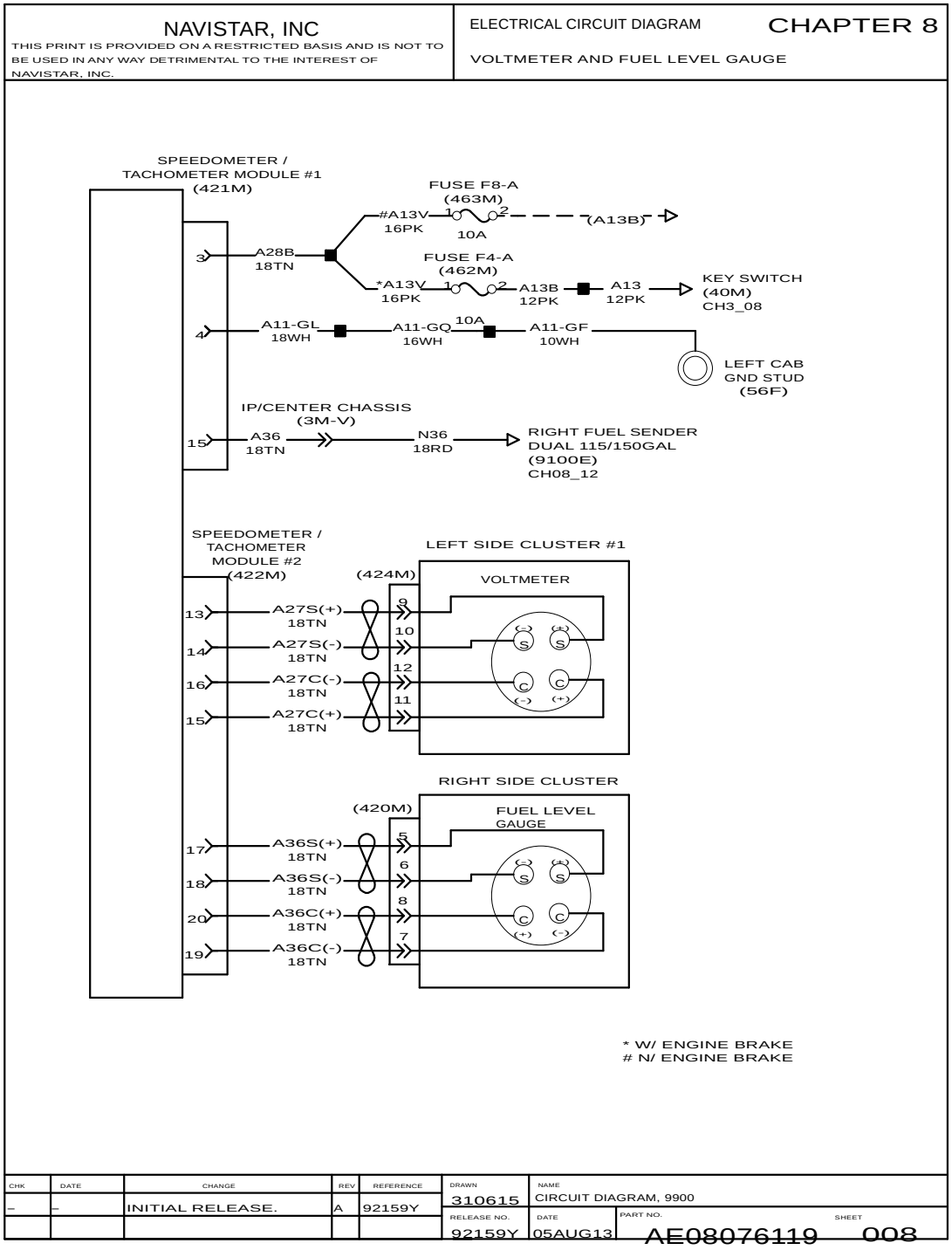

Figure 111 Voltmeter and Fuel Level Gauge.

8.9. ENGINE WATER TEMPERATURE ENGINE OIL PRESSURE SPEEDOMETER AND TACHOMETER GAUGE, P. 9

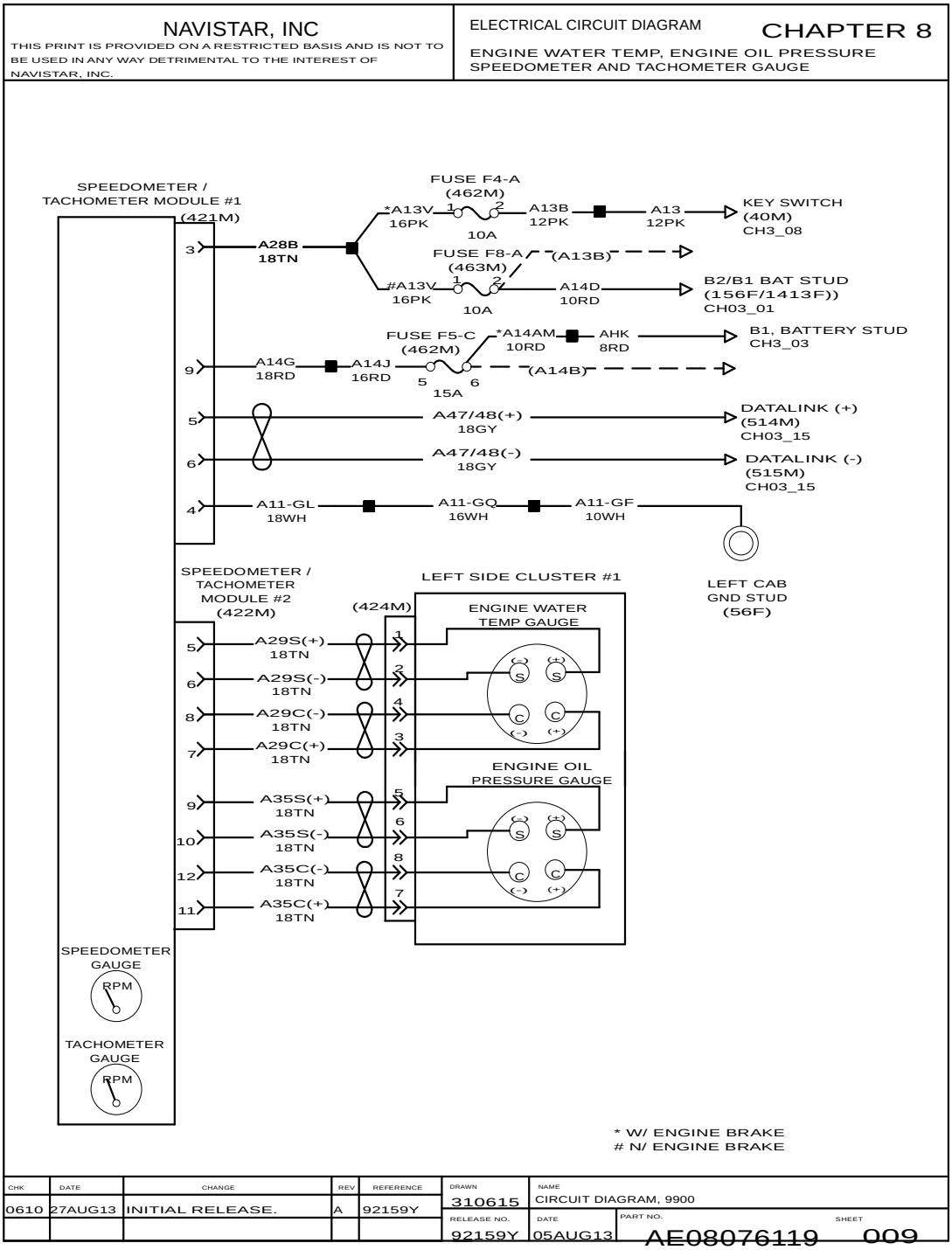

Figure 112 Engine Water Temperature Engine Oil Pressure Speedometer and Tachometer Gauge.

8.10. DIFFERENTIAL LOCK WARNING LAMPS AND ABS CLUSTER WARNING LIGHTS, P. 10

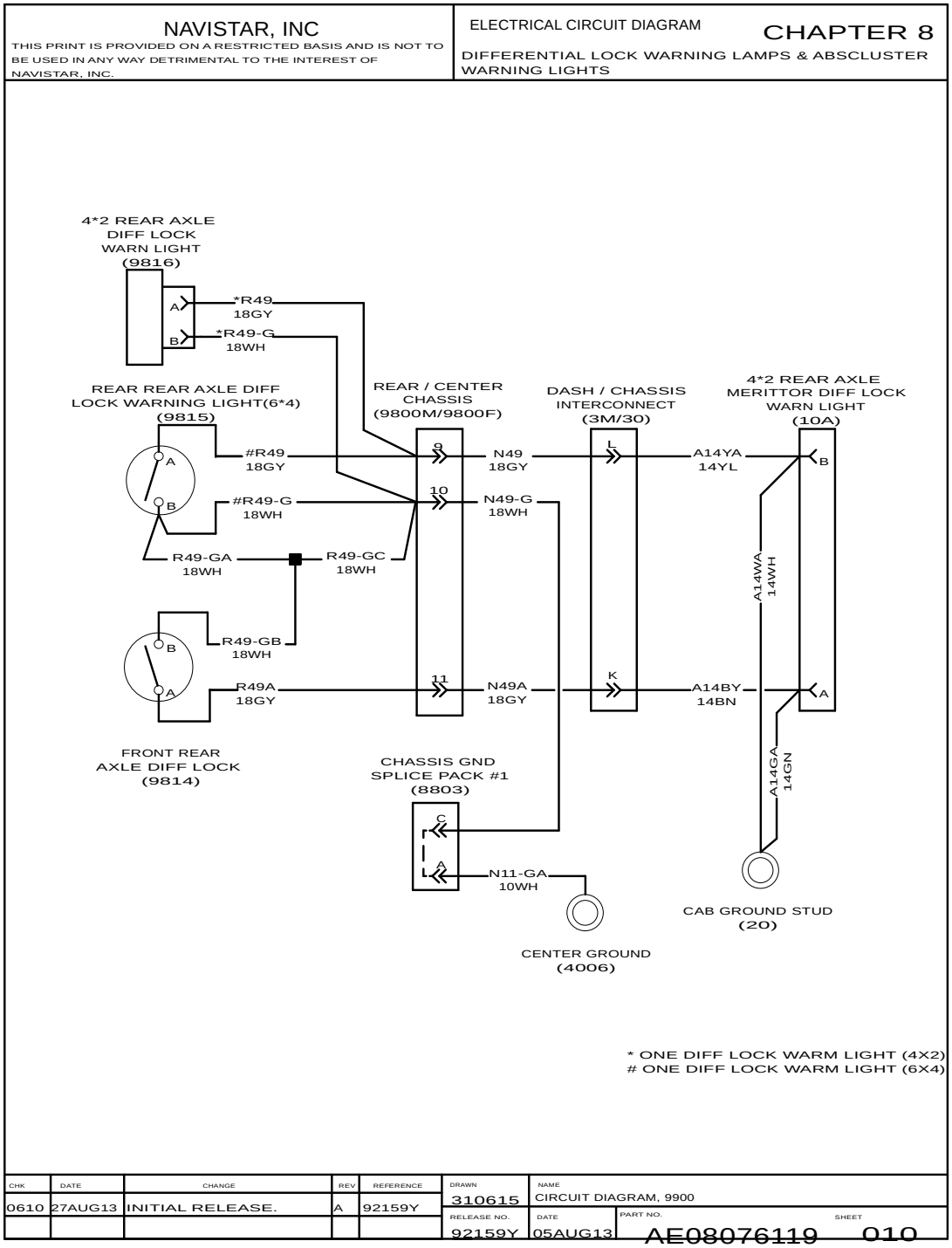

Figure 113 Differential Lock Warning Lamps and ABS Cluster Warning Lights.

8.11. DIFFERENTIAL LOCK WARNING LAMPS AND ABS CLUSTER WARNING LIGHTS (CONT.), P. 11

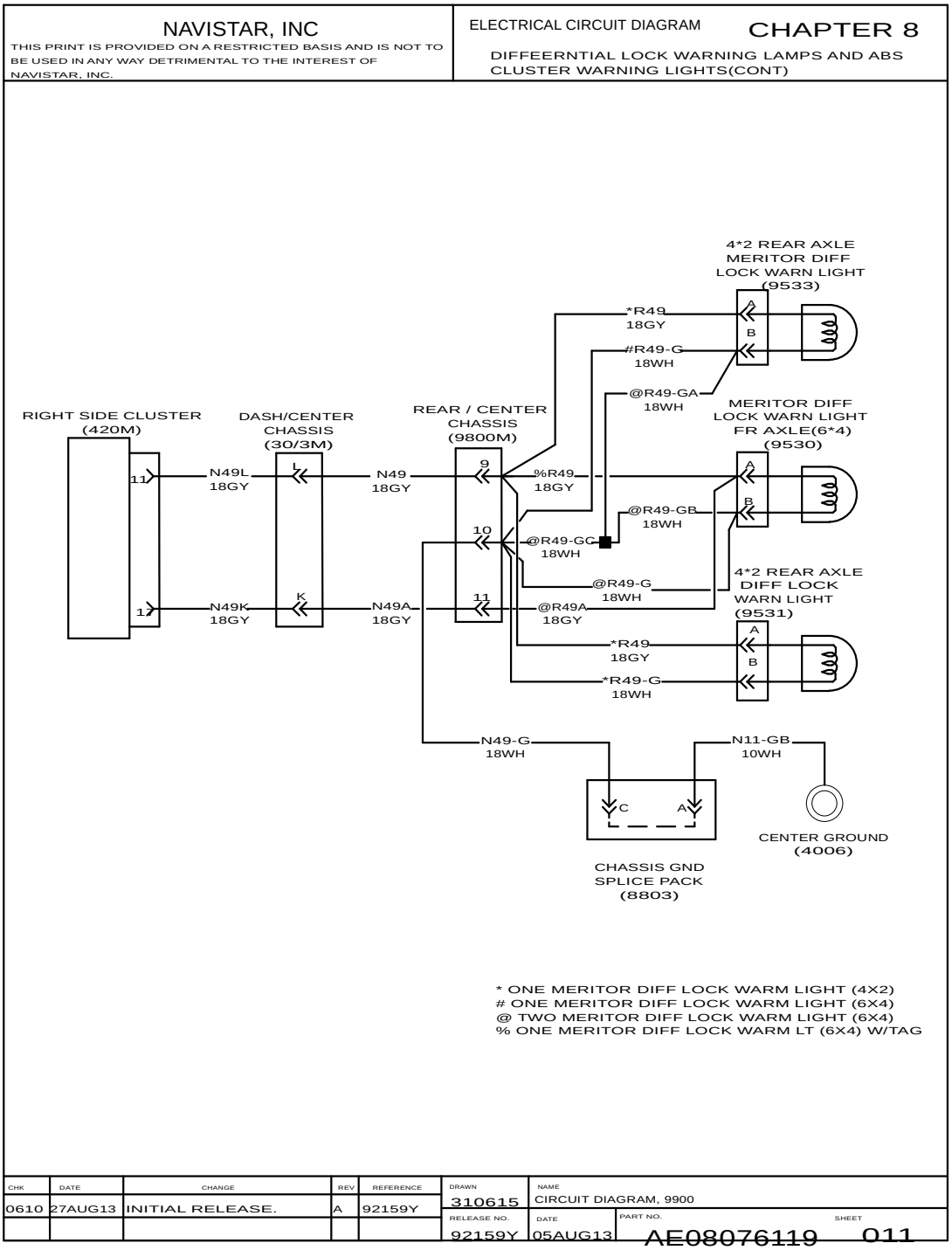

Figure 114 Differential Lock Warning Lamps and ABS Cluster Warning Lights (Cont.)

8.12. FUEL GAUGE CIRCUITRY (DUAL TANK) WITH 115 / 150 GAL., P. 12

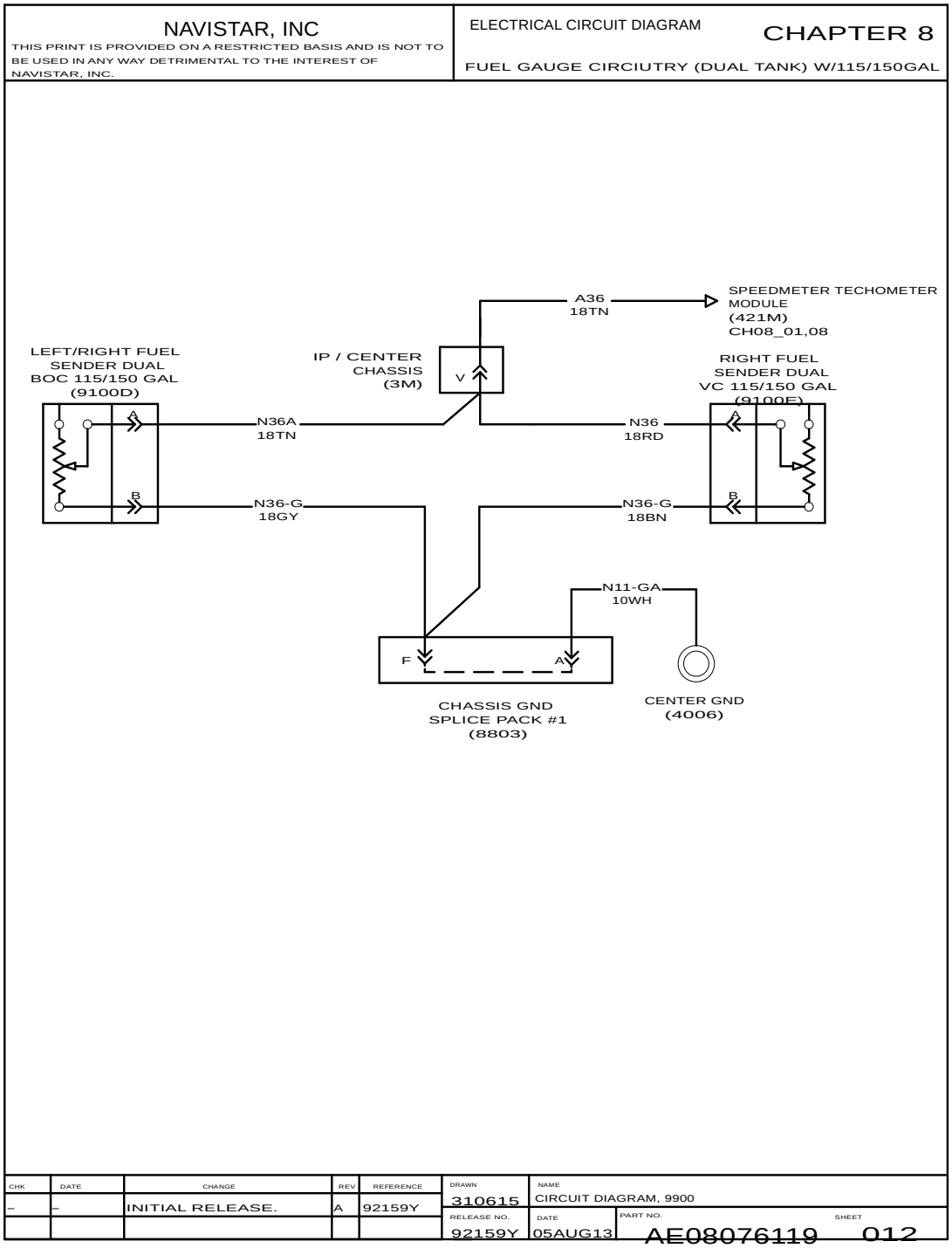

Figure 115 Fuel Gauge Circuitry (Dual Tank) with 115 / 150 Gal..

8.13. AXLE TEMPERATURE GAUGES, P. 13

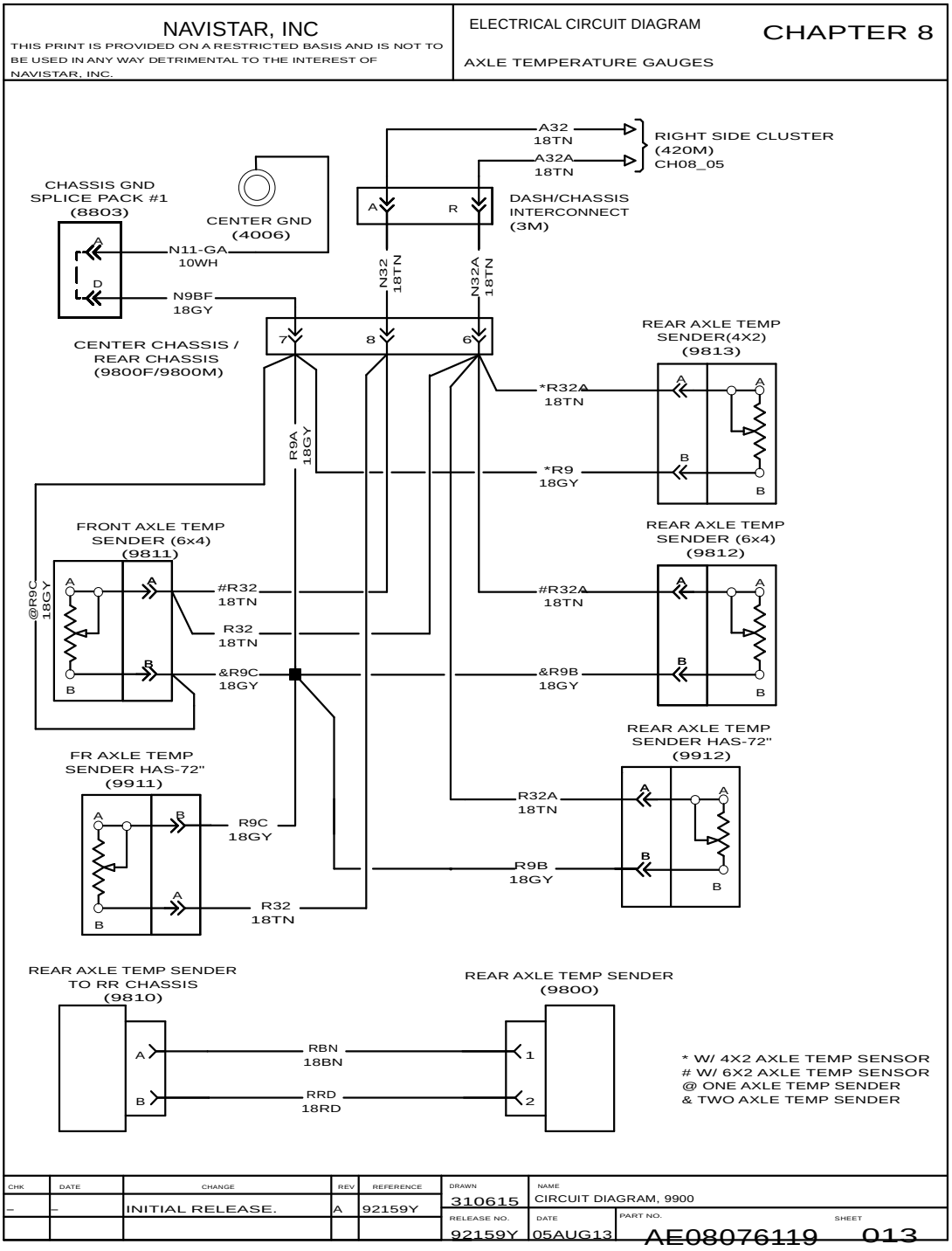

Figure 116 Axle Temperature Gauges.

8.14. ENGINE OIL AND TRANSMISSION OIL TEMPERATURE GAUGE, P. 14

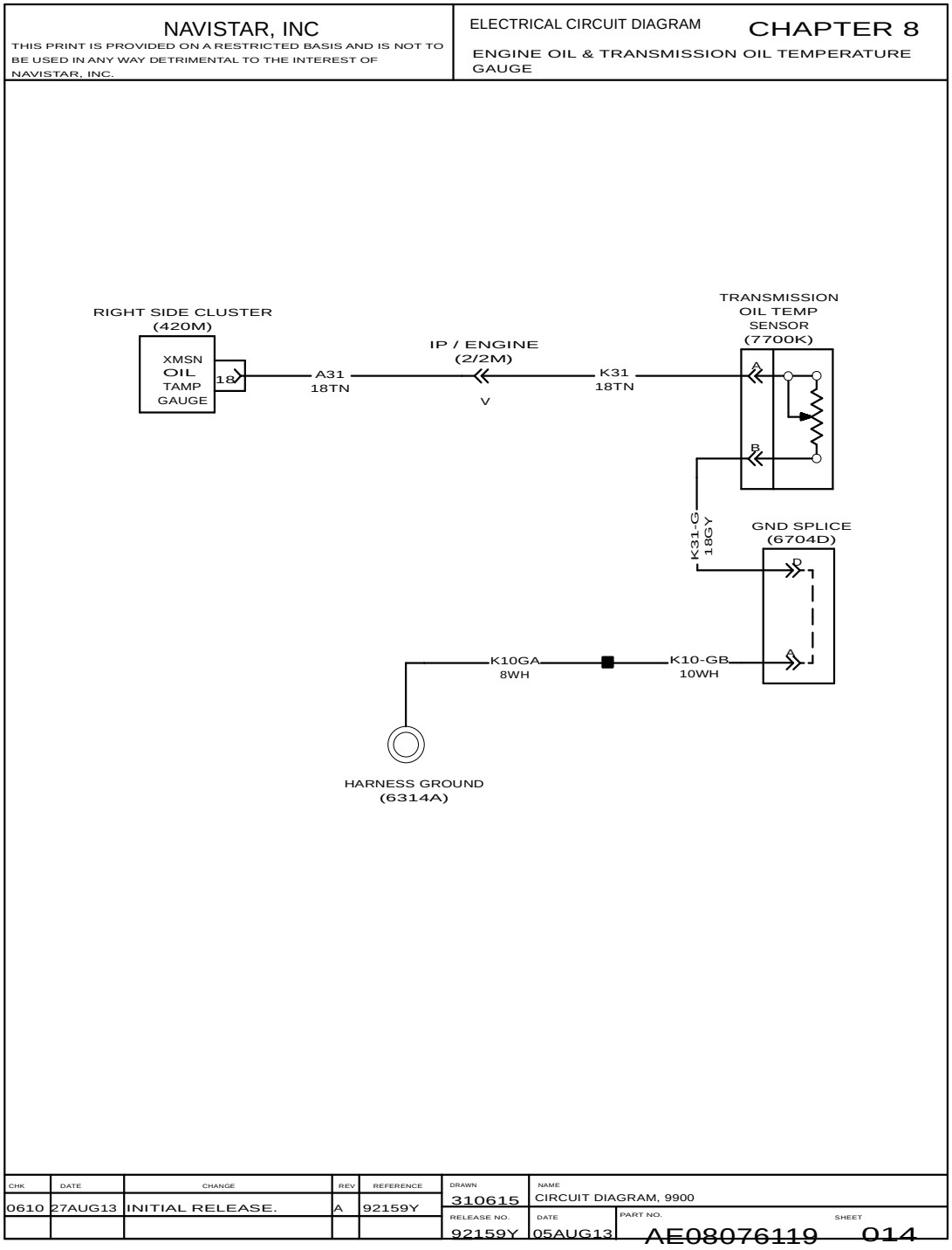

Figure 117 Engine Oil and Transmission Oil Temperature Gauge.

8.15. IDEAL CONTROL TEMPERATURE SENSOR, P. 15

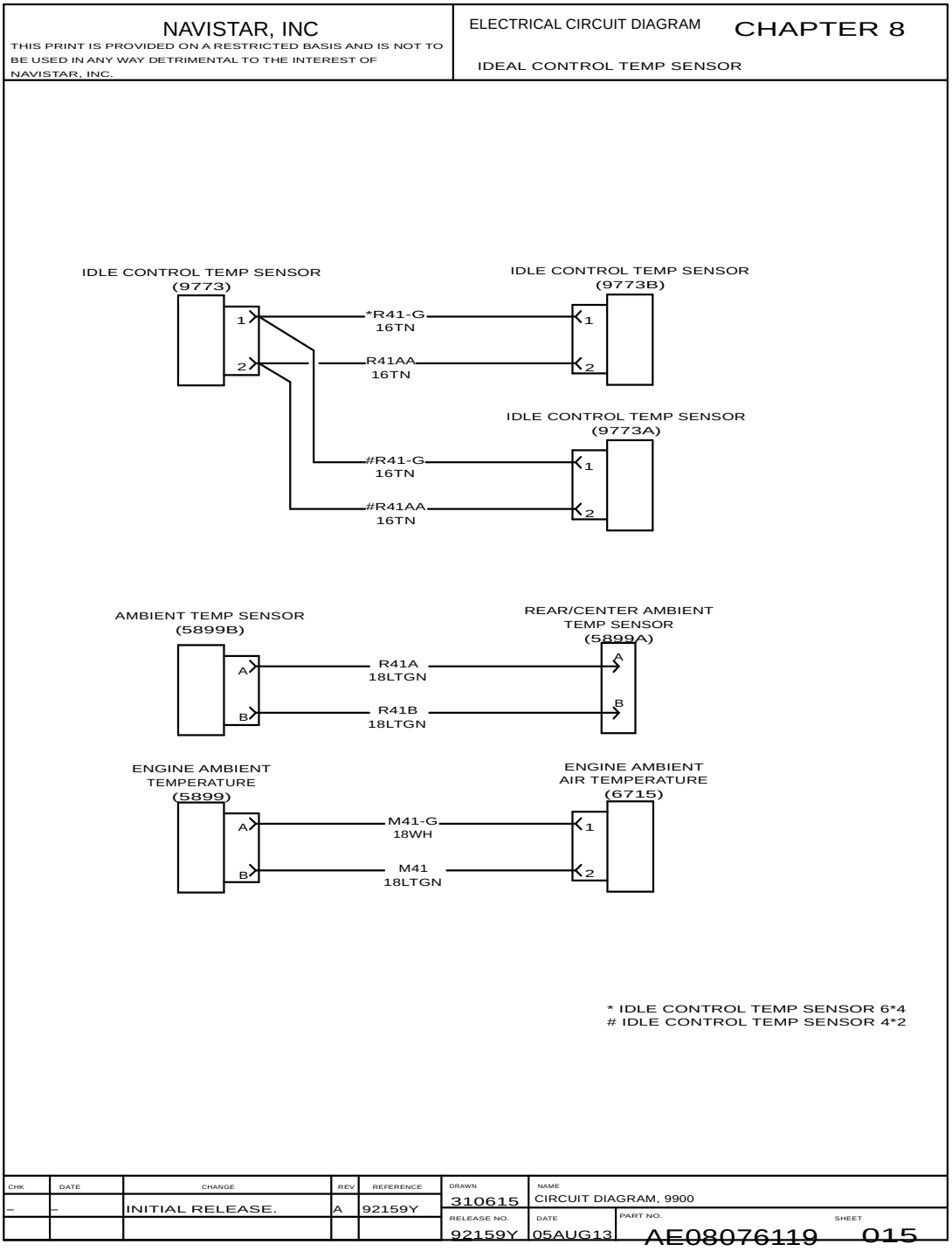

Figure 118 Ideal Control Temperature Sensor.

8.16. DEF GAUGE, P. 16

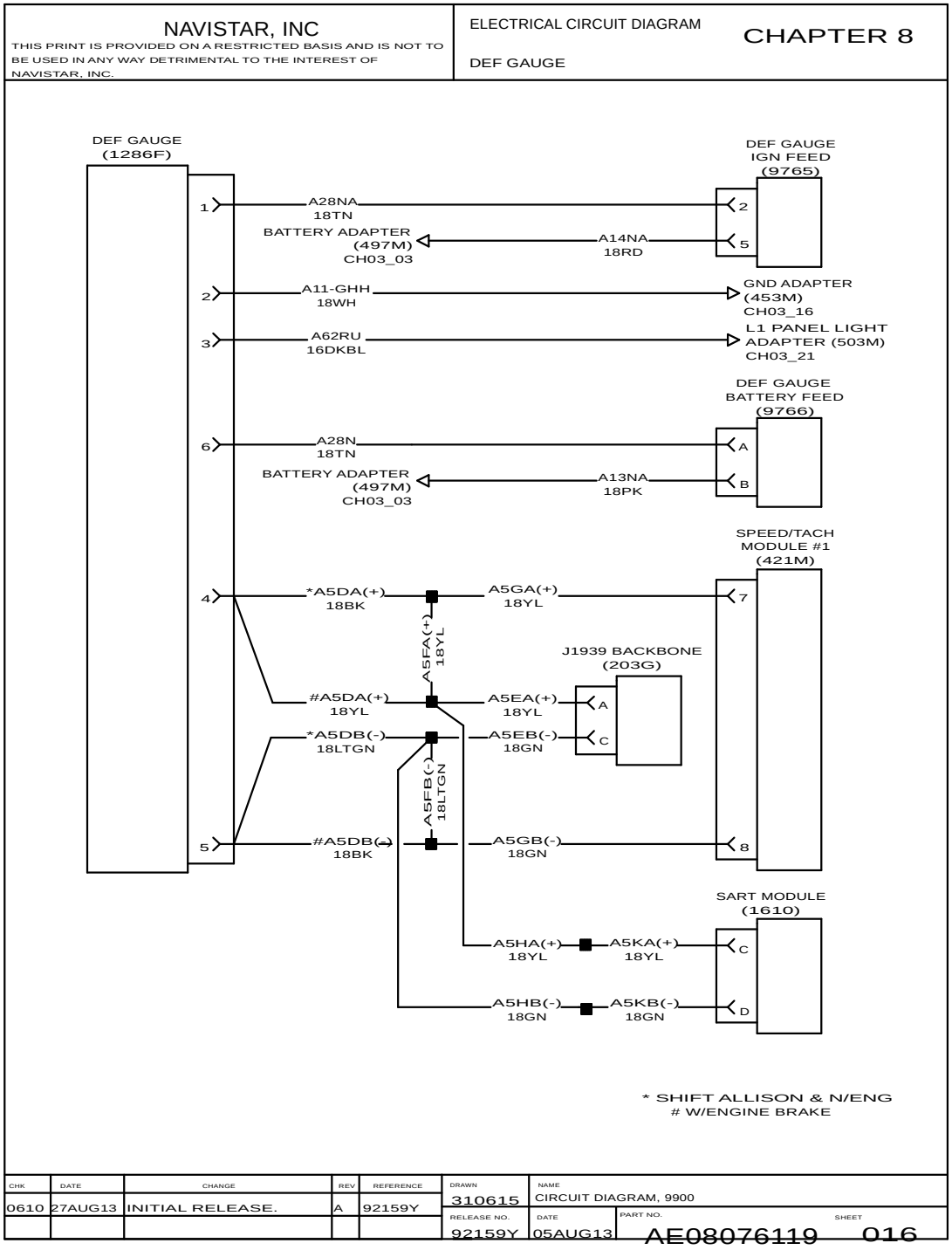

Figure 119 DEF Gauge.

8.17. CLUTCH STARTER INTERLOCK, P. 17

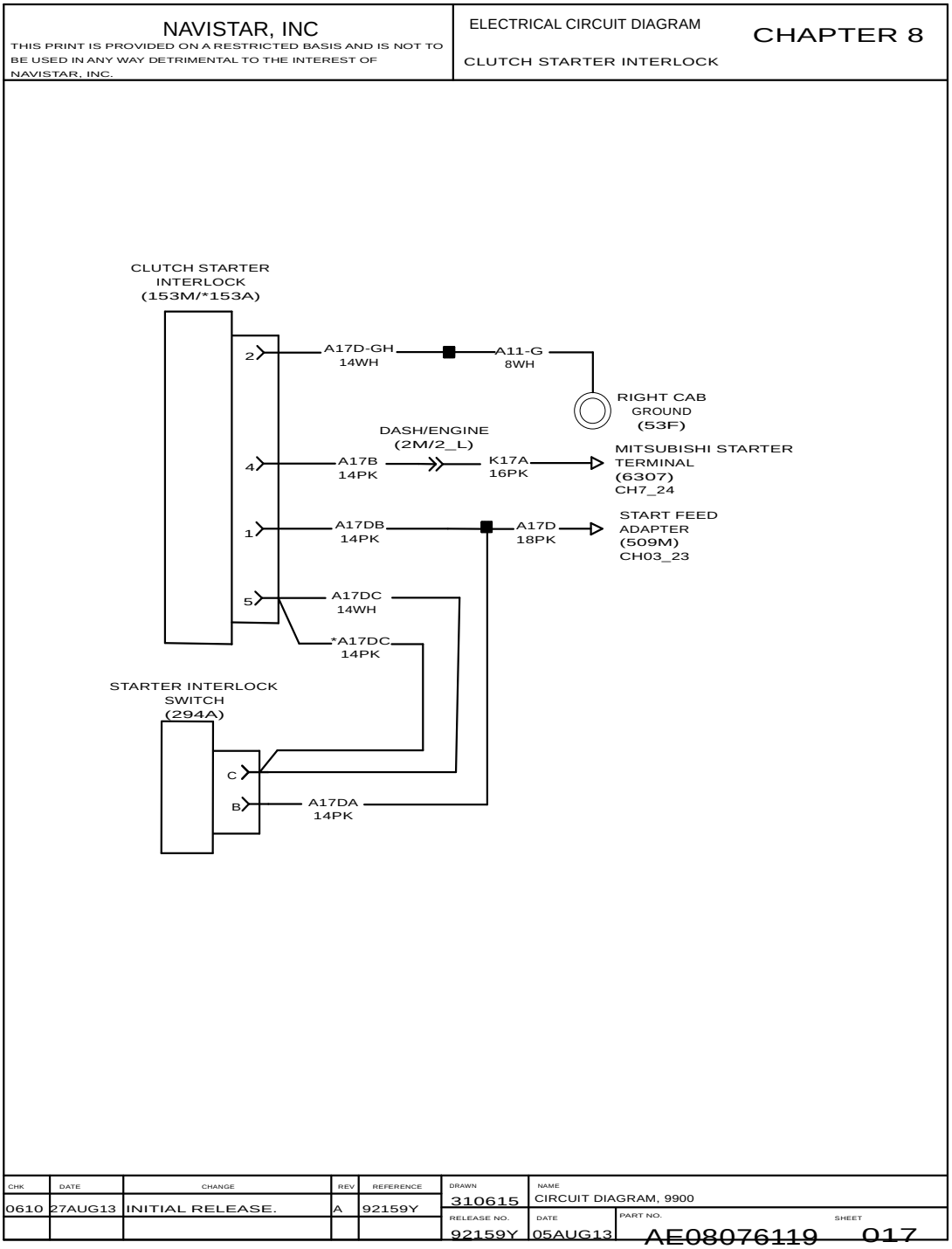

Figure 120 Clutch Starter Interlock.

LIGHTING SYSTEM CLUTCH START INTERLOCK (CHAPTER 9)

9.1. BACK-UP LIGHTS, P. 1

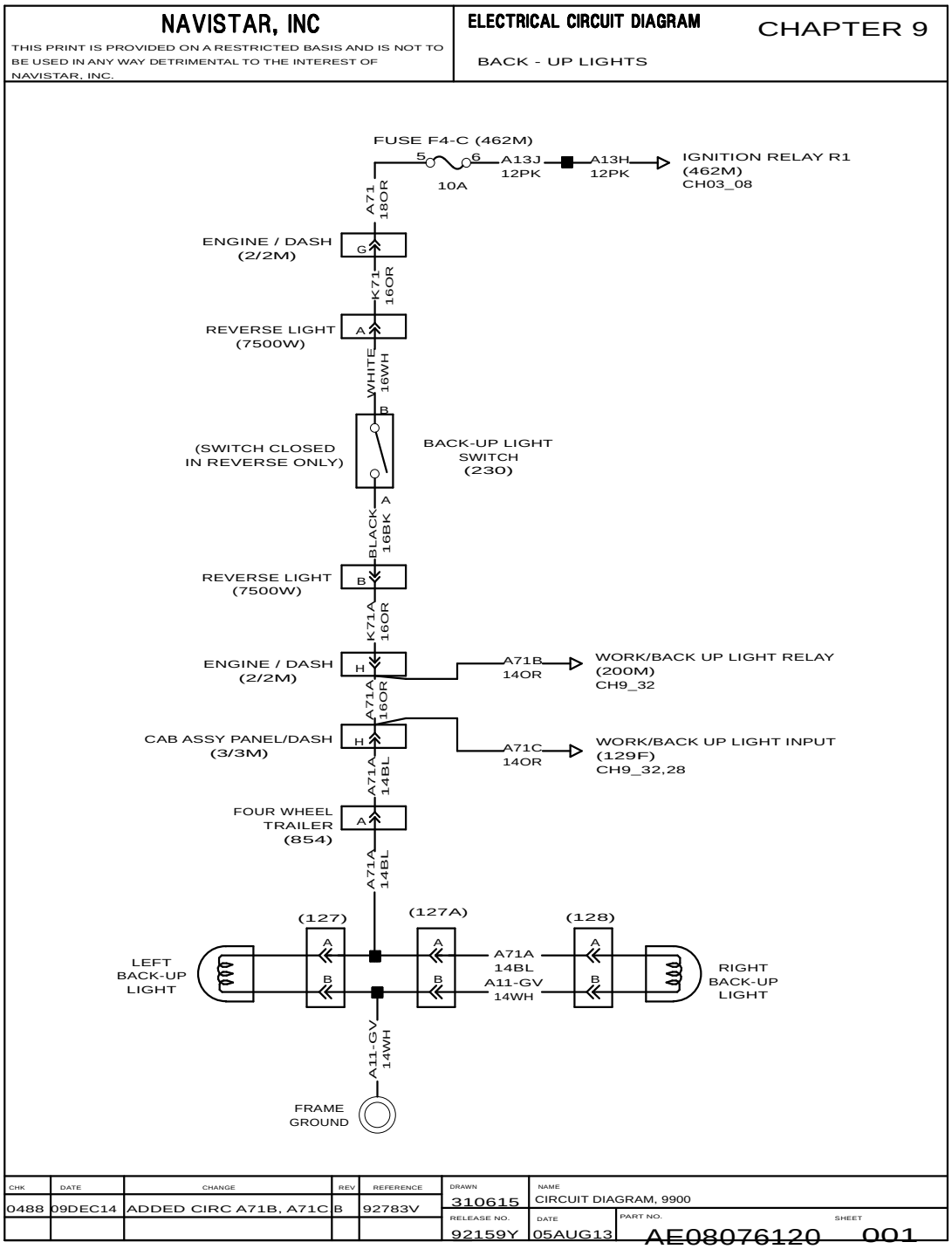

Figure 121 Back-Up Lights.

9.2. CAB AND TRAILER LIGHT SWITCH AND RELAY, P. 2

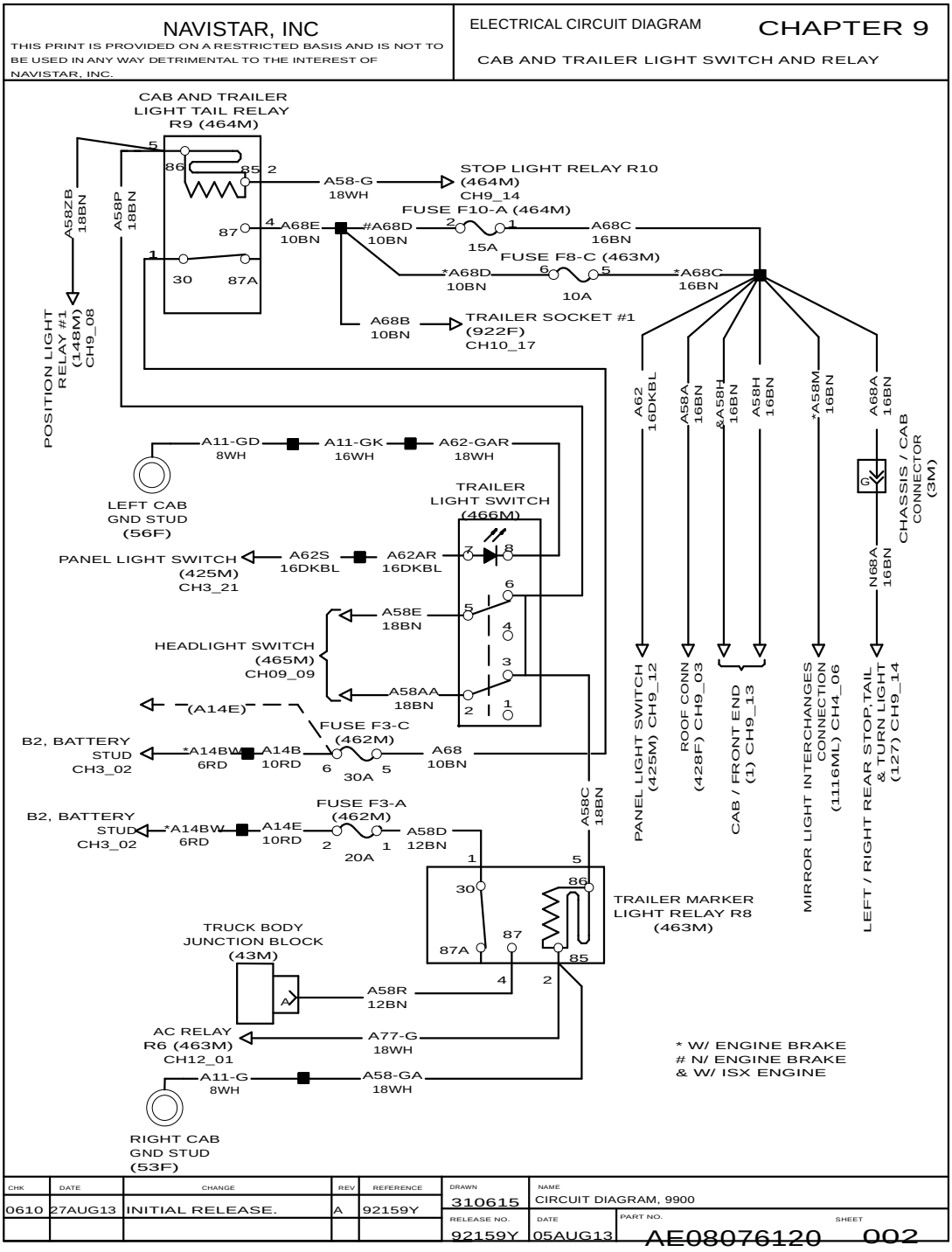

Figure 122 Cab and Trailer Light Switch and Relay.

9.3. CAB CLEARANCE LIGHTS, P. 3

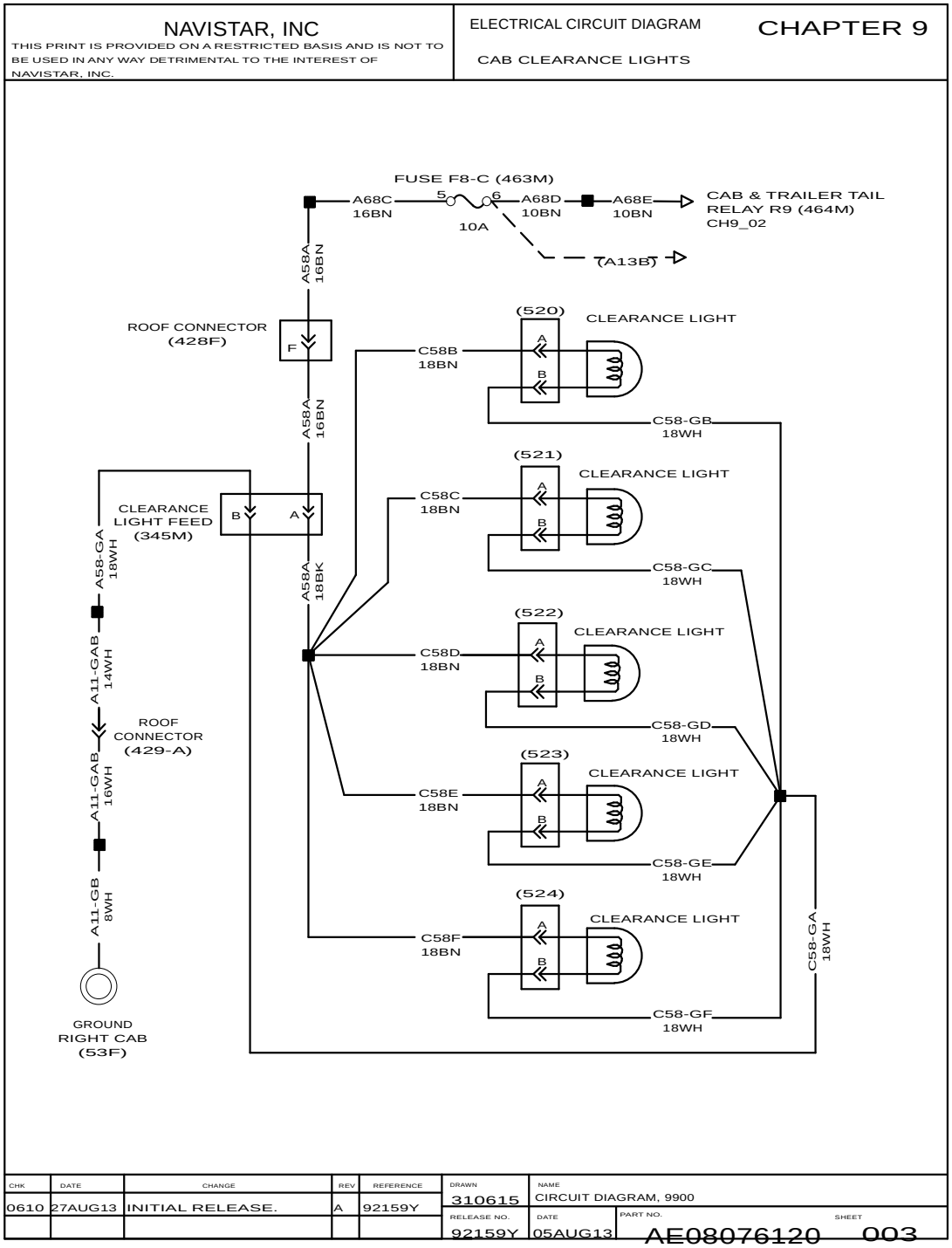

Figure 123 Cab Clearance Lights.

9.4. WORK LIGHT WIRING TRAILER HOOK-UP LIGHT, P. 4

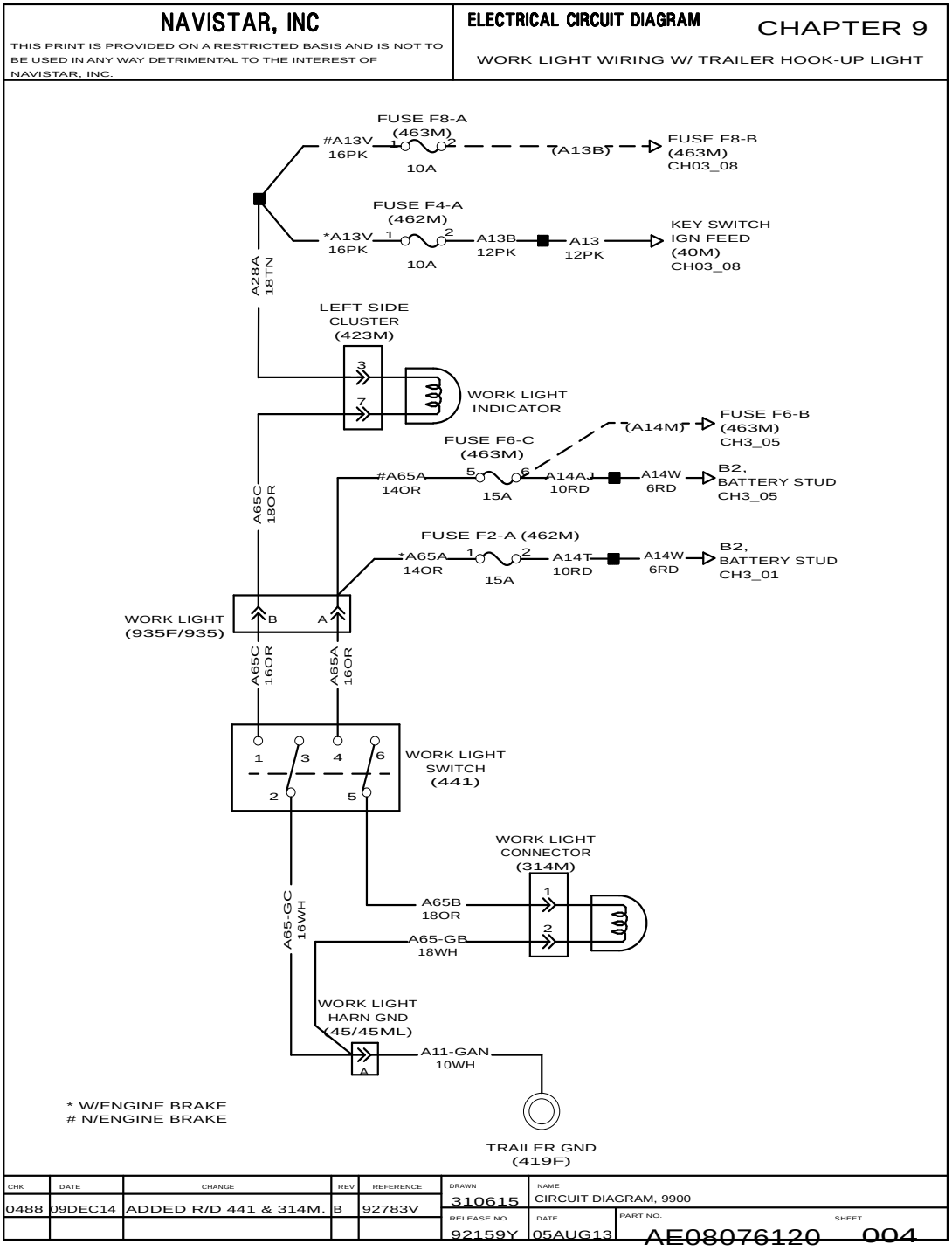

Figure 124 Work Light Wiring Trailer Hook-Up Light.

9.5. CAB DOME, READING, AND COURTESY LIGHTS, P. 5

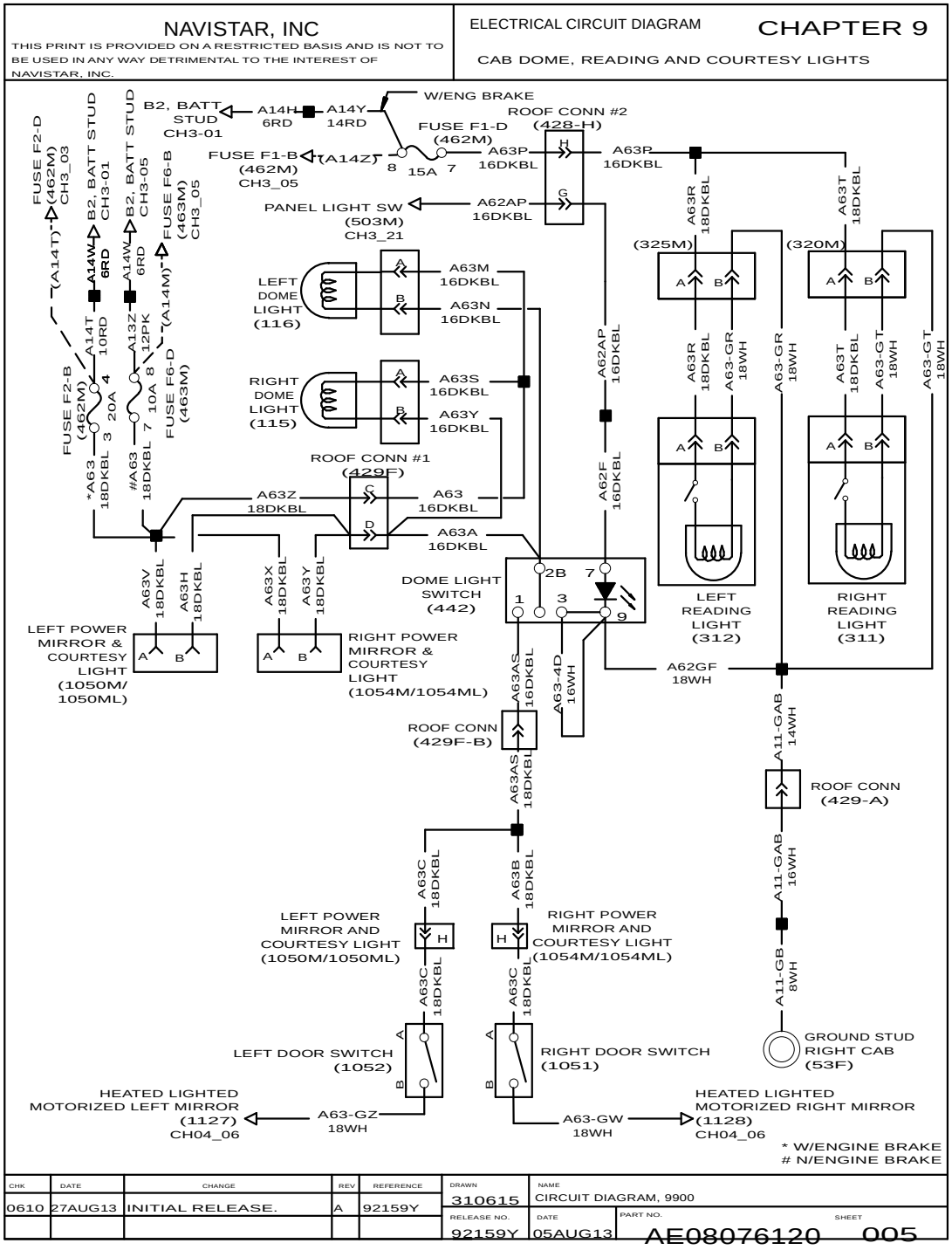

Figure 125 Cab Dome, Reading, and Courtesy Lights.

9.6. CAB DOME, READING, AND COURTESY LIGHTS (CONT.), P. 6

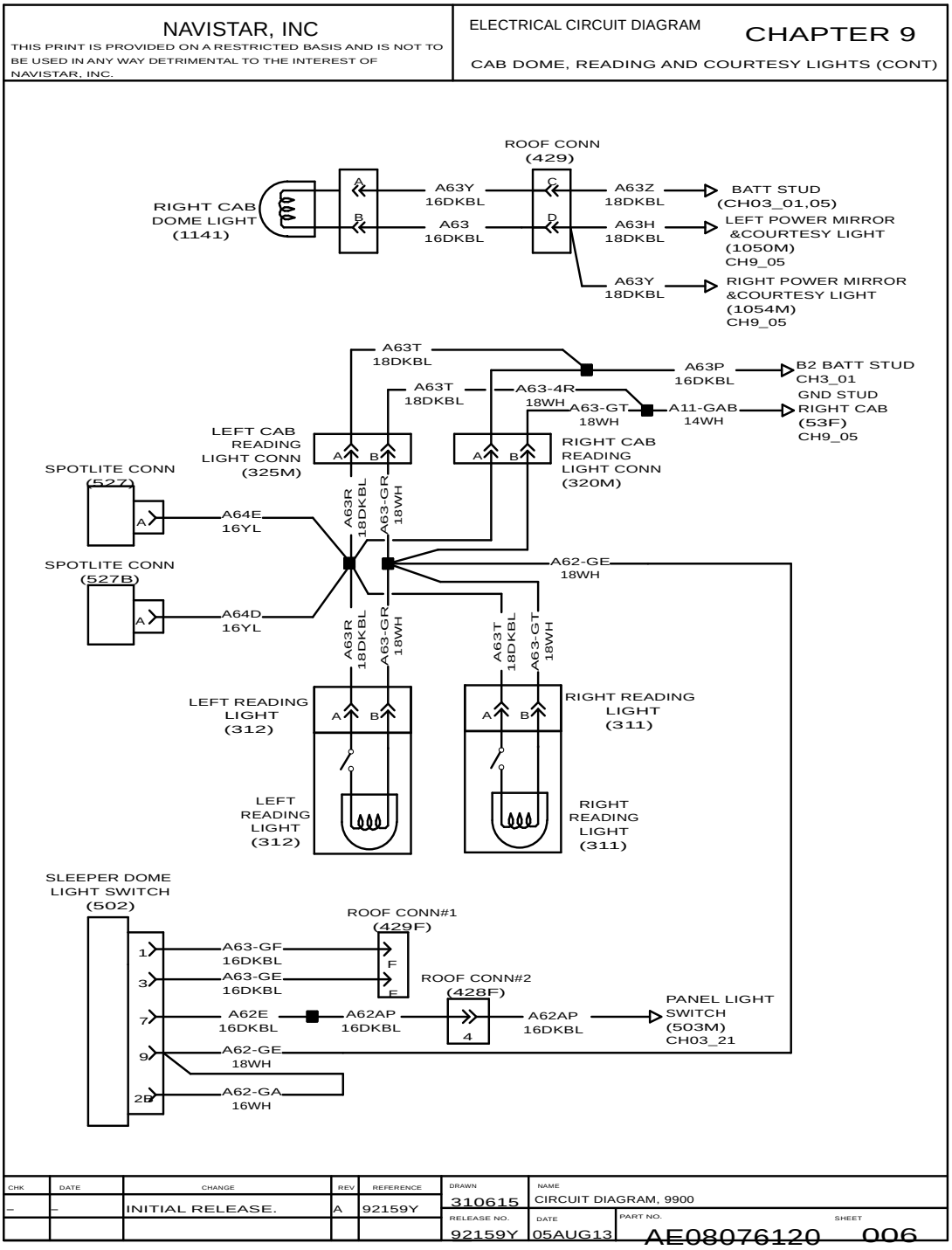

Figure 126 Cab Dome, Reading, and Courtesy Lights (Cont.)

9.7. DAYTIME RUNNING LIGHTS, P. 7

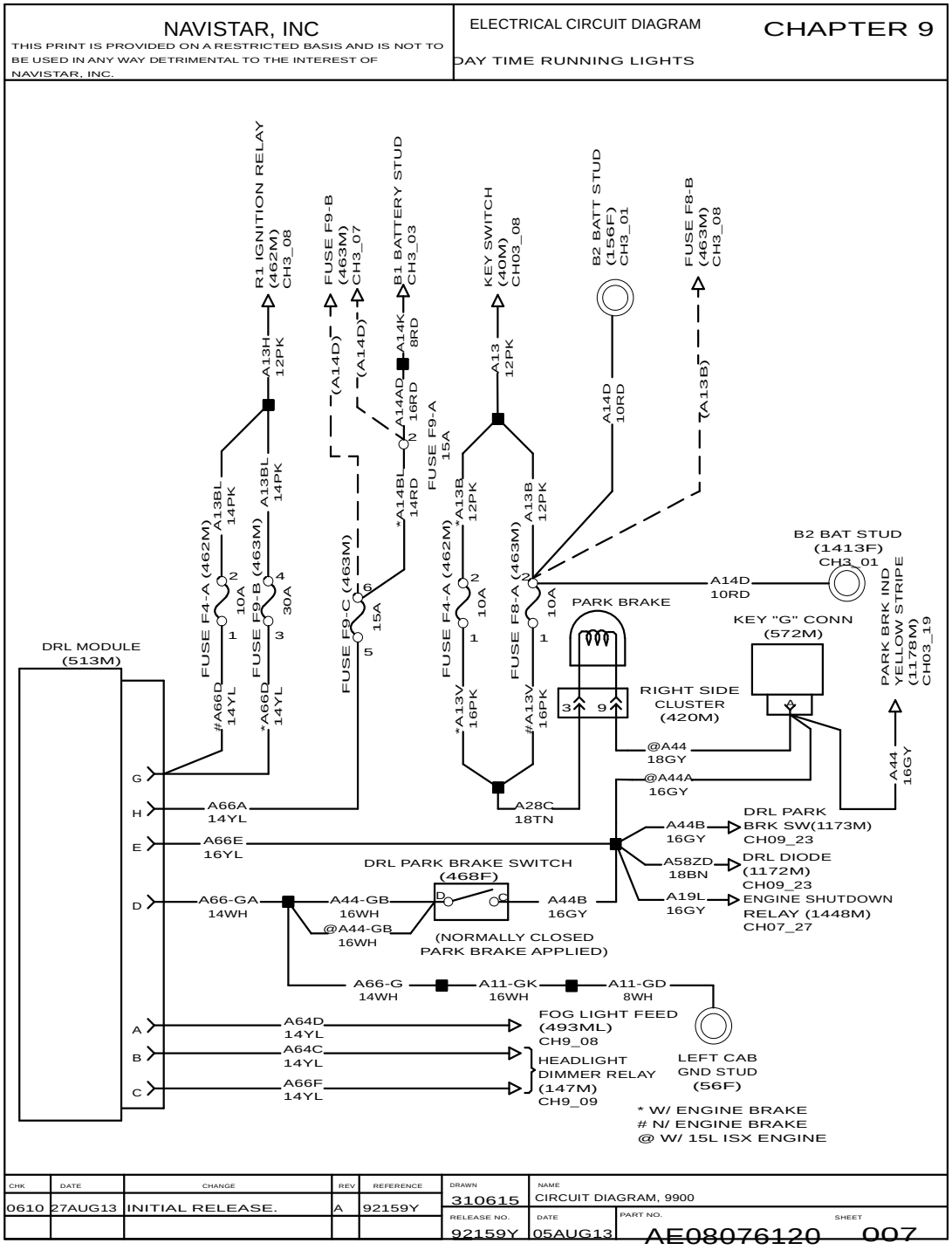

Figure 127 Daytime Running Lights.

9.8. FOG LIGHTS, P. 8

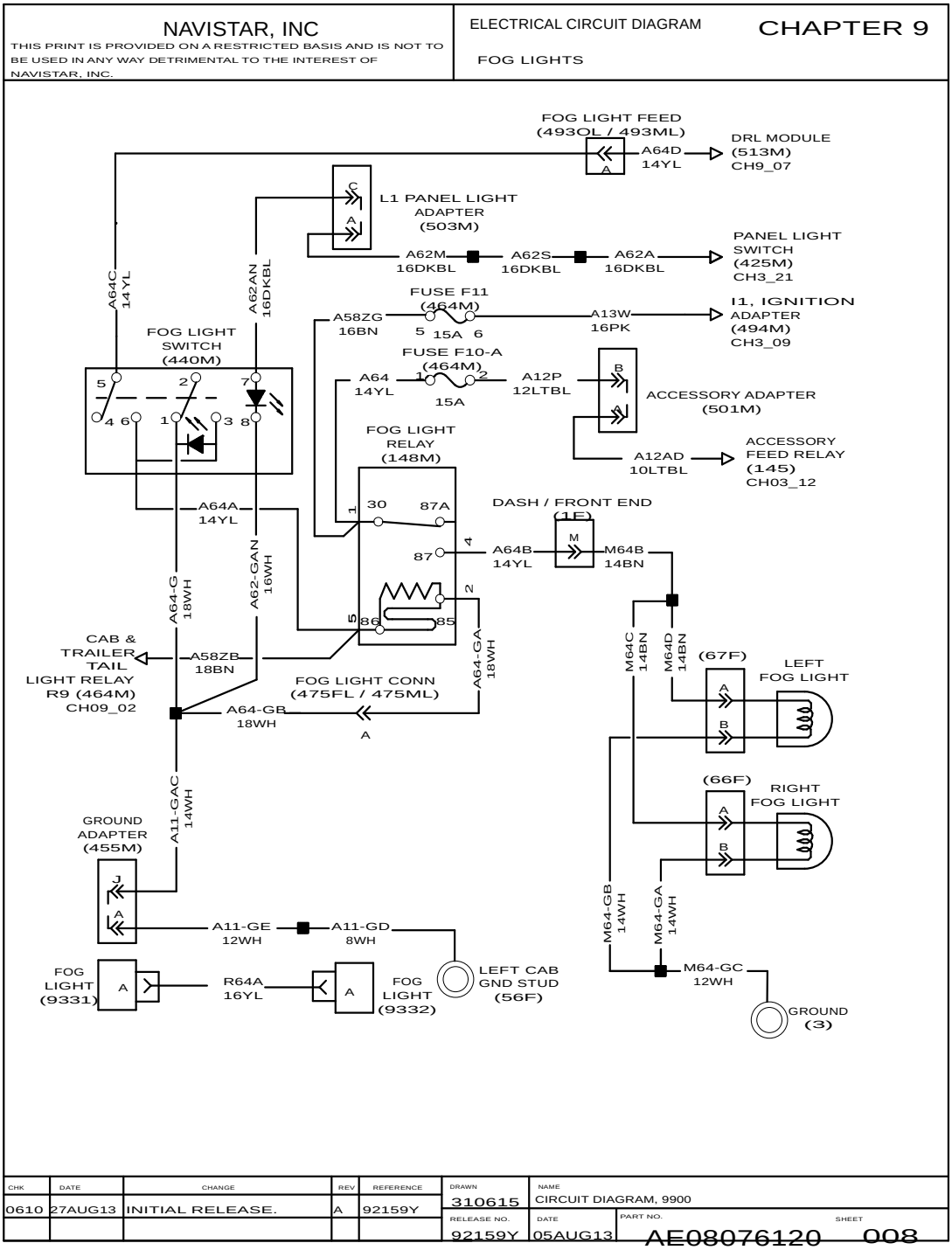

Figure 128 Fog Lights.

9.9. HEADLIGHT SWITCH AND DIMMER SWITCH, P. 9

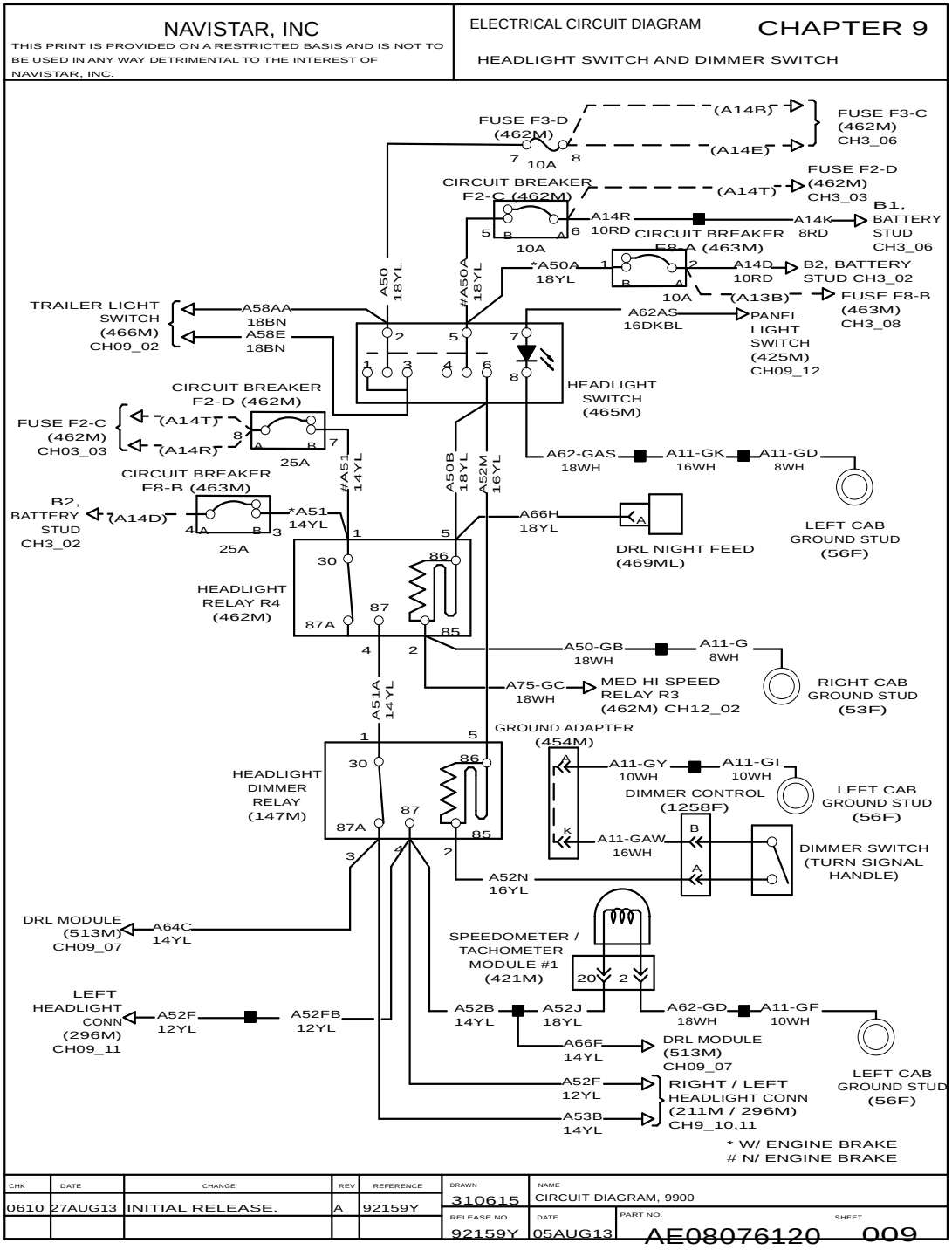

Figure 129 Headlight Switch and Dimmer Switch.

9.10. HEADLIGHTS – WITH BUMPER MOUNTED MARKER LIGHT, P. 10

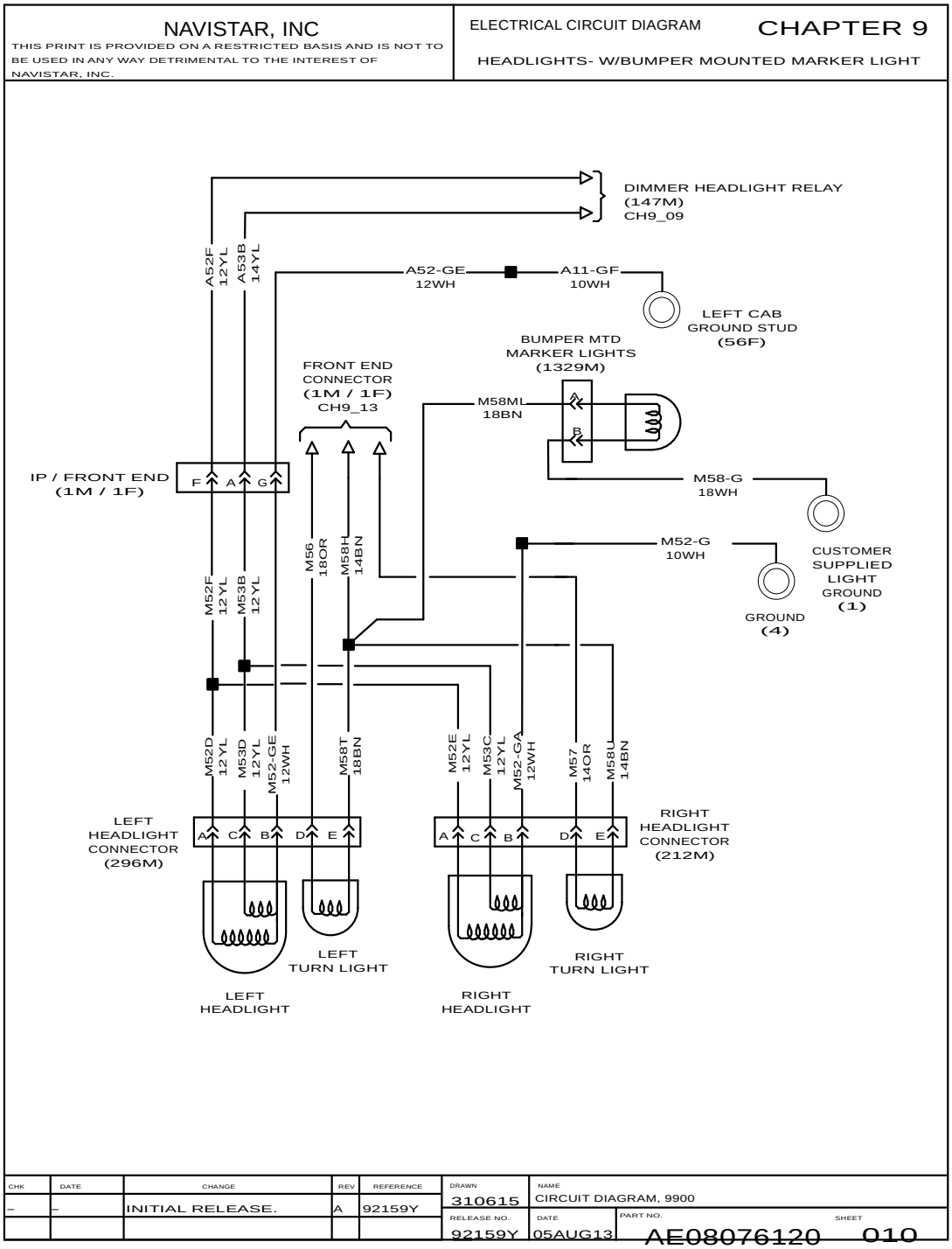

Figure 130 Headlights – with Bumper Mounted Marker Light.

9.11. HEADLIGHTS – WITHOUT BUMPER MOUNTED MARKER LIGHT, P. 11

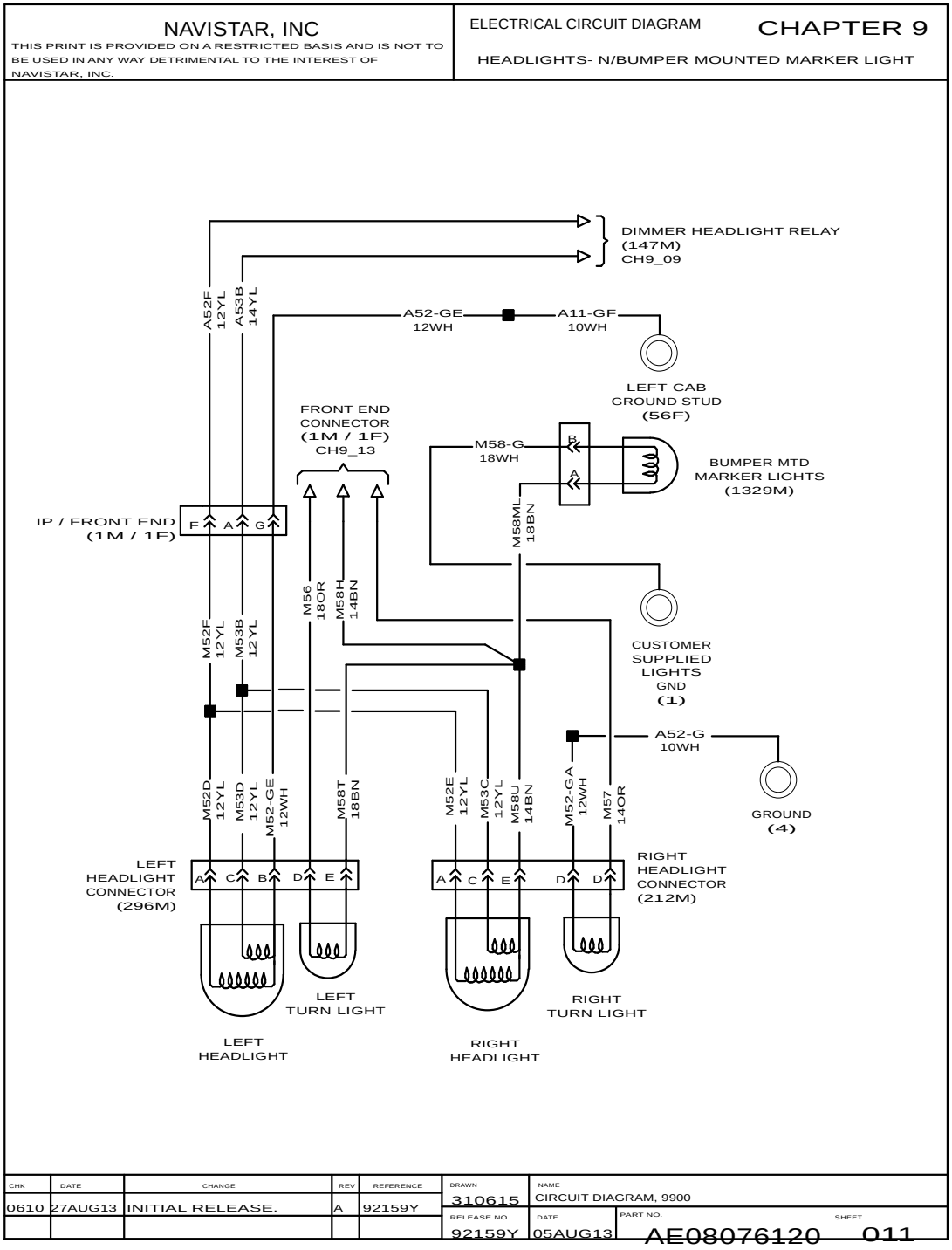

Figure 131 Headlights – without Bumper Mounted Marker Light.

9.12. PANEL LIGHTS, P. 12

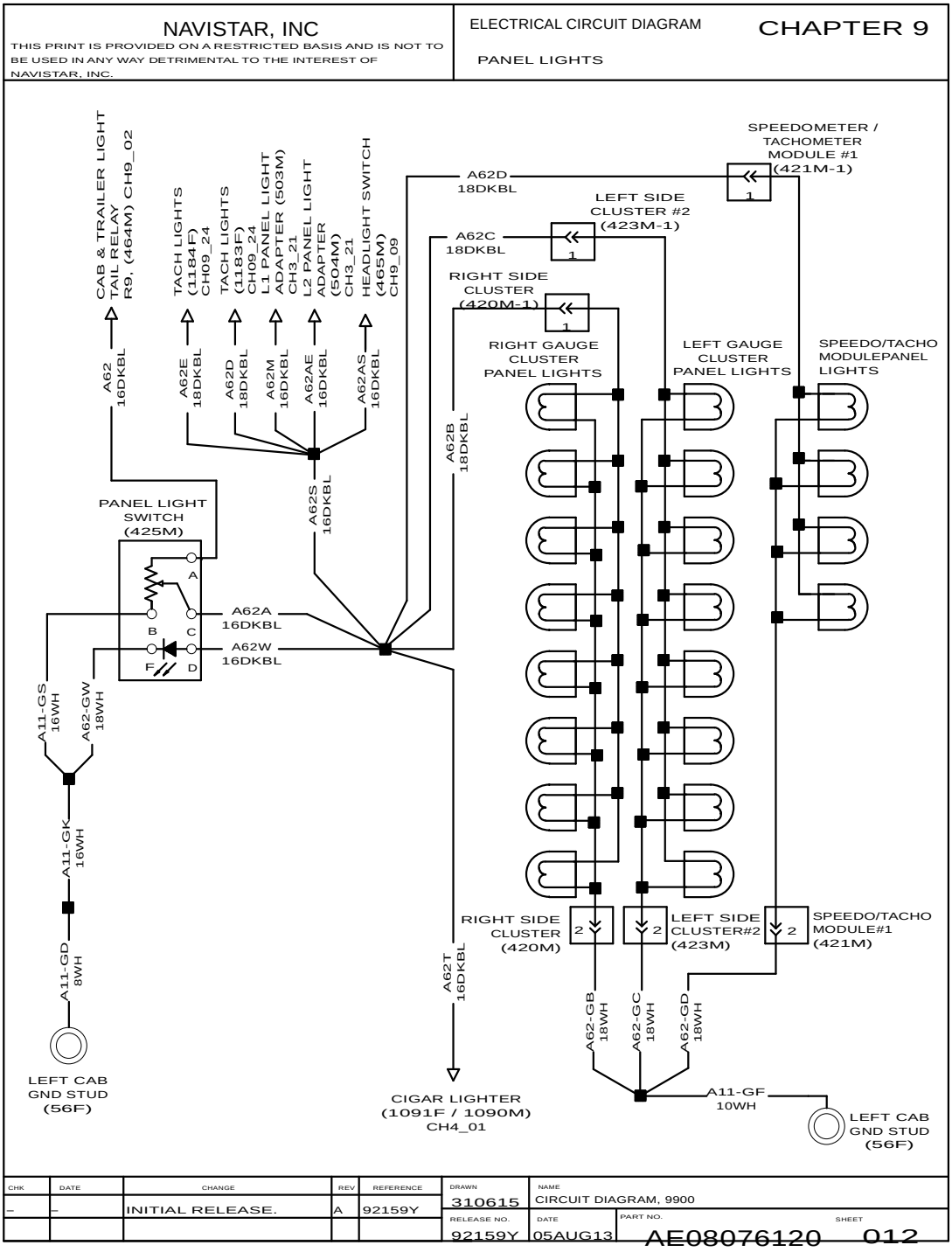

Figure 132 Panel Lights.

9.13. PARK / TURN / SIDE MARKER LIGHTS WITH AUXILIARY HEADLIGHTS, P. 13

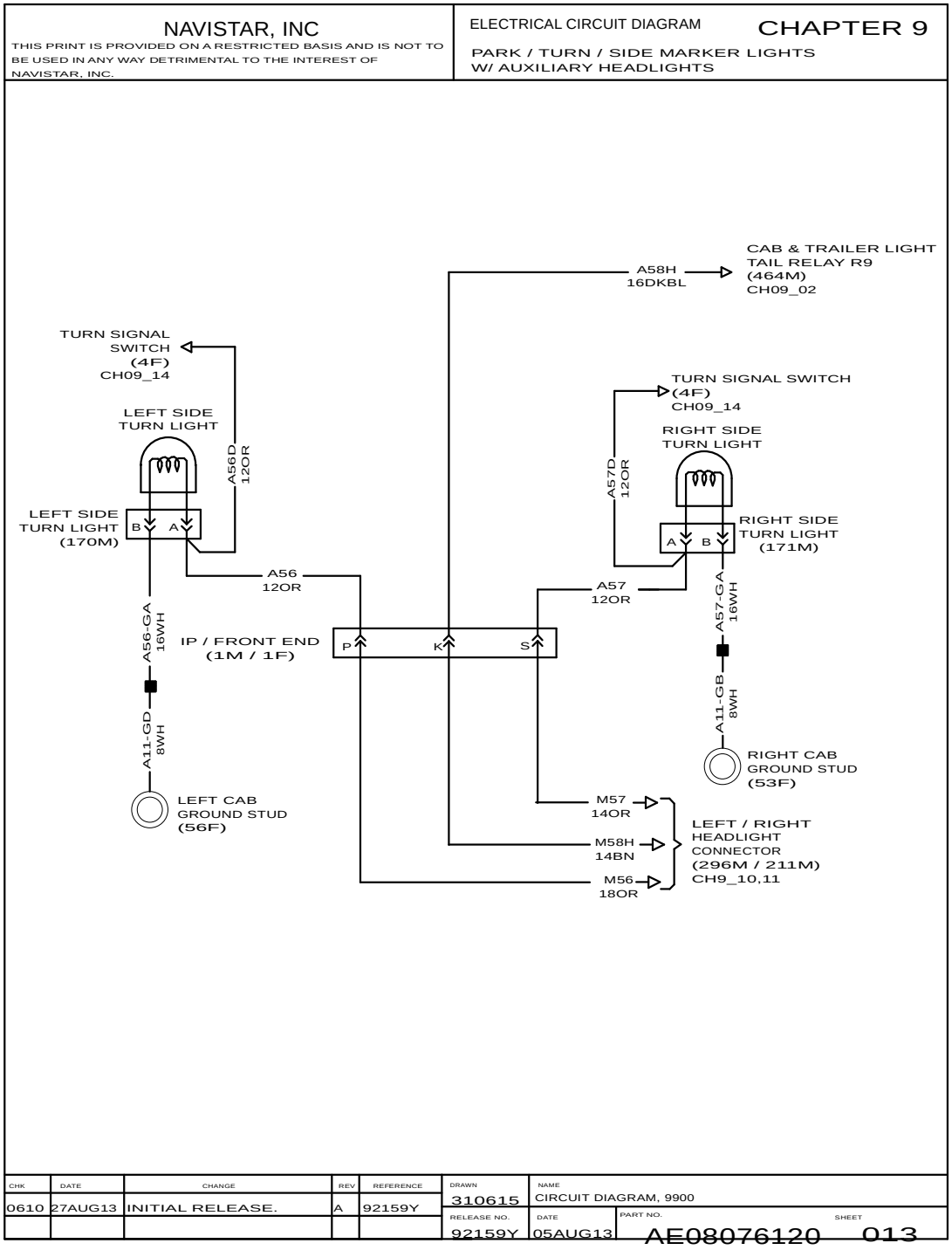

Figure 133 Park / Turn / Side Marker Lights with Auxiliary Headlights.

9.14. STOP, TAIL, TURN AND HAZARD SIGNAL LIGHTS WITH FLASHER, P. 14

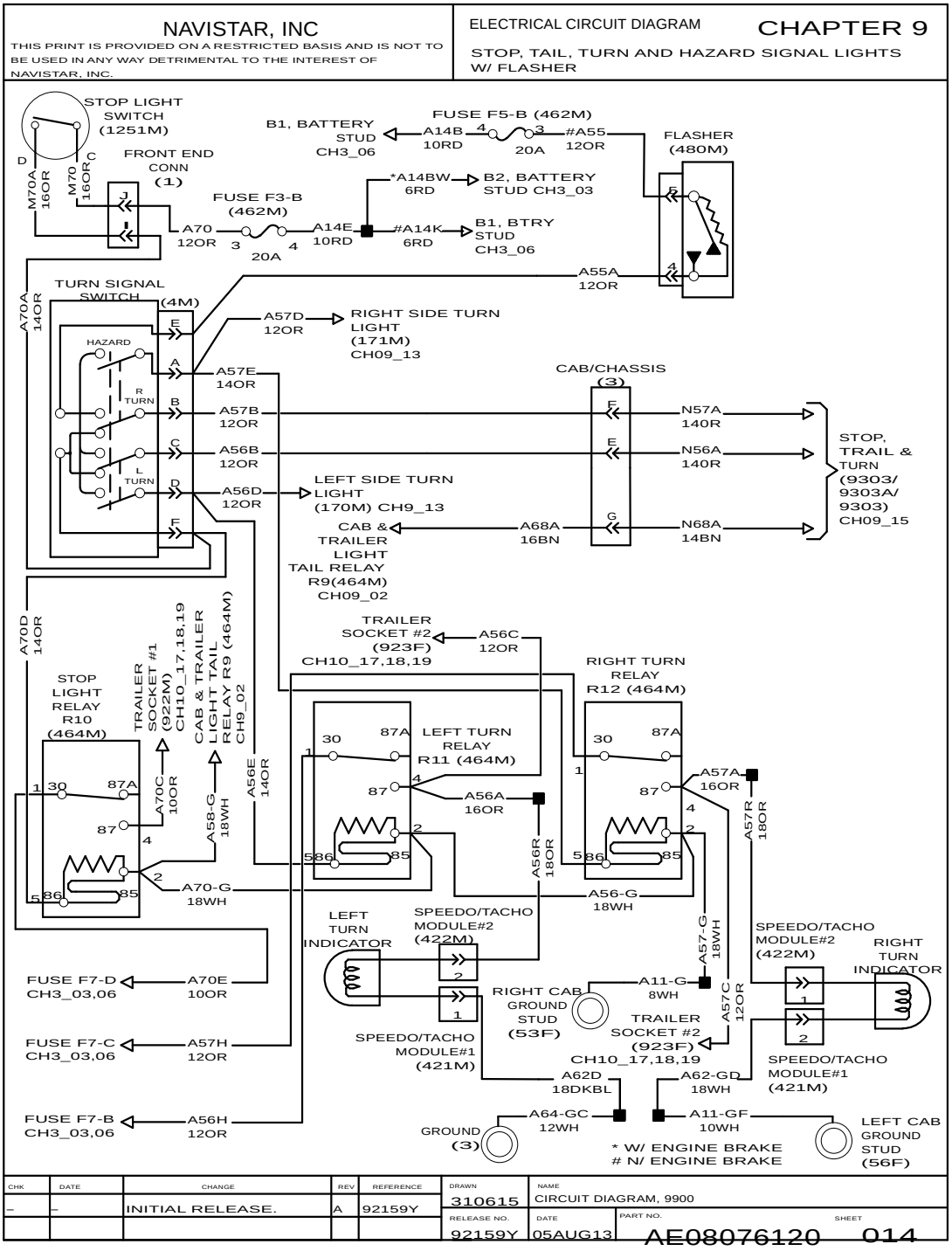

Figure 134 Stop, Tail, Turn and Hazard Signal Lights with Flasher.

9.15. LIGHTS – STOP, TAIL, TURN AND BACK-UP (6 X 4), P. 15

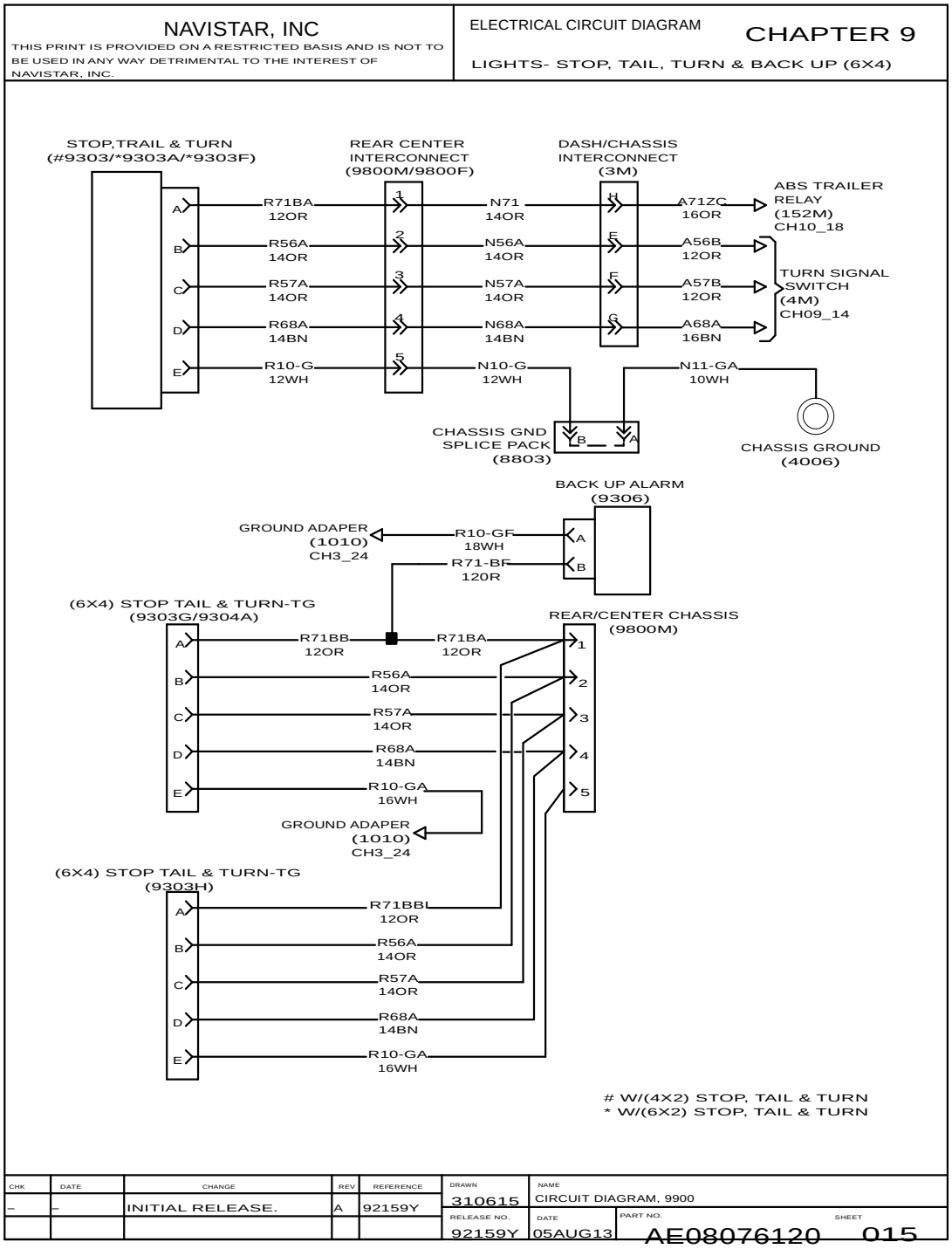

Figure 135 Lights – Stop, Tail, Turn and Back-Up (6 x 4)

9.16. LIGHTS – STOP, TAIL, TURN AND BACK-UP (6 X 4) (CONT.), P. 16

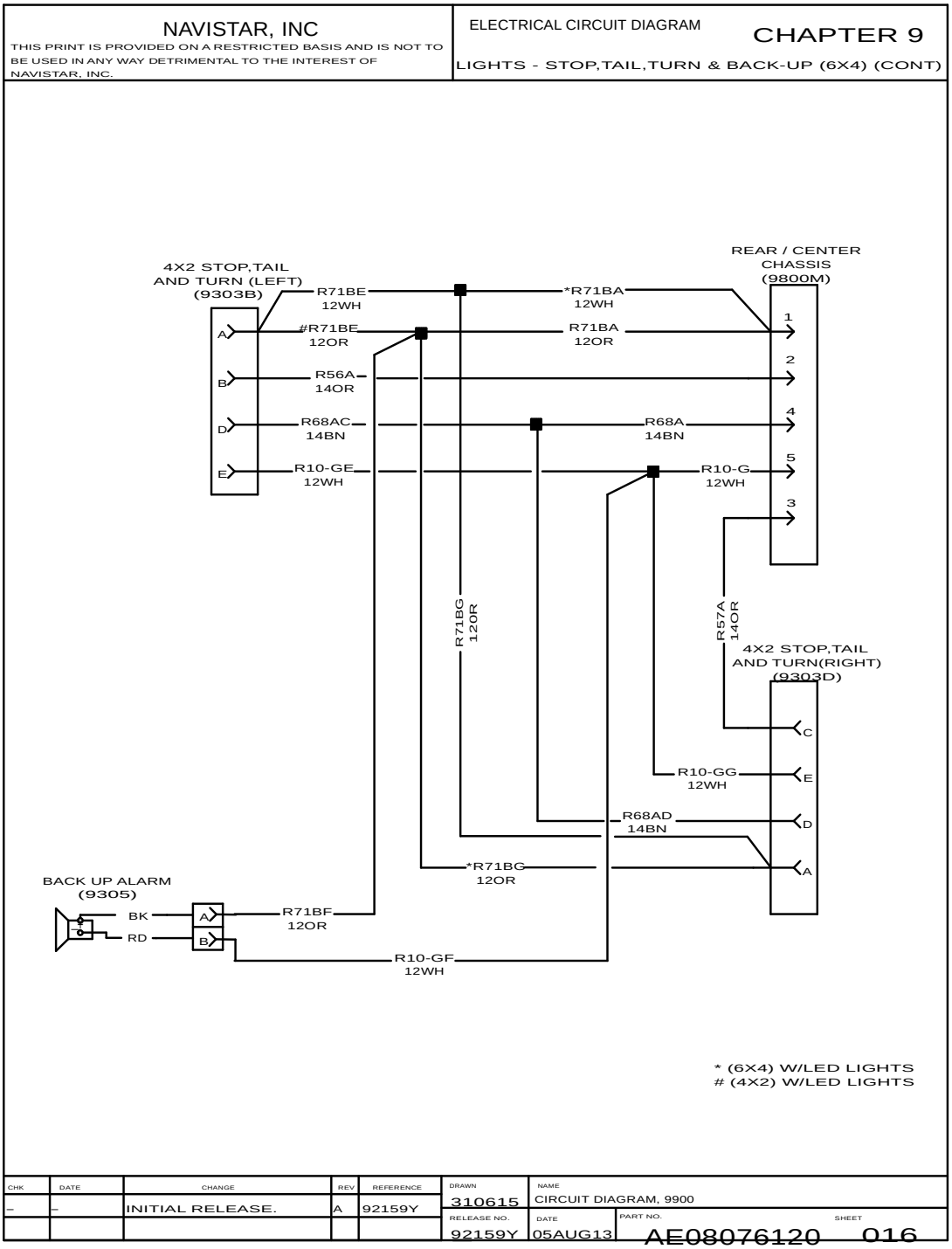

Figure 136 Lights – Stop, Tail, Turn and Back-Up (6 x 4) (Cont.)

9.17. LIGHTS – STOP, TAIL, TURN AND BACK-UP (6 X 4) (CONT.), P. 17

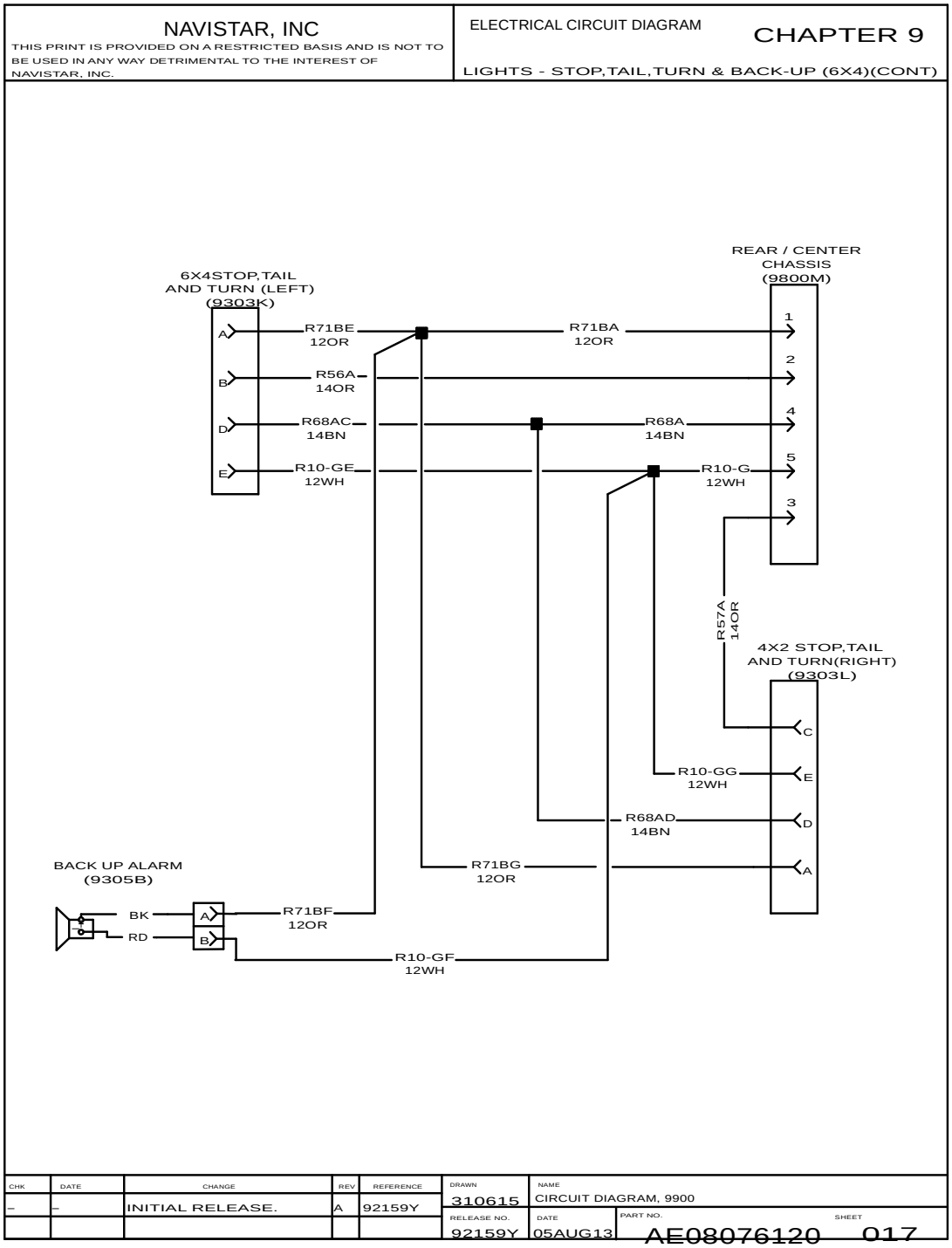

Figure 137 Lights – Stop, Tail, Turn and Back-Up (6 x 4) (Cont.)

9.18. LIGHTS – STOP, TAIL, TURN AND BACK-UP (4 X 2), P. 18

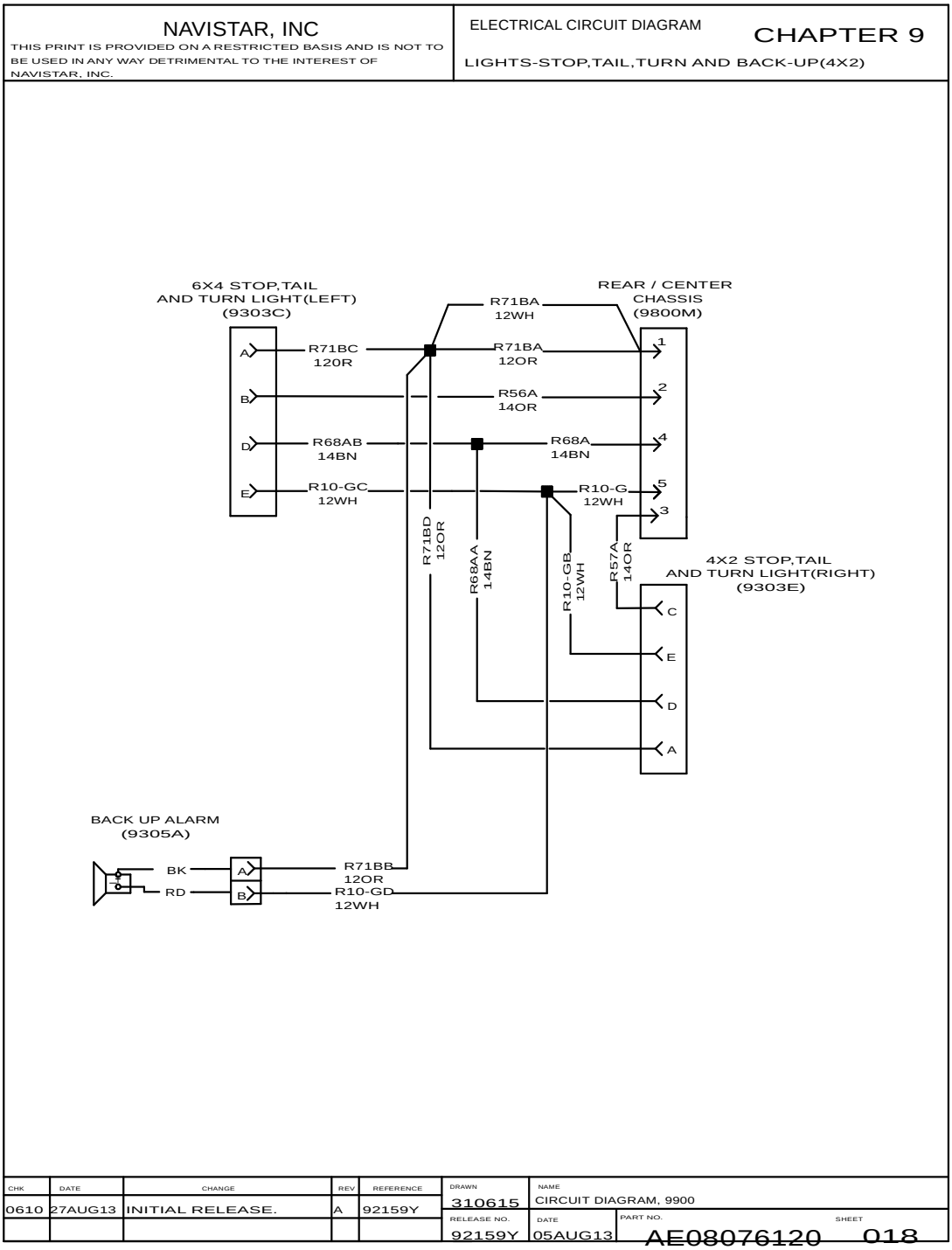

Figure 138 Lights – Stop, Tail, Turn and Back-Up (4 x 2)

9.19. LIGHTS – STOP, TAIL, TURN AND BACK-UP (4 X 2) (CONT.), P. 19

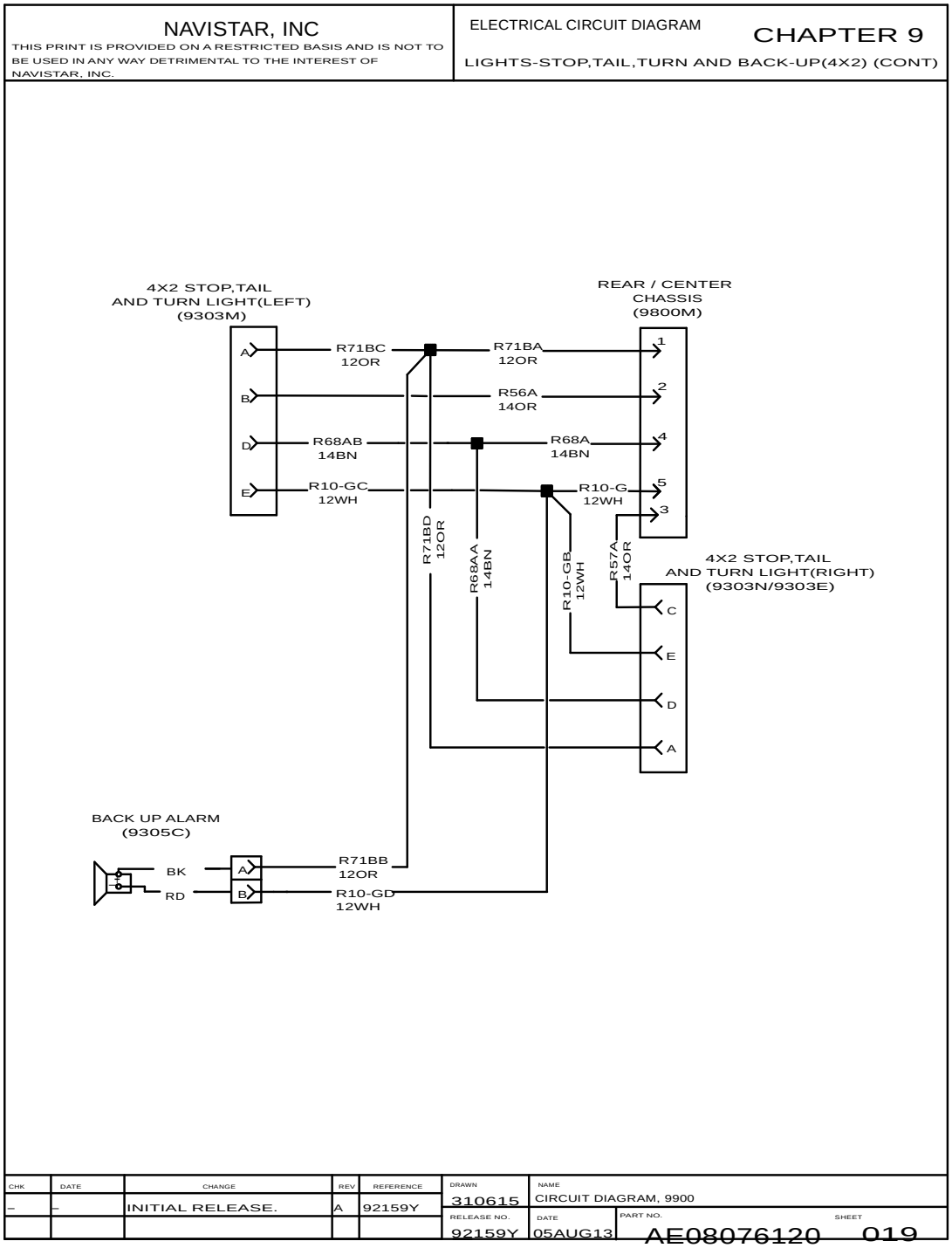

Figure 139 Lights – Stop, Tail, Turn and Back-Up (4 x 2) (Cont.)

9.20. ECE LIGHTS, P. 20

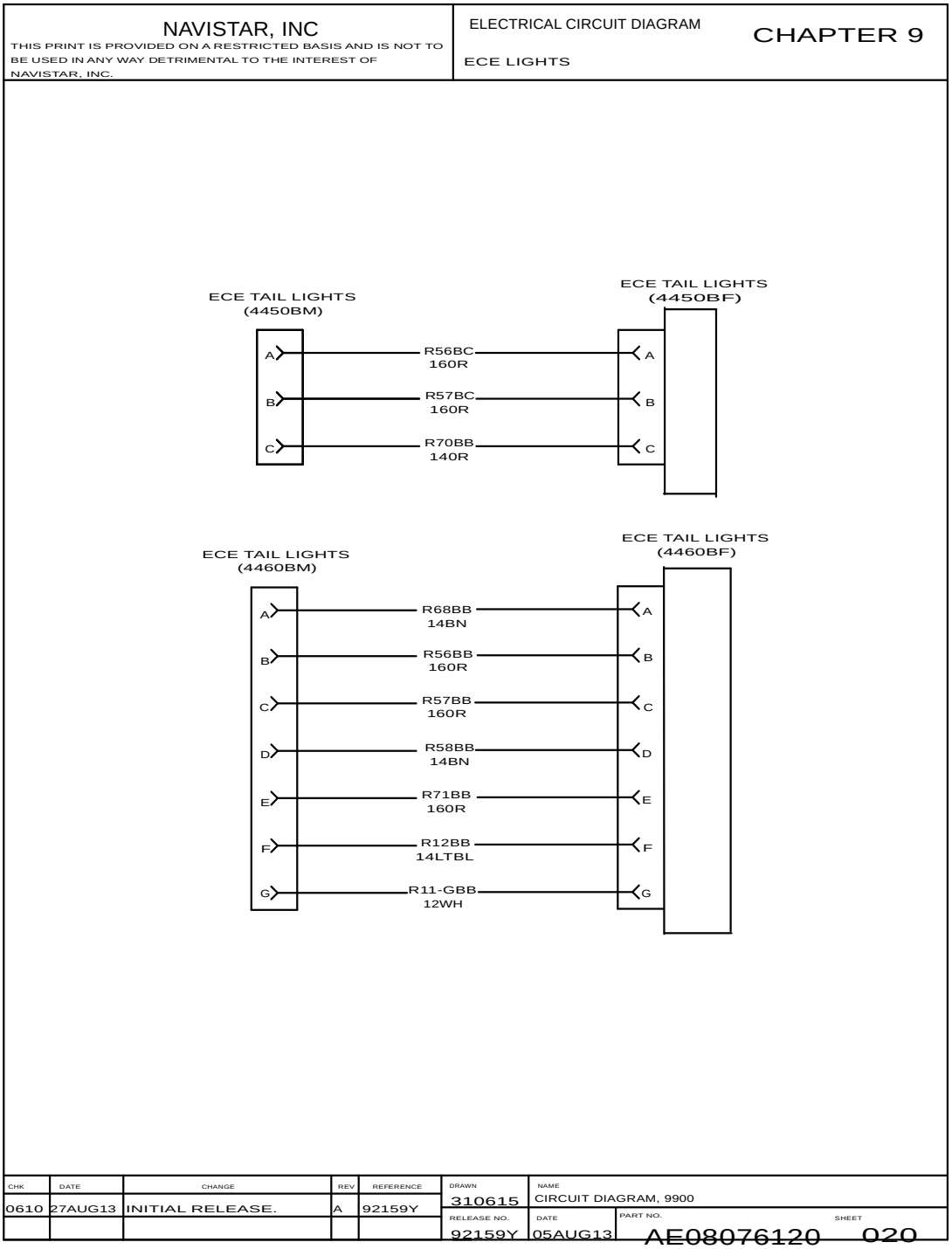

Figure 140 ECE Lights.

9.21. BEACON AND TAIL LIGHT, P. 21

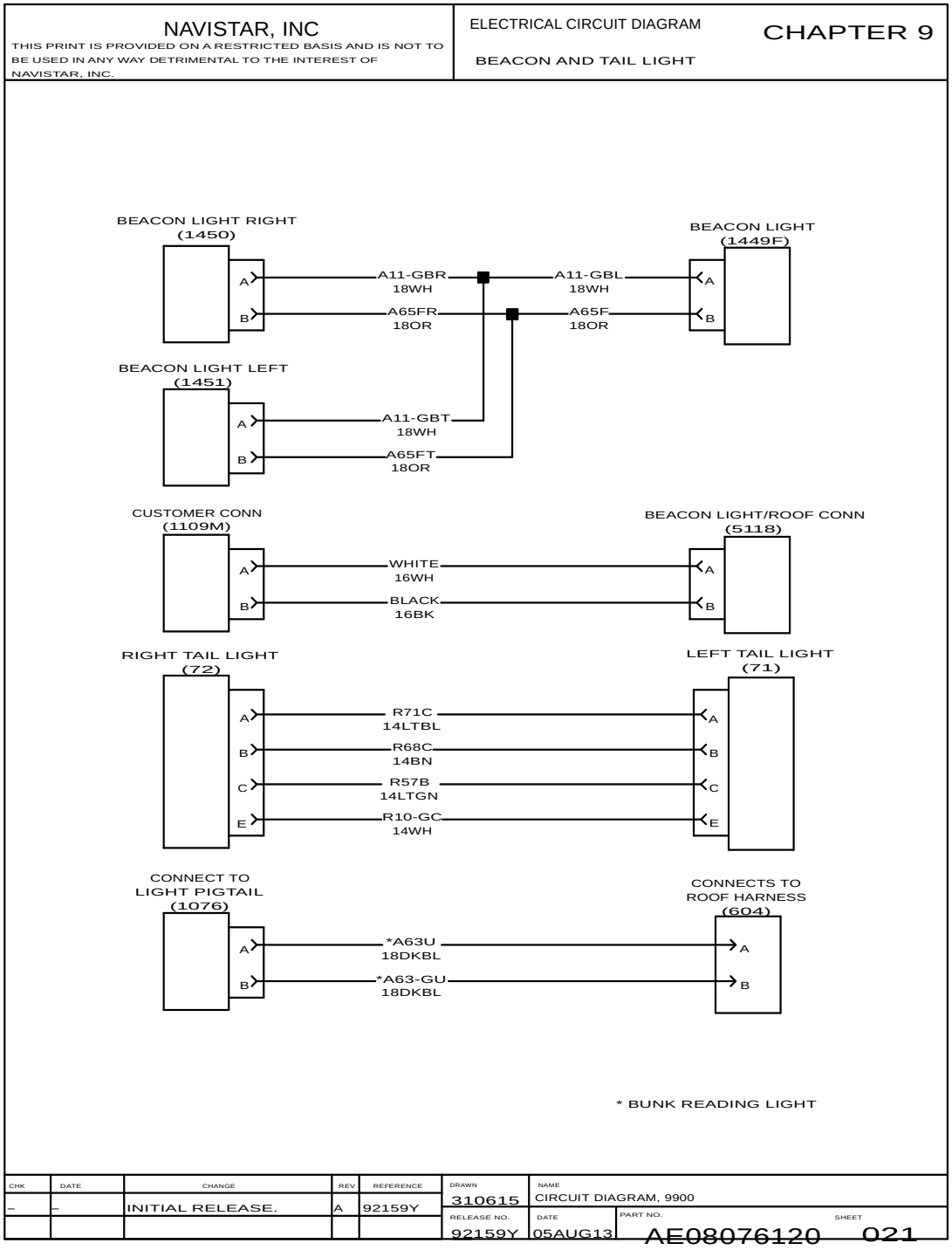

Figure 141 Beacon and Tail Light.

9.22. BEACON AND TAIL LIGHT (CONT.), P. 22

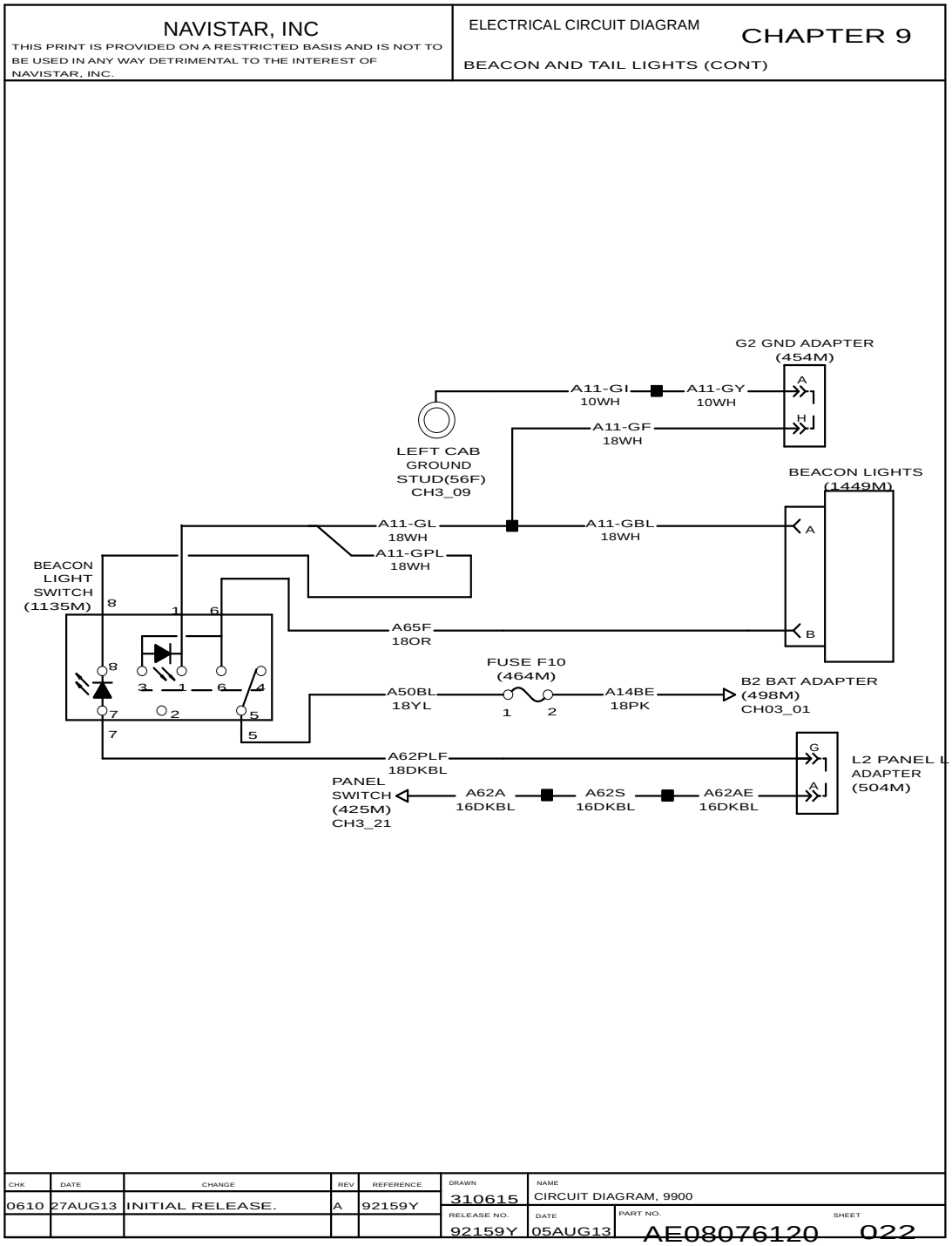

Figure 142 Beacon and Tail Light (Cont.)

9.23. DRL PARK BRAKE SWITCHES, P. 23

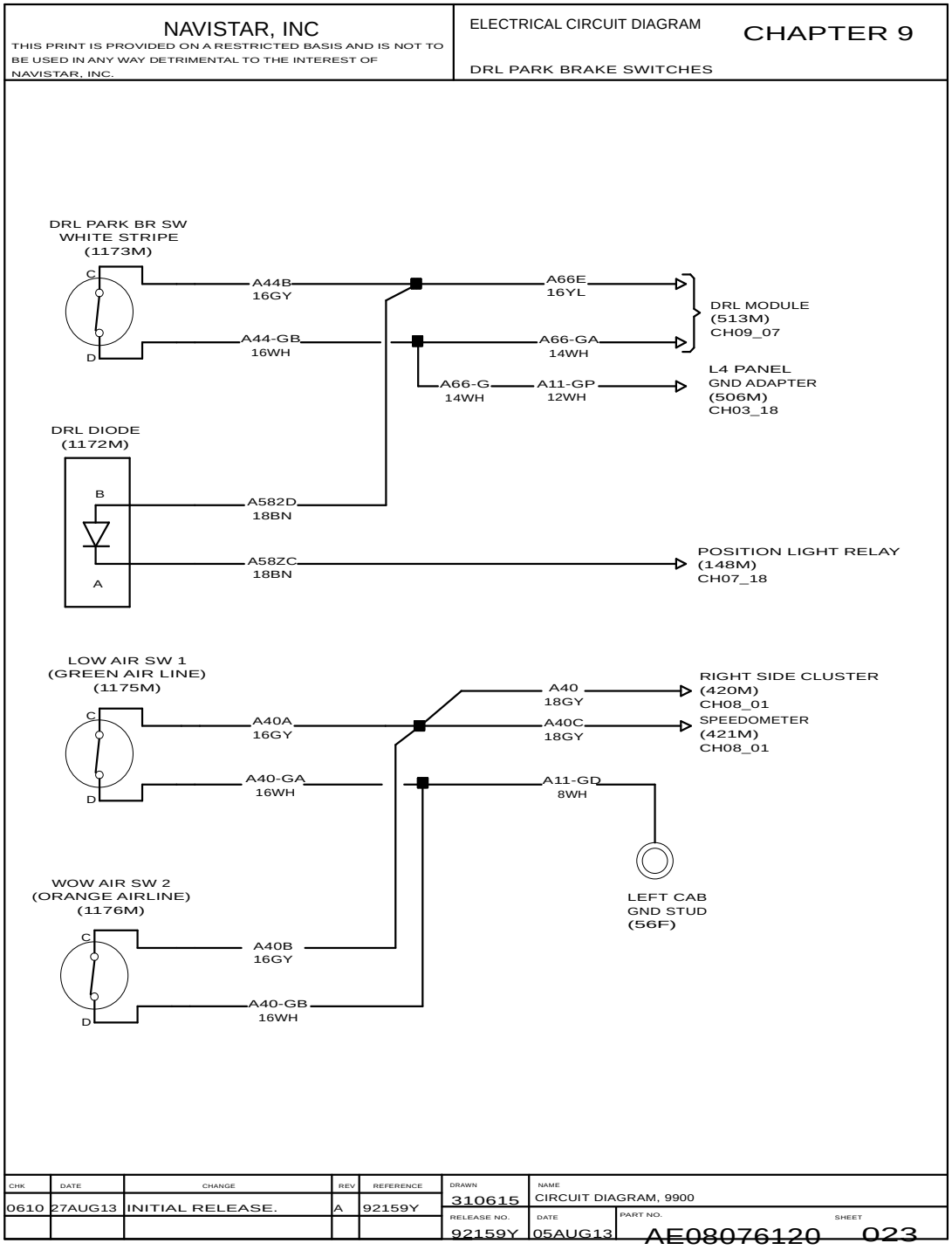

Figure 143 DRL Park Brake Switches.

9.24. LEFT TURN / RIGHT TURN SIGNAL AND HIGH BEAM INDICATOR , P. 24

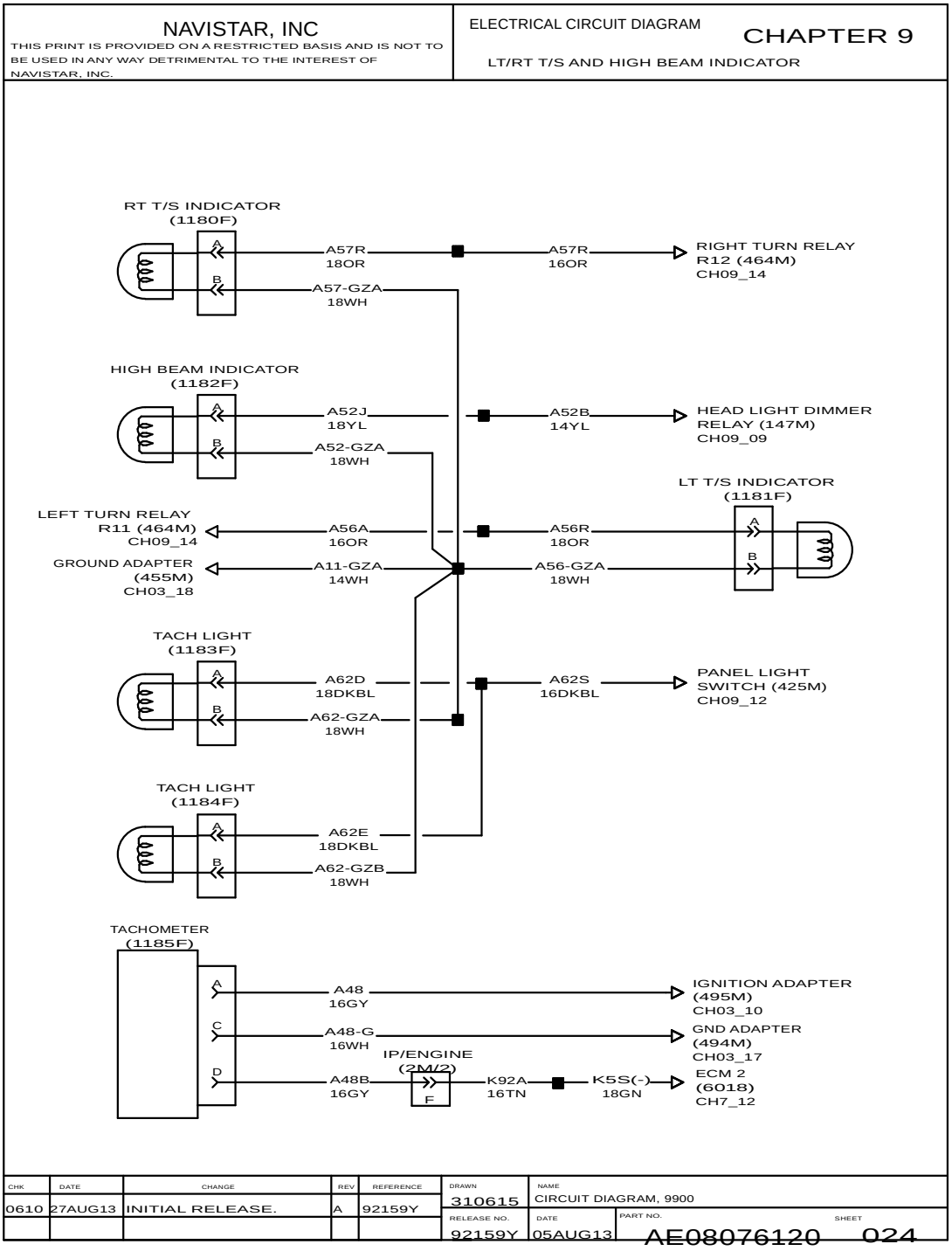

Figure 144 Left Turn / Right Turn Signal and High Beam Indicator.

9.25. CUSTOMER FURNISHED WORK LIGHT WITH AUX HEATER WITH SLEEPER BOX WITH 08WHS, P. 25

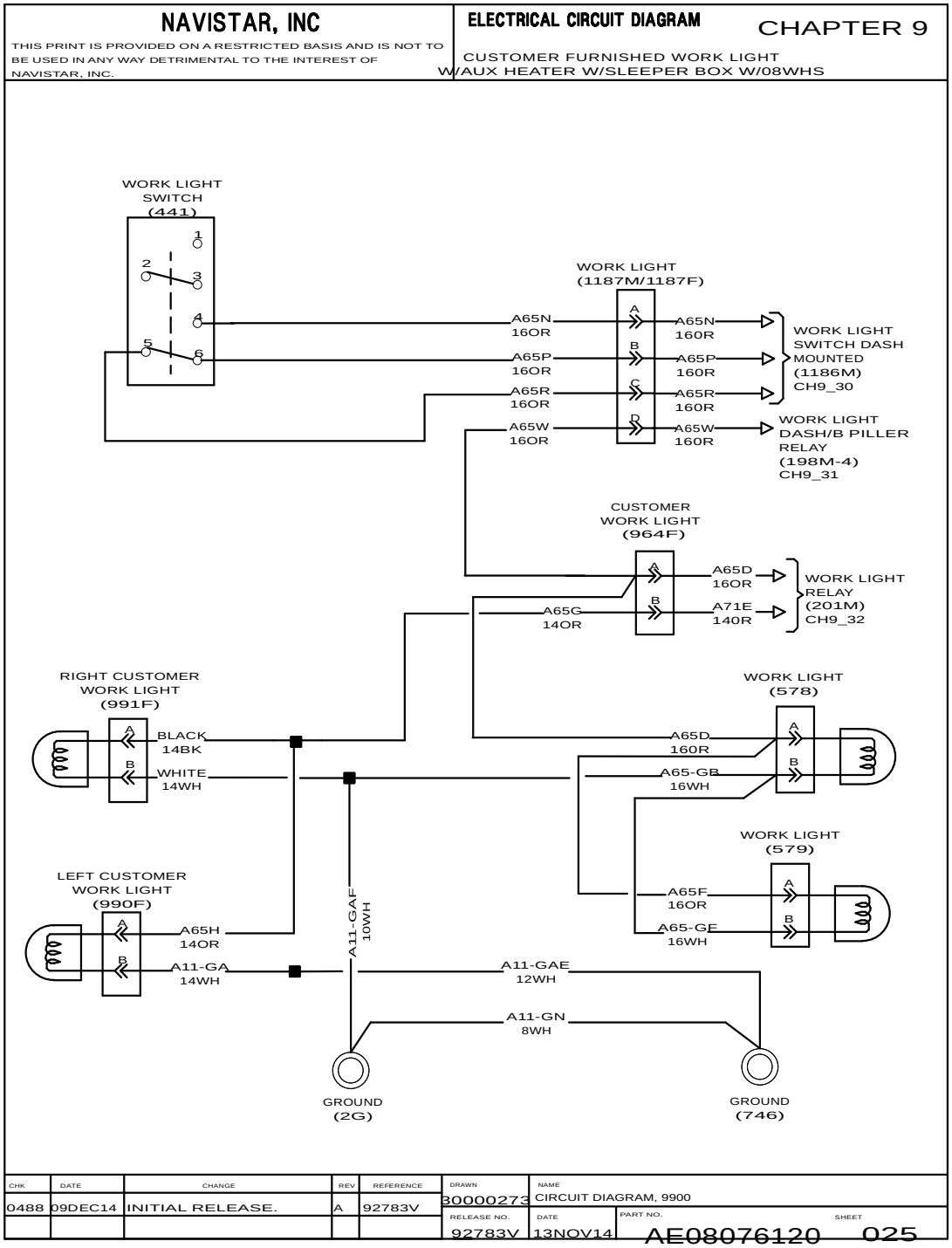

Figure 145 Customer Furnished Work Light with Aux Heater with Sleeper Box with 08WHS.

9.26. CUSTOMER FURNISHED WORK LIGHT WITH AUX HEATER WITH SLEEPER BOX WITH 808TJW, P. 26

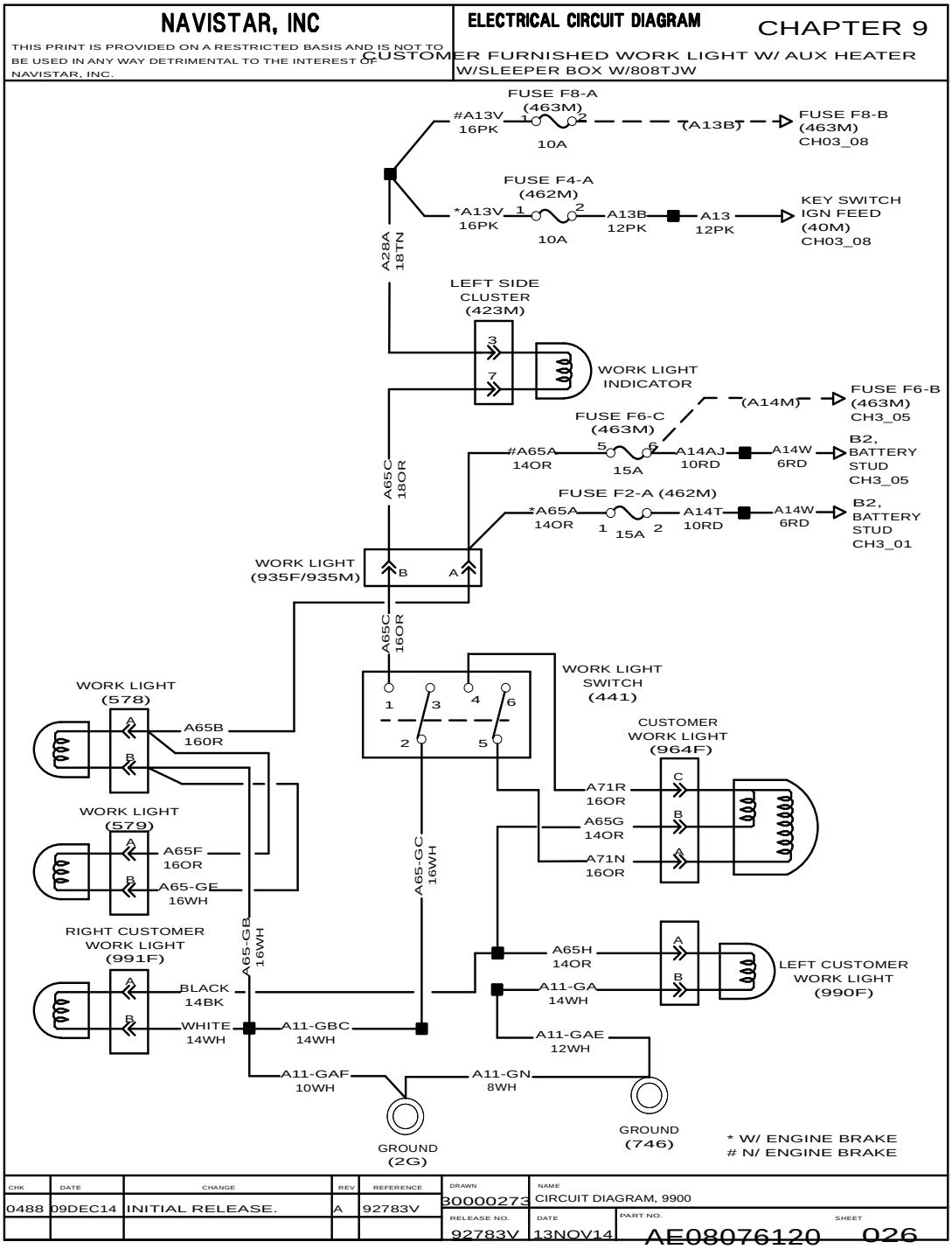

Figure 146 Customer Furnished Work Light with Aux Heater with Sleeper Box with 808TJW

9.27. FLOOD LIGHT WIRING WITHOUT SLEEPER, DAYCAB (808THA), P. 27

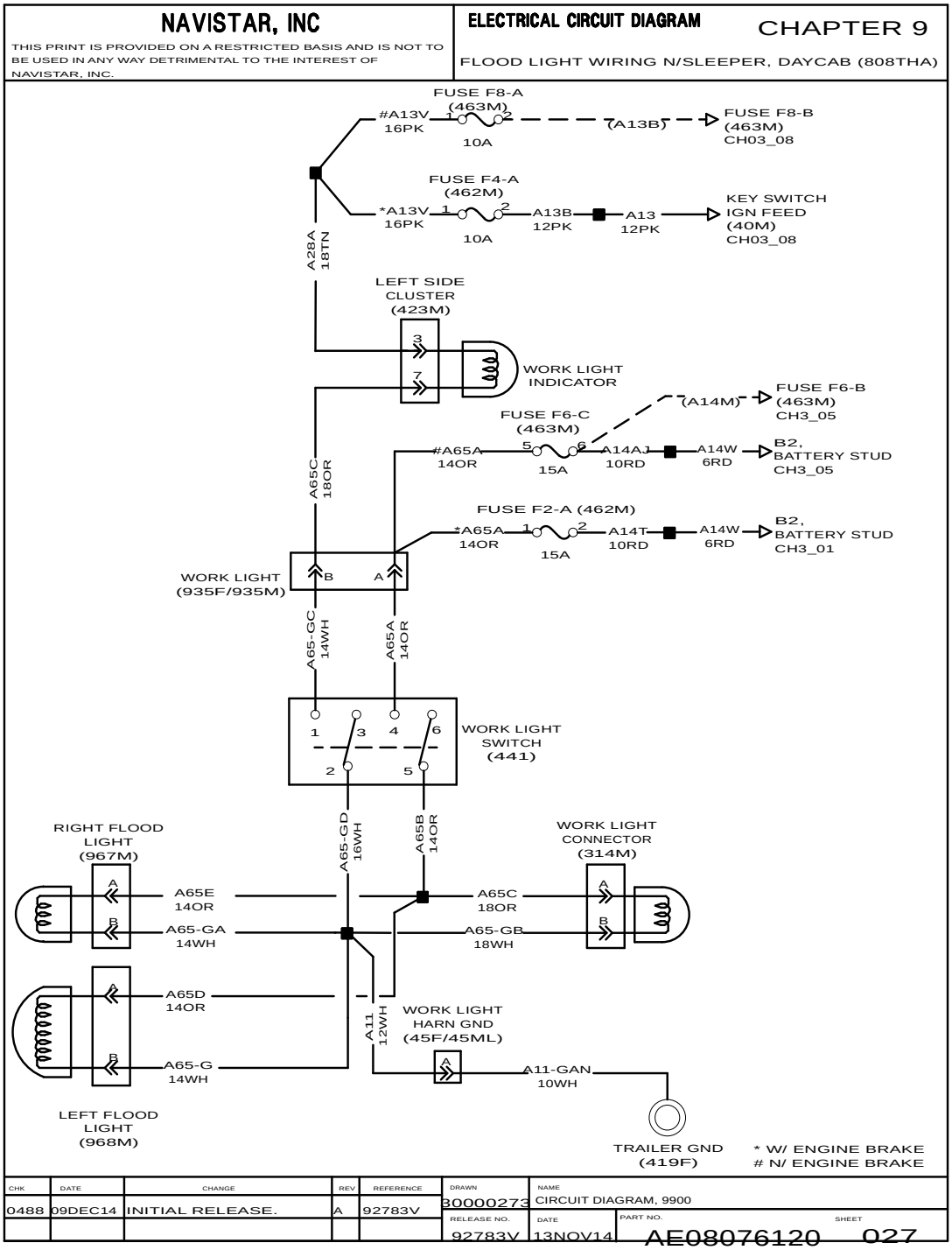

Figure 147 Flood Light Wiring without Sleeper, Daycab (808THA)

9.28. FLOOD LIGHT WIRING WITH BACK-UP LIGHTS WITH LOWERED HEATER BOX, P. 28

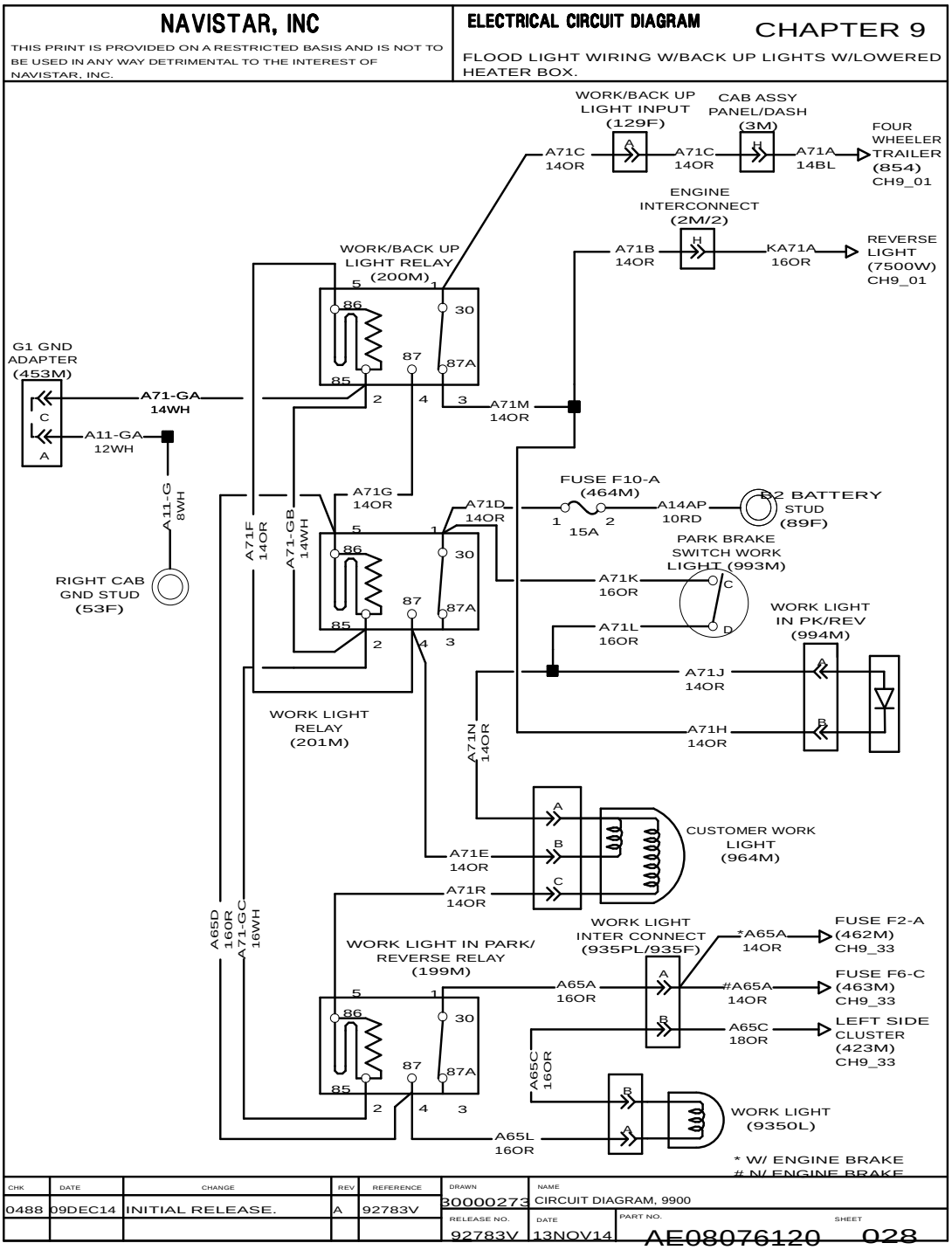

Figure 148 Flood Light Wiring with Back-Up Lights with Lowered Heater Box.

9.29. WORK LIGHT WIRING WITH 5TH WHEEL, P. 29

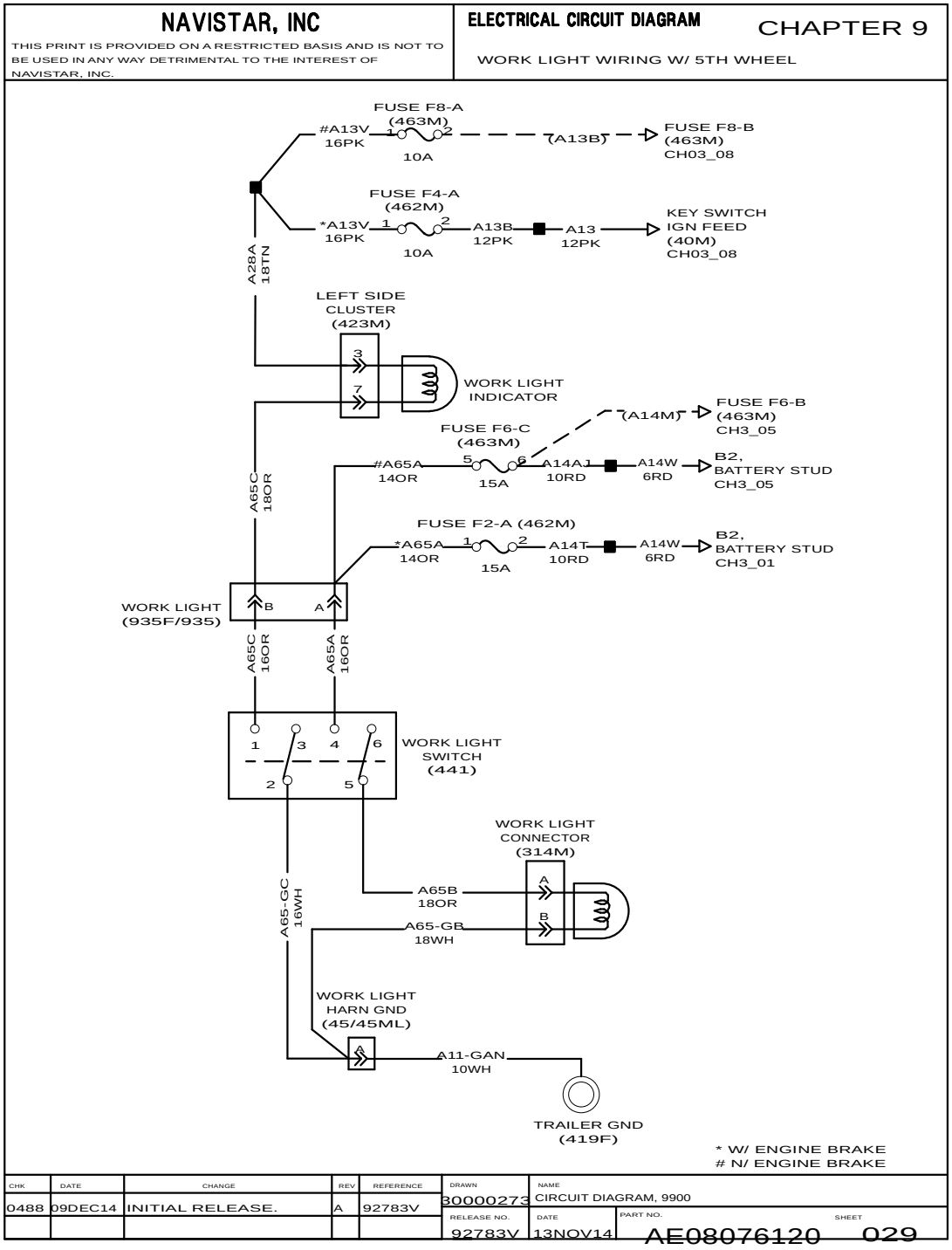

Figure 149 Work Light Wiring with 5th Wheel.

9.30. WORK LIGHT WIRING WITH DUAL (DASH AND B PILLAR) SWITCHED CUSTOMER MOUNTING WITH 08WHS, P. 30

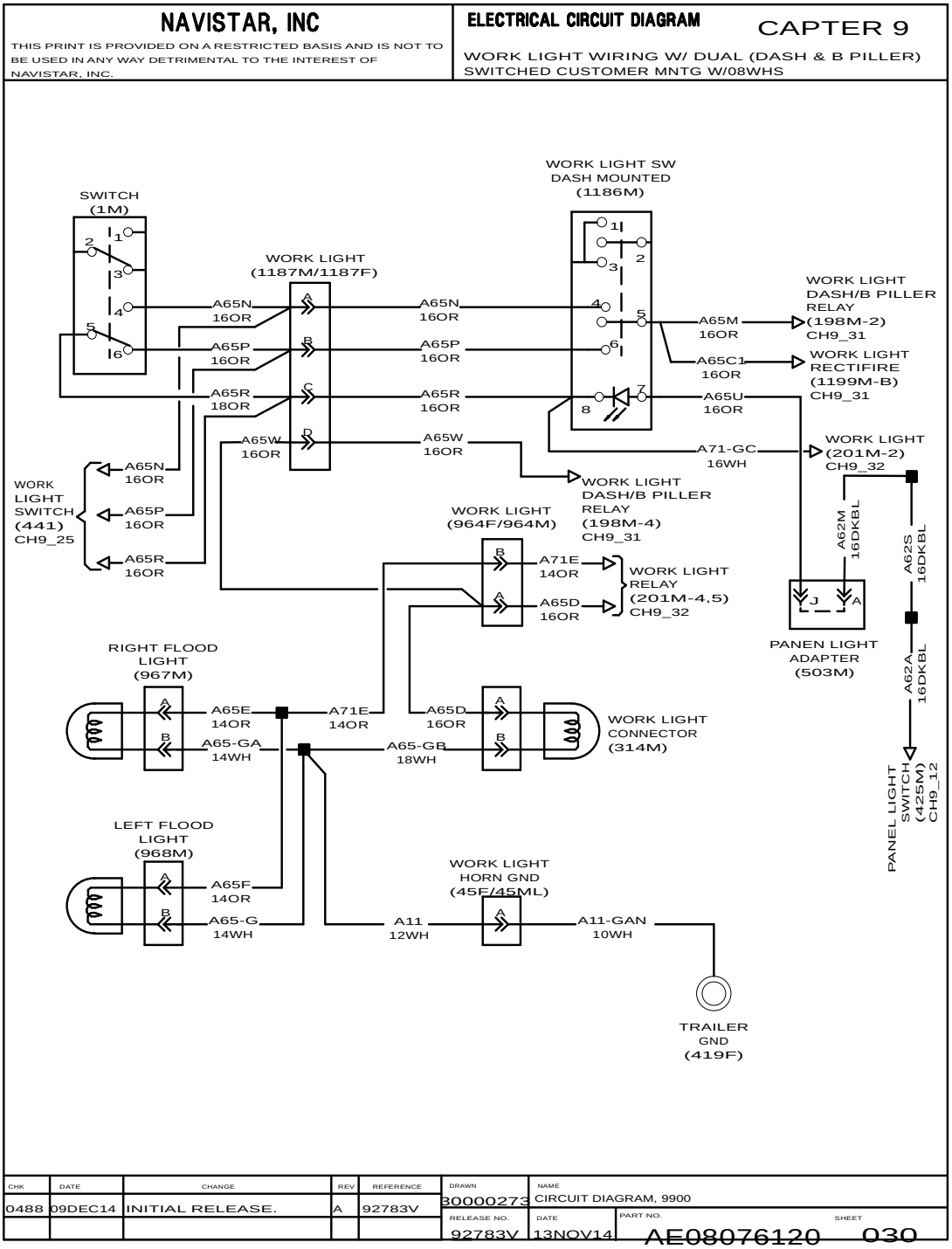

Figure 150 Work Light Wiring with Dual (Dash and B Pillar) Switched Customer Mouting with 08WHS.

9.31. WORK LIGHT WIRING WITH DUAL (DASH AND B PILLAR) SWITCHED CUSTOMER MOUNTING WITH 08WHS (CONT.), P. 31

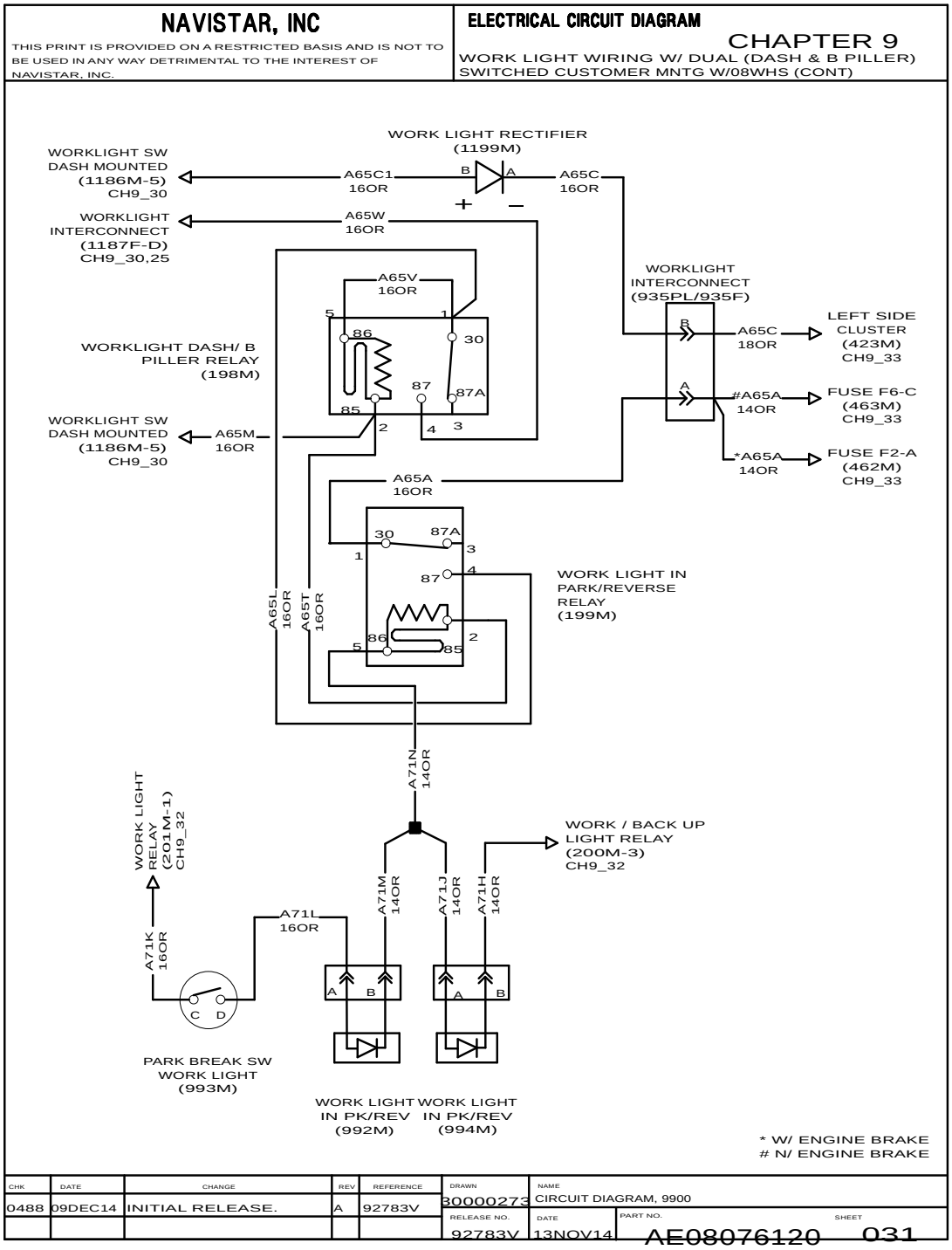

Figure 151 Work Light Wiring with Dual (Dash and B Pillar) Switched Customer Mounting with 08WHS (Cont.)

9.32. WORK LIGHT WIRING WITH DUAL (DASH AND B PILLAR) SWITCHED CUSTOMER MOUNTING WITH 08WHS (CONT.), P. 32

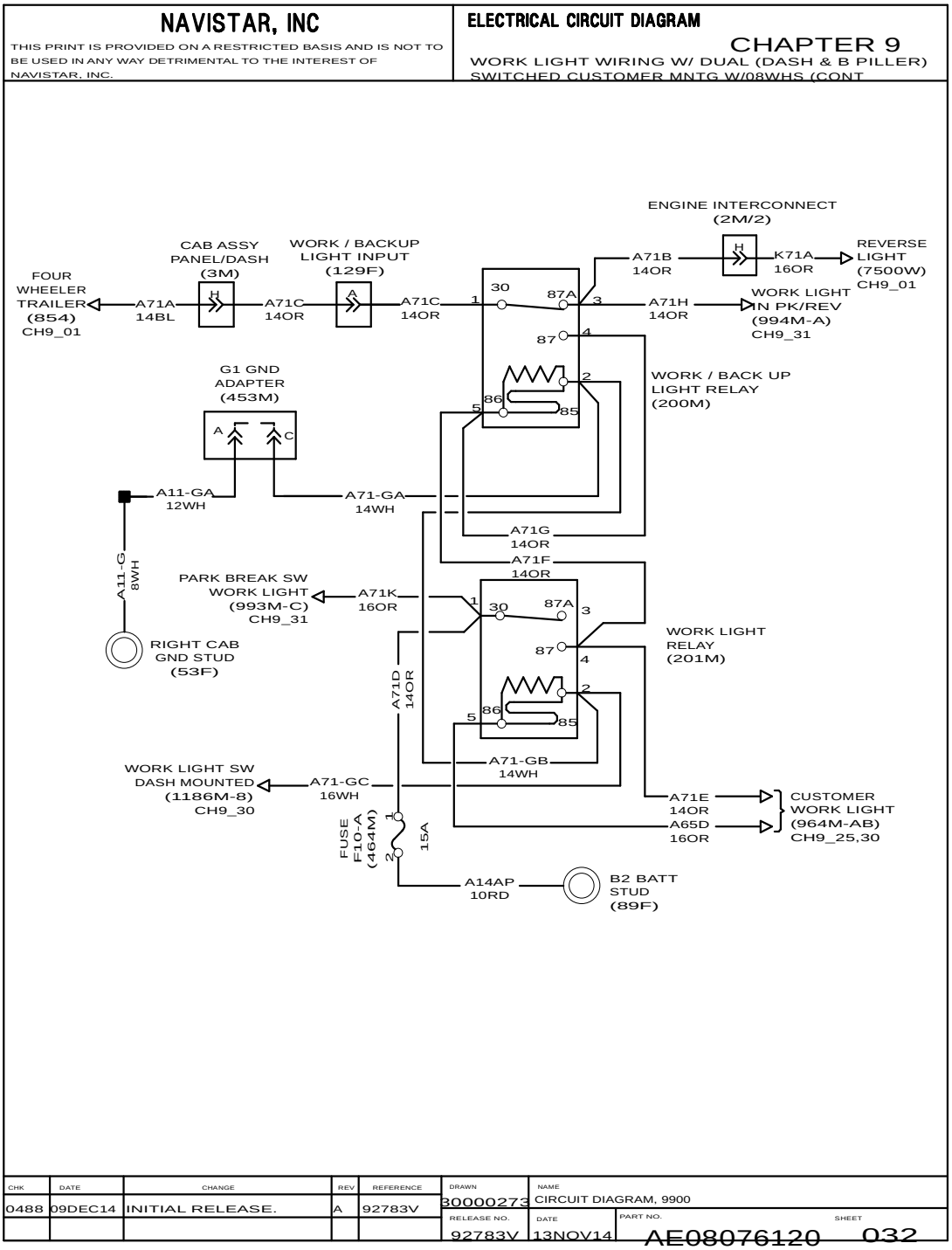

Figure 152 Work Light Wiring with Dual (Dash and B Pillar) Switched Customer Mounting with 08WHS (Cont.)

9.33. WORK LIGHT WIRING WITH 0808TLP, P. 33

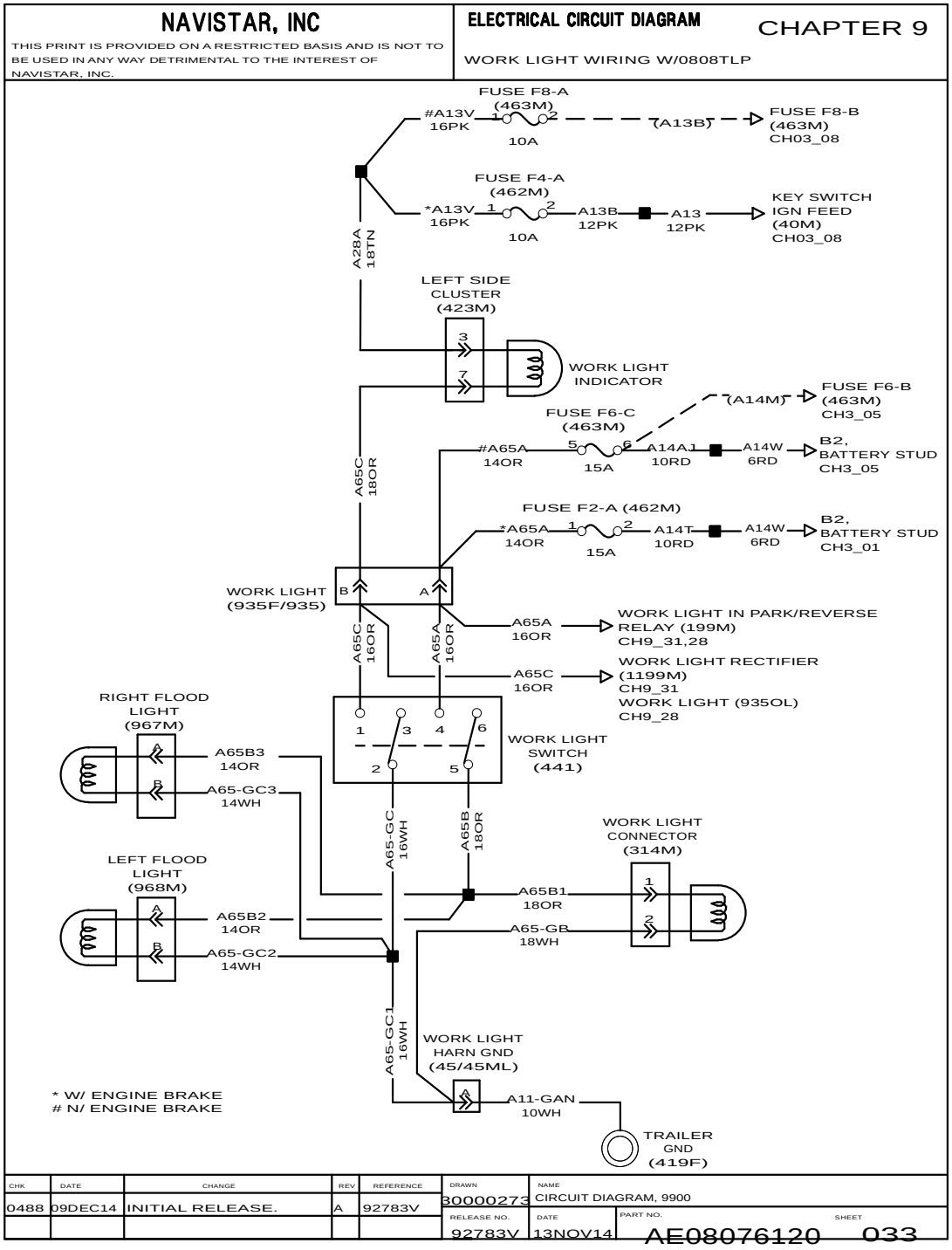

Figure 153 Work Light Wiring with 0808TLP.

9.34. WORK LIGHT WIRING WITH 118 PRO WITH 0808TJW WITH NO IDLE, P. 34

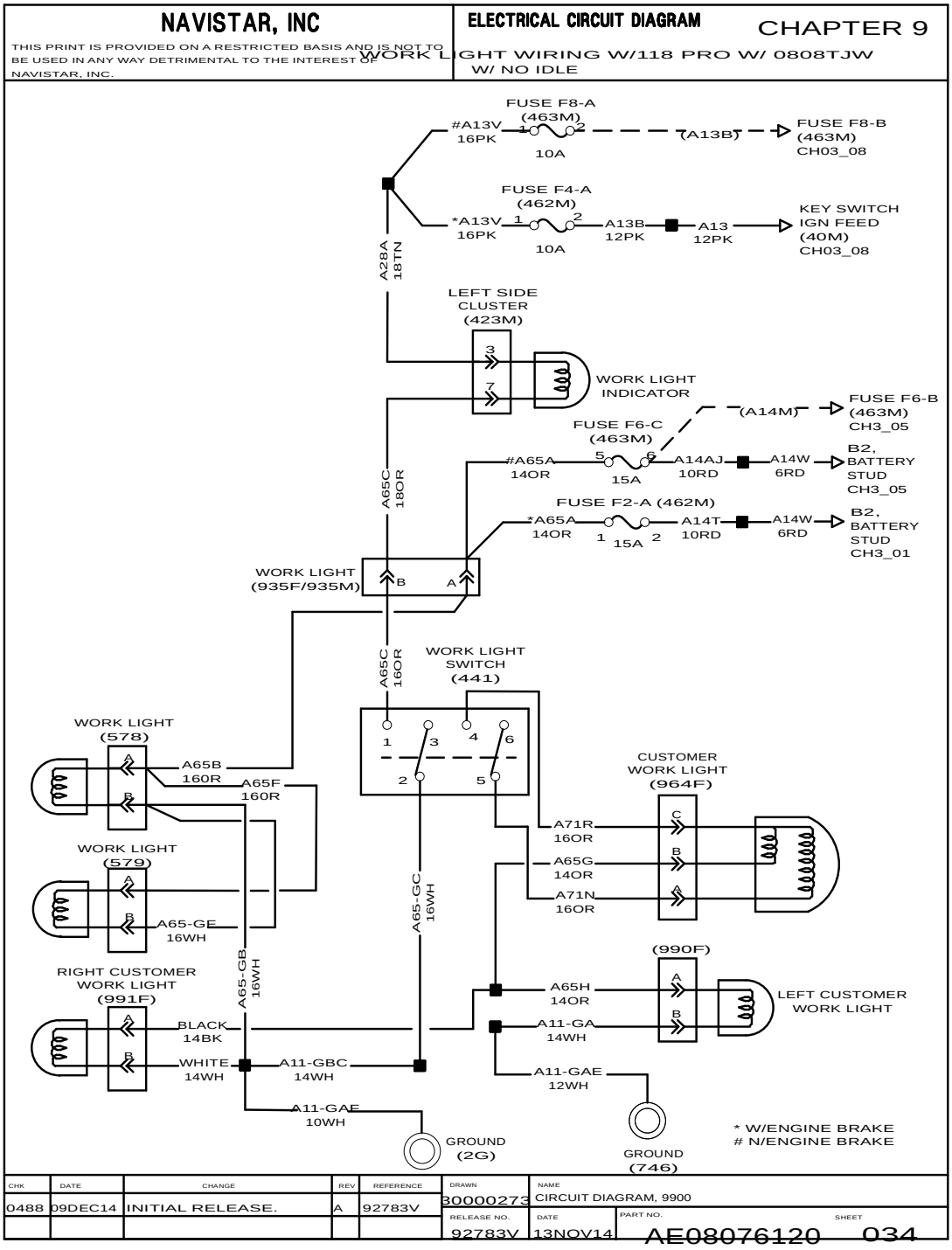

Figure 154 Work Light Wiring with 118 Pro with 0808TJW with No Idle.

9.35. WORK LIGHT WIRING WITH 0808TJW, P. 35

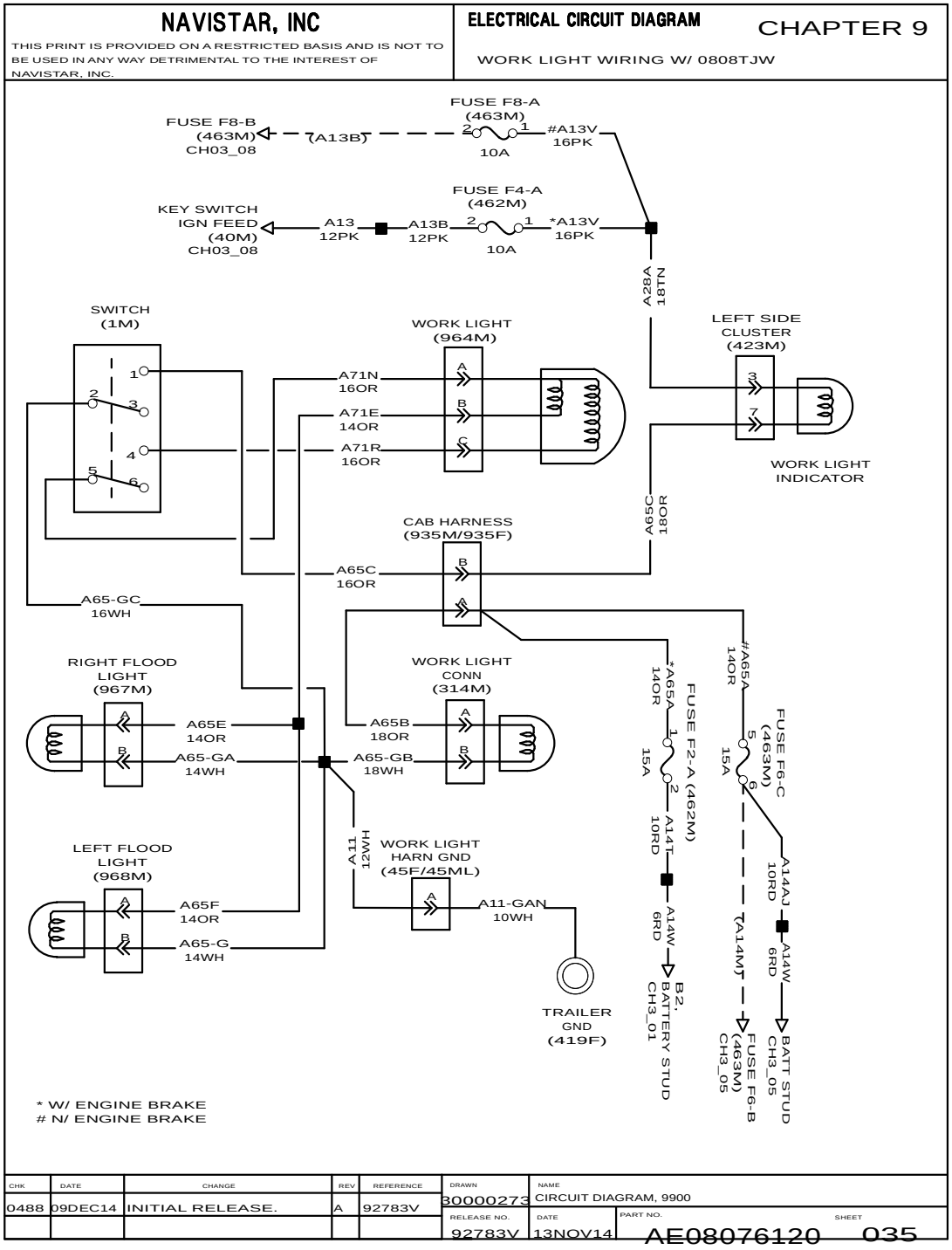

Figure 155 Work Light Wiring with 0808TJW.

9.36. WORK LIGHT WIRING WITH 97 AND 72 PRO-SLEEPER WITH LOW HEATER BOX WITH SLEEPER BOX P. 36

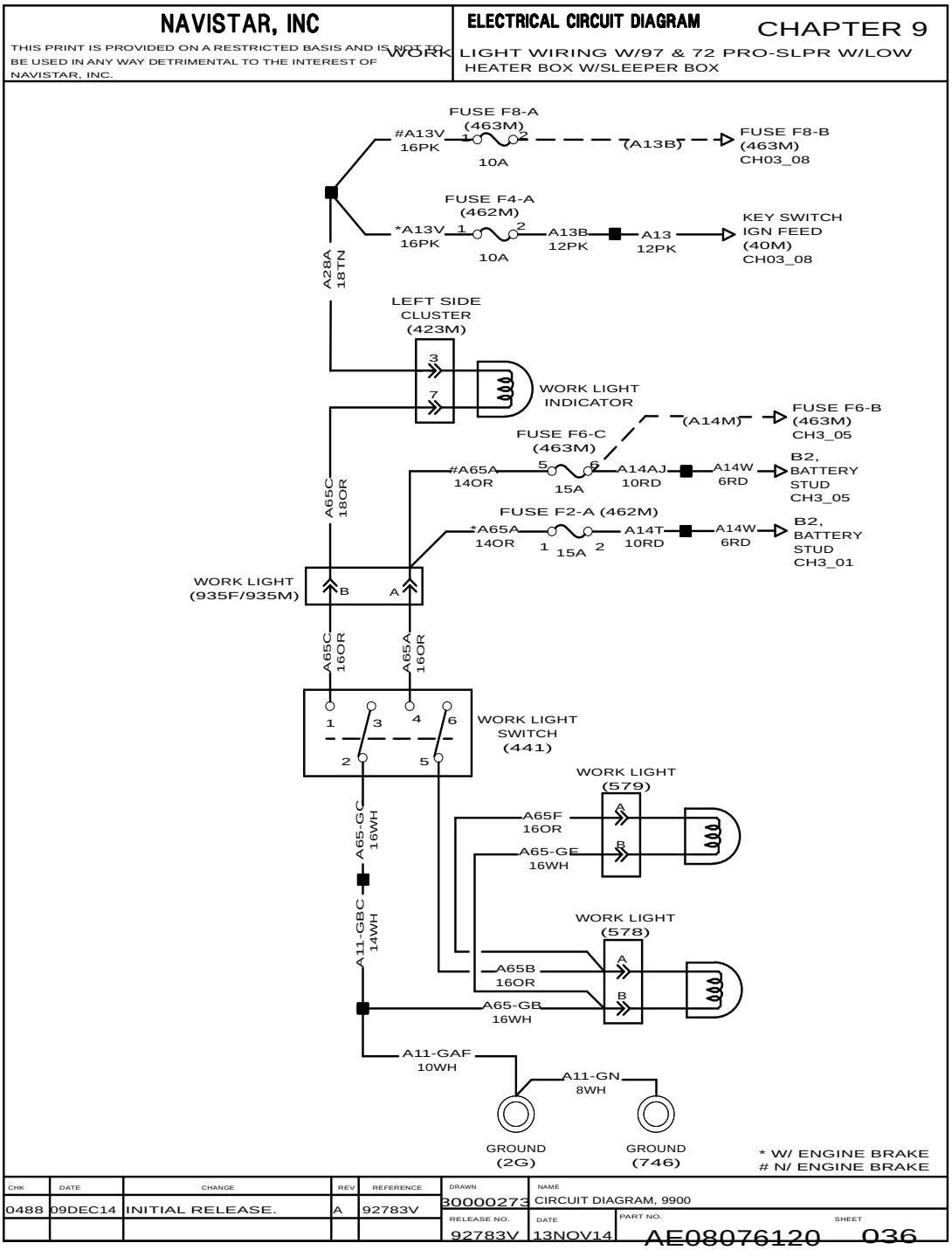

Figure 156 Work Light Wiring with 97 and 72 Pro-Sleeper with Low Heater Box with Sleeper Box.

CHASSIS ACCESSORIES (CHAPTER 10)

10.1. AIR DRYER, P. 1

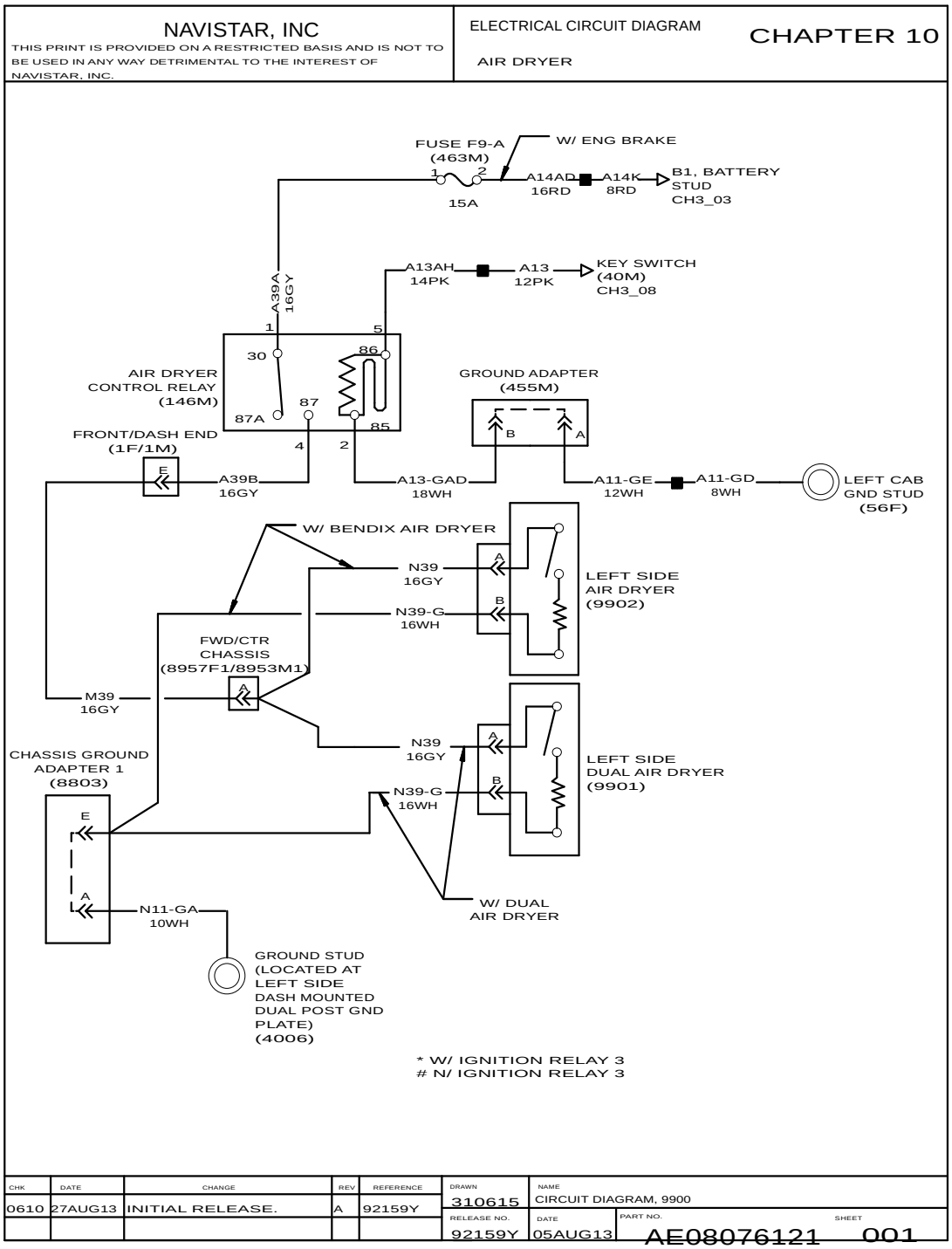

Figure 157 Air Dryer.

10.2. BENDIX AIR ABS 4CH WITH ATC, P. 2

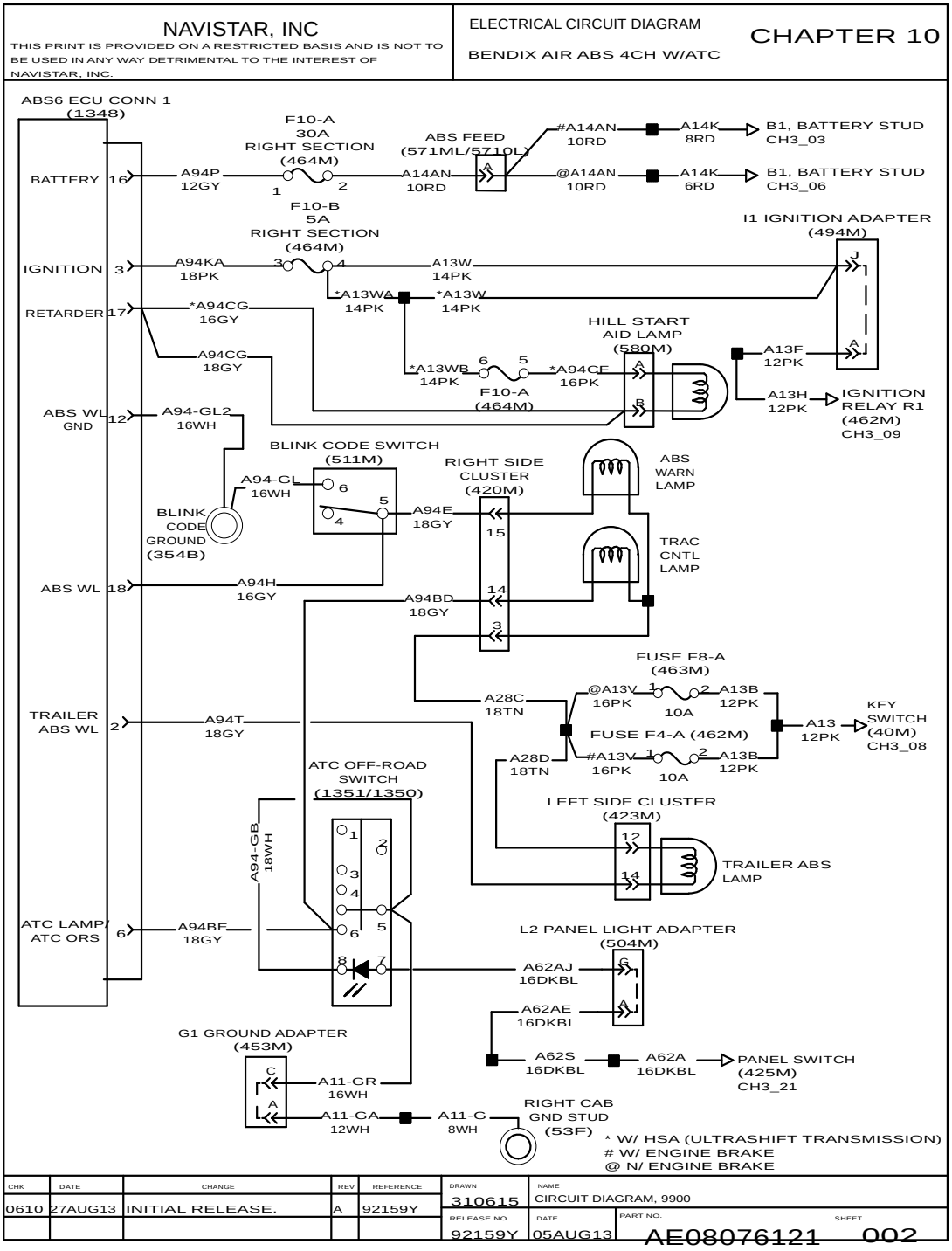

Figure 158 Bendix Air ABS 4CH with ATC.

10.3. WABCO AIR ABS WITH ATC, P. 3

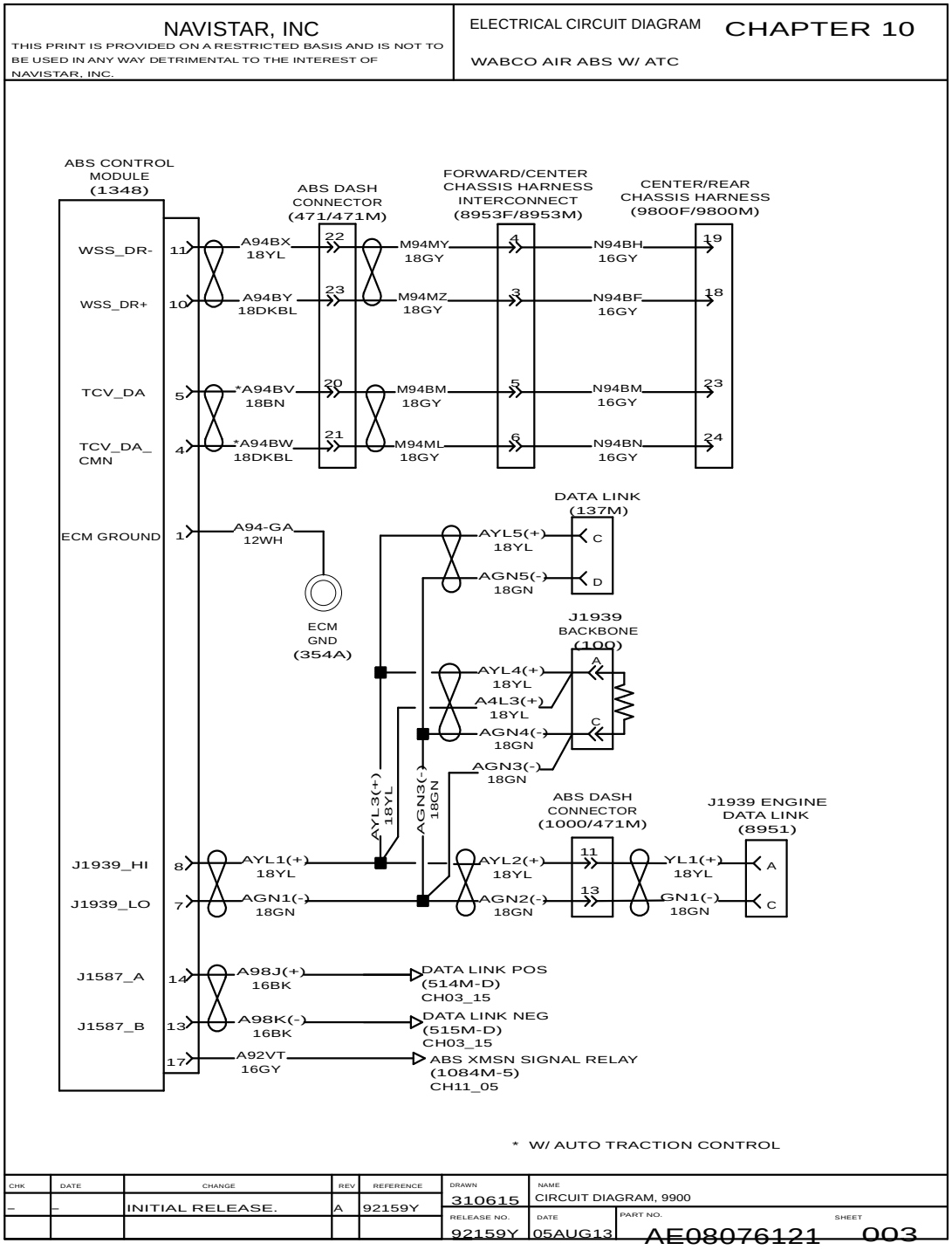

Figure 159 WABCO Air ABS with ATC.

10.4. WABCO AIR ABS WITH ATC (CONT.), P. 4

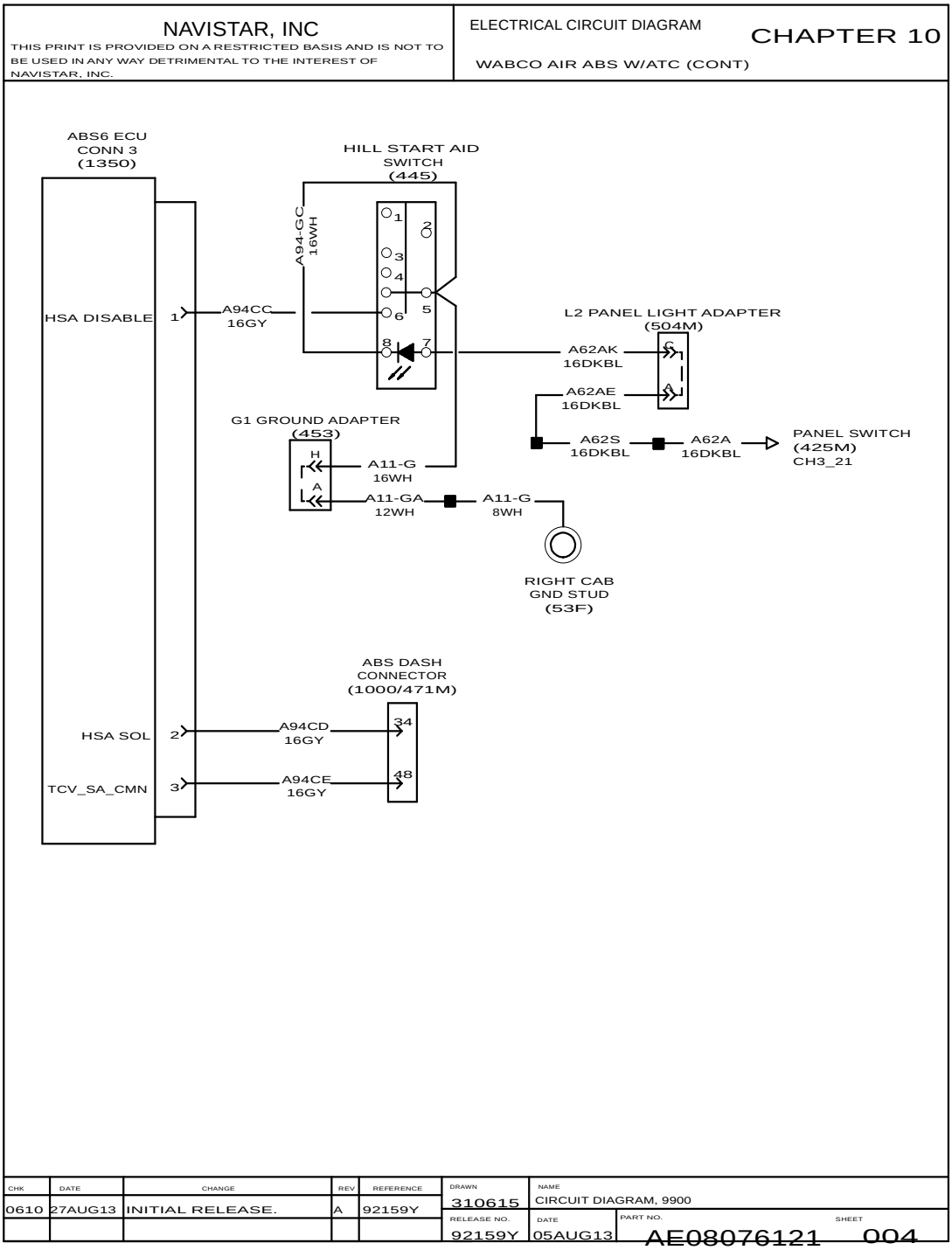

Figure 160 WABCO Air ABS with ATC (Cont.)

10.5. WABCO AIR ABS WITH ATC (CONT.), P. 5

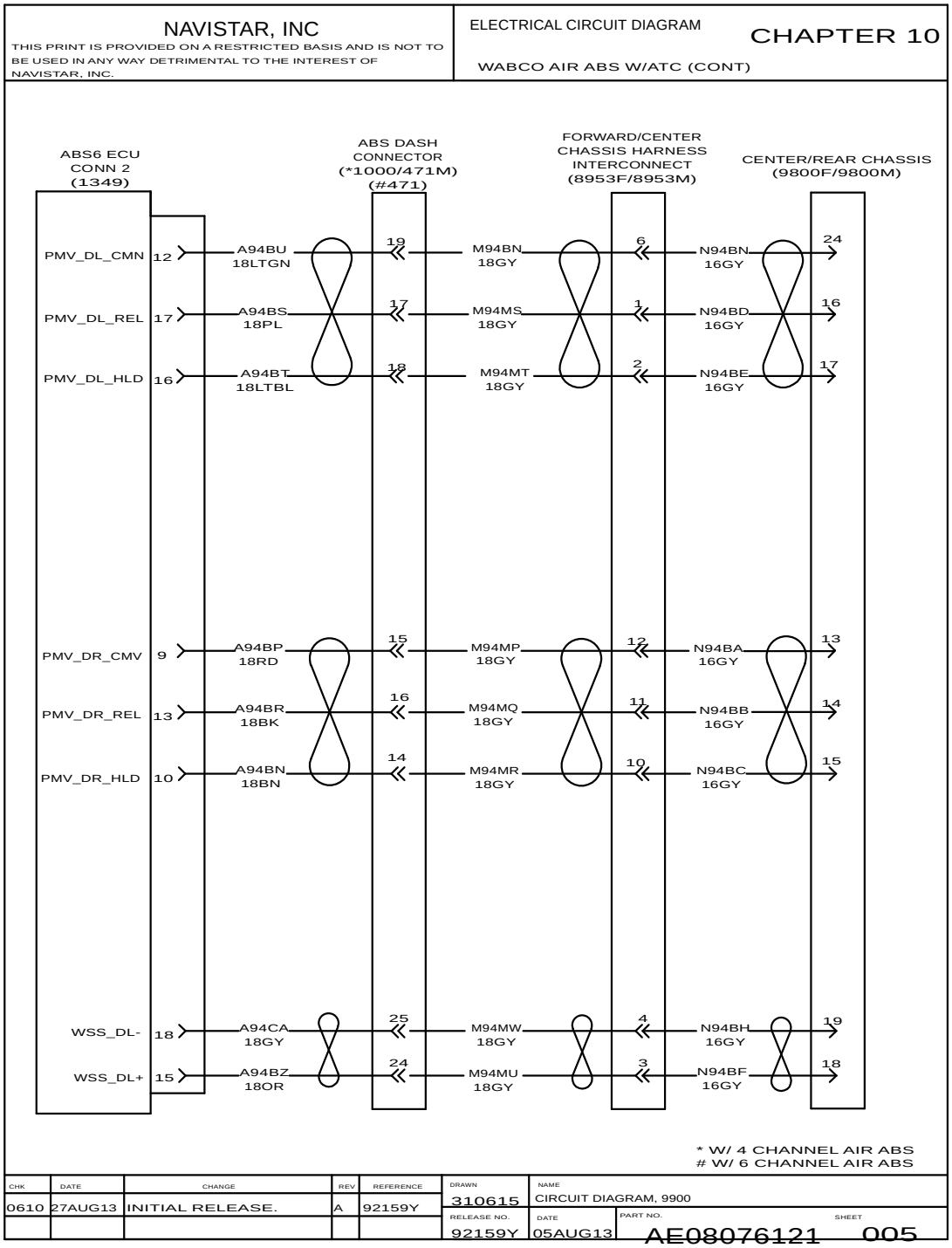

Figure 161 WABCO Air ABS with ATC (Cont.)

10.6. BENDIX AIR ABS 6CH WITH ATC, P. 6

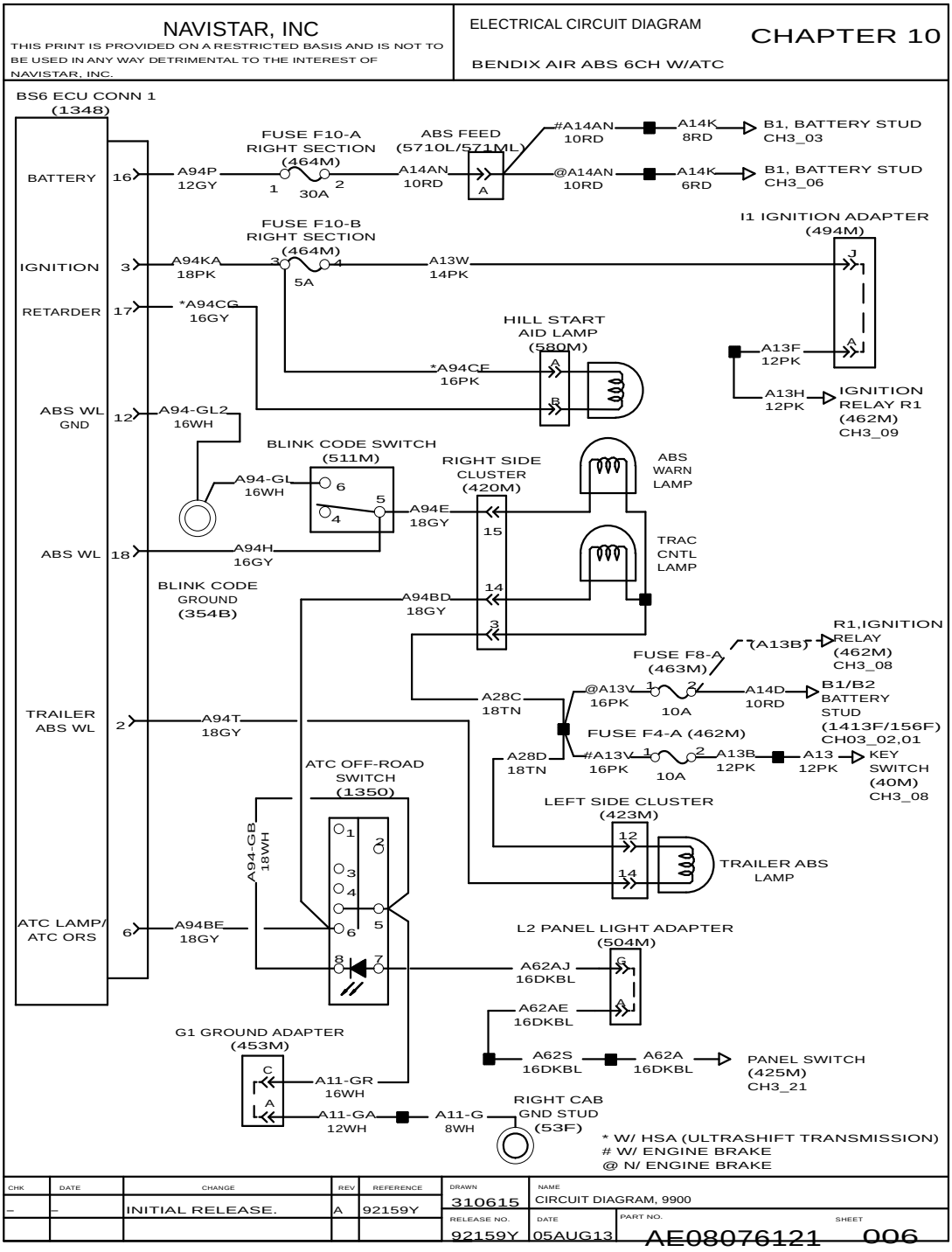

Figure 162 Bendix Air ABS 6CH with ATC.

10.7. BENDIX AIR ABS 6CH WITH ATC (CONT.), P. 7

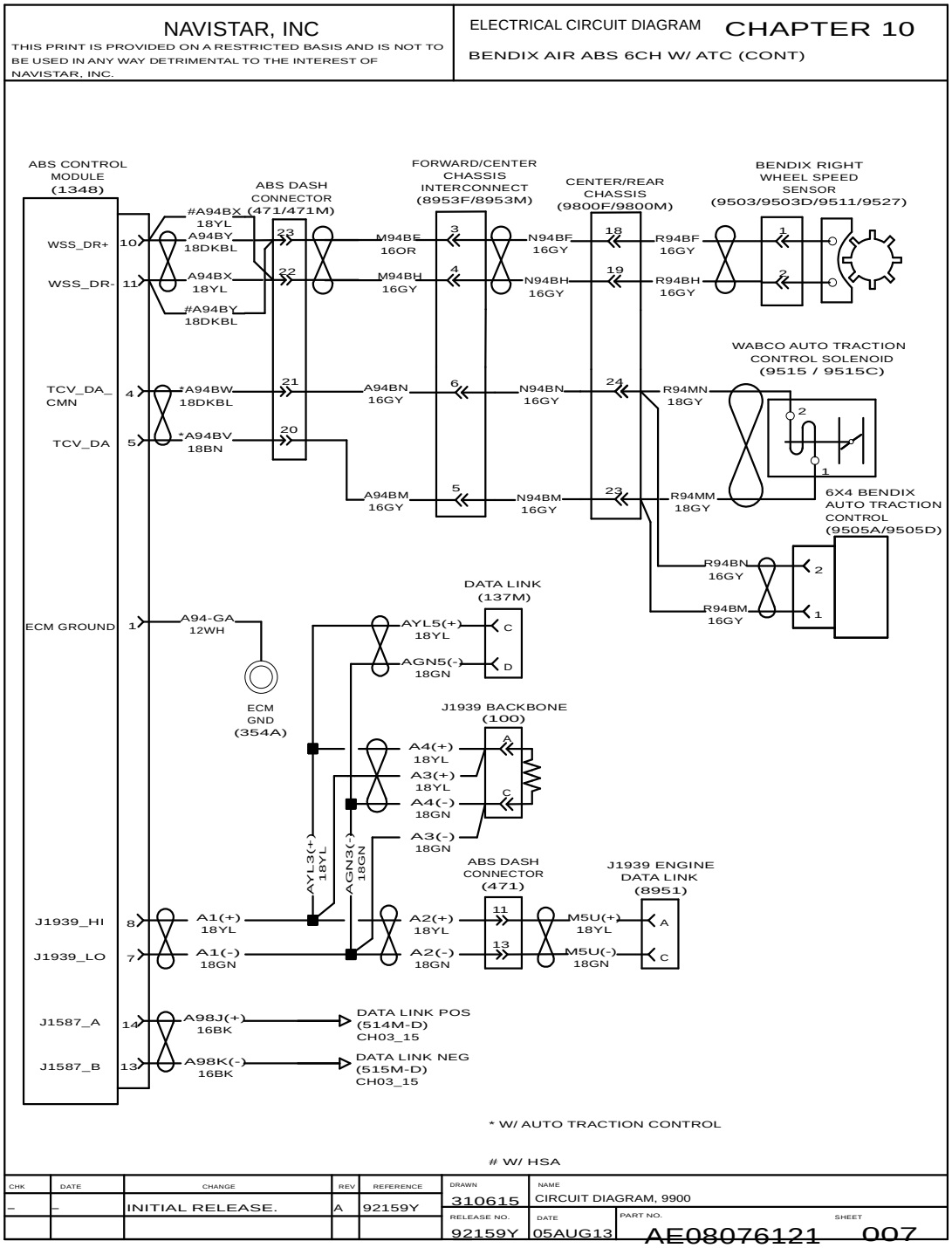

Figure 163 Bendix Air ABS 6CH with ATC (Cont.)

10.8. BENDIX AIR ABS 6CH WITH ATC (CONT.), P. 8

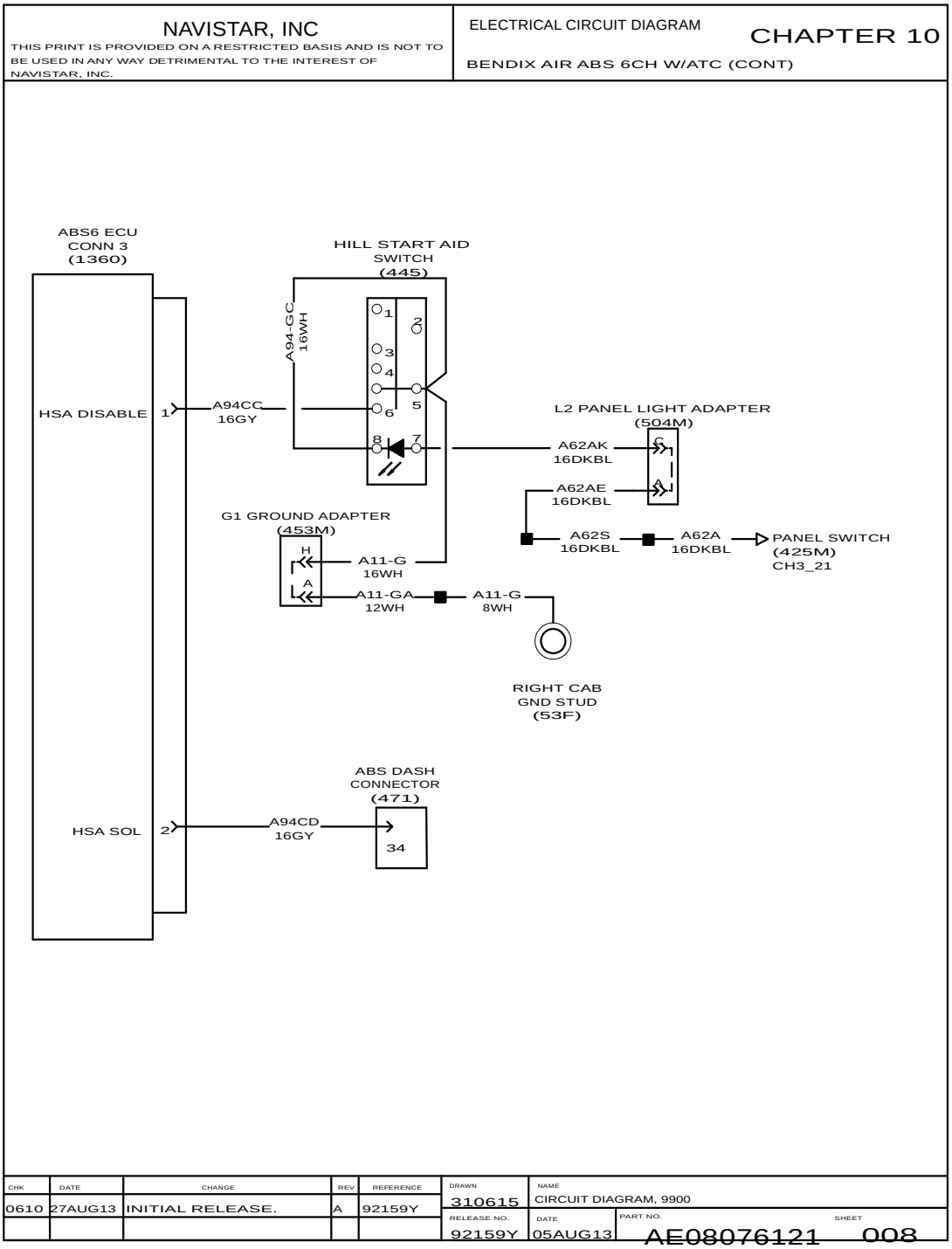

Figure 164 Bendix Air ABS 6CH with ATC (Cont.)

10.9. BENDIX AIR ABS 6CH WITH ATC (CONT.), P. 9

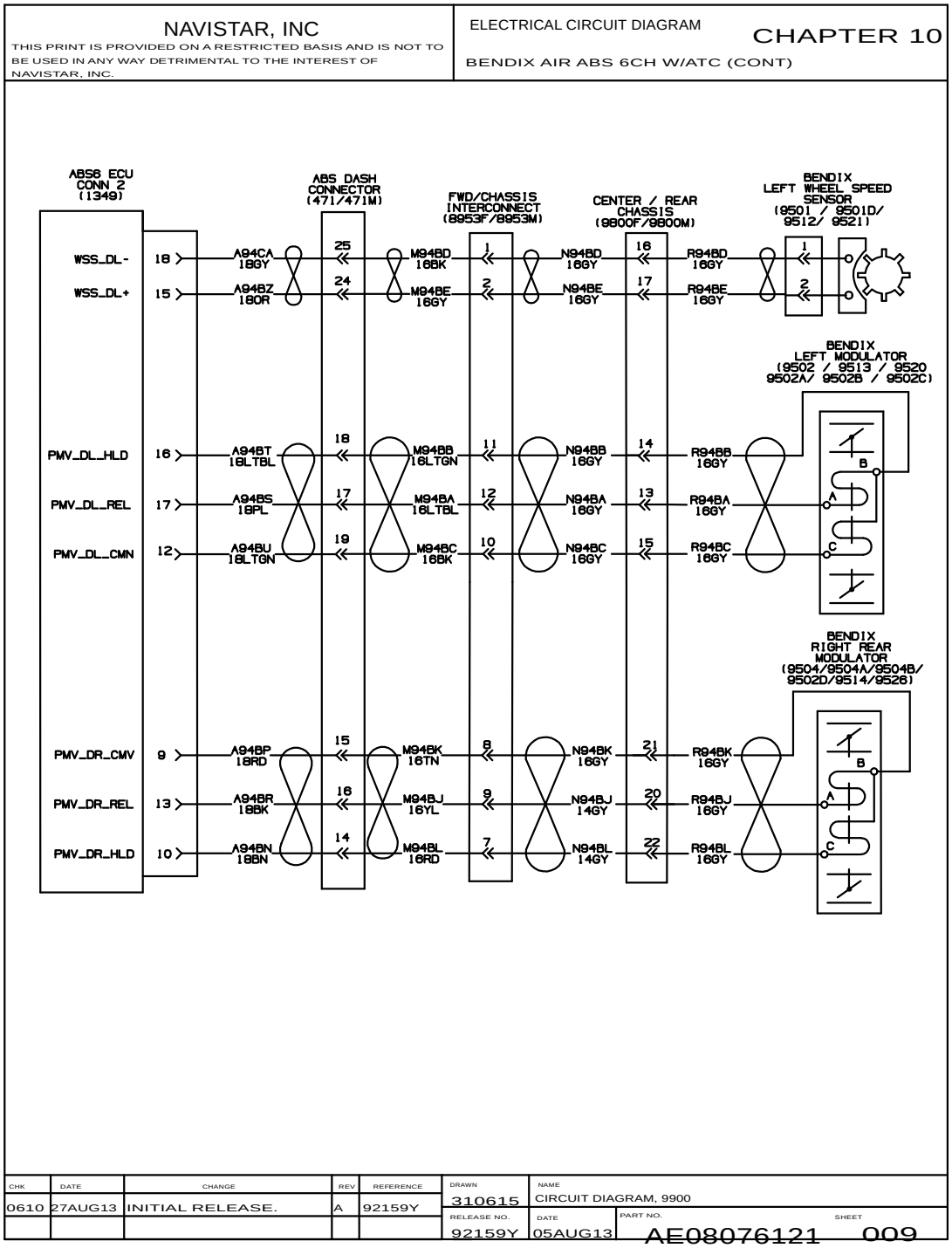

Figure 165 Bendix Air ABS 6CH with ATC (Cont.)

10.10. ABS – BENDIX AIR 6S / 6M (6 X 4) P. 10

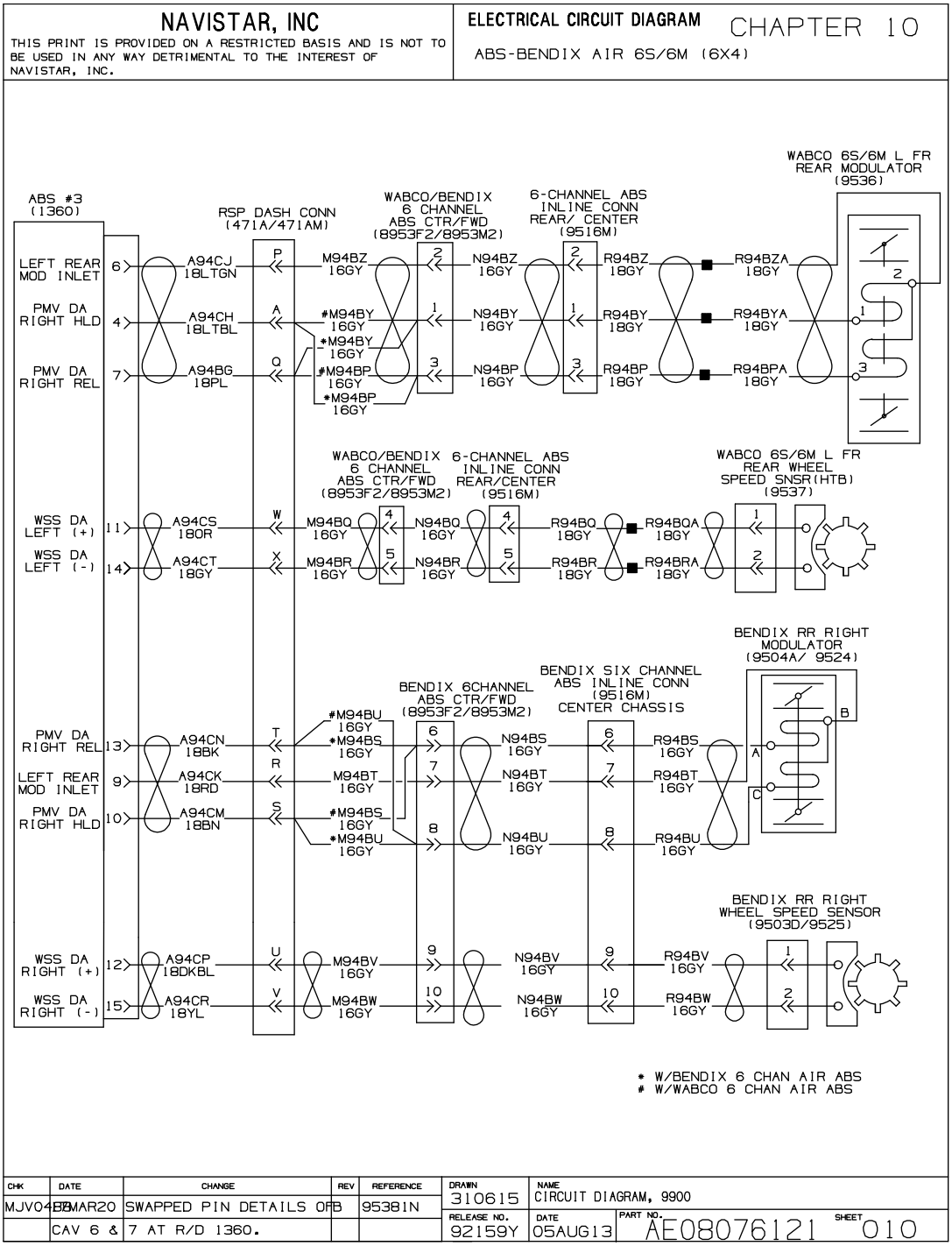

Figure 166 ABS – Bendix Air 6S / 6M (6 x 4)

10.11. BENDIX AIR ABS WITH ATC, P. 11

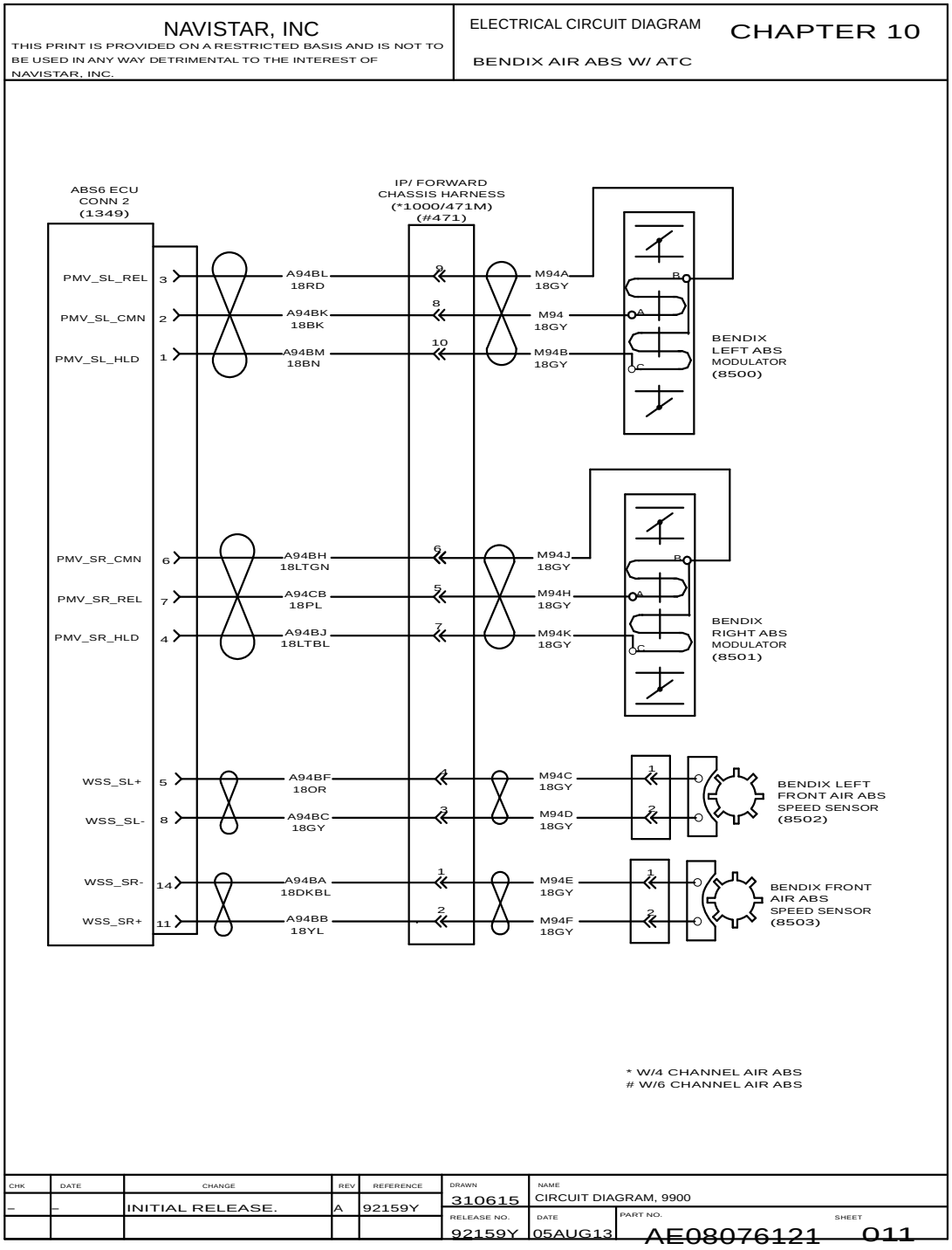

Figure 167 Bendix Air ABS with ATC.

10.12. BENDIX AIR ABS WITH ATC (CONT.), P. 12

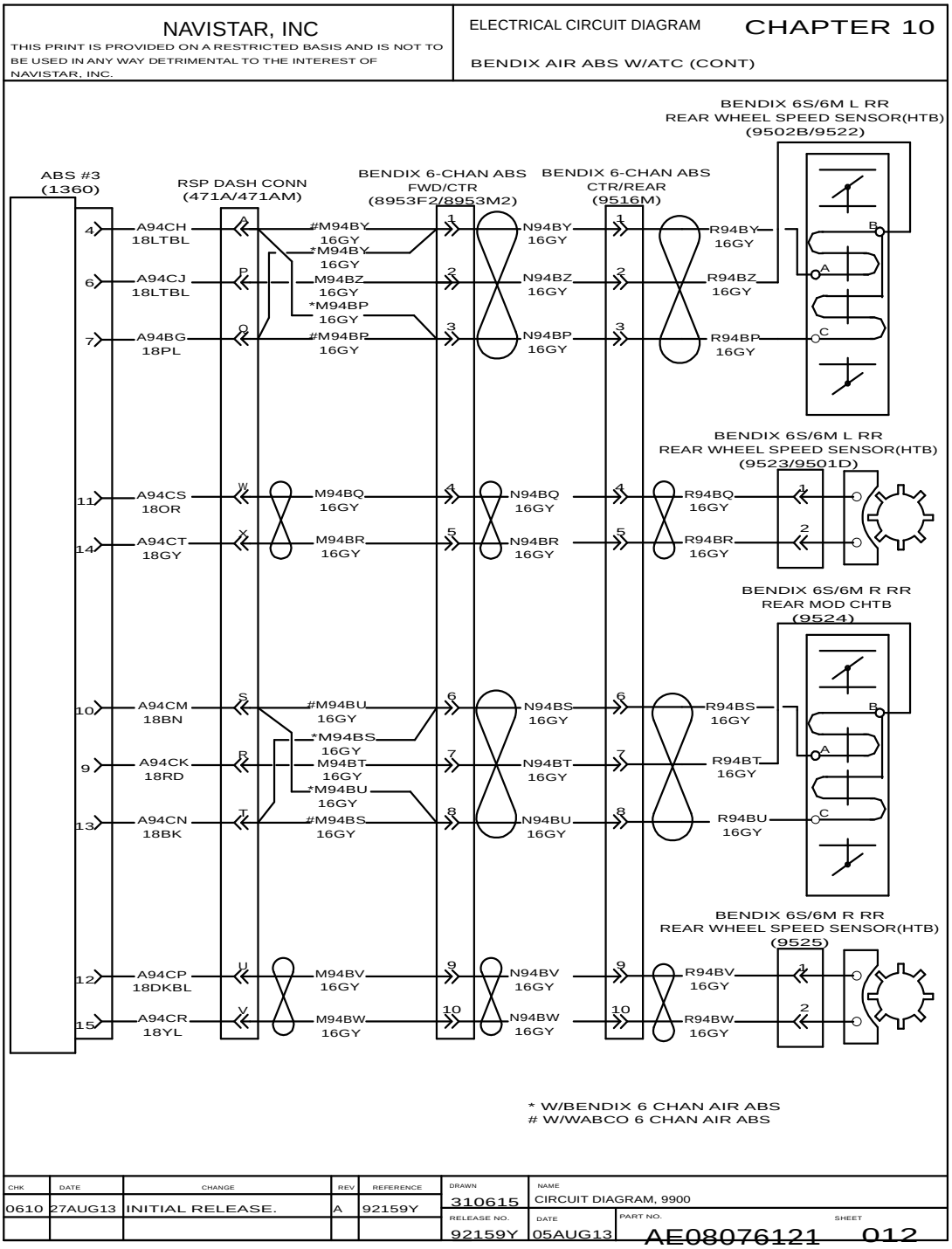

Figure 168 Bendix Air ABS with ATC (Cont.)

10.13. BENDIX ADVANCE AIR ABS, P. 13

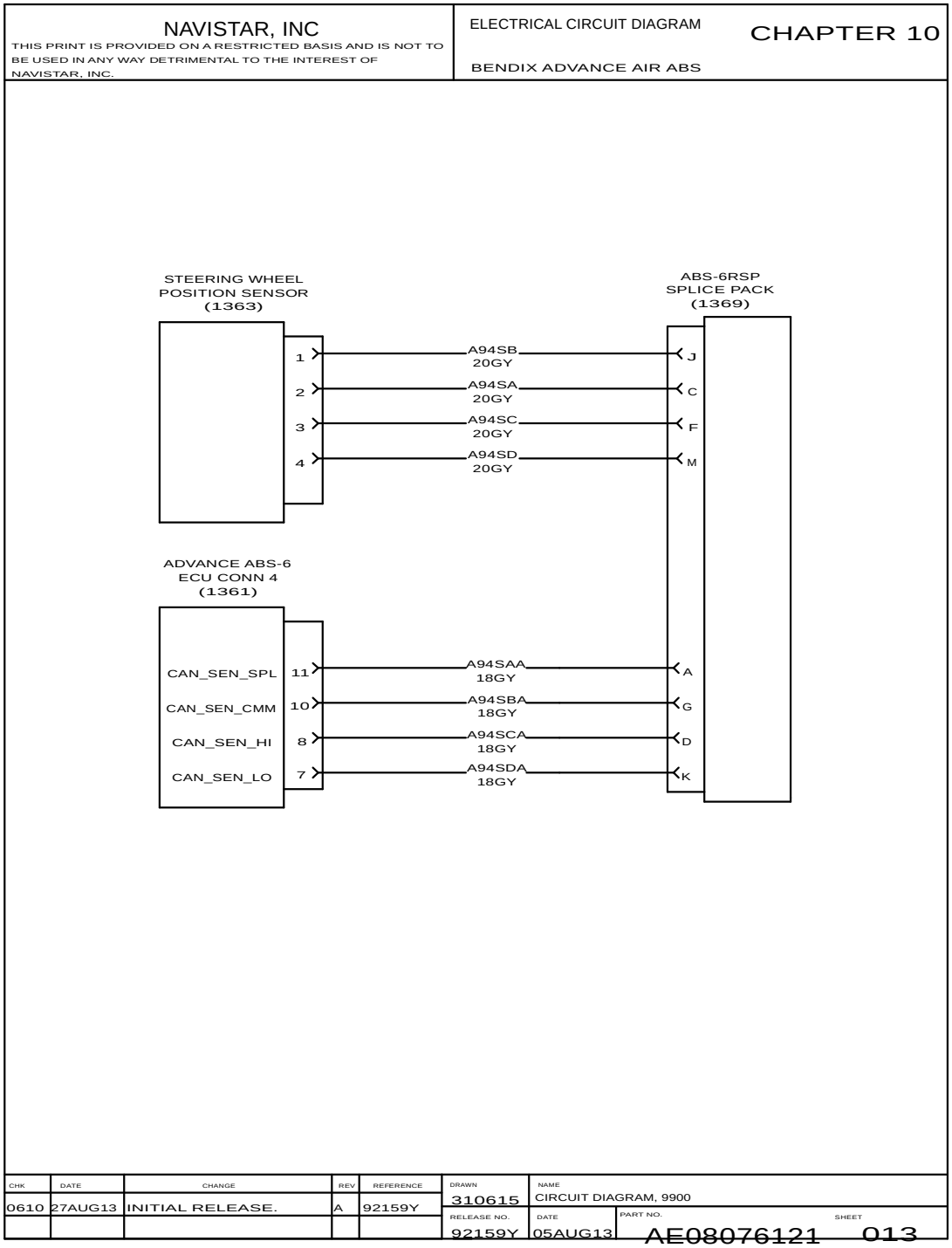

Figure 169 Bendix Advance Air ABS.

10.14. BENDIX ADVANCE AIR ABS (CONT.), P. 14

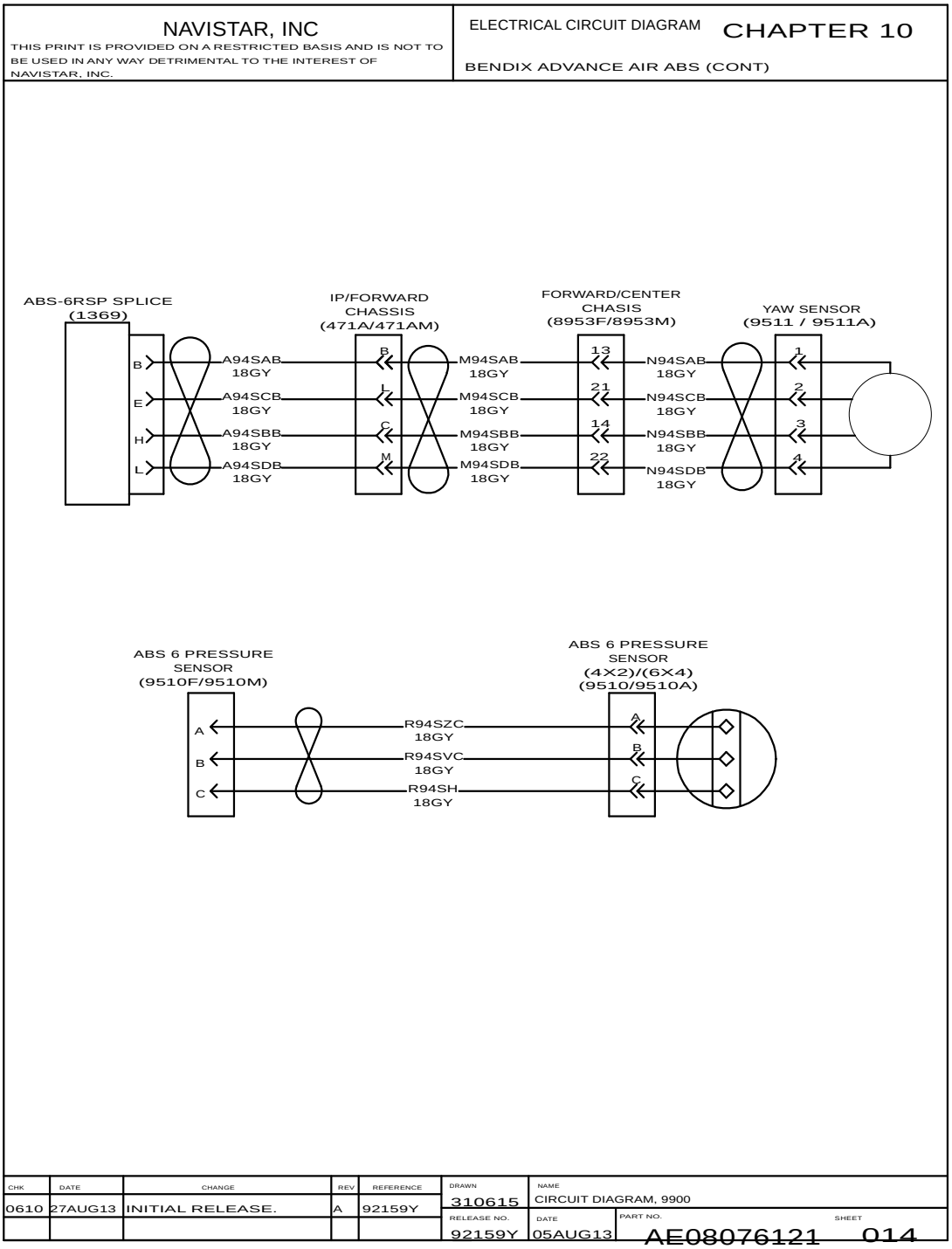

Figure 170 Bendix Advance Air ABS (Cont.)

10.15. BENDIX ADVANCE AIR ABS (CONT.), P. 15

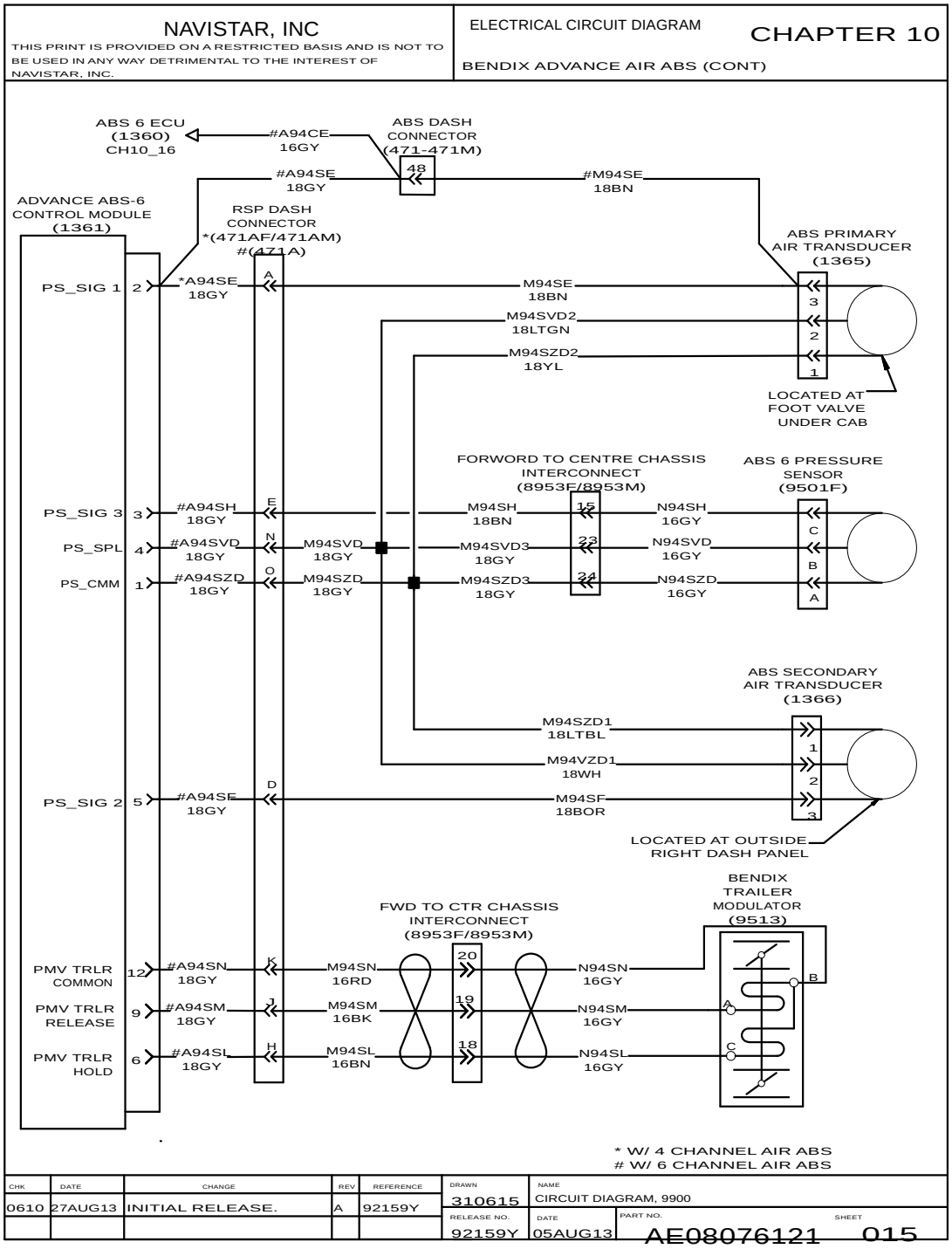

Figure 171 Bendix Advance Air ABS (Cont.)

10.16. BENDIX ADVANCE AIR ABS (CONT.), P. 16

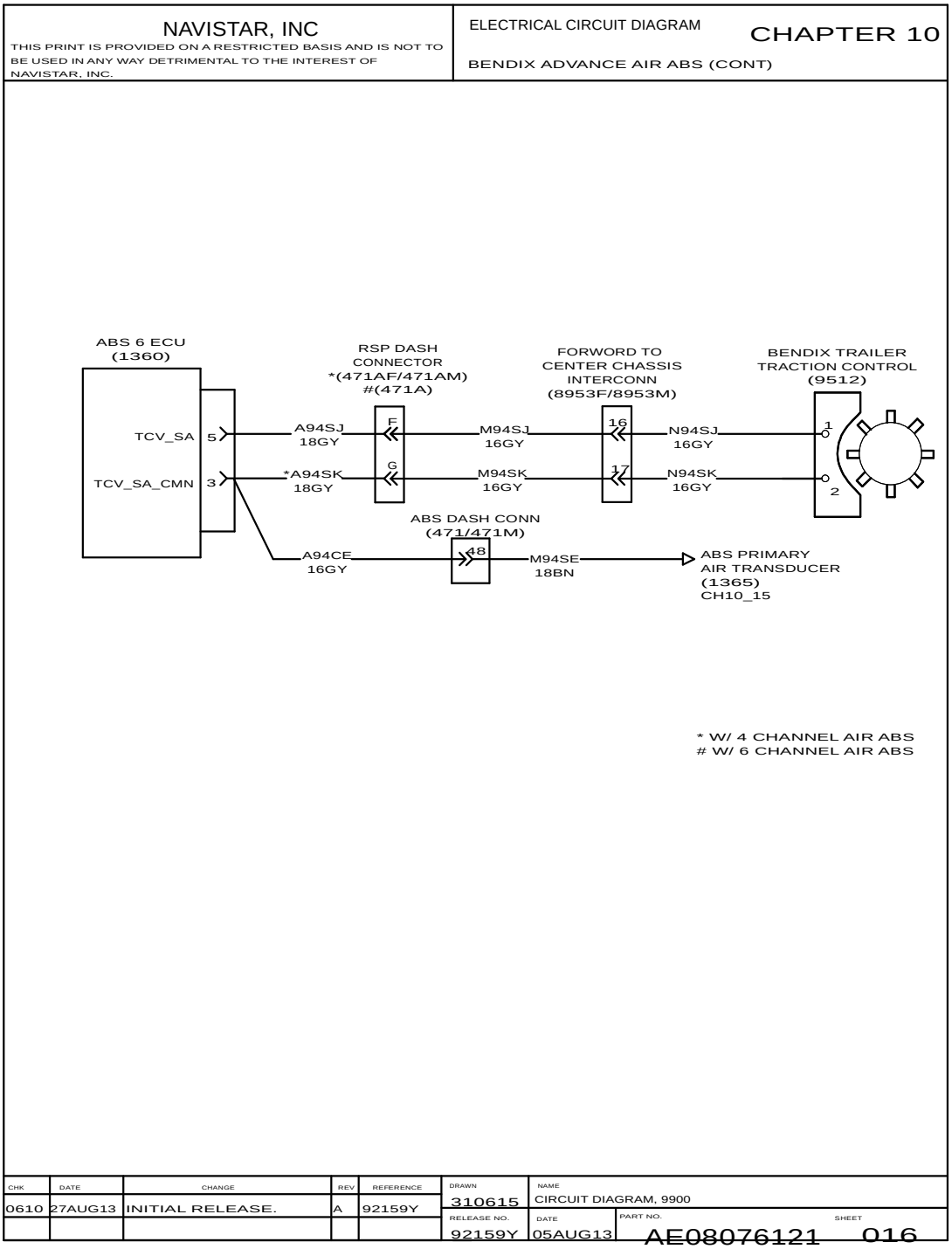

Figure 172 Bendix Advance Air ABS (Cont.)

10.17. TRAILER CONNECTION WITH FOUR WHEEL TRAILER FRAME MOUNTED, P. 17

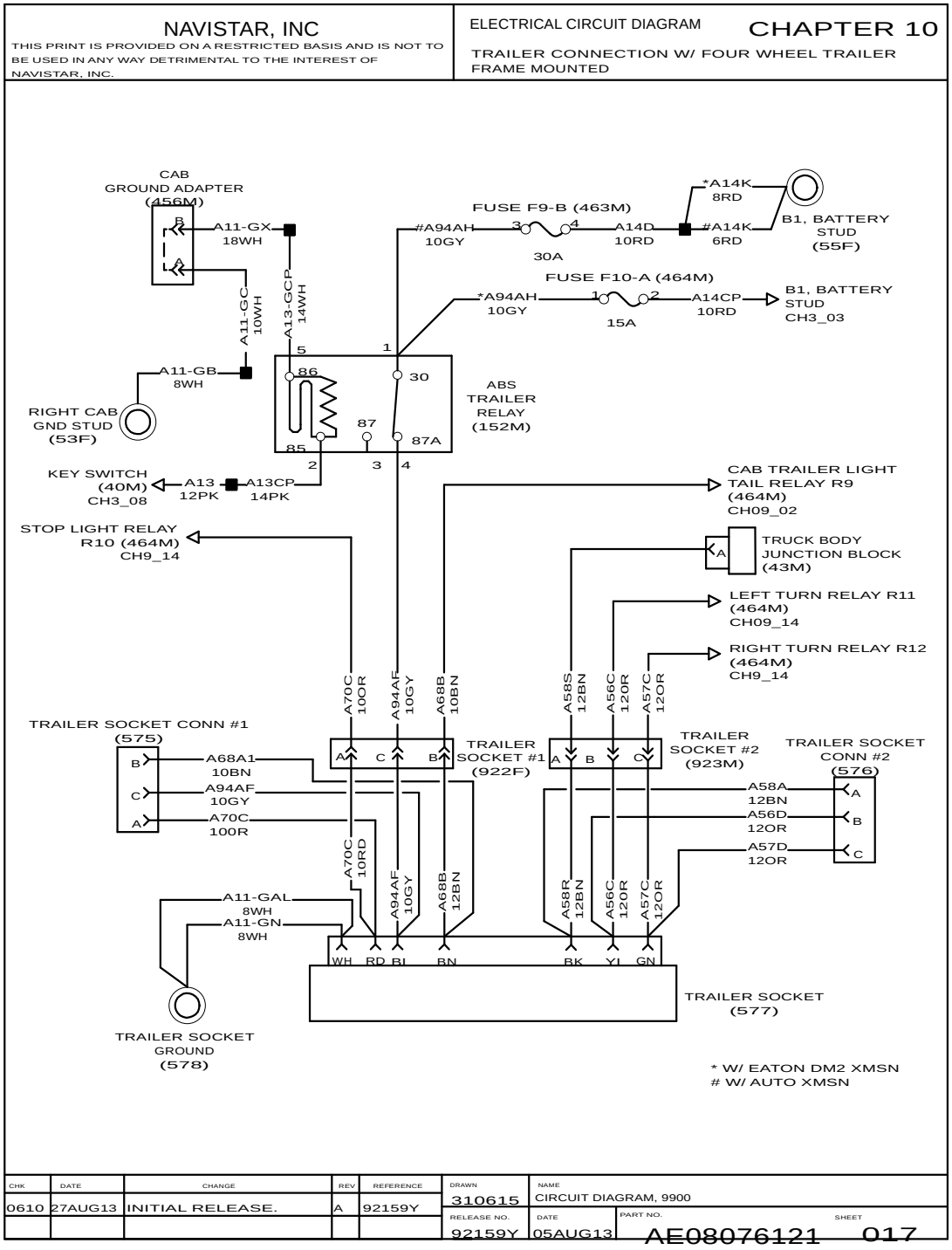

Figure 173 Trailer Connection with Four Wheel Trailer Frame Mounted.

10.18. TRAILER CONNECTION WITH TRAILER LIGHTING CABLE 808TGN, P. 18

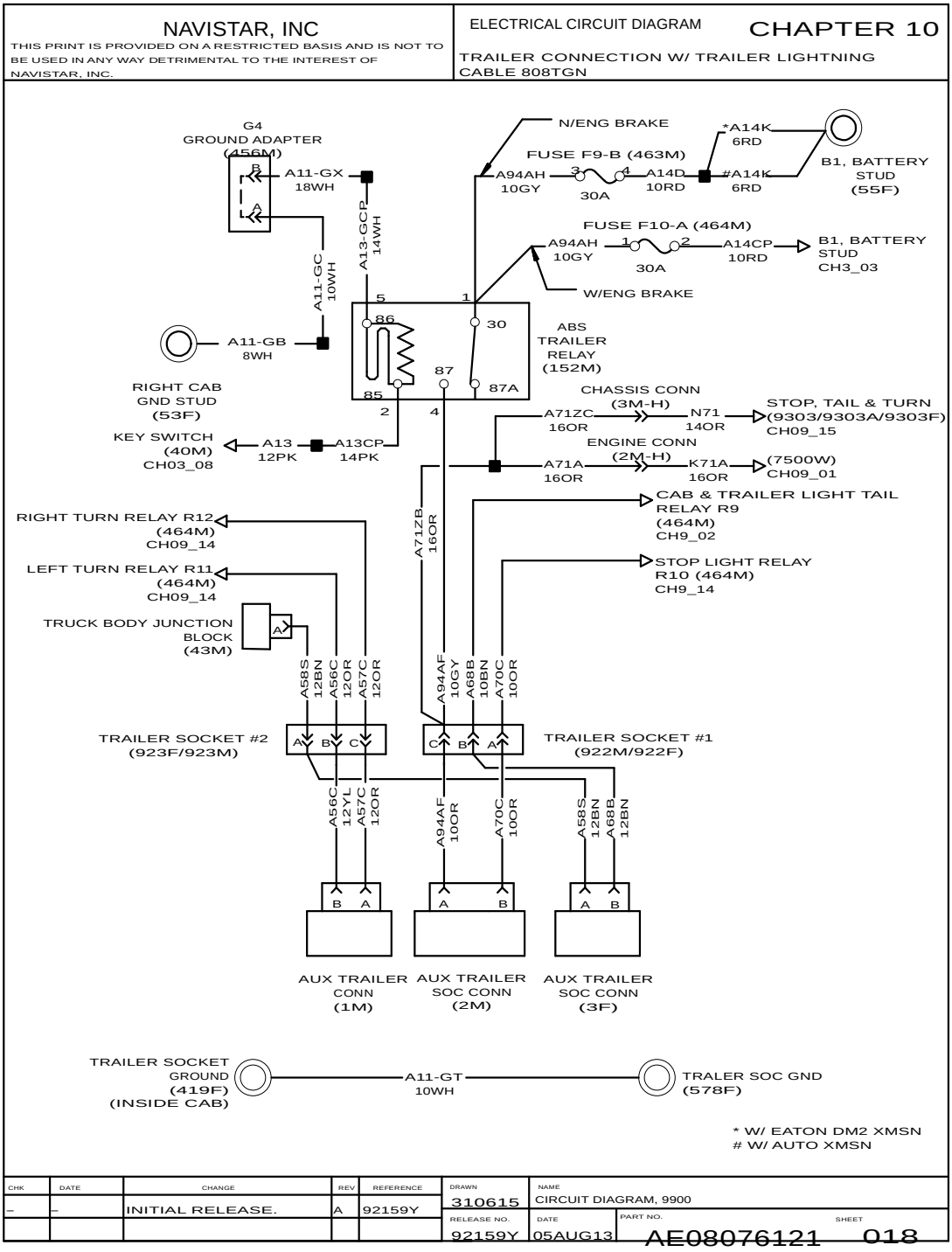

Figure 174 Trailer Connection with Trailer Lighting Cable 808TGN.

10.19. TRAILER CONNECTION WITH 4092 (TRACTOR), P. 19

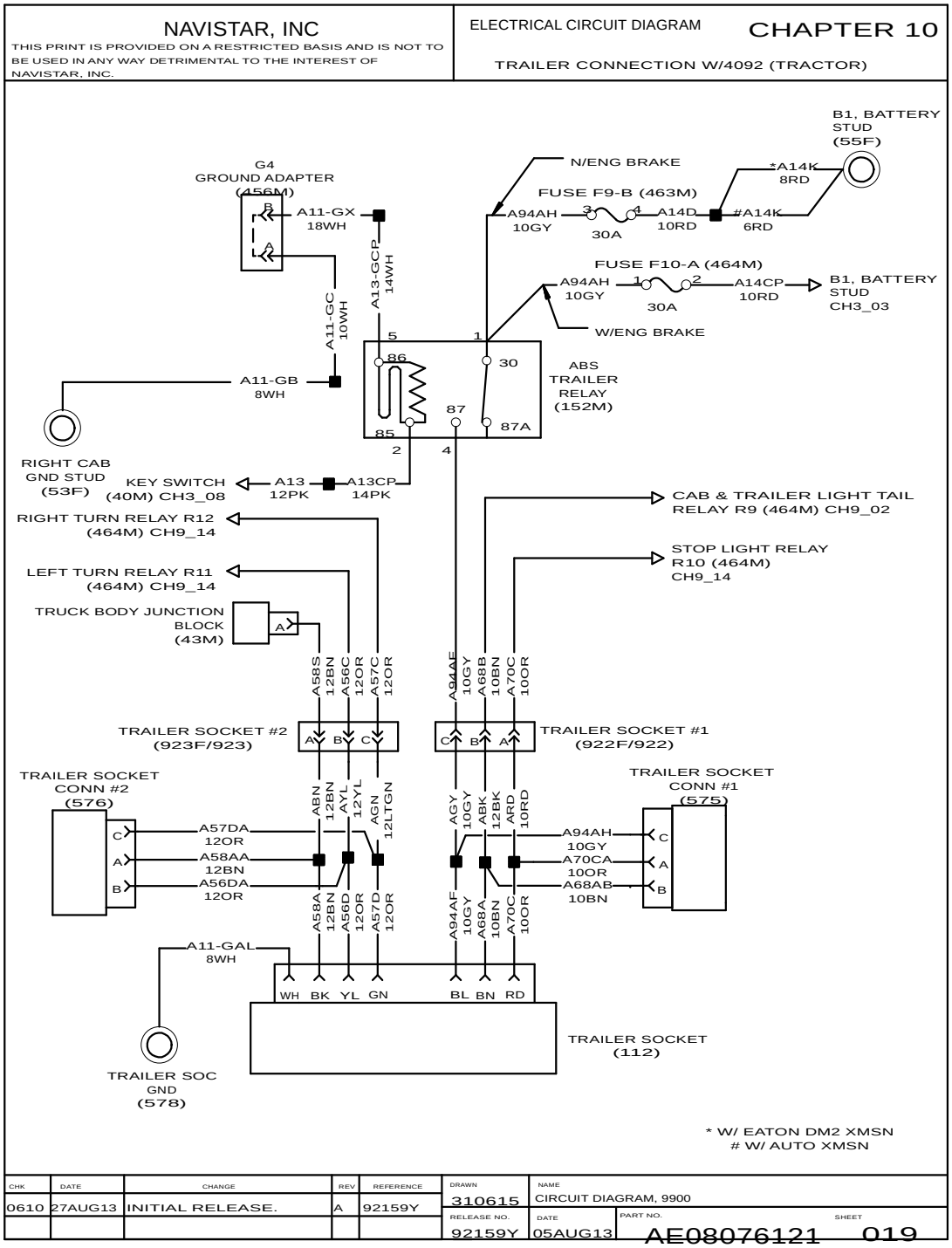

Figure 175 Trailer Connection with 4092 (Tractor)

10.20. ANTILOCK BRAKE SYSTEM WITH WABCO, P. 20

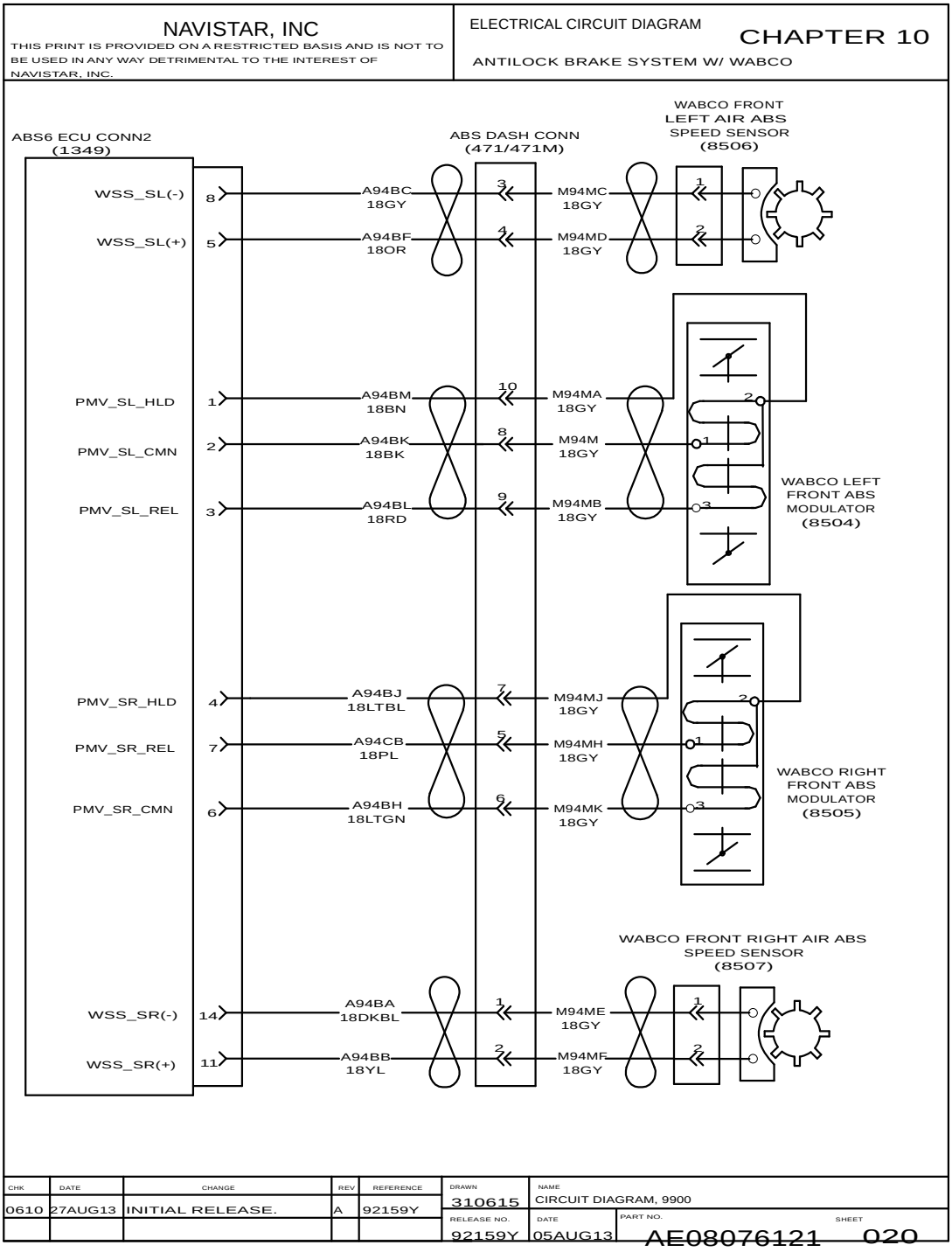

Figure 176 Antilock Brake System with WABCO.

10.21. ANTILOCK BRAKE SYSTEM WITH WABCO (CONT.), P. 21

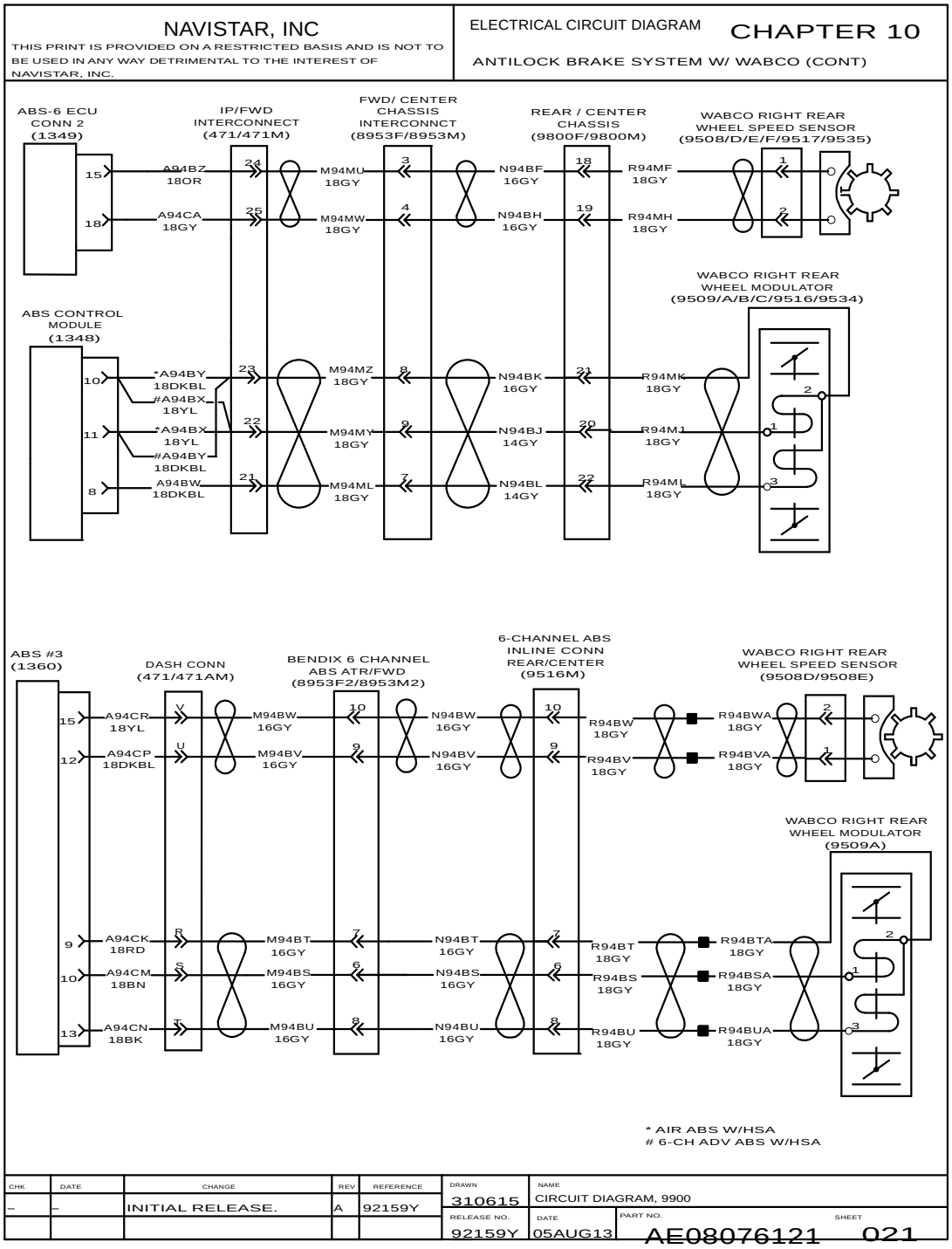

Figure 177 Antilock Brake System with WABCO (Cont.)

10.22. ANTILOCK BRAKE SYSTEM WITH WABCO (CONT.), P. 22

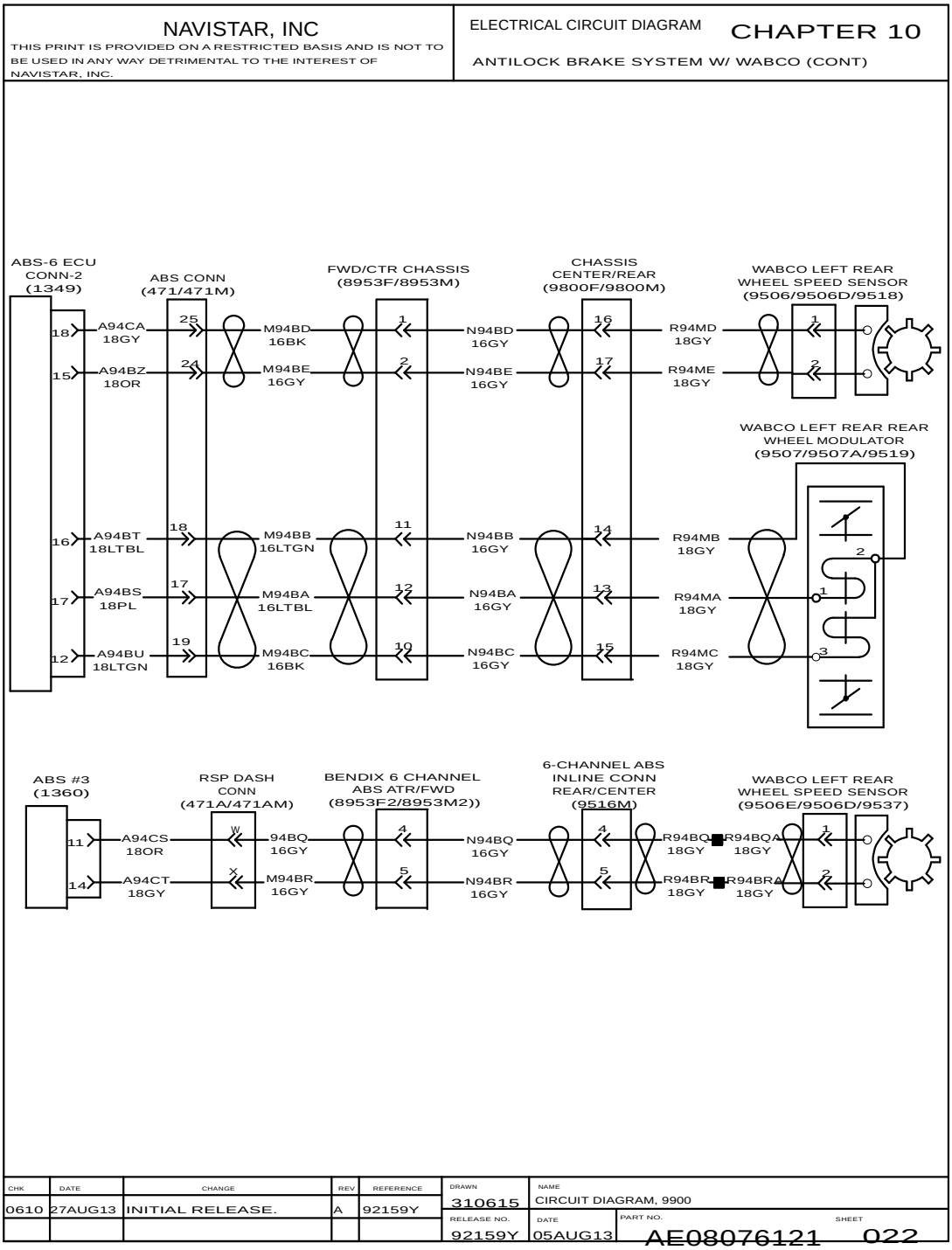

Figure 178 Antilock Brake System with WABCO (Cont.)

10.23. ANTILOCK BRAKE SYSTEM WITH WABCO (CONT.), P. 23

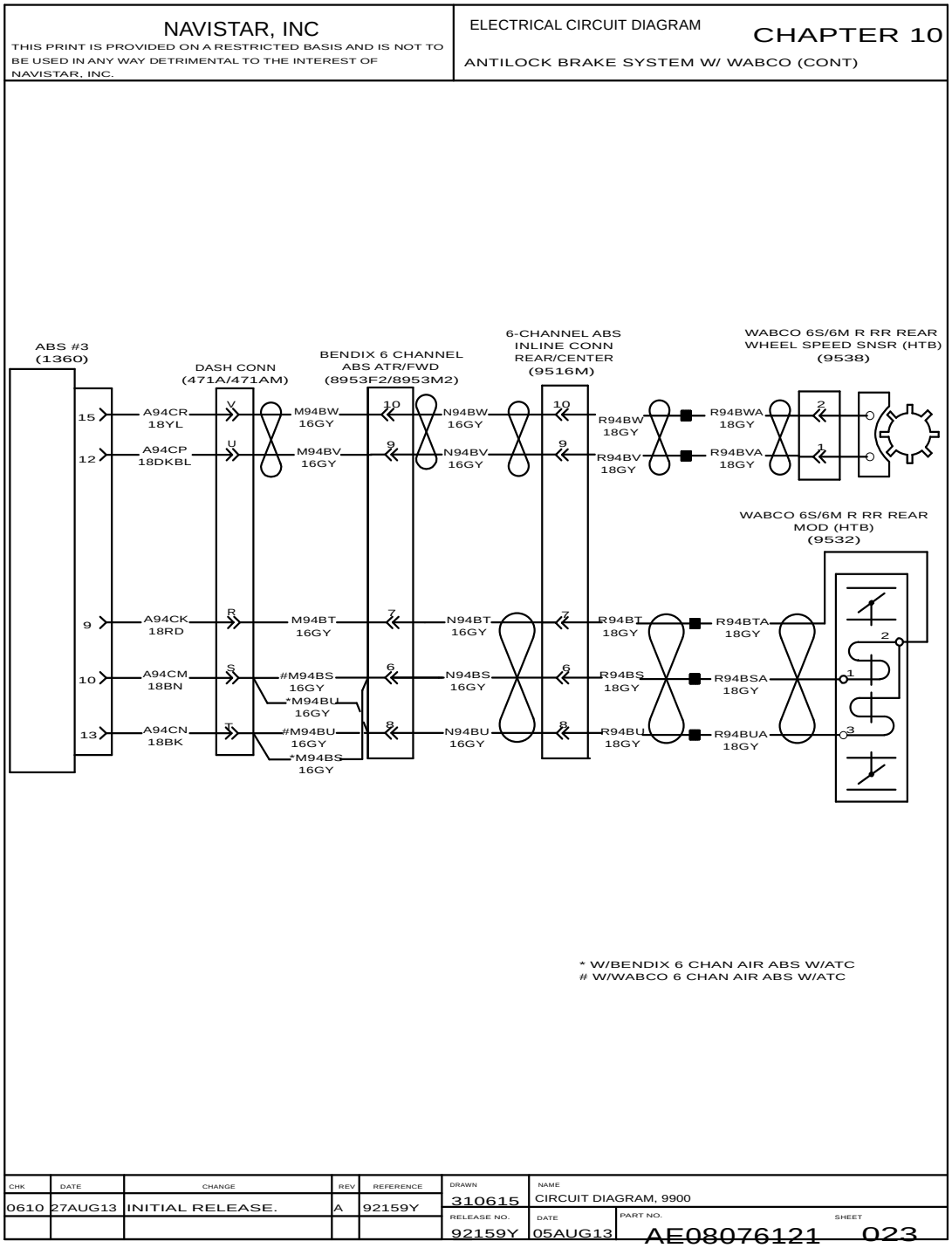

Figure 179 Antilock Brake System with WABCO (Cont.)

10.24. BRAKE SENSOR – WEAR / STROKE, P. 24

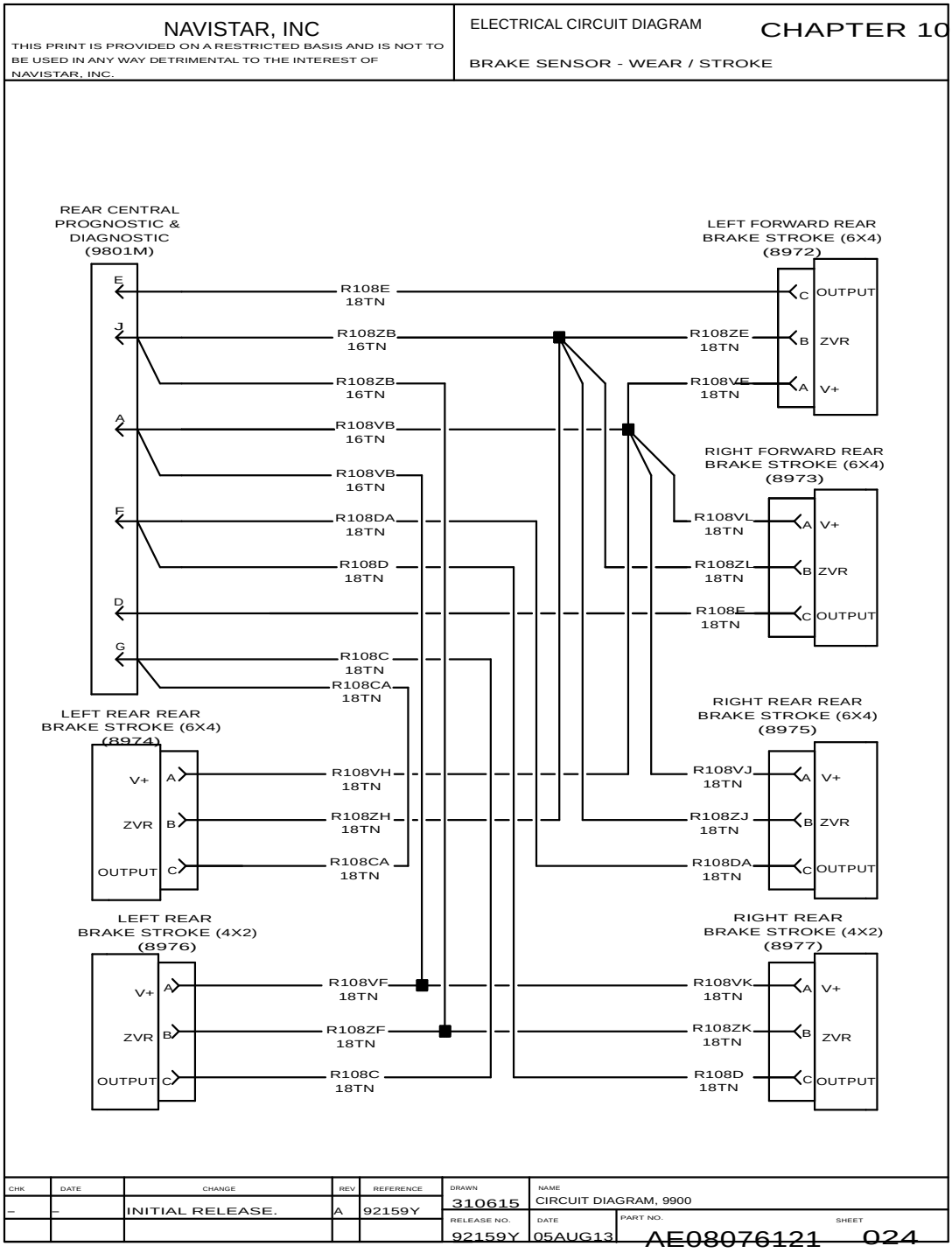

Figure 180 Brake Sensor – Wear / Stroke.

10.25. TIRE PRESSURE MONITOR / ANTENNA, P. 25

NAVISTAR, INC

THIS PRINT IS PROVIDED ON A RESTRICTED BASIS AND IS NOT TO BE USED IN ANY WAY DETRIMENTAL TO THE INTEREST OF NAVISTAR, INC.

ELECTRICAL CIRCUIT DIAGRAM

CHAPTER 10

TIRE PRESSURE MONITOR / ANTENNA

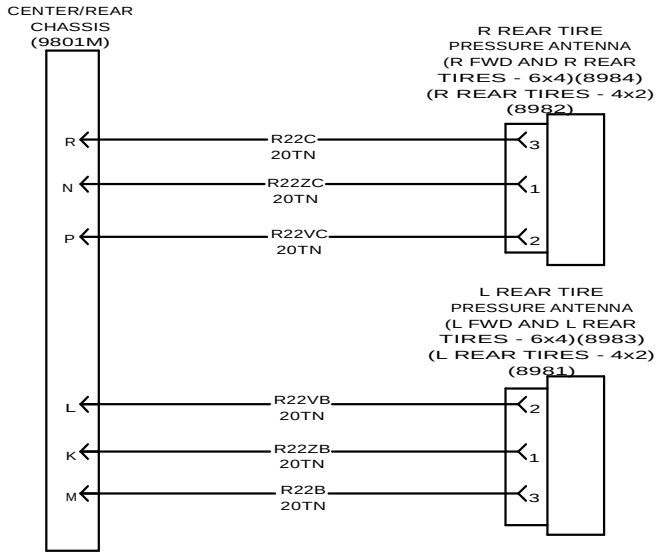

CHK	DATE	CHANGE	REV	REFERENCE	DRAWN	NAME
–	–	INITIAL RELEASE.	A	92159Y	310615	CIRCUIT DIAGRAM, 9900
					RELEASE NO. 92159Y	DATE 05AUG13 / PART NO. AE08076121 / SHEET 025

Figure 181 Tire Pressure Monitor / Antenna.

10.26. AIR SUSPENSION WITH LOAD INDICATOR, P. 26

NAVISTAR, INC

THIS PRINT IS PROVIDED ON A RESTRICTED BASIS AND IS NOT TO BE USED IN ANY WAY DETRIMENTAL TO THE INTEREST OF NAVISTAR, INC.

ELECTRICAL CIRCUIT DIAGRAM

CHAPTER 10

AIR SUSPENSION W/LOAD INDICATOR

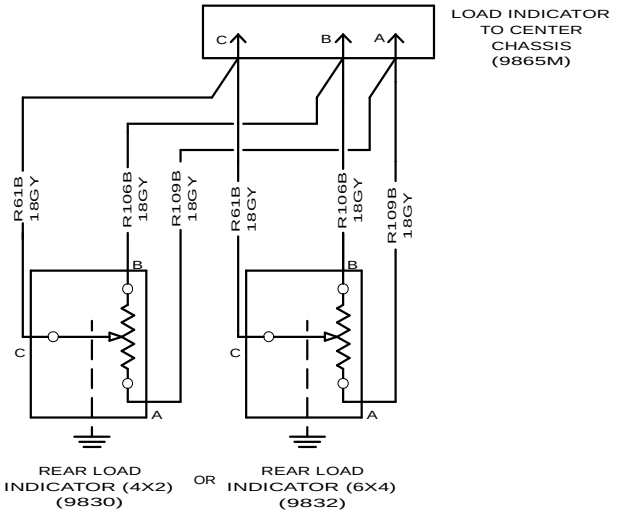

CHK	DATE	CHANGE	REV	REFERENCE	DRAWN	NAME
–	–	INITIAL RELEASE.	A	92159Y	310615	CIRCUIT DIAGRAM, 9900
					RELEASE NO. 92159Y	DATE 05AUG13
					PART NO. AE08076121	SHEET 026

Figure 182 Air Suspension with Load Indicator.

10.27. CUSTOMER SUPPLIED LIGHTS, P. 27

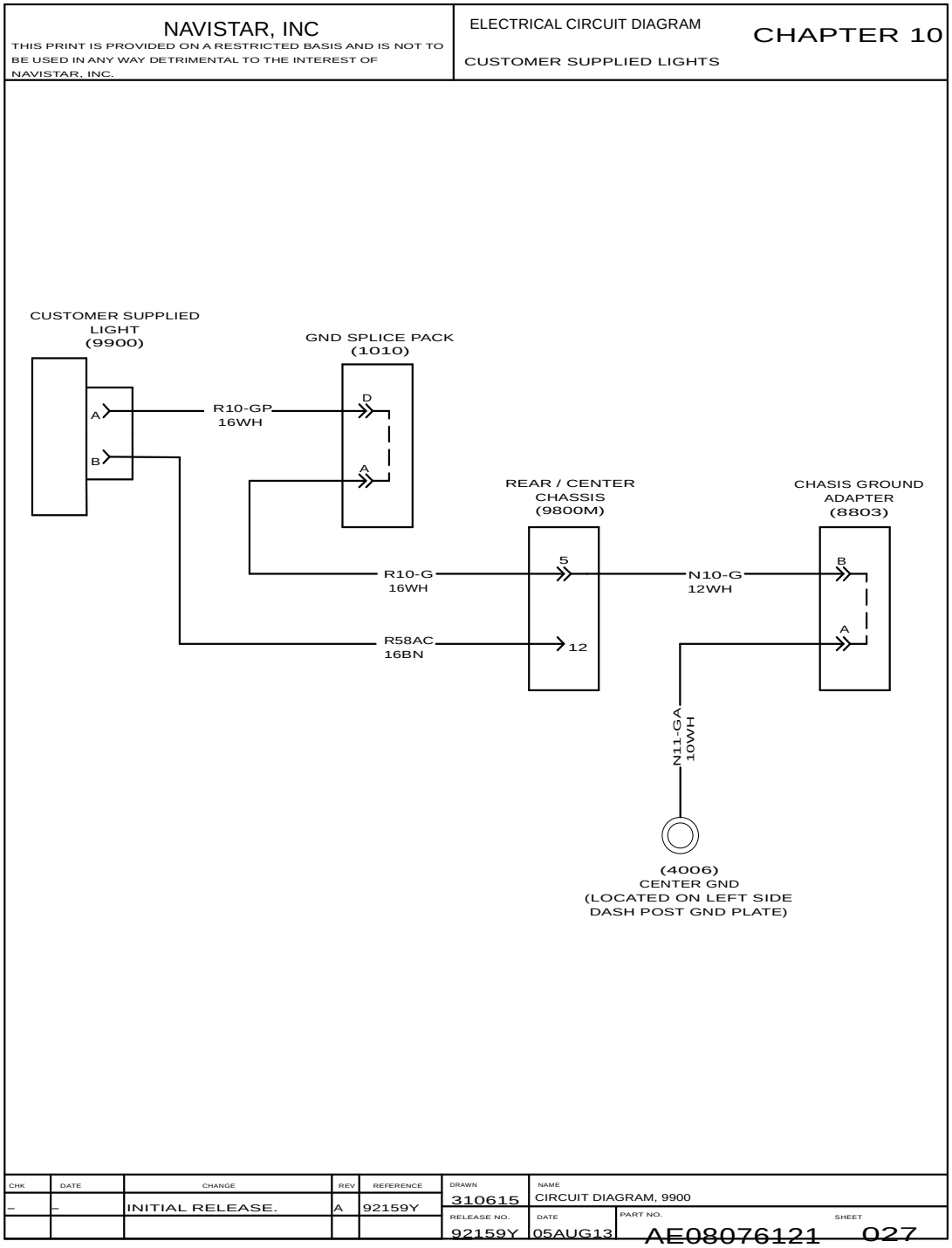

Figure 183 Customer Supplied Lights.

10.28. VEHICLE SENSOR MODULE, P. 28

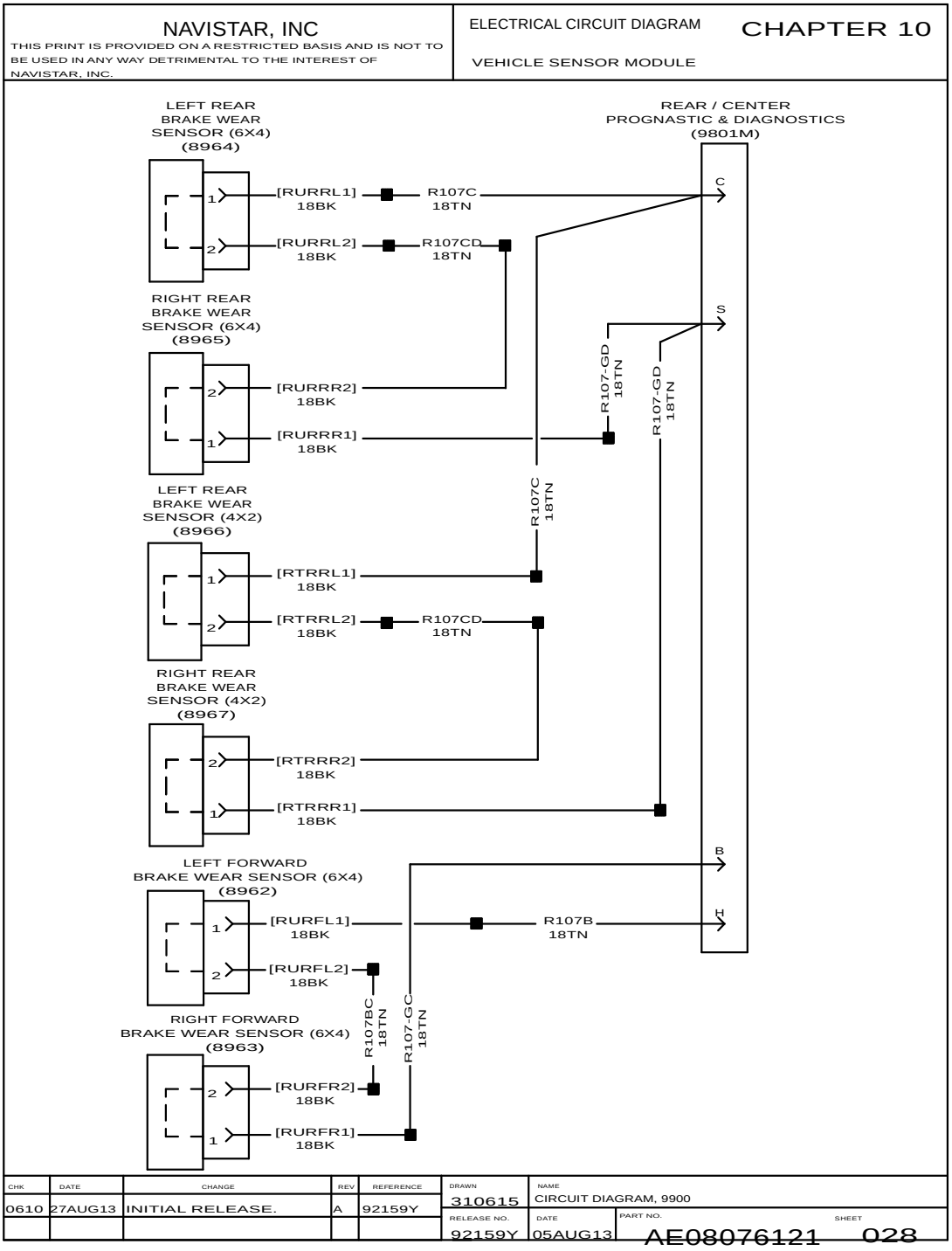

Figure 184 Vehicle Sensor Module.

10.29. TRAILER AUX SWITCH, P. 29

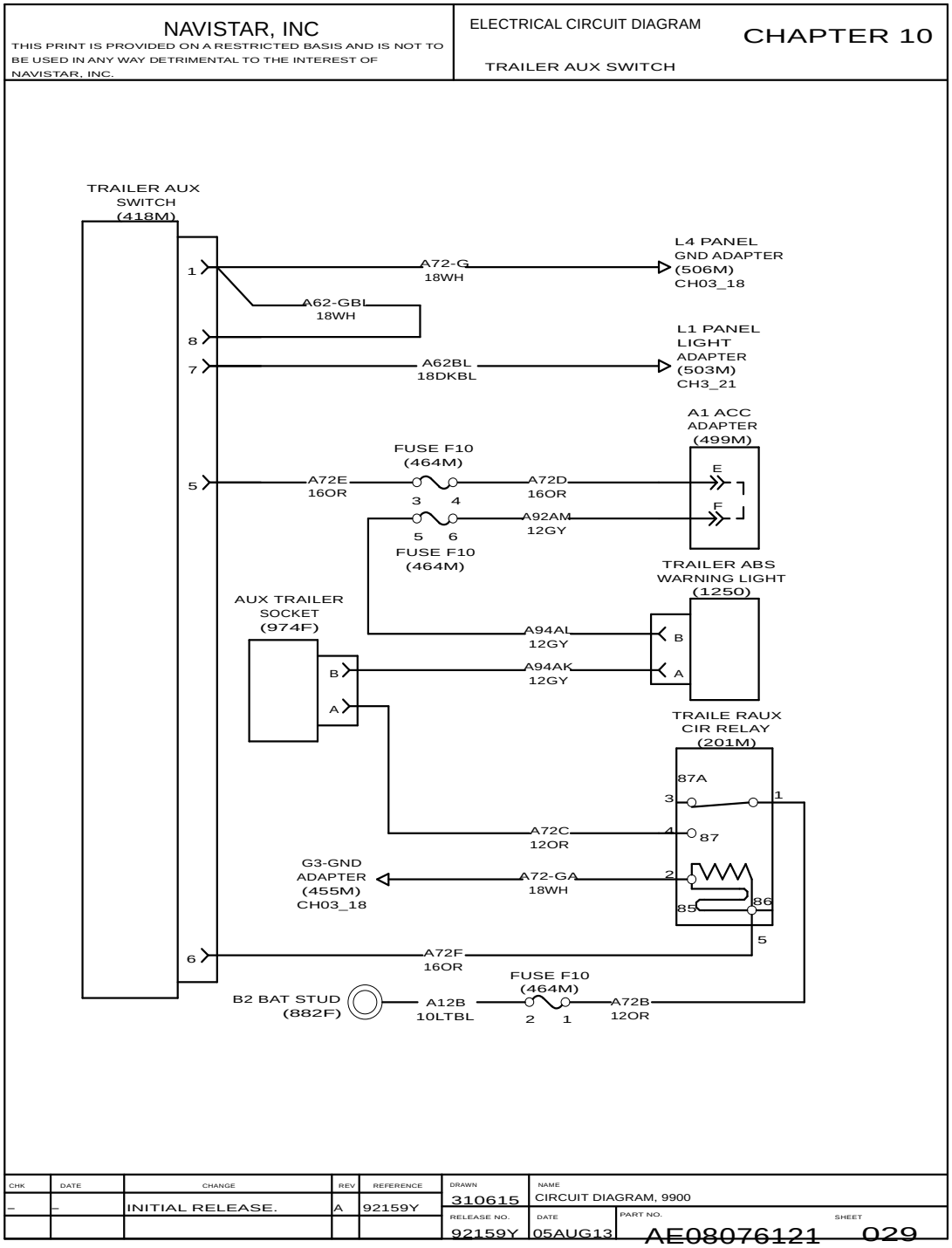

Figure 185 Trailer AUX Switch.

10.30. TRAILER SOCKET AUX 7-WAY, P. 30

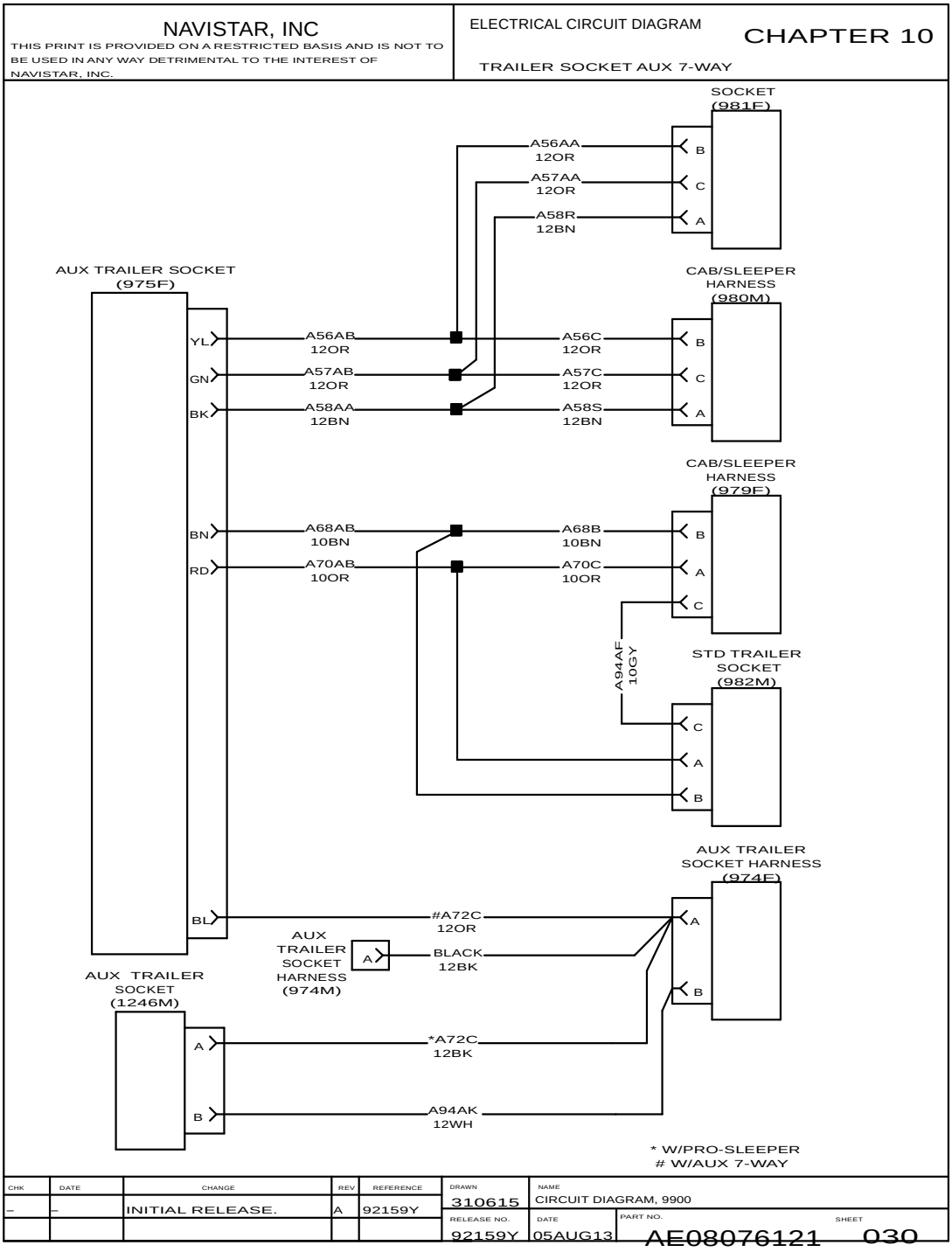

Figure 186 Trailer Socket AUX 7-Way.

10.31. TRAILER SOCKET CONNECTIONS, P. 31

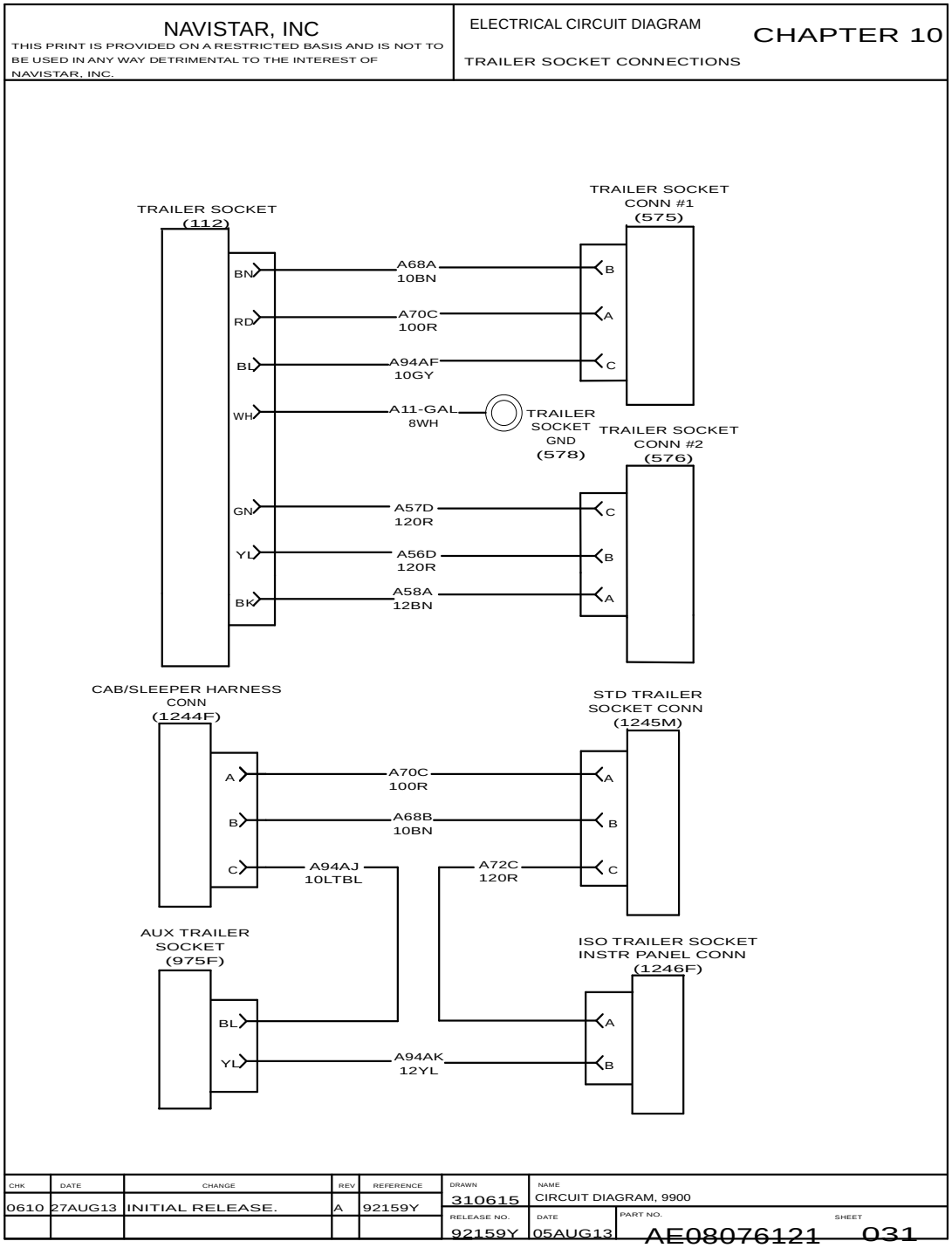

Figure 187 Trailer Socket Connections.

10.32. TRAILER SOCKET – BOC AND EOF, P. 32

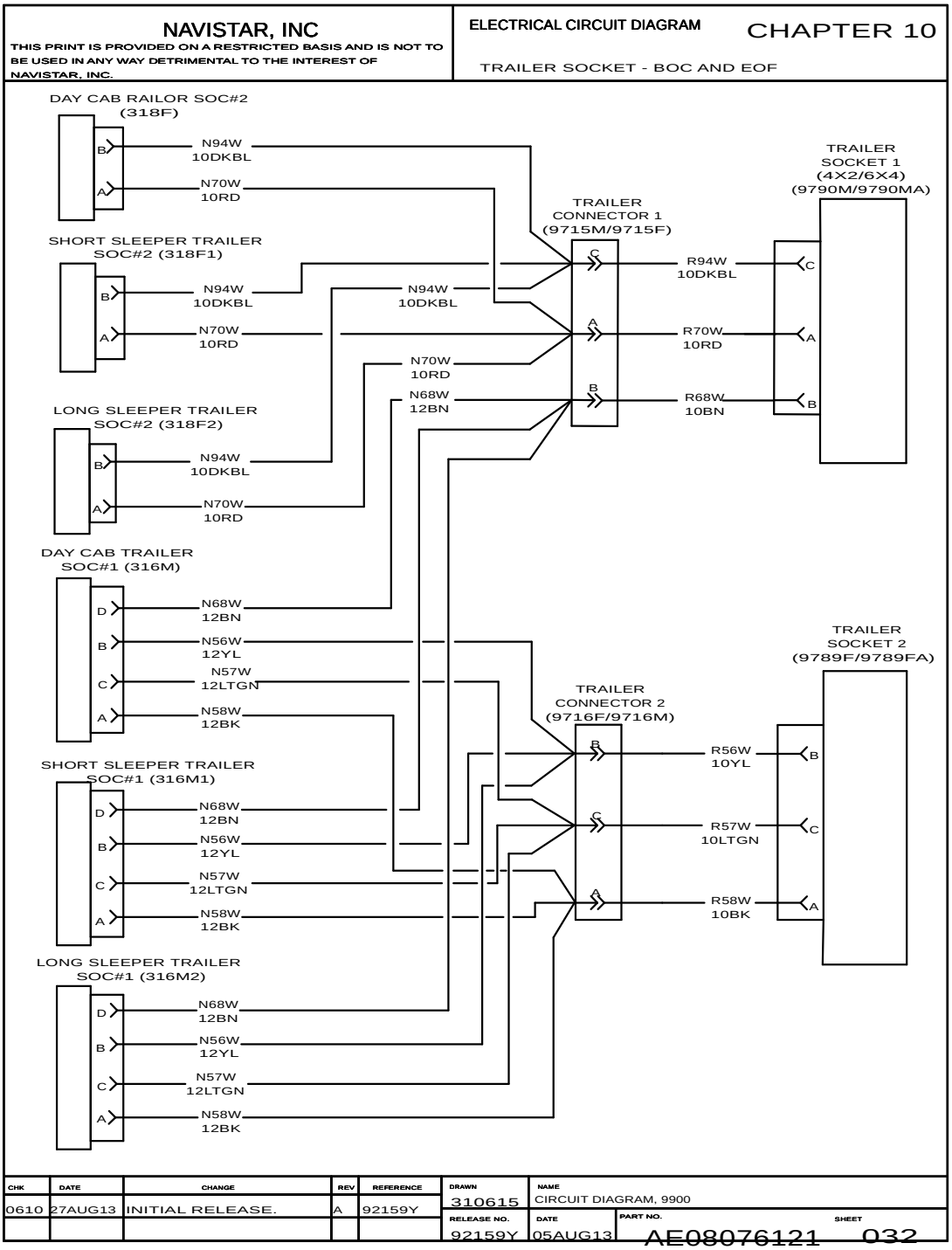

Figure 188 Trailer Socket – BOC and EOF.

TRANSMISSION CONTROL MODULE (CHAPTER 11)

11.1. EATON AUTOSHIFT AND ULTRASHIFT TRANSMISSION (IBB ENGINE), P. 1

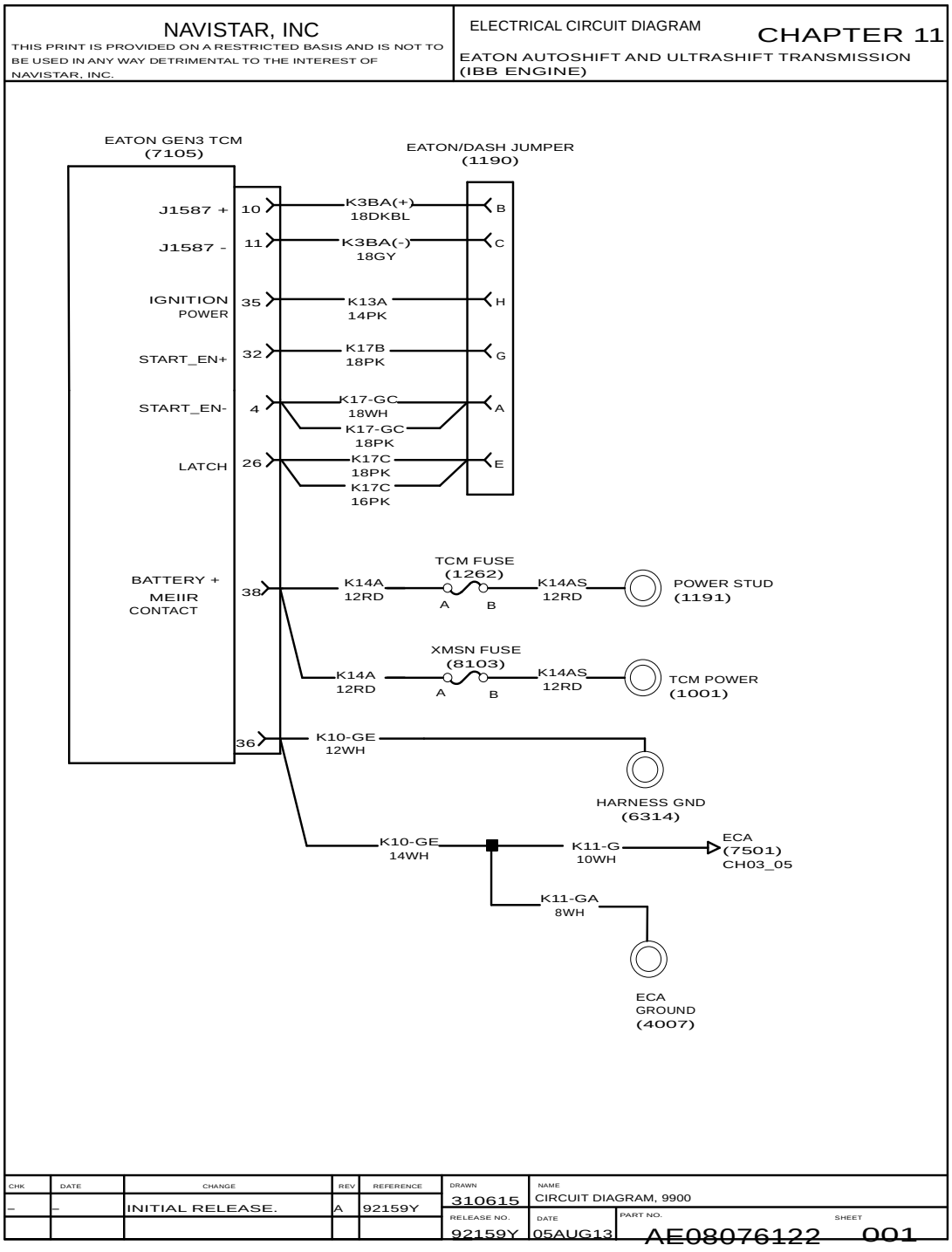

Figure 189 Eaton Autoshift and Ultrashift Transmission (IBB Engine)

11.2. EATON AUTOSHIFT AND ULTRASHIFT TRANSMISSION (IBB ENGINE) (CONT.), P. 2

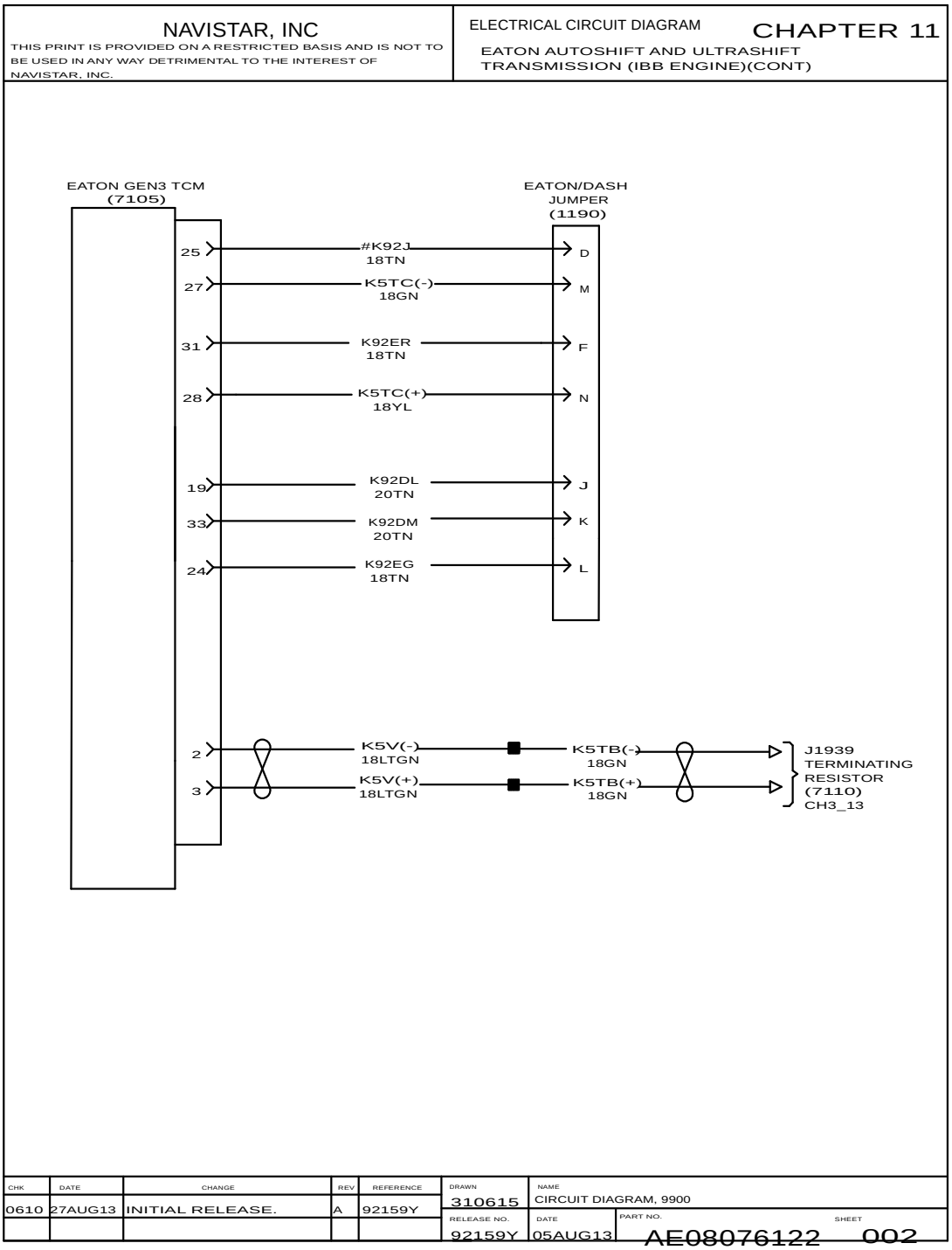

Figure 190 Eaton Autoshift and Ultrashift Transmission (IBB Engine) (Cont.)

11.3. ALLISON TRANSMISSION, P. 3

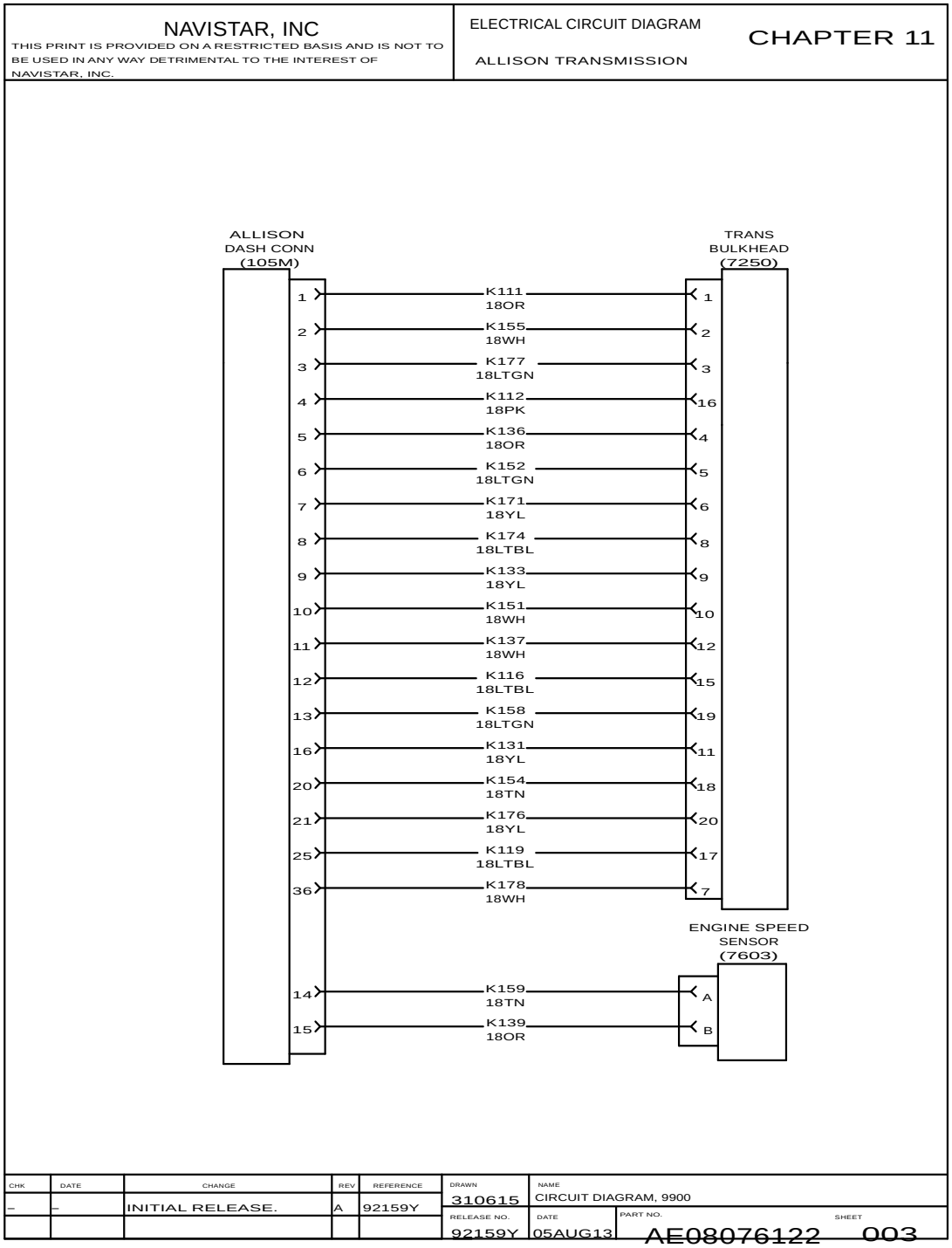

Figure 191 Allison Transmission.

11.4. ALLISON TRANSMISSION (CONT.), P. 4

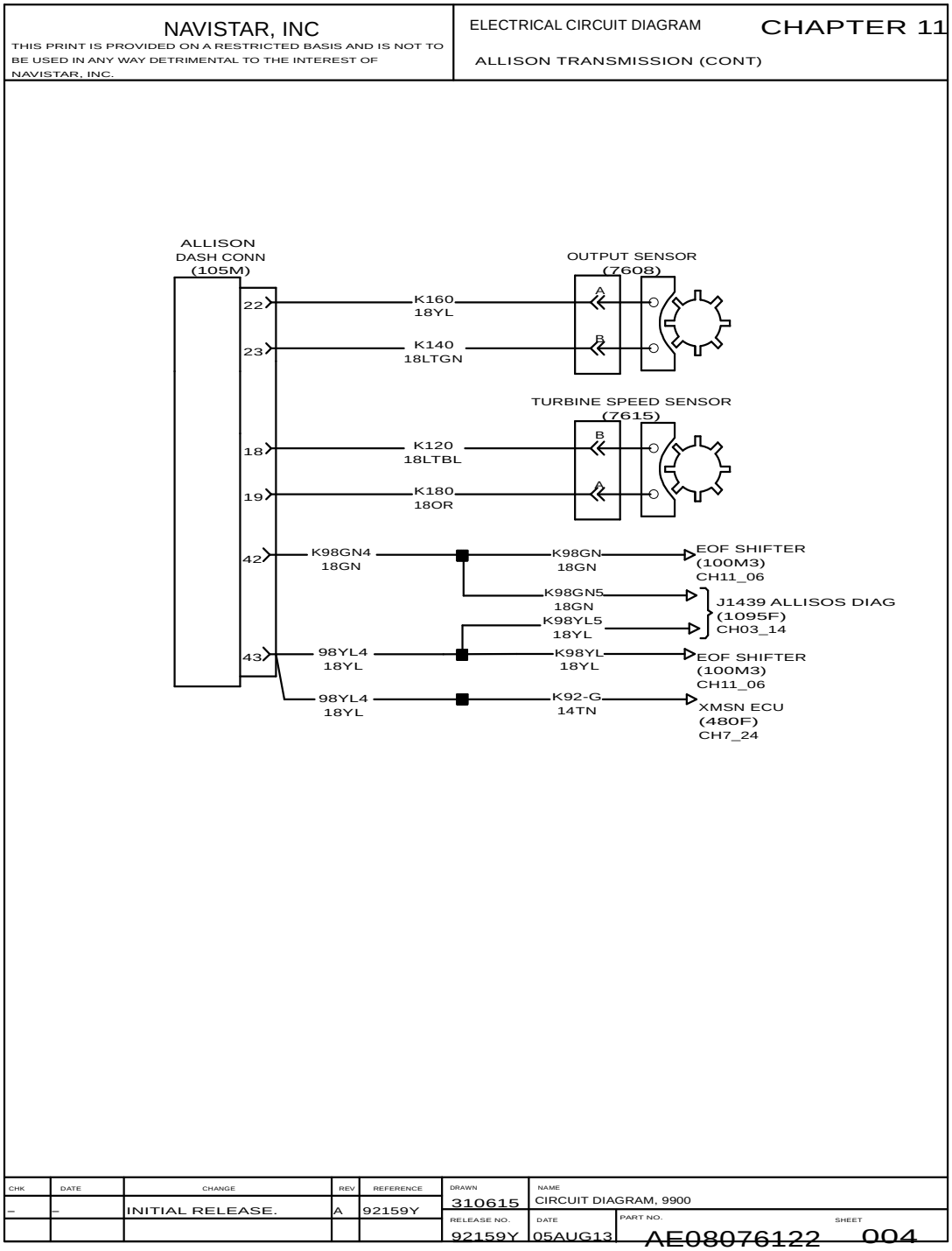

Figure 192 Allison Transmission (Cont.)

11.5. AUTOSHIFT TRANSMISSION, P. 5

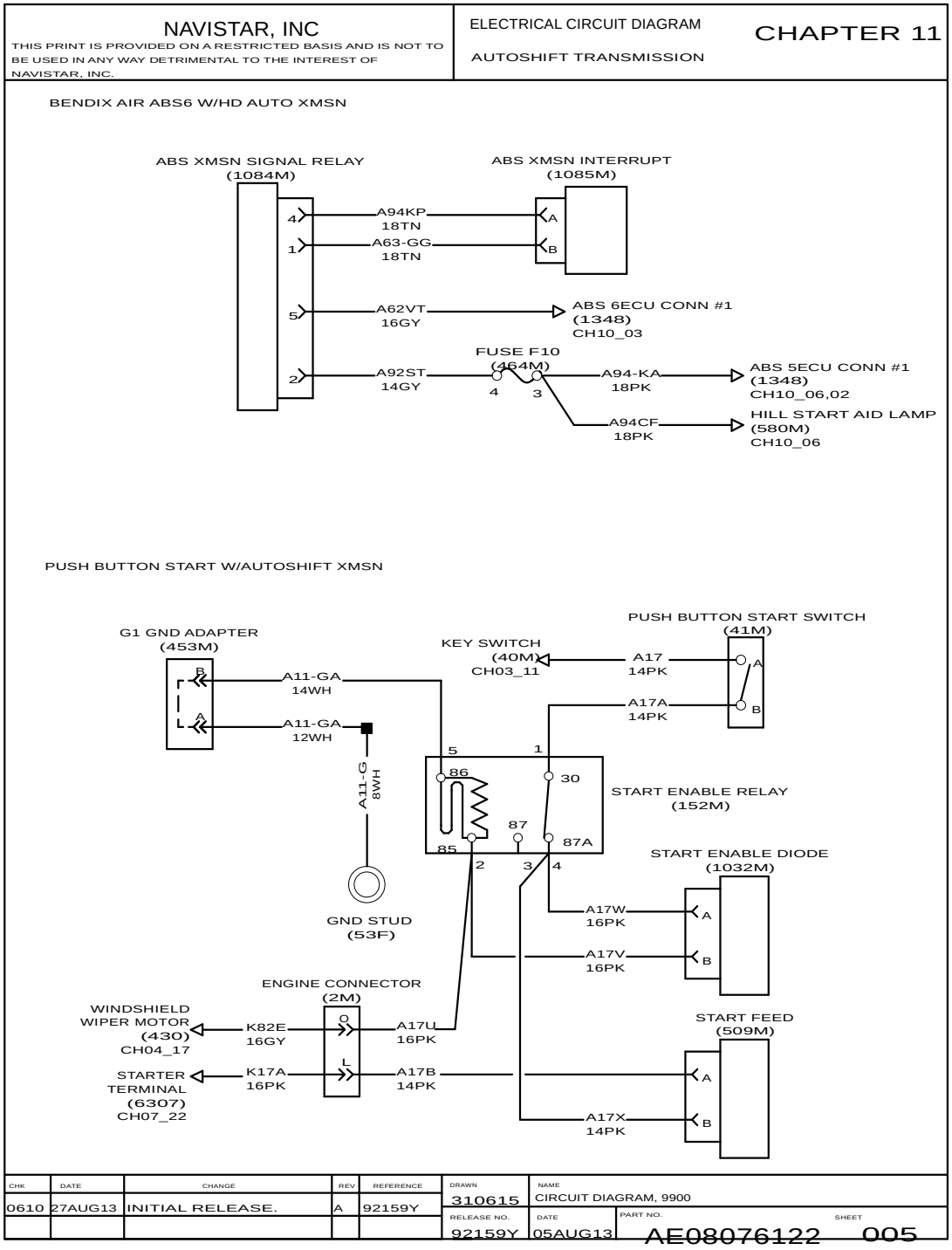

Figure 193 Autoshift Transmission.

11.6. ALLISON TRANSMISSION WITH RETARDER, P. 6

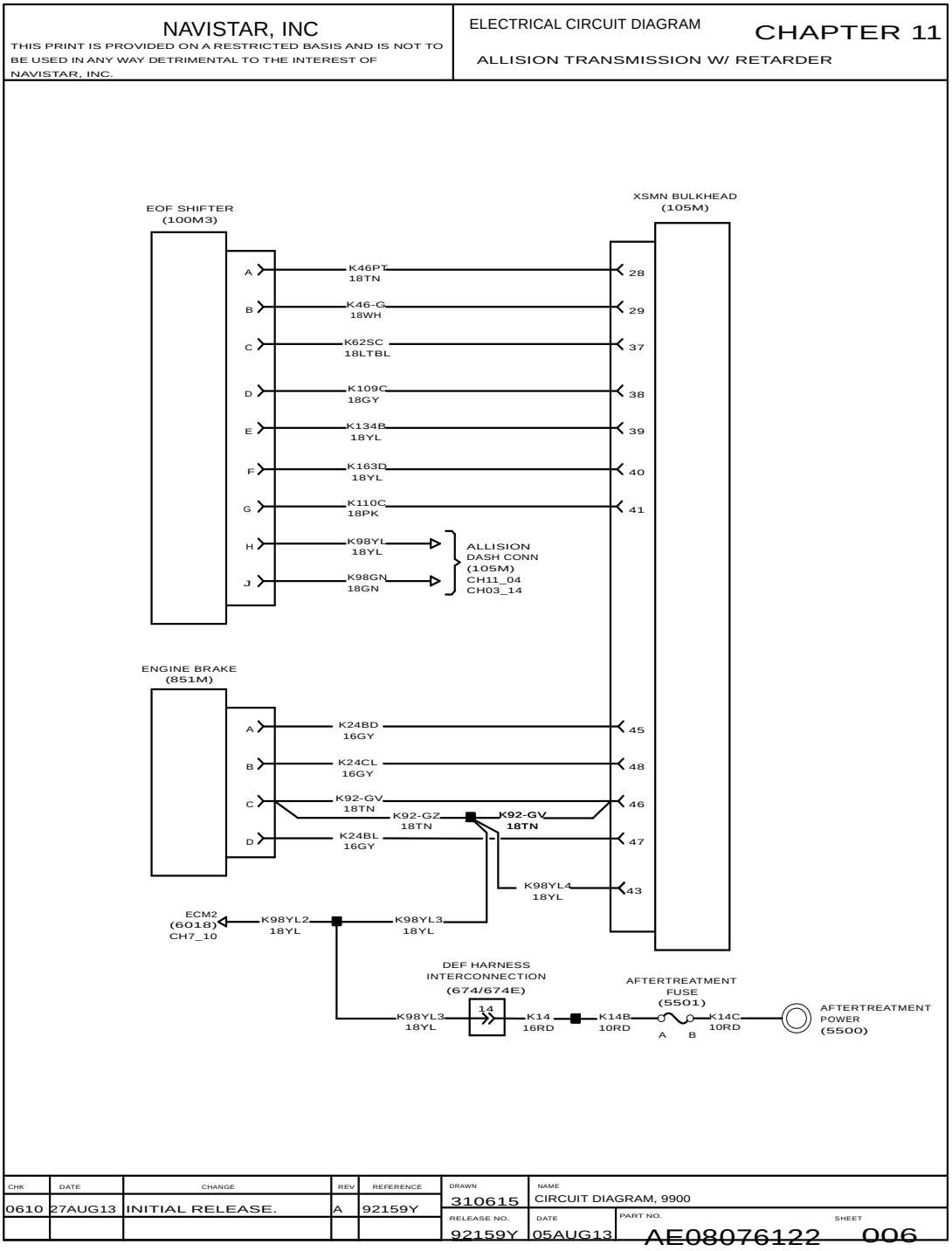

Figure 194 Allison Transmission with Retarder.

11.7. AUTOSHIFT TRANSMISSION WITHOUT ABS, P. 7

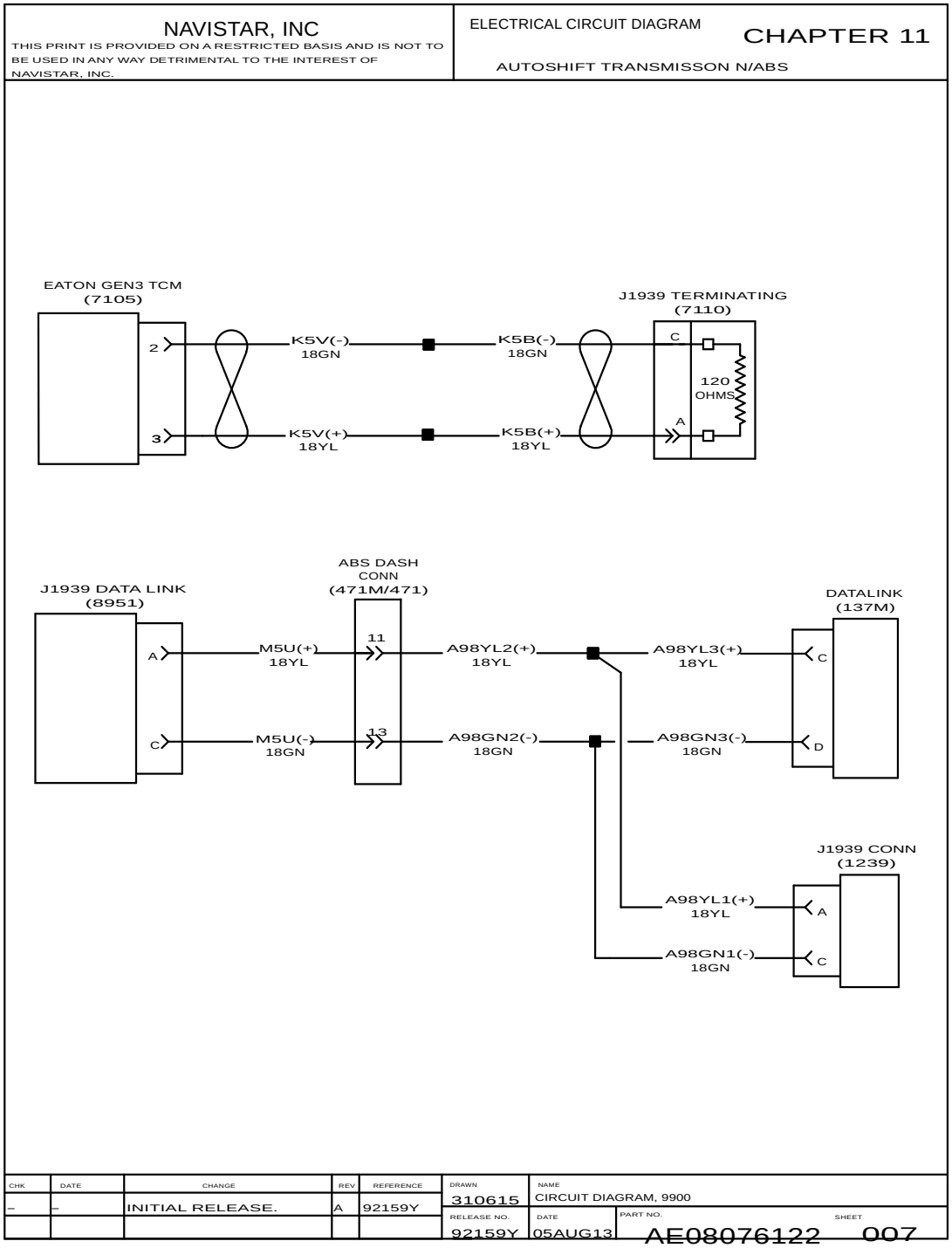

Figure 195 Autoshift Transmission without ABS.

HVAC (CHAPTER 12)

12.1. AIR CONDITIONER – CAB , P. 1

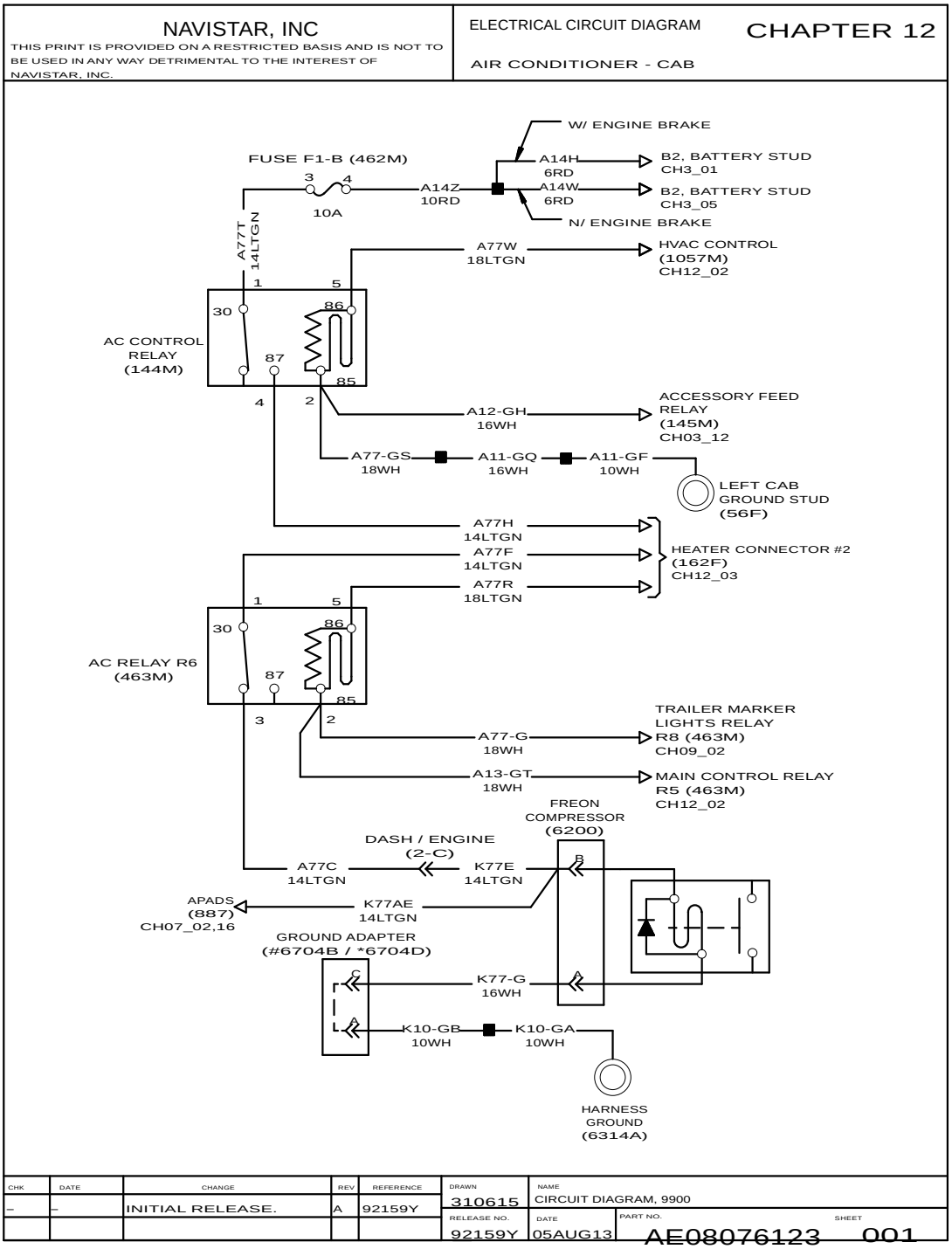

Figure 196 Air Conditioner – Cab.

12.2. HEATER – CAB, P. 2

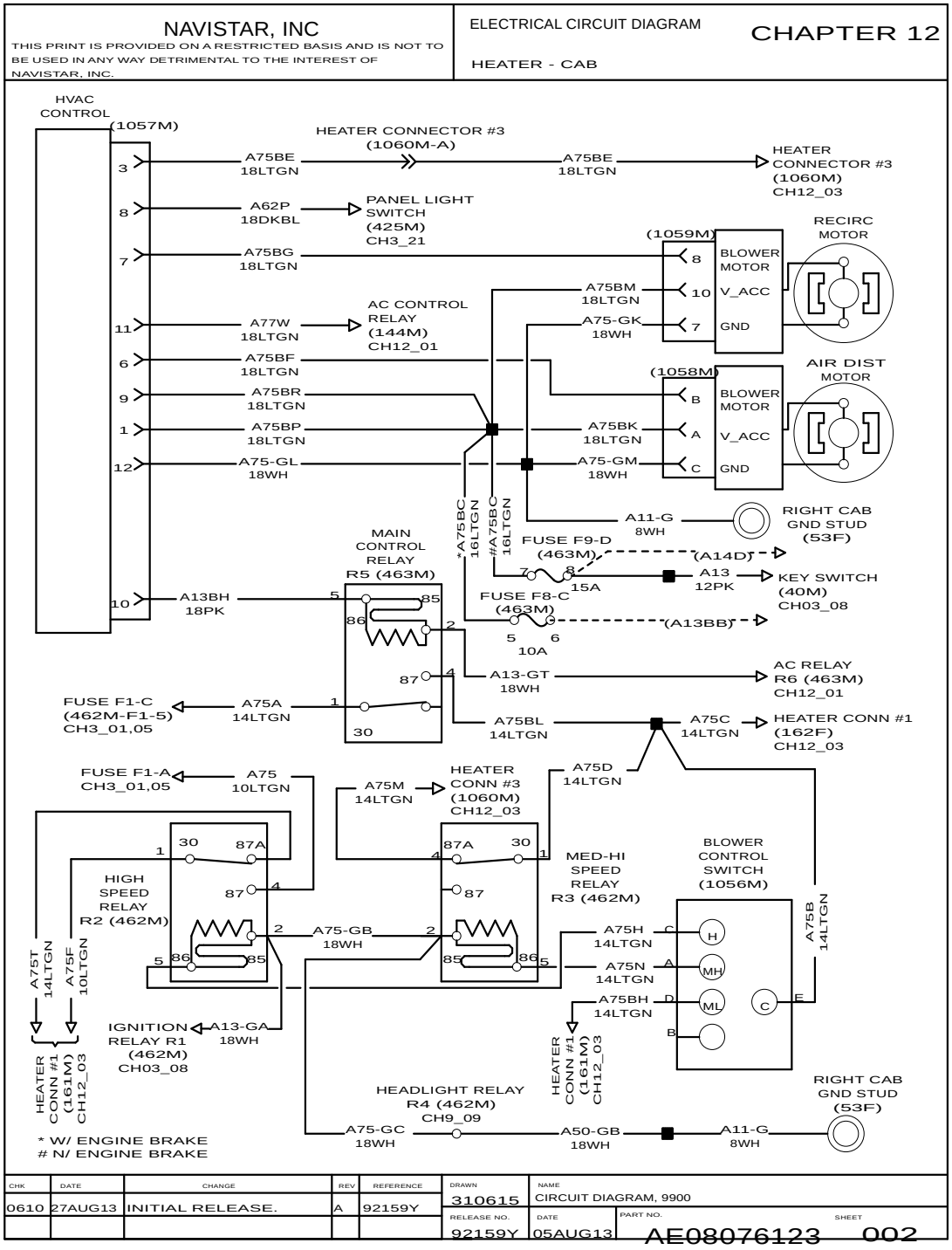

Figure 197 Heater – Cab.

12.3. LOWERED HEATER – CAB, P. 3

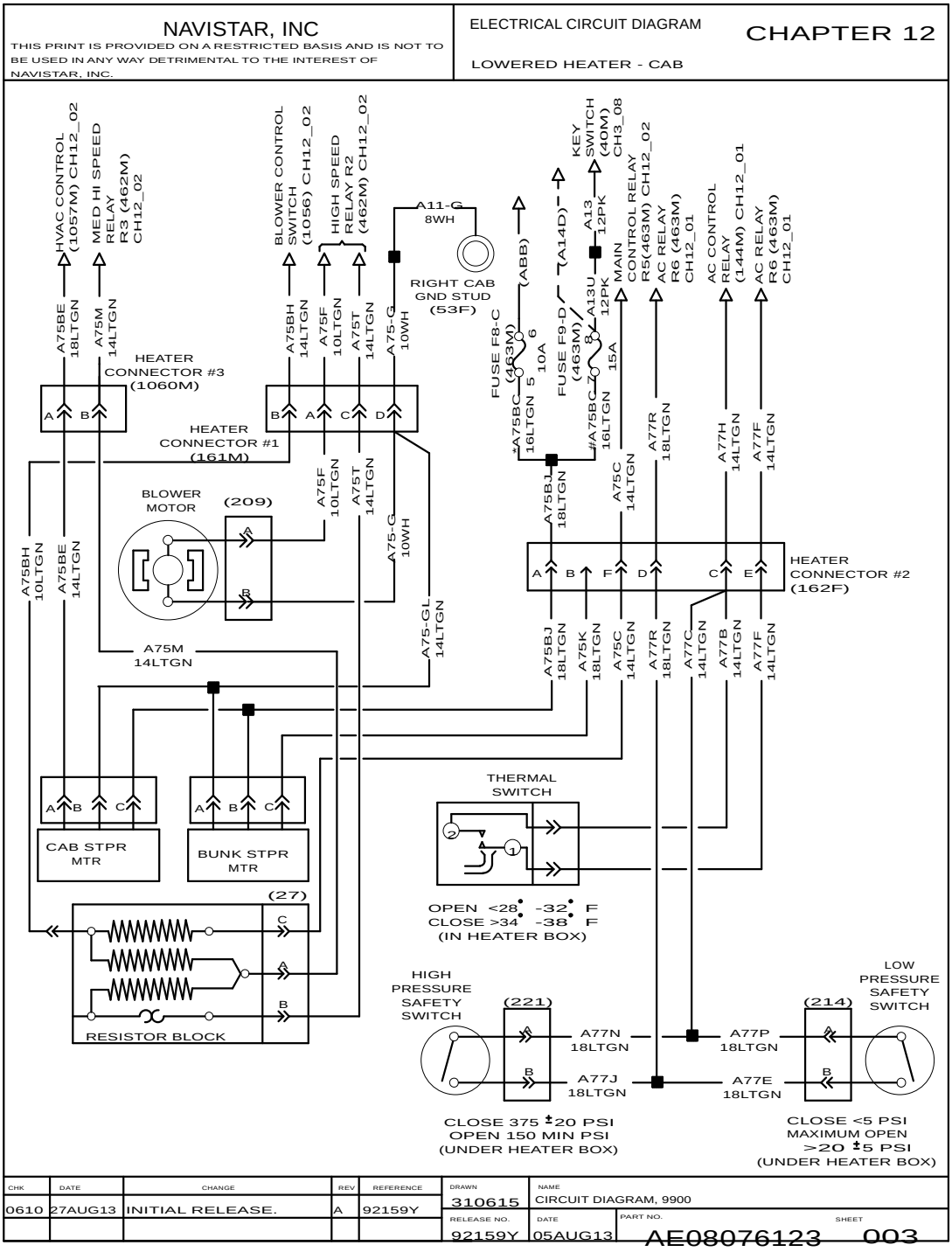

Figure 198 Lowered Heater – Cab.

CONNECTOR COMPOSITE (CHAPTER 13)

13.1. CONNECTOR COMPOSITE (1 / 1F), P. 1

NAVISTAR, INC

THIS PRINT IS PROVIDED ON A RESTRICTED BASIS AND IS NOT TO BE USED IN ANY WAY DETRIMENTAL TO THE INTEREST OF NAVISTAR, INC.

ELECTRICAL CIRCUIT DIAGRAM CHAPTER 13

CONNECTOR BODY COMPOSITE MATING VIEW SHOWN

1

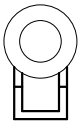

CONNECTOR 1669834C1
BODY LOCK 1675053C1

CAV	CIRCUIT	GAUGE	COLOR	TERMINAL	SEAL/SLEEVE
A	WHITE	12	WH	2033912C1	2033912C1

REMOTE SENSE FUSE
(1F)

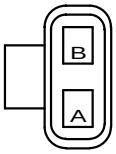

CONNECTOR 1667639C1

CAV	CIRCUIT	GAUGE	COLOR	TERMINAL
A	K7B	16	RD	3895713C1
B	K7A	16	RD	3895713C1

FRONT END CONNECTOR
(1F)

(LOCATED ON DASH PANEL AT LEFT SIDE)

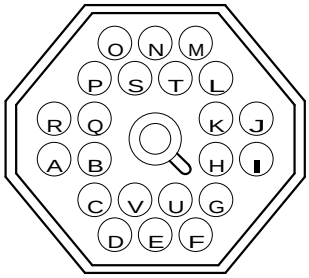

CONNECTOR 0598332C1
BODY LOCK 0598333C1

CAV	CIRCUIT	GAUGE	COLOR	TERMINAL	SEAL/SLEEVE
A	M53B	12	YL	1673748C1	0589390C1
B	M41C	18	LTGN	0587578C1	1652325C1
C	M41D	18	LTGN	0587578C1	1652325C1
D	PLUG	–	–	–	–
E	M39	16	GY	0587577C1	1652325C1
F	M52F	12	YL	1673748C1	0589390C1
G	M52-GE	12	WH	1673748C1	0589390C1
H	M97-GF	18	VT	0587578C1	1652325C1
I	M70A	16	OR	0587577C1	1652325C1
J	M70	16	OR	0587577C1	1652325C1
K	M58H	14	BN	0587577C1	0589391C1
L	M97AL	18	VT	0587578C1	1652325C1
M	M64B	14	BN	0587577C1	0589391C1
N	PLUG	–	–	–	–
O	PLUG	–	–	–	–
P	M56	18	OR	0587578C1	1652325C1
Q	PLUG	–	–	–	–
R	PLUG	–	–	–	–
S	M57	14	OR	0587577C1	0589391C1
T	M85	16	GY	0587577C1	1652325C1
U	PLUG	–	–	–	–
V	PLUG	–	–	–	–

CHK	DATE	CHANGE	REV	REFERENCE	DRAWN	NAME
–	–	INITIAL RELEASE.	A	92159Y	310615	CIRCUIT DIAGRAM, 9900
					RELEASE NO. 92159Y	DATE 01AUG13 / PART NO. AE08076124 / SHEET 001

Figure 199 Connector Composite (1 / 1F)

13.2. CONNECTOR COMPOSITE (1M), P. 2

NAVISTAR, INC

THIS PRINT IS PROVIDED ON A RESTRICTED BASIS AND IS NOT TO BE USED IN ANY WAY DETRIMENTAL TO THE INTEREST OF NAVISTAR, INC.

ELECTRICAL CIRCUIT DIAGRAM CHAPTER 13

CONNECTOR BODY COMPOSITE MATING VIEW SHOWN

AUX TRLR SOC CONN
(1M)

CONNECTOR 1661196C1
BODY LOCK 0598333C1

CAV	CIRCUIT	GAUGE	COLOR	TERMINAL
A	A57C	12	OR	1661211C1
B	A56C	12	YL	1661211C1

AUX TRLR SOC CONN
(1M)

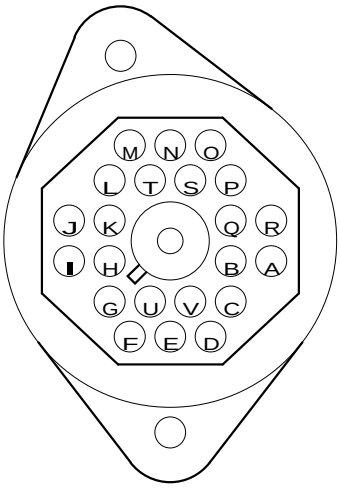

CONNECTOR 0593389C1
BODY LOCK 0598333C1

CAV	CIRCUIT	GAUGE	COLOR	TERMINAL	SEAL/SLEEVE
A	A53B	14	YL	0587575C1	0589391C1
B	A41C	18	LTGN	0587576C1	1652325C1
B	A58ZH	16	BN	0587575C1	1652325C1
C	A41D	18	LTGN	0587576C1	1652325C1
D	PLUG	–	–	–	–
E	A39B	16	GY	0587575C1	1652325C1
F	A52F	12	YL	1673747C1	0589390C1
F	A52F	14	YL	0587575C1	0589391C1
G	A52-GE	12	WH	1673747C1	0589390C1
H*	A97AF	18	VT	0587576C1	1652325C1
H%	A97AL	16	VT	0587575C1	1652325C1
H@	A97-GF	18	VT	0587576C1	1652325C1
I	A70A	14	OR	0587575C1	0589391C1
J	A70	12	OR	1673747C1	0589390C1
K	A58H	16	BN	0587575C1	1652325C1
L*	A97AL	18	VT	0587576C1	1652325C1
L%	A97NM	18	VT	0587576C1	1652325C1
M	A64B	14	YL	0587575C1	0589391C1
N	PLUG	–	–	–	–
O	PLUG	–	–	–	–
P	A56	12	OR	1673747C1	0589390C1
Q	PLUG	–	–	–	–
R	PLUG	–	–	–	–
S	A57	12	OR	1673747C1	0589390C1
T	A85B	16	GY	0587575C1	1652325C1
U	A41C	18	LTGN	0587576C1	1652325C1
V	A41D	18	LTGN	0587576C1	1652325C1

* W/ 2010 1BB ENG & W/ ALLISION XMSN &
W/ ENGINE BRAKE
% w/ INTL CEC I-6ENGINES
@ W/ EATON DM3 XMSN W/ AUTO CLUTCH
W/ CUMMINS W/ ICON

SWITCH
(1M)
(LOCATED AT BEHIND DRIVER SEAT)

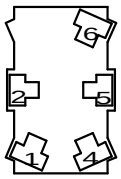

CONNECTOR 1661256C1

CAV	CIRCUIT	GAUGE	COLOR	TERMINAL
1	A65C	16	OR	1661226C1
2	A65-GC	16	WH	1661226C1
3	PLUG	–	–	–
4	A65N	16	OR	1661226C1
4	A71R	16	OR	1661226C1
5	A65R	18	OR	1661224C1
5	A71N	16	OR	1661226C1
6	A65P	16	OR	1661226C1

CHK	DATE	CHANGE	REV	REFERENCE	DRAWN	NAME
0488	09DEC14	ADDED CONN 1661256C1.	B	92783V	310615	CIRCUIT DIAGRAM, 9900
					RELEASE NO. 92159Y	DATE 01AUG13 / PART NO. AE08076124 / SHEET 002

Figure 200 Connector Composite (1M)

13.3. CONNECTOR COMPOSITE (2), P. 3

NAVISTAR, INC

THIS PRINT IS PROVIDED ON A RESTRICTED BASIS AND IS NOT TO BE USED IN ANY WAY DETRIMENTAL TO THE INTEREST OF NAVISTAR, INC.

ELECTRICAL CIRCUIT DIAGRAM CHAPTER 13

CONNECTOR BODY COMPOSITE MATING VIEW SHOWN

DASH CONN 2
(2)
(LOCATED ON DASH PANEL AT LEFT SIDE)

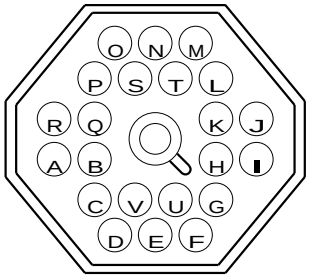

CONNECTOR 0598332C1
BODY LOCK 0598333C1

CAV	CIRCUIT	GAUGE	COLOR	TERMINAL	SEAL/SLEEVE
A	PLUG	–	–	0587579C1	–
B	K30	18	TN	0587578C1	3517771C1
B	K30	16	TN	0587577C1	1652325C1
C	K77E	14	LTGN	0587577C1	0589391C1
D*	K17A	16	PK	0587577C1	1652325C1
D#	K17A	16	PK	0587577C1	1652325C1
D	K17A1	16	PK	0587577C1	1652325C1
E	K97AJ1	16	VT	0587577C1	1652325C1
F	K92A	16	TN	0587577C1	1652325C1
G@	K92B	16	TN	0587577C1	1652325C1
G%	K71	16	OR	0587577C1	1652325C1
H@	K92-GC	16	TN	0587577C1	1652325C1
H%	K71A	16	OR	0587577C1	1652325C1
I	K92-GD	16	TN	0587577C1	1652325C1
J**	K23A	18	TN	0587578C1	1652325C1
J##	K23A	18	PK	0587578C1	1652325C1
J*#	K23B	18	TN	0587578C1	1652325C1
K*#	K23A	18	TN	0587578C1	1652325C1
K*%	K23C	20	TN	0587578C1	3517771C1
L*	K17A	16	PK	0587577C1	1652325C1
L#	K17A	16	PK	0587577C1	1652325C1
L	K17A1	16	PK	0587577C1	1652325C1
M	K82C	16	GY	0587577C1	1652325C1
N	K82D	16	GY	0587577C1	1652325C1
O	K82E	16	GY	0587577C1	1652325C1
P	K13D	16	PK	0587577C1	1652325C1
P	K13D	18	PK	0587578C1	3517771C1
Q	K13D4	18	PK	0587578C1	1652325C1
R	K101A	20	TN	0587578C1	3517771C1
R@@	K93A	18	TN	0587578C1	3517771C1
S	K82F	16	GY	0587577C1	1652325C1
T	K82-GC	16	WH	0587577C1	1652325C1
U	PLUG	–	–	–	–
V	K31	18	TN	0587578C1	1652325C1
V	K31B	16	TN	0587577C1	1652325C1

* W/2013 ISX ENG
\# W/2010 MAXXFORCE 15L ENG
@ W/ALLISON,4000,4500,4700 RDS
% W/ULTRASHIFT PLUS,W/PUSH BUTTON SHIFTER
** W/AIR CONDITIONG & W/FAN OVERRIDE N/APADS
N/AIR CONDITIONG & W/FAN OVERRIDE
@@ W/2-SPEED AXLE & N/SPEEDO WIRING
*# W/AC W/FAN OVERRIDE W/APADS
*% W/AC W/FAN OVERRIDE N/APADS

CHK	DATE	CHANGE	REV	REFERENCE	DRAWN	NAME
MJV0	18JUL18	ADDED CIRC K23B IN	B	94591W	310615	CIRCUIT DIAGRAM, 9900
	CAV J, K23A AND K23C IN CAV K				RELEASE NO. 92159Y	DATE 01AUG13

PART NO. AE08076124 SHEET 003

Figure 201 Connector Composite (2)

13.4. CONNECTOR COMPOSITE (2M), P. 4

NAVISTAR, INC

THIS PRINT IS PROVIDED ON A RESTRICTED BASIS AND IS NOT TO BE USED IN ANY WAY DETRIMENTAL TO THE INTEREST OF NAVISTAR, INC.

ELECTRICAL CIRCUIT DIAGRAM CHAPTER 13

CONNECTOR BODY COMPOSITE MATING VIEW SHOWN

AUX TRLR SOC CONN
(2M)

CONNECTOR 1661196C1

CAV	CIRCUIT	GAUGE	COLOR	TERMINAL
A	A94AF	10	OR	1661211C1
B	A70C	10	OR	1661211C1

ENGINE CONN
(2M)

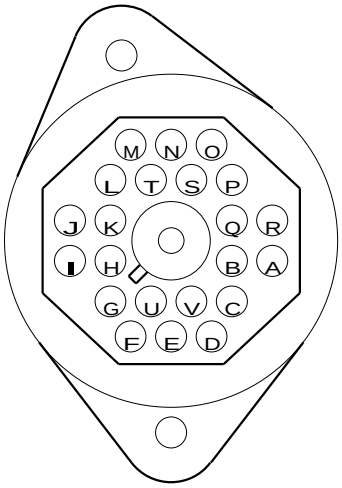

CONNECTOR 0593389C1
BODY LOCK 0598333C1

CAV	CIRCUIT	GAUGE	COLOR	TERMINAL	SEAL/SLEEVE
A	A17EA	16	PK	0587575C1	1652325C1
B	A30	18	TN	0587576C1	1652325C1
C	A77C	14	LTGN	0587575C1	0589391C1
D	A14EF	12	RD	1673747C1	0589390C1
E	A11-GEF	12	WH	1673747C1	0589390C1
F	A97EB	18	VT	0587576C1	1652325C1
F*	A48B	16	GY	0587575C1	1652325C1
G	A71	18	OR	0587576C1	1652325C1
H	A71A	16	OR	0587575C1	1652325C1
H%	A71B	14	OR	0587575C1	0589391C1
I	A97ED	18	VT	0587576C1	1652325C1
J	A23A	16	TN	0587575C1	1652325C1
K	A23B	16	TN	0587575C1	1652325C1
K@	A23A	16	TN	0587575C1	1652325C1
L	A17B	14	PK	0587575C1	0589391C1
M	A82C	16	GY	0587575C1	1652325C1
N	A82D	16	GY	0587575C1	1652325C1
O	A82E	16	GY	0587575C1	1652325C1
P#	A13D	18	PK	0587576C1	1652325C1
P*	A13D	20	PK	0587576C1	1652325C1
P&	A17EF	18	PK	0587576C1	1652325C1
Q	A13D4	18	PK	0587576C1	1652325C1
R	A23Z	16	GY	0587575C1	1652325C1
R	A23	16	TN	0587575C1	1652325C1
S	A82F	16	GY	0587575C1	1652325C1
T	A82-GC	16	WH	0587575C1	1652325C1
U	PLUG	–	–	0587579C1	–
V	A31	18	TN	0587576C1	1652325C1

* W/ALL CUMMINS ENGINES W/BRAZIL
& W/CUMMINS ENGINE N/BRAZIL
# W/D3B1 ENGINE
% W/DUAL SWITCHED CUSTOMER MNTG WORK LGHTS
@ W/FAN DRIVE AND OVERRIDE SWITCH

CHK	DATE	CHANGE	REV	REFERENCE	DRAWN	NAME
MJV0	18JUL18	ADDED CIRC A23A IN	C	94591W	310615	CIRCUIT DIAGRAM, 9900
		CAV K AT R/D 2M.			RELEASE NO. 92159Y	DATE 22MAY13 / PART NO. AE08076124 / SHEET 004

Figure 202 Connector Composite (2M)

13.5. CONNECTOR COMPOSITE (2M1 / 2M2 / 3F), P. 5

NAVISTAR, INC

THIS PRINT IS PROVIDED ON A RESTRICTED BASIS AND IS NOT TO BE USED IN ANY WAY DETRIMENTAL TO THE INTEREST OF NAVISTAR, INC.

ELECTRICAL CIRCUIT DIAGRAM CHAPTER 13

CONNECTOR BODY COMPOSITE MATING VIEW SHOWN

REFERENCE CONNECTOR
(2M1/2M2)

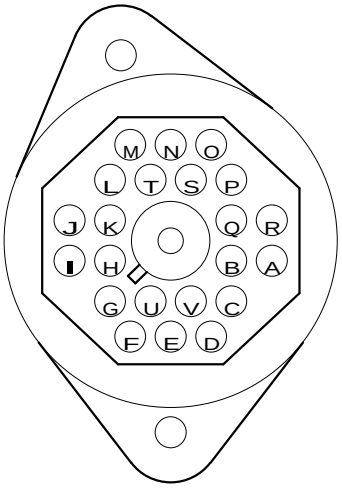

CONNECTOR 0593389C1
BODY LOCK 0598333C1

CAV	CIRCUIT	GAUGE	COLOR	TERMINAL	SEAL/SLEEVE
A	PLUG	–	–	–	–
B	PLUG	–	–	–	–
C	PLUG	–	–	–	–
D	PLUG	–	–	–	–
E	PLUG	–	–	–	–
F	PLUG	–	–	–	–
F	PLUG	–	–	–	–
G	PLUG	–	–	–	–
H	PLUG	–	–	–	–
I	PLUG	–	–	–	–
J	K23A	16	TN	0587575C1	1652325C1
K	PLUG	–	–	–	–
L	PLUG	–	–	–	–
M	PLUG	–	–	–	–
N	PLUG	–	–	–	–
O	PLUG	–	–	–	–
P	PLUG	–	–	–	–
P	PLUG	–	–	–	–
Q	PLUG	–	–	–	–
R	PLUG	–	–	–	–
S	PLUG	–	–	–	–
T	PLUG	–	–	–	–
U	PLUG	–	–	–	–
V	PLUG	–	–	–	–

CHASSIS CONN
(3F)

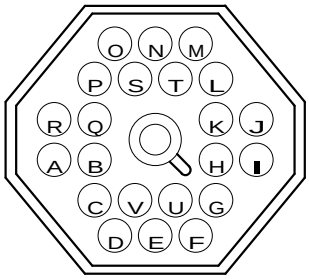

CONNECTOR 0598332C1
BODY LOCK 0598333C1

CAV	CIRCUIT	GAUGE	COLOR	TERMINAL	SEAL/SLEEVE
A	PLUG	–	–	–	–
B	PLUG	–	–	–	–
C	PLUG	–	–	–	–
D	PLUG	–	–	–	–
E	PLUG	–	–	–	–
F	PLUG	–	–	–	–
F	PLUG	–	–	–	–
G	PLUG	–	–	–	–
H	PLUG	–	–	–	–
I	PLUG	–	–	–	–
J	PLUG	–	–	–	–
K	PLUG	–	–	–	–
L	PLUG	–	–	–	–
M	PLUG	–	–	–	–
N	PLUG	–	–	–	–
O	PLUG	–	–	–	–
P	PLUG	–	–	–	–
P	PLUG	–	–	–	–
Q	PLUG	–	–	–	–
R	PLUG	–	–	–	–
S	A87B	16	GY	0587577C1	1652325C1
T	A87A	16	GY	0587577C1	1652325C1
U	PLUG	–	–	–	–
V	PLUG	–	–	–	–

CHK	DATE	CHANGE	REV	REFERENCE	DRAWN	NAME
–	–	INITIAL RELEASE.	A	92159Y	310615	CIRCUIT DIAGRAM, 9900
					RELEASE NO. 92159Y	DATE 01AUG13 / PART NO. AE08076124 / SHEET 005

Figure 203 Connector Composite (2M1 / 2M2 / 3F)

13.6. CONNECTOR COMPOSITE (3F / 3M), P. 6

NAVISTAR, INC

THIS PRINT IS PROVIDED ON A RESTRICTED BASIS AND IS NOT TO BE USED IN ANY WAY DETRIMENTAL TO THE INTEREST OF NAVISTAR, INC.

ELECTRICAL CIRCUIT DIAGRAM CHAPTER 13

CONNECTOR BODY COMPOSITE MATING VIEW SHOWN

AUXILARY TRAILAR SOCKET CONNECTOR
(3F)

CONNECTOR 1661197C1

CAV	CIRCUIT	GAUGE	COLOR	TERMINAL
A	A58S	12	BN	2023899C1
B	A68B	12	BN	2023899C1

CHASSIS CONN
(3M)

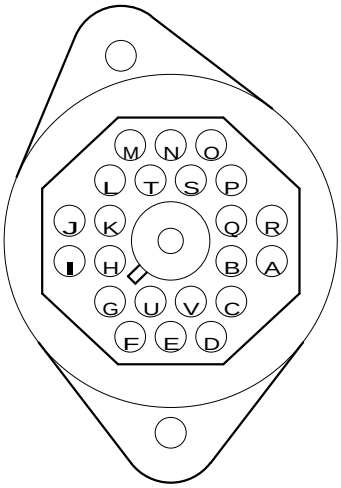

CONNECTOR 0593389C1
BODY LOCK 0598333C1

CAV	CIRCUIT	GAUGE	COLOR	TERMINAL	SEAL/SLEEVE
A	A32	18	TN	0587576C1	1652325C1
B#	A71P	14	BK	0587579C1	0589391C1
C	PLUG	–	–	0587579C1	–
D	A97SB	18	VT	0587576C1	1652325C1
E	A56B	12	OR	1673747C1	0589390C1
F	A57B	12	OR	1673747C1	0589390C1
G	A68A	16	BN	0587575C1	1652325C1
H	A71A	16	OR	0587575C1	1652325C1
H*	A71ZC	16	OR	0587575C1	1652325C1
I	PLUG	–	–	0587579C1	–
J	PLUG	–	–	0587579C1	–
K	PLUG	–	–	0587579C1	–
L	PLUG	–	–	0587579C1	–
M	PLUG	–	–	0587579C1	–
N	PLUG	–	–	0587579C1	–
O	PLUG	–	–	0587579C1	–
P	PLUG	–	–	0587579C1	–
O	PLUG	–	–	0587579C1	–
R	A32A	18	TN	0587576C1	1652325C1
S	A87A	16	GY	0587575C1	1652325C1
T	A87B	16	GY	0587575C1	1652325C1
U	PLUG	–	–	0587579C1	–
V	A36	18	TN	0587576C1	1652325C1

* W/ ALL CUMMINS ENG W/ BRAZIL
\# W/ DUAL SWITCHED CUSTOMER MNTG WORK LGHTS

CHK	DATE	CHANGE	REV	REFERENCE	DRAWN	NAME
0488	09DEC14	ADDED CIRC A71P AT	B	92783V	310615	CIRCUIT DIAGRAM, 9900
		CAV B, IN R/D 3M.			RELEASE NO. 92159Y	DATE 01AUG13 / PART NO. AE08076124 / SHEET 006

Figure 204 Connector Composite (3F / 3M)

13.7. CONNECTOR COMPOSITE (3M / 4M), P. 7

NAVISTAR, INC

THIS PRINT IS PROVIDED ON A RESTRICTED BASIS AND IS NOT TO BE USED IN ANY WAY DETRIMENTAL TO THE INTEREST OF NAVISTAR, INC.

ELECTRICAL CIRCUIT DIAGRAM CHAPTER 13

CONNECTOR BODY COMPOSITE MATING VIEW SHOWN

DASH/CHASSIS INTERCONNECT
(3M)

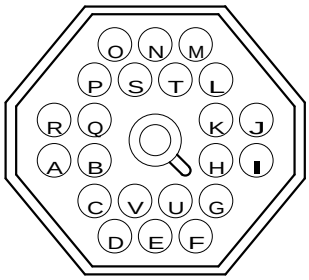

CONNECTOR 0598332C1
BODY LOCK 0598333C1

CAV	CIRCUIT	GAUGE	COLOR	TERMINAL	SEAL/SLEEVE
A	N32	18	TN	0587578C1	1652325C1
B	PLUG	–	–	–	–
C	PLUG	–	–	–	–
D	PLUG	–	–	–	–
E	N56A	14	OR	0587577C1	0589391C1
F	N57A	14	OR	0587577C1	0589391C1
G	N68A	14	BN	0587577C1	0589391C1
H	N71	14	OR	0587577C1	0589391C1
I	PLUG	–	–	–	–
J	PLUG	–	–	–	–
K	N49A	18	GY	0587578C1	1652325C1
L	N49	18	GY	0587578C1	1652325C1
M	PLUG	–	–	–	–
N	PLUG	–	–	–	–
O	PLUG	–	–	–	–
P	PLUG	–	–	–	–
Q	PLUG	–	–	–	–
R	N32A	18	TN	0587578C1	1652325C1
S	N87A	16	GY	0587577C1	1652325C1
T	N87B	16	GY	0587577C1	1652325C1
U	PLUG	–	–	–	–
V*	N36A	18	TN	0587578C1	1652325C1
V#	N36	18	RD	0587578C1	1652325C1

* W/ DUAL BOC FUEL TANKS 115 / 150 GAL
\# W/ DUAL UC FUEL TANKS 115 / 150 GAL

TURN SIGNAL SWITCH
(4M)
(LOCATED ON STEERING COLUMN)

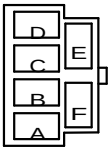

CONNECTOR 0258058C1

CAV	CIRCUIT	GAUGE	COLOR	TERMINAL
A	A57D	12	OR	0333735C1
A#	A57E	14	OR	0333735C1
B	A57B	12	OR	0333734C1
C	A56B	12	OR	0333734C1
D	A56D	12	OR	0333735C1
D	A56E	14	OR	0333735C1
E	A55A	12	OR	0333734C1
F	A70A	14	OR	0333735C1
F	A70D	14	OR	0333735C1

\# W/ 2010 IBB ENGINE & W/ ALLISION
XMSN & W/ ENGINE BRAKE

CHK	DATE	CHANGE	REV	REFERENCE	DRAWN	NAME		
–	–	INITIAL RELEASE.	A	92159Y	310615	CIRCUIT DIAGRAM, 9900		
					RELEASE NO.	DATE	PART NO.	SHEET
					92159Y	01AUG13	AE08076124	007

Figure 205 Connector Composite (3M / 4M)

13.8. CONNECTOR COMPOSITE (8 / 9F / 9M), P. 8

NAVISTAR, INC

THIS PRINT IS PROVIDED ON A RESTRICTED BASIS AND IS NOT TO BE USED IN ANY WAY DETRIMENTAL TO THE INTEREST OF NAVISTAR, INC.

ELECTRICAL CIRCUIT DIAGRAM CHAPTER 13

CONNECTOR BODY COMPOSITE MATING VIEW SHOWN

RADIATOR GROUND
(8)

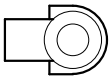

CONNECTOR 0587566C91

CAV	CIRCUIT	GAUGE	COLOR	TERMINAL	SEAL/SLEEVE
A	M11-GR	12	WH	1673747C1	0589390C1

W/S WASHER PUMP FEED
(9F)

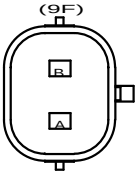

CONNECTOR 3543888C1
BODY LOCK 1661874C1

CAV	CIRCUIT	GAUGE	COLOR	TERMINAL	SEAL/SLEEVE
A	A87A	16	GY	1667742C1	1661872C1
B	A87B	16	GY	1667742C1	1661872C1

W/S WASHER PUMP
(9M)

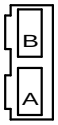

CONNECTOR 0899166R1

CAV	CIRCUIT	GAUGE	COLOR	TERMINAL
A	A87A	16	GY	0188396R1
B	A87B	16	GY	0188396R1

W/S WASHER PUMP
(9M)

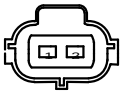

CONNECTOR 3536864C1

CAV	CIRCUIT	GAUGE	COLOR	TERMINAL	SEAL/SLEEVE
1*	N87B	16	GY	3561584C1	3536868C1
1#	N87A	16	GY	3536865C1	3536868C1
2*	N87A	16	GY	3561584C1	3536868C1
2#	N87B	16	GY	3536865C1	3536868C1

* W/ COMMON BASE +500
# W/ WINDSHIELD WASHER WIRING & N/ BUTTERLY HOOD

CHK	DATE	CHANGE	REV	REFERENCE	DRAWN	NAME
–	–	INITIAL RELEASE.	A	92159Y	310615	CIRCUIT DIAGRAM, 9900
					RELEASE NO. 92159Y	DATE 01AUG13 / PART NO. AE08076124 / SHEET 008

Figure 206 Connector Composite (8 / 9F / 9M)

13.9. CONNECTOR COMPOSITE (10A / 18F / 18M / 20 / 29), P. 9

NAVISTAR, INC

THIS PRINT IS PROVIDED ON A RESTRICTED BASIS AND IS NOT TO BE USED IN ANY WAY DETRIMENTAL TO THE INTEREST OF NAVISTAR, INC.

ELECTRICAL CIRCUIT DIAGRAM CHAPTER 13

CONNECTOR BODY COMPOSITE MATING VIEW SHOWN

4X2 REAR AXLE MERITOR DIFF LOCK WARN LIGHT
(10A)

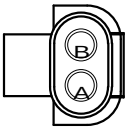

CONNECTOR 3593684C91

CAV	CIRCUIT	GAUGE	COLOR	TERMINAL	SEAL/SLEEVE
A	A14BY	14	BN	0587577C1	0589391C1
B	A14YA	14	YL	0587577C1	0589391C1

MAIN CAB HORN BUTTOTN
(18F)

CONNECTOR 0188393R1

CAV	CIRCUIT	GAUGE	COLOR	TERMINAL
A	A85C	18	GY	0241117R1

HORN BUTTOTN
(18M)

CONNECTOR 0188395R1

CAV	CIRCUIT	GAUGE	COLOR	TERMINAL
A	A85C	16	GY	0188396R1

LOW COOLANT SENDER 1
(20)

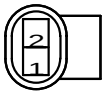

CONNECTOR 3554317C1

CAV	CIRCUIT	GAUGE	COLOR	TERMINAL	SEAL/SLEEVE
1	K34F	18	TN	3554322C1	3554318C1
2	K34E	18	TN	3554322C1	3554318C1

AAT SENDER
(29)

CONNECTOR 3522068C1
BODY LOCK 1661874C1

CAV	CIRCUIT	GAUGE	COLOR	TERMINAL	SEAL/SLEEVE
A	N41D	18	BK	1661875C1	1661872C1
B	N41E	18	GY	1661875C1	1661872C1

CHK	DATE	CHANGE	REV	REFERENCE	DRAWN	NAME		
–	–	INITIAL RELEASE.	A	92159Y	310615	CIRCUIT DIAGRAM, 9900		
					RELEASE NO.	DATE	PART NO.	SHEET
					92159Y	01AUG13	AE08076124	009

Figure 207 Connector Composite (10A / 18F / 18M / 20 / 29)

13.10. CONNECTOR COMPOSITE (30 / 40M), P. 10

NAVISTAR, INC

THIS PRINT IS PROVIDED ON A RESTRICTED BASIS AND IS NOT TO BE USED IN ANY WAY DETRIMENTAL TO THE INTEREST OF NAVISTAR, INC.

ELECTRICAL CIRCUIT DIAGRAM CHAPTER 13

CONNECTOR BODY COMPOSITE MATING VIEW SHOWN

DASH CONN
(30)

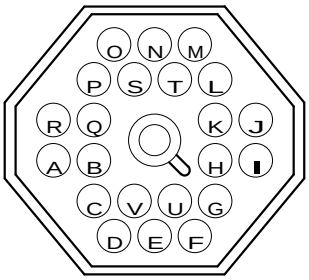

CONNECTOR 0598332C1
BODY LOCK 0598333C1

CAV	CIRCUIT	GAUGE	COLOR	TERMINAL	SEAL/SLEEVE
A	PLUG	–	–	–	–
B	PLUG	–	–	–	–
C	PLUG	–	–	–	–
D	PLUG	–	–	–	–
E	PLUG	–	–	–	–
F	PLUG	–	–	–	–
G	PLUG	–	–	–	–
H	PLUG	–	–	–	–
I	PLUG	–	–	–	–
J	PLUG	–	–	–	–
K	A14BY	14	BN	0587577C1	0589391C1
L	A14YA	14	YL	0587577C1	0589391C1
M	PLUG	–	–	–	–
N	PLUG	–	–	–	–
O	PLUG	–	–	–	–
P	PLUG	–	–	–	–
Q	PLUG	–	–	–	–
R	PLUG	–	–	–	–
S	PLUG	–	–	–	–
T	PLUG	–	–	–	–
U	PLUG	–	–	–	–
V	PLUG	–	–	–	–

KEY SW
(40M)

(LOCATED ON STEERING COLUMN)

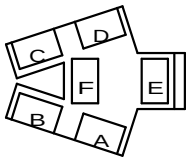

CONNECTOR 0293347C1

CAV	CIRCUIT	GAUGE	COLOR	TERMINAL
A*	A13	12	PK	1660577C1
A#	A13EE	12	PK	1660577C1
B	A17	16	PK	0188396R1
C*	A12	12	LT BL	1677840C1
C#	A12M	12	LT BL	1677840C1
E	A15	12	RD	1660577C1
F	A17	16	PK	0188396R1

* W/ 2010 IBB ENG & W/ ALLISON XMSN
& W/ ENGINE BRAKE
# W/ CUMMINS W/ CUM IDLE CONTROL SYS
W/ PAM, W/ STARTER INTERLOCK

CHK	DATE	CHANGE	REV	REFERENCE	DRAWN	NAME
0610	27AUG13	INITIAL RELEASE.	A	92159Y	310615	CIRCUIT DIAGRAM, 9900
					RELEASE NO. 92159Y	DATE 01AUG13 / PART NO. AE08076124 / SHEET 010

Figure 208 Connector Composite (30 / 40M)

13.11. CONNECTOR COMPOSITE (41M / 43M / 45ML / 45 / 66F / 67F), P. 11

NAVISTAR, INC

THIS PRINT IS PROVIDED ON A RESTRICTED BASIS AND IS NOT TO BE USED IN ANY WAY DETRIMENTAL TO THE INTEREST OF NAVISTAR, INC.

ELECTRICAL CIRCUIT DIAGRAM CHAPTER 13

CONNECTOR BODY COMPOSITE MATING VIEW SHOWN

PUSH BUTTON START SWITCH
(41M)

CONNECTOR 0899166R1

CAV	CIRCUIT	GAUGE	COLOR	TERMINAL
A	A17	16	PK	0188396R1
B	A17A	16	PK	0188396R1

TRUCK BODY JUNCTION BLOCK
(43M)

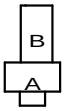

CONNECTOR 0872291R1

CAV	CIRCUIT	GAUGE	COLOR	TERMINAL
A	A58R	12	BN	1677840C1
A	A58S	12	BN	1677840C1
B	PLUG	–	–	–

TRAILER SOCKET GND
(45ML)

CONNECTOR 0188395R1

CAV	CIRCUIT	GAUGE	COLOR	TERMINAL
A	11-GAN	10	WH	1660025C1

WORK LIGHT HARNESS GROUND
(45)
(LOCATED AT BEHIND DRIVER SEAT)

CONNECTOR 0188393R1

CAV	CIRCUIT	GAUGE	COLOR	TERMINAL
A	A65-GC	16	WH	0870923R1
A	A65-GC1	16	WH	0870923R1
A	A65-GB	18	WH	0870923R1

RIGHT FOG LIGHT
(66F)

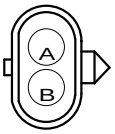

CONNECTOR 0587567C91

CAV	CIRCUIT	GAUGE	COLOR	TERMINAL	SEAL/SLEEVE
A	M64C	14	BN	0587577C1	0589391C1
B	M64-GA	14	WH	0587577C1	0589391C1

LEFT FOG LIGHT
(67F)

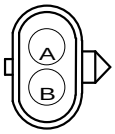

CONNECTOR 0587567C91

CAV	CIRCUIT	GAUGE	COLOR	TERMINAL	SEAL/SLEEVE
A	M64D	14	BN	0587577C1	0589391C1
B	M64-GB	14	WH	0587577C1	0589391C1

CHK	DATE	CHANGE	REV	REFERENCE	DRAWN	NAME
0488	09DEC14	ADDED R/D 45.	B	92783V	310615	CIRCUIT DIAGRAM, 9900
					RELEASE NO. 92159Y	DATE 01AUG13 / PART NO. AE08076124 / SHEET 011

Figure 209 Connector Composite (41M / 43M / 45ML / 45 / 66F / 67F)

13.12. CONNECTOR COMPOSITE (71 / 72 / 100 / 100M3), P. 12

NAVISTAR, INC

THIS PRINT IS PROVIDED ON A RESTRICTED BASIS AND IS NOT TO BE USED IN ANY WAY DETRIMENTAL TO THE INTEREST OF NAVISTAR, INC.

ELECTRICAL CIRCUIT DIAGRAM CHAPTER 13

CONNECTOR BODY COMPOSITE MATING VIEW SHOWN

LEFT TAIL LIGHT/RIGHT TAIL LIGHT
(71/72)

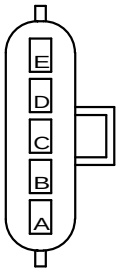

CONNECTOR 1661375C2
BODY LOCK 1661376C1

CAV	CIRCUIT	GAUGE	COLOR	TERMINAL	SEAL/SLEEVE
A	R71C	14	LTBL	2033816C1	0589391C1
B	R68C	14	BN	2033816C1	0589391C1
C	R57B	14	LTGN	2033816C1	0589391C1
D	PLUG	–	–	–	–
E	R10-GC	14	WH	2033816C1	0589391C1

J1939 BACKBONE
(100)

(LOCATED ON INSTRUMENT PANEL)

CONNECTOR 1667741C1
BODY LOCK 1667771C1

CAV	CIRCUIT	GAUGE	COLOR	TERMINAL	SEAL/SLEEVE
A*	R3(+)	18	YL	1661875C1	3568570C1
A#	R4(+)	18	YL	1661875C1	3568570C1
B	PLUG	–	–	–	–
C*	R3(-)	18	GN	1661875C1	3568570C1
C#	R4(-)	18	GN	1661875C1	3568570C1

* N/ 20007 ENGINE & N/ ISX EPA 04
\# W/ 2007 ENGINE, N/ ALLISON 4TH GEN
4000 & 4500 SERIES TRANS

EOF SHIFTER
(100M3)

(LOCATED AT END OF FRAME)

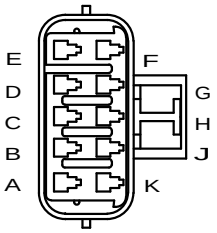

CONNECTOR 3538635C1
BODY LOCK 3538636C1

CAV	CIRCUIT	GAUGE	COLOR	TERMINAL	SEAL/SLEEVE
A	K46PT	18	TN	1661875C1	3568570C1
B	K46-G	18	WH	1661875C1	3568570C1
C	K62SC	18	LTBL	1661875C1	3568570C1
D	K109C	18	GY	1661875C1	1661872C1
E	K134B	18	YL	1661875C1	3568570C1
F	K163D	18	YL	1661875C1	3568570C1
G	K110C	18	PK	1661875C1	3568570C1
H	K98YL	18	YL	1661875C1	3568570C1
J	K98GN	18	GN	1661875C1	3568570C1
K	PLUG	–	–	–	–

CHK	DATE	CHANGE	REV	REFERENCE	DRAWN	NAME
–	–	INITIAL RELEASE.	A	92159Y	310615	CIRCUIT DIAGRAM, 9900
					RELEASE NO. 92159Y	DATE 01AUG13 / PART NO. AE08076124 / SHEET 012

Figure 210 Connector Composite (71 / 72 / 100 / 100M3)

13.13. CONNECTOR COMPOSITE (105M), P. 13

NAVISTAR, INC

THIS PRINT IS PROVIDED ON A RESTRICTED BASIS AND IS NOT TO BE USED IN ANY WAY DETRIMENTAL TO THE INTEREST OF NAVISTAR, INC.

ELECTRICAL CIRCUIT DIAGRAM

CHAPTER 13

CONNECTOR BODY COMPOSITE MATING VIEW SHOWN

ALLISON DASH CONNECTOR
(105M)
(LOCATED ON DASH PANEL AT LEFT SIDE)

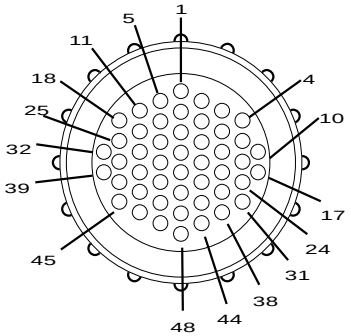

CONNECTOR 3566585C91
BODY LOCK 3566572C1

* W/ALLISON TRANSMISSION
\# W/MANUAL TRANSMISSION

CAV	CIRCUIT	GAUGE	COLOR	TERMINAL
1	K111	18	OR	3566558C1
2	K155	18	WH	3566558C1
3	K177	18	LTGN	3566558C1
4	K112	18	PK	3566558C1
5	K136	18	OR	3566558C1
6	K152	18	LTGN	3566558C1
7	K171	18	YL	3566558C1
8	K174	18	LTBL	3566558C1
9	K133	18	YL	3566558C1
10	K151	18	WH	3566558C1
11	K137	18	WH	3566558C1
12	K116	18	LTBL	3566558C1
13	K158	18	LTGN	3566558C1
14	K159	18	TN	3566558C1
15	K139	18	OR	3566558C1
16	K131	18	YL	3566558C1
17	–	–	–	–
18	K120	18	LTBL	3566558C1
19	K180	18	OR	3566558C1
20	K154	18	TN	3566558C1
21	K176	18	YL	3566558C1
22	K160	18	YL	3566558C1
23	K140	18	LTGN	3566558C1
24	–	–	–	–
25	K119	18	LTBL	3566558C1
26	–	–	–	–
27	–	–	–	–
28	K46PT	18	TN	3566558C1
29	K46-G	18	WH	3566558C1
30	–	–	–	–
31	–	–	–	–
32	–	–	–	–
33	–	–	–	–
34	–	–	–	–
35	–	–	–	–
36	K178	18	WH	3566558C1
37	K62SC	18	LTBL	3566558C1
38	K109C	18	GY	3566558C1
39	K134B	18	YL	3566558C1
40	K163D	18	YL	3566558C1
41	K110C	18	PK	3566558C1
42	K98GN4	18	GN	3566558C1
42	K98GN4	18	GN	3566558C1
42*	K98YL4	18	YL	3566558C1
43	K98YL4	18	YL	3566558C1
43#	K98GN4	18	GN	3566558C1
44	–	–	–	–
45	K24BD	16	GY	3566558C1
46	K92-GV	18	TN	3566558C1
47	K24BL	16	GY	3566558C1
48	K24CL	16	GY	3566558C1

CHK	DATE	CHANGE	REV	REFERENCE	DRAWN	NAME
MJV0	18JUL18	ADDED CIRC K98YL4 &	B	94591W	310615	CIRCUIT DIAGRAM, 9900
	K98GN4	IN CAV 42 & 43 RESPECTIVELY.			RELEASE NO. 92159Y	DATE 01AUG13 / PART NO. AE08076124 / SHEET 013

Figure 211 Connector Composite (105M)

13.14. CONNECTOR COMPOSITE (112 / 113F1 / 113M1), P. 14

NAVISTAR, INC

THIS PRINT IS PROVIDED ON A RESTRICTED BASIS AND IS NOT TO BE USED IN ANY WAY DETRIMENTAL TO THE INTEREST OF NAVISTAR, INC.

ELECTRICAL CIRCUIT DIAGRAM CHAPTER 13

CONNECTOR BODY COMPOSITE MATING VIEW SHOWN

TRAILER SOCKET
(112)

(LOCATED ON REAR OF SLEEPER OR END OF FRAME)

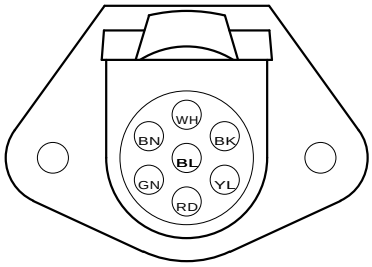

CONNECTOR 1663570C1

CAV	CIRCUIT	GAUGE	COLOR	TERMINAL
BK	A58A	12	BN	INCLUDED
BL	A94AF	10	GY	INCLUDED
BN	A68A	10	BN	INCLUDED
GN	A57D	12	OR	INCLUDED
RD	A70C	10	OR	INCLUDED
WH	A11-GAL	8	WH	INCLUDED
YL	A56D	12	OR	INCLUDED

GROUND
(113F1)

CONNECTOR 3517817C1

CAV	CIRCUIT	GAUGE	COLOR	TERMINAL
A	N11-GW	8	WH	3517818C1

GROUND
(113M1)

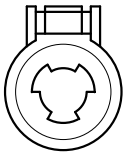

CONNECTOR 3517441C1

CAV	CIRCUIT	GAUGE	COLOR	TERMINAL
A	R11-GW	8	WH	3517439C1

CHK	DATE	CHANGE	REV	REFERENCE	DRAWN	NAME
–	–	INITIAL RELEASE.	A	92159Y	310615	CIRCUIT DIAGRAM, 9900
					RELEASE NO. 92159Y	DATE 01AUG13 / PART NO. AE08076124 / SHEET 014

Figure 212 Connector Composite (112 / 113F1 / 113M1)

13.15. CONNECTOR COMPOSITE (115 / 116 / 129F / 137M), P. 15

NAVISTAR, INC

THIS PRINT IS PROVIDED ON A RESTRICTED BASIS AND IS NOT TO BE USED IN ANY WAY DETRIMENTAL TO THE INTEREST OF NAVISTAR, INC.

ELECTRICAL CIRCUIT DIAGRAM CHAPTER 13

CONNECTOR BODY COMPOSITE MATING VIEW SHOWN

RIGHT CAB DOME LIGHT
(115)
(LOCATED AT RIGHT DOOR AREA)

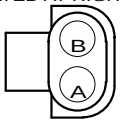

CONNECTOR 0587568C91

CAV	CIRCUIT	GAUGE	COLOR	TERMINAL	SEAL/SLEEVE
A	A63S	16	DKBL	0587575C1	1652325C1
B	A63Y	16	DKBL	0587575C1	1652325C1

LEFT CAB DOME LIGHT
(116)
(LOCATED AT LEFT DOOR AREA)

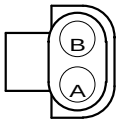

CONNECTOR 0587568C91

CAV	CIRCUIT	GAUGE	COLOR	TERMINAL	SEAL/SLEEVE
A	A63M	16	DKBL	0587575C1	1652325C1
B	A63N	16	DKBL	0587575C1	1652325C1

WORK/BACK UP LIGHT INPUT
(129F)
(LOCATED AT BEHIND DRIVER SEAT)

CONNECTOR 0587565C91

CAV	CIRCUIT	GAUGE	COLOR	TERMINAL	SEAL/SLEEVE
A	A71C	14	OR	0587577C1	0589391C1

DATA LINK
(137M)
(LOCATED IN LEFT SIDE OF INSTRUMENT PANEL)

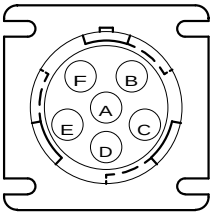

CONNECTOR 2024573C1

CAV	CIRCUIT	GAUGE	COLOR	TERMINAL
A*	A98A(+)	14	BK	0500397C1
A#	A98B(+)	14	BK	0500397C1
B*	A98B(-)	14	BK	0500397C1
B#	A98C(-)	14	BK	0500397C1
C	A97DL	14	VT	0500397C1
D	PLUG	–	–	–
E	A11-GR	14	WH	0500397C1
F	PLUG	–	–	–

* W/ INTL CEC I-6 ENGINE
\# W/ ALL CUMMINS ENGINE W/ BRAZIL

DATA LINK
(137M)

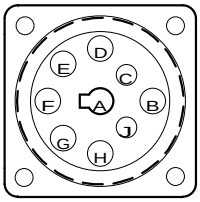

CONNECTOR 3544066C1

CAV	CIRCUIT	GAUGE	COLOR	TERMINAL
A	PLUG	–	–	–
B	PLUG	–	–	–
C*	A98YL3(+)	18	YL	1651968C1
C#	AYL5(+)	18	YL	1651968C1
D	A98GN3(-)	18	GN	1651968C1
D	AGN5(-)	18	GN	1651968C1
E*	PLUG	–	–	–
F#	PLUG	–	–	–

* W/ ABS W/ NON-2007 ENGINE OR W/ 2007, 2010 ENGINE
\# W/ 2007 ENGINE, N/ ALLISION 4TH GEN 4000 & 4500 SERIAL TRANS

CHK	DATE	CHANGE	REV	REFERENCE	DRAWN	NAME
0488	09DEC14	ADDED R/D 129F.	B	92783V	310615	CIRCUIT DIAGRAM, 9900
					RELEASE NO. 92159Y	DATE 01AUG13 / PART NO. AE08076124 / SHEET 015

Figure 213 Connector Composite (115 / 116 / 129F / 137M)

13.16. CONNECTOR COMPOSITE (141M / 142M / 143M), P. 16

NAVISTAR, INC

THIS PRINT IS PROVIDED ON A RESTRICTED BASIS AND IS NOT TO BE USED IN ANY WAY DETRIMENTAL TO THE INTEREST OF NAVISTAR, INC.

ELECTRICAL CIRCUIT DIAGRAM CHAPTER 13

CONNECTOR BODY COMPOSITE MATING VIEW SHOWN

CRUISE SWITCH
(141M)

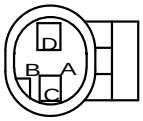

CONNECTOR 1661777C1
BODY LOCK 1661873C1

CAV	CIRCUIT	GAUGE	COLOR	TERMINAL	SEAL/SLEEVE
A	PLUG	–	–	–	–
B	PLUG	–	–	–	–
C	MA97AL	18	VT	1661875C1	1661872C1
D	MA97-GF	18	VT	1661875C1	1661872C1

WIPER-HIGH SPEED
(142M)

(LOCATED INSTRUMENT PANEL)

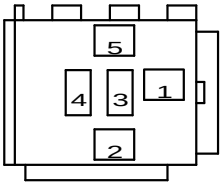

CONNECTOR 0593385C1
BODY LOCK 0593387C1

CAV	CIRCUIT	GAUGE	COLOR	TERMINAL
1*	A82C	16	GY	1661710C1
1#	A82K	16	GY	1661710C1
2	A82J	16	GY	1661709C1
3	A82A	16	GY	1661709C1
4	A82D	16	GY	1661709C1
5*	A12BB	16	LTBL	1661710C1
5#	A12BC	16	LTBL	1661710C1

* W/ 2010 IBB ENG & W/ ALLISON XMSN & W/ ENGINE BRAKE
\# W/ 2010 IBB ENG & W/ ALLISON XMSN & N/ ENGINE BRAKE

WIPER-LOW SPEED
(143M)
(LOCATED IN INSTRUMENT PANEL)

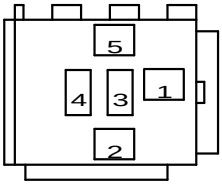

CONNECTOR 0593385C1
BODY LOCK 0593387C1

CAV	CIRCUIT	GAUGE	COLOR	TERMINAL
1	A82E	16	GY	1661709C1
2	A82B	16	GY	1661709C1
3	A82F	16	GY	1661709C1
4	A82A	16	GY	1661709C1
5*	A12BA	16	LTBL	1661710C1
5#	A12BB	16	LTBL	1661710C1

* W/ 2010 IBB ENG & W/ ALLISON XMSN & W/ ENGINE BRAKE
\# W/ 2010 IBB ENG & W/ ALLISON XMSN & N/ ENGINE BRAKE

CHK	DATE	CHANGE	REV	REFERENCE	DRAWN	NAME
–	–	INITIAL RELEASE.	A	92159Y	310615	CIRCUIT DIAGRAM, 9900
					RELEASE NO. 92159Y	DATE 02AUG13 / PART NO. AE08076124 / SHEET 016

Figure 214 Connector Composite (141M / 142M / 143M)

13.17. CONNECTOR COMPOSITE (144M / 145M / 146M), P. 17

NAVISTAR, INC

THIS PRINT IS PROVIDED ON A RESTRICTED BASIS AND IS NOT TO BE USED IN ANY WAY DETRIMENTAL TO THE INTEREST OF NAVISTAR, INC.

ELECTRICAL CIRCUIT DIAGRAM CHAPTER 13

CONNECTOR BODY COMPOSITE MATING VIEW SHOWN

A/C CONTROL
(144M)
(LOCATED IN INSTRUMENT PANEL)

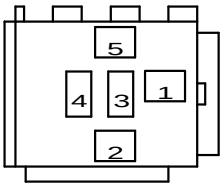

CONNECTOR 0593385C1
BODY LOCK 0593387C

CAV	CIRCUIT	GAUGE	COLOR	TERMINAL
1	A77T	14	LTGN	1661709C1
2*	A12-GH	16	WH	1661709C1
2#	A77-GS	18	WH	1661709C1
3	PLUG	–	–	–
4	A77H	14	LTGN	1661709C1
5	A77W	18	LTGN	1659673C1

* W/ 2010 IBB ENG & W/ ALLISON XMSN & N/ ENGINE BRAKE
\# W/ 2010 IBB ENG & W/ ALLISON XMSN & W/ ENGINE BRAKE

ACCESSORY FEED
(145M)
(LOCATED IN INSTRUMENT PANEL)

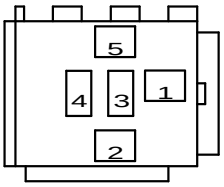

CONNECTOR 0593385C1
BODY LOCK 0593387C1

CAV	CIRCUIT	GAUGE	COLOR	TERMINAL
1	A14BJ	10	RD	1661710C1
2	A12-GH	16	WH	1661709C1
3	PLUG	–	–	–
4	A12AD	10	LTBL	1661710C1
5	A12AC	12	LTBL	1661710C1

AIR DRYER RELAY
(146M)
(LOCATED IN INSTRUMENT PANEL)

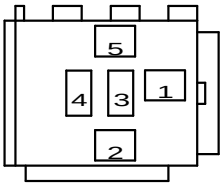

CONNECTOR 0593385C1
BODY LOCK 0593387C1

CAV	CIRCUIT	GAUGE	COLOR	TERMINAL
1	A39A	16	GY	1661709C1
2%	A13-GAD	18	WH	1659673C1
2@	A13-GAD	18	WH	1661709C1
2@	A58-GZB	18	WH	1661709C1
4	A39B	16	GY	1661709C1
5	A13AH	14	PK	1661709C1

@ W/ ALL CUMMINS ENGINE W/ BRAZIL
% W/ 2010 IBB ENG & W/ ALLISON XMSN & N/ ENGINE BRAKE

CHK	DATE	CHANGE	REV	REFERENCE	DRAWN	NAME
–	–	INITIAL RELEASE.	A	92159Y	310615	CIRCUIT DIAGRAM, 9900
					RELEASE NO. 92159Y	DATE 02AUG13 / PART NO. AE08076124 / SHEET 017

Figure 215 Connector Composite (144M / 145M / 146M)

13.18. CONNECTOR COMPOSITE (147M / 148M / 149M), P. 18

NAVISTAR, INC

THIS PRINT IS PROVIDED ON A RESTRICTED BASIS AND IS NOT TO BE USED IN ANY WAY DETRIMENTAL TO THE INTEREST OF NAVISTAR, INC.

ELECTRICAL CIRCUIT DIAGRAM CHAPTER 13

CONNECTOR BODY COMPOSITE MATING VIEW SHOWN

HEADLIGHT DIMMER RELAY
(147M)
(LOCATED IN INSTRUMENT PANEL)

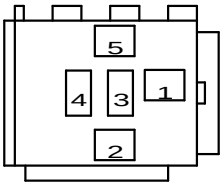

CONNECTOR 0593385C1
BODY LOCK 0593387C1

CAV	CIRCUIT	GAUGE	COLOR	TERMINAL
1	A51A	14	YL	1661709C1
2	A52N	16	YL	1661709C1
3	A53B	14	YL	1661710C1
3	A64C	14	YL	1661710C1
4**	A52F	14	YL	1661710C1
4@	A52FB	12	YL	1661710C1
5	A52M	16	YL	1661709C1

MARKER ON/OFF
(148M)
(LOCATED IN INSTRUMENT PANEL)

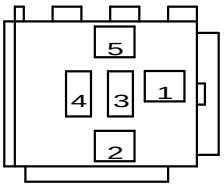

CONNECTOR 0593385C1
BODY LOCK 0593387C1

CAV	CIRCUIT	GAUGE	COLOR	TERMINAL
1%	A64	14	YL	1661709C1
1@	A44EA	18	PK	1661709C1
1**	A44EB	18	PK	1661709C1
1##	A58A	16	BN	2018946C1
1@@	A58ZG	16	BN	1661709C1
2**	A44EA	18	PK	1659673C1
2**	A58W	18	BN	1659673C1
2@@	A58ZC	18	BN	1661709C1
2@@	A58ZE	18	BN	1661709C1
2%	A64-GA	18	WH	1659673C1
3	PLUG	–	–	–
4**	A44EC	18	GY	1659673C1
4##	A58T	16	BN	2018946C1
4@@	A58ZH	16	BN	1661709C1
4%	A64B	14	YL	1661709C1
5**	A44-GE	18	WH	1659673C1
5##	A58-GB	18	WH	1659673C1
5@@	A58ZB	18	BN	1659673C1
5@@	A64A	14	YL	1661709C1

POSITION LIGHT RELAY #2
(149M)

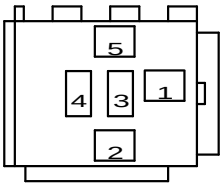

CONNECTOR 0593385C1
BODY LOCK 0593387C1

CAV	CIRCUIT	GAUGE	COLOR	TERMINAL
1%%	A97CN	18	VT	1659673C1
1@@	A58ZE	18	BN	1659673C1
2%%	A97-GA	18	VT	1659673C1
2@@	A58-GZA	18	WH	1659673C1
3%%	A97AH	18	VT	1659673C1
3@@	A58-GZA	18	WH	1661709C1
3@@	A58-GZB	18	WH	1661709C1
4	PLUG	–	–	–
5%%	A97AJ	18	VT	1659673C1
5@@	A13ZB	14	PK	1661709C1

@ W/ 2010 IBB ENGINE & W/ MANUAL XMSN & W/ STARTER INTERLOCK
% W/ HD-2
** W/ 2010 IBB ENG & W/ ALLISON XMSN & W/ ENGINE BRAKE
CAB BASE WITH MARKER ON/OFF
@@ W/ ALL CAMMINS ENGINES W/ BRAZIL
%% W/ 2010 IBB ENG & W/ ALLISON XMSN & N/ ENGINE BRAKE

CHK	DATE	CHANGE	REV	REFERENCE	DRAWN	NAME		
–	–	INITIAL RELEASE.	A	92159Y	310615	CIRCUIT DIAGRAM, 9900		
					RELEASE NO.	DATE	PART NO.	SHEET
					92159Y	02AUG13	AE08076124	018

Figure 216 Connector Composite (147M / 148M / 149M)

13.19. CONNECTOR COMPOSITE (152M / 153A / 153M / 161M), P. 19

NAVISTAR, INC

THIS PRINT IS PROVIDED ON A RESTRICTED BASIS AND IS NOT TO BE USED IN ANY WAY DETRIMENTAL TO THE INTEREST OF NAVISTAR, INC.

ELECTRICAL CIRCUIT DIAGRAM CHAPTER 13

CONNECTOR BODY COMPOSITE MATING VIEW SHOWN

ABS TRAILER RELAY
(152M)
(LOCATED IN INSTRUMENT PANEL)

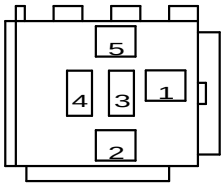

CONNECTOR 0593385C1
BODY LOCK 0593387C1

CAV	CIRCUIT	GAUGE	COLOR	TERMINAL
1	A94AH	10	GY	1661710C1
2	A13CP	14	PK	1661709C1
3	PLUG	–	–	–
4	A94AF	10	GY	1661710C1
5	A13-GCP	14	WH	1661709C1

CLUTCH STARTER INTERLOCK
(153A)

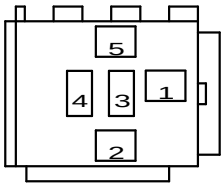

CONNECTOR 0593385C1
BODY LOCK 0593387C1

CAV	CIRCUIT	GAUGE	COLOR	TERMINAL
1	A17DB	14	PK	1661709C1
2	A17D-GH	14	WH	1661709C1
3	PLUG	–	–	–
4	17B	14	PK	1661709C1
5	17DC	14	PK	1661709C1

CLUTCH STARTER INTERLOCK
(153M)

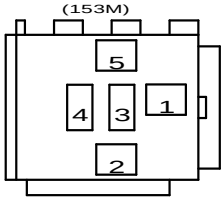

CONNECTOR 0593385C1
BODY LOCK 0593387C1

CAV	CIRCUIT	GAUGE	COLOR	TERMINAL
1	A17DB	14	PK	1661709C1
2	A17D-GH	14	WH	1661709C1
3	PLUG	–	–	–
4	A17B	14	PK	1661709C1
5	A17DC	14	WH	1661709C1

HEATER CONN #1
(161M)

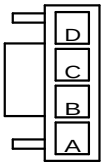

CONNECTOR 1661204C1

CAV	CIRCUIT	GAUGE	COLOR	TERMINAL
A	A75F	10	LTGN	1661227C1
B	A75BH	14	LTGN	1661226C1
C	A75T	14	LTGN	1661226C1
D	A75-G	10	WH	1661227C1

CHK	DATE	CHANGE	REV	REFERENCE	DRAWN	NAME
–	–	INITIAL RELEASE.	A	92159Y	310615	CIRCUIT DIAGRAM, 9900
					RELEASE NO. 92159Y	DATE 02AUG13 / PART NO. AE08076124 / SHEET 019

Figure 217 Connector Composite (152M / 153A / 153M / 161M)

13.20. CONNECTOR COMPOSITE (162F / 167M / 170M / 171M), P. 20

NAVISTAR, INC

THIS PRINT IS PROVIDED ON A RESTRICTED BASIS AND IS NOT TO BE USED IN ANY WAY DETRIMENTAL TO THE INTEREST OF NAVISTAR, INC.

ELECTRICAL CIRCUIT DIAGRAM CHAPTER 13

CONNECTOR BODY COMPOSITE MATING VIEW SHOWN

HEATER CONN #2
(162F)

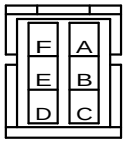

CONNECTOR 1661201C1

CAV	CIRCUIT	GAUGE	COLOR	TERMINAL
A	A75BJ	18	LTGN	1661212C1
B	PLUG	–	–	–
C	A77H	14	LTGN	3534167C1
D	A77R	18	LTGN	1661212C1
E	A77F	14	LTGN	3534167C1
F	A75C	14	LTGN	3534167C1

SPARE ACC
(167M)

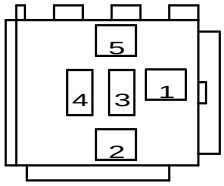

CONNECTOR 0593385C1
BODY LOCK 0593387C1

CAV	CIRCUIT	GAUGE	COLOR	TERMINAL
1	A14AS	10	RD	1661710C1
2	A12S	12	LTBL	1661710C1
3	PLUG	–	–	–
4	A14AF	10	RD	1661710C1
5	A12-GS	18	WH	1659673C1

LT SIDE TURN LGT
(170M)

CONNECTOR 0969541R1

CAV	CIRCUIT	GAUGE	COLOR	TERMINAL
A	A56	12	OR	1677840C1
A	A56D	12	OR	1677840C1
B	A56-GA	16	WH	0333733C1

RT SIDE TURN LIGHT
(171M)

(LOCATED AT BEBIND INSTRUMENT PANEL
RIGHT SIDE)

CONNECTOR 0969541R1

CAV	CIRCUIT	GAUGE	COLOR	TERMINAL
A	A57	12	OR	1677840C1
A	A57D	12	OR	1677840C1
B	A57-GA	16	WH	0188396R1

CHK	DATE	CHANGE	REV	REFERENCE	DRAWN	NAME
0610	27AUG13	INITIAL RELEASE.	A	92159Y	310615	CIRCUIT DIAGRAM, 9900
					RELEASE NO. 92159Y	DATE 02AUG13 / PART NO. AE08076124 / SHEET 020

Figure 218 Connector Composite (162F / 167M / 170M / 171M)

13.21. CONNECTOR COMPOSITE (190), P. 21

NAVISTAR, INC

THIS PRINT IS PROVIDED ON A RESTRICTED BASIS AND IS NOT TO BE USED IN ANY WAY DETRIMENTAL TO THE INTEREST OF NAVISTAR, INC.

ELECTRICAL CIRCUIT DIAGRAM CHAPTER 13

CONNECTOR BODY COMPOSITE MATING VIEW SHOWN

(LOCATED ON DASH PANEL)

ENGINE/DASH BOTTOM
(190)

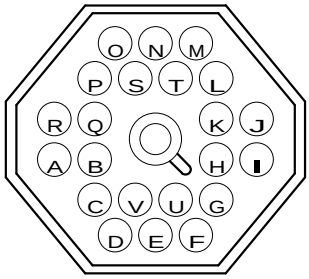

CONNECTOR 0598332C1
BODY LOCK 0598333C1

CAV	CIRCUIT	GAUGE	COLOR	TERMINAL	SEAL/SLEEVE
A	K99-G	20	PL	0587578C1	3517771C1
	K99-G	18	PL	0587578C1	3517771C1
B	K99A5V	20	PL	0587578C1	3517771C1
	K99A5V	18	PL	0587578C1	3517771C1
C	K99	20	PL	0587578C1	3517771C1
	K99	18	PL	0587578C1	3517771C1
D	K44C	14	GY	0587577C1	0589391C1
E	K44D	14	GY	0587577C1	0589391C1
F	K97AL	20	PL	0587578C1	3517771C1
	K97AL	18	PL	0587578C1	3517771C1
G	K97ML	18	PL	0587578C1	3517771C1
H	K97AP	20	PL	0587578C1	3517771C1
	K97AP	18	PL	0587578C1	3517771C1
I*	K97AB	20	PL	0587578C1	3517771C1
	K92A20	20	PL	0587578C1	3517771C1
I#	K97AB	18	VT	0587578C1	1652325C1
I@	K97AB	18	PL	0587578C1	3517771C1
J	K97AE	20	PL	0587578C1	3517771C1
	K97AE	18	PL	0587578C1	3517771C1
K%	K97AA	20	PL	0587578C1	3517771C1
	K92A22	20	PL	0587578C1	3517771C1
K#	K97AA	18	VT	0587578C1	1652325C1
K@	K97AA	18	PL	0587578C1	3517771C1
L	K24AF	20	GY	0587578C1	3517771C1
	K24AF	18	GY	0587578C1	3517771C1
M	K24AE	20	GY	0587578C1	3517771C1
	K24AE	18	GY	0587578C1	3517771C1
N	K99-GD	20	PL	0587578C1	3517771C1
	K99-GD	18	PL	0587578C1	3517771C1
O	K99D	20	PL	0587578C1	3517771C1
	K99D	18	PL	0587578C1	3517771C1
P**	K99D	18	VT	0587578C1	1652325C1
P#	K6D	20	PL	0587578C1	3517771C1
P##	K99D5V	18	PL	0587578C1	3517771C1
Q	K95DEF	16	TN	0587577C1	1652325C1
Q	K92A15	18	PK	0587578C1	1652325C1
R	K97AH	20	PL	0587578C1	3517771C1
	K97AH	18	PL	0587578C1	3517771C1
S	KA101	20	TN	0587578C1	3517771C1
S	KA97WTS	18	PL	0587578C1	3517771C1
T	KA97WF	18	PL	0587578C1	3517771C1
U	KA97AT	18	PL	0587578C1	3517771C1
V	KA95AC	18	TN	0587578C1	3517771C1
V	KA44EC	18	GY	0587578C1	3517771C1

* W/ CRUISE CONTROL & N/ REMOTE CRUISE
# W/ CRUISE CONTROL & W/ REMOTE PTO 9900
@ W/ CRUISE CONTROL & W/ REMOTE CRUISE
% W/ CRUISE CONTROL & N/ REMOTE PTO 5900
** W/ CRUISE CONTROL & N/ REMOTE PTO 9900
W/ 2010 ACCELARATOR & ARTERTREATMENT HORIZ EXHAUST & W/ M-9900-124

CHK	DATE	CHANGE	REV	REFERENCE	DRAWN	NAME
0610	27AUG13	INITIAL RELEASE.	A	92159Y	310615	CIRCUIT DIAGRAM, 9900
					RELEASE NO. 92159Y	DATE 02AUG13 / PART NO. AE08076124 / SHEET 021

Figure 219 Connector Composite (190)

13.22. CONNECTOR COMPOSITE (190M), P. 22

NAVISTAR, INC

THIS PRINT IS PROVIDED ON A RESTRICTED BASIS AND IS NOT TO BE USED IN ANY WAY DETRIMENTAL TO THE INTEREST OF NAVISTAR, INC.

ELECTRICAL CIRCUIT DIAGRAM CHAPTER 13

CONNECTOR BODY COMPOSITE MATING VIEW SHOWN

DASH CONN
(190M)

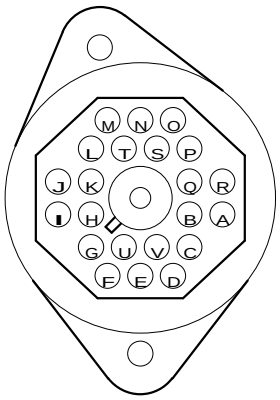

CONNECTOR 0593389C1
BODY LOCK 0598333C1

CAV	CIRCUIT	GAUGE	COLOR	TERMINAL	SEAL/SLEEVE
A*	A99	18	VT	0587576C1	1652325C1
A*	A99B	18	VT	0587576C1	1652325C1
A#	A99-G	18	VT	0587576C1	1652325C1
B*	A97U(5V)	18	VT	0587576C1	1652325C1
B#	A99A(5V)	18	VT	0587576C1	1652325C1
B@	A99A(8V)	18	VT	0587576C1	1652325C1
C%	A99	18	VT	0587576C1	1652325C1
C**	A97W	18	VT	0587576C1	1652325C1
C##	A99-G	18	VT	0587576C1	1652325C1
D##	A99B	18	VT	0587576C1	1652325C1
D**	A99D	18	VT	0587576C1	1652325C1
E**	A97A	18	TN	0587576C1	1652325C1
E@@	A99C	18	VT	0587576C1	1652325C1
F*	A97AL	18	VT	0587576C1	1652325C1
F**	A97CT	16	VT	0587575C1	1652325C1
G**	A98	18	BK	0587576C1	1652325C1
G%	A97AM	18	VT	0587576C1	1652325C1
G#	A97ML	18	VT	0587576C1	1652325C1
H**	A97AF	18	VT	0587576C1	1652325C1
H#	A97AP	18	VT	0587576C1	1652325C1
I%%	A97AA	18	VT	0587576C1	1652325C1
I#	A97AB	18	VT	0587576C1	1652325C1
I**	A97DK	18	VT	0587576C1	1652325C1
J%%	A97AE	18	VT	0587576C1	1652325C1
J**	A97CF	18	VT	0587576C1	1652325C1

CAV	CIRCUIT	GAUGE	COLOR	TERMINAL	SEAL/SLEEVE
K*	A97AA	18	VT	0587576C1	1652325C1
K%%	A97AB	18	VT	0587576C1	1652325C1
K**	A97DJ	18	VT	0587576C1	1652325C1
L	A24AE	18	GY	0587576C1	1652325C1
M	A24AE	18	GY	0587576C1	1652325C1
N**	A97AZ	18	VT	0587576C1	1652325C1
N**	A97CD	18	VT	0587576C1	1652325C1
N%	A99-GD	18	VT	0587576C1	1652325C1
O**	A97AA	18	VT	0587576C1	1652325C1
O##	A97AU	18	VT	0587576C1	1652325C1
O#	A99D	18	VT	0587576C1	1652325C1
P##	A97AV	18	VT	0587576C1	1652325C1
P**	A97NM	18	VT	0587576C1	1652325C1
P#	A99D(5V)	18	VT	0587576C1	1652325C1
Q#	A19M	16	GY	0587575C1	1652325C1
Q@@	A24AP	18	GY	0587576C1	1652325C1
Q***	A92A15	18	PK	0587576C1	1652325C1
Q	A97SB	18	VT	0587576C1	1652325C1
R*	A97AH	18	VT	0587576C1	1652325C1
R###	A97AJ	18	VT	0587576C1	1652325C1
R##	A97CR	16	VT	0587575C1	1652325C1
S	A44M	16	GY	0587575C1	1652325C1
S#	A97WTS	18	VT	0587576C1	1652325C1
S%	A98B(-)	16	BK	0587575C1	1652325C1
S**	A98C(-)	14	BK	0587575C1	0589391C1
T#	A97WF	18	VT	0587576C1	1652325C1
T*	A98(+)	16	BK	0587575C1	1652325C1
T**	A98A(+)	14	BK	0587575C1	0589391C1
U*	A97AT	18	VT	0587576C1	1652325C1
U**	A97T	18	VT	0587576C1	1652325C1
V#	A44EC	18	GY	0587576C1	1652325C1
V*	A97-GA	18	VT	0587576C1	1652325C1

* W/ N98-ELECT CAT N/ ENG BRK
N/ STRTER INTERLOCK
\# W/ 2010 IBB ENG & W/ ALLISON XMSN &
W/ ENGINE BRAKE
@ W/ 2007 CAT C13/C15 ENG W/ ALLISON
XMSN W/ ENG SHUTDOWN
% W/ 2007 CUMMINS & W/ STRTR INTRLCK &
W/ IDLE CONTROL SYS, BRAZIL
** W/ INTL CEC I-6 ENGINES
W/ ALL CUMMINS ENGINES W/ BRAZIL
@@ W/ CUMMINS W/ CUM IDLE CONTROL N/ PAM
W/ STARTER INTERLOCK
%% W/ 2010 IBB ENG & W/ ULTRASHIFT,AUTOSHIFT
,FREEDOM XMSN,ALLISON & N/ ENG BRAKE
*** W/ REMOTE CONTROL FOR ENGINE PTO
W/ 2010 IBB ENGINE & W/ MANUAL XMSN
& W/ STARTER INTERLOCK

CHK	DATE	CHANGE	REV	REFERENCE	DRAWN	NAME
0610	27AUG13	INITIAL RELEASE.	A	92159Y	310615	CIRCUIT DIAGRAM, 9900
					RELEASE NO. 92159Y	DATE 02AUG13 / PART NO. AE08076124 / SHEET 022

Figure 220 Connector Composite (190M)

13.23. CONNECTOR COMPOSITE (198M / 199M), P. 22A

NAVISTAR, INC

THIS PRINT IS PROVIDED ON A RESTRICTED BASIS AND IS NOT TO BE USED IN ANY WAY DETRIMENTAL TO THE INTEREST OF NAVISTAR, INC.

ELECTRICAL CIRCUIT DIAGRAM CHAPTER 13

CONNECTOR BODY COMPOSITE MATING VIEW SHOWN

WORKLIGHT DASH/B PILLAR
(198M)
(LOCATED AT BEHIND DRIVER SEAT)

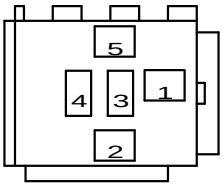

CONNECTOR 0593385C1

CAV	CIRCUIT	GAUGE	COLOR	TERMINAL
1	A65L	16	OR	1661710C1
1	A65V	16	OR	1661710C1
2	A65M	16	OR	1661710C1
2	A65T	16	OR	1661710C1
3	PLUG	–	–	–
4	A65W	16	OR	1661709C1
5	A65V	16	OR	1661709C1

WORKLIGHT IN PARK/REVERSE
(199M)
(LOCATED AT BEHIND DRIVER SEAT)

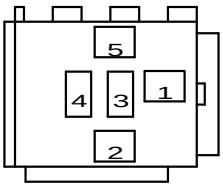

CONNECTOR 0593385C1

CAV	CIRCUIT	GAUGE	COLOR	TERMINAL
1	A65A	16	OR	1661709C1
2	A65T	16	OR	1661709C1
2	A71-GC	16	WH	1661709C1
3	PLUG	–	–	–
4	A65L	16	OR	1661709C1
4	A65L	16	OR	1661710C1
4	A65D	16	OR	1661710C1
5	A71N	14	OR	1661709C1
5	A71R	14	OR	1661709C1

CHK	DATE	CHANGE	REV	REFERENCE	DRAWN	NAME		
0488	09DEC14	INITIAL RELEASE.	A	92783V	23112202	CIRCUIT DIAGRAM, 9900		
					RELEASE NO. 92783V	DATE 12NOV14	PART NO. AE08076124	SHEET 22A

Figure 221 Connector Composite (198M / 199M)

13.24. CONNECTOR COMPOSITE (200M / 201M), P. 23

NAVISTAR, INC

THIS PRINT IS PROVIDED ON A RESTRICTED BASIS AND IS NOT TO BE USED IN ANY WAY DETRIMENTAL TO THE INTEREST OF NAVISTAR, INC.

ELECTRICAL CIRCUIT DIAGRAM CHAPTER 13

CONNECTOR BODY COMPOSITE MATING VIEW SHOWN

POWER LOCK UNLOCK
(200M)

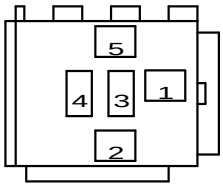

CONNECTOR 0593385C1
BODY LOCK 0593387C1

CAV	CIRCUIT	GAUGE	COLOR	TERMINAL
1	A81H	18	LTGN	1659673C1
1	A97-GC	18	VT	1659673C1
2	A81	18	LTGN	1661709C1
2	A81A	18	LTGN	1661709C1
2	A92-G	18	TN	1659673C1
3	A81-GB	18	WH	1659673C1
4	A81A	18	LTGN	1661709C1
4	A81B	18	LTGN	1661709C1
4	A97-GD	18	VT	1659673C1
5	A92	18	TN	1659673C1
5	A81N	18	LTGN	1661709C1
5	A81P	18	LTGN	1661709C1

WORK BACK-UP LIGHT
(200M)
(LOCATED AT BEHIND DRIVER SEAT)

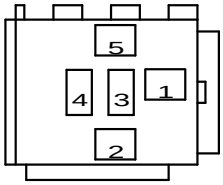

CONNECTOR 0593385C1
BODY LOCK 0593387C1

CAV	CIRCUIT	GAUGE	COLOR	TERMINAL
1	A71C	14	OR	1661709C1
2	A71-GA	14	WH	1661710C1
2	A71-GB	14	WH	1661710C1
3*	A71B	14	OR	1661710C1
3*	A71H	14	OR	1661710C1
3#	A71M	14	OR	1661709C1
4	A71G	14	OR	1661709C1
5#	A71F	14	OR	1661709C1
5*	A71F	14	OR	1661710C1
5*	A71G	14	OR	1661710C1

* W/SWITCHED CUSTOMER MNTG WORK LIGHT
\# W/BACK-UP LIGHTES W/LOWERD HEATER BOX

POWER LOCK LOCK
(201M)

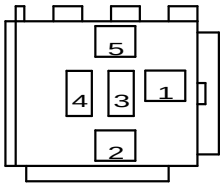

CONNECTOR 0593385C1
BODY LOCK 0593387C1

CAV	CIRCUIT	GAUGE	COLOR	TERMINAL
1	A81D	18	LTGN	1659673C1
1	A83	14	LTGN	1661709C1
1	A72B	12	OR	1661710C1
2	A12-G	14	WH	1661709C1
2	A72-GA	18	WH	1659673C1
2	A81B	18	LTGN	1661709C1
2	A81C	18	LTGN	1661709C1
3	A81-GA	18	WH	1659673C1
4	A72C	12	OR	1661710C1
4	A81C	18	LTGN	1659673C1
4	A83C	14	LTGN	1661710C1
4	A83D	14	LTGN	1661710C1
4	A83D	14	LTGN	1661709C1
5	A12W	12	LTBL	1661710C1
5	A72F	16	OR	1661709C1
5	A81L	18	LTGN	1661709C1
5	A81M	18	LTGN	1661709C1

CHK	DATE	CHANGE	REV	REFERENCE	DRAWN	NAME
0488	09DEC14	ADDED CONN 0593385C1	B	92783V	310615	CIRCUIT DIAGRAM, 9900
		FOR WORK BACKUP LIGHT (200M).			RELEASE NO. 92159Y	DATE 02AUG13 / PART NO. AE08076124 / SHEET 023

Figure 222 Connector Composite (200M / 201M)

13.25. CONNECTOR COMPOSITE (201M / 203), P. 23A

NAVISTAR, INC

THIS PRINT IS PROVIDED ON A RESTRICTED BASIS AND IS NOT TO BE USED IN ANY WAY DETRIMENTAL TO THE INTEREST OF NAVISTAR, INC.

ELECTRICAL CIRCUIT DIAGRAM CHAPTER 13

CONNECTOR BODY COMPOSITE MATING VIEW SHOWN

WORKLIGHT
(201M)
(LOCATED AT BEHIND DRIVER SEAT)

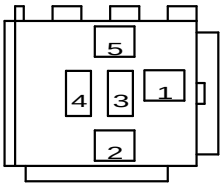

CONNECTOR 0593385C1
BODY LOCK 0593387C1

CAV	CIRCUIT	GAUGE	COLOR	TERMINAL
1	A71D	14	OR	1661710C1
1	A71K	16	OR	1661710C1
2	A71-GB	14	WH	1661710C1
2	A71-GC	16	WH	1661710C1
3	PLUG	–	–	–
4	A71E	14	OR	1661710C1
4	A71F	14	OR	1661710C1
5	A65D	16	OR	1661710C1
5	A65D	16	OR	1661709C1
5	A71G	14	OR	1661710C1

TERMRES J1939
(203)

(LOCATED IN INSTRUMENT PANEL LEFT SIDE)

CONNECTOR 1667741C1
BODY LOCK 1667771C1

CAV	CIRCUIT	GAUGE	COLOR	TERMINAL	SEAL/SLEEVE
A	A5CA(+)	18	YL	1661875C1	3568570C1
A%	A8YL(+)	18	YL	1661875C1	3568570C1
A	A98MAA(+)	18	YL	1661875C1	1661872C1
B	PLUG	–	–	–	–
C	A5CB(-)	18	GN	1661875C1	3568570C1
C%	A8GN(-)	18	GN	1661875C1	3568570C1
C	A8GN(-)	18	LTGN	1661875C1	3568570C1
C	A98MAA(-)	18	YL	1661875C1	1661872C1

% W/ 2010 IBB ENG & W/ ALLISON XMSN &W/ ENGINE BRAKE

CHK	DATE	CHANGE	REV	REFERENCE	DRAWN	NAME
0488	09DEC14	INITIAL RELEASE.	A	92783V	23112202	CIRCUIT DIAGRAM, 9900
					RELEASE NO. 92783V	DATE 11NOV14 / PART NO. AE08076124 / SHEET 23A

Figure 223 Connector Composite (201M / 203)

13.26. CONNECTOR COMPOSITE (203G / 212M / 227 / 228), P. 24

NAVISTAR, INC

THIS PRINT IS PROVIDED ON A RESTRICTED BASIS AND IS NOT TO BE USED IN ANY WAY DETRIMENTAL TO THE INTEREST OF NAVISTAR, INC.

ELECTRICAL CIRCUIT DIAGRAM — CHAPTER 13

CONNECTOR BODY COMPOSITE MATING VIEW SHOWN

J1939 BACKBONE
(203G)
(LOCATED IN INSTRUMENT PANEL)

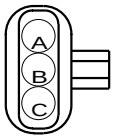

CONNECTOR 1667740C1
BODY LOCK 1667771C1

CAV	CIRCUIT	GAUGE	COLOR	TERMINAL	SEAL/SLEEVE
A*	A10YL(+)	18	YL	1667742C1	3568570C1
A	A5EA(+)	18	YL	1667742C1	3568570C1
A#	A7YL(+)	18	YL	1667742C1	3568570C1
B	PLUG	–	–	2025431C1	–
C	A10GN(-)	18	LT GN	1667742C1	3568570C1
	A10GN(-)	18	GN	1667742C1	3568570C1
C	A5EB(-)	18	GN	1667742C1	3568570C1
C	A5EB(-)	18	LT GN	1667742C1	3568570C1
C@	A7GN(-)	18	GN	1667742C1	3568570C1

* W/2010 IBB ENG & W/ALLISON XMSN & W/ENGINE BRAKE
\# W/2010 IBB ENG & W/ALLISON XMSN & N/ENGINE BRAKE
@ W/2007 CUMMINS & W/STRTR INTRLK & W/IDLE CONTROL

RIGHT HEADLIGHT
(212M)
(LOCATED ON UNDER SIDE OF HOOD BY HEAD LIGHT MODULE RIGHT SIDE)

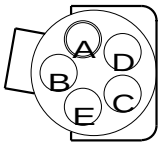

CONNECTOR 1673752C1

CAV	CIRCUIT	GAUGE	COLOR	TERMINAL	SEAL/SLEEVE
A	M52E	12	YL	1673747C1	0589390C1
B	M52-GA	12	WH	1673747C1	0589390C1
C	M53C	12	YL	1673747C1	0589390C1
D	M57	14	OR	0587575C1	0589391C1
E	M58U	14	BN	0587575C1	0589391C1

FAN SOLENOID
(227)
(LOCATED ON ENGINE)

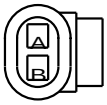

CONNECTOR 3522068C1
BODY LOCK 1661874C1

CAV	CIRCUIT	GAUGE	COLOR	TERMINAL	SEAL/SLEEVE
A	KC23	18	TN	1661875C1	3568570C1
B	KC23-G	18	WH	1661875C1	3568570C1

A/C PRESSURE SWITCH
(228)
(LOCATED ON ENGINE)

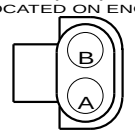

CONNECTOR 0587568C91

CAV	CIRCUIT	GAUGE	COLOR	TERMINAL	SEAL/SLEEVE
A	K23C	18	TN	1661875C1	3568570C1
B	K23T	18	TN	1661875C1	3568570C1

A/C PRESSURE SWITCH
(228)
(LOCATED ON ENGINE)

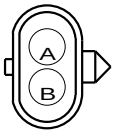

CONNECTOR 0587567C91

CAV	CIRCUIT	GAUGE	COLOR	TERMINAL	SEAL/SLEEVE
A	K23B	18	TN	0587578C1	1652325C1
B	K23A	18	TN	0587578C1	1652325C1

CHK	DATE	CHANGE	REV	REFERENCE	DRAWN	NAME
MJV0	18JUL18	ADDED R/D 228.	B	94591W	310615	CIRCUIT DIAGRAM, 9900
					RELEASE NO. 92159Y	DATE 02AUG13
					PART NO. AE08076124	SHEET 024

Figure 224 Connector Composite (203G / 212M / 227 / 228)

13.27. CONNECTOR COMPOSITE (228F / 228M / 236 / 236F), P. 25

NAVISTAR, INC

THIS PRINT IS PROVIDED ON A RESTRICTED BASIS AND IS NOT TO BE USED IN ANY WAY DETRIMENTAL TO THE INTEREST OF NAVISTAR, INC.

ELECTRICAL CIRCUIT DIAGRAM CHAPTER 13

CONNECTOR BODY COMPOSITE MATING VIEW SHOWN

A/C PRESSURE SWITCH
(228F)
(LOCATED ON ENGINE)

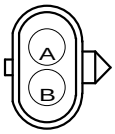

CONNECTOR 0587567C91

CAV	CIRCUIT	GAUGE	COLOR	TERMINAL	SEAL/SLEEVE
A	A23-G	16	TN	0587577C1	1652325C1
B	A23B	16	TN	0587577C1	1652325C1

A/C PRESSURE SWITCH
(228M)
(LOCATED ON ENGINE)

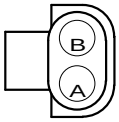

CONNECTOR 0587568C91

CAV	CIRCUIT	GAUGE	COLOR	TERMINAL	SEAL/SLEEVE
A	23A	16	TN	0587575C1	1652325C1
B	23B	16	TN	0587575C1	1652325C1

XMSN OIL TEMP SENDER
(236)
(LOCATED ON XMSN)

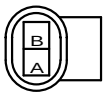

CONNECTOR 2036584C1

CAV	CIRCUIT	GAUGE	COLOR	TERMINAL
A*	K31B	16	TN	2036586C1
A#	K31	18	TN	2036586C1
B*	K31-G	16	WH	2036586C1
B#	K31-G	16	TN	2036586C1

* W/ XMSN OIL TEMP & W/ ALLISON XMSN
\# W/ XMSN OIL TEMP & N/ ALLISON XMSN

AUTO XMSN TEMP SENDER
(236F)
(LOCATED ON XMSN)

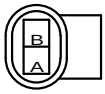

CONNECTOR 2036584C1

CAV	CIRCUIT	GAUGE	COLOR	TERMINAL
A	K31B	16	TN	2036586C1
B	K31-G	16	WH	2036586C1

CHK	DATE	CHANGE	REV	REFERENCE	DRAWN	NAME
0610	27AUG13	INITIAL RELEASE.	A	92159Y	310615	CIRCUIT DIAGRAM, 9900
					RELEASE NO. 92159Y	DATE 02AUG13 / PART NO. AE08076124 / SHEET 025

Figure 225 Connector Composite (228F / 228M / 236 / 236F)

13.28. CONNECTOR COMPOSITE (241M / 243M / 260M), P. 26

NAVISTAR, INC

THIS PRINT IS PROVIDED ON A RESTRICTED BASIS AND IS NOT TO BE USED IN ANY WAY DETRIMENTAL TO THE INTEREST OF NAVISTAR, INC.

ELECTRICAL CIRCUIT DIAGRAM CHAPTER 13

CONNECTOR BODY COMPOSITE MATING VIEW SHOWN

DIAGNOSTIC ON/OFF
(241M)

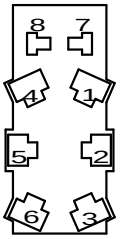

CONNECTOR 2009385C1

CAV	CIRCUIT	GAUGE	COLOR	TERMINAL
1	PLUG	–	–	–
2	PLUG	–	–	–
3	PLUG	–	–	–
4	PLUG	–	–	–
5*	A97-GE	18	VT	1661224C1
5#	A98-G	18	WH	1661224C1
6	A97AM	18	VT	1661224C1
7	A62R	16	DKBL	1661209C1
8	A62-GR	18	WH	1661208C1

* W/ 2007 CUMMINS ZSX ENG W/ ALLISON 4700 XMSN W/ ENG BRAKE
# W/ INTL CEC I-6 ENGINES

INC/DEC IDLE DIAGNOSTIC
(243M)

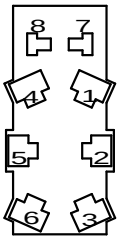

CONNECTOR2009385C1

CAV	CIRCUIT	GAUGE	COLOR	TERMINAL
1	A97AU	18	VT	1661224C1
2	A97-GD	18	VT	1661224C1
3	A97AV	18	VT	1661224C1
4	PLUG	–	–	–
5	PLUG	–	–	–
5	PLUG	–	–	–
6	PLUG	–	–	–
7	A62Q	16	DKBL	1661209C1
8	A62-GQ	18	WH	1661208C1

ENG OVERRIDE DIAGNOSTIC
(260M)

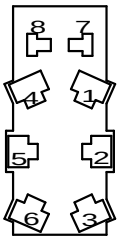

CONNECTOR 2009385C1

CAV	CIRCUIT	GAUGE	COLOR	TERMINAL
1	PLUG	–	–	–
2	PLUG	–	–	–
3	PLUG	–	–	–
4	PLUG	–	–	–
5	A97AU	18	VT	1661224C1
6	A97-GD	18	VT	1661224C1
7	A62Q	16	DKBL	1661209C1
8	A62-GQ	18	WH	1661208C1

CHK	DATE	CHANGE	REV	REFERENCE	DRAWN	NAME
–	–	INITIAL RELEASE.	A	92159Y	310615	CIRCUIT DIAGRAM, 9900
					RELEASE NO. 92159Y	DATE 02AUG13 / PART NO. AE08076124 / SHEET 026

Figure 226 Connector Composite (241M / 243M / 260M)

13.29. CONNECTOR COMPOSITES (267M / 268F / 275 / 294A), P. 27

NAVISTAR, INC

THIS PRINT IS PROVIDED ON A RESTRICTED BASIS AND IS NOT TO BE USED IN ANY WAY DETRIMENTAL TO THE INTEREST OF NAVISTAR, INC.

ELECTRICAL CIRCUIT DIAGRAM CHAPTER 13

CONNECTOR BODY COMPOSITE MATING VIEW SHOWN

THROTTLE POSITION SENSOR
(267M)

(LOCATED IN INSTRUMENT PANEL)

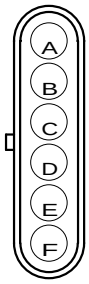

CONNECTOR 0587573C91

CAV	CIRCUIT	GAUGE	COLOR	TERMINAL	SEAL/SLEEVE
A*	A99A	18	VT	0587576C1	1652325C1
A#	A99-G	18	VT	0587576C1	1652325C1
B*	A99B	18	VT	0587576C1	1652325C1
B#	A99	18	VT	0587576C1	1652325C1
C	A99A(5V)	18	VT	0587578C1	1652325C1
D*	A99D	18	VT	0587578C1	1652325C1
D#	A99D(5V)	18	VT	0587578C1	1652325C1
D@	A99C	18	VT	0587576C1	1652325C1
E%	A99-GD	18	VT	0587578C1	1652325C1
E@	A99B	18	VT	0587576C1	1652325C1
F#	A99D	18	VT	0587578C1	1652325C1
F*	A99E	18	VT	0587576C1	1652325C1
F@	A99-GA	18	VT	0587576C1	1652325C1

* W/ INTL CEC I-6 ENGINES
\# W/ 2010 IBB ENG & W/ ALLISON XMSN & N/ ENGINE BRAKE
@ W/ ISM,N14,ISX ENGS W/ ALLISON WORLD XMSN W/ ENG BRAKE
% W/ EXP CUMMINS & W/ STARTER INTERLOCK

IDLE TIMER
(268F)

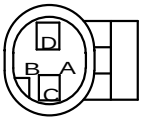

CONNECTOR 1661777C1
BODY LOCK 1661873C1

CAV	CIRCUIT	GAUGE	COLOR	TERMINAL	SEAL/SLEEVE
A	PLUG	–	–	–	–
B	PLUG	–	–	–	–
C	97AV	18	VT	1661875C1	1661872C1
D	97-GE	18	VT	1661875C1	1661872C1

THERMAL OVERCRANK
(275)

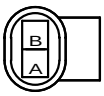

CONNECTOR 2036583C1

CAV	CIRCUIT	GAUGE	COLOR	TERMINAL
A	K17A	16	PK	2036586C1
B	K17A1	16	PK	2036586C1

STARTER INTERLOCK SWITCH
(294A)

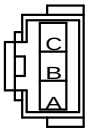

CONNECTOR 1661199C1

CAV	CIRCUIT	GAUGE	COLOR	TERMINAL
A	PLUG	–	–	–
B	A17DA	14	PK	3534167C1
C	A17DC	14	PK	3534167C1

CHK	DATE	CHANGE	REV	REFERENCE	DRAWN	NAME		
–	–	INITIAL RELEASE.	A	92159Y	310615	CIRCUIT DIAGRAM, 9900		
					RELEASE NO. 92159Y	DATE 02AUG13	PART NO. AE08076124	SHEET 027

Figure 227 Connector Composites (267M / 268F / 275 / 294A)

13.30. CONNECTOR COMPOSITES (294F / 296M / 303F2 / 303M2), P. 28

NAVISTAR, INC

THIS PRINT IS PROVIDED ON A RESTRICTED BASIS AND IS NOT TO BE USED IN ANY WAY DETRIMENTAL TO THE INTEREST OF NAVISTAR, INC.

ELECTRICAL CIRCUIT DIAGRAM CHAPTER 13

CONNECTOR BODY COMPOSITE MATING VIEW SHOWN

CLUTCH SW
(294F)

CONNECTOR 1661197C1

CAV	CIRCUIT	GAUGE	COLOR	TERMINAL
A*	97A	18	TN	1661212C1
A#	97AH	18	VT	1661212C1
A@	97AJ	18	VT	1661212C1
B*	97	18	VT	1661213C1
B@	97CM	18	VT	1661212C1
B#	97-GH	18	VT	1661212C1
B*	99E	18	VT	1661213C1

* W/ INTL CEC I-6 ENGINES
\# W/ ISM , N14,ISX ENGS W/ ALLISON WORLD XMSN W/ ENG BRAKE
@ W/ 2010 IBB ENG & W/ ALLISON XMSN & W/ ENGINE BRAKE

LEFT HEADLIGHT
(296M)
(LOCATED ON UNDERSIDE OF HOOD BY HEADLIGHT MODULE-LEFT SIDE)

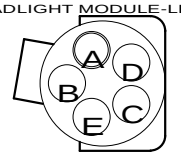

CONNECTOR 1673752C1

CAV	CIRCUIT	GAUGE	COLOR	TERMINAL	SEAL/SLEEVE
A	MA52D	12	YL	1673747C1	0589390C1
B	MA52-GE	12	WH	1673747C1	0589390C1
C	MA53D	12	YL	1673747C1	0589390C1
D	MA56	18	OR	0587576C1	1652325C1
E	MF58T	18	BN	0587576C1	1652325C1

SPEEDO SENSOR
(303F2)

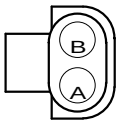

CONNECTOR 0587568C91

CAV	CIRCUIT	GAUGE	COLOR	TERMINAL	SEAL/SLEEVE
A	K97AJ1	16	VT	0587575C1	1652325C1
B	PLUG	–	–	–	–

SPEEDO SENSOR
(303M2)

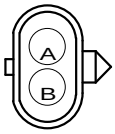

CONNECTOR 0587567C91

CAV	CIRCUIT	GAUGE	COLOR	TERMINAL	SEAL/SLEEVE
A	K97AJ	16	PL	0587577C1	1652325C1
B	K97AK	16	PL	0587577C1	1652325C1

CHK	DATE	CHANGE	REV	REFERENCE	DRAWN	NAME
0610	27AUG13	INITIAL RELEASE.	A	92159Y	310615	CIRCUIT DIAGRAM, 9900
					RELEASE NO. 92159Y	DATE 02AUG13 / PART NO. AE08076124 / SHEET 028

Figure 228 Connector Composites (294F / 296M / 303F2 / 303M2)

13.31. CONNECTOR COMPOSITES (311 / 312 / 313 / 314M), P. 29

NAVISTAR, INC

THIS PRINT IS PROVIDED ON A RESTRICTED BASIS AND IS NOT TO BE USED IN ANY WAY DETRIMENTAL TO THE INTEREST OF NAVISTAR, INC.

ELECTRICAL CIRCUIT DIAGRAM CHAPTER 13

CONNECTOR BODY COMPOSITE MATING VIEW SHOWN

RIGHT CAB READING LIGHT
(311)
(LOCATED AT ROOF NEAR RIGHT)

CONNECTOR 1661259C1
BODY LOCK 1661263C1

CAV	CIRCUIT	GAUGE	COLOR	TERMINAL
A	A63T	18	DKBL	1661261C1
B	A63-GT	18	WH	1661261C1

LEFT CAB READING LIGHT
(312)
(LOCATED AT ROOF NEAR LIGHT)

CONNECTOR 1661259C1
BODY LOCK 1661263C1

CAV	CIRCUIT	GAUGE	COLOR	TERMINAL
A	A63R	18	DKBL	1661261C1
B	A63-GR	18	WH	1661261C1

DEFROSTER FAN
(313)
(LOCATED AT FRONT CENTER ROOF)

CONNECTOR 0969541R1

CAV	CIRCUIT	GAUGE	COLOR	TERMINAL
A	A76F	16	LTGN	0333733C1
B	A76-G	16	WH	0333733C1

WORK LIGHT CONNECTOR
(314M)
(LOCATED AT BEHIND DRIVER SEAT)

CONNECTOR 1661259C1
BODY LOCK 1661263C1

CAV	CIRCUIT	GAUGE	COLOR	TERMINAL
A	A65D	16	OR	1661261C1
A*	A65B	18	OR	1661261C1
A*	A65C	18	OR	1661261C1
B	A65-GB	18	WH	1661261C1

* N/ SLEEPER

WORK LIGHT CONNECTOR
(314M)
(LOCATED AT BEHIND DRIVER SEAT)

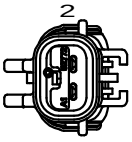

CONNECTOR 3924162C1

CAV	CIRCUIT	GAUGE	COLOR	TERMINAL
1	A65B	18	OR	3618272C1
1	A65B1	18	OR	3618272C1
2	A65-GB	18	WH	3618272C1

CHK	DATE	CHANGE	REV	REFERENCE	DRAWN	NAME
0488	09DEC14	ADDED R/D 314M, MVD	B	92783V	310615	CIRCUIT DIAGRAM, 9900
	R/D 316M, 316M1.				RELEASE NO. 92159Y	DATE 02AUG13 / PART NO. AE08076124 / SHEET 029

Figure 229 Connector Composites (311 / 312 / 313 / 314M)

13.32. CONNECTOR COMPOSITES (316M / 316M1), P. 29A

NAVISTAR, INC

THIS PRINT IS PROVIDED ON A RESTRICTED BASIS AND IS NOT TO BE USED IN ANY WAY DETRIMENTAL TO THE INTEREST OF NAVISTAR, INC.

ELECTRICAL CIRCUIT DIAGRAM CHAPTER 13

CONNECTOR BODY COMPOSITE MATING VIEW SHOWN

DAYCAB TRAILER SOCKET #1
(316M)

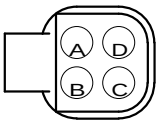

CONNECTOR 1661497C91

CAV	CIRCUIT	GAUGE	COLOR	TERMINAL	SEAL/SLEEVE
A	N58W	12	BK	1673747C1	0589390C1
B	N56W	12	YL	1673747C1	0589390C1
C	N57W	12	LTGN	1673747C1	0589390C1
D	N68W	12	BN	1673747C1	0589390C1

SHORT SLEEPER TRAILER SOCKET #1
(316M1)

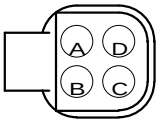

CONNECTOR 1661497C91

CAV	CIRCUIT	GAUGE	COLOR	TERMINAL	SEAL/SLEEVE
A	N58W	12	BK	1673747C1	0589390C1
B	N56W	12	YL	1673747C1	0589390C1
C	N57W	12	LTGN	1673747C1	0589390C1
D	N68W	12	BN	1673747C1	0589390C1

CHK	DATE	CHANGE	REV	REFERENCE	DRAWN	NAME
0488	09DEC14	INITIAL RELEASE.	A	92783V	23112202	CIRCUIT DIAGRAM, 9900
					RELEASE NO. 92783V	DATE 11NOV14 / PART NO. AE08076124 / SHEET 29A

Figure 230 Connector Composites (316M / 316M1)

13.33. CONNECTOR COMPOSITES (316M2 / 318F / 318F1 / 318F2), P. 30

NAVISTAR, INC

THIS PRINT IS PROVIDED ON A RESTRICTED BASIS AND IS NOT TO BE USED IN ANY WAY DETRIMENTAL TO THE INTEREST OF NAVISTAR, INC.

ELECTRICAL CIRCUIT DIAGRAM CHAPTER 13

CONNECTOR BODY COMPOSITE MATING VIEW SHOWN

LONG SLEEPER TRAILER SOCKET #1
(316M2)

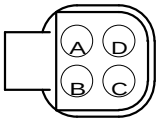

CONNECTOR 1661497C91

CAV	CIRCUIT	GAUGE	COLOR	TERMINAL	SEAL/SLEEVE
A	N58W	12	BK	1673747C1	0589390C1
B	N56W	12	YL	1673747C1	0589390C1
C	N57W	12	LTGN	1673747C1	0589390C1
D	N68W	12	BN	1673747C1	0589390C1

DAYCAB TRAILER SOCKET #2
(318F)

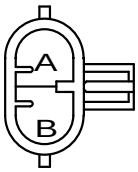

CONNECTOR 2031520C1
BODY LOCK 2033927C1

CAV	CIRCUIT	GAUGE	COLOR	TERMINAL	SEAL/SLEEVE
A	N70W	10	RD	2025423C1	2025427C1
B	N94W	10	DKBL	2025423C1	2025427C1

SHORT SLEEPER TRAILER SOCKET #2
(318F1)

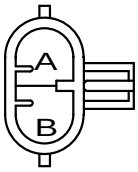

CONNECTOR 2031520C1
BODY LOCK 2033927C1

CAV	CIRCUIT	GAUGE	COLOR	TERMINAL	SEAL/SLEEVE
A	N70W	10	RD	2025423C1	2025427C1
B	N94W	10	DKBL	2025423C1	2025427C1

LONG SLEEPER TRAILER SOCKET #2
(318F2)

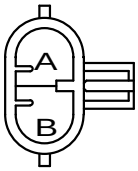

CONNECTOR 2031520C1
BODY LOCK 2033927C1

CAV	CIRCUIT	GAUGE	COLOR	TERMINAL	SEAL/SLEEVE
A	N70W	10	RD	2025423C1	2025427C1
B	N94W	10	DKBL	2025423C1	2025427C1

CHK	DATE	CHANGE	REV	REFERENCE	DRAWN	NAME
0610	27AUG13	INITIAL RELEASE.	A	92159Y	310615	CIRCUIT DIAGRAM, 9900
					RELEASE NO. 92159Y	DATE 02AUG13 / PART NO. AE08076124 / SHEET 030

Figure 231 Connector Composites (316M2 / 318F / 318F1 / 318F2)

13.34. CONNECTOR COMPOSITES (319F / 319F2 / 319F3 / 320M / 328M / 340), P. 31

NAVISTAR, INC

THIS PRINT IS PROVIDED ON A RESTRICTED BASIS AND IS NOT TO BE USED IN ANY WAY DETRIMENTAL TO THE INTEREST OF NAVISTAR, INC.

ELECTRICAL CIRCUIT DIAGRAM CHAPTER 13

CONNECTOR BODY COMPOSITE MATING VIEW SHOWN

GROUND
(319F/319F2/319F3)

CONNECTOR 3517817C1

CAV	CIRCUIT	GAUGE	COLOR	TERMINAL
A	N11-GW	8	WH	3517818C1

RIGHT CAB READING LIGHT CONNECTOR
(320M)

CONNECTOR 1669972C1

CAV	CIRCUIT	GAUGE	COLOR	TERMINAL
A	A63T	18	DKBL	1661208C1
B	A63-GT	18	WH	1661208C1

LEFT CAB READING LIGHT CONNECTOR
(328M)

CONNECTOR 1669972C1

CAV	CIRCUIT	GAUGE	COLOR	TERMINAL
A	A63R	18	DKBL	1661208C1
B	A63-GR	18	WH	1661208C1

AMBIENT TEMP SENSOR
(340)
(LOCATED BETWEEN STARTER AND RADIATOR
NEAR LEFT RAIL)

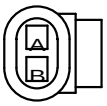

CONNECTOR 3522068C1
BODY LOCK 1661874C1

CAV	CIRCUIT	GAUGE	COLOR	TERMINAL	SEAL/SLEEVE
A	K41	18	LTGN	1661875C1	1661872C1
B	K41-G	18	LTGN	1661875C1	3568570C1

CHK	DATE	CHANGE	REV	REFERENCE	DRAWN	NAME
–	–	INITIAL RELEASE.	A	92159Y	310615	CIRCUIT DIAGRAM, 9900
					RELEASE NO. 92159Y	DATE 02AUG13 / PART NO. AE08076124 / SHEET 031

Figure 232 Connector Composites (319F / 319F2 / 319F3 / 320M / 328M / 340)

13.35. CONNECTOR COMPOSITES (340 / 344 / 345F / 345M), P. 32

NAVISTAR, INC

THIS PRINT IS PROVIDED ON A RESTRICTED BASIS AND IS NOT TO BE USED IN ANY WAY DETRIMENTAL TO THE INTEREST OF NAVISTAR, INC.

ELECTRICAL CIRCUIT DIAGRAM CHAPTER 13

CONNECTOR BODY COMPOSITE MATING VIEW SHOWN

AMBIENT TEMP SENSOR
(340)
(LOCATED NEAR RIGHT SIDE OF FUEL TANK)

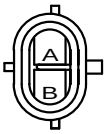

CONNECTOR 3582941C1
BODY LOCK 1661874C1

CAV	CIRCUIT	GAUGE	COLOR	TERMINAL	SEAL/SLEEVE
A	N41D	18	BK	1667742C1	1661872C1
B	NA1E	18	GY	1667742C1	1661872C1

CB SPKR CABLE ASSY
(344)
(LOCATED IN CAB ROOF)

CONNECTOR 1661197C1

CAV	CIRCUIT	GAUGE	COLOR	TERMINAL
A	[GREEN]	16	GN	ASSY
B	[YELLOW]	16	YL	ASSY

CLEARANCE LIGHT
(345F)
(LOCATED IN SUNSHADE)

CONNECTOR 1661260C1

CAV	CIRCUIT	GAUGE	COLOR	TERMINAL
A	A58A	18	BN	1661262C1
B	A58-GA	18	WH	1661262C1

CONNECTOR BODY LOCK/CLERANCE LIGHT FEED
(345M)
(LOCATED IN SUNSHADE)

CONNECTOR 1661259C1
BODY LOCK 1661263C1

CAV	CIRCUIT	GAUGE	COLOR	TERMINAL
A	A58A	18	BK	1661261C1
B	A58-GA	18	WH	1661261C1

CHK	DATE	CHANGE	REV	REFERENCE
0610	27AUG13	INITIAL RELEASE.	A	92159Y

DRAWN 310615 | NAME CIRCUIT DIAGRAM, 9900
RELEASE NO. 92159Y | DATE 02AUG13 | PART NO. AE08076124 | SHEET 032

Figure 233 Connector Composites (340 / 344 / 345F / 345M)

13.36. CONNECTOR COMPOSITES (393 / 404F / 406M), P. 33

NAVISTAR, INC

THIS PRINT IS PROVIDED ON A RESTRICTED BASIS AND IS NOT TO BE USED IN ANY WAY DETRIMENTAL TO THE INTEREST OF NAVISTAR, INC.

ELECTRICAL CIRCUIT DIAGRAM CHAPTER 13

CONNECTOR BODY COMPOSITE MATING VIEW SHOWN

ENGINE OIL TEMP
(393)

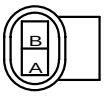

CONNECTOR 2036584C1

CAV	CIRCUIT	GAUGE	COLOR	TERMINAL
A	K30	16	TN	2036586C1
B	K30-GB	16	TN	2036586C1

ENGINE OIL TEMP
(393)

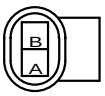

CONNECTOR 2036584C1

CAV	CIRCUIT	GAUGE	COLOR	TERMINAL	SEAL/SLEEVE
A	K30	18	TN	3554322C1	3554318C1
B	K30-GB	18	TN	3554322C1	3554318C1

THROTTLE POSITION SENSOR
(404F)

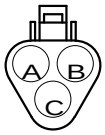

CONNECTOR 1655702C1
BODY LOCK 1655704C1

CAV	CIRCUIT	GAUGE	COLOR	TERMINAL
A	A99A(8V)	18	VT	1680205C1
B	A99-GA	18	VT	1680205C1
C	A99	18	VT	1680205C1

BAP SENSOR
(406M)

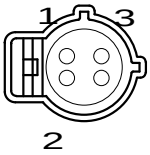

CONNECTOR 2016703C1
BODY LOCK 2016704C1

CAV	CIRCUIT	GAUGE	COLOR	TERMINAL
1	A97Z	18	VT	2003343C1
2	A97BL(5V)	18	VT	2003343C1
3	A97CD	18	VT	2003343C1

CHK	DATE	CHANGE	REV	REFERENCE	DRAWN	NAME
0610	27AUG13	INITIAL RELEASE.	A	92159Y	310615	CIRCUIT DIAGRAM, 9900
					RELEASE NO. 92159Y	DATE 02AUG13 / PART NO. AE08076124 / SHEET 033

Figure 234 Connector Composites (393 / 404F / 406M)

13.37. CONNECTOR COMPOSITES (418M / 420M), P. 34

NAVISTAR, INC

THIS PRINT IS PROVIDED ON A RESTRICTED BASIS AND IS NOT TO BE USED IN ANY WAY DETRIMENTAL TO THE INTEREST OF NAVISTAR, INC.

ELECTRICAL CIRCUIT DIAGRAM CHAPTER 13

CONNECTOR BODY COMPOSITE MATING VIEW SHOWN

TRAILER AUX SWITCH
(418M)

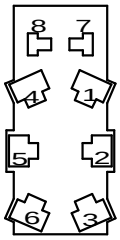

CONNECTOR 2009385C1

CAV	CIRCUIT	GAUGE	COLOR	TERMINAL
1	A62-GBL	18	WH	3541250C1
1	A72-G	18	WH	3541250C1
2	PLUG	–	–	–
3	PLUG	–	–	–
4	PLUG	–	–	–
5	A72E	16	OR	1661226C1
6	A72F	16	OR	1661226C1
7	A62BL	18	DKBL	1661208C1
8	A62-GBL	18	WH	1661208C1

RIGHT SIDE CLUSTER
(420M)
(LOCATED IN INSTRUMENT PANEL CLUSTER)

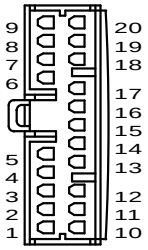

CONNECTOR 2024509C1

CAV	CIRCUIT	GAUGE	COLOR	TERMINAL
1	A62B	18	DKBL	2018639C1
2	A62-GB	18	WH	2018639C1
3	A28C	18	TN	2018639C1
4	A11-GJ	18	WH	2018639C1
5	A36S(+)	18	TN	2018639C1
6	A36S(-)	18	TN	2018639C1
7	A36C(+)	18	TN	2018639C1
8	A36C(-)	18	TN	2018639C1
9	A44	18	GY	2018639C1
10	A38	18	TN	2018639C1
11	PLUG	–	–	–
12	A43	18	GY	2018639C1
13	A40	18	GY	2018639C1
14	A94BD	18	GY	2018639C1
15	A94E	18	GY	2018639C1
16	A36L	18	TN	2018639C1
17	PLUG	–	–	–
18	A31	18	TN	2018639C1
19	A32A	18	TN	2018639C1
20	A32	18	TN	2018639C1

CHK	DATE	CHANGE	REV	REFERENCE	DRAWN	NAME
0610	27AUG13	INITIAL RELEASE.	A	92159Y	310615	CIRCUIT DIAGRAM, 9900
					RELEASE NO. 92159Y	DATE 02AUG13 / PART NO. AE08076124 / SHEET 034

Figure 235 Connector Composites (418M / 420M)

13.38. CONNECTOR COMPOSITES (421M / 422M), P. 35

NAVISTAR, INC

THIS PRINT IS PROVIDED ON A RESTRICTED BASIS AND IS NOT TO BE USED IN ANY WAY DETRIMENTAL TO THE INTEREST OF NAVISTAR, INC.

ELECTRICAL CIRCUIT DIAGRAM CHAPTER 13

CONNECTOR BODY COMPOSITE MATING VIEW SHOWN

SPEEDO/TACH MODULE #1
(421M)

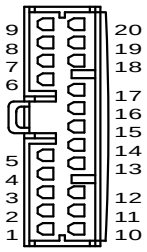

CONNECTOR 2018588C1

CAV	CIRCUIT	GAUGE	COLOR	TERMINAL
1	A62D	18	DK BL	2018639C1
2	A62-GD	18	WH	2018639C1
3	A28B	18	TN	2018639C1
4	A11-GL	18	WH	2018639C1
5	A47/48(+)	18	GY	2018639C1
6	A47/48(-)	18	GY	2018639C1
7	A5GA(+)	18	YL	2018639C1
7	A9YL(+)	18	YL	2018639C1
8	A5GB(-)	18	GN	2018639C1
8	A9GN(-)	18	GN	2018639C1
9	A14G	18	RD	2018639C1
10	PLUG	–	–	–
11	PLUG	–	–	–
12	PLUG	–	–	–
13	PLUG	–	–	–
14	PLUG	–	–	–
15	A36	18	TN	2018639C1
16	PLUG	–	–	–
17	PLUG	–	–	–
18	A40C	18	GY	2018639C1
19	A36L	18	TN	2018639C1
20	A52J	18	YL	2018639C1

SPEEDO/TACH MODULE 2
(422M)

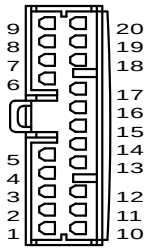

CONNECTOR 2018591C1

CAV	CIRCUIT	GAUGE	COLOR	TERMINAL
1	A57R	18	OR	2018639C1
2	A56R	18	OR	2018639C1
3	A29L	18	TN	2018639C1
4	A35L	18	TN	2018639C1
5	A29S(+)	18	TN	2018639C1
6	A29S(-)	18	TN	2018639C1
7	A29C(+)	18	TN	2018639C1
8	A29C(-)	18	TN	2018639C1
9	A35S(+)	18	TN	2018639C1
10	A35S(-)	18	TN	2018639C1
11	A35C(+)	18	TN	2018639C1
12	A35C(-)	18	TN	2018639C1
13	A27S(+)	18	TN	2018639C1
14	A27S(-)	18	TN	2018639C1
15	A27C(+)	18	TN	2018639C1
16	A27C(-)	18	TN	2018639C1
17	A36S(+)	18	TN	2018639C1
18	A36S(-)	18	TN	2018639C1
19	A36C(+)	18	TN	2018639C1
20	A36C(-)	18	TN	2018639C1

CHK	DATE	CHANGE	REV	REFERENCE	DRAWN	NAME
0610	27AUG13	INITIAL RELEASE.	A	92159Y	310615	CIRCUIT DIAGRAM, 9900
					RELEASE NO. 92159Y	DATE 02AUG13 / PART NO. AE08076124 / SHEET 035

Figure 236 Connector Composites (421M / 422M)

13.39. CONNECTOR COMPOSITES (423M / 424M), P. 36

NAVISTAR, INC

THIS PRINT IS PROVIDED ON A RESTRICTED BASIS AND IS NOT TO BE USED IN ANY WAY DETRIMENTAL TO THE INTEREST OF NAVISTAR, INC.

ELECTRICAL CIRCUIT DIAGRAM CHAPTER 13

CONNECTOR BODY COMPOSITE MATING VIEW SHOWN

LEFT SIDE CLUSTER #2
(423M)

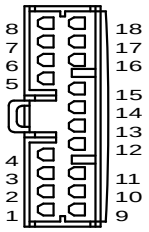

CONNECTOR 2018589C1

CAV	CIRCUIT	GAUGE	COLOR	TERMINAL
1	A62C	18	DK BL	2018639C1
2	A62-GC	18	WH	2018639C1
3	A28A	18	TN	2018639C1
4	A11-GM	18	WH	2018639C1
5	A29L	18	TN	2018639C1
6	PLUG	–	–	–
7	A65C	18	OR	2018639C1
8	A97SB	18	VT	2018639C1
9	A35L	18	TN	2018639C1
10	A97AM	18	VT	2018639C1
10*	A97AT	18	VT	2018639C1
10#	A97ML	18	VT	2018639C1
10@	A97T	18	VT	2018639C1
11@	A97AF	18	VT	2018639C1
11#	A97AP	18	VT	2018639C1
11%	A97AT	18	VT	2018639C1
12	A28D	18	TN	2018639C1
13@	A97AA	18	VT	2018639C1
13#	A97AT	18	VT	2018639C1
13**	A97AZ	18	VT	2018639C1
14	A94T	18	GY	2018639C1
15	PLUG	–	–	–
16	PLUG	–	–	–
17	PLUG	–	–	–
18	A30	18	TN	2018639C1

* W/ EXP CUMMINS ENG & W/ AUTO & N/ CUMM IDLE CONTROL SYS,BRAZIL
# W/ 2010 IBB ENG & W/ ALLISON XMSN & & W/ ENGINE BRAKE
@ W/ INTL CEC I-6 ENGINES
% W/ EXPORT CAT C15/C16 ENG W/ ALLISON XMSN
** W/ EATON DM3 XMSN W/ AUTO CLUTCH W/ CUMMINS W/ ICON,W/ PAM,USA

LEFT SIDE CLUSTER #1
(424M)

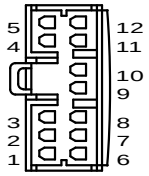

CONNECTOR 2018590C1

CAV	CIRCUIT	GAUGE	COLOR	TERMINAL
1	A29S(+)	18	TN	2018639C1
2	A29S(-)	18	TN	2018639C1
3	A29C(+)	18	TN	2018639C1
4	A29C(-)	18	TN	2018639C1
5	A35S(+)	18	TN	2018639C1
6	A35S(-)	18	TN	2018639C1
7	A35C(+)	18	TN	2018639C1
8	A35C(-)	18	TN	2018639C1
9	A27S(+)	18	TN	2018639C1
10	A27S(-)	18	TN	2018639C1
11	A27C(+)	18	TN	2018639C1
12	A27C(-)	18	TN	2018639C1

CHK	DATE	CHANGE	REV	REFERENCE	DRAWN	NAME		
–	–	INITIAL RELEASE.	A	92159Y	310615	CIRCUIT DIAGRAM, 9900		
					RELEASE NO.	DATE	PART NO.	SHEET
					92159Y	02AUG13	AE08076124	036

Figure 237 Connector Composites (423M / 424M)

13.40. CONNECTOR COMPOSITES (425M / 426M / 427F), P. 37

NAVISTAR, INC

THIS PRINT IS PROVIDED ON A RESTRICTED BASIS AND IS NOT TO BE USED IN ANY WAY DETRIMENTAL TO THE INTEREST OF NAVISTAR, INC.

ELECTRICAL CIRCUIT DIAGRAM CHAPTER 13

CONNECTOR BODY COMPOSITE MATING VIEW SHOWN

PANEL LIGHT SWITCH
(425M)

CONNECTOR 1661200C1

CAV	CIRCUIT	GAUGE	COLOR	TERMINAL
A	A62	16	DKBL	1661209C1
B	A11-GS	16	WH	1661209C1
C	A62A	16	DKBL	1661209C1
D	A62W	16	DKBL	1661209C1
E	PLUG	–	–	–
F	A62-GW	18	WH	1661208C1

RADIO #1
(426M)

(LOCATED IN INSTRUMENT PANEL)

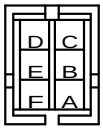

CONNECTOR 1661200C1

CAV	CIRCUIT	GAUGE	COLOR	TERMINAL
A	A88B	16	LTGN	1661209C1
B	A86A	18	LTGN	1661208C1
C	A86C	18	LTGN	1661208C1
D	A86	16	LTGN	1661209C1
E	A86D	18	LTGN	1661208C1
F	A86B	18	LTGN	1661208C1

RADIO #2
(427F)

(LOCATED IN INSTRUMENT PANEL)

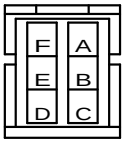

CONNECTOR 1661201C1

CAV	CIRCUIT	GAUGE	COLOR	TERMINAL
A	A86-GA	18	WH	1661212C1
B	A86R	18	LTGN	1661212C1
C	A86T	18	LTGN	1661212C1
D	A86U	18	LTGN	1661212C1
E	A86S	18	LTGN	1661212C1
F	PLUG	–	–	–

CHK	DATE	CHANGE	REV	REFERENCE	DRAWN	NAME
0610	27AUG13	INITIAL RELEASE.	A	92159Y	310615	CIRCUIT DIAGRAM, 9900
					RELEASE NO. 92159Y	DATE 02AUG13 / PART NO. AE08076124 / SHEET 037

Figure 238 Connector Composites (425M / 426M / 427F)

13.41. CONNECTOR COMPOSITES (428 / 428F / 429), P. 38

NAVISTAR, INC

THIS PRINT IS PROVIDED ON A RESTRICTED BASIS AND IS NOT TO BE USED IN ANY WAY DETRIMENTAL TO THE INTEREST OF NAVISTAR, INC.

ELECTRICAL CIRCUIT DIAGRAM CHAPTER 13

CONNECTOR BODY COMPOSITE MATING VIEW SHOWN

ROOF CONN #2
(428)
(LOCATED IN CAB ROOF)

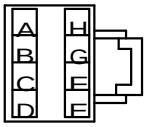

CONNECTOR 2005835C1
BODY LOCK 2006503C1

CAV	CIRCUIT	GAUGE	COLOR	TERMINAL
A	A86A	18	LTGN	1661208C1
B	A86B	18	LTGN	1661208C1
C	A86C	18	LTGN	1661208C1
D	A86D	18	LTGN	1661208C1
E	A86E	16	LTGN	1661208C1
F	A58A	18	BN	1661208C1
G	A62AP	16	DKBL	1661208C1
H	A63P	16	DKBL	1661208C1

ROOF CONN #2
(428F)
(LOCATED IN CAB ROOF)

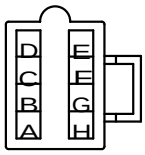

CONNECTOR 2005836C1
BODY LOCK 2006504C1

CAV	CIRCUIT	GAUGE	COLOR	TERMINAL
A	A86A	18	LTGN	1661212C1
B	A86B	18	LTGN	1661212C1
C	A86C	18	LTGN	1661212C1
D	A86D	18	LTGN	1661212C1
E	A86E	16	LTGN	1661212C1
F	A58A	16	BN	1661212C1
G	A62AP	16	DKBL	1661212C1
H	A63P	16	DKBL	1661212C1

ROOF CONN #1
(429)
(LOCATED IN CAB ROOF)

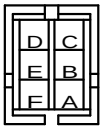

CONNECTOR 1661200C1

CAV	CIRCUIT	GAUGE	COLOR	TERMINAL
A	A11-GAB	14	WH	3566715C1
B	A63AS	16	DKBL	1661209C1
C	A63	16	DKBL	1661209C1
D*	A63A	16	DKBL	1661211C1
D#	A63Y	16	DKBL	1661211C1
E	A63-GE	16	DKBL	1661209C1
F	A63-GF	16	DKBL	1661209C1

* W/ SEPARATE CB & AM/FM ANT & N/ ROAD RELAY,SKYRISE,TEMP/COMP
\# W/ TEMP GAUGE/COMPASS(016HBH) W/ SKYRISE PROSLPR(16AUL)

CHK	DATE	CHANGE	REV	REFERENCE	DRAWN	NAME
0610	27AUG13	INITIAL RELEASE.	A	92159Y	310615	CIRCUIT DIAGRAM, 9900
					RELEASE NO. 92159Y	DATE 02AUG13 / PART NO. AE08076124 / SHEET 038

Figure 239 Connector Composites (428 / 428F / 429)

13.42. CONNECTOR COMPOSITES (429F / 429O / 429P), P. 39

NAVISTAR, INC

THIS PRINT IS PROVIDED ON A RESTRICTED BASIS AND IS NOT TO BE USED IN ANY WAY DETRIMENTAL TO THE INTEREST OF NAVISTAR, INC.

ELECTRICAL CIRCUIT DIAGRAM CHAPTER 13

CONNECTOR BODY COMPOSITE MATING VIEW SHOWN

ROOF CONN #1
(429F)
(LOCATED IN CAB ROOF)

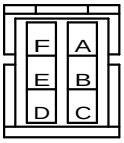

CONNECTOR 1661201C1

CAV	CIRCUIT	GAUGE	COLOR	TERMINAL
A	A11-GAB	16	WH	1661212C1
B	A63AS	18	DKBL	1661212C1
C	A63Z	18	DKBL	1661212C1
D	A63H	18	DKBL	1661213C1
D	A63Y	18	DKBL	1661213C1
E	PLUG	–	–	–
F	PLUG	–	–	–

* W/ 2010 IBB ENG & W/ ALLISON XMSN
& W/ ENGINE BRAKE
\# W/ 2010 IBB ENG & W/ ALLISON XMSN
& N/ ENGINE BRAKE

CAB CONNECTOR INTERCONNECT
(429O)

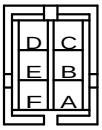

CONNECTOR 1661200C1

CAV	CIRCUIT	GAUGE	COLOR	TERMINAL
A	A11-GAB	14	WH	3566715C1
B	A63AR	16	DKBL	1661209C1
C	A63	16	DKBL	1661209C1
D	A63Y	16	DKBL	1661209C1
E	A63-GE	16	DKBL	1661209C1
F	A63-GF	16	DKBL	1661209C1

ROOF CONNECTOR INTERCONNECT
(429P)

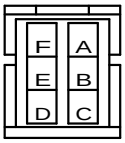

CONNECTOR 1661201C1

CAV	CIRCUIT	GAUGE	COLOR	TERMINAL
A	A11-GAB	14	WH	3534167C1
B	A63AV	16	DKBL	1661212C1
C	A63	16	DKBL	1661212C1
D	A63Y	16	DKBL	1661212C1
E	A63-GE	16	DKBL	1661212C1
F	A63-GF	16	DKBL	1661212C1

CHK	DATE	CHANGE	REV	REFERENCE	DRAWN	NAME		
0610	27AUG13	INITIAL RELEASE.	A	92159Y	310615	CIRCUIT DIAGRAM, 9900		
					RELEASE NO.	DATE	PART NO.	SHEET
					92159Y	02AUG13	AE08076124	039

Figure 240 Connector Composites (429F / 429O / 429P)

13.43. CONNECTOR COMPOSITES (430 / 433M / 434M), P. 40

NAVISTAR, INC

THIS PRINT IS PROVIDED ON A RESTRICTED BASIS AND IS NOT TO BE USED IN ANY WAY DETRIMENTAL TO THE INTEREST OF NAVISTAR, INC.

ELECTRICAL CIRCUIT DIAGRAM CHAPTER 13

CONNECTOR BODY COMPOSITE MATING VIEW SHOWN

WINDSHIELD WIPER MOTOR
(430)
(LOCATED IN UNDER HOOD)

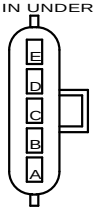

CONNECTOR 1661375C2
BODY LOCK 1661376C1

CAV	CIRCUIT	GAUGE	COLOR	TERMINAL	SEAL/SLEEVE
A	K82C	16	GY	2033819C1	1652325C1
B	K82F	16	GY	2033819C1	1652325C1
C	K82-GC	16	WH	2033819C1	1652325C1
D	K82D	16	GY	2033819C1	1652325C1
E	K82E	16	GY	2033819C1	1652325C1

ENG BRK SELECT
(433M)

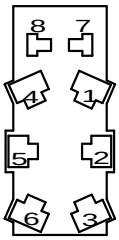

CONNECTOR2009385C1

CAV	CIRCUIT	GAUGE	COLOR	TERMINAL
1	PLUG	–	–	–
2*	A24AD	18	GY	1661224C1
2#	A24BK	18	GY	1661224C1
2*	A24BL	16	GY	1661227C1
3*	A24AE	18	GY	1661224C1
3@	A24AF	18	GY	1661224C1
4	PLUG	–	–	–
5	PLUG	–	–	–
6@	A24AE	18	GY	1661224C1
6*	A24AF	18	GY	1661224C1
6%	A24AP	18	GY	3541250C1
7*	62L	16	DKBL	1661209C1
7#	A62NA	16	DKBL	1661209C1
8	A62-GL	18	WH	1661208C1

* W/ 2010 IBB ENG & W/ ALLISON XMSN & N/ ENGINE BRAKE
\# W/ EXHAUST BRAKE WIRING & W/ ALLISON XMSN
@ W/ ISM, N14, ISX ENGS W/ ALLISON WORLD XMSN W/ ENG BRAKE
% W/ EATON DM3 XMSN W/ AUTOCLUTCH W/ CUMMINS W/ ICON
N/ PAM,USA
** W/ 2010 IBB ENG & W/ ALLISON XMSN & W/ ENGINE BRAKE
EXHAUST BRAKE WIRING & N/ ALLISON XMSN

ENG BRK ON/OFF
(434M)

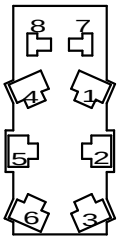

CONNECTOR 2009385C1

CAV	CIRCUIT	GAUGE	COLOR	TERMINAL
1	PLUG	–	–	–
2*	A24AM	18	GY	1661224C1
2**	A24-G	18	GY	1661224C1
2#	A24-GBK	18	WH	1661224C1
3#	A24BK	16	GY	1661227C1
3*	A24CL	16	GY	1661227C1
4	PLUG	–	–	–
5**	A24AD	18	GY	1661224C1
5*	A24BD	16	GY	1661226C1
5#	A24-GBK	18	WH	1661224C1
6*	A24AM	18	GY	1661224C1
6##	A24BK	18	GY	1661224C1
6@	A24-G	18	GY	1661224C1
6*	A92-GT	18	TN	1661224C1
7	A62N	16	DK BL	1661209C1
8	A62-GN	18	WH	1661208C1

CHK	DATE	CHANGE	REV	REFERENCE	DRAWN	NAME		
–	–	INITIAL RELEASE.	A	92159Y	310615	CIRCUIT DIAGRAM, 9900		
					RELEASE NO.	DATE	PART NO.	SHEET
					92159Y	02AUG13	AE08076124	040

Figure 241 Connector Composites (430 / 433M / 434M)

13.44. CONNECTOR COMPOSITES (435M / 436M / 437M), P. 41

NAVISTAR, INC

THIS PRINT IS PROVIDED ON A RESTRICTED BASIS AND IS NOT TO BE USED IN ANY WAY DETRIMENTAL TO THE INTEREST OF NAVISTAR, INC.

ELECTRICAL CIRCUIT DIAGRAM CHAPTER 13

CONNECTOR BODY COMPOSITE MATING VIEW SHOWN

CRUISE ON/OFF
(435M)

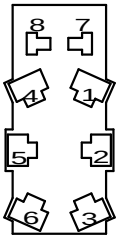

CONNECTOR 2009385C1

CAV	CIRCUIT	GAUGE	COLOR	TERMINAL
1	PLUG	–	–	–
2	PLUG	–	–	–
3	PLUG	–	–	–
4	PLUG	–	–	–
5*	A97AE	18	VT	1661224C1
5#	A97CF	18	VT	3541250C1
5*	A97GB	18	VT	3541250C1
6#	A97AD	18	VT	1661226C1
6@	A97CR	18	VT	3541250C1
6%	A97CS	18	VT	3541250C1
6**	A97-GC	18	VT	1661224C1
7	A62J	16	DKBL	1661209C1
8	A62-GJ	18	WH	1661208C1

CRUISE SET/RESUME
(436M)

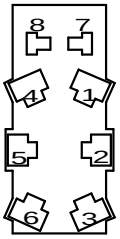

CONNECTOR 2009385C1

CAV	CIRCUIT	GAUGE	COLOR	TERMINAL
1*	A97AA	18	VT	1661224C1
1#	A97DK	18	VT	1661224C1
2@	A97CS	18	VT	1661224C1
2#	A97GB	18	VT	1661224C1
2**	A97-GB	18	VT	1661224C1
3**	A97AB	18	VT	1661224C1
3*	A97DJ	18	VT	1661224C1
4	PLUG	–	–	–
5	PLUG	–	–	–
6	PLUG	–	–	–
7	A62K	16	DKBL	1661209C1
8	A62-GK	18	WH	1661208C1

* W/ 2010 IBB ENG & W/ ULTRASHIFT,AUTOSHIFT,FREEDOMXNSN ALLISON & N/ ENG BRAKE
# W/ INTL CEC I-6 ENGINES
** W/ 2010 IBB ENG & W/ ALLISON XMSN & N/ ENG BRAKE
@ W/ 2010 IBB ENG & W/ ALLISON XMSN & W/ ENG BRAKE

RIGHT MOTORIZED MIRROR SWITCH
(437M)

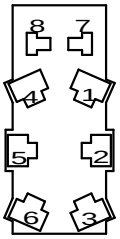

CONNECTOR 2009385C1

CAV	CIRCUIT	GAUGE	COLOR	TERMINAL
1	A78E	18	LTGN	1661224C1
2	A78-GA	18	WH	1661224C1
3	PLUG	–	–	–
4	A78F	18	LTGN	1661224C1
5*	A78C	16	LTGN	1661226C1
5#	A78D	16	LTGN	1661226C1
6	PLUG	–	–	–
7*	A62AW	16	DKBL	1661209C1
7#	A62AW1	16	DKBL	1661209C1
8	A62-GAV	18	WH	1661208C1

* W/ MIRROR WIRING,POWER,RIGHT SIGNAL AXIS
# W/ MIRROE WIRING,POWER,LT & RT SIGNAL AXIS

CHK	DATE	CHANGE	REV	REFERENCE	DRAWN	NAME
–	–	INITIAL RELEASE.	A	92159Y	310615	CIRCUIT DIAGRAM, 9900
					RELEASE NO. 92159Y	DATE 02AUG13 / PART NO. AE08076124 / SHEET 041

Figure 242 Connector Composites (435M / 436M / 437M)

13.45. CONNECTOR COMPOSITES (438M / 440M / 441), P. 42

NAVISTAR, INC

THIS PRINT IS PROVIDED ON A RESTRICTED BASIS AND IS NOT TO BE USED IN ANY WAY DETRIMENTAL TO THE INTEREST OF NAVISTAR, INC.

ELECTRICAL CIRCUIT DIAGRAM CHAPTER 13

CONNECTOR BODY COMPOSITE MATING VIEW SHOWN

HTD MIRROR SWITCH
(438M)

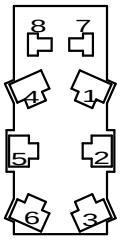

CONNECTOR 2009385C1

CAV	CIRCUIT	GAUGE	COLOR	TERMINAL
1	A78-G	18	WH	1661224C1
2	PLUG	–	–	–
3	PLUG	–	–	–
4	PLUG	–	–	–
5	A78	16	LTGN	1661226C1
6*	A78A	18	LTGN	3541250C1
6#	A78B	18	LTGN	3541250C1
7	A62AX	16	DKBL	1661209C1
8	A62-GAX	18	WH	1661208C1

* W/ 2010 IBB ENG & W/ ALLISON XMSN & N/ ENGINE BRAKE
\# W/ 2010 IBB ENG & W/ ALLISON XMSN & W/ ENGINE BRAKE

FOG LIGHT SWITCH
(440M)

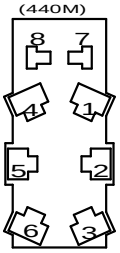

CONNECTOR 2009385C1

CAV	CIRCUIT	GAUGE	COLOR	TERMINAL
1	A64-G	18	WH	1661224C1
2	PLUG	–	–	–
3	PLUG	–	–	–
4	PLUG	–	–	–
5	A64C	14	YL	1661226C1
6	A64A	14	YL	1661226C1
7	A62AN	16	DKBL	1661209C1
8	A62-GAN	16	WH	1661209C1

WORKLIGHT SWITCH
(441)
(LOCATED AT BEHIND DRIVER SEAT)

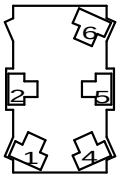

CONNECTOR 1661256C1

CAV	CIRCUIT	GAUGE	COLOR	TERMINAL
1	A65C	16	OR	1661226C1
1*	A65-GC	14	WH	1661226C1
2	A65-GC	16	WH	1661226C1
2*	A65-GD	16	WH	1661226C1
3	PLUG	–	–	–
4*	A65A	14	OR	1661226C1
4#	A65N	16	OR	1661226C1
4#	A71R	16	OR	1661226C1
4#	A65A	16	OR	1661226C1
5*	A65B	14	OR	1661226C1
5#	A65B	16	OR	1661226C1
5	A65B	18	OR	1661224C1
5#	A71N	16	OR	1661226C1
5#	A65R	16	OR	1661226C1
6	A65P	16	OR	1661226C1

* N/ SLEEPER
\# W/ AUX HEATER

CHK	DATE	CHANGE	REV	REFERENCE	DRAWN	NAME
0488	09DEC14	ADDED R/D 441.	B	92783V	310615	CIRCUIT DIAGRAM, 9900
					RELEASE NO. 92159Y	DATE 02AUG13 / PART NO. AE08076124 / SHEET 042

Figure 243 Connector Composites (438M / 440M / 441)

13.46. CONNECTOR COMPOSITES (442), P. 42A

NAVISTAR, INC

THIS PRINT IS PROVIDED ON A RESTRICTED BASIS AND IS NOT TO BE USED IN ANY WAY DETRIMENTAL TO THE INTEREST OF NAVISTAR, INC.

ELECTRICAL CIRCUIT DIAGRAM

CHAPTER 13

CONNECTOR BODY COMPOSITE MATING VIEW SHOWN

DOME LIGHT SWITCH
(442)
(LOCATED AT INSTRUMENT PANEL)

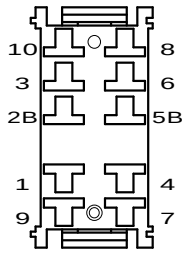

CONNECTOR 3520850C1

CAV	CIRCUIT	GAUGE	COLOR	TERMINAL
1	A63AS	16	DKBL	1661226C1
2B*	A63A	16	DKBL	1661227C1
2B#	A63N	16	DKBL	1661227C1
3	A63-GD	16	WH	1661226C1
4	–	–	–	–
5B	–	–	–	–
6	–	–	–	–
7	A62F	16	DKBL	1661226C1
8	–	–	–	–
9*	A62-GF	18	WH	1661226C1
9#	A63-GD	16	WH	1661226C1
10	–	–	–	–

* W/ 2-BEACON LIGHT CAB MOUNTED W/ GAUGE AMBIENT TEMP & COMPASS
\# W/ CB/AM/FM ANT BASE BOTH SIDES & W/ SKYRISE & W/ TEMP/COMPASS

CHK	DATE	CHANGE	REV	REFERENCE	DRAWN	NAME
0488	09DEC14	INITIAL RELEASE.	A	92783V	23112202	CIRCUIT DIAGRAM, 9900
					RELEASE NO. 92783V	DATE 11NOV14 / PART NO. AE08076124 / SHEET 42A

Figure 244 Connector Composites (442)

13.47. CONNECTOR COMPOSITES (445 / 453 / 453M), P. 43

NAVISTAR, INC

THIS PRINT IS PROVIDED ON A RESTRICTED BASIS AND IS NOT TO BE USED IN ANY WAY DETRIMENTAL TO THE INTEREST OF NAVISTAR, INC.

ELECTRICAL CIRCUIT DIAGRAM CHAPTER 13

CONNECTOR BODY COMPOSITE MATING VIEW SHOWN

HILL START AID SWITCH
(445)

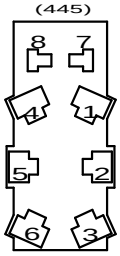

CONNECTOR 2009385C1

CAV	CIRCUIT	GAUGE	COLOR	TERMINAL
1	PLUG	–	–	–
2	PLUG	–	–	–
3	PLUG	–	–	–
4	PLUG	–	–	–
5	A11-G	16	WH	1661227C1
5	A94-GC	16	WH	1661227C1
6	A94CC	16	GY	1661226C1
7	A62AK	16	DKBL	1661209C1
8	A94-GC	16	WH	1661209C1

G1 GND ADAPTER
(453)
(LOCATED IN INSTRUMENT PANEL)

CONNECTOR 2007315C1
BODY LOCK 2007316C1

CAV	CIRCUIT	GAUGE	COLOR	TERMINAL
A	PLUG	–	–	–
B	PLUG	–	–	–
C	A11GR	16	WH	1661209C1
D	PLUG	–	–	–
E	PLUG	–	–	–
F	PLUG	–	–	–
G	PLUG	–	–	–
H	A11-G	16	WH	1661209C1
J	PLUG	–	–	–
K	PLUG	–	–	–

G1 GND ADAPTER
(453M)
(LOCATED IN INSTRUMENT PANEL)

CONNECTOR 2007315C1
BODY LOCK 2007316C1

CAV	CIRCUIT	GAUGE	COLOR	TERMINAL
A	A11-GA	12	WH	3566715C1
B	A11-GR	14	WH	3566715C1
C	A11GR	16	WH	1661209C1
C*	A71-GA	14	WH	3566715C1
D	A11-GEE	18	WH	1661208C1
E	A98-G	18	WH	1661208C1
F	PLUG	–	–	–
G	PLUG	–	–	–
H	A11-G	16	WH	1661209C1
J	PLUG	–	–	–
K	A11-GHH	18	WH	1661208C1

* W/ DUAL SWITCHED CUSTOMER MNTG WORK LIGHTS

CHK	DATE	CHANGE	REV	REFERENCE	DRAWN	NAME
0488	09DEC14	ADDED CIRC A71-GA IN	B	92783V	310615	CIRCUIT DIAGRAM, 9900
	R/D 453M.				RELEASE NO. 92159Y	DATE 02AUG13 / PART NO. AE08076124 / SHEET 043

Figure 245 Connector Composites (445 / 453 / 453M)

13.48. CONNECTOR COMPOSITES (454M / 455M / 456M), P. 44

NAVISTAR, INC

THIS PRINT IS PROVIDED ON A RESTRICTED BASIS AND IS NOT TO BE USED IN ANY WAY DETRIMENTAL TO THE INTEREST OF NAVISTAR, INC.

ELECTRICAL CIRCUIT DIAGRAM CHAPTER 13

CONNECTOR BODY COMPOSITE MATING VIEW SHOWN

G2 GND ADAPTER
(454M)
(LOCATED IN INSTRUMENT PANEL)

CONNECTOR 2007315C1
BODY LOCK 2007316C1

CAV	CIRCUIT	GAUGE	COLOR	TERMINAL
A	A11-GY	10	WH	1661211C1
B	A48-G	16	WH	1661209C1
C	PLUG	–	–	–
D	PLUG	–	–	–
E	A28-G	16	WH	1661209C1
F	PLUG	–	–	–
G	A86-GA	18	WH	1661208C1
H	A11-GF	18	WH	1661208C1
J	PLUG	–	–	–
K	A11-GAW	16	WH	1661209C1

G3 GND ADAPTER
(455M)

(LOCATED IN INSTRUMENT PANEL)

CONNECTOR 2007315C1
BODY LOCK 2007316C1

CAV	CIRCUIT	GAUGE	COLOR	TERMINAL
A	A11-GE	12	WH	3566715C1
B	A13-GAD	18	WH	1661208C1
C*	A11-GZA	14	WH	3566715C1
C#	A38-G	18	WH	1661208C1
C@	A95-G	16	WH	1661209C1
D%	A38-GB	18	WH	1661208C1
D**	A97-GB	18	VT	1661208C1
E	PLUG	–	–	–
F	A72-GA	18	WH	1661208C1
G	A11-GAW	14	WH	3566715C1
H	A41-G	18	WH	1661208C1
J	A11-GAC	14	WH	3566715C1
K	A11-GDA	16	WH	1661209C1

* W/ TRUCK, GLIDERS, TRIM
# W/ HEATED DRIVERS SEAT
@ W/ 2010 IBB ENG & W/ ULTRASHIFT, FREEDOM XMSN, ALLISON & N/ ENG BRAKE
% W/ HEATED PASSANGER SEAT
** W/ 2010 IBB ENG & W/ ALLISON XMSN & W/ ENGINE BRAKE

G4 GND ADAPTER
(456M)

(LOCATED IN INSTRUMENT PANEL)

CONNECTOR 2007315C1
BODY LOCK 2007316C1

CAV	CIRCUIT	GAUGE	COLOR	TERMINAL
A	A11-GC	10	WH	1661211C1
B	A11-GX	18	WH	1661208C1
C	PLUG	–	–	–
D	A44-GZC	16	WH	1661209C1
E	PLUG	–	–	–
F	PLUG	–	–	–
G##	A11-GAD	18	WH	1661208C1
G@@	A78-GC	18	WH	1661208C1
G%%	A78-GA	18	WH	1661208C1
H	A81-G	14	WH	3566715C1
J	PLUG	–	–	–
K	A11-GHD	18	WH	1661208C1

W/ MIRROR WIRING,POWER,RIGHT SIGNAL AXIS
@@ W/ MIRROR WIRING,POWER,LT & RT SIGNAL AXIS
%% W/ MIRROR WIRING,POWER,RT & LT DUAL AXIS

CHK	DATE	CHANGE	REV	REFERENCE	DRAWN	NAME
0610	27AUG13	INITIAL RELEASE.	A	92159Y	310615	CIRCUIT DIAGRAM, 9900
					RELEASE NO. 92159Y	DATE 02AUG13 / PART NO. AE08076124 / SHEET 044

Figure 246 Connector Composites (454M / 455M / 456M)

13.49. CONNECTOR COMPOSITES (457M / 460F), P. 45

NAVISTAR, INC

THIS PRINT IS PROVIDED ON A RESTRICTED BASIS AND IS NOT TO BE USED IN ANY WAY DETRIMENTAL TO THE INTEREST OF NAVISTAR, INC.

ELECTRICAL CIRCUIT DIAGRAM CHAPTER 13

CONNECTOR BODY COMPOSITE MATING VIEW SHOWN

GND ADAPTER
(457M)

CONNECTOR 2007315C1
BODY LOCK 2007316C1

CAV	CIRCUIT	GAUGE	COLOR	TERMINAL
A	A97-GR	18	VT	1661208C1
B	PLUG	–	–	–
C	A44-GM	16	WH	1661209C1
D	A24-GBK	18	WH	1661208C1
E	PLUG	–	–	–
F	PLUG	–	–	–
G	A23A	16	TN	1661209C1
H	PLUG	–	–	–
J	PLUG	–	–	–
K	PLUG	–	–	–

LOW AIR SWCH #1
(460F)

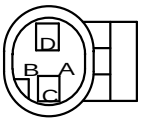

CONNECTOR 1661777C1
BODY LOCK 1661873C1

CAV	CIRCUIT	GAUGE	COLOR	TERMINAL	SEAL/SLEEVE
A	PLUG	–	–	–	–
B	PLUG	–	–	–	–
C	A40A	16	GY	1661875C1	1661872C1
D	A40-GA	16	WH	1661875C1	1661872C1

CHK	DATE	CHANGE	REV	REFERENCE	DRAWN	NAME
0610	27AUG13	INITIAL RELEASE.	A	92159Y	310615	CIRCUIT DIAGRAM, 9900
					RELEASE NO. 92159Y	DATE 02AUG13 / PART NO. AE08076124 / SHEET 045

Figure 247 Connector Composites (457M / 460F)

13.50. CONNECTOR COMPOSITES (462M), P. 46

NAVISTAR, INC

THIS PRINT IS PROVIDED ON A RESTRICTED BASIS AND IS NOT TO BE USED IN ANY WAY DETRIMENTAL TO THE INTEREST OF NAVISTAR, INC.

ELECTRICAL CIRCUIT DIAGRAM CHAPTER 13

CONNECTOR BODY COMPOSITE MATING VIEW SHOWN

LEFT SECTION
(462M)

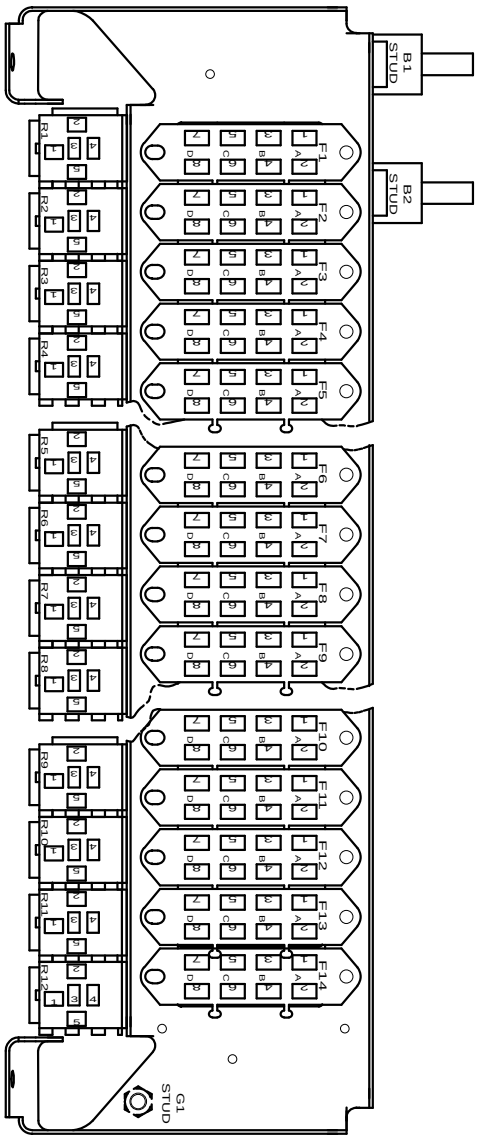

CAV	CIRCUIT	GAUGE	COLOR	TERMINAL
F1-1	PLUG	–	–	–
F1-2	PLUG	–	–	–
F1-3	PLUG	–	–	–
F1-4	PLUG	–	–	–
F1-5	PLUG	–	–	–
F1-6	PLUG	–	–	–
F1-7	PLUG	–	–	–
F1-8	PLUG	–	–	–
F2-1	PLUG	–	–	–
F2-2	PLUG	–	–	–
F2-3	PLUG	–	–	–
F2-4	PLUG	–	–	–
F2-5	PLUG	–	–	–
F2-6	PLUG	–	–	–
F2-7	PLUG	–	–	–
F2-8	PLUG	–	–	–
F3-1	PLUG	–	–	–
F3-2	PLUG	–	–	–
F3-3	PLUG	–	–	–
F3-4	PLUG	–	–	–
F3-5	PLUG	–	–	–
F3-6	PLUG	–	–	–
F3-7	PLUG	–	–	–
F3-8	PLUG	–	–	–
F4-1	PLUG	–	–	–
F4-2	PLUG	–	–	–
F4-3	A83	14	LTGN	0557374C1
F4-4	A14BD	14	RD	0557374C1
F4-5	PLUG	–	–	–
F4-6	PLUG	–	–	–
F4-7	PLUG	–	–	–
F4-7	PLUG	–	–	–

CHART CONTINUED ON SHEET 47

CONNECTOR 2018917C91
BODY LOCK 0593387C1

CHK	DATE	CHANGE	REV	REFERENCE	DRAWN	NAME
0610	27AUG13	INITIAL RELEASE.	A	92159Y	310615	CIRCUIT DIAGRAM, 9900
					RELEASE NO. 92159Y	DATE 02AUG13 / PART NO. AE08076124 / SHEET 046

Figure 248 Connector Composites (462M)

13.51. CONNECTOR COMPOSITES (462M), P. 47

NAVISTAR, INC

THIS PRINT IS PROVIDED ON A RESTRICTED BASIS AND IS NOT TO BE USED IN ANY WAY DETRIMENTAL TO THE INTEREST OF NAVISTAR, INC.

ELECTRICAL CIRCUIT DIAGRAM CHAPTER 13

CONNECTOR BODY COMPOSITE MATING VIEW SHOWN

LEFT SECTION (462M)

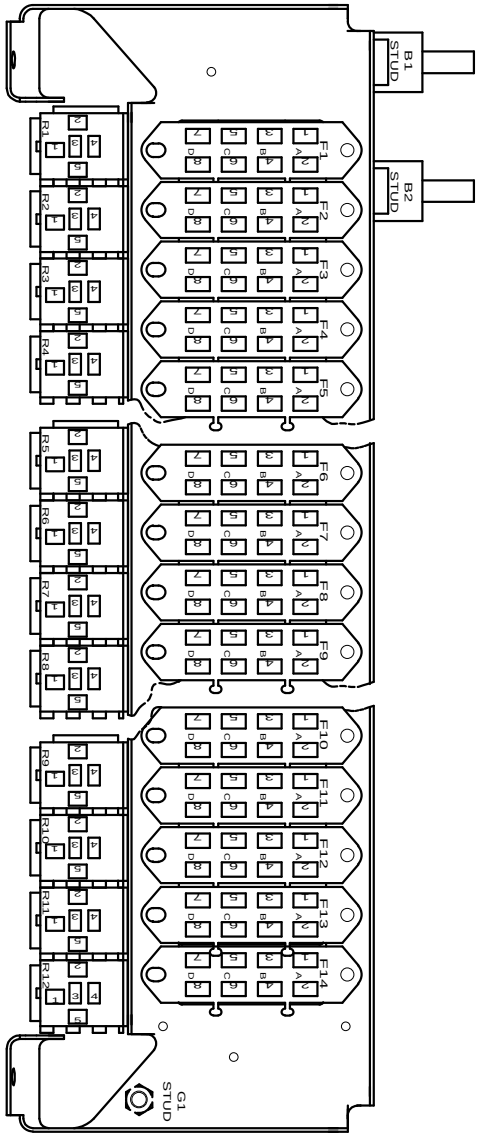

CONNECTOR 2018917C91
BODY LOCK 0593387C1

CHART CONTINUED FROM SHEET 46

CAV	CIRCUIT	GAUGE	COLOR	TERMINAL
F4-7	PLUG	–	–	–
F4-8	PLUG	–	–	–
F5-1	PLUG	–	–	–
F5-2	PLUG	–	–	–
F5-3	PLUG	–	–	–
F5-4	PLUG	–	–	–
F5-5	PLUG	–	–	–
F5-6	PLUG	–	–	–
F5-7	PLUG	–	–	–
F5-8	PLUG	–	–	–
R1-1	PLUG	–	–	–
R1-2	PLUG	–	–	–
R1-3	PLUG	–	–	–
R1-4	PLUG	–	–	–
R1-5	PLUG	–	–	–
R2-1	PLUG	–	–	–
R2-2	PLUG	–	–	–
R2-2	PLUG	–	–	–
R2-3	PLUG	–	–	–
R2-4	PLUG	–	–	–
R2-5	PLUG	–	–	–
R3-1	PLUG	–	–	–
R3-2	PLUG	–	–	–
R3-3	PLUG	–	–	–
R3-4	PLUG	–	–	–
R3-5	PLUG	–	–	–
R4-1	PLUG	–	–	–
R4-2	PLUG	–	–	–
R4-3	PLUG	–	–	–
R4-4	PLUG	–	–	–
R4-5	PLUG	–	–	–

CHK	DATE	CHANGE	REV	REFERENCE	DRAWN	NAME
–	–	INITIAL RELEASE.	A	92159Y	310615	CIRCUIT DIAGRAM, 9900
					RELEASE NO. 92159Y	DATE 02AUG13 / PART NO. AE08076124 / SHEET 047

Figure 249 Connector Composites (462M)

13.52. CONNECTOR COMPOSITES (462M), P. 48

NAVISTAR, INC

THIS PRINT IS PROVIDED ON A RESTRICTED BASIS AND IS NOT TO BE USED IN ANY WAY DETRIMENTAL TO THE INTEREST OF NAVISTAR, INC.

ELECTRICAL CIRCUIT DIAGRAM

CHAPTER 13

CONNECTOR BODY COMPOSITE MATING VIEW SHOWN

LEFT SECTION
(462M)

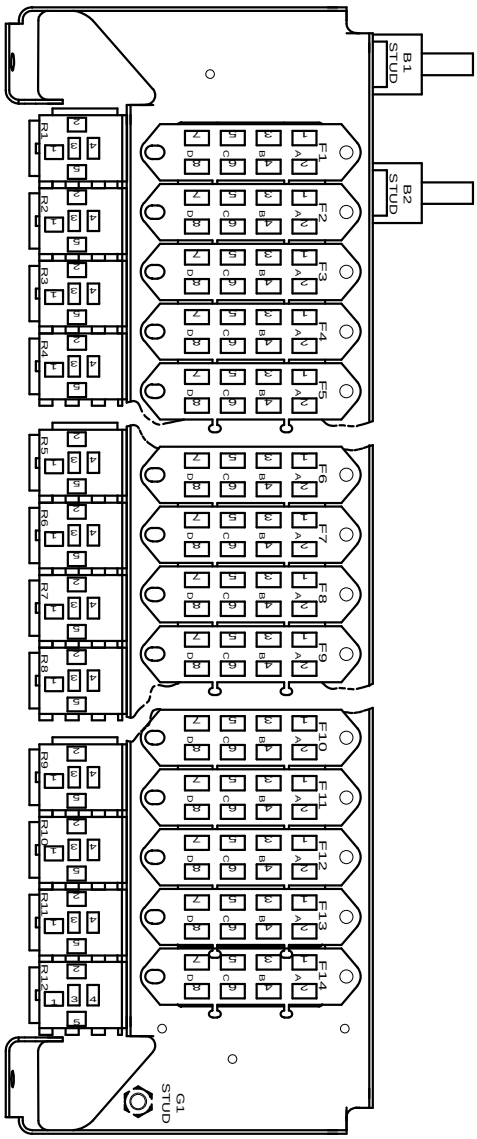

CAV	CIRCUIT	GAUGE	COLOR	TERMINAL
F1-1	A75	10	LTGN	0557375C1
F1-2	A14X	10	RD	0557375C1
F1-2	(A14Z)	–	–	0557383C1
F1-3	A77T	14	LTGN	0557374C1
F1-4	A14Z	10	RD	0557383C1
F1-5	A75A	14	LTGN	0557374C1
F1-6	(A14Z)	–	–	0557383C1
F1-7	A63P	16	DKBL	0557374C1
F1-8	A14Y	14	RD	0557374C1
F1-8	(A14Z)	–	–	0557383C1
F2-1	A84	14	LTGN	0557375C1
F2-1	A86	16	LTGN	0557375C1
F2-1	A65A	14	OR	0557375C1
F2-1	A86E	16	LTGN	0557375C1
F2-2	A12M	12	LTBL	0557375C1
F2-2	A14T	10	RD	0557378C1
F2-3	A63	18	DKBL	1666118C1
F2-3	A86K	14	LTGN	0557375C1
F2-3	A97DL	14	VT	0557375C1
F2-4	A14T	10	RD	0557381C1
F2-4	(A14T)	–	–	0557378C1
F2-5	A50A	18	YL	1666118C1
F2-5	A14S	12	RD	0557375C1
F2-6	A14R	10	RD	0557378C1
F2-6	(A14T)	–	–	0557381C1
F2-7	A51	14	YL	0557374C1
F2-7	A55	12	OR	0557375C1
F2-8	(A14R)	–	–	0557378C1
F2-8	(A14T)	–	–	0557381C1
F3-1	A58D	12	BN	0557375C1
F3-2	A14E	10	RD	0557378C1
F3-2	(A14E)	–	–	0557383C1
F3-3	A70	12	OR	0557375C1
F3-4	A14E	10	RD	0557383C1
F3-4	(A14E)	–	–	0557378C1
F3-5	A68	10	BN	0557375C1
F3-6	A14B	10	RD	0557378C1
F3-6	(A14E)	–	–	0557383C1
F3-7	A50	18	YL	1666118C1
F3-8	(A14B)	–	–	0557378C1
F3-8	(A14E)	–	–	0557383C1
F4-1	A13V	16	PK	0557374C1
F4-1	A66D	14	YL	0557374C1
F4-2	A13B	12	PK	0557375C1
F4-2	A13BL	14	PK	0557374C1
F4-3	PLUG	–	–	–
F4-4	PLUG	–	–	–
F4-5	A71	18	OR	1666118C1
F4-6	A13J	12	PK	0557378C1
F4-7	A78	16	LTGN	0557375C1
F4-7	A78C	16	LTGN	0557375C1

CHART CONTINUED ON SHEET 49

CONNECTOR 2018917C93
BODY LOCK 0593387C1

CHK	DATE	CHANGE	REV	REFERENCE	DRAWN	NAME
0610	27AUG13	INITIAL RELEASE.	A	92159Y	310615	CIRCUIT DIAGRAM, 9900
					RELEASE NO. 92159Y	DATE 02AUG13 / PART NO. AE08076124 / SHEET 048

Figure 250 Connector Composites (462M)

13.53. CONNECTOR COMPOSITES (462M), P. 49

NAVISTAR, INC

THIS PRINT IS PROVIDED ON A RESTRICTED BASIS AND IS NOT TO BE USED IN ANY WAY DETRIMENTAL TO THE INTEREST OF NAVISTAR, INC.

ELECTRICAL CIRCUIT DIAGRAM CHAPTER 13

CONNECTOR BODY COMPOSITE MATING VIEW SHOWN

LEFT SECTION
(462M)

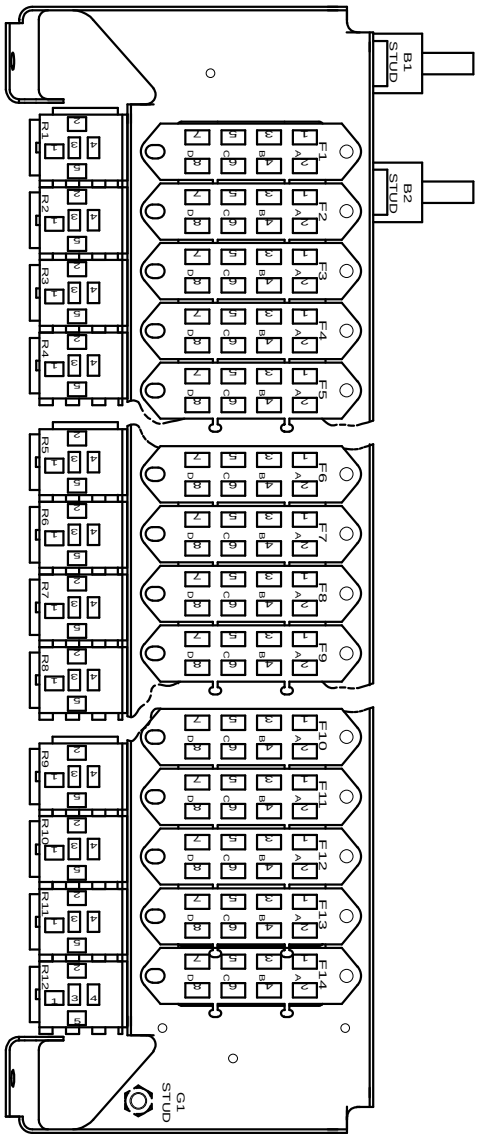

CONNECTOR 2018917C93
BODY LOCK 0593387C1

CHART CONTINUED FROM SHEET 48

CAV	CIRCUIT	GAUGE	COLOR	TERMINAL
F4-7	A82K	16	GY	0557375C1
F4-7	A87B	16	GY	0557375C1
F4-8	A14AL	10	RD	0557375C1
F4-8	(A13J)	–	–	0557378C1
F5-1	A78	16	LTGN	0557375C1
F5-1	A78C	16	LTGN	0557375C1
F5-1	A14S	12	RD	0557375C1
F5-2	A13BN	12	PK	0557375C1
F5-2	(A14B)	–	–	0557383C1
F5-3	A55	12	OR	0557375C1
F5-3	A86	16	LTGN	0557375C1
F5-3	A86E	16	LTGN	0557375C1
F5-4	A12M	12	LTBL	0557375C1
F5-4	A14B	10	RD	0557383C1
F5-5	A85	16	GY	0557375C1
F5-5	A14J	16	RD	0557375C1
F5-6	A14AM	10	RD	0557375C1
F5-6	(A14B)	–	–	0557383C1
F5-7	A14BJ	10	RD	0557375C1
F5-7	A86K	14	LTGN	0557375C1
F5-7	A97DL	14	VT	0557375C1
F5-8	A14AA	14	RD	0557374C1
F5-8	(A14B)	–	–	0557383C1
R1-1	A14S	12	RD	1661710C1
R1-2	A13-GA	18	WH	1659673C1
R1-3	PLUG	–	–	–
R1-4	A13H	12	PK	1661710C1
R1-5	A13A	12	PK	1661710C1
R2-1	A75F	10	LTGN	1661710C1
R2-2	A13-GA	18	WH	1661709C1
R2-2	A75-GB	18	WH	1661709C1
R2-3	A75T	14	LTGN	1661709C1
R2-4	A75	10	LTGN	1661710C1
R2-5	A75H	14	LTGN	1661709C1
R3-1	A75D	14	LTGN	1661709C1
R3-2	A75-GB	18	WH	1661709C1
R3-2	A75-GC	18	WH	1661709C1
R3-3	PLUG	–	–	–
R3-4	A75M	14	LTGN	1661709C1
R3-5	A75N	14	LTGN	1661709C1
R4-1	A51	14	YL	1661709C1
R4-2	A50-GB	18	WH	1661709C1
R4-2	A75-GC	18	WH	1661709C1
R4-3	A58ZA	14	BN	1661709C1
R4-4	A51A	14	YL	1661709C1
R4-5	A50B	18	YL	1661709C1
R4-5	A66H	18	YL	1661709C1

CHK	DATE	CHANGE	REV	REFERENCE	DRAWN	NAME		
–	–	INITIAL RELEASE.	A	92159Y	310615	CIRCUIT DIAGRAM, 9900		
					RELEASE NO.	DATE	PART NO.	SHEET
					92159Y	02AUG13	AE08076124	049

Figure 251 Connector Composites (462M)

13.54. CONNECTOR COMPOSITES (463M), P. 50

NAVISTAR, INC

THIS PRINT IS PROVIDED ON A RESTRICTED BASIS AND IS NOT TO BE USED IN ANY WAY DETRIMENTAL TO THE INTEREST OF NAVISTAR, INC.

ELECTRICAL CIRCUIT DIAGRAM CHAPTER 13

CONNECTOR BODY COMPOSITE MATING VIEW SHOWN

CENTER SECTION
(463M)

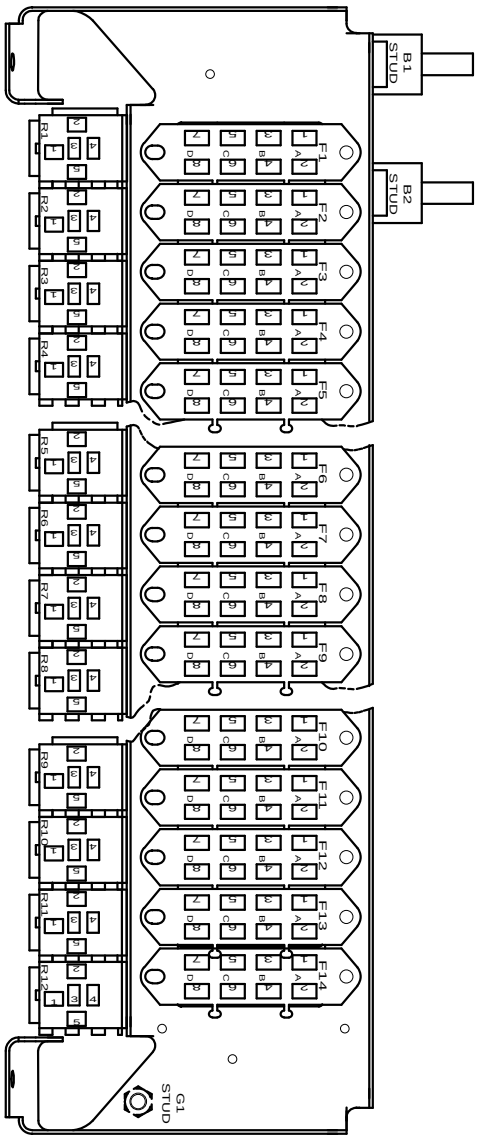

CAV	CIRCUIT	GAUGE	COLOR	TERMINAL
F6-1	PLUG	–	–	–
F6-2	A14M	10	RD	0557378C1
F6-2	(A14M)	–	–	0557383C1
F6-3	PLUG	–	–	–
F6-4	A14M	10	RD	0557383C1
F6-4	(A14M)	–	–	0557378C1
F6-5	A65A	14	OR	0557375C1
F6-5	A84	14	LT GN	0557375C1
F6-5	A65A	14	OR	0557375C1
F6-6	A14AJ	10	RD	0557375C1
F6-6	(A14M)	–	–	0557383C1
F6-7	A63	18	DK BL	1666118C1
F6-7	A13D	18	PK	1666118C1
F6-7	A13D	20	PK	1666118C1
F6-7	A13DM1	20	PK	1666118C1
F6-8	A13Z	12	PK	0557375C1
F6-8	(A14M)	–	–	0557383C1
F7-1	A15	12	RD	0557375C1
F7-2	A14C	10	RD	0557375C1
F7-2	(A14L)	–	–	0557383C1
F7-3	A56H	12	OR	0557375C1
F7-4	A14L	10	RD	0557383C1
F7-5	A57H	12	OR	0557375C1
F7-6	(A14L)	–	–	0557383C1
F7-7	A70E	10	OR	0557375C1
F7-8	A14F	10	RD	0557375C1
F7-8	(A14L)	–	–	0557383C1
F8-1	A13V	16	PK	0557374C1
F8-1	A50A	18	YL	1666118C1
F8-2	A14D	10	RD	0557378C1
F8-2	(A13B)	–	–	0557381C1
F8-3	A51	14	YL	0557374C1
F8-3	A13D	20	PK	1666118C1
F8-3	A13DM1	20	PK	1666118C1
F8-4	A13B	12	PK	0557375C1
F8-4	(A14D)	–	–	0557378C1
F8-5	A68C	16	BN	0557374C1
F8-5	A23	16	TN	0557375C1
F8-5	A75BC	16	LT GN	0557375C1
F8-6	A68D	10	BN	0557375C1
F8-6	(A13B)	–	–	0557381C1
F8-7	PLUG	–	–	–
F8-8	PLUG	–	–	–
F9-1	A39A	16	GY	0557374C1
F9-2	A14AD	16	RD	0557375C1
F9-2	A14BL	14	RD	0557375C1
F9-2	(A14D)	–	–	0557383C1
F9-3	A66D	14	YL	0557374C1
F9-3	A94AH	10	GY	0557375C1
F9-4	A14D	10	RD	0557383C1
F9-4	A13BL	14	PK	0557375C1
F9-4	A13BM	16	PK	0557375C1
F9-5	A66A	14	YL	0557374C1
F9-6	A14BL	14	RD	0557374C1
F9-6	(A14D)	–	–	0557383C1

CONNECTOR 2018917C93
BODY LOCK 0593387C1

CHART CONTINUED ON SHEET 51

CHK	DATE	CHANGE	REV	REFERENCE	DRAWN	NAME
0610	27AUG13	INITIAL RELEASE.	A	92159Y	310615	CIRCUIT DIAGRAM, 9900
					RELEASE NO. 92159Y	DATE 02AUG13 · PART NO. AE08076124 · SHEET 050

Figure 252 Connector Composites (463M)

13.55. CONNECTOR COMPOSITES (463M), P. 51

NAVISTAR, INC

THIS PRINT IS PROVIDED ON A RESTRICTED BASIS AND IS NOT TO BE USED IN ANY WAY DETRIMENTAL TO THE INTEREST OF NAVISTAR, INC.

ELECTRICAL CIRCUIT DIAGRAM CHAPTER 13

CONNECTOR BODY COMPOSITE MATING VIEW SHOWN

CENTER SECTION
(463M)

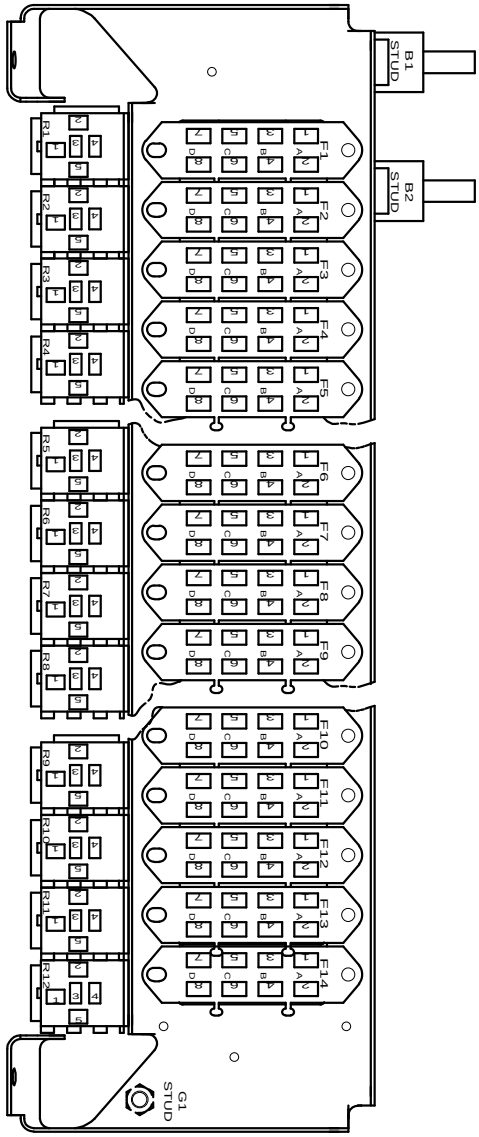

CONNECTOR 2018917C93
BODY LOCK 0593387C1

CHART CONTINUED FROM SHEET 50

CAV	CIRCUIT	GAUGE	COLOR	TERMINAL
F9-7	A82K	16	GY	0557375C1
F9-7	A87B	16	GY	0557375C1
F9-7	A75BC	16	LTGN	0557374C1
F9-8	A13U	12	PK	0557375C1
F9-8	(A14D)	–	–	0557383C1
R5-1	A75A	14	LTGN	1661709C1
R5-2	A13-GT	18	WH	1659673C1
R5-3	PLUG	–	–	–
R5-4	A75BL	14	LTGN	1661709C1
R5-5	A13BH	18	PK	1659673C1
R6-1	A77F	14	LTGN	1661709C1
R6-2	A13-GT	18	WH	1661709C1
R6-2	A77-G	18	WH	1661709C1
R6-3	A77C	14	LTGN	1661709C1
R6-4	PLUG	–	–	–
R6-5	A77R	18	LTGN	1659673C1
R7-1	A85	16	GY	1661710C1
R7-1	A85D	16	GY	1661710C1
R7-2	A85C	16	GY	1661709C1
R7-3	PLUG	–	–	–
R7-4	A85B	16	GY	1661709C1
R7-5	A85D	16	GY	1661709C1
R8-1	A58D	12	BN	1661710C1
R8-2	A58-GA	18	WH	1661709C1
R8-2	A77-G	18	WH	1661709C1
R8-3	PLUG	–	–	–
R8-4	A58R	12	BN	1661710C1
R8-5	A58C	18	BN	1659673C1
R8-5	A58AA	18	BN	1659673C1

CHK	DATE	CHANGE	REV	REFERENCE	DRAWN	NAME		
–	–	INITIAL RELEASE.	A	92159Y	310615	CIRCUIT DIAGRAM, 9900		
					RELEASE NO. 92159Y	DATE 02AUG13	PART NO. AE08076124	SHEET 051

Figure 253 Connector Composites (463M)

13.56. CONNECTOR COMPOSITES (464M), P. 52

NAVISTAR, INC

THIS PRINT IS PROVIDED ON A RESTRICTED BASIS AND IS NOT TO BE USED IN ANY WAY DETRIMENTAL TO THE INTEREST OF NAVISTAR, INC.

ELECTRICAL CIRCUIT DIAGRAM CHAPTER 13

CONNECTOR BODY COMPOSITE MATING VIEW SHOWN

RIGHT SECTION (464M)

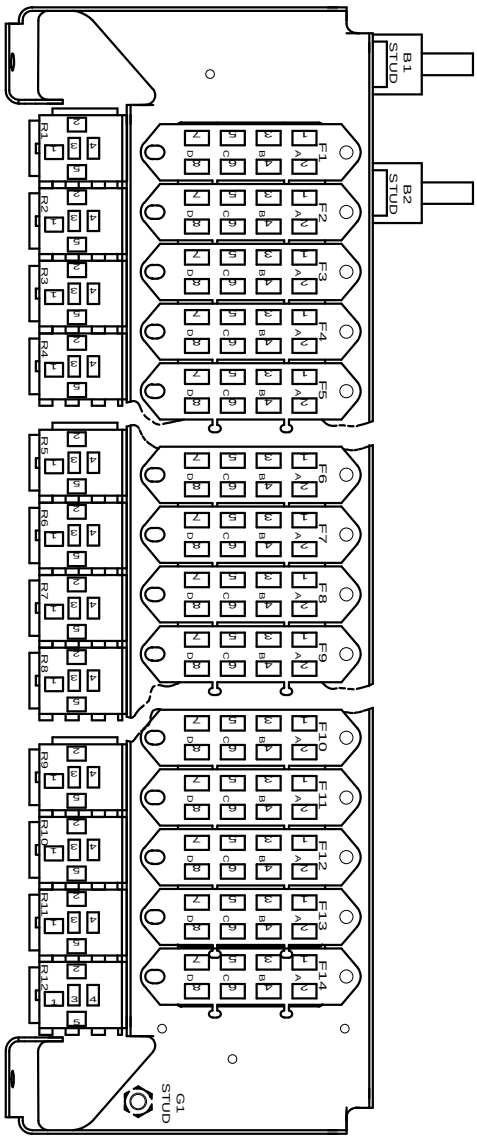

CAV	CIRCUIT	GAUGE	COLOR	TERMINAL
F10-1	A64	14	YL	0557374C1
F10-1	A81	18	LTGN	1666118C1
F10-1	A14AR	14	RD	0557374C1
F10-1	A14AS	10	RD	0557375C1
F10-1	A50BL	18	YL	1666118C1
F10-1	A81R	16	LTGN	0557374C1
F10-1	A94P	12	GY	0557375C1
F10-2	A12P	12	LTBL	0557375C1
F10-2	A14AN	10	RD	0557375C1
F10-2	A14AR	10	RD	0557375C1
F10-2	A14AS	14	RD	0557374C1
F10-2	A14BE	18	PK	1666118C1
F10-2	A14FA	14	RD	0557374C1
F10-3	A14AU	14	RD	0557374C1
F10-3	A94CF	18	PK	0557375C1
F10-3	A94KA	18	PK	1666118C1
F10-4	A13W	14	PK	0557374C1
F10-4	A13WA	14	PK	0557374C1
F10-4	A14AV	14	RD	0557374C1
F10-4	A92ST	14	GY	0557375C1
F10-5	A14AY	10	RD	0557375C1
F10-5	A94CF	16	PK	0557374C1
F10-6	A14AX	14	RD	0557374C1
F10-6	A13WB	14	PK	0557374C1
F10-7	A14BR	10	RD	0557375C1
F10-8	A14BV	14	RD	0557374C1
F11-1	A14BU	10	RD	0557375C1
F11-2	A14BS	14	RD	0557374C1
F11-3	PLUG	–	–	–
F11-4	PLUG	–	–	–
F11-5	PLUG	–	–	–
F11-6	PLUG	–	–	–
F11-7	PLUG	–	–	–
F11-8	PLUG	–	–	–
F12-1	PLUG	–	–	–
F12-2	PLUG	–	–	–
F12-3	PLUG	–	–	–
F12-4	PLUG	–	–	–
F12-5	PLUG	–	–	–
F12-6	PLUG	–	–	–
F12-7	PLUG	–	–	–
F12-8	PLUG	–	–	–

CHART CONTINUED ON SHEET 53

CONNECTOR 2018917C91
BODY LOCK 0593387C1

CHK	DATE	CHANGE	REV	REFERENCE	DRAWN	NAME
0610	27AUG13	INITIAL RELEASE.	A	92159Y	310615	CIRCUIT DIAGRAM, 9900
					RELEASE NO. 92159Y	DATE 02AUG13 / PART NO. AE08076124 / SHEET 052

Figure 254 Connector Composites (464M)

13.57. CONNECTOR COMPOSITES (464M), P. 53

NAVISTAR, INC

THIS PRINT IS PROVIDED ON A RESTRICTED BASIS AND IS NOT TO BE USED IN ANY WAY DETRIMENTAL TO THE INTEREST OF NAVISTAR, INC.

ELECTRICAL CIRCUIT DIAGRAM CHAPTER 13

CONNECTOR BODY COMPOSITE MATING VIEW SHOWN

RIGHT SECTION (464M)

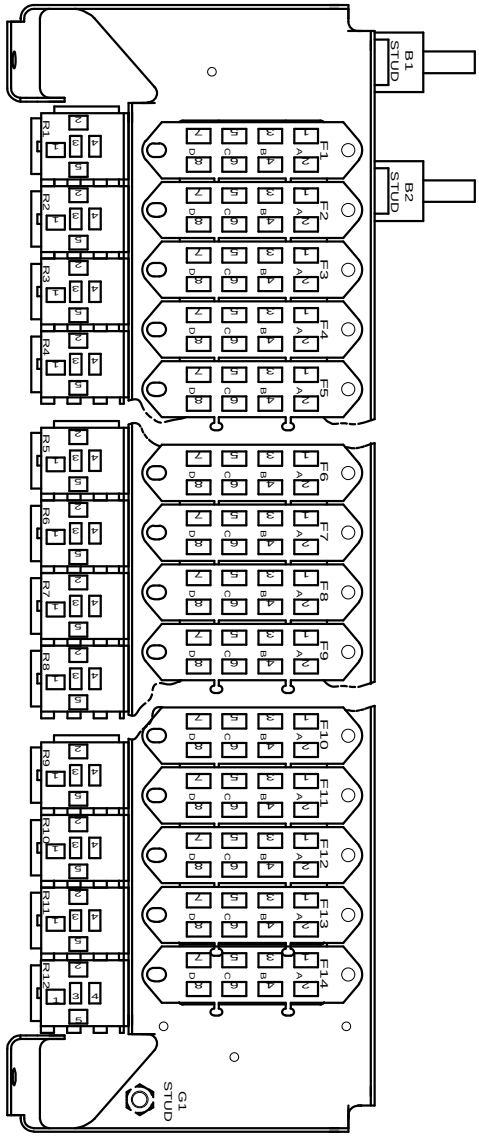

CONNECTOR 2018917C91
BODY LOCK 0593387C1

CHART CONTINUED FROM SHEET 52

CAV	CIRCUIT	GAUGE	COLOR	TERMINAL
F13-1	PLUG	–	–	–
F13-2	PLUG	–	–	–
F13-3	PLUG	–	–	–
F13-4	PLUG	–	–	–
F13-5	PLUG	–	–	–
F13-6	PLUG	–	–	–
F13-7	PLUG	–	–	–
F13-8	PLUG	–	–	–
F14-1	PLUG	–	–	–
F14-2	PLUG	–	–	–
F14-3	PLUG	–	–	–
F14-4	PLUG	–	–	–
F14-5	PLUG	–	–	–
F14-6	PLUG	–	–	–
F14-7	PLUG	–	–	–
F14-8	PLUG	–	–	–

CHK	DATE	CHANGE	REV	REFERENCE	DRAWN	NAME
0610	27AUG13	INITIAL RELEASE.	A	92159Y	310615	CIRCUIT DIAGRAM, 9900
					RELEASE NO. 92159Y	DATE 02AUG13 / PART NO. AE08076124 / SHEET 053

Figure 255 Connector Composites (464M)

13.58. CONNECTOR COMPOSITES (464M), P. 54

NAVISTAR, INC

THIS PRINT IS PROVIDED ON A RESTRICTED BASIS AND IS NOT TO BE USED IN ANY WAY DETRIMENTAL TO THE INTEREST OF NAVISTAR, INC.

ELECTRICAL CIRCUIT DIAGRAM CHAPTER 13

CONNECTOR BODY COMPOSITE MATING VIEW SHOWN

FUSE AND RELAY BLOCK ASSY RIGHT SECTION (464M)

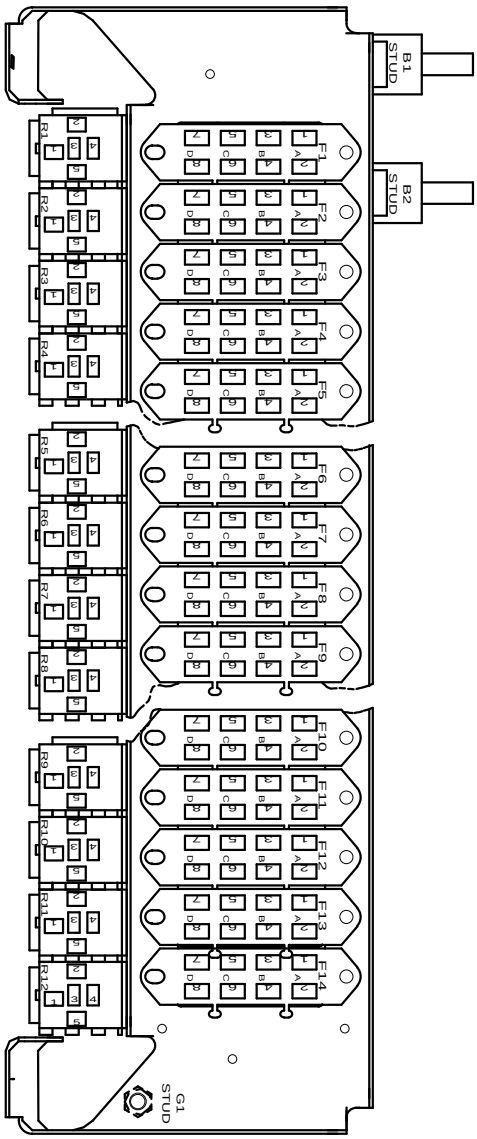

CAV	CIRCUIT	GAUGE	COLOR	TERMINAL
F10-1	A14BDF	16	RD	0557374C1
F10-1	A14CA	14	RD	0557374C1
F10-1	A23W	16	GY	0557374C1
F10-1	A28M	18	TN	1666118C1
F10-1	A38A	18	LTGN	1666118C1
F10-1	A38B	18	LTGN	1666118C1
F10-1	A41A	18	LTGN	1666118C1
F10-1	A72B	12	OR	0557375C1
F10-1	A92A15	18	PK	1666118C1
F10-1*	A71D	14	OR	0557374C1
F10-2	A12B	10	LTBL	0557375C1
F10-2	A13BF	16	GY	0557374C1
F10-2	A13CD	18	PK	1666118C1
F10-2	A13EF	18	PK	1666118C1
F10-2	A13EG	18	PK	1666118C1
F10-2	A13MA	18	PK	1666118C1
F10-2	A14DAF	16	RD	0557374C1
F10-2	A86CB	16	LTGN	1666118C1
F10-2	A13BL	14	PK	0557374C1
F10-2*	A14AP	10	RD	0557375C1
F10-3	A13CA	14	PK	0557374C1
F10-3	A28MA	18	TN	1666118C1
F10-3	A41B	18	LTGN	1666118C1
F10-3	A72E	16	OR	0557374C1
F10-4	A14CD	18	RD	1666118C1
F10-4	A14MA	18	RD	1666118C1
F10-4	A72D	16	OR	0557374C1
F10-4	A86CC	16	LTGN	1666118C1
F10-5	A94AL	12	GY	0557375C1
F10-6	A94AM	12	GY	0557375C1
F10-7	PLUG	–	–	–
F10-8	PLUG	–	–	–
F11-1	PLUG	–	–	–
F11-2	PLUG	–	–	–
F11-3	PLUG	–	–	–
F11-4	PLUG	–	–	–
F11-5	PLUG	–	–	–
F11-6	PLUG	–	–	–
F11-7	PLUG	–	–	–
F11-8	PLUG	–	–	–

* W/ DUAL SWITCHED CUSTOMER MNTG WORK LIGHTS

CHART CONTINUED ON SHEET 55

CONNECTOR 2018917C92
BODY LOCK 0593387C1

CHK	DATE	CHANGE	REV	REFERENCE	DRAWN	NAME
0488	09DEC14	ADDED CIRC A71D & A14AP.	B	92783V	310615	CIRCUIT DIAGRAM, 9900
					RELEASE NO. 92159Y	DATE 02AUG13 / PART NO. AE08076124 / SHEET 054

Figure 256 Connector Composites (464M)

13.59. CONNECTOR COMPOSITES (464M), P. 55

NAVISTAR, INC

THIS PRINT IS PROVIDED ON A RESTRICTED BASIS AND IS NOT TO BE USED IN ANY WAY DETRIMENTAL TO THE INTEREST OF NAVISTAR, INC.

ELECTRICAL CIRCUIT DIAGRAM CHAPTER 13

CONNECTOR BODY COMPOSITE MATING VIEW SHOWN

FUSE AND RELAY BLOCK ASSY RIGHT SECTION (464M)

CHART CONTINUED FROM SHEET 56

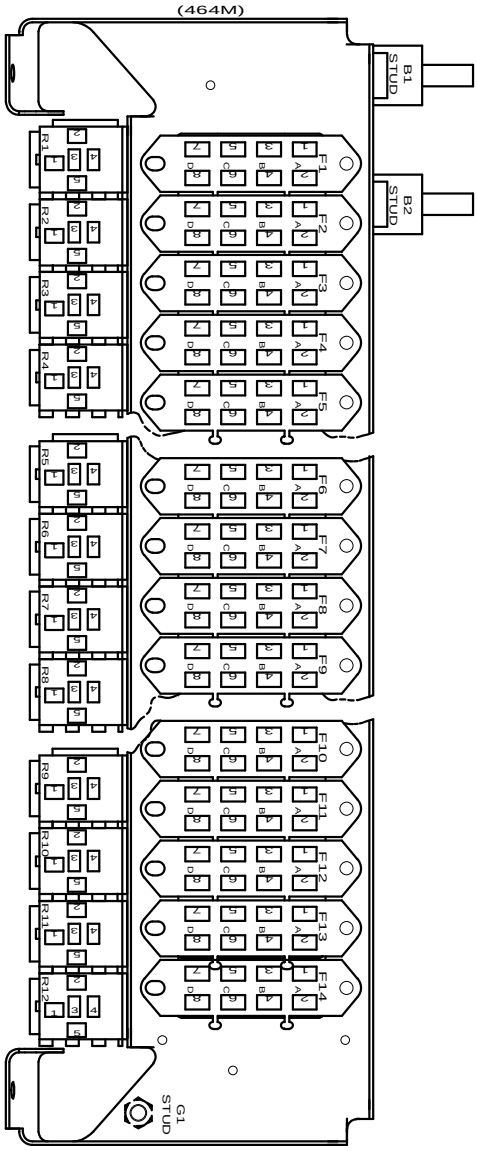

CAV	CIRCUIT	GAUGE	COLOR	TERMINAL
F12-1	PLUG	–	–	–
F12-2	PLUG	–	–	–
F12-3	PLUG	–	–	–
F12-4	PLUG	–	–	–
F12-5	PLUG	–	–	–
F12-6	PLUG	–	–	–
F12-7	PLUG	–	–	–
F12-8	PLUG	–	–	–
F13-1	PLUG	–	–	–
F13-2	PLUG	–	–	–
F13-3	PLUG	–	–	–
F13-4	PLUG	–	–	–
F13-5	PLUG	–	–	–
F13-6	PLUG	–	–	–
F13-7	PLUG	–	–	–
F13-8	PLUG	–	–	–
F14-1	PLUG	–	–	–
F14-2	PLUG	–	–	–
F14-3	PLUG	–	–	–
F14-4	PLUG	–	–	–
F14-5	PLUG	–	–	–
F14-6	PLUG	–	–	–
F14-7	PLUG	–	–	–
F14-8	PLUG	–	–	–
R9-1	PLUG	–	–	–
R9-2	PLUG	–	–	–
R9-3	PLUG	–	–	–
R9-4	PLUG	–	–	–
R9-5	PLUG	–	–	–
R10-1	PLUG	–	–	–
R10-2	PLUG	–	–	–
R10-3	PLUG	–	–	–
R10-4	PLUG	–	–	–
R10-5	PLUG	–	–	–
R11-1	PLUG	–	–	–
R11-2	PLUG	–	–	–
R11-3	PLUG	–	–	–
R11-4	PLUG	–	–	–
R11-5	PLUG	–	–	–
R12-1	PLUG	–	–	–
R12-2	PLUG	–	–	–
R12-3	PLUG	–	–	–
R12-4	PLUG	–	–	–
R12-5	PLUG	–	–	–

CONNECTOR 2018917C92
BODY LOCK 0593387C1

CHK	DATE	CHANGE	REV	REFERENCE	DRAWN	NAME
0610	27AUG13	INITIAL RELEASE.	A	92159Y	310615	CIRCUIT DIAGRAM, 9900
					RELEASE NO. 92159Y	DATE 02AUG13 / PART NO. AE08076124 / SHEET 055

Figure 257 Connector Composites (464M)

13.60. CONNECTOR COMPOSITES (464M), P. 56

NAVISTAR, INC

THIS PRINT IS PROVIDED ON A RESTRICTED BASIS AND IS NOT TO BE USED IN ANY WAY DETRIMENTAL TO THE INTEREST OF NAVISTAR, INC.

ELECTRICAL CIRCUIT DIAGRAM CHAPTER 13

CONNECTOR BODY COMPOSITE MATING VIEW SHOWN

RIGHT SECTION (464M)

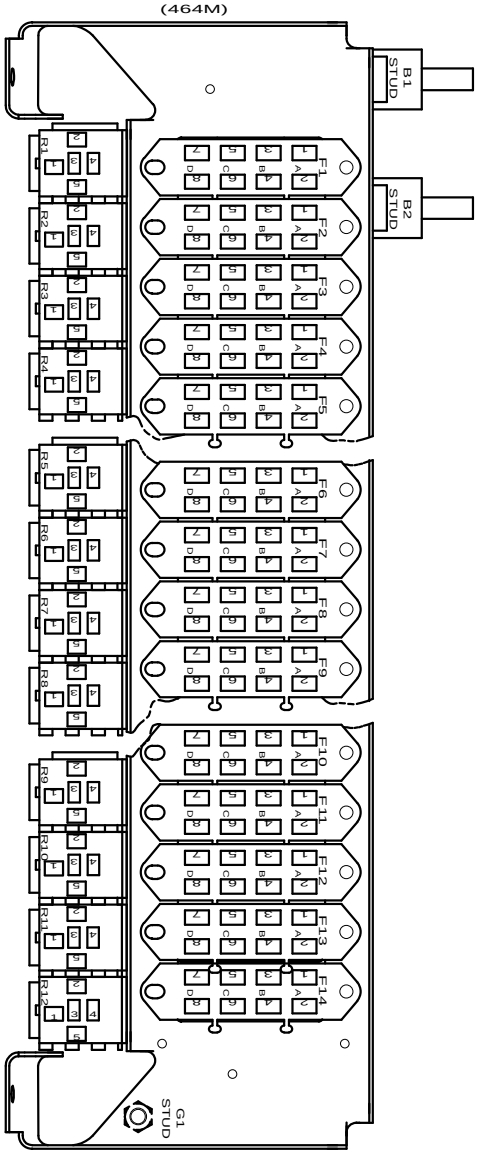

CONNECTOR 2018917C93
BODY LOCK 0593387C1

CAV	CIRCUIT	GAUGE	COLOR	TERMINAL
F10-1	A68C	16	BN	0557374C1
F10-1	A94AH	10	GY	0557375C1
F10-2	A68D	10	BN	0557375C1
F10-2	A14CP	10	RD	0557375C1
F10-3	A12BA	16	LTBL	0557374C1
F10-4	A12F	12	LTBL	0557375C1
F10-5	A23	16	TN	0557374C1
F10-5	A97	18	VT	1666118C1
F10-5	A13Z	12	PK	0557375C1
F10-5	A13ZA	12	PK	0557375C1
F10-5	A17EB	16	PK	0557374C1
F10-6	A95	18	TN	3515897C1
F10-6	A13BB	16	PK	0557374C1
F10-6	A13BM	16	PK	0557374C1
F10-6	A14ED	12	RD	0557375C1
F10-6	A95H	18	GY	3515897C1
F10-7	A13BB	18	PK	3515897C1
F10-7	A13D4	18	PK	3515897C1
F10-7	A13EC	16	PK	0557375C1
F10-7	A13ED	16	PK	0557375C1
F10-7	A97AL	16	VT	0557375C1
F10-7	A97CT	16	VT	0557375C1
F10-8	A13DS	12	PK	0557375C1
F10-8	A13EB	16	PK	0557374C1
F10-8	A14BB	14	RD	0557374C1
F11-1	A95	18	TN	3515897C1
F11-1	A13Z	12	PK	0557375C1
F11-1	A14EA	12	RD	0557375C1
F11-1	A28F	16	TN	0557374C1
F11-1	A95H	18	GY	3515897C1
F11-1	A97AD	18	VT	1666118C1
F11-2	A95	18	TN	3515897C1
F11-2	A13AA	16	PK	0557374C1
F11-2	A13Z	12	PK	0557375C1
F11-2	A14EF	12	RD	0557375C1
F11-2	A28E	16	TN	0557374C1
F11-2	A95H	18	GY	3515897C1
F11-3	A97DL	14	VT	0557374C1
F11-3	A28J	16	TN	0557374C1
F11-4	A14DLF	14	RD	0557374C1
F11-4	A28H	16	TN	0557374C1
F11-5	A28D	18	TN	1666118C1
F11-5	A58ZG	16	BN	0557374C1
F11-6	A13W	16	PK	0557374C1
F11-6	A58ZA	14	BN	0557374C1
F11-7	PLUG	–	–	–
F11-8	PLUG	–	–	–
F12-1	PLUG	–	–	–
F12-2	PLUG	–	–	–
F12-3	PLUG	–	–	–
F12-4	PLUG	–	–	–
F12-5	PLUG	–	–	–
F12-6	PLUG	–	–	–
F12-7	PLUG	–	–	–
F12-8	PLUG	–	–	–

CHART CONTINUED ON SHEET 57

CHK	DATE	CHANGE	REV	REFERENCE	DRAWN	NAME
0610	27AUG13	INITIAL RELEASE.	A	92159Y	310615	CIRCUIT DIAGRAM, 9900
					RELEASE NO. 92159Y	DATE 02AUG13 / PART NO. AE08076124 / SHEET 056

Figure 258 Connector Composites (464M)

13.61. CONNECTOR COMPOSITES (464M), P. 57

NAVISTAR, INC

THIS PRINT IS PROVIDED ON A RESTRICTED BASIS AND IS NOT TO BE USED IN ANY WAY DETRIMENTAL TO THE INTEREST OF NAVISTAR, INC.

ELECTRICAL CIRCUIT DIAGRAM CHAPTER 13

CONNECTOR BODY COMPOSITE MATING VIEW SHOWN

RIGHT SECTION (464M)

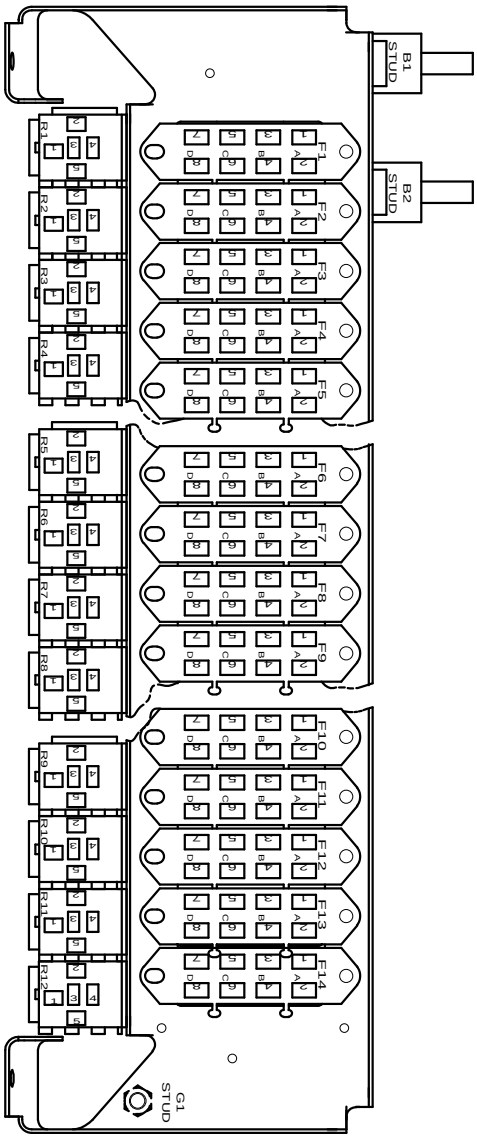

CONNECTOR 2018917C93
BODY LOCK 0593387C1

CHART CONTINUED FROM SHEET 56

CAV	CIRCUIT	GAUGE	COLOR	TERMINAL
F13-1	PLUG	–	–	–
F13-2	PLUG	–	–	–
F13-3	PLUG	–	–	–
F13-4	PLUG	–	–	–
F13-5	PLUG	–	–	–
F13-6	PLUG	–	–	–
F13-7	PLUG	–	–	–
F13-8	PLUG	–	–	–
F14-1	PLUG	–	–	–
F14-2	PLUG	–	–	–
F14-3	PLUG	–	–	–
F14-4	PLUG	–	–	–
F14-5	PLUG	–	–	–
F14-6	PLUG	–	–	–
F14-7	PLUG	–	–	–
F14-8	PLUG	–	–	–
R9-1	A68	10	BN	1661710C1
R9-2	A58-G	18	WH	1659673C1
R9-3	PLUG	–	–	–
R9-4	A68E	10	BN	1661710C1
R9-5	A58F	18	BN	1659673C1
R9-5	A58P	18	BN	1659673C1
R9-5	A58ZB	18	BN	1661709C1
R10-1	A70E	10	OR	1661710C1
R10-2	A58-G	18	WH	1661709C1
R10-2	A70-G	18	WH	1661709C1
R10-3	PLUG	–	–	–
R10-4	A70C	10	OR	1661710C1
R10-5	A70D	14	OR	1661709C1
R11-1	A56H	12	OR	1661710C1
R11-2	A56-G	18	WH	1661709C1
R11-2	A70-G	18	WH	1661709C1
R11-3	PLUG	–	–	–
R11-4	A56A	16	OR	1661710C1
R11-4	A56C	12	OR	1661710C1
R11-5	A56E	14	OR	1661709C1
R12-1	A57H	12	OR	1661710C1
R12-2	A56-G	18	WH	1661709C1
R12-2	A57-G	18	WH	1661709C1
R12-4	A57A	16	OR	1661710C1
R12-4	A57C	12	OR	1661710C1
R12-5	A57E	14	OR	1661709C1

CHK	DATE	CHANGE	REV	REFERENCE	DRAWN	NAME
0610	27AUG13	INITIAL RELEASE.	A	92159Y	310615	CIRCUIT DIAGRAM, 9900
					RELEASE NO. 92159Y	DATE 02AUG13 / PART NO. AE08076124 / SHEET 057

Figure 259 Connector Composites (464M)

13.62. CONNECTOR COMPOSITES (465M / 466M / 468F), P. 58

NAVISTAR, INC

THIS PRINT IS PROVIDED ON A RESTRICTED BASIS AND IS NOT TO BE USED IN ANY WAY DETRIMENTAL TO THE INTEREST OF NAVISTAR, INC.

ELECTRICAL CIRCUIT DIAGRAM CHAPTER 13

CONNECTOR BODY COMPOSITE MATING VIEW SHOWN

HEADLIGHT SWITCH
(465M)

(LOCATED IN INSTRUMENT PANEL)

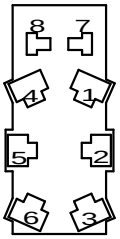

CONNECTOR 2009385C1
BODY LOCK 0593387C1

CAV	CIRCUIT	GAUGE	COLOR	TERMINAL
1	PLUG	–	–	–
2*	A50	18	YL	3541250C1
2#	A58AA	18	BN	3541250C1
3	A58E	18	BN	1661224C1
4	PLUG	–	–	–
5	A50A	18	YL	1661224C1
6%	A52M	16	YL	1661226C1
6#	A50B	18	YL	1661226C1
7	A62AS	16	DKBL	1661209C1
8	A62-GAS	18	WH	1661208C1

* W/ 2010 IBB ENGINE & W/ ALLISON XMSN N/ ENGINE BRAKE
\# W/ 2010 IBB ENGINE & W/ ALLISON XMSN W/ ENGINE BRAKE
% W/ 2007 CUMMINS ISX ENGINE W/ ALLISON 4700 XMSN W/ ENGINE BRAKE

TRAILER LIGHTS SWITCH
(466M)

(LOCATED IN INSTRUMENT PANEL)

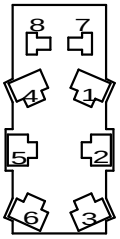

CONNECTOR 2009385C1
BODY LOCK 0593387C1

CAV	CIRCUIT	GAUGE	COLOR	TERMINAL
1	PLUG	–	–	–
2	A58AA	18	BN	1661224C1
3	A58C	18	BN	1661224C1
4	PLUG	–	–	–
5	A58E	18	BN	1661224C1
6	A58P	18	BN	1661224C1
7	A62AR	16	DKBL	1661209C1
8	A62-GAR	16	WH	1661209C1

DRL BRAKE SW
(468F)

(LOCATED IN INSTRUMENT PANEL)

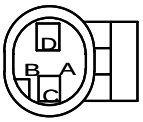

CONNECTOR 1661777C1
BODY LOCK 1661873C1

CAV	CIRCUIT	GAUGE	COLOR	TERMINAL	SEAL/SLEEVE
A	PLUG	–	–	–	–
B	PLUG	–	–	–	–
C	A44B	16	GY	1661875C1	1661872C1
D	A44-GB	16	WH	1661875C1	1661872C1

CHK	DATE	CHANGE	REV	REFERENCE	DRAWN	NAME
0610	27AUG13	INITIAL RELEASE.	A	92159Y	310615	CIRCUIT DIAGRAM, 9900
					RELEASE NO. 92159Y	DATE 02AUG13 / PART NO. AE08076124 / SHEET 058

Figure 260 Connector Composites (465M / 466M / 468F)

13.63. CONNECTOR COMPOSITES (469F / 469ML / 469OL / 469PL), P. 59

NAVISTAR, INC

THIS PRINT IS PROVIDED ON A RESTRICTED BASIS AND IS NOT TO BE USED IN ANY WAY DETRIMENTAL TO THE INTEREST OF NAVISTAR, INC.

ELECTRICAL CIRCUIT DIAGRAM CHAPTER 13

CONNECTOR BODY COMPOSITE MATING VIEW SHOWN

PARL BRAKE CONN
(469F)

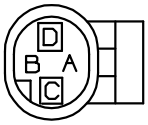

CONNECTOR 1661777C1
BODYLOCK 1661873C1

CAV	CIRCUIT	GAUGE	COLOR	TERMINAL	SEAL/SLEEVE
A	PLUG	-	-	-	-
B	PLUG	-	-	-	-
C	A44M	16	GY	1661875C1	1661872C1
D	A44-GM	16	WH	1661875C1	1661872C1

DRL NIGHT FD
(469ML)

CONNECTOR1661202C1

CAV	CIRCUIT	GAUGE	COLOR	TERMINAL
A	A66H	18	YL	1661215C1

TEMP DISPLY HEADLIGHT FEED
(469OL)

CONNECTOR1661203C1

CAV	CIRCUIT	GAUGE	COLOR	TERMINAL
A*	A41E	18	LTGN	1661222C1
A#	A66H	18	YL	1661222C1

* GAUGE,ELECTRIC TEMP COMPASS DISPLAY N/ EATON VORAD
\# GAUGE,ELEC WIRING TEMP/COMPASS DISPLAY W/ VORAD N/ 12V HTD FWS

DRL NIGHT FEED
(469PL)

CONNECTOR 1661202C1

CAV	CIRCUIT	GAUGE	COLOR	TERMINAL
A	A66H	18	YL	1661215C1

CHK	DATE	CHANGE	REV	REFERENCE	DRAWN	NAME		
–	–	INITIAL RELEASE.	A	92159Y	310615	CIRCUIT DIAGRAM, 9900		
					RELEASE NO.	DATE	PART NO.	SHEET
					92159Y	02AUG13	AE08076124	059

Figure 261 Connector Composites (469F / 469ML / 469OL / 469PL)

13.64. CONNECTOR COMPOSITES (471), P. 60

NAVISTAR, INC

THIS PRINT IS PROVIDED ON A RESTRICTED BASIS AND IS NOT TO BE USED IN ANY WAY DETRIMENTAL TO THE INTEREST OF NAVISTAR, INC.

ELECTRICAL CIRCUIT DIAGRAM CHAPTER 13

CONNECTOR BODY COMPOSITE MATING VIEW SHOWN

ABS DASH CONN
(471)
(LOCATED ON DASH PANNEL AT LEFT SIDE)

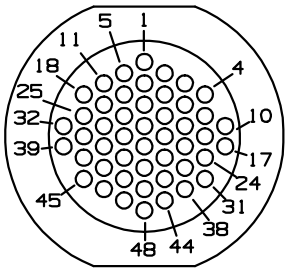

CONNECTOR 3566553C1

CAV	CIRCUIT	GAUGE	COLOR	TERMINAL
1	A94BA	18	DKBL	3566559C1
2	A94BB	18	YL	3566559C1
3	A94BC	18	GY	3566559C1
4	A94BF	18	OR	3566559C1
5	A94CB	18	PL	3566559C1
6	A94BH	18	LTGN	3566559C1
7	A94BJ	18	LTBL	3566559C1
8	A94BK	18	BK	3566559C1
9	A94BL	18	RD	3566559C1
10	A94BM	18	BN	3566559C1
11*	A98YL2(+)	18	YL	3566559C1
11#	AYL2(+)	18	YL	3566559C1
12	A92	18	TN	3566559C1
13*	A98GN2(-)	18	GN	3566559C1
13#	AGN2(-)	18	GN	3566559C1
14	A94BN	18	BN	3566559C1
15	A94BP	18	RD	3566559C1
16	A94BR	18	BK	3566559C1
17	A94BS	18	PL	3566559C1
18	A94BT	18	LTBL	3566559C1
19	A94BU	18	LTGN	3566559C1
20	A94BV	18	BN	3566559C1
21	A94BW	18	DKBL	3566559C1
22	A94BX	18	YL	3566559C1
23	A94BY	18	DKBL	3566559C1
24	A94BZ	18	OR	3566559C1

CAV	CIRCUIT	GAUGE	COLOR	TERMINAL
25	A94CA	18	GY	3566559C1
26	PLUG	-	-	-
27	PLUG	-	-	-
28	PLUG	-	-	-
29	PLUG	-	-	-
30	PLUG	-	-	-
31	PLUG	-	-	-
32	PLUG	-	-	-
33	PLUG	-	-	-
34	A94CD	16	GY	3566559C1
35	PLUG	-	-	-
36	PLUG	-	-	-
37	PLUG	-	-	-
38	PLUG	-	-	-
39	PLUG	-	-	-
40	PLUG	-	-	-
41	PLUG	-	-	-
42	PLUG	-	-	-
43	PLUG	-	-	-
44	PLUG	-	-	-
45	PLUG	-	-	-
46	PLUG	-	-	-
47	PLUG	-	-	-
48%	A94CE	16	GY	3566559C1
48@	A94SE	18	GY	3567157C1

* OMIT ABS W/ NON-2007 ENGINE OR W/ 2007,2010 ENGINES
\# W/ 2007 ENG N/ ALLISON 4TH GEN 4000 & 4500 SERIES TRANS
% W/ BENDIX 6 CHANNEL ABS & W/ HTC & W/ HSA
@ BENDIX AIR ESP HARNESS

CHK	DATE	CHANGE	REV	REFERENCE	DRAWN	NAME
0610	27AUG13	INITIAL RELEASE.	A	92159Y	310615	CIRCUIT DIAGRAM, 9900
					RELEASE NO. 92159Y	DATE 02AUG13 / PART NO. AE08076124 / SHEET 060

Figure 262 Connector Composites (471)

13.65. CONNECTOR COMPOSITES (471A), P. 61

NAVISTAR, INC

THIS PRINT IS PROVIDED ON A RESTRICTED BASIS AND IS NOT TO BE USED IN ANY WAY DETRIMENTAL TO THE INTEREST OF NAVISTAR, INC.

ELECTRICAL CIRCUIT DIAGRAM CHAPTER 13

CONNECTOR BODY COMPOSITE MATING VIEW SHOWN

6-CHANNEL ABS CONNECTOR
(471A)

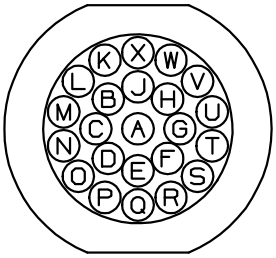

CONNECTOR 1674090C1

CAV	CIRCUIT	GAUGE	COLOR	TERMINAL
A	A94CH	18	LT BL	1651987C1
B	A94SAB	18	GY	1651987C1
C	A94SBB	18	GY	1651987C1
D	A94SF	18	GY	1651987C1
E	A94SH	18	GY	1651987C1
F	A94SJ	18	GY	1651987C1
G	A94SK	18	GY	1651987C1
H	A94SL	18	GY	1651987C1
J	A94SM	18	GY	1651987C1
K	A94SN	18	GY	1651987C1
L	A94SCB	18	GY	1651987C1
M	A94SDB	18	GY	1651987C1
N	A94SVD	18	GY	1651987C1
O	A94SZD	18	GY	1651987C1
P	A94CJ	18	LTGN	1651987C1
Q	A94BG	18	PL	1651987C1
R	A94CK	18	RD	1651987C1
S	A94CM	18	BN	1651987C1
T	A94CN	18	BK	1651987C1
U	A94CP	18	DKBL	1651987C1
V	A94CR	18	YL	1651987C1
W	A94CS	18	OR	1651987C1
X	A94CT	18	GY	1651987C1

CHK	DATE	CHANGE	REV	REFERENCE	DRAWN	NAME		
0610	27AUG13	INITIAL RELEASE.	A	92159Y	310615	CIRCUIT DIAGRAM, 9900		
					RELEASE NO.	DATE	PART NO.	SHEET
					92159Y	02AUG13	AE08076124	061

Figure 263 Connector Composites (471A)

13.66. CONNECTOR COMPOSITES (471AF), P. 62

NAVISTAR, INC

THIS PRINT IS PROVIDED ON A RESTRICTED BASIS AND IS NOT TO BE USED IN ANY WAY DETRIMENTAL TO THE INTEREST OF NAVISTAR, INC.

ELECTRICAL CIRCUIT DIAGRAM CHAPTER 13

CONNECTOR BODY COMPOSITE MATING VIEW SHOWN

RSP DASH CONNECTOR
(471AF)

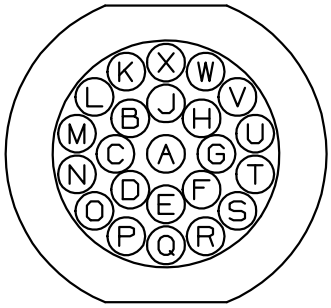

CONNECTOR 1674090C1

CAV	CIRCUIT	GAUGE	COLOR	TERMINAL
A	A94SE	18	GY	1651987C1
B	A94SAB	18	GY	1651987C1
C	A94SBB	18	GY	1651987C1
D	A94SF	18	GY	1651987C1
E	A94SH	18	GY	1651987C1
F	A94SJ	18	GY	1651987C1
G	A94SK	18	GY	1651987C1
H	A94SL	18	GY	1651987C1
J	A94SM	18	GY	1651987C1
K	A94SN	18	GY	1651987C1
L	A94SCB	18	GY	1651987C1
M	A94SDB	18	GY	1651987C1
N	A94SVD	18	GY	1651987C1
O	A94SZD	18	GY	1651987C1

CHK	DATE	CHANGE	REV	REFERENCE	DRAWN	NAME
–	–	INITIAL RELEASE.	A	92159Y	310615	CIRCUIT DIAGRAM, 9900
					RELEASE NO. 92159Y	DATE 02AUG13 / PART NO. AE08076124 / SHEET 062

Figure 264 Connector Composites (471AF)

13.67. CONNECTOR COMPOSITES (471AM), P. 63

NAVISTAR, INC

THIS PRINT IS PROVIDED ON A RESTRICTED BASIS AND IS NOT TO BE USED IN ANY WAY DETRIMENTAL TO THE INTEREST OF NAVISTAR, INC.

ELECTRICAL CIRCUIT DIAGRAM CHAPTER 13

CONNECTOR BODY COMPOSITE MATING VIEW SHOWN

RSP DASH CONNECTOR
(471AM)
(LOCATED ON DASH PANEL)

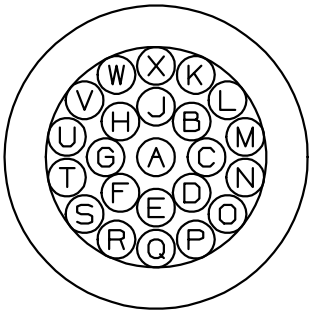

CONNECTOR 1674091C1

CAV	CIRCUIT	GAUGE	COLOR	TERMINAL
A*	M94BP	16	GY	1680205C1
A%	M94SE	18	BN	1680205C1
B	M94SAB	18	GY	1680205C1
C	M94SBB	18	GY	1680205C1
D	M94SF	18	OR	1680205C1
E	M94SH	18	BN	1680205C1
F	M94SJ	16	GY	1680205C1
G	M94SK	16	OR	1680205C1
H	M94SL	16	BN	1680205C1
J	M94SM	16	BK	1680205C1
K	M94SN	16	RD	1680205C1
L	M94SCB	18	GY	1680205C1
M	M94SDB	18	GY	1680205C1
N	M94SVD	18	GY	1680205C1
O	M94SZD	18	GY	1680205C1
P	M94BZ	16	GY	1680205C1
Q	M94BY	16	GY	1680205C1
R	M94BT	16	GY	1680205C1
S	M94BU	16	GY	1680205C1
T	M94BS	16	GY	1680205C1
U	M94BV	16	GY	1680205C1
V	M94BW	16	GY	1680205C1
W	M94BQ	16	GY	1680205C1
X	MF94BR	16	GY	1680205C1

* BENDIX 6 CHAIN AIR ABS
% BENDIX ADV AIR ABS W/ ATC

CHK	DATE	CHANGE	REV	REFERENCE	DRAWN	NAME
–	–	INITIAL RELEASE.	A	92159Y	310615	CIRCUIT DIAGRAM, 9900
					RELEASE NO. 92159Y	DATE 02AUG13 / PART NO. AE08076124 / SHEET 063

Figure 265 Connector Composites (471AM)

13.68. CONNECTOR COMPOSITES (471M), P. 64

NAVISTAR, INC

THIS PRINT IS PROVIDED ON A RESTRICTED BASIS AND IS NOT TO BE USED IN ANY WAY DETRIMENTAL TO THE INTEREST OF NAVISTAR, INC.

ELECTRICAL CIRCUIT DIAGRAM CHAPTER 13

CONNECTOR BODY COMPOSITE MATING VIEW SHOWN

ABS DASH CONNECTOR
(471M)
(LOCATED ON DASH PANEL)

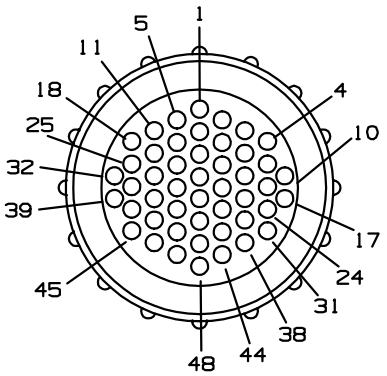

CONNECTOR 3566585C91
BODY LOCK 3566572C1

CAV	CIRCUIT	GAUGE	COLOR	TERMINAL
1*	M94E	18	GY	3567154C1
1#	[M94ME]	18	GY	3567154C1
2*	M94F	18	GY	3567154C1
2#	[M94MF]	18	GY	3567154C1
3*	M94C	18	GY	3567154C1
3#	[M94MC]	18	GY	3567154C1
4*	M94D	18	GY	3567154C1
4#	[M94MD]	18	GY	3567154C1
5*	M94H	18	GY	3567154C1
5#	[M94MH]	18	GY	3567154C1
6*	M94J	18	GY	3567154C1
6#	[M94MK]	18	GY	3567154C1
7*	M94K	18	GY	3567154C1
7#	[M94MJ]	18	GY	3567154C1
8*	M94	18	GY	3567154C1
8#	[M94M]	18	GY	3567154C1
9*	M94A	18	GY	3567154C1
9#	[M94MB]	18	GY	3567154C1
10*	M94B	18	GY	3567154C1
10#	[M94MA]	18	GY	3567154C1
11	M5U(+)	18	YL	3567154C1
12	PLUG	-	-	-
13	M5U(-)	18	GN	3566558C1

* BENDIX AIR ABS W/ ATC
\# WABCO AIR ABS W ATC

CAV	CIRCUIT	GAUGE	COLOR	TERMINAL
14	M94BL	16	RD	3567154C1
15	M94BK	16	TN	3567154C1
16*	M94BJ	16	YL	3567154C1
16#	[M94MQ]	18	GY	3567154C1
17*	M94BA	16	LTBL	3567154C1
17#	[M94MS]	18	GY	3567154C1
18*	M94BB	16	LTGN	3567154C1
18#	[M94MT]	18	GY	3567154C1
19*	M94BC	16	BK	3567154C1
19#	[M94BN]	18	GY	3567154C1
20*	M94BM	16	GY	3567154C1
20#	[M94BM]	18	GY	3567154C1
21	M94BN	16	GY	3567154C1
22	M94BH	16	GY	3567154C1
23*	M94BF	16	OR	3567154C1
23#	[M94MZ]	18	GY	3567154C1
24*	M94BE	16	GY	3567154C1
24#	[M94MU]	18	GY	3567154C1
25*	M94BD	16	BK	3567154C1
25#	[M94MW]	18	GY	3567154C1
26	PLUG	-	-	-
27	PLUG	-	-	-
28	PLUG	-	-	-
29	PLUG	-	-	-
30	PLUG	-	-	-
31	PLUG	-	-	-
32	PLUG	-	-	-
33	PLUG	-	-	-
34	PLUG	-	-	-
35	PLUG	-	-	-
36	PLUG	-	-	-
37	PLUG	-	-	-
38	PLUG	-	-	-
39	PLUG	-	-	-
40	PLUG	-	-	-
41	PLUG	-	-	-
42	PLUG	-	-	-
43	PLUG	-	-	-
44	PLUG	-	-	-
45	PLUG	-	-	-
46	PLUG	-	-	-
47	PLUG	-	-	-
48	M94SE	18	BN	3567154C1

CHK	DATE	CHANGE	REV	REFERENCE	DRAWN	NAME
0610	27AUG13	INITIAL RELEASE.	A	92159Y	310615	CIRCUIT DIAGRAM, 9900
					RELEASE NO. 92159Y	DATE 02AUG13 / PART NO. AE08076124 / SHEET 064

Figure 266 Connector Composites (471M)

13.69. CONNECTOR COMPOSITES (475FL / 475ML / 476M / 478M), P. 65

NAVISTAR, INC

THIS PRINT IS PROVIDED ON A RESTRICTED BASIS AND IS NOT TO BE USED IN ANY WAY DETRIMENTAL TO THE INTEREST OF NAVISTAR, INC.

ELECTRICAL CIRCUIT DIAGRAM CHAPTER 13

CONNECTOR BODY COMPOSITE MATING VIEW SHOWN

FOG LIGHT RELAY (475FL)

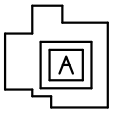

CONNECTOR 1661203C1

CAV	CIRCUIT	GAUGE	COLOR	TERMINAL
A	A64-GB	18	WH	1661220C1

FOG LIGHT RELAY (475ML)

CONNECTOR 1661202C1

CAV	CIRCUIT	GAUGE	COLOR	TERMINAL
A	A64-GA	18	WH	1661215C1

AIR SUSP FEED (476M)

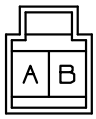

CONNECTOR 0188395R1

CAV	CIRCUIT	GAUGE	COLOR	TERMINAL
A	A38	18	TN	0879630R1
B	PLUG	-	-	-

PDL FEED (478M)

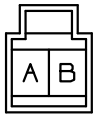

CONNECTOR 0188395R1

CAV	CIRCUIT	GAUGE	COLOR	TERMINAL
A	A43	18	GY	0879630R1
B	PLUG	-	-	-

CHK	DATE	CHANGE	REV	REFERENCE	DRAWN	NAME
–	–	INITIAL RELEASE.	A	92159Y	310615	CIRCUIT DIAGRAM, 9900
					RELEASE NO. 92159Y	DATE 02AUG13 / PART NO. AE08076124 / SHEET 065

Figure 267 Connector Composites (475FL / 475ML / 476M / 478M)

13.70. CONNECTOR COMPOSITES (480F / 480M / 481M / 482M), P. 66

NAVISTAR, INC

THIS PRINT IS PROVIDED ON A RESTRICTED BASIS AND IS NOT TO BE USED IN ANY WAY DETRIMENTAL TO THE INTEREST OF NAVISTAR, INC.

ELECTRICAL CIRCUIT DIAGRAM CHAPTER 13

CONNECTOR BODY COMPOSITE MATING VIEW SHOWN

XMSN ECU
(480F)
(LOCATED IN INSTRUMENT PANNEL)

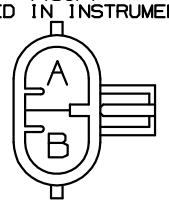

CONNECTOR 2031520C1
BODY LOCK 2033927C1

CAV	CIRCUIT	GAUGE	COLOR	TERMINAL	SEAL/SLEEVE
A	K92	14	TN	2025421C1	2025428C1
B	K92-G	14	TN	2025421C1	2025428C1

FLASHER
(480M)
(LOCATED IN INSTRUMENT PANNEL)

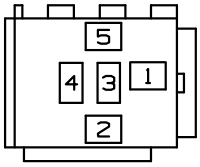

CONNECTOR 0593385C1
BODY LOCK 0593387C1

CAV	CIRCUIT	GAUGE	COLOR	TERMINAL
1	PLUG	-	-	-
2	PLUG	-	-	-
3	PLUG	-	-	-
4	A55A	12	OR	2022374C1
5	A55	12	OR	2022374C1

AUX POWER
(481M)

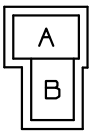

CONNECTOR 0872291R1

CAV	CIRCUIT	GAUGE	COLOR	TERMINAL
A*	A86-GK	14	WH	0879633R1
A#	A86-GL	14	WH	0879633R1
B#	A86BA	14	LTGN	0879633R1
B@	A86K	14	LTGN	0879633R1

* W/ 98-ELECT CAT N/ ENG BRK N/ STARTER INTERLOCK
\# W/ EATON DM2 XMSN W/ AUTOCLUTCH W/ CAT ENG
@ W/ 2010 IBB ENG & W/ ALLISON XMSN & N/ ENG BRAKE

AUX POWER 2
(482M)

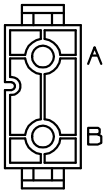

CONNECTOR 3517473C1

CAV	CIRCUIT	GAUGE	COLOR	TERMINAL
A	A86BA	14	LTGN	3517476C1
B	A86-GL	14	WH	3517476C1

CHK	DATE	CHANGE	REV	REFERENCE	DRAWN	NAME
0610	27AUG13	INITIAL RELEASE.	A	92159Y	310615	CIRCUIT DIAGRAM, 9900
					RELEASE NO. 92159Y	DATE 02AUG13 / PART NO. AE08076124 / SHEET 066

Figure 268 Connector Composites (480F / 480M / 481M / 482M)

13.71. CONNECTOR COMPOSITES (489 / 489F / 493ML / 493OL), P. 67

NAVISTAR, INC

THIS PRINT IS PROVIDED ON A RESTRICTED BASIS AND IS NOT TO BE USED IN ANY WAY DETRIMENTAL TO THE INTEREST OF NAVISTAR, INC.

ELECTRICAL CIRCUIT DIAGRAM CHAPTER 13

CONNECTOR BODY COMPOSITE MATING VIEW SHOWN

ROOF CONN #3
(489)
(LOCATED IN CAB)

CONNECTOR 1667305C1
BODY LOCK 1661263C1

CAV	CIRCUIT	GAUGE	COLOR	TERMINAL
A	A86R	18	LTGN	1661261C1
B	A86S	18	LTGN	1661261C1
C	A86T	18	LTGN	1661261C1
D	A86U	18	LTGN	1661261C1

ROOF CONN #3
(489F)
(LOCATED IN CAB)

CONNECTOR 1667529C1
BODY LOCK 1667530C1

CAV	CIRCUIT	GAUGE	COLOR	TERMINAL
A	A86R	18	LTGN	1661262C1
B	A86S	18	LTGN	1661262C1
C	A86T	18	LTGN	1661262C1
D	A86U	18	LTGN	1661262C1

FOG LIGHT FEED
(493ML)
(LOCATED IN CAB)

CONNECTOR 1661202C1

CAV	CIRCUIT	GAUGE	COLOR	TERMINAL
A	A64D	14	YL	1661218C1

FOG LIGHT FEED
(493OL)
(LOCATED IN CAB)

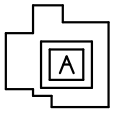

CONNECTOR 1661203C1

CAV	CIRCUIT	GAUGE	COLOR	TERMINAL
A	A64C	14	YL	1661222C1

CHK	DATE	CHANGE	REV	REFERENCE
0610	27AUG13	INITIAL RELEASE.	A	92159Y

DRAWN 310615
NAME CIRCUIT DIAGRAM, 9900
RELEASE NO. 92159Y
DATE 02AUG13
PART NO. AE08076124
SHEET 067

Figure 269 Connector Composites (489 / 489F / 493ML / 493OL)

13.72. CONNECTOR COMPOSITES (494M / 495M), P. 68

NAVISTAR, INC

THIS PRINT IS PROVIDED ON A RESTRICTED BASIS AND IS NOT TO BE USED IN ANY WAY DETRIMENTAL TO THE INTEREST OF NAVISTAR, INC.

ELECTRICAL CIRCUIT DIAGRAM CHAPTER 13

CONNECTOR BODY COMPOSITE MATING VIEW SHOWN

I1, IGNITION ADAPTER
(494M)
(LOCATION IN INSTRUMENT PANEL CENTRE)

CONNECTOR 2007315C1

CAV	CIRCUIT	GAUGE	COLOR	TERMINAL
A	A13F	12	PK	3566715C1
B*	A13AA	16	PK	1661209C1
B#	A13Z	12	PK	3566715C1
B%	A13ZA	12	PK	3566715C1
B@	A13ZB	14	PK	3566715C1
C*	A13BB	16	PK	1661209C1
C@@	A13CD	18	PK	1661208C1
C**	A13DS	12	PK	3566715C1
D*	A13W	16	PK	1661209C1
D@	A28E	16	TN	1661209C1
E	A13CA	14	PK	3566715C1
F	PLUG	-	-	-
G	A13NA	18	PK	1661208C1
H	PLUG	-	-	-
J	A13W	14	PK	3566715C1
K##	A13BF	16	GY	1661209C1
K%%	A13MA	18	PK	1661208C1

* W/ INTL CEC I-6 ENGINES
\# W/ 2007 CUMMINS ENG & W/ ACTO & N/ CAM IDLE CONTROL SYS,BRAZIL
% W/ 2007 CUMMINS ISX ENG W/ ALLISON 4700 XMSN W/ ENG BRAKE
@ W/ ALL CUMMINS ENG W/ BRAZIL
@@ GAUGE,ELEC WIRING TEMP/COMPASS DISPLAY W/ VORAD N/ 12V HTD FWS
** W/ 2010 IBB ENG & W/ ALLISON XMSN & W/ ENG BRAKE
DD-60,CAT 3406 ENG
%% CAB HARNESS OVERLAY MAINFOLD PRESSURE GAUGE(016HY) N/ 2010 ENG

I2-IGN ADAPTER
(495M)
(LOCATION IN INSTRUMENT PANEL)

CONNECTOR 2007315C1

CAV	CIRCUIT	GAUGE	COLOR	TERMINAL
A	A13P	12	PK	3566715C1
B	PLUG	-	-	-
C	PLUG	-	-	-
D	A13BL	14	PK	3566715C1
E	A48	16	GY	1661209C1
F	PLUG	-	-	-
G	PLUG	-	-	-
H	A13EG	18	PK	1661208C1
J	PLUG	-	-	-
K	A13EF	18	PK	1661208C1

CHK	DATE	CHANGE	REV	REFERENCE	DRAWN	NAME		
0610	27AUG13	INITIAL RELEASE.	A	92159Y	310615	CIRCUIT DIAGRAM, 9900		
					RELEASE NO. 92159Y	DATE 02AUG13	PART NO. AE08076124	SHEET 068

Figure 270 Connector Composites (494M / 495M)

13.73. CONNECTOR COMPOSITES (497M / 498M), P. 69

NAVISTAR, INC

THIS PRINT IS PROVIDED ON A RESTRICTED BASIS AND IS NOT TO BE USED IN ANY WAY DETRIMENTAL TO THE INTEREST OF NAVISTAR, INC.

ELECTRICAL CIRCUIT DIAGRAM CHAPTER 13

CONNECTOR BODY COMPOSITE MATING VIEW SHOWN

B1 BAT ADAPTER
(497M)
(LOCATION IN INSTRUMENT PANEL)

CONNECTOR 2007315C1

CAV	CIRCUIT	GAUGE	COLOR	TERMINAL
A	A14V	10	RD	1661211C1
B	A14BB	14	RD	3566715C1
C*	A14FA	14	RD	3566715C1
C#	A14DLF	14	RD	3566715C1
D	A14MA	18	RD	1661208C1
E	A14NA	18	RD	1661208C1
F	PLUG	-	-	-
G*	A14BD	14	RD	3566715C1
G#	A13NA	18	PK	1661208C1
H	PLUG	-	-	-
J	PLUG	-	-	-
K	PLUG	-	-	-

* WIN/LOCK WIRING,POWER LOCK BOTH SIDE
\# W/ INTL CEC I-6 ENG

B2 BAT ADAPTER
(498M)
(LOCATION IN INSTRUMENT PANEL)

CONNECTOR 2007315C1

CAV	CIRCUIT	GAUGE	COLOR	TERMINAL
A	A14AH	10	RD	1661211C1
B*	A14CA	14	RD	3566715C1
B#	A14BE	18	PK	1661208C1
C@	A14CD	18	RD	1661208C1
C%	A28H	16	TN	1661209C1
D	PLUG	-	-	-
E	PLUG	-	-	-
F	PLUG	-	-	-
G	PLUG	-	-	-
H	PLUG	-	-	-
J	PLUG	-	-	-
K	PLUG	-	-	-

* ELECTRICAL WAY RADIO ACCOMODATION PACKAGE
\# W/ BEACON LIGHT W/ FUSE
@ GAUGE ELEC WIRING TEMP/COMPASS DISPLAY W/ VORD N/ 12V HTD FWS
% W/ ALL CUMMINS ENG W/ BRAZIL

CHK	DATE	CHANGE	REV	REFERENCE	DRAWN	NAME
0610	27AUG13	INITIAL RELEASE.	A	92159Y	310615	CIRCUIT DIAGRAM, 9900
					RELEASE NO. 92159Y	DATE 02AUG13 / PART NO. AE08076124 / SHEET 069

Figure 271 Connector Composites (497M / 498M)

13.74. CONNECTOR COMPOSITES (499M / 501M), P. 70

NAVISTAR, INC

THIS PRINT IS PROVIDED ON A RESTRICTED BASIS AND IS NOT TO BE USED IN ANY WAY DETRIMENTAL TO THE INTEREST OF NAVISTAR, INC.

ELECTRICAL CIRCUIT DIAGRAM CHAPTER 13

CONNECTOR BODY COMPOSITE MATING VIEW SHOWN

B2 BAT ADAPTER
(499M)

(LOCATED IN INSTRUMENT PANEL)

CONNECTOR 2007315C1

CAV	CIRCUIT	GAUGE	COLOR	TERMINAL
A	A12A	12	LTBL	3566715C1
B	A12S	12	LTBL	3566715C1
C	PLUG	-	-	-
D	PLUG	-	-	-
E	A72D	16	OR	1661209C1
F	A94AM	12	GY	3566715C1
G	-	-	-	-
H	A12W	12	LTBL	3566715C1
J	PLUG	-	-	-
K	PLUG	-	-	-

A3 ACC ADAPTER
(501M)

(LOCATED IN INSTRUMENT PANEL)

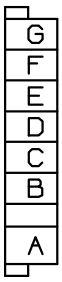

CONNECTOR 2006789C1
BODY LOCK 2006792C1

CAV	CIRCUIT	GAUGE	COLOR	TERMINAL
A	A12AD	10	LTBL	1661211C1
B	A12P	12	LTBL	3566715C1
C	PLUG	-	-	-
D	PLUG	-	-	-
E	PLUG	-	-	-
F	PLUG	-	-	-
G	PLUG	-	-	-

CHK	DATE	CHANGE	REV	REFERENCE	DRAWN	NAME
0610	27AUG13	INITIAL RELEASE.	A	92159Y	310615	CIRCUIT DIAGRAM, 9900
					RELEASE NO. 92159Y	DATE 02AUG13 / PART NO. AE08076124 / SHEET 070

Figure 272 Connector Composites (499M / 501M)

13.75. CONNECTOR COMPOSITES (502 / 503M), P. 71

NAVISTAR, INC

THIS PRINT IS PROVIDED ON A RESTRICTED BASIS AND IS NOT TO BE USED IN ANY WAY DETRIMENTAL TO THE INTEREST OF NAVISTAR, INC.

ELECTRICAL CIRCUIT DIAGRAM CHAPTER 13

CONNECTOR BODY COMPOSITE MATING VIEW SHOWN

SLEEPER DOME LIGHT SWITCH
(502)
(LOCATED IN SLEEPER ROOF)

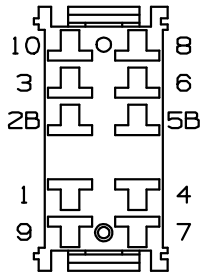

CONNECTOR 3520850C1

CAV	CIRCUIT	GAUGE	COLOR	TERMINAL
1	A63-GF	16	DKBL	1661226C1
2B	A63-GA	16	WH	1661226C1
3	A63-GE	16	DKBL	1661226C1
4	PLUG	-	-	-
5B	PLUG	-	-	-
6	PLUG	-	-	-
7	A62E	16	DKBL	1661226C1
8	PLUG	-	-	-
9*	A62-GE	18	WH	1661226C1
9#	A63-GA	16	WH	1661226C1
10	PLUG	-	-	-

* W/ 2-BEACON LIGHT CAB MOUNTED N/ GAUGE AMBIENT TEMP & COMPASS
\# W/ TEMP GAUGE/COMPASS N/ SKYRISE PROSTAR

L1 PNL LGT ADAPTER
(503M)
(LOCATED IN INSTRUMENT PANEL)

CONNECTOR 2007315C1
BODY LOCK 2007316C1

CAV	CIRCUIT	GAUGE	COLOR	TERMINAL
A	A62M	16	DKBL	1661209C1
B*	A62AL	16	DKBL	1661209C1
B#	A62BE	16	DKBL	1661209C1
C	A62AN	16	DKBL	1661209C1
D	A62BL	18	DKBL	1661208C1
E	A62AW	16	DKBL	1661209C1
F	PLUG	-	-	-
G	PLUG	-	-	-
H	A62AB	16	DKBL	1661209C1
J	A62M	16	DKBL	1661209C1
J%	A65U	16	OR	1661209C1
K	A62RU	16	DKBL	1661209C1

* WIN/LOCK WIRING POWER WINDOW RIGHT SIDE
\# KEYLESS ENTRY SYSTEM REMOTE
% W/ DUAL SWITCHED CUSTOMER MNTG WORK LIGHTS

CHK	DATE	CHANGE	REV	REFERENCE	DRAWN	NAME
0488	09DEC14	ADDED CIRC A65U IN	B	92783V	310615	CIRCUIT DIAGRAM, 9900, - *
	R/D 503M.				RELEASE NO. 92159Y	DATE 02AUG13 / PART NO. AE08076124 / SHEET 071

Figure 273 Connector Composites (502 / 503M)

13.76. CONNECTOR COMPOSITES (504M / 506), P. 72

NAVISTAR, INC

THIS PRINT IS PROVIDED ON A RESTRICTED BASIS AND IS NOT TO BE USED IN ANY WAY DETRIMENTAL TO THE INTEREST OF NAVISTAR, INC.

ELECTRICAL CIRCUIT DIAGRAM CHAPTER 13

CONNECTOR BODY COMPOSITE MATING VIEW SHOWN

L2 PNL LGT ADAPTER
(504M)
(LOCATED IN INSTRUMENT PANEL)

CAV	CIRCUIT	GAUGE	COLOR	TERMINAL
A	A62AE	16	DKBL	1661209C1
B*	A62MSM	16	DKBL	1661209C1
B#	A62BA	16	DKBL	1661209C1
C%	A62AV	16	DKBL	1661209C1
C@	A62AK	16	DKBL	1661209C1
D**	A62A	16	DKBL	1661209C1
D##	A62MSM	16	DKBL	1661209C1
D%%	A62MSP	16	DKBL	1661209C1
E@@	A62AW	16	DKBL	1661209C1
E%%	A62MSP	16	DKBL	1661209C1
F	PLUG	-	-	-
G*#	A62AJ	16	DKBL	1661209C1
G*@	A62PLF	18	DKBL	1661208C1
H	A62U	18	DKBL	1661208C1
J	A62H	16	DKBL	1661209C1
K	PLUG	-	-	-

CONNECTOR 2007315C1
BODY LOCK 2007316C1

* W/ 2007 CUMMINS ISX W/ ALLISON 4700 XMSN W/ ENG BRAKE
\# W/ ALL CUMMINS ENGINE W/ BRAZIL
% W/ V98-ELCT CAT N/ ENG BRK W/ STARTER INTERLOCK W/ MANUAL
W/ 2007 CUMMINS ENG W/ AUTO & N/ CUM IDLE CONTROL SYS BRAZIL
%% W/ 2007 CAT C13/C15 ENG N/ ENG SHUTDOWN
@ W/ BENDIX 6 CHANNEL ABS & W/ ATC & WHSA
** W/ TWO INDIPENDENT DIFF SWITCH CONTROL
*# N/ 2007 ENGINE & N/ ISX EPA 04
@@ MIRROR WIRING,POWER,LT & RT SINGLE AXLE
*@ W/ BEACON LIGHT W/ FUSE

L4 PNL GND ADAPTER
(506)
(LOCATED IN INSTRUMENT PANEL)

CAV	CIRCUIT	GAUGE	COLOR	TERMINAL
A	PLUG	-	-	-
B	PLUG	-	-	-
C	PLUG	-	-	-
D	PLUG	-	-	-
E	PLUG	-	-	-
F	A62-GAW	18	WH	1661208C1
G	PLUG	-	-	-
H	PLUG	-	-	-
I	PLUG	-	-	-
J	PLUG	-	-	-
K	PLUG	-	-	-

CONNECTOR 2007315C1
BODY LOCK 2007316C1

CHK	DATE	CHANGE	REV	REFERENCE	DRAWN	NAME
–	–	INITIAL RELEASE.	A	92159Y	310615	CIRCUIT DIAGRAM, 9900
					RELEASE NO. 92159Y	DATE 02AUG13 / PART NO. AE08076124 / SHEET 072

Figure 274 Connector Composites (504M / 506)

13.77. CONNECTOR COMPOSITES (506M / 509M), P. 73

NAVISTAR, INC

THIS PRINT IS PROVIDED ON A RESTRICTED BASIS AND IS NOT TO BE USED IN ANY WAY DETRIMENTAL TO THE INTEREST OF NAVISTAR, INC.

ELECTRICAL CIRCUIT DIAGRAM CHAPTER 13

CONNECTOR BODY COMPOSITE MATING VIEW SHOWN

L4 PNL GND ADAPTER
(506M)

(LOCATED IN INSTRUMENT PANEL)

CONNECTOR 2007315C1
BODY LOCK 2007316C1

CAV	CIRCUIT	GAUGE	COLOR	TERMINAL
A	A11-GP	12	WH	3566715C1
B	A62-GMS	18	WH	1661208C1
C	A62-HMS	18	WH	1661208C1
D	PLUG	-	-	-
E	PLUG	-	-	-
F*	A62GA	14	WH	1661209C1
F#	A72-G	18	WH	1661208C1
G	PLUG	-	-	-
H	A11-GAL	18	WH	1661208C1
J	A62-GH	18	WH	1661208C1
K	PLUG	-	-	-

* W/ TWO INDEPENDENT DIFF SWITCH CONTROL
\# AUX TRLR SOCKET W/ CENTER PIN CIRCUIT

START FEED ADAPTER
(509M)

(LOCATED IN INSTRUMENT PANEL)

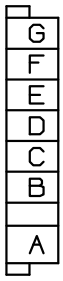

CONNECTOR 2006789C1
BODY LOCK 2006792C1

CAV	CIRCUIT	GAUGE	COLOR	TERMINAL
A*	17B	14	PK	3566715C1
A#	17D	14	PK	3566715C1
B	PLUG	-	-	-
C	17EC	16	PK	1661209C1
E	PLUG	-	-	-
F	PLUG	-	-	-
G	PLUG	-	-	-

* CAB BASE WITH MARKER ON/OFF
\# W/ 2007 CUMMINS & W/ STRTR INTERLOCK
W/ IDLE CONTROL SYS BRAZIL

CHK	DATE	CHANGE	REV	REFERENCE	DRAWN	NAME
–	–	INITIAL RELEASE.	A	92159Y	310615	CIRCUIT DIAGRAM, 9900
					RELEASE NO. 92159Y	DATE 02AUG13 / PART NO. AE08076124 / SHEET 073

Figure 275 Connector Composites (506M / 509M)

13.78. CONNECTOR COMPOSITES (511M / 512F / 513F), P. 74

NAVISTAR, INC

THIS PRINT IS PROVIDED ON A RESTRICTED BASIS AND IS NOT TO BE USED IN ANY WAY DETRIMENTAL TO THE INTEREST OF NAVISTAR, INC.

ELECTRICAL CIRCUIT DIAGRAM CHAPTER 13

CONNECTOR BODY COMPOSITE MATING VIEW SHOWN

BLINK CODE SWITCH
(511M)

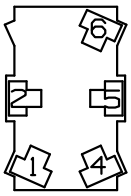

CONNECTOR 1661256C1

CAV	CIRCUIT	GAUGE	COLOR	TERMINAL
1	PLUG	-	-	-
2	PLUG	-	-	-
3	PLUG	-	-	-
4	PLUG	-	-	-
5*	A94E	18	GY	1661226C1
5#	A94H	16	GY	1661226C1
6	A94-GL	16	WH	1661226C1

* BENDIX AIR RSP HARNESS
\# N/ 2007 ENGINE & N/ ISX EPA 04

LOW AIR SWITCH #2
(512F)

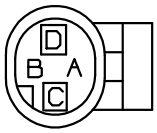

CONNECTOR 1661777C1
BODY LOCK 1661873C1

CAV	CIRCUIT	GAUGE	COLOR	TERMINAL	SEAL/SLEEVE
A	PLUG	-	-	-	-
B	PLUG	-	-	-	-
C	A40B	16	GY	1661875C1	1661872C1
D	A40-GB	16	WH	1661875C1	1661872C1

DRL JUMPER
(513F)

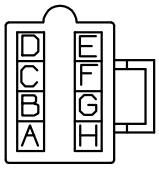

CONNECTOR 2005836C1
BODY LOCK 2006504C1

CAV	CIRCUIT	GAUGE	COLOR	TERMINAL
A	F64E	14	YL	1661213C1
B	F64E	14	YL	1661213C1
C	PLUG	-	-	-
D	PLUG	-	-	-
E	PLUG	-	-	-
F	PLUG	-	-	-
G	PLUG	-	-	-
H	PLUG	-	-	-

CHK	DATE	CHANGE	REV	REFERENCE	DRAWN	NAME
–	–	INITIAL RELEASE.	A	92159Y	310615	CIRCUIT DIAGRAM, 9900
					RELEASE NO. 92159Y	DATE 02AUG13 / PART NO. AE08076124 / SHEET 074

Figure 276 Connector Composites (511M / 512F / 513F)

13.79. CONNECTOR COMPOSITES (513M / 514M / 515), P. 75

NAVISTAR, INC

THIS PRINT IS PROVIDED ON A RESTRICTED BASIS AND IS NOT TO BE USED IN ANY WAY DETRIMENTAL TO THE INTEREST OF NAVISTAR, INC.

ELECTRICAL CIRCUIT DIAGRAM CHAPTER 13

CONNECTOR BODY COMPOSITE MATING VIEW SHOWN

DRL MODULE-USA
(513M)

(LOCATED IN INSTRUMENT PANEL)

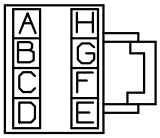

CONNECTOR 2005835C1
BODY LOCK 2006503C1

CAV	CIRCUIT	GAUGE	COLOR	TERMINAL
A	A64D	14	YL	3566715C1
B	A64C	14	YL	3566715C1
C	A66F	14	YL	3566715C1
D	A66-GA	14	WH	3566715C1
E	A66E	16	YL	1661209C1
F	PLUG	-	-	-
G	A66D	14	YL	3566715C1
H	A66A	14	YL	3566715C1

D1-DATA LINK POS
(514M)

(LOCATED IN INSTRUMENT PANEL)

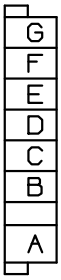

CONNECTOR 2006789C1
BODY LOCK 2006792C1

CAV	CIRCUIT	GAUGE	COLOR	TERMINAL
A	A98A(+)	14	BK	3566715C1
B	A98(+)	16	BK	1661209C1
C	A47/48(+)	18	GY	1661208C1
D*	A98EA(+)	18	BK	1661208C1
D#	A98J(+)	16	BK	1661209C1
E	A98S(+)	16	BK	1661209C1
F	PLUG	-	-	-
G	A98MA(+)	18	BK	1661208C1
H	PLUG	-	-	-

* W/ 2007 CUMMINS ENG W/ CUM IDLE CONTROL SYS
\# BENDIX AIR RSP HARNESS

J1939 CONN
(515)

(LOCATED IN INSTRUMENT PANEL)

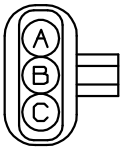

CONNECTOR 1667740C1
BODY LOCK 1667771C1

CAV	CIRCUIT	GAUGE	COLOR	TERMINAL	SEAL/SLEEVE
A	A98MAB(+)	18	YL	1667742C1	1661872C1
B	PLUG	-	-	-	-
C	A98MAB(-)	18	YL	1667742C1	1661872C1

CHK	DATE	CHANGE	REV	REFERENCE	DRAWN	NAME
0610	27AUG13	INITIAL RELEASE.	A	92159Y	310615	CIRCUIT DIAGRAM, 9900
					RELEASE NO. 92159Y	DATE 02AUG13 / PART NO. AE08076124 / SHEET 075

Figure 277 Connector Composites (513M / 514M / 515)

13.80. CONNECTOR COMPOSITES (515M / 516M / 517M), P. 76

NAVISTAR, INC

THIS PRINT IS PROVIDED ON A RESTRICTED BASIS AND IS NOT TO BE USED IN ANY WAY DETRIMENTAL TO THE INTEREST OF NAVISTAR, INC.

ELECTRICAL CIRCUIT DIAGRAM CHAPTER 13

CONNECTOR BODY COMPOSITE MATING VIEW SHOWN

J1939 CONN
(515M)
(LOCATED IN INSTRUMENT PANEL)

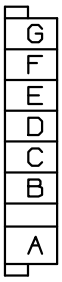

CONNECTOR 2006789C1
BODY LOCK 2006792C1

CAV	CIRCUIT	GAUGE	COLOR	TERMINAL
A	A98C(-)	14	BK	3566715C1
B	A98B(-)	16	BK	1661209C1
C	A47/48(-)	18	GY	1661208C1
D*	A98EB(-)	18	BK	1661208C1
D#	A98K(-)	16	BK	1661209C1
E	A98T(-)	16	BK	1661209C1
F	PLUG	-	-	-
G	A98MB(-)	18	BK	1661208C1

* W/ EATON DM3 XMSN W/ AUTOCLUTCH W/ CUMMINS W/ ICON W/ PAM,USA
\# W/ 2007 ENG,N ALLISON 4TH GEN 4000 & 4500 SERIES TRANS

SPARE 1
(516M)
(LOCATED IN INSTRUMENT PANEL)

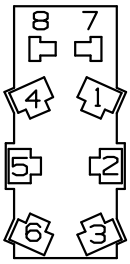

CONNECTOR 2009385C1

CAV	CIRCUIT	GAUGE	COLOR	TERMINAL
1	PLUG	-	-	-
2	PLUG	-	-	-
3	PLUG	-	-	-
4	PLUG	-	-	-
5	A14AS	14	RD	1661226C1
6	A14AT	14	RD	1661226C1
7*	A62V	18	DKBL	1661208C1
7#	A62H	16	DKBL	1661209C1
8#	A62-GH	18	WH	1661208C1
8*	A62-GV	18	WH	1661208C1

* W/ 2 AUX SWITCHES W/ 20 AMP FUSES
\# W/ 3 AUX SWITCHES LESS WIRING

SPARE/ACC
(517M)
(LOCATED IN INSTRUMENT PANEL)

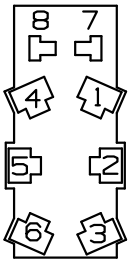

CONNECTOR 2009385C1

CAV	CIRCUIT	GAUGE	COLOR	TERMINAL
1	PLUG	-	-	-
2	PLUG	-	-	-
3	PLUG	-	-	-
4	PLUG	-	-	-
5	A14AF	10	RD	1661227C1
6	A14AQ	10	RD	1661227C1
7	A62U	16	DKBL	1661209C1
8	A62-GU	18	WH	1661208C1

CHK	DATE	CHANGE	REV	REFERENCE	DRAWN	NAME		
–	–	INITIAL RELEASE.	A	92159Y	310615	CIRCUIT DIAGRAM, 9900		
					RELEASE NO.	DATE	PART NO.	SHEET
					92159Y	02AUG13	AE08076124	076

Figure 278 Connector Composites (515M / 516M / 517M)

13.81. CONNECTOR COMPOSITES (520 / 521 / 522 / 523), P. 77

NAVISTAR, INC

THIS PRINT IS PROVIDED ON A RESTRICTED BASIS AND IS NOT TO BE USED IN ANY WAY DETRIMENTAL TO THE INTEREST OF NAVISTAR, INC.

ELECTRICAL CIRCUIT DIAGRAM CHAPTER 13

CONNECTOR BODY COMPOSITE MATING VIEW SHOWN

CLEARANCE LIGHT
(520)
(LOCATED IN SUNSHADE)

CAV	CIRCUIT	GAUGE	COLOR	TERMINAL
A	C58B	18	BN	1661261C1
B	C58-GB	18	WH	1661261C1

CONNECTOR 1661259C1
BODY LOCK 1661263C1

CLEARANCE LIGHT
(521)
(LOCATED IN SUNSHADE)

CAV	CIRCUIT	GAUGE	COLOR	TERMINAL
A	C58C	18	BN	1661261C1
B	C58-GC	18	WH	1661261C1

CONNECTOR 1661259C1
BODY LOCK 1661263C1

CLEARANCE LIGHT
(522)
(LOCATED IN SUNSHADE)

CAV	CIRCUIT	GAUGE	COLOR	TERMINAL
A	C58D	18	BN	1661261C1
B	C58-GD	18	WH	1661261C1

CONNECTOR 1661259C1
BODY LOCK 1661263C1

CLEARANCE LIGHT
(523)
(LOCATED IN SUNSHADE)

CAV	CIRCUIT	GAUGE	COLOR	TERMINAL
A	C58E	18	BN	1661261C1
B	C58-GE	18	WH	1661261C1

CONNECTOR 1661259C1
BODY LOCK 1661263C1

CHK	DATE	CHANGE	REV	REFERENCE	DRAWN	NAME
0610	27AUG13	INITIAL RELEASE.	A	92159Y	310615	CIRCUIT DIAGRAM, 9900
					RELEASE NO. 92159Y	DATE 02AUG13 / PART NO. AE08076124 / SHEET 077

Figure 279 Connector Composites (520 / 521 / 522 / 523)

13.82. CONNECTOR COMPOSITES (524 / 525F / 525M), P. 78

NAVISTAR, INC

THIS PRINT IS PROVIDED ON A RESTRICTED BASIS AND IS NOT TO BE USED IN ANY WAY DETRIMENTAL TO THE INTEREST OF NAVISTAR, INC.

ELECTRICAL CIRCUIT DIAGRAM CHAPTER 13

CONNECTOR BODY COMPOSITE MATING VIEW SHOWN

CLEARANCE LIGHT
(524)
(LOVATED IN SUNSHADE)

CAV	CIRCUIT	GAUGE	COLOR	TERMINAL
A	C58F	18	BN	1661261C1
B	C58-GF	18	WH	1661261C1

CONNECTOR 1661259C1
BODY LOCK 1661263C1

CB CONN
(525F)
(LOCATED IN INSTRUMENT PANEL)

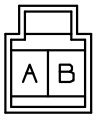

CAV	CIRCUIT	GAUGE	COLOR	TERMINAL
A#	A86F	16	LT GN	0239807R1
A*	A1A	16	LT GN	3546047C91
B#	A86-GF	16	WH	0239807R1
B*	A1G	16	WH	3546047C91

CONNECTOR 0481140C1

* CB ACCOMODATION PACKAGE
# W/ 2-BEACON LIGHT CAB MOUNTED W/ GAUGE AMBIENT TEMP & COMPASS

CB CONN
(525M)
(LOCATED IN INSTRUMENT PANEL)

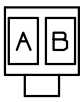

CAV	CIRCUIT	GAUGE	COLOR	TERMINAL
A#	A86AE	16	LT GN	0333733C1
A*	A2A	16	LT GN	3546047C91
B#	A86-GE	16	WH	0333733C1
B*	A2G	16	WH	0333733C1

CONNECTOR 0969541R1

* CB ACCOMODATION PACKAGE
# W/ 2-BEACON LIGHT CAB MOUNTED W/ GAUGE AMBIENT TEMP & COMPASS

CHK	DATE	CHANGE	REV	REFERENCE	DRAWN	NAME
0610	27AUG13	INITIAL RELEASE.	A	92159Y	310615	CIRCUIT DIAGRAM, 9900
					RELEASE NO. 92159Y	DATE 02AUG13 / PART NO. AE08076124 / SHEET 078

Figure 280 Connector Composites (524 / 525F / 525M)

13.83. CONNECTOR COMPOSITES (527 / 527B / 528 / 529), P. 79

NAVISTAR, INC

THIS PRINT IS PROVIDED ON A RESTRICTED BASIS AND IS NOT TO BE USED IN ANY WAY DETRIMENTAL TO THE INTEREST OF NAVISTAR, INC.

ELECTRICAL CIRCUIT DIAGRAM CHAPTER 13

CONNECTOR BODY COMPOSITE MATING VIEW SHOWN

SPOTLIGHT CONNECTOR
(527)

CONNECTOR 0188395R1

CAV	CIRCUIT	GAUGE	COLOR	TERMINAL
A	A64E	16	YL	0188396R1

SPOTLIGHT CONNECTOR
(527B)

CONNECTOR 0188395R1

CAV	CIRCUIT	GAUGE	COLOR	TERMINAL
A	A64D	16	YL	0188396R1

RIGHT REAR SPEAKER
(528)

(LOCARED IN RIGHT)

CONNECTOR 1661197C1

CAV	CIRCUIT	GAUGE	COLOR	TERMINAL
A	A86T	18	LT GN	1661212C1
B	A86U	18	LT GN	1661212C1

RIGHT FRONT RADIO SPEAKER
(529)

CONNECTOR 1661197C1

CAV	CIRCUIT	GAUGE	COLOR	TERMINAL
A	A86C	18	LT GN	1661212C1
B	A86D	18	LT GN	1661212C1

CHK	DATE	CHANGE	REV	REFERENCE	DRAWN	NAME
–	–	INITIAL RELEASE.	A	92159Y	310615	CIRCUIT DIAGRAM, 9900
					RELEASE NO. 92159Y	DATE 02AUG13 / PART NO. AE08076124 / SHEET 079

Figure 281 Connector Composites (527 / 527B / 528 / 529)

13.84. CONNECTOR COMPOSITES (530 / 531 / 559F), P. 80

NAVISTAR, INC

THIS PRINT IS PROVIDED ON A RESTRICTED BASIS AND IS NOT TO BE USED IN ANY WAY DETRIMENTAL TO THE INTEREST OF NAVISTAR, INC.

ELECTRICAL CIRCUIT DIAGRAM CHAPTER 13

CONNECTOR BODY COMPOSITE MATING VIEW SHOWN

LEFT FRONT RADIO SPEAKER
(530)

CONNECTOR 1661197C1

CAV	CIRCUIT	GAUGE	COLOR	TERMINAL
A	A86A	18	LT GN	1661212C1
B	A86B	18	LT GN	1661212C1

LEFT FRONT RADIO SPEAKER
(531)

CONNECTOR 1661197C1

CAV	CIRCUIT	GAUGE	COLOR	TERMINAL
A	A86R	18	LT GN	1661212C1
B	A86S	18	LT GN	1661212C1

TACHOGRAPH ADAPTER MODULE
(559F)

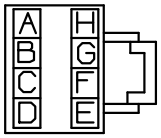

CONNECTOR 2005835C1
BODY LOCK 2006503C1

CAV	CIRCUIT	GAUGE	COLOR	TERMINAL
A	A28J	16	TN	1661209C1
B	A62BA	16	DK BL	1661209C1
C	A28F	16	TN	1661209C1
D	A28-G	16	WH	1661209C1
E	PLUG	-	-	-
F	PLUG	-	-	-
G	A98S(+)	16	BK	1661209C1
H	A98T(-)	16	BK	1661209C1

CHK	DATE	CHANGE	REV	REFERENCE	DRAWN	NAME
–	–	INITIAL RELEASE.	A	92159Y	310615	CIRCUIT DIAGRAM, 9900
					RELEASE NO. 92159Y	DATE 02AUG13 / PART NO. AE08076124 / SHEET 080

Figure 282 Connector Composites (530 / 531 / 559F)

13.85. CONNECTOR COMPOSITES (561ML / 571ML / 571OL / 572M), P. 81

NAVISTAR, INC

THIS PRINT IS PROVIDED ON A RESTRICTED BASIS AND IS NOT TO BE USED IN ANY WAY DETRIMENTAL TO THE INTEREST OF NAVISTAR, INC.

ELECTRICAL CIRCUIT DIAGRAM CHAPTER 13

CONNECTOR BODY COMPOSITE MATING VIEW SHOWN

SPARE/ACC
(561ML)

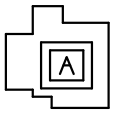

CONNECTOR 1661202C1

CAV	CIRCUIT	GAUGE	COLOR	TERMINAL
A	A14AQ	10	RD	166121C1

ABS FEED
(571ML)

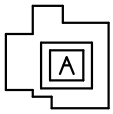

CONNECTOR 1661202C1

CAV	CIRCUIT	GAUGE	COLOR	TERMINAL
A	A14AN	10	RD	1661219C1

ABS FEED
(571OL)

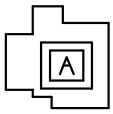

CONNECTOR 1661203C1

CAV	CIRCUIT	GAUGE	COLOR	TERMINAL
A	A14AN	10	RD	1661627C1

KAY "G" CONN
(572M)

CONNECTOR 0188395R1

CAV	CIRCUIT	GAUGE	COLOR	TERMINAL
A*	A44	18	GY	0879633R1
A#	A44A	16	GY	0879633R1
A%	A81X	18	GY	0879630R1

* W/ V98-ELECT CAT N/ ENG BRK N/ STARTER INTERLOCK
\# W/ EATON DM2 XMSN W/ AUTOCLUTCH W/ CAT ENG
% KEYLESS ENTRY SYSTEM REMOTE

CHK	DATE	CHANGE	REV	REFERENCE	DRAWN	NAME		
0610	27AUG13	INITIAL RELEASE.	A	92159Y	310615	CIRCUIT DIAGRAM, 9900		
					RELEASE NO.	DATE	PART NO.	SHEET
					92159Y	02AUG13	AE08076124	081

Figure 283 Connector Composites (561ML / 571ML / 571OL / 572M)

13.86. CONNECTOR COMPOSITES (574 / 575 / 576), P. 82

NAVISTAR, INC

THIS PRINT IS PROVIDED ON A RESTRICTED BASIS AND IS NOT TO BE USED IN ANY WAY DETRIMENTAL TO THE INTEREST OF NAVISTAR, INC.

ELECTRICAL CIRCUIT DIAGRAM CHAPTER 13

CONNECTOR BODY COMPOSITE MATING VIEW SHOWN

SOCKET #2
(574)

CONNECTOR 0481140C1

CAV	CIRCUIT	GAUGE	COLOR	TERMINAL
A	A65-GB	14	WH	0239807R1
B	A65F	14	OR	0239807R1

TRAILER SOCKET CONN #1
(575)

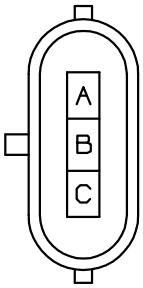

CONNECTOR 1667732C1
BODY LOCK 1667734C1

CAV	CIRCUIT	GAUGE	COLOR	TERMINAL	SEAL/SLEEVE
A*	A70CA	10	OR	2025425C1	1667735C1
A#	A70C	10	OR	2025425C1	1667735C1
B*	A68AB	10	BN	2025425C1	1667735C1
B#	A68A	10	BN	2025425C1	1667735C1
C*	A94AH	10	GY	2025425C1	1667735C1
C#	A94AF	10	GY	2025425C1	1667735C1

* TRACTOR (4092) W/ DAY CAB W/ REAR TRLR SOC(8554) N/ ABS(4A2G)
\# MANUAL SHIFTER WITH BOC & AUX TRAILER SOCKET

TRAILER SOCKET CONN #2
(576)

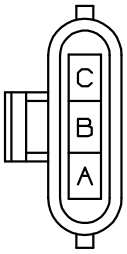

CONNECTOR 1667733C1
BODY LOCK 1667734C1

CAV	CIRCUIT	GAUGE	COLOR	TERMINAL	SEAL/SLEEVE
A*	A58AA	12	BN	1667737C1	1671603C1
A#	A58A	12	BN	1667737C1	1671603C1
B*	A56DA	12	OR	1667737C1	1671603C1
B#	A56D	12	OR	1667737C1	1671603C1
C*	A57DA	12	OR	1667737C1	1671603C1
C#	A57D	12	OR	1667737C1	1671603C1

* TRACTOR (4092) W/ DAY CAB W/ REAR TRLR SOC(8554) N/ ABS(4A2G)
\# MANUAL SHIFTER WITH BOC & AUX TRAILER SOCKET

CHK	DATE	CHANGE	REV	REFERENCE	DRAWN	NAME
0610	27AUG13	INITIAL RELEASE.	A	92159Y	310615	CIRCUIT DIAGRAM, 9900
					RELEASE NO. 92159Y	DATE 02AUG13 / PART NO. AE08076124 / SHEET 082

Figure 284 Connector Composites (574 / 575 / 576)

13.87. CONNECTOR COMPOSITES (576 / 577), P. 83

NAVISTAR, INC

THIS PRINT IS PROVIDED ON A RESTRICTED BASIS AND IS NOT TO BE USED IN ANY WAY DETRIMENTAL TO THE INTEREST OF NAVISTAR, INC.

ELECTRICAL CIRCUIT DIAGRAM CHAPTER 13

CONNECTOR BODY COMPOSITE MATING VIEW SHOWN

SOCKET (576)

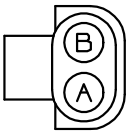

CONNECTOR 0587568C91

CAV	CIRCUIT	GAUGE	COLOR	TERMINAL	SEAL/SLEEVE
A	A65F	14	OR	0587575C1	0589391C1
B	A65-GB	14	WH	0587575C1	0589391C1

TRAILER SOCKET (577)

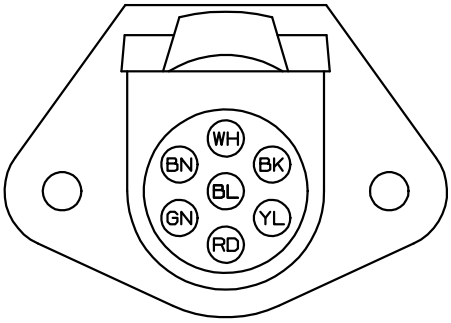

CONNECTOR 1663570C1

CAV	CIRCUIT	GAUGE	COLOR	TERMINAL
WH	A11-GN	8	WH	INCLUDED
BN	A68B	12	BN	INCLUDED
GN	A57C	12	OR	INCLUDED
RD	A70C	10	RD	INCLUDED
YL	A56C	12	OR	INCLUDED
BK	A58R	12	BN	INCLUDED
BL	A94AF	10	GY	INCLUDED

TRAILER SOCKET (577)

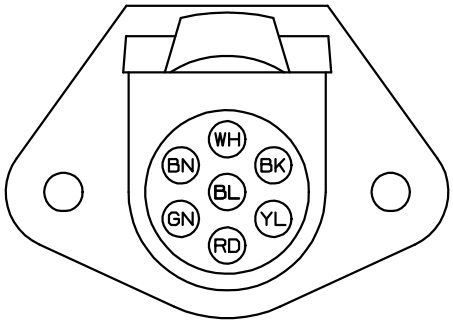

CONNECTOR 3520417C1

CAV	CIRCUIT	GAUGE	COLOR	TERMINAL
WH	A11-GAL	8	WH	INCLUDED
BN	A68A	10	BN	INCLUDED
GN	A57D	12	OR	INCLUDED
RD	A70C	10	OR	INCLUDED
YL	A56D	12	OR	INCLUDED
BK	A58A	12	BN	INCLUDED
BL	A94AF	10	GY	INCLUDED

CHK	DATE	CHANGE	REV	REFERENCE	DRAWN	NAME		
–	–	INITIAL RELEASE.	A	92159Y	310615	CIRCUIT DIAGRAM, 9900		
					RELEASE NO. 92159Y	DATE 02AUG13	PART NO. AE08076124	SHEET 083

Figure 285 Connector Composites (576 / 577)

13.88. CONNECTOR COMPOSITES (578 / 579), P. 83A

NAVISTAR, INC

THIS PRINT IS PROVIDED ON A RESTRICTED BASIS AND IS NOT TO BE USED IN ANY WAY DETRIMENTAL TO THE INTEREST OF NAVISTAR, INC.

ELECTRICAL CIRCUIT DIAGRAM CHAPTER 13

CONNECTOR BODY COMPOSITE MATING VIEW SHOWN

WORKLIGHT
(578)
(LOCATED AT BEHIND DRIVER SEAT)

CONNECTOR 0969541R1

CAV	CIRCUIT	GAUGE	COLOR	TERMINAL
A	A65B	16	OR	0333736C1
A	A65F	16	OR	0333736C1
A	A65D	16	OR	0333736C1
B	A65-GB	16	WH	0333736C1
B	A65-GF	16	WH	0333736C1

WORKLIGHT
(579)
(LOCATED AT BEHIND DRIVER SEAT)

CONNECTOR 0969541R1

CAV	CIRCUIT	GAUGE	COLOR	TERMINAL
A	A65F	16	OR	0333733C1
B	A65-GF	16	WH	0333733C1

CHK	DATE	CHANGE	REV	REFERENCE	DRAWN	NAME
0488	09DEC14	INITIAL RELEASE.	A	92783V	23112202	CIRCUIT DIAGRAM, 9900
					RELEASE NO. 92783V	DATE 11NOV14 / PART NO. AE08076124 / SHEET 83A

Figure 286 Connector Composites (578 / 579)

13.89. CONNECTOR COMPOSITES (580M / 604 / 653M / 659M), P. 84

NAVISTAR, INC

THIS PRINT IS PROVIDED ON A RESTRICTED BASIS AND IS NOT TO BE USED IN ANY WAY DETRIMENTAL TO THE INTEREST OF NAVISTAR, INC.

ELECTRICAL CIRCUIT DIAGRAM CHAPTER 13

CONNECTOR BODY COMPOSITE MATING VIEW SHOWN

HILL START AID LAMP
(580M)

CONNECTOR 0969541R1

CAV	CIRCUIT	GAUGE	COLOR	TERMINAL
A	A94CF	18	PK	0333732C1
	A94CF	16	PK	0333733C1
B	A94CG	18	GY	0333732C1
	A94CG	16	GY	0333733C1

CONNECT TO ROOF HARNESS
(604)
(LOCATED IN INSTRUMENT PANEL)

CONNECTOR 1661260C1
BODY LOCK 1661264C1

CAV	CIRCUIT	GAUGE	COLOR	TERMINAL
A	A63U	18	DKBL	1661262C1
B	A63-GU	18	WH	1661262C1

ENGINE FAN OVERRIDE SWITCH
(653M)

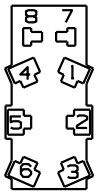

CONNECTOR 2009385C1

CAV	CIRCUIT	GAUGE	COLOR	TERMINAL
1	K23-GY	16	WH	1661226C1
2	-	-	-	-
3	-	-	-	-
4	K23Z	16	GY	1661226C1
5	K23W	16	GY	1661226C1
6	-	-	-	-
7	K62M	16	DKBL	1661209C1
8	K23-GX	16	WH	1661209C1

ENGINE FAN OVERRIDE SWITCH
(659M)

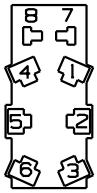

CONNECTOR 2009385C1

CAV	CIRCUIT	GAUGE	COLOR	TERMINAL
1	A23-GY	16	WH	1661226C1
2	-	-	-	-
3	-	-	-	-
4	A23B	16	TN	1661226C1
5	A23A	16	TN	1661226C1
6	-	-	-	-
7	A62M	16	DKBL	1661209C1
8	A11-GR	16	WH	1661209C1

CHK	DATE	CHANGE	REV	REFERENCE	DRAWN	NAME
MJV0	18JUL18	REMOVED CIRC A23B IN	B	94591W	310615	CIRCUIT DIAGRAM, 9900
	CAV 6 AT	R/D 659M.			RELEASE NO. 92159Y	DATE 02AUG13 / PART NO. AE08076124 / SHEET 084

Figure 287 Connector Composites (580M / 604 / 653M / 659M)

13.90. CONNECTOR COMPOSITES (670 / 670G / 671), P. 85

NAVISTAR, INC

THIS PRINT IS PROVIDED ON A RESTRICTED BASIS AND IS NOT TO BE USED IN ANY WAY DETRIMENTAL TO THE INTEREST OF NAVISTAR, INC.

ELECTRICAL CIRCUIT DIAGRAM CHAPTER 13

CONNECTOR BODY COMPOSITE MATING VIEW SHOWN

AFTERTREATMENT HARNESS INTERCONNECT
(670)
(LOCATED IN ENGINE)

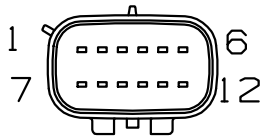

CONNECTOR 3957650C1

CAV	CIRCUIT	GAUGE	COLOR	TERMINAL
1	5(+)	18	YL	3709927C1
2	5(-)	18	GN	3709927C1
3	10	16	WH	3709927C1
4	13	16	PK	3709927C1
5	5A(+)	18	YL	3709927C1
6	5A(-)	18	GN	3709927C1
7	9	18	GY	3709927C1
8	95	18	TN	3709927C1
9	95A	18	TN	3709927C1
10	6	18	GY	3709927C1
11	95(+)	18	TN	3709927C1
12	95(-)	18	TN	3709927C1

AFTERTREATMENT CONNECTOR
(670G)
(LOCATED IN ENGINE)

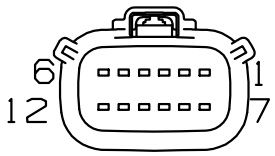

CONNECTOR 3959006C1

CAV	CIRCUIT	GAUGE	COLOR	TERMINAL
1	K5(+)	18	YL	3686943C1
2	K5(-)	18	LT GN	3686943C1
3	K10-GM	16	WH	3686944C1
4	K13	16	PK	3686944C1
5	K5A(+)	18	YL	3686943C1
6	K5A(-)	18	LT GN	3686943C1
7*	K9	18	TN	3686943C1
7#	K9	20	TN	3686943C1
8	K95	20	TN	3686943C1
9	K95A	20	TN	3686943C1
10*	K6	18	VT	3686943C1
10#	K6G	20	PK	3686943C1
11	K95(+)	18	BN	3686943C1
12	K95(-)	18	TN	3686943C1

* W/ CRUISE CONTROL & N/ REMOTE PT09900
\# W/ CRUISE CONTROL & W/ REMOTE PT09900

SCR SENSOR TABLE
(671)
(LOCATED IN ENGINE)

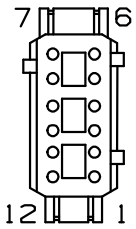

CONNECTOR 3989896C1
BODY LOCK 3553460C1

CAV	CIRCUIT	GAUGE	COLOR	TERMINAL
1	PLUG	-	-	-
2	PLUG	-	-	-
3	PLUG	-	-	-
4	PLUG	-	-	-
5	PLUG	-	-	-
6	PLUG	-	-	-
7	5B(+)	18	YL	3989895C1
8	5B(-)	18	GN	3989895C1
9	10A	18	WH	3989895C1
10	13A	18	PK	3989895C1
11	5(+)	18	YL	3989895C1
12	5(-)	18	GN	3989895C1

CHK	DATE	CHANGE	REV	REFERENCE	DRAWN	NAME
0610	27AUG13	INITIAL RELEASE.	A	92159Y	310615	CIRCUIT DIAGRAM, 9900
					RELEASE NO. 92159Y	DATE 02AUG13 / PART NO. AE08076124 / SHEET 085

Figure 288 Connector Composites (670 / 670G / 671)

13.91. CONNECTOR COMPOSITES (672 / 673 / 674), P. 86

NAVISTAR, INC

THIS PRINT IS PROVIDED ON A RESTRICTED BASIS AND IS NOT TO BE USED IN ANY WAY DETRIMENTAL TO THE INTEREST OF NAVISTAR, INC.

ELECTRICAL CIRCUIT DIAGRAM CHAPTER 13

CONNECTOR BODY COMPOSITE MATING VIEW SHOWN

DPF SENSOR TABLE
(672)
(LOCATED IN ENGINE)

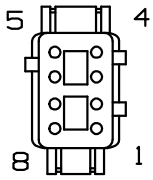

CONNECTOR 3989894C1
BODY LOCK 3539144C1

CAV	CIRCUIT	GAUGE	COLOR	TERMINAL
1	5C(+)	18	YL	3989895C1
2	5C(-)	18	GN	3989895C1
3	10B	18	WH	3989895C1
4	13B	18	PK	3989895C1
5	9	18	GY	3989895C1
6	95	18	TN	3989895C1
7	95A	18	TN	3989895C1
8	6	18	GY	3989895C1

DEF DOSER
(673)
(LOCATED IN ENGINE)

CONNECTOR 3690364C1

CAV	CIRCUIT	GAUGE	COLOR	TERMINAL	SEAL/SLEEVE
1	95(+)	18	TN	3689960C1	3623615C1
2	95(-)	18	TN	3689960C1	3623615C1

DEF HARNESS INTERCONNECT
(674)
(LOCATED IN ENGINE)

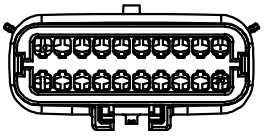

CONNECTOR 3990222C1

CAV	CIRCUIT	GAUGE	COLOR	TERMINAL
1	95D	16	TN	3709927C1
2	95E	18	TN	3709927C1
3	95F	16	TN	3709927C1
4	10	16	WH	3709927C1
5	95G	16	TN	3709927C1
6	95-GBD	16	TN	3709927C1
7	95H	16	TN	3709927C1
8	95J	16	TN	3709927C1
9	95K	16	TN	3709927C1
10	95A	16	TN	3709927C1
11	95-G	16	TN	3709927C1
12	95B	16	TN	3709927C1
13	95C	16	TN	3709927C1
14	14	16	RD	3709927C1
15	13	16	PK	3709927C1
16	14D	16	RD	3709927C1
17	95-GAD	16	TN	3709927C1
18	1 5(-)	18	GN	3709927C1
19	1 5(+)	18	YL	3709927C1
20	14A	16	RD	3709927C1

CHK	DATE	CHANGE	REV	REFERENCE	DRAWN	NAME		
–	–	INITIAL RELEASE.	A	92159Y	310615	CIRCUIT DIAGRAM, 9900		
					RELEASE NO. 92159Y	DATE 02AUG13	PART NO. AE08076124	SHEET 086

Figure 289 Connector Composites (672 / 673 / 674)

13.92. CONNECTOR COMPOSITES (674E / 675 / 676), P. 87

NAVISTAR, INC

THIS PRINT IS PROVIDED ON A RESTRICTED BASIS AND IS NOT TO BE USED IN ANY WAY DETRIMENTAL TO THE INTEREST OF NAVISTAR, INC.

ELECTRICAL CIRCUIT DIAGRAM CHAPTER 13

CONNECTOR BODY COMPOSITE MATING VIEW SHOWN

DEF TANK CONNECTOR
(674E)
(LOCATED IN ENGINE)

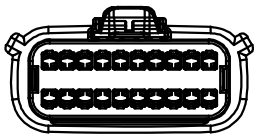

CONNECTOR 3990231C1

CAV	CIRCUIT	GAUGE	COLOR	TERMINAL
1	K95D	20	TN	3743668C1
2	K95E	20	TN	3743668C1
3	K95F	20	TN	3743668C1
4	K10-GL	16	WH	0239481R1
5	K95G	20	TN	3743668C1
6	K95-GB	16	TN	3743666C1
7	K95H	20	TN	0239481R1
8*	K95J	16	VT	0239481R1
8#	K6E	20	PK	0239481R1
9	K95K	20	TN	3743668C1
10	K95A1	20	TN	3743668C1
11	K95M	16	TN	0239481R1
12	K95B	20	TN	3743668C1
13	K95C	20	TN	3743668C1
14	K14	16	RD	0239481R1
15	K13A	16	PK	0239481R1
16	K13E	16	PK	0239481R1
17	K95-GA	20	TN	3743668C1
18	K5(-)	18	LT GN	3686943C1
19	K5(+)	18	YL	3686943C1
20	K14A	16	RD	0239481R1

* W/ CRUISE CONTROL & N/ REMOTE PT09900
\# W/ CRUISE CONTROL & W/ REMOTE PT09900

BACKFLOW HEATER LINE
(675)
(LOCATED IN ENGINE)

CONNECTOR 3854665C91

CAV	CIRCUIT	GAUGE	COLOR	TERMINAL
1	95AA	16	TN	1680205C1
2	95-GA	16	TN	1680205C1

PRESSURE HEATER LINE
(676)
(LOCATED IN ENGINE)

CONNECTOR 3854666C91

CAV	CIRCUIT	GAUGE	COLOR	TERMINAL
1	95BA	16	TN	1680205C1
2	95-GB	16	TN	1680205C1

CHK	DATE	CHANGE	REV	REFERENCE	DRAWN	NAME
–	–	INITIAL RELEASE.	A	92159Y	310615	CIRCUIT DIAGRAM, 9900
					RELEASE NO. 92159Y	DATE 02AUG13 / PART NO. AE08076124 / SHEET 087

Figure 290 Connector Composites (674E / 675 / 676)

13.93. CONNECTOR COMPOSITES (677 / 677M / 678 / 678M), P. 88

NAVISTAR, INC

THIS PRINT IS PROVIDED ON A RESTRICTED BASIS AND IS NOT TO BE USED IN ANY WAY DETRIMENTAL TO THE INTEREST OF NAVISTAR, INC.

ELECTRICAL CIRCUIT DIAGRAM CHAPTER 13

CONNECTOR BODY COMPOSITE MATING VIEW SHOWN

SUCTION HEATER LINE
(677)
(LOCATED IN ENGINE AFTERTREATMENT)

CONNECTOR 3854645C91

CAV	CIRCUIT	GAUGE	COLOR	TERMINAL
1	95CA	16	TN	1680205C1
2	95-GC	16	TN	1680205C1

SPARE 2
(677M)
(LOCATED IN ENGINE AFTERTREATMENT)

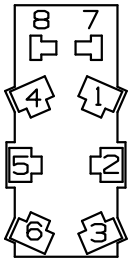

CONNECTOR 2009385C1

CAV	CIRCUIT	GAUGE	COLOR	TERMINAL
1	PLUG	-	-	-
2	PLUG	-	-	-
3	PLUG	-	-	-
4	PLUG	-	-	-
5	14AV	14	RD	1661226C1
6	14AW	14	RD	1661226C1
7	62W	16	DK BL	1661208C1
8	62-GW	18	WH	1661208C1

TANK SENSOR TEMP/LEVEL
(678)
(LOCATED IN ENGINE AFTERTREATMENT)

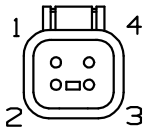

CONNECTOR 3991593C1
BODY LOCK 3545579C1

CAV	CIRCUIT	GAUGE	COLOR	TERMINAL
1	5A(-)	18	GN	3572625C1
2	5A(+)	18	YL	3572625C1
3	10B	16	WH	3572625C1
4	13A	16	PK	3572625C1

SPARE 2
(678M)
(LOCATED IN ENGINE AFTERTREATMENT)

CONNECTOR 1661202C1

CAV	CIRCUIT	GAUGE	COLOR	TERMINAL
A	14AW	14	RD	1661218C1

CHK	DATE	CHANGE	REV	REFERENCE	DRAWN	NAME
–	–	INITIAL RELEASE.	A	92159Y	310615	CIRCUIT DIAGRAM, 9900
					RELEASE NO. 92159Y	DATE 02AUG13 / PART NO. AE08076124 / SHEET 088

Figure 291 Connector Composites (677 / 677M / 678 / 678M)

13.94. CONNECTOR COMPOSITES (679), P. 89

NAVISTAR, INC

THIS PRINT IS PROVIDED ON A RESTRICTED BASIS AND IS NOT TO BE USED IN ANY WAY DETRIMENTAL TO THE INTEREST OF NAVISTAR, INC.

ELECTRICAL CIRCUIT DIAGRAM CHAPTER 13

CONNECTOR BODY COMPOSITE MATING VIEW SHOWN

AFTERTREATMENT PDM
(679)
(LOCATED IN ENGINE)

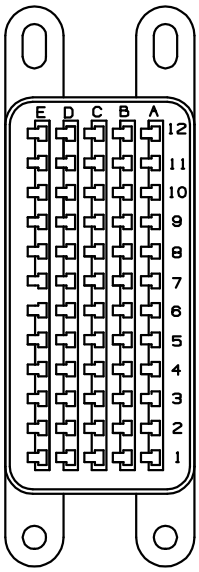

CONNECTOR 6107899C91

CAV	CIRCUIT	GAUGE	COLOR	TERMINAL	SEAL/SLEEVE
A1	95TA	16	TN	2033819C1	1652325C1
A2	95RA	16	TN	2033819C1	1652325C1
A3	95TB	16	TN	2033819C1	1652325C1
A4	95RB	16	TN	2033819C1	1652325C1
A5	95TC	16	TN	2033819C1	1652325C1
A6	95RC	16	TN	2033819C1	1652325C1
A7	95PB	16	TN	2033819C1	1652325C1
A8	95PA	16	TN	2033819C1	1652325C1
A9	14C	16	RD	2033819C1	1652325C1
A10	10C	16	WH	2033819C1	1652325C1
A11	PLUG	-	-	-	-
A12	PLUG	-	-	-	-
B1	95-GBA	16	TN	2033819C1	1652325C1
B2	95AB	16	TN	2033819C1	1652325C1
B3	95-GBB	16	TN	2033819C1	1652325C1
B4	95BB	16	TN	2033819C1	1652325C1
B5	95-GBC	16	TN	2033819C1	1652325C1
B6	95CB	16	TN	2033819C1	1652325C1
B7	95-GAD	16	TN	2033819C1	1652325C1
B8	95N	16	TN	2033819C1	1652325C1
B9	14D	16	RD	2033819C1	1652325C1
B10	14E	16	RD	2033819C1	1652325C1
B11	PLUG	-	-	-	-
B12	PLUG	-	-	-	-
C1	95S	16	TN	2033819C1	1652325C1
C2	14	16	RD	2033819C1	1652325C1
C3	95P	16	TN	2033819C1	1652325C1
C4	14B	16	RD	2033819C1	1652325C1
C5	13B	16	PK	2033819C1	1652325C1
C6	14E	16	RD	2033819C1	1652325C1
C7	PLUG	-	-	-	-
C8	PLUG	-	-	-	-
C9	PLUG	-	-	-	-
C10	PLUG	-	-	-	-
C11	PLUG	-	-	-	-
C12	PLUG	-	-	-	-
D1	PLUG	-	-	-	-
D2	PLUG	-	-	-	-
D3	PLUG	-	-	-	-
D4	PLUG	-	-	-	-
D5	PLUG	-	-	-	-

CHART CONTINUED ON SHEET 90

CHK	DATE	CHANGE	REV	REFERENCE	DRAWN	NAME
–	–	INITIAL RELEASE.	A	92159Y	310615	CIRCUIT DIAGRAM, 9900
					RELEASE NO. 92159Y	DATE 02AUG13 / PART NO. AE08076124 / SHEET 089

Figure 292 Connector Composites (679)

13.95. CONNECTOR COMPOSITES (679 / 679F), P. 90

NAVISTAR, INC

THIS PRINT IS PROVIDED ON A RESTRICTED BASIS AND IS NOT TO BE USED IN ANY WAY DETRIMENTAL TO THE INTEREST OF NAVISTAR, INC.

ELECTRICAL CIRCUIT DIAGRAM CHAPTER 13

CONNECTOR BODY COMPOSITE MATING VIEW SHOWN

CHART CONTINUED FROM SHEET 89

AFTERTREATMENT PDM
(679)

CAV	CIRCUIT	GAUGE	COLOR	TERMINAL	SEAL/SLEEVE
D6	PLUG	-	-	-	-
D7	PLUG	-	-	-	-
D8	PLUG	-	-	-	-
D9	PLUG	-	-	-	-
D10	PLUG	-	-	-	-
D11	PLUG	-	-	-	-
D12	PLUG	-	-	-	-
E1	PLUG	-	-	-	-
E2	PLUG	-	-	-	-
E3	PLUG	-	-	-	-
E4	PLUG	-	-	-	-
E5	PLUG	-	-	-	-
E6	PLUG	-	-	-	-
E7	PLUG	-	-	-	-
E8	PLUG	-	-	-	-
E9	PLUG	-	-	-	-
E10	PLUG	-	-	-	-
E11	PLUG	-	-	-	-
E12	PLUG	-	-	-	-

SPARE SWITCH CONNECTOR
(679F)
(LOCATED IN INSTRUMENT PANEL)

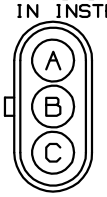

CONNECTOR 0587569C91

CAV	CIRCUIT	GAUGE	COLOR	TERMINAL	SEAL/SLEEVE
A	A14AT	14	RD	0587577C1	0589391C1
B	A14AW	14	RD	0587577C1	0589391C1
C	A14AZ	14	RD	0587577C1	0589391C1

SPARE SWITCH CONNECTOR
(679F)
(LOCATED IN INSTRUMENT PANEL)

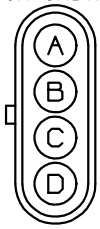

CONNECTOR 0587571C91

CAV	CIRCUIT	GAUGE	COLOR	TERMINAL	SEAL/SLEEVE
A	A14AT	14	RD	0587577C1	0589391C1
B	A14AW	14	RD	0587577C1	0589391C1
C	A14AZ	14	RD	0587577C1	0589391C1
D	A14BW	14	RD	0587577C1	0589391C1

CHK	DATE	CHANGE	REV	REFERENCE	DRAWN	NAME
–	–	INITIAL RELEASE.	A	92159Y	310615	CIRCUIT DIAGRAM, 9900
					RELEASE NO. 92159Y	DATE 02AUG13 / PART NO. AE08076124 / SHEET 090

Figure 293 Connector Composites (679 / 679F)

13.96. CONNECTOR COMPOSITES (679F / 679M / 680 / 681), P. 91

NAVISTAR, INC

THIS PRINT IS PROVIDED ON A RESTRICTED BASIS AND IS NOT TO BE USED IN ANY WAY DETRIMENTAL TO THE INTEREST OF NAVISTAR, INC.

ELECTRICAL CIRCUIT DIAGRAM CHAPTER 13

CONNECTOR BODY COMPOSITE MATING VIEW SHOWN

SPARE SWITCH CONNECTOR
(679F)
(LOCATED IN INSTRUMENT PANEL)

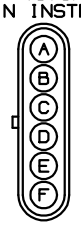

CONNECTOR 0587573C91

CAV	CIRCUIT	GAUGE	COLOR	TERMINAL	SEAL/SLEEVE
A	A14AT	14	RD	0587577C1	0589391C1
B	A14AW	14	RD	0587577C1	0589391C1
C	A14AZ	14	RD	0587577C1	0589391C1
D	A14BW	14	RD	0587577C1	0589391C1
E	A14BT	14	RD	0587577C1	0589391C1
F	PLUG	-	-	-	-

SPARE SWITCH CONNECTOR
(679M)
(LOCATED IN INSTRUMENT PANEL)

CONNECTOR 1661202C1

CAV	CIRCUIT	GAUGE	COLOR	TERMINAL
A	A14AT	14	RD	1661218C1

DEF PUMP
(680)
(LOCATED IN ENGINE)

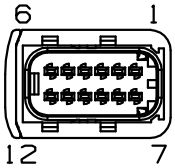

CONNECTOR 3850730C1

CAV	CIRCUIT	GAUGE	COLOR	TERMINAL	SEAL/SLEEVE
1	PLUG	-	-	-	-
2	95J	16	TN	3712037C1	3573653C1
3	95K	16	TN	3712037C1	3573653C1
4	95H	16	TN	3712037C1	3573653C1
5	95N	16	TN	3712037C1	3573653C1
6	10A	16	WH	3712037C1	3573653C1
7	PLUG	-	-	-	-
8	95L	16	TN	3712037C1	3573653C1
9	95D	16	TN	3712037C1	3573653C1
10	95F	16	TN	3712037C1	3573653C1
11	95G	16	TN	3712037C1	3573653C1
12	95M	16	TN	3712037C1	3573653C1

PRIVATE CAN TERM RESISTOR
(681)
(LOCATED IN ENGINE)

CONNECTOR 1667741C1
BODY LOCK 1667771C1

CAV	CIRCUIT	GAUGE	COLOR	TERMINAL	SEAL/SLEEVE
A	5B(-)	18	GN	1661875C1	3568570C1
B	PLUG	-	-	-	-
C	5B(+)	18	YL	1661875C1	3568570C1

CHK	DATE	CHANGE	REV	REFERENCE	DRAWN	NAME
0610	27AUG13	INITIAL RELEASE.	A	92159Y	310615	CIRCUIT DIAGRAM, 9900
					RELEASE NO. 92159Y	DATE 02AUG13 / PART NO. AE08076124 / SHEET 091

Figure 294 Connector Composites (679F / 679M / 680 / 681)

13.97. CONNECTOR COMPOSITES (745 / 800/ 800F / 816F / 823M / 851F), P. 92

NAVISTAR, INC

THIS PRINT IS PROVIDED ON A RESTRICTED BASIS AND IS NOT TO BE USED IN ANY WAY DETRIMENTAL TO THE INTEREST OF NAVISTAR, INC.

ELECTRICAL CIRCUIT DIAGRAM CHAPTER 13

CONNECTOR BODY COMPOSITE MATING VIEW SHOWN

AUX POWER TERMINAL
(745)

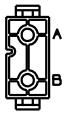

CONNECTOR 3517473C1

CAV	CIRCUIT	GAUGE	COLOR	TERMINAL
A	A3A	16	RD	3517475C1
B	A3G	16	BK	3517475C1

FAN PROTECTION SWITCH
(800)

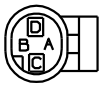

CONNECTOR 1661777C1
BODY LOCK 1661873C1

CAV	CIRCUIT	GA	COLOR	TERMINAL	SEAL/SLV
A	PLUG	-	-	2025431C1	-
B	PLUG	-	-	2025431C1	-
C•	K23B	18	TN	1661875C1	1661872C1
C#	K23A	18	TN	1661875C1	1661872C1
C%	K23B	20	TN	1661875C1	3568570C1
C@	K23A	20	TN	1661875C1	3568570C1
C••	K23C	20	TN	1661875C1	3568570C1
D•	K23A	18	TN	1661875C1	1661872C1
D••	K23B	18	TN	1661875C1	1661872C1
D@	K23-G	18	TN	1661875C1	1661872C1
D#	K23B	20	TN	1661875C1	3568570C1

• W/AIR CONDITIONING & W/FAN OVERRIDE W/APADS
N/AIR CONDITIONING & W/FAN OVERRIDE
% W/AIR CONTIONING & N/FAN OVERRIDE & W/APADS
@ N/AIR CONDITIONING & N/FAN OVERRIDE
•• W/AIR CONDITIONING & N/FAN OVERRIDE & N/APADS

SOURCE BRAKE SWITCH
(800F)

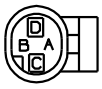

CONNECTOR 1661777C1
BODY LOCK 1661873C1

CAV	CIRCUIT	GAUGE	COLOR	TERMINAL	SEAL/SLEEVE
A	PLUG	-	-	2025431C1	-
B	PLUG	-	-	2025431C1	-
C	A23A	16	TN	1661875C1	1661872C1
D	A23-G	16	TN	1661875C1	1661872C1

LOW BATTERY INDICATOR LIGHT
(816F)

CONNECTOR 0481140C1

CAV	CIRCUIT	GAUGE	COLOR	TERMINAL
A	A14DMF	16	PK	0239807R1
B	A14DMK	16	RD	0239807R1

LEFT MOTORIZED MIRROR SWITCH
(823M)

CONNECTOR 2009385C1

CAV	CIRCUIT	GAUGE	COLOR	TERMINAL
1	A78J	18	LTGN	1661224C1
2	A78-GB	18	WH	1661224C1
3	PLUG	-	-	-
4	A78K	18	LTGN	1661224C1
5	A78L	18	LTGN	1661224C1
7	A62AW2	16	DKBL	1661209C1
8	A62-GAV	18	WH	1661208C1

ENG BRK INTERRUPT
(851F)

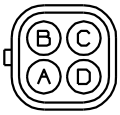

CONNECTOR 1661496C91

CAV	CIRCUIT	GAUGE	COLOR	TERMINAL	SEAL/SLEEVE
A	A24BD	16	GY	0587577C1	1652325C1
B	A24CL	16	GY	0587577C1	1652325C1
C	A92-GT	16	TN	0587577C1	1652325C1
D	A24BL	16	GY	0587577C1	1652325C1

CHK	DATE	CHANGE	REV	REFERENCE	DRAWN	NAME
MJV04	18JUL18	ADDED R/D 800.	B	94591W	310615	CIRCUIT DIAGRAM, 9900
					RELEASE NO. 92159Y	DATE 02AUG13

PART NO. AE08076124 SHEET 092

Figure 295 Connector Composites (745 / 800 / 800F / 816F / 823M / 851F)

13.98. CONNECTOR COMPOSITES (851M / 887 / 922 / 922F / 922M), P. 93

NAVISTAR, INC

THIS PRINT IS PROVIDED ON A RESTRICTED BASIS AND IS NOT TO BE USED IN ANY WAY DETRIMENTAL TO THE INTEREST OF NAVISTAR, INC.

ELECTRICAL CIRCUIT DIAGRAM CHAPTER 13

CONNECTOR BODY COMPOSITE MATING VIEW SHOWN

ENGINE BRAKE
(851M)
(LOCATED IN ENGINE)

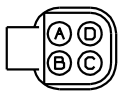

CONNECTOR 1661497C91

CAV	CIRCUIT	GAUGE	COLOR	TERMINAL	SEAL/SLEEVE
A	K24BD	16	GY	0587575C1	1652325C1
B	K24CL	16	GY	0587575C1	1652325C1
C	K92-GV	18	TN	0587576C1	1652325C1
D	K24BL	16	GY	0587575C1	1652325C1

APADS
(887)
(LOCATED IN ENGINE)

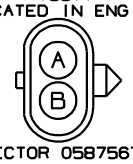

CONNECTOR 0587567C91

CAV	CIRCUIT	GAUGE	COLOR	TERMINAL	SEAL/SLEEVE
A#	K23AC	18	TN	0587578C1	1652325C1
A•	K23AC	18	TN	0587578C1	3517771C1
A•	K23AC	20	TN	0587578C1	3517771C1
A#	K23AC	20	TN	0587578C1	3517771C1
A#	K23A	18	TN	0587578C1	1652325C1
B	K77AE	14	LTGN	0587577C1	0589391C1

• W/AIR CONDITIONING & W/FAN OVERRIDE & W/APADS
W/AIR CONDITIONING & N/FAN OVERRIDE & W/APADS

TRAILER SOCKET (REAR) CONN #1
(922)
(LOCATED AT BACK OF CAB FOR TRAILER SOCKET INTERCONNECT)

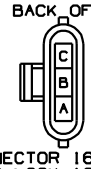

CONNECTOR 1667733C1
BODY LOCK 1667734C1

CAV	CIRCUIT	GAUGE	COLOR	TERMINAL	SEAL/SLEEVE
A	RD	10	RD	1667737C1	1667735C1
B	BK	12	BK	1667737C1	1671603C1
C	GY	10	GY	1667737C1	1667735C1

AUX TRLR SOC CONN
(922F)
(LOCATED BEHIND DRIVER'S SEAT AT B-PILLAR)

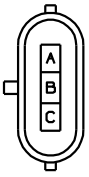

CONNECTOR 1667732C1
BODY LOCK 1667734C1

CAV	CIRCUIT	GAUGE	COLOR	TERMINAL	SEAL/SLEEVE
A•	A70C	10	OR	2025425C1	1667735C1
A#	A70C	10	RD	2025425C1	1667739C1
B	A68B	12	BN	2025424C1	1671603C1
	A68B	12	BN	2025424C1	1667735C1
C•	A94AF	10	OR	2025425C1	1667735C1
C#	A94AF	10	GY	2025425C1	1667739C1

• '18 OR 15' WIRED DIRECT 808 TGN,04SUE 7 WAY
W/DAY CAB W/EXTRA LENGTH CABLE

TRAILER SOCKET #1
(922M)
(LOCATED BEHIND DRIVER'S SEAT AT B-PILLAR)

CONNECTOR 1667733C1
BODY LOCK 1667734C1

CAV	CIRCUIT	GAUGE	COLOR	TERMINAL	SEAL/SLEEVE
A	A70C	10	OR	1667737C1	1667735C1
B	A68B	10	BN	1667737C1	1667735C1
C•	A94AF	10	GY	1667737C1	1667735C1
C#	A71ZB	16	OR	1667738C1	1664232C1

• W/V98-ELECT CAT N/ENG BRK
W/ALL CUMMINS ENGINE W/BRAZIL

CHK	DATE	CHANGE	REV	REFERENCE	DRAWN	NAME
MJV04	18JUL18	ADDED CIRC K23A IN	B	94591W	310615	CIRCUIT DIAGRAM, 9900
		CAV A AT R/D 887.			RELEASE NO. 92159Y	DATE 02AUG13 / PART NO. AE08076124 / SHEET 093

Figure 296 Connector Composites (851M / 887 / 922 / 922F / 922M)

13.99. CONNECTOR COMPOSITES (923 / 923F / 923M / 935F), P. 94

NAVISTAR, INC

THIS PRINT IS PROVIDED ON A RESTRICTED BASIS AND IS NOT TO BE USED IN ANY WAY DETRIMENTAL TO THE INTEREST OF NAVISTAR, INC.

ELECTRICAL CIRCUIT DIAGRAM CHAPTER 13

CONNECTOR BODY COMPOSITE MATING VIEW SHOWN

TRAILER SOCKET (REAR) CONN #2
(923)
(LOCATED BEHIND DRIVER'S SEAT AT B-PILLAR)

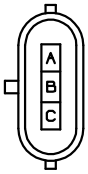

CONNECTOR 1667732C1
BODY LOCK 1667734C1

CAV	CIRCUIT	GAUGE	COLOR	TERMINAL	SEAL/SLEEVE
A	BN	12	BN	2025424C1	1671603C1
B	YL	12	YL	2025424C1	1671603C1
C	GN	12	LTGN	2025424C1	1671603C1

TRAILER SOCKET (REAR) CONN #2
(923F)
(LOCATED AT BACK OF CAB FOR
TRAILER SOCKET INTERCONNECT)

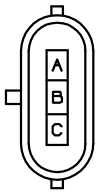

CONNECTOR 1667732C1
BODY LOCK 1667734C1

CAV	CIRCUIT	GAUGE	COLOR	TERMINAL	SEAL/SLEEVE
A	A58S	12	BN	2025424C1	1671603C1
B	A56C	12	OR	2025424C1	1671603C1
C	A57C	12	OR	2025424C1	1671603C1

TRAILER SOCKET #2
(923M)
(LOCATED AT BACK OF CAB FOR
TRAILER SOCKET INTERCONNECT)

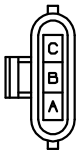

CONNECTOR 1667733C1
BODY LOCK 1667734C1

CAV	CIRCUIT	GAUGE	COLOR	TERMINAL	SEAL/SLEEVE
A*	A58S	12	BN	1667737C1	1671603C1
A#	A58R	12	BN	1667737C1	1667735C1
B*	A56C	12	YL	1667737C1	1671603C1
B#	A56C	12	OR	1667737C1	1667735C1
C	A57C	12	OR	1667737C1	1671603C1
	A57C	12	OR	1667737C1	1667735C1

* '18 OR 15' WIRED DIRECT 808TGN,04SUE 7 WAY
# W/ DAY CAB W/ EXTRA LENGTH CABLE

WORK LIGHT
(935F)
(LOCATED AT BEHIND DRIVER SEAT)

CONNECTOR 1661197C1

CAV	CIRCUIT	GAUGE	COLOR	TERMINAL
A	A65A	14	OR	3534167C1
B	A65C	18	OR	1661212C1

CHK	DATE	CHANGE	REV	REFERENCE	DRAWN	NAME
–	–	INITIAL RELEASE.	A	92159Y	310615	CIRCUIT DIAGRAM, 9900
					RELEASE NO. 92159Y	DATE 02AUG13 / PART NO. AE08076124 / SHEET 094

Figure 297 Connector Composites (923 / 923F / 923M / 935F)

13.100. CONNECTOR COMPOSITES (935 / 935M / 935OL / 935PL), P. 94A

NAVISTAR, INC

THIS PRINT IS PROVIDED ON A RESTRICTED BASIS AND IS NOT TO BE USED IN ANY WAY DETRIMENTAL TO THE INTEREST OF NAVISTAR, INC.

ELECTRICAL CIRCUIT DIAGRAM CHAPTER 13

CONNECTOR BODY COMPOSITE MATING VIEW SHOWN

WORKLIGHT
(935)
(LOCATED AT BEHIND DRIVER SEAT)

CONNECTOR 1661196C1

CAV	CIRCUIT	GAUGE	COLOR	TERMINAL
A	A65A	16	OR	1661209C1
B	A65C	16	OR	1661209C1

CAB HARNESS
(935M)

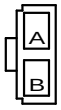

CONNECTOR 1661196C1

CAV	CIRCUIT	GAUGE	COLOR	TERMINAL
A	A65B	18	OR	1661208C1
A	A65A	14	OR	1661209C1
A	A65A	16	OR	1661209C1
A	A65B	16	OR	1661209C1
B	A65-GC	14	WH	1661209C1
B	A65C	16	OR	1661209C1

WORK/BACK UP LIGHT INPUT
(935OL)
(LOCATED AT BEHIND DRIVER SEAT)

CONNECTOR 1661197C1

CAV	CIRCUIT	GAUGE	COLOR	TERMINAL
A	A65L	16	OR	1661212C1
B	A65C	16	OR	1661212C1

WORKLIGHT
(935PL)
(LOCATED AT BEHIND DRIVER SEAT)

CONNECTOR 1661196C1

CAV	CIRCUIT	GAUGE	COLOR	TERMINAL
A	A65A	16	OR	1661209C1
B	A65C	16	OR	1661209C1

CHK	DATE	CHANGE	REV	REFERENCE	DRAWN	NAME
0488	09DEC14	INITIAL RELEASE.	A	92783V	23112202	CIRCUIT DIAGRAM, 9900
					RELEASE NO. 92783V	DATE 11NOV14 / PART NO. AE08076124 / SHEET 94A

Figure 298 Connector Composites Connector Composites (935 / 935M / 935OL / 935PL)

13.101. CONNECTOR COMPOSITES (946 / 957F / 958F / 958M / 959M), P. 95

NAVISTAR, INC

THIS PRINT IS PROVIDED ON A RESTRICTED BASIS AND IS NOT TO BE USED IN ANY WAY DETRIMENTAL TO THE INTEREST OF NAVISTAR, INC.

ELECTRICAL CIRCUIT DIAGRAM CHAPTER 13

CONNECTOR BODY COMPOSITE MATING VIEW SHOWN

AUX SPEED SENSOR
(946)
(LOCATED ON TOP OF TRANSMISSION)

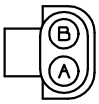

CONNECTOR 0587568C91

CAV	CIRCUIT	GAUGE	COLOR	TERMINAL	SEAL/SLEEVE
A	K44C	14	GY	0587575C1	0589391C1
B	K44D	14	GY	0587575C1	0589391C1

REAR THROTTLE CONTROL
(957F)
(LOCATED NEAR EXTERIOR DASH)

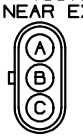

CONNECTOR 0587569C91

CAV	CIRCUIT	GAUGE	COLOR	TERMINAL	SEAL/SLEEVE
A	A97BA	18	VT	0587578C1	1652325C1
B	A97-GC	18	VT	0587578C1	1652325C1
C	A97BB	18	VT	0587578C1	1652325C1

REMOTE CRUISE
(958F)
(LOCATED IN INSTRUMENT PANEL)

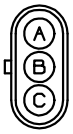

CONNECTOR 0587569C91

CAV	CIRCUIT	GAUGE	COLOR	TERMINAL	SEAL/SLEEVE
A	K97BA	18	VT	0587578C1	1652325C1
B	K97-GG	18	VT	0587578C1	1652325C1
C	K97BB	18	VT	0587578C1	1652325C1

REMOTE CRUISE CONN
(958M)
(LOCATED IN CAB)

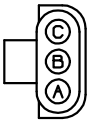

CONNECTOR 0587570C91

CAV	CIRCUIT	GAUGE	COLOR	TERMINAL	SEAL/SLEEVE
A	A97BA	18	VT	0587576C1	1652325C1
B	A97-GB	18	VT	0587576C1	1652325C1
B	A97-GB	16	VT	0587575C1	1652325C1
C	A97BB	18	VT	0587576C1	1652325C1

* W/ 5000 SERIES W/ REMOTE CRUISE CONTROL
\# W/ 5000 SERIES W/ REMOTE CRUISE W/ EATON VMS XMSN

REAR THROTTLE PRESS SWITCH
(959M)
(LOCATED NEAR EXTERIOR DASH)

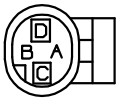

CONNECTOR 1661777C1
BODY LOCK 1661873C1

CAV	CIRCUIT	GAUGE	COLOR	TERMINAL	SEAL/SLEEVE
A	PLUG	-	-	-	-
B	PLUG	-	-	-	-
C	A97-GB	18	VT	1661875C1	1661872C1
D	A97-GC	18	VT	1661875C1	1661872C1

CHK	DATE	CHANGE	REV	REFERENCE	DRAWN	NAME
–	–	INITIAL RELEASE.	A	92159Y	310615	CIRCUIT DIAGRAM, 9900
					RELEASE NO. 92159Y	DATE 02AUG13 / PART NO. AE08076124 / SHEET 095

Figure 299 Connector Composites (946 / 957F / 958F / 958M / 959M)

13.102. CONNECTOR COMPOSITES (964F / 964M), P. 95A

NAVISTAR, INC

THIS PRINT IS PROVIDED ON A RESTRICTED BASIS AND IS NOT TO BE USED IN ANY WAY DETRIMENTAL TO THE INTEREST OF NAVISTAR, INC.

ELECTRICAL CIRCUIT DIAGRAM CHAPTER 13

CONNECTOR BODY COMPOSITE MATING VIEW SHOWN

CUSTOMER WORKLIGHTS
(964F)
(LOCATED AT BEHIND DRIVER SEAT)

CONNECTOR 1661197C1

CAV	CIRCUIT	GAUGE	COLOR	TERMINAL
A#	A65D	16	OR	1661214C2
A#	A65W	16	OR	1661214C2
B#	A65G	14	OR	3534167C1
B	A71E	14	OR	3534167C1

W/ AUX HEATER

CUSTOMER WORKLIGHTS
(964F)
(LOCATED AT BEHIND DRIVER SEAT)

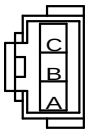

CONNECTOR 1661199C1

CAV	CIRCUIT	GAUGE	COLOR	TERMINAL
A	A71N	16	OR	1661212C1
B	A65G	14	OR	3534167C1
C	A71R	16	OR	1661212C1

CUSTOMER WORKLIGHTS
(964M)
(LOCATED AT BEHIND DRIVER SEAT)

CONNECTOR 1661196C1

CAV	CIRCUIT	GAUGE	COLOR	TERMINAL
A	A65D	16	OR	1661209C1
B	A71E	14	OR	3566715C1

W/ DUAL SWITCHED

CUSTOMER WORKLIGHTS
(964M)
(LOCATED AT BEHIND DRIVER SEAT)

CONNECTOR 1661198C1

CAV	CIRCUIT	GAUGE	COLOR	TERMINAL
A	A71N	14	OR	3566715C1
B	A71E	14	OR	3566715C1
C	A71R	14	OR	3566715C1

W/ BACK-UP LIGHTS W/ LOWERED HEATER BOX

CUSTOMER WORKLIGHTS
(964M)
(LOCATED AT BEHIND DRIVER SEAT)

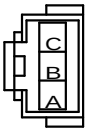

CONNECTOR 1661199C1

CAV	CIRCUIT	GAUGE	COLOR	TERMINAL
A	A71N	16	OR	1661212C1
B	A71E	14	OR	3534167C1
C	A71R	16	OR	1661212C1

CHK	DATE	CHANGE	REV	REFERENCE	DRAWN	NAME
0488	09DEC14	INITIAL RELEASE.	A	92783V	23112202	CIRCUIT DIAGRAM, 9900
					RELEASE NO. 92783V	DATE 11NOV14 / PART NO. AE08076124 / SHEET 95A

Figure 300 Connector Composites (964F / 964M)

13.103. CONNECTOR COMPOSITES (967M / 968M), P. 95B

NAVISTAR, INC

THIS PRINT IS PROVIDED ON A RESTRICTED BASIS AND IS NOT TO BE USED IN ANY WAY DETRIMENTAL TO THE INTEREST OF NAVISTAR, INC.

ELECTRICAL CIRCUIT DIAGRAM CHAPTER 13

CONNECTOR BODY COMPOSITE MATING VIEW SHOWN

RIGHT FLOOD LIGHT
(967M)
(LOCATED AT BEHIND DRIVER SEAT)

CONNECTOR 1661196C1

CAV	CIRCUIT	GAUGE	COLOR	TERMINAL
A*	A65E	14	OR	1661209C1
A	A65E	14	OR	3566715C1
A	A65B3	14	OR	3566715C1
B*	A65-GA	14	WH	1661209C1
B	A65-GA	14	WH	3566715C1
B	A65-GC3	14	WH	3566715C1

* N/ SLEEPER

RIGHT FLOOD LIGHT
(968M)
(LOCATED AT BEHIND DRIVER SEAT)

CONNECTOR 1661196C1

CAV	CIRCUIT	GAUGE	COLOR	TERMINAL
A*	A65D	14	OR	1661209C1
A	A65F	14	OR	3566715C1
A	A65B2	14	OR	3566715C1
B*	A65-G	14	WH	1661209C1
B	A65-G	14	WH	3566715C1
B	A65-GC2	14	WH	3566715C1

* N/ SLEEPER

CHK	DATE	CHANGE	REV	REFERENCE	DRAWN	NAME
0488	09DEC14	INITIAL RELEASE.	A	92783V	23112202	CIRCUIT DIAGRAM, 9900
					RELEASE NO. 92783V	DATE 11NOV14 / PART NO. AE08076124 / SHEET 95B

Figure 301 Connector Composites (967M / 968M)

13.104. CONNECTOR COMPOSITES (974F / 974M), P. 96

NAVISTAR, INC

THIS PRINT IS PROVIDED ON A RESTRICTED BASIS AND IS NOT TO BE USED IN ANY WAY DETRIMENTAL TO THE INTEREST OF NAVISTAR, INC.

ELECTRICAL CIRCUIT DIAGRAM CHAPTER 13

CONNECTOR BODY COMPOSITE MATING VIEW SHOWN

B-PILLAR/AUX TRAILER SOCKET HARNESS
(974F)
(LOCATED ON BACK OF CAB)

CONNECTOR 1669834C1
BODY LOCK 1675053C1

CAV	CIRCUIT	GAUGE	COLOR	TERMINAL	SEAL/SLEEVE
A*	BLACK	12	BK	2033912C1	0589390C1
A#	A72C	12	OR	2033912C1	0589390C1

TRLR SOCKET INSTR EL HARNESS CONN
(974F)
(LOCATED ON BACK OF CAB)

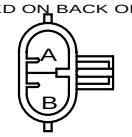

CONNECTOR 2031520C1
BODY LOCK 2033927C1

CAV	CIRCUIT	GAUGE	COLOR	TERMINAL	SEAL/SLEEVE
A	A72C	12	BK	2025422C1	2025427C1
B	A94AK	12	WH	2025422C1	2025427C1

AUX TRLR SOCKET
(974F)
(LOCATED ON BACK OF CAB & END OF FRAME)

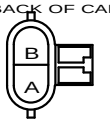

CONNECTOR 2031522C1
BODY LOCK 2033927C1

CAV	CIRCUIT	GAUGE	COLOR	TERMINAL	SEAL/SLEEVE
A	A72C	12	OR	2031531C1	2025428C1
B	A94AK	12	GY	2031531C1	2025428C1

AUX TRLR SOCKET
(974M)
(LOCATED ON BACK OF CAB & END OF FRAME)

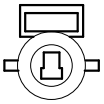

CONNECTOR 1664531C1
BODY LOCK 1675053C1

CAV	CIRCUIT	GAUGE	COLOR	TERMINAL	SEAL/SLEEVE
A*	BLACK	12	BK	2033816C1	0589390C1
A#	A72C	12	OR	2033816C1	0589390C1

* W/PRO-SLEEPER
\# AUX TRLR SOCKET W/CENTER PIN CIRCUIT

CHK	DATE	CHANGE	REV	REFERENCE	DRAWN	NAME
–	–	INITIAL RELEASE.	A	92159Y	310615	CIRCUIT DIAGRAM, 9900
					RELEASE NO. 92159Y	DATE 02AUG13 / PART NO. AE08076124 / SHEET 096

Figure 302 Connector Composites (974F / 974M)

13.105. CONNECTOR COMPOSITES (975F / 979F), P. 97

NAVISTAR, INC

THIS PRINT IS PROVIDED ON A RESTRICTED BASIS AND IS NOT TO BE USED IN ANY WAY DETRIMENTAL TO THE INTEREST OF NAVISTAR, INC.

ELECTRICAL CIRCUIT DIAGRAM CHAPTER 13

CONNECTOR BODY COMPOSITE MATING VIEW SHOWN

AUX TRLR SOCKET
(975F)
(LOCATED ON BACK OF CAB & END OF FRAME)

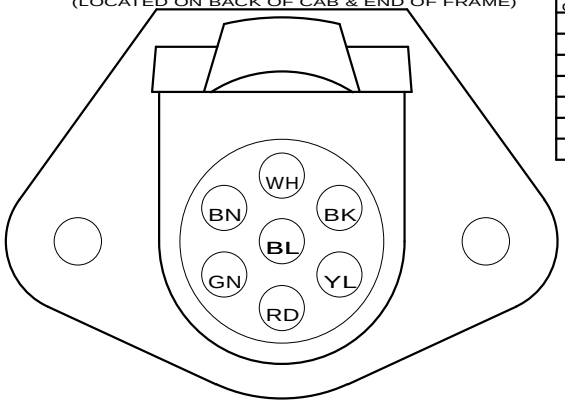

CONNECTOR 1663570C1

CAV	CIRCUIT	GAUGE	COLOR	TERMINAL
BK	A58AA	12	BN	INCLUDED
BL	A72C	12	OR	INCLUDED
BN	A68AB	10	BN	INCLUDED
GN	A57AB	12	OR	INCLUDED
RD	A70AB	10	OR	INCLUDED
WH	A11-GG	8	WH	INCLUDED
YL	A56AB	12	OR	INCLUDED

AUX TRLR SOCKET
(975F)
(LOCATED ON BACK OF CAB & END OF FRAME)

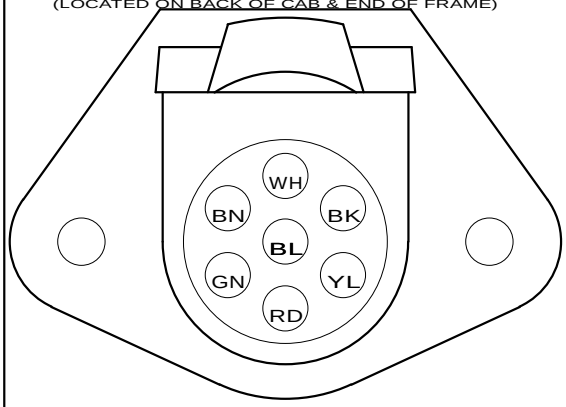

CONNECTOR 3531276C1

CAV	CIRCUIT	GAUGE	COLOR	TERMINAL
BK	A72D	12	BK	INCLUDED
BL	A94AJ	10	LTBL	INCLUDED
BN	A98AT(-)	12	BN	INCLUDED
GN	A98AS(+)	12	LTGN	INCLUDED
RD	A72E	10	RD	INCLUDED
WH	A11-GG	8	WH	INCLUDED
YL	A94AK	12	YL	INCLUDED

CAB/SLEEPER HARNESS
(979F)

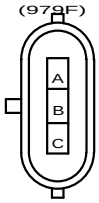

CONNECTOR 1667732C1
BODY LOCK 1667734C1

CAV	CIRCUIT	GAUGE	COLOR	TERMINAL	SEAL/SLEEVE
A	A70C	10	OR	2025425C1	1667739C1
B	A68B	10	BN	2025425C1	1667739C1
C	A94AF	10	GY	2025425C1	1667739C1

CHK	DATE	CHANGE	REV	REFERENCE	DRAWN	NAME
–	–	INITIAL RELEASE.	A	92159Y	310615	CIRCUIT DIAGRAM, 9900
					RELEASE NO. 92159Y	DATE 02AUG13 / PART NO. AE08076124 / SHEET 097

Figure 303 Connector Composites (975F / 979F)

13.106. CONNECTOR COMPOSITES (980M / 981F / 982M / 990F / 991F), P. 98

NAVISTAR, INC

THIS PRINT IS PROVIDED ON A RESTRICTED BASIS AND IS NOT TO BE USED IN ANY WAY DETRIMENTAL TO THE INTEREST OF NAVISTAR, INC.

ELECTRICAL CIRCUIT DIAGRAM CHAPTER 13

CONNECTOR BODY COMPOSITE MATING VIEW SHOWN

CAB/SLEEPER HARNESS
(980M)

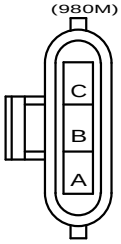

CONNECTOR 1667733C1
BODY LOCK 1667734C1

CAV	CIRCUIT	GAUGE	COLOR	TERMINAL	SEAL/SLEEVE
A	A58S	12	BN	1667737C1	1667735C1
B	A56C	12	OR	1667737C1	1667735C1
C	A57C	12	OR	1667737C1	1667735C1

STD TRLR SOCKET
(981F)

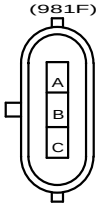

CONNECTOR 1667732C1
BODY LOCK 1667734C1

CAV	CIRCUIT	GAUGE	COLOR	TERMINAL	SEAL/SLEEVE
A	A58R	12	BN	2025424C1	1667735C1
B	A56AA	12	OR	2025424C1	1667735C1
C	A57AA	12	OR	2025424C1	1667735C1

STD TRLR SOCKET
(982M)

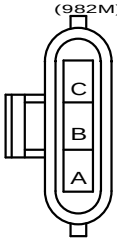

CONNECTOR 1667733C1
BODY LOCK 1667734C1

CAV	CIRCUIT	GAUGE	COLOR	TERMINAL	SEAL/SLEEVE
A	A70AA	10	OR	1667737C1	1667739C1
B	A68AA	10	BN	1667737C1	1667739C1
C	A94AF	10	GY	1667737C1	1667739C1

LEFT CUSTOMER WORKLIGHTS
(990F)
(LOCATED AT BEHIND DRIVER SEAT)

CONNECTOR 1661197C1

CAV	CIRCUIT	GAUGE	COLOR	TERMINAL
A	A65H	14	OR	3534167C1
B	A11-GA	14	WH	3534167C1

RT CUSTOMER WORKLIGHTS
(991F)
(LOCATED AT BEHIND DRIVER SEAT)

CONNECTOR 1661197C1

CAV	CIRCUIT	GAUGE	COLOR	TERMINAL
A	BLACK	14	BK	3534167C1
B	WHITE	14	WH	3534167C1

CHK	DATE	CHANGE	REV	REFERENCE
0488	09DEC14	ADDED R/D 990F & 991F	B	92783V

DRAWN 310615
NAME CIRCUIT DIAGRAM, 9900
RELEASE NO. 92159Y
DATE 02AUG13
PART NO. AE08076124
SHEET 098

Figure 304 Connector Composites (980M / 981F / 982M / 990F / 991F)

13.107. CONNECTOR COMPOSITES (992M / 993M / 1000), P. 98A

NAVISTAR, INC

THIS PRINT IS PROVIDED ON A RESTRICTED BASIS AND IS NOT TO BE USED IN ANY WAY DETRIMENTAL TO THE INTEREST OF NAVISTAR, INC.

ELECTRICAL CIRCUIT DIAGRAM CHAPTER 13

CONNECTOR BODY COMPOSITE MATING VIEW SHOWN

WORKLIGHT IN PK/REV
(992M)
(LOCATED AT BEHIND DRIVER SEAT)

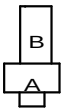

CONNECTOR 0872291R1

CAV	CIRCUIT	GAUGE	COLOR	TERMINAL
A	A71L	16	OR	0188396R1
B	A71M	14	OR	0188396R1

PARK BRAKE SW WORKLIGHT
(993M)
(LOCATED AT BEHIND DRIVER SEAT)

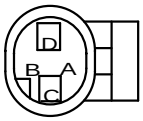

CONNECTOR 1661777C1

CAV	CIRCUIT	GAUGE	COLOR	TERMINAL
A	PLUG	–	–	2025431C1
B	PLUG	–	–	2025431C1
C	71K	16	OR	1661875C1
D	71L	16	OR	1661875C1

AFTERTREATMENT/ ENGINE
(1000)

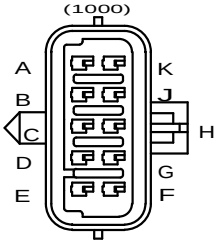

CONNECTOR 3538634C1
BODY LOCK 3538636C1

CAV	CIRCUIT	GAUGE	COLOR	TERMINAL	SEAL/SLEEVE
A	K95A	18	WH	1667742C1	3568570C1
B	K95-GA	18	WH	1667742C1	3568570C1
C	K95B	18	WH	1667742C1	3568570C1
D	K95-GB	18	WH	1667742C1	3568570C1
E	K95C	18	WH	1667742C1	3568570C1
F	K95-GC	18	WH	1667742C1	3568570C1
G	K95-GD	18	WH	1667742C1	3568570C1
H	K95E	18	WH	1667742C1	3568570C1
J	K95DA	18	WH	1667742C1	3568570C1
K	PLUG	–	–	–	–

CHK	DATE	CHANGE	REV	REFERENCE	DRAWN	NAME
0488	09DEC14	INITIAL RELEASE.	A	92783V	23112202	CIRCUIT DIAGRAM, 9900
					RELEASE NO. 92783V	DATE 11NOV14 / PART NO. AE08076124 / SHEET 98A

Figure 305 Connector Composites (992M / 993M / 1000)

13.108. CONNECTOR COMPOSITES (1000), P. 99

NAVISTAR, INC

THIS PRINT IS PROVIDED ON A RESTRICTED BASIS AND IS NOT TO BE USED IN ANY WAY DETRIMENTAL TO THE INTEREST OF NAVISTAR, INC.

ELECTRICAL CIRCUIT DIAGRAM CHAPTER 13

CONNECTOR BODY COMPOSITE MATING VIEW SHOWN

ABS DASH CONNECTOR
(1000)

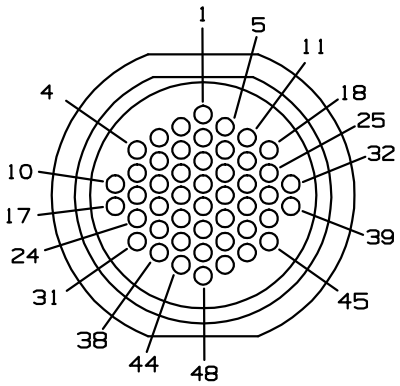

CONNECTOR 3566553C1

CAV	CIRCUIT	GAUGE	COLOR	TERMINAL
1	A94BA	18	DK BL	3566559C1
2	A94BB	18	YL	3566559C1
3	A94BC	18	GY	3566559C1
4	A94BF	18	OR	3566559C1
5	A94CB	18	PL	3566559C1
6	A94BH	18	LT GN	3566559C1
7	A94BJ	18	LT BL	3566559C1
8	A94BK	18	BK	3566559C1
9	A94BL	18	RD	3566559C1
10	A94BM	18	BN	3566559C1
11	A2(+)	18	YL	3566559C1
12	PLUG	-	-	-
13	A2(-)	18	GN	3566559C1
14	A94BN	18	BN	3566559C1
15	A94BP	18	RD	3566559C1
16	A94BR	18	BK	3566559C1
17	A94BS	18	PL	3566559C1
18	A94BT	18	LT BL	3566559C1
19	A94BU	18	LT GN	3566559C1
20	A94BV	18	BN	3566559C1
21	A94BW	18	DK BL	3566559C1
22	A94BX	18	YL	3566559C1
23	A94BY	18	DK BL	3566559C1
24	A94BZ	18	OR	3566559C1
25	A94CA	18	GY	3566559C1

CAV	CIRCUIT	GAUGE	COLOR	TERMINAL
26	PLUG	-	-	-
27	PLUG	-	-	-
28	PLUG	-	-	-
29	PLUG	-	-	-
30	PLUG	-	-	-
31	PLUG	-	-	-
32	PLUG	-	-	-
33	PLUG	-	-	-
34	A94CD	16	GY	3566559C1
35	PLUG	-	-	-
36	PLUG	-	-	-
37	PLUG	-	-	-
38	PLUG	-	-	-
39	PLUG	-	-	-
40	PLUG	-	-	-
41	PLUG	-	-	-
42	PLUG	-	-	-
43	PLUG	-	-	-
44	PLUG	-	-	-
45	PLUG	-	-	-
46	PLUG	-	-	-
47	PLUG	-	-	-
48	A94CE	16	GY	3566559C1

CHK	DATE	CHANGE	REV	REFERENCE	DRAWN	NAME
0610	27AUG13	INITIAL RELEASE.	A	92159Y	310615	CIRCUIT DIAGRAM, 9900
					RELEASE NO. 92159Y	DATE 02AUG13 / PART NO. AE08076124 / SHEET 099

Figure 306 Connector Composites (1000)

13.109. CONNECTOR COMPOSITES (1010 / 1027 / 1033F), P. 100

NAVISTAR, INC

THIS PRINT IS PROVIDED ON A RESTRICTED BASIS AND IS NOT TO BE USED IN ANY WAY DETRIMENTAL TO THE INTEREST OF NAVISTAR, INC.

ELECTRICAL CIRCUIT DIAGRAM CHAPTER 13

CONNECTOR BODY COMPOSITE MATING VIEW SHOWN

GND SPLICE PACK
(1010)

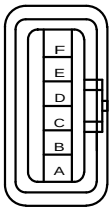

CONNECTOR 3543729C1
BODY LOCK 3543731C1

CAV	CIRCUIT	GAUGE	COLOR	TERMINAL	SEAL/SLEEVE
A	R10-G	16	WH	3535303C1	3535424C1
B	R10-GA	16	WH	3535303C1	3535424C1
C	PLUD	–	–	–	–
D	R10-GP	16	WH	3535303C1	3535424C1
E	R10-GF	16	WH	3535303C1	3535424C1
F	PLUG	–	–	–	–

ECM BATT+ / DEF BATT-
(1027)

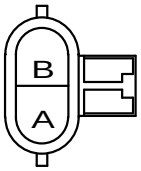

CONNECTOR 2031522C1
BODY LOCK 2033927C1

CAV	CIRCUIT	GAUGE	COLOR	TERMINAL	SEAL/SLEEVE
A	K14	10	RD	2031531C1	2025427C1
B	K10-H	10	WH	2031531C1	2025427C1

POWER WINDOW RIGHT
(1033F)

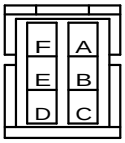

CONNECTOR 1661201C1

CAV	CIRCUIT	GAUGE	COLOR	TERMINAL
A	PLUG	–	–	–
B	A83D	14	LT GN	3534167C1
C	PLUG	–	–	–
D	A83J	14	LT GN	3534167C1
E	A83K	14	LT GN	3534167C1
F	PLUG	–	–	–

CHK	DATE	CHANGE	REV	REFERENCE	DRAWN	NAME
0610	27AUG13	INITIAL RELEASE.	A	92159Y	310615	CIRCUIT DIAGRAM, 9900
					RELEASE NO. 92159Y	DATE 02AUG13 / PART NO. AE08076124 / SHEET 100

Figure 307 Connector Composites (1010 / 1027 / 1033F)

13.110. CONNECTOR COMPOSITES (1034F / 1048F / 1049F), P. 101

NAVISTAR, INC

THIS PRINT IS PROVIDED ON A RESTRICTED BASIS AND IS NOT TO BE USED IN ANY WAY DETRIMENTAL TO THE INTEREST OF NAVISTAR, INC.

ELECTRICAL CIRCUIT DIAGRAM CHAPTER 13

CONNECTOR BODY COMPOSITE MATING VIEW SHOWN

POWER WINDOW LEFT
(1034F)
(LOCATED ON LEFT SIDE DOOR)

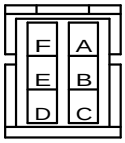

CONNECTOR 1661201C1

CAV	CIRCUIT	GAUGE	COLOR	TERMINAL
A	A83-GA	14	WH	3534167C1
B	A83J	14	LTGN	3534167C1
C	A83C	14	LTGN	3534167C1
D	PLUG	–	–	–
E	A83K	14	LTGN	3534167C1
F	PLUG	–	–	–

LEFT POWER LOCK
(1048F)
(LOCATED IN LEFT SIDE DOOR)

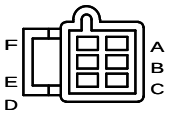

CONNECTOR 2031872C1
BODY LOCK 2031874C1

CAV	CIRCUIT	GAUGE	COLOR	TERMINAL
A	A81M	18	LTGN	1661262C1
B	A81-GC	18	WH	1661262C1
C	A62BD	18	DKBL	1661262C1
D*	A81N	18	LTGN	1661262C1
D#	A81U	18	LTGN	1661262C1
E	A81F	18	LTGN	1661262C1
F	A81K	18	LTGN	1661262C1

* WIN/LOCK WIRING, POWER LOCK, BOTH SIDES
\# KEYLESS ENTRY SYSTEM - REMOTE

RIGHT POWER LOCK
(1049F)
(LOCATED IN RIGHT SIDE DOOR)

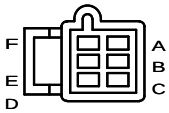

CONNECTOR 2031872C1
BODY LOCK 2031874C1

CAV	CIRCUIT	GAUGE	COLOR	TERMINAL
A	A81P	18	LTGN	1661262C1
B	A81J	18	LTGN	1661262C1
C	A81L	18	LTGN	1661262C1
D*	A81E	18	LTGN	1661262C1
D#	A81S	18	LTGN	1661262C1
E	A81-GD	18	WH	1661262C1
F	A62BC	18	DKBL	1661262C1

* WIN/LOCK WIRING, POWER LOCK, BOTH SIDES
\# KEYLESS ENTRY SYSTEM - REMOTE

CHK	DATE	CHANGE	REV	REFERENCE	DRAWN	NAME
0610	27AUG13	INITIAL RELEASE.	A	92159Y	310615	CIRCUIT DIAGRAM, 9900
					RELEASE NO. 92159Y	DATE 02AUG13 / PART NO. AE08076124 / SHEET 101

Figure 308 Connector Composites (1034F / 1048F / 1049F)

13.111. CONNECTOR COMPOSITES (1050M / 1050ML / 1054M), P. 102

NAVISTAR, INC

THIS PRINT IS PROVIDED ON A RESTRICTED BASIS AND IS NOT TO BE USED IN ANY WAY DETRIMENTAL TO THE INTEREST OF NAVISTAR, INC.

ELECTRICAL CIRCUIT DIAGRAM CHAPTER 13

CONNECTOR BODY COMPOSITE MATING VIEW SHOWN

LT PWR MIRROR & COURTE SY LIGHT
(1050M)
(LOCATED ON HOOD LEFT SIDE)

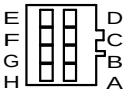

CONNECTOR 3515762C1
BODY LOCK 3515764C1

CAV	CIRCUIT	GAUGE	COLOR	TERMINAL
A	A63V	18	DKBL	1661261C1
B	A63H	18	DKBL	1661261C1
C	A11-GZ	18	WH	1661261C1
D*	A58J	18	BN	1661261C1
D#	A78R	18	LTGN	1661261C1
E*	A78J	18	LTGN	1661261C1
E#	A78N	18	LTGN	1661261C1
F	A78K	18	LTGN	1661261C1
F	A78P	18	LTGN	1661261C1
G	A78B	18	LTGN	1661261C1
H	A63C	18	DKBL	1661261C1

* MIRROR WIRING, POWER, RIGHT SINGLE AXIS
\# MIRROR WIRING, POWER, RT AND LT DUAL AXIS

RT PWR MIRROR & COURTESY LIGHT
(1050ML)
(LOCATED ON HOOD RIGHT SIDE)

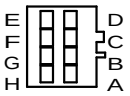

CONNECTOR 3515762C1
BODY LOCK 3515764C1

CAV	CIRCUIT	GAUGE	COLOR	TERMINAL
A	A63V	18	DKBL	1661261C1
B	A63H	18	DKBL	1661261C1
C	A11-GZ	18	WH	1661261C1
D	PLUG	–	–	–
E	PLUG	–	–	–
F	PLUG	–	–	–
G	A78B	18	LTGN	1661261C1
H	A63C	18	DKBL	1661261C1

RT PWR MIRROR & COURTESY LIGHT
(1054M)
(LOCATED ON HOOD RIGHT SIDE)

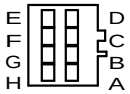

CONNECTOR 3515762C1
BODY LOCK 3515764C1

CAV	CIRCUIT	GAUGE	COLOR	TERMINAL
A	A63X	18	DKBL	1661261C1
B	A63Y	18	DKBL	1661261C1
C	A11-GAE	18	WH	1661261C1
D*	A58L	18	BN	1661261C1
D#	A78S	18	LTGN	1661261C1
E	A78E	18	LTGN	1661261C1
F	A78F	18	LTGN	1661261C1
G	A78A	18	LTGN	1661261C1
H	A63B	18	DKBL	1661261C1

* MIRROR WIRING, POWER, RIGHT SINGLE AXIS
\# MIRROR WIRING, POWER, RT AND LT DUAL AXIS

CHK	DATE	CHANGE	REV	REFERENCE	DRAWN	NAME
0610	27AUG13	INITIAL RELEASE.	A	92159Y	310615	CIRCUIT DIAGRAM, 9900
					RELEASE NO. 92159Y	DATE 02AUG13 / PART NO. AE08076124 / SHEET 102

Figure 309 Connector Composites (1050M / 1050ML / 1054M)

13.112. CONNECTOR COMPOSITES (1054ML / 1056M / 1057M), P. 103

NAVISTAR, INC

THIS PRINT IS PROVIDED ON A RESTRICTED BASIS AND IS NOT TO BE USED IN ANY WAY DETRIMENTAL TO THE INTEREST OF NAVISTAR, INC.

ELECTRICAL CIRCUIT DIAGRAM CHAPTER 13

CONNECTOR BODY COMPOSITE MATING VIEW SHOWN

RT PWR MIRROR & COURTESY LIGHT
(1054ML)
(LOCATED ON HOOD RIGHT SIDE)

CONNECTOR 3515762C1
BODY LOCK 3515764C1

CAV	CIRCUIT	GAUGE	COLOR	TERMINAL
A	A63X	18	DKBL	1661261C1
B	A63Y	18	DKBL	1661261C1
C	A11-GAE	18	WH	1661261C1
D	A58L	18	BN	1661261C1
E	A78S	18	LTGN	1661261C1
F	A78E	18	LTGN	1661261C1
G	A78A	18	LTGN	1661261C1
H	A63B	18	DKBL	1661261C1

BLOWER CONTROLLER SWITCH
(1056M)
(LOCATED IN SLEEPER CONTROL PANEL)

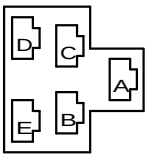

CONNECTOR 1664511C1

CAV	CIRCUIT	GAUGE	COLOR	TERMINAL
A	A75N	14	LTGN	0556897C1
B	PLUG	–	–	–
C	A75H	14	LTGN	0556897C1
D	A75BH	14	LTGN	0556897C1
E	A75B	14	LTGN	0556897C1

HVAC CONTROLLER
(1057M)
(LOCATED IN SLEEPER CONTROL PANEL)

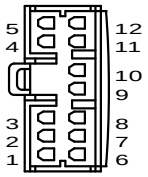

CONNECTOR 2018590C1

CAV	CIRCUIT	GAUGE	COLOR	TERMINAL
1	A75BP	18	LTGN	2018639C1
2	PLUG	–	–	–
3	A75BE	18	LTGN	2018639C1
4	PLUG	–	–	–
5	PLUG	–	–	–
6	A75BF	18	LTGN	2018639C1
7	A75BG	18	LTGN	2018639C1
8	A62P	18	DKBL	2018639C1
9	A75BR	18	LTGN	2018639C1
10	A13BH	18	PK	2018639C1
11	A77W	18	LTGN	2018639C1
12	A75-GL	18	WH	2018639C1

CHK	DATE	CHANGE	REV	REFERENCE	DRAWN	NAME		
0610	27AUG13	INITIAL RELEASE.	A	92159Y	310615	CIRCUIT DIAGRAM, 9900		
					RELEASE NO.	DATE	PART NO.	SHEET
					92159Y	02AUG13	AE08076124	103

Figure 310 Connector Composites (1054ML / 1056M / 1057M)

13.113. CONNECTOR COMPOSITES (1058M / 1059M / 1060M / 1069M), P. 104

NAVISTAR, INC

THIS PRINT IS PROVIDED ON A RESTRICTED BASIS AND IS NOT TO BE USED IN ANY WAY DETRIMENTAL TO THE INTEREST OF NAVISTAR, INC.

ELECTRICAL CIRCUIT DIAGRAM CHAPTER 13

CONNECTOR BODY COMPOSITE MATING VIEW SHOWN

AIR DIST
(1058M)
(LOCATED IN INSTRUMENT PANEL)

CONNECTOR 1661889C1
BODY LOCK 1661890C1

CAV	CIRCUIT	GAUGE	COLOR	TERMINAL
A	A75BK	18	LTGN	1661261C1
B	A75BF	18	LTGN	1661261C1
C	A75-GM	18	WH	1661261C1

RE CIRC
(1059M)
(LOCATED IN INSTRUMENT PANEL)

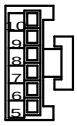

CONNECTOR 3522071C1
BODY LOCK 1661890C1

CAV	CIRCUIT	GAUGE	COLOR	TERMINAL
5	PLUG	–	–	–
6	PLUG	–	–	–
7	A75-GK	18	WH	3522073C1
8	A75BG	18	LTGN	3522073C1
9	PLUG	–	–	–
10	A75BM	18	LTGN	3522073C1

HEATER CONN #3
(1060M)
(LOCATED IN INSTRUMENT PANEL)

CONNECTOR 1669973C1
BODY LOCK 1661890C1

CAV	CIRCUIT	GAUGE	COLOR	TERMINAL
A	A75BE	18	LTGN	1661212C1
B	A75M	14	LTGN	3534167C1

B2 BAT ADAPTER
(1069M)
(LOCATED IN INSTRUMENT PANEL CENTER)

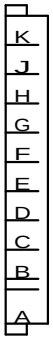

CONNECTOR 2007315C1
BODY LOCK 2007316C1

CAV	CIRCUIT	GAUGE	COLOR	TERMINAL
A	A14FC	10	RD	1661211C1
B	PLUG	–	–	–
C	PLUG	–	–	–
D	PLUG	–	–	–
E	PLUG	–	–	–
F	PLUG	–	–	–
G	PLUG	–	–	–
H	PLUG	–	–	–
J	PLUG	–	–	–
K	PLUG	–	–	–

CHK	DATE	CHANGE	REV	REFERENCE	DRAWN	NAME
0610	27AUG13	INITIAL RELEASE.	A	92159Y	310615	CIRCUIT DIAGRAM, 9900
					RELEASE NO. 92159Y	DATE 02AUG13 / PART NO. AE08076124 / SHEET 104

Figure 311 Connector Composites (1058M / 1059M / 1060M / 1069M)

13.114. CONNECTOR COMPOSITES (1076 / 1084M / 1085M / 1090F), P. 105

NAVISTAR, INC

THIS PRINT IS PROVIDED ON A RESTRICTED BASIS AND IS NOT TO BE USED IN ANY WAY DETRIMENTAL TO THE INTEREST OF NAVISTAR, INC.

ELECTRICAL CIRCUIT DIAGRAM CHAPTER 13

CONNECTOR BODY COMPOSITE MATING VIEW SHOWN

CONNECTS TO LIGHT PIGTAIL
(1076)
(LOCATED IN INSTRUMENT PANEL)

CONNECTOR 1661259C1
BODY LOCK 1661263C1

CAV	CIRCUIT	GAUGE	COLOR	TERMINAL
A	A63U	18	DKBL	1661261C1
B	A63-GU	18	WH	1661261C1

ABS XMSN SIGNAL RELAY
(1084M)
(LOCATED IN INSTRUMENT PANEL)

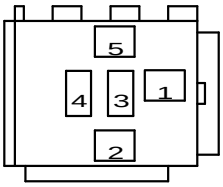

CONNECTOR 0593385C1
BODY LOCK 0593387C1

CAV	CIRCUIT	GAUGE	COLOR	TERMINAL
1	A92-GG	18	TN	1659673C1
2	A92ST	14	GY	1661709C1
3	PLUG	–	–	–
4	A94KP	18	TN	1659673C1
5	A92VT	16	GY	1661709C1

ABS XMSN INTERRUPT
(1085M)
(LOCATED IN INSTRUMENT PANEL)

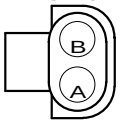

CONNECTOR 0587568C91

CAV	CIRCUIT	GAUGE	COLOR	TERMINAL	SEAL/SLEEVE
A	A94KP	18	TN	0587576C1	1652325C1
B	A92-GG	18	TN	0587576C1	1652325C1

CIGAR LIGHTER
(1090F)
(LOCATED IN INSTRUMENT PANEL)

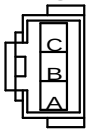

CONNECTOR 1661199C1

CAV	CIRCUIT	GAUGE	COLOR	TERMINAL
A	A62AA	16	DKBL	1661212C1
B	A84H	14	LTGN	3534167C1
C	A84-GH	16	WH	1661212C1

CHK	DATE	CHANGE	REV	REFERENCE	DRAWN	NAME
0610	27AUG13	INITIAL RELEASE.	A	92159Y	310615	CIRCUIT DIAGRAM, 9900
					RELEASE NO. 92159Y	DATE 02AUG13 / PART NO. AE08076124 / SHEET 105

Figure 312 Connector Composites (1076 / 1084M / 1085M / 1090F)

13.115. CONNECTOR COMPOSITES (1090M / 1095F / 1097), P. 106

NAVISTAR, INC

THIS PRINT IS PROVIDED ON A RESTRICTED BASIS AND IS NOT TO BE USED IN ANY WAY DETRIMENTAL TO THE INTEREST OF NAVISTAR, INC.

ELECTRICAL CIRCUIT DIAGRAM CHAPTER 13

CONNECTOR BODY COMPOSITE MATING VIEW SHOWN

CIGAR LIGHTER
(1090M)
(LOCATED IN INSTRUMENT PANEL)

CONNECTOR 1661198C1

CAV	CIRCUIT	GAUGE	COLOR	TERMINAL
A	A62T	16	DKBL	1661209C1
B	A84	14	LTGN	3566715C1
C	A84-G	16	WH	1661209C1

J1939 ALLISON DIAG
(1095F)
(LOCATED AT LEFT SIDE OF ENGINE)

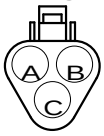

CONNECTOR 3601919C1
BODY LOCK 3601921C1

CAV	CIRCUIT	GAUGE	COLOR	TERMINAL
A	K98YL5	18	YL	1680205C1
B	K98GN5	18	GN	1680205C1
C	PLUG	–	–	–

W/ 2010 MAXFORCE 15L ENG

J1939 ALLISON DIAG
(1095F)
(LOCATED AT LEFT SIDE OF ENGINE)

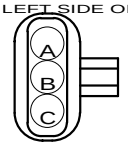

CONNECTOR 1667740C1
BODY LOCK 1667771C1

CAV	CIRCUIT	GAUGE	COLOR	TERMINAL	SEAL/SLEEVE
A	K98YL5	18	YL	1667742C1	3568570C1
B	K98GN5	18	GN	1667742C1	3568570C1
C	PLUG	–	–	–	–

W/ 2013 ISX ENG

J1939 BACKBONE
(1097)
(LOCATED ON TRANSMISSION HARNESS)

CONNECTOR 1667741C1
BODY LOCK 1667771C1

CAV	CIRCUIT	GAUGE	COLOR	TERMINAL	SEAL/SLEEVE
A*	K98YL1	18	YL	1661875C1	3568570C1
A#	K5R(+)	18	YL	1661875C1	3568570C1
B	PLUG	–	–	–	–
C*	K98GN1	18	GN	1661875C1	3568570C1
C#	K5R(-)	18	GN	1661875C1	3568570C1

* W/ ALLISION 4700 OFS W/EOF SHIFTER
\# W/ MANUAL TRANSMISSION

CHK	DATE	CHANGE	REV	REFERENCE	DRAWN	NAME
0610	27AUG13	INITIAL RELEASE.	A	92159Y	310615	CIRCUIT DIAGRAM, 9900
					RELEASE NO. 92159Y	DATE 02AUG13 / PART NO. AE08076124 / SHEET 106

Figure 313 Connector Composites (1090M / 1095F / 1097)

13.116. CONNECTOR COMPOSITES (1109M / 1116ML / 1116OL / 1129M / 1130M), P. 107

NAVISTAR, INC

THIS PRINT IS PROVIDED ON A RESTRICTED BASIS AND IS NOT TO BE USED IN ANY WAY DETRIMENTAL TO THE INTEREST OF NAVISTAR, INC.

ELECTRICAL CIRCUIT DIAGRAM CHAPTER 13

CONNECTOR BODY COMPOSITE MATING VIEW SHOWN

BEACON LIGHT CUSTOMER CONN
(1109M)

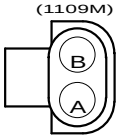

CONNECTOR 0587568C91

CAV	CIRCUIT	GAUGE	COLOR	TERMINAL	SEAL/SLEEVE
A	WHITE	16	WH	0587575C1	1652325C1
B	BLACK	16	BK	0587575C1	1652325C1

MIRROR LIGHT INTERHARN CONNECTION
(1116ML)

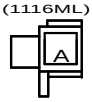

CONNECTOR 1661202C1

CAV	CIRCUIT	GAUGE	COLOR	TERMINAL
A	A58M	16	BN	1661218C1

MIRROR LIGHT INTERHARNESS CONNECTION
(1116OL)

CONNECTOR 1661203C1

CAV	CIRCUIT	GAUGE	COLOR	TERMINAL
A*	A58J	18	BN	1661222C1
A#	A58L	18	BN	1661222C1

* MIRROR WIRING, POWER, RIGHT SINGLE AXIS
\# MIRROR WIRING, POWER, LT & RT SINGLE AXIS

SPARE 1
(1129M)

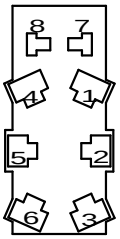

CONNECTOR 2009385C1

CAV	CIRCUIT	GAUGE	COLOR	TERMINAL
1	PLUG	–	–	–
2	PLUG	–	–	–
3	PLUG	–	–	–
4	PLUG	–	–	–
5	A14AS	14	RD	1661226C1
6	A14AT	14	RD	1661226C1
7	A62V	18	DKBL	1661208C1
8	A62-GV	18	WH	1661208C1

SPARE 2
(1130M)

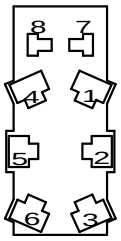

CONNECTOR 2009385C1

CAV	CIRCUIT	GAUGE	COLOR	TERMINAL
1	PLUG	–	–	–
2	PLUG	–	–	–
3	PLUG	–	–	–
4	PLUG	–	–	–
5	A14AV	14	RD	1661226C1
6	A14AW	14	RD	1661226C1
7	A62W	18	DKBL	1661208C1
8	A62-GW	18	WH	1661208C1

CHK	DATE	CHANGE	REV	REFERENCE	DRAWN	NAME
0610	27AUG13	INITIAL RELEASE.	A	92159Y	310615	CIRCUIT DIAGRAM, 9900
					RELEASE NO. 92159Y	DATE 02AUG13 / PART NO. AE08076124 / SHEET 107

Figure 314 Connector Composites (1109M / 1116ML / 1116OL / 1129M / 1130M)

13.117. CONNECTOR COMPOSITES (1131M / 1132M / 1133M), P. 108

NAVISTAR, INC

THIS PRINT IS PROVIDED ON A RESTRICTED BASIS AND IS NOT TO BE USED IN ANY WAY DETRIMENTAL TO THE INTEREST OF NAVISTAR, INC.

ELECTRICAL CIRCUIT DIAGRAM CHAPTER 13

CONNECTOR BODY COMPOSITE MATING VIEW SHOWN

SPARE 3
(1131M)
(LOCATED IN INSTRUMENT PANEL CENTER)

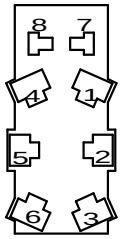

CONNECTOR 2009385C1

CAV	CIRCUIT	GAUGE	COLOR	TERMINAL
1	PLUG	–	–	–
2	PLUG	–	–	–
3	PLUG	–	–	–
4	PLUG	–	–	–
5	A14AX	14	RD	1661226C1
6	A14AZ	14	RD	1661226C1
7	A62T	18	DKBL	1661208C1
8	A62-GT	18	WH	1661208C1

SPARE 4
(1132M)
(LOCATED IN INSTRUMENT PANEL CENTER)

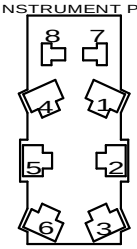

CONNECTOR 2009385C1

CAV	CIRCUIT	GAUGE	COLOR	TERMINAL
1	PLUG	–	–	–
2	PLUG	–	–	–
3	PLUG	–	–	–
4	PLUG	–	–	–
5	A14BV	14	RD	1661226C1
6	A14BW	14	RD	1661226C1
7	A62X	18	DKBL	1661208C1
8	A62-GX	18	WH	1661208C1

SPARE 5
(1133M)
(LOCATED IN INSTRUMENT PANEL CENTER)

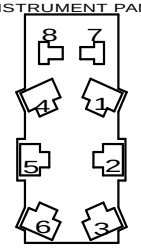

CONNECTOR 2009385C1

CAV	CIRCUIT	GAUGE	COLOR	TERMINAL
1	PLUG	–	–	–
2	PLUG	–	–	–
3	PLUG	–	–	–
4	PLUG	–	–	–
5	A14BS	14	RD	1661226C1
6	A14BT	14	RD	1661226C1
7	A62Y	18	DKBL	1661208C1
8	A62-GY	18	WH	1661208C1

CHK	DATE	CHANGE	REV	REFERENCE	DRAWN	NAME		
0610	27AUG13	INITIAL RELEASE.	A	92159Y	310615	CIRCUIT DIAGRAM, 9900		
					RELEASE NO. 92159Y	DATE 02AUG13	PART NO. AE08076124	SHEET 108

Figure 315 Connector Composites (1131M / 1132M / 1133M)

13.118. CONNECTOR COMPOSITES (1135M / 1137F / 1141), P. 109

NAVISTAR, INC

THIS PRINT IS PROVIDED ON A RESTRICTED BASIS AND IS NOT TO BE USED IN ANY WAY DETRIMENTAL TO THE INTEREST OF NAVISTAR, INC.

ELECTRICAL CIRCUIT DIAGRAM CHAPTER 13

CONNECTOR BODY COMPOSITE MATING VIEW SHOWN

BEACON LIGHT SWITCH
(1135M)

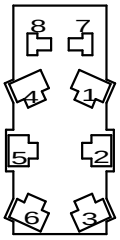

CONNECTOR 2009385C1

CAV	CIRCUIT	GAUGE	COLOR	TERMINAL
1	A11-GL	18	WH	3541250C1
1	A11-GPL	18	WH	3541250C1
2	PLUG	–	–	–
3	PLUG	–	–	–
4	A14BS	14	RD	1661226C1
5	A50BL	18	YL	1661224C1
6	A65F	18	OR	1661224C1
7	A62PLF	18	DKBL	1661208C1
8	A11-GPL	18	WH	1661208C1

DUAL AXIS MOTORIZED MIRROR SWITCH
(1137F)

CONNECTOR 3515763C1
BODY LOCK 3515765C1

CAV	CIRCUIT	GAUGE	COLOR	TERMINAL
A	A78C	18	LTGN	1661262C1
B	A78N	18	LTGN	1661262C1
C	A78P	18	LTGN	1661262C1
D	A78R	18	LTGN	1661262C1
E	A78S	18	LTGN	1661262C1
F	A78F	18	LTGN	1661262C1
G	A78E	18	LTGN	1661262C1
H	A78-GA	18	WH	1661262C1

RIGHT CAB DOME LIGHT
(1141)

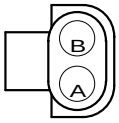

CONNECTOR 0587568C91

CAV	CIRCUIT	GAUGE	COLOR	TERMINAL	SEAL/SLEEVE
A	A63	16	DKBL	0587575C1	1652325C1
B	A63Y	16	DKBL	0587575C1	1652325C1

CHK	DATE	CHANGE	REV	REFERENCE	DRAWN	NAME
–	–	INITIAL RELEASE.	A	92159Y	310615	CIRCUIT DIAGRAM, 9900
					RELEASE NO. 92159Y	DATE 02AUG13 / PART NO. AE08076124 / SHEET 109

Figure 316 Connector Composites (1135M / 1137F / 1141)

13.119. CONNECTOR COMPOSITES (1157F / 1158M / 1162F), P. 110

NAVISTAR, INC

THIS PRINT IS PROVIDED ON A RESTRICTED BASIS AND IS NOT TO BE USED IN ANY WAY DETRIMENTAL TO THE INTEREST OF NAVISTAR, INC.

ELECTRICAL CIRCUIT DIAGRAM CHAPTER 13

CONNECTOR BODY COMPOSITE MATING VIEW SHOWN

POWER WINDOW RIGHT
(1157F)

CONNECTOR 1661197C1

CAV	CIRCUIT	GAUGE	COLOR	TERMINAL
A	A83L	14	LTGN	3534167C1
B	A83M	14	LTGN	3534167C1

POWER WINDOW RIGHT SIDE SWITCH
(1158M)

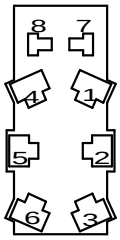

CONNECTOR 2009385C1

CAV	CIRCUIT	GAUGE	COLOR	TERMINAL
1	A83-GA	14	WH	1661227C1
	A62-GBR	18	WH	1661227C1
2	A83L	14	LTGN	1661226C1
3	PLUG	–	–	–
4	A83D	14	LTGN	1661226C1
5	A83M	14	LTGN	1661226C1
6	PLUG	–	–	–
7	A62AL	16	DKBL	1661209C1
8	A62-GBR	18	WH	1661208C1

FRONT REAR AXLE CTD SWITCH
(1162F)

CONNECTOR 3531901C1
BODY LOCK 3531905C1

CAV	CIRCUIT	GAUGE	COLOR	TERMINAL
A	PLUG	–	–	–
B	PLUG	–	–	–
C	A62GB	16	WH	1661261C1
D	A62B	16	DKBL	1661261C1

CHK	DATE	CHANGE	REV	REFERENCE	DRAWN	NAME
0610	27AUG13	INITIAL RELEASE.	A	92159Y	310615	CIRCUIT DIAGRAM, 9900
					RELEASE NO. 92159Y	DATE 02AUG13 / PART NO. AE08076124 / SHEET 110

Figure 317 Connector Composites (1157F / 1158M / 1162F)

13.120. CONNECTOR COMPOSITES (1164F / 1171M / 1172M), P. 111

NAVISTAR, INC

THIS PRINT IS PROVIDED ON A RESTRICTED BASIS AND IS NOT TO BE USED IN ANY WAY DETRIMENTAL TO THE INTEREST OF NAVISTAR, INC.

ELECTRICAL CIRCUIT DIAGRAM CHAPTER 13

CONNECTOR BODY COMPOSITE MATING VIEW SHOWN

REAR REAR AXLE CTD SWITCH
(1164F)
(LOCATED IN INSTRUMENT PANEL)

CONNECTOR 3531901C1
BODY LOCK 3531905C1

CAV	CIRCUIT	GAUGE	COLOR	TERMINAL
A	PLUG	–	–	–
B	PLUG	–	–	–
C	A62GD	16	WH	1661261C1
D	A62D	16	DKBL	1661261C1

WIPER/WASHAR SWITCH
(1171M)
(LOCATED IN INSTRUMENT PANEL)

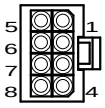

CONNECTOR 3534177C1

CAV	CIRCUIT	GAUGE	COLOR	TERMINAL
1	A12BC	16	LTBL	3534193C1
2	A62AG	16	DKBL	3534193C1
3	A82B	16	GY	3534193C1
4	A82J	16	GY	3534193C1
5	A87A	16	GY	3534193C1
6	A82-GB	16	WH	3534193C1
7	PLUG	–	–	–
8	PLUG	–	–	–

DRL DIODE
(1172M)
(LOCATED IN INSTRUMENT PANEL)

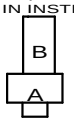

CONNECTOR 0872291R1

CAV	CIRCUIT	GAUGE	COLOR	TERMINAL
A	A58ZC	18	BN	0879630R1
B	A58ZD	18	BN	0879630R1

CHK	DATE	CHANGE	REV	REFERENCE	DRAWN	NAME
0610	27AUG13	INITIAL RELEASE.	A	92159Y	310615	CIRCUIT DIAGRAM, 9900
					RELEASE NO. 92159Y	DATE 02AUG13 / PART NO. AE08076124 / SHEET 111

Figure 318 Connector Composites (1164F / 1171M / 1172M)

13.121. CONNECTOR COMPOSITES (1173M / 1175M / 1176M / 1178M), P. 112

NAVISTAR, INC

THIS PRINT IS PROVIDED ON A RESTRICTED BASIS AND IS NOT TO BE USED IN ANY WAY DETRIMENTAL TO THE INTEREST OF NAVISTAR, INC.

ELECTRICAL CIRCUIT DIAGRAM CHAPTER 13

CONNECTOR BODY COMPOSITE MATING VIEW SHOWN

DRL PARK BR SW WHITE STRIPE
(1173M)
(LOCATED AT BASE OF STEERING COLUMN)

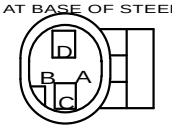

CONNECTOR 1661777C1
BODY LOCK 1661873C1

CAV	CIRCUIT	GAUGE	COLOR	TERMINAL	SEAL/SLEEVE
A	PLUG	–	–	–	–
B	PLUG	–	–	–	–
C	A44B	16	GY	1661875C1	1661872C1
D	A44-GB	16	WH	1661875C1	1661872C1

LOW AIR SW 1 (GREEN AIR LINE)
(1175M)
(LOCATED INSIDE LEFT FRAME RAIL UNDER CAB)

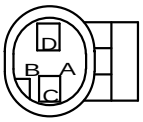

CONNECTOR 1661777C1
BODY LOCK 1661873C1

CAV	CIRCUIT	GAUGE	COLOR	TERMINAL	SEAL/SLEEVE
A	PLUG	–	–	–	–
B	PLUG	–	–	–	–
C	A40A	16	GY	1661875C1	1661872C1
D	A40-GA	16	WH	1661875C1	1661872C1

LOW AIR SW 2 (ORANGE AIR LINE)
(1176M)
(LOCATED INSIDE LEFT FRAME RAIL UNDER CAB)

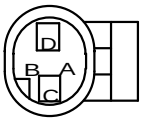

CONNECTOR 1661777C1
BODY LOCK 1661873C1

CAV	CIRCUIT	GAUGE	COLOR	TERMINAL	SEAL/SLEEVE
A	PLUG	–	–	–	–
B	PLUG	–	–	–	–
C	A40B	16	GY	1661875C1	1661872C1
D	A40-GB	16	WH	1661875C1	1661872C1

PARK BRAKE IND. YELLOW STRIPE
(1178M)
(LOCATED AT INSTRUMENT PANEL)

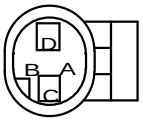

CONNECTOR 1661777C1
BODY LOCK 1661873C1

CAV	CIRCUIT	GAUGE	COLOR	TERMINAL	SEAL/SLEEVE
A	PLUG	–	–	–	–
B	PLUG	–	–	–	–
C	A44A	16	GY	1661875C1	1661872C1
D	A44-GZC	16	WH	1661875C1	1661872C1

CHK	DATE	CHANGE	REV	REFERENCE	DRAWN	NAME		
–	–	INITIAL RELEASE.	A	92159Y	310615	CIRCUIT DIAGRAM, 9900		
					RELEASE NO.	DATE	PART NO.	SHEET
					92159Y	02AUG13	AE08076124	112

Figure 319 Connector Composites (1173M / 1175M / 1176M / 1178M)

13.122. CONNECTOR COMPOSITES (1180F / 1181F / 1182F / 1183F / 1184F / 1185F / 1186M), P. 113

NAVISTAR, INC

THIS PRINT IS PROVIDED ON A RESTRICTED BASIS AND IS NOT TO BE USED IN ANY WAY DETRIMENTAL TO THE INTEREST OF NAVISTAR, INC.

ELECTRICAL CIRCUIT DIAGRAM CHAPTER 13

CONNECTOR BODY COMPOSITE MATING VIEW SHOWN

RT.T/S INDICATOR
(1180F)
(LOCATED ON INSTRUMENT PANEL)

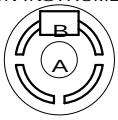

CONNECTOR 0161998R1

CAV	CIRCUIT	GAUGE	COLOR	TERMINAL
A	A57R	18	OR	0186203R2
B	A57-GZA	18	WH	0161997R1

LT.T/S INDICATOR
(1181F)
(LOCATED ON INSTRUMENT PANEL)

CONNECTOR 0161998R1

CAV	CIRCUIT	GAUGE	COLOR	TERMINAL
A	A56R	18	OR	0186203R2
B	A56-GZA	18	WH	0161997R1

HIGH BEAM INDICATOR
(1182F)
(LOCATED ON INSTRUMENT PANEL)

CONNECTOR 0161998R1

CAV	CIRCUIT	GAUGE	COLOR	TERMINAL
A	A52J	18	YL	0186203R2
B	A52-GZA	18	WH	0161997R1

TACH LIGHTS
(1183F)
(LOCATED ON INSTRUMENT PANEL)

CONNECTOR 0161998R1

CAV	CIRCUIT	GAUGE	COLOR	TERMINAL
A	A62D	18	DKBL	0186203R2
B	A62-GZA	18	WH	0161997R1

TACH LIGHTS
(1184F)
(LOCATED ON INSTRUMENT PANEL)

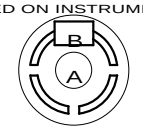

CONNECTOR 0161998R1

CAV	CIRCUIT	GAUGE	COLOR	TERMINAL
A	A62E	18	DKBL	0186203R2
B	A62-GZB	18	WH	0161997R1

TACHOMETER
(1185F)
(LOCATED ON INSTRUMENT PANEL)

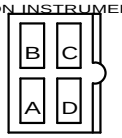

CONNECTOR 0255058C1

CAV	CIRCUIT	GAUGE	COLOR	TERMINAL
A	A48	16	GY	0333733C1
B	PLUG	–	–	–
C	A48-G	16	WH	0333733C1
D	A48B	16	GY	0333733C1

WORKLIGHT SWITCH
DASH MOUNTED
(1186M)
(LOCATED AT BEHIND DRIVER SEAT)

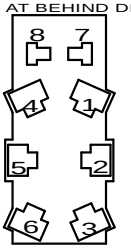

CONNECTOR 2009385C1

CAV	CIRCUIT	GAUGE	COLOR	TERMINAL
1	PLUG	–	–	–
2	PLUG	–	–	–
3	PLUG	–	–	–
4	A65N	16	OR	1661226C1
5	A65C1	16	OR	1661227C1
5	A65M	16	OR	1661227C1
6	A65P	16	OR	1661226C1
7	A65U	16	OR	1661209C1
8	A65R	16	OR	1661211C1
8	A71-GC	16	WH	1661211C1

CHK	DATE	CHANGE	REV	REFERENCE	DRAWN	NAME
0488	09DEC14	ADDED R/D 1186M &	B	92783V	310615	CIRCUIT DIAGRAM, 9900
	1185F				RELEASE NO. 92159Y	DATE 02AUG13 / PART NO. AE08076124 / SHEET 113

Figure 320 Connector Composites (1180F / 1181F / 1182F / 1183F / 1184F / 1185F / 1186M)

13.123. CONNECTOR COMPOSITES (1187F / 1187M / 1190 / 1199M / 1209F / 1212M), P. 114

NAVISTAR, INC

THIS PRINT IS PROVIDED ON A RESTRICTED BASIS AND IS NOT TO BE USED IN ANY WAY DETRIMENTAL TO THE INTEREST OF NAVISTAR, INC.

ELECTRICAL CIRCUIT DIAGRAM CHAPTER 13

CONNECTOR BODY COMPOSITE MATING VIEW SHOWN

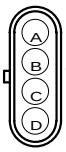

WORKLIGHT
(1187F)
(LOCATED AT BEHIND DRIVER SEAT)
CONNECTOR 0587571C91

CAV	CIRCUIT	GAUGE	COLOR	TERMINAL	SEAL/SLEEVE
A	A65N	16	OR	0587577C1	1652325C1
B	A65P	16	OR	0587577C1	1652325C1
C	A65R	16	OR	0587577C1	1652325C1
D	A65W	16	OR	0587577C1	1652325C1

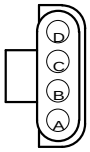

WORKLIGHT
(1187M)
(LOCATED AT BEHIND DRIVER SEAT)
CONNECTOR 0587572C91

CAV	CIRCUIT	GAUGE	COLOR	TERMINAL	SEAL/SLEEVE
A	A65N	16	OR	0587575C1	1652325C1
B	A65P	16	OR	0587575C1	1652325C1
C	A65R	16	OR	0587575C1	1652325C1
C	A65R	18	OR	0587576C1	1652325C1
D	A65W	16	OR	0587575C1	1652325C1

XMSN / DASH JUMPER
(1190)
(LOCATED IN LEFT SIDE OF CAB)

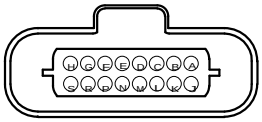

CONNECTOR 3580539C1
BODY LOCK 3573833C1

CAV	CIRCUIT	GAUGE	COLOR	TERMINAL	SEAL/SLEEVE
A	K17-GC	18	WH	3534162C1	3535427C1
	K17-GC	18	PK	3534162C1	3535427C1
B	K3BA(+)	18	DKBL	3534162C1	3535427C1
C	K3BA(-)	18	GY	3534162C1	3535427C1
D	K92J	18	TN	3534162C1	3535427C1
E	K17C	16	PK	3534162C1	3535427C1
F	K92ER	18	TN	3534162C1	3535427C1
G	K17B	18	PK	3534162C1	3535427C1
H	K13A	14	PK	3534163C1	3535428C1
J	K92DL	20	TN	3535299C1	35335427C1
K	K92DM	20	TN	3535299C1	3535427C1
L	K92EG	18	TN	3534162C1	3535427C1
M	K5TC(-)	18	GN	3534162C1	3535427C1
N	K5TC(+)	18	YL	3534162C1	3535427C1
P	PLUG	–	–	–	–
R	PLUG	–	–	–	–
S	PLUG	–	–	–	–

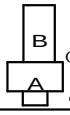

WORKLIGHT
RECTIFIRE
(1199M)
(LOCATED AT BEHIND DRIVER SEAT)
CONNECTOR 0872291R1

CAV	CIRCUIT	GAUGE	COLOR	TERMINAL	SEAL/SLEEVE
A	A65C	16	OR	0188396R1	–
B	A65C1	16	OR	0188396R1	–

CUMMINS ICON THERMOSTAT
(1209F)
(LOCATED IN INSTRUMENT PANEL)

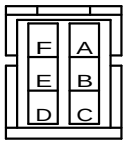

CONNECTOR 1661201C1

CAV	CIRCUIT	GAUGE	COLOR	TERMINAL
A	A14EC	16	RD	1661212C1
B	A11-GEB	16	WH	1661212C1
C	A97EA	18	VT	1661212C1
D	A13ED	16	PK	1661212C1
E	PLUG	–	–	–
F	PLUG	–	–	–

CUMMINS ICON ECM CONN 3
(1212M)
(LOCATED IN INSTRUMENT PANEL)

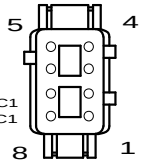

CONNECTOR 3539139C1
BODY LOCK 3539144C1

CAV	CIRCUIT	GAUGE	COLOR	TERMINAL
1	A14EB	16	RD	3518963C1
2	A11-GEA	16	WH	3518963C1
3	A97EB	18	VT	3518963C1
4	A97EA	18	VT	3518963C1
5	A97EJ	18	VT	3518963C1
6	A97EL	18	VT	3518963C1
7	A13EC	16	PK	3518963C1
8	A17	16	PK	3518963C1

CHK	DATE	CHANGE	REV	REFERENCE	DRAWN	NAME
0488	09DEC14	ADDED R/D 1187F,1187M,	B	92783V	310615	CIRCUIT DIAGRAM, 9900
	1199M				RELEASE NO. 92159Y	DATE 02AUG13 / PART NO. AE08076124 / SHEET 114

Figure 321 Connector Composites (1187F / 1187M / 1190 / 1199M / 1209F / 1212M)

13.124. CONNECTOR COMPOSITES (1213F / 1214FL / 1214ML / 1215F), P. 115

NAVISTAR, INC

THIS PRINT IS PROVIDED ON A RESTRICTED BASIS AND IS NOT TO BE USED IN ANY WAY DETRIMENTAL TO THE INTEREST OF NAVISTAR, INC.

ELECTRICAL CIRCUIT DIAGRAM CHAPTER 13

CONNECTOR BODY COMPOSITE MATING VIEW SHOWN

CUMMINS ICON ECM CONN 4
(1213F)
(LOCATED ON LEFT SIDE OF ENGINE)

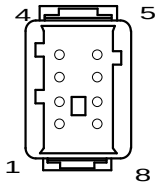

CONNECTOR 3539140C1
BODY LOCK 3539145C1

CAV	CIRCUIT	GAUGE	COLOR	TERMINAL
1	PLUG	–	–	–
2	A97EE	18	VT	3518961C1
3	A17EA	16	PK	3518961C1
4	A97EM	18	VT	3518961C1
5	A17EE	18	PK	3518961C1
6	A17ED	18	PK	3518961C1
7	A98EA(+)	18	BK	3518961C1
8	A98EB(-)	18	BK	3518961C1

ECM START CIRCUIT
(1214FL)
(LOCATED ON LEFT SIDE OF ENGINE)

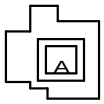

CONNECTOR 1661203C1

CAV	CIRCUIT	GAUGE	COLOR	TERMINAL
A	A17	16	PK	1661222C1

ECM START CIRCUIT CONNECTOR
(1214ML)
(LOCATED ON LEFT SIDE OF ENGINE)

CONNECTOR 1661202C1

CAV	CIRCUIT	GAUGE	COLOR	TERMINAL
A*	A17	16	PK	1661218C1
A#	A17A	16	PK	1661218C1

* W/ CUMMINS IDLE CONTROL & N/PUSH BUTTON START, CEEMAT XMSN
\# W/ CUMMINS IDLE CONTROL & W/PUSH BUTTON

CUMMINS ICON INDICATOR LIGHT
(1215F)
(LOCATED IN INSTRUMENT PANEL)

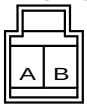

CONNECTOR 0481140C1

CAV	CIRCUIT	GAUGE	COLOR	TERMINAL
A	A97EK	18	VT	0241117R1
B	A97EL	18	VT	0241117R1

CHK	DATE	CHANGE	REV	REFERENCE	DRAWN	NAME
–	–	INITIAL RELEASE.	A	92159Y	310615	CIRCUIT DIAGRAM, 9900
					RELEASE NO. 92159Y	DATE 02AUG13 / PART NO. AE08076124 / SHEET 115

Figure 322 Connector Composites (1213F / 1214FL / 1214ML / 1215F)

13.125. CONNECTOR COMPOSITES (1216F / 1217M / 1218M / 1226M), P. 116

NAVISTAR, INC

THIS PRINT IS PROVIDED ON A RESTRICTED BASIS AND IS NOT TO BE USED IN ANY WAY DETRIMENTAL TO THE INTEREST OF NAVISTAR, INC.

ELECTRICAL CIRCUIT DIAGRAM CHAPTER 13

CONNECTOR BODY COMPOSITE MATING VIEW SHOWN

CUMMINS ICON PARK BRAKE SW
(1216F)
(LOCATED UNDER HOOD-LEFT SIDE BY DASH PANEL)

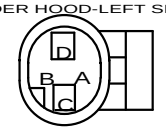

CONNECTOR 1661777C1
BODY LOCK 1661873C1

CAV	CIRCUIT	GAUGE	COLOR	TERMINAL	SEAL/SLEEVE
A	PLUG	–	–	–	–
B	PLUG	–	–	–	–
C	A97EF	18	VT	1661875C1	1661872C1
D	A97EH	18	VT	1661875C1	1661872C1

START RELAY
(1217M)
(LOCATED ON INSTRUMENT PANEL RIGHT SIDE)

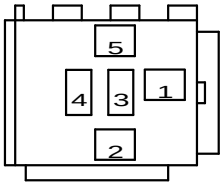

CONNECTOR 0593385C1
BODY LOCK 0593387C1

CAV	CIRCUIT	GAUGE	COLOR	TERMINAL
1	A17EB	16	PK	1661709C1
2*	A17EE	18	PK	1661709C1
2#	A17EF1	18	PK	1661709C1
2@	A17EF1	20	PK	1661709C1
	A17EF1	18	PK	1661709C1
3	PLUG	–	–	–
4	A17EC	16	PK	1661709C1
5	A17ED	18	PK	1659673C1

* W/ CUMMINS W/ CUM IDLE CONTROL SYS W/ PAM, W/ STARTER INTERLOCK
\# W/ CUMMINS W/ CUM IDLE CONTROL SYS N/ PAM, N/ STARTER INTERLOCK
@ W/ 2007 CUMMINS ENG W/ CUM IDLE CONTROL SYSTEM

IGN RELAY
(1218M)
(LOCATED ON INSTRUMENT PANEL RIGHT SIDE)

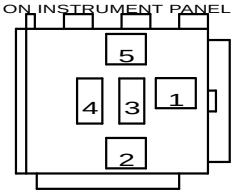

CONNECTOR 0593385C1
BODY LOCK 0593387C1

CAV	CIRCUIT	GAUGE	COLOR	TERMINAL
1	A13EA	12	PK	1661710C1
2	A11-GEE	18	WH	1659673C1
3	A13	12	PK	1661710C1
4	PLUG	–	–	–
5	A97EM	18	VT	1659673C1

12/24V CONV BATTERY FEED
(1226M)
(LOCATED ON INSTRUMENT PANEL RIGHT SIDE)

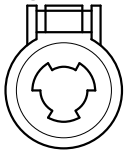

CONNECTOR 3517441C1

CAV	CIRCUIT	GAUGE	COLOR	TERMINAL
A	A14ZA	8	RD	3517439C1

CHK	DATE	CHANGE	REV	REFERENCE	DRAWN	NAME
–	–	INITIAL RELEASE.	A	92159Y	310615	CIRCUIT DIAGRAM, 9900
					RELEASE NO. 92159Y	DATE 02AUG13 / PART NO. AE08076124 / SHEET 116

Figure 323 Connector Composites (1216F / 1217M / 1218M / 1226M)

13.126. CONNECTOR COMPOSITES (1239 / 1244F), P. 117

NAVISTAR, INC

THIS PRINT IS PROVIDED ON A RESTRICTED BASIS AND IS NOT TO BE USED IN ANY WAY DETRIMENTAL TO THE INTEREST OF NAVISTAR, INC.

ELECTRICAL CIRCUIT DIAGRAM CHAPTER 13

CONNECTOR BODY COMPOSITE MATING VIEW SHOWN

J1939 CONN
(1239)
(LOCATED IN INSTRUMENT PANEL CENTER)

CONNECTOR 1667741C1
BODY LOCK 1667771C1

CAV	CIRCUIT	GAUGE	COLOR	TERMINAL	SEAL/SLEEVE
A	A98YL1(+)	18	YL	1661875C1	3568570C1
B	PLUG	–	–	–	–
C	A98GN1(-)	18	GN	1661875C1	3568570C1

CAB/SLEEPER HARNESS CONNECTOR
(1244F)
(LOCATED AT LEFT SIDE BACK OF DRIVER DOOR)

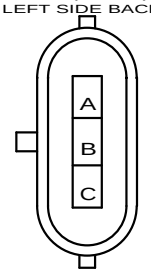

CONNECTOR 1667732C1
BODY LOCK 1667734C1

CAV	CIRCUIT	GAUGE	COLOR	TERMINAL	SEAL/SLEEVE
A	A70C	10	OR	2025425C1	1667735C1
B	A68B	10	BN	2025425C1	1667735C1
C	A94AJ	10	LTBL	2025425C1	1667735C1

REMOTE KEYLESS MODULE CONN 2
(1244F)
(LOCATED IN SLEEPER CONTROL PANEL)

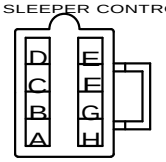

CONNECTOR 2005836C1
BODY LOCK 2006504C1

CAV	CIRCUIT	GAUGE	COLOR	TERMINAL
A	A81-GY	18	WH	1661212C1
B	A81V	18	LTGN	1661212C1
C	A81F	18	LTGN	1661212C1
D	A81R	16	LTGN	1661212C1
E	A81X	18	GY	1661212C1
F	A81T	18	LTGN	1661212C1
G	A63AV	16	DKBL	1661212C1
H	A63AU	18	DKBL	1661212C1

CHK	DATE	CHANGE	REV	REFERENCE	DRAWN	NAME
0610	27AUG13	INITIAL RELEASE.	A	92159Y	310615	CIRCUIT DIAGRAM, 9900
					RELEASE NO. 92159Y	DATE 02AUG13 / PART NO. AE08076124 / SHEET 117

Figure 324 Connector Composites (1239 / 1244F)

13.127. CONNECTOR COMPOSITES (1245M / 1246F), P. 118

NAVISTAR, INC

THIS PRINT IS PROVIDED ON A RESTRICTED BASIS AND IS NOT TO BE USED IN ANY WAY DETRIMENTAL TO THE INTEREST OF NAVISTAR, INC.

ELECTRICAL CIRCUIT DIAGRAM CHAPTER 13

CONNECTOR BODY COMPOSITE MATING VIEW SHOWN

STD TRAILER SOCKET CONNECTOR
(1245M)
(LOCATED AT BOTTOM OF DASH PANEL-LEFT SIDE)

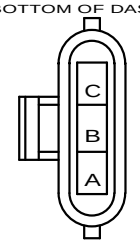

CONNECTOR 1667733C1
BODY LOCK 1667734C1

CAV	CIRCUIT	GAUGE	COLOR	TERMINAL	SEAL/SLEEVE
A	A70C	10	OR	1667737C1	1667735C1
B	A68B	10	BN	1667737C1	1667735C1
C	A72C	12	OR	1667737C1	1671603C1

REMOTE KEYLESS MODULE CONN 3
(1245M)
(LOCATED IN INSTRUMENT PANEL)

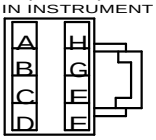

CONNECTOR 2005835C1
BODY LOCK 1667734C1

CAV	CIRCUIT	GAUGE	COLOR	TERMINAL
A	A81-GU	18	WH	1661208C1
B	PLUG	–	–	–
C	A81S	18	LTGN	1661208C1
D	A85E	18	GY	1661208C1
E	A81W	16	LTGN	1661209C1
F	A81D	18	LTGN	1661208C1
G	A63AR	16	DKBL	1661209C1
H	PLUG	–	–	–

KEYLESS REMOTE
PROGRAMMING CONNECTOR #1
(1246F)
(LOCATED IN INSTRUMENT PANEL)

CONNECTOR 0239809R1

CAV	CIRCUIT	GAUGE	COLOR	TERMINAL
A	A81-GW	16	WH	0239806R1
B	PLUG	–	–	–

ISO TRAILER SOCKET
INSTR PANNEL HARNESS CONN
(1246F)
(LOCATED ON BACK OF CAB & END OF FRAME)

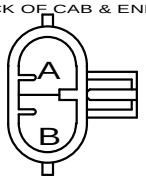

CONNECTOR 2031520C1
BODY LOCK 2033927C1

CAV	CIRCUIT	GAUGE	COLOR	TERMINAL	SEAL/SLEEVE
A	A72C	12	OR	2025422C1	2025427C1
B	A94AK	12	YL	2025422C1	2025427C1

CHK	DATE	CHANGE	REV	REFERENCE
0610	27AUG13	INITIAL RELEASE.	A	92159Y

DRAWN 310615 | NAME CIRCUIT DIAGRAM, 9900

RELEASE NO. 92159Y | DATE 02AUG13 | PART NO. AE08076124 | SHEET 118

Figure 325 Connector Composites (1245M / 1246F)

13.128. CONNECTOR COMPOSITES (1246M / 1247M / 1248M), P. 119

NAVISTAR, INC

THIS PRINT IS PROVIDED ON A RESTRICTED BASIS AND IS NOT TO BE USED IN ANY WAY DETRIMENTAL TO THE INTEREST OF NAVISTAR, INC.

ELECTRICAL CIRCUIT DIAGRAM CHAPTER 13

CONNECTOR BODY COMPOSITE MATING VIEW SHOWN

AUX TRLR SOCKET
(1246M)
(LOCATED ON BACK OF CAB & END OF FRAME)

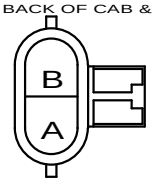

CONNECTOR 2031522C1
BODY LOCK 2033927C1

CAV	CIRCUIT	GAUGE	COLOR	TERMINAL	SEAL/SLEEVE
A	A72C	12	BK	2031531C1	2025427C1
B	A94AK	12	WH	2031531C1	2025427C1

AUX CIRCUIT CONN
(1247M)
(LOCATED ON INSTRUMENT PANEL)

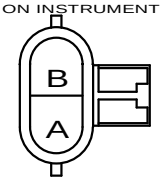

CONNECTOR 2031522C1
BODY LOCK 2033927C1

CAV	CIRCUIT	GAUGE	COLOR	TERMINAL	SEAL/SLEEVE
A	A72D	12	BK	2031531C1	2025427C1
B	A72E	10	RD	2031531C1	2025426C1

KEYLESS REMOTE PROGRAMMING
CONNECTOR #2
(1247M)
(LOCATED ON INSTRUMENT PANEL)

CONNECTOR 0239808R1

CAV	CIRCUIT	GAUGE	COLOR	TERMINAL
A	A81W	16	LT GN	0239805R1

REMOTE KEYLESS HORN BUTTON
(1248M)
(LOCATED ON INSTRUMENT PANEL)

CONNECTOR 0188395R1

CAV	CIRCUIT	GAUGE	COLOR	TERMINAL
A	A85C	18	GY	0879632R1
A	A85E	18	GY	0879632R1

J1708 DATALINK CONNECTOR
(1248M)
(LOCATED ON INSTRUMENT PANEL)

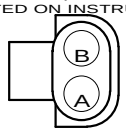

CONNECTOR 0587568C91

CAV	CIRCUIT	GAUGE	COLOR	TERMINAL	SEAL/SLEEVE
A	A98AS(+)	12	LTGN	1673747C1	0589390C1
B	A98AT(-)	12	BN	1673747C1	0589390C1

CHK	DATE	CHANGE	REV	REFERENCE	DRAWN	NAME
0610	27AUG13	INITIAL RELEASE.	A	92159Y	310615	CIRCUIT DIAGRAM, 9900
					RELEASE NO. 92159Y	DATE 02AUG13 / PART NO. AE08076124 / SHEET 119

Figure 326 Connector Composites (1246M / 1247M / 1248M)

13.129. CONNECTOR COMPOSITES (1250 / 1251M / 1258F), P. 120

NAVISTAR, INC

THIS PRINT IS PROVIDED ON A RESTRICTED BASIS AND IS NOT TO BE USED IN ANY WAY DETRIMENTAL TO THE INTEREST OF NAVISTAR, INC.

ELECTRICAL CIRCUIT DIAGRAM CHAPTER 13

CONNECTOR BODY COMPOSITE MATING VIEW SHOWN

TRAILER ABS WARNING LIGHT
(1250)

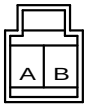

CONNECTOR 0481140C1

CAV	CIRCUIT	GAUGE	COLOR	TERMINAL
A	A94AK	12	GY	0188392R2
B	A94AL	12	GY	0188392R2

STOP LIGHT SWITCH
(1251M)

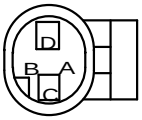

CONNECTOR 1661777C1
BODY LOCK 1661873C1

CAV	CIRCUIT	GAUGE	COLOR	TERMINAL	SEAL/SLEEVE
A	PLUG	–	–	–	–
B	PLUG	–	–	–	–
C	M70	16	OR	1661875C1	1661872C1
D	M70A	16	OR	1661875C1	1661872C1

DIMMER SWITCH
(1258F)

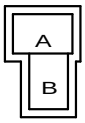

CONNECTOR 0872290R1

CAV	CIRCUIT	GAUGE	COLOR	TERMINAL
A	A52N	16	YL	0239807R1
B	A11-GAW	16	WH	0239807R1

CHK	DATE	CHANGE	REV	REFERENCE
0610	27AUG13	INITIAL RELEASE.	A	92159Y

DRAWN 310615 | NAME CIRCUIT DIAGRAM, 9900

RELEASE NO. 92159Y | DATE 02AUG13 | PART NO. AE08076124 | SHEET 120

Figure 327 Connector Composites (1250 / 1251M / 1258F)

13.130. CONNECTOR COMPOSITES (1258M / 1262 / 1281F / 1281M), P. 121

NAVISTAR, INC

THIS PRINT IS PROVIDED ON A RESTRICTED BASIS AND IS NOT TO BE USED IN ANY WAY DETRIMENTAL TO THE INTEREST OF NAVISTAR, INC.

ELECTRICAL CIRCUIT DIAGRAM CHAPTER 13

CONNECTOR BODY COMPOSITE MATING VIEW SHOWN

SURE POWER LOW VOLTAGE DISCONNECT
(1258M)

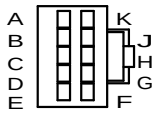

CONNECTOR 3540612C1
BODY LOCK 3540614C1

CAV	CIRCUIT	GAUGE	COLOR	TERMINAL
A	A14DML	16	OR	1661261C1
B	A11-GDC	16	WH	1661261C1
C	A14DMF	16	PK	1661261C1
D	PLUG	–	–	–
E	A14DMH	16	RD	1661261C1
F	PLUG	–	–	–
G	PLUG	–	–	–
H	PLUG	–	–	–
J	A14DML	16	OR	1661261C1
K	PLUG	–	–	–

TCM FUSE
(1262)

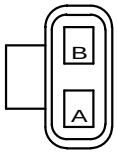

CONNECTOR 1667639C1

CAV	CIRCUIT	GAUGE	COLOR	TERMINAL
A	K14A	12	RD	0188392R2
B	K14AS	12	RD	0188392R2

TEMP/COMP ROOF CONNECTOR
(1281F)

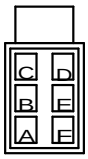

CONNECTOR 3544679C1
BODY LOCK 3544680C1

CAV	CIRCUIT	GAUGE	COLOR	TERMINAL
A	A41A	18	PK	1661212C1
B	A41B	18	RD	1661212C1
C	A41C	18	LTGN	1661212C1
D	A41D	18	LTGN	1661212C1
E	A41E	18	YL	1661212C1
F	41-G	18	WH	1661212C1

TEMP/COMPASS DISPLAY ROOF CONNECTOR
(1281M)

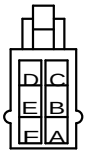

CONNECTOR 3544677C1
BODY LOCK 3544678C1

CAV	CIRCUIT	GAUGE	COLOR	TERMINAL
A	A41A	18	LTGN	1661208C1
B	A41B	18	LTGN	1661208C1
C	A41C	18	LTGN	1661208C1
D	A41D	18	LTGN	1661208C1
E	A41E	18	LTGN	1661208C1
F	A41-G	18	WH	1661208C1

CHK	DATE	CHANGE	REV	REFERENCE	DRAWN	NAME
–	–	INITIAL RELEASE.	A	92159Y	310615	CIRCUIT DIAGRAM, 9900
					RELEASE NO. 92159Y	DATE 02AUG13 / PART NO. AE08076124 / SHEET 121

Figure 328 Connector Composites (1258M / 1262 / 1281F / 1281M)

13.131. CONNECTOR COMPOSITES (1282M / 1283 / 1284 / 1285F), P. 122

NAVISTAR, INC

THIS PRINT IS PROVIDED ON A RESTRICTED BASIS AND IS NOT TO BE USED IN ANY WAY DETRIMENTAL TO THE INTEREST OF NAVISTAR, INC.

ELECTRICAL CIRCUIT DIAGRAM CHAPTER 13

CONNECTOR BODY COMPOSITE MATING VIEW SHOWN

TEMP/COMPASS DISPLAY
(1282M)

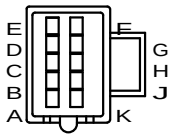

CONNECTOR 3540613C1
BODY LOCK 3540615C1

CAV	CIRCUIT	GAUGE	COLOR	TERMINAL
A	A41B	18	RD	1661262C1
B	A41A	18	PK	1661262C1
C	A41E	18	YL	1661262C1
D	A41-G	18	WH	1661262C1
E	A41F	18	LTGN	1661262C1
F	A41H	18	LTGN	1661262C1
G	A41J	18	LTGN	1661262C1
J	A41C	18	LTGN	1661262C1
K	A41D	18	LTGN	1661262C1

COMPASS MODULE
(1283)

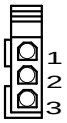

CONNECTOR 3573444C1

CAV	CIRCUIT	GAUGE	COLOR	TERMINAL
1	A41F	18	LTGN	3534193C1
2	A41H	18	LTGN	3534193C1
3	A41J	18	LTGN	3534193C1

TEMPERATURE SENSOR
(1284)

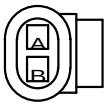

CONNECTOR 3522068C1
BODY LOCK 1661874C1

CAV	CIRCUIT	GAUGE	COLOR	TERMINAL
A	M41C	18	LTGN	3534193C1
B	M41D	18	LTGN	3534193C1

TURBO BOOST GAUGE
(1285F)

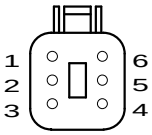

CONNECTOR 2005240C1
BODY LOCK 2005242C1

CAV	CIRCUIT	GAUGE	COLOR	TERMINAL
1	A28MA	18	TN	1680205C1
2	A11-GHD	18	WH	1680205C1
3	A62AB	16	DKBL	1680205C1
4	A98MA(+)	18	BK	1680205C1
5	A98MA(-)	18	BK	1680205C1
6	A28M	18	TN	1680205C1

MANIFOLD PRESSURE GAUGE
(1285F)

CONNECTOR 3515763C1
BODY LOCK 3515764C1

CAV	CIRCUIT	GAUGE	COLOR	TERMINAL
A	A28M	18	TN	1661262C1
B	A28MA	18	TN	1661262C1
C	A11-GHD	18	WH	1661262C1
D	A62AB	16	DKBL	1661262C1
E	A98MA(+)	18	BK	1661262C1
F	A98MB(-)	18	BK	1661262C1
G	PLUG	–	–	–
H	PLUG	–	–	–

CHK	DATE	CHANGE	REV	REFERENCE	DRAWN	NAME
0610	27AUG13	INITIAL RELEASE.	A	92159Y	310615	CIRCUIT DIAGRAM, 9900
					RELEASE NO. 92159Y	DATE 02AUG13 / PART NO. AE08076124 / SHEET 122

Figure 329 Connector Composites (1282M / 1283 / 1284 / 1285F)

13.132. CONNECTOR COMPOSITES (1286F / 1316FL), P. 123

NAVISTAR, INC

THIS PRINT IS PROVIDED ON A RESTRICTED BASIS AND IS NOT TO BE USED IN ANY WAY DETRIMENTAL TO THE INTEREST OF NAVISTAR, INC.

ELECTRICAL CIRCUIT DIAGRAM CHAPTER 13

CONNECTOR BODY COMPOSITE MATING VIEW SHOWN

DEF GAUGE
(1286F)

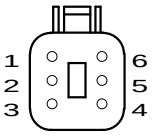

CONNECTOR 2005240C1
BODY LOCK 2005242C1

CAV	CIRCUIT	GAUGE	COLOR	TERMINAL
1	A28NA	18	TN	1680205C1
2	A11-GHH	18	WH	1680205C1
*3	A62RU	18	DKBL	1680205C1
&3	A62RU	18	DKBL	1680205C1
4	A5DA(+)	18	BK	1680205C1
5	A5DB(-)	18	BK	1680205C1
6	A28N	18	TN	1680205C1

* W/ AUOTO ULTRASHIFT, FREEDOM
& W/ SHIFT ALLISON & N/ENG

ULTRASHIFT / DM2
(1316FL)

CONNECTOR 1661202C1

CAV	CIRCUIT	GAUGE	COLOR	TERMINAL
A	A13DM1	20	PK	1661215C1

EATON DM2 XMSN
(1316FL)

CONNECTOR 1661203C1

CAV	CIRCUIT	GAUGE	COLOR	TERMINAL
A*	A13DM1	20	PK	1661220C1
A#	A13DM1	18	PK	1661220C1
A@	A17EF1	20	PK	1661220C1
A%	A17EF1	18	PK	1661220C1

* W/ EATON DM2 XMSN W/ AUTOCLUCH
W/ CAT ENG
W/ 2010 IBB ENG & W/ ALLISION XMSN &
N/ ENGINE BRAKE
@ W/ EATON DM3 XMSN W/ AUTOCLUCH
W/ CUMMINS W/ ICON W/ PAM, USA
% W/ 2007 CUMM W/ CUM IDEL CONTROL &
N/ BRAZIL W/ STARTER INTERLOCK

CHK	DATE	CHANGE	REV	REFERENCE	DRAWN	NAME
–	–	INITIAL RELEASE.	A	92159Y	310615	CIRCUIT DIAGRAM, 9900
					RELEASE NO. 92159Y	DATE 02AUG13 / PART NO. AE08076124 / SHEET 123

Figure 330 Connector Composites (1286F / 1316FL)

13.133. CONNECTOR COMPOSITES (1316ML / 1329M / 1331F / 1332F), P. 124

NAVISTAR, INC

THIS PRINT IS PROVIDED ON A RESTRICTED BASIS AND IS NOT TO BE USED IN ANY WAY DETRIMENTAL TO THE INTEREST OF NAVISTAR, INC.

ELECTRICAL CIRCUIT DIAGRAM CHAPTER 13

CONNECTOR BODY COMPOSITE MATING VIEW SHOWN

* W/2010 IBB ENG & W/MANUAL XMSN & W/STARTER INTERLOCK
& W/2007 CUMM W/CUM IDLE CONTROL & N/BRAZIL W/STARTER INTERLOCK

EATON DM2 XMSN
(1316ML)

CONNECTOR 1661202C1

CAV	CIRCUIT	GAUGE	COLOR	TERMINAL
A	A13D	20	PK	1661215C1
*A	A13D	18	PK	1661215C1
&A	A17EF	18	PK	1661215C1

ULTRASHIFT / DM2
(1316ML)

CONNECTOR 1661203C1

CAV	CIRCUIT	GAUGE	COLOR	TERMINAL
A	A13D	20	PK	1661220C1

BUMPER MTD MARKER LIGHT
(1329M)

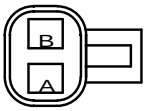

CONNECTOR 1671610C1
BODY LOCK 1671608C1

CAV	CIRCUIT	GAUGE	COLOR	TERMINAL	SEAL/SLEEVE
A	M58ML	18	BN	2033819C1	1652325C1
B	M58-G	18	WH	2033819C1	1652325C1

DRIVER'S HEATED SEAT CONNECTOR
(1331F)

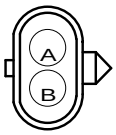

CONNECTOR 0587567C91

CAV	CIRCUIT	GAUGE	COLOR	TERMINAL	SEAL/SLEEVE
A	WHITE	18	WH	0587578C1	1652325C1
B	BLACK	18	BK	0587578C1	1652325C1

HEATED PASSANGER SEAT CONNECTOR
(1332F)

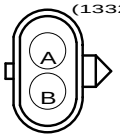

CONNECTOR 0587567C91

CAV	CIRCUIT	GAUGE	COLOR	TERMINAL	SEAL/SLEEVE
A	WHITE	18	WH	0587578C1	1652325C1
B	BLACK	18	BK	0587578C1	1652325C1

CHK	DATE	CHANGE	REV	REFERENCE	DRAWN	NAME
0610	27AUG13	INITIAL RELEASE.	A	92159Y	310615	CIRCUIT DIAGRAM, 9900
					RELEASE NO. 92159Y	DATE 02AUG13 / PART NO. AE08076124 / SHEET 124

Figure 331 Connector Composites (1316ML / 1329M / 1331F / 1332F)

13.134. CONNECTOR COMPOSITES (1348 / 1349 / 1350), P. 125

NAVISTAR, INC

THIS PRINT IS PROVIDED ON A RESTRICTED BASIS AND IS NOT TO BE USED IN ANY WAY DETRIMENTAL TO THE INTEREST OF NAVISTAR, INC.

ELECTRICAL CIRCUIT DIAGRAM CHAPTER 13

CONNECTOR BODY COMPOSITE MATING VIEW SHOWN

ABS6 ECU CONN 1
(1348)
(LOCATED ON RIGHT
SIDE KICK PANEL ABS MODULE)

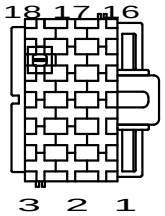

CONNECTOR 3596926C1
BODY LOCK 3562309C1

CAV	CIRCUIT	GAUGE	COLOR	TERMINAL
1	A94-GA	12	WH	3597157C1
2	A94T	18	GY	3598072C1
3	A94KA	18	PK	3598072C1
4	A94BW	18	DKBL	3598072C1
5	A94BV	18	BN	3598072C1
6	A94BE	18	GY	3598072C1
7	AGN1(-)	18	GN	3598072C1
8	AYL1(+)	18	YL	3598072C1
9	PLUG	–	–	–
10	A94BY	18	DKBL	3598072C1
11	A94BX	18	YL	3598072C1
12	A94-GL2	16	WH	3548970C1
13	A98K(-)	16	BK	3598073C1
14	A98J(+)	16	BK	3598073C1
15	PLUG	–	–	–
16	A94P	12	GY	3597157C1
17*	A92VT	16	GY	3598073C1
17#	A94CG	18	GY	3598072C1
18	A94H	16	GY	3548970C1

* W/ HD AUTO XMSN & N/ FRT AXLE INDICATOR LIGHT & W/ 2007 ENG
\# W/ ABS PREMIUM & W/ ATC & W/HSA

ABS6 ECU CONN 2
(1349)
(LOCATED ON RIGHT
SIDE KICK PANEL ABS MODULE)

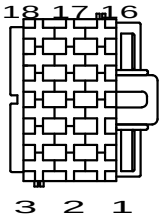

CONNECTOR 3596929C1

CAV	CIRCUIT	GAUGE	COLOR	TERMINAL
1	A94BM	18	BN	3598072C1
2	A94BK	18	BK	3598072C1
3	A94BL	18	RD	3598072C1
4	A94BJ	18	LTBL	3598072C1
5	A94BF	18	OR	3598072C1
6	A94BH	18	LTGN	3598072C1
7	A94CB	18	PL	3598072C1
8	A94BC	18	GY	3598072C1
9	A94BP	18	RD	3598072C1
10	A94BN	18	BN	3598072C1
11	A94BB	18	YL	3598072C1
12	A94BU	18	LTGN	3598072C1
13	A94BR	18	BK	3598072C1
14	A94BA	18	DKBL	3598072C1
15	A94BZ	18	OR	3598072C1
16	A94BT	18	LTBL	3598072C1
17	A94BS	18	PL	3598072C1
18	A94CA	18	GY	3598072C1

ATC OFF-ROAD SWITCH
(1350)

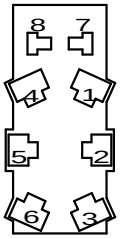

CONNECTOR 2009385C1

CAV	CIRCUIT	GAUGE	COLOR	TERMINAL
1	PLUG	–	–	–
2	PLUG	–	–	–
3	PLUG	–	–	–
4	PLUG	–	–	–
5**	A11GR	16	WH	1661226C1
5##	A94-GB	18	WH	1661226C1
6@	A94BD	18	GY	3541250C1
6##	A94BE	18	GY	3541250C1
7	A62AJ	16	DKBL	1661209C1
8	A94-GB	18	WH	1661208C1

** BENDIX AIR RSP HARNESS
\## N/ 2007 ENGINE & N/ ISX EPA 04
@ W/ ABS PREMIUM & W/ ATC & W/PLC

CHK	DATE	CHANGE	REV	REFERENCE	DRAWN	NAME
–	–	INITIAL RELEASE.	A	92159Y	310615	CIRCUIT DIAGRAM, 9900
					RELEASE NO. 92159Y	DATE 02AUG13 / PART NO. AE08076124 / SHEET 125

Figure 332 Connector Composites (1348 / 1349 / 1350)

13.135. CONNECTOR COMPOSITES (1350 / 1351), P. 126

NAVISTAR, INC

THIS PRINT IS PROVIDED ON A RESTRICTED BASIS AND IS NOT TO BE USED IN ANY WAY DETRIMENTAL TO THE INTEREST OF NAVISTAR, INC.

ELECTRICAL CIRCUIT DIAGRAM CHAPTER 13

CONNECTOR BODY COMPOSITE MATING VIEW SHOWN

ABS6 ECU CONN 3
(1350)
(LOCATED ON RIGHT SIDE KICK PANEL ABS MODULE)

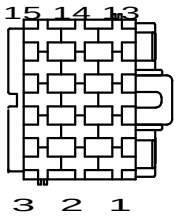

CONNECTOR 3596928C1

CAV	CIRCUIT	GAUGE	COLOR	TERMINAL
1	A94CC	16	GY	3598073C1
2	A94CD	16	GY	3598073C1
3	A94CE	16	GY	3598073C1
4	PLUG	–	–	–
5	PLUG	–	–	–
6	PLUG	–	–	–
7	PLUG	–	–	–
8	PLUG	–	–	–
9	PLUG	–	–	–
10	PLUG	–	–	–
11	PLUG	–	–	–
12	PLUG	–	–	–
13	PLUG	–	–	–
14	PLUG	–	–	–
15	PLUG	–	–	–

ATC OFF-ROAD SWITCH
(1351)

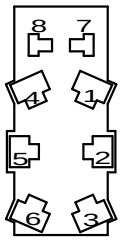

CONNECTOR 2009385C1

CAV	CIRCUIT	GAUGE	COLOR	TERMINAL
1	PLUG	–	–	–
2	PLUG	–	–	–
3	PLUG	–	–	–
4	PLUG	–	–	–
5	A11GR	16	WH	1661226C1
	A94-GB	18	WH	1661226C1
6	A94BD	18	GY	3541250C1
6	A94BE	18	GY	3541250C1
7	A62AJ	16	DKBL	1661209C1
8	A94-GB	18	WH	1661208C1

CHK	DATE	CHANGE	REV	REFERENCE	DRAWN	NAME
–	–	INITIAL RELEASE.	A	92159Y	310615	CIRCUIT DIAGRAM, 9900
					RELEASE NO. 92159Y	DATE 02AUG13 / PART NO. AE08076124 / SHEET 126

Figure 333 Connector Composites (1350 / 1351)

13.136. CONNECTOR COMPOSITES (1360 / 1361 / 1363), P. 127

NAVISTAR, INC

THIS PRINT IS PROVIDED ON A RESTRICTED BASIS AND IS NOT TO BE USED IN ANY WAY DETRIMENTAL TO THE INTEREST OF NAVISTAR, INC.

ELECTRICAL CIRCUIT DIAGRAM CHAPTER 13

CONNECTOR BODY COMPOSITE MATING VIEW SHOWN

ABS-6 ADVANCED ECU CONN #3
(1360)

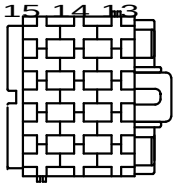

CONNECTOR 3596928C1

CAV	CIRCUIT	GAUGE	COLOR	TERMINAL
1	A94CC	16	GY	3598073C1
2	A94CD	16	GY	3598073C1
*3	A94CE	16	GY	3598073C1
@3	A94SK	18	GY	3598072C1
4	A94CH	18	LTBL	3598072C1
5	A94SJ	18	GY	3598072C1
6	A94CJ	18	LTGN	3598072C1
7	A94BG	18	PL	3598072C1
8	PLUG	–	–	–
9	A94CK	18	RD	3598072C1
10	A94CM	18	BN	3598072C1
11	A94CS	18	OR	3598072C1
12	A94CP	18	DKBL	3598072C1
13	A94CN	18	BK	3598072C1
14	A94CT	18	GY	3598072C1
@15	A94CR	18	YL	3598072C1
%15	A94CR	16	YL	3598073C1

% W/BENDIX AIR ABS W/HSA
@ W/BENDIX 6 CH ADVANCED ABS W/HSA
* W/BENDIX W/6 CHANNEL W/ATC W/ULTRASHIFT

ABS-6 ADVANCED ECU CONN 4
(1361)

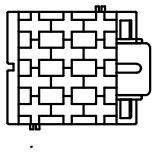

CONNECTOR 3596927C1

CAV	CIRCUIT	GAUGE	COLOR	TERMINAL
1	A94SZD	18	GY	3598072C1
2	A94SE	18	GY	3598072C1
3	A94SH	18	GY	3598072C1
4	A94SVD	18	GY	3598072C1
5	A94SF	18	GY	3598072C1
6	A94SL	18	GY	3598072C1
7	A94SDA	18	GY	3598072C1
8	A94SCA	18	GY	3598072C1
9	A94SM	18	GY	3598072C1
10	A94SBA	18	GY	3598072C1
11	A94SAA	18	GY	3598072C1
12	A94SN	18	GY	3598072C1

STEERING WHEEL POSITION SENSOR
(1363)

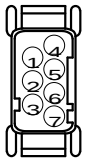

CONNECTOR 3601800C1

CAV	CIRCUIT	GAUGE	COLOR	TERMINAL
1	A94SB	20	GY	3601801C1
2	A94SA	20	GY	3601801C1
3	A94SC	20	GY	3601801C1
4	A94SD	20	GY	3601801C1
5	PLUG	–	–	–
6	PLUG	–	–	–
7	PLUG	–	–	–

CHK	DATE	CHANGE	REV	REFERENCE	DRAWN	NAME
0610	27AUG13	INITIAL RELEASE.	A	92159Y	310615	CIRCUIT DIAGRAM, 9900
					RELEASE NO. 92159Y	DATE 02AUG13 / PART NO. AE08076124 / SHEET 127

Figure 334 Connector Composites (1360 / 1361 / 1363)

13.137. CONNECTOR COMPOSITES (1365 / 1366 / 1369 / 1370), P. 128

NAVISTAR, INC

THIS PRINT IS PROVIDED ON A RESTRICTED BASIS AND IS NOT TO BE USED IN ANY WAY DETRIMENTAL TO THE INTEREST OF NAVISTAR, INC.

ELECTRICAL CIRCUIT DIAGRAM CHAPTER 13

CONNECTOR BODY COMPOSITE MATING VIEW SHOWN

ABS PRIMARY AIR TRANSDUCER
(1365)

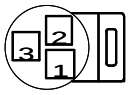

CONNECTOR 3662921C1
BODY LOCK 3662879C1

CAV	CIRCUIT	GAUGE	COLOR	TERMINAL	SEAL/SLEEVE
1	M94SZD2	18	YL	3554322C1	3554318C1
2	M94SVD2	18	LT GN	3554322C1	3554318C1
3	M94SE	18	BN	3554322C1	3554318C1

ABS SECONDARY AIR TRANSDUCER
(1366)

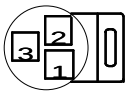

CONNECTOR 3662921C1
BODY LOCK 3662879C1

CAV	CIRCUIT	GAUGE	COLOR	TERMINAL	SEAL/SLEEVE
1	M94SZD1	18	LTBL	3554322C1	3554318C1
2	M94SVD1	18	WH	3554322C1	3554318C1
3	M94SF	18	OR	3554322C1	3554318C1

ABS-6 RSP SPLICE PACK
(1369)

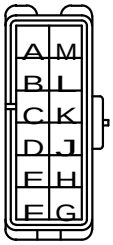

CONNECTOR 3601838C1
BODY LOCK 3601839C1

CAV	CIRCUIT	GAUGE	COLOR	TERMINAL
A	A94SAA	18	GY	3534164C1
B	A94SAB	18	GY	3534164C1
C	A94SA	20	GY	3535484C1
D	A94SCA	18	GY	3534164C1
E	A94SCB	18	GY	3534164C1
F	A94SC	20	GY	3535484C1
G	A94SBA	18	GY	3534164C1
H	A94SBB	18	GY	3534164C1
J	A94SB	20	GY	3535484C1
K	A94SDA	18	GY	3534164C1
L	A94SDB	18	GY	3534164C1
M	A94SD	20	GY	3535484C1

ECM FUSE
(1370)

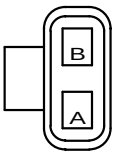

CONNECTOR 3512967C1

CAV	CIRCUIT	GAUGE	COLOR	TERMINAL
A	K14C	10	RD	3679001C1
B	K14D	10	RD	3679001C1

CHK	DATE	CHANGE	REV	REFERENCE
0610	27AUG13	INITIAL RELEASE.	A	92159Y

DRAWN 310615 | NAME CIRCUIT DIAGRAM, 9900

RELEASE NO. 92159Y | DATE 02AUG13 | PART NO. AE08076124 | SHEET 128

Figure 335 Connector Composites (1365 / 1366 / 1369 / 1370)

13.138. CONNECTOR COMPOSITES (1378 / 1386 / 1387), P. 129

NAVISTAR, INC

THIS PRINT IS PROVIDED ON A RESTRICTED BASIS AND IS NOT TO BE USED IN ANY WAY DETRIMENTAL TO THE INTEREST OF NAVISTAR, INC.

ELECTRICAL CIRCUIT DIAGRAM CHAPTER 13

CONNECTOR BODY COMPOSITE MATING VIEW SHOWN

COOLANT MODULE
(1378)

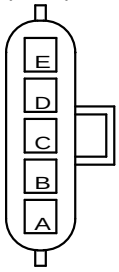

CONNECTOR 1687789C1
BODY LOCK 1661376C1

CAV	CIRCUIT	GAUGE	COLOR	TERMINAL	SEAL/SLEEVE
A*	K6B	20	VT	2033819C1	1652325C1
A#	K6B	20	PL	2033819C1	3517771C1
B	K34F	18	TN	2033819C1	3517771C1
C	K34B	20	TN	2033819C1	3517771C1
D	K34D	20	TN	2033819C1	3517771C1
E	K34E	18	TN	2033819C1	3517771C1

* W/ CRUISE CONTROL & N/ REMOTE PTO 9900
\# W/ CRUISE CONTROL & W/ REMOTE PTO 9900

DATA LINK
(1386)

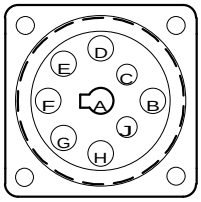

CONNECTOR 3544066C1

CAV	CIRCUIT	GAUGE	COLOR	TERMINAL
A	A11-GR	14	WH	1659750C1
B	A97DL	14	VT	1659750C1
C	PLUG	–	–	–
D	PLUG	–	–	–
E	PLUG	–	–	–
F	A98A(+)	14	BK	1659750C1
G	A98C(-)	14	BK	1659750C1
H	PLUG	–	–	–
J	PLUG	–	–	–

THROTTLE POSITION SENSOR
(1387)

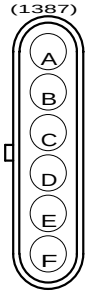

CONNECTOR 0587573C91

CAV	CIRCUIT	GAUGE	COLOR	TERMINAL	SEAL/SLEEVE
A	A99-G	18	VT	0587578C1	1652325C1
B	A99	18	VT	0587578C1	1652325C1
C	A99A(5V)	18	VT	0587578C1	1652325C1
D	A99D(5V)	18	VT	0587578C1	1652325C1
E	A99-GD	18	VT	0587578C1	1652325C1
F	A99D	18	VT	0587578C1	1652325C1

CHK	DATE	CHANGE	REV	REFERENCE	DRAWN	NAME
0610	27AUG13	INITIAL RELEASE.	A	92159Y	310615	CIRCUIT DIAGRAM, 9900
					RELEASE NO. 92159Y	DATE 02AUG13
					PART NO. AE08076124	SHEET 129

Figure 336 Connector Composites (1378 / 1386 / 1387)

13.139. CONNECTOR COMPOSITES (1387M / 1387M1 / 1399M), P. 130

NAVISTAR, INC

THIS PRINT IS PROVIDED ON A RESTRICTED BASIS AND IS NOT TO BE USED IN ANY WAY DETRIMENTAL TO THE INTEREST OF NAVISTAR, INC.

ELECTRICAL CIRCUIT DIAGRAM CHAPTER 13

CONNECTOR BODY COMPOSITE MATING VIEW SHOWN

THROTTLE POSITION SENSOR CAB
(1387M)

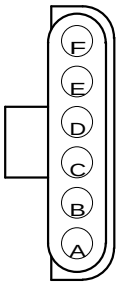

CONNECTOR 0587574C91

CAV	CIRCUIT	GAUGE	COLOR	TERMINAL	SEAL/SLEEVE
A	A99-G	18	VT	0587576C1	1652325C1
B	A99	18	VT	0587576C1	1652325C1
C	A99A(5V)	18	VT	0587576C1	1652325C1
D	A99C	18	VT	0587576C1	1652325C1
E	A99B	18	VT	0587576C1	1652325C1
F	A99-GA	18	VT	0587576C1	1652325C1

THROTTLE POSITION SENSOR -THROTTLE
(1387M1)

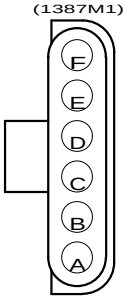

CONNECTOR 0587574C91

CAV	CIRCUIT	GAUGE	COLOR	TERMINAL	SEAL/SLEEVE
A	A99-G	18	VT	0587576C1	1652325C1
B	A99	18	VT	0587576C1	1652325C1
C	A99A(5V)	18	VT	0587576C1	1652325C1
D	A99C	18	VT	0587576C1	1652325C1
E	A99B	18	VT	0587576C1	1652325C1
F	A99-GA	18	VT	0587576C1	1652325C1

WIPER MOTOR INSIDE
(1399M)

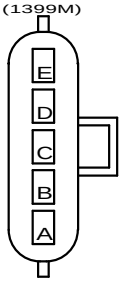

CONNECTOR 1661375C2
BODY LOCK 1661376C1

CAV	CIRCUIT	GAUGE	COLOR	TERMINAL	SEAL/SLEEVE
A	A82C	16	GY	2033819C1	1652325C1
B	A82-GC	16	WH	2033819C1	1652325C1
C	A82F	16	GY	2033819C1	1652325C1
D	A82E	16	GY	2033819C1	1652325C1
E	A82D	16	GY	2033819C1	1652325C1

CHK	DATE	CHANGE	REV	REFERENCE	DRAWN	NAME
–	–	INITIAL RELEASE.	A	92159Y	310615	CIRCUIT DIAGRAM, 9900
					RELEASE NO. 92159Y	DATE 02AUG13 / PART NO. AE08076124 / SHEET 130

Figure 337 Connector Composites (1387M / 1387M1 / 1399M)

13.140. CONNECTOR COMPOSITES (1402 / 1402M / 1403), P. 131

NAVISTAR, INC

THIS PRINT IS PROVIDED ON A RESTRICTED BASIS AND IS NOT TO BE USED IN ANY WAY DETRIMENTAL TO THE INTEREST OF NAVISTAR, INC.

ELECTRICAL CIRCUIT DIAGRAM CHAPTER 13

CONNECTOR BODY COMPOSITE MATING VIEW SHOWN

INHIBIT REGEN SWITCH
(1402)
(LOCATED IN INSTRUMENT PANEL)

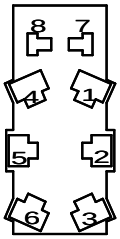

CONNECTOR 2009385C1

CAV	CIRCUIT	GAUGE	COLOR	TERMINAL
1	A95IR	18	TN	1661224C1
2	PLUG	–	–	–
3	PLUG	–	–	–
4	A95IG	18	TN	1661224C1
5	A95IN	18	TN	1661224C1
6	A95-GD	16	WH	1661226C1
7	A62MSP	16	DKBL	1661209C1
8	A62-HMS	18	WH	1661208C1

CAB CLR ID LTS SWITCH
(1402M)

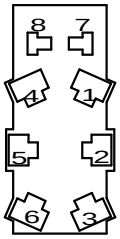

CONNECTOR 2009385C1

CAV	CIRCUIT	GAUGE	COLOR	TERMINAL
1	A62-GAV	18	WH	1661224C1
2	PLUG	–	–	–
3	PLUG	–	–	–
4	PLUG	–	–	–
5	A58G	18	BN	1661224C1
6	A58W	18	BN	3541250C1
6	A58AA	18	BN	3541250C1
7	A62AR	16	DKBL	1661209C1
8	A62-GAR	16	WH	1661209C1

PARKED REGEN SWITCH
(1403)
(LOCATED IN INSTRUMENT PANEL)

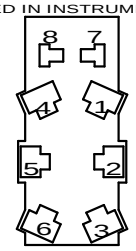

CONNECTOR 2009385C1

CAV	CIRCUIT	GAUGE	COLOR	TERMINAL
1	A95FA	18	TN	1661224C1
2	PLUG	–	–	–
3	PLUG	–	–	–
4	A95BA	18	GY	1661224C1
5	A95E	18	TN	1661224C1
6	A95-GC	16	WH	1661226C1
7	A62MSM	16	DKBL	1661209C1
8	A62-GMS	18	WH	1661208C1

CHK	DATE	CHANGE	REV	REFERENCE	DRAWN	NAME
0610	27AUG13	INITIAL RELEASE.	A	92159Y	310615	CIRCUIT DIAGRAM, 9900
					RELEASE NO. 92159Y	DATE 02AUG13 / PART NO. AE08076124 / SHEET 131

Figure 338 Connector Composites (1402 / 1402M / 1403)

13.141. CONNECTOR COMPOSITES (1404 / 1405 / 1406), P. 132

NAVISTAR, INC

THIS PRINT IS PROVIDED ON A RESTRICTED BASIS AND IS NOT TO BE USED IN ANY WAY DETRIMENTAL TO THE INTEREST OF NAVISTAR, INC.

ELECTRICAL CIRCUIT DIAGRAM CHAPTER 13

CONNECTOR BODY COMPOSITE MATING VIEW SHOWN

HIGH EXHAUST TEMP LIGHT
(1404)
(LOCATED IN INSTRUMENT PANEL)

CONNECTOR 0969541R1

* W/AUTO XMSN & N/ENG BRAKE
& W/AUTO XMSN & W/ENG BRAKE

CAV	CIRCUIT	GAUGE	COLOR	TERMINAL
*A	A95HT	18	GY	0879630R1
&A	A95HT	18	GY	0333732C1
*B	A95HR	18	GY	0879630R1
&B	A95HR	18	GY	0333732C1

PARTICULATE TRAP WARNING LIGHT
(1405)
(LOCATED IN INSTRUMENT PANEL)

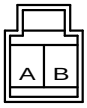

CONNECTOR 0481140C1

CAV	CIRCUIT	GAUGE	COLOR	TERMINAL
A	A95HV	18	GY	0241117R1
B	A95FB	18	GY	0241117R1

J1 MULTIPLEXED SIGNAL MODULE
(1406)
(LOCATED IN INSTRUMENT PANEL)

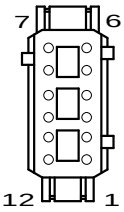

CONNECTOR 3553404C1
BODY LOCK 3553460C1

CAV	CIRCUIT	GAUGE	COLOR	TERMINAL
1	A95BM	18	TN	3518963C1
2	A95IN	18	TN	3518963C1
3	A95E	18	TN	3518963C1
4	PLUG	–	–	–
5	A5AA(+)	18	YL	3518963C1
	A5AA(+)	18	YL	3555249C1
5*	A6YL(+)	18	YL	3518963C1
6	A5AB(-)	18	GN	3518963C1
	A5AB(-)	18	GN	3555249C1
	A5AB(-)	18	GN	1666118C1
6#	A6GN(-)	18	GN	3518963C1
7	A95A	18	TN	3518963C1
8	A95-GA	16	WH	3518963C1
9	PLUG	–	–	–
10	PLUG	–	–	–
11	PLUG	–	–	–
12	PLUG	–	–	–

* W/ 2007 CAT C13/ C15 ENG W/ ALLISION XMSN W/ ENG SHUTDOWN
\# W/ 2010 IBB ENGINE & W/ ALLISION XMSN & N/ ENGINE BRAKE

CHK	DATE	CHANGE	REV	REFERENCE	DRAWN	NAME
0610	27AUG13	INITIAL RELEASE.	A	92159Y	310615	CIRCUIT DIAGRAM, 9900
					RELEASE NO. 92159Y	DATE 02AUG13 / PART NO. AE08076124 / SHEET 132

Figure 339 Connector Composites (1404 / 1405 / 1406)

13.142. CONNECTOR COMPOSITES (1407 / 1409M / 1410F), P. 133

NAVISTAR, INC

THIS PRINT IS PROVIDED ON A RESTRICTED BASIS AND IS NOT TO BE USED IN ANY WAY DETRIMENTAL TO THE INTEREST OF NAVISTAR, INC.

ELECTRICAL CIRCUIT DIAGRAM CHAPTER 13

CONNECTOR BODY COMPOSITE MATING VIEW SHOWN

J2 MULTIPLEXED SIGNAL MODULE
(1407)
(LOCATED IN INSTRUMENT PANEL)

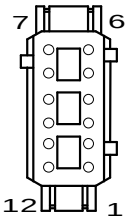

CONNECTOR 3586750C1
BODY LOCK 3553460C1

CAV	CIRCUIT	GAUGE	COLOR	TERMINAL
1	PLUG	–	–	–
2	PLUG	–	–	–
3	PLUG	–	–	–
4	A95FA	18	TN	3518963C1
5	A95IR	18	TN	3518963C1
6	A95HR	18	GY	3518963C1
7	A95FB	18	GY	3518963C1
8	PLUG	–	–	–
9	PLUG	–	–	–
10	PLUG	–	–	–
11	PLUG	–	–	–
12	PLUG	–	–	–

ICON FUSE HOLDER
(1409M)

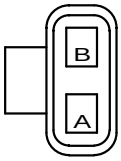

CONNECTOR 1667639C1

CAV	CIRCUIT	GAUGE	COLOR	TERMINAL
A	A14EA	12	RD	1661708C1
B	A14EF	12	RD	1661708C1

ICON FUSE
(1410F)

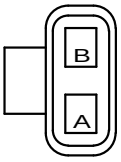

CONNECTOR 1667639C1

CAV	CIRCUIT	GAUGE	COLOR	TERMINAL
A	A14EA	12	RD	1661708C1
B	A14EF	12	RD	1661708C1

CHK	DATE	CHANGE	REV	REFERENCE	DRAWN	NAME
–	–	INITIAL RELEASE.	A	92159Y	310615	CIRCUIT DIAGRAM, 9900
					RELEASE NO. 92159Y	DATE 02AUG13 / PART NO. AE08076124 / SHEET 133

Figure 340 Connector Composites (1407 / 1409M / 1410F)

13.143. CONNECTOR COMPOSITES (1415 / 1448M / 1449F / 1449M / 1450), P. 134

NAVISTAR, INC

THIS PRINT IS PROVIDED ON A RESTRICTED BASIS AND IS NOT TO BE USED IN ANY WAY DETRIMENTAL TO THE INTEREST OF NAVISTAR, INC.

ELECTRICAL CIRCUIT DIAGRAM CHAPTER 13

CONNECTOR BODY COMPOSITE MATING VIEW SHOWN

AFTERTREATMENT BUZZER
(1415)
(LOCATED IN INSTRUMENT PANEL)

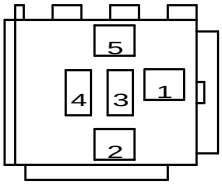

CONNECTOR 0593385C1
BODY LOCK 0593387C1

CAV	CIRCUIT	GAUGE	COLOR	TERMINAL
1	A95BM	18	TN	1659673C1
2	PLUG	–	–	–
3	A95BZ	18	TN	1659673C1
4	PLUG	–	–	–
5	PLUG	–	–	–

ENGINE SHUT DOWN RELAY
(1448M)

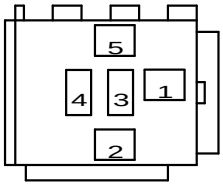

CONNECTOR 0593385C1
BODY LOCK 0593387C1

CAV	CIRCUIT	GAUGE	COLOR	TERMINAL
1	A19M	16	GY	1661709C1
2	A19L	16	GY	1661709C1
3	PLUG	–	–	–
4	A19-GF	16	GY	1661709C1
5	A19K	16	GY	1661709C1

BEACON LIGHTS
(1449F)

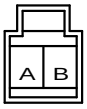

CONNECTOR 0481140C1

CAV	CIRCUIT	GAUGE	COLOR	TERMINAL
A	D11-GBL	18	WH	0241117R1
B	D65F	18	OR	0241117R1

BEACON LIGHTS
(1449M)

CONNECTOR 0969541R1

CAV	CIRCUIT	GAUGE	COLOR	TERMINAL
A	D11-GBL	18	WH	0333732C1
B	D65F	18	OR	0333732C1

BEACON LIGHT RIGHT
(1450)

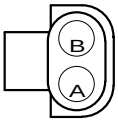

CONNECTOR 0587568C91

CAV	CIRCUIT	GAUGE	COLOR	TERMINAL	SEAL/SLEEVE
A	D11-GBR	18	WH	0587576C1	1652325C1
B	D65FR	18	OR	0587576C1	1652325C1

CHK	DATE	CHANGE	REV	REFERENCE	DRAWN	NAME
0610	27AUG13	INITIAL RELEASE.	A	92159Y	310615	CIRCUIT DIAGRAM, 9900
					RELEASE NO. 92159Y	DATE 02AUG13

PART NO. AE08076124 SHEET 134

Figure 341 Connector Composites (1415 / 1448M / 1449F / 1449M / 1450)

13.144. CONNECTOR COMPOSITES (1450 / 1451 / 1455), P. 135

NAVISTAR, INC

THIS PRINT IS PROVIDED ON A RESTRICTED BASIS AND IS NOT TO BE USED IN ANY WAY DETRIMENTAL TO THE INTEREST OF NAVISTAR, INC.

ELECTRICAL CIRCUIT DIAGRAM CHAPTER 13

CONNECTOR BODY COMPOSITE MATING VIEW SHOWN

BEACON LIGHT RIGHT
(1450)

CAV	CIRCUIT	GAUGE	COLOR	TERMINAL
A	A11-GBR	18	WH	1661261C1
B	A65FR	18	OR	1661261C1

CONNECTOR 1661259C1
BODY LOCK 1661263C1

BEACON LIGHT LEFT
(1451)

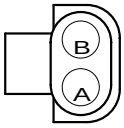

CAV	CIRCUIT	GAUGE	COLOR	TERMINAL	SEAL/SLEEVE
A	A11-GBT	18	WH	0587576C1	1652325C1
B	A65FT	18	OR	0587576C1	1652325C1

CONNECTOR 0587568C91

BEACON LIGHT LEFT
(1451)

CAV	CIRCUIT	GAUGE	COLOR	TERMINAL
A	A11-GBT	18	WH	1661261C1
B	A65FT	18	OR	1661261C1

CONNECTOR 1661259C1
BODY LOCK 1661263C1

WAIT TO START
(1455)

CAV	CIRCUIT	GAUGE	COLOR	TERMINAL
A	A97S	18	VT	1661262C1
B	A97WTS	18	VT	1661262C1

CONNECTOR 1661260C1
BODY LOCK 1661264C1

CHK	DATE	CHANGE	REV	REFERENCE	DRAWN	NAME
–	–	INITIAL RELEASE.	A	92159Y	310615	CIRCUIT DIAGRAM, 9900
					RELEASE NO. 92159Y	DATE 02AUG13
					PART NO. AE08076124	SHEET 135

Figure 342 Connector Composites (1450 / 1451 / 1455)

13.145. CONNECTOR COMPOSITES (1456 / 1610 / 1874B), P. 136

NAVISTAR, INC

THIS PRINT IS PROVIDED ON A RESTRICTED BASIS AND IS NOT TO BE USED IN ANY WAY DETRIMENTAL TO THE INTEREST OF NAVISTAR, INC.

ELECTRICAL CIRCUIT DIAGRAM CHAPTER 13

CONNECTOR BODY COMPOSITE MATING VIEW SHOWN

WATER IN FUEL
(1456)
(LOCATED IN INSTRUMENT PANEL)

CONNECTOR 1661259C1
BODY LOCK 1661263C1

CAV	CIRCUIT	GAUGE	COLOR	TERMINAL	SEAL/SLEEVE
A	A97F	18	VT	1661261C1	N/A
B	A97WF	18	VT	1661261C1	N/A

SART MODULE
(1610)
(LOCATED IN CAB)

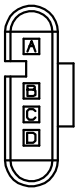

CONNECTOR 3540756C1
BODY LOCK 3540758C1

CAV	CIRCUIT	GAUGE	COLOR	TERMINAL	SEAL/SLEEVE
A	A97CP	18	VT	1661875C1	1661872C1
B	A97-GB	18	VT	1661875C1	1661872C1
C	A5KA(+)	18	YL	1661875C1	3568570C1
C*	A4YL(+)	18	YL	1661875C1	3568570C1
D	A5KB(-)	18	GN	1661875C1	3568570C1
D*	A4GN(-)	18	GN	1661875C1	3568570C1

* W/ 2010 IBB ENG & W/ ALLISION XMSN &
W/ ENGINE BRAKE

DAVCO WIF SENSOR
(1874B)
(LOCATED ON ENGINE)

CONNECTOR 3590390C1

CAV	CIRCUIT	GAUGE	COLOR	TERMINAL	SEAL/SLEEVE
1	K95	20	TN	3536865C1	3536867C1
2	K95-GF	18	TN	3561584C1	3536868C1

CHK	DATE	CHANGE	REV	REFERENCE	DRAWN	NAME
–	–	INITIAL RELEASE.	A	92159Y	310615	CIRCUIT DIAGRAM, 9900
					RELEASE NO. 92159Y	DATE 02AUG13
					PART NO. AE08076124	SHEET 136

Figure 343 Connector Composites (1456 / 1610 / 1874B)

13.146. CONNECTOR COMPOSITES (1874C / 1874D / 4328 / 4450BF), P. 137

NAVISTAR, INC

THIS PRINT IS PROVIDED ON A RESTRICTED BASIS AND IS NOT TO BE USED IN ANY WAY DETRIMENTAL TO THE INTEREST OF NAVISTAR, INC.

ELECTRICAL CIRCUIT DIAGRAM CHAPTER 13

CONNECTOR BODY COMPOSITE MATING VIEW SHOWN

WIF SENSOR (1874C)

CONNECTOR 3590390C1

CAV	CIRCUIT	GAUGE	COLOR	TERMINAL	SEAL/SLEEVE
1	K95W	18	TN	3561584C1	3536867C1
2	K95-GF	18	WH	3561584C1	3536867C1

RAYCOR WIF SENSOR (1874D)

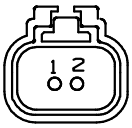

CONNECTOR 3977821C1

CAV	CIRCUIT	GAUGE	COLOR	TERMINAL	SEAL/SLEEVE
1	K95	18	TN	3526966C1	N/A
2	K95-GG	18	TN	3526966C1	N/A

ECA GROUND (4328)

CONNECTOR 3602454C1
BODY LOCK 1655705C1

CAV	CIRCUIT	GAUGE	COLOR	TERMINAL
A	K98YL	18	YL	1680206C1
B	K98GN	18	GN	1680206C1
C	PLUG	_	_	_

ECE TAIL LIGHTS (4450BF)

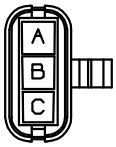

CONNECTOR 3553961C1
BODY LOCK 3554019C1

CAV	CIRCUIT	GAUGE	COLOR	TERMINAL	SEAL/SLEEVE
A	R56BC	16	OR	2033911C1	1652325C1
B	R57BC	16	OR	2033911C1	1652325C1
C	R70BB	14	OR	2033912C1	0589391C1

CHK	DATE	CHANGE	REV	REFERENCE	DRAWN	NAME
0610	27AUG13	INITIAL RELEASE.	A	92159Y	310615	CIRCUIT DIAGRAM, 9900
					RELEASE NO. 92159Y	DATE 02AUG13

PART NO. AE08076124 SHEET 137

Figure 344 Connector Composites (1874C / 1874D / 4328 / 4450BF)

13.147. CONNECTOR COMPOSITES (4450BM / 4460BF / 4460BM / 4705), P. 138

NAVISTAR, INC

THIS PRINT IS PROVIDED ON A RESTRICTED BASIS AND IS NOT TO BE USED IN ANY WAY DETRIMENTAL TO THE INTEREST OF NAVISTAR, INC.

ELECTRICAL CIRCUIT DIAGRAM CHAPTER 13

CONNECTOR BODY COMPOSITE MATING VIEW SHOWN

ECE TAIL LIGHTS (4450BM)

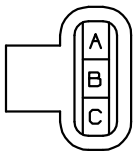

CONNECTOR 1686834C1
BODY LOCK 3554019C1

CAV	CIRCUIT	GAUGE	COLOR	TERMINAL	SEAL/SLEEVE
A	R56BC	16	OR	2033819C1	1652325C1
B	R57BC	16	OR	2033819C1	1652325C1
C	R70BB	14	OR	2033816C1	0589391C1

ECE TAIL LIGHTS (4460BF)

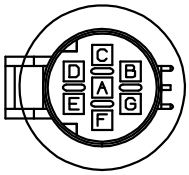

CONNECTOR 2039312C91
BODY LOCK 2039342C1

CAV	CIRCUIT	GAUGE	COLOR	TERMINAL	SEAL/SLEEVE
A	R68BB	14	BN	2033912C1	0589391C1
B	R56BB	16	OR	2033911C1	1652325C1
C	R57BB	16	OR	2033911C1	1652325C1
D	R58BB	14	BN	2033912C1	0589391C1
E	R71BB	16	OR	2033911C1	1652325C1
F	R12BB	14	LTBL	2033912C1	0589391C1
G	R11-GBB	12	WH	2033912C1	0589390C1

ECE TAIL LIGHTS (4460BM)

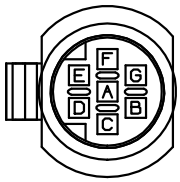

CONNECTOR 2039311C91
BODY LOCK 2039342C1

CAV	CIRCUIT	GAUGE	COLOR	TERMINAL	SEAL/SLEEVE
A	R68BB	14	BN	3535486C1	0589391C1
B	R56BB	16	OR	2039343C1	1652325C1
C	R57BB	16	OR	2039343C1	1652325C1
D	R58BB	14	BN	3535486C1	0589391C1
E	R71BB	16	OR	2039343C1	1652325C1
F	R12BB	14	LTBL	3535486C1	0589391C1
G	R11-GBB	12	WH	2039344C1	0589390C1

BODY BUILDER 1 (4705)

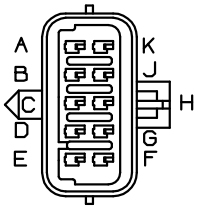

CONNECTOR 3538634C1
BODY LOCK 3538636C1

CAV	CIRCUIT	GAUGE	COLOR	TERMINAL	SEAL/SLEEVE
A	K92A15	18	PK	1667742C1	1661872C1
B	K92A11	18	TN	1667742C1	3568570C1
C	K92A12	18	TN	1667742C1	3568570C1
D	K92A13	18	VT	1667742C1	1661872C1
E	K92A9	18	VT	1667742C1	1661872C1
F	K92A10	18	TN	1667742C1	3568570C1
G	K92A8	18	TN	1667742C1	3568570C1
J	K92A17	18	TN	1667742C1	3568570C1

CHK	DATE	CHANGE	REV	REFERENCE	DRAWN	NAME
0610	27AUG13	INITIAL RELEASE.	A	92159Y	310615	CIRCUIT DIAGRAM, 9900
					RELEASE NO. 92159Y	DATE 05AUG13 / PART NO. AE08076124 / SHEET 138

Figure 345 Connector Composites (4450BM / 4460BF / 4460BM / 4705)

13.148. CONNECTOR COMPOSITES (4706 / 5118 / 5200A / 5501), P. 139

NAVISTAR, INC

THIS PRINT IS PROVIDED ON A RESTRICTED BASIS AND IS NOT TO BE USED IN ANY WAY DETRIMENTAL TO THE INTEREST OF NAVISTAR, INC.

ELECTRICAL CIRCUIT DIAGRAM CHAPTER 13

CONNECTOR BODY COMPOSITE MATING VIEW SHOWN

BODY BUILDER 2
(4706)

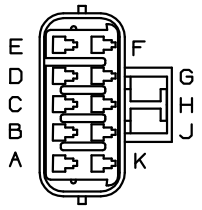

CONNECTOR 3538635C1
BODY LOCK 3538636C1

* W/2010 MAXFORCE 15L ENG
● W/2013 ISX ENG

CAV	CIRCUIT	GAUGE	COLOR	TERMINAL	SEAL/SLEEVE
*A	K92A5	18	TN	1661875C1	3568570C1
●A	K92A5	20	TN	1667742C1	3568570C1
B	K6A	20	PL	1667742C1	3568570C1
*C	K92A3	18	TN	1661875C1	3568570C1
●C	K92A3	20	PL	1667742C1	3568570C1
D	PLUG	-	-	-	-
E	PLUG	-	-	-	-
F	PLUG	-	-	-	-
G	K92A7	18	TN	1661875C1	3568570C1
H	K92A1	18	TN	1661875C1	3568570C1
*J	K92A18	18	TN	1661875C1	3568570C1
●J	K92A18	20	TN	1667742C1	3568570C1
K	PLUG	-	-	-	-

BEACON LIGHT/ROOF CONN
(5118)
(LOCATED ON LEFT SIDE WALL OF SLEEPER)

CONNECTOR 1661260C1

CAV	CIRCUIT	GAUGE	COLOR	TERMINAL	SEAL/SLEEVE
A	WHITE	16	WH	1661262C1	N/A
B	BLACK	16	BK	1661262C1	N/A

COOLANT FLOW VALVE
(5200A)

CONNECTOR 3714731C1

CAV	CIRCUIT	GAUGE	COLOR	TERMINAL	SEAL/SLEEVE
1	K95AB	20	TN	3601686C1	3733609C1
2	PLUG	_	_	_	_
3	PLUG	_	_	_	_
4	K95AC	20	TN	3601686C1	3733609C1

AFTERTREATMENT FUSE
(5501)

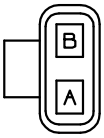

CONNECTOR 3512967C1

CAV	CIRCUIT	GAUGE	COLOR	TERMINAL	SEAL/SLEEVE
A	K14B	10	RD	3679001C1	N/A
B	K14C	10	RD	3679001C1	N/A

CHK	DATE	CHANGE	REV	REFERENCE	DRAWN	NAME
0610	27AUG13	INITIAL RELEASE.	A	92159Y	310615	CIRCUIT DIAGRAM, 9900
					RELEASE NO. 92159Y	DATE 05AUG13

PART NO. AE08076124 SHEET 139

Figure 346 Connector Composites (4706 / 5118 / 5200A / 5501)

13.149. CONNECTOR COMPOSITES (5899 / 5899A), P. 140

NAVISTAR, INC

THIS PRINT IS PROVIDED ON A RESTRICTED BASIS AND IS NOT TO BE USED IN ANY WAY DETRIMENTAL TO THE INTEREST OF NAVISTAR, INC.

ELECTRICAL CIRCUIT DIAGRAM CHAPTER 13

CONNECTOR BODY COMPOSITE MATING VIEW SHOWN

ENGINE AMBIENT TEMPERATURE
(5899)

CONNECTOR 3522068C1
BODY LOCK 1661874C1

CAV	CIRCUIT	GAUGE	COLOR	TERMINAL	SEAL/SLEEVE
A	M41-G	18	WH	1661875C1	1661872C1
B	M41	18	LT GN	1661875C1	1661872C1

REAR/CENTER AMBIENT
TEMPERATURE SENSOR
(5899A)

CONNECTOR 3582941C1
BODY LOCK 1661874C1

CAV	CIRCUIT	GAUGE	COLOR	TERMINAL	SEAL/SLEEVE
A	R41A	18	LTGN	1667742C1	1661872C1
B	R41B	18	LTGN	1667742C1	1661872C1

CHK	DATE	CHANGE	REV	REFERENCE	DRAWN	NAME
–	–	INITIAL RELEASE.	A	92159Y	310615	CIRCUIT DIAGRAM, 9900
					RELEASE NO. 92159Y	DATE 05AUG13 / PART NO. AE08076124 / SHEET 140

Figure 347 Connector Composites (5899 / 5899A)

13.150. CONNECTOR COMPOSITES (5899A / 5899B / 6000), P. 141

NAVISTAR, INC

THIS PRINT IS PROVIDED ON A RESTRICTED BASIS AND IS NOT TO BE USED IN ANY WAY DETRIMENTAL TO THE INTEREST OF NAVISTAR, INC.

ELECTRICAL CIRCUIT DIAGRAM CHAPTER 13

CONNECTOR BODY COMPOSITE MATING VIEW SHOWN

REAR/CENTER AMBIENT TEMPERATURE SENSOR (5899A)

CONNECTOR 3582941C1
BODY LOCK 1661874C1

CAV	CIRCUIT	GAUGE	COLOR	TERMINAL	SEAL/SLEEVE
A	R41A	18	LTGN	1667742C1	1661872C1
B	R41B	18	LTGN	1667742C1	1661872C1

AMBIENT TEMPERATURE SENSOR (5899B)

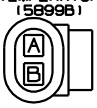

CONNECTOR 3522068C1
BODY LOCK 1661874C1

CAV	CIRCUIT	GAUGE	COLOR	TERMINAL	SEAL/SLEEVE
A	R41A	18	LTGN	1661875C1	1661872C1
B	R41B	18	LTGN	1661875C1	1661872C1

ECM CONNECTOR (6000) (LOCATED ON LEFT SIDE OF ENGINE)

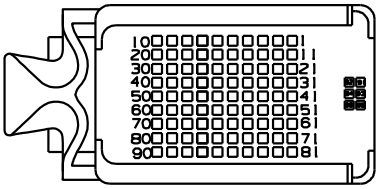

CONNECTOR 3945694C1
BODY LOCK 3743662C1

CAV	CIRCUIT	GAUGE	COLOR	TERMINAL
1	K14F	16	RD	3743666C1
2	K95DEF	16	TN	3743666C1
3	K95-GB	16	TN	3743666C1
4	PLUG	-	-	3744547C1
5	K13B	18	PK	3743666C1
6	K95F	20	TN	3743668C1
7	K95-GA	20	TN	3743668C1
8•	K6A	20	PL	3743668C1
8#	K6	20	PL	3743668C1
9	K99A5V	20	PL	3743668C1
10	K99	20	PL	3743668C1
11	K23B	20	TN	3743668C1
11	K23A	20	TN	3743668C1
11	K23C	20	TN	3743668C1
12●	K97AB	20	PL	3743668C1
12%%	K97CB	18	PL	3743668C1
12#	K92A21	20	PL	3743668C1
13••	K95	20	TN	3743668C1
13##	K95A	20	TN	3743668C1
14	PLUG	-	-	3744547C1
15	PLUG	-	-	3744547C1
16	K95K	20	TN	3743668C1
17	PLUG	-	-	3744547C1
18	PLUG	-	-	3744547C1
19●	K97AA	20	PL	3743668C1
19%%	K97CA	20	PL	3743668C1
19%	K92A23	20	PL	3743668C1
20	K101	20	TN	3743668C1

CAV	CIRCUIT	GAUGE	COLOR	TERMINAL
21	PLUG	-	-	3744547C1
22●●	K98YL2	20	YL	3743668C1
22%	K55(+)	20	YL	3743668C1
23	PLUG	-	-	3744547C1
24	PLUG	-	-	3744547C1
25	K14E	16	RD	3743666C1
26	K14D	16	RD	3743666C1
27	K14C	16	RD	3743666C1
28	K14B	16	RD	3743666C1
29	PLUG	-	-	3744547C1
30	K92A8	20	PL	3743668C1
31	PLUG	-	-	3744547C1
32	K9A	20	TN	3743668C1
33	K99-G	20	PL	3743668C1
34	PLUG	-	-	3744547C1
35	K34B	20	TN	3743668C1
36	PLUG	-	-	3744547C1
37	PLUG	-	-	3744547C1
38	K95B	20	TN	3743668C1
39	K95A1	20	TN	3743668C1
40	K95C	20	TN	3743668C1
41	K95	20	TN	3743668C1
42	K95A	20	TN	3743668C1
43	K23AC	20	TN	3743668C1
44	K97AL	20	PL	3743668C1
45	PLUG	-	-	3744547C1
46●●	K98GN2	20	LTGN	3743668C1
46%	K55(-)	20	LTGN	3743668C1
47	PLUG	-	-	3744547C1
48	K97ML	18	PL	3743666C1
49	K10-GL	16	WH	3743666C1
50	K10-GK	16	WH	3743666C1

CHART CONTINUED ON SHEET 142

- • W/CRUISE CONTROL & N/REMOTE PTO 9900
- # W/CRUISE CONTROL & W/REMOTE PTO 9900
- ● W/CRUISE CONTROL & N/REMOTE PTO 5900
- •• W/FUEL/ WATER SEPARATOR - RACOR, 9900
- ## W/FUEL/ WATER SEPARATOR - DAVCO, 9900
- ●● W/ALLISION 4700 OFS W/EOF SHIFTER
- % W/MANUAL TRANSMISSION
- %% W/CRUISE CONTROL, REM CRUISE & N/REMOTE PTO 5900

CHK	DATE	CHANGE	REV	REFERENCE	DRAWN	NAME
MJV0	18JUL18	ADDED CIRC K23A AND	B	94591W	310615	CIRCUIT DIAGRAM, 9900
	K23C IN	CAV 11 AT R/D 6000.			RELEASE NO. 92159Y	DATE 05AUG13 / PART NO. AE08076124 / SHEET 141

Figure 348 Connector Composites (5899A / 5899B / 6000)

13.151. CONNECTOR COMPOSITES (6000 / 6001), P. 142

NAVISTAR, INC

THIS PRINT IS PROVIDED ON A RESTRICTED BASIS AND IS NOT TO BE USED IN ANY WAY DETRIMENTAL TO THE INTEREST OF NAVISTAR, INC.

ELECTRICAL CIRCUIT DIAGRAM CHAPTER 13

CONNECTOR BODY COMPOSITE MATING VIEW SHOWN

CHART CONTINUED FROM SHEET 141

ECM CONNECTOR
(6000)

CAV	CIRCUIT	GAUGE	COLOR	TERMINAL
51	K10-GH	16	WH	3743666C1
52	K10-GG	16	WH	3743666C1
53	K95(-)	18	TN	3743666C1
54	K95E	20	TN	3743668C1
55	PLUG	–	–	–
56	PLUG	–	–	–
57	K95AA	20	TN	3743668C1
59	K47AA	20	GY	3743668C1
60	K47B	20	GY	3743668C1
61	K99-GD	20	PL	3743668C1
62	KA95G	18	TN	3743666C1
63	K92A5	20	TN	3743668C1
64	K99D	20	PL	3743668C1
65	K41	20	LTGN	3743668C1
66	PLUG	–	–	–
67	K92A18	20	TN	3743668C1
68	K24AE	20	GY	3743668C1
69	PLUG	–	–	–
70	K101A	20	TN	3743668C1
71	K97AP	20	PL	3743668C1
72	K97AT	18	PL	3743666C1
73	K10-GD	16	WH	3743666C1
74	PLUG	–	–	–
75	K21	16	TN	3743666C1
76	KUK	16	TN	3743666C1
77	K95(+)	18	BN	3743666C1
78	K23	20	TN	3743668C1
79	K95D	20	TN	3743668C1
80	PLUG	–	–	–

CAV	CIRCUIT	GAUGE	COLOR	TERMINAL
81	K95G	20	TN	3743668C1
82	K95AB	20	TN	3743668C1
83	PLUG	–	–	–
84	K95MA	20	TN	3743668C1
85	K95MB	20	TN	3743668C1
86	K24AF	20	GY	3743668C1
87	PLUG	–	–	–
88	PLUG	–	–	–
89	PLUG	–	–	–
90	K97AE	20	PL	3743668C1
91	PLUG	–	–	–
92	K97AH	20	PL	3743668C1
93	PLUG	–	–	–
94	K92A10	20	TN	3743668C1
95	PLUG	–	–	–
96	PLUG	–	–	–

ECM IGN 5A FUSE
(6001)

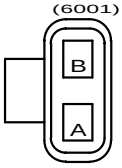

CONNECTOR 1667639C1

CAV	CIRCUIT	GAUGE	COLOR	TERMINAL
A	K13B	18	PK	3895713C1
B	K13C	18	PK	3895713C1

CHK	DATE	CHANGE	REV	REFERENCE
0610	27AUG13	INITIAL RELEASE.	A	92159Y

DRAWN 310615 | NAME CIRCUIT DIAGRAM, 9900

RELEASE NO. 92159Y | DATE 05AUG13 | PART NO. AE08076124 | SHEET 142

Figure 349 Connector Composites (6000 / 6001)

13.152. CONNECTOR COMPOSITES (6018), P. 143

NAVISTAR, INC

THIS PRINT IS PROVIDED ON A RESTRICTED BASIS AND IS NOT TO BE USED IN ANY WAY DETRIMENTAL TO THE INTEREST OF NAVISTAR, INC.

ELECTRICAL CIRCUIT DIAGRAM CHAPTER 13

CONNECTOR BODY COMPOSITE MATING VIEW SHOWN

ECM 2
(6018)
(LOCATED ON LEFT SIDE OF ENGINES)

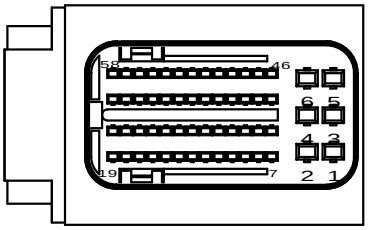

CONNECTOR 3687798C1
BODY LOCK 3687805C1

CAV	CIRCUIT	GAUGE	COLOR	TERMINAL	SEAL/SLEEVE
1	K14G	14	RD	3687802C1	3624233C1
2	K92A16	14	WH	3687802C1	3624233C1
3	K14HA	14	RD	3687802C1	3624233C1
4	K92BA16	14	WH	3687802C1	3624233C1
5	K14KA	14	RD	3687802C1	3624233C1
6	K92C16	14	WH	3687802C1	3624233C1
7	PLUG	–	–	–	–
8	K23B1	18	TN	3687804C1	–
9	PLUG	–	–	–	–
10	K95-GC	18	WH	3687804C1	–
11	K99-GD	18	PL	3687804C1	–
12	K95E	18	TN	3687804C1	–
13	K92A5	18	TN	3687804C1	–
14	PLUG	–	–	–	–
15	K41A	18	TN	3687804C1	–
16	K95B	18	TN	3687804C1	–
17	K13D	18	PK	3687804C1	–
18	K23-G	18	WH	3687804C1	–
19	K14L	18	RD	3687804C1	–
20	PLUG	–	–	–	–
21	K41-GB	18	WH	3687804C1	–
22	K95-GA	18	WH	3687804C1	–
23	K99-G	18	PL	3687804C1	–
24	K92A3	18	TN	3687804C1	–
25	K95V	18	TN	3687804C1	–
26	K95T	18	TN	3687804C1	–
27	K95C	18	TN	3687804C1	–
28	K95A	18	TN	3687804C1	–
29	PLUG	–	–	–	–

CAV	CIRCUIT	GAUGE	COLOR	TERMINAL	SEAL/SLEEVE
30	K23	18	TN	3687804C1	–
31	PLUG	–	–	–	–
32	PLUG	–	–	–	–
33	K95VC	18	TN	3687804C1	–
34*	K98YL2	18	YL	3687804C1	–
34#	K5S(+)	18	YL	3687804C1	–
35	K98GN	18	GN	3687804C1	–
36	K99A5V	18	PL	3687804C1	–
37	PLUG	–	–	–	–
38	PLUG	–	–	–	–
39	K95VE	18	TN	3687804C1	–
40	K95VIR	18	WH	3687804C1	–
41	K95-GE	18	WH	3687804C1	–
42	K34E	18	TN	3687804C1	–
43	PLUG	–	–	–	–
44	K41B	18	TN	3687804C1	–
45	PLUG	–	–	–	–
46	K95VB	18	TN	3687804C1	–
47*	K98GN2	18	GN	3687804C1	–
47#	K5S(-)	18	GN	3687804C1	–
48	K98YL	18	YL	3687804C1	–
49	K23A1	18	TN	3687804C1	–
50	K99D5V	18	PL	3687804C1	–
51	PLUG	–	–	–	–
52	K95VA	18	TN	3687804C1	–
53	K95VD	18	TN	3687804C1	–
54	K41C	18	TN	3687804C1	–
55	K95-GB	18	WH	3687804C1	–
56	K92A17	18	TN	3687804C1	–
57	K97ML	18	PL	3687804C1	–
58	K23C	18	TN	3687804C1	–

* W/ ALLISION 4700 OFS W/ EOF SHIFTER
\# W/ MANUAL TRANSMISSION

CHK	DATE	CHANGE	REV	REFERENCE	DRAWN	NAME
0610	27AUG13	INITIAL RELEASE.	A	92159Y	310615	CIRCUIT DIAGRAM, 9900
					RELEASE NO. 92159Y	DATE 05AUG13 / PART NO. AE08076124 / SHEET 143

Figure 350 Connector Composites (6018)

13.153. CONNECTOR COMPOSITES (6019), P. 144

NAVISTAR, INC

THIS PRINT IS PROVIDED ON A RESTRICTED BASIS AND IS NOT TO BE USED IN ANY WAY DETRIMENTAL TO THE INTEREST OF NAVISTAR, INC.

ELECTRICAL CIRCUIT DIAGRAM CHAPTER 13

CONNECTOR BODY COMPOSITE MATING VIEW SHOWN

ECM 2
(6019)
(LOCATED ON LEFT SIDE OF ENGINES)

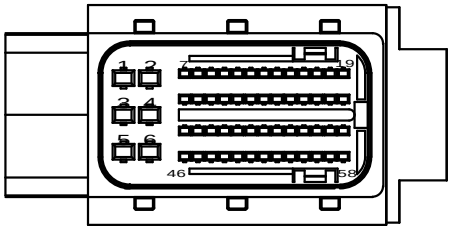

CONNECTOR 3687797C1
BODY LOCK 3687805C1

CAV	CIRCUIT	GAUGE	COLOR	TERMINAL	SEAL/SLEEVE
1	K14M	14	RD	3687802C1	3624233C1
2	K92D16	14	WH	3687802C1	3624233C1
3	PLUG	–	–	–	–
4	PLUG	–	–	–	–
5	PLUG	–	–	–	–
6	PLUG	–	–	–	–
7	K95K	18	TN	3687804C1	–
8	K95D	18	TN	3687804C1	–
9	K92A8	18	TN	3687804C1	–
10	K92A7	18	TN	3687804C1	–
11	PLUG	–	–	–	–
12	PLUG	–	–	–	–
13	K92A1	18	TN	3687804C1	–
14	K97WF	18	PL	3687804C1	–
15	K97WTS	18	PL	3687804C1	–
16	K97Y	18	TN	3687804C1	–
17	K97AT	18	PL	3687804C1	–
18	PLUG	–	–	–	–
19	PLUG	–	–	–	–
20	K95M	18	TN	3687804C1	–
21	PLUG	–	–	–	–
22	K97AE	18	PL	3687804C1	–
23	K97CA	18	PL	3687804C1	–
24	PLUG	–	–	–	–
25	PLUG	–	–	–	–
26	K93A	18	TN	3687804C1	–
27*	K23AC	18	TN	3687804C1	–
27#	K23AD	18	TN	3687804C1	–
27@	K23M	18	TN	3687804C1	–
27%	K23B	18	TN	3687804C1	–
27	K23C	18	TN	3687804C1	–
28	K97AP	18	PL	3687804C1	–
29	PLUG	–	–	–	–

CAV	CIRCUIT	GAUGE	COLOR	TERMINAL	SEAL/SLEEVE
30	K92A10	18	TN	3687804C1	–
31	PLUG	–	–	–	–
32	PLUG	–	–	–	–
33	K97AL	18	PL	3687804C1	–
34	K95-GF	18	WH	3687804C1	–
35	K92A12	18	TN	3687804C1	–
36	K97AH	18	PL	3687804C1	–
37	K95W	18	TN	3687804C1	–
38	PLUG	–	–	–	–
39	K44EC	18	GY	3687804C1	–
40	K24AE	18	GY	3687804C1	–
41	K95-GD	18	WH	3687804C1	–
42	K95R	18	TN	3687804C1	–
43	K41-G	18	LTGN	3687804C1	–
44	PLUG	–	–	–	–
45	PLUG	–	–	–	–
46	K92A18	18	TN	3687804C1	–
47	PLUG	–	–	–	–
48	K92A11	18	TN	3687804C1	–
49	K34F	18	TN	3687804C1	–
50	K95S	18	TN	3687804C1	–
51	PLUG	–	–	–	–
52	K97CB	18	PL	3687804C1	–
53	K24AF	18	GY	3687804C1	–
54	K99	18	PL	3687804C1	–
55	K99D	18	PL	3687804C1	–
56	PLUG	–	–	–	–
57	PLUG	–	–	–	–
58	PLUG	–	–	–	–

* W/ APADS & N/ FAN OVERRIDE
\# W/ APADS & W/ FAN OVERRIDE
@ W/ AIR CONDITIONG & W/ FAN OVERRIDE & N/ AP
% N/ AIR CONDITIONG & W/ FAN OVERRIDE
** N/ AIR CONDITIONG & W/ FAN OVERRIDE, APADS

CHK	DATE	CHANGE	REV	REFERENCE	DRAWN	NAME
0610	27AUG13	INITIAL RELEASE.	A	92159Y	310615	CIRCUIT DIAGRAM, 9900
					RELEASE NO. 92159Y	DATE 05AUG13 / PART NO. AE08076124 / SHEET 144

Figure 351 Connector Composites (6019)

13.154. CONNECTOR COMPOSITES (6033 / 6200), P. 145

NAVISTAR, INC

THIS PRINT IS PROVIDED ON A RESTRICTED BASIS AND IS NOT TO BE USED IN ANY WAY DETRIMENTAL TO THE INTEREST OF NAVISTAR, INC.

ELECTRICAL CIRCUIT DIAGRAM CHAPTER 13

CONNECTOR BODY COMPOSITE MATING VIEW SHOWN

ENGINE SENSOR NTERFACE
(6033)
(LOCATED ON LEFT SIDE OF ENGINES)

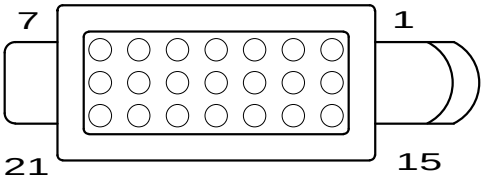

CONNECTOR 3803137C1
BODY LOCK 3803139C1

CAV	CIRCUIT	GAUGE	COLOR	TERMINAL	SEAL/SLEEVE
1	K10-GJ	16	WH	3803140C1	3803134C1
2	K10-GK	16	WH	3803140C1	3803134C1
3	K13F	18	PK	3803140C1	3803134C1
4	K13FA	18	PK	3803140C1	3803134C1
5	K41A	18	TN	3803140C1	3803134C1
6	PLUG	–	–	–	–
7	K41B	18	TN	3803140C1	3803134C1
8	K41C	18	TN	3803140C1	3803134C1
9	K41-GB	18	WH	3803140C1	3803134C1
10	K95H	18	TN	3803140C1	3803134C1
11	K95J	18	TN	3803140C1	3803134C1
12*	K97AJ	16	PL	3803140C1	3803134C1
12#	K47	18	GY	3803140C1	3803134C1
13*	K97AK	16	PL	3803140C1	3803134C1
13#	K47A	18	GY	3803140C1	3803134C1
14	K97Y	18	TN	3803140C1	3803134C1
15	K41	18	LTGN	3803140C1	3803134C1
16	PLUG	–	–	–	–
17	PLUG	–	–	–	–
18	PLUG	–	–	–	–
19	K21B3	18	TN	3803140C1	3803134C1
20	K21B2	18	TN	3803140C1	3803134C1
21	K21B1	18	TN	3803140C1	3803134C1

* W/ ALLISION 4000, 4500, 4700 RDS
\# W/ MANUAL TRANSMISSION

FREON COMPRESSOR
(6200)
(LOCATED ON AC COMPRESSOR FRONT RIGHT OF ENGINE)

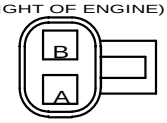

CONNECTOR 1671610C1
BODY LOCK 1671608C1

CAV	CIRCUIT	GAUGE	COLOR	TERMINAL	SEAL/SLEEVE
A	K77-G	16	WH	2033819C1	1652325C1
B@	K77AE	14	LT GN	2033816C1	0589391C1
B%	K77E	14	LT GN	2033816C1	0589391C1

@ W/ APADS & N/ FAN OVERRIDE
% W/ AIR CONDITIONG & W/ FAN OVERRIDE & N/ APADS

CHK	DATE	CHANGE	REV	REFERENCE	DRAWN	NAME		
–	–	INITIAL RELEASE.	A	92159Y	310615	CIRCUIT DIAGRAM, 9900		
					RELEASE NO.	DATE	PART NO.	SHEET
					92159Y	05AUG13	AE08076124	145

Figure 352 Connector Composites (6033 / 6200)

13.155. CONNECTOR COMPOSITES (6260VH / 6260VL / 6260VM / 6260VN / 6300), P. 146

NAVISTAR, INC

THIS PRINT IS PROVIDED ON A RESTRICTED BASIS AND IS NOT TO BE USED IN ANY WAY DETRIMENTAL TO THE INTEREST OF NAVISTAR, INC.

ELECTRICAL CIRCUIT DIAGRAM CHAPTER 13

CONNECTOR BODY COMPOSITE MATING VIEW SHOWN

HCI INJECTOR DOSING VALVE
(6260VH)
(LOCATED ON LEFT SIDE OF ENGINE)

CONNECTOR 3690364C1

CAV	CIRCUIT	GAUGE	COLOR	TERMINAL	SEAL/SLEEVE
1	K95H	18	TN	3689960C1	3623615C1
2	K95J	18	TN	3689960C1	3623615C1

HCI FUEL SHUT OFF VALVE
(6260VL)
(LOCATED ON LEFT SIDE OF ENGINE)

CONNECTOR 3689957C1

CAV	CIRCUIT	GAUGE	COLOR	TERMINAL	SEAL/SLEEVE
1	K95K	18	TN	3689960C1	3623615C1
2	K95M	18	TN	3689960C1	3623615C1

AFTERTREATMENT FUEL TEMP AND PRESSURE
(6260VM)
(LOCATED ON LEFT SIDE OF ENGINE)

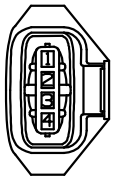

CONNECTOR 3689956C1

CAV	CIRCUIT	GAUGE	COLOR	TERMINAL	SEAL/SLEEVE
1	K95-GE	18	WH	3689959C1	3623615C1
2	K95T	18	TN	3689959C1	3623615C1
3	K95DC	18	TN	3689959C1	3623615C1
4	K95V	18	TN	3689959C1	3623615C1

EXHAUST LAMBDA SENSOR
(6260VN)
(LOCATED ON LEFT SIDE OF ENGINE)

CONNECTOR 3691136C1

CAV	CIRCUIT	GAUGE	COLOR	TERMINAL	SEAL/SLEEVE
1	K95VA	18	TN	3693147C1	3573653C1
2	K95VIR	18	WH	3693147C1	3573653C1
3	K95VB	18	TN	3693147C1	3573653C1
4	K95VC	18	TN	3693147C1	3573653C1
5	K95VD	18	TN	3693147C1	3573653C1
6	K95VE	18	TN	3693147C1	3573653C1

VARIABLE SPEED FAN
(6300)
(LOCATED ON FRONT OF RADIATOR)

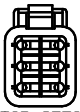

CONNECTOR 3579124c1
BODY LOCK 3579126c1

CAV	CIRCUIT	GAUGE	COLOR	TERMINAL
1	K23-G	18	TN	3555249C1
2	K23A1	18	TN	3555249C1
3	K23	18	TN	3555249C1
4	K23B1	18	TN	3555249C1
5	K23C	18	TN	3555249C1
6	PLUG	-	-	-

CHK	DATE	CHANGE	REV	REFERENCE
0610	27AUG13	INITIAL RELEASE.	A	92159Y

DRAWN 310615
NAME CIRCUIT DIAGRAM, 9900
RELEASE NO. 92159Y
DATE 05AUG13
PART NO. AE08076124
SHEET 146

Figure 353 Connector Composites (6260VH / 6260VL / 6260VM / 6260VN / 6300)

13.156. CONNECTOR COMPOSITES (6400 / 6401 / 6550 / 6565), P. 147

NAVISTAR, INC

THIS PRINT IS PROVIDED ON A RESTRICTED BASIS AND IS NOT TO BE USED IN ANY WAY DETRIMENTAL TO THE INTEREST OF NAVISTAR, INC.

ELECTRICAL CIRCUIT DIAGRAM CHAPTER 13

CONNECTOR BODY COMPOSITE MATING VIEW SHOWN

FAN SOLENOID
(6400)
(LOCATED ON LEFT REAR OF ENGINE)

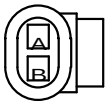

CONNECTOR 3522068C1
BODY LOCK 1661874C1

CAV	CIRCUIT	GAUGE	COLOR	TERMINAL	SEAL/SLEEVE
A	K23	20	TN	1661875C1	3568570C1
B	K23-G	20	TN	1661875C1	3568570C1

COOLANT
LEVEL SENSOR
(6401)
(LOCATED ON COOLANT RESERVOIR)

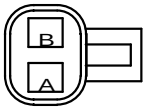

CONNECTOR 1671610C1
BODY LOCK 1671608C1

CAV	CIRCUIT	GAUGE	COLOR	TERMINAL	SEAL/SLEEVE
A	K34F	18	TN	2033819C1	3517771C1
B	K34E	18	TN	2033819C1	3517771C1

ETHER START
(6550)
(LOCATED ON ETHER - FRONT LEFT RAIL)

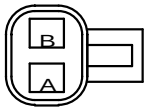

CONNECTOR 1671610C1
BODY LOCK 1671608C1

CAV	CIRCUIT	GAUGE	COLOR	TERMINAL	SEAL/SLEEVE
A	K21	16	TN	2033819C1	1652325C1
B	K21A	16	TN	2033819C1	1652325C1

FLAME START
(6565)
(LOCATED ON ETHER - FRONT LEFT RAIL

CONNECTOR 3517759C1

CAV	CIRCUIT	GAUGE	COLOR	TERMINAL
A	K14L3	4	RD	3517758C1

CHK	DATE	CHANGE	REV	REFERENCE	DRAWN	NAME
0610	27AUG13	INITIAL RELEASE.	A	92159Y	310615	CIRCUIT DIAGRAM, 9900
					RELEASE NO. 92159Y	DATE 05AUG13 / PART NO. AE08076124 / SHEET 147

Figure 354 Connector Composites (6400 / 6401 / 6550 / 6565)

13.157. CONNECTOR COMPOSITES (6704D / 6715 / 6720), P. 148

NAVISTAR, INC

THIS PRINT IS PROVIDED ON A RESTRICTED BASIS AND IS NOT TO BE USED IN ANY WAY DETRIMENTAL TO THE INTEREST OF NAVISTAR, INC.

ELECTRICAL CIRCUIT DIAGRAM CHAPTER 13

CONNECTOR BODY COMPOSITE MATING VIEW SHOWN

GROUND SPLICE
(6704D)
(LOCATED AT LEFT REAR OF ENGINE)

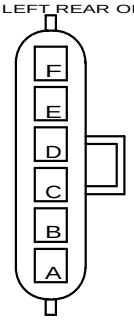

CONNECTOR 3551896C1
BODY LOCK 3551897C1

CAV	CIRCUIT	GAUGE	COLOR	TERMINAL	SEAL/SLEEVE
A	K10-GB	10	WH	1687847C1	0589390C1
B*	K31-G	16	TN	2033819C1	1652325C1
B%	K31-G	16	WH	2033819C1	1652325C1
C	K77-G	16	WH	2033819C1	1652325C1
D	K31-G	18	GY	2033819C1	1652325C1
E	K30-GB	18	TN	2033819C1	3517771C1

* W/XMSN OIL TEMP & N/A111SON XMSN
% W/XMSN OIL TEMP & N/A111SON XMSN

AMBIENT AIR TEMP
(6715)
(LOCATED BETWEEN STARTER AND RADIATOR NEAR LEFT RAIL)

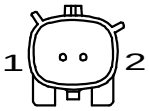

CONNECTOR 6104815C1

CAV	CIRCUIT	GAUGE	COLOR	TERMINAL
1	K41-G	18	TN	3850120C1
2	K41	20	LTGN	3850120C1

ENGINE AMBIENT
AIR TEMP
(6715)
(LOCATED BETWEEN STARTER AND RADIATOR NEAR LEFT RAIL)

CONNECTOR 3950690C1

CAV	CIRCUIT	GAUGE	COLOR	TERMINAL
1	M41-G	18	WH	3686943C1
2	M41	18	LTGN	3686943C1

AFTERTREATMENT
SENSOR
(6720)
(LOCATED ON LEFT SIDE OF ENGINES)

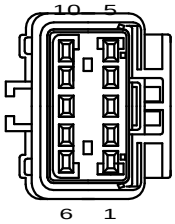

CONNECTOR 3690369C1

* W/ AFTERTRATMENT
\# W/ ENGINE

CAV	CIRCUIT	GAUGE	COLOR	TERMINAL
1*	95A	18	WH	3613771C1
1#	K95A	18	TN	3613771C1
2*	95-GA	18	WH	3613771C1
2#	K95-GA	18	WH	3613771C1
3*	95B	18	WH	3613771C1
3#	K95B	18	TN	3613771C1
4*	95-GB	18	WH	3613771C1
4#	K95-GB	18	WH	3613771C1
5*	95C	18	WH	3613771C1
5#	K95C	18	TN	3613771C1
6*	95-GC	18	WH	3613771C1
6#	K95-GC	18	WH	3613771C1
7*	95-GD	18	WH	3613771C1
7#	K95-GD	18	WH	3613771C1
8*	95E	18	WH	3613771C1
8#	K95E	18	TN	3613771C1
9*	95DA	18	WH	3613771C1
9#	K95DA	18	TN	3613771C1
10	PLUG	–	–	–

CHK	DATE	CHANGE	REV	REFERENCE	DRAWN	NAME
–	–	INITIAL RELEASE.	A	92159Y	310615	CIRCUIT DIAGRAM, 9900
					RELEASE NO. 92159Y	DATE 05AUG13 / PART NO. AE08076124 / SHEET 148

Figure 355 Connector Composites (6704D / 6715 / 6720)

13.158. CONNECTOR COMPOSITES (6720A / 6720B / 6730 / 7100), P. 149

NAVISTAR, INC

THIS PRINT IS PROVIDED ON A RESTRICTED BASIS AND IS NOT TO BE USED IN ANY WAY DETRIMENTAL TO THE INTEREST OF NAVISTAR, INC.

ELECTRICAL CIRCUIT DIAGRAM CHAPTER 13

CONNECTOR BODY COMPOSITE MATING VIEW SHOWN

ENGINE AFTERTREATMENT
(6720A)
(LOCATED ON LEFT SIDE OF ENGINES)

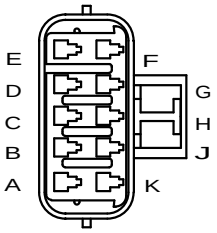

CONNECTOR 3538635C1
BODY LOCK 3538636C1

CAV	CIRCUIT	GAUGE	COLOR	TERMINAL	SEAL/SLEEVE
A	K95A	18	TN	1661875C1	3568570C1
B	K95-GA	18	WH	1661875C1	3568570C1
C	K95B	18	TN	1661875C1	3568570C1
D	K95-GB	18	WH	1661875C1	3568570C1
E	K95C	18	TN	1661875C1	3568570C1
F	K95-GC	18	WH	1661875C1	3568570C1
G	K95-GD	18	WH	1661875C1	3568570C1
H	K95E	18	TN	1661875C1	3568570C1
J	K95DA	18	TN	1661875C1	3568570C1
K	PLUG	–	–	–	–

ENGINE /AFTERTREATMENT SLEEPER
(6720B)
(LOCATED ON LEFT SIDE OF ENGINES)

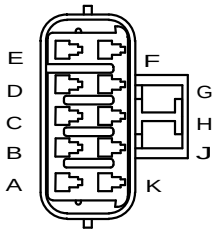

CONNECTOR 3538635C1
BODY LOCK 3538636C1

CAV	CIRCUIT	GAUGE	COLOR	TERMINAL	SEAL/SLEEVE
A	K95A	18	TN	1661875C1	3568570C1
B	K95-GA	18	WH	1661875C1	3568570C1
C	K95B	18	TN	1661875C1	3568570C1
D	K95-GB	18	WH	1661875C1	3568570C1
E	K95C	18	TN	1661875C1	3568570C1
F	K95-GC	18	WH	1661875C1	3568570C1
G	K95-GD	18	WH	1661875C1	3568570C1
H	K95E	18	TN	1661875C1	3568570C1
J	K95DA	18	TN	1661875C1	3568570C1

HCI FUEL PRESSURE 1 & TEMP
(6730)
(LOCATED ON LEFT SIDE OF ENGINES)

CONNECTOR 3689958C1

CAV	CIRCUIT	GAUGE	COLOR	TERMINAL	SEAL/SLEEVE
1	K95DB	18	TN	3689959C1	3623615C1
2	K95R	18	TN	3689959C1	3623615C1
3	K95S	18	TN	3689959C1	3623615C1

REMOTE SENSE STARTER
(7100)
(LOCATED ON LEFT SIDE OF ENGINES)

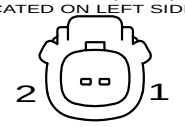

CONNECTOR 3950690C1

CAV	CIRCUIT	GAUGE	COLOR	TERMINAL
1	K1A	16	LTBL	3686944C1
2	PLUG	–	–	–

CHK	DATE	CHANGE	REV	REFERENCE	DRAWN	NAME
0610	27AUG13	INITIAL RELEASE.	A	92159Y	310615	CIRCUIT DIAGRAM, 9900
					RELEASE NO. 92159Y	DATE 05AUG13 / PART NO. AE08076124 / SHEET 149

Figure 356 Connector Composites (6720A / 6720B / 6730 / 7100)

13.159. CONNECTOR COMPOSITES (7105), P. 150

NAVISTAR, INC

THIS PRINT IS PROVIDED ON A RESTRICTED BASIS AND IS NOT TO BE USED IN ANY WAY DETRIMENTAL TO THE INTEREST OF NAVISTAR, INC.

ELECTRICAL CIRCUIT DIAGRAM CHAPTER 13

CONNECTOR BODY COMPOSITE MATING VIEW SHOWN

EATON GEN3 TCM CONNECTOR
(7105)
(LOCATED AT LEFT SIDE OF XMSN)

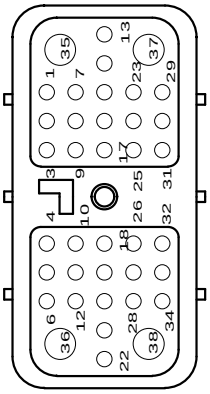

CONNECTOR 3599542C1

CAV	CIRCUIT	GAUGE	COLOR	TERMINAL
1	PLUG	–	–	–
2	K5V(-)	18	GN	3518963C1
3	K5V(+)	18	YL	3518963C1
4	K17-GC	18	WH	3555249C1
	K17-GC	18	PK	3518963C1
5	PLUG	–	–	–
6	PLUG	–	–	–
7	PLUG	–	–	–
8	PLUG	–	–	–
9	PLUG	–	–	–
10	K3BA(+)	18	DKBL	3555249C1
	K3BA(+)	18	DKBL	3518963C1
11	K3BA(-)	18	GY	3555249C1
	K3BA(-)	18	GY	3518963C1
12	PLUG	–	–	–
13	PLUG	–	–	–
14	PLUG	–	–	–
15	PLUG	–	–	–
16	PLUG	–	–	–
17	PLUG	–	–	–
18	PLUG	–	–	–
19	K92DL	20	TN	3555249C1
20	PLUG	–	–	–
21	PLUG	–	–	–
22	PLUG	–	–	–
23	PLUG	–	–	–
24	K92EG	18	TN	3555249C1
	K92EG	18	TN	3518963C1
25	K92J	18	TN	3555249C1
	K92J	18	TN	3518963C1
26	K17C	18	PK	3555249C1
	K17C	16	PK	3518963C1
27	K5TC(-)	18	GN	3555249C1
	K5TC(-)	18	GN	3518963C1
28	K5TC(+)	18	YL	3555249C1
	K5TC(+)	18	YL	3518963C1
29	PLUG	–	–	–
30	PLUG	–	–	–
31	K92ER	18	TN	3555249C1
	K92ER	18	TN	3518963C1
32	K17B	18	PK	3555249C1
	K17B	18	PK	3518963C1
33	K92DM	20	TN	3555249C1
34	PLUG	–	–	–
35	K13A	14	PK	3557534C1
36	K10-GE	14	WH	1646429C1
	K10-GE	12	WH	3557534C1
37	PLUG	–	–	–
38	K14A	12	RD	3841699C1
	K14A	12	RD	3557534C1

CHK	DATE	CHANGE	REV	REFERENCE	DRAWN	NAME
–	–	INITIAL RELEASE.	A	92159Y	310615	CIRCUIT DIAGRAM, 9900
					RELEASE NO. 92159Y	DATE 05AUG13 / PART NO. AE08076124 / SHEET 150

Figure 357 Connector Composites (7105)

13.160. CONNECTOR COMPOSITES (7110 / 7110A / 7250), P. 151

NAVISTAR, INC

THIS PRINT IS PROVIDED ON A RESTRICTED BASIS AND IS NOT TO BE USED IN ANY WAY DETRIMENTAL TO THE INTEREST OF NAVISTAR, INC.

ELECTRICAL CIRCUIT DIAGRAM CHAPTER 13

CONNECTOR BODY COMPOSITE MATING VIEW SHOWN

J1939 TERMINATOR
(7110)
(LOCATED ON TRANSMISSION)

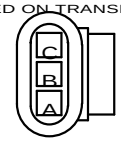

CONNECTOR 1667741C1
BODY LOCK 1667771C1

CAV	CIRCUIT	GAUGE	COLOR	TERMINAL	SEAL/SLEEVE
A	K5TB(+)	18	YL	1661875C1	3568570C1
B	PLUG	–	–	–	–
C	K5TB(-)	18	GN	1661875C1	3568570C1

J1939 TERMINATOR
(7110A)
(LOCATED ON LEFT SIDE
OF TRANSMISSION)

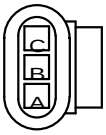

CONNECTOR 1667741C1
BODY LOCK 1667771C1

CAV	CIRCUIT	GAUGE	COLOR	TERMINAL	SEAL/SLEEVE
A	K5B(+)	18	YL	1661875C1	3568570C1
B	PLUG	–	–	–	–
C	K5B(-)	18	GN	1661875C1	3568570C1

TRANS BULKHEAD
(7250)
(LOCATED ON REAR RIGHT
OF TRANSMISSION)

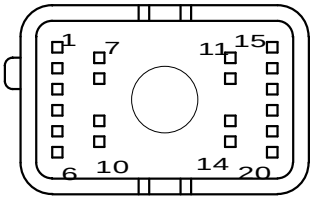

CONNECTOR 3605715C1
BODY LOCK 3606532C1

CAV	CIRCUIT	GAUGE	COLOR	TERMINAL
1	K111	18	OR	3686945C1
2	K155	18	WH	3686945C1
3	K177	18	LTGN	3686945C1
4	K136	18	OR	3686945C1
5	K152	18	LTGN	3686945C1
6	K171	18	YL	3686945C1
7	K178	18	WH	3686945C1
8	K174	18	LTBL	3686945C1
9	K133	18	YL	3686945C1
10	K151	18	WH	3686945C1
11	K131	18	YL	3686945C1
12	K137	18	WH	3686945C1
13	PLUG	–	–	–
14	PLUG	–	–	–
15	K116	18	LTBL	3686945C1
16	K112	18	PK	3686945C1
17	K119	18	LTBL	3686945C1
18	K154	18	TN	3686945C1
19	K158	18	LTGN	3686945C1
20	K176	18	YL	3686945C1

CHK	DATE	CHANGE	REV	REFERENCE	DRAWN	NAME
–	–	INITIAL RELEASE.	A	92159Y	310615	CIRCUIT DIAGRAM, 9900
					RELEASE NO. 92159Y	DATE 02AUG13 / PART NO. AE08076124 / SHEET 151

Figure 358 Connector Composites (7110 / 7110A / 7250)

13.161. CONNECTOR COMPOSITES (7500W / 7501 / 7600), P. 152

NAVISTAR, INC

THIS PRINT IS PROVIDED ON A RESTRICTED BASIS AND IS NOT TO BE USED IN ANY WAY DETRIMENTAL TO THE INTEREST OF NAVISTAR, INC.

ELECTRICAL CIRCUIT DIAGRAM CHAPTER 13

CONNECTOR BODY COMPOSITE MATING VIEW SHOWN

BACK-UP LIGHT
(7500W)
(LOCATED ON TOP OF TRANSMISSION)

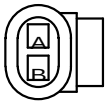

CONNECTOR 1661778C1
BODY LOCK 1661874C1

CAV	CIRCUIT	GAUGE	COLOR	TERMINAL	SEAL/SLEEVE
A	KL71	16	OR	1661875C1	1661872C1
B	KL71A	16	OR	1661875C1	1661872C1

ECA
(7501)

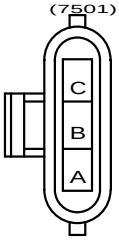

CONNECTOR 1667733C1
BODY LOCK 1667734C1

CAV	CIRCUIT	GAUGE	COLOR	TERMINAL	SEAL/SLEEVE
A	PLUG	–	–	–	–
B	K11-G	10	WH	1667737C1	1667735C1
C	K14S	10	RD	1667737C1	1667735C1

VEHICLE SPEED SENSOR
(7600)
(LOCATED ON TOP OF TRANSMISSION)

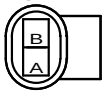

CONNECTOR 2036583C1

CAV	CIRCUIT	GAUGE	COLOR	TERMINAL
A	K47A	18	GY	3554322C1
B	K47	18	GY	3554322C1

VEHICLE SPEED SENSOR
(7600)
(LOCATED ON TOP OF TRANSMISSION)

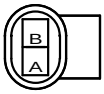

CONNECTOR 3662425C1
BODY LOCK 3662518C1

CAV	CIRCUIT	GAUGE	COLOR	TERMINAL	SEAL/SLEEVE
A	K47	18	GY	3554322C1	3554318C1
B	K47A	18	GY	3554322C1	3554318C1

CHK	DATE	CHANGE	REV	REFERENCE	DRAWN	NAME
–	–	INITIAL RELEASE.	A	92159Y	310615	CIRCUIT DIAGRAM, 9900
					RELEASE NO. 92159Y	DATE 02AUG13 / PART NO. AE08076124 / SHEET 152

Figure 359 Connector Composites (7500W / 7501 / 7600)

13.162. CONNECTOR COMPOSITES (7603 / 7608 / 7615 / 7700K), P. 153

NAVISTAR, INC

THIS PRINT IS PROVIDED ON A RESTRICTED BASIS AND IS NOT TO BE USED IN ANY WAY DETRIMENTAL TO THE INTEREST OF NAVISTAR, INC.

ELECTRICAL CIRCUIT DIAGRAM CHAPTER 13

CONNECTOR BODY COMPOSITE MATING VIEW SHOWN

ENGINE SPEED SENSOR
(7603)
(LOCATED IN ENGINE)

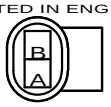

CONNECTOR 3610533C1
BODY LOCK 3610532C1

CAV	CIRCUIT	GAUGE	COLOR	TERMINAL	SEAL/SLEEVE
A	K159	18	TN	3554322C1	3554318C1
B	K139	18	OR	3554322C1	3554318C1

OTUPUT SENSOR
(7608)
(LOCATED IN ENGINE)

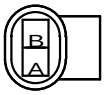

CONNECTOR 3610533C1
BODY LOCK 3610532C1

CAV	CIRCUIT	GAUGE	COLOR	TERMINAL	SEAL/SLEEVE
A	K160	18	YL	3554322C1	3554318C1
B	K140	18	LTGN	3554322C1	3554318C1

TURBINE SPEED SENSOR
(7615)
(LOCATED IN ENGINE)

CONNECTOR 3610533C1
BODY LOCK 3610532C1

CAV	CIRCUIT	GAUGE	COLOR	TERMINAL	SEAL/SLEEVE
A	K180	18	OR	3554322C1	3554318C1
B	K120	18	LTBL	3554322C1	3554318C1

TRANS OIL TEMPERATURE
(7700K)
(LOCATED IN UNDERSIDE OF TRANSMISSION)

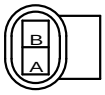

CONNECTOR 2036584C1

CAV	CIRCUIT	GAUGE	COLOR	TERMINAL
A	K31	18	TN	2036586C1
B	K31-G	18	GY	2036586C1

CHK	DATE	CHANGE	REV	REFERENCE	DRAWN	NAME
–	–	INITIAL RELEASE.	A	92159Y	310615	CIRCUIT DIAGRAM, 9900
					RELEASE NO. 92159Y	DATE 02AUG13 / PART NO. AE08076124 / SHEET 153

Figure 360 Connector Composites (7603 / 7608 / 7615 / 7700K)

13.163. CONNECTOR COMPOSITES (7704 / 8103 / 8104), P. 154

NAVISTAR, INC

THIS PRINT IS PROVIDED ON A RESTRICTED BASIS AND IS NOT TO BE USED IN ANY WAY DETRIMENTAL TO THE INTEREST OF NAVISTAR, INC.

ELECTRICAL CIRCUIT DIAGRAM CHAPTER 13

CONNECTOR BODY COMPOSITE MATING VIEW SHOWN

ECM SWITCH GND SPLICE
(7704)

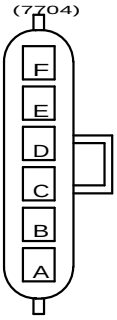

CONNECTOR 3551896C1
BODY LOCK 3551897C1

CAV	CIRCUIT	GAUGE	COLOR	TERMINAL	SEAL/SLEEVE
A	K95G	18	TN	2033819C1	3517771C1
B	K23A	18	TN	2033819C1	1652325C1
C	K41-G	18	TN	2033819C1	1652325C1
D*	K95-GG	18	TN	2033819C1	1652325C1
D#	K95-GF	18	TN	2033819C1	1652325C1
E	PLUG	–	–	–	–
F	K95AC	18	TN	2033819C1	3517771C1

* W/ FUEL/WATER SAPERATOR - DAVCO, 900
\# W/ FUEL/WATER SAPERATOR - RACOR, 9900

TCM 30A FUSE
(8103)

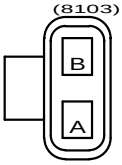

CONNECTOR 1667639C1

CAV	CIRCUIT	GAUGE	COLOR	TERMINAL
A	K14A	12	RD	1661708C1
B	K14AS	12	RD	1661708C1

ECA 50A FUSE
(8104)
(LOCATED AT CAB)

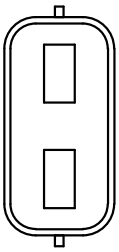

CONNECTOR 3525613C1

CAV	CIRCUIT	GAUGE	COLOR	TERMINAL	SEAL/SLEEVE
A	K14R	10	RD	3515522C1	3515525C1
B	K14S	10	RD	3515522C1	3515525C1

CHK	DATE	CHANGE	REV	REFERENCE	DRAWN	NAME
0610	27AUG13	INITIAL RELEASE.	A	92159Y	310615	CIRCUIT DIAGRAM, 9900
					RELEASE NO. 92159Y	DATE 02AUG13 / PART NO. AE08076124 / SHEET 154

Figure 361 Connector Composites (7704 / 8103 / 8104)

13.164. CONNECTOR COMPOSITES (8107 / 8303 / 8310 / 8311), P. 155

NAVISTAR, INC

THIS PRINT IS PROVIDED ON A RESTRICTED BASIS AND IS NOT TO BE USED IN ANY WAY DETRIMENTAL TO THE INTEREST OF NAVISTAR, INC.

ELECTRICAL CIRCUIT DIAGRAM CHAPTER 13

CONNECTOR BODY COMPOSITE MATING VIEW SHOWN

TIMER CIRCUIT ENGINE FUSE
(8107)
(LOCATED AT CAB)

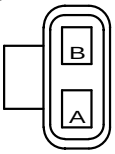

CONNECTOR 1667639C1

CAV	CIRCUIT	GAUGE	COLOR	TERMINAL
A	K14L1	16	RD	1661707C1
B	K14L2	16	RD	1661707C1

ELECTRIC HORN
(8303)
(LOCATED ON LEFT FRAME RAIL
UNDER ENGINE CROSSMEMBER)

CONNECTOR 1661778C1
BODY LOCK 1661874C1

CAV	CIRCUIT	GAUGE	COLOR	TERMINAL	SEAL/SLEEVE
A	M85	16	GY	1661875C1	1661872C1
B	M85-GA	16	WH	1661875C1	1661872C1

DUAL ELECTRIC HORNS
(8310)
(LOCATED ON LEFT FRAME RAIL
UNDER ENGINE CROSSMEMBER)

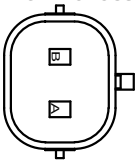

CONNECTOR 3543888C1
BODY LOCK 1661874C1

CAV	CIRCUIT	GAUGE	COLOR	TERMINAL	SEAL/SLEEVE
A	M85J	16	GY	1667742C1	1661872C1
B	M85-GC	16	WH	1667742C1	1661872C1

ELECTRIC HORN #1
(8311)
(LOCATED UNDER ENGINE CROSSMEMBER)

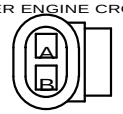

CONNECTOR 1661778C1
BODY LOCK 1661874C1

CAV	CIRCUIT	GAUGE	COLOR	TERMINAL	SEAL/SLEEVE
A	M85J	16	GY	1661875C1	1661872C1
B	M85-GC	16	WH	1661875C1	1661872C1

CHK	DATE	CHANGE	REV	REFERENCE	DRAWN	NAME
–	–	INITIAL RELEASE.	A	92159Y	310615	CIRCUIT DIAGRAM, 9900
					RELEASE NO. 92159Y	DATE 02AUG13 / PART NO. AE08076124 / SHEET 155

Figure 362 Connector Composites (8107 / 8303 / 8310 / 8311)

13.165. CONNECTOR COMPOSITES (8410 / 8500 / 8501), P. 156

NAVISTAR, INC

THIS PRINT IS PROVIDED ON A RESTRICTED BASIS AND IS NOT TO BE USED IN ANY WAY DETRIMENTAL TO THE INTEREST OF NAVISTAR, INC.

ELECTRICAL CIRCUIT DIAGRAM CHAPTER 13

CONNECTOR BODY COMPOSITE MATING VIEW SHOWN

FLAME START RELAY
(8410)
(LOCATED ON LEFT SIDE OF ENGINE)

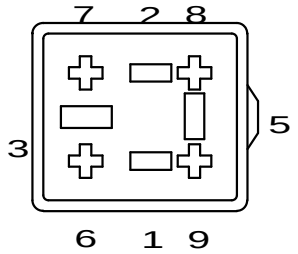

CONNECTOR 3664985C1

CAV	CIRCUIT	GAUGE	COLOR	TERMINAL	SEAL/SLEEVE
1	K21A1	12	TN	3664983C1	3664987C1
2	K21A2	12	TN	3664983C1	3664987C1
3	K14A1	8	RD	3664982C1	3664986C1
4	PLUG	–	–	–	–
5	PLUG	–	–	–	–
6	K21B1	18	TN	3664984C1	3664988C1
7	K21B2	18	TN	3664984C1	3664988C1
8	K21B3	18	TN	3664984C1	3664988C1
9	PLUG	–	–	–	–

BENDIX LEFT ABS MODULATOR
(8500)
(LOCATED ON LEFT FRAME RAIL BY FRONT AXLE)

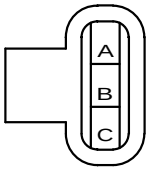

CONNECTOR 1686834C1
BODY LOCK 1664408C1

CAV	CIRCUIT	GAUGE	COLOR	TERMINAL	SEAL/SLEEVE
A	M94	18	GY	2033819C1	1652325C1
B	M94A	18	GY	2033819C1	1652325C1
C	M94B	18	GY	2033819C1	1652325C1

OEM CROSSOVER CONNECTOR
(8500)
(LOCATED IN ENGINE)

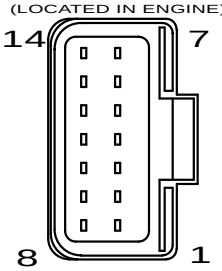

CONNECTOR 3573078C1

CAV	CIRCUIT	GAUGE	COLOR	TERMINAL
1	PLUG	–	–	–
2	K5A(+)	18	YL	3573077C1
3	PLUG	–	–	–
4	PLUG	–	–	–
5	PLUG	–	–	–
6	K13B	18	PK	3573077C1
7	PLUG	–	–	–
8	PLUG	–	–	–
9	K5A(-)	18	LTGN	3573077C1
10	PLUG	–	–	–
11	PLUG	–	–	–
12	PLUG	–	–	–
13	K10-GK	18	WH	3573077C1
14	PLUG	–	–	–

BENDIX RIGHT ABS MODULATOR
(8501)
(LOCATED ON RIGHT FRAME RAIL BY FRONT AXLE)

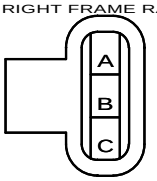

CONNECTOR 1686834C1
BODY LOCK 1664408C1

CAV	CIRCUIT	GAUGE	COLOR	TERMINAL	SEAL/SLEEVE
A	M94H	18	GY	2033819C1	1652325C1
B	M94J	18	GY	2033819C1	1652325C1
C	M94K	18	GY	2033819C1	1652325C1

CHK	DATE	CHANGE	REV	REFERENCE	DRAWN	NAME
–	–	INITIAL RELEASE.	A	92159Y	310615	CIRCUIT DIAGRAM, 9900
					RELEASE NO. 92159Y	DATE 02AUG13 / PART NO. AE08076124 / SHEET 156

Figure 363 Connector Composites (8410 / 8500 / 8501)

13.166. CONNECTOR COMPOSITES (8502 / 8503 / 8504 / 8505), P. 157

NAVISTAR, INC

THIS PRINT IS PROVIDED ON A RESTRICTED BASIS AND IS NOT TO BE USED IN ANY WAY DETRIMENTAL TO THE INTEREST OF NAVISTAR, INC.

ELECTRICAL CIRCUIT DIAGRAM CHAPTER 13

CONNECTOR BODY COMPOSITE MATING VIEW SHOWN

BENDIX LEFT AIR ABS SPEED SENSOR
(8502)
(LOCATED ON LEFT FRAME RAIL BY FRONT AXLE)

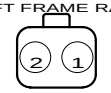

CONNECTOR 1684261C1
BODY LOCK 1684263C1

CAV	CIRCUIT	GAUGE	COLOR	TERMINAL
1	M94C	18	GY	1680205C1
2	M94D	18	GY	3572625C1
	M94D	18	GY	1680205C1

BENDIX RIGHT AIR ABS SPEED SENSOR
(8503)
(LOCATED ON RIGHT FRAME RAIL BY FRONT AXLE)

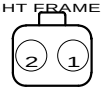

CONNECTOR 1684261C1
BODY LOCK 1684263C1

CAV	CIRCUIT	GAUGE	COLOR	TERMINAL
1	M94E	18	GY	1680205C1
2	M94F	18	GY	1680205C1

WABCO LEFT ABS MODULATOR
(8504)

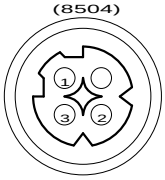

CONNECTOR 3919376C1

CAV	CIRCUIT	GAUGE	COLOR	TERMINAL
1	[MX94M]	18	GY	3601686C1
2	[MX94MA]	18	GY	3601686C1
3	[MX94MB]	18	GY	3601686C1

WABCO RIGHT ABS MODULATOR
(8505)

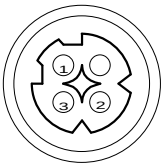

CONNECTOR 3913976C1

CAV	CIRCUIT	GAUGE	COLOR	TERMINAL
1	[MX94MH]	18	GY	3601686C1
2	[MX94MJ]	18	GY	3601686C1
3	[MX94MK]	18	GY	3601686C1

CHK	DATE	CHANGE	REV	REFERENCE	DRAWN	NAME
–	–	INITIAL RELEASE.	A	92159Y	310615	CIRCUIT DIAGRAM, 9900
					RELEASE NO. 92159Y	DATE 02AUG13 / PART NO. AE08076124 / SHEET 157

Figure 364 Connector Composites (8502 / 8503 / 8504 / 8505)

13.167. CONNECTOR COMPOSITES (8506 / 8507 / 8803 / 8951), P. 158

NAVISTAR, INC

THIS PRINT IS PROVIDED ON A RESTRICTED BASIS AND IS NOT TO BE USED IN ANY WAY DETRIMENTAL TO THE INTEREST OF NAVISTAR, INC.

ELECTRICAL CIRCUIT DIAGRAM CHAPTER 13

CONNECTOR BODY COMPOSITE MATING VIEW SHOWN

WABCO LEFT ABS SPEED SENSOR
(8506)

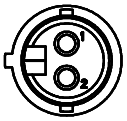

CONNECTOR 6111844C1

CAV	CIRCUIT	GAUGE	COLOR	TERMINAL
1	[NC94MC]	18	GY	6111842C1
2	[NC94MD]	18	GY	6111842C1

WABCO RIGHT ABS SPEED SENSOR
(8507)

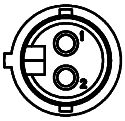

CONNECTOR 6111844C1

CAV	CIRCUIT	GAUGE	COLOR	TERMINAL
1	[NC94ME]	18	GY	6111842C1
2	[NC94MF]	18	GY	6111842C1

CHASSIS GND SPLICE PACK #1
(8803)
(LOCATED ON LEFT FRAME RAIL UNDER CAB)

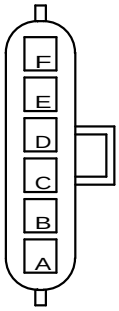

CONNECTOR 3551896C1
BODY LOCK 3551897C1

CAV	CIRCUIT	GAUGE	COLOR	TERMINAL	SEAL/SLEEVE
A	N11-GA	10	WH	1687847C1	0589390C1
B	N10-G	12	WH	2033816C1	0589391C1
C	N49-G	18	WH	2033819C1	1652325C1
D	N9BF	18	GY	2033819C1	1652325C1
E	N39-G	16	WH	2033819C1	1652325C1
F*	N36-G	18	GY	2033819C1	1652325C1
F#	N36-G	18	BN	2033819C1	1652325C1

* W/ DUAL BOC FUEL TANKS 115 / 150 GAL
\# W/ DUAL UC FUEL TANKS 115 / 150 GAL

J1939 ENGINE DATALINK
(8951)

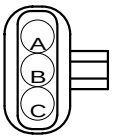

CONNECTOR 1667740C1
BODY LOCK 1667771C1

CAV	CIRCUIT	GAUGE	COLOR	TERMINAL	SEAL/SLEEVE
A	M5U(+)	18	YL	1667742C1	3568570C1
B	PLUG	–	–	–	–
C	M5U(-)	18	GN	1667742C1	3568570C1

CHK	DATE	CHANGE	REV	REFERENCE	DRAWN	NAME
0610	27AUG13	INITIAL RELEASE.	A	92159Y	310615	CIRCUIT DIAGRAM, 9900
					RELEASE NO. 92159Y	DATE 02AUG13 / PART NO. AE08076124 / SHEET 158

Figure 365 Connector Composites (8506 / 8507 / 8803 / 8951)

13.168. CONNECTOR COMPOSITES (8953F), P. 159

NAVISTAR, INC

THIS PRINT IS PROVIDED ON A RESTRICTED BASIS AND IS NOT TO BE USED IN ANY WAY DETRIMENTAL TO THE INTEREST OF NAVISTAR, INC.

ELECTRICAL CIRCUIT DIAGRAM CHAPTER 13

CONNECTOR BODY COMPOSITE MATING VIEW SHOWN

FORWARD/CENTER CHASSIS INTERCONNECT
(8953F)

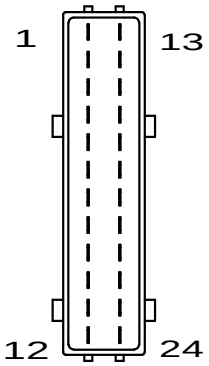

CONNECTOR 3558022C1
BODY LOCK 3558056C1

CAV	CIRCUIT	GAUGE	COLOR	TERMINAL	SEAL/SLEEVE
1*	M94BD	16	BK	3559037C1	3509903C1
1#	[M94MS]	18	GY	3559036C1	3509903C1
2*	M94BE	16	GY	3559037C1	3509903C1
2#	[M94MT]	18	GY	3559036C1	3509903C1
3*	M94BF	16	OR	3559037C1	3509903C1
3#	[M94MU]	18	GY	3559036C1	3509903C1
4*	M94BH	16	GY	3559037C1	3509903C1
4#	[M94MW]	18	GY	3559036C1	3509903C1
5@	M94BM	16	GY	3559037C1	3509903C1
5%	[NE94BM]	18	GY	3559036C1	3509903C1
6@	M94BN	16	GY	3559037C1	3509903C1
6%	[M94BN]	18	GY	3559036C1	3509903C1
7*	M94BL	16	RD	3559037C1	3509903C1
7#	[M94ML]	18	GY	3559036C1	3509903C1
8*	M94BK	16	TN	3559037C1	3509903C1
8#	[M94MZ]	18	GY	3559036C1	3509903C1
9*	M94BJ	16	YL	3559037C1	3509903C1
9#	[M94MY]	18	GY	3559036C1	3509903C1
10*	M94BC	16	BK	3559037C1	3509903C1
10#	[M94MR]	18	GY	3559036C1	3509903C1
11*	M94BB	16	LTGN	3559037C1	3509903C1
11#	[M94MQ]	18	GY	3559036C1	3509903C1
12*	M94BA	16	LTBL	3559037C1	3509903C1
12#	[M94MP]	18	GY	3559036C1	3509903C1
13	M94SAB	18	GY	3559036C1	3509903C1
14	M94SBB	18	GY	3559036C1	3509903C1
15	M94SH	18	BN	3559036C1	3509903C1
16	M94SJ	16	GY	3559037C1	3509903C1
17	M94SK	16	OR	3559037C1	3509903C1
18	M94SL	16	BN	3559037C1	3509903C1
19	M94SM	16	BK	3559037C1	3509903C1
20	M94SN	16	RD	3559037C1	3509903C1
21	M94SCB	18	GY	3559036C1	3509903C1
22	M94SDB	18	GY	3559036C1	3509903C1
23	M94SVD3	18	GY	3559036C1	3532128C1
24	M94SZD3	18	GY	3559036C1	3532128C1

* MB - BENDIX AIR ABS
\# W/ WABCO AIR ABS
@ BENDIX AIR ABS W/ ATC
% W/ WABCO AIR ABS W/ ATC

BENDIX 6-CHANNEL ABS FWD/CENTR
(8953F)

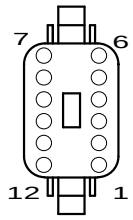

CONNECTOR 3602757C1
BODY LOCK 3601925C1

CAV	CIRCUIT	GAUGE	COLOR	TERMINAL
1	M94BY	16	GY	1680205C1
2	M94BZ	16	GY	1680205C1
3	M94BP	16	GY	1680205C1
4	M94BQ	16	GY	1680205C1
5	M94BR	16	GY	1680205C1
6	M94BS	16	GY	1680205C1
7	M94BT	16	GY	1680205C1
8	M94BU	16	GY	1680205C1
9	M94BV	16	GY	1680205C1
10	M94BW	16	GY	1680205C1

CHK	DATE	CHANGE	REV	REFERENCE	DRAWN	NAME
–	–	INITIAL RELEASE.	A	92159Y	310615	CIRCUIT DIAGRAM, 9900
					RELEASE NO. 92159Y	DATE 02AUG13 / PART NO. AE08076124 / SHEET 159

Figure 366 Connector Composites (8953F)

13.169. CONNECTOR COMPOSITES (8953M / 8953M1), P. 160

NAVISTAR, INC

THIS PRINT IS PROVIDED ON A RESTRICTED BASIS AND IS NOT TO BE USED IN ANY WAY DETRIMENTAL TO THE INTEREST OF NAVISTAR, INC.

ELECTRICAL CIRCUIT DIAGRAM CHAPTER 13

CONNECTOR BODY COMPOSITE MATING VIEW SHOWN

FORWARD/CENTER CHASSIS INTERCONNECT
(8953M)

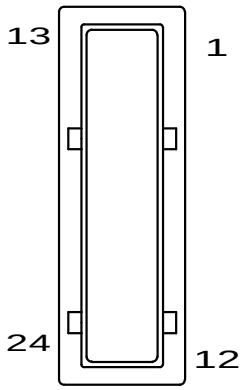

CONNECTOR 3558026C1
BODY LOCK 3558056C1

CAV	CIRCUIT	GAUGE	COLOR	TERMINAL	SEAL/SLEEVE
1	N94BD	16	GY	3559035C1	3509903C1
2	N94BE	16	GY	3559035C1	3509903C1
3	N94BF	16	GY	3559035C1	3509903C1
4	N94BH	16	GY	3559035C1	3509903C1
5	N94BM	16	GY	3559035C1	3509903C1
6	N94BN	16	GY	3559035C1	3509903C1
7	N94BL	14	GY	3559035C1	3575783C1
8	N94BK	16	GY	3559035C1	3509903C1
9	N94BJ	14	GY	3559035C1	3575783C1
10	N94BC	16	GY	3559035C1	3509903C1
11	N94BB	16	GY	3559035C1	3509903C1
12	N94BA	16	GY	3559035C1	3509903C1
13	N94SAB	18	GY	3509874C1	3509903C1
14	N94SBB	18	GY	3509874C1	3509903C1
15	N94SH	16	GY	3559035C1	3509903C1
16	N94SJ	16	GY	3559035C1	3509903C1
17	N94SK	16	GY	3559035C1	3509903C1
18	N94SL	16	GY	3559035C1	3509903C1
19	N94SM	16	GY	3559035C1	3509903C1
20	N94SN	16	GY	3559035C1	3509903C1
21	N94SCB	18	GY	3509874C1	3509903C1
22	N94SDB	18	GY	3509874C1	3509903C1
23	N94SVD	16	GY	3559035C1	3509903C1
24	N94SZD	16	GY	3559035C1	3509903C1

FORWARD/CENTER CHASSIS INTERCONNECT
(8953M1)

CONNECTOR 0587565C91

CAV	CIRCUIT	GAUGE	COLOR	TERMINAL	SEAL/SLEEVE
A	N39	16	GY	0587577C1	1652325C1

CHK	DATE	CHANGE	REV	REFERENCE
–	–	INITIAL RELEASE.	A	92159Y

DRAWN 310615 | NAME CIRCUIT DIAGRAM, 9900

RELEASE NO. 92159Y | DATE 02AUG13 | PART NO. AE08076124 | SHEET 160

Figure 367 Connector Composites (8953M / 8953M1)

13.170. CONNECTOR COMPOSITES (8953M2 / 8957F1 / 8962 / 8963), P. 161

NAVISTAR, INC

THIS PRINT IS PROVIDED ON A RESTRICTED BASIS AND IS NOT TO BE USED IN ANY WAY DETRIMENTAL TO THE INTEREST OF NAVISTAR, INC.

ELECTRICAL CIRCUIT DIAGRAM CHAPTER 13

CONNECTOR BODY COMPOSITE MATING VIEW SHOWN

BENDIX 6-CHANNEL ABS FWD/CENTR
(8953M2)
(LOCATED ON LEFT FRAME RAIL BEHIND CAB)

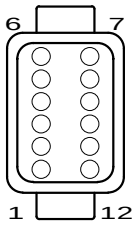

CONNECTOR 1689499C1
BODY LOCK 1689501C1

CAV	CIRCUIT	GAUGE	COLOR	TERMINAL
1	N94BY	16	GY	1680206C1
2	N94BZ	16	GY	1680206C1
3	N94BP	16	GY	1680206C1
4	N94BO	16	GY	1680206C1
5	N94BR	16	GY	1680206C1
6	N94BS	16	GY	1680206C1
7	N94BT	16	GY	1680206C1
8	N94BU	16	GY	1680206C1
9	N94BV	16	GY	1680206C1
10	N94BW	16	GY	1680206C1

FORWARD/CENTER CHASSIS INTERCONNECT
(8957F1)

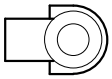

CONNECTOR 0587566C91

CAV	CIRCUIT	GAUGE	COLOR	TERMINAL	SEAL/SLEEVE
A	M39	16	GY	0587575C1	1652325C1

LEFT FR BRAKE WEAR SENSOR (6X4)
(8962)
(LOCATED ON LEFT FRAME RAIL BY FRONT
FORWARD REAR AXLE)

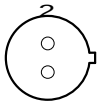

CONNECTOR 3600334C1

CAV	CIRCUIT	GAUGE	COLOR	TERMINAL
1	[RURFL1]	18	BK	ASSY
2	[RURFL2]	18	BK	ASSY

RIGHT FR BRAKE WEAR SENSOR (6X4)
(8963)
(LOCATED ON RIGHT FRAME RAIL BY FRONT
FORWARD REAR AXLE)

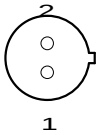

CONNECTOR 3600334C1

CAV	CIRCUIT	GAUGE	COLOR	TERMINAL
1	[RURFR1]	18	BK	ASSY
2	[RURFR2]	18	BK	ASSY

CHK	DATE	CHANGE	REV	REFERENCE	DRAWN	NAME
–	–	INITIAL RELEASE.	A	92159Y	310615	CIRCUIT DIAGRAM, 9900
					RELEASE NO. 92159Y	DATE 02AUG13 / PART NO. AE08076124 / SHEET 161

Figure 368 Connector Composites (8953M2 / 8957F1 / 8962 / 8963)

13.171. CONNECTOR COMPOSITES (8964 / 8965 / 8966 / 8967), P. 162

NAVISTAR, INC

THIS PRINT IS PROVIDED ON A RESTRICTED BASIS AND IS NOT TO BE USED IN ANY WAY DETRIMENTAL TO THE INTEREST OF NAVISTAR, INC.

ELECTRICAL CIRCUIT DIAGRAM CHAPTER 13

CONNECTOR BODY COMPOSITE MATING VIEW SHOWN

LEFT RR BRAKE WEAR SENSOR (6X4)
(8964)
(LOCATED ON LEFT FRAME RAIL BY REAR REAR AXLE)

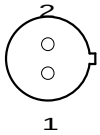

CONNECTOR 3600334C1

CAV	CIRCUIT	GAUGE	COLOR	TERMINAL
1	[RURRL1]	18	BK	0382181C1
2	[RURRL2]	18	BK	0382181C1

RIGHT RR BRAKE WEAR SENSOR (6X4)
(8965)
(LOCATED ON RIGHT FRAME RAIL BY REAR REAR AXLE)

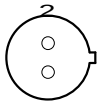

CONNECTOR 3600334C1

CAV	CIRCUIT	GAUGE	COLOR	TERMINAL
1	[RURRR1]	18	BK	0382181C1
2	[RURRR2]	18	BK	0382181C1

LEFT REAR WEAR SENSOR (4X2)
(8966)
(LOCATED ON LEFT FRAME RAIL BY REAR AXLE)

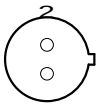

CONNECTOR 3600334C1

CAV	CIRCUIT	GAUGE	COLOR	TERMINAL
1	[RTRRL1]	18	BK	0382181C1
2	[RTRRL2]	18	BK	0382181C1

REAR BRAKE WEAR SENSOR (4X2)
(8967)
(LOCATED ON RIGHT FRAME RAIL BY REAR AXLE)

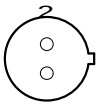

CONNECTOR 3600334C1

CAV	CIRCUIT	GAUGE	COLOR	TERMINAL
1	[RTRRR1]	18	BK	0382181C1
2	[RTRRR2]	18	BK	0382181C1

CHK	DATE	CHANGE	REV	REFERENCE	DRAWN	NAME
–	–	INITIAL RELEASE.	A	92159Y	310615	CIRCUIT DIAGRAM, 9900
					RELEASE NO. 92159Y	DATE 02AUG13
					PART NO. AE08076124	SHEET 162

Figure 369 Connector Composites (8964 / 8965 / 8966 / 8967)

13.172. CONNECTOR COMPOSITES (8972 / 8973 / 8974 / 8975), P. 163

NAVISTAR, INC

THIS PRINT IS PROVIDED ON A RESTRICTED BASIS AND IS NOT TO BE USED IN ANY WAY DETRIMENTAL TO THE INTEREST OF NAVISTAR, INC.

ELECTRICAL CIRCUIT DIAGRAM CHAPTER 13

CONNECTOR BODY COMPOSITE MATING VIEW SHOWN

LEFT FR BRAKE STROKE (6X4)
(8972)
(LOCATED ON LEFT FRAME RAIL BY FORWARD REAR AXLE)

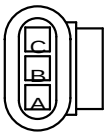

CONNECTOR 1667741C1
BODY LOCK 1667771C1

CAV	CIRCUIT	GAUGE	COLOR	TERMINAL	SEAL/SLEEVE
A	R108VE	18	TN	1661875C1	1661872C1
B	R108ZE	18	TN	1661875C1	1661872C1
C	R108E	18	TN	1661875C1	1661872C1

RIGHT FR BRAKE STROKE (6X4)
(8973)
(LOCATED ON RIGHT FRAME RAIL BY FORWARD REAR AXLE)

CONNECTOR 1667741C1
BODY LOCK 1667771C1

CAV	CIRCUIT	GAUGE	COLOR	TERMINAL	SEAL/SLEEVE
A	R108VL	18	TN	1661875C1	1661872C1
B	R108ZL	18	TN	1661875C1	1661872C1
C	R108F	18	TN	1661875C1	1661872C1

LEFT RR BRAKE STROKE (6X4)
(8974)
(LOCATED ON LEFT FRAME RAIL BY REAR REAR AXLE)

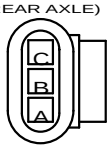

CONNECTOR 1667741C1
BODY LOCK 1667771C1

CAV	CIRCUIT	GAUGE	COLOR	TERMINAL	SEAL/SLEEVE
A	R108VH	18	TN	1661875C1	1661872C1
B	R108ZH	18	TN	1661875C1	1661872C1
C	R108CA	18	TN	1661875C1	1661872C1

RIGHT RR BRAKE STROKE (6X4)
(8975)
(LOCATED ON RIGHT FRAME RAIL BY REAR REAR AXLE)

CONNECTOR 1667741C1
BODY LOCK 1667771C1

CAV	CIRCUIT	GAUGE	COLOR	TERMINAL	SEAL/SLEEVE
A	R108VJ	18	TN	1661875C1	1661872C1
B	R108ZJ	18	TN	1661875C1	1661872C1
C	R108DA	18	TN	1661875C1	1661872C1

CHK	DATE	CHANGE	REV	REFERENCE	DRAWN	NAME
0610	27AUG13	INITIAL RELEASE.	A	92159Y	310615	CIRCUIT DIAGRAM, 9900
					RELEASE NO. 92159Y	DATE 02AUG13 / PART NO. AE08076124 / SHEET 163

Figure 370 Connector Composites (8972 / 8973 / 8974 / 8975)

13.173. CONNECTOR COMPOSITES (8976 / 8977 / 8981 / 8982), P. 164

NAVISTAR, INC

THIS PRINT IS PROVIDED ON A RESTRICTED BASIS AND IS NOT TO BE USED IN ANY WAY DETRIMENTAL TO THE INTEREST OF NAVISTAR, INC.

ELECTRICAL CIRCUIT DIAGRAM CHAPTER 13

CONNECTOR BODY COMPOSITE MATING VIEW SHOWN

LEFT REAR BRAKE STROKE (4X2)
(8976)
(LOCATED ON LEFT FRAME RAIL BY REAR AXLE)

CONNECTOR 1667741C1
BODY LOCK 1667771C1

CAV	CIRCUIT	GAUGE	COLOR	TERMINAL	SEAL/SLEEVE
A	R108VF	18	TN	1661875C1	1661872C1
B	R108ZF	18	TN	1661875C1	1661872C1
C	R108C	18	TN	1661875C1	1661872C1

RIGHT REAR BRAKE STROKE (4X2)
(8977)
(LOCATED ON RIGHT FRAME RAIL BY REAR AXLE)

CONNECTOR 1667741C1
BODY LOCK 1667771C1

CAV	CIRCUIT	GAUGE	COLOR	TERMINAL	SEAL/SLEEVE
A	R108VK	18	TN	1661875C1	1661872C1
B	R108ZK	18	TN	1661875C1	1661872C1
C	R108D	18	TN	1661875C1	1661872C1

LEFT REAR TIRE PRESSURE MONITOR (4X2)
(8981)
(LOCATED ON LEFT FRAME RAIL BY REAR AXLE(S))

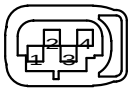

CONNECTOR 3600324C1

CAV	CIRCUIT	GAUGE	COLOR	TERMINAL	SEAL/SLEEVE
1	R22ZB	20	TN	3600325C1	3600327C1
2	R22VB	20	TN	3600325C1	3600327C1
3	R22B	20	TN	3600325C1	3600327C1
4	PLUG	–	–	–	–

RIGHT REAR TIRE PRESS MONITOR (4X2)
(8982)
LOCATED ON RIGHT FRAME RAIL BY REAR AXLE(S))

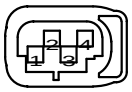

CONNECTOR 3600324C1

CAV	CIRCUIT	GAUGE	COLOR	TERMINAL	SEAL/SLEEVE
1	R22ZC	20	TN	3600325C1	3600327C1
2	R22VC	20	TN	3600325C1	3600327C1
3	R22C	20	TN	3600325C1	3600327C1
4	PLUG	–	–	–	–

CHK	DATE	CHANGE	REV	REFERENCE	DRAWN	NAME		
–	–	INITIAL RELEASE.	A	92159Y	310615	CIRCUIT DIAGRAM, 9900		
					RELEASE NO.	DATE	PART NO.	SHEET
					92159Y	02AUG13	AE08076124	164

Figure 371 Connector Composites (8976 / 8977 / 8981 / 8982)

13.174. CONNECTOR COMPOSITES (8983 / 8984 / 9100D / 9100E), P. 165

NAVISTAR, INC

THIS PRINT IS PROVIDED ON A RESTRICTED BASIS AND IS NOT TO BE USED IN ANY WAY DETRIMENTAL TO THE INTEREST OF NAVISTAR, INC.

ELECTRICAL CIRCUIT DIAGRAM CHAPTER 13

CONNECTOR BODY COMPOSITE MATING VIEW SHOWN

LEFT REAR TIRE PRESS MONITOR (6X4)
(8983)

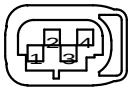

CONNECTOR 3600324C1

CAV	CIRCUIT	GAUGE	COLOR	TERMINAL	SEAL/SLEEVE
1	R22ZB	20	TN	3600325C1	3600327C1
2	R22VB	20	TN	3600325C1	3600327C1
3	R22B	20	TN	3600325C1	3600327C1
4	PLUG	–	–	–	–

RIGHT REAR TIRE PRESS MONITOR (6X4)
(8984)

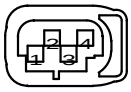

CONNECTOR 3600324C1

CAV	CIRCUIT	GAUGE	COLOR	TERMINAL	SEAL/SLEEVE
1	R22ZC	20	TN	3600325C1	3600327C1
2	R22VC	20	TN	3600325C1	3600327C1
3	R22C	20	TN	3600325C1	3600327C1
4	PLUG	–	–	–	–

LEFT FUEL SENDER DUAL BOC 115/150 GAL
(9100D)

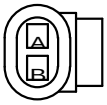

CONNECTOR 1661778C1
BODY LOCK 1661874C1

CAV	CIRCUIT	GAUGE	COLOR	TERMINAL	SEAL/SLEEVE
A	N36A	18	TN	1661875C1	1661872C1
B	N36-G	18	GY	1661875C1	1661872C1

RIGHT FUEL SENDER DUAL OC 115/150 GAL
(9100E)

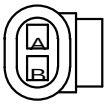

CONNECTOR 1661778C1
BODY LOCK 1661874C1

CAV	CIRCUIT	GAUGE	COLOR	TERMINAL	SEAL/SLEEVE
A	N36	18	RD	1661875C1	1661872C1
B	N36-G	18	BN	1661875C1	1661872C1

CHK	DATE	CHANGE	REV	REFERENCE	DRAWN	NAME
0610	27AUG13	INITIAL RELEASE.	A	92159Y	310615	CIRCUIT DIAGRAM, 9900
					RELEASE NO. 92159Y	DATE 02AUG13 / PART NO. AE08076124 / SHEET 165

Figure 372 Connector Composites (8983 / 8984 / 9100D / 9100E)

13.175. CONNECTOR COMPOSITES (9303 / 9303A / 9303B), P. 166

NAVISTAR, INC

THIS PRINT IS PROVIDED ON A RESTRICTED BASIS AND IS NOT TO BE USED IN ANY WAY DETRIMENTAL TO THE INTEREST OF NAVISTAR, INC.

ELECTRICAL CIRCUIT DIAGRAM CHAPTER 13

CONNECTOR BODY COMPOSITE MATING VIEW SHOWN

4X2 STOP TAIL AND TURN
(9303)
(LOCATED AT REAR END OF LEFT FRAME RAIL)

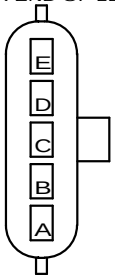

CONNECTOR 1661375C2
BODY LOCK 1661376C1

CAV	CIRCUIT	GAUGE	COLOR	TERMINAL	SEAL/SLEEVE
A	R71BA	12	OR	2033816C1	3575783C1
B	R56A	14	OR	2033816C1	3575783C1
C	R57A	14	OR	2033816C1	3575783C1
D	R68A	14	BN	2033816C1	3575783C1
E	R10-G	12	WH	2033816C1	3575783C1

6X4 STOP TAIL AND TURN
(9303A)

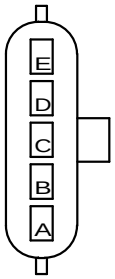

CONNECTOR 1661375C2
BODY LOCK 1661376C1

CAV	CIRCUIT	GAUGE	COLOR	TERMINAL	SEAL/SLEEVE
A	R71BA	12	OR	2033816C1	0589391C1
B	R56A	14	OR	2033816C1	0589391C1
C	R57A	14	OR	2033816C1	0589391C1
D	R68A	14	BN	2033816C1	0589391C1
E	R10-G	12	WH	2033816C1	0589391C1

6X4 STOP TAIL AND TURN(LEFT)
(9303B)

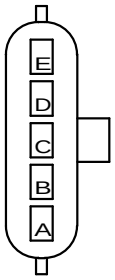

CONNECTOR 1661375C2
BODY LOCK 1661376C1

CAV	CIRCUIT	GAUGE	COLOR	TERMINAL	SEAL/SLEEVE
A	R71BE	12	WH	2033816C1	0589391C1
B	R56A	14	OR	2033816C1	0589391C1
C	PLUG	–	–	–	–
D	R68AC	14	BN	2033816C1	0589391C1
E	R10-GE	12	WH	2033816C1	0589391C1

CHK	DATE	CHANGE	REV	REFERENCE	DRAWN	NAME
0610	27AUG13	INITIAL RELEASE.	A	92159Y	310615	CIRCUIT DIAGRAM, 9900
					RELEASE NO. 92159Y	DATE 02AUG13 / PART NO. AE08076124 / SHEET 166

Figure 373 Connector Composites (9303 / 9303A / 9303B)

13.176. CONNECTOR COMPOSITES (9303C / 9303D / 9303E), P. 167

NAVISTAR, INC

THIS PRINT IS PROVIDED ON A RESTRICTED BASIS AND IS NOT TO BE USED IN ANY WAY DETRIMENTAL TO THE INTEREST OF NAVISTAR, INC.

ELECTRICAL CIRCUIT DIAGRAM CHAPTER 13

CONNECTOR BODY COMPOSITE MATING VIEW SHOWN

4X2 STOP TAIL AND TURN(LEFT)
(9303C)
(LOCATED ON REAR END OF LEFT FRAME RAIL)

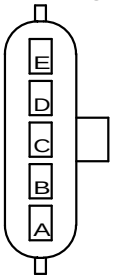

CONNECTOR 1661375C2
BODY LOCK 1661376C1

CAV	CIRCUIT	GAUGE	COLOR	TERMINAL	SEAL/SLEEVE
A	R71BC	12	OR	2033816C1	0589391C1
B	R56A	14	OR	2033816C1	0589391C1
C	PLUG	–	–	–	–
D	R68AB	14	BN	2033816C1	0589391C1
E	R10-GC	12	WH	2033816C1	0589391C1

6X4 STOP TAIL AND TURN(RIGHT)
(9303D)
(LOCATED ON REAR END OF RIGHT FRAME RAIL)

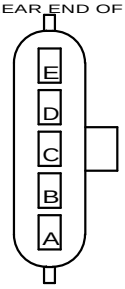

CONNECTOR 1661375C2
BODY LOCK 1661376C1

CAV	CIRCUIT	GAUGE	COLOR	TERMINAL	SEAL/SLEEVE
A	R71BG	12	WH	2033816C1	0589391C1
B	PLUG	–	–	–	–
C	R57A	14	OR	2033816C1	0589391C1
D	R68AD	14	BN	2033816C1	0589391C1
E	R10-GG	12	WH	2033816C1	0589391C1

4X2 STOP TAIL AND TURN(RIGHT)
(9303E)
(LOCATED ON REAR END OF RIGHT FRAME RAIL)

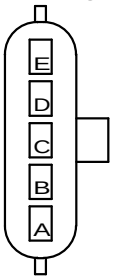

CONNECTOR 1661375C2
BODY LOCK 1661376C1

CAV	CIRCUIT	GAUGE	COLOR	TERMINAL	SEAL/SLEEVE
A	R71BD	12	OR	2033816C1	0589391C1
B	PLUG	–	–	–	–
C	R57A	14	OR	2033816C1	0589391C1
D	R68AA	14	BN	2033816C1	0589391C1
E	R10-GB	12	WH	2033816C1	0589391C1

CHK	DATE	CHANGE	REV	REFERENCE	DRAWN	NAME
–	–	INITIAL RELEASE.	A	92159Y	310615	CIRCUIT DIAGRAM, 9900
					RELEASE NO. 92159Y	DATE 02AUG13 / PART NO. AE08076124 / SHEET 167

Figure 374 Connector Composites (9303C / 9303D / 9303E)

13.177. CONNECTOR COMPOSITES (9303F / 9303G / 9303H), P. 168

NAVISTAR, INC

THIS PRINT IS PROVIDED ON A RESTRICTED BASIS AND IS NOT TO BE USED IN ANY WAY DETRIMENTAL TO THE INTEREST OF NAVISTAR, INC.

ELECTRICAL CIRCUIT DIAGRAM CHAPTER 13

CONNECTOR BODY COMPOSITE MATING VIEW SHOWN

6X4 STOP TAIL AND TURN 233AF
(9303F)

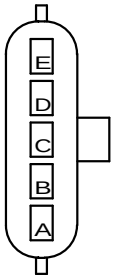

CONNECTOR 1661375C2
BODY LOCK 1661376C1

CAV	CIRCUIT	GAUGE	COLOR	TERMINAL	SEAL/SLEEVE
A	R71BA	12	OR	2033816C1	0589391C1
B	R56A	14	OR	2033816C1	0589391C1
C	R57A	14	OR	2033816C1	0589391C1
D	R68A	14	BN	2033816C1	0589391C1
E	R10-G	12	WH	2033816C1	0589391C1

6X4 STOP TAIL AND TURN TG
(9303G)

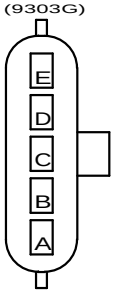

CONNECTOR 1661375C2
BODY LOCK 1661376C1

CAV	CIRCUIT	GAUGE	COLOR	TERMINAL	SEAL/SLEEVE
A	R71BB	12	OR	2033816C1	0589391C1
B	R56A	14	OR	2033816C1	0589391C1
C	R57A	14	OR	2033816C1	0589391C1
D	R68A	14	BN	2033816C1	0589391C1
E	R10-GA	16	WH	2033819C1	1652325C1

6X4 STOP TAIL AND TURN TG
(9303H)

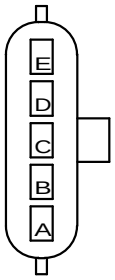

CONNECTOR 1661375C2
BODY LOCK 1661376C1

CAV	CIRCUIT	GAUGE	COLOR	TERMINAL	SEAL/SLEEVE
A	R71BB1	12	OR	2033816C1	0589391C1
B	R56A	14	OR	2033816C1	0589391C1
C	R57A	14	OR	2033816C1	0589391C1
D	R68A	14	BN	2033816C1	0589391C1
E	R10-G	16	WH	2033819C1	1652325C1

CHK	DATE	CHANGE	REV	REFERENCE	DRAWN	NAME
–	–	INITIAL RELEASE.	A	92159Y	310615	CIRCUIT DIAGRAM, 9900
					RELEASE NO. 92159Y	DATE 02AUG13 / PART NO. AE08076124 / SHEET 168

Figure 375 Connector Composites (9303F / 9303G / 9303H)

13.178. CONNECTOR COMPOSITES (9303K / 9303L / 9303M), P. 169

NAVISTAR, INC

THIS PRINT IS PROVIDED ON A RESTRICTED BASIS AND IS NOT TO BE USED IN ANY WAY DETRIMENTAL TO THE INTEREST OF NAVISTAR, INC.

ELECTRICAL CIRCUIT DIAGRAM CHAPTER 13

CONNECTOR BODY COMPOSITE MATING VIEW SHOWN

6X4 STOP TAIL AND TURN LEFT
(9303K)

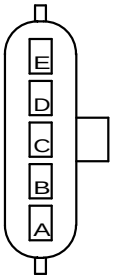

CONNECTOR 1661375C2
BODY LOCK 1661376C1

CAV	CIRCUIT	GAUGE	COLOR	TERMINAL	SEAL/SLEEVE
A	R71BE	12	OR	2033816C1	0589391C1
B	R56A	14	OR	2033816C1	0589391C1
C	PLUG	–	–	–	–
D	R68AC	14	BN	2033816C1	0589391C1
E	R10-GE	12	WH	2033816C1	0589391C1

6X4 STOP TAIL AND TURN RIGHT
(9303L)

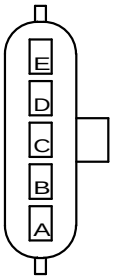

CONNECTOR 1661375C2
BODY LOCK 1661376C1

CAV	CIRCUIT	GAUGE	COLOR	TERMINAL	SEAL/SLEEVE
A	R71BG	12	OR	2033816C1	0589391C1
B	PLUG	–	–	–	–
C	R57A	14	OR	2033816C1	0589391C1
D	R68AD	14	BN	2033816C1	0589391C1
E	R10-GG	12	WH	2033816C1	0589391C1

4X2 STOP TAIL AND TURN LEFT
(9303M)

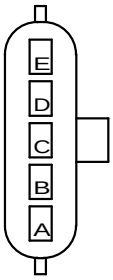

CONNECTOR 1661375C2
BODY LOCK 1661376C1

CAV	CIRCUIT	GAUGE	COLOR	TERMINAL	SEAL/SLEEVE
A	R71BC	12	OR	2033816C1	0589391C1
C	PLUG	–	–	–	–
B	R56A	14	OR	2033816C1	0589391C1
D	R68AB	14	BN	2033816C1	0589391C1
E	R10-GC	12	WH	2033816C1	0589391C1

CHK	DATE	CHANGE	REV	REFERENCE	DRAWN	NAME
0610	27AUG13	INITIAL RELEASE.	A	92159Y	310615	CIRCUIT DIAGRAM, 9900
					RELEASE NO. 92159Y	DATE 02AUG13 / PART NO. AE08076124 / SHEET 169

Figure 376 Connector Composites (9303K / 9303L / 9303M)

13.179. CONNECTOR COMPOSITES (9303N / 9304A / 9305), P. 170

NAVISTAR, INC

THIS PRINT IS PROVIDED ON A RESTRICTED BASIS AND IS NOT TO BE USED IN ANY WAY DETRIMENTAL TO THE INTEREST OF NAVISTAR, INC.

ELECTRICAL CIRCUIT DIAGRAM CHAPTER 13

CONNECTOR BODY COMPOSITE MATING VIEW SHOWN

4X2 STOP TAIL AND TURN RIGHT
(9303N)

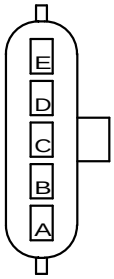

CONNECTOR 1661375C2
BODY LOCK 1661376C1

CAV	CIRCUIT	GAUGE	COLOR	TERMINAL	SEAL/SLEEVE
A	R71BE	12	OR	2033816C1	0589391C1
B	R56A	14	OR	2033816C1	0589391C1
C	PLUG	–	–	–	–
D	R68AC	14	BN	2033816C1	0589391C1
E	R10-GE	12	WH	2033816C1	0589391C1

6X4 STOP TAIL AND TURN - TG
(9304A)

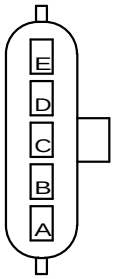

CONNECTOR 1661375C2
BODY LOCK 1661376C1

CAV	CIRCUIT	GAUGE	COLOR	TERMINAL	SEAL/SLEEVE
A	R71BG	12	OR	2033816C1	0589391C1
B	PLUG	–	–	–	–
C	R57A	14	OR	2033816C1	0589391C1
D	R68AD	14	BN	2033816C1	0589391C1
E	R10-GG	12	WH	2033816C1	0589391C1

BACK-UP ALARM
(9305)

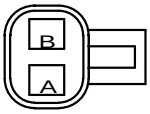

CONNECTOR 1671610C1
BODY LOCK 1671608C1

CAV	CIRCUIT	GAUGE	COLOR	TERMINAL	SEAL/SLEEVE
A	R71BF	12	OR	2033816C1	0589391C1
B	R10-GF	12	WH	2033816C1	0589390C1

CHK	DATE	CHANGE	REV	REFERENCE	DRAWN	NAME
–	–	INITIAL RELEASE.	A	92159Y	310615	CIRCUIT DIAGRAM, 9900
					RELEASE NO. 92159Y	DATE 02AUG13 / PART NO. AE08076124 / SHEET 170

Figure 377 Connector Composites (9303N / 9304A / 9305)

13.180. CONNECTOR COMPOSITES (9305A / 9305B / 9305C / 9306), P. 171

NAVISTAR, INC

THIS PRINT IS PROVIDED ON A RESTRICTED BASIS AND IS NOT TO BE USED IN ANY WAY DETRIMENTAL TO THE INTEREST OF NAVISTAR, INC.

ELECTRICAL CIRCUIT DIAGRAM CHAPTER 13

CONNECTOR BODY COMPOSITE MATING VIEW SHOWN

BACK-UP ALARM
(9305A)
(LOCATED AT TRANSMISSION)

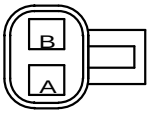

CONNECTOR 1671610C1
BODY LOCK 1671608C1

CAV	CIRCUIT	GAUGE	COLOR	TERMINAL	SEAL/SLEEVE
A	R71BB	12	OR	2033816C1	0589391C1
B	R10-GD	12	WH	2033816C1	0589390C1

BACK-UP ALARM
(9305B)
(LOCATED AT TRANSMISSION)

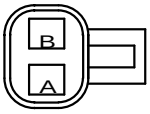

CONNECTOR 1671610C1
BODY LOCK 1671608C1

CAV	CIRCUIT	GAUGE	COLOR	TERMINAL	SEAL/SLEEVE
A	R71BF	12	OR	2033816C1	0589390C1
B	R10-GF	12	WH	2033816C1	0589391C1

BACK-UP ALARM
(9305C)
(LOCATED AT TRANSMISSION)

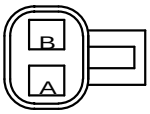

CONNECTOR 1671610C1
BODY LOCK 1671608C1

CAV	CIRCUIT	GAUGE	COLOR	TERMINAL	SEAL/SLEEVE
A	R71BB	12	OR	2033816C1	0589391C1
B	R10-GD	12	WH	2033816C1	0589391C1

BACK-UP ALARM
(9306)
(LOCATED AT TRANSMISSION)

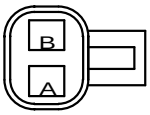

CONNECTOR 1671610C1
BODY LOCK 1671608C1

CAV	CIRCUIT	GAUGE	COLOR	TERMINAL	SEAL/SLEEVE
A	R71BF	12	OR	2033816C1	0589390C1
B	R10-GF	16	WH	2033816C1	1652325C1

CHK	DATE	CHANGE	REV	REFERENCE	DRAWN	NAME
–	–	INITIAL RELEASE.	A	92159Y	310615	CIRCUIT DIAGRAM, 9900
					RELEASE NO. 92159Y	DATE 02AUG13 / PART NO. AE08076124 / SHEET 171

Figure 378 Connector Composites (9305A / 9305B / 9305C / 9306)

13.181. CONNECTOR COMPOSITES (9331 / 9332 / 9501 / 9501F / 9501D / 9502), P. 172

NAVISTAR, INC

THIS PRINT IS PROVIDED ON A RESTRICTED BASIS AND IS NOT TO BE USED IN ANY WAY DETRIMENTAL TO THE INTEREST OF NAVISTAR, INC.

ELECTRICAL CIRCUIT DIAGRAM CHAPTER 13

CONNECTOR BODY COMPOSITE MATING VIEW SHOWN

FOG-LIGHT
(9331)
(LOCATED AT THE FORWARD END OF RIGHT FRAME RAIL)

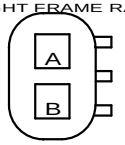

CONNECTOR 1671611C1
BODY LOCK 1671608C1

CAV	CIRCUIT	GAUGE	COLOR	TERMINAL	SEAL/SLEEVE
A	R64A	16	YL	2033911C1	1652325C1
B	PLUG	–	–	–	–

FOG-LIGHT (9332)
(LOCATED AT THE FORWARD END OF RIGHT FRAME RAIL)

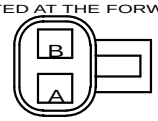

CONNECTOR 1671610C1
BODY LOCK 1671608C1

CAV	CIRCUIT	GAUGE	COLOR	TERMINAL	SEAL/SLEEVE
A	R64A	16	YL	2033819C1	1652325C1
B	PLUG	–	–	–	–

BENDIX LEFT WHEEL SPEED SENSOR (4X2)
(9501)
(LOCATED ON LEFT FRAME RAIL BY REAR AXLE)

CONNECTOR 1684261C1
BODY LOCK 1684263C1

CAV	CIRCUIT	GAUGE	COLOR	TERMINAL
1	R94BD	16	GY	1680205C1
2	R94BE	16	GY	1680205C1

ABS-6 PRESSURE SENSOR
(9501F)
(LOCATED ON LEFT FRAME RAIL,BACK OF CAB)

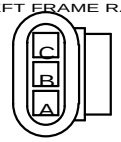

CONNECTOR 1667741C1
BODY LOCK 1667771C1

CAV	CIRCUIT	GAUGE	COLOR	TERMINAL	SEAL/SLEEVE
A	N94SZD	16	GY	1661875C1	1661872C1
B	N94SVD	16	GY	1661875C1	1661872C1
C	N94SH	16	GY	1661875C1	1661872C1

BENDIX RR LEFT WHEEL SPEED SENSOR (6X4)
(9501D)
(LOCATED AT LEFT FRAME RAIL BY REAR AXLE)

CONNECTOR 1684261C1
BODY LOCK 1684263C1

CAV	CIRCUIT	GAUGE	COLOR	TERMINAL
1*	R94BQ	16	GY	1680205C1
1#	R94BD	16	GY	1680205C1
2*	R94BR	16	GY	1680205C1
2#	R94BE	16	GY	1680205C1

BENDIX AIR ABS (6X4 HAS)
* BENDIX AIR ABS (6X4 IROS)

BENDIX LEFT MODULATOR (4X2)
(9502)
(LOCATED ON LEFT FRAME RAIL BY REAR AXLE)

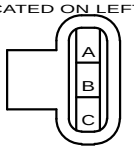

CONNECTOR 1686834C1
BODY LOCK 1664408C1

CAV	CIRCUIT	GAUGE	COLOR	TERMINAL	SEAL/SLEEVE
A	R94BA	16	GY	2033819C1	1652325C1
B	R94BB	16	GY	2033819C1	1652325C1
C	R94BC	16	GY	2033819C1	1652325C1

CHK	DATE	CHANGE	REV	REFERENCE
0610	27AUG13	INITIAL RELEASE.	A	92159Y

DRAWN 310615 — NAME CIRCUIT DIAGRAM, 9900

RELEASE NO. 92159Y — DATE 02AUG13 — PART NO. AE08076124 — SHEET 172

Figure 379 Connector Composites (9331 / 9332 / 9501 / 9501F / 9501D / 9502)

13.182. CONNECTOR COMPOSITES (9502A / 9502B / 9502C / 9502D / 9503), P. 173

NAVISTAR, INC

THIS PRINT IS PROVIDED ON A RESTRICTED BASIS AND IS NOT TO BE USED IN ANY WAY DETRIMENTAL TO THE INTEREST OF NAVISTAR, INC.

ELECTRICAL CIRCUIT DIAGRAM CHAPTER 13

CONNECTOR BODY COMPOSITE MATING VIEW SHOWN

BENDIX LEFT MODULATOR (6X4 HAS)
(9502A)
(LOCATED AT LEFT FRAME RAIL BY REAR AXLE)

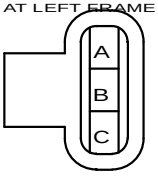

CONNECTOR 1686834C1
BODY LOCK 1664408C1

CAV	CIRCUIT	GAUGE	COLOR	TERMINAL	SEAL/SLEEVE
A	R94BA	16	GY	2033819C1	1652325C1
B	R94BB	16	GY	2033819C1	1652325C1
C	R94BC	16	GY	2033819C1	1652325C1

BENDIX LEFT REAR MODULATOR (6X4 IROS)
(9502B)
(LOCATED AT LEFT FRAME RAIL BY REAR AXLE)

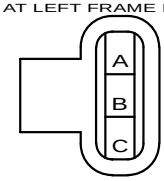

CONNECTOR 1686834C1
BODY LOCK 1664408C1

CAV	CIRCUIT	GAUGE	COLOR	TERMINAL	SEAL/SLEEVE
A*	R94BA	16	GY	2033819C1	1652325C1
A#	R94BY	16	GY	2033819C1	1652325C1
B*	R94BB	16	GY	2033819C1	1652325C1
B#	R94BZ	16	GY	2033819C1	1652325C1
C*	R94BC	16	GY	2033819C1	1652325C1
C#	R94BP	16	GY	2033819C1	1652325C1

* BX ADV AIR ABS W/6X4 IROS-TAG
\# BENDIX 6 CH ABS,6X4,IROS

BENDIX ECE LEFT MODULATOR
(9502C)
(LOCATED AT LEFT FRAME RAIL BY REAR AXLE)

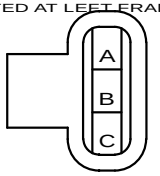

CONNECTOR 1686834C1
BODY LOCK 1664408C1

CAV	CIRCUIT	GAUGE	COLOR	TERMINAL	SEAL/SLEEVE
A	R94BA	16	GY	2033819C1	1652325C1
B	R94BB	16	GY	2033819C1	1652325C1
C	R94BC	16	GY	2033819C1	1652325C1

BENDIX ECE RIGHT MODULATOR
(9502D)
(LOCATED AT RIGHT FRAME RAIL BY REAR AXLE)

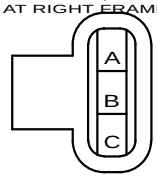

CONNECTOR 1686834C1
BODY LOCK 1664408C1

CAV	CIRCUIT	GAUGE	COLOR	TERMINAL	SEAL/SLEEVE
A	R94BJ	16	GY	2033819C1	1652325C1
B	R94BK	16	GY	2033819C1	1652325C1
C	R94BL	16	GY	2033819C1	1652325C1

BENDIX RIGHT WHEEL
SPEED SENSOR (4X2)
(9503)
(LOCATED ON RIGHT FRAME RAIL BY REAR AXLE)

CONNECTOR 1684261C1
BODY LOCK 1684263C1

CAV	CIRCUIT	GAUGE	COLOR	TERMINAL
1	R94BF	16	GY	1680205C1
2	R94BH	16	GY	1680205C1

CHK	DATE	CHANGE	REV	REFERENCE
–	–	INITIAL RELEASE.	A	92159Y

DRAWN 310615 | NAME CIRCUIT DIAGRAM, 9900
RELEASE NO. 92159Y | DATE 02AUG13 | PART NO. AE08076124 | SHEET 173

Figure 380 Connector Composites (9502A / 9502B / 9502C / 9502D / 9503)

13.183. CONNECTOR COMPOSITES (9503D / 9504 / 9504A / 9504B / 9505), P. 174

NAVISTAR, INC

THIS PRINT IS PROVIDED ON A RESTRICTED BASIS AND IS NOT TO BE USED IN ANY WAY DETRIMENTAL TO THE INTEREST OF NAVISTAR, INC.

ELECTRICAL CIRCUIT DIAGRAM CHAPTER 13

CONNECTOR BODY COMPOSITE MATING VIEW SHOWN

BENDIX RR REAR RIGHT WHEEL SPEED SENSOR (6X4 HAS)
(9503D)
(LOCATED RIGHT FRAME RAIL BY REAR AXLE)

CONNECTOR 1684261C1
BODY LOCK 1684263C1

CAV	CIRCUIT	GAUGE	COLOR	TERMINAL
1*	R94BV	16	GY	1680205C1
1#	R94BF	16	GY	1680205C1
2*	R94BW	16	GY	1680205C1
2#	R94BH	16	GY	1680205C1

* BENDIX AIR ABS (6X4 IROS)
\# BENDIX AIR ABS (6X4 HAS)

BENDIX RIGHT MODULATOR(4X2)
(9504)
(LOCATED ON RIGHT FRAME RAIL BY REAR AXLE)

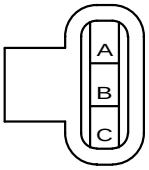

CONNECTOR 1686834C1
BODY LOCK 1664408C1

CAV	CIRCUIT	GAUGE	COLOR	TERMINAL	SEAL/SLEEVE
A	R94BJ	16	GY	2033819C1	1652325C1
B	R94BK	16	GY	2033819C1	1652325C1
C	R94BL	16	GY	2033819C1	1652325C1

BENDIX RR REAR RIGHT MODULATOR (6X4 IROS)
(9504A)
(LOCATED ON RIGHT FRAME RAIL BY REAR AXLE)

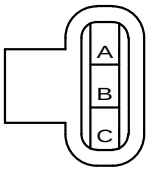

CONNECTOR 1686834C1
BODY LOCK 1664408C1

CAV	CIRCUIT	GAUGE	COLOR	TERMINAL	SEAL/SLEEVE
A@	R94BJ	16	GY	2033819C1	1652325C1
A%	R94BS	16	GY	2033819C1	1652325C1
B@	R94BK	16	GY	2033819C1	1652325C1
B%	R94BT	16	GY	2033819C1	1652325C1
C@	R94BL	16	GY	2033819C1	1652325C1
C%	R94BU	16	GY	2033819C1	1652325C1

@ BX ADV AIR ABS W/ IROS - TAG
% BENDIX 6 CH ABS, 6X4, HEAD

BENDIX FR REAR RIGHT MODULATOR(6X4 HAS)
(9504B)
(LOCATED ON RIGHT FRAME RAIL BY REAR AXLE)

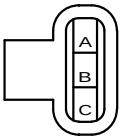

CONNECTOR 1686834C1
BODY LOCK 1664408C1

CAV	CIRCUIT	GAUGE	COLOR	TERMINAL	SEAL/SLEEVE
A	R94BJ	16	GY	2033819C1	1652325C1
B	R94BK	16	GY	2033819C1	1652325C1
C	R94BL	16	GY	2033819C1	1652325C1

(4X2) BENDIX AUTO TRACTION CONTOL
(9505)
(LOCATED ON CROSSMEMBER AT REAR AXLE (S))

CONNECTOR 3678796C1

CAV	CIRCUIT	GAUGE	COLOR	TERMINAL	SEAL/SLEEVE
1	R94BM	16	GY	3679224C1	3601687C1
2	R94BN	16	GY	3679224C1	3601687C1

CHK	DATE	CHANGE	REV	REFERENCE	DRAWN	NAME
0610	27AUG13	INITIAL RELEASE.	A	92159Y	310615	CIRCUIT DIAGRAM, 9900
					RELEASE NO. 92159Y	DATE 02AUG13 / PART NO. AE08076124 / SHEET 174

Figure 381 Connector Composites (9503D / 9504 / 9504A / 9504B / 9505)

13.184. CONNECTOR COMPOSITES (9505A / 9505D / 9506 / 9506D / 9506E), P. 175

NAVISTAR, INC

THIS PRINT IS PROVIDED ON A RESTRICTED BASIS AND IS NOT TO BE USED IN ANY WAY DETRIMENTAL TO THE INTEREST OF NAVISTAR, INC.

ELECTRICAL CIRCUIT DIAGRAM CHAPTER 13

CONNECTOR BODY COMPOSITE MATING VIEW SHOWN

(6X4) BENDIX AUTO TRACTION CONTOL
(9505A)
(LOCATED ON CROSSMEMBER AT REAR AXLE(S))

CONNECTOR 3678796C1

CAV	CIRCUIT	GAUGE	COLOR	TERMINAL	SEAL/SLEEVE
1	R94BM	16	GY	3679224C1	3601687C1
2	R94BN	16	GY	3679224C1	3601687C1

(6X4) BENDIX AUTO TRACTION CONTOL
(9505D)
(LOCATED ON CROSSMEMBER AT REAR AXLE(S))

CONNECTOR 3678796C1

CAV	CIRCUIT	GAUGE	COLOR	TERMINAL	SEAL/SLEEVE
1	R94BM	16	GY	3679224C1	3601687C1
2	R94BN	16	GY	3679224C1	3601687C1

WABCO LEFT WHEEL SPEED
SENSOR (4X2)
(9506)
(LOCATED ON LEFT FRAME RAIL BY REAR AXLE)

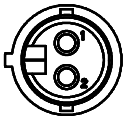

CONNECTOR 6111844C1

CAV	CIRCUIT	GAUGE	COLOR	TERMINAL	SEAL/SLEEVE
1	R94MD	18	GY	6111842C1	6111843C1
2	R94ME	18	GY	6111842C1	6111843C1

WABCO RR LEFT WHEEL SPEED
SENSOR (6X4 HAS)
(9506D)
(LOCATED ON RIGHT FRAME RAIL BY REAR AXLE)

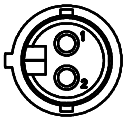

CONNECTOR 6111844C1

CAV	CIRCUIT	GAUGE	COLOR	TERMINAL	SEAL/SLEEVE
1*	R94MD	18	GY	6111842C1	6111843C1
1#	R94BOA	18	GY	6111842C1	6111843C1
2*	R94ME	18	GY	6111842C1	6111843C1
2#	R94BRA	18	GY	6111842C1	6111843C1

* WABCO AIR ABS (6X4 HAS)
\# BENDIX AIR ABS (6X4 HAS)

WABCO RR LEFT WHEEL SPEED
SENSOR (6X4 IROS/HTB)
(9506E)
(LOCATED ON LEFT FRAME RAIL BY REAR AXLE)

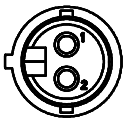

CONNECTOR 6111844C1

CAV	CIRCUIT	GAUGE	COLOR	TERMINAL	SEAL/SLEEVE
1%	R94MD	18	GY	6111842C1	6111843C1
1@	R94BOA	18	GY	6111842C1	6111843C1
2%	R94ME	18	GY	6111842C1	6111843C1
2@	R94BRA	18	GY	6111842C1	6111843C1

% WABCO AIR ABS (6X4 IROS)
@ WABCO 6 CHAN ABS 6X4, IROS

CHK	DATE	CHANGE	REV	REFERENCE	DRAWN	NAME
0610	27AUG13	INITIAL RELEASE.	A	92159Y	310615	CIRCUIT DIAGRAM, 9900
					RELEASE NO. 92159Y	DATE 02AUG13 / PART NO. AE08076124 / SHEET 175

Figure 382 Connector Composites (9505A / 9505D / 9506 / 9506D / 9506E)

13.185. CONNECTOR COMPOSITES (9506F / 9507 / 9507A / 9507B / 9507C), P. 176

NAVISTAR, INC

THIS PRINT IS PROVIDED ON A RESTRICTED BASIS AND IS NOT TO BE USED IN ANY WAY DETRIMENTAL TO THE INTEREST OF NAVISTAR, INC.

ELECTRICAL CIRCUIT DIAGRAM CHAPTER 13

CONNECTOR BODY COMPOSITE MATING VIEW SHOWN

WABCO RR LEFT WHEEL SPEED SENSOR (6X4 HTB)
(9506F)
(LOCATED ON LEFT FRAME RAIL BY REAR AXLE)

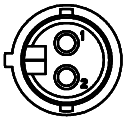

CONNECTOR 6111844C1

CAV	CIRCUIT	GAUGE	COLOR	TERMINAL	SEAL/SLEEVE
1	R94MD	18	GY	6111842C1	6111843C1
2	R94ME	18	GY	6111842C1	6111843C1

WABCO LEFT MODULATOR(4X2)
(9507)
(LOCATED ON LEFT FRAMERAIL BY REAR AXLE)

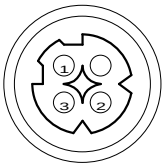

CONNECTOR 3919376C1

CAV	CIRCUIT	GAUGE	COLOR	TERMINAL	SEAL/SLEEVE
1	R94MA	18	GY	3601686C1	3733609C1
2	R94MB	18	GY	3601686C1	3733609C1
3	R94MC	18	GY	3601686C1	3733609C1

WABCO LEFT MODULATOR (6X4 HAS)
(9507A)
(LOCATED ON LEFT FRAME RAIL BY REAR AXLE)

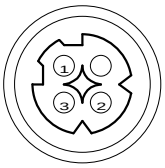

CONNECTOR 3919376C1

CAV	CIRCUIT	GAUGE	COLOR	TERMINAL	SEAL/SLEEVE
1	R94MA	18	GY	3601686C1	3733609C1
2	R94MB	18	GY	3601686C1	3733609C1
3	R94MC	18	GY	3601686C1	3733609C1

WABCO LEFT REAR MODULATOR
(6X4 IROS/HTB)
(9507B)
(LOCATED ON LEFT FRAME RAIL BY REAR AXLE)

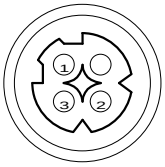

CONNECTOR 3919376C1

CAV	CIRCUIT	GAUGE	COLOR	TERMINAL	SEAL/SLEEVE
1*	R94MA	18	GY	3601686C1	3733609C1
1#	R94BYA	18	GY	3601686C1	3733609C1
2*	R94MB	18	GY	3601686C1	3733609C1
2#	R94BZA	18	GY	3601686C1	3733609C1
3*	R94MC	18	GY	3601686C1	3733609C1
3#	R94BPA	18	GY	3601686C1	3733609C1

*- WABCO AIR ABS (6X4 IROS)
#- WABCO 6CHAIN ABS 6X4,HENDRICKSON

WABCO LEFT REAR MODULATOR
(6X4 HTB)
(9507C)
(LOCATED ON LEFT FRAME RAIL BY REAR AXLE)

CONNECTOR 3919376C1

CAV	CIRCUIT	GAUGE	COLOR	TERMINAL	SEAL/SLEEVE
1	R94MA	18	GY	3601686C1	3733609C1
2	R94MB	18	GY	3601686C1	3733609C1
3	R94MC	18	GY	3601686C1	3733609C1

CHK	DATE	CHANGE	REV	REFERENCE	DRAWN	NAME
–	–	INITIAL RELEASE.	A	92159Y	310615	CIRCUIT DIAGRAM, 9900
					RELEASE NO. 92159Y	DATE 02AUG13 / PART NO. AE08076124 / SHEET 176

Figure 383 Connector Composites (9506F / 9507 / 9507A / 9507B / 9507C)

13.186. CONNECTOR COMPOSITES (9508 / 9508D / 9508E / 9508F / 9509), P. 177

NAVISTAR, INC

THIS PRINT IS PROVIDED ON A RESTRICTED BASIS AND IS NOT TO BE USED IN ANY WAY DETRIMENTAL TO THE INTEREST OF NAVISTAR, INC.

ELECTRICAL CIRCUIT DIAGRAM CHAPTER 13

CONNECTOR BODY COMPOSITE MATING VIEW SHOWN

WABCO RIGHT WHEEL SPEED SENSOR (4X2)
(9508)
(LOCATED ON RIGHT FRAME RAIL BY REAR AXLE)

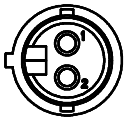

CONNECTOR 6111844C1

CAV	CIRCUIT	GAUGE	COLOR	TERMINAL	SEAL/SLEEVE
1	R94MF	18	GY	6111842C1	6111843C1
2	R94MH	18	GY	6111842C1	6111843C1

WABCO RR REAR RIGHT WHEEL
SPEED SENSOR (6X4 HAS)
(9508D)
(LOCATED ON RIGHT FRAME RAIL BY REAR AXLE)

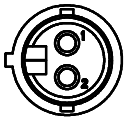

CONNECTOR 6111844C1

CAV	CIRCUIT	GAUGE	COLOR	TERMINAL	SEAL/SLEEVE
1*	R94MF	18	GY	6111842C1	6111843C1
1#	R94BVA	18	GY	6111842C1	6111843C1
2*	R94MH	18	GY	6111842C1	6111843C1
2#	R94BWA	18	GY	6111842C1	6111843C1

*- SR-WABCO AIR ABS(6X4 HAS)
#- US-WABCO 6CHAIN ABS 6X4, HENDRICKSON

WABCO RR REAR RIGHT WHEEL
SPEED SENSOR (6X4 IROS/HTB)
(9508E)
(LOCATED ON RIGHT FRAME RAIL BY REAR AXLE)

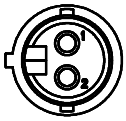

CONNECTOR 6111844C1

CAV	CIRCUIT	GAUGE	COLOR	TERMINAL	SEAL/SLEEVE
1@	R94MF	18	GY	6111842C1	6111843C1
1%.	R94BVA	18	GY	6111842C1	6111843C1
2@	R94MH	18	GY	6111842C1	6111843C1
2%	R94BWA	18	GY	6111842C1	6111843C1

@- SS-WABCO AIR ABS(6X4 2POS)
%- VS-BENDIX 6CH ABS, 6X4, HEND W/ATC/RSP/ESP

WABCO RR RIGHT WHEEL SPEED SENSOR (6X4 HTB)
(9508F)
(LOCATED ON RIGHT FRAME RAIL BY REAR AXLE)

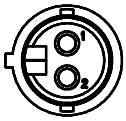

CONNECTOR 6111844C1

CAV	CIRCUIT	GAUGE	COLOR	TERMINAL	SEAL/SLEEVE
1	R94MF	18	GY	6111842C1	6111843C1
2	R94MH	18	GY	6111842C1	6111843C1

WABCO RIGHT WHEEL MODULATOR (4X2)
(9509)
(LOCATED ON RIGHT FRAME RAIL BY REAR AXLE)

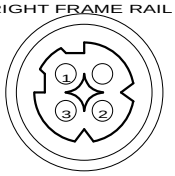

CONNECTOR 3919376C1

CAV	CIRCUIT	GAUGE	COLOR	TERMINAL	SEAL/SLEEVE
1	R94MJ	18	GY	3601686C1	3733609C1
2	R94MK	18	GY	3601686C1	3733609C1
3	R94ML	18	GY	3601686C1	3733609C1

CHK	DATE	CHANGE	REV	REFERENCE	DRAWN	NAME
0610	27AUG13	INITIAL RELEASE.	A	92159Y	310615	CIRCUIT DIAGRAM, 9900
					RELEASE NO. 92159Y	DATE 02AUG13 / PART NO. AE08076124 / SHEET 177

Figure 384 Connector Composites (9508 / 9508D / 9508E / 9508F / 9509)

13.187. CONNECTOR COMPOSITES (9509A / 9509B / 9509C / 9510), P. 178

NAVISTAR, INC

THIS PRINT IS PROVIDED ON A RESTRICTED BASIS AND IS NOT TO BE USED IN ANY WAY DETRIMENTAL TO THE INTEREST OF NAVISTAR, INC.

ELECTRICAL CIRCUIT DIAGRAM CHAPTER 13

CONNECTOR BODY COMPOSITE MATING VIEW SHOWN

WABCO RR REAR RIGHT MODULATOR (6X4 IROS/HTB)
(9509A)
(LOCATED ON RIGHT FRAME RAIL BY REAR AXLE)

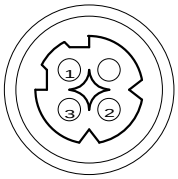

CONNECTOR 3919376C1

CAV	CIRCUIT	GAUGE	COLOR	TERMINAL	SEAL/SLEEVE
1	R94MJ	18	GY	3601686C1	3733609C1
1	R94BSA	18	GY	3601686C1	3733609C1
2*	R94MK	18	GY	3601686C1	3733609C1
2#	R94BTA	18	GY	3601686C1	3733609C1
3	R94ML	18	GY	3601686C1	3733609C1
3	R94BUA	18	GY	3601686C1	3733609C1

* WABCO AIR ABS(6*4 IROS) W/ ATC
\# WABCO 6 CHAN ABS 6*4,HENDRICKSON

WABCO FR RIGHT MODULATOR (6X4 HAS)
(9509B)
(LOCATED ON RIGHT FRAME RAIL BY REAR AXLE)

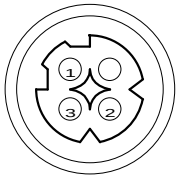

CONNECTOR 3919376C1

CAV	CIRCUIT	GAUGE	COLOR	TERMINAL	SEAL/SLEEVE
1	R94MJ	18	GY	3601686C1	3733609C1
2	R94MK	18	GY	3601686C1	3733609C1
3	R94ML	18	GY	3601686C1	3733609C1

WABCO RR RIGHT MODULATOR (6X4 HTB)
(9509C)
(LOCATED ON RIGHT FRAME RAIL BY REAR AXLE)

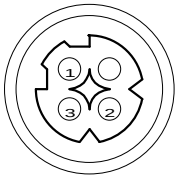

CONNECTOR 3919376C1

CAV	CIRCUIT	GAUGE	COLOR	TERMINAL	SEAL/SLEEVE
1	R94MJ	18	GY	3601686C1	3733609C1
2	R94MK	18	GY	3601686C1	3733609C1
3	R94ML	18	GY	3601686C1	3733609C1

ABS-6 PRESSURE SENSOR (4X2)
(9510)
(LOCATED ON RIGHT FRAME RAIL BY REAR AXLE)

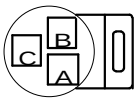

CONNECTOR 1678137C1

CAV	CIRCUIT	GAUGE	COLOR	TERMINAL
A	R94SZC	18	GY	1651943C1
B	R94SVC	18	GY	1651943C1
C	R94SH	18	GY	1651943C1

CHK	DATE	CHANGE	REV	REFERENCE	DRAWN	NAME
0610	27AUG13	INITIAL RELEASE.	A	92159Y	310615	CIRCUIT DIAGRAM, 9900
					RELEASE NO. 92159Y	DATE 02AUG13 / PART NO. AE08076124 / SHEET 178

Figure 385 Connector Composites (9509A / 9509B / 9509C / 9510)

13.188. CONNECTOR COMPOSITES (9510A / 9510M / 9511), P. 179

NAVISTAR, INC

THIS PRINT IS PROVIDED ON A RESTRICTED BASIS AND IS NOT TO BE USED IN ANY WAY DETRIMENTAL TO THE INTEREST OF NAVISTAR, INC.

ELECTRICAL CIRCUIT DIAGRAM CHAPTER 13

CONNECTOR BODY COMPOSITE MATING VIEW SHOWN

ABS-6 PRESSURE SENSOR (6X4)
(9510A)

(LOCATED ON REAR SUSPENSION AIR BAG-RIGHT SIDE)

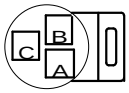

CONNECTOR 1678137C1

CAV	CIRCUIT	GAUGE	COLOR	TERMINAL
A	R94SZC	18	GY	1651943C1
B	R94SVC	18	GY	1651943C1
C	R94SH	18	GY	1651943C1

ABS-6 PRESSURE SENSOR
(9510M)
(LOCATED ON LEFT FRAME RAIL BEHIND CAB)

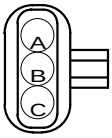

CONNECTOR 1667740C1
BODY LOCK 1667771C1

CAV	CIRCUIT	GAUGE	COLOR	TERMINAL	SEAL/SLEEVE
A	R94SZC	18	GY	1667742C1	1661872C1
B	R94SVC	18	GY	1667742C1	1661872C1
C	R94SH	18	GY	1667742C1	1661872C1

BENDIX FR RIGHT WHEEL SPEED
(9511)

(LOCATED ON LEFT FRAME RAIL BEHIND CAB)

CONNECTOR 1684261C1
BODY LOCK 1684263C1

CAV	CIRCUIT	GAUGE	COLOR	TERMINAL
1	R94BF	16	GY	1680205C1
2	R94BH	16	GY	1680205C1

YAW RATE SENSOR
(9511)

(LOCATED NEAR LEFT FRAME RAIL BACK OF CAB)

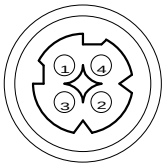

CONNECTOR 3601685C1

CAV	CIRCUIT	GAUGE	COLOR	TERMINAL	SEAL/SLEEVE
1	N94SAB	18	GY	3601686C1	3601687C1
2	N94SCB	18	GY	3601686C1	3601687C1
3	N94SBB	18	GY	3601686C1	3601687C1
4	N94SDB	18	GY	3601686C1	3601687C1

CHK	DATE	CHANGE	REV	REFERENCE	DRAWN	NAME
0610	27AUG13	INITIAL RELEASE.	A	92159Y	310615	CIRCUIT DIAGRAM, 9900
					RELEASE NO. 92159Y	DATE 02AUG13 / PART NO. AE08076124 / SHEET 179

Figure 386 Connector Composites (9510A / 9510M / 9511)

13.189. CONNECTOR COMPOSITES (9511A / 9512 / 9513), P. 180

NAVISTAR, INC

THIS PRINT IS PROVIDED ON A RESTRICTED BASIS AND IS NOT TO BE USED IN ANY WAY DETRIMENTAL TO THE INTEREST OF NAVISTAR, INC.

ELECTRICAL CIRCUIT DIAGRAM CHAPTER 13

CONNECTOR BODY COMPOSITE MATING VIEW SHOWN

YAW SENSOR
(9511A)
(LOCATED BEHIND CAB CROSSMEMBER)

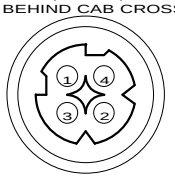

CONNECTOR 3601685C1

CAV	CIRCUIT	GAUGE	COLOR	TERMINAL	SEAL/SLEEVE
1	N94SAB	18	GY	3601686C1	3601687C1
3	N94SCB	18	GY	3601686C1	3601687C1
2	N94SBB	18	GY	3601686C1	3601687C1
4	N94SDB	18	GY	3601686C1	3601687C1

BENDIX FR LEFT WHEEL
SPEED SENSOR
(9512)
(LOCATED ON RIGHT FRAME
RAIL BY FRONT AXLE)

CONNECTOR 1684261C1
BODY LOCK 1684263C1

CAV	CIRCUIT	GAUGE	COLOR	TERMINAL
1	R94BD	16	GY	1680205C1
2	R94BE	16	GY	1680205C1

BENDIX TRAILER
TRACTION CONTROL
(9512)

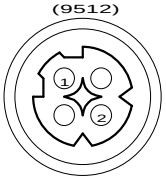

CONNECTOR 3678796C1

CAV	CIRCUIT	GAUGE	COLOR	TERMINAL	SEAL/SLEEVE
1	N94SJ	16	GY	3679224C1	3601687C1
2	N94SK	16	GY	3679224C1	3601687C1

BENDIX TRAILER MODULATOR/
BENDIX FR LEFT MODULATOR
(9513)
(LOCATED ON LEFT FRAME RAIL UNDER CAB)

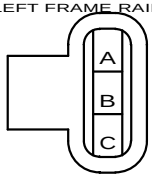

CONNECTOR 1686834C1
BODY LOCK 1664408C1

CAV	CIRCUIT	GAUGE	COLOR	TERMINAL	SEAL/SLEEVE
A*	N94SM	16	GY	2033819C1	1652325C1
A#	R94BA	16	GY	2033819C1	1652325C1
B*	N94SN	16	GY	2033819C1	1652325C1
B#	R94BB	16	GY	2033819C1	1652325C1
C*	N94SL	16	GY	2033819C1	1652325C1
C#	R94BC	16	GY	2033819C1	1652325C1

BENDIX 6 CH ABS,6*4,IROS
* BENDIX ADV AIR ABS W/ ATC +500

CHK	DATE	CHANGE	REV	REFERENCE	DRAWN	NAME		
0610	27AUG13	INITIAL RELEASE.	A	92159Y	310615	CIRCUIT DIAGRAM, 9900		
					RELEASE NO. 92159Y	DATE 02AUG13	PART NO. AE08076124	SHEET 180

Figure 387 Connector Composites (9511A / 9512 / 9513)

13.190. CONNECTOR COMPOSITES (9514 / 9515 / 9515C / 9516), P. 181

NAVISTAR, INC

THIS PRINT IS PROVIDED ON A RESTRICTED BASIS AND IS NOT TO BE USED IN ANY WAY DETRIMENTAL TO THE INTEREST OF NAVISTAR, INC.

ELECTRICAL CIRCUIT DIAGRAM CHAPTER 13

CONNECTOR BODY COMPOSITE MATING VIEW SHOWN

BENDIX FR RIGHT MODULATOR
(9514)
(LOCATED ON RIGHT FRAME RAIL BY REAR AXLE)

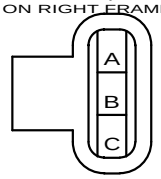

CAV	CIRCUIT	GAUGE	COLOR	TERMINAL	SEAL/SLEEVE
A	R94BJ	16	GY	2033819C1	1652325C1
B	R94BK	16	GY	2033819C1	1652325C1
C	R94BL	16	GY	2033819C1	1652325C1

CONNECTOR 1686834C1
BODY LOCK 1664408C1

4X2 WABCO AUTO
TRACTION CONTROL
(9515)
(LOCATED ON CROSSMEMBER AT REAR AXLE(S))

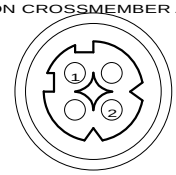

CAV	CIRCUIT	GAUGE	COLOR	TERMINAL
1	[SU94MM]	18	GY	ASSY
2	PLUG	–	–	–

CONNECTOR 3710092C1

WABCO AUTO TRACTION
CONTROL (6X4 HTB)
(9515C)
(LOCATED ON CROSSMEMBER AT REAR AXLE(S))

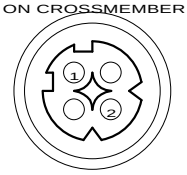

CAV	CIRCUIT	GAUGE	COLOR	TERMINAL
1	[R94MM]	18	GY	ASSY
2	[R94MN]	18	GY	ASSY

CONNECTOR 3710092C1

WABCO FR RIGHT MODULATOR
(9516)
(LOCATED ON RIGHT FRAME RAIL BY REAR AXLE)

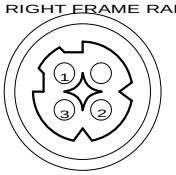

CAV	CIRCUIT	GAUGE	COLOR	TERMINAL	SEAL/SLEEVE
1	R94MJ	18	GY	3601686C1	3733609C1
2	R94MK	18	GY	3601686C1	3733609C1
3	R94ML	18	GY	3601686C1	3733609C1

CONNECTOR 3919376C1

CHK	DATE	CHANGE	REV	REFERENCE	DRAWN	NAME
0610	27AUG13	INITIAL RELEASE.	A	92159Y	310615	CIRCUIT DIAGRAM, 9900
					RELEASE NO. 92159Y	DATE 02AUG13

PART NO. AE08076124 SHEET 181

Figure 388 Connector Composites (9514 / 9515 / 9515C / 9516)

13.191. CONNECTOR COMPOSITES (9516M / 9517), P. 182

NAVISTAR, INC

THIS PRINT IS PROVIDED ON A RESTRICTED BASIS AND IS NOT TO BE USED IN ANY WAY DETRIMENTAL TO THE INTEREST OF NAVISTAR, INC.

ELECTRICAL CIRCUIT DIAGRAM CHAPTER 13

CONNECTOR BODY COMPOSITE MATING VIEW SHOWN

BENDIX 6 CHANNEL ABS
INLINE CONN
(9516M)

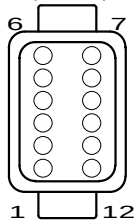

CONNECTOR 3519462C1
BODY LOCK 1689501C1

CAV	CIRCUIT	GAUGE	COLOR	TERMINAL
1	R94BY	18	GY	1680206C1
2	R94BZ	16	GY	1680206C1
3	R94BP	18	GY	1680206C1
4	R94BO	16	GY	1680206C1
5	R94BR	18	GY	1680206C1
6	R94BS	16	GY	1680206C1
7	R94BT	18	GY	1680206C1
8	R94BU	16	GY	1680206C1
9	R94BV	18	GY	1680206C1
10	R94BW	16	GY	1680206C1
11	PLUG	–	–	–
12	PLUG	–	–	–

BENDIX 6 CHANNEL
ABS CENTR/REAR
(9516M)

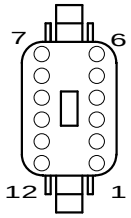

CONNECTOR 3602757C1
BODY LOCK 1689501C1

CAV	CIRCUIT	GAUGE	COLOR	TERMINAL
1	N94BY	16	GY	1680205C1
2	N94BZ	16	GY	1680205C1
3	N94BP	16	GY	1680205C1
4	N94BO	16	GY	1680205C1
5	N94BR	16	GY	1680205C1
6	N94BS	16	GY	1680205C1
7	N94BT	16	GY	1680205C1
8	N94BU	16	GY	1680205C1
9	N94BV	16	GY	1680205C1
10	N94BW	16	GY	1680205C1
11	PLUG	–	–	–
12	PLUG	–	–	–

WABCO FR RIGHT WHEEL
SPEED SENSOR
(9517)

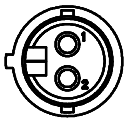

CONNECTOR 6111844C1

CAV	CIRCUIT	GAUGE	COLOR	TERMINAL	SEAL/SLEEVE
1	R94MF	18	GY	6111842C1	6111843C1
2	R94MH	18	GY	6111842C1	6111843C1

CHK	DATE	CHANGE	REV	REFERENCE	DRAWN	NAME
–	–	INITIAL RELEASE.	A	92159Y	310615	CIRCUIT DIAGRAM, 9900
					RELEASE NO. 92159Y	DATE 02AUG13 / PART NO. AE08076124 / SHEET 182

Figure 389 Connector Composites (9516M / 9517)

13.192. CONNECTOR COMPOSITES (9518 / 9519 / 9520 / 9521), P. 183

NAVISTAR, INC

THIS PRINT IS PROVIDED ON A RESTRICTED BASIS AND IS NOT TO BE USED IN ANY WAY DETRIMENTAL TO THE INTEREST OF NAVISTAR, INC.

ELECTRICAL CIRCUIT DIAGRAM CHAPTER 13

CONNECTOR BODY COMPOSITE MATING VIEW SHOWN

WABCO FR LEFT WHEEL
SPEED SENSOR
(9518)
(LOCATED ON LEFT FRAME RAIL BY REAR AXLE)

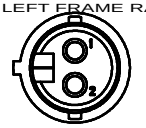

CONNECTOR 6111844C1

CAV	CIRCUIT	GAUGE	COLOR	TERMINAL	SEAL/SLEEVE
1	R94MD	18	GY	6111842C1	6111843C1
2	R94ME	18	GY	6111842C1	6111843C1

WABCO FR LEFT MODULATOR
(9519)
(LOCATED ON LEFT FRAME RAIL BY REAR AXLE)

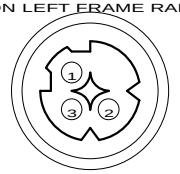

CONNECTOR 6111844C1

CAV	CIRCUIT	GAUGE	COLOR	TERMINAL	SEAL/SLEEVE
1	R94MA	18	GY	3601686C1	3733609C1
2	R94MB	18	GY	3601686C1	3733609C1
3	R94MC	18	GY	3601686C1	3733609C1

BENDIX 6S/6M L FR REAR MOD (HTB)
(9520)
(LOCATED ON LEFT FRAME RAIL BY REAR AXLE)

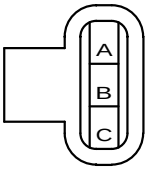

CONNECTOR 1686834C1
BODY LOCK 1664408C1

CAV	CIRCUIT	GAUGE	COLOR	TERMINAL	SEAL/SLEEVE
A	R94BA	16	GY	2033819C1	1652325C1
B	R94BB	16	GY	2033819C1	1652325C1
C	R94BC	16	GY	2033819C1	1652325C1

BENDIX 6S/6M L FR
REAR WHL SPEED SNSR (HTB)
(9521)
(LOCATED ON RIGHT FRAME RAIL BY REAR AXLE)

CONNECTOR 1684261C1
BODY LOCK 1684263C1

CAV	CIRCUIT	GAUGE	COLOR	TERMINAL
1	R94BD	16	GY	1680205C1
2	R94BE	16	GY	1680205C1

CHK	DATE	CHANGE	REV	REFERENCE	DRAWN	NAME
0610	27AUG13	INITIAL RELEASE.	A	92159Y	310615	CIRCUIT DIAGRAM, 9900
					RELEASE NO. 92159Y	DATE 02AUG13 / PART NO. AE08076124 / SHEET 183

Figure 390 Connector Composites (9518 / 9519 / 9520 / 9521)

13.193. CONNECTOR COMPOSITES (9522 / 9523 / 9524 / 9525), P. 184

NAVISTAR, INC

THIS PRINT IS PROVIDED ON A RESTRICTED BASIS AND IS NOT TO BE USED IN ANY WAY DETRIMENTAL TO THE INTEREST OF NAVISTAR, INC.

ELECTRICAL CIRCUIT DIAGRAM CHAPTER 13

CONNECTOR BODY COMPOSITE MATING VIEW SHOWN

BENDIX 6M/6S L RR REAR MOD (HTB)
(9522)
(LOCATED ON LEFT FRAME RAIL BY REAR AXLE)

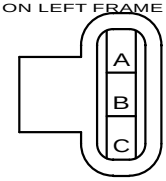

CAV	CIRCUIT	GAUGE	COLOR	TERMINAL	SEAL/SLEEVE
A	R94BY	16	GY	2033819C1	1652325C1
B	R94BZ	16	GY	2033819C1	1652325C1
C	R94BP	16	GY	2033819C1	1652325C1

CONNECTOR 1686834C1
BODY LOCK 1664408C1

BENDIX 6S/6M L RR REAR WHL SPEED SNSR (HTB)
(9523)
(LOCATED ON LEFT FRAME RAIL BY REAR AXLE)

CAV	CIRCUIT	GAUGE	COLOR	TERMINAL
1	R94BQ	16	GY	1680205C1
2	R94BR	16	GY	1680205C1

CONNECTOR 1684261C1
BODY LOCK 1684263C1

BENDIX 6S/6M R RR REAR MOD (HTB)
(9524)
(LOCATED ON RIGHT FRAME RAIL BY REAR AXLE)

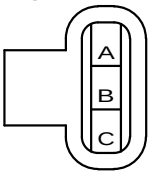

CAV	CIRCUIT	GAUGE	COLOR	TERMINAL	SEAL/SLEEVE
A	R94BS	16	GY	2033819C1	1652325C1
B	R94BT	16	GY	2033819C1	1652325C1
C	R94BU	16	GY	2033819C1	1652325C1

CONNECTOR 1686834C1
BODY LOCK 1664408C1

BENDIX 6S/6M R RR REAR WHL SPEED SNSR (HTB)
(9525)
(LOCATED ON RIGHT FRAME RAIL BY REAR AXLE)

CAV	CIRCUIT	GAUGE	COLOR	TERMINAL
1	R94BV	16	GY	1680205C1
2	R94BW	16	GY	1680205C1

CONNECTOR 1684261C1
BODY LOCK 1684263C1

CHK	DATE	CHANGE	REV	REFERENCE	DRAWN	NAME
0610	27AUG13	INITIAL RELEASE.	A	92159Y	310615	CIRCUIT DIAGRAM, 9900
					RELEASE NO. 92159Y	DATE 02AUG13

PART NO. AE08076124 SHEET 184

Figure 391 Connector Composites (9522 / 9523 / 9524 / 9525)

13.194. CONNECTOR COMPOSITES (9526 / 9527 / 9528 / 9529), P. 185

NAVISTAR, INC

THIS PRINT IS PROVIDED ON A RESTRICTED BASIS AND IS NOT TO BE USED IN ANY WAY DETRIMENTAL TO THE INTEREST OF NAVISTAR, INC.

ELECTRICAL CIRCUIT DIAGRAM CHAPTER 13

CONNECTOR BODY COMPOSITE MATING VIEW SHOWN

BENDIX 6S/6M R FR REAR MOD (HTB)
(9526)
(LOCATED ON RIGHT FRAME RAIL BY REAR AXLE)

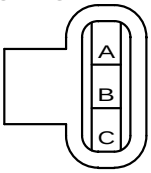

CONNECTOR 1686834C1
BODY LOCK 1664408C1

CAV	CIRCUIT	GAUGE	COLOR	TERMINAL	SEAL/SLEEVE
A	R94BJ	16	GY	2033819C1	1652325C1
B	R94BK	16	GY	2033819C1	1652325C1
C	R94BL	16	GY	2033819C1	1652325C1

BENDIX 6S/6M R FR REAR WHL SPEED SNSR (HTB)
(9527)
(LOCATED ON RIGHT FRAME RAIL BY REAR AXLE)

CONNECTOR1684261C1
BODY LOCK1684263C1

CAV	CIRCUIT	GAUGE	COLOR	TERMINAL
1	R94BF	16	GY	1680205C1
2	R94BH	16	GY	1680205C1

WABCO 6S/6M L FR REAR MOD (HTB)
(9528)
(LOCATED ON LEFT FRAME RAIL BY REAR AXLE)

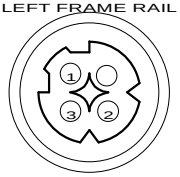

CONNECTOR 3919376C1

CAV	CIRCUIT	GAUGE	COLOR	TERMINAL	SEAL/SLEEVE
1	R94MA	18	GY	3601686C1	3733609C1
2	R94MB	18	GY	3601686C1	3733609C1
3	R94MC	18	GY	3601686C1	3733609C1

WABCO 6S/6M L FR REAR WHL SPEED SNSR (HTB)
(9529)
(LOCATED ON LEFT FRAME RAIL BY REAR AXLE)

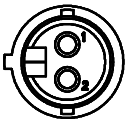

CONNECTOR 6111844C1

CAV	CIRCUIT	GAUGE	COLOR	TERMINAL	SEAL/SLEEVE
1	R94MD	18	GY	6111842C1	6111843C1
2	R94ME	18	GY	6111842C1	6111843C1

CHK	DATE	CHANGE	REV	REFERENCE	DRAWN	NAME
0610	27AUG13	INITIAL RELEASE.	A	92159Y	310615	CIRCUIT DIAGRAM, 9900
					RELEASE NO. 92159Y	DATE 02AUG13 / PART NO. AE08076124 / SHEET 185

Figure 392 Connector Composites (9526 / 9527 / 9528 / 9529)

13.195. CONNECTOR COMPOSITES (9530 / 9531 / 9532 / 9533), P. 186

NAVISTAR, INC

THIS PRINT IS PROVIDED ON A RESTRICTED BASIS AND IS NOT TO BE USED IN ANY WAY DETRIMENTAL TO THE INTEREST OF NAVISTAR, INC.

ELECTRICAL CIRCUIT DIAGRAM CHAPTER 13

CONNECTOR BODY COMPOSITE MATING VIEW SHOWN

MERITOR DIFF LOCK WARN LIGHT FR AXLE (6X4)
(9530)
(LOCATED ON FRONT OF REAR AXLE)

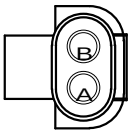

CONNECTOR 3593684C91

CAV	CIRCUIT	GAUGE	COLOR	TERMINAL	SEAL/SLEEVE
A*	R49	18	GY	0587578C1	1652325C1
A#	R49A	18	GY	0587578C1	1652325C1
B*	R49-G	18	WH	0587578C1	1652325C1
B#	R49-GB	18	WH	0587578C1	1652325C1

* ONE MERITOR DIFF LOCK WARN LT(6*4) W/ TAG
\# TWO MERITOR DIFF LOCK WARN LIGHT(6*4)

4X2 REAR AXLE MERITOR DIFF LOCK WARN LIGHT
(9531)
(LOCATED ON FRONT OF REAR AXLE)

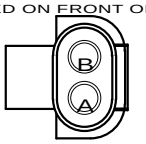

CONNECTOR 3593684C91

CAV	CIRCUIT	GAUGE	COLOR	TERMINAL	SEAL/SLEEVE
A	R49	18	GY	0587578C1	1652325C1
B	R49-G	18	WH	0587578C1	1652325C1

WABCO 6S/6M R RR REAR MOD (HTB)
(9532)
(LOCATED AT RIGHT FRAME RAIL
NEAR REAR AXLE)

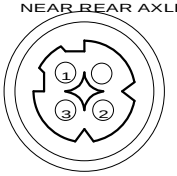

CONNECTOR 3919376C1

CAV	CIRCUIT	GAUGE	COLOR	TERMINAL	SEAL/SLEEVE
1	R94BSA	18	GY	3601686C1	3733609C1
2	R94BTA	18	GY	3601686C1	3733609C1
3	R94BUA	18	GY	3601686C1	3733609C1

4X2 REAR AXLE MERITOR DIFF LOCK WARN LT
(9533)
(LOCATED ON FRONT OF REAR AXLE)

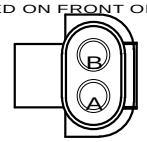

CONNECTOR 3593684C91

CAV	CIRCUIT	GAUGE	COLOR	TERMINAL	SEAL/SLEEVE
A	R49	18	GY	0587578C1	1652325C1
B*	R49-G	18	WH	0587578C1	1652325C1
B#	R49-GA	18	WH	0587578C1	1652325C1

* ONE MERITOR DIFF LOCK WARN LIGHT(6*4)
\# TWO MERITOR DIFF LOCK WARN LIGHT(6*4)

CHK	DATE	CHANGE	REV	REFERENCE	DRAWN	NAME
0610	27AUG13	INITIAL RELEASE.	A	92159Y	310615	CIRCUIT DIAGRAM, 9900
					RELEASE NO. 92159Y	DATE 02AUG13 / PART NO. AE08076124 / SHEET 186

Figure 393 Connector Composites (9530 / 9531 / 9532 / 9533)

13.196. CONNECTOR COMPOSITES (9534 / 9535 / 9536 / 9537), P. 187

NAVISTAR, INC

THIS PRINT IS PROVIDED ON A RESTRICTED BASIS AND IS NOT TO BE USED IN ANY WAY DETRIMENTAL TO THE INTEREST OF NAVISTAR, INC.

ELECTRICAL CIRCUIT DIAGRAM CHAPTER 13

CONNECTOR BODY COMPOSITE MATING VIEW SHOWN

WABCO 6S/6M R FR REAR MOD (HTB)
(9534)
(LOCATED ON RIGHT FRAME RAIL)

CONNECTOR 3919376C1

CAV	CIRCUIT	GAUGE	COLOR	TERMINAL	SEAL/SLEEVE
1	R94MJ	18	GY	3601686C1	3733609C1
2	R94MK	18	GY	3601686C1	3733609C1
3	R94ML	18	GY	3601686C1	3733609C1

WABCO 6S/6M R FR REAR WHL SPEED SNSR (HTB)
(9535)
(LOCATED ON RIGHT FRAME RAIL)

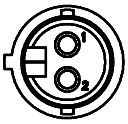

CONNECTOR 6111844C1

CAV	CIRCUIT	GAUGE	COLOR	TERMINAL	SEAL/SLEEVE
1	R94MF	18	GY	6111842C1	6111843C1
2	R94MH	18	GY	6111842C1	6111843C1

WABCO 6S/6M L RR REAR MOD (HTB)
(9536)
(LOCATED ON LEFT FRAME RAIL)

CONNECTOR 3919376C1

CAV	CIRCUIT	GAUGE	COLOR	TERMINAL	SEAL/SLEEVE
1	R94BYA	18	GY	3601686C1	3733609C1
2	R94BZA	18	GY	3601686C1	3733609C1
3	R94BPA	18	GY	3601686C1	3733609C1

WABCO 6S/6M L RR REAR WHL SPEED SNSR (HTB)
(9537)
(LOCATED ON LEFT FRAME RAIL)

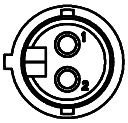

CONNECTOR 6111844C1

CAV	CIRCUIT	GAUGE	COLOR	TERMINAL	SEAL/SLEEVE
1	R94BOA	18	GY	6111842C1	6111843C1
2	R94BRA	18	GY	6111842C1	6111843C1

CHK	DATE	CHANGE	REV	REFERENCE	DRAWN	NAME
0610	27AUG13	INITIAL RELEASE.	A	92159Y	310615	CIRCUIT DIAGRAM, 9900
					RELEASE NO. 92159Y	DATE 02AUG13 / PART NO. AE08076124 / SHEET 187

Figure 394 Connector Composites (9534 / 9535 / 9536 / 9537)

13.197. CONNECTOR COMPOSITES (9538 / 9715F / 9715M), P. 188

NAVISTAR, INC

THIS PRINT IS PROVIDED ON A RESTRICTED BASIS AND IS NOT TO BE USED IN ANY WAY DETRIMENTAL TO THE INTEREST OF NAVISTAR, INC.

ELECTRICAL CIRCUIT DIAGRAM CHAPTER 13

CONNECTOR BODY COMPOSITE MATING VIEW SHOWN

WABCO 6S/6M R RR REAR WHL SPEED SNSR (HTB)
(9538)
(LOCATED ON RIGHT FRAME RAIL BY REAR REAR AXLE)

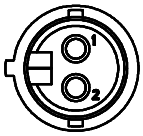

CONNECTOR 6111844C1

CAV	CIRCUIT	GAUGE	COLOR	TERMINAL	SEAL/SLEEVE
1	R94BVA	18	GY	6111842C1	6111843C1
2	R94BWA	18	GY	6111842C1	6111843C1

TRAILER SOCKET
(9715F)
(LOCATED AT LEFT FRAME RAIL BEHIND CAB)

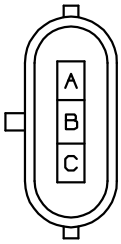

CONNECTOR 1667732C1
BODY LOCK 1667734C1

CAV	CIRCUIT	GAUGE	COLOR	TERMINAL	SEAL/SLEEVE
A	R70W	10	RD	2025425C1	1667735C1
B	R68W	10	BN	2025425C1	1667735C1
C	R94W	10	DKBL	2025425C1	1667735C1

TRAILER SOCKET 1
(9715M)
(LOCATED AT END OF FRAME - LEFT SIDE)

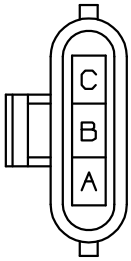

CONNECTOR 1667733C1
BODY LOCK 1667734C1

CAV	CIRCUIT	GAUGE	COLOR	TERMINAL	SEAL/SLEEVE
A	N70W	10	RD	1667737C1	1667735C1
B	N68W	12	BN	1667737C1	1671603C1
C	N94W	10	DKBL	1667737C1	1667735C1

CHK	DATE	CHANGE	REV	REFERENCE	DRAWN	NAME
0610	27AUG13	INITIAL RELEASE.	A	92159Y	310615	CIRCUIT DIAGRAM, 9900
					RELEASE NO. 92159Y	DATE 02AUG13 / PART NO. AE08076124 / SHEET 188

Figure 395 Connector Composites (9538 / 9715F / 9715M)

13.198. CONNECTOR COMPOSITES (9716F / 9716M / 9766), P. 189

NAVISTAR, INC

THIS PRINT IS PROVIDED ON A RESTRICTED BASIS AND IS NOT TO BE USED IN ANY WAY DETRIMENTAL TO THE INTEREST OF NAVISTAR, INC.

ELECTRICAL CIRCUIT DIAGRAM CHAPTER 13

CONNECTOR BODY COMPOSITE MATING VIEW SHOWN

TRAILER SOCKET 2
(9716F)
(LOCATED AT END OF FRAME - LEFT SIDE)

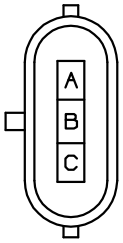

CONNECTOR 1667732C1
BODY LOCK 1667734C1

CAV	CIRCUIT	GAUGE	COLOR	TERMINAL	SEAL/SLEEVE
A	N58W	12	BK	2025424C1	1671603C1
B	N56W	12	YL	2025424C1	1671603C1
C	N57W	12	LTGN	2025424C1	1671603C1

TRAILER SOCKET 2
(9716M)
(LOCATED ON LEFT FRAME RAIL BEHIND CAB)

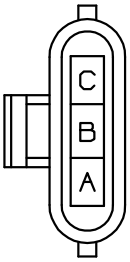

CONNECTOR 1667733C1
BODY LOCK 1667734C1

CAV	CIRCUIT	GAUGE	COLOR	TERMINAL	SEAL/SLEEVE
A	R58W	10	BK	1667737C1	1667735C1
B	R56W	10	YL	1667737C1	1667735C1
C	R57W	10	LTGN	1667737C1	1667735C1

DEF GAUGE BATTERY FEED
(9766)
(LOCATED AT INSTRUMENT PANEL)

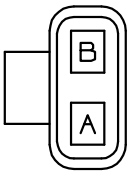

CONNECTOR 1667639C1

CAV	CIRCUIT	GAUGE	COLOR	TERMINAL
A	28N	18	TN	3895713C1
B	13NA	18	PK	3895713C1

CHK	DATE	CHANGE	REV	REFERENCE	DRAWN	NAME
0610	27AUG13	INITIAL RELEASE.	A	92159Y	310615	CIRCUIT DIAGRAM, 9900
					RELEASE NO. 92159Y	DATE 02AUG13 / PART NO. AE08076124 / SHEET 189

Figure 396 Connector Composites (9716F / 9716M / 9766)

13.199. CONNECTOR COMPOSITES (9773 / 9773A / 9773B / 9789F / 9789FA), P. 190

NAVISTAR, INC

THIS PRINT IS PROVIDED ON A RESTRICTED BASIS AND IS NOT TO BE USED IN ANY WAY DETRIMENTAL TO THE INTEREST OF NAVISTAR, INC.

ELECTRICAL CIRCUIT DIAGRAM CHAPTER 13

CONNECTOR BODY COMPOSITE MATING VIEW SHOWN

IDLE CONTROL TEMP SENSOR
(9773)
(LOCATED AT FRONT OF LEFT FRAME RAIL)

CONNECTOR 3518182C1
BODY LOCK 3518184C1

CAV	CIRCUIT	GAUGE	COLOR	TERMINAL
1	R41-G	16	TN	3518963C1
2	R41AA	16	TN	3518963C1

IDLE CONTROL TEMP SENSOR
(9773A)
(LOCATED AT FRONT OF LEFT FRAME RAIL)

CONNECTOR 3518182C1
BODY LOCK 3518184C1

CAV	CIRCUIT	GAUGE	COLOR	TERMINAL
1	R41-G	16	TN	3518963C1
2	R41AA	16	TN	3518963C1

IDLE CONTROL TEMP SENSOR
(9773B)
(LOCATED AT FRONT OF LEFT FRAME RAIL)

CONNECTOR 3518182C1
BODY LOCK 3518184C1

CAV	CIRCUIT	GAUGE	COLOR	TERMINAL
1	R41-G	16	TN	3518963C1
2	R41AA	16	TN	3518963C1

TRAILER SOCKET 2 (4X2)
(9789F)
(LOCATED ON LEFT FRAME RAIL BEHIND CAB)

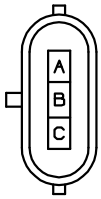

CONNECTOR 1667732C1
BODY LOCK 1667734C1

CAV	CIRCUIT	GAUGE	COLOR	TERMINAL	SEAL/SLEEVE
A	R58W	10	BK	2025425C1	1667735C1
B	R56W	10	YL	2025425C1	1667735C1
C	R57W	10	LTGN	2025425C1	1667735C1

TRAILER SOCKET 2 (6X4)
(9789FA)
(LOCATED ON LEFT FRAME RAIL BEHIND CAB)

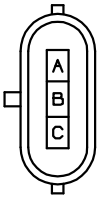

CONNECTOR 1667732C1
BODY LOCK 1667734C1

CAV	CIRCUIT	GAUGE	COLOR	TERMINAL	SEAL/SLEEVE
A	R58W	10	BK	2025425C1	1667735C1
B	R56W	10	YL	2025425C1	1667735C1
C	R57W	10	LTGN	2025425C1	1667735C1

CHK	DATE	CHANGE	REV	REFERENCE	DRAWN	NAME
0610	27AUG13	INITIAL RELEASE.	A	92159Y	310615	CIRCUIT DIAGRAM, 9900
					RELEASE NO. 92159Y	DATE 02AUG13 / PART NO. AE08076124 / SHEET 190

Figure 397 Connector Composites (9773 / 9773A / 9773B / 9789F / 9789FA)

13.200. CONNECTOR COMPOSITES (9790M / 9790MA), P. 191

NAVISTAR, INC

THIS PRINT IS PROVIDED ON A RESTRICTED BASIS AND IS NOT TO BE USED IN ANY WAY DETRIMENTAL TO THE INTEREST OF NAVISTAR, INC.

ELECTRICAL CIRCUIT DIAGRAM CHAPTER 13

CONNECTOR BODY COMPOSITE MATING VIEW SHOWN

TRAILER SOCKET 1 (4X2)
(9790M)
(LOCATED ON END OF FRAME LEFT SIDE)

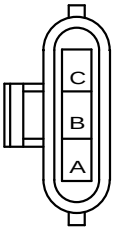

CONNECTOR 1667733C1
BODY LOCK 1667734C1

CAV	CIRCUIT	GAUGE	COLOR	TERMINAL	SEAL/SLEEVE
A	R70W	10	RD	1667737C1	1667735C1
B	R68W	10	BN	1667737C1	1667735C1
C	R94W	10	DKBL	1667737C1	1667735C1

TRAILER SOCKET 1 (6X4)
(9790MA)
(LOCATED ON END OF FRAME LEFT SIDE)

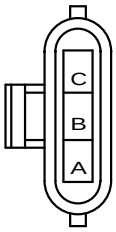

CONNECTOR 1667733C1
BODY LOCK 1667734C1

CAV	CIRCUIT	GAUGE	COLOR	TERMINAL	SEAL/SLEEVE
A	R70W	10	RD	1667737C1	1667735C1
B	R68W	10	BN	1667737C1	1667735C1
C	R94W	10	DKBL	1667737C1	1667735C1

CHK	DATE	CHANGE	REV	REFERENCE	DRAWN	NAME
0610	27AUG13	INITIAL RELEASE.	A	92159Y	310615	CIRCUIT DIAGRAM, 9900
					RELEASE NO. 92159Y	DATE 02AUG13 / PART NO. AE08076124 / SHEET 191

Figure 398 Connector Composites (9790M / 9790MA)

13.201. CONNECTOR COMPOSITES (9800 / 9800F), P. 192

NAVISTAR, INC

THIS PRINT IS PROVIDED ON A RESTRICTED BASIS AND IS NOT TO BE USED IN ANY WAY DETRIMENTAL TO THE INTEREST OF NAVISTAR, INC.

ELECTRICAL CIRCUIT DIAGRAM CHAPTER 13

CONNECTOR BODY COMPOSITE MATING VIEW SHOWN

REAR AXLE TEMP SENDER
(9800)

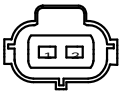

CONNECTOR 3536864C1

CAV	CIRCUIT	GAUGE	COLOR	TERMINAL	SEAL/SLEEVE
1	BN	18	BN	3536865C1	3536868C1
2	RD	18	RD	3536865C1	3536868C1

CONNECTION TO REAR CHASSIS
HARNESS
(9800F)

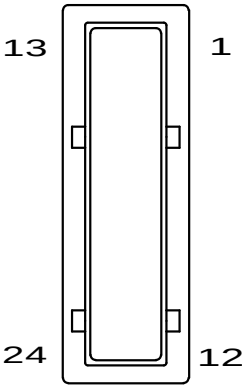

CONNECTOR 3558026C1
BODY LOCK 3558056C1

CAV	CIRCUIT	GAUGE	COLOR	TERMINAL	SEAL/SLEEVE
1	N71	14	OR	3559035C1	3575783C1
2	N56A	14	OR	3559035C1	3575783C1
3	N57A	14	OR	3559035C1	3575783C1
4	N68A	14	BN	3559035C1	3575783C1
5	N10-G	12	WH	3559035C1	3575783C1
6	N32A	18	TN	3509874C1	3509903C1
7	N9BF	18	GY	3509874C1	3509903C1
8	N32	18	TN	3509874C1	3509903C1
9	N49	18	GY	3509874C1	3509903C1
10	N49-G	18	WH	3509874C1	3509903C1
11	N49A	18	GY	3509874C1	3509903C1
12	PLUG	–	–	–	–
13	N94BA	16	GY	3559035C1	3509903C1
14	N94BB	16	GY	3559035C1	3509903C1
15	N94BC	16	GY	3559035C1	3509903C1
16	N94BD	16	GY	3559035C1	3509903C1
17	N94BE	16	GY	3559035C1	3509903C1
18	N94BF	16	GY	3559035C1	3509903C1
19	N94BH	16	GY	3559035C1	3509903C1
20	N94BJ	14	GY	3559035C1	3575783C1
21	N94BK	16	GY	3559035C1	3509903C1
22	N94BL	14	GY	3559035C1	3575783C1
23	N94BM	16	GY	3559035C1	3509903C1
24	N94BN	16	GY	3559035C1	3509903C1

CHK	DATE	CHANGE	REV	REFERENCE	DRAWN	NAME
–	–	INITIAL RELEASE.	A	92159Y	310615	CIRCUIT DIAGRAM, 9900
					RELEASE NO. 92159Y	DATE 02AUG13
					PART NO. AE08076124	SHEET 192

Figure 399 Connector Composites (9800 / 9800F)

13.202. CONNECTOR COMPOSITES (9800M), P. 193

NAVISTAR, INC

THIS PRINT IS PROVIDED ON A RESTRICTED BASIS AND IS NOT TO BE USED IN ANY WAY DETRIMENTAL TO THE INTEREST OF NAVISTAR, INC.

ELECTRICAL CIRCUIT DIAGRAM CHAPTER 13

CONNECTOR BODY COMPOSITE MATING VIEW SHOWN

CONNECTION TO CENTER HARNESS
(9800M)

(LOCATED ON LEFT FRAME RAIL BEHIND CAB)

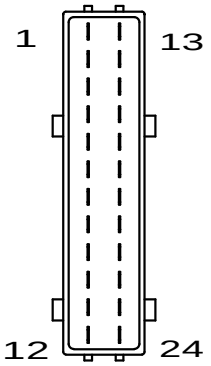

CONNECTOR 3558022C1
BODY LOCK 3558056C1

CAV	CIRCUIT	GAUGE	COLOR	TERMINAL	SEAL/SLEEVE
1*	R71BA	12	WH	3559037C1	3575783C1
	R71BA	12	OR	3559037C1	3575783C1
1#	R71BB1	12	OR	3559037C1	3575783C1
2	R56A	14	OR	3559037C1	3575783C1
3	R57A	14	OR	3559037C1	3575783C1
4	R68A	14	BN	3559037C1	3575783C1
5	R10-G	12	WH	3559037C1	3575783C1
	R10-G	16	WH	3559037C1	3509903C1
6@	R32A	18	TN	3559036C1	3509903C1
6%	R32	18	TN	3559036C1	3509903C1
7%	R9A	18	GY	3559036C1	3509903C1
7**	R9	18	GY	3559036C1	3509903C1
7@	R9C	18	GY	3559036C1	3509903C1
8	R32	18	TN	3559036C1	3509903C1
9	R49	18	GY	3559036C1	3509903C1
10##	R49-G	18	WH	3559036C1	3509903C1
10%%	R49-GC	18	WH	3559036C1	3509903C1
11	R49A	18	GY	3559036C1	3509903C1
12	R58AC	16	BN	3559037C1	3509903C1
13@@	R94BA	16	GY	3559037C1	3509903C1
13***	R94MA	18	GY	3559036C1	3532128C1
14@@	R94BB	16	GY	3559037C1	3509903C1
14***	R94MB	18	GY	3559036C1	3532128C1
15@@	R94BC	16	GY	3559037C1	3509903C1
15***	R94MC	18	GY	3559036C1	3532128C1
16@@	R94BD	16	GY	3559037C1	3509903C1
16***	R94MD	18	GY	3559036C1	3532128C1
17@@	R94BE	16	GY	3559037C1	3509903C1
17***	R94ME	18	GY	3559036C1	3532128C1
18@@	R94BF	16	GY	3559037C1	3509903C1
18***	R94MF	18	GY	3559036C1	3532128C1
19@@	R94BH	16	GY	3559037C1	3509903C1
19***	R94MH	18	GY	3559036C1	3532128C1
20@@	R94BJ	16	GY	3559037C1	3509903C1
20***	R94MJ	18	GY	3559036C1	3532128C1
21@@	R94BK	16	GY	3559037C1	3509903C1
21***	R94MK	18	GY	3559036C1	3532128C1
22@@	R94BL	16	GY	3559037C1	3509903C1
22***	R94ML	18	GY	3559036C1	3532128C1
23###	R94BM	16	GY	3559037C1	3509903C1
23%%%	[R94MM]	18	GY	3559036C1	3509903C1
24###	R94BN	16	GY	3559037C1	3509903C1
24%%%	[R94MN]	18	GY	3559036C1	3509903C1

* COMMON BASE(4*2)
# COMMON BASE(6*4) W/ AF > 1800
% ONE AXLE TEMP SENDERSR(6*4) W/ TAG
@ TWO AXLE TEMP SENDER(6*4)
** ONE AXLE TEMP SENDER(4*2)
ONE DIFF LOCK WARN LIGHT(4*2)
%% TWO DIFF LOCK WARN LIGHT(6*4)
@@ BENDIX AIR ABS(4*2)
*** WABCO AIR ABS(6*4 HAS)
BENDIX AIR ABS W/ ATC(4*2)
%%% WABCO ADVANCED AIR ABS W/ ATC-6*4 HTB

CHK	DATE	CHANGE	REV	REFERENCE	DRAWN	NAME
–	–	INITIAL RELEASE.	A	92159Y	310615	CIRCUIT DIAGRAM, 9900
					RELEASE NO. 92159Y	DATE 02AUG13 / PART NO. AE08076124 / SHEET 193

Figure 400 Connector Composites (9800M)

13.203. CONNECTOR COMPOSITES (9801M / 9810 / 9811 / 9812), P. 194

NAVISTAR, INC

THIS PRINT IS PROVIDED ON A RESTRICTED BASIS AND IS NOT TO BE USED IN ANY WAY DETRIMENTAL TO THE INTEREST OF NAVISTAR, INC.

ELECTRICAL CIRCUIT DIAGRAM CHAPTER 13

CONNECTOR BODY COMPOSITE MATING VIEW SHOWN

REAR /CENTER PROG AND DIAG
(9801M)
(LOCATED ON LEFT FRAME RAIL BEHIND CAB)

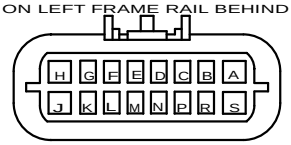

CONNECTOR 3533853C1

CAV	CIRCUIT	GAUGE	COLOR	TERMINAL	SEAL/SLEEVE
A	R108VB	16	TN	3534160C1	3535428C1
B	R107-GC	18	TN	3535305C1	3535424C1
C	R107C	18	TN	3535305C1	3535424C1
D	R108F	18	TN	3535305C1	3535424C1
E	R108E	18	TN	3535305C1	3535424C1
F	R108D	18	TN	3535305C1	3535424C1
F	R108DA	18	TN	3535305C1	3535424C1
G	R108C	18	TN	3535305C1	3535424C1
G	R108CA	18	TN	3535305C1	3535424C1
H	R107B	18	TN	3534160C1	3535427C1
J	R108ZB	16	TN	3534160C1	3535428C1
K	R22ZB	20	TN	3535304C1	3535423C1
L	R22VB	20	TN	3535304C1	3535423C1
M	R22B	20	TN	3535304C1	3535423C1
N	R22ZC	20	TN	3535304C1	3535423C1
P	R22VC	20	TN	3535304C1	3535423C1
R	R22C	20	TN	3535304C1	3535423C1
S	R107-GD	18	TN	3534160C1	3535427C1

REAR AXLE TEMP SENDER TO RR CHASSIS
(9810)
(LOCATED ON LEFT FRAME RAIL BY REAR REAR AXLE)

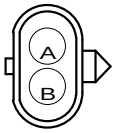

CONNECTOR 0587567C91

CAV	CIRCUIT	GAUGE	COLOR	TERMINAL	SEAL/SLEEVE
A	BN	18	BN	0587578C1	1652325C1
B	RD	18	RD	0587578C1	1652325C1

FR AXLE TEMP SENDER
(9811)
(LOCATED ON LEFT FRAME RAIL BY FORWARD REAR AXLE)

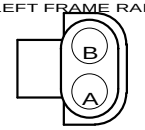

CONNECTOR 0587568C91

CAV	CIRCUIT	GAUGE	COLOR	TERMINAL	SEAL/SLEEVE
A	TA32	18	TN	0587576C1	1652325C1
B	RH9C	18	GY	0587576C1	1652325C1

RR AXLE TEMP SENDER (6X4)
(9812)
(LOCATED ON LEFT FRAME RAIL BY REAR REAR AXLE)

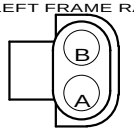

CONNECTOR 0587568C91

CAV	CIRCUIT	GAUGE	COLOR	TERMINAL	SEAL/SLEEVE
A	R32A	18	TN	0587576C1	1652325C1
B	R9B	18	GY	0587576C1	1652325C1

CHK	DATE	CHANGE	REV	REFERENCE	DRAWN	NAME
–	–	INITIAL RELEASE.	A	92159Y	310615	CIRCUIT DIAGRAM, 9900
					RELEASE NO. 92159Y	DATE 02AUG13 / PART NO. AE08076124 / SHEET 194

Figure 401 Connector Composites (9801M / 9810 / 9811 / 9812)

13.204. CONNECTOR COMPOSITES (9813 / 9814 / 9815 / 9816 / 9830), P. 195

NAVISTAR, INC

THIS PRINT IS PROVIDED ON A RESTRICTED BASIS AND IS NOT TO BE USED IN ANY WAY DETRIMENTAL TO THE INTEREST OF NAVISTAR, INC.

ELECTRICAL CIRCUIT DIAGRAM CHAPTER 13

CONNECTOR BODY COMPOSITE MATING VIEW SHOWN

REAR AXLE TEMP SENDAR (4X2)
(9813)
(LOCATED ON LEFT FRAME RAIL BY REAR AXLE)

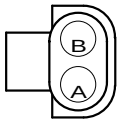

CONNECTOR 0587568C91

CAV	CIRCUIT	GAUGE	COLOR	TERMINAL	SEAL/SLEEVE
A	R32A	18	TN	0587576C1	1652325C1
B	R9	18	GY	0587576C1	1652325C1

FR AXLE DIFF LOCK
(9814)
(LOCATED ON FRONT OF REAR AXLE)

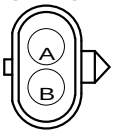

CONNECTOR 0587567C91

CAV	CIRCUIT	GAUGE	COLOR	TERMINAL	SEAL/SLEEVE
A	R49A	18	GY	0587578C1	1652325C1
B	R49-GB	18	WH	0587578C1	1652325C1

RR AXLE DIFF LOCK
WARN LIGHT (6X4)
(9815)
(LOCATED ON FRONT OF REAR REAR AXLE)

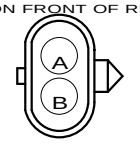

CONNECTOR 0587567C91

CAV	CIRCUIT	GAUGE	COLOR	TERMINAL	SEAL/SLEEVE
A	R49	18	GY	0587578C1	1652325C1
B*	R49-GA	18	WH	0587578C1	1652325C1
B#	R49-G	18	WH	0587578C1	1652325C1

* TWO DIFF LOCK WARM LIGHT(6*4)
\# ONE DIFF LOCK WARM LIGHT(6*4)

4X2 REAR AXLE DIFF
LOCK WARN LIGHT
(9816)
(LOCATED ON FRONT OF REAR AXLE)

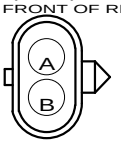

CONNECTOR 0587567C91

CAV	CIRCUIT	GAUGE	COLOR	TERMINAL	SEAL/SLEEVE
A	R49	18	GY	0587578C1	1652325C1
B	R49-G	18	WH	0587578C1	1652325C1

REAR LOAD INDICATOR (4X2)
(9830)
(LOCATED ON REAR SUSPENSION AIR BAG:
LEFT SIDE-6X4
RIGHT SIDE-4X2)

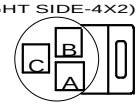

CONNECTOR 1678137C1

CAV	CIRCUIT	GAUGE	COLOR	TERMINAL	SEAL/SLEEVE
A*	R109B	18	GY	1651943C1	N/A
B*	R106B	18	GY	1651943C1	N/A
C*	R61B	18	GY	1651943C1	N/A

* REAR LOAD INDICATOR (4X2)

CHK	DATE	CHANGE	REV	REFERENCE	DRAWN	NAME
–	–	INITIAL RELEASE.	A	92159Y	310615	CIRCUIT DIAGRAM, 9900
					RELEASE NO. 92159Y	DATE 02AUG13 / PART NO. AE08076124 / SHEET 195

Figure 402 Connector Composites (9813 / 9814 / 9815 / 9816 / 9830)

13.205. CONNECTOR COMPOSITES (9832 / 9865M / 9900 / 9901), P. 196

NAVISTAR, INC

THIS PRINT IS PROVIDED ON A RESTRICTED BASIS AND IS NOT TO BE USED IN ANY WAY DETRIMENTAL TO THE INTEREST OF NAVISTAR, INC.

ELECTRICAL CIRCUIT DIAGRAM CHAPTER 13

CONNECTOR BODY COMPOSITE MATING VIEW SHOWN

REAR LOAD INDICATOR (6X4)
(9832)
(LOCATED ON REAR SUSPENSION AIR BAG:
LEFT SIDE-6X4
RIGHT SIDE-4X2)

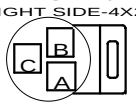

CONNECTOR 1678137C1

CAV	CIRCUIT	GAUGE	COLOR	TERMINAL
B#	R106B	18	GY	1651943C1
A#	R109B	18	GY	1651943C1
C#	R61B	18	GY	1651943C1

REAR LOAD INDICATOR (6X4)

LOAD INDICATOR TO CENTER CHASSIS
(9865M)
(LOCATED ON LEFT FRAME RAIL BEHIND CAB)

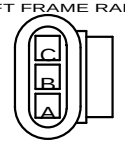

CONNECTOR 1667741C1
BODY LOCK 1667771C1

CAV	CIRCUIT	GAUGE	COLOR	TERMINAL	SEAL/SLEEVE
A	R109B	18	GY	1661875C1	1661872C1
B	R106B	18	GY	1661875C1	1661872C1
C	R61B	18	GY	1661875C1	1661872C1

CUSTOMER SUPPLIED LIGHTS
(9900)
(LOCATED IN BACKPANEL (DAYCAB))

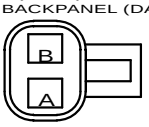

CONNECTOR 1671610C1
BODY LOCK 1671608C1

CAV	CIRCUIT	GAUGE	COLOR	TERMINAL	SEAL/SLEEVE
A	R10-GP	16	WH	2033819C1	1652325C1
B	R58AC	16	BN	2033819C1	1652325C1

LSM BENDIX W/ AUX AIR DRYER
(9901)
(LOCATED ON LEFT FRAME RAIL BEHIND CAB UNDER SLEEPER)

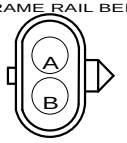

CONNECTOR 0587567C91

CAV	CIRCUIT	GAUGE	COLOR	TERMINAL	SEAL/SLEEVE
A	N39	16	GY	0587577C1	1652325C1
B	NZ9-G	16	WH	0587577C1	1652325C1

CHK	DATE	CHANGE	REV	REFERENCE	DRAWN	NAME		
–	–	INITIAL RELEASE.	A	92159Y	310615	CIRCUIT DIAGRAM, 9900		
					RELEASE NO.	DATE	PART NO.	SHEET
					92159Y	02AUG13	AE08076124	196

Figure 403 Connector Composites (9832 / 9865M / 9900 / 9901)

13.206. CONNECTOR COMPOSITES (9902 / 9911 / 9912), P. 197

NAVISTAR, INC

THIS PRINT IS PROVIDED ON A RESTRICTED BASIS AND IS NOT TO BE USED IN ANY WAY DETRIMENTAL TO THE INTEREST OF NAVISTAR, INC.

ELECTRICAL CIRCUIT DIAGRAM CHAPTER 13

CONNECTOR BODY COMPOSITE MATING VIEW SHOWN

LSM BENDIX AIR DRYER
(9902)
(LOCATED IN LEFT FRAME RAIL BY AIR DRYER)

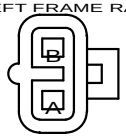

CAV	CIRCUIT	GAUGE	COLOR	TERMINAL	SEAL/SLEEVE
A	RD39	16	GY	2033819C1	1652325C1
B	RD39-G	16	WH	2033819C1	1652325C1

CONNECTOR 1673790C1
BODY LOCK 1673791C1

FR AXLE TEMP SENDER HAS-72
(9911)
(LOCATED ON LEFT FRAME RAIL BY FORWARD REAR AXLE)

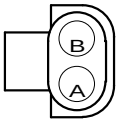

CAV	CIRCUIT	GAUGE	COLOR	TERMINAL	SEAL/SLEEVE
A	R32	18	TN	0587576C1	1652325C1
B	RC9C	18	GY	0587576C1	1652325C1

CONNECTOR 0587568C91
BODY LOCK 1673791C1

RR AXLE TEMP SENDER HAS-72
(9912)
(LOCATED ON LEFT FRAME RAIL BY REAR REAR AXLE)

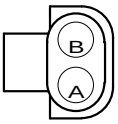

CAV	CIRCUIT	GAUGE	COLOR	TERMINAL	SEAL/SLEEVE
A	R32A	18	TN	0587576C1	1652325C1
B	R9B	18	GY	0587576C1	1652325C1

CONNECTOR 0587568C91
BODY LOCK 1673791C1

CHK	DATE	CHANGE	REV	REFERENCE	DRAWN	NAME
–	–	INITIAL RELEASE.	A	92159Y	310615	CIRCUIT DIAGRAM, 9900
					RELEASE NO. 92159Y	DATE 02AUG13 / PART NO. AE08076124 / SHEET 197

Figure 404 Connector Composites (9902 / 9911 / 9912)